https://truckmanualshub.com/

Genie®

Service Manual

refer to inside cover for serial number information

Part No. 72876
September 2006
Rev C2

GS™-1530
GS™-1930

https://truckmanualshub.com/

Important

Read, understand and obey the safety rules and operating instructions in the *Genie GS-1530* and *GS-1930 Operator's Manual* before attempting any maintenance or repair procedure.

This manual provides detailed scheduled maintenance information for the machine owner and user. It also provides troubleshooting and repair procedures for qualified service professionals.

Basic mechanical, hydraulic and electrical skills are required to perform most procedures. However, several procedures require specialized skills, tools, lifting equipment and a suitable workshop. In these instances, we strongly recommend that maintenance and repair be performed at an authorized Genie dealer service center.

Technical Publications

Genie Industries has endeavored to deliver the highest degree of accuracy possible. However, continuous improvement of our products is a Genie policy. Therefore, product specifications are subject to change without notice.

Readers are encouraged to notify Genie of errors and send in suggestions for improvement. All communications will be carefully considered for future printings of this and all other manuals.

Contact Us:

PO Box 97030
Redmond, WA 98073-9730 USA

www.genieindustries.com
e-mail: techsup@genieind.com

Serial Number Information

Genie Industries offers the following Service Manuals for these models:

Title	Part No.
Genie GS-1530 and GS-1930 Service Manual (before serial number 17408)	39528

Copyright © 1997 by Genie Industries

72876 Rev C April 2003
Second Edition, Third Printing

"Genie" is a registered trademark of Genie Industries in the USA and many other countries.
"GS" is a trademark of Genie Industries.

Printed on recycled paper

Printed in U.S.A.

https://truckmanualshub.com/

Safety Rules

Danger

Failure to obey the instructions and safety rules in this manual and the *Genie GS-1530 and GS-1930 Operator's Manual* will result in death or serious injury.

Many of the hazards identified in the operator's manual are also safety hazards when maintenance and repair procedures are performed.

Do Not Perform Maintenance Unless:

☑ You are trained and qualified to perform maintenance on this machine.

☑ You read, understand and obey:
- manufacturer's instructions and safety rules
- employer's safety rules and worksite regulations
- applicable governmental regulations

☑ You have the appropriate tools, lifting equipment and a suitable workshop.

https://truckmanualshub.com/

SAFETY RULES

Personal Safety

Any person working on or around a machine must be aware of all known safety hazards. Personal safety and the continued safe operation of the machine should be your top priority.

Read each procedure thoroughly. This manual and the decals on the machine, use signal words to identify the following:

Safety alert symbol—used to alert personnel to potential personal injury hazards. Obey all safety messages that follow this symbol to avoid possible injury or death.

DANGER Red—used to indicate the presence of an imminently hazardous situation which, if not avoided, will result in death or serious injury.

WARNING Orange—used to indicate the presence of a potentially hazardous situation which, if not avoided, could result in death or serious injury.

CAUTION Yellow with safety alert symbol—used to indicate the presence of a potentially hazardous situation which, if not avoided, may cause minor or moderate injury.

CAUTION Yellow without safety alert symbol—used to indicate the presence of a potentially hazardous situation which, if not avoided, may result in property damage.

NOTICE Green—used to indicate operation or maintenance information.

Be sure to wear protective eye wear and other protective clothing if the situation warrants it.

Be aware of potential crushing hazards such as moving parts, free swinging or unsecured components when lifting or placing loads. Always wear approved steel-toed shoes.

Workplace Safety

Be sure to keep sparks, flames and lighted tobacco away from flammable and combustible materials like battery gases and engine fuels. Always have an approved fire extinguisher within easy reach.

Be sure that all tools and working areas are properly maintained and ready for use. Keep work surfaces clean and free of debris that could get into machine components and cause damage.

Be sure any forklift, overhead crane or other lifting or supporting device is fully capable of supporting and stabilizing the weight to be lifted. Use only chains or straps that are in good condition and of ample capacity.

Be sure that fasteners intended for one time use (i.e., cotter pins and self-locking nuts) are not reused. These components may fail if they are used a second time.

Be sure to properly dispose of old oil or other fluids. Use an approved container. Please be environmentally safe .

Be sure that your workshop or work area is properly ventilated and well lit.

https://truckmanualshub.com/

Table of Contents

Introduction

Important Information ..... *ii*

Section One **Safety Rules**

General Safety Rules ..... *iii*

Section Two **Specifications** - Rev C

Machine Specifications, GS-1530 ..... 2 - 1
Performance Specifications, GS-1530 ..... 2 - 1
Machine Specifications, GS-1930 ..... 2 - 2
Performance Specifications, GS-1930 ..... 2 - 2
Machine Specifications, GS-1932 (Australia Outdoor) ..... 2 - 3
Performance Specifications, GS-1932 (Australia Outdoor) ..... 2 - 3
Hydraulic Specifications - All Models ..... 2 - 4
Manifold Component Specifications ..... 2 - 5
Hydraulic Hose and Fitting Torque Specifications ..... 2 - 6

Section Three **Scheduled Maintenance Procedures**

Introduction ..... 3 - 1
Pre-delivery Preparation Report ..... 3 - 3
Maintenance Inspection Report ..... 3 - 5
Checklist A Procedures - Rev C
A-1 Perform Pre-operation Inspection ..... 3 - 6
A-2 Perform Function Tests ..... 3 - 6
A-3 Perform 30 Day Service ..... 3 - 7
A-4 Grease the Steer Yokes ..... 3 - 7

https://truckmanualshub.com/

TABLE OF CONTENTS

Section Three **Maintenance Procedures,** continued

Checklist B Procedures - Rev C

B-1 Inspect the Batteries ..... 3 - 8
B-2 Inspect the Electrical Wiring ..... 3 - 9
B-3 Inspect the Tires and Wheels (including castle nut torque) ..... 3 - 10
B-4 Test the Key Switch ..... 3 - 10
B-5 Test the Automotive-style Horn (if equipped) ..... 3 - 11
B-6 Test the Drive Brakes ..... 3 - 12
B-7 Test the Drive Speed - Stowed Position ..... 3 - 14
B-8 Test the Drive Speed - Raised Position ..... 3 - 15
B-9 Perform Hydraulic Oil Analysis ..... 3 - 16
B-10 Replace the Hydraulic Tank Return Filter ..... 3 - 16
B-11 Check the Module Tray Latch Components ..... 3 - 17

Checklist C Procedure - Rev C

C-1 Check the Scissor Arm Wear Pads ..... 3 - 18

Checklist D Procedure - Rev B

D-1 Test or Replace the Hydraulic Oil ..... 3 - 19

Section Four **Repair Procedures**

Introduction ..... 4 - 1

Platform Controls - Rev B

1-1 Circuit Boards ..... 4 - 2
1-2 Joystick Controller ..... 4 - 3
1-3 Controller Adjustments ..... 4 - 5
1-4 Software Configuration ..... 4 - 12

Platform Components - Rev A

2-1 Platform ..... 4 - 16
2-2 Platform Extension ..... 4 - 17

https://truckmanualshub.com/

TABLE OF CONTENTS

Section Four **Repair Procedures,** continued

Scissor Components - Rev A

3-1 Scissor Assembly, GS-1530 ..... 4 - 18

3-2 Scissor Assembly, GS-1930 ..... 4 - 24

3-3 Lift Cylinder ..... 4 - 32

Ground Controls - Rev B

4-1 Manual Platform Lowering Cable ..... 4 - 34

4-2 Toggle Switches ..... 4 - 36

4-3 Control Relays ..... 4 - 37

4-4 Tilt Level Sensor (before serial number 50444) ..... 4 - 38

4-5 Tilt Level Sensor (after serial number 50443) ..... 4 - 46

Hydraulic Pump - Rev B

5-1 Function Pump ..... 4 - 54

Function Manifold - Rev B

6-1 Function Manifold Components (from serial number 17408 to 35799) ..... 4 - 56

6-2 Function Manifold Components (after serial number 35799) ..... 4 - 58

6-3 Valve Adjustments - Function Manifold ..... 4 - 60

6-4 Valve Coils ..... 4 - 66

Hydraulic Tank - Rev A

7-1 Hydraulic Tank ..... 4 - 68

Steer Axle Components - Rev B

8-1 Yoke and Drive Motor ..... 4 - 69

8-2 Steer Cylinder ..... 4 - 71

8-3 Steer Bellcrank ..... 4 - 72

Non-steer Axle Components - Rev B

9-1 Drive Brake ..... 4 - 73

Brake Release Hand Pump Components - Rev A

10-1 Brake Release Hand Pump Components ..... 4 - 74

https://truckmanualshub.com/

TABLE OF CONTENTS

Section Five	**Troubleshooting Flow Charts and Fault Codes**	
	Introduction	5 - 1
	Fault Code Chart (after serial number 17407) - Rev A	5 - 3
Chart Number	Chart Title	
1	All Functions Will Not Operate - Rev A	5 - 4
2	Pump Motor Will Not Operate - Rev A	5 - 6
3	All Functions Inoperative, Power Unit Starts and Runs - Rev A	5 - 8
4	Ground Controls Inoperative, Platform Controls Operate Normally - Rev A	5 - 9
5	Platform Controls Inoperative, Ground Controls Operate Normally - Rev A	5 - 10
6	Platform Up Function Inoperative - Rev A	5 - 11
7	Platform Down Function Inoperative - Rev A	5 - 12
8	Steer Left Function Inoperative - Rev A	5 - 13
9	Steer Right Function Inoperative - Rev A	5 - 15
10	All Drive Functions Inoperative, All Other Functions Operate Normally - Rev A	5 - 17
10A	Brake Release Function Inoperative - Rev A	5 - 18
11	Drive Forward Function Inoperative - Rev A	5 - 19
12	Drive Reverse Function Inoperative - Rev A	5 - 20
13	Machine Will Not Drive At Full Speed - Rev A	5 - 21
14	Machine Drives At Full Speed With Platform Raised - Rev A	5 - 22
15	Limit Switch Function Inoperative - Rev A	5 - 23
16	Fault Code 02 - ECM / Platform Communication Error - Rev A	5 - 24

https://truckmanualshub.com/

TABLE OF CONTENTS

Section Six **Schematics**

Introduction ..... 6 - 1

Electrical Components - Rev C ..... 6 - 2

ECM Pin-out Legend - Rev B ..... 6 - 4

Control Relay Layout - Rev A ..... 6 - 6

Platform Controls Wiring Diagram
(from serial number 17408 to 51014) - Rev B ..... 6 - 8

Platform Controls Wiring Diagram
(from serial number 51015 to 59999) - Rev A ..... 6 - 9

Ground Controls Wiring Diagram - Rev C ..... 6 - 10

Level Sensor Box Wiring Diagram - Rev A ..... 6 - 11

Electrical Symbols Legend - Rev C ..... 6 - 12

Electrical Schematic
(from serial number 17408 to 21064) - Rev C ..... 6 - 13

Electrical Schematic
(from serial number 21065 to 21262) - Rev C ..... 6 - 15

Electrical Schematic
(from serial number 21263 to 25141) - Rev C ..... 6 - 17

Electrical Schematic
(from serial number 25142 to 28936) - Rev C ..... 6 - 19

Electrical Schematic
(from serial number 28937 to 35799) - Rev C ..... 6 - 21

Electrical Schematic
(from serial number 35800 to 40925) - Rev C ..... 6 - 23

Electrical Schematic
(from serial number 40926 to 49804) - Rev B ..... 6 - 25

https://truckmanualshub.com/

TABLE OF CONTENTS

Section Six **Schematics,** continued

Electrical Schematic
(from serial number 49805 to 51014) - Rev B ..... 6 - 27

Electrical Schematic
(from serial number 51015 to 52966) - Rev B ..... 6 - 29

Electrical Schematic
(from serial number 52967 to 53999) - Rev B ..... 6 - 31

Electrical Schematic
(from serial number 54000 to 59999) - Rev B ..... 6 - 33

Hydraulic Schematic Legend and Component Reference - Rev B ..... 6 - 35

Hydraulic Schematic
(from serial number 17408 to 35799) - Rev B ..... 6 - 36

Hydraulic Schematic
(from serial number 35800 to 59999) - Rev B ..... 6 - 37

https://truckmanualshub.com/

REV C

Specifications

Machine Specifications, GS-1530

Batteries	
Type	6V DC
Group	T-105
Quantity	8
Battery capacity, maximum	225AH
Reserve capacity @ 25A rate	447 minutes
Fluid capacities	
Hydraulic tank	5 gallons 18.9 liters
Hydraulic system (including tank)	5.5 gallons 20.8 liters
Tires and wheels	
Tire size (solid rubber)	12 x 4.5 x 8.6 in 30.5 x 11.4 x 21.8 cm
Tire contact area	9 sq in 58 sq cm
Overall tire diameter	12 in 30.5 cm
Wheel diameter	8.6 in 21.8 cm
Wheel width	4.5 in 11.4 cm
Castle nut torque, dry	300 ft-lbs 406.7 Nm
Castle nut torque, lubricated	225 ft-lbs 305 Nm

For operational specifications, refer to the Operators Manual.

Performance Specifications, GS-1530

Drive speed, maximum	
Platform stowed	2.5 mph 40 ft / 10.7 sec 4 km/h 12.2 m / 10.7 sec
Platform raised	0.5 mph 40 ft / 55 sec 0.7 km/h 12.2 m / 55 sec
Braking distance, maximum	
High range on paved surface	2 ft 61 cm
Load capacity, maximum	
Platform retracted	600 lbs 272 kg
Platform only	350 lbs 159 kg
Extension only	250 lbs 113 kg
Function speed, maximum from platform controls (with 1 person in platform)	
Platform up	15 to 17 seconds
Platform down	16 to 18 seconds
Airborne noise emissions Maximum sound level at normal operation workstations (A-weighted)	<70 dB
Gradeability	30%

Continuous improvement of our products is a Genie policy. Product specifications are subject to change without notice.

https://truckmanualshub.com/

SPECIFICATIONS REV C

Machine Specifications, GS-1930

Batteries	
Type	6V DC
Group	T-105
Quantity	8
Battery capacity, maximum	225AH
Reserve capacity @ 25A rate	447 minutes
Fluid capacities	
Hydraulic tank	5 gallons 18.9 liters
Hydraulic system (including tank)	5.5 gallons 20.8 liters
Tires and wheels	
Tire size (solid rubber)	12 x 4.5 x 8.6 in 30.5 x 11.4 x 21.8 cm
Tire contact area	9 sq in 58 sq cm
Overall tire diameter	12 in 30.5 cm
Wheel diameter	8.6 in 21.8 cm
Wheel width	4.5 in 11.4 cm
Castle nut torque, dry	300 ft-lbs 406.7 Nm
Castle nut torque, lubricated	225 ft-lbs 305 Nm

For operational specifications, refer to the Operators Manual.

Performance Specifications, GS-1930

Drive speed, maximum	
Platform stowed	2.5 mph 40 ft / 10.7 sec 4 km/h 12.2 m / 10.7 sec
Platform raised	0.5 mph 40 ft / 55 sec 0.7 km/h 12.2 m / 55 sec
Braking distance, maximum	
High range on paved surface	2 ft 61 cm
Load capacity, maximum	
Platform retracted	500 lbs 227 kg
Platform only	250 lbs 113 kg
Extension only	250 lbs 113 kg
Function speed, maximum from platform controls (with 1 person in platform)	
Platform up	15 to 17 seconds
Platform down	22 to 24 seconds
Airborne noise emissions Maximum sound level at normal operation workstations (A-weighted)	<70 dB
Gradeability	
ANSI, CSA, CE	30%
Australia	25%

Continuous improvement of our products is a Genie policy. Product specifications are subject to change without notice.

https://truckmanualshub.com/

REV C SPECIFICATIONS

Machine Specifications, GS-1932 (Australia Outdoor)

Batteries	
Type	6V DC
Group	T-105
Quantity	8
Battery capacity, maximum	225AH
Reserve capacity @ 25A rate	447 minutes
Fluid capacities	
Hydraulic tank	5 gallons 18.9 liters
Hydraulic system (including tank)	5.5 gallons 20.8 liters
Tires and wheels	
Tire size (solid rubber)	12 x 4.5 x 8.6 in 30.5 x 11.4 x 21.8 cm
Tire contact area	9 sq in 58 sq cm
Overall tire diameter	12 in 30.5 cm
Wheel diameter	8.6 in 21.8 cm
Wheel width	4.5 in 11.4 cm
Castle nut torque, dry	300 ft-lbs 406.7 Nm
Castle nut torque, lubricated	225 ft-lbs 305 Nm

For operational specifications, refer to the Operators Manual.

Performance Specifications, GS-1932 (Australia Outdoor)

Drive speed, maximum	
Platform stowed	2.5 mph 40 ft / 10.7 sec 4 km/h 12.2 m / 10.7 sec
Platform raised	0.5 mph 40 ft / 55 sec 0.7 km/h 12.2 m / 55 sec
Braking distance, maximum	
High range on paved surface	2 ft 61 cm
Load capacity, maximum	
Platform retracted	500 lbs 227 kg
Platform only	250 lbs 113 kg
Extension only	250 lbs 113 kg
Function speed, maximum from platform controls (with 1 person in platform)	
Platform up	15 to 17 seconds
Platform down	22 to 24 seconds
Airborne noise emissions Maximum sound level at normal operation workstations (A-weighted)	<70 dB
Gradeability	25%

Continuous improvement of our products is a Genie policy. Product specifications are subject to change without notice.

https://truckmanualshub.com/

SPECIFICATIONS REV C

Hydraulic Specifications

Hydraulic Oil Specifications	
Before serial number 52640	
Hydraulic oil type	Shell Donax TG (Dexron III)
After serial number 52639	
Hydraulic oil type	Chevron Rykon MV equivalent
Approximate SAE grade	5W-20
Viscosity index rating	200

Chevron Rykon MV oil is fully compatible and mixable with Shell Donax TG (Dexron III) oils.
Genie specifications require hydraulic oils which are designed to give maximum protection to hydraulic systems, have the ability to perform over a wide temperature range, and have a minimum viscosity index rating of 150. They should provide excellent antiwear, oxidation, corrosion inhibition, seal conditioning, and foam and aeration suppression properties.

Optional fluids	
Biodegradable	Petro Canada Premium ECO 46 Statoil Hydra Way Bio Pa 32 BP Biohyd SE-S
Fire resistant	UCON Hydrolube HP-5046 Quintolubric 822
Mineral based	Shell Tellus T32 Shell Tellus T46

NOTICE Genie specifications require additional equipment and special installation instructions for the approved optional fluids. Consult the Genie Industries Service Department before use.

Function pump	
Type	Gear
Displacement per revolution	0.244 cu in 4 cc
Flow rate @ 2500 psi / 172 bar	4 gpm 15 L/min
Hydraulic tank return filter	10 micron with 25 psi / 1.7 bar bypass

Function manifold	
System relief valve pressure	3500 psi 241 bar
Lift relief valve pressure (added after serial number 35799)	3000 psi 207 bar
Steer relief valve pressure	1500 psi 103 bar

https://truckmanualshub.com/

REV C

Manifold Component Specifications

Plug torque	
SAE No. 2	50 in-lbs / 6 Nm
SAE No. 4	13 ft-lbs / 18 Nm
SAE No. 6	18 ft-lbs / 24 Nm
SAE No. 8	50 ft-lbs / 68 Nm
SAE No. 10	55 ft-lbs / 75 Nm
SAE No. 12	75 ft-lbs / 102 Nm

Valve Coil Resistance

Description	Specification
Solenoid valve, 3 position 4 way 20V DC with diode (schematic item AF and BI)	25 to 27 Ω
Solenoid valve, 2 position 4 way 20V DC with diode (schematic item AG)	18 to 20 Ω
Solenoid valve, N.O. poppet 20V DC with diode (schematic item AH)	25 to 27 Ω
Solenoid valve, 3 position 4 way 20V DC with diode (schematic item AI and BJ)	18 to 20 Ω
Solenoid valve, 2 position 4 way 20V DC with diode (schematic item BG)	18 to 20 Ω

https://truckmanualshub.com/

SPECIFICATIONS REV C

Hydraulic Hose and Fitting Torque Specifications

Your machine is equipped with either 37° flared fittings and hose ends OR Parker Seal-Lok® fittings and hose ends. Genie specifications require that fittings and hose ends be torqued to specification when they are removed and installed or when new hoses or fittings are installed.

SAE O-ring Boss Port
(tube fitting - installed into Aluminum)

SAE Dash size	Torque
-4	11 ft-lbs / 14.9 Nm
-6	23 ft-lbs / 31.2 Nm
-8	40 ft-lbs / 54.2 Nm
-10	69 ft-lbs / 93.6 Nm
-12	93 ft-lbs / 126.1 Nm
-16	139 ft-lbs / 188.5 Nm
-20	172 ft-lbs / 233.2 Nm
-24	208 ft-lbs / 282 Nm

SAE O-ring Boss Port
(tube fitting - installed into Steel)

SAE Dash size	Torque
-4	16 ft-lbs / 21.7 Nm
-6	35 ft-lbs / 47.5 Nm
-8	60 ft-lbs / 81.3 Nm
-10	105 ft-lbs / 142.4 Nm
-12	140 ft-lbs / 190 Nm
-16	210 ft-lbs / 284.7 Nm
-20	260 ft-lbs / 352.5 Nm
-24	315 ft-lbs / 427.1 Nm

Seal-Lok® Fittings
(hose end)

SAE Dash size	Torque
-4	18 ft-lbs / 24.4 Nm
-6	27 ft-lbs / 36.6 Nm
-8	40 ft-lbs / 54.2 Nm
-10	63 ft-lbs / 85.4 Nm
-12	90 ft-lbs / 122 Nm
-16	120 ft-lbs / 162.7 Nm
-20	140 ft-lbs / 190 Nm
-24	165 ft-lbs / 223.7 Nm

JIC 37° Fittings
(swivel nut or hose connection)

SAE Dash size	Thread Size	Flats
-4	7/16-20	2
-6	9/16-18	1 1/4
-8	3/4-16	1
-10	7/8-14	1
-12	1 1/16-12	1
-16	1 5/16-12	1
-20	1 5/8-12	1
-24	1 7/8-12	1

https://truckmanualshub.com/

Torque Procedure

JIC 37° fittings

1 Align the tube flare (hex nut) against the nose of the fitting body (body hex fitting) and tighten the hex nut to the body hex fitting to hand-tight, approximately 30 in-lbs / 3.4 Nm.

2 Make a reference mark on one of the flats of the hex nut, and continue it on to the body hex fitting with a permanent ink marker.

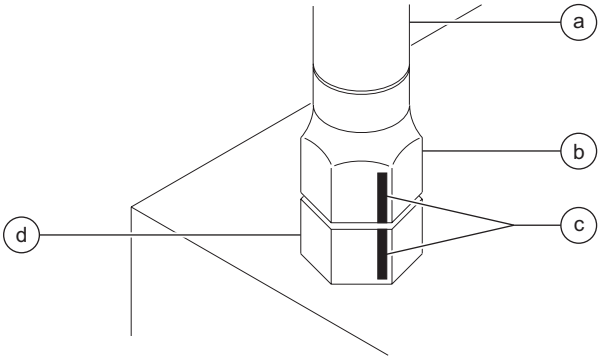

a hydraulic hose
b hex nut
c reference mark
d body hex fitting

3 Working clockwise on the body hex fitting, make a second mark with a permanent ink marker to indicate the proper tightening position.

NOTICE Use the *JIC 37° Fittings* table on the previous page to determine the correct number of flats for the proper tightening position.

NOTICE The marks indicate that the correct tightening positions have been determined. Use the second mark on the body hex fitting to properly tighten the joint after it has been loosened.

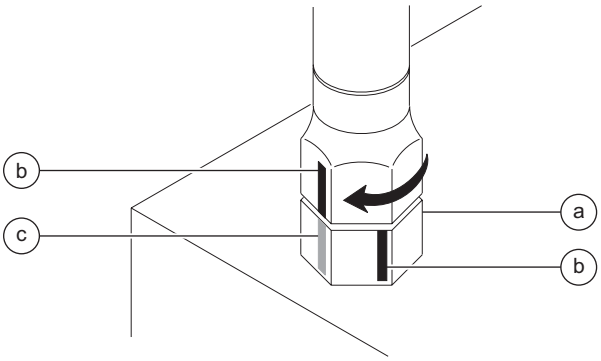

a body hex fitting
b reference mark
c second mark

4 Tighten the hex nut until the mark on the hex nut is aligned with the second mark on the body hex fitting.

5 Operate all machine functions and inspect the hoses and fittings and related components to confirm that there are no leaks.

https://truckmanualshub.com/

Seal-Lok® fittings

1 Replace the O-ring. The O-ring must be replaced anytime the seal has been broken. The O-ring cannot be re-used if the fitting or hose end has been tightened beyond finger tight.

NOTICE The O-rings used in the Parker Seal Lok® fittings and hose ends are custom-size O-rings. They are not standard SAE size O-rings. They are available in the O-ring field service kit.

2 Lubricate the O-ring before installation.

3 Be sure that the face seal O-ring is seated and retained properly.

4 Position the tube and nut squarely on the face seal end of the fitting and tighten the nut finger tight.

5 Tighten the nut or fitting to the appropriate torque per given size as shown in the table.

6 Operate all machine functions and inspect the hoses and fittings and related components to confirm that there are no leaks.

https://truckmanualshub.com/

Scheduled Maintenance Procedures

Observe and Obey:

- ☑ Maintenance inspections shall be completed by a person trained and qualified on the maintenance of this machine.
- ☑ Scheduled maintenance inspections shall be completed daily, quarterly, annually and every 2 years as specified on the *Maintenance Inspection Report.*

⚠WARNING Failure to perform each procedure as presented and scheduled could result in death, serious injury or substantial damage.

- ☑ Immediately tag and remove from service a damaged or malfunctioning machine.
- ☑ Repair any machine damage or malfunction before operating the machine.
- ☑ Keep records on all inspections for three years.
- ☑ Machines that have been out of service for a period longer than 3 months must complete the quarterly inspection.
- ☑ Unless otherwise specified, perform each maintenance procedure with the machine in the following configuration:
  - Machine parked on a firm, level surface
  - Platform in the stowed position
  - Key switch in the off position with the key removed
  - Wheels chocked

About This Section

This section contains detailed procedures for each scheduled maintenance inspection.

Each procedure includes a description, safety warnings and step-by-step instructions.

Symbols Legend

⚠ Safety alert symbol—used to alert personnel to potential personal injury hazards. Obey all safety messages that follow this symbol to avoid possible injury or death.

⚠DANGER Red—used to indicate the presence of an imminently hazardous situation which, if not avoided, **will** result in death or serious injury.

⚠WARNING Orange—used to indicate the presence of a potentially hazardous situation which, if not avoided, **could** result in death or serious injury.

⚠CAUTION Yellow with safety alert symbol—used to indicate the presence of a potentially hazardous situation which, if not avoided, **may** cause minor or moderate injury.

CAUTION Yellow without safety alert symbol—used to indicate the presence of a potentially hazardous situation which, if not avoided, **may** result in property damage.

NOTICE Green—used to indicate operation or maintenance information.

⊙ Indicates that a specific result is expected after performing a series of steps.

https://truckmanualshub.com/

SCHEDULED MAINTENANCE PROCEDURES

Maintenance Symbols Legend

NOTICE The following symbols have been used in this manual to help communicate the intent of the instructions. When one or more of the symbols appears at the beginning of a maintenance procedure, it conveys the meaning below.

Indicates that tools will be required to perform this procedure.

Indicates that new parts will be required to perform this procedure.

Indicates that a cold motor or pump will be required to perform this procedure.

Indicates that dealer service will be required to perform this procedure.

Pre-delivery Preparation Report

The pre-delivery preparation report contains checklists for each type of scheduled inspection.

Make copies of the *Pre-delivery Preparation Report* to use for each inspection. Store completed forms as required.

Maintenance Schedule

There are four types of maintenance inspections that must be performed according to a schedule—daily, quarterly, annual, and two year. The *Scheduled Maintenance Procedures Section* and the *Maintenance Inspection Report* have been divided into four subsections—A, B, C and D. Use the following chart to determine which group(s) of procedures are required to perform a scheduled inspection.

Inspection	Table or Checklist
Daily or every 8 hours	A
Quarterly or every 250 hours	A + B
Annually or every 1000 hours	A + B + C
Two year or every 2000 hours	A + B + C + D

Maintenance Inspection Report

The maintenance inspection report contains checklists for each type of scheduled inspection.

Make copies of the *Maintenance Inspection Report* to use for each inspection. Store completed forms as required.

https://truckmanualshub.com/

Pre-Delivery Preparation

Fundamentals

It is the responsibility of the dealer to perform the Pre-delivery Preparation.

The Pre-delivery Preparation is performed prior to each delivery. The inspection is designed to discover if anything is apparently wrong with a machine before it is put into service.

A damaged or modified machine must never be used. If damage or any variation from factory delivered condition is discovered, the machine must be tagged and removed from service.

Repairs to the machine may only be made by a qualified service technician, according to the manufacturer's specifications.

Scheduled maintenance inspections shall be performed by qualified service technicians, according to the manufacturer's specifications and the requirements listed in the responsibilities manual.

Instructions

Use the operator's manual on your machine.

The Pre-delivery Preparation consists of completing the Pre-operation Inspection, the Maintenance items and the Function Tests.

Use this form to record the results. Place a check in the appropriate box after each part is completed. Follow the instructions in the operator's manual.

If any inspection receives an N, remove the machine from service, repair and re-inspect it. After repair, place a check in the R box.

Legend

Y = yes, completed
N = no, unable to complete
R = repaired

Comments

Pre-Delivery Preparation	Y	N	R
Pre-operation inspection completed			
Maintenance items completed			
Function tests completed			

Model

Serial number

Date

Machine owner

Inspected by (print)

Inspector signature

Inspector title

Inspector company

Genie Industries USA
18340 NE 76th Street
PO Box 97030
Redmond, WA 98073-9730
(425) 881-1800

Genie UK
The Maltings, Wharf Road
Grantham, Lincolnshire
NG31- 6BH England
(44) 1476-584333

Copyright © 2002 by Genie Industries. Genie® is a registered trademark of Genie Industries.
Rev A

https://truckmanualshub.com/

This page intentionally left blank.

https://truckmanualshub.com/

Maintenance Inspection Report

Model

Serial number

Date

Hour meter

Machine owner

Inspected by (print)

Inspector signature

Inspector title

Inspector company

Instructions

- Make copies of this report to use for each inspection.
- Select the appropriate checklist(s) for the type of inspection to be performed.

☐	**Daily or 8 hour Inspection:**	**A**
☐	**Quarterly or 250 hour Inspection:**	**A+B**
☐	**Annual or 1000 hours Inspection:**	**A+B+C**
☐	**2 Year or 2000 hour Inspection:**	**A+B+C+D**

- Place a check in the appropriate box after each inspection procedure is completed.
- Use the step-by-step procedures in this section to learn how to perform these inspections.
- If any inspection receives an "N," tag and remove the machine from service, repair and re-inspect it. After repair, place a check in the "R" box.

Legend

Y = yes, acceptable

N = no, remove from service

R = repaired

Comments

Checklist A - Rev C	**Y**	**N**	**R**
A-1 Pre-operation inspect			
A-2 Function tests			
Perform after 40 hours:			
A-3 30 day service			
Perform every 100 hours:			
A-4 Grease steer yokes			

Checklist B - Rev C	**Y**	**N**	**R**
B-1 Batteries			
B-2 Electrical wiring			
B-3 Tires and wheels			
B-4 Emergency stop			
B-5 Key switch			
B-6 Horn (if equipped)			
B-7 Drive brakes			
B-8 Drive speed - stowed			
B-9 Drive speed - raised			
B-10 Hydraulic oil analysis			
B-11 Hydraulic tank return filter			
B-12 Latch components			

Checklist C - Rev C	**Y**	**N**	**R**
C-1 Scissor arm wear pads			

Checklist D - Rev B	**Y**	**N**	**R**
D-1 Hydraulic oil			

https://truckmanualshub.com/

Checklist A Procedures

REV C

A-1
Perform Pre-operation Inspection

Completing a Pre-operation Inspection is essential to safe machine operation. The Pre-operation Inspection is a visual inspection performed by the operator prior to each work shift. The inspection is designed to discover if anything is apparently wrong with a machine before the operator performs the function tests. The Pre-operation Inspection also serves to determine if routine maintenance procedures are required.

Complete information to perform this procedure is available in the *Genie GS-1530 and GS-1930 Operator's Manual*. Refer to the Operator's Manual on your machine.

A-2
Perform Function Tests

Completing the function tests is essential to safe machine operation. Function tests are designed to discover any malfunctions before the machine is put into service. A malfunctioning machine must never be used. If malfunctions are discovered, the machine must be tagged and removed from service.

Complete information to perform this procedure is available in the *Genie GS-1530 and GS-1930 Operator's Manual*. Refer to the Operator's Manual on your machine.

https://truckmanualshub.com/

A-3
Perform 30 Day Service

The 30 day maintenance procedure is a one-time sequence of procedures to be performed after the first 30 days or 50 hours of use. After this interval, refer to the maintenance checklists for continued scheduled maintenance.

1 Perform the following maintenance procedures:
- B-3 Inspect the Tires and Wheels (including castle nut torque)
- B-11 Replace the Hydraulic Tank Return Filter

A-4
Grease the Steer Yokes

NOTICE Genie specifications require that this procedure be performed every 100 hours of operation.

Regular application of lubrication to the steer yokes is essential to good machine performance and service life. Continued use of an insufficiently greased steer yoke will result in component damage.

1 Locate the grease fitting on the top of the steer yoke.

2 Pump multipurpose grease into the steer yoke until the steer yoke is full and grease is being forced past the bearings. Repeat this step for the other steer yoke.

Grease type	Multipurpose grease

https://truckmanualshub.com/

Checklist B Procedures

REV C

B-1
Inspect the Batteries

Proper battery condition is essential to good machine performance and operational safety. Improper fluid levels or damaged cables and connections can result in component damage and hazardous conditions.

WARNING Electrocution hazard. Contact with electrically charged circuits could result in death or serious injury. Remove all rings, watches and other jewelry.

WARNING Bodily injury hazard. Batteries contain acid. Avoid spilling or contacting battery acid. Neutralize battery acid spills with baking soda and water.

NOTICE Perform this procedure after fully charging the batteries.

NOTICE For a more accurate determination of battery condition, fully charge the batteries and allow the batteries to rest 24 hours before performing this procedure to allow the battery cells to equalize.

1 Put on protective clothing and eye wear.

2 Be sure that the battery cable connections are free of corrosion.

3 Be sure that the battery retaining fasteners and cable connections are tight.

4 Remove the battery vent caps from all batteries and check the specific gravity of each battery cell with a hydrometer.

⊙ Result: If any battery cell displays a specific gravity of less than 1.026, the battery must be replaced.

5 Check the battery acid level of each battery. If needed, replenish with distilled water to the bottom of the battery fill tube. Do not overfill.

6 Install the battery vent caps.

7 Check each battery pack and verify that the batteries are wired correctly.

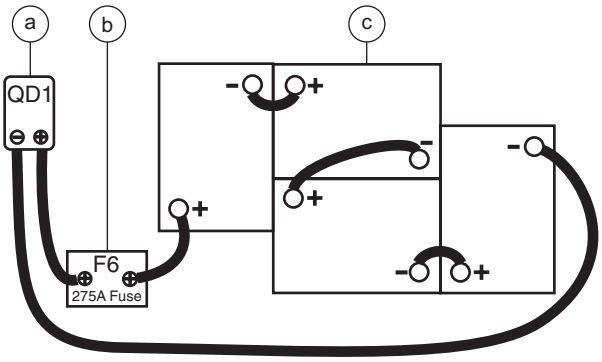

a quick disconnect QD1
b 275A fuse F6
c batteries B5

https://truckmanualshub.com/

B-2
Inspect the Electrical Wiring

Maintaining electrical wiring in good condition is essential to safe operation and good machine performance. Failure to find and replace burnt, chafed, corroded or pinched wires could result in unsafe operating conditions and may cause component damage.

WARNING Electrocution hazard. Contact with electrically charged circuits could result in death or serious injury. Remove all rings, watches and other jewelry.

1 Inspect the following areas for burnt, chafed, corroded and loose wires:

- Ground control panel
- Hydraulic power unit module tray
- Battery pack module tray
- Scissor arms
- Platform controls

2 Inspect for a liberal coating of dielectric grease in all connections between the ECM and the platform controls.

3 Turn the key switch to ground control and pull out the red Emergency Stop button to the on position at both the ground and platform controls.

4 Raise the platform approximately 8 feet / 2.4 m from the ground.

5 Rotate the safety arm away from the machine and let it hang down.

6 Lower the platform onto the safety arm.

WARNING Crushing hazard. Keep hands clear of the safety arm when lowering the platform.

7 Inspect the center chassis area and scissor arms for burnt, chafed and pinched cables.

8 Inspect the following areas for burnt, chafed, corroded, pinched and loose wires:

- ECM to platform controls
- Power to platform wiring

9 Inspect for a liberal coating of dielectric grease in all connections between the ECM and the platform controls.

10 Raise the platform and return the safety arm to the stowed position.

11 Lower the platform to the stowed position and turn the machine off.

https://truckmanualshub.com/

B-3
Inspect the Tires and Wheels (including castle nut torque)

Maintaining the tires and wheels in good condition is essential to safe operation and good performance. Tire and/or wheel failure could result in a machine tip-over. Component damage may also result if problems are not discovered and repaired in a timely fashion.

1 Check the tire surface and sidewalls for cuts, cracks, punctures and unusual wear.

2 Check each wheel for damage, bends and cracks.

3 Remove the cotter pin and check each castle nut for proper torque. Refer to Section 2, *Specifications*.

NOTICE Always replace the cotter pin with a new one when removing the castle nut or when checking the torque of the castle nut.

4 Install a new cotter pin. Bend the cotter pin to lock it in place.

B-4
Test the Key Switch

Proper key switch action and response is essential to safe machine operation. The machine can be operated from the ground or platform controls and the activation of one or the other is accomplished with the key switch. Failure of the key switch to activate the appropriate control panel could cause a hazardous operating situation.

NOTICE Perform this procedure from the ground using the platform controls. Do not stand in the platform.

1 Pull out the red Emergency Stop button to the on position at both the ground and platform controls.

2 Turn the key switch to **platform control**.

3 Check the platform up/down function from the **ground controls**.

⊙ Result: The machine functions should **not** operate.

4 Turn the key switch to **ground control**.

5 Check the machine functions from the **platform controls**.

⊙ Result: The machine functions should **not** operate.

6 Turn the key switch to the off position.

⊙ Result: No function should operate.

https://truckmanualshub.com/

B-5
Test the Automotive-style Horn (if equipped)

A functioning horn is essential to safe machine operation. The horn is activated at the platform controls and sounds at the ground as a warning to ground personnel. An improperly functioning horn will prevent the operator from alerting ground personnel of hazards or unsafe conditions.

1 Turn the key switch to platform control and pull out the red Emergency Stop button to the on position at both the ground and platform controls.

2 Push down the horn button at the platform controls.

⊙ Result: The horn should sound.

https://truckmanualshub.com/

B-6
Test the Drive Brakes

Proper brake action is essential to safe machine operation. The drive brake function should operate smoothly, free of hesitation, jerking and unusual noise. Hydraulically-released individual wheel brakes can appear to operate normally when not fully operational.

NOTICE Perform this procedure with the machine on a firm, level surface that is free of obstructions.

NOTICE Be sure the platform extension deck is fully retracted and the platform is in the stowed position.

1 Mark a test line on the ground for reference.

2 Turn the key switch to platform control and pull out the red Emergency Stop button to the on position at both the ground and platform controls.

3 Lower the platform to the stowed position.

4 Press the drive function select button. Refer to Illustration 1.

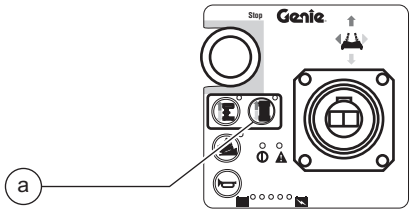

Illustration 1

a drive function select button BN8

5 Choose a point on the machine; i.e., contact patch of a tire, as a visual reference for use when crossing the test line.

6 Bring the machine to top drive speed before reaching the test line. Release the function enable switch or the joystick when your reference point on the machine crosses the test line.

7 Measure the distance between the test line and your machine reference point. Refer to Section 2, *Specifications*.

Result: The machine stops within the specified braking distance. No action required.

Result: The machine does not stop within the specified braking distance. Proceed to step 8 and determine if the machine is equipped with a dynamic braking valve.

NOTICE The brakes must be able to hold the machine on any slope it is able to climb.

8 Disconnect the battery pack from the machine.

WARNING Electrocution hazard. Contact with electrically charged circuits could result in death or serious injury. Remove all rings, watches and other jewelry.

9 Locate the drive forward/reverse valve on the function manifold. Refer to Illustrations 2.

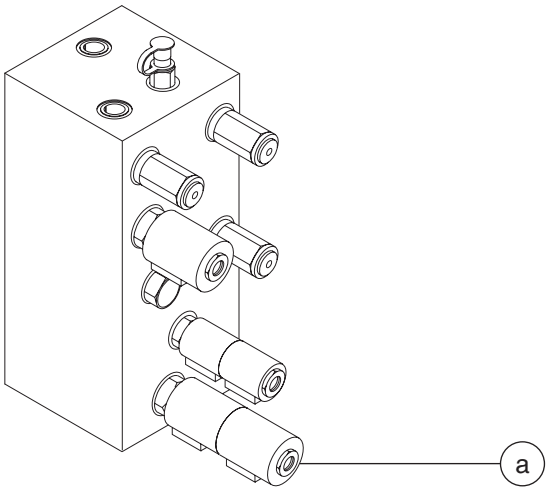

Illustration 2

a drive forward/reserve valve

https://truckmanualshub.com/

10 Tag the forward and the reverse valve coils. Remove the coils from the valve.

NOTICE The forward valve coil has white and brown wires attached.

NOTICE The reverse valve coil has white/black and brown wires attached.

NOTICE For reassembly, it will be helpful to leave the wire harness attached to the valve coils.

11 Remove the drive forward/reverse valve from the function manifold. Cap the open port of the manifold.

12 Carefully inspect the hex portion of the valve for an identification stamp.

⊙ Result: SV10-4727 is stamped on the hex portion of the drive forward/reverse valve. This indicates the machine is equipped with a dynamic brake valve. Proceed to step 13.

⊠ Result: SV10-4727 is not stamped on the hex portion of the drive forward/reverse valve. This indicates the machine is not equipped with a dynamic brake valve. Proceed to step 18.

13 Install the drive forward/reverse valve removed in step 11 into the function manifold and securely tighten. Torque to 25 ft-lbs / 34 Nm.

14 In order, install the reverse valve coil (with white/black and brown wires), spacer washer and the forward valve coil (with white and brown wires) onto the valve.

NOTICE For the machine to function correctly, the reverse valve coil must be closest to the manifold.

15 Install the coil nut onto the valve and tighten. Torque to 60 in-lbs / 7 Nm.

16 Connect the battery pack to the machine.

17 Replace the brakes and repeat this procedure beginning with step 1. Refer to Repair Procedure 9-1, *How to Remove a Drive Brake.*

18 Contact the Genie Industries Service Parts Department and order kit part number 105457.

19 Install the new valve received in the kit and mark the new valve with a white paint pen to identify new valve installation.

20 Repeat this procedure beginning with step 1.

If the machine fails to stop within the specified stopping distance after installing new brakes, please contact the Genie Industries Scissors Service Department, 1-800-536-1800 Ext. 8710.

https://truckmanualshub.com/

CHECKLIST B PROCEDURES REV C

B-7
Test the Drive Speed - Stowed Position

Proper drive functions are essential to safe machine operation. The drive function should respond quickly and smoothly to operator control. Drive performance should also be free of hesitation, jerking and unusual noise over the entire proportionally controlled speed range.

NOTICE Perform this procedure with the machine on a firm, level surface that is free of obstructions.

1 Create start and finish lines by marking two lines on the ground 40 feet / 12.2 m apart.

2 Turn the key switch to platform control and pull out the red Emergency Stop button to the on position at both the ground and platform controls.

3 Lower the platform to the stowed position.

4 **Models with drive function select button:** Press the drive function select button.

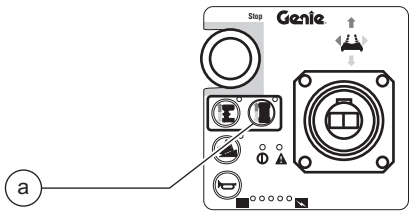

a drive function select button BN8

5 Choose a point on the machine; i.e., contact patch of a tire, as a visual reference for use when crossing the start and finish lines.

6 Bring the machine to top drive speed before reaching the start line. Begin timing when your reference point on the machine crosses the start line.

7 Continue at full speed and note the time when your reference point on the machine passes over the finish line. Refer to Section 2, *Specifications*.

https://truckmanualshub.com/

B-8
Test the Drive Speed - Raised Position

Proper drive functions are essential to safe machine operation. The drive function should respond quickly and smoothly to operator control. Drive performance should also be free of hesitation, jerking and unusual noise over the entire proportionally controlled speed range.

NOTICE Perform this procedure with the machine on a firm, level surface that is free of obstructions.

1 Create start and finish lines by marking two lines on the ground 40 feet / 12.2 m apart.

2 Turn the key switch to platform control and pull out the red Emergency Stop button to the on position at both the ground and platform controls.

3 **Models with lift function enable button:** Press and hold the lift function enable button.
Models with drive function select button: Press the lift function select button.

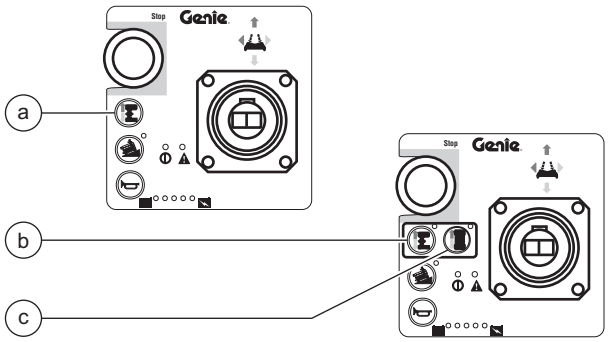

a lift function enable button BN9
b lift function select button BN9
c drive function select button BN8

4 Press and hold the function enable switch on the joystick.

5 Raise the platform approximately 4 feet / 1.2 m from the ground.

6 **Models with lift function enable button:** Release the lift function enable button.
Models with drive function select button: Press the drive function select button.

7 Choose a point on the machine; i.e., contact patch of a tire, as a visual reference for use when crossing the start and finish lines.

8 Bring the machine to top drive speed before reaching the start line. Begin timing when your reference point on the machine crosses the start line.

9 Continue at full speed and note the time when your reference point on the machine passes over the finish line. Refer to Section 2, *Specifications*.

https://truckmanualshub.com/

B-9
Perform Hydraulic Oil Analysis

Replacement or testing of the hydraulic oil is essential for good machine performance and service life. Dirty oil and a clogged suction strainer may cause the machine to perform poorly and continued use may cause component damage. Extremely dirty conditions may require oil changes to be performed more often.

NOTICE Before replacing the hydraulic oil, the oil may be tested by an oil distributor for specific levels of contamination to verify that changing the oil is necessary. **If the hydraulic oil is not replaced at the two year inspection, test the oil quarterly. Replace the oil when it fails the test.** See D-1, *Test or Replace the Hydraulic Oil.*

B-10
Replace the Hydraulic Tank Return Filter

Replacement of the hydraulic tank return filter is essential for good machine performance and service life. A dirty or clogged filter may cause the machine to perform poorly and continued use may cause component damage. Extremely dirty conditions may require that the filter be replaced more often.

CAUTION Beware of hot oil. Contact with hot oil may cause severe burns.

NOTICE The hydraulic tank return filter is mounted on the function manifold next to the hydraulic power unit.

1 Clean the area around the oil filter. Remove the filter with an oil filter wrench.

2 Apply a thin layer of oil to the new oil filter gasket.

3 Install the new filter and tighten it securely by hand.

4 Use a permanent ink marker to write the date and number of hours from the hour meter (if equipped) on the filter.

5 Turn the key switch to ground control and pull out the red Emergency Stop button to the on position at both the ground and platform controls.

6 Activate and hold the platform up toggle switch.

7 Inspect the filter and related components to be sure that there are no leaks.

8 Clean up any oil that may have spilled.

https://truckmanualshub.com/

B-11
Check the Module Tray Latch Components

Maintaining the module tray latch components in good condition is essential to good performance and service life. Failure to detect worn out latch components may result in module trays opening unexpectedly, creating an unsafe operating condition.

Models before serial number 35800:

1 Open both module trays and lubricate each module tray latch. Using light oil, apply a few drops to the side of the latch pin.

2 Inspect each module tray latch pad (if equipped). Replace any worn pad before the latch fails to securely hold the module tray closed.

NOTICE The module tray latch pad is attached to the drive chassis and located above the module tray latch when the module tray is closed.

Models after serial number 35799:

1 Lubricate each module tray rotary latch. Using light oil, apply a few drops to each of the springs and to the sides of the rotary latch mechanism.

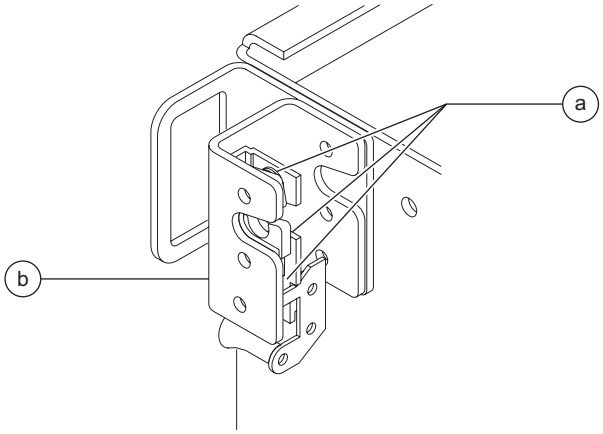

a rotary latch springs
b module tray rotary latch

2 Inspect each module tray latch U-bolt. Tighten any loose U-bolt retaining fastener before the latch fails to securely hold the module tray closed.

https://truckmanualshub.com/

Checklist C Procedure

REV C

C-1
Check the Scissor Arm Wear Pads

Maintaining the scissor arm wear pads in good condition is essential to safe machine operation. Continued use of worn our wear pads may result in component damage and unsafe operating conditions.

NOTICE Perform this procedure with the platform in the stowed position.

1 Measure the thickness of each scissor arm wear pad at the non-steer end of the machine.

2 Replace both wear pads if either one is less than 0.21 inch / 5.3 mm thick. Refer to Repair Procedure 3-1 or 3-2, *How to Replace the Scissor Arm Wear Pads.*

3 Apply a thin layer of dry film lubricant to the area of the chassis where the scissor arm wear pads make contact.

Scissor arm wear pad specification	
Wear pad thickness, minimum	0.21 inch 5.3 mm

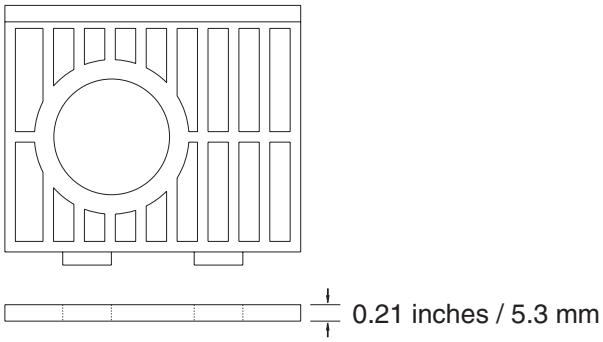

https://truckmanualshub.com/

Checklist D Procedure

REV B

D-1
Test or Replace the Hydraulic Oil

Replacement or testing of the hydraulic oil is essential for good machine performance and service life. Dirty oil and a clogged suction strainer may cause the machine to perform poorly and continued use may cause component damage. Extremely dirty conditions may require oil changes to be performed more often.

NOTICE Before replacing the hydraulic oil, the oil may be tested by an oil distributor for specific levels of contamination to verify that changing the oil is necessary. **If the hydraulic oil is not replaced at the two year inspection, test the oil quarterly. Replace the oil when it fails the test.**

NOTICE Perform this procedure with the platform in the stowed position.

1 Disconnect the battery pack from the machine.

2 Open the power unit module tray.

3 Remove the drain plug from the hydraulic tank and allow all of the oil to drain into a suitable container. Refer to Section 2, *Specifications*, for capacity information.

WARNING Bodily injury hazard. Spraying hydraulic oil can penetrate and burn skin. Loosen hydraulic connections very slowly to allow the oil pressure to dissipate gradually. Do not allow oil to squirt or spray.

4 Tag, disconnect and plug the hydraulic tank return hose at the top of the hydraulic tank.

5 Remove the motor controller mounting bracket retaining fasteners and move the motor controller to the side.

6 Remove the return filter mounting bracket fasteners from the manifold. Push the filter and accumulator out of the way.

7 Tag, disconnect and plug the hydraulic pump inlet hose at the side of the hydraulic tank.

8 Remove the hydraulic tank retaining fasteners and remove the hydraulic tank from the machine.

9 Remove the suction strainer from the tank and clean it using a mild solvent.

10 Clean the inside of the hydraulic tank using a mild solvent.

11 Install the suction strainer using thread sealer on the threads.

https://truckmanualshub.com/

CHECKLIST D PROCEDURES REV B

12 Install and tighten the hydraulic tank drain plug using thread sealer on the threads. Torque to specification.

Torque specifications	
Hydraulic tank drain plug, dry	75 in-lbs 8.5 Nm
Hydraulic tank drain plug, lubricated	56 in-lbs 6.3 Nm

13 Install the hydraulic tank and install and tighten the hydraulic tank retaining fasteners. Torque to specification.

Torque specifications	
Hydraulic tank retaining fasteners, dry	70 in-lbs 7.9 Nm
Hydraulic tank retaining fasteners, lubricated	52 in-lbs 5.9 Nm

14 Install the hydraulic pump inlet hose onto the fitting at the side of the hydraulic tank and tighten the hose clamp.

15 Install the hydraulic filter bracket and the motor controller bracket and tighten the fasteners.

CAUTION Component damage hazard. The connectors on the motor controller will short to ground if the motor controller mounting bracket is not installed before the battery pack is connected.

16 Install the hydraulic pump return hose onto the fitting at the top of the hydraulic tank and tighten the hose clamp.

17 Fill the tank with hydraulic oil until the fluid is within the FULL and ADD marks on the oil level indicator decal. Do not overfill.

18 Activate the pump to fill the hydraulic system with oil and bleed the system of air and check for leaks.

CAUTION Component damage hazard. The pump can be damaged if operated without oil. Be careful not to empty the hydraulic tank while in the process of filling the hydraulic system.

19 Repeat steps 17 through 18 until the hydraulic system and tank are both full.

20 Clean up any oil that may have spilled. Properly discard the used oil and filter.

https://truckmanualshub.com/

Repair Procedures

Observe and Obey:

- ☑ Repair procedures shall be completed by a person trained and qualified on the repair of this machine.
- ☑ Immediately tag and remove from service a damaged or malfunctioning machine.
- ☑ Repair any machine damage or malfunction before operating the machine.

Before Repairs Start:

- ☑ Read, understand and obey the safety rules and operating instructions in the *Genie GS-1530 and GS-1930 Operator's Manual*.
- ☑ Be sure that all necessary tools and parts are available and ready for use.
- ☑ Read each procedure completely and adhere to the instructions. Attempting shortcuts may produce hazardous conditions.
- ☑ Unless otherwise specified, perform each repair procedure with the machine in the following configuration:
  - Machine parked on a firm, level surface
  - Platform in the stowed position
  - Key switch in the off position with the key removed
  - Wheels chocked
  - All external AC power supply disconnected from the machine

About This Section

Most of the procedures in this section should only be performed by a trained service professional in a suitably equipped workshop. Select the appropriate repair procedure after troubleshooting the problem.

Perform disassembly procedures to the point where repairs can be completed. To re-assemble, perform the disassembly steps in reverse order.

Symbols Legend

Safety alert symbol—used to alert personnel to potential personal injury hazards. Obey all safety messages that follow this symbol to avoid possible injury or death.

DANGER Red—used to indicate the presence of an imminently hazardous situation which, if not avoided, **will** result in death or serious injury.

WARNING Orange—used to indicate the presence of a potentially hazardous situation which, if not avoided, **could** result in death or serious injury.

CAUTION Yellow with safety alert symbol—used to indicate the presence of a potentially hazardous situation which, if not avoided, **may** cause minor or moderate injury.

CAUTION Yellow without safety alert symbol—used to indicate the presence of a potentially hazardous situation which, if not avoided, **may** result in property damage.

NOTICE Green—used to indicate operation or maintenance information.

⊙ Indicates that a specific result is expected after performing a series of steps.

https://truckmanualshub.com/

Platform Controls

REV B

The platform controls, used to operate the machine from the platform or while standing on the ground, can also be used to tune the performance of the machine.

Moving the joystick or activating a button or toggle switch sends a signal to the Electronic Control Module (ECM). When the ECM is in the function mode, the platform controls are used to operate the various machine functions. When the ECM is in the programming mode (PS is shown in the diagnostic display window), the platform controls are used to adjust the function speed parameters.

The platform controls contains an electronic circuit board, joystick, membrane decal, buttons, switches and LEDs. Potentiometer-equipped joysticks can be adjusted to maintain performance.

For further information or assistance, consult the Genie Industries Service Department.

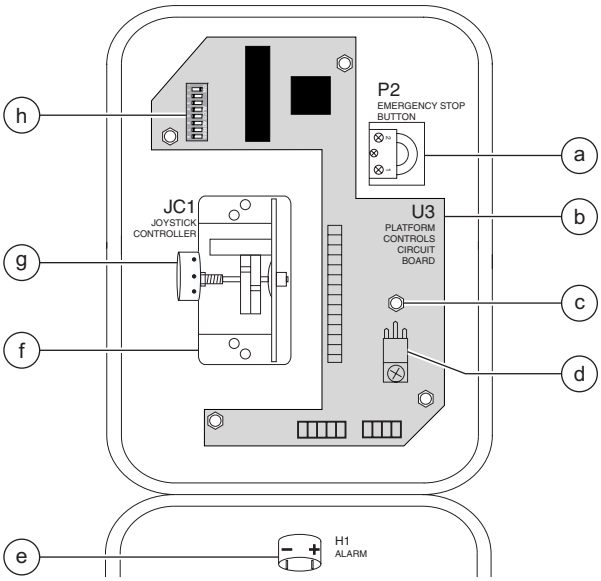

Models before serial number 51015
(potentiometer-equipped joystick)

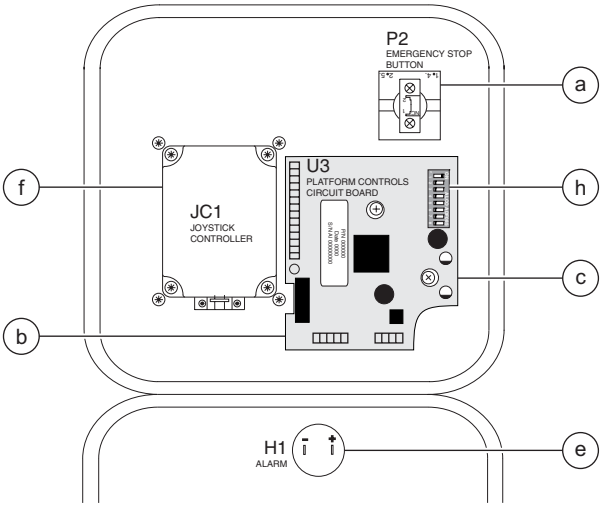

Models after serial number 51014
(hall effect joystick)

a red Emergency Stop button P2
b platform controls circuit board U3
c circuit board retaining fastener
d circuit board voltage regulator D7
e alarm H1
f joystick controller JC1
g potentiometer R15
h DIP switch SW25

https://truckmanualshub.com/

1-1 Circuit Boards

How to Remove the Platform Controls Circuit Board

1 Push in the red Emergency Stop button to the off position at both the ground and platform controls.

2 Remove the platform control box lid retaining fasteners. Open the control box lid.

3 Locate the membrane circuit board mounted to the inside of the platform control box lid.

WARNING Electrocution hazard. Contact with electrically charged circuits could result in death or serious injury. Remove all rings, watches and other jewelry.

CAUTION Component damage hazard. Electrostatic discharge (ESD) can damage printed circuit board components. Maintain firm contact with a metal part of the machine that is grounded at all times when handling printed circuit boards OR use a grounded wrist strap.

4 Carefully disconnect the three wire harness connectors from the platform controls circuit board.

5 Carefully remove the platform controls circuit board retaining fasteners.

6 Carefully remove the platform controls circuit board from the platform control box lid.

1-2 Joystick Controller

Maintaining the joystick at the proper setting is essential to safe machine operation. The joystick should operate smoothly over its entire range of motion.

A Hall-effect joystick controller was incorporated into the platform controls after serial number 51014. It does not require any calibration.

How to Calibrate the Joystick Controller (before serial number 51015)

NOTICE This procedure applies only to models with a potentiometer-equipped joystick.

1 Turn the key switch to platform controls and pull out the red Emergency Stop button to the on position at both the ground and platform controls.

2 Remove the platform control box lid retaining fasteners. Open the control box lid.

WARNING Electrocution hazard. Contact with electrically charged circuits could result in death or serious injury. Remove all rings, watches and other jewelry.

https://truckmanualshub.com/

PLATFORM CONTROLS REV B

3 Locate the potentiometer on the base of the joystick controller.

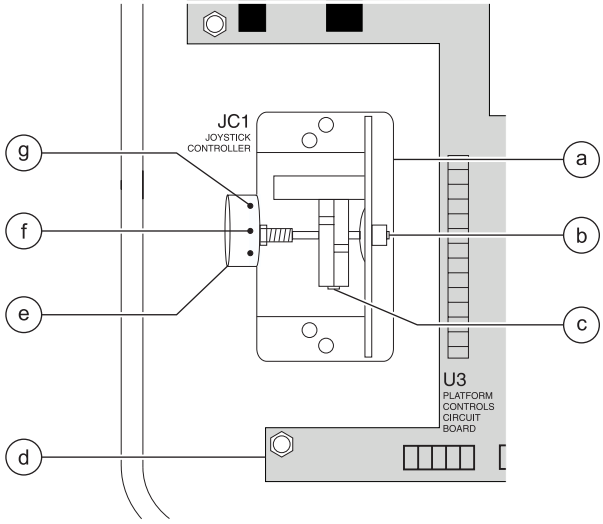

a joystick controller JC1
b potentiometer shaft
c potentiometer set screw
d platform controls circuit board U3
e potentiometer R15
f brown wire
g purple wire

4 With a volt meter set to read DC voltage, place the volt meter negative lead on the purple wire. Place the volt meter positive lead on the brown wire.

WARNING Electrocution hazard. Contact with electrically charged circuits could result in death or serious injury. Remove all rings, watches and other jewelry.

5 Loosen the set screw on the potentiometer shaft just enough to let the shaft rotate.

6 With the joystick in the neutral position, adjust the potentiometer to 2.05V DC at the potentiometer shaft. Tighten the set screw.

7 Move the joystick full stroke in both directions several times. Return the joystick to the neutral position.

⊙ Result: The volt meter should read 2.05V DC.

⊙ Result: If the volt meter does not read 2.05V DC, repeat steps 5 through 7.

8 Turn the key switch to the off position.

9 Wait a few seconds and then turn the key switch to platform controls.

⊙ Result: The error light on the top of the platform control box should go out and Code 47 should not be present on the diagnostic display at the battery module side of the machine.

⊙ Result: If the error indicator light is still on or if code 47 is present on the diagnostic display, repeat steps 5 through 9.

10 Turn the key switch to the off position.

11 Close the lid and install the fasteners.

https://truckmanualshub.com/

1-3 Controller Adjustments

Platform lift speed and raised drive speed, controlled by the ECM which is located in the battery pack module tray, are adjustable to compensate for wear in the hydraulic pump and drive motors.
The raised drive speed and lift speed are determined by the percentage of total controller output. For further information or assistance, consult the Genie Industries Service Department.

DANGER Tip-over hazard. Do not adjust the lift and/or drive speed higher than specified in this procedure. Setting the function speeds greater than specifications could cause the machine to tip over resulting in death or serious injury.

DANGER Tip-over hazard. This procedure must only be performed by a trained service professional. Attempting this procedure without the necessary skills will result in death or serious injury.

NOTICE Select a test area that is firm, level and free of obstructions.

How to Determine the Revision Level

1 Remove the platform controls from the platform.

2 Place the platform controls close to the diagnostic display on the power unit side of the machine.

3 Turn the key switch to platform control and pull out the red Emergency Stop buttons to the on position at both the ground and platform controls.

4 Press and hold the lift function enable button OR press the lift function select button.

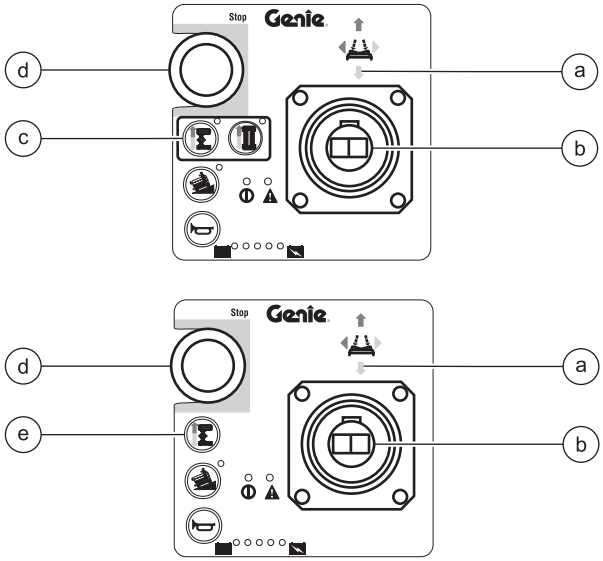

a yellow arrow
b joystick controller JC1
c lift function select button BN9
d red Emergency Stop button P2
e lift function enable button BN9

5 Slowly move the joystick in the direction indicated by the yellow arrow.

⊙ Result: The software revision level will appear in the diagnostic display.

⊙ Result: If the software revision level does not appear in the diagnostic display, turn the key switch to ground control and repeat steps 4 and 5. The software revision level will appear in the diagnostic display.

6 Push in the red Emergency Stop button to the off position at both the ground and platform controls and turn the key switch to the off position.

https://truckmanualshub.com/

How to Adjust the Lift Speed

DANGER Tip-over hazard. Do not adjust the lift and/or drive speed higher than specified in this procedure. Setting the function speeds greater than specifications could cause the machine to tip over resulting in death or serious injury.

DANGER Tip-over hazard. This procedure must only be performed by a trained service professional. Attempting this procedure without the necessary skills will result in death or serious injury.

Software revision A0 and B0:

1 Push in the red Emergency Stop button to the off position at both the ground and platform controls. Turn the key switch to the off position.

2 Pull out the red Emergency Stop button to the on position at both the ground and platform controls.

3 Press and hold the lift function enable and horn buttons, and turn the key switch to platform controls.

⊙ Result: The diagnostic display will show "PS."

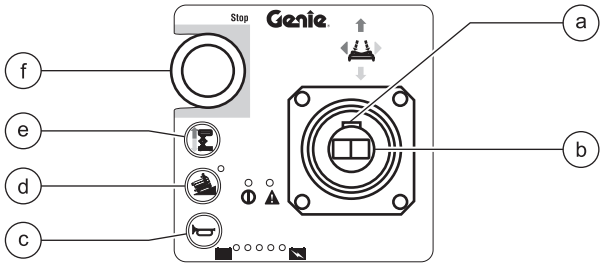

a function enable switch SW5
b joystick controller JC1 with thumb steering rocker SW6
c horn button BN5
d machine on incline button
e lift function enable button BN9
f red Emergency Stop button P2

4 Release the lift function enable and horn buttons.

5 Press and hold the lift function enable button.

⊙ Result: The diagnostic display will show the maximum lift speed percentage.

6 Use the steering thumb rocker switch on the joystick to increase or decrease the maximum lift speed percentage. Refer to Section 2, *Specifications*.

7 Turn the key switch to the off position.

NOTICE Any change in software settings will not take effect until the key switch is turned to the off position.

https://truckmanualshub.com/

Software revision C0 and higher:

1 Push in the red Emergency Stop button to the off position at the ground and platform controls. Turn the key switch to the off position.

2 Pull out the red Emergency Stop button to the on position at the ground and platform controls.

3 At the platform controls, press and hold the lift function select and horn buttons and turn the key switch to platform controls.

⊙ Result: The diagnostic display will show "PS."

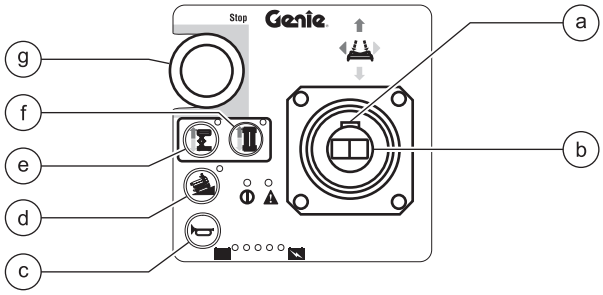

a function enable switch SW5
b joystick controller JC1 with thumb steering rocker SW6
c horn button BN5
d machine on incline button
e lift function select button BN9
f drive function select BN8
g red Emergency Stop button P2

4 Release the lift function select and horn buttons.

⊙ Result: The diagnostic display will show the maximum lift speed percentage.

5 Press the lift function select button.

6 Use the steering thumb rocker switch on the joystick to increase or decrease the maximum lift speed percentage. Refer to Section 2, *Specifications*.

7 Turn the key switch to the off position.

NOTICE Any change in software settings will not take effect until the key switch is turned to the off position.

https://truckmanualshub.com/

How to Adjust the Stowed Drive Speed

DANGER Tip-over hazard. Do not adjust the lift and/or drive speed higher than specified in this procedure. Setting the function speeds greater than specifications could cause the machine to tip over resulting in death or serious injury.

DANGER Tip-over hazard. This procedure must only be performed by a trained service professional. Attempting this procedure without the necessary skills will result in death or serious injury.

Software revision D0 and higher:

1 Push in the red Emergency Stop button to the off position at the ground and platform controls. Turn the key switch to the off position.

2 Pull out the red Emergency Stop button to the on position at the ground and platform controls.

3 Press and hold the lift function select and horn buttons and turn the key switch to platform controls.

⊙ Result: The diagnostic display will show "PS."

4 Release the lift function select and horn buttons.

⊙ Result: The diagnostic display will show the maximum lift speed percentage.

5 Press the drive function select button.

⊙ Result: The diagnostic display will show the stowed drive speed percentage.

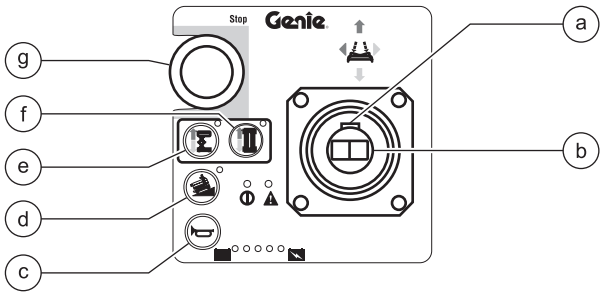

a function enable switch SW5
b joystick controller JC1 with thumb steering rocker SW6
c horn button BN5
d machine on incline button BN6
e lift function select button BN9
f drive function select BN8
g red Emergency Stop button P2

6 Use the steering thumb rocker switch on the joystick to increase or decrease the stowed drive speed percentage. Refer to Section 2, *Specifications*.

7 Turn the key switch to the off position.

NOTICE Any change in software settings will not take effect until the key switch is turned to the off position.

https://truckmanualshub.com/

How to Adjust the Raised Drive Speed

DANGER Tip-over hazard. Do not adjust the lift and/or drive speed higher than specified in this procedure. Setting the function speeds greater than specifications could cause the machine to tip over resulting in death or serious injury.

DANGER Tip-over hazard. This procedure must only be performed by a trained service professional. Attempting this procedure without the necessary skills will result in death or serious injury.

Software revision A0 and B0:

1 Push in the red Emergency Stop button to the off position at the ground and platform controls. Turn the key switch to the off position.

2 Pull out the red Emergency Stop button to the on position at the ground and platform controls.

3 Press and hold the lift function enable and horn buttons, and turn the key switch to platform controls.

⊙ Result: The diagnostic display will show "PS."

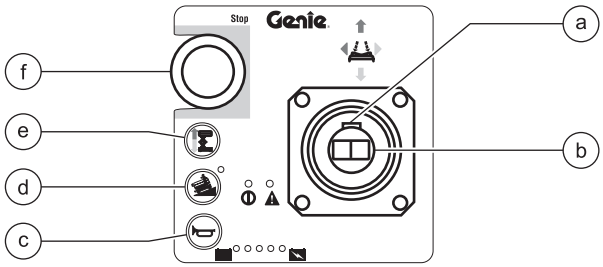

a function enable switch SW5
b joystick controller JC1 with thumb steering rocker SW6
c horn button BN5
d machine on incline button
e lift function enable button BN9
f red Emergency Stop button P2

4 Release the lift function enable and horn buttons.

5 Press and hold the horn button.

⊙ Result: The diagnostic display will show the raised drive speed percentage.

6 Use the steering thumb rocker switch on the joystick to increase or decrease the maximum raised drive speed percentage. Refer to Section 2, *Specifications*.

7 Turn the key switch to the off position.

NOTICE Any change in software settings will not take effect until the key switch is turned to the off position.

https://truckmanualshub.com/

PLATFORM CONTROLS REV B

Software revision C0:

1 Push in the red Emergency Stop button to the off position at the ground and platform controls. Turn the key switch to the off position.

2 Pull out the red Emergency Stop button to the on position at the ground and platform controls.

3 Press and hold the lift function select and horn buttons, and turn the key switch to platform controls.

⊙ Result: The diagnostic display will show "PS".

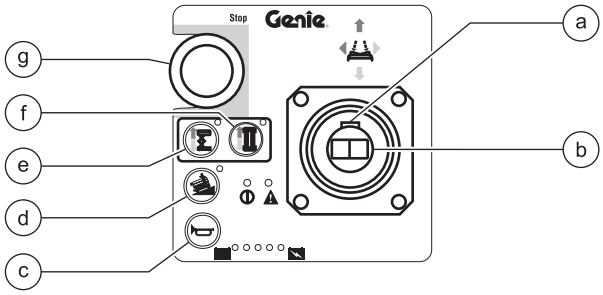

a function enable switch SW5
b joystick controller JC1 with thumb steering rocker SW6
c horn button BN5
d machine on incline button
e lift function select button BN9
f drive function select BN8
g red Emergency Stop button P2

4 Release the lift function select and horn buttons.

⊙ Result: The diagnostic display will show the maximum lift speed percentage.

5 Press the drive function select button.

⊙ Result: The diagnostic display will show "PS."

6 Press and hold the horn button.

⊙ Result: The diagnostic display will show the raised drive speed percentage.

7 Use the steering thumb rocker switch on the joystick to increase or decrease the maximum lift speed percentage. Refer to Section 2, *Specifications*.

8 Turn the key switch to the off position.

NOTICE Any change in software settings will not take effect until the key switch is turned to the off position.

https://truckmanualshub.com/

Software revision D0 and higher:

1 Push in the red Emergency Stop button to the off position at the ground and platform controls. Turn the key switch to the off position.

2 Pull out the red Emergency Stop button to the on position at the ground and platform controls.

3 Press and hold the lift function select and horn buttons, and turn the key switch to platform controls.

⊙ Result: The diagnostic display will show "PS."

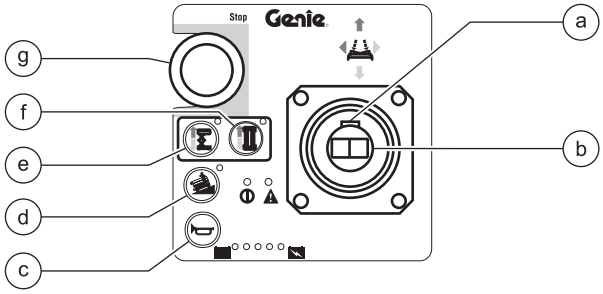

a function enable switch SW5
b joystick controller JC1 with thumb steering rocker SW6
c horn button BN5
d machine on incline button
e lift function select button BN9
f drive function select BN8
g red Emergency Stop button P2

4 Release the lift function select and horn buttons.

⊙ Result: The diagnostic display will show the maximum lift speed percentage.

5 Press and hold the horn button.

⊙ Result: The diagnostic display will show the raised drive speed percentage.

6 Use the steering thumb rocker switch on the joystick to increase or decrease the maximum lift speed percentage. Refer to Section 2, *Specifications*.

7 Turn the key switch to the off position.

NOTICE Any change in software settings will not take effect until the key switch is turned to the off position.

https://truckmanualshub.com/

1-4 Software Configuration

The ECM (Electronic Control Module) contains programming for all configurations of the Genie GS-1530 and GS-1930. The platform controls can be adjusted to a different configuration by changing the combination of the DIP switch settings. The DIP switch is located on the circuit board inside the platform control box.
DIP switches have two positions - ON or OFF. When reading the DIP switch code in the *DIP Switch Code Chart*, the ON and OFF are represented by the numbers 1 (ON) and 0 (OFF).

NOTICE Select a test area that is firm, level and free of obstructions.

How to Determine the DIP Switch Configuration

1 Remove the platform controls from the platform.

2 Place the platform controls close to the diagnostic display on the power unit side of the machine.

3 Turn the key switch to platform control and pull out the red Emergency Stop buttons to the on position at both the ground and platform controls.

4 Press and hold the lift function enable button OR press the lift function select button.

5 Slowly move the joystick in the direction indicated by the blue arrow.

⊙ Result: The DIP switch configuration will appear in the diagnostic display.

https://truckmanualshub.com/

How to Set the DIP Switch Codes

DANGER Tip-over hazard. Do not adjust the DIP switch settings to other than what is specified in this procedure. Exceeding specifications could cause the machine to tip over resulting in death or serious injury.

NOTICE If replacing the circuit board, note the toggle positions on the DIP switch. Set the DIP switch on the new circuit board to the same configuration as the old board.

1 Push in the red Emergency Stop button to the off position at the ground and platform controls. Turn the key switch to the off position.

2 Remove the fasteners securing the top of the platform controls and open the platform control box.

3 Rotate the platform control box to the position shown to correctly identify the configuration of the DIP switch settings.

4 Locate the DIP switch on the circuit board. Move the DIP switch settings to correspond with the configuration of the machine options, indicated in the *DIP Switch Code Chart*.

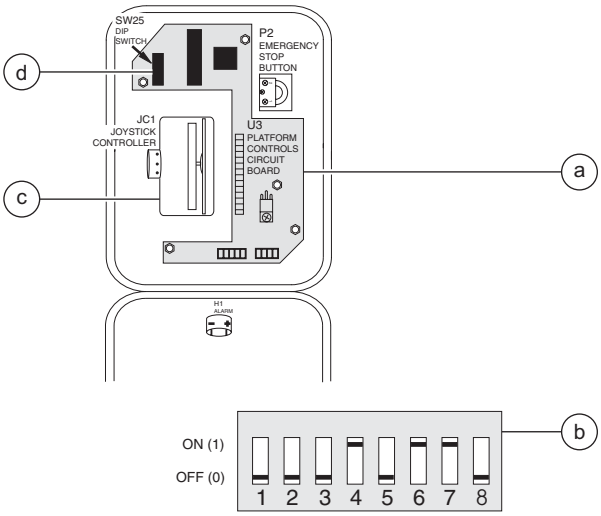

a platform controls circuit board U3
b enlarged view of DIP switch SW25
c joystick controller JC1
d DIP switch SW25

5 Close the lid and install the fasteners.

6 Confirm the settings. See 1-3, *How to Determine the DIP Switch Configuration*.

7 Push in the red Emergency Stop button to the off position at both the ground and platform controls and turn the key switch to the off position.

NOTICE Any change in DIP settings will not take effect until the key switch is turned to the off position.

https://truckmanualshub.com/

DIP Switch Code Chart

A mark in the column indicates that the machine configuration includes this option.

Diagnostic Display Code	DIP Switch Code	OFF for GS-30 models	Motion Beacon	Motion Alarm	Lift Drive Cut Out	Overload Cut Out	Descent Delay	Battery Drain Alarm	OFF for all models
00	00000000								
01	00000100						•		
02	00001000					•			
03	00010000				•				
04	00100000			•					
05	01000000		•						
06	00001100					•	•		
07	00010100				•		•		
08	00100100			•			•		
09	01000100		•				•		
10	00011100				•	•	•		
11	00101100			•		•	•		
12	01001100		•			•	•		
13	00110100			•	•		•		
14	01010100		•		•		•		
15	01100100		•	•			•		
16	00111100			•	•	•	•		
17	01011100		•		•	•	•		
18	01101100		•	•		•	•		
19	01110100		•	•	•		•		
20	01111100		•	•	•	•	•		
21	00011000				•	•			
22	00101000			•		•			
23	01001000		•			•			
24	00111000			•	•	•			
25	01011000		•		•	•			
26	01101000		•	•		•			
27	01111000		•	•	•	•			
28	00110000			•	•				
29	01010000		•		•				
30	01110000		•	•	•				
31	01100000		•	•					

DIP Switch Function Definitions

NOTICE If replacing the circuit board, note the toggle positions on the DIP switches. Set the DIP switches on the new circuit board to the same configuration of the old board.

Motion Beacon: The motion beacon option flashes only when operating a function.

Motion Alarm: The motion alarm will sound when operating any function.

Lift/Drive Cut Out: This cuts out lift and drive functions when the machine exceeds the rating on the serial plate. Required for Europe and Australia before serial number 48817. Installed on all machines after serial number 48816.

Overload: This cuts out all functions when the pressure sensor is overloaded. The Emergency Stop button must be cycled before any function can be resumed. Required for France.

Descent Delay: This option halts descent at approximately 7 feet / 2.1 m. All controls must be released for 4 to 6 seconds before descent is re-enabled. Required for Europe.

Battery Drain Alarm: When the machine is turned on and no function is activated for 10 minutes, the alarm will sound once every 3 seconds. This option can be activated by moving DIP switch 7 to position 1.

DIP Switch Legend

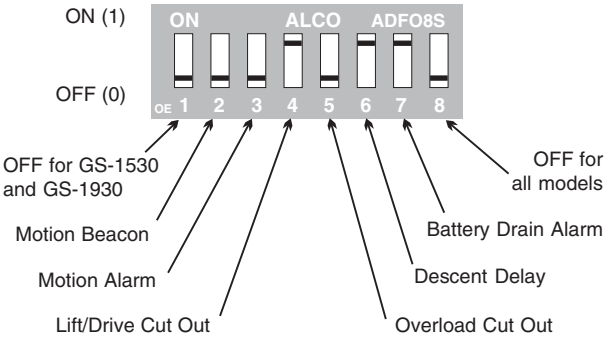

https://truckmanualshub.com/

DIP Switch Settings

Diagnostic display code 00

DIP switch code: 00000000
Options: None

Diagnostic display code 01

DIP switch code: 00000100
Options: descent delay

Diagnostic display code 02

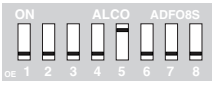

DIP switch code: 00001000
Options: overload cut out

Diagnostic display code 03

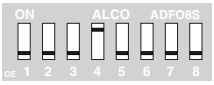

DIP switch code: 00010000
Options: lift drive cut out

Diagnostic display code 04

DIP switch code: 00100000
Options: motion alarm

Diagnostic display code 05

DIP switch code: 01000000
Options: motion beacon

Diagnostic display code 06

DIP switch code: 00001100
Options: overload cut out, descent delay

Diagnostic display code 07

DIP switch code: 00010100
Options: lift drive cut out, descent delay

Diagnostic display code 08

DIP switch code: 00100100
Options: motion alarm, descent delay

Diagnostic display code 09

DIP switch code: 01000100
Options: motion beacon, descent delay

Diagnostic display code 10

DIP switch code: 00011100
Options: lift drive cut out, overload cut out, descent delay

Diagnostic display code 11

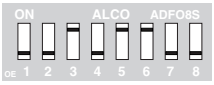

DIP switch code: 00101100
Options: motion alarm, overload cut out, descent delay

Diagnostic display code 12

DIP switch code: 01001100
Options: motion beacon, overload cut out, descent delay

Diagnostic display code 13

DIP switch code: 00110100
Options: motion alarm, lift drive cut out, descent delay

Diagnostic display code 14

DIP switch code: 01010100
Options: motion beacon, lift drive cut out, descent delay

Diagnostic display code 15

DIP switch code: 01100100
Options: motion beacon, motion alarm, descent delay

Diagnostic display code 16

DIP switch code: 00111100
Options: motion alarm, lift drive cut out, overload cut out, descent delay

Diagnostic display code 17

DIP switch code: 01011100
Options: motion beacon, lift drive cut out, overload cut out, descent delay

Diagnostic display code 18

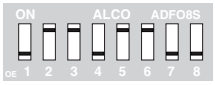

DIP switch code: 01101100
Options: motion beacon, motion alarm, overload cut out, descent delay

Diagnostic display code 19

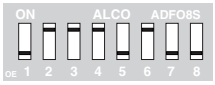

DIP switch code: 01110100
Options: motion beacon, motion alarm, lift drive cut out, descent delay

Diagnostic display code 20

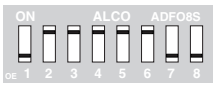

DIP switch code: 01111100
Options: motion beacon, motion alarm, lift drive cut out, overload cut out, descent delay

Diagnostic display code 21

DIP switch code: 00011000
Options: lift drive cut out, overload cut out

Diagnostic display code 22

DIP switch code: 00101000
Options: motion alarm, overload cut out

Diagnostic display code 23

DIP switch code: 01001000
Options: motion beacon, overload cut out

Diagnostic display code 24

DIP switch code: 00111000
Options: motion alarm, lift drive cut out, overload cut out

Diagnostic display code 25

DIP switch code: 01011000
Options: motion beacon, lift drive cut out, overload cut out

Diagnostic display code 26

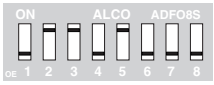

DIP switch code: 01101000
Options: motion beacon, motion alarm, overload cut out

Diagnostic display code 27

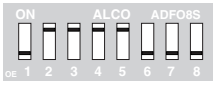

DIP switch code: 01111000
Options: motion beacon, motion alarm, lift drive cut out, overload cut out

Diagnostic display code 28

DIP switch code: 00110000
Options: motion alarm, lift drive cut out

Diagnostic display code 29

DIP switch code: 01010000
Options: motion beacon, lift drive cut out

Diagnostic display code 30

DIP switch code: 01110000
Options: motion beacon, motion alarm, lift drive cut out

Diagnostic display code 31

DIP switch code: 01100000
Options: motion beacon, motion alarm

https://truckmanualshub.com/

Platform Components

REV A

2-1 Platform

How to Remove the Platform

NOTICE Perform this procedure with the platform extension fully retracted and locked in position.

1 Lower the platform to the stowed position.

2 Disconnect the battery packs from the machine.

⚠WARNING Electrocution hazard. Contact with electrically charged circuits could cause death or serious injury. Remove all rings, watches and other jewelry.

3 Remove the retaining fastener securing the platform controls quick disconnect plug to the bottom of the platform.

4 Twist to disconnect the plug from the platform controls.

5 Remove the cover from the AC outlet. Label and disconnect the wiring from the outlet.

⚠WARNING Electrocution hazard. Contact with electrically charged circuits could result in death or serious injury. Remove all rings, watches and other jewelry.

6 Pull the wiring through the platform tube.

NOTICE If your machine is equipped with an air line to platform option, the air line must be disconnected from the platform before removal.

7 Support the platform with a forklift at the non-steer end. Do not apply any lifting pressure.

8 Attach a strap from the platform railings to the carriage on the forklift to help support the platform.

9 Remove the platform pivot pin retaining fasteners from the platform pivot pins at the steer end of the machine.

10 Use a slide hammer to remove the pins.

⚠WARNING Crushing hazard. The platform will fall if not properly supported.

11 Remove the plugs from the access holes in the side of the platform.

12 Lift the steer end of the platform slightly to clear the scissor arms and slide the platform towards the non-steer end of the machine until the non-steer end platform pivot pins are visible through the access holes in the side of the platform.

13 Remove the platform pivot pin retaining fasteners from the platform pivot pins at the non-steer end of the machine.

14 Use a slide hammer to remove the pins.

⚠WARNING Crushing hazard. The platform will fall if not properly supported.

15 Carefully lift the platform off of the machine and place it on a structure capable of supporting it.

NOTICE Note the position of the wear pads before the platform is removed so when the platform is installed they will be in the correct position.

https://truckmanualshub.com/

2-2 Platform Extension

How to Remove the Platform Extension

1 Lower the platform to the stowed position.

2 Extend the platform approximately 3 feet / 1 m.

3 Remove the platform controls from the platform and lay them off to the side of the machine.

4 Support the platform extension with a forklift at the steer end. Do not apply any lifting pressure.

5 Attach a strap from the platform extension railings to the carriage on the forklift to help support the platform extension.

6 Remove the two retaining fasteners from each platform extension roller bracket assembly. Remove each assembly from the machine.

NOTICE Do not remove the platform roller bolt.

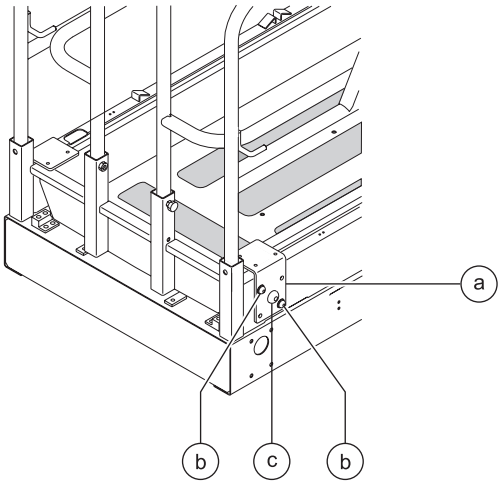

a roller bracket assembly
b assembly retaining fastener
c platform roller bolt

7 Remove the platform roller wheels from the machine.

8 Carefully slide the platform extension out from the platform and place it on a structure capable of supporting it.

How to Replace the Platform Extension Wear Pads

1 Remove the Platform Extension. See 2-2, *How to Remove the Platform Extension.*

2 Drill out the rivets which hold the wear pads in place.

3 Install the new wear pads using new rivets.

NOTICE When installing new rivets, make sure the rivet heads are not above the surface of the wear pad.

https://truckmanualshub.com/

Scissor Components

REV A

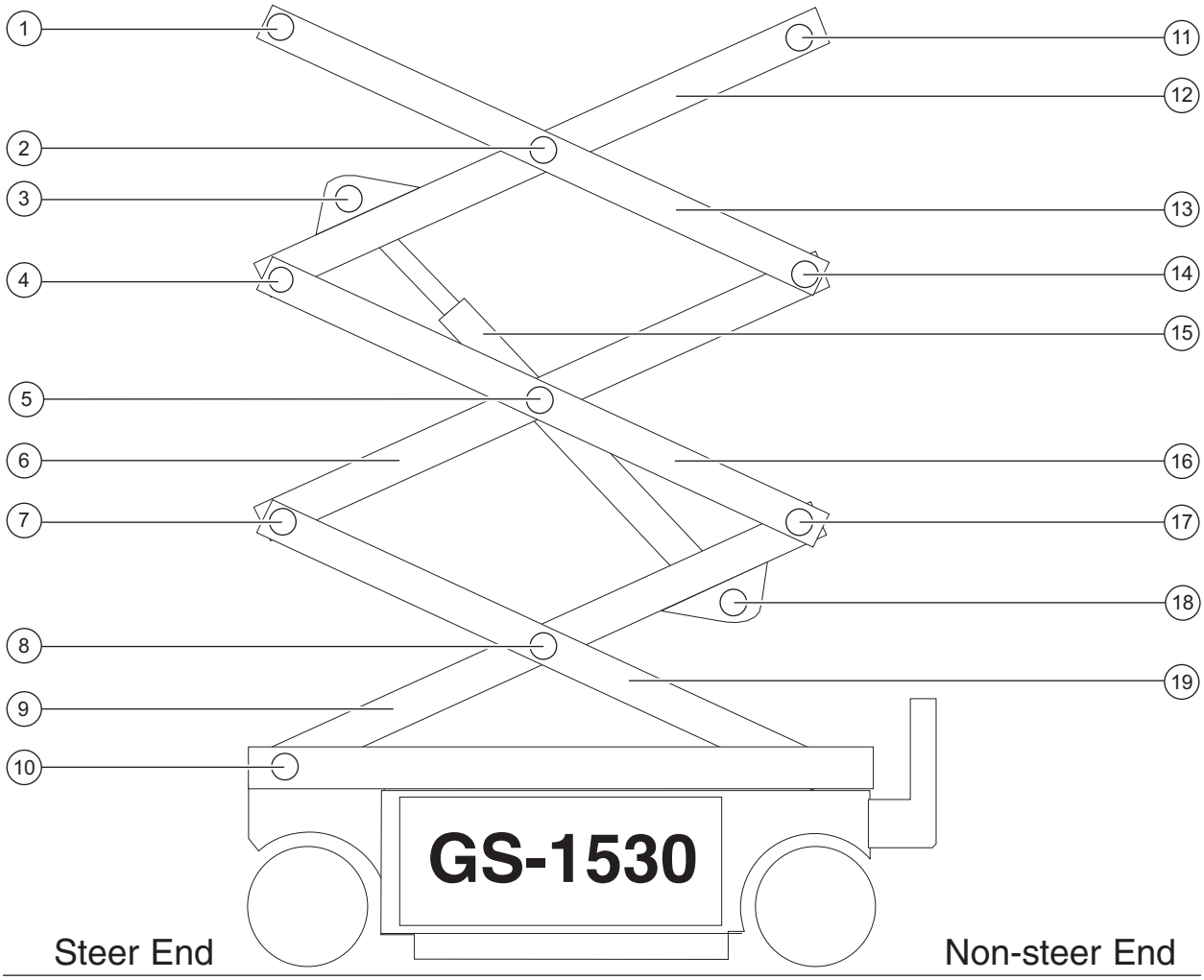

1 Number 4 pivot pin (steer end)
2 Number 3 center pivot pin
3 Lift cylinder rod-end pivot pin
4 Number 3 pivot pin (steer end)
5 Number 2 center pivot pin (2 pins)
6 Number 2 inner arm
7 Number 2 pivot pin (steer end)
8 Number 1 center pivot pin
9 Number 1 inner arm
10 Number 1 pivot pin (steer end) (2 pins)
11 Number 4 pivot pin (non-steer end)
12 Number 3 inner arm
13 Number 3 outer arm
14 Number 3 pivot pin (non-steer end)
15 Lift cylinder
16 Number 2 outer arm
17 Number 2 pivot pin (non-steer end)
18 Lift cylinder barrel-end pivot pin
19 Number 1 outer arm

https://truckmanualshub.com/

3-1 Scissor Assembly, GS-1530

How to Disassemble the Scissor Assembly, GS-1530

WARNING Bodily injury hazard. This procedure requires specific repair skills, lifting equipment and a suitable workshop. Attempting this procedure without these skills and tools could result in death or serious injury and significant component damage. Dealer service is required.

NOTICE When removing a hose assembly or fitting, the O-ring on the fitting and/or hose end must be replaced and then torqued to specification during installation. Refer to Section Two, *Hydraulic Hose and Fitting Torque Specifications.*

1 Remove the platform. See 2-1, *How to Remove the Platform.*

2 Remove the cables from the side of the number 3 outer arm (index #13) at the ground controls side.

CAUTION Component damage hazard. Cables can be damaged if they are kinked or pinched.

3 Attach a lifting strap from an overhead crane to the number 3 outer arm (index #13).

4 Remove the external snap rings from the number 3 center pivot pin (index #2).

5 Use a soft metal drift to remove the number 3 center pivot pin (index #2).

6 Remove the external snap rings from the number 3 pivot pin (index #14).

7 Use a soft metal drift to remove the number 3 pivot pin (index #14). Remove the number 3 outer arm (index #13) from the machine.

CAUTION Bodily injury hazard. The number 3 outer arm (index #13) may become unbalanced and fall if not properly supported when it is removed from the machine.

8 Remove the cable clamps from the number 3 inner arm (index #12).

9 Remove the mounting fasteners from the cable tray support at the steer end.

10 Remove the external snap rings from the number 2 center pivot pin (index #5) at the ground controls side. Do not remove the pin.

11 Slide the cable tray towards the battery pack side of the machine. Remove it from the machine and lay it off to the side.

CAUTION Component damage hazard. Cables can be damaged if they are kinked or pinched.

https://truckmanualshub.com/

12 Attach a lifting strap from an overhead crane to the lug on the rod end of the lift cylinder (index #15).

13 Remove the pin retaining fasteners from the cylinder rod-end pivot pin (index #3). Use a soft metal drift to remove the pin.

⚠CAUTION Bodily injury hazard. The cylinder may fall if not properly supported when the pin is removed.

14 Lower the lift cylinder (index #15) onto the number 1 center pivot pin (index #8).

15 Attach a lifting strap from an overhead crane to the number 3 inner arm (index #12).

16 Remove the external snap rings from the number 3 pivot pin (index #4).

17 Use a soft metal drift to remove the number 3 pivot pin (index #4). Remove the number 3 inner arm (index #12) from the machine.

⚠CAUTION Bodily injury hazard. The number 3 inner arm (index #12) may become unbalanced and fall if not properly supported when it is removed from the machine.

18 Attach a lifting strap from an overhead crane to the number 2 outer arm (index #16).

19 Remove the external snap rings from the number 2 center pivot pin (index #5) at the battery pack side of the machine.

20 Use a soft metal drift to remove both of the number 2 center pivot pins (index #5).

21 Remove the external snap rings from the number 2 pivot pin (index #17) at the non-steer end.

22 Use a soft metal drift to remove the number 2 pivot pin (index #17). Remove the number 2 outer arm (index #16) from the machine.

⚠CAUTION Bodily injury hazard. The number 2 outer arm (index #16) may become unbalanced and fall if not properly supported when it is removed from the machine.

23 Attach a lifting strap from an overhead crane to the number 2 inner arm (index #6).

24 Remove the external snap rings from the number 2 pivot pin (index #7).

25 Use a soft metal drift to remove the number 2 pivot pin (index #7). Remove the number 2 inner arm (index #6) from the machine.

⚠CAUTION Bodily injury hazard. The number 2 inner arm (index #6) may become unbalanced and fall if not properly supported when it is removed from the machine.

26 Remove the safety arm from the number 2 inner arm (index #6) that was just removed.

27 Attach a lifting strap from an overhead crane to the number 1 inner arm (index #9).

https://truckmanualshub.com/

28 Raise the number 1 inner arm (index #9) approximately 2 feet / 0.6 m and insert the safety arm between the number 1 inner arm (index #9) and the number 1 outer arm (index #19).

⚠CAUTION Bodily injury hazard. Keep hands clear of moving parts when lowering the scissor arms onto the safety arm.

29 Tag, disconnect and plug the hydraulic hose on the lift cylinder (index #15). Cap the fitting on the cylinder.

⚠WARNING Bodily injury hazard. Spraying hydraulic oil can penetrate and burn skin. Loosen hydraulic connections very slowly to allow the oil pressure to dissipate gradually. Do not allow oil to squirt or spray.

30 Tag and disconnect the wires and manual lowering cable from the solenoid valve on the cylinder.

31 Attach a lifting strap from an overhead crane to the lug on the rod end of the lift cylinder (index #15). Raise the lift cylinder to a vertical position.

32 Remove the pin retaining fasteners from the lift cylinder barrel-end pin (index #18). Use a soft metal drift to remove the pin. Remove the lift cylinder (index #15) from the machine.

⚠WARNING Crushing hazard. The lift cylinder (index #15) may become unbalanced and fall when it is removed from the machine if it is not properly attached to the overhead crane.

CAUTION Component damage hazard. Be careful not to damage the valve or fittings on the cylinder while removing it from the machine.

33 Place a 4 x 4 x 32 inch / 10 x 10 x 80 cm long block across both sides of the chassis under the number 1 center pivot pin (index #8).

34 Attach a lifting strap from an overhead crane to the number 1 inner arm (index #9). Raise the inner arm slightly and remove the safety arm. Lower the arms onto the block.

⚠CAUTION Bodily injury hazard. Keep hands clear of moving parts when lowering the arms onto the block.

35 Remove the cables from the number 1 inner arm (index #9) and lay them off to the side.

CAUTION Component damage hazard. Cables can be damaged if they are kinked or pinched.

36 Attach a lifting strap from an overhead crane to the number 1 outer arm (index #19). Do not lift it.

https://truckmanualshub.com/

37 Remove the external snap rings from the number 1 center pivot pin (index #8).

38 Use a soft metal drift to remove the number 1 center pivot pin (index #8).

CAUTION Bodily injury hazard. The number 1 outer arm (index #19) may become unbalanced and fall if not properly supported when the pin is removed.

39 Slide the number 1 outer arm (index #19) to the non-steer end and remove it from the machine.

CAUTION Bodily injury hazard. The number 1 outer arm (index #19) may become unbalanced and fall if not properly supported when it is removed from the machine.

NOTICE Note the position of the wear pads before the arm is removed so when the scissor assembly is installed they will be in the correct position.

40 Attach a lifting strap from an overhead crane to the number 1 inner arm (index #9). Do not apply any lifting pressure.

41 Remove the pin retaining fasteners from both of the number 1 pivot pins (index #10) at the steer end of the machine. Use a slide hammer to remove the pins.

42 Remove the number 1 inner arm (index #9) from the machine.

CAUTION Bodily injury hazard. The number 1 inner arm (index #9) may become unbalanced and fall if not properly supported when removed from the machine.

How to Replace the Scissor Arm Wear Pads

1 Remove the platform. See 2-1, *How to Remove the Platform.*

2 Remove the mounting fasteners from the stationary wear pads on the platform.

NOTICE Note the position of the wear pads before they are removed so when the new ones are installed they will be in the correct position.

3 Support and secure the entry ladder to an appropriate lifting device.

4 Remove the entry ladder mounting fasteners. Remove the entry ladder from the machine.

CAUTION Crushing hazard. The entry ladder may become unbalanced and fall if not properly supported and secured to the lifting device.

5 Raise the platform 6 to 7 feet / 1.8 to 2.1 m.

6 Lift the safety arm, move it to the center of the scissor arm and rotate down to a vertical position.

7 Lower the scissor arms onto the safety arm.

WARNING Crushing hazard. Keep hands clear of the safety arm when lowering the platform.

8 Mark the mounting position of the level sensor box on the drive chassis.

9 Remove the level sensor box cover.

https://truckmanualshub.com/

10 Mark the mounting position of the level sensor on the level sensor box.

11 Remove the level sensor box mounting fasteners and slide the box towards the non-steer end of the machine as far as it can go.

CAUTION Component damage hazard. Be careful not to damage the level sensor box, limit switch, level sensor or wiring while moving the level sensor box.

12 Secure the ends of the scissor arms together at both ends of the machine with a strap or other suitable device.

13 Remove the pin retaining fasteners from the number 1 inner arm pivot pins (item #11) at the steer end of the machine. Use a slide hammer to remove the pins.

14 Attach a lifting strap from an overhead crane to the steer end of the scissor arms.

15 Slide the forks from a forklift under the scissor arms at the non-steer end of the machine.

16 Raise the scissor arms up with the overhead crane until the number 1 inner arm will clear the level sensor box.

CAUTION Component damage hazard. Be careful not to damage the level sensor box, limit switch or level sensor while moving the scissor assembly.

17 Move the scissor assembly towards the non-steer end of the machine slightly and to one side of the machine until one of the scissor arm wear pads is accessible. Do not allow both wear pads to slide out of the drive chassis.

⚠ DANGER Crushing hazard. The scissor assembly will fall if both wear pads are allowed to slide out of the drive chassis.

18 Remove the old wear pad.

NOTICE Note the position of the wear pad before it is removed so when the new one is installed it will be in the correct position.

19 Install the new wear pad.

20 Move the scissor assembly towards the other side of the machine until the other scissor arm wear pad is accessible.

⚠ DANGER Crushing hazard. The scissor assembly will fall if both wear pads are allowed to slide out of the drive chassis.

21 Remove the old wear pad.

NOTICE Note the position of the wear pad before it is removed so when the new one is installed it will be in the correct position.

22 Install the new wear pad.

23 Slide the scissor assembly back into the drive chassis.

24 Lower the scissor assembly into position and install the pivot pins.

CAUTION Component damage hazard. Be careful not to damage the level sensor box, limit switch or level sensor while installing the scissor assembly.

https://truckmanualshub.com/

SCISSOR COMPONENTS REV A

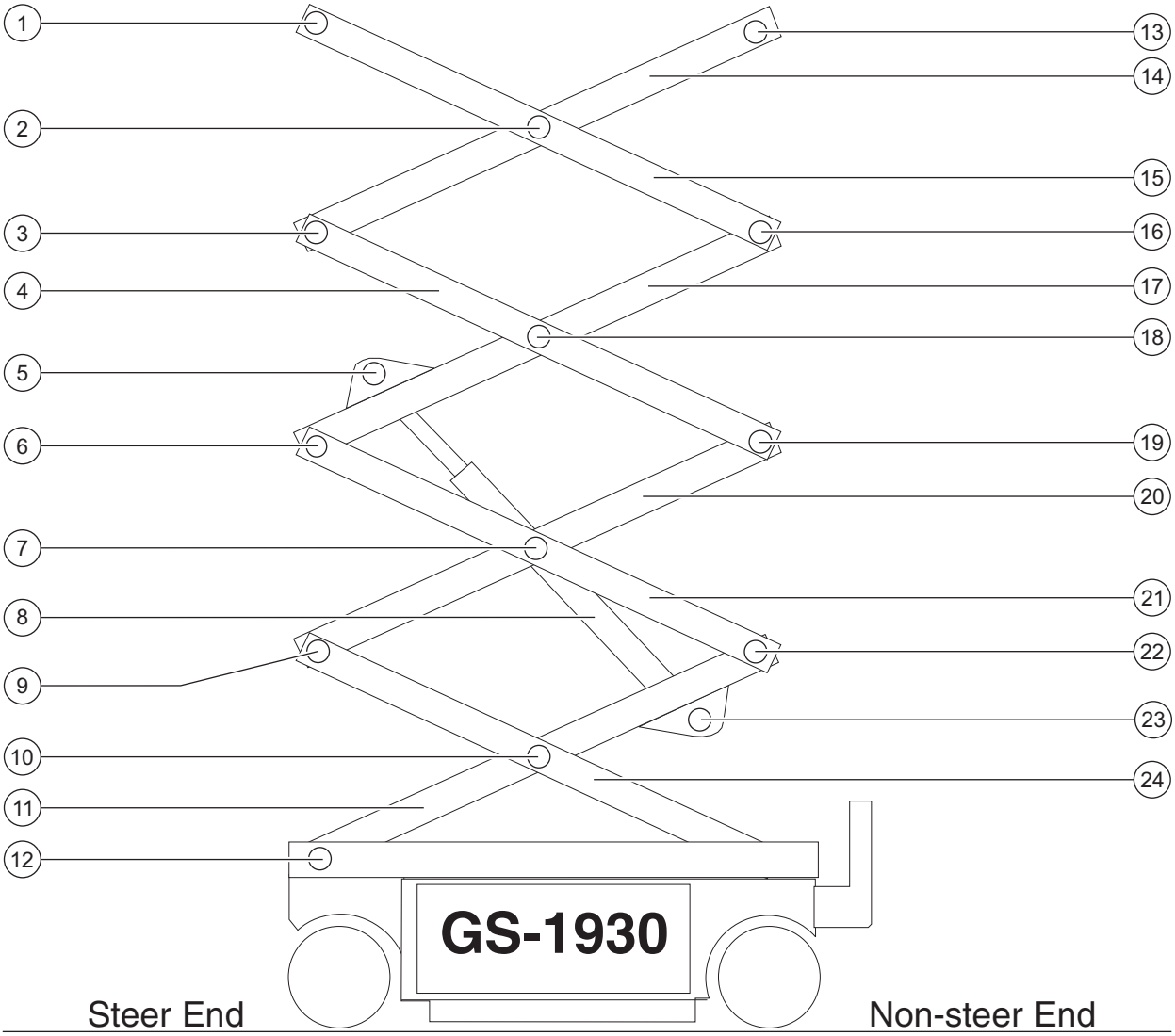

1 Number 5 pivot pin (steer end)
2 Number 4 center pivot pin
3 Number 4 pivot pin (steer end)
4 Number 3 outer arm
5 Lift cylinder rod-end pivot pin
6 Number 3 pivot pin (steer end)
7 Number 2 center pivot pin (2 pins)
8 Lift cylinder
9 Number 2 pivot pin (steer end)
10 Number 1 center pivot pin
11 Number 1 inner arm
12 Number 1 pivot pin (steer end) (2 pins)
13 Number 5 pivot pin (non-steer end)
14 Number 4 inner arm
15 Number 4 outer arm
16 Number 4 pivot pin (non-steer end)
17 Number 3 inner arm
18 Number 3 center pivot pin
19 Number 3 pivot pin (non-steer end)
20 Number 2 inner arm
21 Number 2 outer arm
22 Number 2 pivot pin (non-steer end)
23 Lift cylinder barrel-end pivot pin
24 Number 1 outer arm

https://truckmanualshub.com/

3-2 Scissor Assembly, GS-1930

How to Disassemble the Scissor Assembly, GS-1930

WARNING Bodily injury hazard. The procedures in this section require specific repair skills, lifting equipment and a suitable workshop. Attempting this procedure without these skills and tools could result in death or serious injury and significant component damage. Dealer service is required.

NOTICE When removing a hose assembly or fitting, the O-ring on the fitting and/or hose end must be replaced and then torqued to specification during installation. Refer to Section Two, *Hydraulic Hose and Fitting Torque Specifications.*

1 Remove the platform. See 2-1, *How to Remove the Platform.*

2 Remove the cables from the side of the number 4 outer arm (index #15) at the ground controls side.

CAUTION Component damage hazard. Cables can be damaged if they are kinked or pinched.

3 Attach a lifting strap from an overhead crane to the number 4 outer arm (index #15).

4 Remove the external snap rings from the number 4 center pivot pin (index #2).

5 Use a soft metal drift to remove the number 4 center pivot pin (index #2).

6 Remove the external snap ring from the number 4 pivot pin (index #16) at the non-steer end of the machine.

7 Use a soft metal drift to remove the number 4 pivot pin (index #16) from the non-steer end of the machine. Remove the number 4 outer arm (index #15) from the machine.

CAUTION Crushing hazard. The number 4 outer arm (index #15) may become unbalanced and fall if not properly supported when it is removed from the machine.

8 Remove the cables from the upper cable tray and lay them off to the side.

CAUTION Component damage hazard. Cables can be damaged if they are kinked or pinched.

9 Remove the mounting fasteners from the upper cable tray supports.

10 Remove the upper cable tray from the scissor assembly.

11 Attach a lifting strap from an overhead crane to the number 4 inner arm (index #14).

12 Remove the external snap rings from the number 4 pivot pin (index #3).

https://truckmanualshub.com/

13 Use a soft metal drift to remove the number 4 pivot pin (index #3) at the steer end. Remove the number 4 inner arm (index #14) from the machine.

⚠CAUTION Crushing hazard. The number 4 inner arm (index #14) may become unbalanced and fall if not properly supported when it is removed from the machine.

14 Attach a lifting strap from an overhead crane to the number 3 outer arm (index #4) at the ground controls side.

15 Remove the external snap rings from the number 3 center pivot pin (index #18).

16 Use a soft metal drift to remove the number 3 center pivot pin (index #18).

17 Remove the external snap rings from the number 3 pivot pin (index #19) at the non-steer end of the machine. Do not remove the pin.

18 Use a soft metal drift to tap the number 3 pivot pin (index #19) halfway out at the non-steer end of the machine. Remove the number 3 outer arm (index #4) at the ground controls side from the machine.

⚠CAUTION Bodily injury hazard. The number 3 outer arm (index #4) at the ground controls side may become unbalanced and fall if not properly supported when it is removed from the machine.

19 Attach a lifting strap from an overhead crane to the number 3 outer arm (index #4) at the battery pack side.

20 Use a soft metal drift to tap the number 3 pivot pin (index #19) in the other direction. Remove the number 3 outer arm (index #4) from the battery pack side of the machine.

⚠CAUTION Bodily injury hazard. The number 3 outer arm (index #4) at the battery pack side may become unbalanced and fall if not properly supported when it is removed from the machine.

21 Remove the number 3 pivot pin (index #19) from the non-steer end of the machine.

22 Attach a lifting strap from an overhead crane to the lug on the rod end of the lift cylinder for support. Do not apply any lifting pressure.

23 Remove the pin retaining fasteners from the lift cylinder rod-end pivot pin (index #5). Use a soft metal drift to remove the pin.

⚠CAUTION Bodily injury hazard. The cylinder may fall when the rod-end pivot pin is removed if not properly supported.

24 Lower the cylinder onto the number 1 center pivot pin (index #10).

25 Remove the cables from the number 3 inner arm (index #17) and lay them to the side.

26 Attach a lifting strap from an overhead crane to the number 3 inner arm (index #17).

27 Remove the external snap rings from the number 3 pivot pin (index #6) at the steer end.

https://truckmanualshub.com/

28 Use a soft metal drift to remove the number 3 pivot pin (index #6). Remove the number 3 inner arm (index #17) from the machine.

⚠CAUTION Bodily injury hazard. The number 3 inner arm (index #17) may become unbalanced and fall if not properly supported when it is removed from the machine.

29 Remove the cables from the lower cable tray and lay them off to the side.

CAUTION Component damage hazard. Cables can be damaged if they are kinked or pinched.

30 Remove the mounting fasteners from the lower cable tray supports.

31 Remove the mounting fasteners from the lower cable tray mounting bracket on the number 2 center pivot pin (index #7) at the ground controls side of the machine.

32 Slide the cable tray towards the battery pack side of the machine and remove it from the machine.

33 Attach a lifting strap from an overhead crane to the number 2 outer arm (index #21) at the ground controls side.

34 Remove the external snap rings from the number 2 center pivot pin (index #7) at the ground controls side.

35 Use a soft metal drift to remove the number 2 center pivot pin (index #7) at the ground controls side.

36 Use a soft metal drift to tap the number 2 pivot pin (index #22) halfway out at the non-steer end of the machine. Remove the number 2 outer arm (index #21) from the ground controls side of the machine.

⚠CAUTION Bodily injury hazard. The number 2 outer arm (index #21) at the ground controls side may become unbalanced and fall if not properly supported when it is removed from the machine.

37 Attach a lifting strap from an overhead crane to the number 2 outer arm (index #21) at the battery pack side.

38 Remove the external snap rings from the number 2 center pivot pin (index #7) at the battery pack side.

39 Use a soft metal drift to remove the number 2 center pivot pin (index #7) at the battery pack side.

⚠CAUTION Bodily injury hazard. The number 2 outer arm (index #21) at the battery pack side may become unbalanced and fall if not properly supported when it is removed from the machine.

https://truckmanualshub.com/

40 Use a soft metal drift to tap the number 2 pivot pin (index #22) in the other direction at the non-steer end. Remove the number 2 outer arm (index #21) from the battery pack side of the machine.

⚠CAUTION Bodily injury hazard. The number 2 outer arm (index #21) at the battery pack side may become unbalanced and fall if not properly supported when it is removed from the machine.

41 Attach a lifting strap from an overhead crane to the number 2 inner arm (index #20).

42 Remove the external snap rings from the number 2 pivot pin (index #9) at the steer end of the machine.

43 Use a soft metal drift to remove the number 2 pivot pin (index #9). Remove the number 2 inner arm (index #20) from the machine.

⚠CAUTION Bodily injury hazard. The number 2 inner arm (index #20) may become unbalanced and fall if not properly supported when it is removed from the machine.

44 Remove the safety arm from the number 2 inner arm (index #20) that was just removed.

45 Attach a lifting strap from an overhead crane to the number 1 inner arm (index #11).

46 Raise the number 1 inner arm (index #11) approximately 2 feet / 60 cm and install the safety arm between the number 1 inner arm (index #11) and the number 1 outer arm (index #24). Lower the scissor arms onto the safety arm.

⚠CAUTION Bodily injury hazard. Keep hands clear of moving parts when lowering the scissor arms onto the safety arm.

47 Tag, disconnect and plug the hydraulic hose on the lift cylinder. Cap the fitting on the cylinder.

⚠WARNING Bodily injury hazard. Spraying hydraulic oil can penetrate and burn skin. Loosen hydraulic connections very slowly to allow the oil pressure to dissipate gradually. Do not allow oil to squirt or spray.

48 Tag and disconnect the wires and manual lowering cable from the solenoid valve on the cylinder.

49 Attach a lifting strap from an overhead crane to the lug on the rod end of the lift cylinder (index #8). Raise the lift cylinder to a vertical position.

https://truckmanualshub.com/

50 Remove the pin retaining fasteners from the lift cylinder barrel-end pin (index #23). Use a soft metal drift to remove the pin. Remove the lift cylinder (index #8) from the machine.

⚠WARNING Crushing hazard. The lift cylinder (index #8) may become unbalanced and fall when it is removed from the machine if not properly attached to the overhead crane.

CAUTION Component damage hazard. Be careful not to damage the valve or fittings on the cylinder while removing it from the machine.

51 Place a 4 x 4 x 48 inch / 10 cm x 10 cm x 1.2 m long block across both sides of the chassis under the number 1 center pivot pin (index #10).

52 Attach a lifting strap from an overhead crane to the number 1 inner arm (index #11) at the non-steer end. Raise the number 1 inner arm and remove the safety arm. Lower the number 1 inner arm (index #11) onto the block that was placed across the chassis.

⚠CAUTION Bodily injury hazard. Keep hands clear of moving parts when lowering the arms onto the block.

53 Remove the cables and hydraulic hoses from the number 1 inner arm (index #11) and lay them to the side.

CAUTION Component damage hazard. Cables and hoses can be damaged if they are kinked or pinched.

54 Support and secure the entry ladder to an appropriate lifting device.

55 Remove the entry ladder mounting fasteners. Remove the entry ladder from the machine.

⚠CAUTION Crushing hazard. The entry ladder may become unbalanced and fall if not properly supported and secured to the lifting device.

56 Attach a lifting strap from an overhead crane to the number 1 outer arm (index #24). Do not apply any lifting pressure.

57 Remove the external snap rings from the number 1 center pivot pin (index #10).

58 Use a soft metal drift to remove the number 1 center pivot pin (index #10).

⚠CAUTION Bodily injury hazard. The number 1 outer arm (index #24) may become unbalanced and fall if not properly supported when the pin is removed.

59 Slide the number 1 outer arm (index #24) to the non-steer end and remove it from the machine.

⚠CAUTION Bodily injury hazard. The number 1 outer arm (index #24) may become unbalanced and fall if not properly supported when it is removed from the machine.

NOTICE Note the position of the wear pads before the arm is removed so when the scissor is assembled they will be in the correct position.

https://truckmanualshub.com/

60 Attach the strap from an overhead crane to the number 1 inner arm (index #11). Do not lift it.

61 Remove the pin retaining fasteners from both of the number 1 pivot pins (index #12) at the steer end of the machine. Use a slide hammer to remove the pins.

62 Remove the number 1 inner arm (index #11) from the machine.

⚠CAUTION Bodily injury hazard. The number 1 inner arm (index #11) may become unbalanced and fall if not properly supported when it is removed from the machine.

CAUTION Component damage hazard. Be sure not to damage the limit switch or level sensor box components when the number 1 inner arm (index #11) is removed from the machine.

How to Replace the Scissor Arm Wear Pads

1 Remove the platform. See 2-1, *How to Remove the Platform.*

2 Remove the mounting fasteners from the stationary wear pads on the platform.

NOTICE Note the position of the wear pads before they are removed so when the new ones are installed they will be in the correct position.

3 Support and secure the entry ladder to an appropriate lifting device.

4 Remove the entry ladder mounting fasteners. Remove the entry ladder from the machine.

⚠CAUTION Crushing hazard. The entry ladder may become unbalanced and fall if not properly supported and secured to the lifting device.

5 Raise the platform 6 to 7 feet / 1.8 to 2.1 m.

6 Lift the safety arm, move it to the center of the scissor arm and rotate down to a vertical position.

7 Lower the scissor arms onto the safety arm.

⚠WARNING Crushing hazard. Keep hands clear of the safety arm when lowering the platform.

8 Mark the mounting position of the level sensor box on the drive chassis.

9 Remove the level sensor box cover.

10 Mark the mounting position of the level sensor on the level sensor box.

https://truckmanualshub.com/

11 Remove the level sensor box mounting fasteners and slide the box towards the non-steer end of the machine as far as it can go.

CAUTION Component damage hazard. Be careful not to damage the level sensor box, limit switch, level sensor or wiring while moving the level sensor box.

12 Secure the ends of the scissor arms together at both ends of the machine with a strap or other suitable device.

13 Remove the pin retaining fasteners from the number 1 inner arm pivot pins (item #11) at the steer end of the machine. Use a slide hammer to remove the pins.

14 Attach a lifting strap from an overhead crane to the steer end of the scissor arms.

15 Slide the forks from a forklift under the scissor arms at the non-steer end of the machine.

16 Raise the scissor arms up with the overhead crane until the number 1 inner arm will clear the level sensor box.

CAUTION Component damage hazard. Be careful not to damage the level sensor box, limit switch or level sensor while moving the scissor assembly.

17 Move the scissor assembly towards the non-steer end of the machine slightly and to one side of the machine until one of the scissor arm wear pads is accessible. Do not allow both wear pads to slide out of the drive chassis.

⚠ DANGER Crushing hazard. The scissor assembly will fall if both wear pads are allowed to slide out of the drive chassis.

18 Remove the old wear pad.

NOTICE Note the position of the wear pad before it is removed so when the new one is installed it will be in the correct position.

19 Install the new wear pad.

20 Move the scissor assembly towards the other side of the machine until the other scissor arm wear pad is accessible.

⚠ DANGER Crushing hazard. The scissor assembly will fall if both wear pads are allowed to slide out of the drive chassis.

21 Remove the old wear pad.

NOTICE Note the position of the wear pad before it is removed so when the new one is installed it will be in the correct position.

22 Install the new wear pad.

23 Slide the scissor assembly back into the drive chassis.

24 Lower the scissor assembly into position and install the pivot pins.

CAUTION Component damage hazard. Be careful not to damage the level sensor box, limit switch or level sensor while installing the scissor assembly.

https://truckmanualshub.com/

3-3
Lift Cylinder

How to Remove the Lift Cylinder

WARNING Bodily injury hazard. This procedure requires specific repair skills, lifting equipment and a suitable workshop. Attempting this procedure without these skills and tools could result in death or serious injury and significant component damage. Dealer service is strongly recommended.

NOTICE When removing a hose assembly or fitting, the O-ring on the fitting and/or hose end must be replaced and then torqued to specification during installation. Refer to Section 2, *Hydraulic Hose and Fitting Torque Specifications.*

1 Raise the platform 7 to 8 feet / 2.1 to 2.4 m.

2 Lift the safety arm, move it to the center of the scissor arm and rotate down to a vertical position.

3 Lower the platform onto the safety arm.

WARNING Crushing hazard. Keep hands clear of the safety arm when lowering the platform.

4 Tag and disconnect the wiring from the solenoid valve at the barrel end of the lift cylinder.

Before serial number 23568

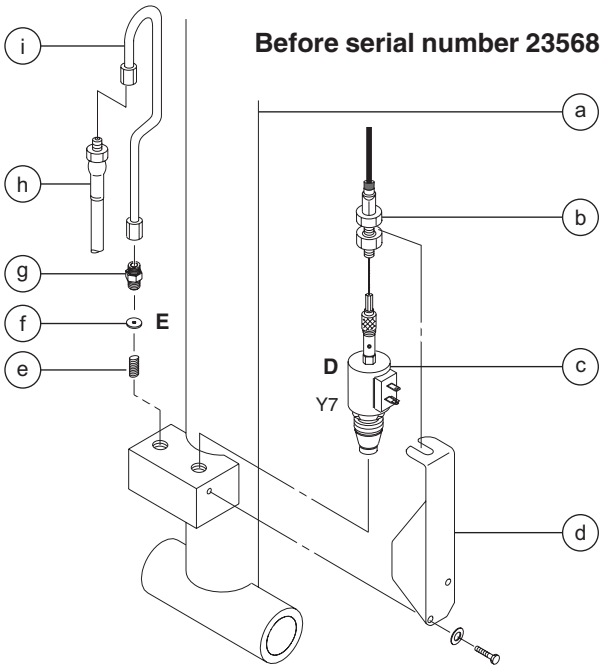

a lift cylinder
b lowering cable
c solenoid valve (schematic item D)
d cable mounting bracket
e spring
f orifice (schematic item E)
g connector fitting
h hydraulic hose
i hard line assembly

After serial number 23567

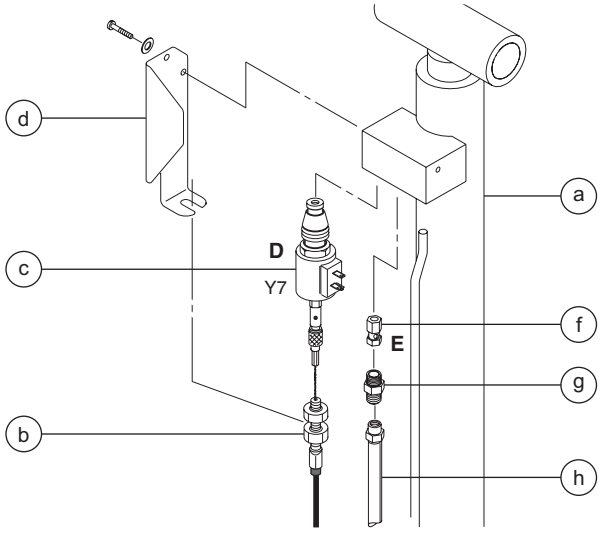

https://truckmanualshub.com/

5 Loosen the adjustment nuts on the solenoid, then disconnect the manual lowering cable from the solenoid.

NOTICE During assembly, the manual platform lowering cable needs to be properly adjusted. See 4-1, *How to Adjust the Manual Platform Lowering Cable*.

6 Remove the mounting fasteners from the manual lowering cable mounting bracket. Remove the bracket from the cylinder.

7 **Before serial number 23568:** Disconnect and plug the hydraulic hardline from the lift cylinder. Cap the fitting on the cylinder.
After serial number 23567: Disconnect and plug the hydraulic hose from the lift cylinder. Cap the fitting on the cylinder.

⚠WARNING Bodily injury hazard. Spraying hydraulic oil can penetrate and burn skin. Loosen hydraulic connections very slowly to allow the oil pressure to dissipate gradually. Do not allow oil to squirt or spray.

8 **Before serial number 23568:** Remove the hardline retaining strap from the cylinder.

9 Attach a lifting strap from an overhead crane to the rod end of the lift cylinder for support.

10 Remove the external snap ring from the lift cylinder rod-end pivot pin. Use a soft metal drift to remove the pin.

⚠WARNING Crushing hazard. The lift cylinder will fall if not properly supported.

CAUTION Component damage hazard. Be careful not to damage the level sensor box, limit switch or level sensor while lowering the cylinder.

11 Lower the cylinder.

12 Support and secure the entry ladder to an appropriate lifting device.

13 Remove the fasteners from the entry ladder and remove the entry ladder from the machine.

⚠WARNING Crushing hazard. The entry ladder could become unbalanced and fall if not properly supported and secured to the lifting device.

14 Attach a lifting strap from an overhead crane or similar lifting device to the barrel end of the lift cylinder for support.

15 Remove the external snap ring from the lift cylinder barrel-end pivot pin. Use a soft metal drift to remove the pin.

⚠WARNING Crushing hazard. The lift cylinder will fall if not properly supported when the pin is removed.

16 Support and secure the lift cylinder to an appropriate lifting device.

17 Remove the lift cylinder through the scissor arms at the non-steer end of the machine.

CAUTION Component damage hazard. Be careful not to damage the valve or fittings on the cylinder while removing it from the machine.

https://truckmanualshub.com/

Ground Controls

REV B

4-1
Manual Platform Lowering Cable

The manual platform lowering cable lowers the platform in the event of a main power failure. The manual platform lowering cable is attached to the barrel end of the lift cylinder and is activated next to the ground controls.

How to Adjust the Manual Platform Lowering Cable

1 Raise the platform 7 to 8 feet / 2.1 to 2.4 m.

2 Lift the safety arm, move it to the center of the scissor arm and rotate down to a vertical position.

3 Lower the platform onto the safety arm.

⚠WARNING Crushing hazard. Keep hands clear of the safety arm when lowering the platform.

4 Push the handle on the manual platform lowering cable all the way in.

5 Disconnect the cable mounting nut from the lowering valve at the barrel end of the lift cylinder.

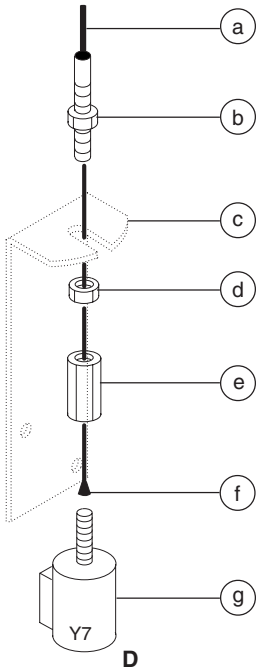

a manual lowering cable sheath
b upper lock nut
c cable mounting bracket
d lower lock nut
e cable mounting nut
f end of the lowering cable
g manual lowering valve (schematic item D)

6 Pull the cable tight and measure the distance between the end of the lowering cable and the end of the lowering valve.

⊙ Result: The measurement should be 3/16 to 1/4 inch / 4.7 to 6.4 mm.

Platform manual lowering cable specification	
Gap, lowering cable to valve	3/16 to 1/4 inch 4.7 to 6.4 mm

Skip to step 10 if the measurement is correct.

https://truckmanualshub.com/

7 To adjust, loosen the upper lock nut on the cable mounting bracket. Turn the lower lock nut clockwise to decrease the distance or counterclockwise to increase the distance.

8 Tighten the upper lock nut and re-measure the distance between the end of the lowering cable and the end of the lowering valve. Re-adjust if needed.

9 Install the cable mounting nut onto the lowering valve.

10 Raise the platform and rotate the safety arm to the stowed position.

11 Pull the manual lowering handle at the ground controls 2 to 3 times to ensure it is functioning correctly.

https://truckmanualshub.com/

4-2 Toggle Switches

Toggle switches used for single function switching are single pole double throw (SPDT) switches.

How to Test a Single Pole Double Throw Toggle Switch

NOTICE Continuity is the equivalent of 0 to 3 ohms. A simple continuity tester may not accurately test the switch.

This procedure covers fundamental switch testing and does not specifically apply to all varieties of toggle switches.

1 Turn the key switch to the OFF position. Tag and disconnect all wiring from the toggle switch to be tested.

NOTICE Disconnect the wires from the toggle switch before testing.

2 Connect the leads of an ohmmeter to the switch terminals in the following combinations listed below to check for continuity.

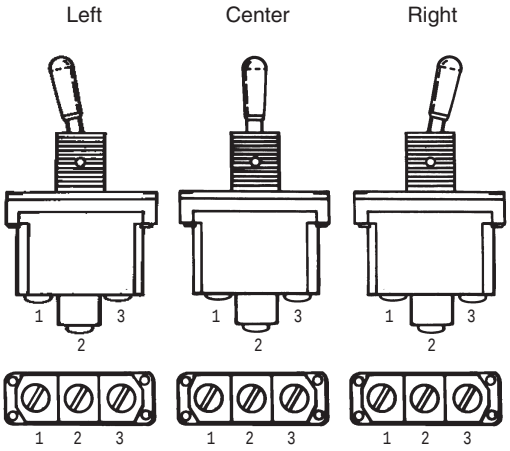

Test	Desired result
Left position	
terminal 1 to 2, 3	no continuity (infinite Ω)
terminal 2 to 3	continuity (zero Ω)
Center position	There are no terminal combinations that will produce continuity (infinite **W**)
Right position	
terminal 1 to 2	continuity (zero Ω)
terminal 1 to 3	no continuity (infinite Ω)
terminal 2 to 3	no continuity

https://truckmanualshub.com/

4-3 Control Relays

Relays used for single function switching are single pole double throw (SPDT) relays.

How to Test a Single Pole Double Throw Relay

⚠WARNING Electrocution hazard. Contact with electrically charged circuits could cause death or serious injury. Remove all rings, watches and other jewelry.

1 Label and then disconnect all the wiring from the relay to be tested.

2 Connect the leads from an ohmmeter or continuity tester to each terminal combination and check for continuity. Terminals 85 and 86 represent the coil and should not be tested in any other combination.

Test	Desired result
terminal 85 to 86 with resistor	310 to 330Ω
terminal 87 to 87a and 30	no continuity (infinite Ω)
terminal 87a to 30	continuity (zero Ω)

3 Connect 24V DC and a ground wire to terminals 85 and 86, then test the following terminal combinations.

Test	Desired result
terminal 87a to 87 and 30	no continuity (infinite Ω)
terminal 87 to 30	continuity (zero Ω)

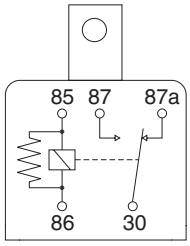

Relay schematic - deactivated

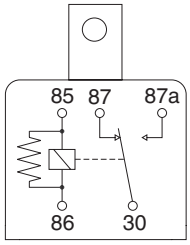

Relay schematic - activated

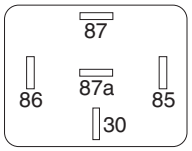

Terminal Number Legend
- terminal no. 87a - N.C.
- terminal no. 85 - ground
- terminal no. 30 - common
- terminal no. 86 - coil
- terminal no. 87 - N.O.

https://truckmanualshub.com/

4-4 Tilt Level Sensor (before serial number 50444)

How to Install and Calibrate the 1.5° Level Sensor

This procedure is for models equipped with a 1.5° side / 3° front / 5° rear level sensor.

Type	Serial range
GS-1530 Australia	from 24998 to 50443
GS-1930 ANSI, CSA	from 24998 to 50443
GS-1930 Australia	from 48338 to 50443
GS-1932 (Australia outdoor)	before 50444

DANGER Tip-over hazard. Failure to install or calibrate the tilt level sensor as instructed will compromise machine stability and cause the machine to tip over, resulting in death or serious injury. Do not install or calibrate the level sensor other than specified in this procedure.

NOTICE Perform this procedure with the machine on a firm, level surface that is free of obstructions.

1 Remove the platform controls from the platform.

2 Turn the key switch to platform control and pull out the red Emergency Stop buttons to the ON position at both the ground and platform controls.

3 Block the wheels at the non-steer end of the machine.

4 Center a lifting jack under the drive chassis at the steer end of the machine.

5 Raise the machine approximately 2 inches / 5 cm.

6 Place a 0.91 x 6 x 6 inch / 23.1 mm x 15 cm x 15 cm thick steel block under both wheels at the steer end of the machine.

7 Lower the machine onto the blocks.

8 Raise the platform 7 to 8 feet / 2.1 to 2.4 m.

9 Lift the safety arm, move it to the center of the scissor arm and rotate down to a vertical position.

10 Lower the platform onto the safety arm.

WARNING Crushing hazard. Keep hands clear of the safety arm when lowering the platform.

11 Remove the tilt level sensor box cover retaining fasteners. Remove the cover.

NOTICE The tilt level sensor box is located on top of the chassis at the steer end of the machine.

If you are not installing a new level sensor, proceed to step 20.

12 Turn the key switch to the OFF position and push in the red Emergency Stop button to the OFF position at the ground controls.

13 Tag and disconnect the wiring harness from the level sensor, limit switch and alarm.

https://truckmanualshub.com/

14 Remove the tilt level sensor box retaining fasteners. Remove the tilt level sensor box from the machine.

15 Remove the tilt level sensor retaining fasteners. Remove the tilt level sensor from the level sensor box.

16 Place the new tilt level sensor in the tilt level sensor box with the "X" on the level sensor base closest to the long side of the tilt level sensor box and the "Y" on the level sensor base closest to the short side of the tilt level sensor box. Install the level sensor retaining fasteners.

DANGER Tip-over hazard. The tilt level sensor must be installed with the "X" on the level sensor base closest to the long side of the tilt level sensor box and the "Y" on the level sensor base closest to the short side of the tilt level sensor box. Failure to install the tilt level sensor as instructed could cause the machine to tip over resulting in death or serious injury.

17 Install the level sensor box onto the machine. Install the level sensor box retaining fasteners.

18 Connect the wiring harness to the level sensor, limit switch and alarm.

19 Turn the key switch to the ground control and pull out the red Emergency Stop button to the ON position at the ground controls.

Steer end

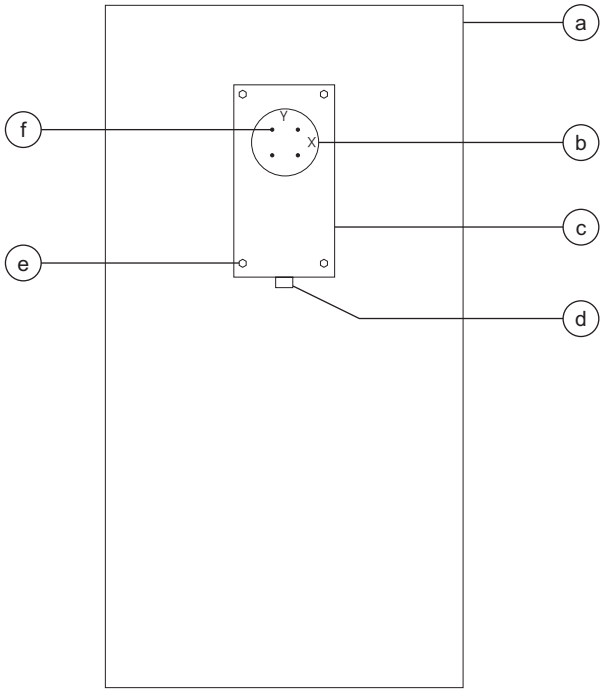

Non-steer end

a scissor chassis
b tilt level sensor
c level sensor box
d alarm
e box retaining fastener
f level sensor retaining fastener

https://truckmanualshub.com/

20 Tighten the level sensor adjusting fasteners until the bubble in the top of the level sensor is centered in the circles.

⊙ Result: The tilt sensor alarm should not sound.

NOTICE Be sure there are threads showing through the top of the adjusting fasteners.

21 Raise the platform slightly.

22 Return the safety arm to the stowed position.

23 Lower the platform to the stowed position.

24 Raise the machine approximately 2 inches / 5 cm.

25 Remove the blocks from under both wheels.

26 Lower the machine and remove the jack.

27 Remove the blocks from the wheels at the non-steer end of the machine.

28 Block the wheels at the steer end of the machine.

29 Center a lifting jack under the drive chassis at the non-steer end of the machine.

30 Raise the machine approximately 5 inches / 13 cm.

31 Place a 4.73 x 6 x 6 inch / 12.1 x 15 x 15 cm thick steel block under both wheels at the non-steer end of the machine.

32 Lower the machine onto the blocks.

33 **Models before serial number 48817:** Raise the platform 7 to 8 feet / 2.1 to 2.1 m.

⊙ Result: The tilt sensor alarm should sound.

⊙ Result: If the tilt sensor alarm does not sound, adjust the tilt level sensor until the alarm just begins to sound OR the down limit switch may need to be adjusted.

NOTICE **CE models:** When the platform is raised 7 to 8 feet / 2.1 to 2.4 m from the ground, an alarm should sound and the lift and drive functions should not operate.

Models after serial number 48816: Raise the platform 7 to 8 feet / 2.1 to 2.4 m.

⊙ Result: The platform should stop and an alarm should sound.

⊙ Result: If the platform does not stop or the tilt sensor alarm does not sound, adjust the tilt level sensor until the alarm just begins to sound OR the down limit switch may need to be adjusted.

34 Lower the platform to the stowed position.

35 Raise the machine approximately 5 inches / 13 cm.

36 Remove the blocks from under both wheels.

37 Lower the machine and remove the jack.

38 Remove the blocks from the wheels at the steer end of the machine.

39 Center a lifting jack under the drive chassis at the ground controls side of the machine.

40 Raise the machine approximately 2 inches / 5 cm.

https://truckmanualshub.com/

41 **GS-1530 and GS-1930:** Place a 0.62 x 6 x 6 inch / 15.7 mm x 15 cm x 15 cm thick steel block under both wheels at the ground controls side of the machine.

GS-1932: Place a 0.82 x 6 x 6 inch / 17 mm x 15 cm x 15 cm thick steel block under both wheels at the ground controls side of the machine.

42 Lower the machine onto the blocks.

43 Raise the platform 7 to 8 feet / 2.1 to 2.4 m.

⊙ Result: The tilt sensor alarm should sound.

44 Adjust the tilt level sensor retaining fasteners just until the tilt sensor alarm does not sound.

45 Lower the platform to the stowed position.

46 Raise the machine approximately 2 inches / 5 cm.

47 Remove the blocks from under both wheels.

48 Lower the machine and remove the jack.

49 Center a lifting jack under the drive chassis at the battery pack side of the machine.

50 Raise the machine approximately 2 inches / 5 cm.

51 **GS-1530 and GS-1930:** Place a 0.76 x 6 x 6 inch / 19.3 mm x 15 cm x 15 cm thick steel block under both wheels at the battery pack side of the machine.

GS-1932: Place a 0.82 x 6 x 6 inch / 20.8 mm x 15 cm x 15 cm thick steel block under both wheels at the battery pack side of the machine.

52 Lower the machine onto the blocks.

53 **Models before serial number 48817:** Raise the platform 7 to 8 feet / 2.1 to 2.4 m.

⊙ Result: The tilt sensor alarm should sound.

⊙ Result: If the tilt sensor alarm does not sound, adjust the tilt level sensor until the alarm just begins to sound OR the down limit switch may need to be adjusted.

NOTICE **CE models:** When the platform is raised 7 to 8 feet / 2.1 to 2.4 m from the ground, an alarm should sound and the lift and drive functions should not operate.

Models after serial number 48816: Raise the platform 7 to 8 feet / 2.1 to 2.4 m.

⊙ Result: The platform should stop and an alarm should sound.

⊙ Result: If the platform does not stop or the tilt sensor alarm does not sound, adjust the tilt level sensor until the alarm just begins to sound OR the down limit switch may need to be adjusted.

54 Lift the safety arm, move it to the center of the scissor arm and rotate down to a vertical position.

55 Lower the scissor arms onto the safety arm.

⚠WARNING Crushing hazard. Keep hands clear of the safety arm when lowering the platform.

56 Install the tilt level sensor box cover.

57 Raise the platform 7 to 8 feet / 2.1 to 2.4 m.

58 Return the safety arm to the stowed position.

59 Lower the platform to the stowed position.

60 Raise the machine approximately 2 inches / 5 cm.

61 Remove the blocks from under both wheels.

62 Lower the machine and remove the jack.

https://truckmanualshub.com/

How to Install and Calibrate the 2° Level Sensor

This procedure is for models equipped with a 2° side / 3° front / 5° rear level sensor.

Type	Serial range
GS-1530 ANSI, CSA, CE	before 50444
GS-1530 Australia	before 24998
GS-1930 ANSI, CSA	before 24998
GS-1930 CE	before 50444
GS-1930 Australia	before 48338

DANGER Tip-over hazard. Failure to install or calibrate the tilt level sensor as instructed will compromise machine stability and cause the machine to tip over, resulting in death or serious injury. Do not install or calibrate the level sensor other than specified in this procedure.

NOTICE Perform this procedure with the machine on a firm, level surface that is free of obstructions.

1 Remove the platform controls from the platform.

2 Turn the key switch to platform control and pull out the red Emergency Stop buttons to the ON position at both the ground and platform controls.

3 Block the wheels at the non-steer end of the machine.

4 Center a lifting jack under the drive chassis at the steer end of the machine.

5 Raise the machine approximately 2 inches / 5 cm.

6 Place a 0.91 x 6 x 6 inch / 23.1 mm x 15 cm x 15 cm thick steel block under both wheels at the steer end of the machine.

7 Lower the machine onto the blocks.

8 Raise the platform 7 to 8 feet / 2.1 to 2.4 m.

9 Lift the safety arm, move it to the center of the scissor arm and rotate down to a vertical position.

10 Lower the scissor arms onto the safety arm.

WARNING Crushing hazard. Keep hands clear of the safety arm when lowering the platform.

11 Remove the tilt level sensor box cover retaining fasteners. Remove the cover.

NOTICE The tilt level sensor box is located on top of the chassis at the steer end of the machine.

If you are not installing a new level sensor, proceed to step 20.

12 Turn the key switch to the OFF position and push in the red Emergency Stop button to the OFF position at the ground controls.

13 Tag and disconnect the wiring harness from the level sensor, limit switch and alarm.

https://truckmanualshub.com/

14 Remove the tilt level sensor box retaining fasteners. Remove the tilt level sensor box from the machine.

15 Remove the tilt level sensor retaining fasteners. Remove the tilt level sensor from the level sensor box.

16 Place the new tilt level sensor in the tilt level sensor box with the "X" on the level sensor base closest to the long side of the tilt level sensor box and the "Y" on the level sensor base closest to the short side of the tilt level sensor box.

DANGER Tip-over hazard. The tilt level sensor must be installed with the "X" on the level sensor base closest to the long side of the tilt level sensor box and the "Y" on the level sensor base closest to the short side of the tilt level sensor box. Failure to install the tilt level sensor as instructed could cause the machine to tip over resulting in death or serious injury.

17 Install the level sensor box onto the machine. Install the level sensor box retaining fasteners.

18 Connect the wiring harness to the level sensor, limit switch and alarm.

19 Turn the key switch to the ground control and pull out the red Emergency Stop button to the ON position at the ground controls.

Steer end

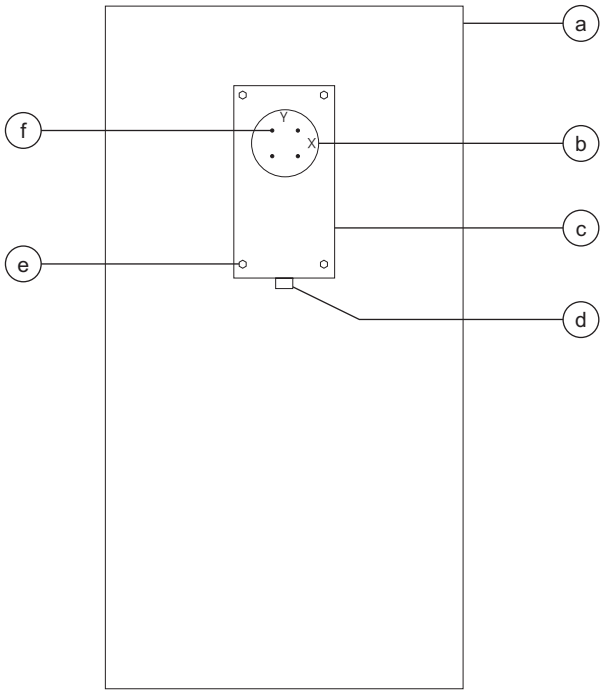

Non-steer end

a scissor chassis
b tilt level sensor
c level sensor box
d alarm
e box retaining fastener
f level sensor retaining fastener

https://truckmanualshub.com/

20 Tighten the level sensor adjusting fasteners until the bubble in the top of the level sensor is centered in the circles.

NOTICE Be sure there are threads showing through the top of the adjusting fasteners.

⊙ Result: The tilt sensor alarm should not sound.

21 Raise the platform slightly.

22 Return the safety arm to the stowed position.

23 Lower the platform to the stowed position.

24 Raise the machine approximately 2 inches / 5 cm.

25 Remove the blocks from under both wheels.

26 Lower the machine and remove the jack.

27 Remove the blocks from the wheels at the non-steer end of the machine.

28 Block the wheels at the steer end of the machine.

29 Center a lifting jack under the drive chassis at the non-steer end of the machine.

30 Raise the machine approximately 5 inches / 13 cm.

31 Place a 4.73 x 6 x 6 inch / 12.1 x 15 x 15 cm thick steel block under both wheels at the non-steer end of the machine.

32 Lower the machine onto the blocks.

33 **Models before serial number 48817:** Raise the platform 7 to 8 feet / 2.1 to 2.1 m.

⊙ Result: The tilt sensor alarm should sound.

⊙ Result: If the tilt sensor alarm does not sound, adjust the tilt level sensor until the alarm just begins to sound OR the down limit switch may need to be adjusted.

NOTICE **CE models:** When the platform is raised 7 to 8 feet / 2.1 to 2.4 m from the ground, an alarm should sound and the lift and drive functions should not operate.

Models after serial number 48816: Raise the platform 7 to 8 feet / 2.1 to 2.4 m.

⊙ Result: The platform should stop and an alarm should sound.

⊙ Result: If the platform does not stop or the tilt sensor alarm does not sound, adjust the tilt level sensor until the alarm just begins to sound OR the down limit switch may need to be adjusted.

34 Lower the platform to the stowed position.

35 Raise the machine approximately 5 inches / 13 cm.

36 Remove the blocks from under both wheels.

37 Lower the machine and remove the jack.

38 Remove the blocks from the wheels at the steer end of the machine.

39 Center a lifting jack under the drive chassis at the ground controls side of the machine.

40 Raise the machine approximately 2 inches / 5 cm.

https://truckmanualshub.com/

41 Place a 0.85 x 6 x 6 inch / 21.5 mm x 15 cm x 15 cm thick steel block under both wheels at the ground controls side of the machine.

42 Lower the machine onto the blocks.

43 Raise the platform 7 to 8 feet / 2.1 to 2.4 m.

⊙ Result: The tilt sensor alarm should sound.

44 Adjust the tilt level sensor retaining fasteners just until the tilt sensor alarm does not sound.

45 Lower the platform to the stowed position.

46 Raise the machine approximately 2 inches / 5 cm.

47 Remove the blocks from under both wheels.

48 Lower the machine and remove the jack.

49 Center a lifting jack under the drive chassis at the battery pack side of the machine.

50 Raise the machine approximately 2 inches / 5 cm.

51 Place a 0.98 x 6 x 6 inch / 25 mm x 15 cm x 15 cm thick steel block under both wheels at the battery pack side of the machine.

52 Lower the machine onto the blocks.

53 **Models before serial number 48817:** Raise the platform 7 to 8 feet / 2.1 to 2.1 m.

⊙ Result: The tilt sensor alarm should sound.

⊙ Result: If the tilt sensor alarm does not sound, adjust the tilt level sensor until the alarm just begins to sound OR the down limit switch may need to be adjusted.

NOTICE **CE models:** When the platform is raised 7 to 8 feet / 2.1 to 2.4 m from the ground, an alarm should sound and the lift and drive functions should not operate.

Models after serial number 48816: Raise the platform 7 to 8 feet / 2.1 to 2.4 m.

⊙ Result: The platform should stop and an alarm should sound.

⊙ Result: If the platform does not stop or the tilt sensor alarm does not sound, adjust the tilt level sensor until the alarm just begins to sound OR the down limit switch may need to be adjusted.

54 Lift the safety arm, move it to the center of the scissor arm and rotate down to a vertical position.

55 Lower the scissor arms onto the safety arm.

⚠WARNING Crushing hazard. Keep hands clear of the safety arm when lowering the platform.

56 Install the tilt level sensor box cover.

57 Raise the platform slightly.

58 Return the safety arm to the stowed position.

59 Lower the platform to the stowed position.

60 Raise the machine approximately 2 inches / 5 cm.

61 Remove the blocks from under both wheels.

62 Lower the machine and remove the jack.

https://truckmanualshub.com/

4-5
Tilt Level Sensor (after serial number 50443)

How to Install and Calibrate the 1.5° Level Sensor

This procedure is for models equipped with a 1.5° side / 3° front / 3° rear level sensor.

Type	Serial range
GS-1530 Australia	after 50443
GS-1930 ANSI, CSA, Australia	after 50443
GS-1932 (Australia outdoor)	after 50443

DANGER Tip-over hazard. Failure to install or calibrate the tilt level sensor as instructed will compromise machine stability and cause the machine to tip over, resulting in death or serious injury. Do not install or calibrate the level sensor other than specified in this procedure.

NOTICE Perform this procedure with the machine on a firm, level surface that is free of obstructions.

1 Remove the platform controls from the platform.

2 Turn the key switch to platform control and pull out the red Emergency Stop buttons to the on position at both the ground and platform controls.

3 Raise the platform 7 to 8 feet / 2.1 to 2.4 m.

4 Lift the safety arm, move it to the center of the scissor arm and rotate down to a vertical position.

5 Lower the platform onto the safety arm.

WARNING Crushing hazard. Keep hands clear of the safety arm when lowering the platform.

6 Remove the tilt level sensor box cover retaining fasteners. Remove the cover.

NOTICE The tilt level sensor box is located on top of the chassis at the steer end of the machine.

If you are not installing a new level sensor, proceed to step 15.

7 Turn the key switch to the off position and push in the red Emergency Stop button to the off position at the ground controls.

8 Tag and disconnect the wiring harness from the level sensor, limit switch and alarm.

9 Remove the tilt level sensor box retaining fasteners. Remove the tilt level sensor box from the machine.

10 Remove the tilt level sensor retaining fasteners. Remove the tilt level sensor from the level sensor box.

https://truckmanualshub.com/

11 Place the new tilt level sensor in the tilt level sensor box with the "X" on the level sensor base closest to the long side of the tilt level sensor box and the "Y" on the level sensor base closest to the short side of the tilt level sensor box. Install the level sensor retaining fasteners.

DANGER Tip-over hazard. The tilt level sensor must be installed with the "X" on the level sensor base closest to the long side of the tilt level sensor box and the "Y" on the level sensor base closest to the short side of the tilt level sensor box. Failure to install the tilt level sensor as instructed could cause the machine to tip over resulting in death or serious injury.

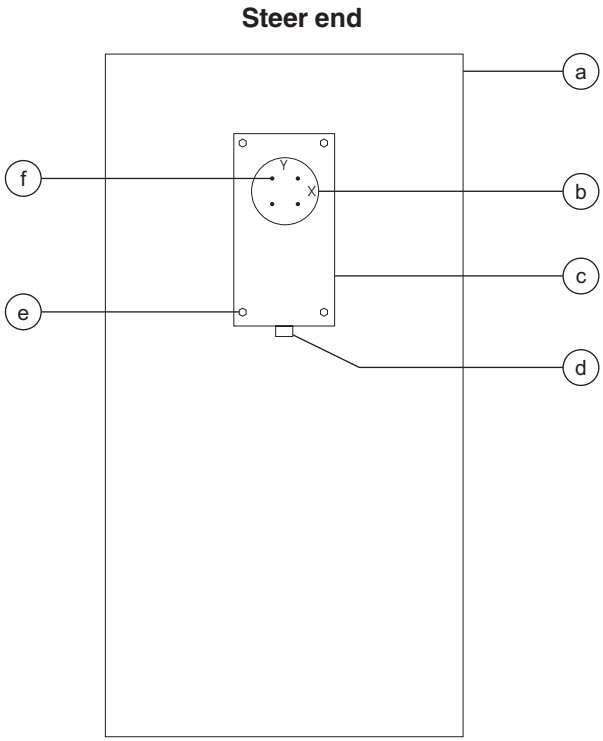

a scissor chassis
b tilt level sensor
c level sensor box
d alarm
e box retaining fastener
f level sensor retaining fastener

https://truckmanualshub.com/

12 Install the level sensor box onto the machine. Install the level sensor box retaining fasteners.

13 Connect the wiring harness to the level sensor, limit switch and alarm.

14 Turn the key switch to the ground control and pull out the red Emergency Stop button to the ON position at the ground controls.

15 Tighten the level sensor adjusting fasteners until the bubble in the top of the level sensor is centered in the circles.

⊙ Result: The tilt sensor alarm should not sound.

NOTICE Be sure there are threads showing through the top of the adjusting fasteners.

16 Raise the platform slightly.

17 Return the safety arm to the stowed position.

18 Lower the platform to the stowed position.

19 Center a lifting jack under the drive chassis at the ground controls side of the machine.

20 Raise the machine approximately 2 inches / 5 cm.

21 **GS-1530 and GS-1930:** Place a 0.62 x 6 x 6 inch / 15.7 mm x 15 cm x 15 cm thick steel block under both wheels at the ground controls side of the machine.

GS-1932: Place a 0.67 x 6 x 6 inch / 17 mm x 15 cm x 15 cm thick steel block under both wheels at the ground controls side of the machine.

22 Lower the machine onto the blocks.

23 Raise the platform 7 to 8 feet / 2.1 to 2.4 m.

⊙ Result: The tilt sensor alarm should not sound.

⊙ Result: The tilt sensor alarm does sound. Adjust the tilt level sensor retaining fasteners just until the tilt sensor alarm does not sound.

24 Lower the platform to the stowed position.

25 Raise the machine approximately 2 inches / 5 cm.

26 Remove the blocks from under both wheels.

27 Lower the machine and remove the jack.

28 Center a lifting jack under the drive chassis at the battery pack side of the machine.

29 Raise the machine approximately 2 inches / 5 cm.

33 **GS-1530 and GS-1930:** Place a 0.76 x 6 x 6 inch / 19.3 mm x 15 cm x 15 cm thick steel block under both wheels at the ground controls side of the machine.

GS-1932: Place a 0.82 x 6 x 6 inch / 20.8 mm x 15 cm x 15 cm thick steel block under both wheels at the ground controls side of the machine.

31 Lower the machine onto the blocks.

https://truckmanualshub.com/

32 **Models before serial number 48817:** Raise the platform 7 to 8 feet / 2.1 to 2.4 m.

- Result: The tilt sensor alarm should sound.
- Result: The tilt sensor alarm does not sound. Adjust the tilt level sensor until the alarm just begins to sound OR the down limit switch may need to be adjusted.

NOTICE **CE models:** When the platform is raised 7 to 8 feet / 2.1 to 2.4 m from the ground, an alarm should sound and the lift and drive functions should not operate.

Models after serial number 48816: Raise the platform 7 to 8 feet / 2.1 to 2.4 m.

- Result: The platform should stop and an alarm should sound.
- Result: The platform does not stop or the tilt sensor alarm does not sound. Adjust the tilt level sensor until the alarm just begins to sound OR the down limit switch may need to be adjusted.

33 Lift the safety arm, move it to the center of the scissor arm and rotate down to a vertical position.

34 Lower the scissor arms onto the safety arm.

⚠WARNING Crushing hazard. Keep hands clear of the safety arm when lowering the platform.

35 Install the tilt level sensor box cover.

36 Raise the platform 7 to 8 feet / 2.1 to 2.4 m.

37 Return the safety arm to the stowed position.

38 Lower the platform to the stowed position.

39 Raise the machine approximately 2 inches / 5 cm.

40 Remove the blocks from under both wheels.

41 Lower the machine and remove the jack.

https://truckmanualshub.com/

How to Install and Calibrate the 2° Level Sensor

This procedure is for models equipped with a 2° side / 3° front / 3° rear level sensor.

Type	Serial range
GS-1530 ANSI, CSA, CE	after 50443
GS-1930 CE	after 50443

DANGER Tip-over hazard. Failure to install or calibrate the tilt level sensor as instructed will compromise machine stability and cause the machine to tip over, resulting in death or serious injury. Do not install or calibrate the level sensor other than specified in this procedure.

NOTICE Perform this procedure with the machine on a firm, level surface that is free of obstructions.

1 Remove the platform controls from the platform.

2 Turn the key switch to platform control and pull out the red Emergency Stop buttons to the ON position at both the ground and platform controls.

3 Raise the platform 7 to 8 feet / 2.1 to 2.4 m.

4 Lift the safety arm, move it to the center of the scissor arm and rotate down to a vertical position.

5 Lower the platform onto the safety arm.

WARNING Crushing hazard. Keep hands clear of the safety arm when lowering the platform.

6 Remove the tilt level sensor box cover retaining fasteners. Remove the cover.

NOTICE The tilt level sensor box is located on top of the chassis at the steer end of the machine.

If you are not installing a new level sensor, proceed to step 15.

7 Turn the key switch to the OFF position and push in the red Emergency Stop button to the OFF position at the ground controls.

8 Tag and disconnect the wiring harness from the level sensor, limit switch and alarm.

9 Remove the tilt level sensor box retaining fasteners. Remove the tilt level sensor box from the machine.

10 Remove the tilt level sensor retaining fasteners. Remove the tilt level sensor from the level sensor box.

https://truckmanualshub.com/

11 Place the new tilt level sensor in the tilt level sensor box with the "X" on the level sensor base closest to the long side of the tilt level sensor box and the "Y" on the level sensor base closest to the short side of the tilt level sensor box. Install the level sensor retaining fasteners.

DANGER Tip-over hazard. The tilt level sensor must be installed with the "X" on the level sensor base closest to the long side of the tilt level sensor box and the "Y" on the level sensor base closest to the short side of the tilt level sensor box. Failure to install the tilt level sensor as instructed could cause the machine to tip over resulting in death or serious injury.

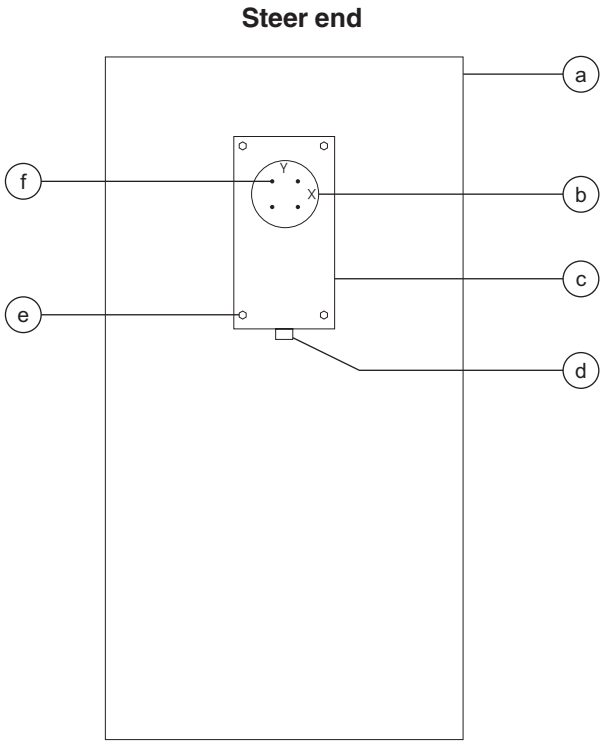

a scissor chassis
b tilt level sensor
c level sensor box
d alarm
e box retaining fastener
f level sensor retaining fastener

https://truckmanualshub.com/

12 Install the level sensor box onto the machine. Install the level sensor box retaining fasteners.

13 Connect the wiring harness to the level sensor, limit switch and alarm.

14 Turn the key switch to the ground control and pull out the red Emergency Stop button to the ON position at the ground controls.

15 Tighten the level sensor adjusting fasteners until the bubble in the top of the level sensor is centered in the circles.

⊙ Result: The tilt sensor alarm should not sound.

NOTICE Be sure there are threads showing through the top of the adjusting fasteners.

16 Raise the platform slightly.

17 Return the safety arm to the stowed position.

18 Lower the platform to the stowed position.

19 Center a lifting jack under the drive chassis at the ground controls side of the machine.

20 Raise the machine approximately 2 inches / 5 cm.

21 Place a 0.85 x 6 x 6 inch / 21.6 mm x 15 cm x 15 cm thick steel block under both wheels at the ground controls side of the machine.

22 Lower the machine onto the blocks.

23 Raise the platform 7 to 8 feet / 2.1 to 2.4 m.

⊙ Result: The tilt sensor alarm should not sound.

⊙ Result: The tilt sensor alarm does sound. Adjust the tilt level sensor retaining fasteners just until the tilt sensor alarm does not sound.

24 Lower the platform to the stowed position.

25 Raise the machine approximately 2 inches / 5 cm.

26 Remove the blocks from under both wheels.

27 Lower the machine and remove the jack.

28 Center a lifting jack under the drive chassis at the battery pack side of the machine.

29 Raise the machine approximately 2 inches / 5 cm.

30 Place a 0.98 x 6 x 6 inch / 24.9 mm x 15 cm x 15 cm thick steel block under both wheels at the ground controls side of the machine.

31 Lower the machine onto the blocks.

https://truckmanualshub.com/

32 **Models before serial number 48817:** Raise the platform 7 to 8 feet / 2.1 to 2.4 m.

- Result: The tilt sensor alarm should sound.
- Result: The tilt sensor alarm does not sound. Adjust the tilt level sensor until the alarm just begins to sound OR the down limit switch may need to be adjusted.

NOTICE **CE models:** When the platform is raised 7 to 8 feet / 2.1 to 2.4 m from the ground, an alarm should sound and the lift and drive functions should not operate.

Models after serial number 48816: Raise the platform 7 to 8 feet / 2.1 to 2.4 m.

- Result: The platform should stop and an alarm should sound.
- Result: The platform does not stop or the tilt sensor alarm does not sound. Adjust the tilt level sensor until the alarm just begins to sound OR the down limit switch may need to be adjusted.

33 Lift the safety arm, move it to the center of the scissor arm and rotate down to a vertical position.

34 Lower the scissor arms onto the safety arm.

⚠WARNING Crushing hazard. Keep hands clear of the safety arm when lowering the platform.

35 Install the tilt level sensor box cover.

36 Raise the platform 7 to 8 feet / 2.1 to 2.4 m.

37 Return the safety arm to the stowed position.

38 Lower the platform to the stowed position.

39 Raise the machine approximately 2 inches / 5 cm.

40 Remove the blocks from under both wheels.

41 Lower the machine and remove the jack.

https://truckmanualshub.com/

Hydraulic Pump

REV B

5-1
Function Pump

The hydraulic pump is attached to the motor which makes up the Hydraulic Power Unit.

How to Test the Hydraulic Pump

NOTICE When removing a hose assembly or fitting, the O-ring on the fitting and/or hose end must be replaced and then torqued to specification during installation. Refer to Section Two, *Hydraulic Hose and Fitting Torque Specifications.*

1 Disconnect and plug the high pressure hydraulic hose from the hydraulic pump.

⚠WARNING Bodily injury hazard. Spraying hydraulic oil can penetrate and burn skin. Loosen hydraulic connections very slowly to allow the oil pressure to dissipate gradually. Do not allow oil to squirt or spray.

2 Connect a 0 to 5000 psi / 0 to 350 bar pressure gauge to the high pressure port on the pump.

3 Turn the key switch to ground control and pull out the red Emergency Stop button to the on position at both the ground and platform controls.

4 Activate the platform up function from the ground controls.

⊙ Result: If the pressure gauge reads 3200 psi / 221 bar, immediately stop. The pump is good.

⊙ Result: If pressure fails to reach 3200 psi / 221 bar, the pump is bad and will need to be serviced or replaced.

CAUTION Component damage hazard. There is no relief valve in the hydraulic pump and the pump can be damaged if the pressure is allowed to exceed 3200 psi / 221 bar. When testing the pump, activate the pump in one second intervals until 3200 psi / 221 bar is confirmed. Do not over-pressurize the pump.

5 Remove the pressure gauge and reconnect the hydraulic hose.

⚠WARNING Bodily injury hazard. Spraying hydraulic oil can penetrate and burn skin. Loosen hydraulic connections very slowly to allow the oil pressure to dissipate gradually. Do not allow oil to squirt or spray.

https://truckmanualshub.com/

How to Remove the Hydraulic Pump

NOTICE When removing a hose assembly or fitting, the O-ring on the fitting and/or hose end must be replaced and then torqued to specification during installation. Refer to Section Two, *Hydraulic Hose and Fitting Torque Specifications.*

1 Remove the mounting fasteners from the hydraulic filter bracket at the function manifold. Push the filter off to the side.

2 Tag, disconnect and cap the hydraulic hoses on the pump.

⚠WARNING Bodily injury hazard. Spraying hydraulic oil can penetrate and burn skin. Loosen hydraulic connections very slowly to allow the oil pressure to dissipate gradually. Do not allow oil to squirt or spray.

3 Remove the pump mounting bolts. Carefully remove the pump.

⚠DANGER Tip-over hazard. After replacing the hydraulic pump, it is critical to return the lift speed and raised drive speed settings to original factory specifications. Failure to restore the machine to original factory specifications could cause the machine to tip over resulting in death or serious injury.

https://truckmanualshub.com/

Function Manifold

REV B

6-1
Function Manifold Components (from serial number 17408 to 35799)

The function manifold is mounted inside the hydraulic power unit module tray

Index No.	Description	Schematic Item	Function	Torque
1	Diagnostic nipple	AA	Testing	
2	Flow regulator, 0.75 gpm / 2.8 L/min	AB	Steer circuit	35 ft-lbs / 47 Nm
3	Relief valve, 3500 psi / 241.3 bar	AC	System relief	20 ft-lbs / 27 Nm
4	Orifice - washer, 0.040 in / 1 mm	AD	Steer circuit	
5	Relief valve, 1500 psi / 103.4 bar	AE	Steer relief	20 ft-lbs / 27 Nm
6	Solenoid valve, 3 position 4 way	AF	Steer left/right	20 ft-lbs / 27 Nm
7	Solenoid valve, 2 position 4 way	AG	Platform up	25 ft-lbs / 34 Nm
8	Solenoid valve, 2 position 2 way, N. O.	AH	Brake circuit	20 ft-lbs / 27 Nm
9	Solenoid valve, 3 position 4 way	AI	Drive forward/reverse	25 ft-lbs / 34 Nm
10	Check valve, 5 psi / 0.3 bar	AJ	Brake circuit	25 ft-lbs / 34 Nm
11	Check valve, 5 psi / 0.3 bar	AK	Steer circuit	20 ft-lbs / 27 Nm

https://truckmanualshub.com/

REV B FUNCTION MANIFOLD

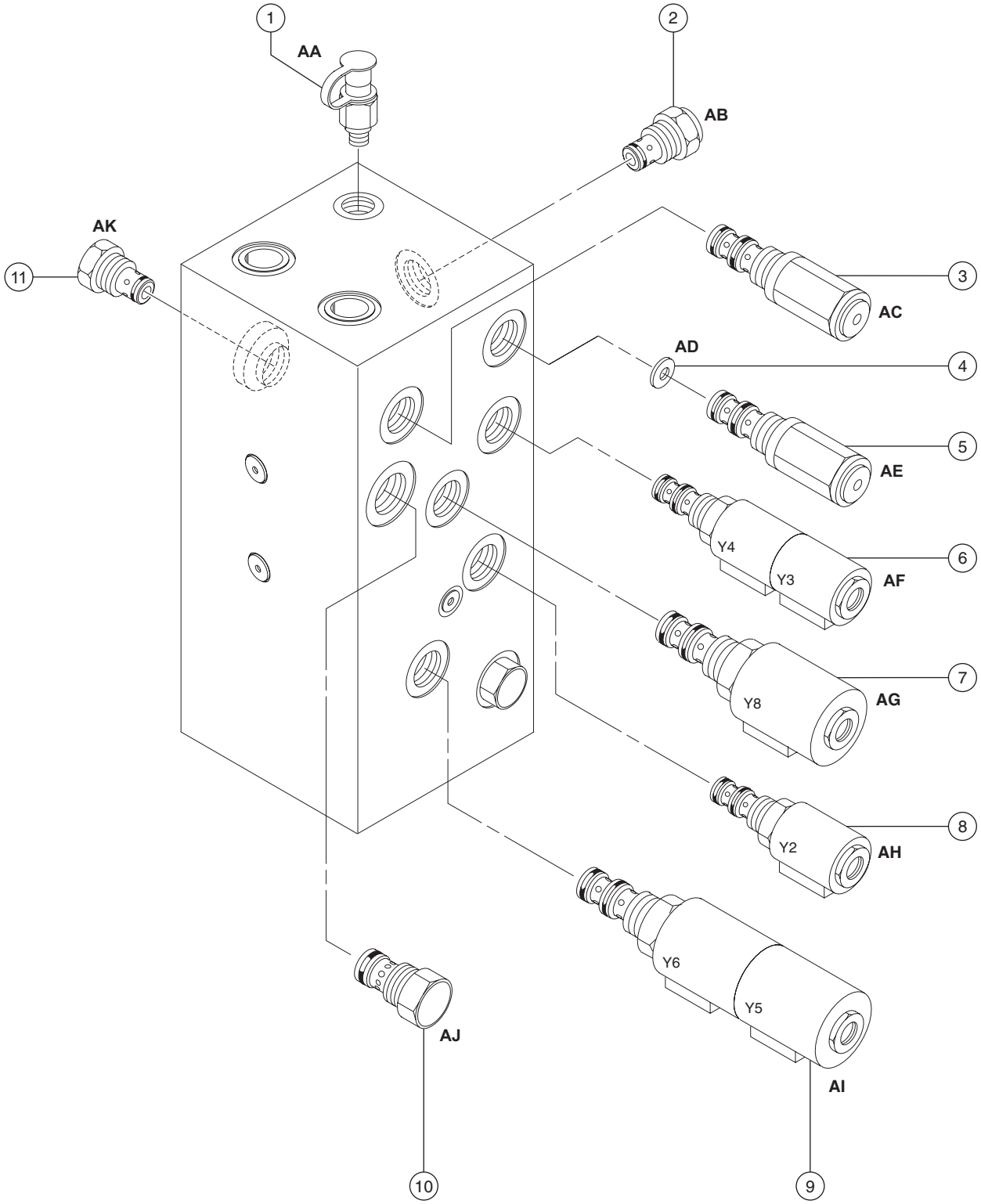

https://truckmanualshub.com/

6-2
Function Manifold Components (after serial number 35799)

The function manifold is mounted inside the hydraulic power unit module tray

Index No.	Description	Schematic Item	Function	Torque
1	Diagnostic nipple	BA	Testing	
2	Flow regulator, 0.75 gpm / 2.8 L/min	BB	Steer circuit	35 ft-lbs / 47 Nm
3	Relief valve, 3500 psi / 241.3 bar	BC	System relief	20 ft-lbs / 27 Nm
4	Relief valve, 3000 psi / 207 bar	BD	Lift relief	20 ft-lbs / 27 Nm
5	Orifice - washer, 0.040 in / 1 mm	BE	Steer circuit	
6	Relief valve, 1500 psi / 103.4 bar	BF	Steering relief	20 ft-lbs / 27 Nm
7	Solenoid valve, 2 position 4 way	BG	Platform up	25 ft-lbs / 34 Nm
8	Check valve, 10 psi / 0.7 bar	BH	Drive circuit	25 ft-lbs / 34 Nm
9	Solenoid valve, 3 position 4 way	BI	Steer left/right	20 ft-lbs / 27 Nm
10	Solenoid valve, 3 position 4 way	BJ	Drive forward/reverse	25 ft-lbs / 34 Nm
11	Check valve	BK	Steer circuit	20 ft-lbs / 27 Nm

https://truckmanualshub.com/

REV B FUNCTION MANIFOLD

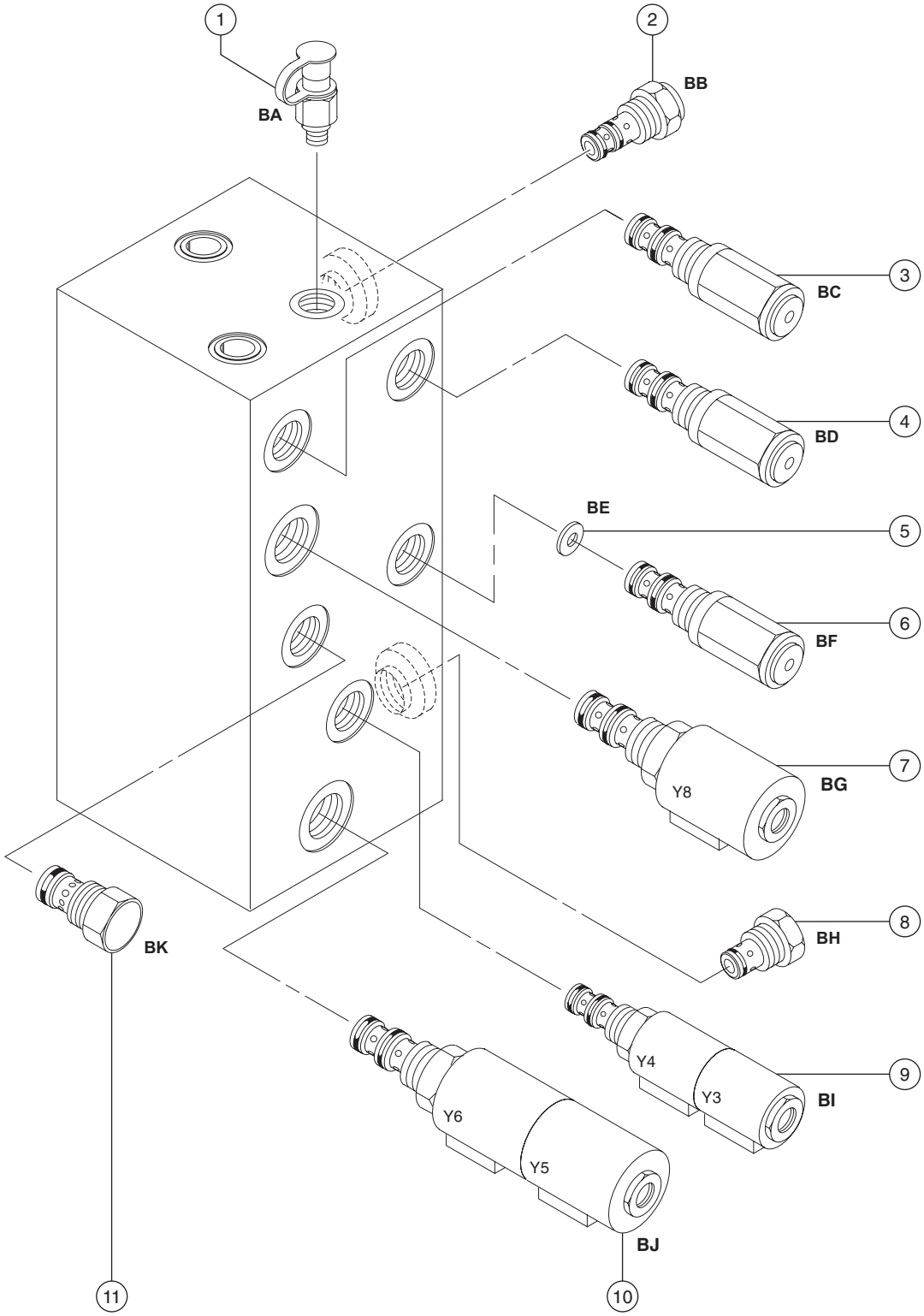

https://truckmanualshub.com/

6-3 Valve Adjustments - Function Manifold

How to Adjust the System Relief Valve

NOTICE Be sure that the hydraulic oil level is between the FULL and ADD marks on the oil level indicator decal.

Before serial number 35800:

1 Open the hydraulic power unit module tray and locate the system relief valve on the function manifold (item AC).

2 Place maximum rated load into the platform. Secure the load to the platform. Refer to Section 2, *Specifications*.

3 Remove the platform controls from the platform.

NOTICE Perform this test from the ground with the platform controls. Do not stand in the platform.

4 Turn the key switch to platform control and pull out the red Emergency Stop button to the on position at both the ground and platform controls.

5 Hold the system relief valve with a wrench and remove the cap (item AC).

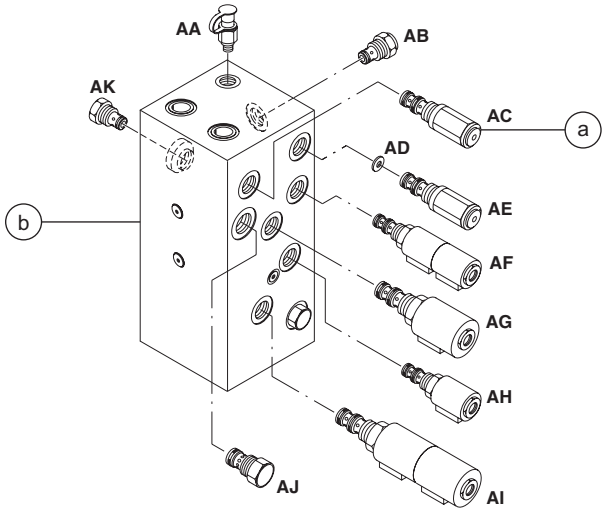

a system relief valve
b function manifold

6 **Models with lift function enable button:** Press and hold the lift function enable button. **Models with drive function select button:** Press the lift function select button.

7 Press and hold the function enable switch.

8 While activating the platform up function, adjust the internal hex socket clockwise, just until the platform begins to raise.

9 Fully lower the platform.

10 Add an additional 50 pounds / 22.7 kg to the platform. Secure the additional weight.

11 Raise the platform slightly.

⊙ Result: The power unit should **not** be able to lift the platform.

⊙ Result: If the power unit lifts the platform, adjust the internal hex socket counterclockwise until the adjustment is correct.

12 Install the relief valve cap.

https://truckmanualshub.com/

13 Bleed the hydraulic system by raising the platform to full height. If the pump cavitates or platform fails to reach full height, add hydraulic oil until the pump is functioning correctly. Do not overfill the hydraulic reservoir.

CAUTION Component damage hazard. Do not continue to operate the machine if the hydraulic pump is cavitating.

After serial number 35799:

1 Open the hydraulic power unit module tray and locate the system relief valve on the function manifold (item BC).

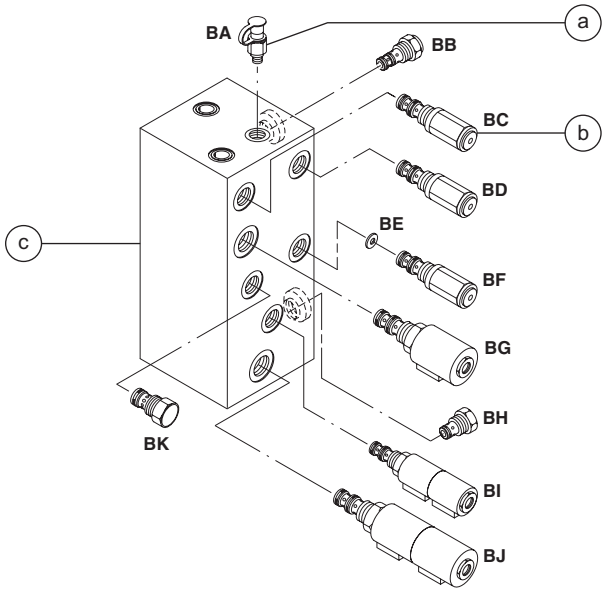

a test port
b system relief valve
c function manifold

2 Connect a 0 to 5000 psi / 0 to 350 bar pressure gauge to the test port on the function manifold (item BA).

3 Chock both sides of the wheels at the steer end of the machine.

4 Remove the platform controls from the platform.

NOTICE Perform this test from the ground with the platform controls. Do not stand in the platform.

5 Turn the key switch to platform control and pull out the red Emergency Stop button to the on position at both the ground and platform controls.

6 Press and hold the function enable switch.

7 Move and hold the joystick fully in either direction while observing the pressure reading on the pressure gauge. Note the pressure. Refer to Section 2, *Specifications*.

8 Turn the machine off. Hold the system relief valve with a wrench and remove the cap (item BC).

9 Adjust the internal hex socket. Turn it clockwise to increase the pressure or counterclockwise to decrease the pressure.

⚠ DANGER Tip-over hazard. Failure to adjust the relief valves to specification could cause the machine to tip over resulting in death or serious injury. Do not adjust the relief valve pressures higher than specifications.

10 Install the relief valve cap.

11 Repeat steps 5 through 7 to confirm the relief valve pressure.

https://truckmanualshub.com/

How to Adjust the Platform Lift Relief Valve (after serial number 35799)

NOTICE Be sure that the hydraulic oil level is between the full and add marks on the oil level indicator decal.

1 Open the hydraulic power unit module tray and locate the system relief valve on the function manifold (item BC).

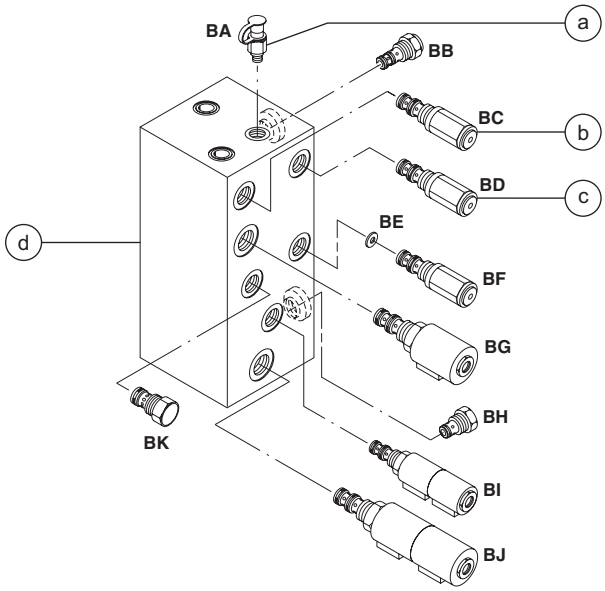

a test port
b system relief valve
c lift relief valve
d function manifold

2 Connect a 0 to 5000 psi / 0 to 350 bar pressure gauge to the test port on the function manifold (item BA).

3 Chock both sides of the wheels at the steer end of the machine.

4 Remove the platform controls from the platform.

NOTICE Perform this test from the ground with the platform controls. Do not stand in the platform.

5 Turn the key switch to platform control and pull out the red Emergency Stop button to the on position at both the ground and platform controls.

6 Press and hold the function enable switch.

7 Move and hold the joystick fully in either direction while observing the pressure reading on the pressure gauge. Note the pressure. Refer to Section 2, *Specifications*.

8 Turn the machine off. Hold the system relief valve with a wrench and remove the cap (item BC).

9 Adjust the internal hex socket. Turn it clockwise to increase the pressure or counterclockwise to decrease the pressure.

⚠ DANGER Tip-over hazard. Failure to adjust the relief valves to specification could cause the machine to tip over resulting in death or serious injury. Do not adjust the relief valve pressures higher than specifications.

10 Install the relief valve cap.

https://truckmanualshub.com/

11 Repeat steps 5 through 7 to confirm the relief valve pressure.

12 Place maximum rated load into the platform. Secure the load to the platform. Refer to Section 2, *Specifications*.

13 Turn the key switch to ground control and pull out the red Emergency Stop button to the on position at both the ground and platform controls.

14 Hold the lift relief valve with a wrench and remove the cap (item BD).

15 While activating the platform up function, adjust the internal hex socket clockwise, just until the platform begins to raise.

16 Fully lower the platform.

17 Add an additional 50 pounds (22.7 kg) to the platform. Secure the additional weight.

18 Raise the platform slightly.

⊙ Result: The power unit should **not** be able to lift the platform.

⊙ Result: If the power unit lifts the platform, adjust the internal hex socket counterclockwise until the adjustment is correct.

19 Install the relief valve cap.

20 Bleed the hydraulic system by raising the platform to full height. If the pump cavitates or the platform fails to reach full height, add hydraulic oil until the pump is functioning correctly. Do not overfill the hydraulic tank.

CAUTION Component damage hazard. Do not continue to operate the machine if the hydraulic pump is cavitating.

https://truckmanualshub.com/

How to Adjust the Steer Relief Valve

1 Open the hydraulic power unit module tray and locate the steer relief valve on the function manifold (items AE or BF).

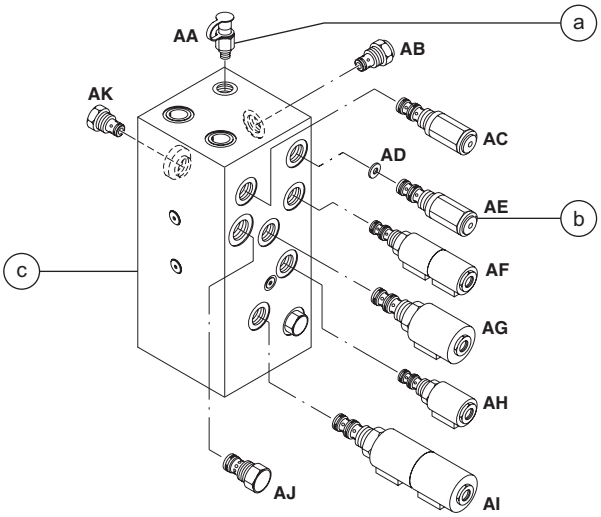

Models before serial number 35800

a test port
b steer relief valve
c function manifold

2 Connect a 0 to 5000 psi / 0 to 350 bar pressure gauge to the test port (item AA or BA) on the function manifold.

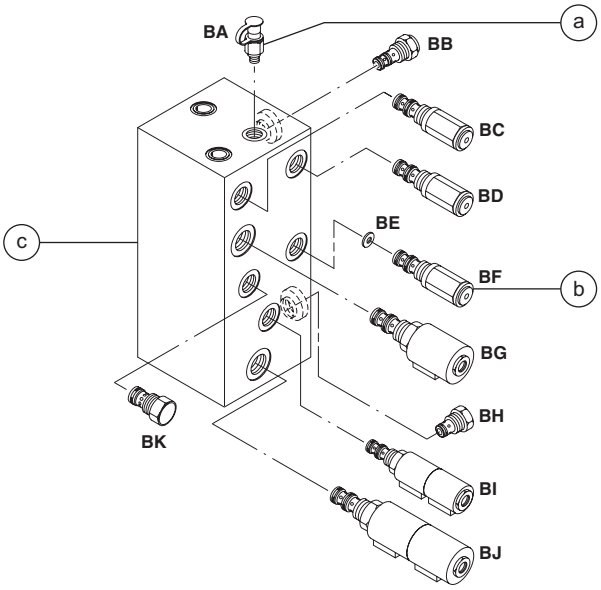

Models after serial number 35799

a test port
b steer relief valve
c function manifold

3 Remove the platform controls from the platform.

NOTICE Perform this test from the ground with the platform controls. Do not stand in the platform.

4 Turn the key switch to platform control and pull out the red Emergency Stop button to the on position at both the ground and platform controls.

https://truckmanualshub.com/

5 Activate the function enable switch and press and hold the steer thumb rocker switch to the right. Allow the wheels to completely turn to the right. Continue holding the switch while observing the pressure reading on the pressure gauge. Note the pressure. Refer to Section 2, *Specifications*.

6 Press and hold the steer thumb rocker switch to the left. Allow the wheels to completely turn to the left. Continue holding the switch while observing the pressure reading on the pressure gauge.

7 Turn the machine off. Hold the steer relief valve with a wrench and remove the cap (item AE or BF).

8 Adjust the internal hex socket. Turn it clockwise to increase the pressure or counterclockwise to decrease the pressure.

⚠ DANGER Tip-over hazard. Failure to adjust the relief valves to specification could cause the machine to tip over resulting in death or serious injury. Do not adjust the relief valve pressures higher than specifications.

9 Install the relief valve cap.

10 Repeat steps 5 through 8 to confirm the relief valve pressure.

https://truckmanualshub.com/

6-4 Valve Coils

How to Test a Coil

A properly functioning coil provides an electromotive force which operates the solenoid valve. Critical to normal operation is continuity within the coil that provides this force field.

⚠WARNING Electrocution hazard. Contact with electrically charged circuits could result in death or serious injury. Remove all rings, watches and other jewelry.

1 Tag and disconnect the wire harness from the coil to be tested.

2 Test the coil resistance.

⊙ Result: The resistance should be within specification, plus or minus 30%.

⊙ Result: If the resistance is not within specification, plus or minus 30%, replace the coil.

Valve Coil Resistance Specifications

Description	Specification
Solenoid valve, 3 position 4 way 20V DC with diode (schematic item AF and BI)	25 to 27 Ω
Solenoid valve, 2 position 4 way 20V DC with diode (schematic item AG)	18 to 20 Ω
Solenoid valve, N.O. poppet 20V DC with diode (schematic item AH)	25 to 27 Ω
Solenoid valve, 3 position 4 way 20V DC with diode (schematic item AI and BJ)	18 to 20 Ω
Solenoid valve, 2 position 4 way 20V DC with diode (schematic item BG)	18 to 20 Ω

How to Test a Coil Diode

Genie incorporates spike suppressing diodes in all of its coils. Properly functioning coil diodes protect the electrical circuit by suppressing voltage spikes. Voltage spikes naturally occur within a function circuit following the interruption of electrical current to a coil. Faulty diodes can fail to protect the electrical system, resulting in a tripped circuit breaker or component damage.

⚠WARNING Electrocution hazard. Contact with electrically charged circuits could result in death or serious injury. Remove all rings, watches and other jewelry.

1 Test the coil for resistance. See 6-4 *How to Test a Coil.*

https://truckmanualshub.com/

2 Connect a 10W resistor to the negative terminal of a known good 9V DC battery. Connect the other end of the resistor to a terminal on the coil.

NOTICE The battery should read 9V DC or more when measured across the terminals.

Resistor, 10W	
Genie part number	27287

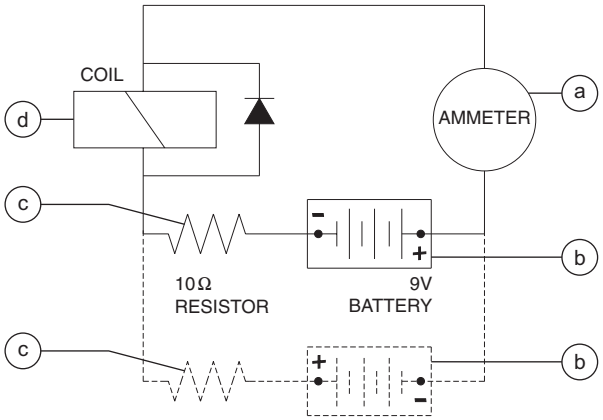

a multimeter
b 9V DC battery
c 10W resistor
d coil

Note: Dotted lines in illustration indicate a reversed connection as specified in step 6

3 Set a multimeter to read DC voltage.

NOTICE The multimeter, when set to read DC voltage, should be capable of reading up to 800 mA.

4 Connect the negative lead to the other terminal on the coil.

NOTICE If testing a single-terminal coil, connect the negative lead to the internal metallic ring at either end of the coil.

5 Momentarily connect the positive lead from the multimeter to the positive terminal on the 9V battery. Note and record the current reading.

6 At the battery or coil terminals, reverse the connections. Note and record the current reading.

⊙ Result: Both current readings are greater than 0 mA and are different by a minimum of 20%. The coil is good.

⊙ Result: If one or both of the current readings are 0 mA, or if the two current readings do not differ by a minimum of 20%, the coil and/or its internal diode are faulty and the coil should be replaced.

https://truckmanualshub.com/

Hydraulic Tank

REV A

7-1 Hydraulic Tank

The primary functions of the hydraulic tank are to cool, clean and deaerate the hydraulic fluid during operation. It utilizes internal suction strainers for the pump supply lines and has an external return line filter.

How to Remove the Hydraulic Tank

CAUTION Component damage hazard. The work area and surfaces where this procedure will be performed must be clean and free of debris that could get into the hydraulic system.

NOTICE When removing a hose assembly or fitting, the O-ring on the fitting and/or hose end must be replaced and then torqued to specification during installation. Refer to Section Two, *Hydraulic Hose and Fitting Torque Specifications.*

NOTICE Perform this procedure with the platform in the stowed position.

1 Disconnect the battery pack from the machine.

WARNING Electrocution hazard. Contact with electrically charged circuits could result in death or serious injury. Remove all rings, watches and other jewelry.

2 Open the power unit module tray.

3 Remove the drain plug from the hydraulic tank and allow all of the oil from the tank to drain into a suitable container. Refer to Section 2, *Specifications*.

WARNING Bodily injury hazard. Spraying hydraulic oil can penetrate and burn skin. Loosen hydraulic connections very slowly to allow the oil pressure to dissipate gradually. Do not allow oil to squirt or spray.

4 Tag, disconnect and plug the hydraulic tank return hose at the top of the hydraulic tank.

5 Remove the motor controller mounting bracket retaining fasteners and move the motor controller to the side.

6 Remove the return filter mounting bracket fasteners from the manifold. Push the filter and accumulator out of the way.

7 Tag, disconnect and plug the hydraulic pump inlet hose at the side of the hydraulic tank.

8 Remove the hydraulic tank retaining fasteners and remove the hydraulic tank from the machine.

https://truckmanualshub.com/

Steer Axle Components

REV B

8-1
Yoke and Drive Motor

How to Remove the Yoke and Drive Motor Assembly

NOTICE When removing a hose assembly or fitting, the O-ring on the fitting and/or hose end must be replaced and then torqued to specification during installation. Refer to Section Two, *Hydraulic Hose and Fitting Torque Specifications.*

1 Block the non-steer wheels.

2 Center a lifting jack under the drive chassis at the steer end of the machine.

3 Remove the cotter pin from the wheel castle nut.

NOTICE Always replace the cotter pin with a new one when removing the castle nut.

4 Loosen the wheel castle nut. Do not remove it.

5 Raise the machine approximately 6 inches / 15 cm. Place blocks under the chassis for support.

⚠WARNING Crushing hazard. The chassis could fall if not properly supported.

6 Remove the wheel castle nut. Remove the wheel.

7 Tag, disconnect and plug the hydraulic hoses on the drive motor. Cap the fittings on the drive motor.

⚠WARNING Bodily injury hazard. Spraying hydraulic oil can penetrate and burn skin. Loosen hydraulic connections very slowly to allow the oil pressure to dissipate gradually. Do not allow oil to squirt or spray.

CAUTION Component damage hazard. Hoses can be damaged if they are kinked or pinched.

8 Support and secure the yoke assembly to an appropriate lifting device.

9 Remove the retaining fastener from the steer link at the yoke assembly.

NOTICE Note the quantity and location of the spacers when disconnecting the steer link from the yoke assembly.

10 Remove the retaining fastener from the top of the yoke pivot shaft.

11 Lower the yoke assembly out of the chassis.

⚠CAUTION Bodily injury hazard. The yoke/motor assembly may fall if not properly supported when it is removed from the chassis.

NOTICE During re-assembly, be sure that the spacers are installed onto the steer link.

https://truckmanualshub.com/

How to Remove a Drive Motor

1 Block the non-steer wheels.

2 Center a lifting jack under the drive chassis at the steer end of the machine.

3 Remove the cotter pin from the wheel castle nut of the motor to be removed.

NOTICE Always replace the cotter pin with a new one when removing the castle nut.

4 Loosen the wheel castle nut. Do not remove it.

5 Raise the machine approximately 2 inches / 5 cm. Place blocks under the chassis for support.

⚠WARNING Crushing hazard. The chassis could fall if not properly supported.

6 Remove the wheel castle nut. Remove the wheel.

7 Tag, disconnect and plug the hydraulic hoses on the drive motor. Cap the fittings on the drive motor.

⚠WARNING Bodily injury hazard. Spraying hydraulic oil can penetrate and burn skin. Loosen hydraulic connections very slowly to allow the oil pressure to dissipate gradually. Do not allow oil to squirt or spray.

CAUTION Component damage hazard. Hoses can be damaged if they are kinked or pinched.

8 Remove the drive motor mounting fasteners. Remove the motor.

Torque specifications	
Drive motor mounting fasteners, dry	75 ft-lbs 101.7 Nm
Drive motor mounting fasteners, lubricated	56 ft-lbs 76.3 Nm

https://truckmanualshub.com/

8-2
Steer Cylinder

How to Remove the Steer Cylinder

NOTICE When removing a hose assembly or fitting, the O-ring on the fitting and/or hose end must be replaced and then torqued to specification during installation. Refer to Section Two, *Hydraulic Hose and Fitting Torque Specifications.*

1 Block the non-steer wheels.

2 Tag, disconnect and plug the hydraulic hoses from the steer cylinder. Cap the fittings on the cylinder.

⚠WARNING Bodily injury hazard. Spraying hydraulic oil can penetrate and burn skin. Loosen hydraulic connections very slowly to allow the oil pressure to dissipate gradually. Do not allow oil to squirt or spray.

CAUTION Component damage hazard. Hoses can be damaged if they are kinked or pinched.

3 Remove the pin retaining fasteners from the barrel-end pivot pin. Remove the pivot pin.

NOTICE Note the quantity and location of the spacers when removing the barrel-end pivot pin.

4 Remove the pin retaining fasteners from the rod-end pivot pin. Remove the pin.

NOTICE Note the quantity and location of the spacers when removing the rod-end pivot pin.

5 Remove the steer cylinder from the machine.

https://truckmanualshub.com/

8-3
Steer Bellcrank

How to Remove the Steer Bellcrank

1 Remove the steer cylinder. See 8-2, *How to Remove the Steer Cylinder.*

2 **From serial number 17408 to 43000:** Remove the retaining fastener from the center pivot pin of the bellcrank.
After serial number 43000: Remove the retaining fastener from the center pivot pin of the bellcrank. Remove the pin.

NOTICE Note the quantity and the location of the spacers on the bellcrank.

3 Block the non-steer wheels.

4 Center a lifting jack under the drive chassis at the steer end.

5 Remove the retaining fasteners from the steer links at each end of the bellcrank.

NOTICE Note the quantity and location of the spacers between the bellcrank and the steer links.

6 Raise the machine approximately 14 inches / 36 cm. Place blocks under the chassis for support.

⚠WARNING Crushing hazard. The chassis could fall if not properly supported.

7 Turn the yokes to the side so the bellcrank can be removed.

8 Remove the bellcrank from the machine.

NOTICE Note the quantity and the location of the spacers in between the bellcrank and the steer links.

https://truckmanualshub.com/

REV B

Non-steer Axle Components

9-1 Drive Brake

How to Remove a Drive Brake

NOTICE When removing a hose assembly or fitting, the O-ring on the fitting and/or hose end must be replaced and then torqued to specification during installation. Refer to Section Two, *Hydraulic Hose and Fitting Torque Specifications.*

1 Support and secure the entry ladder to an appropriate lifting device.

2 Remove the entry ladder mounting fasteners. Remove the entry ladder from the machine.

⚠CAUTION Crushing hazard. The entry ladder may become unbalanced and fall if it is not properly supported and secured to the lifting device.

3 Block the steer wheels.

4 Center a lifting jack under the drive chassis at the non-steer end.

5 Remove the cotter pin from the wheel castle nut.

NOTICE Always replace the cotter pin with a new one when removing the castle nut.

6 Loosen the wheel castle nut. Do not remove it.

7 Raise the machine approximately 2 inches / 5 cm. Place blocks under the chassis for support.

⚠WARNING Crushing hazard. The chassis could fall if not properly supported.

8 Remove the wheel castle nut. Remove the wheel.

9 Tag, disconnect and plug the hydraulic hose from the brake. Cap the fitting on the brake.

⚠WARNING Bodily injury hazard. Spraying hydraulic oil can penetrate and burn skin. Loosen hydraulic connections very slowly to allow the oil pressure to dissipate gradually. Do not allow oil to squirt or spray.

10 Place a lifting jack under the brake for support.

11 Remove the fasteners that attach the brake to the drive chassis. Remove the brake.

⚠CAUTION Crushing hazard. The brake will fall if not properly supported when the mounting fasteners are removed.

Torque specifications	
Brake mounting fasteners, dry	75 ft-lbs 102 Nm
Brake mounting fasteners, lubricated	56 ft-lbs 76 Nm

https://truckmanualshub.com/

Brake Release Hand Pump Components

REV A

10-1
Brake Release Hand Pump Components

The brake release hand pump manifold is mounted behind the entry ladder next to the battery charger.

Index No.	Description	Schematic Item	Function	Torque
1	Check valve, pilot operated	A	Manual brake release circuit	25-30 ft-lbs / 34-41 Nm
2	Shuttle valve	B	Brake release	8-10 ft-lbs / 11-14 Nm
3	Hand pump	C	Manual brake release	25-30 ft-lbs / 34-41 Nm

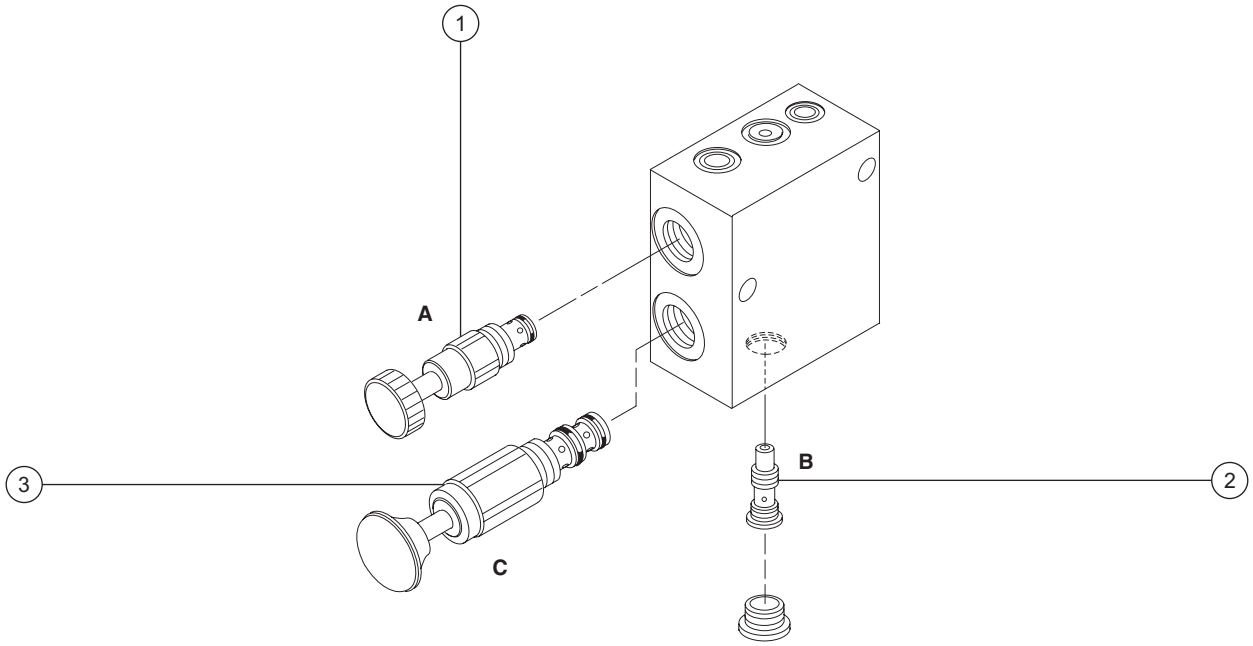

https://truckmanualshub.com/

Troubleshooting Flow Charts

Observe and Obey:

- ☑ Troubleshooting and repair procedures shall be completed by a person trained and qualified on the repair of this machine.
- ☑ Immediately tag and remove from service a damaged or malfunctioning machine.
- ☑ Repair any machine damage or malfunction before operating the machine.
- ☑ Unless otherwise specified, perform each repair procedure with the machine in the following configuration:
  - · Machine parked on a firm, level surface
  - · Platform in stowed position
  - · Key switch in the off position with the key removed
  - · Wheels chocked

Before Troubleshooting:

- ☑ Read, understand and obey the safety rules and operating instructions printed in the *Genie GS-1530 and GS-1930 Operator's Manual.*
- ☑ Be sure that all necessary tools and test equipment are available and ready for use.
- ☑ Read each appropriate flow chart thoroughly. Attempting shortcuts may produce hazardous conditions.
- ☑ Be aware of the following hazards and follow generally accepted safe workshop practices.

⚠DANGER Crushing hazard. When testing or replacing any hydraulic component, always support the structure and secure it from movement.

⚠DANGER Electrocution hazard. Contact with electrically charged circuits could result in death or serious injury. Remove all rings, watches and other jewelry.

⚠WARNING Bodily injury hazard. Spraying hydraulic oil can penetrate and burn skin. Loosen hydraulic connections very slowly to allow the oil pressure to dissipate gradually. Do not allow oil to squirt or spray.

NOTICE Two persons will be required to safely perform some troubleshooting procedures.

https://truckmanualshub.com/

TROUBLESHOOTING FLOW CHARTS

About This Section

When a malfunction is discovered, the flow charts in this section will help a service professional pinpoint the cause of the problem. To use this section, basic hand tools and certain pieces of test equipment are required—voltmeter, ohmmeter, pressure gauges.

The location of terminals mentioned in this section can be found on the appropriate electrical or hydraulic schematics provided in Section 6, *Schematics*.

Since various degrees of a particular function loss may occur, selecting the appropriate flow chart may be troublesome. When a function will not operate with the same speed or power as a machine in good working condition, refer to the flow chart which most closely describes the problem.

General Repair Process

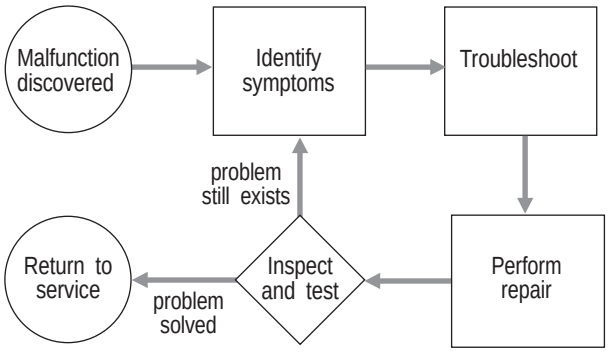

LED Diagnostic Readout

The diagnostic readout displays numerical codes that provide information about the machine operating status and about malfunctions. The dot to the right of the numbers will blink during normal operation codes and remain on with fault codes.

The codes listed in the Fault Code Chart describe malfunctions and can aid in troubleshooting the machine by pinpointing the area or component affected.

https://truckmanualshub.com/

REV A

Fault Code Chart

(after serial number 17407)

Fault Code	Problem	Possible Causes	Solution
01	Internal ECM error.	EPROM not programmed.	Replace ECM.
02 (See Chart 16)	ECM/Platform communication error.	Malfunctioning control cable OR malfunctioning platform controls.	Troubleshoot control cable OR troubleshoot platform controls.
03	Undefined platform DIP switch settings.	DIP switch settings incorrect.	Correct DIP switch settings.
12 (See Chart 4)	Chassis up/down toggle closed at start up.	Malfunctioning up/down switch.	Troubleshoot up/down switch.
18 (See Charts 10, 13 or 14)	Pothole guard failure.	Malfunctioning pothole switch OR obstruction in pothole guard linkage.	Troubleshoot pothole switch OR remove obstruction.
19 (See Chart 15)	Limit switch failure.	Malfunctioning limit switch OR wire disconnected from limit switch.	Troubleshoot limit switch OR inspect wire connection.
42 (See Chart 5 or Chart 8)	Platform left turn switch fault.	Malfunctioning steer left microswitch.	Troubleshoot steer left microswitch.
43 (See Chart 5 or Chart 9)	Platform right turn switch fault.	Malfunctioning steer right microswitch.	Troubleshoot steer right microswitch.
46 (See Chart 5)	Platform drive enable switch fault.	Malfunctioning drive enable switch.	Troubleshoot drive enable switch.
47	Platform joystick fault.	Joystick potentiometer not centered.	Verify potentiometer setting.
52 (See Chart 11)	Forward coil fault.	Malfunctioning coil OR wire disconnected from coil.	Troubleshoot coil OR inspect wire connection.
53 (See Chart 12)	Reverse coil fault.	Malfunctioning coil OR wire disconnected from coil.	Troubleshoot coil OR inspect wire connection.
54 (See Chart 6)	Up coil fault.	Malfunctioning coil OR wire disconnected from coil.	Troubleshoot coil OR inspect wire connection.
55 (See Chart 7)	Down coil fault.	Malfunctioning coil OR wire disconnected from coil.	Troubleshoot coil OR inspect wire connection.
56 (See Chart 9)	Steer right coil fault.	Malfunctioning coil OR wire disconnected from coil.	Troubleshoot coil OR inspect wire connection.
57 (See Chart 8)	Steer left coil fault.	Malfunctioning coil OR wire disconnected from coil.	Troubleshoot coil OR inspect wire connection.
58 (See Chart 10 or Chart 10A)	Brake coil fault.	Malfunctioning coil OR wire disconnected from coil.	Troubleshoot coil OR inspect wire connection.
59	Series/parallel coil fault.	DIP switch settings are incorrect.	Troubleshoot and correct DIP switch settings.
68	Low battery voltage.	Batteries discharged.	Charge batteries.
88	ECM has been erased.	Static strap may be missing from the machine.	Replace static strap.

https://truckmanualshub.com/

Chart 1

REV A

All Functions Will Not Operate

Be sure the circuit breaker and fuse are not tripped or blown.

Be sure both Emergency Stop switches are pulled out to the ON position.

Be sure the batteries are fully charged and properly connected.

Be sure the hydraulic tank is filled to the correct level.

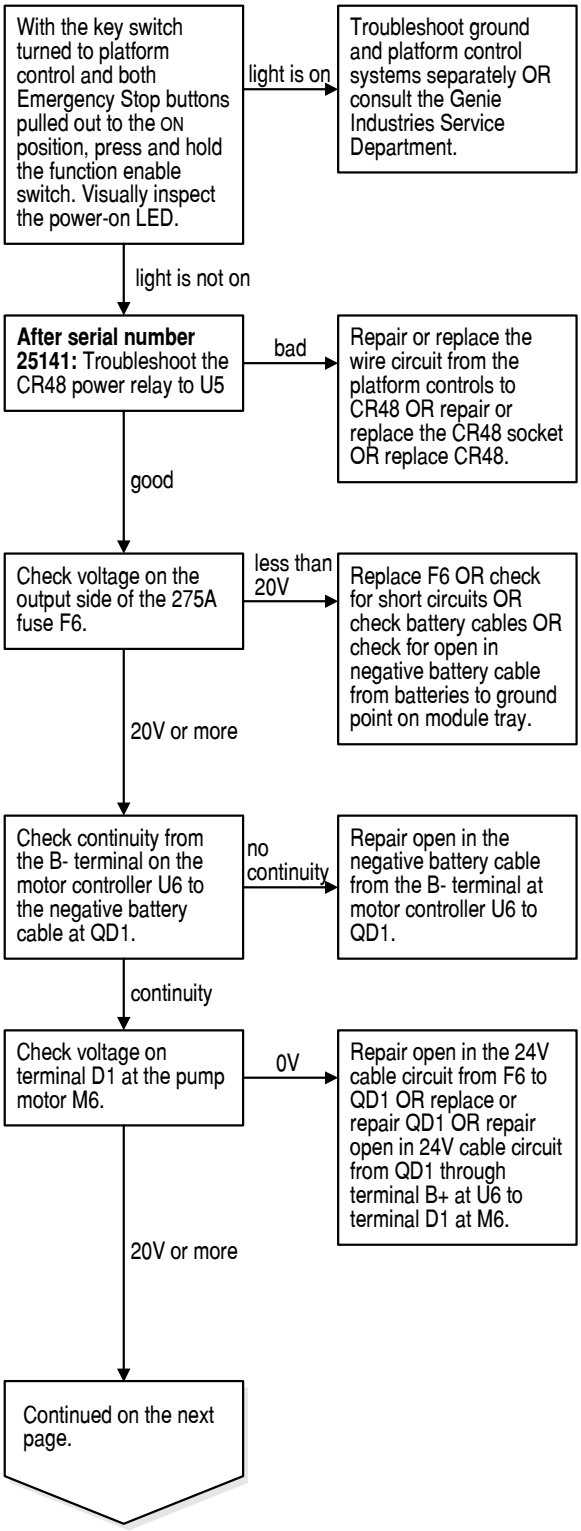

https://truckmanualshub.com/

REV A CHART 1

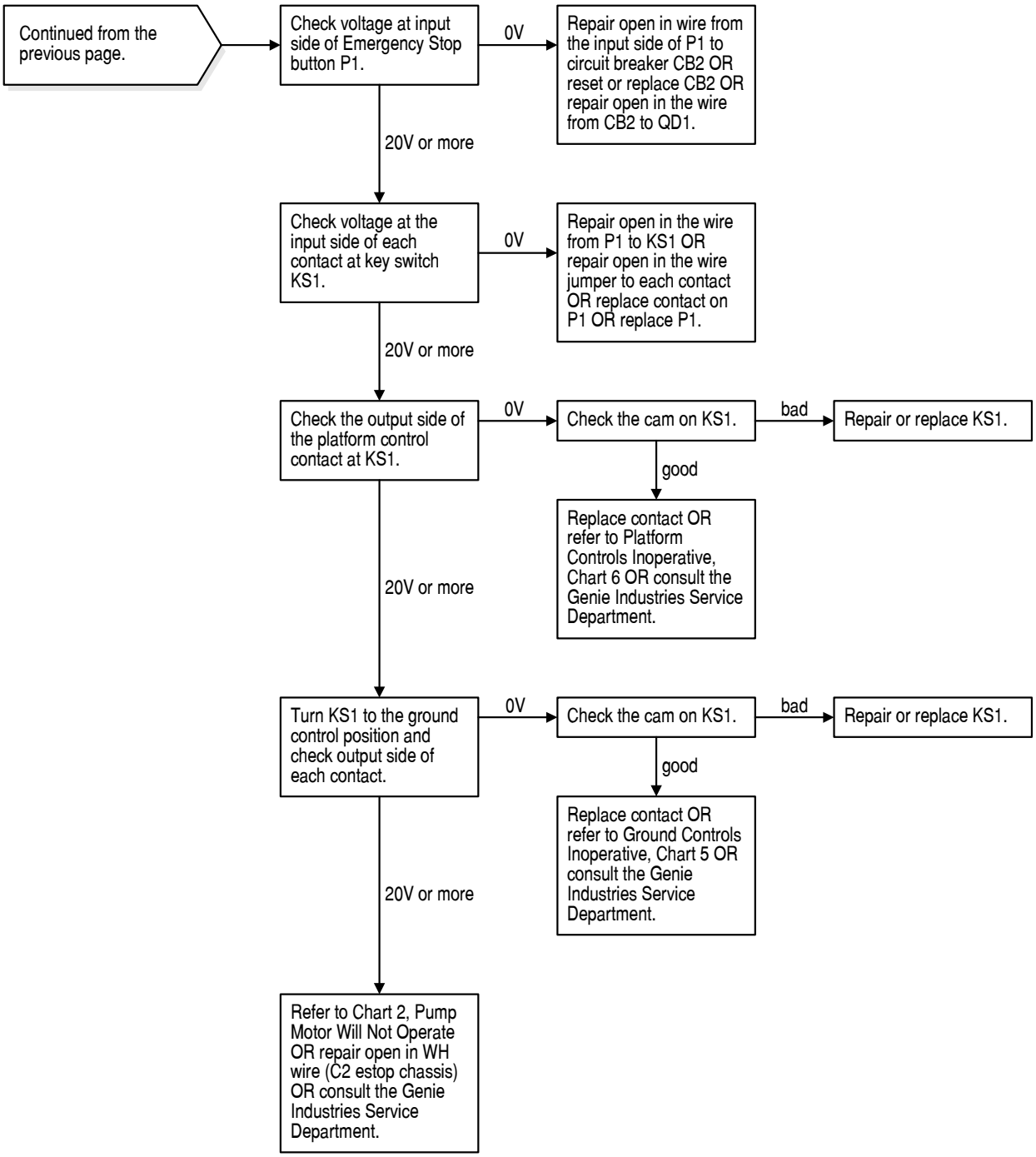

https://truckmanualshub.com/

Chart 2

REV A

Pump Motor Will Not Operate

Be sure the circuit breaker and fuse are not tripped or blown.

Be sure the batteries are fully charged and properly connected.

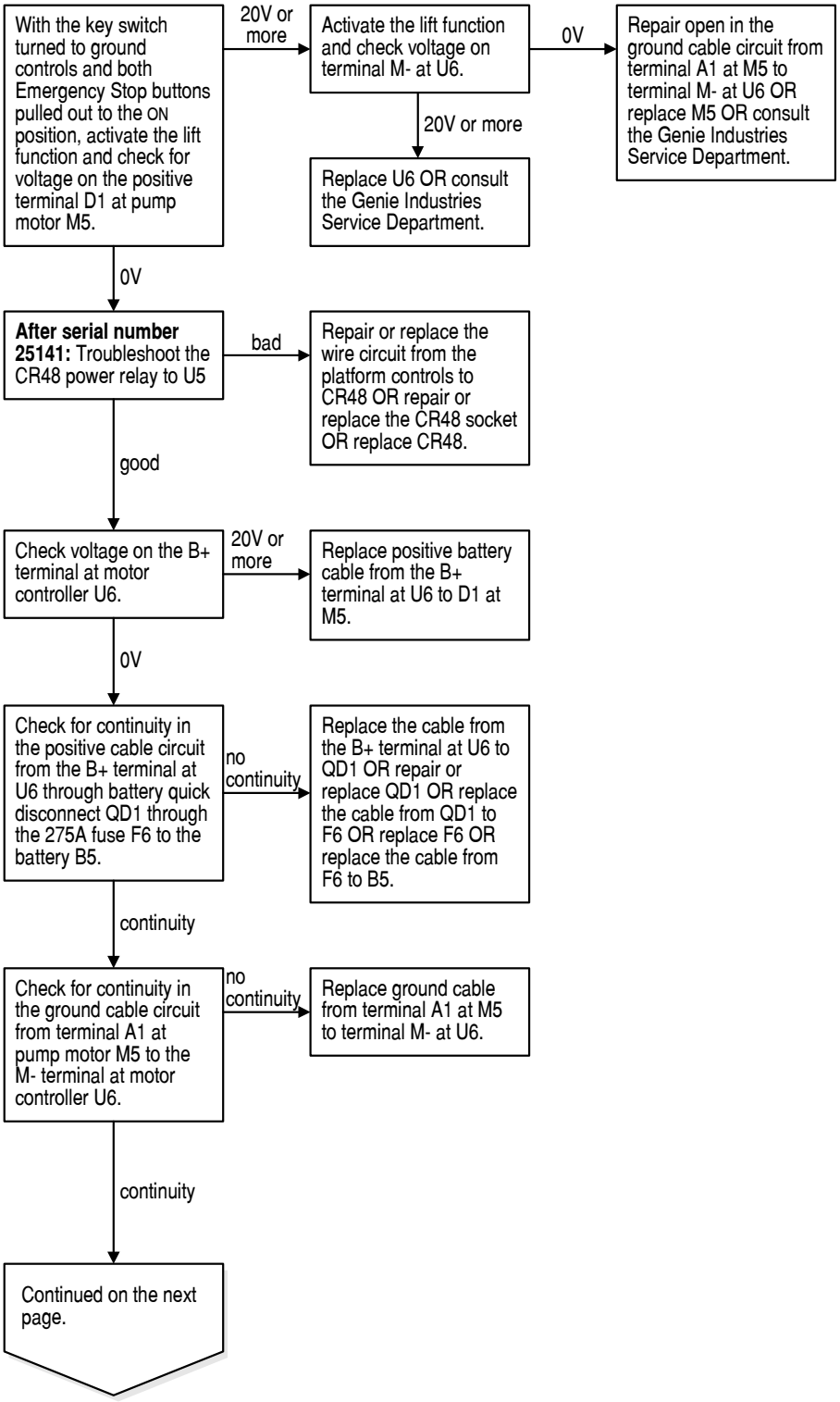

https://truckmanualshub.com/

REV A CHART 2

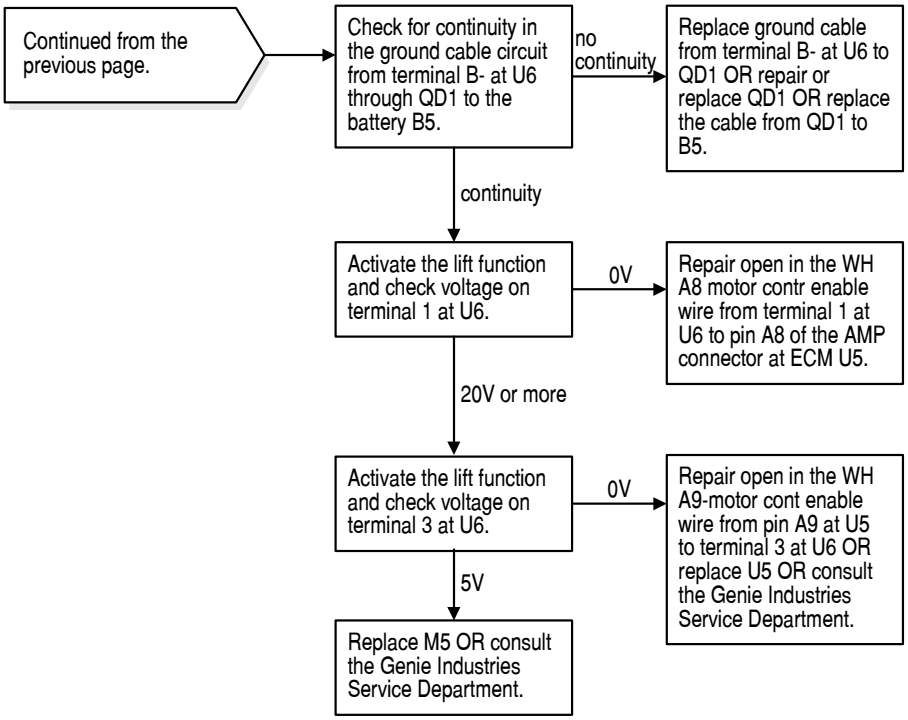

https://truckmanualshub.com/

Chart 3

REV A

All Functions Inoperative, Power Unit Starts and Runs

Be sure, if the Error Indicator light is on at the platform controls, you refer to the specific chart that relates to the error code that is displayed on the ECM.

Be sure the circuit breaker and fuse are not tripped or blown.

Be sure the batteries are fully charged and properly connected.

Be sure the hydraulic tank is filled to the correct level.

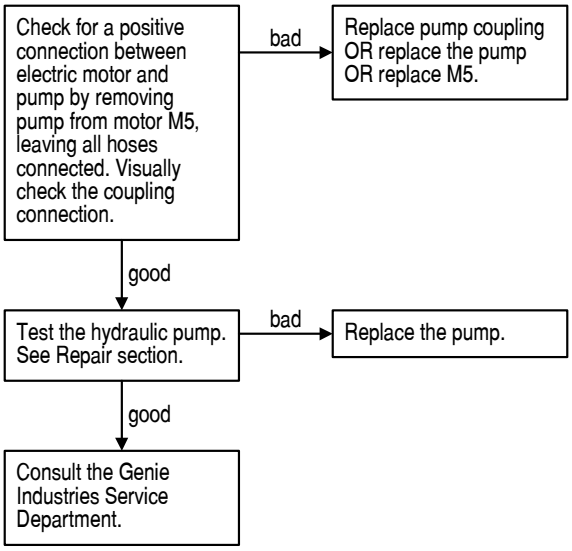

https://truckmanualshub.com/

Chart 4

REV A

Ground Controls Inoperative, Platform Controls Operate Normally

Be sure, if the Error Indicator light is on at the platform controls, you refer to the specific chart that relates to the error code that is displayed on the ECM.

Be sure the circuit breaker and fuse are not tripped or blown.

Be sure the batteries are properly connected.

Be sure the batteries are fully charged.

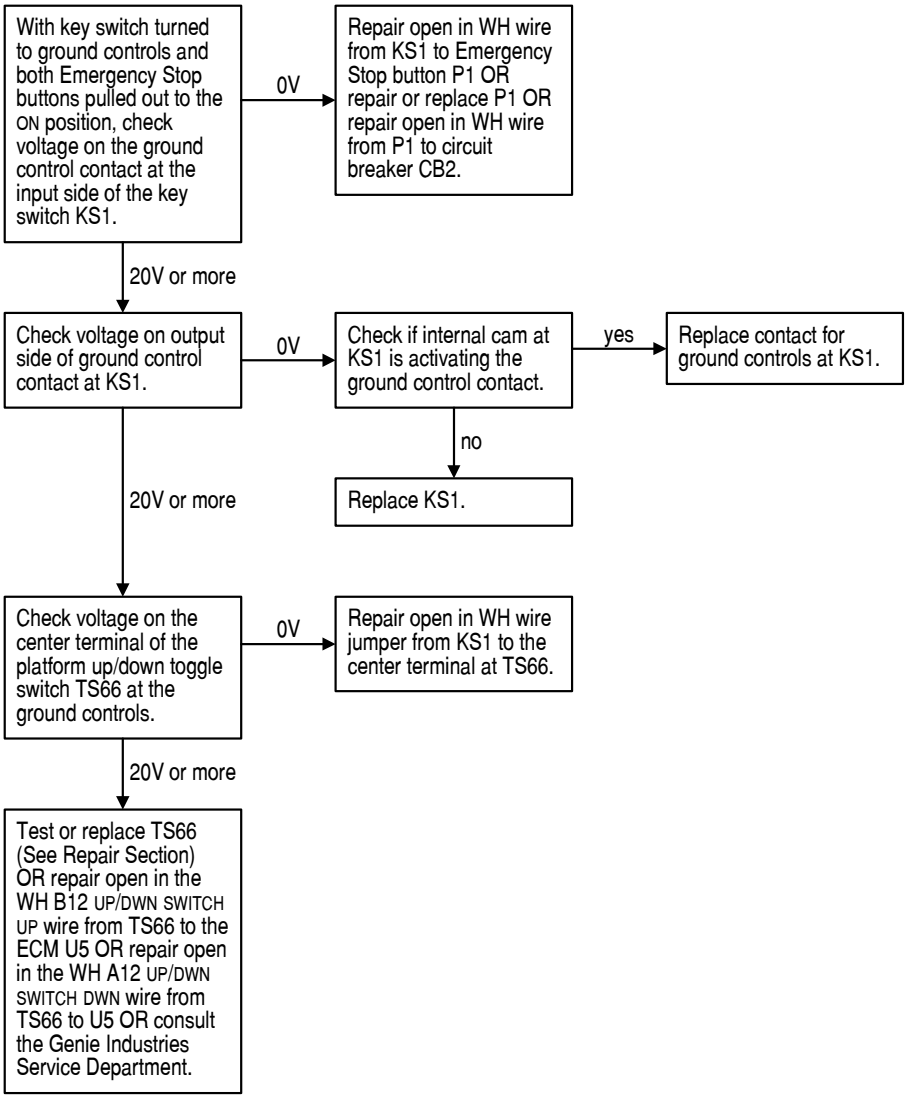

https://truckmanualshub.com/

Chart 5

REV A

Platform Controls Inoperative, Ground Controls Operate Normally

Be sure, if the Error Indicator light is on at the platform controls, you refer to the specific chart that relates to the error code that is displayed on the ECM.

Be sure the circuit breaker and fuse are not tripped or blown.

Be sure the batteries are fully charged and properly connected.

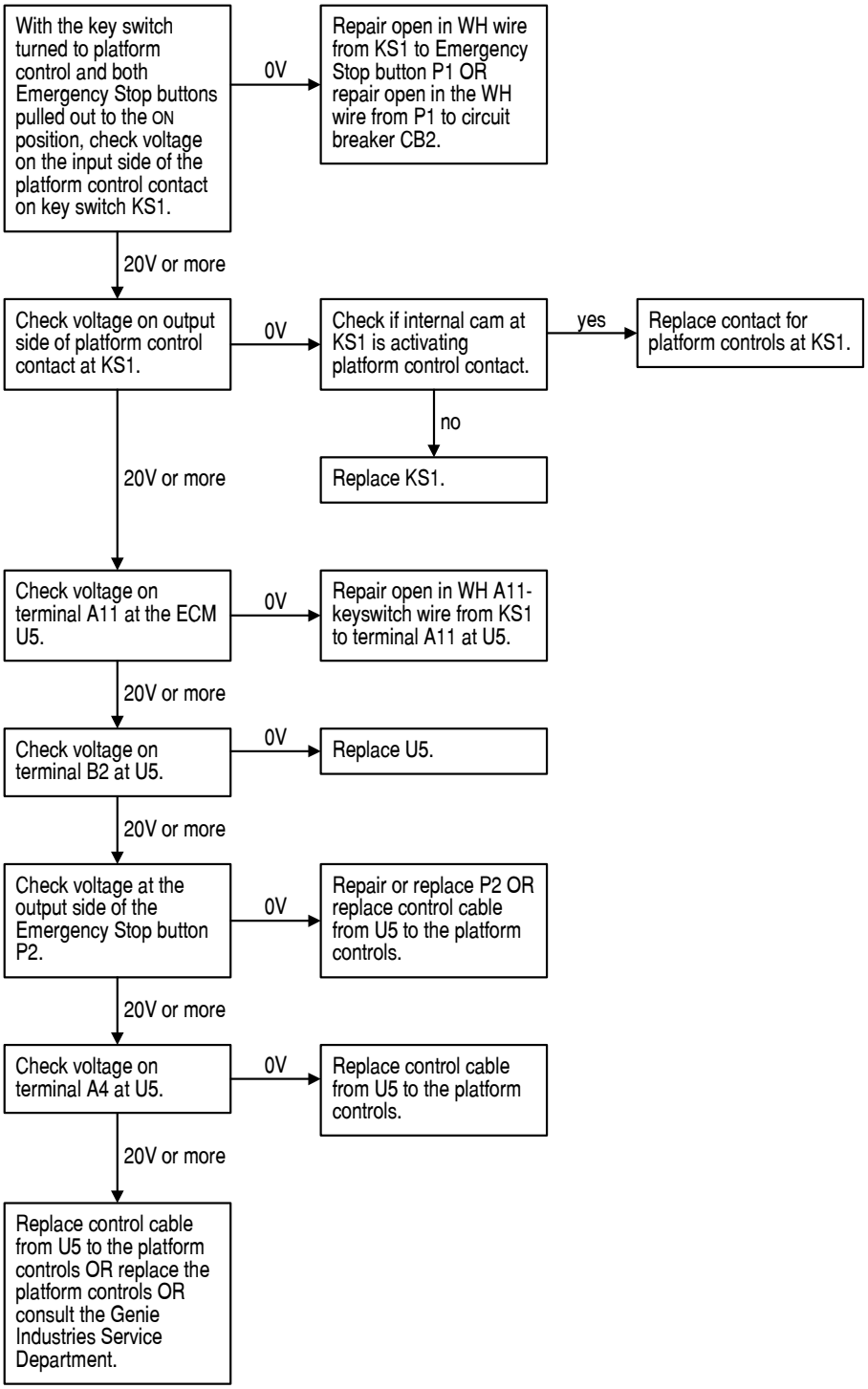

https://truckmanualshub.com/

REV A

Chart 6

Platform Up Function Inoperative

Be sure all other functions operate normally.

Be sure the circuit breaker and fuse are not tripped or blown.

Be sure the batteries are fully charged and properly connected.

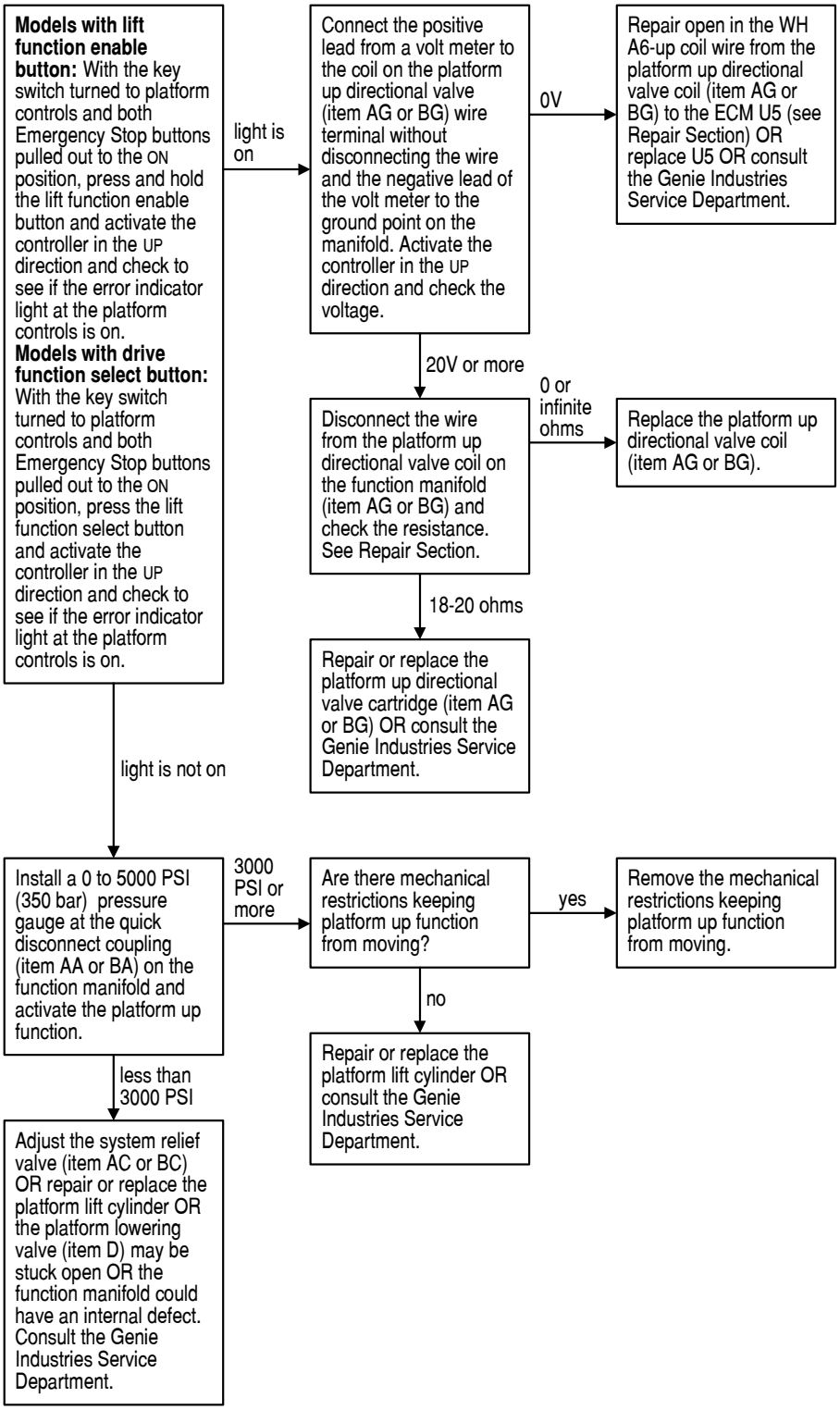

https://truckmanualshub.com/

Chart 7

REV A

Platform Down Function Inoperative

Be sure all other functions operate normally.

Be sure the circuit breaker and fuse are not tripped or blown.

Be sure the batteries are fully charged and properly connected.

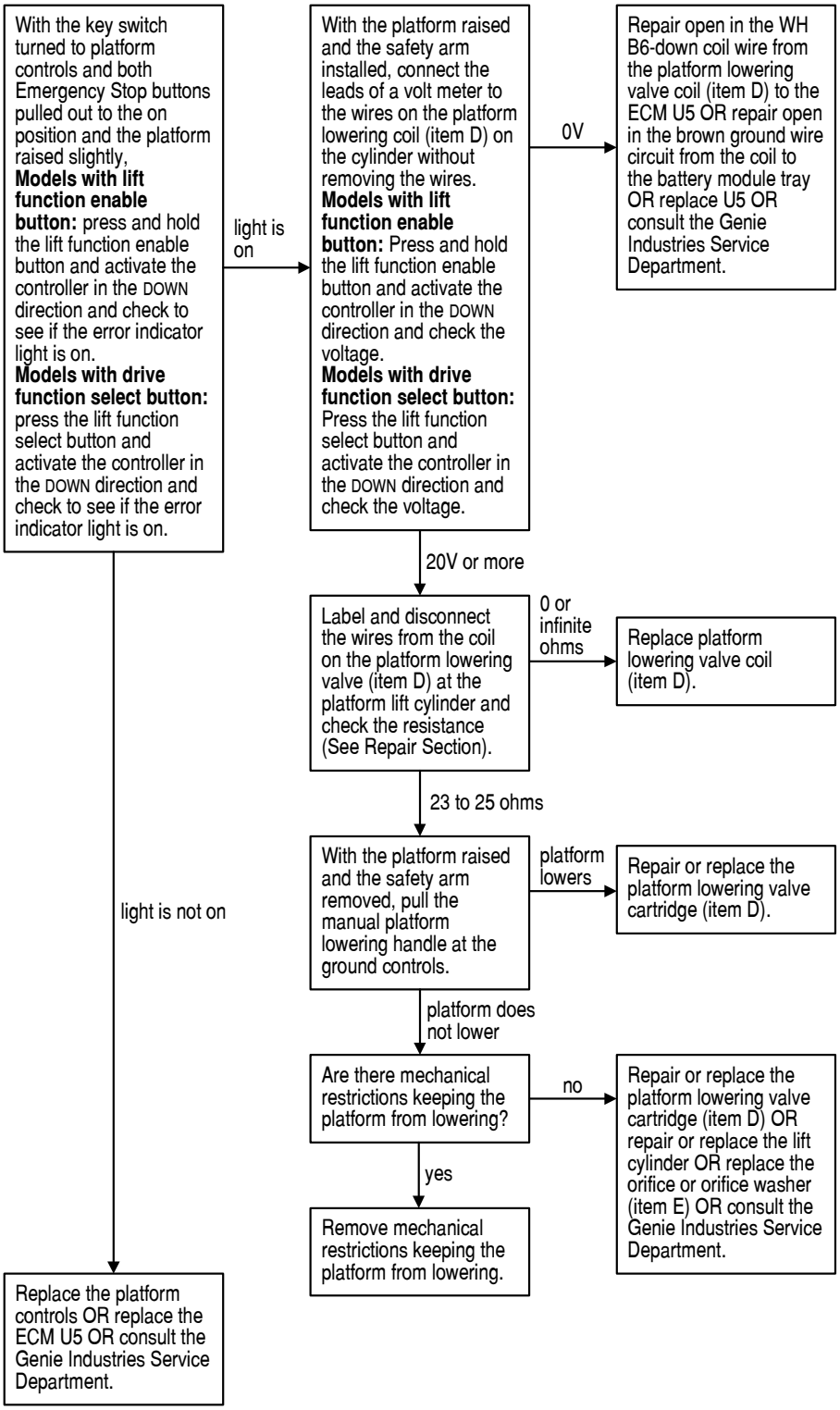

https://truckmanualshub.com/

Chart 8

REV A

Steer Left Function Inoperative

Be sure all other functions operate normally.

Be sure the circuit breaker and fuse are not tripped or blown.

Be sure the batteries are fully charged and properly connected.

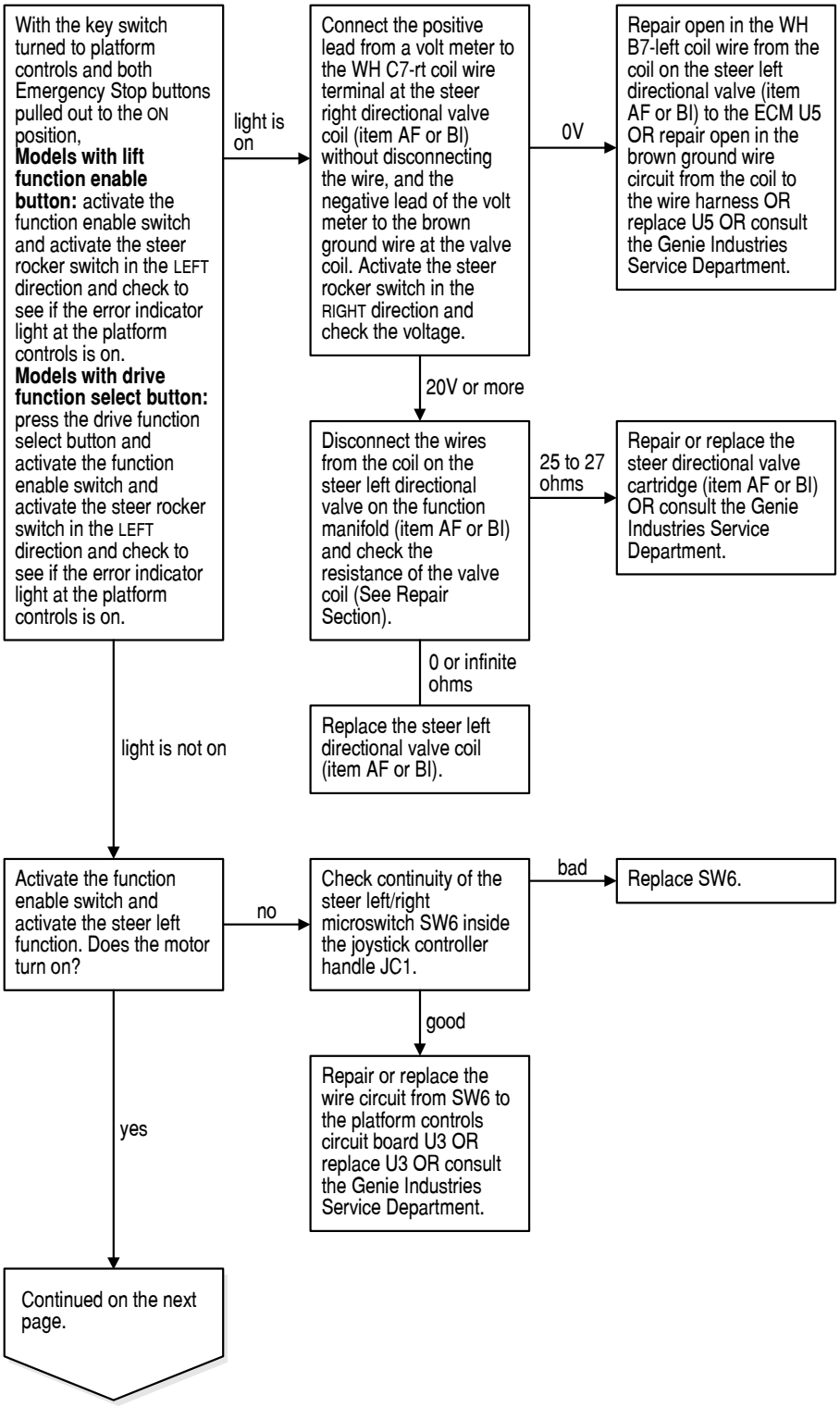

https://truckmanualshub.com/

CHART 8 REV A

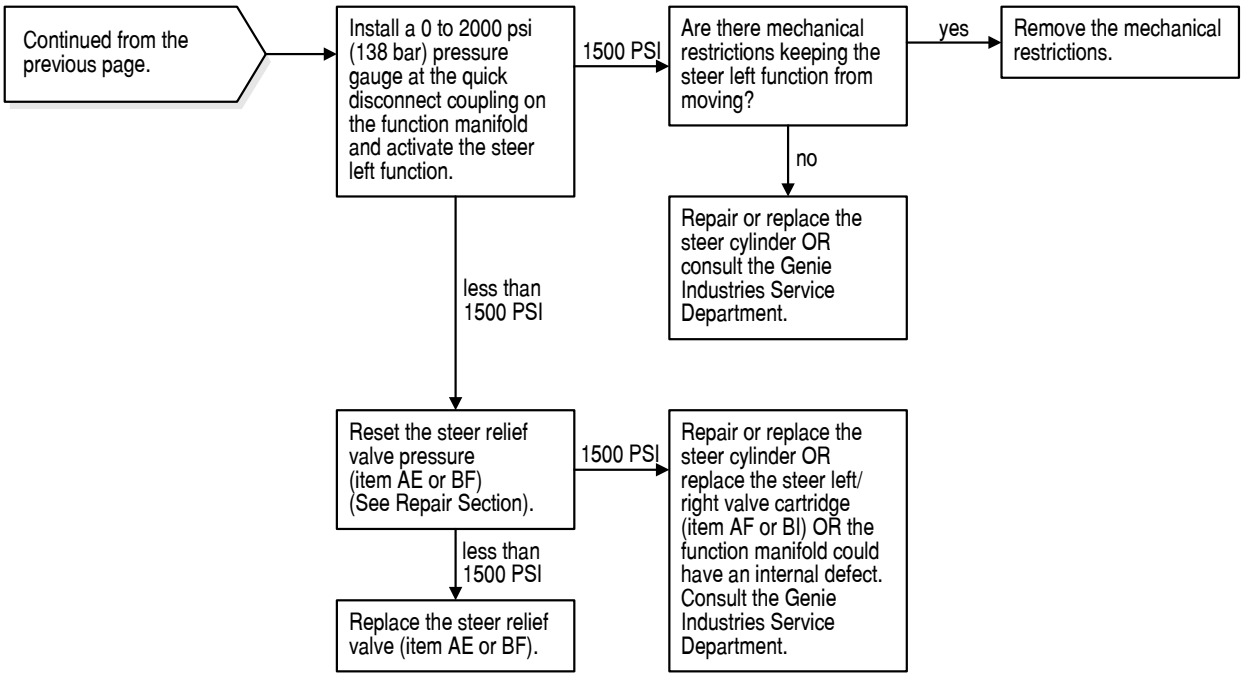

https://truckmanualshub.com/

REV A

Chart 9

Steer Right Function Inoperative

Be sure all other functions operate normally.

Be sure the circuit breaker and fuse are not tripped or blown.

Be sure the batteries are fully charged and properly connected.

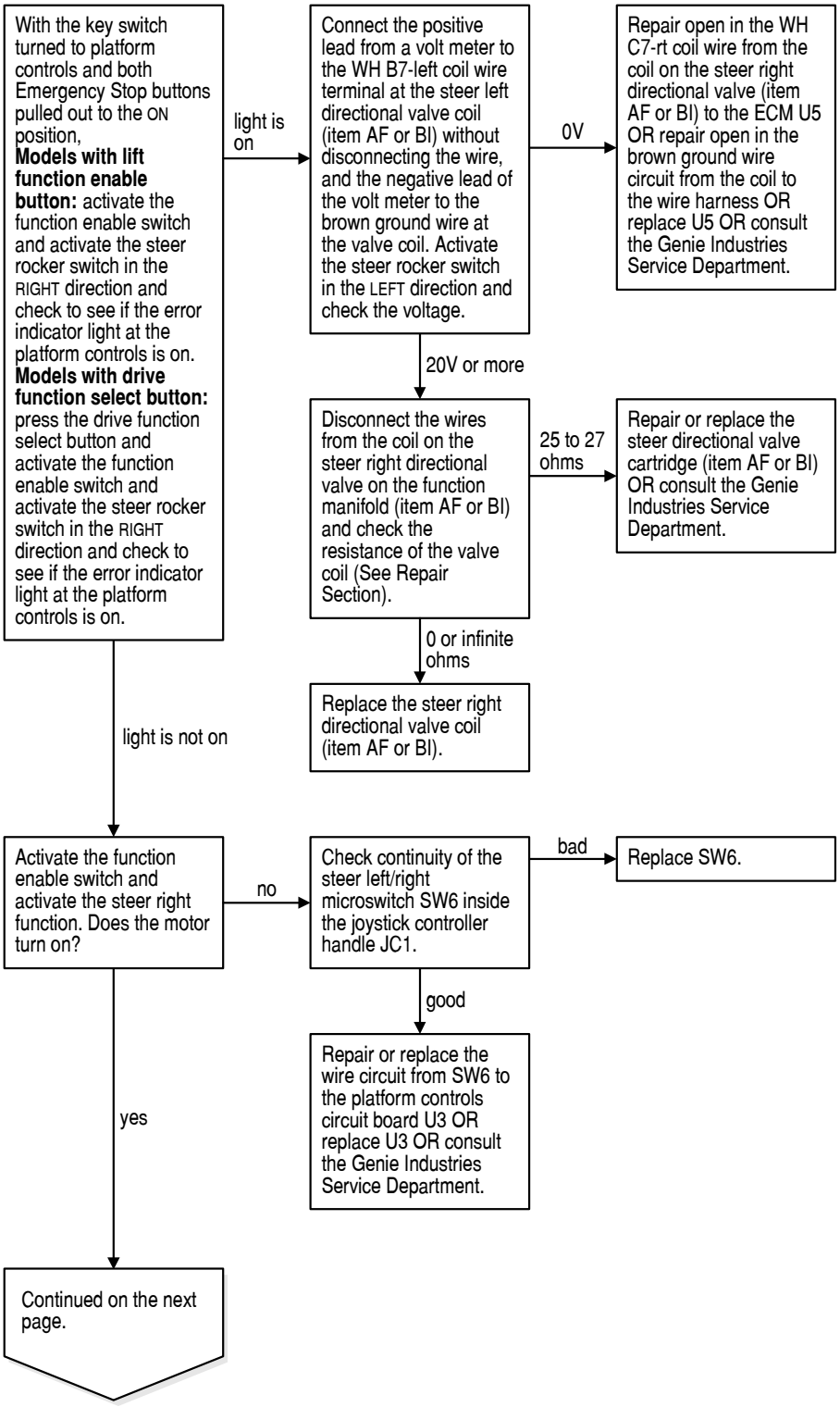

https://truckmanualshub.com/

CHART 9 REV A

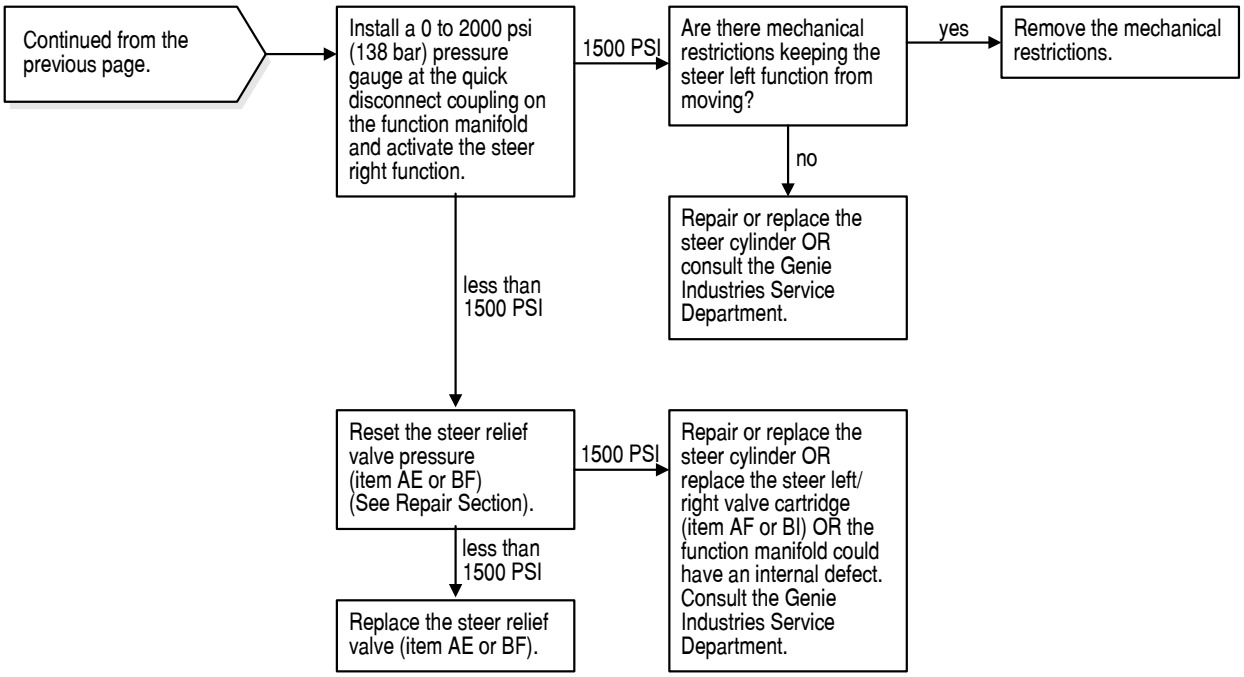

https://truckmanualshub.com/

Chart 10

REV A

All Drive Functions Inoperative, All Other Functions Operate Normally

Be sure, if the Error Indicator light is on at the platform controls, you refer to the specific chart that relates to the error code that is displayed on the ECM.

Be sure the circuit breaker and fuse are not tripped or blown.

Be sure the batteries are fully charged and properly connected.

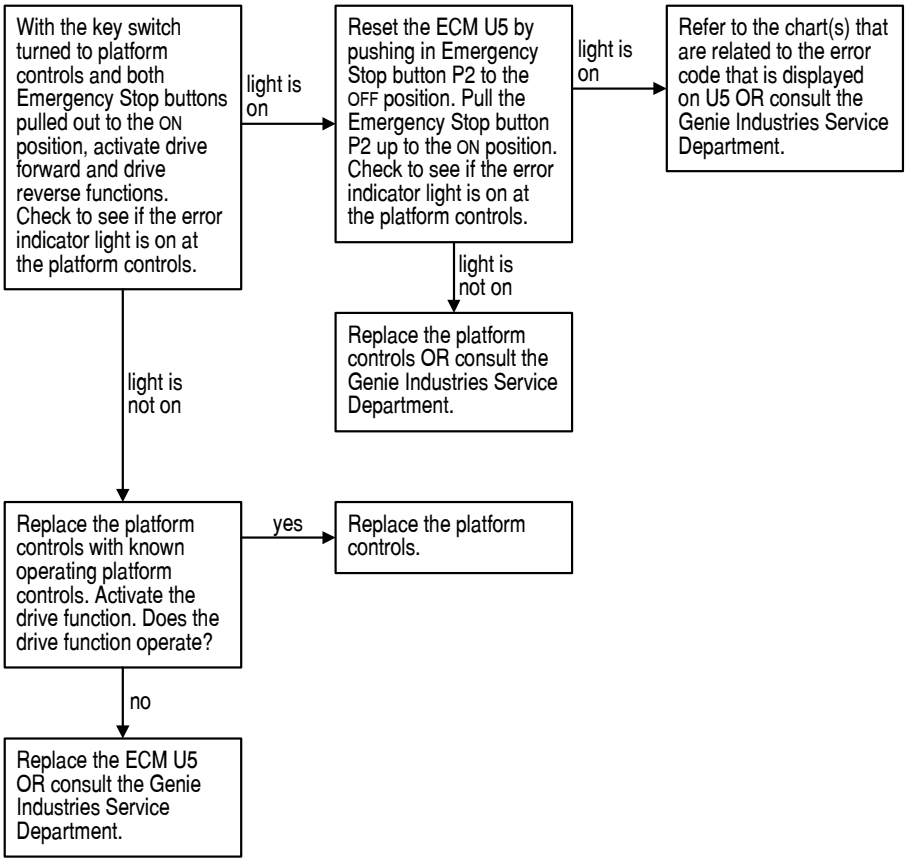

https://truckmanualshub.com/

Chart 10A

REV A

Brake Release Function Inoperative

Be sure, if the Error Indicator light is on at the platform controls, you refer to the specific chart that relates to the error code that is displayed on the ECM.

Be sure the circuit breaker and fuse are not tripped or blown.

Be sure the batteries are fully charged and properly connected.

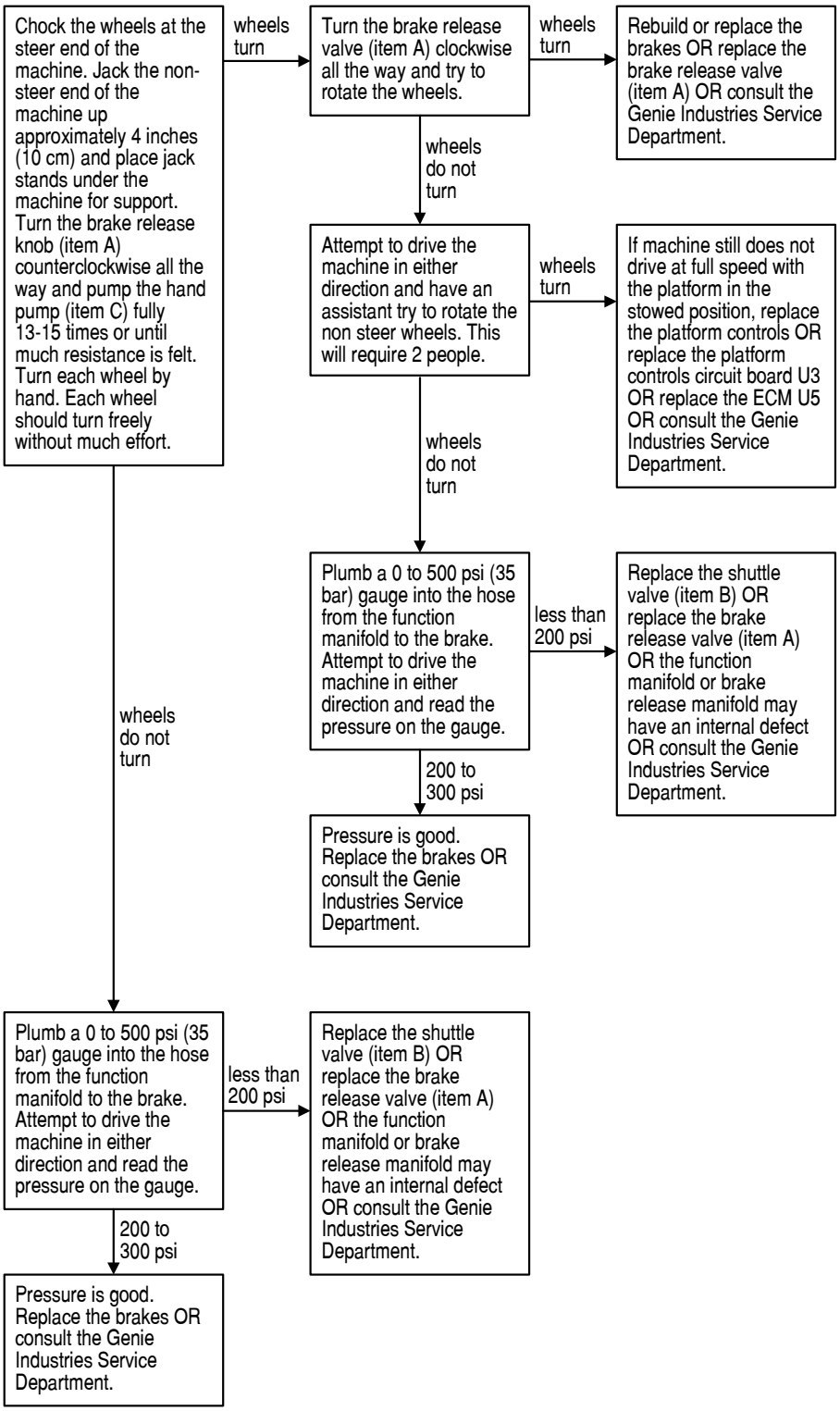

https://truckmanualshub.com/

Chart 11

REV A

Drive Forward Function Inoperative

Be sure all other functions operate normally.

Be sure the circuit breaker and fuse are not tripped or blown.

Be sure the batteries are fully charged and properly connected.

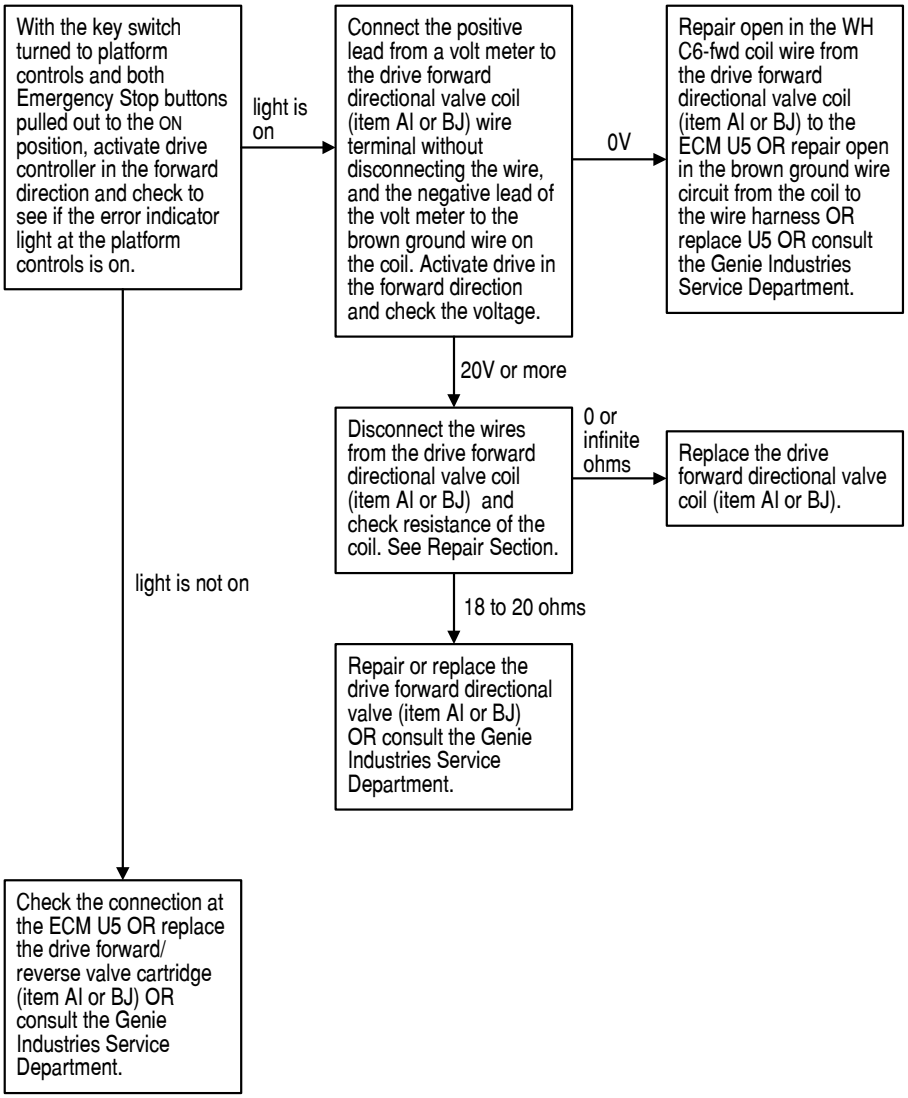

https://truckmanualshub.com/

Chart 12

REV A

Drive Reverse Function Inoperative

Be sure all other functions operate normally.

Be sure the circuit breaker and fuse are not tripped or blown.

Be sure the batteries are fully charged and properly connected.

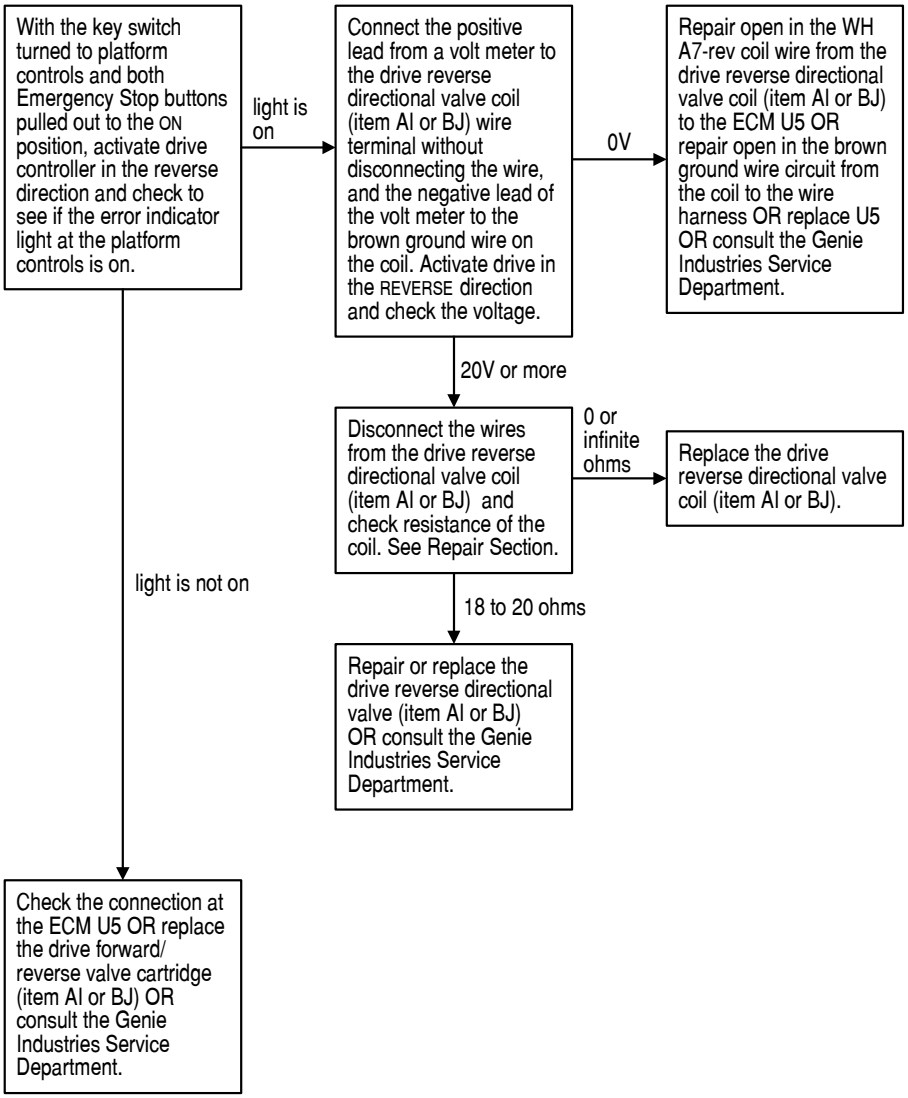

https://truckmanualshub.com/

Chart 13

REV A

Machine Will Not Drive At Full Speed

Be sure the circuit breaker and fuse are not tripped or blown.

Be sure the batteries are fully charged and properly connected.

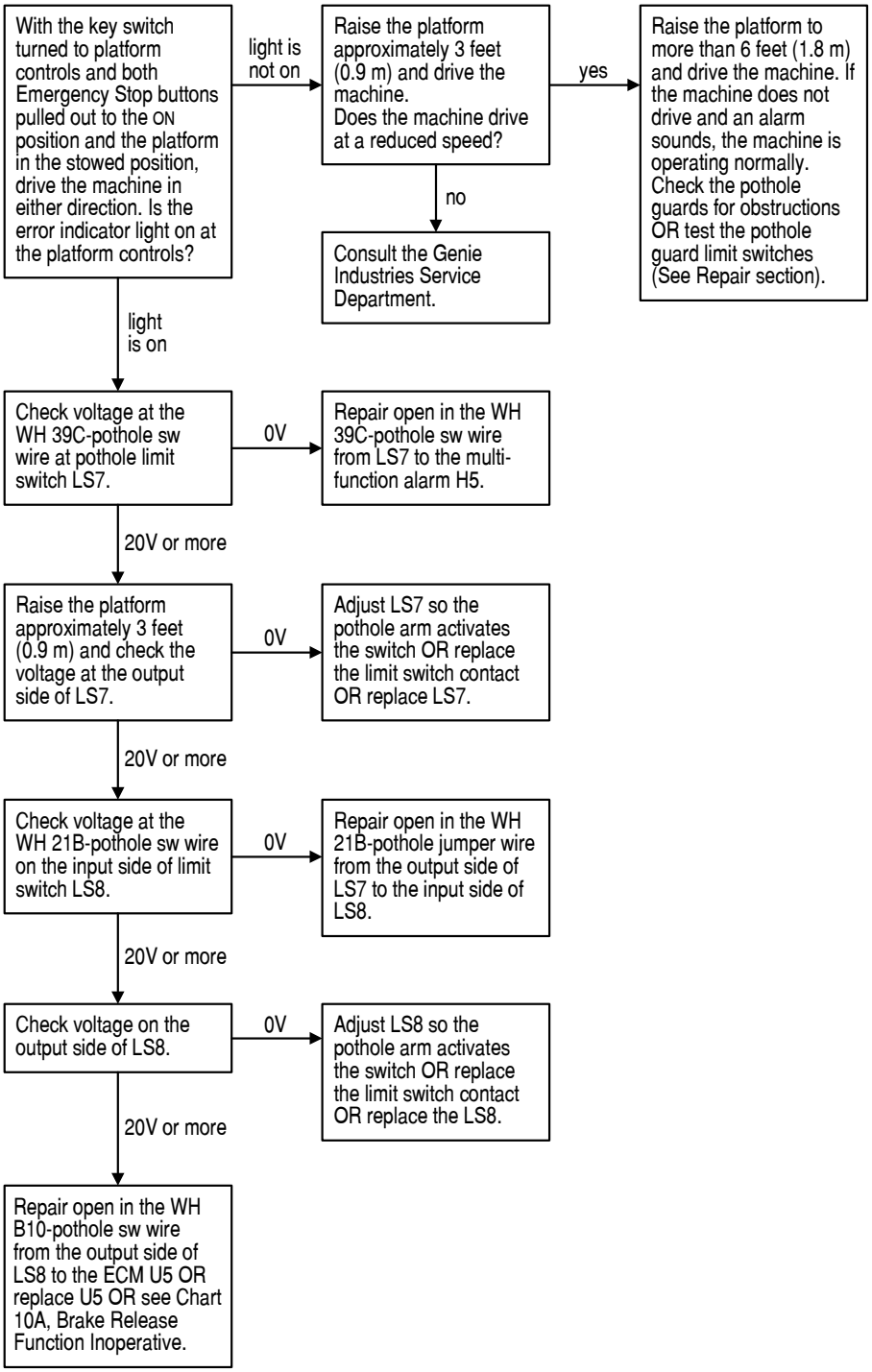

https://truckmanualshub.com/

Chart 14

REV A

Machine Drives At Full Speed With Platform Raised

Be sure the circuit breaker and fuse are not tripped or blown.

Be sure the batteries are fully charged and properly connected.

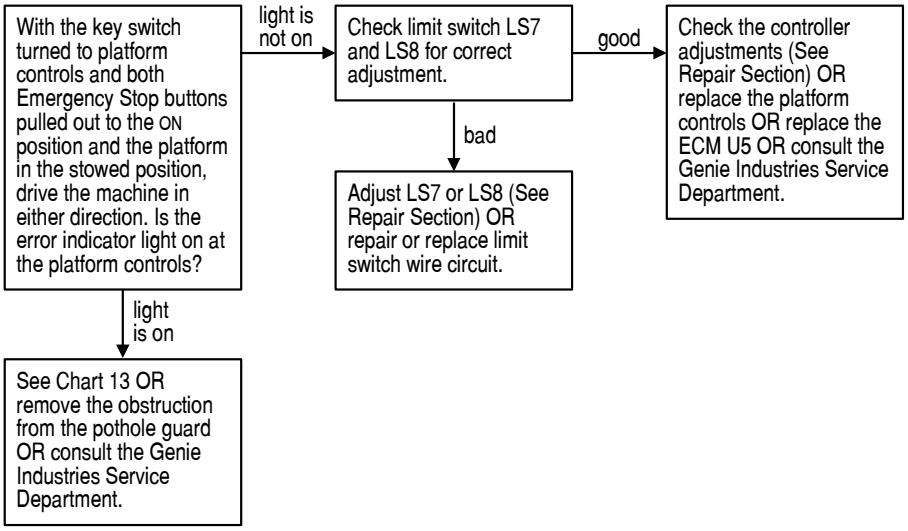

https://truckmanualshub.com/

Chart 15

REV A

Limit Switch Function Inoperative

Be sure the circuit breaker and fuse are not tripped or blown.

Be sure the limit switches are clear of debris.

Be sure the pothole guards are deploying.

Be sure the batteries are fully charged and properly connected.

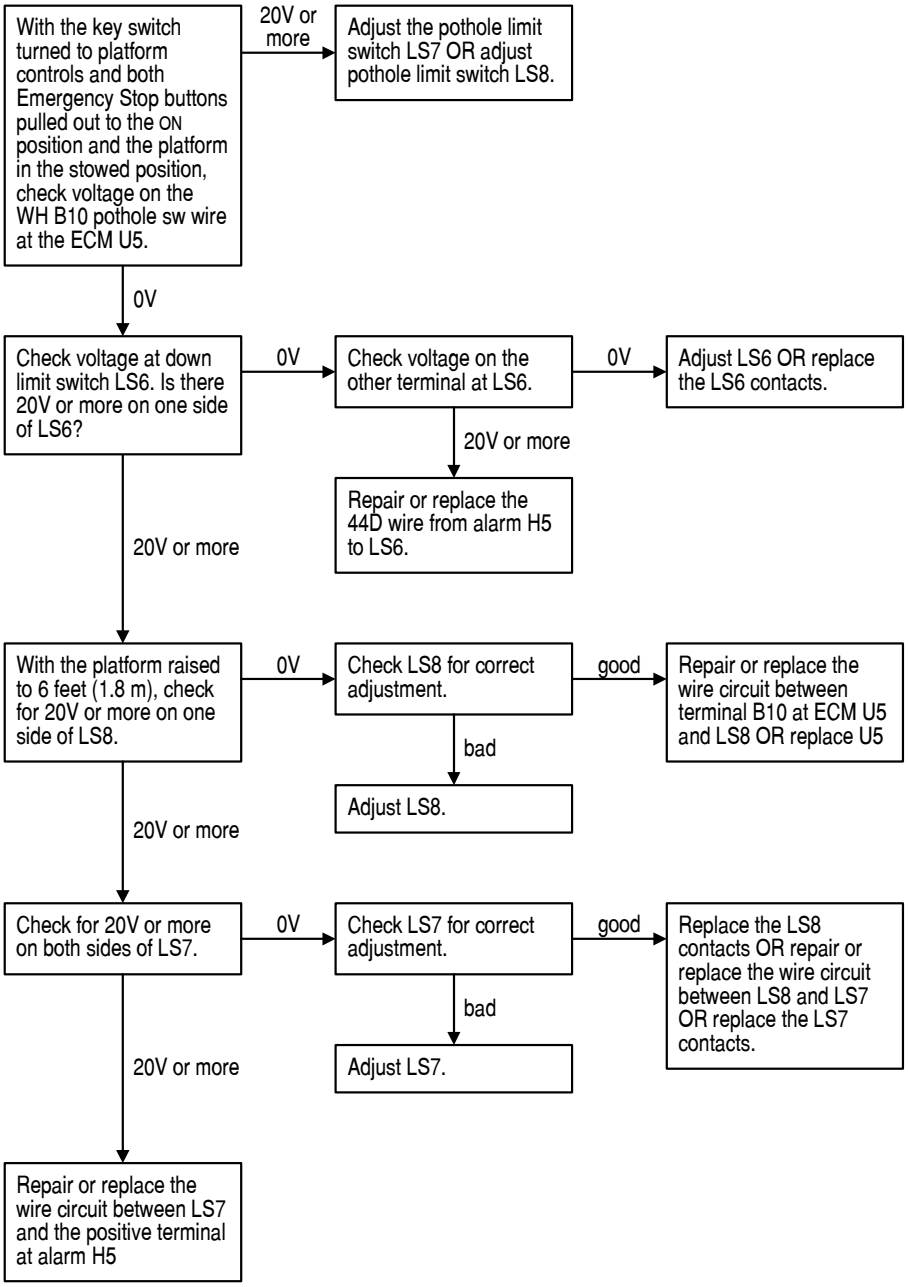

https://truckmanualshub.com/

Chart 16

REV A

Fault Code 02 - ECM / Platform Communication Error

Be sure the circuit breaker and fuse are not tripped or blown.

Be sure the batteries are fully charged and properly connected.

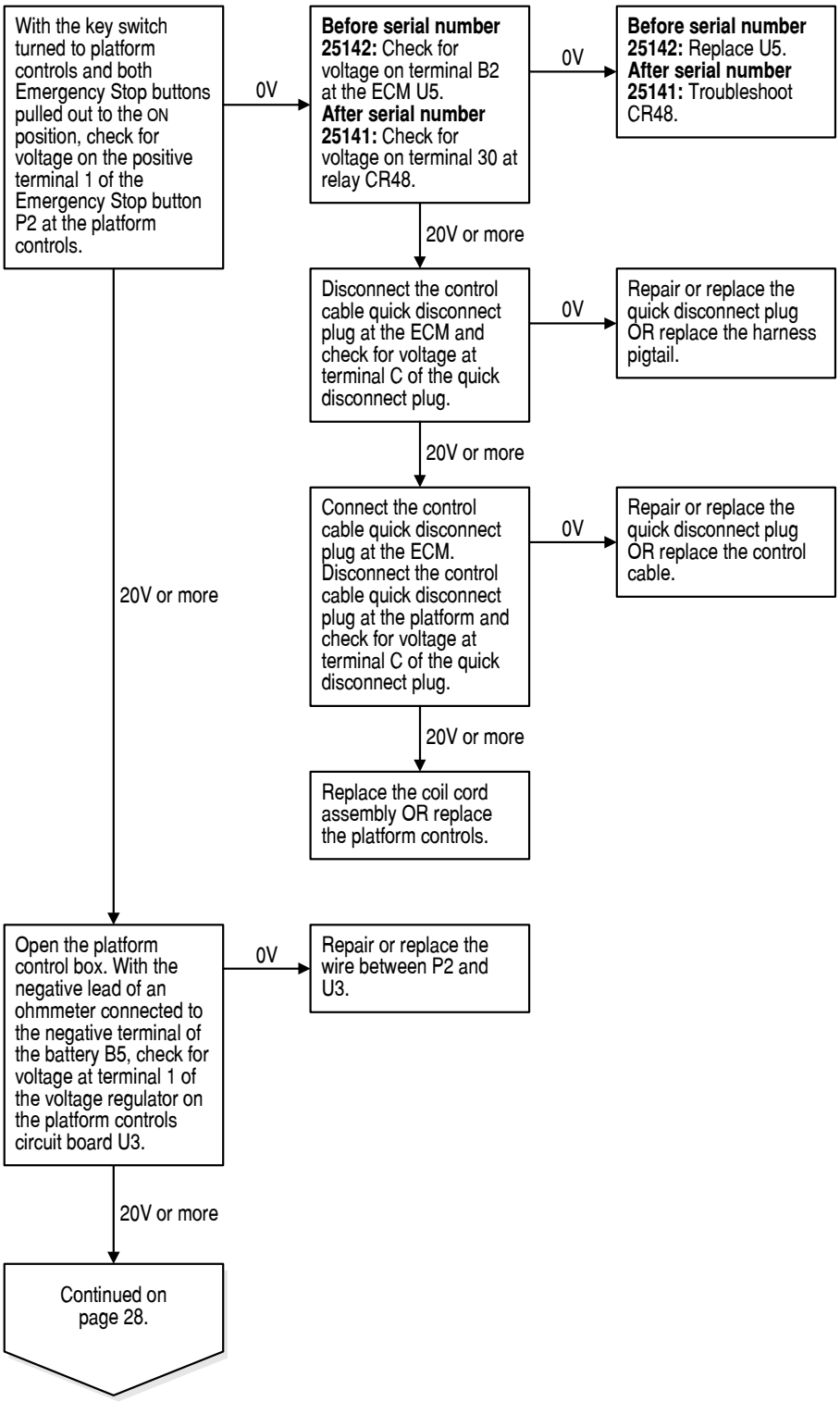

https://truckmanualshub.com/

REV A CHART 16

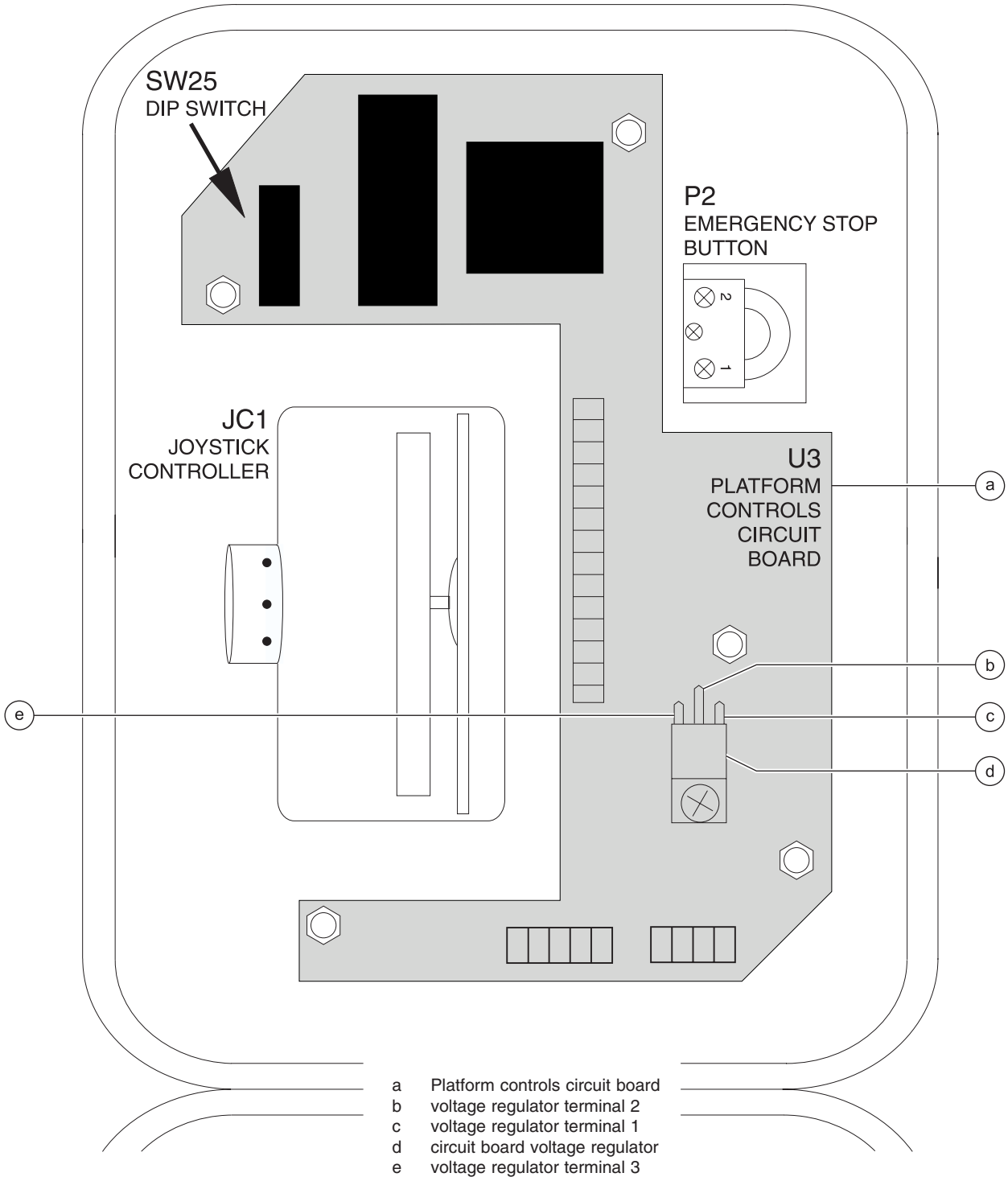

a Platform controls circuit board
b voltage regulator terminal 2
c voltage regulator terminal 1
d circuit board voltage regulator
e voltage regulator terminal 3

https://truckmanualshub.com/

CHART 16 REV A

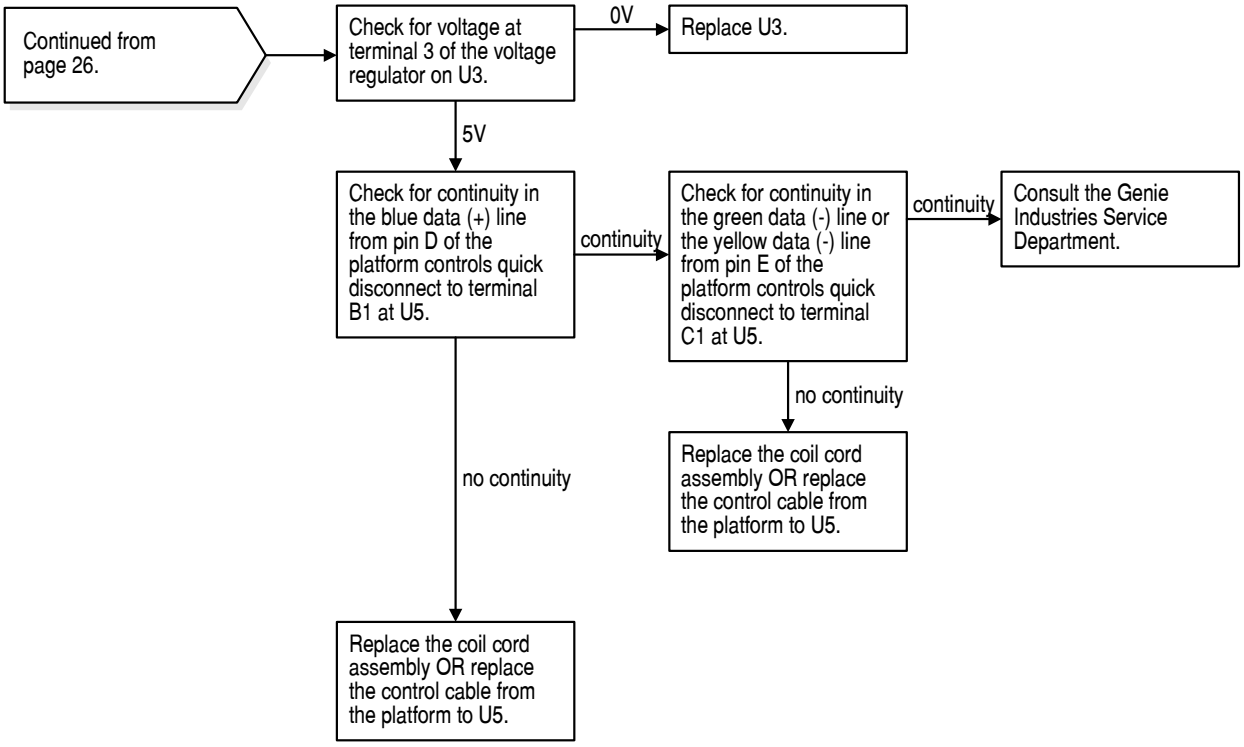

https://truckmanualshub.com/

Schematics

Observe and Obey:

- ☑ Troubleshooting and repair procedures shall be completed by a person trained and qualified on the repair of this machine.
- ☑ Immediately tag and remove from service a damaged or malfunctioning machine.
- ☑ Repair any machine damage or malfunction before operating the machine.

Before Troubleshooting:

- ☑ Read, understand and obey the safety rules and operating instructions printed in the *Genie GS-1530 and GS-1930 Operator's Manual.*
- ☑ Be sure that all necessary tools and test equipment are available and ready for use.

About This Section

There are two groups of schematics in this section. An illustration legend precedes each group of drawings.

Electrical Schematics

WARNING Electrocution hazard. Contact with electrically charged circuits could result in death or serious injury. Remove all rings, watches and other jewelry.

Hydraulic Schematics

WARNING Bodily injury hazard. Spraying hydraulic oil can penetrate and burn skin. Loosen hydraulic connections very slowly to allow the oil pressure to dissipate gradually. Do not allow oil to squirt or spray.

General Repair Process

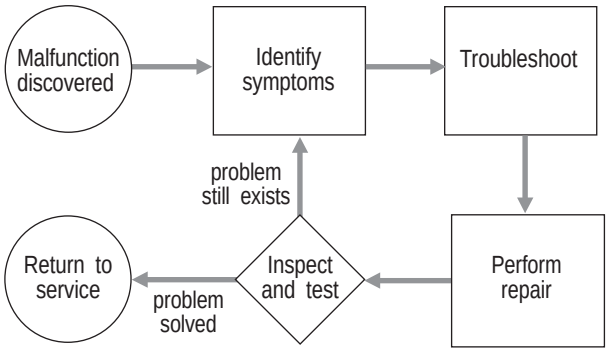

https://truckmanualshub.com/

Electrical Components

REV C

Item	Description	Genie Part Number	Manufacturer	Manufacturer Part Number	Qty
B5	Battery, 225AH, 6V DC	62201	Trojan Battery Co.	T-105, dry	4
CB2	Circuit breaker, 7A	47811	ETA	45-700-IG1-P10	1
CR5	Relay, 24V DC				
(before serial number 43737)		56302	Potter-Brumfield	VF4-15H11-CO5	1
(after serial number 43736)		78098	Siemens	VF4-45H11-CO5	1
CR48	Relay, 24V DC				
(before serial number 43737)		56302	Potter-Brumfield	VF4-15H11-CO5	1
(after serial number 43736)		78098	Siemens	VF4-45H11-CO5	1
F6	Fuse, 275A	40833	Buss	ANN-275	1
FB1	Flashing beacon	39676	ECCO Electronic Controls	6220A	2
G6	Hour meter				
(before serial number 21065)		19506	ENM Corporation	T40A4508	1
(from serial number 21065 to 40925)		56100	Curtis Instruments	17305666	1
(after serial number 40925)		19506	ENM Corporation	T40A4508	1
H1, H5	Alarm, steady tone	39540	Floyd Bell Inc.	UC-09628-Q	1
H2	Alarm, 24V DC	81579	Hella.	95346	1
KS1	Contact - key switch, N.O.				
(before serial number 37962)		45081	Telemecanique	ZB2-BE101	1
(from serial number 37962 to 52966)		66816	Telemecanique	ZBE-101	1
(after serial number 52966)		96008	Hobbs	X-88652	1
LS6	Contact - limit switch, N.C.	19491	Telemecanique	XESP2151	1
LS7, LS8	Contact - limit switch, N.C.H.O.	19491	Telemecanique	XESP2151	2
P1	Contact, N.C.				
(before serial number 36367)		29732	Telemecanique	ZB2-BE102	1
(after serial number 36366)		66818	Telemecanique	ZBE102	1
P2	Contact, N.C				
(before serial number 36367)		44990	Telemecanique	ZA2-BZ1026	1
(after serial number 36366)		66818	Telemecanique	ZBE102	1

https://truckmanualshub.com/

REV C ELECTRICAL COMPONENTS

Item	Description	Genie Part Number	Manufacturer	Manufacturer Part Number	Qty
QD1	Battery connector	19436	Anderson	6325-G1	1
R21	Resistor, 75 ohm	51590	Dale	RS-10-38, 75 ohm	1
TS66	Toggle switch, SPDT 3 position momentary	13037	Microswitch Control Inc.	1NT1-7	1
U6	Motor controller, 24V DC, 275A				
(before serial number 47731)		66047	Curtis	1204-036	1
(after serial number 47730)		78385	General Electric	IC3645SE6B300GN1	1
U27	Inductor, noise suppression, 47 mH, 2.5A, 0.034 ohm	47124	Dale	IHD3-47MH15%	1
Y2	Coil, 20V DC with diode	39347	Hydra Power Systems	6309757	1
Y3, Y4	Coil, 20V DC with diode				
(before serial number 35800)		39347	Hydra Power Systems	6309757	2
(after serial number 35799)		52594	Hydra Power Systems	6309820	2
Y5, Y6, Y8	Coil, 20V DC with diode				
(before serial number 35800)		44176	Hydra Power Systems	6359752	3
(after serial number 35799)		52595	Hydra Power Systems	6359792	3
Y7	Coil, 20V DC				
(before serial number 23568)		44787	Hydra Power Systems	10166-25	1
Y7	Coil, 20V DC with diode				
(after serial number 23567)		66467	Hydra Power Systems	10188-91	1

https://truckmanualshub.com/

ECM Pin-out Legend

REV B

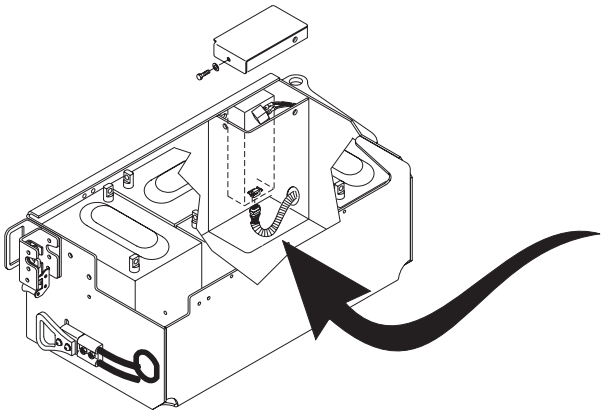

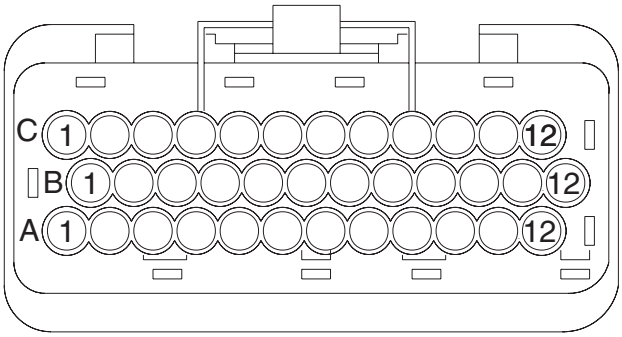

ECM PIN-OUT LEGEND From serial number 17408 to 21064	
Item	**Description**
A1	Spare
A2	Ground from platform controls (input) (White wire at platform)
A3	Spare
A4	Power from platform controls to ECM (input) (Red wire at platform)
A5	Level sensor power S7 (output)
A6	Platform up coil Y8 (output)
A7	Drive reverse coil Y5 (output)
A8	Motor controller U6, terminal 1 (output)
A9	Motor controller U6, terminal 3 (output)
A10	Overload sensor PS2 (input)
A11	Key switch to platform control (input)
A12	Platform down TS66 (input)
B1	Platform data link (+) (input) (Blue wire at platform)
B2	Power to platform controls (output) (Black wire at platform)
B3	ECM ground (output)
B4	Spare
B5	Spare
B6	Platform down coil Y7 (output)
B7	Steer left coil Y4 (output)
B8	Automotive-style horn H2 (option) (output)
B9	Multi-function alarm H5 (output)
B10	Pothole limit switch (input)
B11	Drive enable power (input)
B12	Platform up at ground controls TS66 (input)
C1	Platform data link (–) (input) (Yellow wire at platform)
C2	Key switch to ground control (input)
C3	Spare
C4	Spare
C5	Spare
C6	Drive forward coil Y6 (output)
C7	Steer right coil Y3 (output)
C8	Spare
C9	Brake release coil Y2 (output)
C10	Spare
C11	Level sensor signal S7 (input)
C12	Down limit switch LS6 (input)

ECM PIN-OUT LEGEND From serial number 21065 to 25141	
Item	**Description**
A1	Flashing beacon FB1 (output)
A2	Ground from platform controls (input) (White wire at platform)
A3	Spare
A4	Power from platform controls to ECM (input) (Red wire at platform)
A5	Level sensor power S7 (output)
A6	Platform up coil Y8 (output)
A7	Drive reverse coil Y5 (output)
A8	Motor controller U6, terminal 1 (output)
A9	Motor controller U6, terminal 3 (output)
A10	Overload sensor PS2 (input)
A11	Key switch to platform control (input)
A12	Platform down TS66 (input)
B1	Platform data link (+) (input) (Blue wire at platform)
B2	Power to platform controls (output) (Black wire at platform)
B3	ECM ground (output)
B4	Spare
B5	Spare
B6	Platform down coil Y7 (output)
B7	Steer left coil Y4 (output)
B8	Automotive-style horn H2 (option) (output)
B9	Multi-function alarm H5 (output)
B10	Pothole limit switch (input)
B11	Drive enable power (input)
B12	Platform up TS66 (input)
C1	Platform data link (–) (input) (Yellow wire at platform)
C2	Power to ECM (input)
C3	Spare
C4	Spare
C5	Spare
C6	Drive forward coil Y6 (output)
C7	Steer right coil Y3 (output)
C8	Spare
C9	Brake release coil Y2 (output)
C10	Spare
C11	Level sensor signal S7 (input)
C12	Down limit switch LS6 (input)

https://truckmanualshub.com/

REV B

ECM PIN-OUT LEGEND

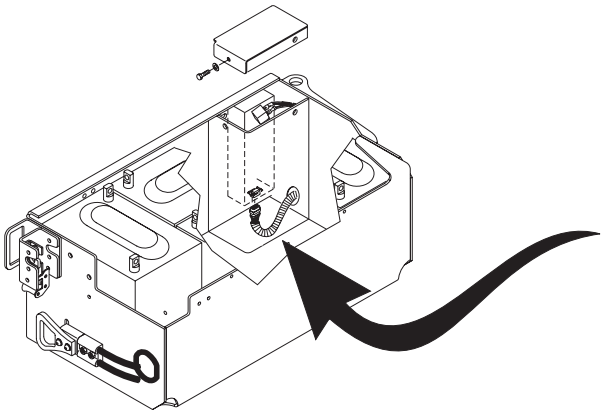

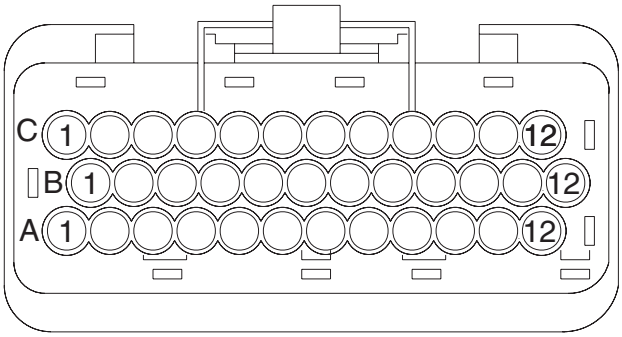

ECM PIN-OUT LEGEND From serial number 25142 to 35799	
Item	**Description**
A1	Flashing beacon FB1 (output)
A2	Ground from platform controls (input) (Blue wire at platform)
A3	Spare
A4	Power from platform controls to ECM (input) (White wire at platform)
A5	Level sensor power S7 ((output)
A6	Platform up coil Y8 (output)
A7	Drive reverse coil Y5 (output)
A8	Motor controller U6, terminal 1 (output)
A9	Motor controller U6, terminal 3 (output)
A10	Overload sensor PS2 (input)
A11	Key switch to platform control (input)
A12	Platform down TS66 (input)
B1	Platform data link (+) (input) (Black wire at platform)
B2	Spare
B3	ECM ground (output)
B4	Spare
B5	Spare
B6	Platform down coil Y7 (output)
B7	Steer left coil Y4 (output)
B8	Automotive-style horn H2 (option) (output)
B9	Multi-function alarm H5 (output)
B10	Pothole limit switch (input)
B11	Drive enable power (input)
B12	Platform up TS66 (input)
C1	Platform data link (–) (input) (Yellow wire at platform)
C2	Power to ECM (input)
C3	Spare
C4	Spare
C5	Spare
C6	Drive forward coil Y6 (output)
C7	Steer right coil Y3 (output)
C8	Spare
C9	Brake release coil Y2 (output)
C10	Spare
C11	Level sensor signal S7 (input)
C12	Down limit switch LS6 (input)

ECM PIN-OUT LEGEND From serial number 35799 to 59999	
Item	**Description**
A1	Flashing beacon FB1 (output)
A2	Ground from platform controls (input) (Blue wire at platform)
A3	Spare
A4	Power from platform controls to ECM (input) (White wire at platform)
A5	Level sensor power S7 (output)
A6	Platform up coil Y8 (output)
A7	Drive reverse coil Y5 (output)
A8	Motor controller U6, terminal 1
A9	Motor controller U6, terminal 3
A10	Overload sensor PS2 (input)
A11	Key switch to platform control (input)
A12	Platform down TS66 (input)
B1	Platform data link (+) (input) (Black wire at platform)
B2	Spare
B3	ECM ground (output)
B4	Spare
B5	Spare
B6	Platform down coil Y7 (output)
B7	Steer left coil Y4 (output)
B8	Automotive-style horn H2 (option) (output)
B9	Multi-function alarm H5 (output)
B10	Pothole limit switch (input)
B11	Drive enable power (input)
B12	Platform up TS66 (input)
C1	Platform data link (–) (input) (Yellow wire at platform)
C2	Power to ECM (input)
C3	Spare
C4	Spare
C5	Spare
C6	Drive forward coil Y6 (output)
C7	Steer right coil Y3 (output)
C8	Spare
C9	Spare
C10	Spare
C11	Level sensor signal S7 (input)
C12	Down limit switch LS66 (input)

https://truckmanualshub.com/

Control Relay Layout

REV A

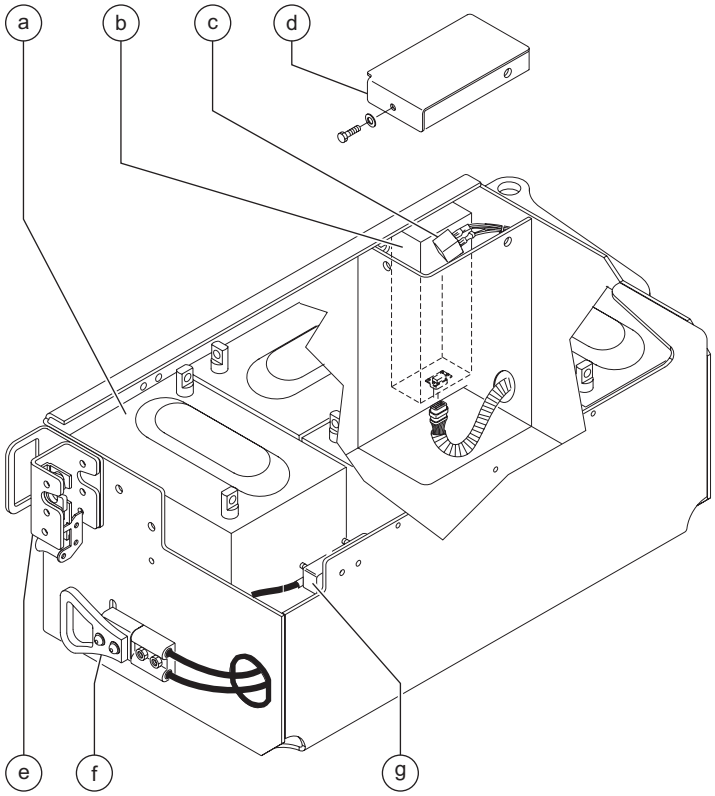

a batteries B5
b Electronic Control Module (ECM) U5
c CR48 power relay to U5 (not used before serial number 25142)
d lid - ECM box
e module tray rotary latch
f battery quick disconnect QD1
g 275A fuse F6
h automotive-style horn H2 (option)
i multi-function alarm H5
j CR5 horn relay
k tilt level sensor S7

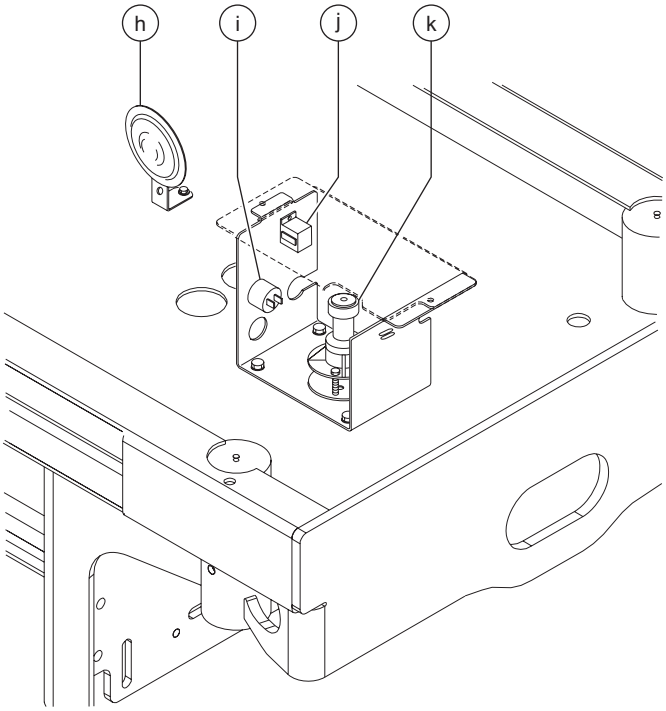

https://truckmanualshub.com/

This page intentionally left blank.

https://truckmanualshub.com/

Platform Controls Wiring Diagram (from serial number 17408 to 51014)

REV B

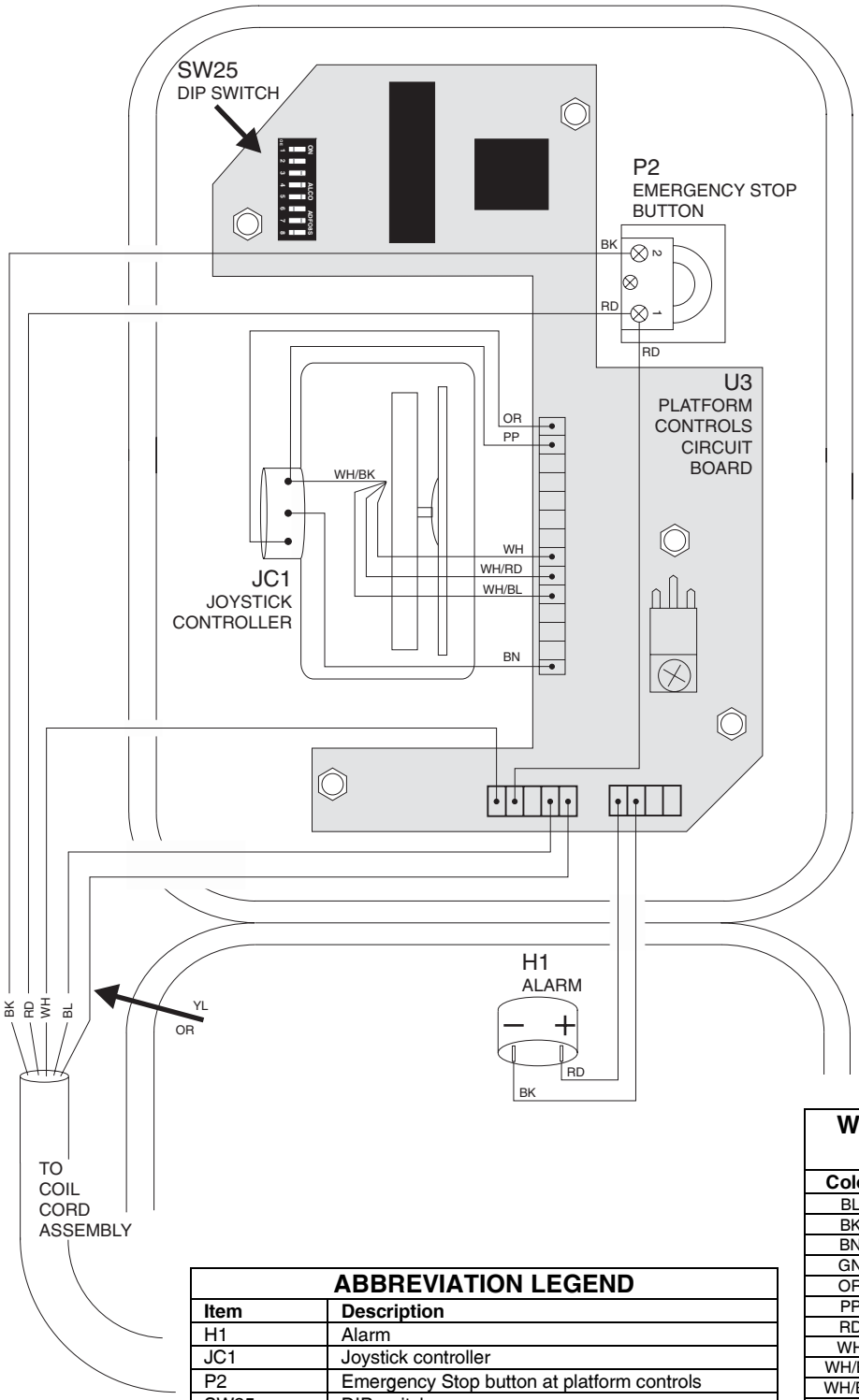

ABBREVIATION LEGEND	
Item	**Description**
H1	Alarm
JC1	Joystick controller
P2	Emergency Stop button at platform controls
SW25	DIP switch
U3	Platform controls circuit board

WIRE COLOR LEGEND	
Color	**Description**
BL	Blue
BK	Black
BN	Brown
GN	Green
OR	Orange
PP	Purple
RD	Red
WH	White
WH/BL	White/Blue
WH/BK	White/Black
WH/RD	White/Red
YL	Yellow

https://truckmanualshub.com/

REV A

Platform Controls Wiring Diagram (from serial number 51015 to 59999)

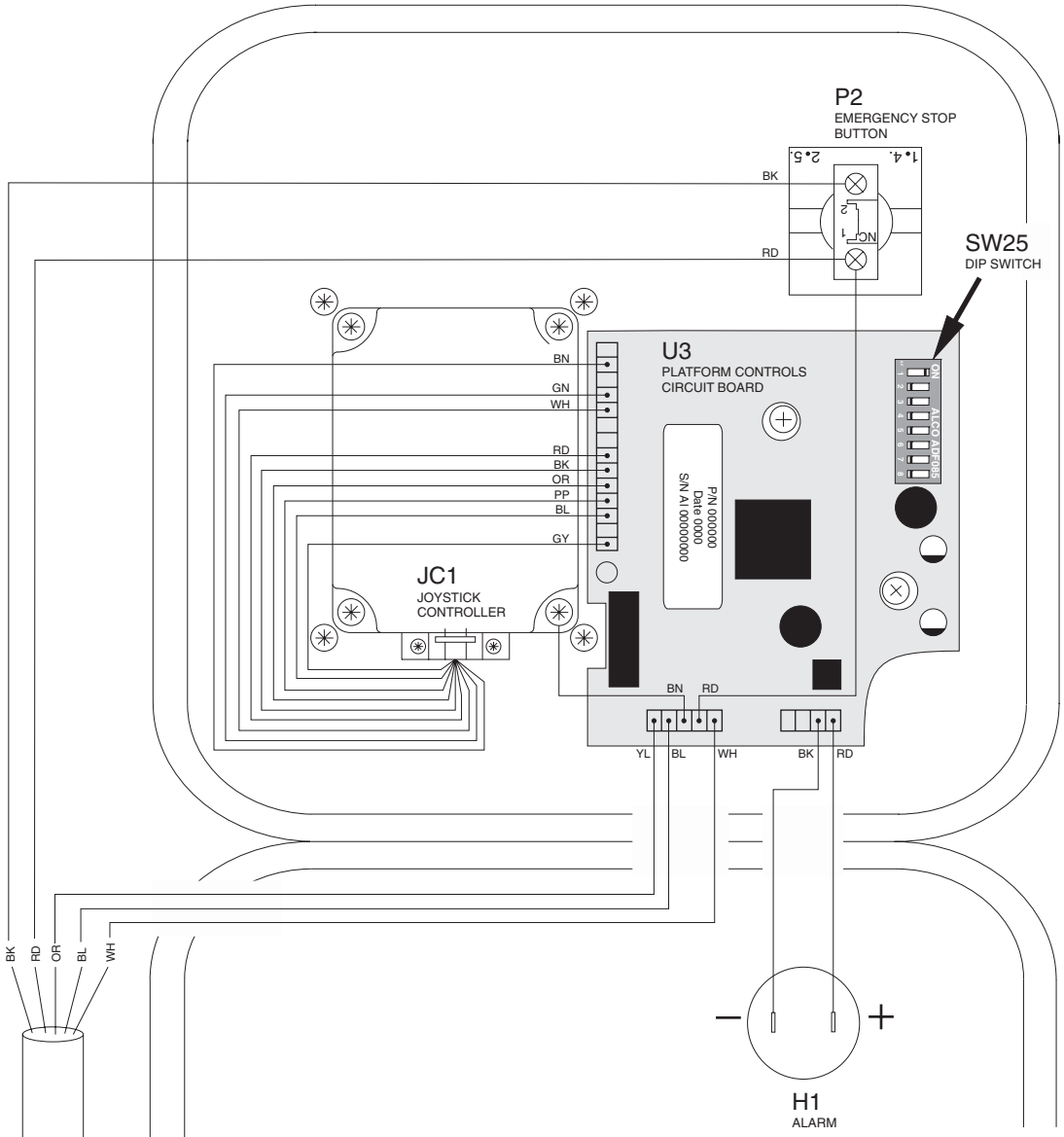

ABBREVIATION LEGEND	
Item	**Description**
H1	Alarm
JC1	Joystick controller
P2	Emergency Stop button at platform controls
SW25	DIP switch
U3	Platform controls circuit board

WIRE COLOR LEGEND	
Color	**Description**
BL	Blue
BK	Black
BN	Brown
GN	Green
GY	Gray
OR	Orange
PP	Purple
RD	Red
WH	White
YL	Yellow

https://truckmanualshub.com/

Ground Controls Wiring Diagram

REV C

Ground Controls (after serial number 52966)

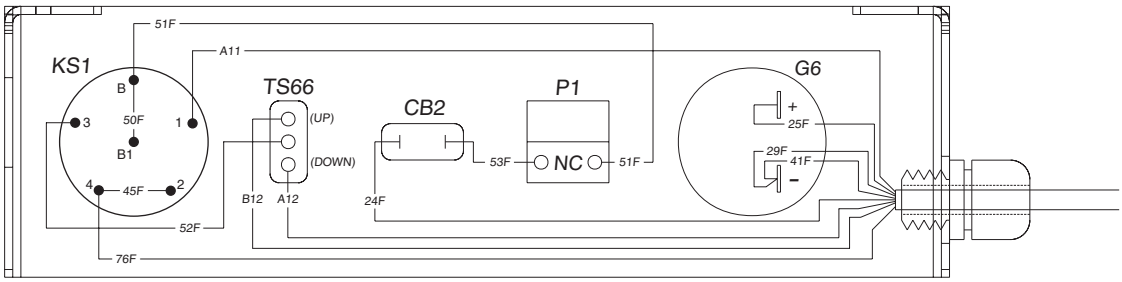

Ground Controls (before serial number 21065 and from serial number 40926 to 52966)

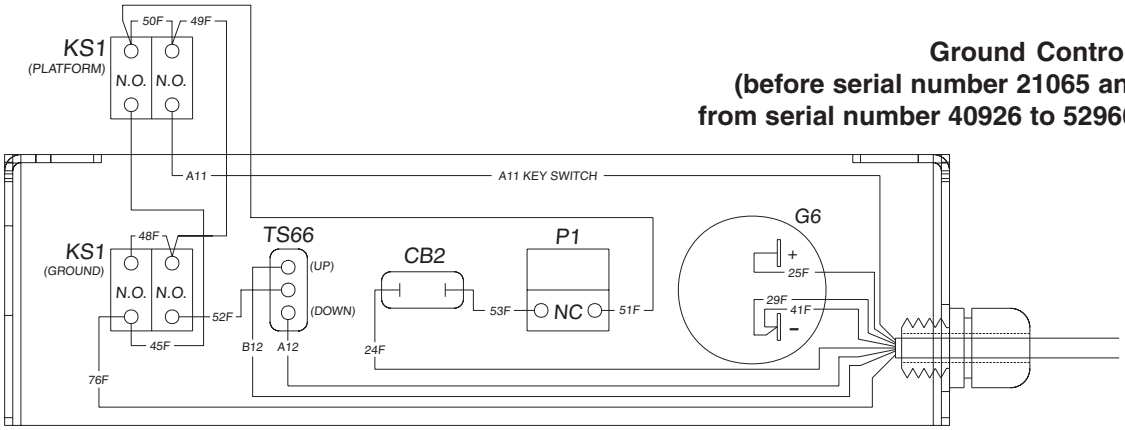

Ground Controls (from serial number 21065 to 40925)

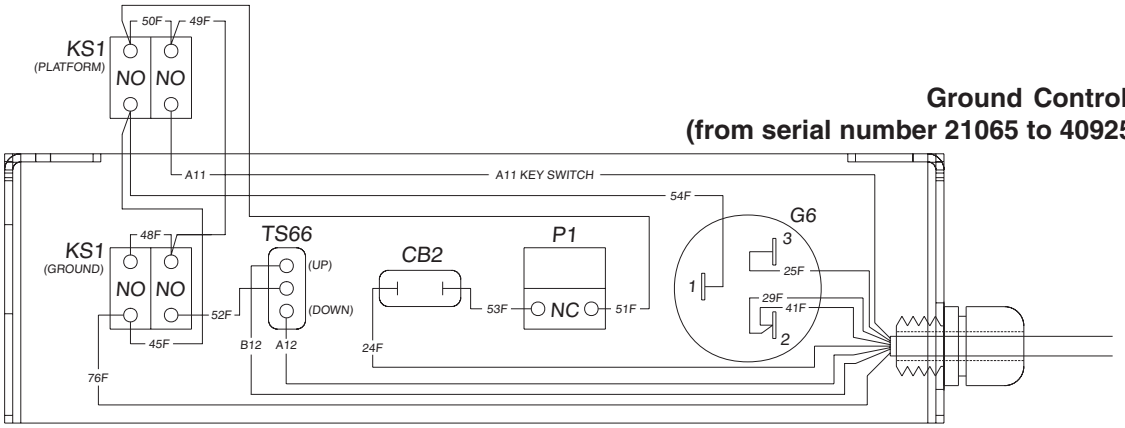

ABBREVIATION LEGEND	
Item	**Description**
CB2	Circuit breaker, 7A
G6	Hour meter
KS1	Key switch
P1	Emergency Stop
TS66	Platform up/down toggle switch

https://truckmanualshub.com/

Level Sensor Box Wiring Diagram

REV A

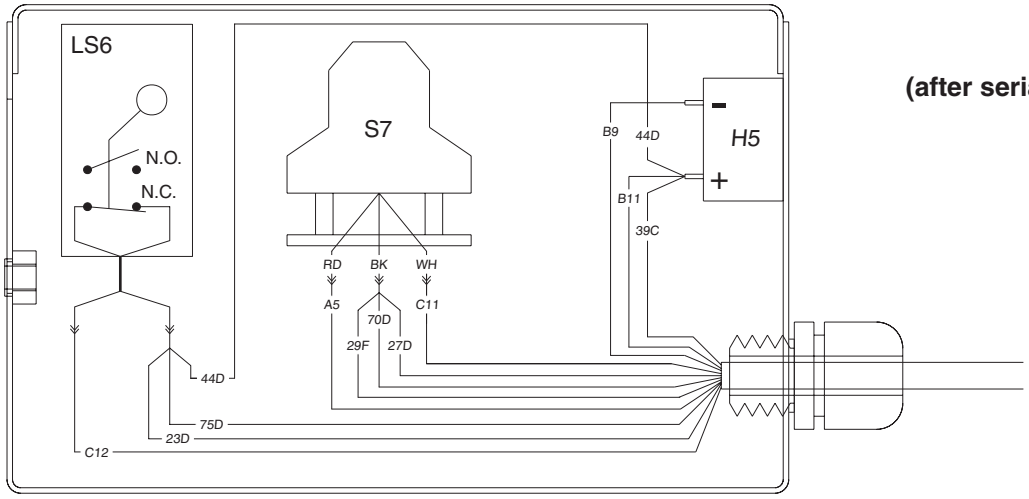

Level Sensor (after serial number 21064)

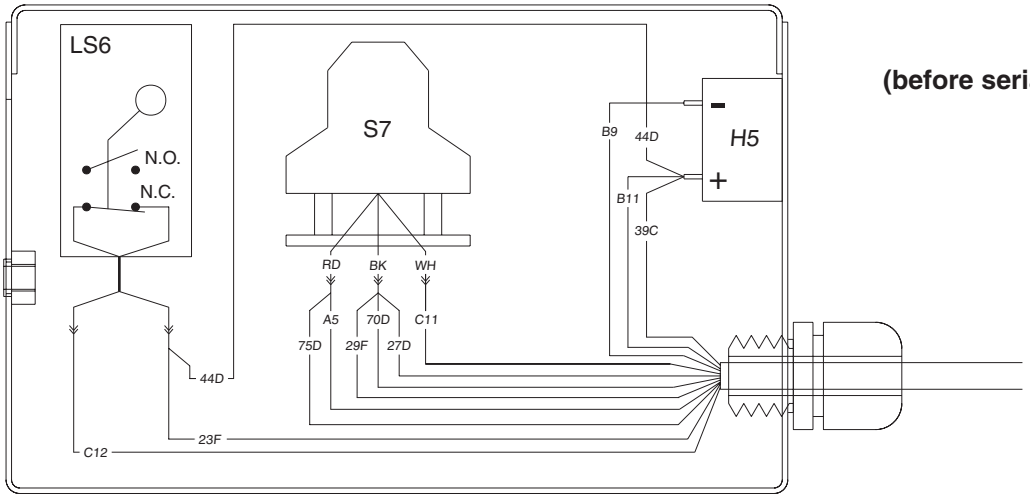

Level Sensor (before serial number 21065)

WIRE COLOR LEGEND	
Color	**Description**
BK	Black
RD	Red
WH	White

ABBREVIATION LEGEND	
Item	**Description**
H5	Multi-function alarm
LS6	Down limit switch
S7	Level sensor

https://truckmanualshub.com/

Electrical Symbols Legend

REV C

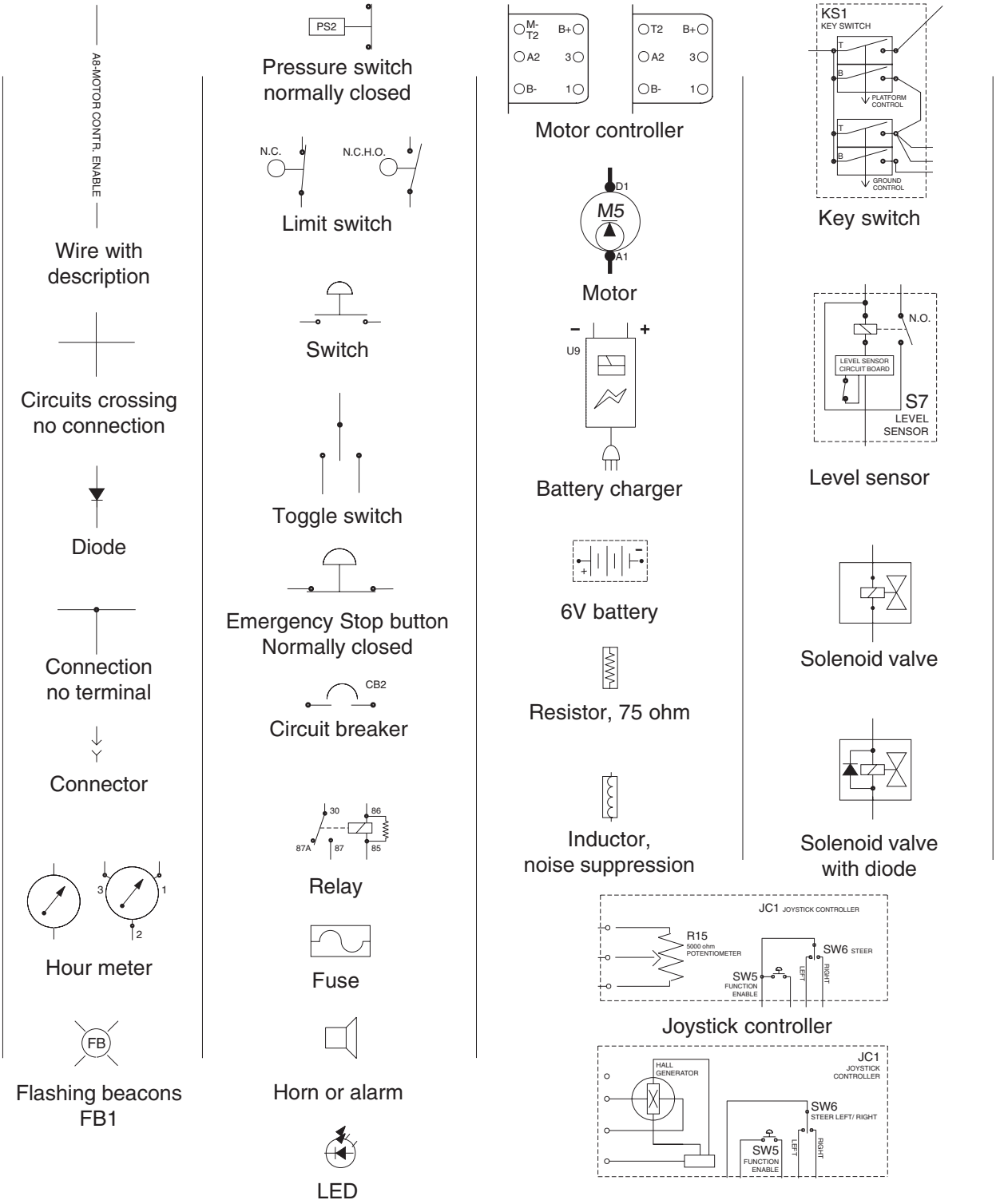

https://truckmanualshub.com/

https://truckmanualshub.com/

Electrical Schematic

(from serial number 17408 to 21064)

REV C

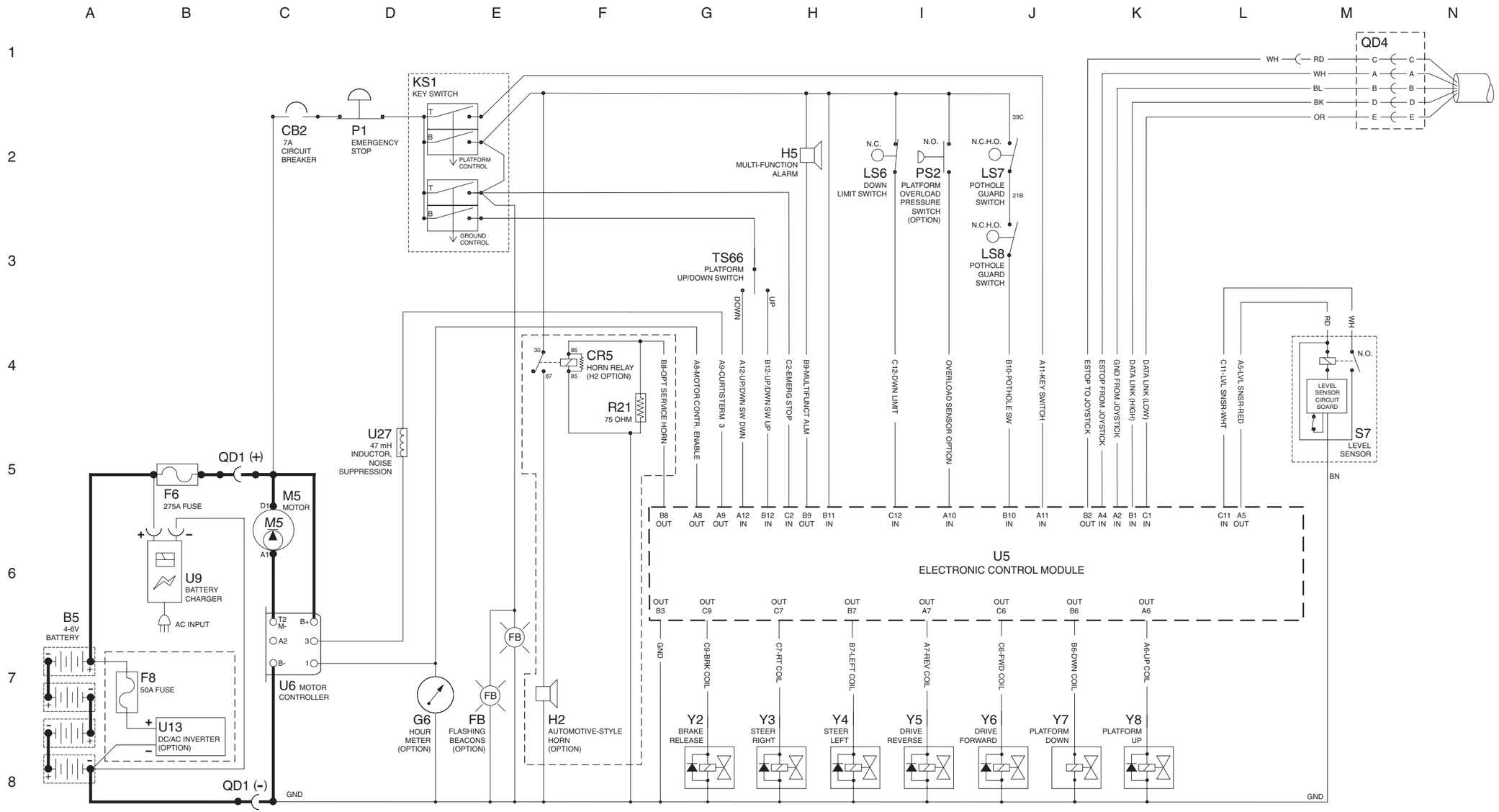

https://truckmanualshub.com/

REV C

Electrical Schematic
(from serial number 17408 to 21064)

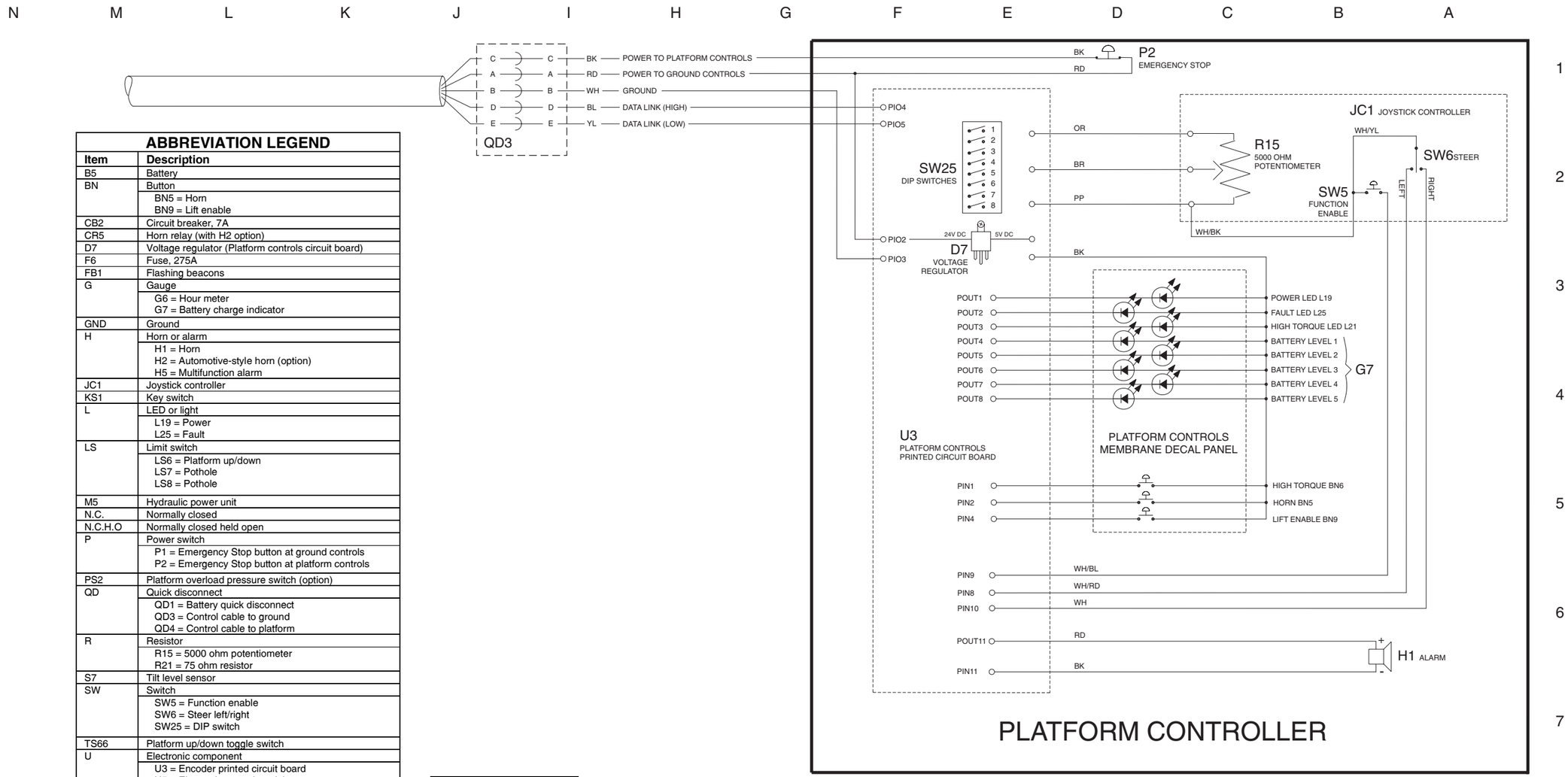

ABBREVIATION LEGEND

Item	Description
B5	Battery
BN	Button BN5 = Horn BN9 = Lift enable
CB2	Circuit breaker, 7A
CR5	Horn relay (with H2 option)
D7	Voltage regulator (Platform controls circuit board)
F6	Fuse, 275A
FB1	Flashing beacons
G	Gauge G6 = Hour meter G7 = Battery charge indicator
GND	Ground
H	Horn or alarm H1 = Horn H2 = Automotive-style horn (option) H5 = Multifunction alarm
JC1	Joystick controller
KS1	Key switch
L	LED or light L19 = Power L25 = Fault
LS	Limit switch LS6 = Platform up/down LS7 = Pothole LS8 = Pothole
M5	Hydraulic power unit
N.C.	Normally closed
N.C.H.O	Normally closed held open
P	Power switch P1 = Emergency Stop button at ground controls P2 = Emergency Stop button at platform controls
PS2	Platform overload pressure switch (option)
QD	Quick disconnect QD1 = Battery quick disconnect QD3 = Control cable to ground QD4 = Control cable to platform
R	Resistor R15 = 5000 ohm potentiometer R21 = 75 ohm resistor
S7	Tilt level sensor
SW	Switch SW5 = Function enable SW6 = Steer left/right SW25 = DIP switch
TS66	Platform up/down toggle switch
U	Electronic component U3 = Encoder printed circuit board U5 = Electronic control module U6 = Motor controller U9 = Battery charger U13 = Voltage inverter (option) U27 = 47 mH inductor, noise suppression
Y	Valve coil Y2 = Brake release Y3 = Steer right Y4 = Steer left Y5 = Drive reverse Y6 = Drive forward Y7 = Platform down Y8 = Platform up

WIRE COLOR LEGEND

Color	Description
BL	Blue
BK	Black
BN	Brown
GN	Green
OR	Orange
RD	Red
WH	White
YL	Yellow

https://truckmanualshub.com/

Electrical Schematic
(from serial number 17408 to 21064)

https://truckmanualshub.com/

https://truckmanualshub.com/

Electrical Schematic

(from serial number 21065 to 21262)

REV C

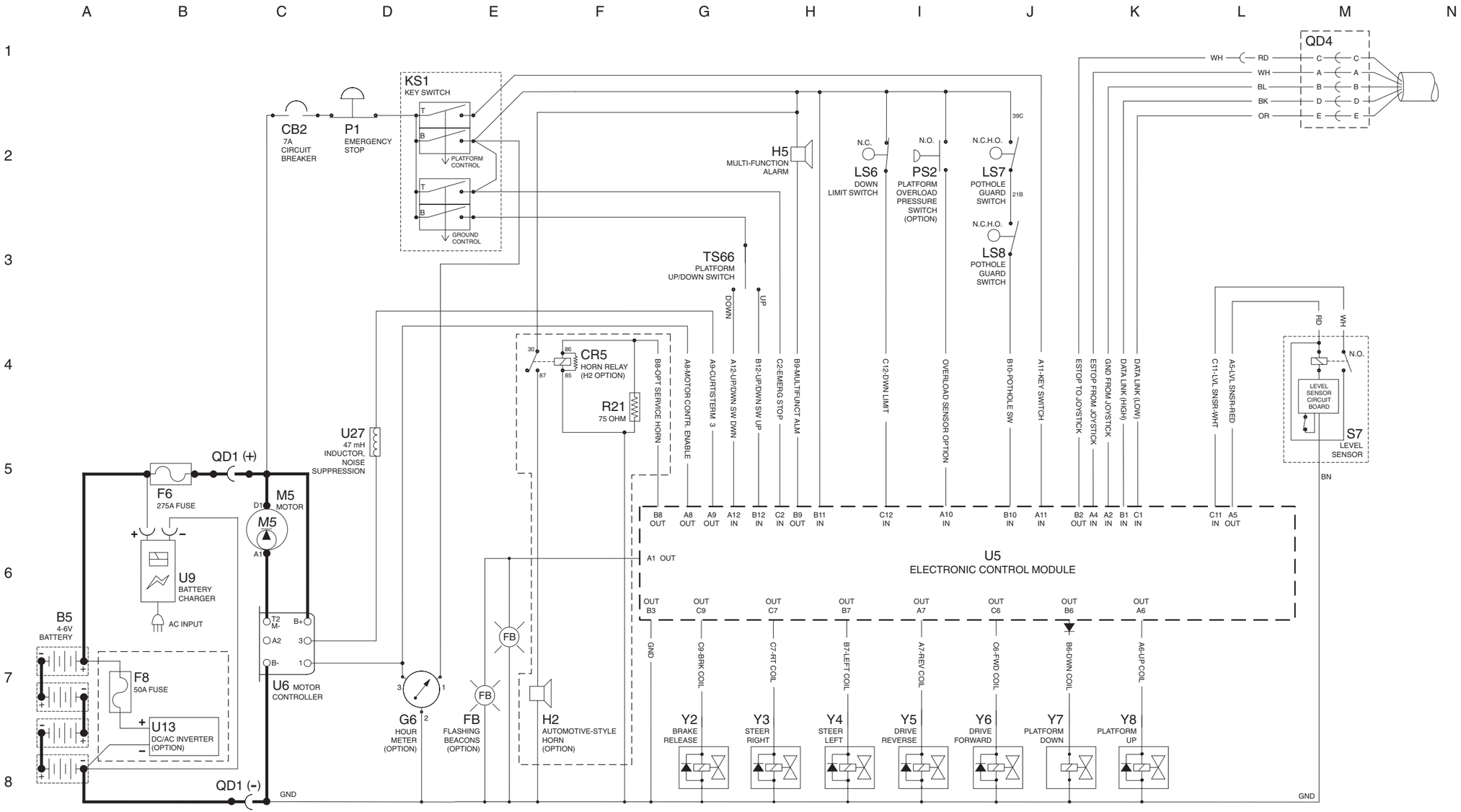

https://truckmanualshub.com/

REV C

Electrical Schematic

(from serial number 21065 to 21262)

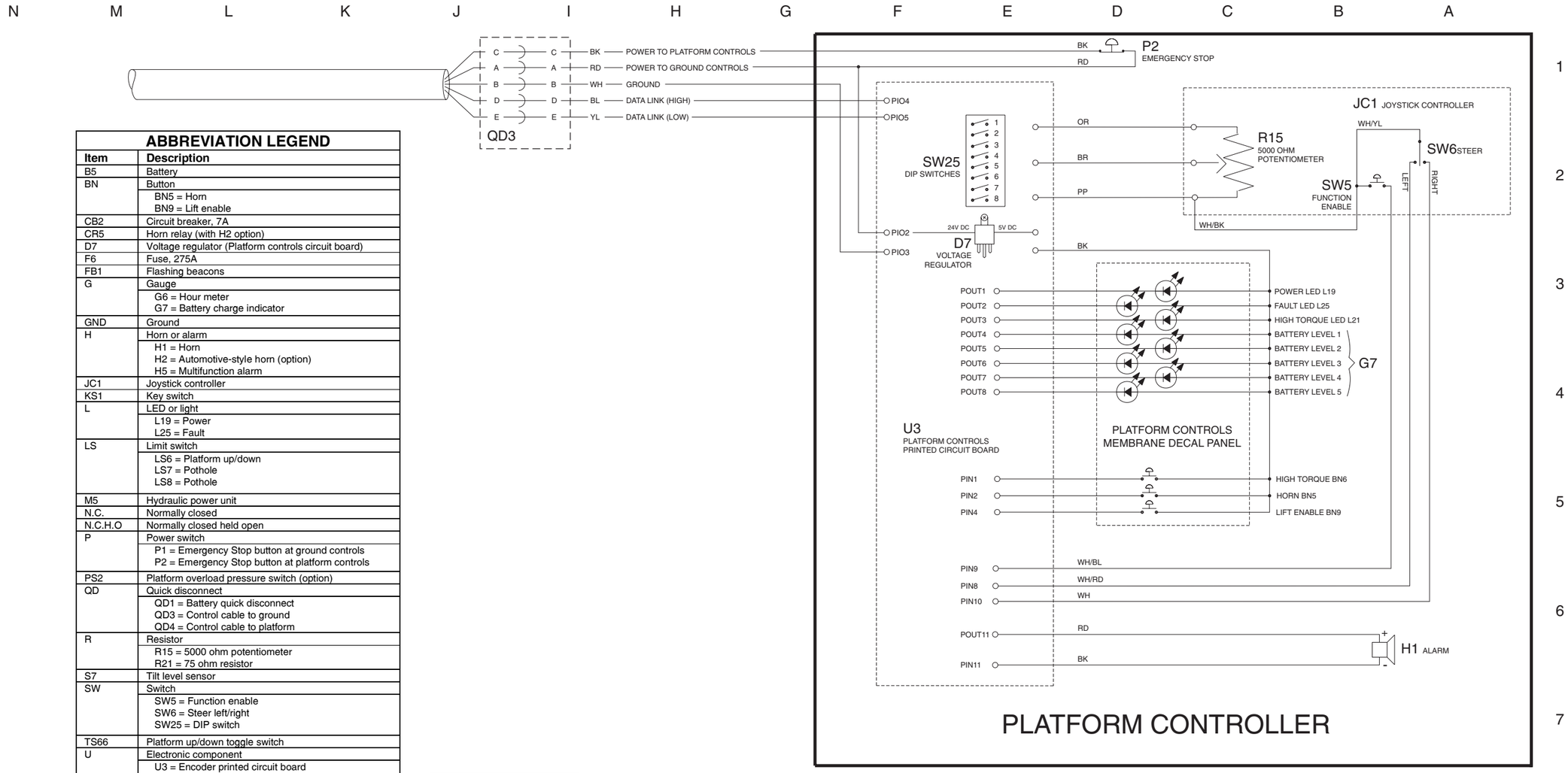

ABBREVIATION LEGEND

Item	Description
B5	Battery
BN	Button BN5 = Horn BN9 = Lift enable
CB2	Circuit breaker, 7A
CR5	Horn relay (with H2 option)
D7	Voltage regulator (Platform controls circuit board)
F6	Fuse, 275A
FB1	Flashing beacons
G	Gauge G6 = Hour meter G7 = Battery charge indicator
GND	Ground
H	Horn or alarm H1 = Horn H2 = Automotive-style horn (option) H5 = Multifunction alarm
JC1	Joystick controller
KS1	Key switch
L	LED or light L19 = Power L25 = Fault
LS	Limit switch LS6 = Platform up/down LS7 = Pothole LS8 = Pothole
M5	Hydraulic power unit
N.C.	Normally closed
N.C.H.O	Normally closed held open
P	Power switch P1 = Emergency Stop button at ground controls P2 = Emergency Stop button at platform controls
PS2	Platform overload pressure switch (option)
QD	Quick disconnect QD1 = Battery quick disconnect QD3 = Control cable to ground QD4 = Control cable to platform
R	Resistor R15 = 5000 ohm potentiometer R21 = 75 ohm resistor
S7	Tilt level sensor
SW	Switch SW5 = Function enable SW6 = Steer left/right SW25 = DIP switch
TS66	Platform up/down toggle switch
U	Electronic component U3 = Encoder printed circuit board U5 = Electronic control module U6 = Motor controller U9 = Battery charger U13 = Voltage inverter (option) U27 = 47 mH inductor, noise suppression
Y	Valve coil Y2 = Brake release Y3 = Steer right Y4 = Steer left Y5 = Drive reverse Y6 = Drive forward Y7 = Platform down Y8 = Platform up

WIRE COLOR LEGEND

Color	Description
BL	Blue
BK	Black
BN	Brown
GN	Green
OR	Orange
RD	Red
WH	White
YL	Yellow

https://truckmanualshub.com/

Electrical Schematic
(from serial number 21065 to 21262)

https://truckmanualshub.com/

https://truckmanualshub.com/

Electrical Schematic

(from serial number 21263 to 25141)

REV C

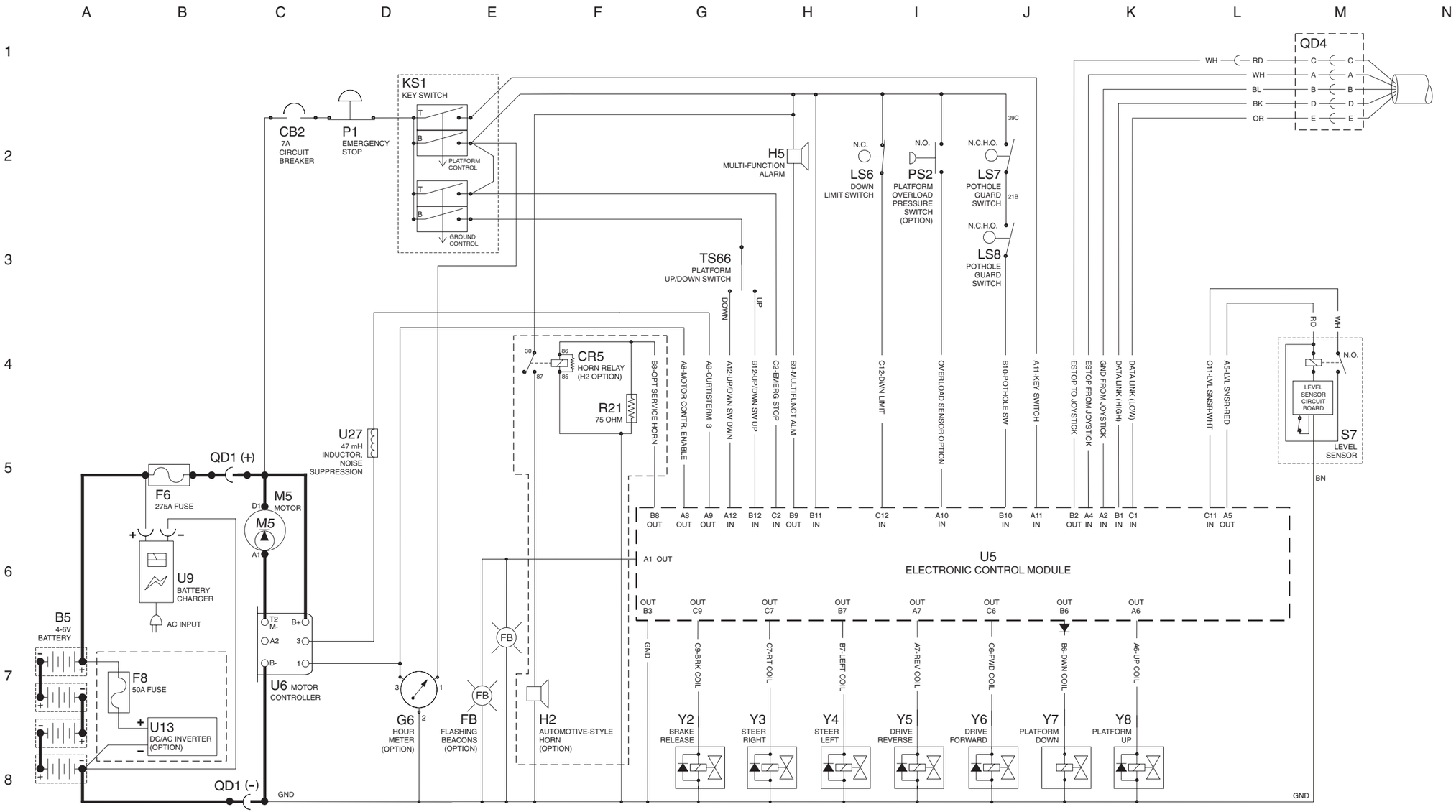

https://truckmanualshub.com/

REV C

Electrical Schematic
(from serial number 21263 to 25141)

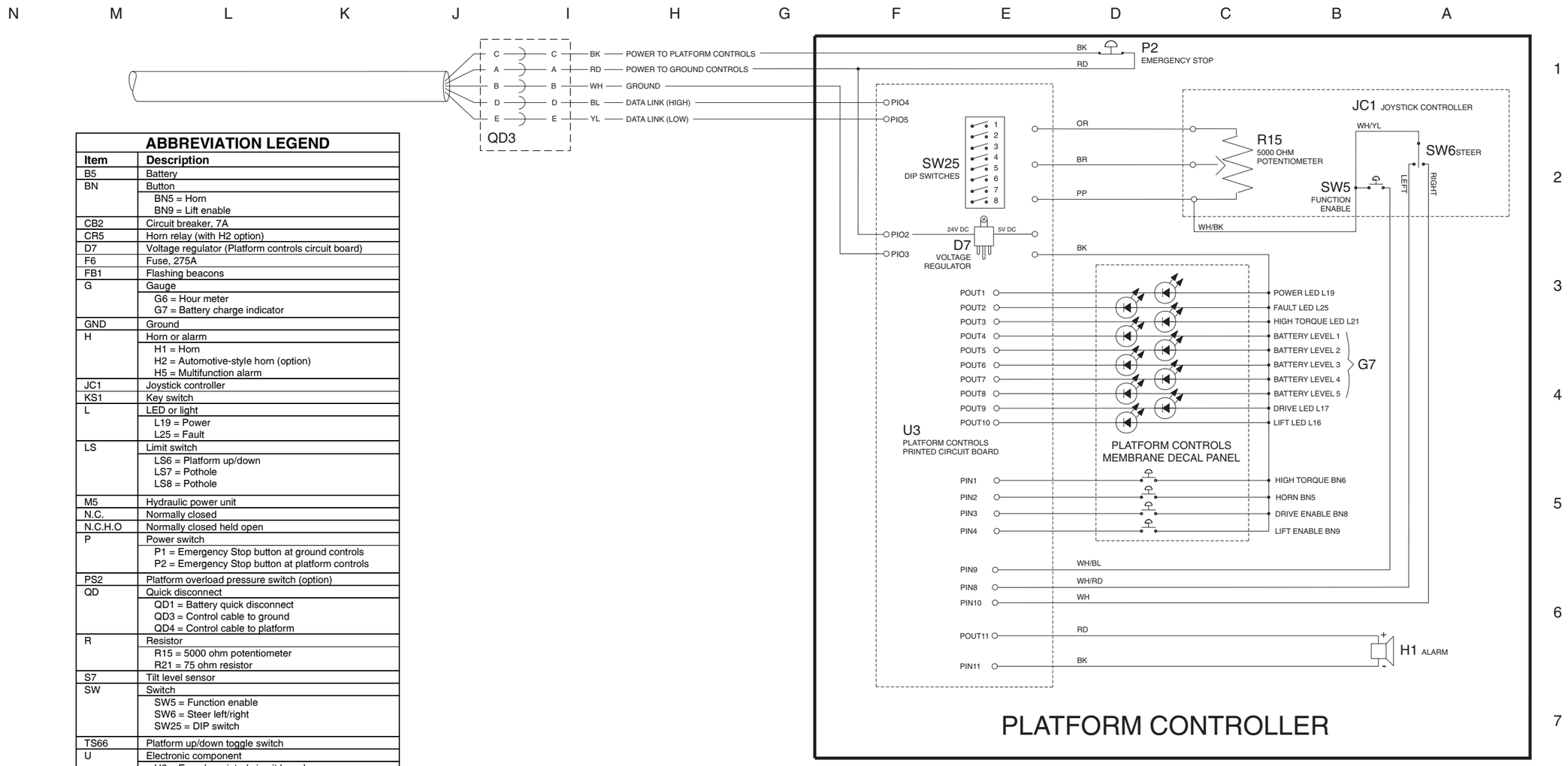

ABBREVIATION LEGEND

Item	Description
B5	Battery
BN	Button BN5 = Horn BN9 = Lift enable
CB2	Circuit breaker, 7A
CR5	Horn relay (with H2 option)
D7	Voltage regulator (Platform controls circuit board)
F6	Fuse, 275A
FB1	Flashing beacons
G	Gauge G6 = Hour meter G7 = Battery charge indicator
GND	Ground
H	Horn or alarm H1 = Horn H2 = Automotive-style horn (option) H5 = Multifunction alarm
JC1	Joystick controller
KS1	Key switch
L	LED or light L19 = Power L25 = Fault
LS	Limit switch LS6 = Platform up/down LS7 = Pothole LS8 = Pothole
M5	Hydraulic power unit
N.C.	Normally closed
N.C.H.O	Normally closed held open
P	Power switch P1 = Emergency Stop button at ground controls P2 = Emergency Stop button at platform controls
PS2	Platform overload pressure switch (option)
QD	Quick disconnect QD1 = Battery quick disconnect QD3 = Control cable to ground QD4 = Control cable to platform
R	Resistor R15 = 5000 ohm potentiometer R21 = 75 ohm resistor
S7	Tilt level sensor
SW	Switch SW5 = Function enable SW6 = Steer left/right SW25 = DIP switch
TS66	Platform up/down toggle switch
U	Electronic component U3 = Encoder printed circuit board U5 = Electronic control module U6 = Motor controller U9 = Battery charger U13 = Voltage inverter (option) U27 = 47 mH inductor, noise suppression
Y	Valve coil Y2 = Brake release Y3 = Steer right Y4 = Steer left Y5 = Drive reverse Y6 = Drive forward Y7 = Platform down Y8 = Platform up

WIRE COLOR LEGEND

Color	Description
BL	Blue
BK	Black
BN	Brown
GN	Green
OR	Orange
RD	Red
WH	White
YL	Yellow

https://truckmanualshub.com/

Electrical Schematic
(from serial number 21263 to 25141)

https://truckmanualshub.com/

https://truckmanualshub.com/

Electrical Schematic

(from serial number 25142 to 28936)

REV C

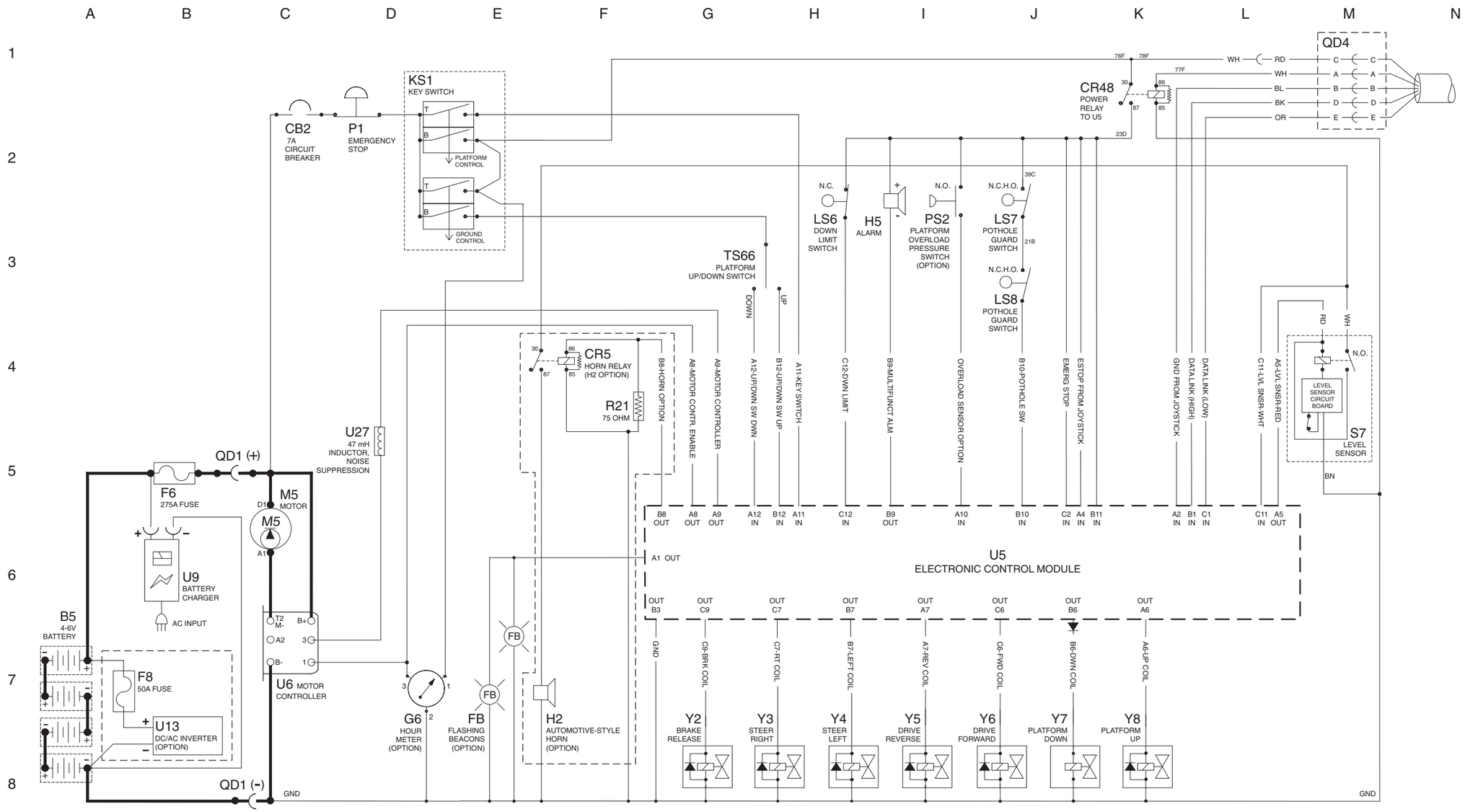

https://truckmanualshub.com/

REV C

Electrical Schematic
(from serial number 25142 to 28936)

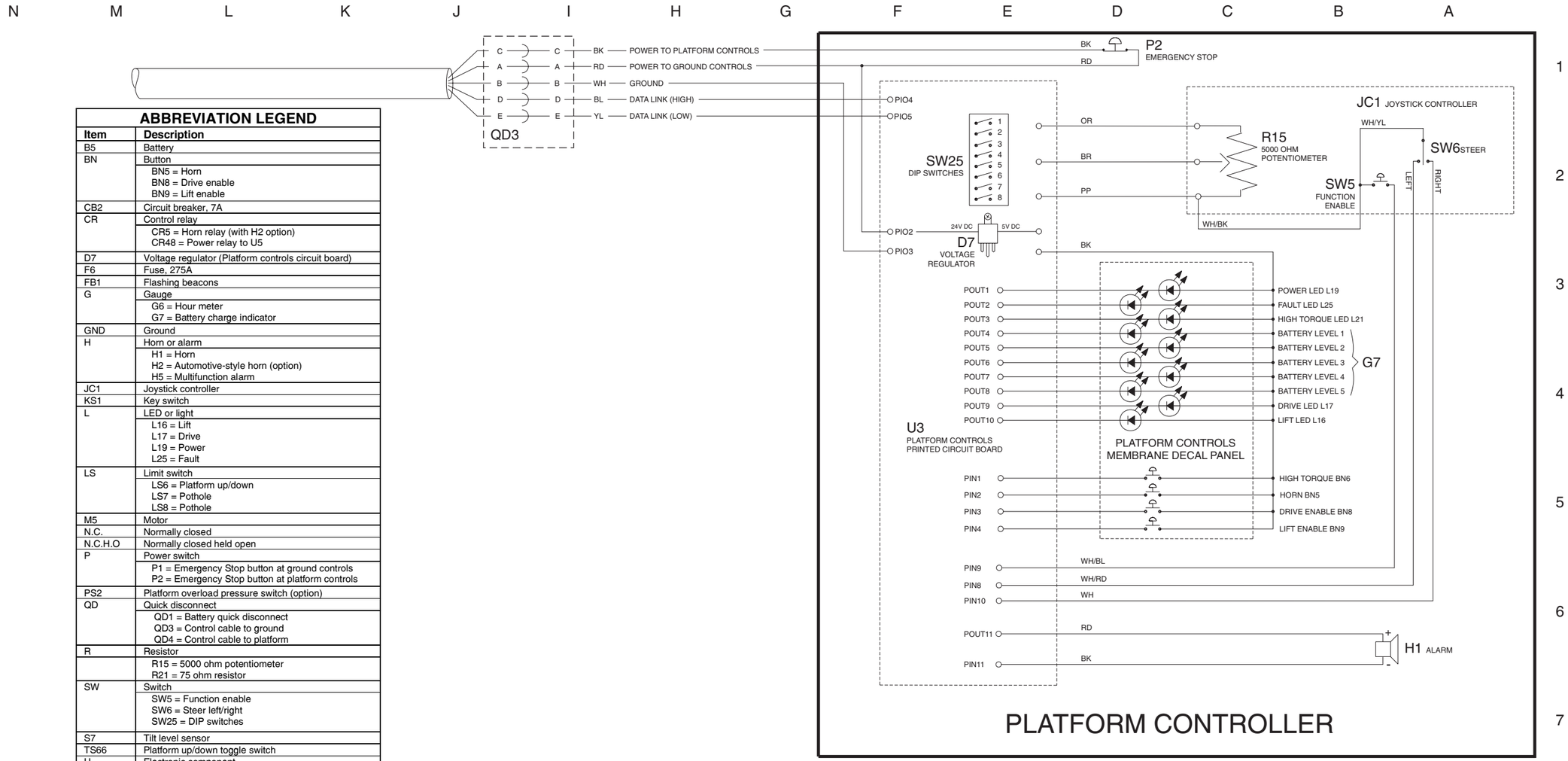

ABBREVIATION LEGEND	
Item	**Description**
B5	Battery
BN	Button BN5 = Horn BN8 = Drive enable BN9 = Lift enable
CB2	Circuit breaker, 7A
CR	Control relay CR5 = Horn relay (with H2 option) CR48 = Power relay to U5
D7	Voltage regulator (Platform controls circuit board)
F6	Fuse, 275A
FB1	Flashing beacons
G	Gauge G6 = Hour meter G7 = Battery charge indicator
GND	Ground
H	Horn or alarm H1 = Horn H2 = Automotive-style horn (option) H5 = Multifunction alarm
JC1	Joystick controller
KS1	Key switch
L	LED or light L16 = Lift L17 = Drive L19 = Power L25 = Fault
LS	Limit switch LS6 = Platform up/down LS7 = Pothole LS8 = Pothole
M5	Motor
N.C.	Normally closed
N.C.H.O	Normally closed held open
P	Power switch P1 = Emergency Stop button at ground controls P2 = Emergency Stop button at platform controls
PS2	Platform overload pressure switch (option)
QD	Quick disconnect QD1 = Battery quick disconnect QD3 = Control cable to ground QD4 = Control cable to platform
R	Resistor R15 = 5000 ohm potentiometer R21 = 75 ohm resistor
SW	Switch SW5 = Function enable SW6 = Steer left/right SW25 = DIP switches
S7	Tilt level sensor
TS66	Platform up/down toggle switch
U	Electronic component U3 = Encoder printed circuit board U5 = Electronic control module U6 = Motor controller U9 = Battery charger U13 = Voltage inverter (option) U27 = 47 mH inductor, noise suppression
Y	Valve coil Y2 = Brake release Y3 = Steer right Y4 = Steer left Y5 = Drive reverse Y6 = Drive forward Y7 = Platform down Y8 = Platform up

WIRE COLOR LEGEND	
Color	**Description**
BL	Blue
BK	Black
BN	Brown
GN	Green
OR	Orange
RD	Red
WH	White
YL	Yellow

https://truckmanualshub.com/

Electrical Schematic
(from serial number 25142 to 28936)

https://truckmanualshub.com/

https://truckmanualshub.com/

Electrical Schematic

(from serial number 28937 to 35799)

REV C

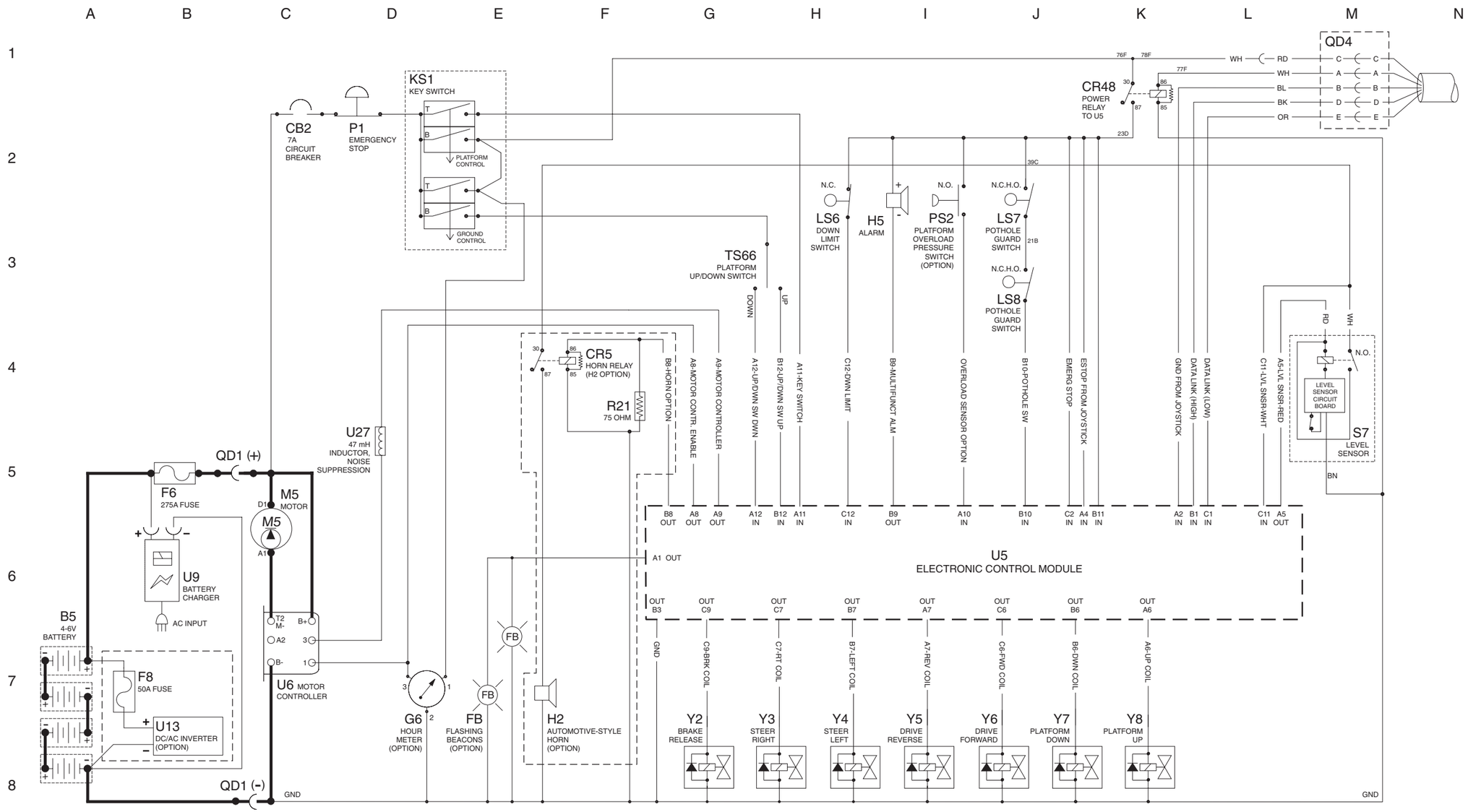

https://truckmanualshub.com/

REV C

Electrical Schematic

(from serial number 28937 to 35799)

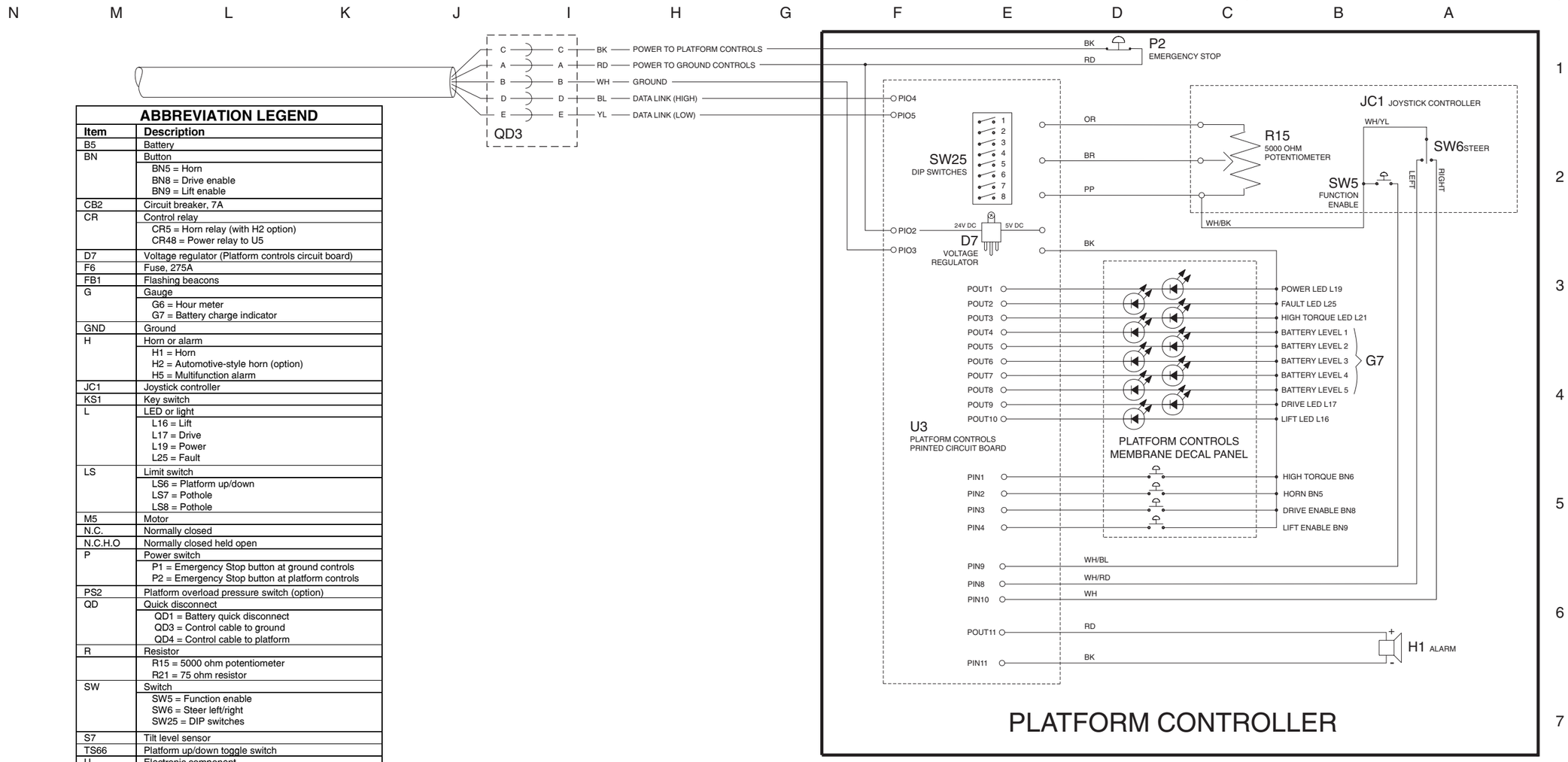

ABBREVIATION LEGEND	
Item	**Description**
B5	Battery
BN	Button BN5 = Horn BN8 = Drive enable BN9 = Lift enable
CB2	Circuit breaker, 7A
CR	Control relay CR5 = Horn relay (with H2 option) CR48 = Power relay to U5
D7	Voltage regulator (Platform controls circuit board)
F6	Fuse, 275A
FB1	Flashing beacons
G	Gauge G6 = Hour meter G7 = Battery charge indicator
GND	Ground
H	Horn or alarm H1 = Horn H2 = Automotive-style horn (option) H5 = Multifunction alarm
JC1	Joystick controller
KS1	Key switch
L	LED or light L16 = Lift L17 = Drive L19 = Power L25 = Fault
LS	Limit switch LS6 = Platform up/down LS7 = Pothole LS8 = Pothole
M5	Motor
N.C.	Normally closed
N.C.H.O	Normally closed held open
P	Power switch P1 = Emergency Stop button at ground controls P2 = Emergency Stop button at platform controls
PS2	Platform overload pressure switch (option)
QD	Quick disconnect QD1 = Battery quick disconnect QD3 = Control cable to ground QD4 = Control cable to platform
R	Resistor R15 = 5000 ohm potentiometer R21 = 75 ohm resistor
SW	Switch SW5 = Function enable SW6 = Steer left/right SW25 = DIP switches
S7	Tilt level sensor
TS66	Platform up/down toggle switch
U	Electronic component U3 = Encoder printed circuit board U5 = Electronic control module U6 = Motor controller U9 = Battery charger U13 = Voltage inverter (option) U27 = 47 mH inductor, noise suppression
Y	Valve coil Y2 = Brake release Y3 = Steer right Y4 = Steer left Y5 = Drive reverse Y6 = Drive forward Y7 = Platform down Y8 = Platform up

WIRE COLOR LEGEND	
Color	**Description**
BL	Blue
BK	Black
BN	Brown
GN	Green
OR	Orange
RD	Red
WH	White
YL	Yellow

https://truckmanualshub.com/

Electrical Schematic
(from serial number 28937 to 35799)

https://truckmanualshub.com/

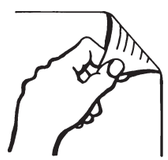

https://truckmanualshub.com/

Electrical Schematic

(from serial number 35800 to 40925)

REV C

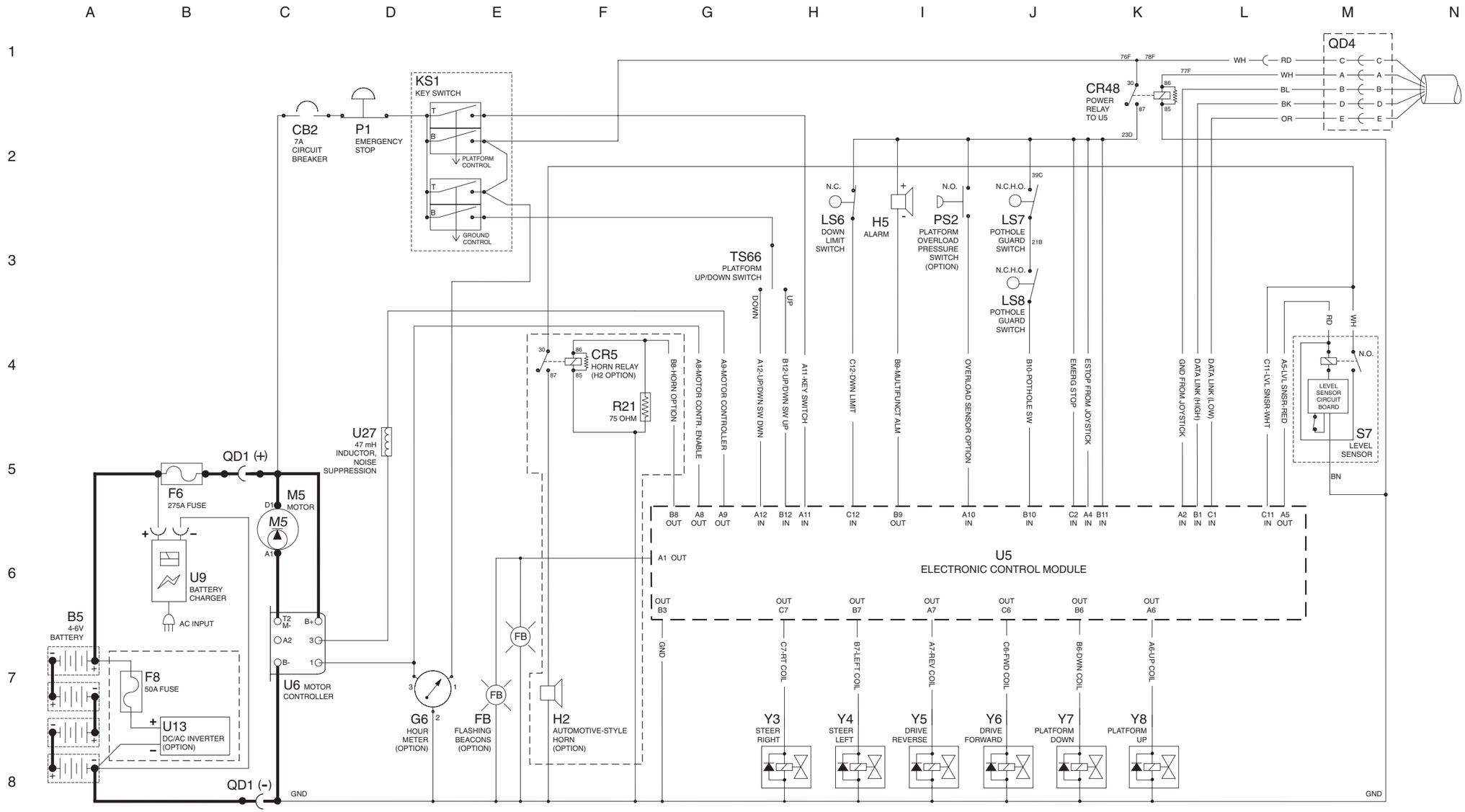

https://truckmanualshub.com/

REV C

Electrical Schematic
(from serial number 35800 to 40925)

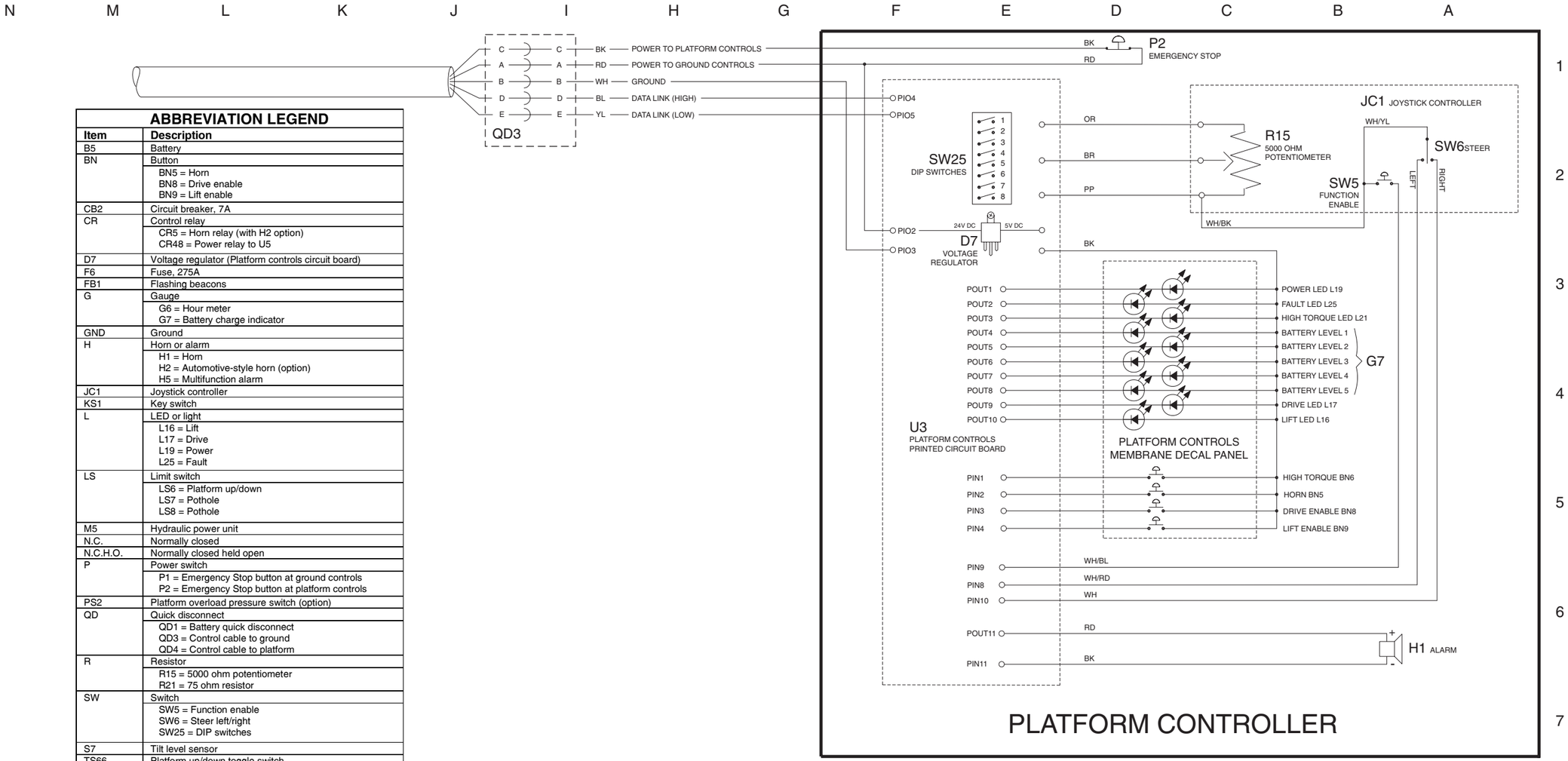

ABBREVIATION LEGEND	
Item	**Description**
B5	Battery
BN	Button BN5 = Horn BN8 = Drive enable BN9 = Lift enable
CB2	Circuit breaker, 7A
CR	Control relay CR5 = Horn relay (with H2 option) CR48 = Power relay to U5
D7	Voltage regulator (Platform controls circuit board)
F6	Fuse, 275A
FB1	Flashing beacons
G	Gauge G6 = Hour meter G7 = Battery charge indicator
GND	Ground
H	Horn or alarm H1 = Horn H2 = Automotive-style horn (option) H5 = Multifunction alarm
JC1	Joystick controller
KS1	Key switch
L	LED or light L16 = Lift L17 = Drive L19 = Power L25 = Fault
LS	Limit switch LS6 = Platform up/down LS7 = Pothole LS8 = Pothole
M5	Hydraulic power unit
N.C.	Normally closed
N.C.H.O.	Normally closed held open
P	Power switch P1 = Emergency Stop button at ground controls P2 = Emergency Stop button at platform controls
PS2	Platform overload pressure switch (option)
QD	Quick disconnect QD1 = Battery quick disconnect QD3 = Control cable to ground QD4 = Control cable to platform
R	Resistor R15 = 5000 ohm potentiometer R21 = 75 ohm resistor
SW	Switch SW5 = Function enable SW6 = Steer left/right SW25 = DIP switches
S7	Tilt level sensor
TS66	Platform up/down toggle switch
U	Electronic component U3 = Encoder printed circuit board U5 = Electronic control module U6 = Motor controller U9 = Battery charger U13 = Voltage inverter (option) U27 = 47 mH inductor, noise suppression
Y	Valve coil Y3 = Steer right Y4 = Steer left Y5 = Drive reverse Y6 = Drive forward Y7 = Platform down Y8 = Platform up

WIRE COLOR LEGEND	
Color	**Description**
BL	Blue
BK	Black
BN	Brown
GN	Green
OR	Orange
RD	Red
WH	White
YL	Yellow

https://truckmanualshub.com/

Electrical Schematic
(from serial number 35800 to 40925)

https://truckmanualshub.com/

https://truckmanualshub.com/

Electrical Schematic

(from serial number 40926 to 49804)

REV B

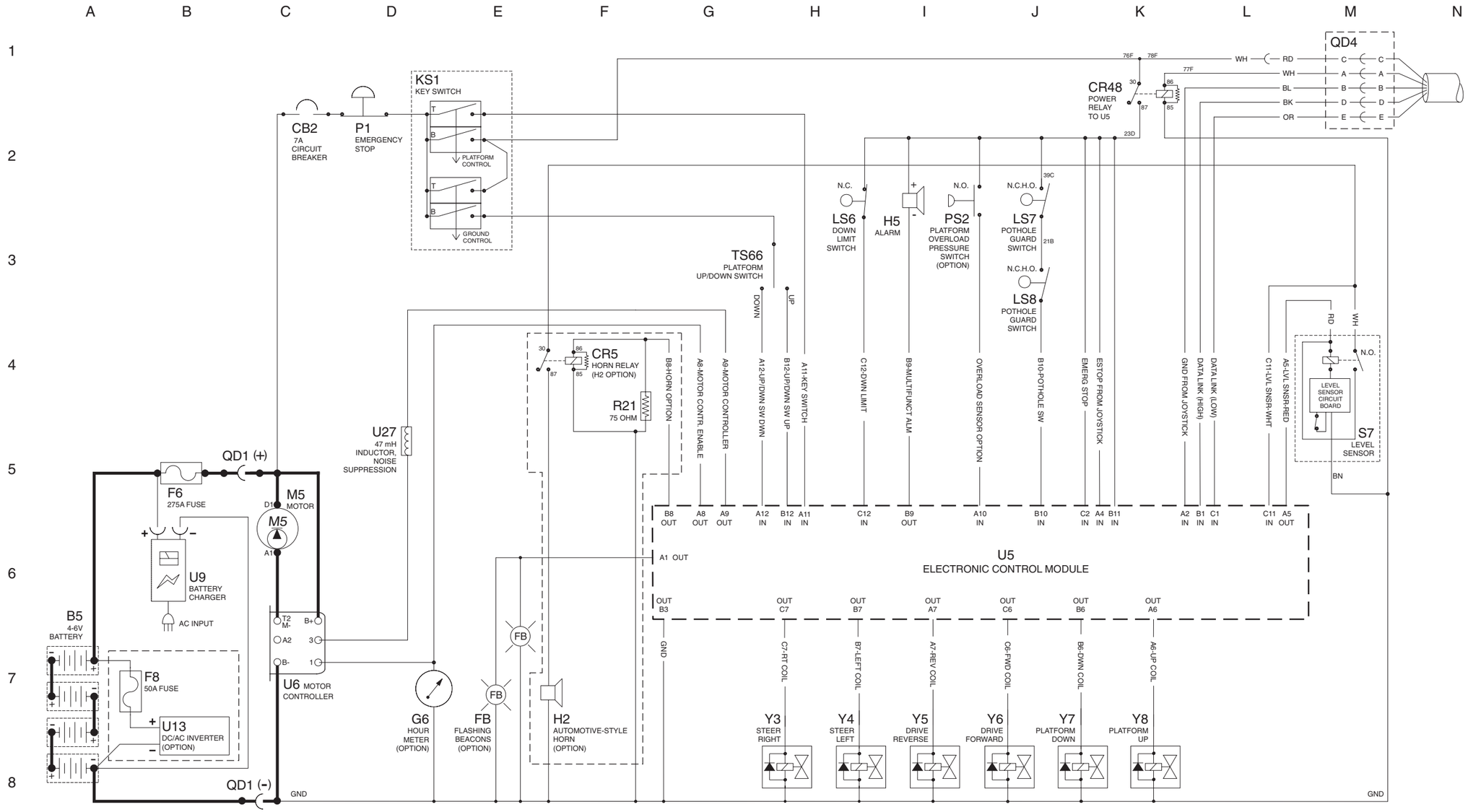

https://truckmanualshub.com/

REV B

Electrical Schematic

(from serial number 40926 to 49804)

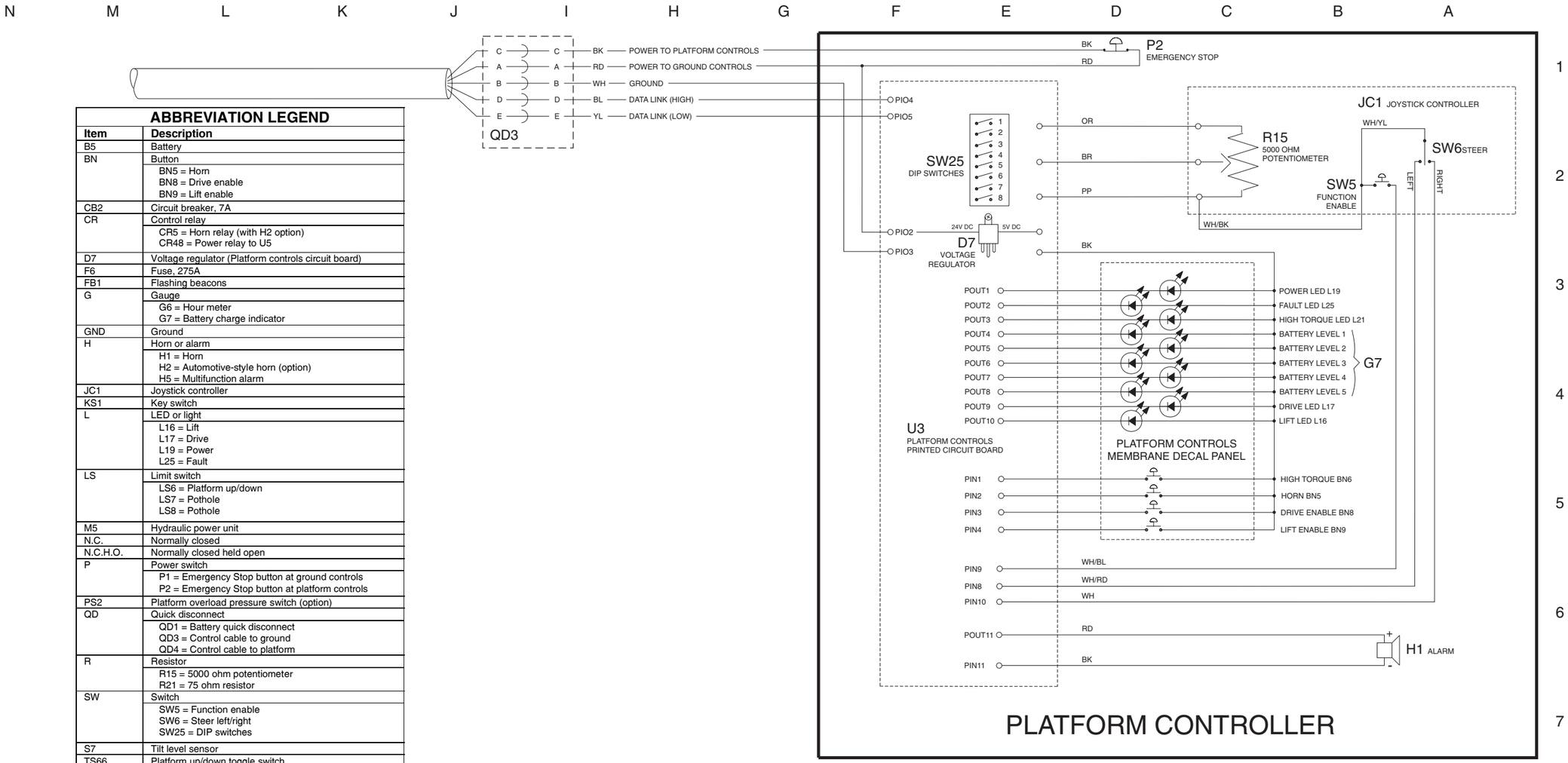

ABBREVIATION LEGEND	
Item	**Description**
B5	Battery
BN	Button BN5 = Horn BN8 = Drive enable BN9 = Lift enable
CB2	Circuit breaker, 7A
CR	Control relay CR5 = Horn relay (with H2 option) CR48 = Power relay to U5
D7	Voltage regulator (Platform controls circuit board)
F6	Fuse, 275A
FB1	Flashing beacons
G	Gauge G6 = Hour meter G7 = Battery charge indicator
GND	Ground
H	Horn or alarm H1 = Horn H2 = Automotive-style horn (option) H5 = Multifunction alarm
JC1	Joystick controller
KS1	Key switch
L	LED or light L16 = Lift L17 = Drive L19 = Power L25 = Fault
LS	Limit switch LS6 = Platform up/down LS7 = Pothole LS8 = Pothole
M5	Hydraulic power unit
N.C.	Normally closed
N.C.H.O.	Normally closed held open
P	Power switch P1 = Emergency Stop button at ground controls P2 = Emergency Stop button at platform controls
PS2	Platform overload pressure switch (option)
QD	Quick disconnect QD1 = Battery quick disconnect QD3 = Control cable to ground QD4 = Control cable to platform
R	Resistor R15 = 5000 ohm potentiometer R21 = 75 ohm resistor
SW	Switch SW5 = Function enable SW6 = Steer left/right SW25 = DIP switches
S7	Tilt level sensor
TS66	Platform up/down toggle switch
U	Electronic component U3 = Encoder printed circuit board U5 = Electronic control module U6 = Motor controller U9 = Battery charger U13 = Voltage inverter (option) U27 = 47 mH inductor, noise suppression
Y	Valve coil Y3 = Steer right Y4 = Steer left Y5 = Drive reverse Y6 = Drive forward Y7 = Platform down Y8 = Platform up

WIRE COLOR LEGEND	
Color	**Description**
BL	Blue
BK	Black
BN	Brown
GN	Green
OR	Orange
RD	Red
WH	White
YL	Yellow

https://truckmanualshub.com/

Electrical Schematic
(from serial number 40926 to 49804)

https://truckmanualshub.com/

https://truckmanualshub.com/

Electrical Schematic

(from serial number 49805 to 51014)

REV B

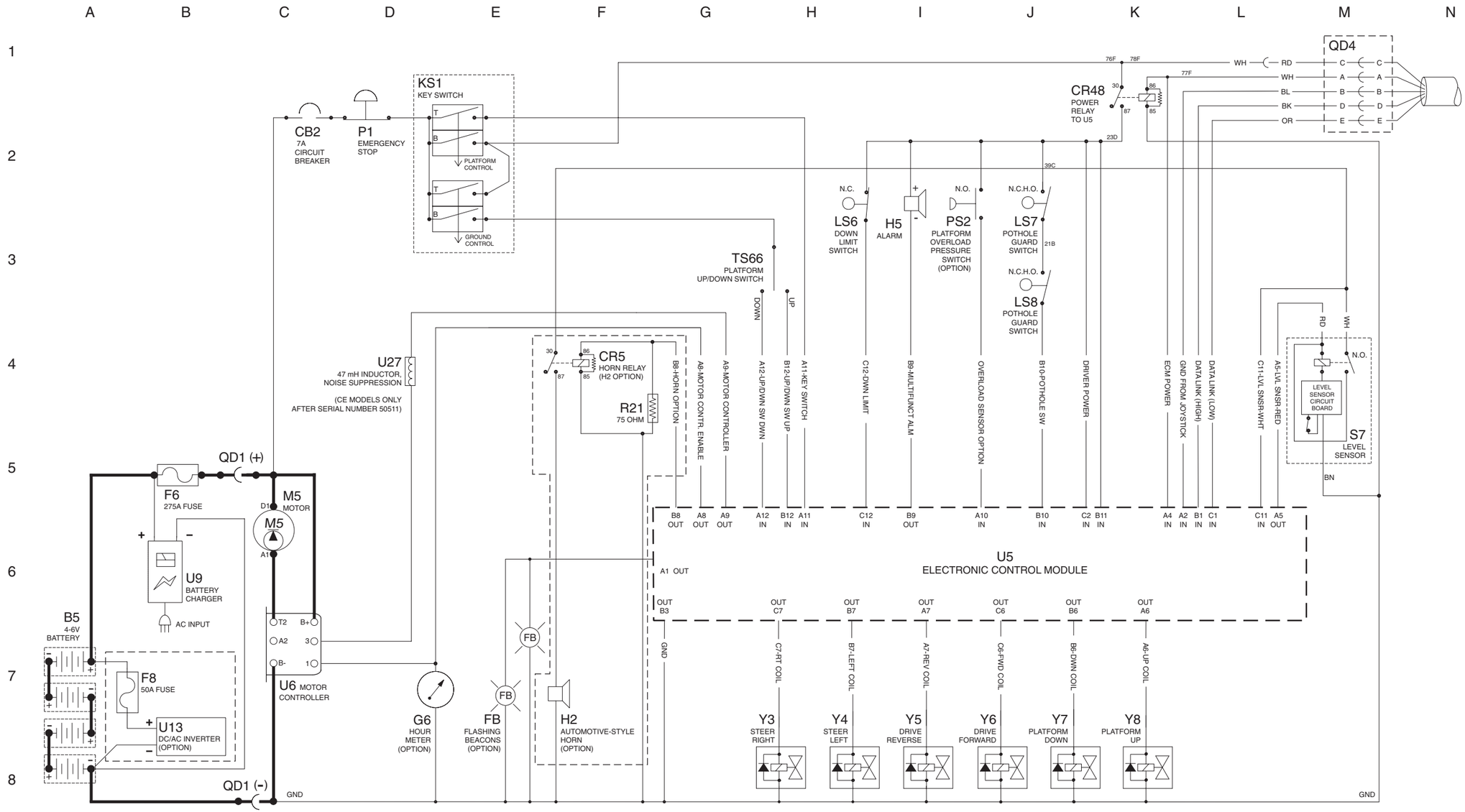

https://truckmanualshub.com/

REV B

Electrical Schematic

(from serial number 49805 to 51014)

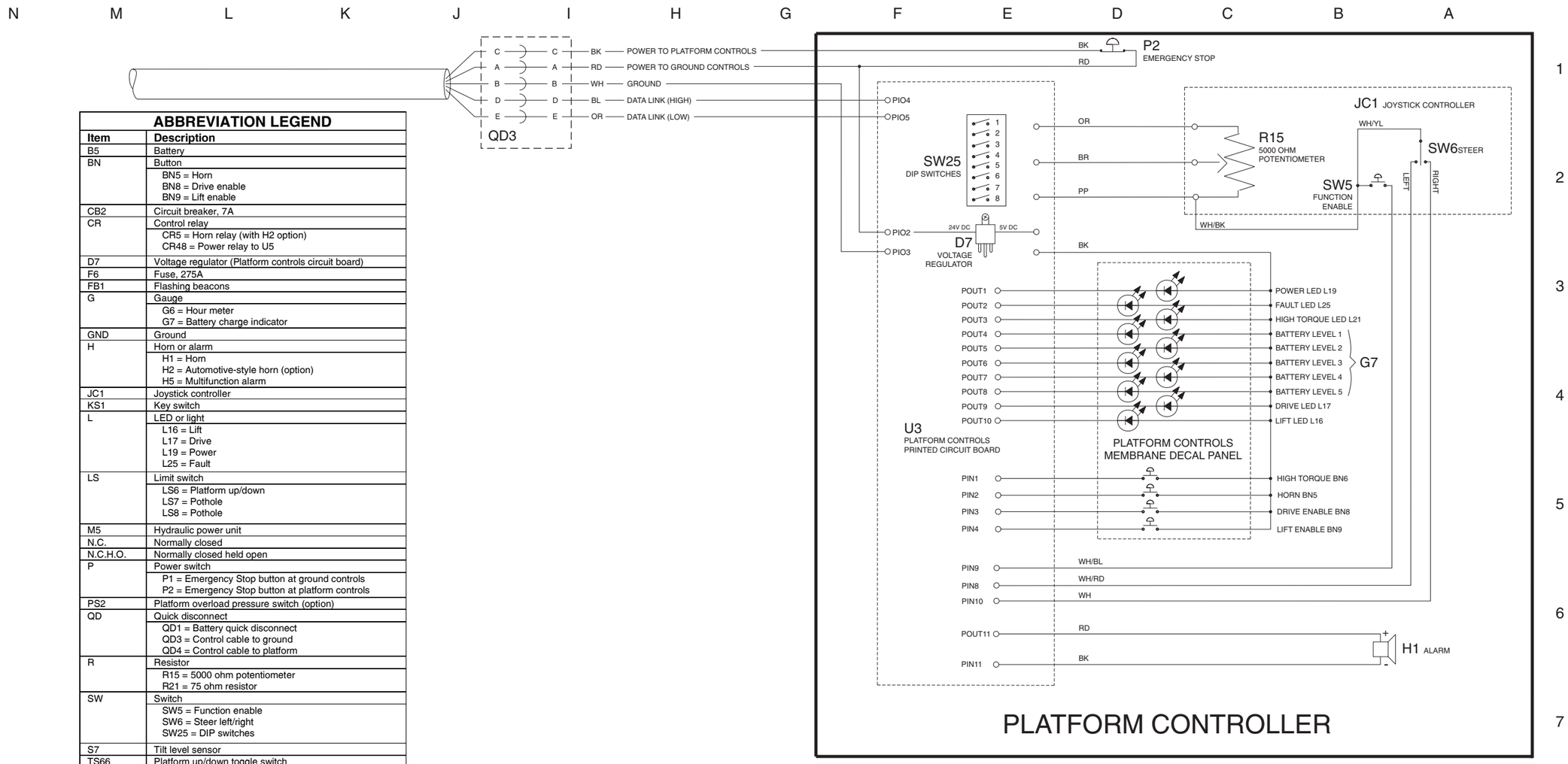

ABBREVIATION LEGEND	
Item	**Description**
B5	Battery
BN	Button BN5 = Horn BN8 = Drive enable BN9 = Lift enable
CB2	Circuit breaker, 7A
CR	Control relay CR5 = Horn relay (with H2 option) CR48 = Power relay to U5
D7	Voltage regulator (Platform controls circuit board)
F6	Fuse, 275A
FB1	Flashing beacons
G	Gauge G6 = Hour meter G7 = Battery charge indicator
GND	Ground
H	Horn or alarm H1 = Horn H2 = Automotive-style horn (option) H5 = Multifunction alarm
JC1	Joystick controller
KS1	Key switch
L	LED or light L16 = Lift L17 = Drive L19 = Power L25 = Fault
LS	Limit switch LS6 = Platform up/down LS7 = Pothole LS8 = Pothole
M5	Hydraulic power unit
N.C.	Normally closed
N.C.H.O.	Normally closed held open
P	Power switch P1 = Emergency Stop button at ground controls P2 = Emergency Stop button at platform controls
PS2	Platform overload pressure switch (option)
QD	Quick disconnect QD1 = Battery quick disconnect QD3 = Control cable to ground QD4 = Control cable to platform
R	Resistor R15 = 5000 ohm potentiometer R21 = 75 ohm resistor
SW	Switch SW5 = Function enable SW6 = Steer left/right SW25 = DIP switches
S7	Tilt level sensor
TS66	Platform up/down toggle switch
U	Electronic component U3 = Encoder printed circuit board U5 = Electronic control module U6 = Motor controller U9 = Battery charger U13 = Voltage inverter (option) U27 = 47 mH inductor, noise suppression
Y	Valve coil Y3 = Steer right Y4 = Steer left Y5 = Drive reverse Y6 = Drive forward Y7 = Platform down Y8 = Platform up

WIRE COLOR LEGEND	
Color	**Description**
BL	Blue
BK	Black
BN	Brown
GN	Green
OR	Orange
RD	Red
WH	White
YL	Yellow

https://truckmanualshub.com/

Electrical Schematic
(from serial number 49805 to 51014)

https://truckmanualshub.com/

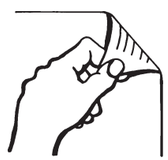

https://truckmanualshub.com/

Electrical Schematic

(from serial number 51015 to 52966)

REV B

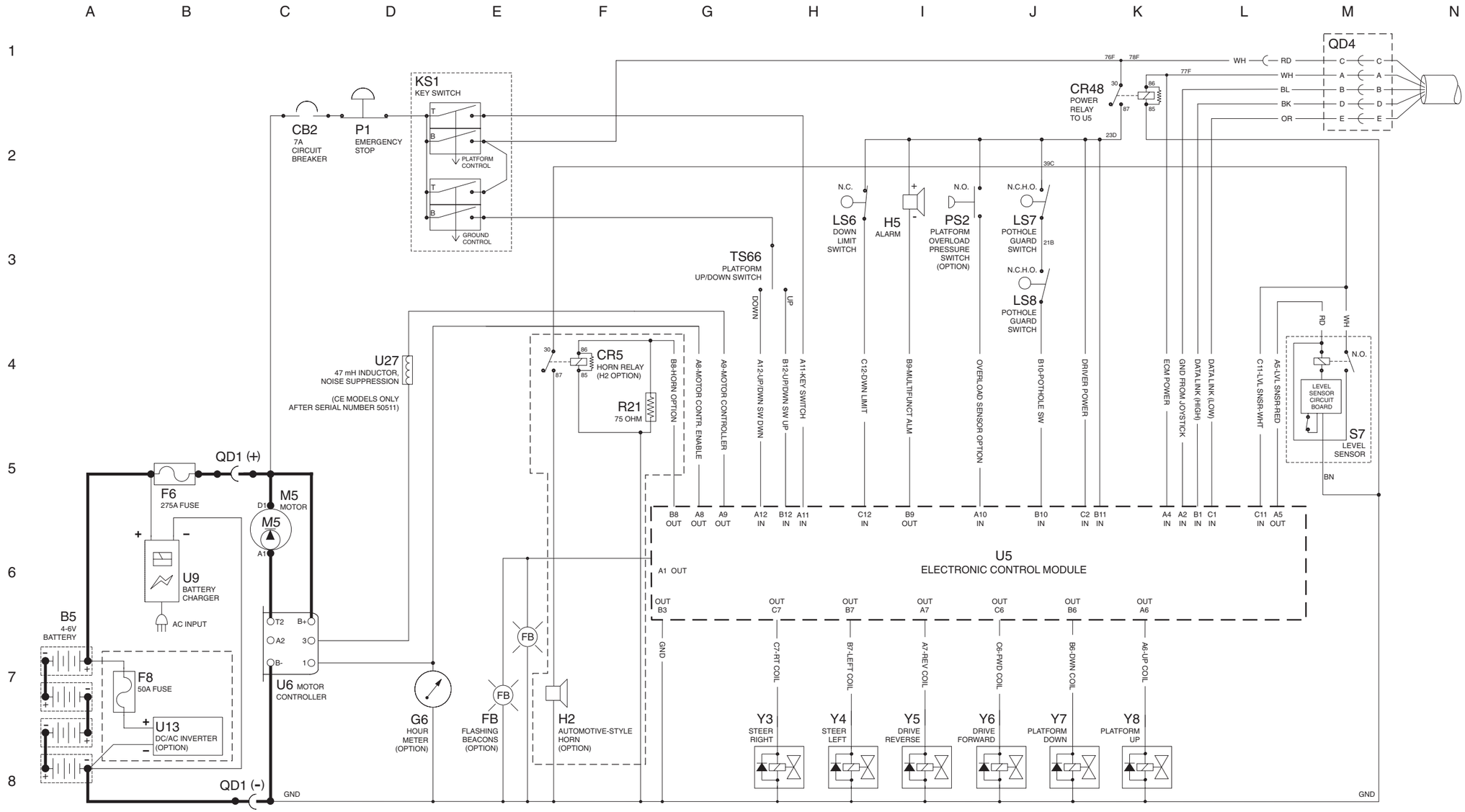

https://truckmanualshub.com/

REV B

Electrical Schematic

(from serial number 51015 to 52966)

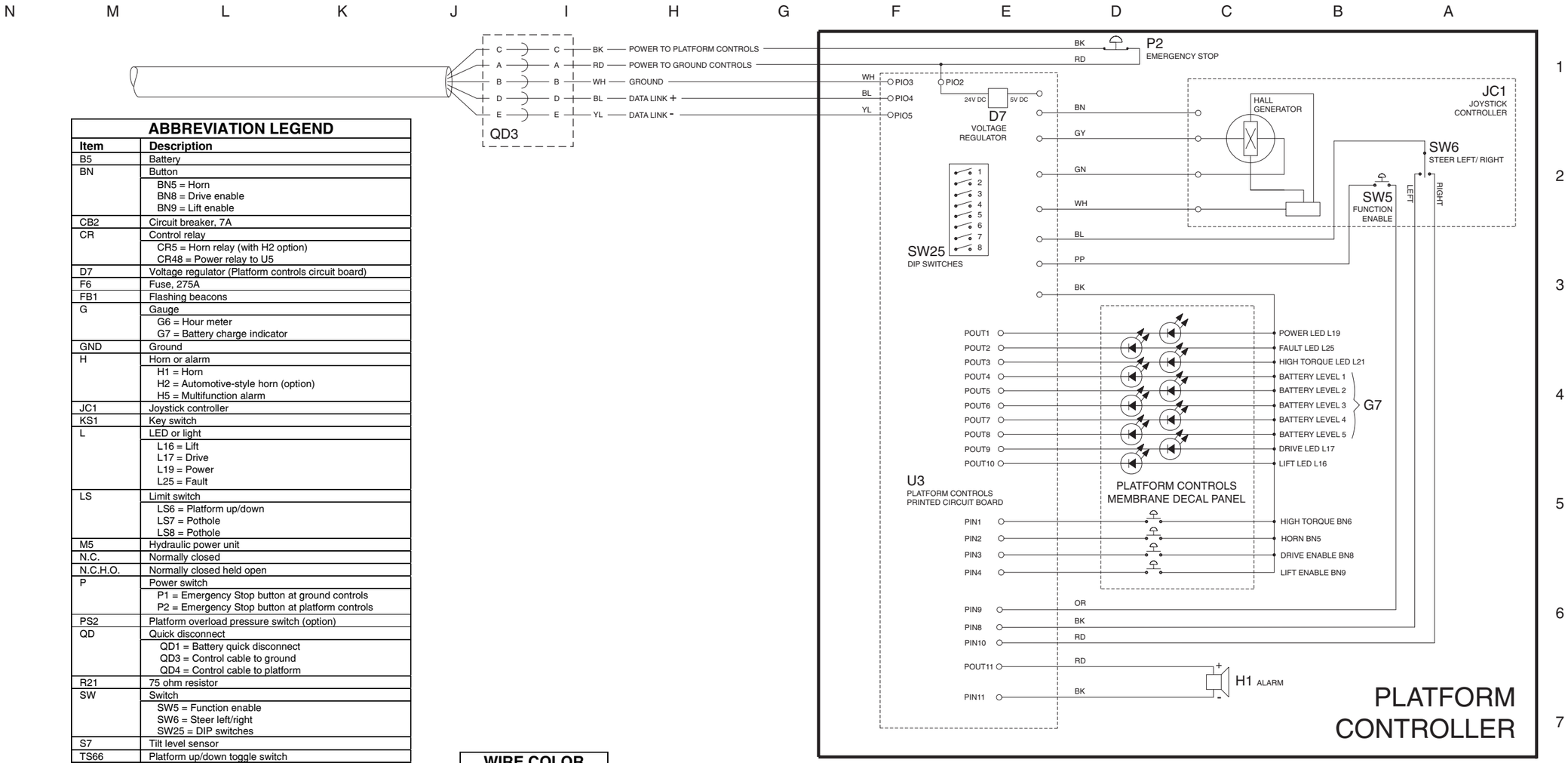

ABBREVIATION LEGEND	
Item	**Description**
B5	Battery
BN	Button BN5 = Horn BN8 = Drive enable BN9 = Lift enable
CB2	Circuit breaker, 7A
CR	Control relay CR5 = Horn relay (with H2 option) CR48 = Power relay to U5
D7	Voltage regulator (Platform controls circuit board)
F6	Fuse, 275A
FB1	Flashing beacons
G	Gauge G6 = Hour meter G7 = Battery charge indicator
GND	Ground
H	Horn or alarm H1 = Horn H2 = Automotive-style horn (option) H5 = Multifunction alarm
JC1	Joystick controller
KS1	Key switch
L	LED or light L16 = Lift L17 = Drive L19 = Power L25 = Fault
LS	Limit switch LS6 = Platform up/down LS7 = Pothole LS8 = Pothole
M5	Hydraulic power unit
N.C.	Normally closed
N.C.H.O.	Normally closed held open
P	Power switch P1 = Emergency Stop button at ground controls P2 = Emergency Stop button at platform controls
PS2	Platform overload pressure switch (option)
QD	Quick disconnect QD1 = Battery quick disconnect QD3 = Control cable to ground QD4 = Control cable to platform
R21	75 ohm resistor
SW	Switch SW5 = Function enable SW6 = Steer left/right SW25 = DIP switches
S7	Tilt level sensor
TS66	Platform up/down toggle switch
U	Electronic component U3 = Encoder printed circuit board U5 = Electronic control module U6 = Motor controller U9 = Battery charger U13 = Voltage inverter (option) U27 = 47 mH inductor, noise suppression
Y	Valve coil Y3 = Steer right Y4 = Steer left Y5 = Drive reverse Y6 = Drive forward Y7 = Platform down Y8 = Platform up

WIRE COLOR LEGEND	
Color	**Description**
BL	Blue
BK	Black
BN	Brown
GN	Green
GY	Gray
OR	Orange
PP	Purple
RD	Red
WH	White
YL	Yellow

https://truckmanualshub.com/

Electrical Schematic
(from serial number 51015 to 52966)

https://truckmanualshub.com/

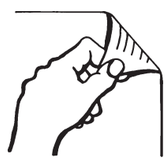

https://truckmanualshub.com/

Electrical Schematic

(from serial number 52967 to 53999)

REV B

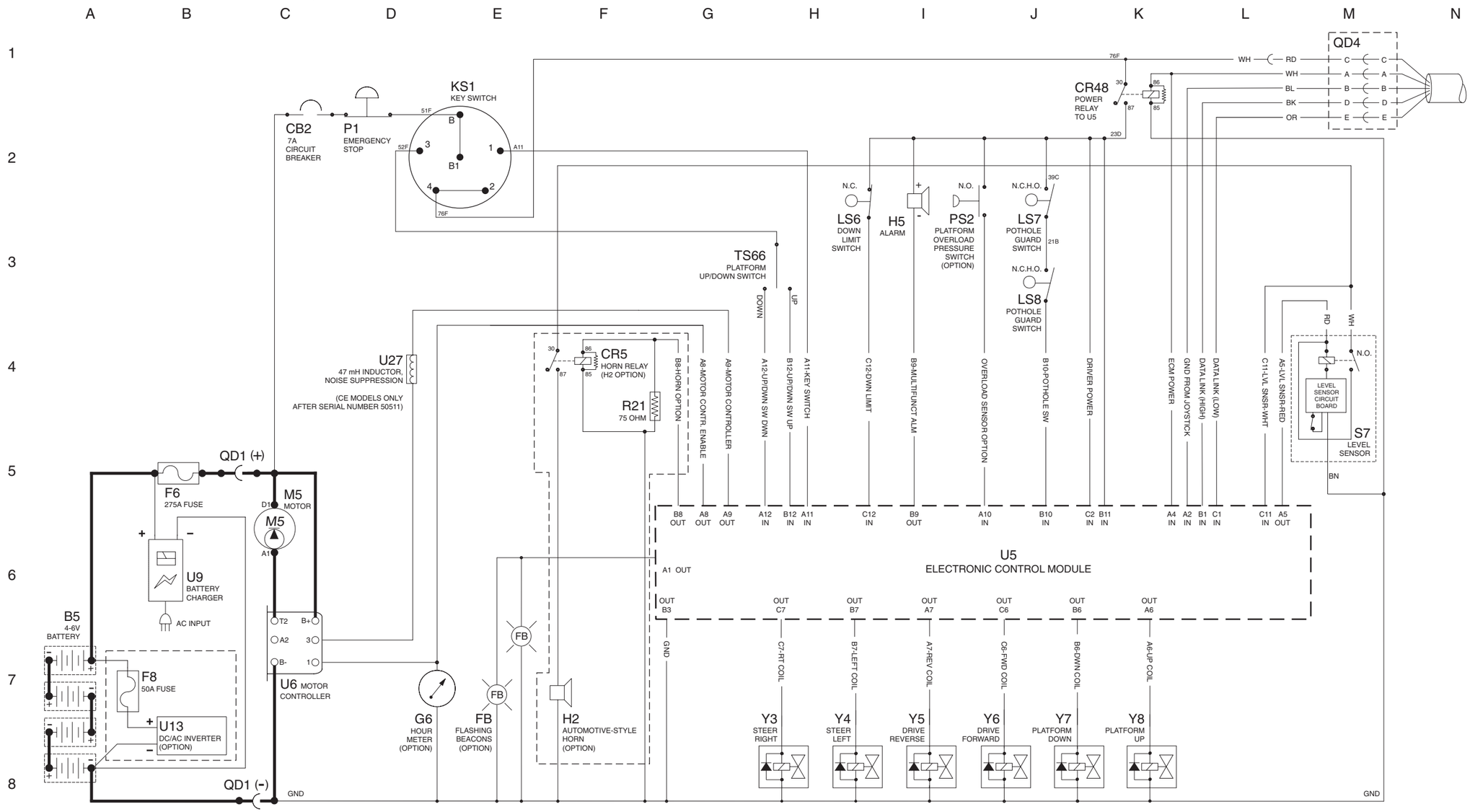

https://truckmanualshub.com/

REV B

Electrical Schematic

(from serial number 52967 to 53999)

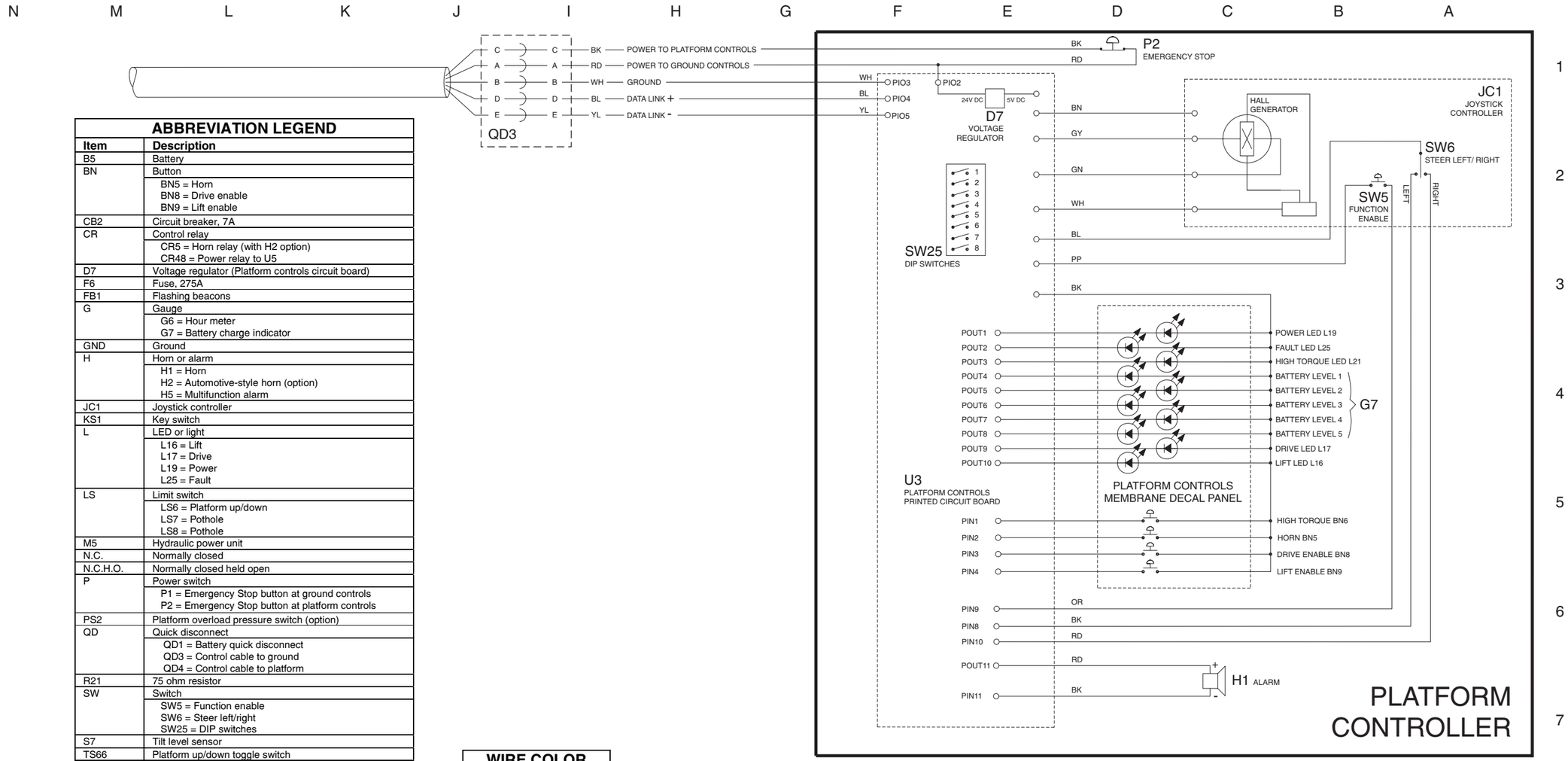

ABBREVIATION LEGEND	
Item	**Description**
B5	Battery
BN	Button
	BN5 = Horn BN8 = Drive enable BN9 = Lift enable
CB2	Circuit breaker, 7A
CR	Control relay
	CR5 = Horn relay (with H2 option) CR48 = Power relay to U5
D7	Voltage regulator (Platform controls circuit board)
F6	Fuse, 275A
FB1	Flashing beacons
G	Gauge
	G6 = Hour meter G7 = Battery charge indicator
GND	Ground
H	Horn or alarm
	H1 = Horn H2 = Automotive-style horn (option) H5 = Multifunction alarm
JC1	Joystick controller
KS1	Key switch
L	LED or light
	L16 = Lift L17 = Drive L19 = Power L25 = Fault
LS	Limit switch
	LS6 = Platform up/down LS7 = Pothole LS8 = Pothole
M5	Hydraulic power unit
N.C.	Normally closed
N.C.H.O.	Normally closed held open
P	Power switch
	P1 = Emergency Stop button at ground controls P2 = Emergency Stop button at platform controls
PS2	Platform overload pressure switch (option)
QD	Quick disconnect
	QD1 = Battery quick disconnect QD3 = Control cable to ground QD4 = Control cable to platform
R21	75 ohm resistor
SW	Switch
	SW5 = Function enable SW6 = Steer left/right SW25 = DIP switches
S7	Tilt level sensor
TS66	Platform up/down toggle switch
U	Electronic component
	U3 = Encoder printed circuit board U5 = Electronic control module U6 = Motor controller U9 = Battery charger U13 = Voltage inverter (option) U27 = 47 mH inductor, noise suppression
Y	Valve coil
	Y3 = Steer right Y4 = Steer left Y5 = Drive reverse Y6 = Drive forward Y7 = Platform down Y8 = Platform up

WIRE COLOR LEGEND	
Color	**Description**
BL	Blue
BK	Black
BN	Brown
GN	Green
GY	Gray
OR	Orange
PP	Purple
RD	Red
WH	White
YL	Yellow

https://truckmanualshub.com/

Electrical Schematic
(from serial number 52967 to 53999)

https://truckmanualshub.com/

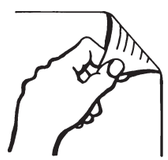

https://truckmanualshub.com/

Electrical Schematic

(from serial number 54000 to 59999)

REV B

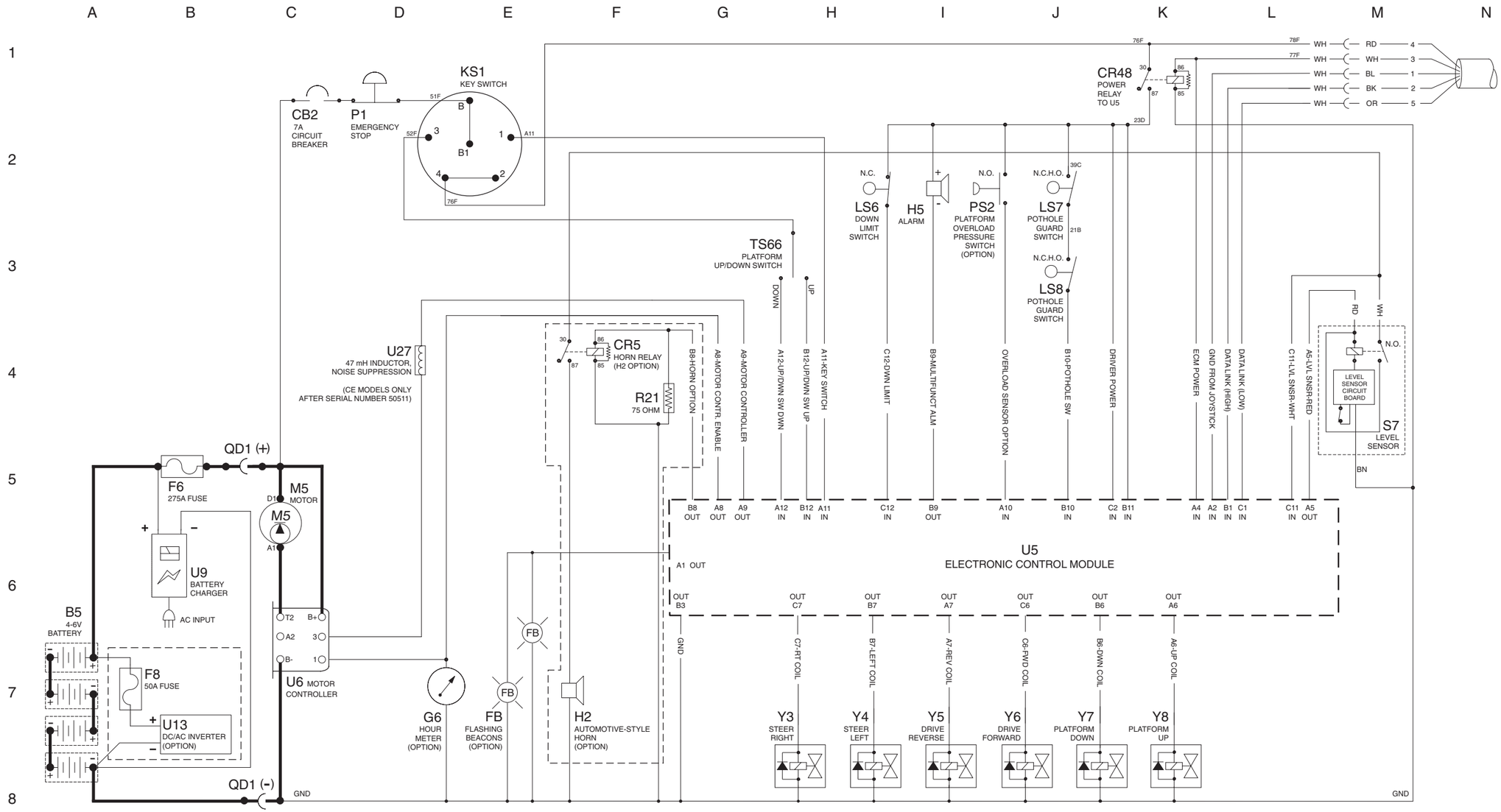

https://truckmanualshub.com/

REV B

Electrical Schematic

(from serial number 54000 to 59999)

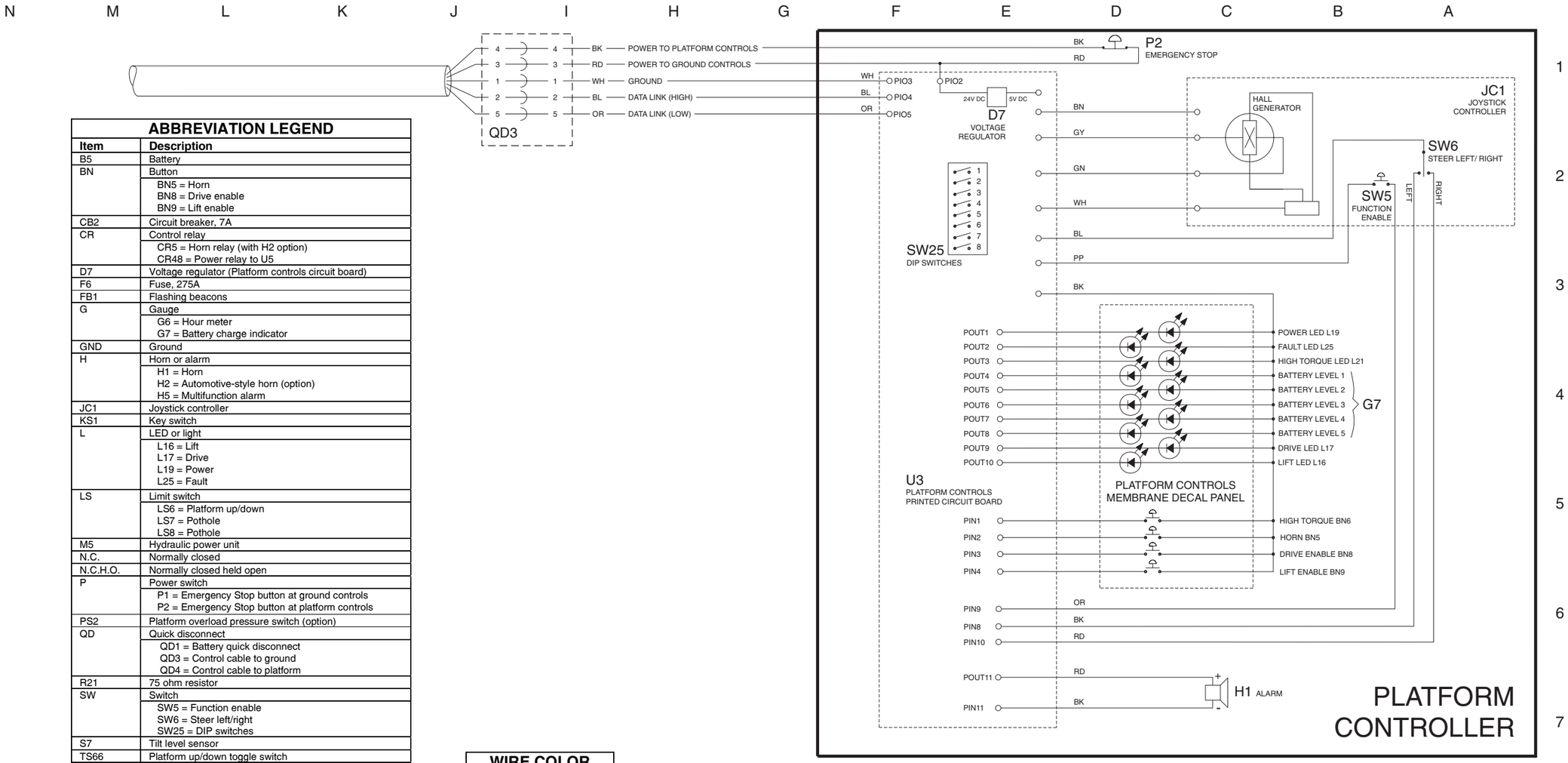

ABBREVIATION LEGEND	
Item	**Description**
B5	Battery
BN	Button BN5 = Horn BN8 = Drive enable BN9 = Lift enable
CB2	Circuit breaker, 7A
CR	Control relay CR5 = Horn relay (with H2 option) CR48 = Power relay to U5
D7	Voltage regulator (Platform controls circuit board)
F6	Fuse, 275A
FB1	Flashing beacons
G	Gauge G6 = Hour meter G7 = Battery charge indicator
GND	Ground
H	Horn or alarm H1 = Horn H2 = Automotive-style horn (option) H5 = Multifunction alarm
JC1	Joystick controller
KS1	Key switch
L	LED or light L16 = Lift L17 = Drive L19 = Power L25 = Fault
LS	Limit switch LS6 = Platform up/down LS7 = Pothole LS8 = Pothole
M5	Hydraulic power unit
N.C.	Normally closed
N.C.H.O.	Normally closed held open
P	Power switch P1 = Emergency Stop button at ground controls P2 = Emergency Stop button at platform controls
PS2	Platform overload pressure switch (option)
QD	Quick disconnect QD1 = Battery quick disconnect QD3 = Control cable to ground QD4 = Control cable to platform
R21	75 ohm resistor
SW	Switch SW5 = Function enable SW6 = Steer left/right SW25 = DIP switches
S7	Tilt level sensor
TS66	Platform up/down toggle switch
U	Electronic component U3 = Encoder printed circuit board U5 = Electronic control module U6 = Motor controller U9 = Battery charger U13 = Voltage inverter (option) U27 = 47 mH inductor, noise suppression
Y	Valve coil Y3 = Steer right Y4 = Steer left Y5 = Drive reverse Y6 = Drive forward Y7 = Platform down Y8 = Platform up

WIRE COLOR LEGEND	
Color	**Description**
BL	Blue
BK	Black
BN	Brown
GN	Green
GY	Gray
OR	Orange
PP	Purple
RD	Red
WH	White
YL	Yellow

https://truckmanualshub.com/

Electrical Schematic
(from serial number 54000 to 59999)

https://truckmanualshub.com/

Hydraulic Schematic Legend and Component Reference

https://truckmanualshub.com/

Hydraulic Schematic Legend and Component Reference

REV B

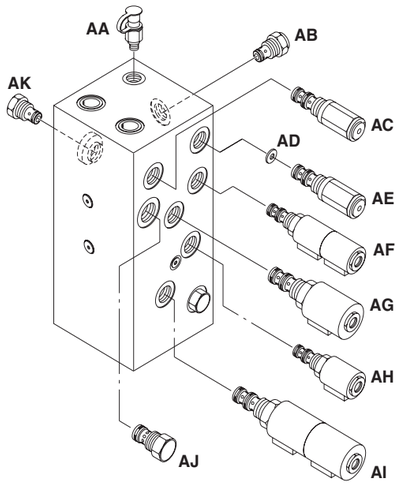

Function manifold components
(from serial number 17408 to 35799)

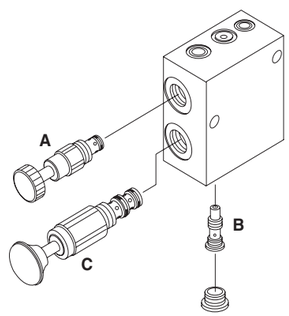

Brake release hand pump manifold components

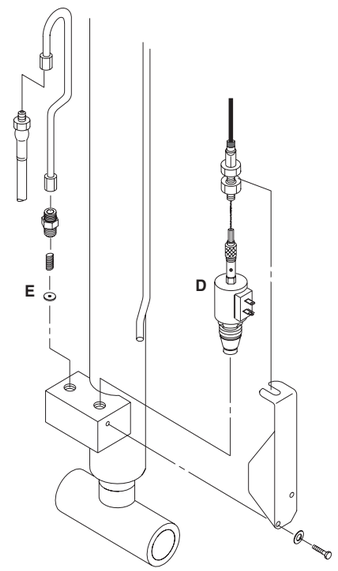

Lift cylinder components
(before serial number 23568)

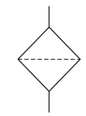

Filter

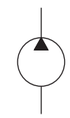

Fixed displacement pump

Bi-directional motor

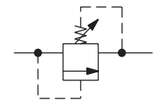

Relief valve

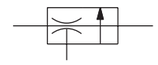

Priority flow regulator

Orifice with size

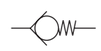

Check valve

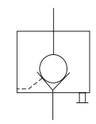

Check valve, pilot to open

Shuttle valve

Brake

Hand pump

Variable speed motor

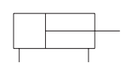

Dual acting cylinder

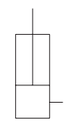

Single acting cylinder

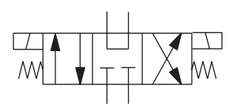

Solenoid operated 3 position 4 way directional valve

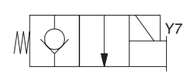

Solenoid operated 2 position 2 way valve, normally closed with manual over-ride

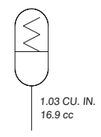

Accumulator

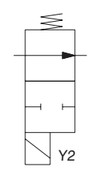

Solenoid operated 2 position 2 way directional valve

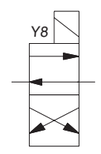

Solenoid operated 2 position 4 way directional valve

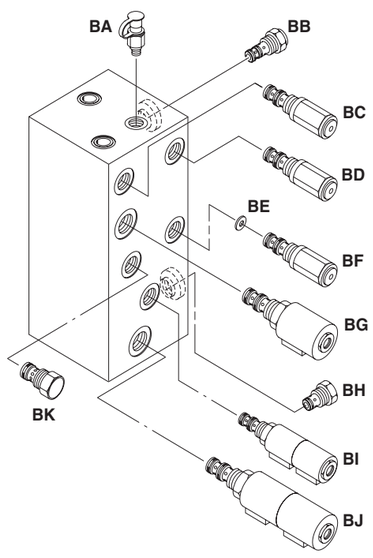

Function manifold components
(after serial number 35799)

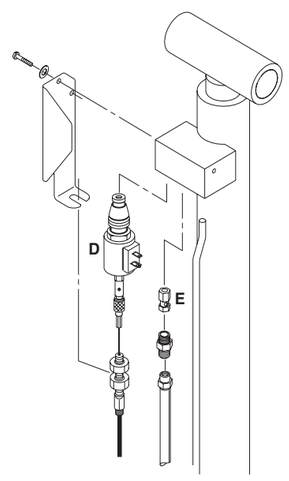

Lift cylinder components
(after serial number 23567)

https://truckmanualshub.com/

REV B

Hydraulic Schematic

(from serial number 17408 to 35799)

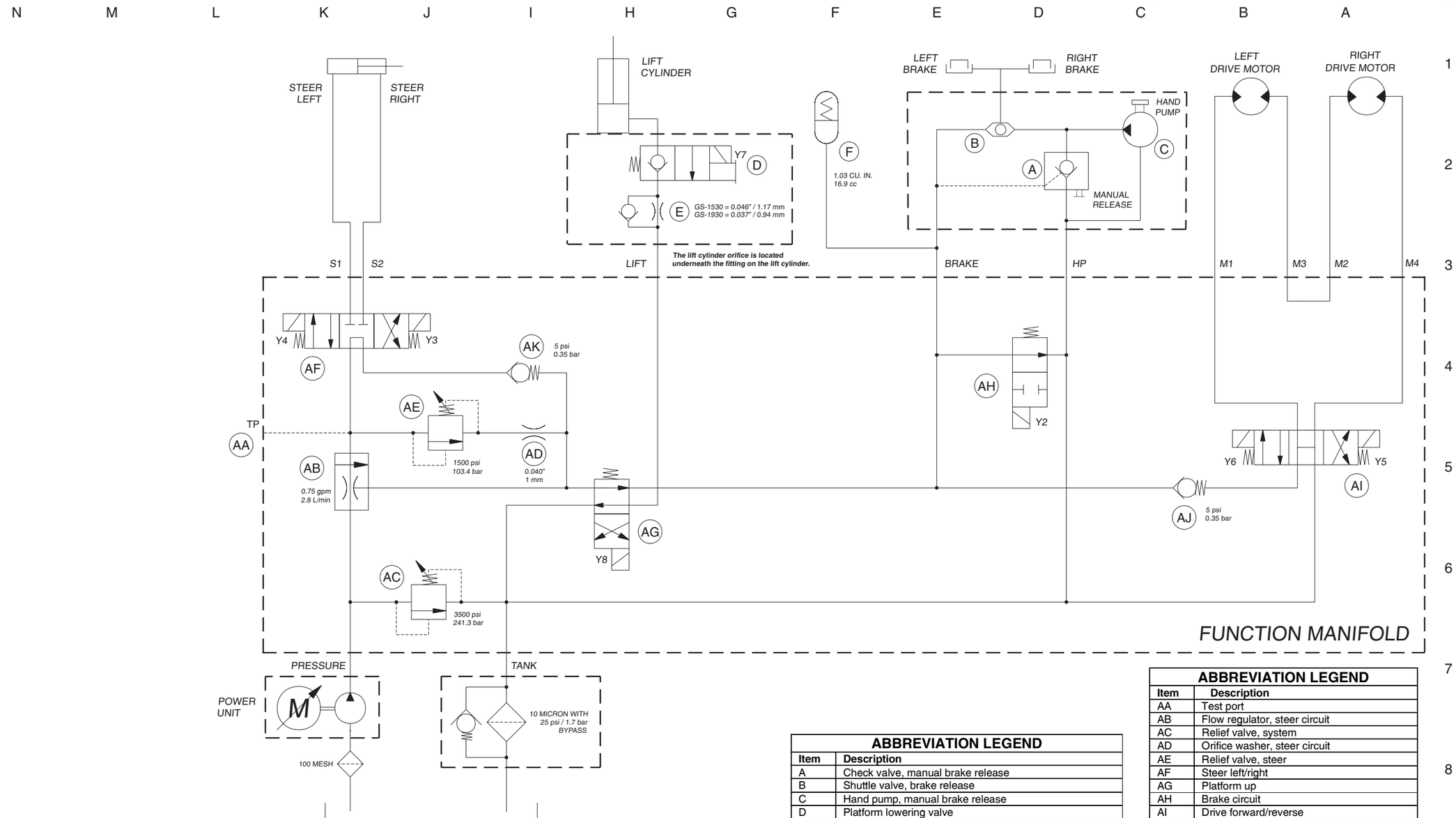

ABBREVIATION LEGEND	
Item	**Description**
A	Check valve, manual brake release
B	Shuttle valve, brake release
C	Hand pump, manual brake release
D	Platform lowering valve
E	Orifice, platform down circuit
F	Accumulator

ABBREVIATION LEGEND	
Item	**Description**
AA	Test port
AB	Flow regulator, steer circuit
AC	Relief valve, system
AD	Orifice washer, steer circuit
AE	Relief valve, steer
AF	Steer left/right
AG	Platform up
AH	Brake circuit
AI	Drive forward/reverse
AJ	Check valve, brake circuit
AK	Check valve, steer circuit

https://truckmanualshub.com/

Hydraulic Schematic
(from serial number 17408 to 35799)

https://truckmanualshub.com/

REV B

Hydraulic Schematic

(from serial number 35800 to 59999)

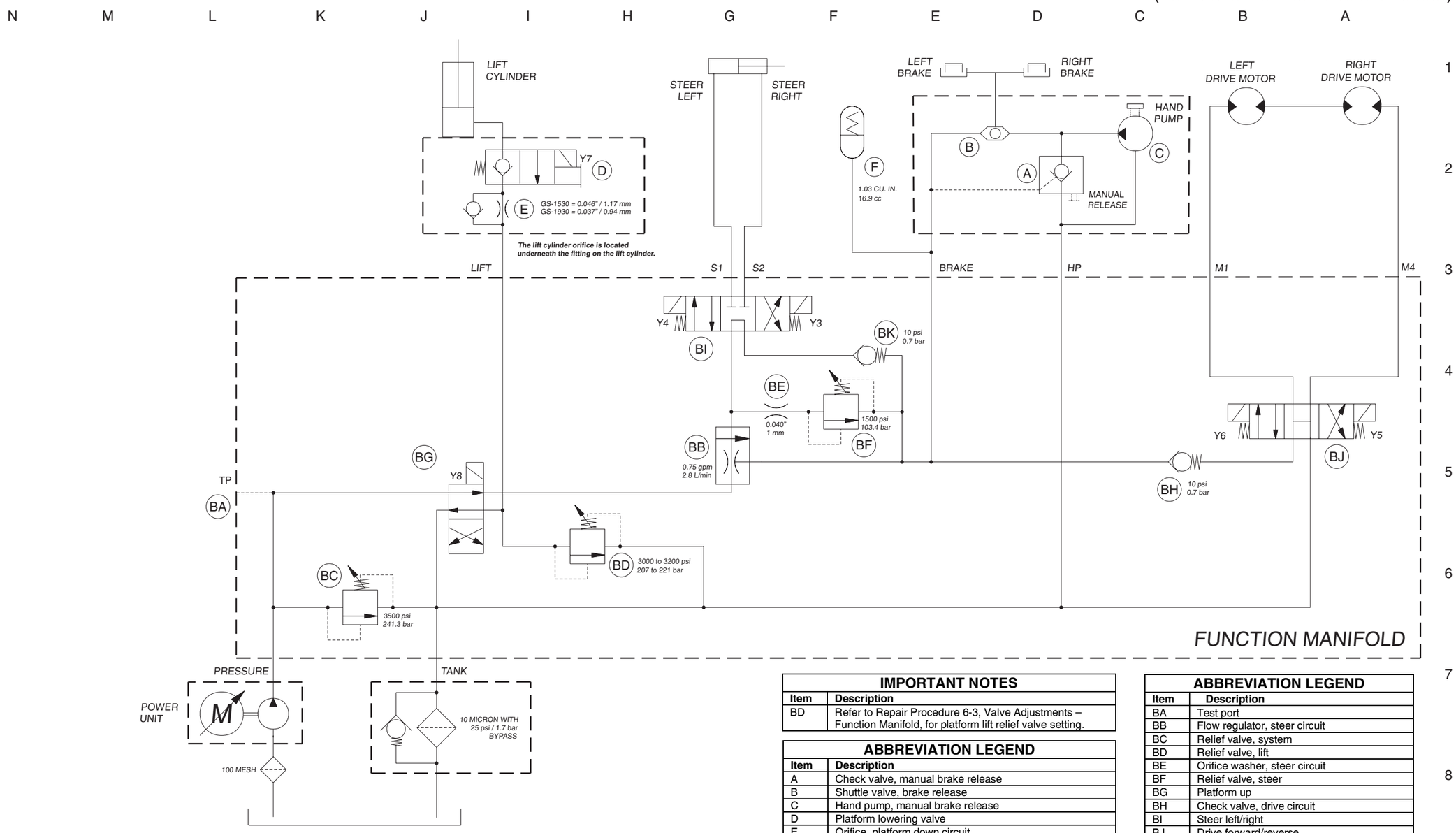

IMPORTANT NOTES	
Item	**Description**
BD	Refer to Repair Procedure 6-3, Valve Adjustments – Function Manifold, for platform lift relief valve setting.

ABBREVIATION LEGEND	
Item	**Description**
A	Check valve, manual brake release
B	Shuttle valve, brake release
C	Hand pump, manual brake release
D	Platform lowering valve
E	Orifice, platform down circuit
F	Accumulator

ABBREVIATION LEGEND	
Item	**Description**
BA	Test port
BB	Flow regulator, steer circuit
BC	Relief valve, system
BD	Relief valve, lift
BE	Orifice washer, steer circuit
BF	Relief valve, steer
BG	Platform up
BH	Check valve, drive circuit
BI	Steer left/right
BJ	Drive forward/reverse
BK	Check valve, steer circuit

https://truckmanualshub.com/

Hydraulic Schematic
(from serial number 35800 to 59999)

ruckmanualsh

Service Manual GS-1530 & GS-1930

Part No.
72876

Rev C2

https://truckmanualshub.com/

Distributed By:

Genie North America
Phone 425.881.1800
Toll Free USA and Canada 800.536.1800
Fax 425.883.3475

Genie Australia Pty Ltd.
Phone +61 7 3375 1660
Fax +61 7 3375 1002

Genie China
Phone +86 21 53852570
Fax +86 21 53852569

Genie Malaysia
Phone +65 98 480 775
Fax +65 67 533 544

Genie Japan
Phone +81 3 3453 6082
Fax +81 3 3453 6083

Genie Korea
Phone +82 25 587 267
Fax +82 25 583 910

Genie Brasil
Phone +55 11 41 665 755
Fax +55 11 41 665 754

Genie Holland
Phone +31 183 581 102
Fax +31 183 581 566

Genie Scandinavia
Phone +46 31 575100
Fax +46 31 579020

Genie France
Phone +33 (0)2 37 26 09 99
Fax +33 (0)2 37 26 09 98

Genie Iberica
Phone +34 93 579 5042
Fax +34 93 579 5059

Genie Germany
Phone 0800 180 9017
Phone +49 422 149 1818
Fax +49 422 149 1820

Genie U.K.
Phone +44 (0)1476 584333
Fax +44 (0)1476 584334

Genie Mexico City
Phone +52 55 5666 5242
Fax +52 55 5666 3241