STRONG PARTNERS. TOUGH TRUCKS.

Preliminary Information

High Capacity Forklift Trucks

H25XMS-9, H30XMS-9, H32XMS-9

25.000 – 32.000 kg @ 900 mm

H25XM-12, H28XM-12, H30XM-12, H32XM-12

25.000 – 32.000 kg @ 1200 mm

Container Handling Trucks

H28XM-16CH, H32XM-16CH

24.000 – 28.400 kg @ 1600 mm

H25-32XMS-9 Forklift Trucks

CHARACTERISTICS	1.1	Manufacturer		HYSTER		HYSTER		HYSTER			1.1	CHARACTERISTICS
	1.2	Model designation		H25XMS-9		H30XMS-9		H32XMS-9			1.2	
	1.3	Power: battery, diesel, LPG, electric mains		Diesel		Diesel		Diesel			1.3	
	1.4	Operation: manual, pedestrian, stand, seat, orderpicker		Seat		Seat		Seat			1.4	
	1.5	Load capacity	Q (kg)	25 000	21 850	30 000	26 100	31 950	28 050		1.5	
	1.6	Load centre	c (mm)	900	1 200	900	1 200	900	1 200		1.6	
	1.8	Load distance (Dual function SS & FP carriage)	x (mm)	1 185		1 270		1 270			1.8	
	1.9	Wheelbase	y (mm)	3 655		3 935		3 935			1.9	
WEIGHTS	2.1	Unladen weight ●	kg	38 205		45 555		46 165			2.1	WEIGHTS
	2.2	Axle loading with load, front/rear	kg	58 710	4 445	69 565	5 470	73 140	4 775		2.2	
	2.3	Axle loading without load, front/rear	kg	19 435	18 770	23 720	21 835	23 765	22 400		2.3	
WHEELS & TYRES	3.1	Tyres: L = pneumatic, V = solid, SE = pneumatic-shaped solid		L		L		L			3.1	WHEELS & TYRES
	3.2	Tyre size, front		14,00 x 24		16,00 x 25		16,00 x 25			3.2	
	3.3	Tyre size, rear		14,00 x 24		16,00 x 25		16,00 x 25			3.3	
	3.5	Number of wheels, front / rear (X = driven)		4X	2	4X	2	4X	2		3.5	
	3.6	Tread, front	b_{10} (mm)	2 250		2 425		2 425			3.6	
	3.7	Tread, rear	b_{11} (mm)	2 380		2 340		2 340			3.7	
DIMENSIONS	4.1	Mast tilt, forward / backwards	degrees	6	10	6	10	6	10		4.1	DIMENSIONS
	4.2	Height of mast lowered (unloaded)	h_1 (mm)	4 125		4 225		4 225			4.2	
	4.4	Lift height (bottom of forks)	h_3 (mm)	4 265		4 265		4 265			4.4	
	4.5	Height of mast extended (unloaded)	h_4 (mm)	6 260		6 355		6 355			4.5	
	4.7	Cab height (open cab)	h_6 (mm)	3 385		3 455		3 455			4.7	
	4.8	Seat height (Seat Index Point, ISO 5353)	h_7 (mm)	2 245		2 315		2 315			4.8	
	4.12	Coupling height	h_{10} (mm)	960		1 030		1 030			4.12	
	4.19	Overall length	l_1 (mm)	8 315		8 680		8 680			4.19	
	4.20	Length to face of forks	l_2 (mm)	5 875		6 240		6 240			4.20	
	4.21	Overall width truck	b_2 (mm)	3 225		3 380		3 380			4.21	
	4.22	Fork dimensions	s/e/l (mm)	105	280	2 440	105	300	2 440	105	300	2 440	4.22
	4.23	Carriage type		Hook-type Dual-function Sideshift & Forkpositioning			Hook-type Dual-function Sideshift & Forkpositioning			Hook-type Dual-function Sideshift & Forkpositioning			4.23
	4.24	Carriage width	b_3 (mm)	3 000			3 180			3 180			4.24
	4.25	Width over the forks min. / max., a) Standard Fork Positioning, with cyls in outer position a) Standard Fork Positioning, with cyls in inner position b) Optional 'Zero in-to-in' Fork Positioning, with cyls in outer position b) Optional 'Zero in-to-in' Fork Positioning, with cyls in inner position	b_5 (mm)	a) 1 430 a) 880 b) 970 b) 560	a) 2 970 a) 2 420 b) 2 970 b) 2 420		a) 1 480 a) 930 b) 1 020 b) 600	a) 3 140 a) 2 590 b) 3 140 b) 2 590		a) 1 480 a) 930 b) 1 020 b) 600	a) 3 140 a) 2 590 b) 3 140 b) 2 590		4.25
	4.30	Sideshift @ width over forks	b_8b_5 (mm)	+/- 385	2 200		+/- 415	2 310		+/- 415	2 310		4.30
	4.31	Ground clearance under mast, with load	m_1 (mm)	275			275			275			4.31
	4.32	Ground clearance, centre of wheelbase	m_2 (mm)	365			440			440			4.32
	4.33	Stacking Aisle, without operating clearance (load size 1830 mm W x 1830 mm L)	V (mm)	8 340			8 790			8 790			4.33
		Stacking Aisle, with 200 mm operating clearance (load size 1830 mm W x 1830 mm L)	Ast (mm)	8 540			8 990			8 990			
		Stacking Aisle, with 10% operating clearance (load size 1830 mm W x 1830 mm L)	Ast (mm)	9 175			9 670			9 670			
	4.35	Turning radius	W_a (mm)	5 326			5 691			5 691			4.35
	4.36	Internal turning radius	b_{13} (mm)	428			583			583			4.36
PERFORMANCE	5.1	Travel speed with / without load	km/h	26	27	25	26	25	26		5.1	PERFORMANCE
	5.2	Lifting speed with / without load - with 230 Hp engine	m/sec	0,30	0,35	0,25	0,29	0,25	0,29		5.2	
		Lifting speed with / without load - with 264 Hp engine	m/sec	0,34	0,35	0,28	0,29	0,28	0,29			
	5.2a	Lifting speed with 70% load - with 230 Hp engine	m/sec	T.B.D	T.B.D	T.B.D	T.B.D	T.B.D	T.B.D		5.2a	
		Lifting speed with 70% load - with 264 Hp engine	m/sec	T.B.D	T.B.D	T.B.D	T.B.D	T.B.D	T.B.D			
	5.3	Lowering speed with / without load	m/sec	0,50	0,50	0,50	0,50	0,50	0,50		5.3	
	5.5	Drawbar pull with / without load @ 1,6 km/hr - with 230 Hp engine ◆	kN	140	125	141	146	140	146		5.5	
		Drawbar pull with / without load @ 1,6 km/hr - with 264 Hp engine ◆	kN	161	125	162	154	161	154			
	5.6	Max. drawbar pull with / without load - with 230 Hp engine ◆	kN	176	125	177	154	176	154		5.6	
		Max. drawbar pull with / without load - with 264 Hp engine ◆	kN	200	125	201	154	201	154			
	5.7	Gradeability with / without load @ 1,6 km/hr - with 230 Hp engine †	%	24	28	20	27	19	27		5.7	
		Gradeability with / without load @ 1,6 km/hr - with 264 Hp engine †	%	27	28	23	27	22	27			
	5.8	Gradeability with / without load @ stall - with 230 Hp engine †	%	30	28	25	27	25	27		5.8	
		Gradeability with / without load @ stall - with 264 Hp engine †	%	35	28	29	27	29	27			
	5.10	Service brake		Oil immersed 'wet discs'		Oil immersed 'wet discs'		Oil immersed 'wet discs'			5.10	
MOTOR	7.1	Engine manufacturer / type		Cummins	QSC 8,3	Cummins	QSC 8,3	Cummins	QSC 8,3		7.1	MOTOR
	7.2	Engine output according to ISO 1585: For standard engine: Maximum @ 2 000 rpm / Nominal @ max 2 200 rpm For optional engine: Maximum @ 2 000 rpm / Nominal @ max 2 200 rpm	kW	230 Hp (172 kW) 264 Hp (197 kW)	215 Hp (160 kW) 250 Hp (186 kW)	230 Hp (172 kW) 264 Hp (197 kW)	215 Hp (160 kW) 250 Hp (186 kW)	230 Hp (172 kW) 264 Hp (197 kW)	215 Hp (160 kW) 250 Hp (186 kW)		7.2	
	7.2.1	Maximum engine torque - Standard 230 Hp engine Maximum engine torque - Optional 264 Hp engine	Nm	915 Nm @ 900 - 1500 rpm 1 125 Nm @ 1 500 rpm		915 Nm @ 900 - 1500 rpm 1 125 Nm @ 1 500 rpm		915 Nm @ 900 - 1500 rpm 1 125 Nm @ 1 500 rpm			7.2.1	
	7.3	Governed speed	rpm	2 200		2 200		2 200			7.3	
	7.4	Number of cylinders / displacement	/cm³	6	8 270	6	8 270	6	8 270		7.4	
	7.5	Fuel consumption in accordance to VDI	l/h	☎		☎		☎			7.5	
OTHER	8.1	Drive control		Torque Converter		Torque Converter		Torque Converter			8.1	OTHER
	8.2	Working pressure for attachments	bar	235		235		235			8.2	
	8.3	Oil flow for auxiliary functions	l/min	70		70		70			8.3	
	8.4	Noise level LpAZ, inside cab, per EN12053	dB (A)	76		76		76			8.4	
	8.5	Towing coupling type		Pin		Pin		Pin			8.5	

Specification data is based on VDI 2198

Equipment and weight: Fork lift trucks:

- ● Weights (line 2.1) are based on the following specifications: Complete truck with Pneumatic tyres, 4265 mm BOF (4370 mm TOF) 2-Stage Vista Mast, Dual-function Sideshift-Forkpositioners carriage and Hook-type forks 2440 mm long.

Notes: Specifications are affected by the conditions of the vehicle and how it is equipped, as well as the nature and condition of the operating area. If these specifications are critical, the proposed application should be discussed with your dealer

† Gradeability figures (line 5.7 & 5.8) are provided for comparison of tractive performance, but are not intended to endorse the operation of the vehicle on the stated inclines. Follow instructions in the operating manual regarding operation on inclines.

◆ Drawbar pull performance figures (line 5.5 & 5.6) are only indicative for comparison purpose. These performances are only possible for a short period of time.

☎ Consult your Hyster lift truck dealer

Specification data is based on VDI 2198

Hyster products are subject to change without notice. Lift trucks illustrated may feature optional equipment.

CE Safety: This truck conforms to the current EU requirements.

H25-32XM-12 Forklift Trucks

CHARACTERISTICS	1.1	Manufacturer		HYSTER		HYSTER		HYSTER		HYSTER		1.1	CHARACTERISTICS
	1.2	Model designation		H25XM-12		H28XM-12		H30XM-12		H32XM-12		1,2	
	1.3	Power: battery, diesel, LPG, electric mains		Diesel		Diesel		Diesel		Diesel		1,3	
	1.4	Operation: manual, pedestrian, stand, seat, orderpicker		Seat		Seat		Seat		Seat		1,4	
	1.5	Load capacity	Q (kg)	25 000		28 000	31 850	30 000	32 000	32 000		1,5	
	1.6	Load centre	c (mm)	1 200		1 200	900	1 200	900 - 1 000	1 200		1.6	
	1.8	Load distance (Dual function SS & FP Hook-type carriage)	x (mm)	1 185		1 270		1 270		1 270		1,8	
	1.9	Wheelbase	y (mm)	4 315		4 315		4 315		4 825		1,9	
WEIGHTS	2.1	Unladen weight ●	kg	38 630		45 785		46 430		46 010		2.1	WEIGHTS
	2.2	Axle loading with load, front/rear	kg	58 345	5 285	67 735	6 050	70 935	5 490	72 082	5 927	2.2	
	2.3	Axle loading without load, front/rear	kg	19 530	19 100	23 715	22 070	23 770	22 660	23 708	22 302	2.3	
WHEELS & TYRES	3.1	Tyres: L = pneumatic, V = solid, SE = pneumatic-shaped solid		L		L		L		L		3.1	WHEELS & TYRES
	3.2	Tyre size, front		14,00 x 24		16,00 x 25		16,00 x 25		16,00 x 25		3.2	
	3.3	Tyre size, rear		14,00 x 24		16,00 x 25		16,00 x 25		16,00 x 25		3.3	
	3.5	Number of wheels, front / rear (X = driven)		4X	2	4X	2	4X	2	4X	2	3.5	
	3.6	Tread, front	b_{10} (mm)	2 250		2 425		2 425		2 425		3,6	
	3.7	Tread, rear	b_{11} (mm)	2 380		2 340		2 340		2 340		3.7	
DIMENSIONS	4.1	Mast tilt, forward / backwards	degrees	6	10	6	10	6	10	6	10	4.1	DIMENSIONS
	4.2	Height of mast lowered (unloaded)	h_1 (mm)	4 125		4 225		4 225		4 225		4.2	
	4.4	Lift height (bottom of forks)	h_3 (mm)	4 265		4 265		4 265		4 265		4,4	
	4.5	Height of mast extended (unloaded)	h_4 (mm)	6 260		6 355		6 355		6 355		4,5	
	4,7	Cab height (open module)	h_6 (mm)	3 385		3 455		3 455		3 455		4,7	
	4,8	Seat height (Seat Index Point, ISO 5353)	h_7 (mm)	2 245		2 315		2 315		2 315		4,8	
	4.12	Coupling height	h_{10} (mm)	960		1 030		1 030		1 030		4.12	
	4,19	Overall length	l_1 (mm)	8 975		9 060		9 060		9 060		4,19	
	4.20	Length to face of forks	l_2 (mm)	6 535		6 620		6 620		7 130		4.20	
	4,21	Overall width truck	b_2 (mm)	3 225		3 380		3 380		3 380		4,21	
	4,22	Fork dimensions	s/e/l (mm)	105	280 2 440	105	300 2 440	105	300 2 440	105	300 2 440	4,22	
	4.23	Carriage type		Hook-type Dual-function Sideshift & Forkpositioning		Hook-type Dual-function Sideshift & Forkpositioning		Hook-type Dual-function Sideshift & Forkpositioning		Hook-type Dual-function Sideshift & Forkpositioning		4.23	
	4,24	Carriage width	b_3 (mm)	3 000		3 180		3 180		3 180		4,24	
	4.25	Width over the forks min. / max., a) Standard Fork Positioning, with cyls in outer position a) Standard Fork Positioning, with cyls in inner position b) Optional 'Zero in-to-in' Fork Positioning, with cyls in outer position b) Optional 'Zero in-to-in' Fork Positioning, with cyls in inner position	b_5 (mm)	a) 1 430 a) 880 b) 970 b) 560	a) 2 970 a) 2 420 b) 2 970 b) 2 420	a) 1 480 a) 930 b) 1 020 b) 600	a) 3 140 a) 2 590 b) 3 140 b) 2 590	a) 1 480 a) 930 b) 1 020 b) 600	a) 3 140 a) 2 590 b) 3 140 b) 2 590	a) 1 480 a) 930 b) 1 020 b) 600	a) 3 140 a) 2 590 b) 3 140 b) 2 590	4.25	
	4,30	Sideshift @ width over forks	b_8b_5 (mm)	+/- 385	2 200	+/- 415	2 310	+/- 415	2 310	+/- 415	2 310	4,30	
	4.31	Ground clearance under mast, with load	m_1 (mm)	275		275		275		275		4.31	
	4,32	Ground clearance, centre of wheelbase	m_2 (mm)	365		440		440		440		4,32	
	4.33	Stacking Aisle, without operating clearance (load size 2 440 mm W x 2 440 mm L)	V (mm)	9 810		9 895		9 895		10 560		4.33	
		Stacking Aisle, with 200 mm operating clearance (load size 2 440 mm W x 2 440 mm L)	Ast (mm)	10 010		10 010		10 010		10 760			
		Stacking Aisle, with 10% operating clearance (load size 2 440 mm W x 2 440 mm L)	Ast (mm)	10 790		10 885		10 885		11 615			
	4.35	Turning radius	W_a (mm)	6 185		6 185		6 185		6 848		4.35	
	4.36	Internal turning radius	b_{13} (mm)	977		899		899		1 323		4.36	
PERFORMANCE	5.1	Travel speed with / without load	km/h	26	27	25	26	25	26	25	26	5.1	PERFORMANCE
	5.2	Lifting speed with / without load - with 230 Hp engine	m/sec	0,30	0,35	0,25	0,29	0,25	0,29	0,25	0,29	5,2	
		Lifting speed with / without load - with 264 Hp engine	m/sec	0,34	0,35	0,28	0,29	0,28	0,29	0,28	0,29		
	5.2a	Lifting speed with 70 % load - with 230 Hp engine	m/sec	T,B,D		T,B,D		T,B,D		T,B,D		5.2a	
		Lifting speed with 70 % load - with 264 Hp engine	m/sec	T,B,D		T,B,D		T,B,D		T,B,D			
	5.3	Lowering speed with / without load	m/sec	0,50	0,50	0,50	0,50	0,50	0,50	0,50	0,50	5.3	
	5.5	Drawbar pull with / without load @ 1,6 km/hr - with 230 Hp engine ◆	kN	140	130	141	146	141	146	140	146	5,5	
		Drawbar pull with / without load @ 1,6 km/hr - with 264 Hp engine ◆	kN	161	130	162	154	161	154	161	158		
	5.6	Max. drawbar pull with / without load - with 230 Hp engine ◆	kN	176	130	177	154	176	154	176	158	5.6	
		Max. drawbar pull with / without load - with 264 Hp engine ◆	kN	200	130	202	154	201	154	201	158		
	5.7	Gradeability with / without load @ 1,6 km/hr - with 230 Hp engine †	%	23	27	20	26	19	27	19	27	5.7	
		Gradeability with / without load @ 1,6 km/hr - with 264 Hp engine †	%	27	27	23	26	22	27	22	27		
	5.8	Gradeability with / without load @ stall - with 230 Hp engine †	%	29	27	26	26	25	27	24	27	5.8	
		Gradeability with / without load @ stall - with 264 Hp engine †	%	34	27	29	26	28	27	27	27		
	5.10	Service brake		Oil immersed 'wet discs'		Oil immersed 'wet discs'		Oil immersed 'wet discs'		Oil immersed 'wet discs'		5,10	
MOTOR	7.1	Engine manufacturer / type		Cummins	QSC 8,3	Cummins	QSC 8,3	Cummins	QSC 8,3	Cummins	QSC 8,3	7,1	MOTOR
	7.2	Engine output according to ISO 1585: For standard engine: Maximum @ 2 000 rpm / Nominal @ max 2 200 rpm For optional engine: Maximum @ 2 000 rpm / Nominal @ max 2 200 rpm	kW	230 Hp (172 kW) 264 Hp (197 kW)	215 Hp (160 kW) 250 Hp (186 kW)	230 Hp (172 kW) 264 Hp (197 kW)	215 Hp (160 kW) 250 Hp (186 kW)	230 Hp (172 kW) 264 Hp (197 kW)	215 Hp (160 kW) 250 Hp (186 kW)	230 Hp (172 kW) 264 Hp (197 kW)	215 Hp (160 kW) 250 Hp (186 kW)	7.2	
	7.2.1	Maximum engine torque - Standard 230 Hp engine Maximum engine torque - Optional 264 Hp engine	Nm	915 Nm @ 900 - 1500 rpm 1 125 Nm @ 1 500 rpm		915 Nm @ 900 - 1500 rpm 1 125 Nm @ 1 500 rpm		915 Nm @ 900 - 1500 rpm 1 125 Nm @ 1 500 rpm		915 Nm @ 900 - 1500 rpm 1 125 Nm @ 1 500 rpm		7.2.1	
	7.3	Governed speed	rpm	2 200		2 200		2 200		2 200		7.3	
	7.4	Number of cylinders / displacement	/cm³	6	8 270	6	8 270	6	8 270	6	8 270	7,4	
	7.5	Fuel consumption in accordance to VDI	l/h	☎		☎		☎		☎		7.5	
OTHER	8.1	Drive control		Torque Converter		Torque Converter		Torque Converter		Torque Converter		8,1	OTHER
	8.2	Working pressure for attachments	bar	235		235		235		235		8.2	
	8.3	Oil flow for auxiliary functions	l/min	70		70		70		70		8,3	
	8.4	Noise level LpAZ, inside cab, per EN12053	dB (A)	76		76		76		76		8,4	
	8.5	Towing coupling type		Pin		Pin		Pin		Pin		8,5	

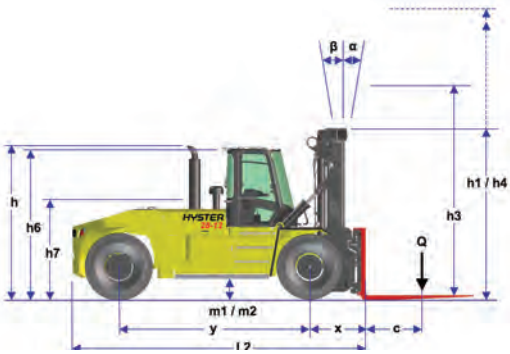

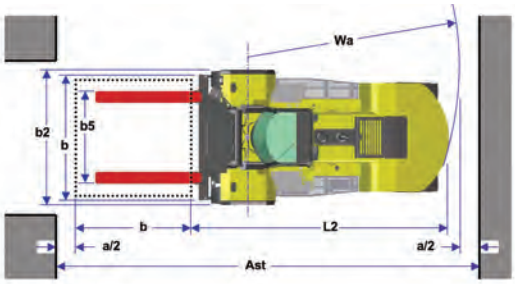

Ast = Wa + x + b + a
(see line 4.33)
a = Minimum operating clearance (VDI standard = 200mm, BITA recommendation = 300mm)
b = Load length

H28-32XM-16CH Dedicated 20’-40’ Container Handlers

				HYSTER		HYSTER			
CHARACTERISTICS	1.1	Manufacturer						1.1	CHARACTERISTICS
	1.2	Model designation		H28XM-16CH		H32XM-16CH		1.2	
	1.3	Power: battery, diesel, LPG, electric mains		Diesel		Diesel		1.3	
	1.4	Operation: manual, pedestrian, stand, seat, orderpicker		Seat		Seat		1.4	
	1.5	Load capacity	Q (kg)	26 400	24 000	30 500	28 400	1.5	
	1.6	Load centre	c_1 / c_2 (mm)	1 390	1 600	1 390	1 600	1.6	
	1.8	Load distance (Dedicated carriage)	x (mm)	790		790		1.8	
	1.9	Wheelbase	y (mm)	4 315		4 825		1.9	
WEIGHTS	2.1	Unladen weight ●	kg	51 489		51 710		2.1	WEIGHTS
	2.2	Axle loading with load, front/rear	kg	74 459	5 027	76 250	5 940	2.2	
	2.3	Axle loading without load, front/rear	kg	32 333	19 153	32 017	19 693	2.3	
WHEELS & TYRES	3.1	Tyres: L = pneumatic, V = solid, SE = pneumatic-shaped solid		L		L		3.1	WHEELS & TYRES
	3.2	Tyre size, front		16,00 x 25		16,00 x 25		3.2	
	3.3	Tyre size, rear		16,00 x 25		16,00 x 25		3.3	
	3.5	Number of wheels, front / rear (X = driven)		4X	2	4X	2	3.5	
	3.6	Tread, front	b_{10} (mm)	2 425		2 425		3.6	
	3.7	Tread, rear	b_{11} (mm)	2 340		2 340		3.7	
DIMENSIONS	4.1	Mast tilt, forward / backwards	degrees	6	10	6	10	4.1	DIMENSIONS
	4.2	Height of mast lowered (unloaded)	h_1 (mm)	5 640		5 640		4.2	
	4.4	Lift height (bottom of forks)	h_3 (mm)	6 095		6 095		4.4	
	4.5	Height of mast extended (unloaded)	h_4 (mm)	8 685		8 685		4.5	
	4.7	Cab height (open module)	h_6 (mm)	3 455		3 455		4.7	
	4.8	Seat height (Seat Index Point, ISO 5353)	h_7 (mm)	2 315		2 315		4.8	
	4.12	Coupling height	h_{10} (mm)	1 030		1 030		4.12	
	4.13	Minimum height of cont. spreader Twistlocks, from the ground	h_{13} (mm)	1 060		1 060		4.12	
	4.19	Overall length, incl. spreader at forward reach position	l_1 (mm)	8 750		9 260		4.19	
	4.20	Length without spreader	l_2 (mm)	6 310		6 820		4.20	
	4.21	Overall width truck	b_2 (mm)	3 380		3 380		4.21	
	4.22	Fork dimensions	s/e/l (mm)	NA		NA		4.22	
	4.23	Carriage type		Dedicated carriage for Hyster Container Handling spreader		Dedicated carriage for Hyster Container Handling spreader		4.23	
	4.24	Dedicated Carriage width	b_3 (mm)	3 390		3 390		4.24	
	4.30	Sideshift movement of the container spreader	b_4/b_5 (mm)	+/- 217	NA	+/- 217	NA	4.30	
	4.31	Ground clearance under mast, with load	m_1 (mm)	275		275		4.31	
	4.32	Ground clearance, centre of wheelbase	m_2 (mm)	440		440		4.32	
	4.34	Stacking aisle, 20’ / 40’, without operating clearance	V (mm)	9 615	13 620	10 245	13 745	4.33	
		Stacking aisle, 20’ / 40’, with 200 mm operating clearance	Ast (mm)	9 815	13 820	10 445	13 945		
		Stacking aisle, 20’ / 40’, with 10 % operating clearance	Ast (mm)	10 575	14 980	11 270	15 120		
	4.35	Turning radius	W_a (mm)	6 185		6 848		4.35	
	4.36	Internal turning radius	b_{13} (mm)	899		1 323		4.36	
PERFORMANCE	5.1	Travel speed with / without load	km/h	25	26	25	26	5.1	PERFORMANCE
	5.2	Lifting speed with / without load - with 230 Hp engine	m/sec	0,25	0,29	0,25	0,29	5.2	
		Lifting speed with / without load - with 264 Hp engine	m/sec	0,28	0,29	0,28	0,29		
	5.2a	Lifting speed with 70 % load - with 230 Hp engine	m/sec	T.B.D		T.B.D		5.2a	
		Lifting speed with 70 % load - with 264 Hp engine	m/sec	T.B.D		T.B.D			
	5.3	Lowering speed with / without load	m/sec	0,50	0,50	0,50	0,50	5.3	
	5.5	Drawbar pull with / without load @ 1,6 km/hr - with 230 Hp engine ◆	kN	140	145	139	145	5.5	
		Drawbar pull with / without load @ 1,6 km/hr - with 264 Hp engine ◆	kN	161	165	160	165		
	5.6	Max. drawbar pull with / without load - with 230 Hp engine ◆	kN	176	181	175	180	5.6	
		Max. drawbar pull with / without load - with 264 Hp engine ◆	kN	201	205	200	205		
	5.7	Gradeability with / without load @ 1,6 km/hr - with 230 Hp engine †	%	19	30	17	29	5.7	
		Gradeability with / without load @ 1,6 km/hr - with 264 Hp engine †	%	22	33	20	34		
	5.8	Gradeability with / without load @ stall - with 230 Hp engine †	%	24	33	22	34	5.8	
		Gradeability with / without load @ stall - with 264 Hp engine †	%	27	33	25	34		
	5.10	Service brake		Oil immersed 'wet discs'		Oil immersed 'wet discs'		5.10	
MOTOR	7.1	Engine manufacturer / type		Cummins	QSC 8.3	Cummins	QSC 8.3	7.1	MOTOR
	7.2	Engine output according to ISO 1585: For standard engine: Maximum @ 2 000 rpm / Nominal @ max 2 200 rpm For optional engine: Maximum @ 2 000 rpm / Nominal @ max 2 200 rpm	kW	230 Hp (172 kW) 264 Hp (197 kW)	215 Hp (160 kW) 250 Hp (186 kW)	230 Hp (172 kW) 264 Hp (197 kW)	215 Hp (160 kW) 250 Hp (186 kW)	7.2	
	7.2.1	Maximum engine torque - Standard 230 Hp engine Maximum engine torque - Optional 264 Hp engine	Nm	915 Nm @ 900 - 1500 rpm 1 125 Nm @ 1 500 rpm		915 Nm @ 900 - 1500 rpm 1 125 Nm @ 1 500 rpm		7.2.1	
	7.3	Governed speed	rpm	2 200		2 200		7.3	
	7.4	Number of cylinders / displacement	/cm^3	6	8 270	6	8 270	7.4	
	7.5	Fuel consumption	l/h	☎		☎		7.5	
OTHER	8.1	Drive control		Torque Converter		Torque Converter		8.1	OTHER
	8.2	Working pressure for attachments	bar	235		235		8.2	
	8.3	Oil flow for auxiliary functions	l/min	70		70		8.3	
	8.4	Noise level LpAZ, inside cab, per EN12053	dB (A)	76		76		8.4	
	8.5	Towing coupling type		Pin		Pin		8.5	

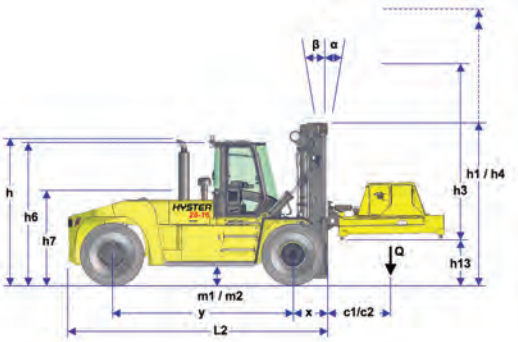

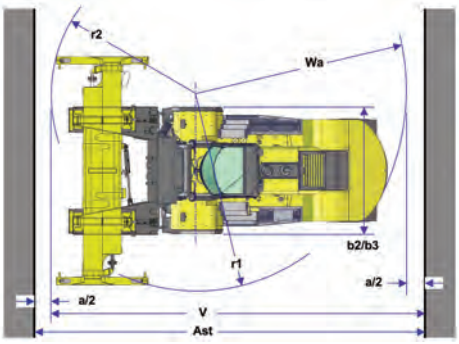

Equipment and weight:
Container Handlers:
Weights (line 2.1) are based on the following specifications: Complete truck with Cab, Pneumatic tyres, 6095 mm BOF (6200 mm TOF) 2-Stage Vista Mast, Dedicated carriage and Telescopic 20’-40’ ISO Container Spreader.

r1 = radius of swing of container rear corner
r2 = radius of swing of container front corner
Wa = outside turning radius of the truck
V = theoretical 90º stacking aisle, no intrusive stacking
V = r2 + the larger of r1 or Wa
a = total operating clearance, a/2 is operating clearance at each side
a = according VDI: 200 mm (100 mm each side)
a = according FEM TN01 recommendation: 10% of V (5% of V at each side)
Ast = practical 90º stacking aisle, no intrusive stacking and with clearance
Ast = V + a. For data see line 4.34

FOLD OUT PAGE

Capacities

Forklift Trucks

Capacities are valid for complete trucks with Pneumatic tyres, 2-Stage Vista mast with lift height as specified, Dual-function Hook-type Sideshift-Forkpositioners carriage and Quick-disconnect Hook-type forks 2440 mm long.

H25XMS-9 capacities @ 900mm and 1 200 mm

	Stacking height/ (20') container height	Mast lift height TOF (mm)	Mast lowered height (mm)	Sideshift-forkpositioners Carriage and Hook-type Q.D. 2 440 mm forks				Sideshift-forkpositioners Carriage with ZERO IN-TO-IN forkpositioning and Hook-type Q.D. 2 440 mm forks			
				Capacity in kg at 900 mm load centre	Mast back tilt	Capacity in kg at 1 200 mm load centre	Mast back tilt	Capacity in kg at 900 mm load centre	Mast back tilt	Capacity in kg at 1 200 mm load centre	Mast back tilt
2 high	8'6"	3 155	3 520	25 000	10°	22 000	10°	25 000	10°	22 000	10°
	9'6"	3 760	3 820	25 000	10°	22 000	10°	25 000	10°	22 000	10°
	9'6"	4 370	4 125	25 000	10°	22 000	10°	25 000	10°	22 000	10°
	9'6"	4 980	4 430	25 000	10°	22 000	10°	25 000	10°	22 000	10°
3 high	9'6"	6 200	5 040	25 000	10°	22 000	10°	24 485	10°	22 000	10°
4 high	9'6"	9 250	6 565	On request	-	On request	-	◆	-	◆	-

H25XM-12 capacities @ 1 200 mm

	Stacking height/ (20') container height	Mast lift height TOF (mm)	Mast lowered height (mm)	Sideshift-forkpositioners Carriage and Hook-type Q.D. 2440 mm forks		Sideshift-forkpositioners Carriage with ZERO IN-TO-IN forkpositioning and Hook-type Q.D. 2 440 mm forks	
				Capacity in kg at 1 200 mm load centre	Mast back tilt	Capacity in kg at 1 200 mm load centre	Mast back tilt
2 high	8'6"	3 155	3 520	25 000	10°	25 000	10°
	9'6"	3 760	3 820	25 000	10°	25 000	10°
	9'6"	4 370	4 125	25 000	10°	25 000	10°
	9'6"	4 980	4 430	25 000	10°	25 000	10°
3 high	9'6"	6 200	5 040	25 000	10°	25 000	10°
4 high	9'6"	9 250	6 565	On request	-	◆	-

H28XM-12 capacities @ 900mm and 1 200 mm

	Stacking height/ (20') container height	Mast lift height TOF (mm)	Mast lowered height (mm)	Sideshift-forkpositioners Carriage and Hook-type Q.D. 2 440 mm forks				Sideshift-forkpositioners Carriage with ZERO IN-TO-IN forkpositioning and Hook-type Q.D. 2 440 mm forks			
				Capacity in kg at 900 mm load centre	Mast back tilt	Capacity in kg at 1 200 mm load centre	Mast back tilt	Capacity in kg at 900 mm load centre	Mast back tilt	Capacity in kg at 1 200 mm load centre	Mast back tilt
2 high	8'6"	3 155	3 620	30 850	10°	28 000	10°	30 850	10°	28 000	10°
	9'6"	3 760	3 920	30 850	10°	28 000	10°	30 850	10°	28 000	10°
	9'6"	4 370	4 225	30 850	10°	28 000	10°	30 850	10°	28 000	10°
3 high	9'6"	6 200	5 140	30 850	10°	28 000	10°	30 850	10°	28 000	10°
	9'6"	6 810	5 445	On request	-	On request	-	◆	10°	◆	-
4 high	9'6"	9 250	7 175	On request	-	On request	-	◆	-	◆	-
	9'6"	9 860	7 480	On request	-	On request	-	◆	-	◆	-

H30XMS-9 capacities @ 900mm and 1 200 mm

	Stacking height/ (20') container height	Mast lift height TOF (mm)	Mast lowered height (mm)	Sideshift-forkpositioners Carriage and Hook-type Q.D. 2 440 mm forks				Sideshift-forkpositioners Carriage with ZERO IN-TO-IN forkpositioning and Hook-type Q.D. 2 440 mm forks			
				Capacity in kg at 900 mm load centre	Mast back tilt	Capacity in kg at 1 200 mm load centre	Mast back tilt	Capacity in kg at 900 mm load centre	Mast back tilt	Capacity in kg at 1 200 mm load centre	Mast back tilt
2 high	8'6"	3 155	3 620	30 000	10°	26 100	10°	30 000	10°	26 100	10°
	9'6"	3 760	3 920	30 000	10°	26 100	10°	30 000	10°	26 100	10°
	9'6"	4 370	4 225	30 000	10°	26 100	10°	30 000	10°	26 100	10°
3 high	9'6"	6 200	5 140	30 000	10°	26 100	10°	30 000	10°	26 100	10°
	9'6"	6 810	5 445	On request	-	On request	-	◆	-	◆	-
4 high	9'6"	9 250	7 160	On request	-	On request	-	◆	-	◆	-
	9'6"	9 860	7 465	On request	-	On request	-	◆	-	◆	-

H30XM-12 capacities @ 900mm and 1 200 mm

	Stacking height/ (20') container height	Mast lift height TOF (mm)	Mast lowered height (mm)	Sideshift-forkpositioners Carriage and Hook-type Q.D. 2 440 mm forks				Sideshift-forkpositioners Carriage with ZERO IN-TO-IN forkpositioning and Hook-type Q.D. 2 440 mm forks			
				Capacity in kg at 900 mm load centre	Mast back tilt	Capacity in kg at 1 200 mm load centre	Mast back tilt	Capacity in kg at 900 mm load centre	Mast back tilt	Capacity in kg at 1 200 mm load centre	Mast back tilt
2 high	8'6"	3 155	3 620	32 000	10°	30 000	10°	32 000	10°	30 000	10°
	9'6"	3 760	3 920	32 000	10°	30 000	10°	32 000	10°	30 000	10°
	9'6"	4 370	4 225	32 000	10°	30 000	10°	32 000	10°	30 000	10°
3 high	9'6"	6 200	5 140	32 000	10°	30 000	10°	32 000	10°	30 000	10°
	9'6"	6 810	5 445	On request	-	On request	-	◆	-	◆	-
4 high	9'6"	9 250	7 160	On request	-	On request	-	◆	-	◆	-
	9'6"	9 860	7 465	On request	-	On request	-	◆	-	◆	-

◆ Carriage with ZERO IN-TO-IN forkpositioning not recommended in combination with lift heights above 6200mm

● H28-32XM-16CH models can also handle half-height (4' or 4'3" high) containers

H32XMS-9 capacities @ 900mm and 1 200 mm

	Stacking height/ (20') container height	Mast lift height TOF (mm)	Mast lowered height (mm)	Sideshift-forkpositioners Carriage and Hook-type Q.D. 2 440 mm forks				Sideshift-forkpositioners Carriage with ZERO IN-TO-IN forkpositioning and Hook-type Q.D. 2 440 mm forks			
				Capacity in kg at 900 mm load centre	Mast back tilt	Capacity in kg at 1 200 mm load centre	Mast back tilt	Capacity in kg at 900 mm load centre	Mast back tilt	Capacity in kg at 1 200 mm load centre	Mast back tilt
2 high	8'6"	3 155	3 620	32 000	10°	28 000	10°	32 000	10°	28 000	10°
	9'6"	3 760	3 920	32 000	10°	28 000	10°	32 000	10°	28 000	10°
	9'6"	4 370	4 225	32 000	10°	28 000	10°	32 000	10°	28 000	10°
3 high	9'6"	6 200	5 140	32 000	10°	28 000	10°	32 000	10°	28 000	10°
	9'6"	6 810	5 445	On request	-	On request	-	◆	-	◆	-
4 high	9'6"	9 250	7 160	On request	-	On request	-	◆	-	◆	-
	9'6"	9 860	7 465	On request	-	On request	-	◆	-	◆	-

H32XM-12 capacities @ 1 200 mm

	Stacking height/ (20') container height	Mast lift height TOF (mm)	Mast lowered height (mm)	Sideshift-forkpositioners Carriage and Hook-type Q.D. 2440 mm forks		Sideshift-forkpositioners Carriage with ZERO IN-TO-IN forkpositioning and Hook-type Q.D. 2 440 mm forks	
				Capacity in kg at 1 200 mm load centre	Mast back tilt	Capacity in kg at 1 200 mm load centre	Mast back tilt
2 high	8'6"	3 155	3 620	32 000	10°	32 000	10°
	9'6"	3 760	3 920	32 000	10°	32 000	10°
	9'6"	4 370	4 225	32 000	10°	32 000	10°
3 high	9'6"	6 200	5 140	32 000	10°	32 000	10°
	9'6"	6 810	5 445	On request	-	◆	-
4 high	9'6"	9 250	7 160	On request	-	◆	-
	9'6"	9 860	7 465	On request	-	◆	-

H28XM-16CH and H32XM-16CH capacities in kg

	Stacking height/ (20') container height ❍	Recomm. Mast lift height TOF (mm)	Mast lowered height (mm)	Maximum under twistlocks (mm)	H28XM-16CH with dedicated (half-high mounted) 20'-40' telescopic spreader		H32XM-16CH with dedicated (half-high mounted) 20'-40' telescopic spreader	
					Spreader reach retracted	Spreader reach extended	Spreader reach retracted	Spreader reach extended
2 high	8'6"	6 200	5 650	7 155	25 100	22 850	30 480	27 300
	9'6"	6 200	5 650	7 155	25 100	22 850	30 480	27 300
3 high	9'6"	9 250	7 175	10 195	25 100	22 850	30 480	27 300
4 high	8'6"	9 860	7 480	10 815	25 100	22 850	30 480	27 300
	9'6"	11 080 ❍	8 090	12 035	TBA	TBA	TBA	TBA

Dedicated Container Handlers

Capacities are valid for complete trucks with Cab, Pneumatic tyres, 2-Stage Vista mast with lift height as specified, Dedicated carriage and 20'-40' Telescopic ISO container spreader.

Care must be exercised when handling elevated loads. When the load is elevated, truck stability is reduced. It is important that mast tilt in either direction be kept to a minimum when loads are elevated. Operators must be trained and adhere to the instructions contained in the Operating Manual.

Lifting capacities are in conformance with standards ISO 1074 (Fork lifts) or ISO 10525 (Container Handlers).

FOLD OUT PAGE

1951 Hyster A-model

1968 Hyster B-model

1983 Hyster C-model

1991 Hyster F-model

2010 Hyster XM model

80

1929-2009

Built on Experience

Five Hyster Generations

The H25-32XM Series benefits from Hyster's 80 years of experience designing and building forklift trucks and almost 60 years of experience of manufacturing Big Trucks, with lifting capacities over 16 tonnes. These H25-32XM trucks are already the 5th generation machines, since Hyster started producing the first trucks in this capacity range - the 'A' Series - in 1951.

The H25-32XM Series has been designed for the demanding applications in the heavy industry and container handling sectors. These trucks offer impressive value, in a high-specification package: a unique blend of high productivity, reliable proven components, fuel efficiency and outstanding driver comfort.

H25XM-9

H32XM-12

Added Value

Nine in a Row

- Seven mid-range Forklift Trucks from 25 tonnes @ 900 mm up to 32 tonnes @ 1200 mm load centre.
- Three of these FLT's are ultra-compact 'S' models, able to work in very restricted operating spaces.
- Two Dedicated Container Handler models offer uniquely high container lifting capacity.

Uniquely Compact

- Ultra-compact 'S' (Short) models H25XMS-9, H30XMS-9 and H32XMS-9 feature a uniquely short wheelbase, ideally suited to applications with extreme operating space restrictions.

Strong and Durable

- Large 8.3 litre Cummins QSC8.3 industrial diesel engine (de-tuned). The industrial rating of 230 hp, optionally 264 hp (optional), ensure increased dependability for long periods of peak power operation.
- Oil-immersed 'wet discs' brakes reduce maintenance requirements.
- The tropical cooling system ensures that the trucks are able to work in ambient temperatures of up to 50°C for normal applications or 45°C for heavy-duty operations.

Productive

- Lifting speeds are class leading: The practical 4-mode average speed is an impressive 0.39 to 0.41 m/sec, with the standard 230 hp engine.
- Auto-shift 3-speed powershift transmission is standard.

Clean

- The QSC8.3 Cummins diesel has low exhaust emissions and conforms to EC Tier 3 NRMM emissions standards.

Efficient

- H25-32XM trucks feature power-on-demand load-sensing hydraulics - an effective way to substantially reduce fuel consumption.
- Fuel economy is best demonstrated by the official Cummins 'specific fuel consumption' data: a low 228-236 g/kW-hr., at maximum engine torque.

Simply Versatile

- The Hyster 'Dual-function' fork-carriage offers two forkpositioning ranges, in addition to sideshift. A uniquely simple 'Outer' and 'Inner' mounting position for the forkpositioning cylinders delivers additional application versatility. A 'Zero in-to-in' Forkpositioning version is optional, where two forks can also be moved together to handle one coil.
- The Dual-function carriage is also Hook-type, with a 'Quick-disconnect' feature for fast interchange between forks and a coil ram or another handling attachment.

Visibility

- The Hyster 'Vista' Operator's Compartment is located in a mid-high, forward position to maximise all-round visibility.
- The wide open mast construction and a low-profile yet high-visibility carriage offer excellent visibility to forks/load.
- The sloping design of the counterweight greatly enhances visibility to the rear.

Comfort

- The industry leading design of the Hyster 'Vista' Operator Compartment offers excellent comfort, all-round visibility, outstanding ergonomics and a low noise level of 76 dB(A) with cab configuration, according to EN12053.

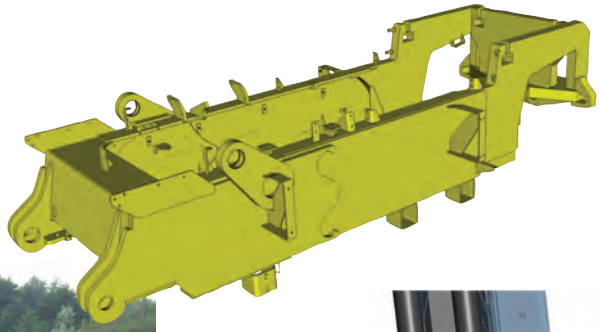

Strength and Durability

Frame

- The H25-32XM features an immensely strong integral frame, with massive supports for the mast and axles.

Industrial

- Hyster uses the 8.3 litre large displacement Cummins engine 'QSC8.3', with a de-tuned industrial rating of 230 hp or optional 264 hp. This industrial rating offers extra dependability for long periods of peak power operation.

Tropical Cooling

- The tropical cooling system ensures that trucks are able to work in normal applications in ambient temperatures of up to 50°C, or up to 45°C for heavy duty operations.
- A unique 'stacked' 4-piece radiator cooler block has 4 separate elements for: Engine (coolant & turbo-intercooler), the transmission, and the 'wet discs' brakes and hydraulic system. Cooling is highly efficient as each of the 4 elements receive direct fresh cooling air.

Wet Brakes

- The AxleTech drive axle (PRC-1794 on H25XM models, PRC-3806 on H28-32XM models) is a planetary double-reduction type, providing stability and durability, whilst the oil-immersed 'wet disc' brakes reduce maintenance requirements.

Forward-Reverse

- The S.O.H. TE17-series 3-speed powershift transmission features the APC200 Soft-shift automatic gear shifting system, and is also fitted with a protective forward-reverse shifting lock-out, active at over 5 km/h and more than 1400rpm.
- Hyster's 'sandwich' type steer axle, with a single cylinder and non-adjustable tie rods is renowned for its long life and low maintenance requirements.

Protection

- An engine and transmission protection system is standard equipment. This system initially derates engine power and finally shuts the engine down, helping to prevent possible damage. The protection acts on high engine coolant temperature or low oil pressure, plus on transmission low oil pressure and high oil temperature.

Strong Mast

The masts of H28-32XM(S)-9/12 offer extra strength thanks to the unique '6-roller' construction, for lift heights up to 6.20m - low build-height for typical indoor and outdoor applications is combined with immense strength.

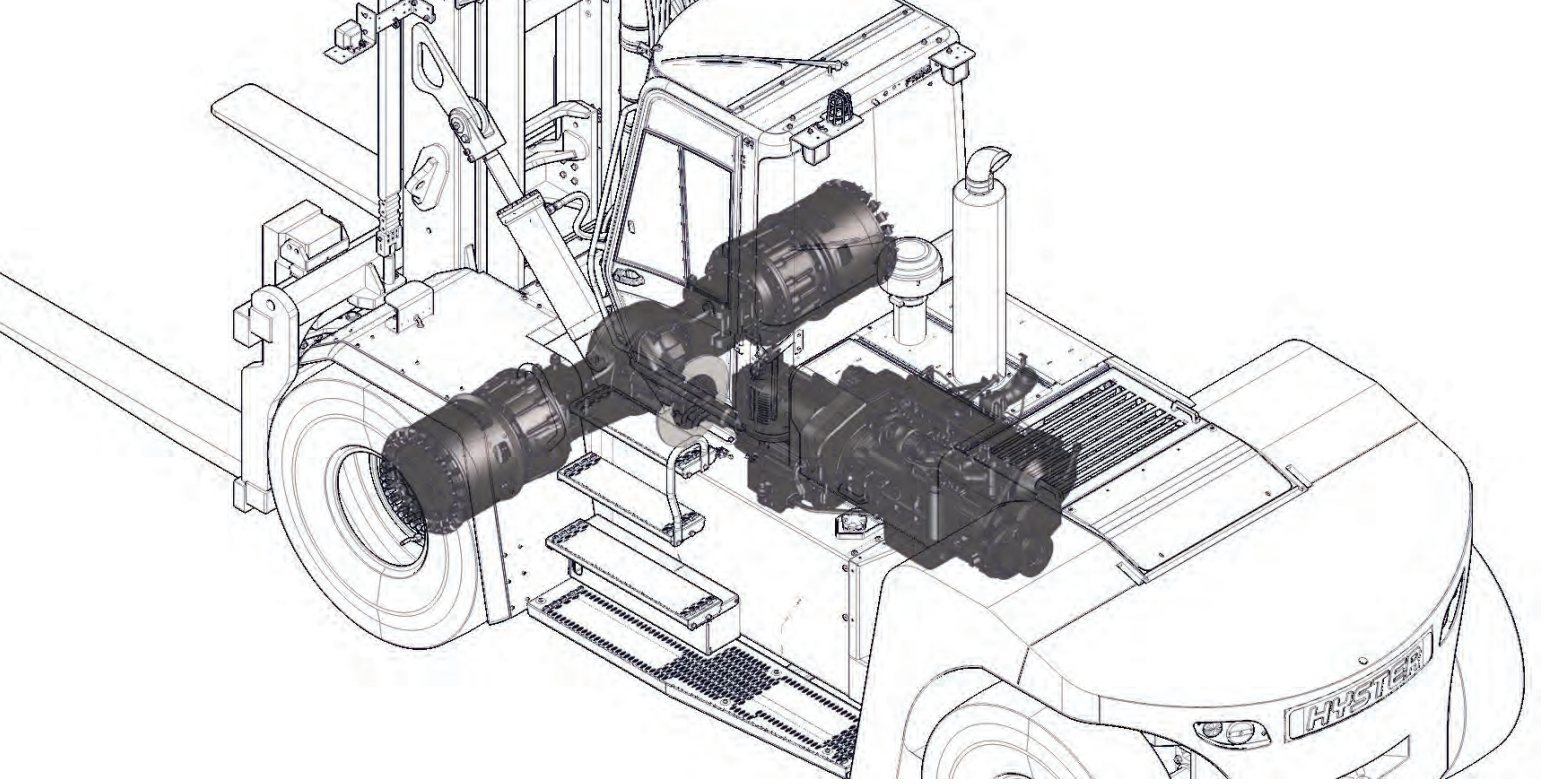

Productivity

Smooth

- Power is provided by a Cummins QSC8.3 industrial diesel engine, with turbocharger and charge air cooler. This large displacement 8.3 litre 6-cylinder engine has a very smooth torque characteristics. No less than 915 Nm of torque is available from 900 rpm up to1500 rpm. The result is excellent lifting and acceleration power, combined with low fuel consumption.
- Engine performance is ample with 230 hp (172 kW) as standard. An optional power package of 264 hp (197 kW) is available for extensive peak-performance operation in demanding applications.

On Demand

- Lift trucks use a major portion of the engine power for hydraulic lifting functions. Therefore Hyster has equipped the H25-32XM with load-sensing 'Power on Demand' hydraulic pumps, where the applied hydraulic lifting power (and therefore engine power) is adjusted 'on demand' by the actual load weight lifted.

  The truck only provides maximum power on demand, when it is really needed. In other words, load-sensing hydraulics offer noticeable advantages: Easier lifting and decreased wear on all hydraulic components and the engine.

Lifting Speeds

- Lifting speeds are class leading: The practical 4-mode average (of laden- & unladen lifting, plus laden- & unladen lowering) speed is a fantastic 0.39 to 0.41 m/sec.

The optional 264 Hp engine delivers a 0.03 m/sec higher laden lift speed for peak productivity requirements.

Clean

- The low exhaust emissions of the Cummins QSC8.3 industrial diesel engine conform to the stringent EC Tier 3 emissions standard for NRMM (Non-Road Mobile Machinery).
- A heavy duty engine air filter is standard. It has a maintenance-free 'SyKlone' cyclonic pre-cleaner, plus a 2-stage filter, making it suitable for dusty operating environments.
- A 'puller' type cooling fan draws in cleaner air, from the top of the truck (not from underneath).

Soft-shift

- Both engine power versions come with the S.O.H. (Spicer Off-Highway) model TE17 three-speed powershift transmission, equipped with the intelligent APC200 'Soft-shift' auto-shift logic, plus it has a protective forward / reverse shifting lock-out to protect the transmission against abuse operation.
- A back-up alarm, with self-adjusting level, sounds when in reverse gear.

Hot or Cold

- H25-32XM trucks can work in ambient temperatures ranging from -18 ºC up to +50 ºC, in standard configuration with no additional options required.

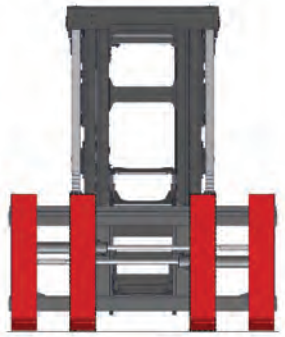

Sideshift Carriage with **Standard** Forkpositioning range - Forks in 'Outer' FP cyls position

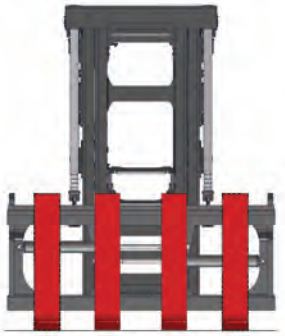

Sideshift Carriage with **Standard** Forkpositioning range - Forks in 'Inner' FP cyls position

Standard

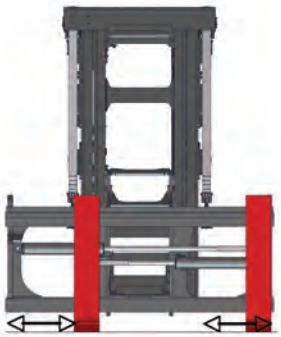

Sideshift Carriage with **Independent** Forkpositioning (forks move separately)

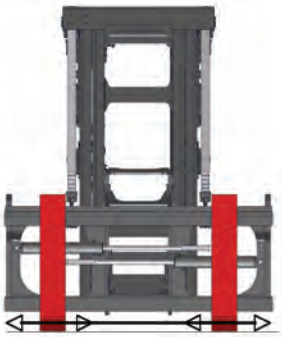

Sideshift Carriage with **Simultaneous** Forkpositioning (forks move in & out together)

Choice

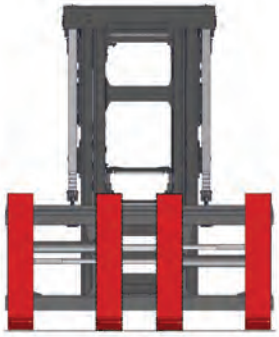

Sideshift Carriage with '**Zero in-to-in**' Forkpositioning range - Forks in 'Outer' FP cyls position

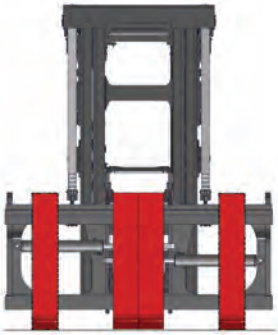

Sideshift Carriage with '**Zero in-to-in**' Forkpositioning range - Forks in 'Inner' FP cyls position

Option

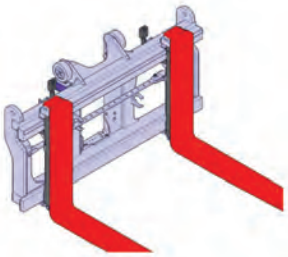

Carriage **without** Sideshift and **without** Forkpositioning (with forks retainer bar)

Coil Ram - Hook-type for quick-disconnect

More Options

Simple Versatility

The simplicity and versatility by the 'Dual-function' carriage of the Hyster H25-32XM, sets a new standard for large forklift trucks, by offering unique built-in flexibility for various fork handling duties.

Versatile

- This Hyster designed and built carriage has a Hook-style design with a 'quick-disconnect' (dis)mounting feature for the forks, enabling fast exchange between forks and e.g. a coil ram.
- It features Sideshift (SS) and Forkpositioning (FP) as standard.
- It is equipped with two Forkpositioning working ranges - An Outer- and Inner FP position on the FP cylinders enables a uniquely wide 'in-to-in' or 'out-to-out' working range of the forks (dimension b5).

Simplicity

- Slider pads (not rollers) are used as simple- and cost effective bearings for the movement of the forks on the carriage. Owners of H25-32XM machines will benefit from Hyster's long experience (over 20 years) in successfully using synthetic material slider pads in lift truck carriages.

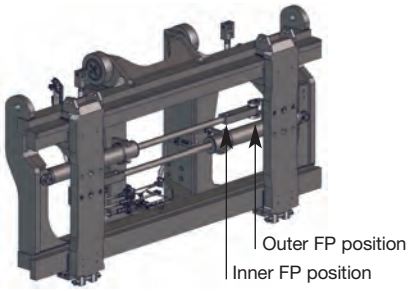

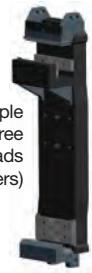

Simple maintenance-free slider pads (not rollers)

Choice

- 'Individual' FP (forks move separately) is the standard, with an optional choice of 'Simultaneous' FP (forks move together).

Option

- 'Zero in-to-in' FP range is optional (also with above two FP ranges). In the Inner FP position the two forks can then be moved together to handle one coil. Available with. max 6.20 m lift height mast.

More Options

- Coil ram pole, Hook-type quick-disconnect style, for fast exchange with (hook-type) forks.
- Carriage without Sideshift and without Forkpositioners functions. For very basic handling requirements.

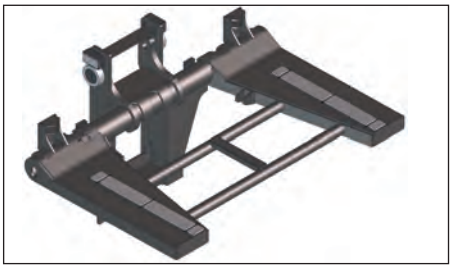

H28-32XM-16CH Dedicated Container Handlers

Since 1986 Hyster FLT type Dedicated Container Handlers have set the standard in highest net container lifting capacity.

For example: The 32 tonne model H32XM-16CH with Hyster 20'-40' container spreader (weight 6.3 tonnes) still lifts a container weight of 30.5 tonnes.

The secret is the still unique Hyster 'Dedicated Carriage' that supports the container spreader.

Dedicated Carriage

This unique 'Dedicated Carriage' is the key construction element of 'masted' Hyster Container Handlers and offers in total four significant operational advantages:

Highest Lifting Capacity

- For example: H28XM-16CH with Hyster 20'-40' container spreader (of 6.3 tonnes) still has net of 26.4 t capacity. And this at a load centre of 1390 mm (not 1220 mm).
- The dedicated spreader mounting delivers a remarkable reduction in 'load distance' (dimension 'x' is only 790mm). See page 5 for all the excellent net container lifting capacities.

Unique Simplicity

- The dedicated carriage mounting is uniquely simple. With very few moving and wearing parts (e.g. no suspension linkages, no ball-joints) it features a virtually maintenance-free spreader mounting.

Less Heavy

- A significant reduction in front-end weight (of 4-4.5 tonnes compared to the conventional fork-mounting of a container spreader) directly results in more container lifting capacity.
- With this reduced 'load distance' plus the lighter weight of the dedicated mounting, a 7% reduction in laden front axle loading is a welcome result that ensures lower floor loading and reduced tyre wear.

Half-high

- H28-32XM-16CH Dedicated Container Handlers have a 'half-high'-mounted position of the container spreader as a standard feature. This means that in addition to the usual full height 8'6" - 9'6" high containers, the machine has the additional versatility to also handle 'half height' 4' - 4'3" high containers.

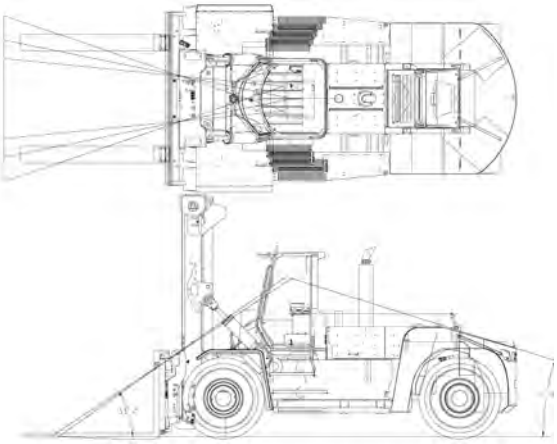

All-round Visibility

All-round visibility is an outstanding benefit of the H25-32XM trucks. This is thanks to the combination of a class-leading operator compartment design (the Hyster 'Vista' cab), an open-view mast, a high-visibility carriage, plus the bevelled counterweight shape.

Operator Position

- The operator is ideally positioned, mid-high and towards the front, for optimal visibility of the fork handling operation at hand. This mid-high placement also gives excellent vision sideways and rearwards, boosting driver confidence.

Hyster 'Vista' Cab

The fully equipped Hyster 'Vista' cab (option on FLT models) stands out on all-round visibility aspects:

- The top window is rounded at the front, so the wiper covers this shape fully. A clever internal overhead guard with 'angled' bars minimises obstruction too.
- The curved front window is not a styling element - as the front cab pillars are positioned far back, the operator has a significantly wider view, which is extremely beneficial when handling wide loads or 20' containers.

- The doors feature glass panels in both the upper and lower part of the frame that really enhance sideways visibility.
- The low position of the front dash panel ensures excellent visibility directly in front of the cab.
- The cab features an effective heating and demisting system with multiple outlets front and rear. Wipers (parallel system in front) and washers are located on the front, top and rear screens. Two inside panorama type rear-view mirrors, plus two outside rear-view mirrors contribute to the excellent visibility.

Open Mast

- The Hyster 'Vista' mast has a fully open design: The lift cylinders are behind the mast channels plus the lift chains are outside-mounted but also nested away for optimum visibility.
- Visibility is further improved by the unique (Hyster designed) 'angled' position of the hosegroup over the mast.

High-visibility Carriage

- The Hyster 'Dual function' carriage features an open design, which promotes visibility, even at 'see-through' lorry-bed height.

Functional Design

- Rearwards visibility is greatly enhanced by the sloping design of the counterweight, which tapers down towards the rear of the truck.

Driver Comfort & Ergonomics

The Hyster 'Vista' operator compartment (available either as Open Operator Module or as a fully equipped Cab) is the acknowledged 'state-of-the-art' driver's environment in the industry today.

Comfort

- The Hyster 'Vista' fully equipped cab (option on FLT model) is pressurised and ventilation air is filtered via an interior filter element, to keep dust out.
- Effective heating with 3-stage blower and extensive ventilation / demister air outlets.
- Low noise level at drivers ear of only 76 dB(A) per EN12053 (only 75 dB(A) per BITA). The operator compartment is mounted on anti-vibration isolators.
- The fully adjustable suspension seat has armrests, a high backrest and safety belt. Optional: Air-suspension (Deluxe) seat.
- Sliding windows in both cab doors. Door locking device while driving with the doors open.
- Driver on-off access is comfortable, with wide anti-slip steps and conveniently placed handrails.

Controls

- Steering column is adjustable for both height and angle and the soft-grip steering wheel features a spinner knob for finger light operation.
- The 3-directions adjustable armrest console suspends with the seat and houses the controls: Levers and switches (FLT) or single-handle Joystick control (CH); Directional lever with forward / reverse shifting protection - Auto-soft-shift function (manual shifting possible).
- Responsive hydraulic brakes and automotive style pedal layout.

Instruments

- Conveniently located dash display, to the right of the operator, to ensure maximum forward visibility. A set of flashing LED warning lights, positioned on the steering column, catch the driver's attention, should he need to refer to the readout on the dash display at any time.
- Analogue display for: Hour meter, fuel level, battery charge, engine oil pressure and coolant temperature, transmission pressure and temperature.
- Warning lights for: Lights on, wiper and washer functions, battery charge, low brake pressure.
- Audible warning for: Low brake pressure. The reverse-driving beeper has a self-adjusting sound level of 5 dB(A) above the surrounding sound level, so is effective but avoids possible annoyance for other personnel.

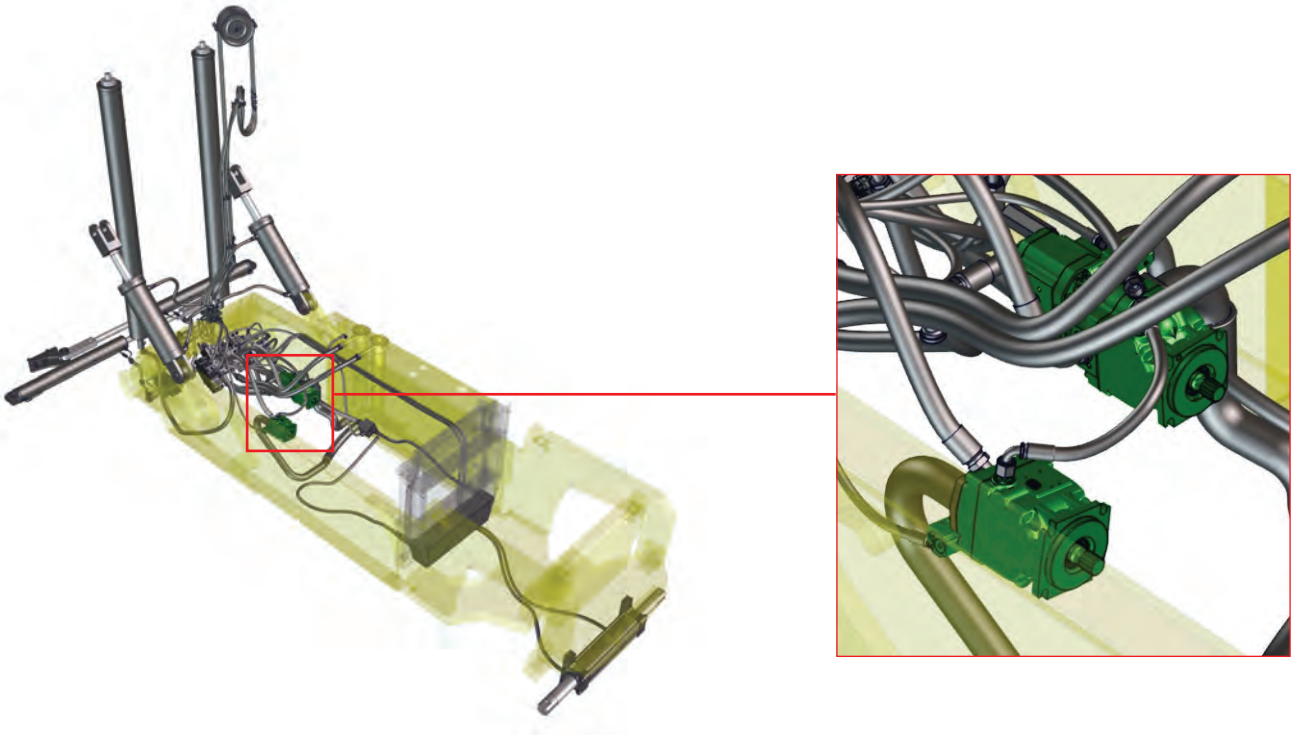

Efficiency & Lower Operating Costs

Lift trucks consume a major portion of the engine power for the hydraulic lifting and tilt functions, rather than for driving at speed.

That is why Hyster has optimised this important power consumption (and fuel consumption) function, by designing an efficient so-called 'Power on Demand' load-sensing hydraulic system.

Power on Demand

- A 'Power on Demand' hydraulic system is load-sensing, so 'feels' the load weight that is lifted. Depending on that actual load weight, two so-called 'variable displacement' (piston-type) hydraulic oil pumps supply the required hydraulic power, but no more. This is in contrast to conventional 'fixed- displacement' (gear-type) pumps.
- This system also makes the lifting function more operator friendly and contributes to the decreased wear of hydraulic components and the engine. The life of the hydraulic oil is also extended.

  So the load (weight), these variable displacement oil pumps and the diesel engine are linked.

Fuel Saving

- As maximum loads are not always handled (and many lift modes are without load), the truck requires less engine power and will consume less fuel, with savings of 5% to 15%.

'Green' Pumps

- The load-sensing system with 'variable displacement' pumps really is 'green' as power is not wasted, neither in 'light' operating conditions nor when working up to the maximum hydraulic performance.

Proven Hydraulics

- Well proven hydraulic components by Sauer-Danfoss are used. 'Power on demand' hydraulics are already proven, including the positive 'green' effects, in hundreds of Hyster ReachStackers.

Oil Filtration

- Hydraulic oil is effectively filtered at three locations: In the hydraulic tank (two 5l main filters), at the brake pump (5l filter) plus a 20l filter in the 'wet discs' brakes cooling circuit.

  Hydraulic tank capacity 274 litres (H25XMS-9: 237 litres). (A light on the dash warns of high hydraulic oil temperature)

Performance Tuning

- The operating speed of the hydraulic functions (lift, tilt, sideshift, forkpositioners or auxiliary) can be adjusted (by your Hyster service technician), to optimise them for a specific application, e.g. for low or high lifting heights or the use of a hydraulic attachment. The user can choose either maximum energy saving or maximum performance, or the best balance of the two. The factory setting is at this mid-point and the alternative settings provide lower or higher speeds.

Service Made Easy

Tilting Cab

- The tilting cab is a standard feature on Hyster Big Trucks, however not a common sight in the industry. The cab can be-tilted to the right-hand side, by hand lever. An electrical push button powered tilting system is available as an option. This side-tilting Hyster 'Vista' cab together with the gas-spring assisted 'gull-wing' shaped engine hoods and a rear opening hood, offer excellent service access to all components, ensuring maintenance is efficient and easy.

Hydraulics

- Hydraulic oil level can be easily checked by a sight-glass on the side of the tank. Leak-free O-ring 'ORFS' hydraulic fittings are used throughout the machine. (A light on the dash warns of high hydraulic oil temperature)
- Hydraulic functions can be adjusted in speed (by your Hyster service technician), and optimised for a specific application.

Electronics

- The CANbus wiring connection for the engine, transmission and instruments cluster and the electronic control unit for the load-sensing hydraulics are both located inside the operator compartment's side-console.
- All error codes are shown on the dash display's LCD screen.

Easy to Access

- The central cooler (built-up of 4 separate elements) can be easily accessed for cleaning, via a separate flip-up grill.
- The truck also features centralised pressure check points and a digital pressure indicator on the brake system accumulator.
- The hydraulic oil level is easily checked with a sight-glass located on side of the hydraulic tank.
- Increased service intervals of 500 hrs.

Standard Equipment

'Vista' Operator Compartment

- Forklift (FLT) models: Open Module.
- Container Handling (CH) models: Fully Equipped Cab.
- FLT: Levers for mast lift & tilt and sideshift, plus switches for forkpositioners.
- CH: Joystick for 'single-handle' intuitive control of mast lift, tilt and spreader functions
- Mechanical full-suspension seat with high backrest and seat belt. Two wide-view rear view mirrors inside, plus two extra outside rear view mirrors. Manual cab tilt (for service access).

Instruments

- Conveniently side-positioned dash display, with LED warning lights on the steering column.
- Gauges for: Hour meter, fuel level, battery charge, engine oil pressure and coolant temperature, transmission pressure and temp.
- Warning lights for: Lights on, wiper and washer functions, battery charge, low brake pressure.
- Beeper warning for: Low brake pressure, back up alarm when in reverse gear.

Drivetrain

- 230 hp Cummins QSC8.3 Industrial diesel engine. Conforms to EC Tier 3 NRMM emissions; Heavy duty engine 2-stage air filter plus 'Sy-Klone' maintenance free pre-cleaner; Fuel tank 364 litres (H25XM-9: 305 litres); Aluminised steel anti-corrosive exhaust; Tropical cooling for engine, transmission, brakes and hydraulic system.
- SOH TE17 Auto-shift transmission, APC200 'Soft-shift', forward-reverse shifting lock-out; Reverse-driving beeper.
- Engine and transmission protection system; Drive axle with oil-immersed 'wet discs' brakes; Steering axle with wheel nut protection rings; Pneumatic bias ply tyres.

Electrics

- 24 V system, 70 A alternator, batteries 204 Ah (20 hr.). Battery master switch; CANbus connection for engine, transmission, instruments cluster; All sealed electrical connectors.

Hydraulic Functions

- FLT models: 5 way valve and hosegroup for lift, tilt, sideshift and 2 forkpositioners.
  CH: 7 way functions.

Lights

FLT models: Base lightkit: 2 Head lights front, 2 Rear work/drive lights on the cab, 2 Combination LED tail- & stop- & rear driving lights recess-mounted in the counterweight.
CH models: Complete lightkit: Base lightkit plus lightkit no.1: 4 work lights on the cab; Plus orange strobe light on cab; 4 direction indicators with hazard switch.

Front-end

- Mast: 'Vista' 2-Stage mast with 3760 mm TOF lift height. Mast tilt: 6 degrees forward and 10 degrees back
- Carriage: Dual function type with sideshift and standard forkpositioners (FP) with 'outer' and 'inner' positions of the FP cylinders for a wider fork positioning work range.
- Forks: Hook-type quick-disconnect 2440 mm long; Suitable for 20' ISO container pockets.

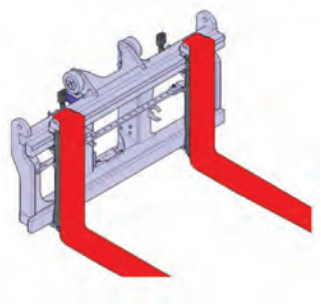

Optional Equipment

Operator Compartment

- Forklift (FLT) models: 'Vista' Fully Equipped Cab. CH models: Open Operator's Module.
- FLT: Joystick control, instead of levers.
- In-Cab & Operator convenience items: Roller sun screens on top and rear screens (cab only). Air-conditioning (FLT model: if with optional 'Vista' cab); Heavy-duty air-conditioning. Climate control; Air suspension seat; 'DeLuxe' air suspension seat (optional with seat heating); Trainer seat with seat belt; Support bar for communication equipment; Converter 24 V to 12 V DC for accessories; Radio preparation; Map reading light; Extra air circulation fan; Storage box; Air horn; Powered cab tilt; Engine shut-down on driver presence.

Drivetrain

- 264 hp Cummins QSC8.3 Industrial diesel engine.
- Reduction of the maximum drive speed to 16 or 20 km/hr.

Tyres

- Radial tyres (with tread or as 'slicks'); Solid (PSS) tyres - subject to application approval.

Lights

- FLT: Lightkit 1: 4x cab-mounted work lights or Lightkit 2: 2x mast-mounted work lights; Orange strobe light on cab; 4 direction indicators (turn signals) with hazard switch.
- HID (Xenon) work lights, instead of standard halogen type.

Hydraulics

- Hydraulic accumulator (shock absorber) in lift system (mandatory with solid PSS tyres).

Front-end

- Mast lift heights from 3155 to 9860 mm TOF, other lift heights available on request; Mast tilt indicator; Mast tilt angle 15 degrees forward.
- Carriage with simultaneous Forkpositioning, instead of independent; Carriage with 'Zero in-to-in' Forkpositioning range (not recommended above 6.20 m lift height); Carriage without Sideshift and without Forkpositioners, (for very basic handling requirements).
- Coil ram pole - Hook-type quick disconnect type.

Other Options

- Lifting eyes, 2x on the mast and 2x on the rear of the truck.
- Mudflaps front and rear.

Strong Partners, Tough Trucks, for Demanding Operations, Everywhere.

Hyster supplies a complete range of warehouse equipment, IC and electric counterbalanced trucks, container handlers and reach stackers.

Hyster is committed to being much more than a lift truck supplier. Our aim is to offer a complete partnership capable of responding to the full spectrum of materials handling issues:

Whether you need professional consultancy on your fleet management, fully qualified service support, or reliable parts supply, you can depend on Hyster.

Our network of highly trained dealers provides expert, responsive local support. They can offer cost-effective finance packages and introduce effectively managed maintenance programmes to ensure that you get the best possible value. Our business is dealing with your materials handling needs so you can focus on the success of your business today and in the future.

Hyster Europe, Flagship House, Reading Road North, Fleet, Hants GU51 4WD, England.

Tel: +44 (0) 1252 810261 **Fax: +44 (0) 1252 770702**

Email: info@hyster.co.uk **http://www.hyster.com/europe**

A division of NACCO Materials Handling Limited.

01/10/TLC Printed in England
Form No.901459/0

Hyster®, ***HYSTER***®, & Monotrol® are registered trademarks of Hyster Company in certain countries.
™, Fortens™, Pacesetter VSM™, DuraMatch™, DuraMatch Plus™, TouchPoint™, TouchControl™, EZXchange™, HSM™ & Vista™ are trademarks of Hyster Company in the United States and in certain countries where rights in unregistered trademarks are recognised.
Hyster products are subject to change without notice. Lift trucks illustrated may feature optional equipment.