https://truckmanualshub.com/

BODY BUILDER INSTRUCTIONS

Mack Trucks

Power Take-off (PTO)
PI / CHU, AN / CXU, GR / GU, TD
LR, TE / MRU
Section 9

Power Take-off (PTO)

This information provides specifications for Power Take-off (PTO) applications in MACK vehicles.

Note: We have attempted to cover as much information as possible. However, this information does not cover all the unique variations that a vehicle chassis may present. Note that illustrations are typical but may not reflect all the variations of assembly.

All data provided is based on information that was current at time of release. However, **this information is subject to change without notice**.

Please note that no part of this information may be reproduced, stored, or transmitted by any means without the express written permission of MACK Trucks, Inc.

Contents:

- “Overview”, page 3
  - “General”, page 3
  - “PTO Speed Functions”, page 4
  - “Power Take-off Types”, page 7
  - “mDrive Power Take-off”, page 9
- “Transmission-mounted PTO”, page 9
  - “Transmission-mounted PTO”, page 10
  - “Power Take-off (PTO), Installation (mDrive)”, page 15
- “Rear-mounted Engine PTO”, page 28
- “Front-mounted Engine PTO”, page 35
- “Hydraulic Pumps”, page 40

All Rights Reserved

https://truckmanualshub.com/

- “Supplier PTO/Pump Literature”, page 73
- “PTO Programming”, page 83
- “Parameter Programming”, page 92
  - “General”, page 92
  - “Programming”, page 94
  - “Examples”, page 111
    - “Trash Packer – PTO Single Speed Control”, page 111
    - “Trash Packer – PTO with Secondary Enable”, page 112
    - “Hand Throttle PTO 0 as Low Speed “Cruise Control””, page 113
    - “Concrete Pumper - Driveshaft PTO with Limits”, page 114
    - “Line Painter – PTO Road Speed Limit”, page 115
    - “Line Painter – PTO Set Road Speed”, page 116
    - “Dump Truck – Configuring “Hand Throttle” PTO 0”, page 117
    - “Trash Container Truck – Limits for PTO”, page 118
    - “Two Speed Control for Driveshaft PTO”, page 119
- “Regeneration in PTO Mode”, page 120
- “Rolling Start for mDrive: New Generation AMT-F ”, page 124
- “mDrive Auto Neutral”, page 125
- “Standard Settings”, page 125
- “Installation of Single and Double PTOs on mDrive Generation F Transmissions ”, page 132
- “Split Shaft PTO Functionality with mDrive HD Transmissions”, page 136

https://truckmanualshub.com/

Overview

General

Auxiliary equipment require power take-offs, either when the truck is stationary or when it is in motion. Various power take-off alternatives can be chosen, depending on the bodywork.

The work is generally carried out by equipment which is powered by a hydraulic motor. The hydraulic motor, together with a pump and associated equipment, form the basis of the hydraulic system. The pump, which provides the hydraulic pressure and flow to the motor, is the heart of the hydraulic system.

All power take-offs covered by this chapter are available factory installed. Some variants can also be ordered.
It is important to design an optimum hydraulic system, and to specify the correct pump size to provide sufficient oil flow and prevent overloading of the power take-off.

Power Take-off

There are a number of different power take-off variants available, with single or double outlets. The power take-off is supplied with one of several output drives, keyed shaft, SAE drive flange or internal splined DIN.

Power take-offs are classified into two family variants: **Clutch dependent** and **Clutch independent**

Abbreviations

PTR	=	Single power take-off transmission, rear mounted (**P**ower take-off **T**ransmission **R**ear). All are rear-facing.
PTRD	=	Double power take-off transmission, rear mounted (**P**ower take-off, **T**ransmission, **R**ear mounted, **D**ouble).
REPTO	=	Flywheel mounted power take-off (Rear Engine PTO). This variant is available with rear-facing flange or opening for hydraulic pump located at one o' clock position.
EPTT	=	Maximum permitted torque on engine power take–off (**E**ngine **P**ower **T**ake–off **T**orque)
HPE	=	Hydraulic pump mounted to an engine power take–off (**H**ydraulic **P**ump **E**ngine mounted).

All Rights Reserved

https://truckmanualshub.com/

PTO Speed Functions

For the purposes of this manual, PTO (Power Take–off) is a function to maintain engine speed regardless of engine load. Think of it as cruise control for the engine - only instead of maintaining a steady vehicle speed, it is maintaining engine speed. It is most often used to provide increased steady engine speed when operating auxiliary equipment such as hydraulic pumps or compressors. The term "PTO" has come to mean both the function of maintaining constant engine speed during use of auxiliary equipment, as well as a term for the auxiliary equipment itself.

There are two types of PTO engine speed control used in Mack trucks:

Electronic Hand Throttle

(EHT/PTO 0)	This type of PTO is standard equipment; it is initiated and controlled using the cruise control "ON/OFF", "SET / Decel or Resume / Accel switches. Manufacturers refer to this function by different names - Mack calls it "Electronic Hand Throttle" (EHT), even though some of the parameters for programming this function will refer to it as "high idle". (Note that in the North American market, the term "high idle" usually refers to the maximum possible engine speed under no-load conditions).
"Physical" or "Wired" PTO	This type of PTO is most commonly associated with the engagement of engine- or transmission-"Wired" PTO driven accessories, where the user wishes to "remotely" activate the engine speed control function. It is usually accomplished by wiring the auxiliary equipment to the PTO function controller (VECU, BBM ECU, or Transmission ECU) so that engaging one will automatically activate the other.

How each of these different PTO functions operate will depend upon the installed engine. For Mack engines, the PTO functions are split between the Engine ECU and VECU.

Notes

All Rights Reserved

https://truckmanualshub.com/

Body Builder Module

PTO Control functionality, which is in the Transmission Control Unit (TCU) in AMT-D, has been removed in AMT-F. Therefore, this functionality needs to be provided in the vehicle through the VECU for single PTO and with Body Builder Module (BBM) when using Dual PTOs.

- This is added to support dual PTOs with the AMT-F and AMT-FX transmissions.
- MACK BBM is located on the doghouse BIW with a mounting plate, under the plastic doghouse cover not visible to the driver.

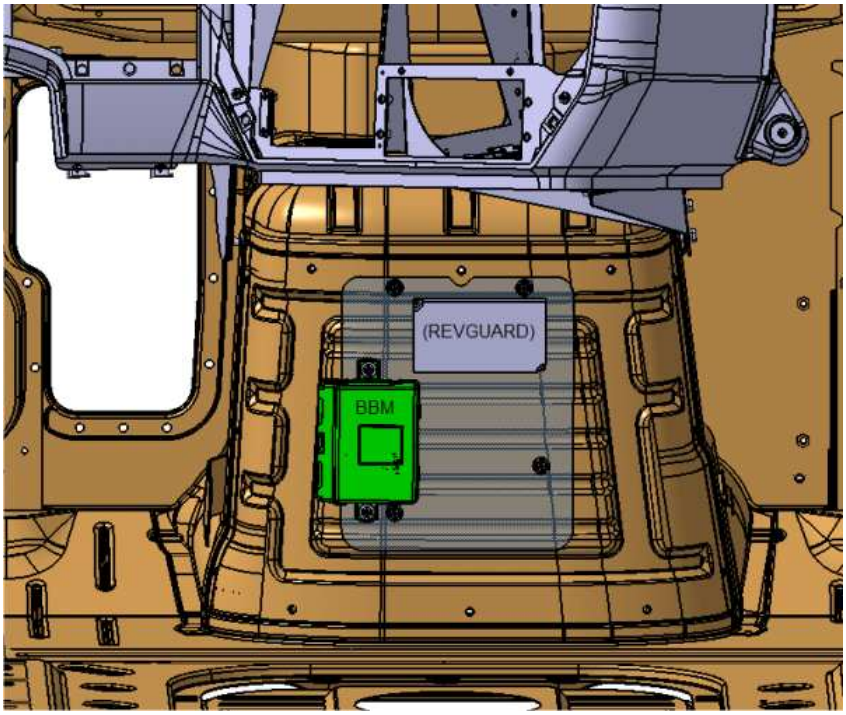

W9115439

Notes

All Rights Reserved

https://truckmanualshub.com/

PTO Functions with the MACK MP7 and MP8

A "PTO" icon will appear in the instrument cluster only when 'Remote' ('Wired') PTO is engaged.

Electronic Hand Throttle PTO

The VECU reads the cruise control PTO switch status, and commands the engine into PTO mode when conditions are right. These conditions are program in the VECU and might include a maximum vehicle speed, park brake set or not, etc.

The engine PTO 'set speed' is selected by either pressing the cruise control "RESUME" button, or by using the accelerator pedal to get the desired engine speed and pressing one of the cruise control "SET" buttons (either SET / Decel or Resume / Accel). Once the PTO function is active, the SET / Decel or Resume / Accel buttons can be used to adjust the PTO engine speed (within limits).

Physical or Remote/Wired PTO

This PTO function is activated by applying an external signal to a dedicated PTO input pin on the VECU. The set speed can be adjusted using the cruise control SET / Decel or Resume / Accel buttons, as above.

The Mack VECU allows for up to 4 PTO speed controls plus the PTO (EHT) without the use of a BBM. Each PTO can be independently selected and controlled by separate speed settings as well as independent engagement and disengagement requirements.

A sub-function of the 'wired' PTOs in the VECU is the ability to activate PTO "outputs". Traditionally, the auxiliary device (PTO pump, bypass solenoid, etc.) is wired so as to be activated by the same switch which initiates the engine speed control function. This means that the hardware will be engaged whenever the switch is on, even if the engine speed is not being controlled. There also is no protection against an input switch that has been accidentally activated.

With the *m*Drive transmission the PTO "Output Control" function of the VECU and BBM ECU, it is possible to prevent engagement of the auxiliary equipment until certain conditions are met - park brake set, engine speed within a certain range, etc. This is accomplished by controlling the auxiliary equipment with the VECU, instead of directly from a switch. The ECUs still read the switch input, though, and will only allow the auxiliary device to engage when conditions are right.

Notes

All Rights Reserved

https://truckmanualshub.com/

Power Take-off Types

Clutch Dependent Power Take-off

Clutch dependent power take-offs are designed to work when the truck is parked. Common applications are dump trucks, mobile cranes, tank trucks, etc. They are mounted on the transmission and stop rotating when the clutch pedal is depressed.

Note: The clutch pedal must be depressed (if equipped), to engage or disengage the power take-off.

- PTR-XX
- PTRD-XX

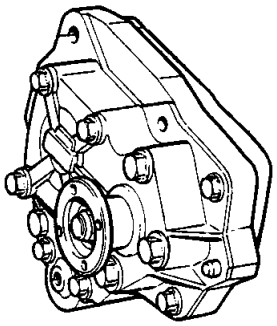

T4006562

PTR-FL

Clutch Independent Power Take-off

A clutch independent power take-off is mainly used when work is to be done when driving. Refrigerated, hook lifts, concrete mixer, snow plows/sand spreaders, etc. They are designed to be installed either on the front of the engine or the flywheel housing.

Rear Engine Power Take-off (REPTO)

An engine mounted power take-off is mounted on the rear of the flywheel housing.

MP7 and MP8

On the MP7 and MP8 engines the power take-off is ordered separately or ordered when the vehicle is built.

- **PTR-DIN** (DIN5462/ISO7653 connection)
- **PTR1300** (flange SAE1300)
- **PTR1400** (flange SAE1400)
- **PTR-DIN + HPE-XXX**
  (Engine power take–off together with engine mounted hydraulic pump)

All Rights Reserved

https://truckmanualshub.com/

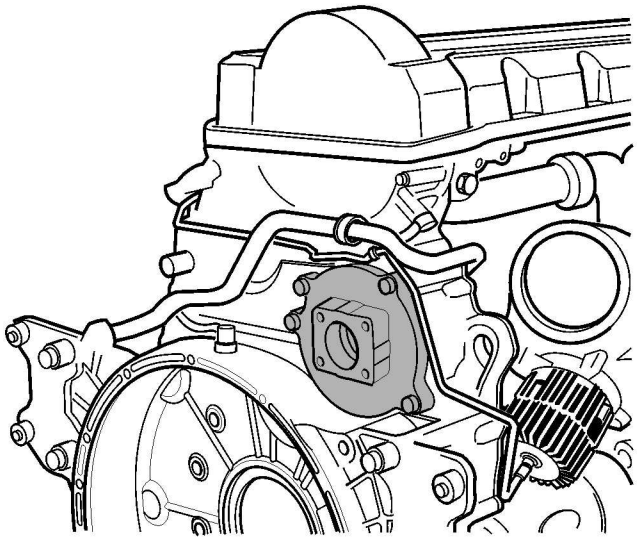

T9008395

PTR-DIN

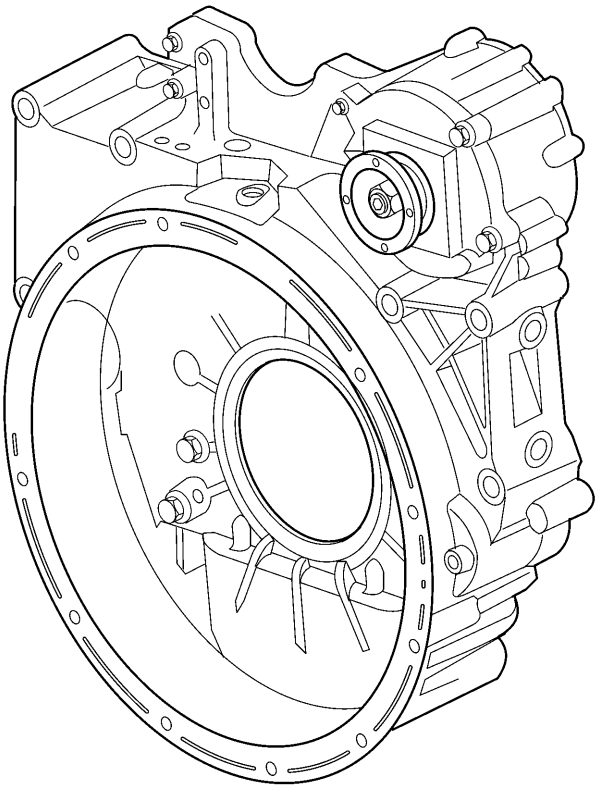

W4002977

Rear-mounted Engine PTO with Flange SAE 1410/ ISO 7647

All Rights Reserved

https://truckmanualshub.com/

Transmission-mounted PTO

mDrive Power Take-off

The *m*Drive is an automated manual transmission. When you have the PTO engaged and put the transmission into gear by pressing the service brake and selecting D on the shift pad, the TECU commands the clutch to be released and engages the countershaft brake. This stops the countershaft, which in turn stops the rotation of the PTO when the driver releases the brake pedal and applies the throttle. The clutch will re-engage and the countershaft will start to rotate along the PTO.

When the driver stops the truck, the clutch will disengage if “R” is selected. The transmission will shift into reverse and when the driver releases the service brake and depresses the throttle, the clutch will re-engage and the PTO will start to spin again.

This is something any manual transmission would require, but the clutch would be depressed and released by the driver.

The *m*Drive with transmission–mounted PTO may not be the solution for the Roll Off Chassis. The REPTO (MP only) unit is best suited for this application, where the truck is moved and uses the hydraulics at the same time. (This was possible with an Allison Transmission).

If the driver wants to operate the PTO while driving the truck, the transmission will only be able to operate in the starting gear that was selected. Depending on the vehicle options and starting gear selected, the maximum vehicle speed is usually around 6 mph.

Speed Ratios for mDrive Transmission Mounted PTOs

Power take-off	Weight (lb)	*m*Drive Overdrive		*m*Drive Direct	
		Low	High	Low	High
Type					
Single					
PTR-FL	35.3	0.93	1.18	0.73	0.93
PTR-DM	28.7	1.35	1.72	1.06	1.35
Double and Triple					
PTRD-F (Outer)	41.9	1.65	2.10	1.30	1.65
PTRD-F (Inner)		0.77	0.98	0.60	0.77
PTRD-D	44.1	1.65	2.10	1.30	1.65
PTRD-D1	57.3	1.65	2.10	1.30	1.65
PTRD-D2 (Outer)	70.5	1.65	2.10	1.30	1.65
PTRD-D2 (Inner)		0.77	0.98	0.60	0.77

1 Engine Speed: Transmission PTO Ratio (Example – 1:1.65)

All Rights Reserved

https://truckmanualshub.com/

Transmission-mounted PTO

MACK mDrive, AMT

This information is meant as an aid to identify transmission PTO options available with the *m*Drive Transmission.

The following table shows the available PTO's with installation kit part numbers and required software accessory kits.

PTO Type	PTR-FL	PTR-DM	PTRD-F	PTRD-D	PTRD-D1	PTRD-D2
Part Number	20997251	20997415	20796430	20796008	20796225	20796355
Installation Kit Number	85134988	85134988	85134988	85134988	85134988 & 85132964	85134988 & 85132964
Software Accessory Kit AMT-D	85137335	85137335	85139651	85139652	85110254	85140256
Software Accessory Kit AMT-F	85137335	85137335	85137335	85137335	85151840	85151840

Notes

All Rights Reserved

https://truckmanualshub.com/

mDrive Transmission Mounted PTOs

PTO	Connection		Direction of Rotation	Max. Horsepower (KW)	Max. Torque ft-lb (Nm)
Type	Type	Dimension			
PTR-FL	Flange	SAE1300	Counter clockwise when facing back of engine	134 (100)	443 (600)
PTR-DM	Direct	DIN5462			
PTRD-F	Flange (Outer)	SAE1400	Clockwise when facing back of engine	188 (140)	642 (870)
	Direct (Inner)	DIN5462	Counter clockwise when facing back of engine		
PTRD-D	Direct (Front)	DIN5462	Counter clockwise when facing front of engine		
	Direct (Rear)		Clockwise when facing back of engine		
PTRD-D1	Direct (Front)	DIN5462	Counter clockwise when facing front of engine		
	Flange (Rear)	SAE1400	Clockwise when facing back of engine		
PTRD-D2	Direct (Front)	DIN5462	Counter clockwise when facing front of engine	Max power inner and outer shafts must not exceed 188 hp (140)	Max Torque 642 ft-lb (850) See table below.
	Flange (Outer)	SAE1300	Clockwise when facing back of engine		
	Flange (Inner)	SAE1400	Counter clockwise when facing back of engine		

Power Take–off (PTRD-D2) Maximum Torque

642 ft-lb (850) is the Maximum PTO Torque for PTRD-D2	
Inner shaft ft-lb (Nm)	***Outer shaft ft-lb (Nm) [sum of front and rear PTO]***
738 (1000)	148 (200)
664 (900)	221 (300)
516 (700)	295 (400)
369 (500)	369 (500)
203 (275)	443 (600)
48 (65)	516 (700)

All Rights Reserved

https://truckmanualshub.com/

Engine PTO in combination with AMT

When using the *m*Drive gearbox, the **engine** power take-off can be engaged during driving (depending on parameter setting) but exceeding the maximum torque (shown in the table below) can cause problems during gear shifting. For this reason it is recommended that equipment shall be designed so that the torque limits in the table below are not exceeded during driving.

Engine	Maximum Torque Horsepower (Nm) While Driving
MP7	148 (200)
MP8	221 (300)

PTO Installation Kit

Installation Kit 85134988 includes parts required for installing types PTR-FL, PTR-DM, PTR-DH, PTRD-F, PTRD-D. For installing PTRD-D1, PTRD-D2 also requires 85132964.

Pump

See Tools and other Helpful Links section in Body Builder Manual for pump selection and information.

http://www.macktrucks.com/parts-and-services/support/body-builders/tools/

Notes

All Rights Reserved

https://truckmanualshub.com/

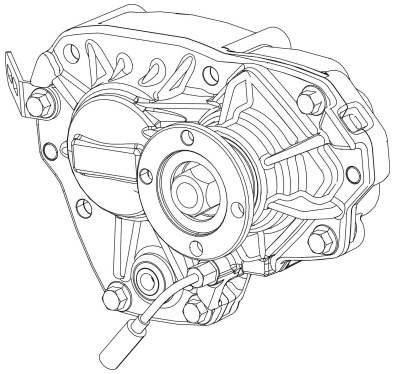

W2122051

PTR-FL

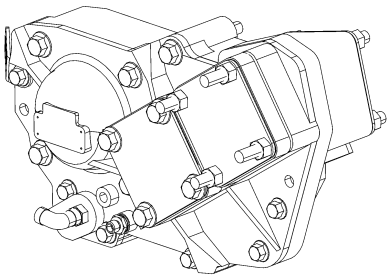

W4003060

PTRD-D

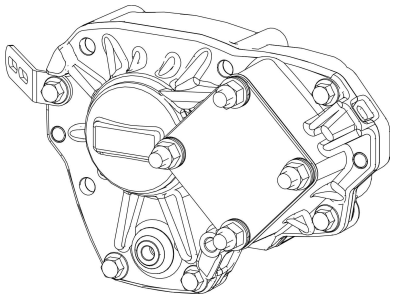

W9122052

PTR-DM

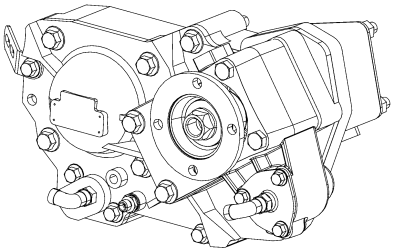

W4003061

PTRD-D1

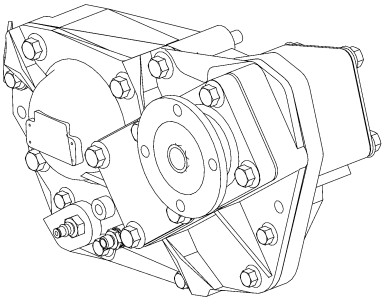

W4003059

PTRD-F

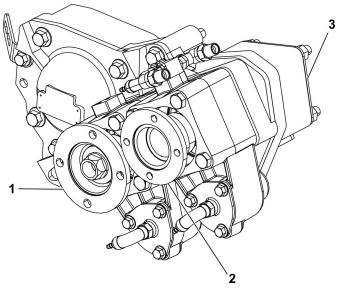

W4111374

PTRD-D2

PTO Drive Position on the Double and Triple PTO Housings

1 PTO # 1

2 PTO # 2

3 PTO # 3

All Rights Reserved

https://truckmanualshub.com/

Diesel Exhaust Fluid (DEF) Cooling Lines, Side Mounted PTO

This kit is being released in order to provide a solution for customers requiring a side mounted PTO on mechanical transmissions. Currently, if a PTO is mounted on the transmission it will interfere with the urea cooling lines that are routed down the right side of the frame. This kit allows the customer to remove the hard piping associated with the urea cooling lines and replace them with flexible hoses that prevents the previously mentioned interference.

Mechanical Transmission PTO Cooling Line Routing Kit			
MP8 Contents 85124281		MP7 Contents 85124282	
Part Number	Quantity	Part Number	Quantity
21477961	2	21477961	1
20437238	3	21479099	1
965541	2	20437238	2
965559	3	965541	2
965560	1	965559	3
981664	6	965560	1
946440	5	981664	6
948645	5	946440	5
946329	3	948645	5
971098	3	946329	3
20805109	2	971098	3
984992	2	20805109	2
		984992	2

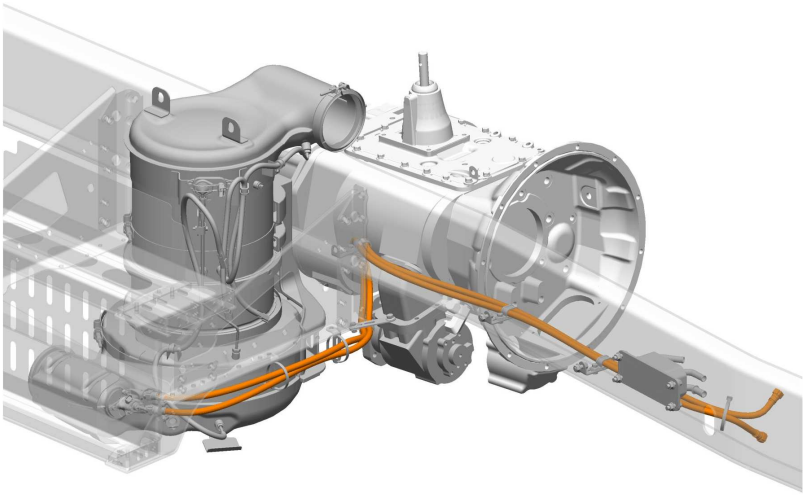

W2037255

Cooling Line Routing

All Rights Reserved

https://truckmanualshub.com/

Power Take-off (PTO), Installation (mDrive)

PTO kit 85134988 includes transmission drive parts, a solenoid valve, and a switch for a single PTO. PTO kit 85132964 includes an additional solenoid and switch valve for dual PTO's. Both kits are required for dual PTO's.

1. Raise and support the rear of the vehicle.

Note: Lift the rear of the truck until the back of the transmission has been raised 76-89 mm (3-3.5 in) to minimize transmission fluid loss.

2. Drain the air system.
3. Drain the *m*Drive transmission air supply tank.

Note: This tank is equipped with a pressure protection safety valve and will not drain with the rest of the air system.

4. Remove the PTO mounting surface block off plate from the transmission range housing.

Note: Position a drain pan to capture lost transmission fluid.

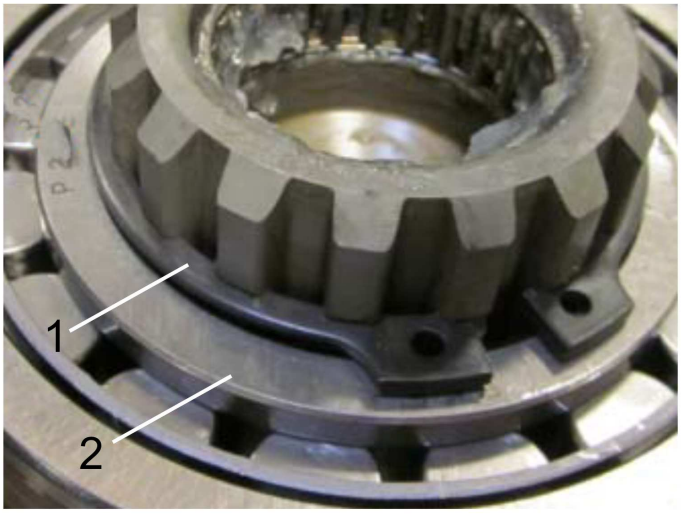

W4079510

1 Snap Ring
2 Thrust Washer

5. Assemble the PTO drive shaft, bearing, thrust washer and snap rings.

Note: Using a brass drift, gently drive the bearing into place striking only the inner race. Reposition the drift with each strike, rotating around the bearing.

Notes

All Rights Reserved

https://truckmanualshub.com/

6. Pack the PTO drive shaft bearing with grease. Note: Use a synthetic based grease such as MACK part number 1077790 or equivalent.

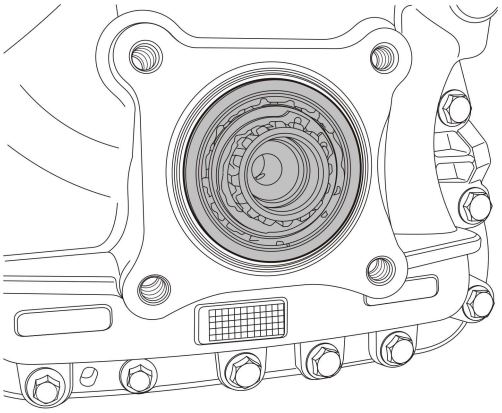

W4003016

7. Install the PTO drive shaft assembly in the transmission.

Note: Once positioned in the transmission, it may be necessary to gently tap the shaft in. Use a plastic or rubber faced hammer.

Note: The bearing is seated when the snap ring on the outside of the bearing touches the mating groove on the transmission.

8. Lubricate the PTO drive shaft pilot bearing.

Note: Use a synthetic based grease such as MACK part number 1077790 or equivalent.

9. Install the PTO drive shaft pilot bearing.

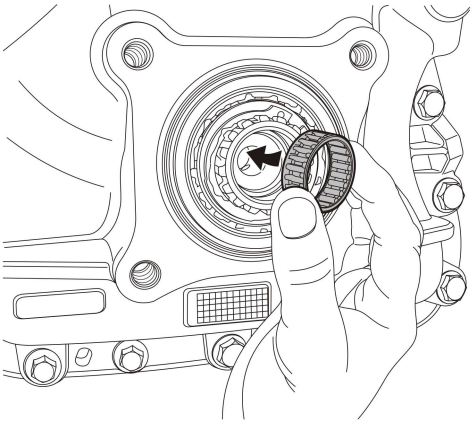

W4003017

10. Apply a bead of silicone sealant on the PTO mounting surface.

Note: Only use silicone to seal the PTO mating surfaces. Do not use gaskets or O-rings.

Note: Clean the PTO mating surface on the transmission prior to applying the silicone.

All Rights Reserved

https://truckmanualshub.com/

11. Install the air line bracket on the left upper PTO mounting bolt. Install the PTO and tighten the mounting bolts to 85 ± 5 (30 ± 4 ft/lb).

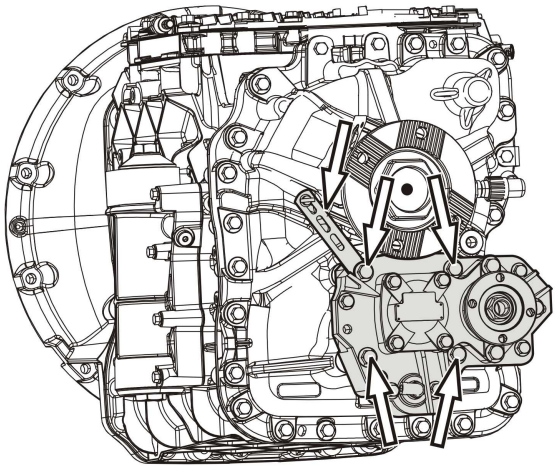

W4003020

12. Remove the PTO oil supply line plug from the back side of the transmission oil filter housing.

Note: Use a copper gasket to seal the fitting.

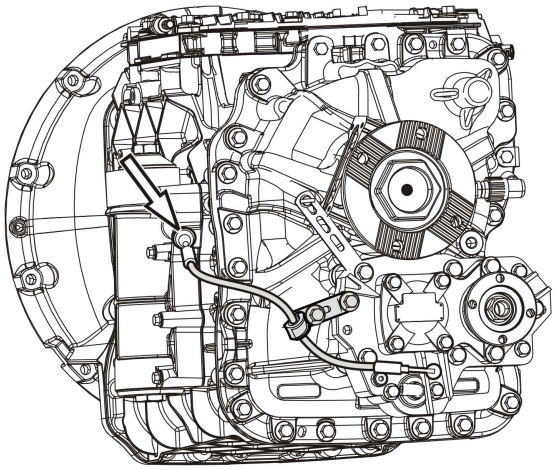

W4003018

All Rights Reserved

https://truckmanualshub.com/

13. Connect the PTO oil feed line to the oil port. Tighten the line.

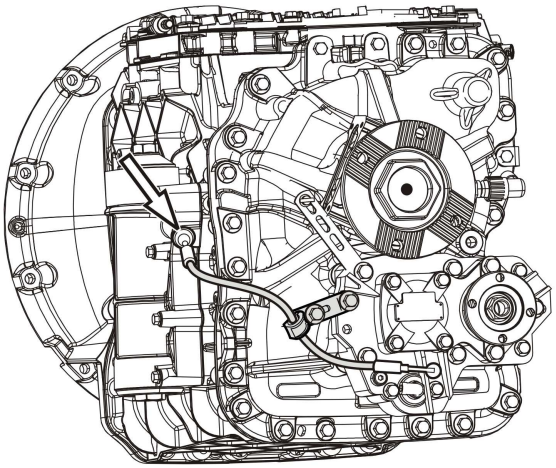

W4003018

14. Locate the PTO solenoid wiring harness connectors tied to the transmission wiring harness on top of the transmission. Cut tie straps as needed to free the harness for use.

Note: The wiring tags should read PTO1 and PTO2 at the connectors.

15. For a single PTO, install two quick connect air fittings and one pipe plug into the PTO solenoid. For dual PTO's , install an O-ring between solenoids in place of the pipe plug.

Note: The supply line fitting should accept a 9.5 mm (3/8 in) air line, and the outlet fitting should accept a 6.35 mm (1/4 in) air line.

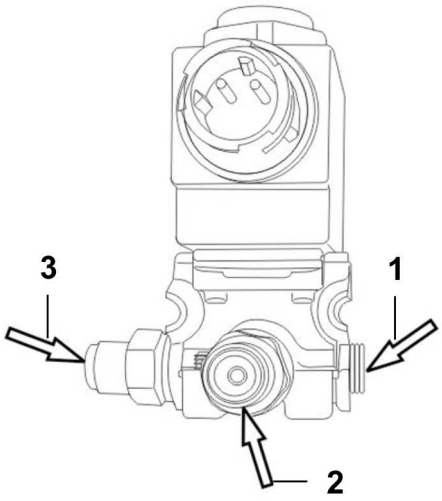

W9123394

1 Plug for single or O-ring for dual
2 Outlet fitting 1/4"
3 Supply line 3/8"

All Rights Reserved

https://truckmanualshub.com/

16. Install the PTO solenoid or solenoids to the bracket and tighten the fasteners to 20 ± 3 (15 ± 2 ft/lb).

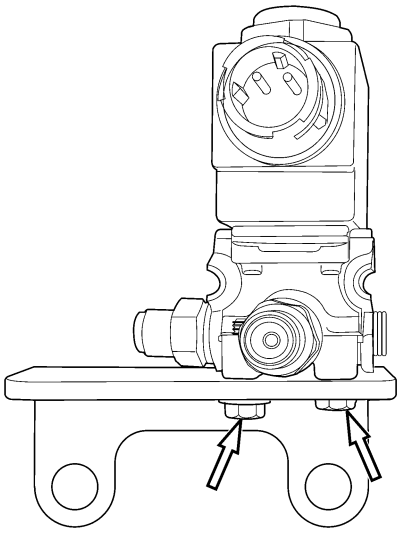

W4003027

17. Remove the two, top left range housing mounting bolts.
18. Install the bracket using the range housing bolts. Tighten the bolts to 110 ± 10 (81 ± 7 ft/lb).

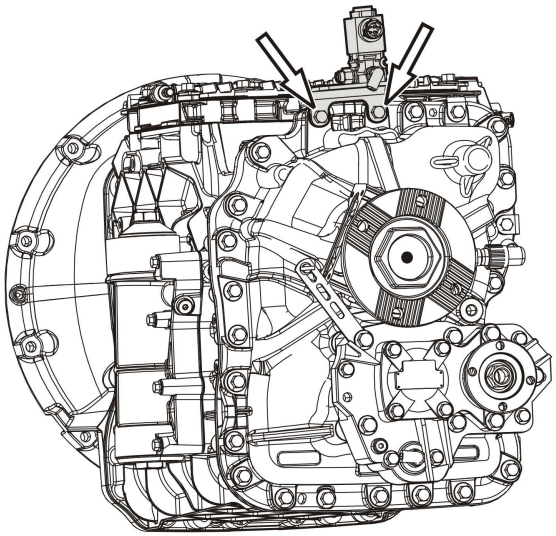

W4003019

All Rights Reserved

https://truckmanualshub.com/

19. Connect PTO1 wiring harness to the solenoid.

Note: The wiring tags should read PTO1 and PTO2 at the connectors.

20. Install a 90° air line quick connect fitting into the PTO.

Note: The fitting should accept a 6.35 mm (1/4 in) air line.

21. Install a 6.35 mm (1/4 in) inch air line from the solenoid to the PTO.

Note: Route away from moving parts and secure to mounting bracket with tie straps.

22. Remove the plug from the available 9.5 mm (3/8 in) inch air line port on the pressure protection manifold, found on the left inner frame rail. Insert the air line and route it to the solenoid inlet 3/8 in port.

Install the solenoids. Install the 9.5 mm (3/8 in) air supply line to the pressure protection manifold and then connect it to the solenoid.

Note: Route the line away from any moving parts and secure using tie straps.

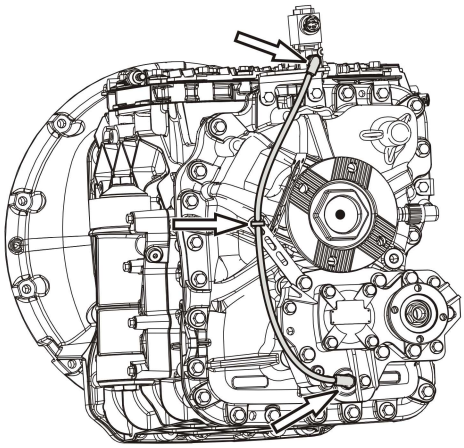

W4003022

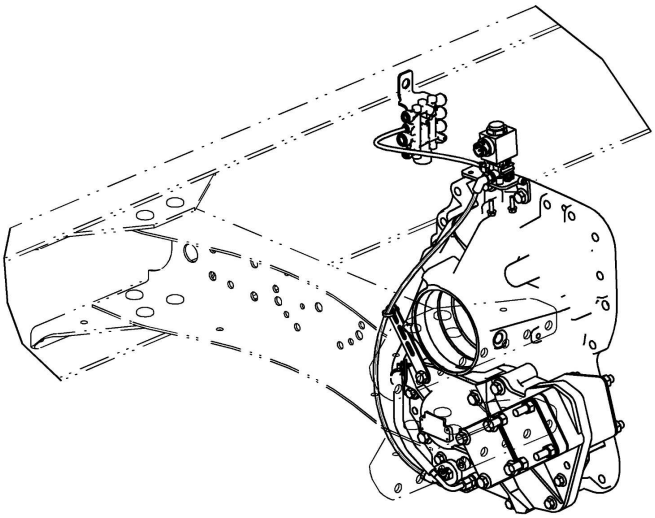

W9123652

All Rights Reserved

https://truckmanualshub.com/

23. Pressurize the air system and check for leaks.

Note: If any leaks are found, drain the air tank and repair the leak. Re-test until no leaks are found.

24. Remove the supports and lower the vehicle.

25. Fill the transmission with new MACK approved oil.

Note: Fill the transmission until the fluid level is between minimum and maximum of the sight glass.

Note: Do not reuse old oil from the *m*Drive transmission. Always use new oil when filling.

Note: 1–2 L (1–2.1 qt) of fluid may be lost during the installation.

Silver Drain Plug	85146531, SAE50 *m*Drive Heavy Duty
Brass Drain Plug	9853–120551, 75W-80 *m*Drive Standard

26. Remove the bussed electrical center (BEC) cover in the cab.
27. Check for a 15 amp fuse in fuse slot F8 and a 10 amp fuse in fuse slot F17 of the BEC. Install fuses if missing.

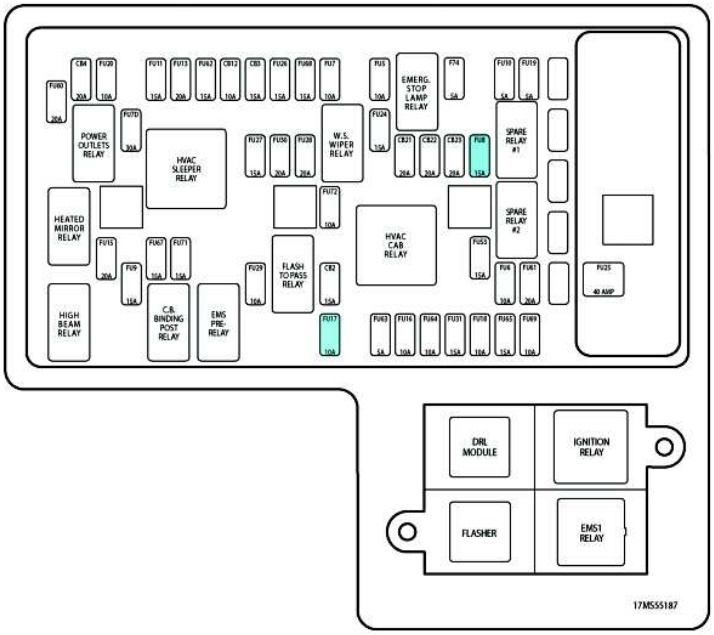

W9115436

All Rights Reserved

https://truckmanualshub.com/

28. Install the BEC cover.

29. Remove the dash switch blank from the first blank switch position 1 through 3 on switch panel.

Note: Switch position 3 is the default position for the PTO switch, but switch position 1 or 2 should be used if blank. The PTO switch connector is in the cab wiring harness and is located behind this panel.

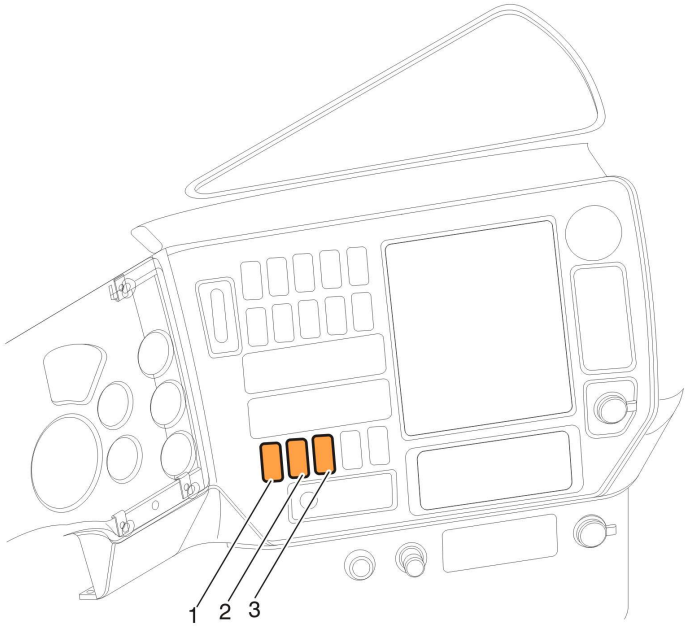

W8061184

30. Install the PTO switch (82280522) in position 1, 2, or 3, depending on which location is the first available blank position.

31. Using the scan tool, run accessory kit and program the transmission control module (TCM) with the appropriate software for a single PTO. Contact the help desk for further assistance.

Note: The appropriate software is dependent upon how many solenoids are being used to actuate the PTO (single or dual solenoids), not the outputs on the PTO.

Note: When installing an *m*Drive Transmission mounted PTO, contact MACK Tech Support 1–800–888–2039 to secure the correct software for the Transmission Electrical Control Module (TECU).

32. After the TCM has been programmed with its software, it is necessary to perform the “Transmission and Clutch Calibration” using the scan tool.

33. Perform PTO parameter programming. For more information, refer to the “PTO Programming” bulletin found in the electrical section of the Body Builders Manual.

Note: It will be necessary to change the vehicle electronic control unit (VECU) default parameter for PTO position mounting from engine1 to transmission1.

36. Run the vehicle and re-check the transmission fluid level. Top off the transmission as needed so the fluid level is between minimum and maximum of the sight glass.

Note: The PTO shares the transmission fluid for lubrication. The PTO will retain about 0.8 qt (0.75 L), of transmission fluid after initially being run. Always top off the transmission fluid after installing a new PTO.

Note: For PTO 2 Switch an overlay harness may be required. Contact your local MACK dealer for parts.

All Rights Reserved

https://truckmanualshub.com/

Rear-mounted Power Take-off Description and Operation

Description

There are two types of MACK T300/T200 series rear-mounted PTO units, direct drive and optional ratio. Both PTOs are driven by a quill shaft which engages the transmission front countershaft. Therefore, the PTO output shaft speed is fixed at the pre-set percent of engine speed, regardless of which transmission gear is selected. Engagement and disengagement of both PTOs is accomplished by a field-fabricated control arrangement (rod or cable) or by a MACK air-operated PTO control. In either case, engagement is by means of a sliding clutch arrangement. For both units, the vehicle must be stopped and the clutch disengaged before the PTO can be engaged.

Direct Drive PTO

A direct drive PTO can be installed in any of the rear countershaft positions — upper left, upper right or lower center. Depending on which position the PTO unit is mounted, it affects whether the unit mounts upright or is slanted right or left. This positioning affects draining and filling units with lubricant. Direct drive PTO draining and filling procedures will be covered in the MAINTENANCE section of this manual.

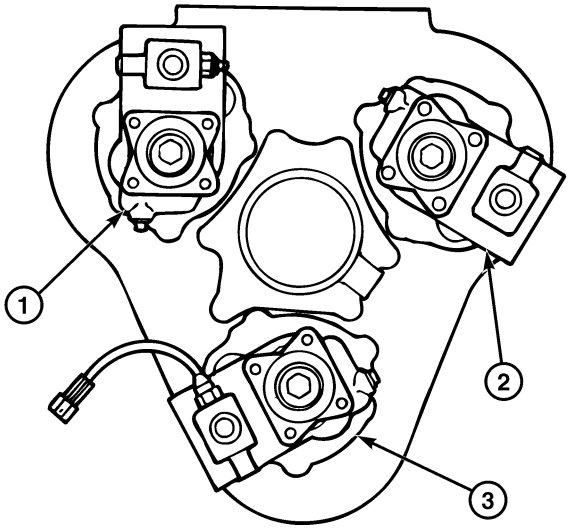

305891a

W0040845

1 Upper Left Location
2 Upper Right Location
3 Lower Center Location

The output speed (as a percentage of engine speed) of the direct-mounted PTO depends on which T300/T200 transmission it is mounted on and is fixed at that percentage, regardless of which transmission gear is selected. Refer to the following chart for PTO speed percentage of engine rpm as related to transmission.

All Rights Reserved

https://truckmanualshub.com/

Power Take-off Rear-mounted	MACK Transmission	PTO Speed to Engine RPM Percentage	Output Torque Rating ft-lb (Nm)	Rotation Same as or Opposite Engine
Upper Left	T2050/T305	84	735 (997)	Opposite of Engine
Upper Right	T2060/T306	84	735 (997)	Opposite of Engine
Lower Center	T2060A/T306G	70	735 (997)	Opposite of Engine
	T2070, B, D/T307M/307	84	735 (997)	Opposite of Engine
	T2080, B, D/T308M/308	84	735 (997)	Opposite of Engine
	T2090/R/L/LR T309/L/LR/T310	70	735 (997)	Opposite of Engine
	T2100	65	735 (997)	Opposite of Engine
	T2110B	65	735 (997)	Opposite of Engine
	T2130, T2180, A, B	70	735 (997)	Opposite of Engine
	T313/L/LR/L21/LR21/21	70	735 (997)	Opposite of Engine
	T318/L/LR/L21/LR21/21	70	735 (997)	Opposite of Engine
	TM308/TM309	70	735 (997)	Opposite of Engine
	TM308M/TM309M	70	735 (997)	Opposite of Engine
	T310M/ME/MLR	70	735 (997)	Opposite of Engine

Rear-mounted PTO in-Service Guidelines

In the past, transmission PTO applications were considered for intermittent service, which means run for several minutes and then shut down and allowed to cool before reuse. More and more, varied applications are causing transmission PTOs to be used continually, or for longer periods of time.

The following recommendations are for MACK rear-mounted PTO applications:

- **Intermittent Service** — The PTO unit is operated, under load, for only 5 minutes out of every 15 minute time period.
- **Continuous Service** — The PTO unit is operated, under load, for more than 5 minutes straight. Units that are operated for more than 5 minutes in a 15 minute time period are also considered continuous service.

Rear-mounted PTO units expected to operate under the continuous service guideline, must have the torque or horsepower ratings reduced by 30%, to prevent premature wear of the unit.

All Rights Reserved

https://truckmanualshub.com/

Rear-mounted PTO Component Locations

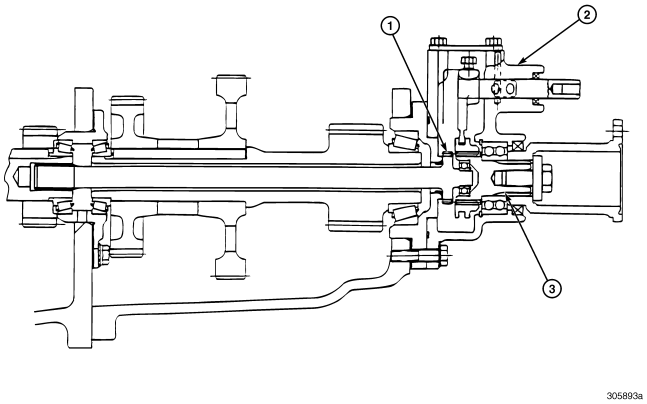

W0040851

Direct Drive RMPTO Cross-Sectional View

1 Quill Shaft Assembly
2 PTO Cover Assembly
3 PTO Output Shaft Assembly

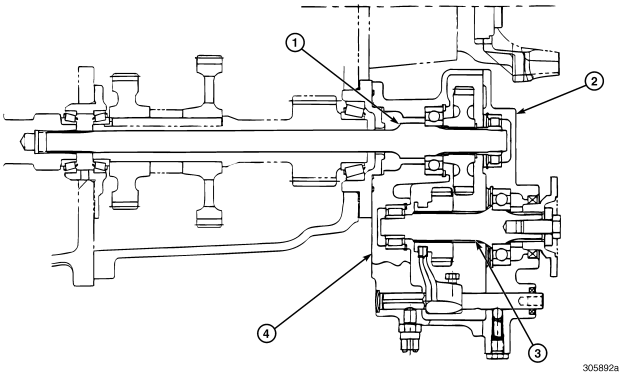

W0040849

Optional Ratio RMPTO Cross-Sectional View

1 Quill Shaft Assembly
2 PTO Cover Assembly
3 Output Shaft Assembly
4 PTO Housing Assembly

All Rights Reserved

https://truckmanualshub.com/

SAE Flanges

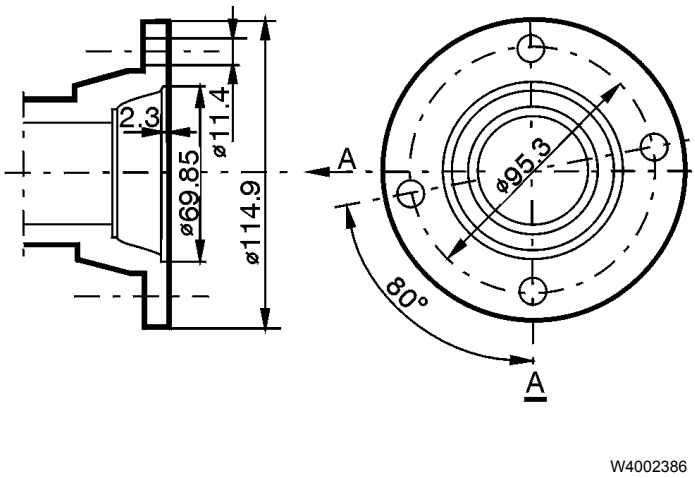

Flange SAE 1400

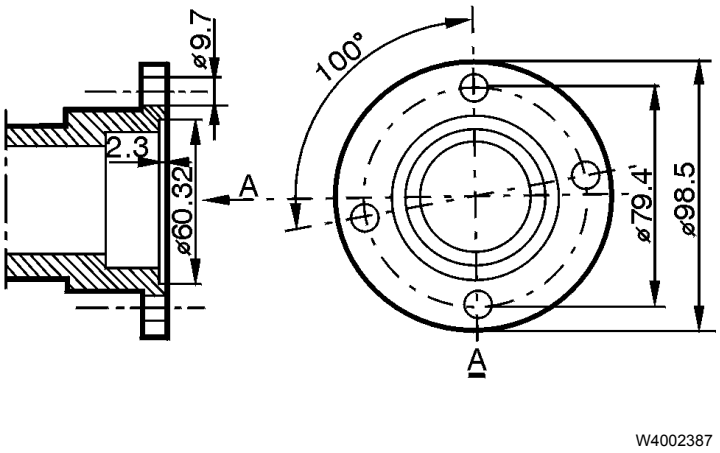

Flange SAE 1300

Notes

All Rights Reserved

https://truckmanualshub.com/

Optional Ratio PTO

The optional ratio PTO for the T300/T200 series transmission is available only in the lower center position. Additionally, this PTO is available only on the following transmission models, the T2110B, T2180A, T310ME, T313L21/T318L21, T313LR21/T318LR21, and T31321/T31821. Only these transmissions are built with the dual-tapered roller bearing output housing which allows space for the drive yoke to fit past the PTO unit.

This optional ratio PTO is available in three ratios, all as a percentage of engine speed and is fixed at that percentage regardless of which transmission gear is selected. Refer to the chart below for PTO speed percentage of engine rpm as related to transmission.

Power Take-off	MACK Transmission	PTO Speed to Engine RPM Percentage	Output Torque Rating ft-lb (Nm)	Rotation Same as or Opposite Engine
Rear-mounted Lower Center	T2110B	96 126 143	390 (529) 298 (404) 262 (355)	Same as Engine
	T2180A, T310ME, T31321/L21/LR21, T31821/L21/LR21	103 136 154	364 (494) 276 (374) 244 (331)	Same as Engine

Notes

All Rights Reserved

https://truckmanualshub.com/

Rear-mounted Engine PTO

Trucks used for certain applications, such as cement mixers or dump trucks, may be equipped with a rear—mounted engine PTO (REPTO). PTOs of this type are installed on the rear of the engine, and are driven by the crankshaft. They are intended for use when the vehicle is moving or stationary.

REPTOs have been designed to accomplish a number of performance-related objectives:

- They have eliminated unnecessary parts (e.g., additional Front-mounted PTO equipment).
- They deliver efficient, clutch independent power.
- They allow specification of a lengthened wheelbase without exceeding overall length restrictions.

Example: two trucks with the same frame length must meet the same overall length of 10 m (40 ft). The truck with a front-engine PTO requiring a hydraulic pump in front of the engine (or bumper) will limit the wheelbase approximately 46 – 53 cm (18 – 21 in) compared to the vehicle with REPTO. This results in an increase in payload under the federal Bridge Law of 545 – 680 kg (1200 – 1500 lb).

This performance is possible because REPTOs are designed as an integral bearing housing that is mounted on the right, rear of the engine.

Note: The REPTO rotates in the same direction as the engine.

Note: The REPTO access hatch is tied to the REPTO variant. Whenever a REPTO is requested the access hatch is provided. Therefore, the customer does not need to request the hatch.

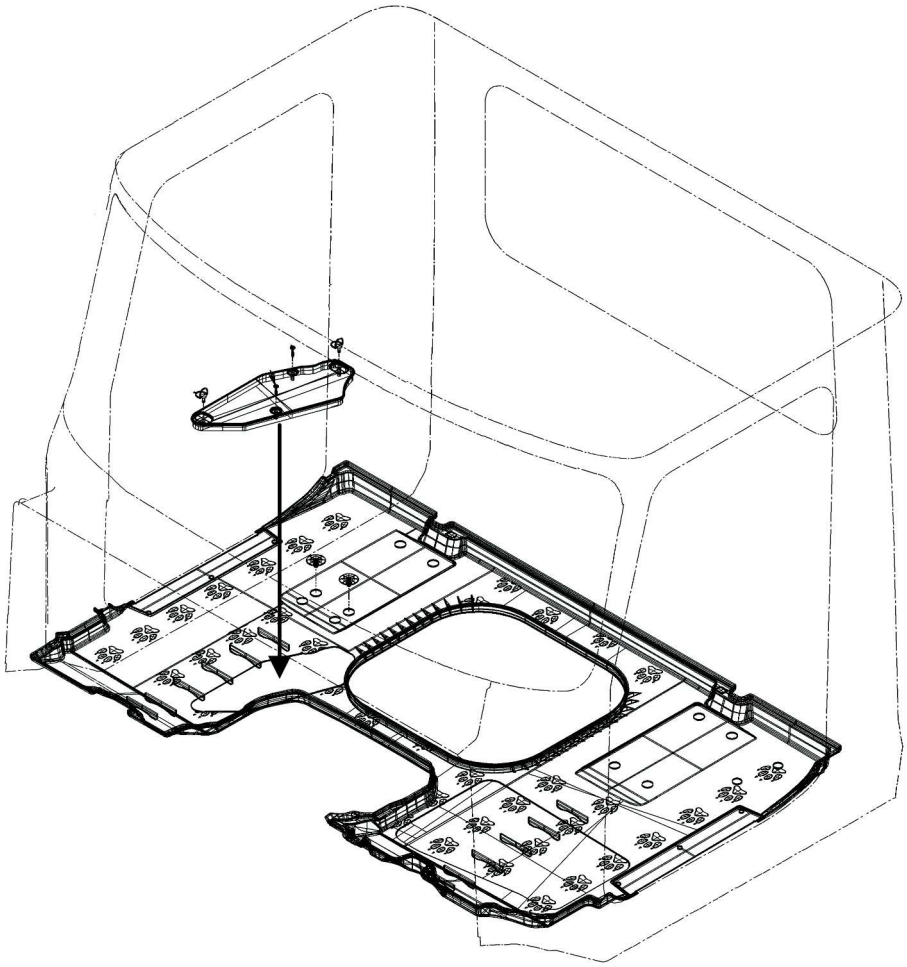

W8116059

All Rights Reserved

https://truckmanualshub.com/

Benefits of REPTO include:

- Eliminate the need for extended frame or bumper.
- Permits shorter hydraulic lines.
- Simplifies maintenance (REPTO need not be removed for clutch service)
- Eliminates need for modification to radiator and radiator supports for PTO shaft clearance.

REPTOs permit the operator to engage or disengage the PTO even when the vehicle is moving. Unlike transmission-mounted PTOs, REPTOs are dependent only on the engine.

Rear Engine-mounted PTO with Flange SAE 1410/ ISO 7647

Related: Engine Package (101), Intermediate Crossmember (OA), Cab Suspension (2D)

Option T1-A1 is a clutch independent, rear-mounted, engine power take-off with a SAE1300/1400 flange connection for shaft driven accessories. The power take-off consists of a bearing housing that is mounted on the right rear side of the engine gear train. It is suited to types of transport in which the power take-off must be clutch independent. This means that the power is taken directly from the engine. The power take-off can operate both when the vehicle is in motion and when it is stationary, resulting in high vehicle productivity.

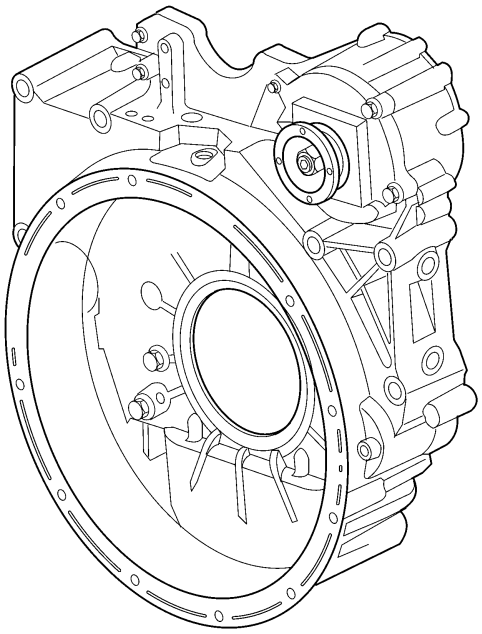

W4002977

All Rights Reserved

https://truckmanualshub.com/

Rear Engine Mounted Power Take-off

Speed ratio: 1:X.x (1: = engine, X.x = power take-off)

Engine	Speed ratio	Direction of rotation[1]	Max permissible torque ft-lb (Nm)[2]
MP7	1:1.08	↶ 1	< 3 mph (5 km/h) 740 (1003) > 3 mph (5 km/h) 480 (651)
MP8	1:1.26		> 3 mph (5 km/h) 480 (651)
			> 3 mph (5 km/h) 740 (1003)

1 Counter clockwise when facing back of engine

2 The engagement of the hydraulic pump must not give any pressure peaks exceeding the rated pressure.

Note: Low stiffness of the prop shaft and big inertia on the pump will give low resonance frequency, which can be triggered by the frequency in the engine.
The engagement time has to be so long that no pressure peaks will occur, and the best way to verify this is to measure the pressure close to the pump.

Resonance Frequency

CAUTION

The minimum torsional resonance frequency is 300 Hz for the system propeller shaft to PTO pump. Failure to not follow this may cause severe engine component damage.

*Resonance frequency (**f**) for a propeller shaft driven PTO is calculated as:*

$$f = \frac{1}{2 \times \pi} \times \sqrt{\frac{k}{J}}$$

f = resonance frequency (Hz)

k = stiffness of prop shaft and coupling(s) (Nm/rad)

J = hydraulic pump and coupling mass moment of inertia (kgm2)

Example:

k = 2,8 x 105 Nm/rad

J = 0,05 kgm2

$$f = \frac{1}{2 \times \pi} \times \sqrt{\frac{2.8 \times 10^5}{0.05}} = 377\,Hz$$

All Rights Reserved

https://truckmanualshub.com/

Rear Engine-mounted PTO with Splined Shaft Groove (Female) DIN 5462

The PTO consists of a bearing housing that is mounted on the right rear side of the engine gear train. It is suited to types of transport in which the power take-off must be clutch independent. This means that the power is taken directly from the engine, and the engagement/disengagement can be done while the vehicle is being driven. It can also operate both when the vehicle is in motion or stationary. The PTO has few moving parts high performance and is especially suited to MACK's engines for high availability.

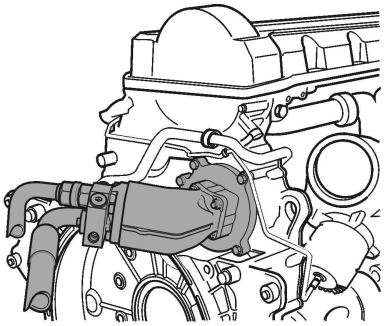

T4019448

Shown with optional direct mount pump

MACK MP7 REPTO Specifications	
Location	Right rear side of engine gear train
Type	Clutch independent power take-off
Flange Connection	SAE 1350/1410 4 — Bolt
DIN Mounting	5462/ISO 7653
Engine	MP7
Gear Ratio (Engine:PTO)	1:1.08
Max Torque — Stationary	740 ft-lb (1003 Nm)
Max Torque — >5 kph (3 mph)	480 ft-lb (651 Nm)
Weight	15.5 kg (34.2 lb)

MACK MP8 REPTO Specifications	
Location	Right rear side of engine gear train
Type	Clutch independent power take-off
Flange Connection	SAE 1350/1410 4 — Bolt
DIN Mounting	5462/ISO 7653
Engine	MP8
Gear Ratio (Engine:PTO)	1:1.26
Max Torque — Stationary	740 ft-lb (1003 Nm)
Max Torque — >5 kph (3 mph)	480 ft-lb (651 Nm)
Weight	15.5 kg (34.2 lb)

All Rights Reserved

https://truckmanualshub.com/

Rear Engine PTO, Installation

When installing a rear engine PTO on a MP7 or MP8 engine, use the following parts information

PTO Spline	Part Number	Description	QTY
MP7 DIN	21909758	REPTO Unit	1
	976068	O-Ring	1
	984850	Bolt	2
	984820	Bolt	2
MP7 SAE	21912452	REPTO Unit	1
	976068	O-Ring	1
	984850	Bolt	2
	984820	Bolt	2
MP8 DIN	21912752	REPTO Unit	1
	976068	O-Ring	1
	984762	Bolt	1
	984816	Bolt	3
MP8 SAE	21913220	REPTO Unit	1
	976068	O-Ring	1
	984762	Bolt	1
	984816	Bolt	3
	22066340	Protecting Screen	1

Notes

All Rights Reserved

https://truckmanualshub.com/

Back of Cab (BOC) Crossmember For PTO with/without Mixer Body Plates

Related:

- OA-AC BOC Crossmember for PTO with Mixer Body Plates
- OA-AD BOC Crossmember for PTO without Mixer Body Plates
- AX-AA Flip Overhang Crossmember Upside Down

BOC crossmember for PTO with Mixer Body Plates (OA-AC) and BOC crossmember for PTO without Mixer (OA-AD) Intermediate crossmember offerings are available in MACK Models with REPTO or Allison PTO configurations for Mixer use. These options allow body companies to mount the mixer PTO pump on the MACK crossmember rather than replace or remove it. An inverted intermediate overhang crossmember option, Flip Overhang crossmember Upside Down (AX-AA), is also available that will allow for mixer booster axle cylinder clearance. When this option is specified the intermediate overhang crossmember is mounted upside down to prevent the mixer cylinder from interfering.

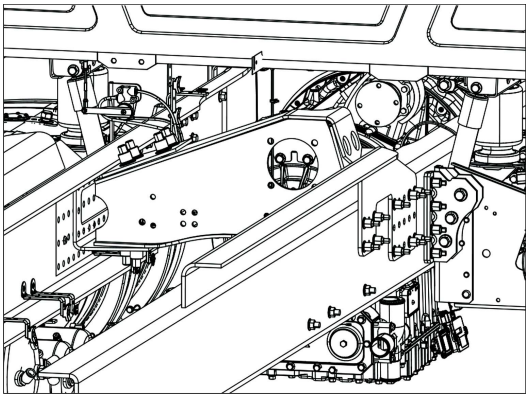

W4112704

Crossmember and Body Plate

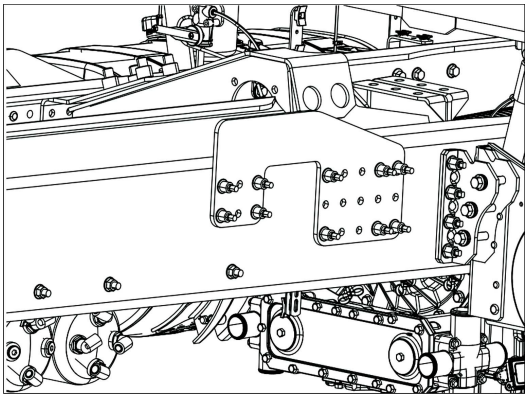

W4112705

Crossmember and Body Plate

Notes

All Rights Reserved

https://truckmanualshub.com/

Note: PTO noise on conventional models equipped with an Allison Automatic Transmission.

Power take-off (PTO) units are used on vocational vehicles to power hydraulic pumps and other auxiliary equipment, and these units can either be mounted on the engine or the transmission. Allison automatic transmissions may provide PTO mounting locations at both the 1 o'clock and 8 o'clock positions (when viewed from the back of the transmission as seen in figure below).

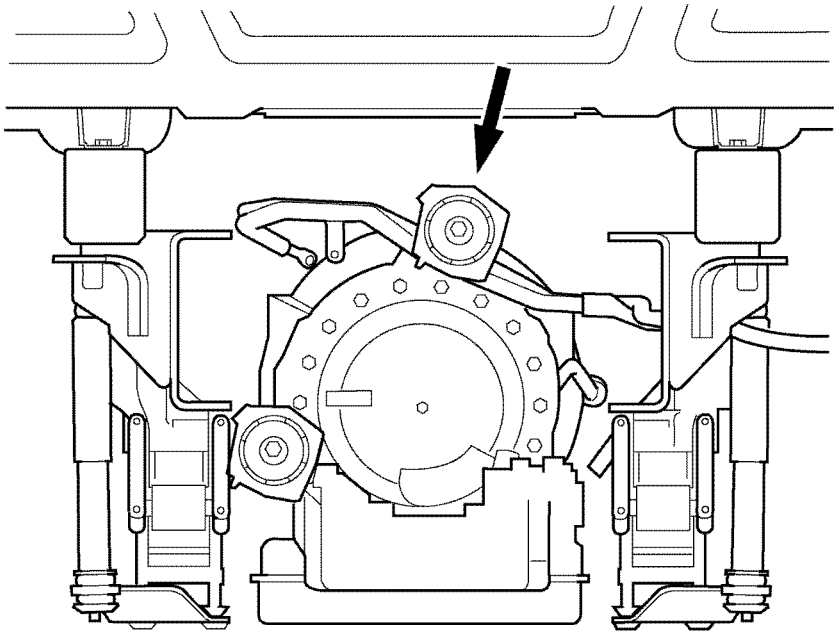

W2037548

Allison Automatic Transmission PTO Mounting Locations

On conventional models, mounting a PTO unit in the 1 o'clock position places the unit only inches below the cab floor. Due to the proximity of the PTO unit to the cab floor, any noise generated by the PTO will be easily heard inside the cab. While vehicle occupant(s) may find this noise objectionable, there has been no identified degradation of performance or durability with this transmission/PTO mounting arrangement. Since most PTO systems are installed by body builders or aftermarket suppliers, Mack Trucks, Inc. cannot restrict or control installation of these systems. Because of this, Mack Trucks, Inc. will not address any noise-related issues associated with this type of transmission/PTO arrangement.

If interior cab noise is a concern, it is strongly recommended that the rear engine-mounted PTO (REPTO) be used on any Allison automatic transmission-equipped conventional models which require a PTO. The SAE flange-type REPTO allows the use of a driveshaft to power a remote-mounted, electric clutch-type hydraulic pump/valve system. This type of system allows the same ON/OFF functionality as a transmission-mounted electric clutch-type PTO. Depending upon specific needs or customer preferences, the REPTO option should be used in lieu of a transmission-mounted PTO for conventional models equipped with an Allison automatic transmission.

All Rights Reserved

https://truckmanualshub.com/

Front-mounted Engine PTO

The front-mounted PTO is suitable for the following applications:

- Refuse
- Dump body with spreading apparatus
- Roll on/off, hook lifts
- Municipality trucks with multiple hydraulic equipment needs, snow plows, cranes, dump bodies, etc.

Front PTO Configuration, Axle Back

MP8

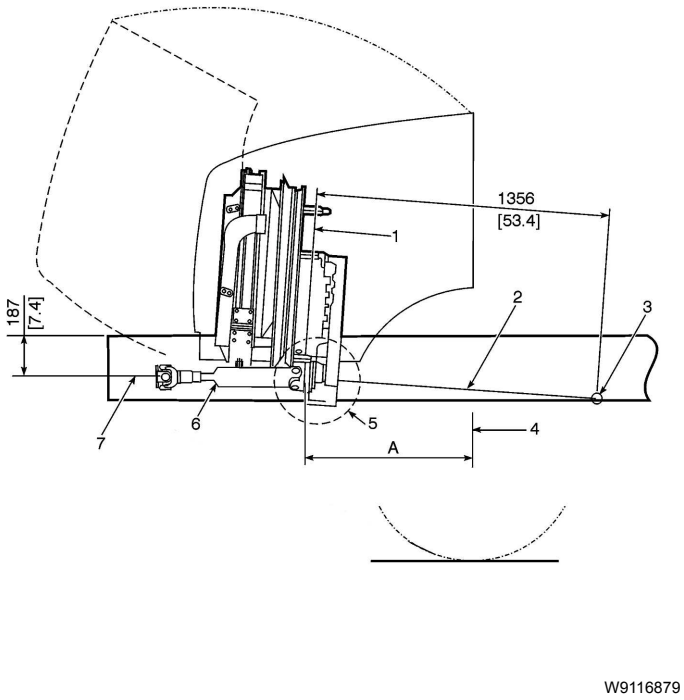

Fig. 1 Front PTO, Axle Back, With 930 Sq. in. Radiator (MP8)

1	PTO shaft mounting surface.
2	Centerline of crankshaft at 4°.
3	Position of engine rear face of flywheel housing.
4	Centerline of front axle.
5	See Fig. 4 on page 37 .
6	1410 Series shaft shown.
7	Centerline of PTO driveshaft (horizontal)
A	Dimension (see table below)

All Rights Reserved

https://truckmanualshub.com/

Dimension	Axle Forward mm (in)	Axle Back mm (in)
A	220 (8.7)	778 (30.6)

Max Torque 678 Nm (500 ft-lb) **Max Power** 134 kW (180 hp) @ 1800 rpm

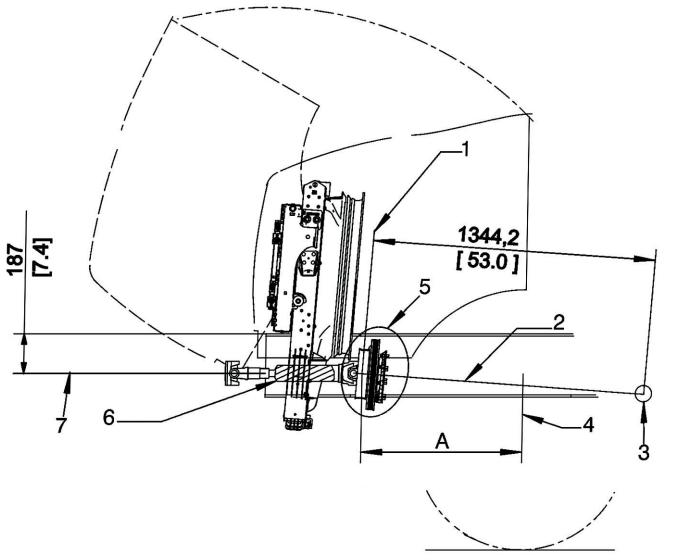

Fig. 2 Front PTO, Axle Back, With 1240 Sq. in. Radiator (MP8)

1 PTO shaft mounting surface.

2 Centerline of crankshaft at 4°.

3 Position of engine rear face of flywheel housing.

4 Centerline of front axle.

5 See Fig. 5 on page 38 .

6 1410 Series shaft shown.

7 Centerline of PTO driveshaft (horizontal)

A Dimension (see table below)

Dimension	Axle Forward mm (in)	Axle Back mm (in)
A	206 (8.1)	766 (30.2)

All Rights Reserved

https://truckmanualshub.com/

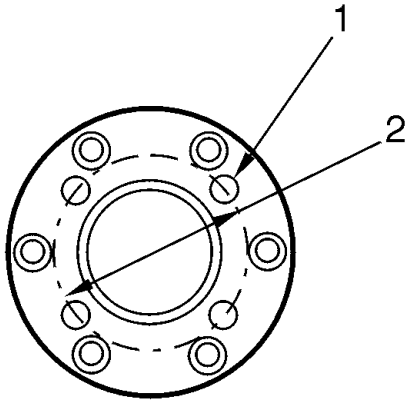

W4002367

Fig. 3 Adapter PTO Drive Coupling (1350/1410), MP8 (1:2)

1 4 x 7/16 — 20UNF-2B
2 ∅95.25 PC Diameter

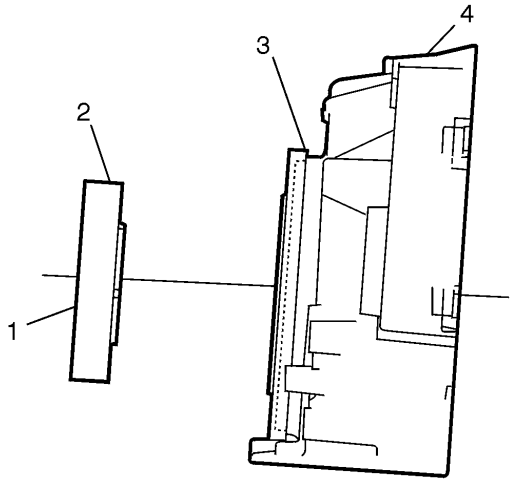

W4002368

Fig. 4 Exploded View, Front PTO Drive Adaptation, With 930 Sq. in. Radiator MP8 (1:2)

1 PTO Shaft Flange Mounting Surface
2 Adapter PTO Drive Coupling
3 Companion Flange with Base Engine
4 Engine Timing Case Cover

All Rights Reserved

https://truckmanualshub.com/

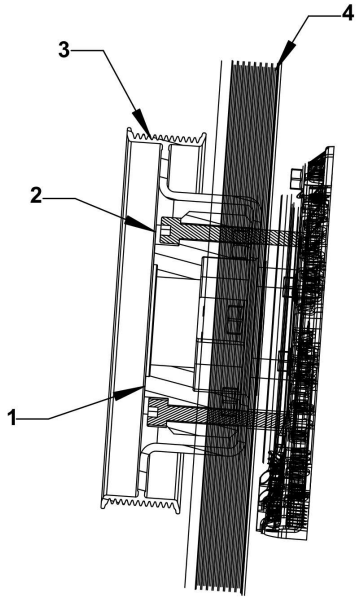

W4111399

Fig. 5 Exploded View, Front PTO Drive Adaptation, With 1240 Sq. in. Radiator MP8

1 PTO Shaft Flange Mounting Surface
2 Adapter PTO Drive Coupling
3 Fan Drive Pulley
4 Crankshaft Damper

Notes

All Rights Reserved

https://truckmanualshub.com/

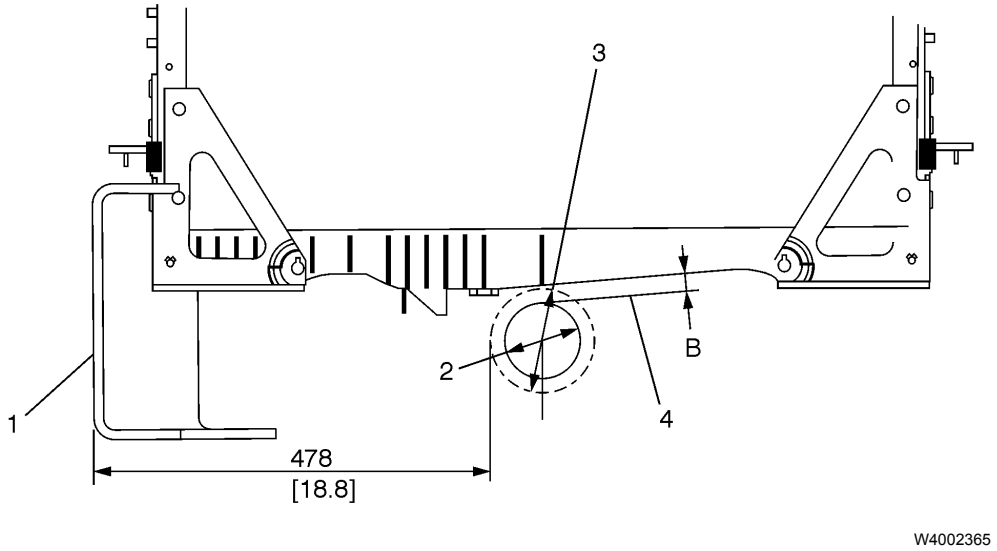

Fig. 6 Partial Front View, With 930 Sq. in. Radiator MP8

1 RH Siderail

2 Tube diameter: 89 mm (3.5 in)

3 Swing diameter: 1410 Series joint, 124 mm (4.9 in)

4 Clearance to radiator with 1410 Series shaft tube in horizontal position.

B Dimension (see table below)

Dimension	MP8 mm (in)
B	17 (0.7)

Notes

All Rights Reserved

https://truckmanualshub.com/

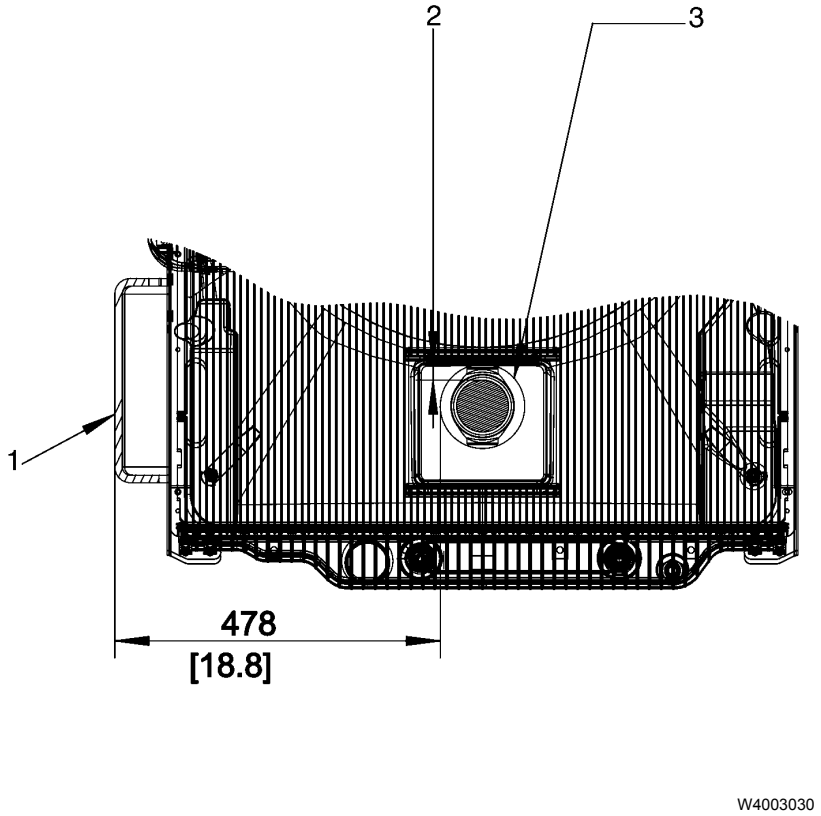

Fig. 7 Partial Front View, With 1240 Sq. in. Radiator MP8

1 RH Siderail

2 76 mm Shaft Tube Clearance to Cooling Package

3 Swing diameter: 1410 Series joint, 124 mm (4.9 in)

Hydraulic Pumps

Abbreviations

HPE = Hydraulic pump mounted to an engine power take–off (**H**ydraulic **P**ump **E**ngine mounted).
HPG = Hydraulic pump mounted to a gearbox power take–off (**H**ydraulic **P**ump **G**earbox mounted).

All Rights Reserved

https://truckmanualshub.com/

Pump Connection

There are two types of connections for hydraulic pumps:

- Din Drive pumps
- Flange mounted

Din Drive Pumps

Plugged-in pumps are connected directly to the power fake-off via a splined shaft. Connection is done according to DIN5462/ISO 7653 standard 8 X 32 X 36 mm spineshaft.
The VP1– and F1 Plus pumps are available for plugged-in mounting

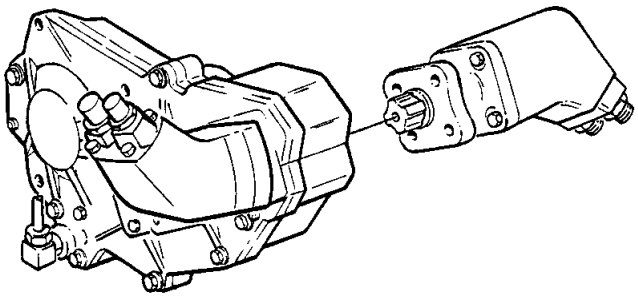

T4006560

Din mount

Flange Mounted Pumps

The hydraulic pumps can also be connected to the power take-off via a propeller shaft. Connection is done to a flange according to SAE 1300 or SAE 1400 standard.
The VP1– and F1 Plus pumps are possible to connect to a propeller shaft.

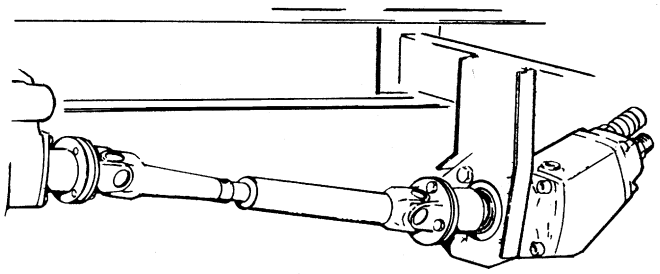

T9006112

Flange mounted

All Rights Reserved

https://truckmanualshub.com/

Hydraulic System and Pumps

Dimensioning of Hydraulic System and Hydraulic Pumps

Note: The body builder should enclose an information binder, delivered with the truck, including **hydraulic system data** (system dimensioning description and dimensioning criteria).
Service, function and safety descriptions should also be enclosed.

It is important to dimension an optimum hydraulic system, and to specify the correct pump size to provide sufficient oil flow and prevent overloading of the power take-off.

Pipes, Lines, and Hoses

DANGER

Hoses and pipes should not be routed too near the warm points in the truck. Avoid crossed pipes which could cause chafing. Failure to follow this guide line increases the risk of fire if leakage occurs, and allows undue heat transfer to the hydraulic oil.

Connected to the hydraulic pump are a high-pressure hose, suction and drain lines.

When dimensioning the hydraulic system, it is important that:

- Hoses and lines must be connected to the pump with unions. O-ring seals must be used between pump and union.
- Tapered fittings should be avoided.
- Teflon tape or similar must not be used since pieces can break off and get into the hydraulic system and eventually cause damage.
- If steel piping is used, it must be installed so that movements and vibrations do not cause leakage. Normally hoses must be used nearest the pump.
- Oxide scale must be removed from pipes which have been heat-bent or welded. Flush or blow the pipes clean before installing them.

Notes

All Rights Reserved

https://truckmanualshub.com/

High-Pressure Hose

These hoses must have a minimum of four steel wire coil inserts in order to withstand the high pressure in the hydraulic system.

When mounting a high-pressure hose:

- Make sure the hoses are not twisted when connected up.
- Make sure the hoses are long enough.
- Strive to get as few bends as possible on a hose.
- Avoid kinks by using correct unions. Only pressed unions may be used when replacing hose unions.

Note: Check for oil leakage and for high noise levels in the system when the truck is in motion.

Suction Line

The suction line is made of piping or armored hose which retains its shape even when there is vacuum in the line.

To avoid cavitation:

- The suction line should be as short as possible and **should not exceed 4 meters (13.12 ft.)**. In the event longer lines are required, larger line dimensions must be used.
- The suction line should connect to the bottom of the tank and must be correctly tightened to prevent air getting into the oil.
- The suction line must have a wide diameter and must be free from kinks and constrictions. Do not use reducer fittings with restrictions.

Note: Avoid suction lines of high-pressure hooks and hooks made locally from pipe pieces welded together. They could cause unnecessary suction resistance.

Suitable suction line sizes at different flow quantities and with a flow speed of less than 0,8 m/s:

Inner diameter Ø mm (inches)	Flow up to liter/minute (gallons/minute)
50 (2.0)	0–120 (0–32)
64 (2.5)	101–150 (27–40)
75 (3.0)	> 150 (40)

All Rights Reserved

https://truckmanualshub.com/

Drain Line and Bypass Valve

If the hydraulic pump is installed to a constantly running PTO (i.e. — engine PTO), it is provided with a bypass valve.

The bypass valve reduces the oil flow through the pump to obtain proper lubrication, low heat generation and to avoid cavitation.

Fixed Displacement Pump

HPE-FXX (F1 single flow)

In order to prevent heat build-up in the pump during transportation, it is important that at least 5 liter/minute (1.32 gallons/minute) comes out of the filter at “q” (refer to the schematic below). This applies to an “open center” system when the valve is in the bypass mode (non-activated solenoid).

Note: If the flow at “q” is less than 5 liter/minute (5.28 quarts/minute) (caused e.g. by a high pressure drop in the main system) when the valve is in the bypass mode or if the hydraulic system is of the “closed center” type, then an external drain line **must be installed** from the bypass valve drain port directly to the hydraulic tank.

HPE-TXX (F2 twin flow)

In order to secure a cooling flow through the system, a separate drain line is already connected to the bypass valve from factory and the other end of the hose is temporary plugged. At final assembly the hose should be connected to the hydraulic tank, entering below oil level (preferable to the filter housing on the oil tank).

Bypass Valve

For the fixed displacement hydraulic pumps the bypass valve is attached directly on top of the end cap of the hydraulic pump. It is electrical operated and the valve function must only be activated or released at no-load (below 20 bar) system pressure.

For F2- twin flow hydraulic pump it can be used when, temporarily, one of the two circuits is not required; the power loss is thus reduced as the non-required flow is not forced through lines and “open center” valves.

1 Pilot operated check valve
2 Solenoid valve
3 Directional control valve (“open center”)
4 Hydraulic pump
5 Valve block
6 Drain port
7 (External line)

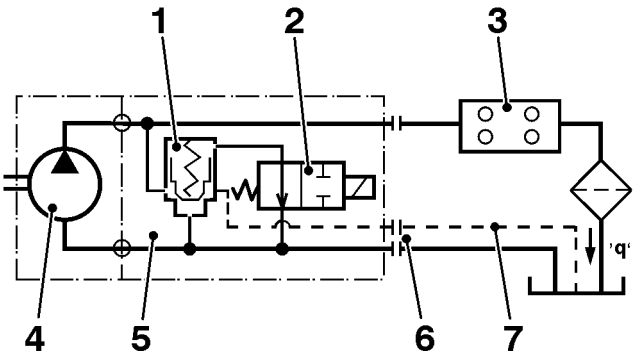

T9008080

HPE-FXX

All Rights Reserved

https://truckmanualshub.com/

HPE-VXX (VP1)

At final assembly, since the control valve on the hydraulic pump is not internally drained, there must be an external drain line installed between port “T” and the hydraulic tank.

Bypass Valve

For variable displacement pump the bypass is, from factory, attached to the temporary oil reservoir and connected to the hydraulic pump via a hose to the port for gauge outlet, (on VP1-45 and VP1-75 port beside suction port and on the VP1-120 port “M”on the control valve).

The valve, which requires no additional control valve, allows the pump to operate on- or off-load up to its maximum self–priming speed.

When a load sensing valve function is engaged, the bypass flow is cut off (as port 'X' is being pressurized).

1 Hydraulic pump
2 Nipple with orifice
3 Bypass valve
4 Load sensing valve
5 Load sensing (LS) signal

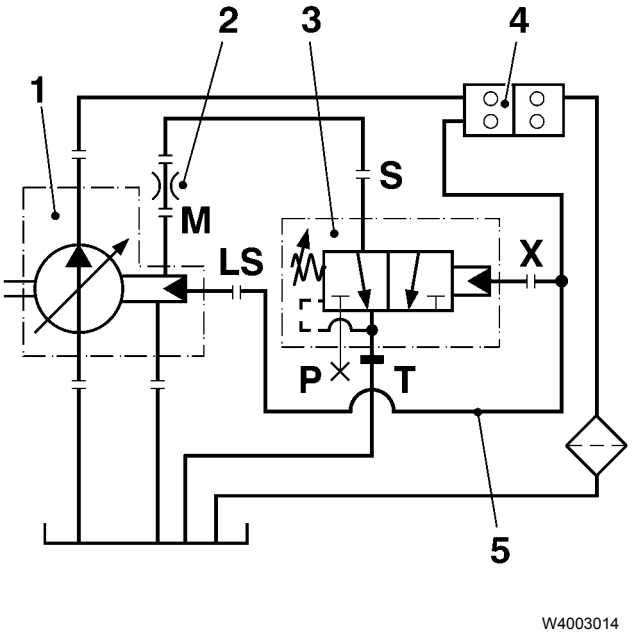

HPE–V120

All Rights Reserved

https://truckmanualshub.com/

Hydraulic Oil Tank

The tank must be large enough to avoid cavitation and overheating. A suitable volume is 1,5 times the nominal pump flow per minute.

The tank includes:

1 Air filter, fitted (as required) in a tube and provided with a non-return valve
2 Level gauge
3 Suction connector equipped with full-flow tap
4 Angled, perforated plate on which air bubbles accumulate and rise to the surface
5 Return oil filter

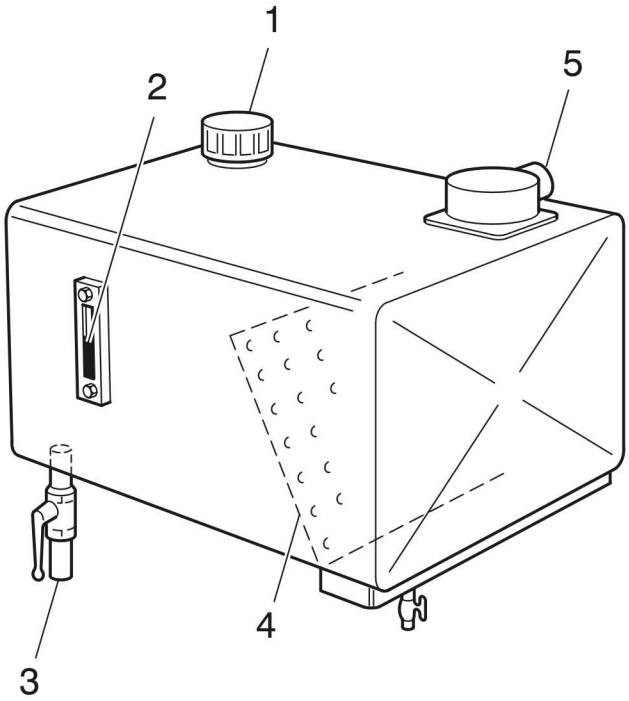

T9008314

Illustration is for reference only. May differ on specific vehicle.

When installing a hydraulic tank:

- The volume of the hydraulic tank must be dimensioned 1,5 times the nominal pump flow during normal working conditions.
- Make sure that the placing of the hydraulic tank does not limit the performance of the hydraulic pump.

  For example: The suction fitting must not be placed below the inlet of the return pipe.
- It is important that the deaeration surface is big enough. Prevent external dust and dirt from entering the hydraulic system. The inside of the tank must be well cleaned. To prevent dust getting into the system, the air filter should have the same filtration degree as the return oil filter.
- Oil is topped-up through the return oil filter, preferably via a rapid joint on the return line where the oil can be pumped in.
- Check oil level and ensure that it is oil of recommended type and viscosity.

All Rights Reserved

https://truckmanualshub.com/

Return Oil Filter

Note: The filter must be replaced at least once a year.

A return oil filter should be installed in the tank or in the return line. The filter should be dimensioned for a capacity which is approximately twice that of the pump flow.

Recommended filtration level:

- A 28 micron filter should be used with lower pressures of 0–200 bar (0–2900 psi).
- A 10 micron filter should be used with higher pressures of 200–300 bar (2900–4351 psi).

Check return pipe and filter condition and check for oil leakage.

Hydraulic Oil

Note: Do not mix oils of different quality.

Hydraulic fluids type HLP (DIN51524), automatic transmission fluid (ATF) Dextron II and engine oil type API/CD can be used.

Recommended viscosity:

- 20-30 mm^2/s (.78–1.18 $inches^2/s$) (cSt) .

Starting Up

CAUTION

Make sure the suction connector always is below the minimum level of the hydraulic oil. Failure to do so may result in component damage.

Make sure the entire hydraulic system is clean before filling it with a recommended fluid. In particular the pump, which must be purged to remove any entrapped air in the pump housing (use the uppermost purge port). Failure to do so may result in component damage.

Notes

All Rights Reserved

https://truckmanualshub.com/

Calculation of Hydraulic Pump Size

The following information is required to dimension the hydraulic system:

- **Oil flow Q=l/min (Quarts/min.)**, to the equipment
- **Oil pressure p=bar (psi)**, to do the work intended
- **Permissible torque or power taken from the engine**
- **Permissible pump speed**
- **PTO Gear ratio**

Engine Speed

Engine speed limit for engine mounted hydraulic pumps

Vehicles specified with engine mounted hydraulic pumps will always have a maximum engine speed (rpm) pre set from factory.

Depending of pump size and if the vehicle is equipped with BBM (Body Builder Module) or not, the setting is between 1700–2100 rpm.
This has been done by using data parameters in the vehicle control unit, and when the hydraulic pump is in service, the maximum engine speed cannot be overridden by pressing the throttle.

If the hydraulic system is designed in such way that the self-suction speed of the hydraulic pump is reduced, then the limited value should be modified using Premium tech tool.

Engine Speed Control

Check that the permissible speed, specified by the pump manufacturer on the pump, is not exceeded.

Pump speed per minute **n** is governed by engine speed **ne** and power take-off gear ratio **Z**:

$$n = ne \times Z$$

n = Pump speed (rpm)
ne = Engine speed (rpm)
Z = Power take-off gear ratio

All Rights Reserved

https://truckmanualshub.com/

Pump Speed

The maximum (self-suction) speeds given in the catalogue apply at 1.0 bar (14.5 psi) (abs.) intake pressure.

To achieve correct pump speed the following is required:

- Oil level approx. 0.5 m above pump inlet
- Correctly dimensioned suction pipe
- Original suction nipple
- Correctly designed hydraulic fluid reservoir

The flow speed in the suction pipes should be less than **1 m/s (39.36 in/hg)**. Poor suction conditions lead to cavitation, high noise levels, shorter operational lifetime and, in the worst case, pump failure.

Pump Capacity

The pump capacity or size **D** cm³/rotation (inches³/rotation) should be able to give sufficient oil flow **Q** l/min (inches/min.) for the equipment. The choice of size depends on the oil flow required, engine speed and power take-off gearing. A small pump can give a large oil flow if the power take-off gear ratio is large, or if the engine speed is high.

Pump size is calculated as:

$$Q = \frac{D \times n \times \eta v}{1000} \Leftrightarrow D = \frac{Q \times 1000}{n \times \eta v}$$

n = Pump speed (ne x Z)
D = Pump size cm³/rotation (inches³/rotation)
ne = Engine speed
Q = Oil flow l/min (quarts/min.)
Z = Power take-off gear ratio
ηv = volumetric efficiency

Torque Control

A certain torque, **Mku** is required from the power take-off at the pump shaft to drive the pump. This torque must not exceed the permissible torque for the power take-off. Expressed in Nm, this torque is:

$$M_{ku} = \frac{D \times p}{63 \times \eta hm} < M_{ku,till.}$$

Mku = Torque at power take-off (Nm)
D = Pump size cm³/rotation (inches³/rotation)
p = Hydraulic working pressure bar (psi)
Mku, till. = Permissible torque for the power take-off Nm (ft-lb)
ηhm = Mechanical efficiency
< = Less than

All Rights Reserved

https://truckmanualshub.com/

Torque control of the engine **Mmot** must not exceed the permissible torque for the engine (please refer to the Body builder instructions “Power take-off, performance”) at a given engine speed.

Engine torque is equal to power take-off torque x gear ratio.

$$M_{mot} = Mku \times Z < M_{mot,till.}$$

Mmot = Engine torque Nm (ft-lb)
Z = Power take-off gear ratio
Mku = Torque at power take-off Nm (lb/ft)
Mmot, till. = Permissible engine torque Nm (ft-lb)
< = Less than

Power Requirements

The power **N** needed to drive the pump is proportional to the flow and working pressure and inversely proportional to the efficiency of the pump **η**.

Check that pump power curve, to see that it has the capacity needed to provide the calculated power **N**.

$$N = \frac{Q \times p}{600 \times \eta t}$$

N = Power kW (hp)
Q = Flow through pump l/min (quarts/min.)
p = Working pressure bar (psi)
ηt = Overall pump efficiency**(app. 0.95)**

$$\eta t = \eta v \times \eta hm.$$

Notes

All Rights Reserved

https://truckmanualshub.com/

Example 1 (Dump), Selecting Pump Size Clutch Dependent PTO

Operating conditions

Flow	60-80 l/min (63–85 quarts/min.)
Pressure:	230 bar (3335 psi)
Engine rpm:	800 rpm
PTO ratio:	1:1.53

Determine the Pump Speed

n = ne x Z=800 x 1.53 = 1200 rpm

Choosing the pump size

$$Q = \frac{D \times n \times \eta v}{1000} \triangleright \quad D = \frac{Q \times 1000}{n \times \eta v} \triangleright \quad \frac{70 \times 1000}{1200 \times 0,98} = 60\ cm^3/rotation$$

Select F1-61 and check torque and power.

Torque Requirement of the Pump

$$Mku = \frac{D \times p}{63 \times \eta hm} = \frac{59,5 \times 230}{63 \times 0,98} = 222\ Nm$$

Power Requirement of the Pump

$$N = \frac{Q \times p}{600 \times \eta t} = \frac{70 \times 230}{600 \times 0,95} = 28\ kW$$

Notes

All Rights Reserved

https://truckmanualshub.com/

Example 2 (General crane), Selecting Pump Size Clutch Independent PTO

Operating conditions

Flow	80 l/min (84 quarts/min.)
Pressure:	250 bar (3626 psi)
Engine rpm:	800 - 900 rpm
PTO ratio:	1:0.97

Determine the Pump Speed

n = ne x Z = 800 x 0,97 = 800 rpm

Choosing the Pump Size

$$Q = \frac{D \times n \times \eta v}{1000} \triangleright \quad D = \frac{Q \times 1000}{n \times \eta v} \triangleright \quad \frac{80 \times 1000}{800 \times 0,98} = 102\ cm^3\ /rotation$$

Select F1-101 and check torque and power.

Torque Requirement of the Pump

$$M = \frac{D \times p}{63 \times \eta hm} = \frac{102,9 \times 250}{63 \times 0,98} = 417\ Nm$$

Power Requirement of the Pump

$$N = \frac{Q \times p}{600 \times \eta t} = \frac{102 \times 250}{600 \times 0,95} = 45\ kW$$

Notes

All Rights Reserved

https://truckmanualshub.com/

Pump Types

The following pump types are available from MACK:

- Pumps with fixed displacement
- Pumps with variable displacement

Fixed Displacement Pump

This type of hydraulic pump is adapted for a single circuit system with fixed volume.

The fixed displacement pump consists internally of one or two single circuit(s), from the suction port to the pressure port(s).

Examples:

- HPE / HPG-F61 (Parker F1-61)
- HPE / HPG-F81 (Parker F1-81)
- HPE / HPG-F101 (Parker F1-101)
- HPE-T53 (Parker F2-53/53)
- HPE-T42 (Parker F2-42/42)

Variable Displacement Pump

This type of hydraulic pump is also adapted for a single circuit system, from the suction port to the pressure port, but with variable displacement. When installed in a load sensing system, the variable displacement pump (VP1) supplies the correct amount of flow required by the various work functions currently engaged. This means that the energy consumption and heat generated are minimized and much reduced in comparison with a fixed displacement pump used in the same system.

Examples:

- HPE / HPG-V120 (Parker VP1-120)

Notes

All Rights Reserved

https://truckmanualshub.com/

Delivery Conditions for Factory Installed Hydraulic Pumps

CAUTION

Hydraulic pumps must never be in use without oil flow in the hydraulic system. Failure to do so may result in component damage.

For Trucks with Transmission Mounted PTO:

To prevent the possibility to engage the hydraulic pump before definitive assembly, the following is done from factory:

- The PTO magnetic valve outlet is blocked up by a hexagon socket plug.

One or two valves is plugged, depending on type of PTO.

- The valve nipple, which the body builder should connect, is placed in a plastic bag and strapped on the end of the pneumatic hose at magnetic valve.

For Trucks with Engine Mounted PTO:

The hydraulic pump is always engaged; therefore sufficient lubrication is needed continuously for the pump.

- To establish lubrication during transport from factory to final assembly at body builder, **a temporary hydraulic transport kit** is added at the factory.
- The components in the kit (tank, hoses and unions) should be replaced; **they are not dimensioned for the working pressure** in the definitive hydraulic system.

  Note: The replacement must be performed in particularly clean conditions. Dirt and other contamination which finds its way into the hydraulic system could easily cause severe damage.

Temporary hydraulic transport kit

There are two different temporary kits, and the size of the oil reservoir differs:

1. Temporary hydraulic transport kit (for fixed displacement pumps)

Engine	Amount of oil if refill is needed
MP7/MP8 (HPE-FXX)	0.3 ± 0.05 liter (0.32 ± 0.05 quarts)

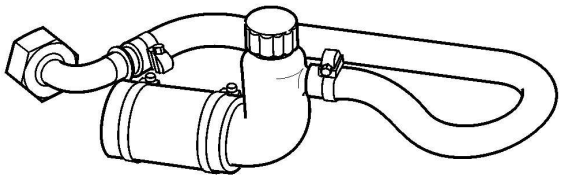

T9008337

All Rights Reserved

https://truckmanualshub.com/

2. Temporary hydraulic transport kit (for variable displacement or customer adaptation installed hydraulic pump)

Engine	Amount of oil if refill is needed
MP7/MP8	Minimum level on reservoir should be achieved after the engine is started. Approximately 10 liter (10.5 quarts).

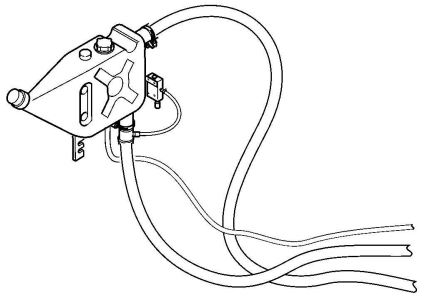

MP7 Engine

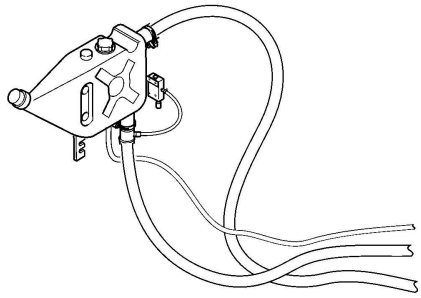

With Engine Mounted PTO (MP7 and MP8)

Connections to the Engine Mounted Hydraulic Pump

A Factory delivered Factory installed connection from the hydraulic pump. Dimension 25S (M36 x 2).

B Body builder Body builder's connection. Hose connection with 24° cone.

C Suction side Smallest external connection diameter see table below:

Hydraulic pump	Diameter X mm (inches)
PTES-FXX PTES-VXX HPE-V45 HPE-V75	50 (1.97)
HPE-FXX HPE-TXX HPG-FXX	63 (2.48)
HPE-V120 HPG-V120	75 (2.95)

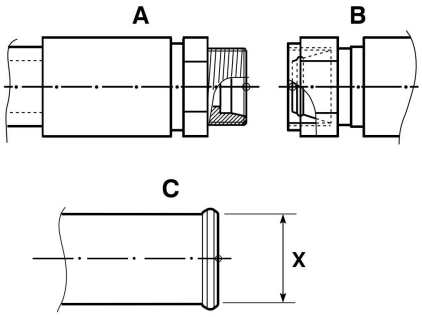

T9008408

X = smallest external connection diameter.

All Rights Reserved

https://truckmanualshub.com/

Installation Requirements for Hydraulic Pump at Final Assembly

CAUTION

Hydraulic pumps must never be in use without oil flow in the hydraulic system. Failure to do so may result in component damage.

Fixed displacement pump, HPE-FXX (F1 single flow)

- Remove the temporary oil reservoir kit, tank, fittings and hoses are not designed for use in high pressure installations.
- See to that enough oil flow (minimum 5l/min) is running in the final hydraulic system back to the hydraulic tank when the hydraulic pump is running unloaded. If not, a drain line must be installed from bypass valve to hydraulic tank entering below oil surface (to avoid “foaming” the oil).

Fixed displacement pump, HPE-TXX (F2 twin flow)

- Remove the temporary oil reservoir kit, tank, fittings and hoses are not designed for use in high pressure installations.
- The drain hose from bypass valve, supplied loose from factory, must be connected to hydraulic tank entering below oil surface (to avoid “foaming” the oil). Dimension of hose fitting is M12x1,5 DIN 20078N. It is allowable to shorten the drain hose, but a new fitting must be attached in a proper way.

Variable displacement pump, HPE-VXX (VP1)

- Remove the temporary oil reservoir kit, tank, fittings and hoses are not designed for use in high pressure installations.
- The bypass valve attached to the tank together with the hose between pump and by pass valve shall be kept and a drain hose should be connected between port “T” and hydraulic tank. It is allowable to shorten the drain hose between pump and bypass valve but a new fitting (M12x1,5 DIN 20078N) must be attached to fit onto fitting in bypass valve.
- The load signal on its way to port “LS” at the load sensing regulator on the hydraulic pump shall be connected in port “X” on the bypass valve as well.
- A drain line must be installed between port “T” on the hydraulic pump and the hydraulic tank since the load sensing regulator is not internally drained.

Permissible Pump Bending Torque

The hydraulic pump mounted to a power take-off causes bending torque at the power take-off.

A transmission mounted power take-off has the following maximum permissible torque:

PTR/PTRD/PTPT/PTR with AMT–D and AMT–F Transmission

PTO	Maximum bending torque ft-lb (Nm)
PTR/PTRD	30 (40)
PTPT-D	30 (40)
PTR	30 (40)

All Rights Reserved

https://truckmanualshub.com/

Calculation of Pump Bending Torque

Torque is calculated with the formula below:

$$M_b = m \times g \times A$$

Mb Bending moment at pump connection to power take-off (Nm).

m Pump weight (kg).

g Normal acceleration = 9.81 N/kg.

A Distance between pump center of gravity and anchorage on power take-off (m).

Note: This calculation method is used irrespective of PTO/pump location.

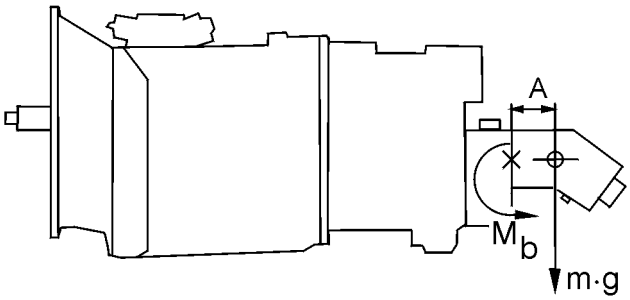

T9007591

Notes

All Rights Reserved

https://truckmanualshub.com/

Propeller Shaft Installation

If a power take-off with coupling flange is to be used, the pump is installed by means of a bracket, either on an existing cross-member or on the sub-frame. An alternative method is to install an extra crossmember and install the pump on it. In this case, it is important to design the crossmember so that it can withstand the forces involved when the chassis twists and bends. The best way to achieve this is to design the crossmember as a normal, intermediate crossmember.

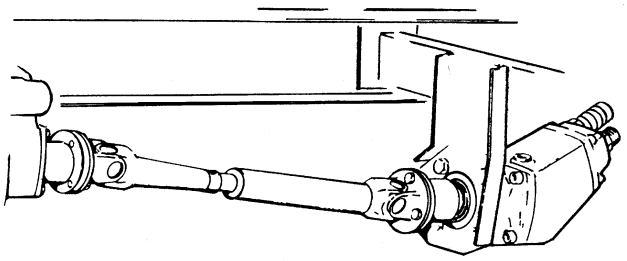

T9006112

The same requirements apply to power take-off propeller shafts as for drive line propeller shafts. For best service life, the true joint angle should be kept between 0.5 – 8 degrees.

It is important that angles β1 and β2 are equal.

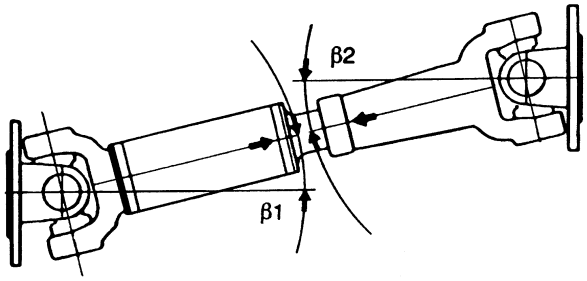

T9006113

Notes

All Rights Reserved

https://truckmanualshub.com/

Specifying the Pump

The PTO and the hydraulic pump must be selected to function properly in the application(s) for which the truck is intended. For example, a refrigeration unit must continue to operate while the vehicle is mobile, and the dump body must continue to operate while the vehicle is stationary. The PTO and pump also must have sufficient flow — dependent on oil flow, pressure, and the efficiency of the pump — to perform the designated work. The pump must be specified to achieve the flow of hydraulic oil required to ensure satisfactory operation of the equipment.

Input Data

The equipment driven by the hydraulic system requires a certain oil flow and working pressure. The components driving the hydraulic system must not be overloaded.

Several variables affect specification of the correct PTO/pump combination for the hydraulic system. Typically, this information can be found on the *hydraulic equipment manufacturer's* data sheet. Equipment power requirements can include:

- Oil flow (Q) in LPM (GPM).
- Oil pressure (p) in bar (psi).
- Permitted torque/power output of the PTO.
- Permitted speed of the pump.
- Truck operating speed (spreading).

Calculating pump displacement cc/rev (in³/rev)

$$D = \frac{Q \times 231}{Ne \times Z} \quad \text{or} \quad \frac{D \times Ne \times Z}{231}$$

Calculating PTO/pump torque Nm (ft-lb)

$$T = \frac{D \times p}{74}$$

Calculating PTO/pump power kW (hp)

$$P = \frac{Q \times p}{1680 \times n}$$

Checking maximum PTO/pump speed (rpm)

$$Np = Ne \times Z \quad \text{or} \quad Ne = \frac{Np}{Z}$$

All Rights Reserved

https://truckmanualshub.com/

Q	=	Flow	LPM (gpm)
Ne	=	Engine speed	(rpm)
Np	=	Pump speed	(rpm)
Z	=	PTO ratio	(0.60, 0.73, 0.91, 1.23, 1.30, 1.54, 1.62)
D	=	Dump displacement	cc/rev (in^3/rev)
p	=	Working pressure	bar (psi)
P	=	Power	kW (hp)
T	=	Torque	Nm (ft-lb)
μ	=	Efficiency	0.75 - 0.85 Gear Pump 0.90 - 0.95 Piston Pump

Pump Capacity, Displacement

The pump capacity or size (D = cc/rev (in^3/rev)) must be able to offer sufficient flow (Q = LPM (GPM)) for the proper operation of the equipment. The selection of the pump size depends on the desired flow, engine speed, and PTO ratio. A small pump can allow a large flow if the PTO ratio or engine speed is high enough.

Use the following to calculate pump size:

D Pump Size cc/rev (in^3/rev)

Q Flow LPM (GPM)

Ne Engine Speed (rpm)

Z PTO Ratio

$$D = \frac{Q \times 231}{Ne \times Z} \quad \text{or} \quad Q = \frac{D \times Ne \times Z}{231}$$

RECOMMENDATION

Select the highest possible PTO ratio and the smallest pump size that meet the requirements without exceeding the pump speed, pressure, and power limits.

All Rights Reserved

https://truckmanualshub.com/

PTO/Pump Power Requirements

The engine must provide sufficient power to drive the pump.

The power (P) required to drive the pump is in direct proportion to the flow and working pressure, and is in inverse proportion to the pump efficiency (n).

Use the following to calculate the engine power requirement:

P Power kW (hp)

Q Flow Through the Pump LPM (GPM)

p Working Pressure

n Pump efficiency

$$P = \frac{Q \times p}{1680 \times n}$$

Engine Operating Speed Recommendation

PTO Power Requirement hp (kW)	**Engine rpm (Ne)**
< 40 (30)	700 - 800
42 – 67 (31 - 50)	800 - 900
68 – 94 (51 - 70)	900 - 1000
> 95 (71)	>1000

Notes

All Rights Reserved

https://truckmanualshub.com/

Checking PTO Torque

A certain torque is required from the PTO on the pump shaft to drive the pump. This torque should be less than that which is permitted on the PTO itself.

Use the following to calculate the PTO torque:

T	Torque — Nm (ft-lb)
D	Pump Size — cc/rev (in³/rev)
p	Hydraulic System Pressure — bar (psi)
Tperm	Permitted Torque on PTO (< Engine Torque)

Note: If only the engine power curve is available, check as described in “PTO/Pump Power Requirements”, page 61 .

$$P = \frac{Q \times p}{1680 \times n} < Tperm$$

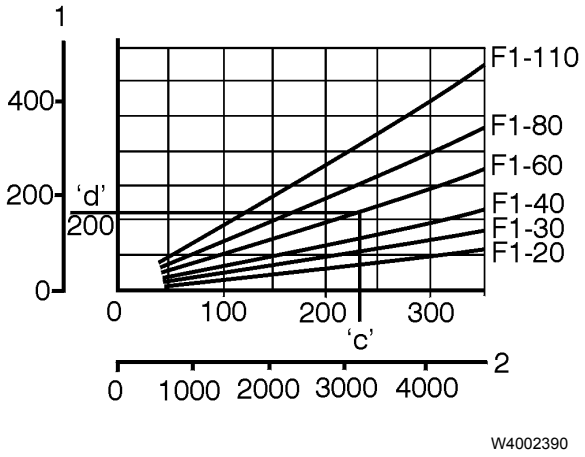

Torque Curve, Parker/VOAC Pumps

All Rights Reserved

https://truckmanualshub.com/

Speed Check

Make sure that the permitted speed of the pump (as stated by the pump manufacturer) is not exceeded.

The pump speed (Ne) is governed by the engine speed (Ne) and the PTO ratio (Z).

Use the following to calculate pump speed:

Np	Pump Speed/Minute
Ne	Engine Speed (rpm)
Z	PTO Ratio (%)

Constant speed during driving is obtainable with a variable pump. The engine speed (Ne) for a clutch-dependent PTO is often set to operate around 1000 rpm (engine). If the PTO is driven with an inappropriately low engine speed, an uneven flow can occur as the engine speed drops during loading.

$$Np = Ne \times Z \quad \text{or} \quad Ne = \frac{Np}{Z}$$

Power Requirements vs. Engine Speed

PTO Power Requirement hp (kW)	**Engine rpm (Ne)**
< 40 (30)	700 - 800
42 – 67 (31 - 50)	800 - 900
68 – 94 (51 - 70)	900 - 1000
> 95 (71)	>1000

Notes

All Rights Reserved

https://truckmanualshub.com/

Suction and Pressure Lines

The size (diameter and length) of the suction/pressure lines also will affect the function of the hydraulic system (see “Hydraulic Line Requirements”, page 65).

The suction line should be of sufficient diameter and minimum length without restrictions (pipe adapters) between the pump and the oil reservoir connection. A pressure line with insufficient diameter will create unnecessary pressure losses in the form of heat. A flow of 11.5 LPM (30 GPM) with a pressure drop of 9.65 bar (140 psi) will generate approximately 1.7 kW (5800 BTU).

Use a calculation sheet to determine the correct PTO/pump combination (see “Calculating/Selecting a PTO and Matching Pump”, page 64 .

Calculating/Selecting a PTO and Matching Pump

Customer _____

_____

Vehicle _____

Engine _____

Transmission _____

Equipment _____

1. Equipment flow demand	Q =	_____			lpm (gpm)
2. Working pressure	p =	_____	_____	_____	bar (psi)
3. PTO alternative ratio	Z =	_____ ,	_____ ,	_____	
4. Pump alternatives	D =	_____ ,	_____ ,	_____	
5. Engine working speed	Ne =	_____ ,	_____ ,	_____	rpm

Pump displacement cc/rev (in³/rev)

$$D = \frac{Q \times 231}{Ne \times Z} \quad \text{or} \quad \frac{D \times Ne \times Z}{231}$$

PTO/pump power kW (hp)

$$P = \frac{Q \times p}{1680 \times n}$$

PTO/pump torque Nm (ft-lb)

$$T = \frac{D \times p}{74}$$

All Rights Reserved

https://truckmanualshub.com/

Hydraulic Line Requirements

Suction Pipe/Line

The figures in the table show the minimum inside diameter without restrictions (pipe adapters) of a suction pipe from the tank into the pump needed to avoid cavitation (noise). Other parts of the system can be designed differently, depending on installation requirements.

Minimum Inside Diameter

VOAC F1 - Pump	**Inside Diameter of Suction Pipe**	
F1-61	38/50 mm	1.5/2.0 in
F1-81/101	50/65 mm	2.0/2.5 in

CAUTION

A suction line with insufficient diameter will create cavitation damage and low pump efficiency.

Pipe/Line Selection

To prevent cavitation (noise) damage and excessive pressure losses (heat), the inside diameter of the pipe must be the correct size. Do not exceed the maximum flow speeds.

Maximum Allowable Flow Speeds

Line Type	Pressure bar (psi)	Flow Speed m/s (ft/s)
Suction	—	0.45 – 1.07 (1.5 - 3.5)
Pressure	103 – 310 1500 - 4500)	3.05 – 4.88 (10 - 16)

CAUTION

A pressure line with insufficient diameter will create unnecessary pressure losses which will appear as heat. A flow of 113.5 LPM (30 GPM) with a pressure drop of 9.65 bar (140 psi) will generate approximately 1.7 kW (5800 BTU), which can cause abnormal wear and damage to components.

All Rights Reserved

https://truckmanualshub.com/

Select the smallest inside line diameter that meets the flow speed recommendations.

Recommended Inside Line Diameter

Fluid Flow	Flow Speed m/s (ft/s) at Indicated Inside Line Diameter				
LPM (gpm)	19.1 mm (0.75 in)	25.4 mm (1.00 in)	31.8 mm (1.25 in)	38.1 mm (1.50 in)	50.8 mm (2.00 in)
37.9 (10)	2.23 (7.3)	**1.25 (4.1)**	**0.79 (2.6)**	**0.55 (1.8)**	**0.3 (1.0)**
56.8 (15)	3.32 (10.9)	1.86 (6.1)	**1.19 (3.9)**	**0.82 (2.7)**	**0.46 (1.5)**
75.7 (20)	4.42 (14.5)	2.5 (8.2)	1.58 (5.2)	**2.0 (3.6)**	**0.61 (2.0)**
94.6 (25)	N/A	3.1 (10.2)	1.98 (6.5)	**1.37 (4.5)**	**0.79 (2.6)**
113.6 (30)	N/A	3.75 (12.3)	2.38 (7.8)	1.68 (5.5)	**0.91 (3.0)**

Pressure Pipe | **Suction Pipe**

Oil Reservoir Tank

As a guide, an oil reservoir tank with a capacity 1 or 2 times the pump flow/minute will be sufficient. For shorter periods of operation, a smaller capacity may be used.

Prior to installation, the oil reservoir must be cleaned to remove all manufacturing debris. The inside area should be treated with oil-resistant paint. Prior to filling the tank, the oil should be poured through a filter to eliminate any possibility of dirt entering the tank. An oil filter with a rating of 10 microns (absolute) should be installed in the tank or return line. Oil filters should be changed annually.

RECOMMENDATION

51 mm (2 in) suction line should be used between pump and reservoir (with no reducer fitting); suction line restrictions should be minimized.

RECOMMENDATION

51 mm (2 in) ball valve should be used as shut-off device whenever feasible.

All Rights Reserved

https://truckmanualshub.com/

Hydraulic Piston Pumps

Mack Trucks offers both single and twin-flow Parker hydraulic pumps, which can be driven in the following ways:

- Direct-driven pump – can be mounted directly on the PTO, either at the factory or by the body builder company, in accordance with the DIN 5462/ISO 7653 standard. All Parker F1 and F2 pumps can be direct mounted to either the transmission or engine PTO.
- Single driveshaft driven pump – can be driven by a driveshaft connected to the PTO SAE 1310/1410 flange and are typically mounted by the body builder company.

F1 and F2

Pump Frame Size	25	41	61	81	101	42 A	42 B	53 A	53 B
Displacement (cu.in/rev)	1.56	2.50	3.63	4.98	6.28	2.62	2.50	3.29	3.17
Max Continuous Pressure	3,600	3,600	3,600	3,600	3,600	5,000		5,000	
Max Intermittent Pressure	5,000	5,000	5,000	5,000	5,000	5,800		5,800	
Min Speed RPM @ Max Pressure Max	2700	2700	2700	2300	2300	2,550		2,550	
	2200	2100	1900	1750	1550	1800		1800	
Continuous Max Output Horsepower Intermittent	26.8	36.2	45.5	54.9	64.3	117		147	
	34.8	49.6	59.0	72.3	83.1	134		168	
Weight (lbs)	18.7	18.7	18.7	27.5	27.5	41.8		41.8	

W9114241

The F1 and F2 are piston pumps that are larger in size than the GP1, piston pumps are more efficient than gear pumps and therefore produce less heat during the operation.

Piston pumps are 97% efficient at ~1000 rpm.

All Rights Reserved

https://truckmanualshub.com/

F1 Pump Features:

- Higher self-priming speeds
- Operating pressures to 400 bar
- Higher overall efficiency
- Increased reliability
- Reduced noise level
- Easier to change direction of rotation
- Optimized commutation - low flow pulsations
- Installation above the reservoir level possible
- Smaller installation dimensions

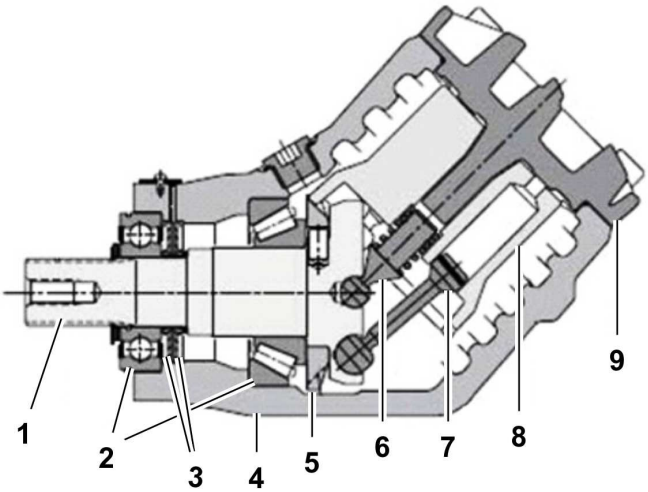

W9124202

1. Input shaft
2. Bearings
3. Shaft seals
4. Housing
5. Timing gear
6. Barrel support
7. Piston with piston ring
8. Cylinder barrel
9. End cap

All Rights Reserved

https://truckmanualshub.com/

Pump Rotation Change RH to LH (Applies to F1 Series Only)

Recommend holding pump in vise: Follow steps (a) through (e) below.

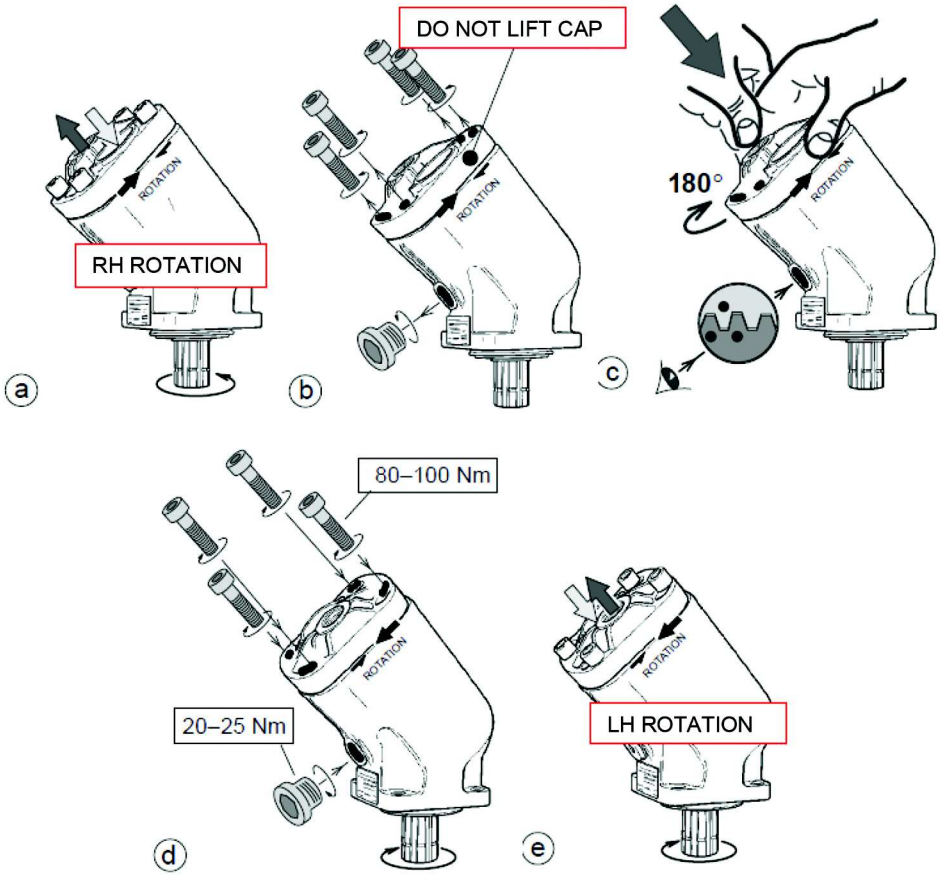

W9122747

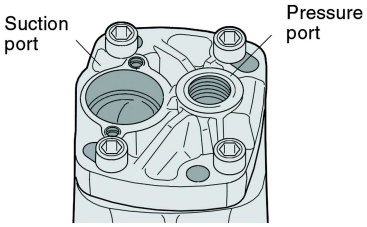

W9124467

Left hand rotation

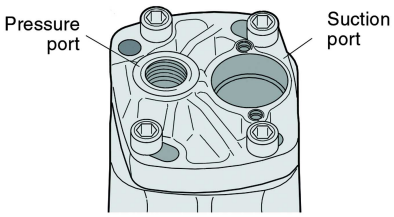

W9124468

Right hand rotation

All Rights Reserved

https://truckmanualshub.com/

F2 Pump Features:

Series F2 is a further development of the twin-flow version of series F1, the very first bent-axis truck pump on the market to feature two entirely independent flows. With a suitable build-up of the hydraulic system, the main advantage with a twin-flow pump is that three different flows can be provided at the same engine speed. The twin- flow pump makes it possible to further optimize the hydraulic system and offers:

- Less energy consumption
- Reduced risk of system overheating
- Lower weight when compared to installation of two pumps
- Easier installation
- Standardized system solutions

The twin-flow pump makes it possible to operate two work functions that are independent of each other while allowing higher speed and an increased operating precision. Another requirement can be a large and a small flow, or two equal flows. All of these alternatives are possible with the twin-flow pump.

The pump can be utilized to provide one flow at high system pressure, and, as soon as the pressure has decreased sufficiently, add the flow from the other circuit. This eliminates the risk of exceeding the PTO power rating and, at the same time, provides an optimal driving function.

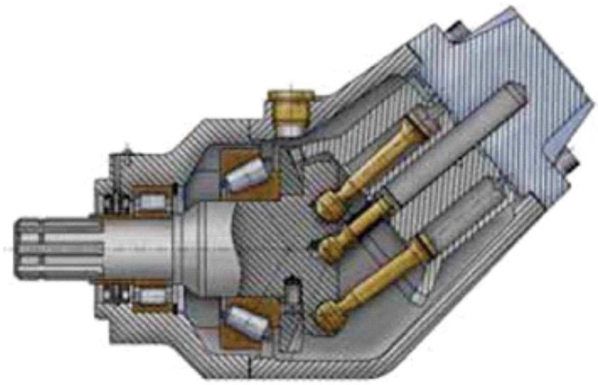

W9114243

Notes

All Rights Reserved

https://truckmanualshub.com/

Parker provides charts to determine the most suitable pump for a PTO operation; the charts are in metric so a conversion to conventional US units is required.

1 bar = 14.503 psi
1 Liter = .26417 gallons
1 kW = 1.3404 hp

Pump Flow (gpm) at Pump Speed (rpm)							
Pump	**1000 rpm**	**1200 rpm**	**1400 rpm**	**1600 rpm**	**1800 rpm**	**2000 rpm**	**2200 rpm**
F1-25	6.8	8.1	9.4	10.8	12.2	13.5	14.9
F1–41	10.8	12.9	15.1	17.2	19.4	21.6	23.7
F1–61	15.7	18.9	22.0	25.1	28.3	31.4	34.6
F1–81	21.6	25.9	30.2	34.5	38.8	43.1	———
F1–101	27.0	32.4	37.8	43.2	48.5	———	———
F2-42/42	11.3/10.8	13.6/13.0	15.9/15.2	18.1/17.3	20.4/19.5	———	———
F2-53/53	14.3/13.7	17.1/16.5	20.0/19.2	22.9/22.0	25.6/24.7	———	———

*Refer to the specific Product Information bulletins in TM2 for pump housing dimensions and performance.

Note: A new gasket is necessary, when installing a new pump. The gasket is available as part number 20551226.

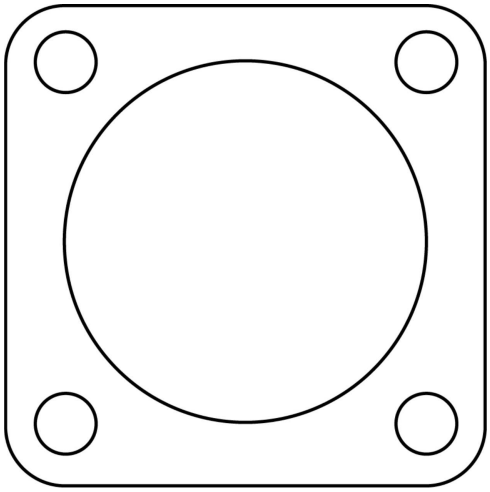

W9122748

All Rights Reserved

https://truckmanualshub.com/

Pump Bearing Lift

Bearing life is dependent on how the pump is installed on the PTO as shown in the illustrations below.

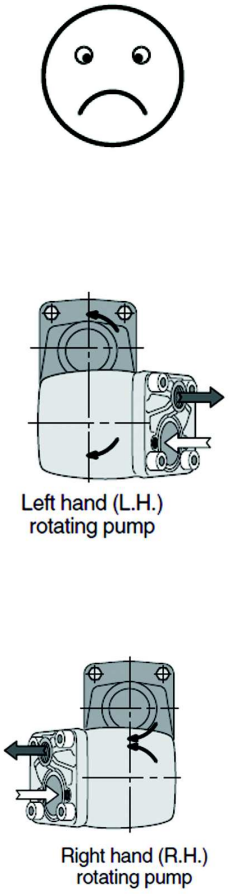

Fig. 1.

Bearing life is dependent on how the pump is installed on the PTO as shown in the illustrations below.

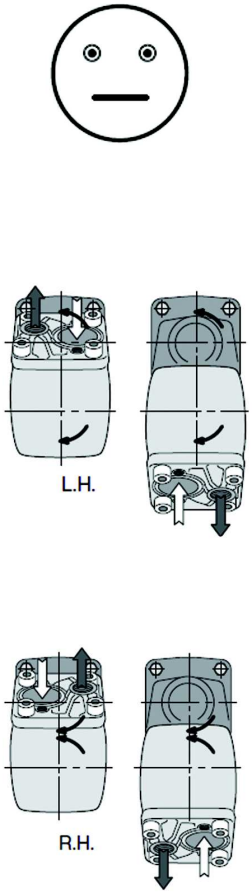

Fig. 2.

Parker Hannifin will assist in determining bearing life in a particular application.

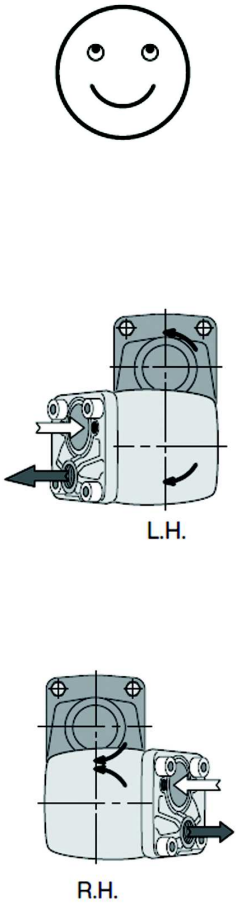

Fig. 3.

All Rights Reserved

https://truckmanualshub.com/

Supplier PTO/Pump Literature

For additional PTO/pump information and specifications, contact the appropriate PTO/pump manufacturer.

Bezares

Contact Bezares at 888-663-1786 for pump literature or visit the following site:
www.pto-us.com

Muncie

Contact Muncie at 800-367-7867 for pump literature or visit the following site:
www.munciepower.com

Parker/Chelsea

Contact Paker/Chelsea at 662-895-1011 for pump literature or visit the following site:
www.parker.com

Permco

Contact Permco at 800-626-2801 for pump literature or visit the following site:
www.permco.com

Notes

All Rights Reserved

https://truckmanualshub.com/

BPV-F1 Bypass Valve

An F1 pump supplied with a bypass valve can be utilized in applications where the pump is operating constantly i.e. when the pump is driven from the crankshaft through a driveshaft or mounted directly to a DIN 5462 REPTO or it can be installed on a PTO. In most cases, the bypass valve allows the pump to be driven at max engine rpm during transportation at no load. This prevents pump cavitation and high heat generation which may otherwise be encountered at large flows. The BPV valve connects the outlet and inlet ports of the pump, and only a small oil flow goes through the system to the tank. The valve is installed directly on top of the pump port surface with ’banjo’ fittings. As the BPV valve is symmetrical it can be ’turned 180°’ to suit either left hand or right hand pump rotation, or to prevent interference with chassis components. The valve can only be engaged or disengaged (through a 12 VDC solenoid) at no-load system pressure.

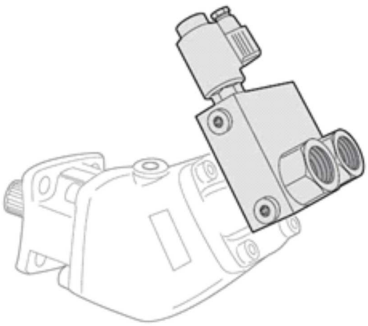

W9114244

Bypass Valve			
Model	**Pump Application**	**Parker Part No.**	**Mack Part No.**
BPV-F1-25	F1-25	3787712	21418975
BPV-F1-25	F1-41, F1-51, F1-61	3787047	21230082
BPV-F1-81	F1-81, F1-101	3787048	21230083
BPV-F2	F2-42, F2-53	3781851	20374479

All Rights Reserved

https://truckmanualshub.com/

BPV-F1-25 and -81 Bypass Valve

The bypass valve is mainly utilized in applications where the F1 pump is driven from the crank-shaft through a driveshaft, or when it is installed on a REPTO. The BPV bypass valve should be engaged during transportation when the pump is operating constantly and the engine is running at max rpm; the hydraulic system is not sized for the large flow that would otherwise go through it. The BPV valve substantially reduces the energy loss during transportation. The valve installs directly on top of the pump end cap with a pressure port ’banjo’ fitting and an inlet port spacer bushing with two cap screws; refer to the illustration below. As the BPV valve is symmetrical, it can be ’turned 180°’ to prevent interference with chassis components; it can be utilized for either left hand or right hand pumps. The valve function must only be activated or released (by means of a 12V VDC solenoid) at no-load (below 290 psi) system pressure.

Important Information

In order to prevent heat build-up in the pump during transportation, it is important that at least 1.3 gal/min comes out of the filter at ’q’ (refer to the schematic). This applies to an "open center” system when the valve is in the bypass mode (non-activated solenoid).

Note: a) If the flow at ‘q’ is less than 1.3gal/min (caused e.g. by high pressure drop in the main system) when the valve is in the bypass mode.
b) If the hydraulic system is of the ’closed center’ type, then an external drain line must be installed from the bypass valve drain port directly to tank as shown in the schematic; a drain kit is available.

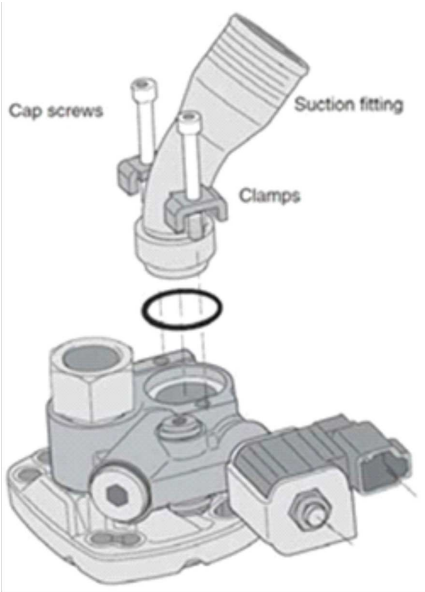

W9114245

All Rights Reserved

https://truckmanualshub.com/

Hydraulic Wet Kits

Use of the Parker F1, F2 and GP1 pumps requires components that are not traditionally installed into NA truck hydraulic systems.

1) To modulate the flow of oil so that the operation of the hydraulic system can be regulated traditional systems use a control valve that is incorporated into the pump assembly. The Parker F1, F2 and GP1 require the addition of an oil flow regulator to be installed in the circuit remotely from the pump to control the flow of the oil from the pump to the system actuator.

2) Parker F1 and F2 pumps run very tight tolerances to achieve the 97% pump efficiency so the system requires that a filter element be installed into the return line to filter out debris as the oil returns to the tank. A pressure gauge is recommended to be installed in the filter housing to indicate when the filter element has trapped sufficient debris that it restricts the flow of oil back to the tank and requires the replacement of the filter.

Installation and Start-up for F1 and F2 Hydraulic Pumps

Fluids — Need to operate with a high quality, mineral based hydraulic oil. Type HLP hydraulic oil is suitable, as well as biologically degradable fluids like natural and synthetic esters and polyaphaolefins.

- SS 15 54 34
- SMR Hydraulic Oil Standard 1996-2

*Contact Parker Hannifin for further information.

Start-up — Make sure the entire hydraulic system is clean and the pump is filled (to at least 50%) with a recommended hydraulic fluid, as the internal leakage does not provide sufficient lubrication at start-up.

Drain Line — Fixed displacement pumps don’t need an external drain line as they are internally drained. However, when the pump is mounted on an engine PTO, it is recommended to mount a drain line from the bypass valve directly to the oil tank if in doubt.

Notes

All Rights Reserved

https://truckmanualshub.com/

High Pressure Hose

These hoses must be designed to withstand the high pressure in the hydraulic system. When installing a high pressure hose:

- Make sure the hoses are not twisted when connected.
- Make sure the hoses are long enough.
- Strive to get as few bends as possible on a hose.
- Avoid kinks by using correct unions.

Hydraulic Pump Flow MP7 Engine, (GPM) at Pump Speed (rpm) REPTO

Parker/VOAC Pump[1]	REPTO Ratio	Pump Speed (rpm)					
		800 L/min (gpm)	900 L/min (gpm)	1000 L/min (gpm)	1200 L/min (gpm)	1400 L/min (gpm)	1600 L/min (gpm)
F1–61	1:1.08	51 (13.5)	58 (15.3)	64 (16.9)	77 (20.3)	90 (23.8)	103 (27.2)
F1–81	1:1.08	71 (18.8)	79 (20.9)	88 (23.2)	106 (28.0)	123 (32.5)	141 (37.2)
F1–101	1:1.08	89 (23.5)	100 (26.4)	111 (29.3)	133 (35.1)	156 (41.2)	178 (47.0)
F2–42/42	1:1.08	37/35 (9.8/9.2)	42/40 (11.1/ 10.6)	46/44 (12.2/ 11.6)	56/53 (14.8/ 14.0)	65/62 (17.2/ 16.4)	74/71 (19.5/ 18.8)
F2–53/53	1:1.08	47/45 (12.4/ 11.9)	52/51 (13.7/ 13.5)	58/56 (15.3/ 14.8)	70/67 (18.5/ 17.7)	82/79 (21.6/ 20.9)	93/90 (24.6/ 23.8)

Hydraulic Pump Flow MP8 Engines, (GPM) at Pump Speed (rpm) REPTO

Parker/VOAC Pump[1]	REPTO Ratio	Pump Speed (rpm)					
		800 L/min (gpm)	900 L/min (gpm)	1000 L/min (gpm)	1200 L/min (gpm)	1400 L/min (gpm)	1600 L/min (gpm)
F1–61	1:1.26	51 (13.5)	58 (15.3)	64 (16.9)	77 (20.3)	90 (23.8)	103 (27.2)
F1–81	1:1.26	71 (18.8)	79 (20.9)	88 (23.2)	106 (28.0)	123 (32.5)	141 (37.2)
F1–101	1:1.26	89 (23.5)	100 (26.4)	111 (29.3)	133 (35.1)	156 (41.2)	178 (47.0)
F2–42/42	1:1.26	37/35 (9.8/9.2)	42/40 (11.1/ 10.6)	46/44 (12.2/ 11.6)	56/53 (14.8/ 14.0)	65/62 (17.2/ 16.4)	74/71 (19.5/ 18.8)
F2–53/53	1:1.26	47/45 (12.4/ 11.9)	52/51 (13.7/ 13.5)	58/56 (15.3/ 14.8)	70/67 (18.5/ 17.7)	82/79 (21.6/ 20.9)	93/90 (24.6/ 23.8)

All Rights Reserved

https://truckmanualshub.com/

Parker Hannifin Pressure Fittings

A special pressure fitting is required to convert the threads in the pump from BSPP to SAE J37. These fittings are available from Mack Trucks under the following part numbers.

Mack Part Number	Pump Size	BSPP Thread	Tube Size mm (in)
4643–12F40MXS	F1–41, F1–51, F1–61 F2–52 / 52, F2–42 / 42 GP1–23, GP1–41	3/4 x 14	19 (3/4)
4643–16F40MXS	F1–81, F1–101	1 x 11	25 (1)
4643–1620F40MXS	GP1–60, GP1–80, GP1–100	1 1/4 x 11	25 (1)
4643–20F40MXS	GP1–60, GP1–80, GP1–100	1 1/4 x 11	30, 32 (1 1/4)
4643–24–20F40MXS	GP1–60, GP1–80, GP1–100	1 1/4 x 11	38 (1 1/2)

Hydraulic Pumps Offered By Mack

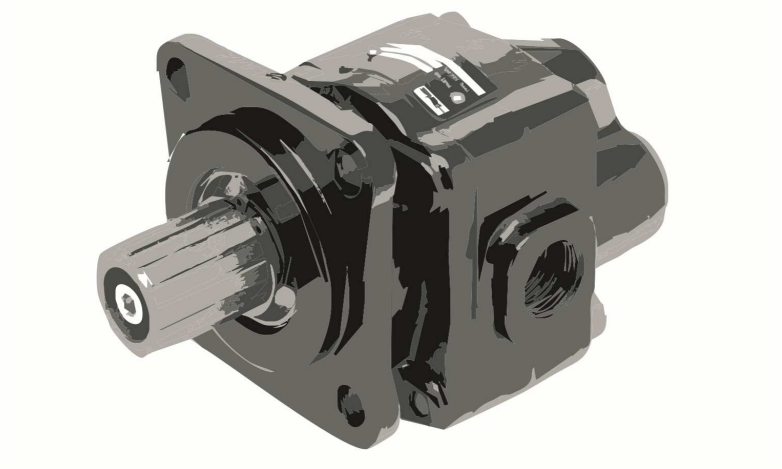

W9133804

Parker Gear Pumps		
Model	**Parker Part No.**	**Mack Part No.**
GP1–23	3789383	22045713
GP1–41	3789384	22045714
GP1–60	3789385	22045715
GP1–80	3789386	22045716
GP1–100	3784184	22725227

All Rights Reserved

https://truckmanualshub.com/

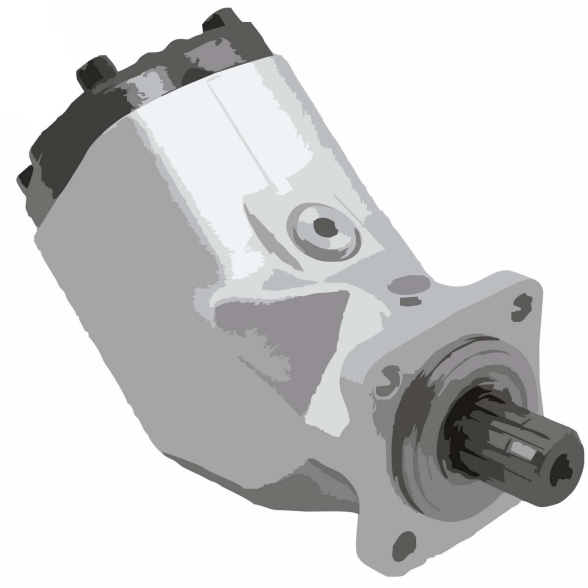

W9133805

Parker Bent Axial Piston Fixed Pumps		
Model	**Parker Part No.**	**Mack Part No.**
F1–25	3781524	20455918
F1–41	3781540	20392941
F1–51	3781550	20392942
F1–61	3781560	20392943
F1–81	3781580	20392944
F1–101	3781600	20392945
F2–42 / 42	3785783	20909025
F2–53 / 53	3783573	20458341

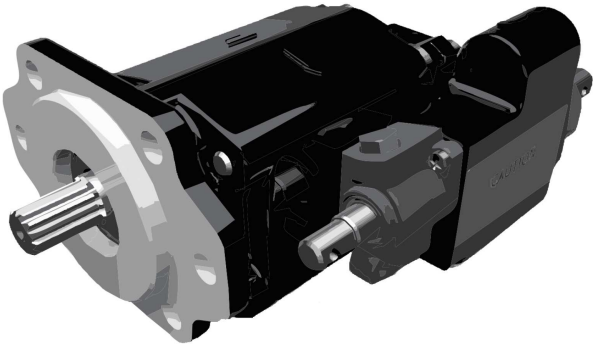

W9133806

Parker Dump Pump		
Model	**Parker Part No.**	**Mack Part No.**
G102	3089310913	22745915

Note: Pump specifications can be found in the Pump Speed Calculator or at www.parker.com

All Rights Reserved

https://truckmanualshub.com/

Flow Pump, Exploded View

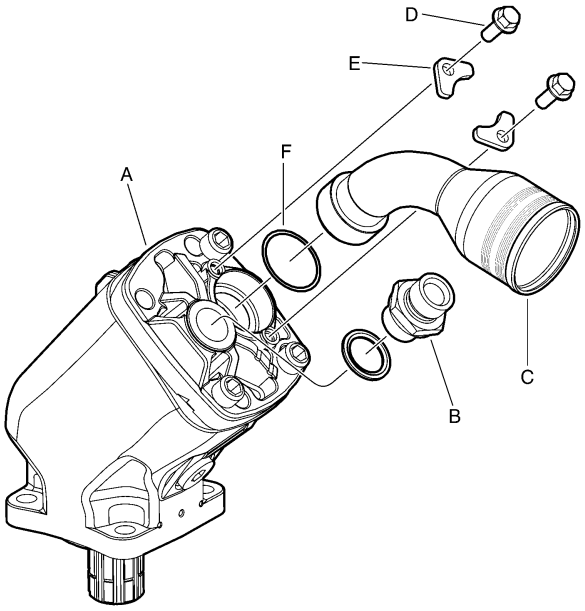

W4003046

Flow Pump, Exploded View	
A	Pump Assembly
B	Pressure Fitting
C	Suction Tube Kit
D	Screw, included in Suction Tube Kit
E	Clamp, included in Suction Tube Kit
F	O-ring, included in Suction Tube Kit

All Rights Reserved

https://truckmanualshub.com/

PTO Fittings

Straight Fitting			
Part Numbers	A mm (in)	B mm (in)	C mm (in)
85100131	17 (0.6)	136 (5.4)	50 (2)

45 Fitting			
Part Numbers	A mm (in)	B mm (in)	C mm (in)
85100585	67 (2.6)	110 (4.3)	50 (2)

90 Fitting			
Part Numbers	A mm (in)	B mm (in)	C mm (in)
85114334	135 (5.3)	83 (3.3)	50 (2)
85114335	147 (5.8)	103 (4.1)	63 (2.5)

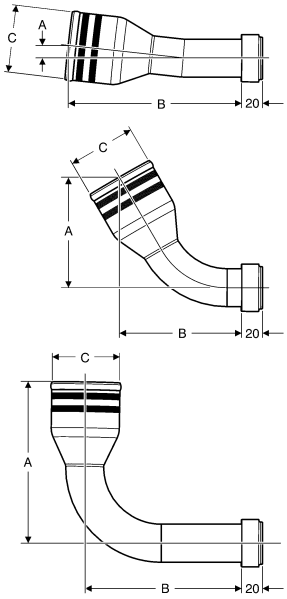

W4003045

Images from top to bottom:

Straight Fitting
45° Fitting
90° Fitting

Note: All pumps have a right hand direction of rotation as seen from the PTO (looking to the front of the vehicle).

Note: All suction fittings come in kit form. Includes clamps, bolts, and O-ring.

All Rights Reserved

https://truckmanualshub.com/

Rear-mounted PTO

Rear Engine PTO Unit Identification

Unit Identification Stamping

For the Optional Ratio PTO unit, the following model code information represents the identification stamping on the left side of the PTO housing. As the unit is mounted on the rear of the transmission, the stamping will appear upside down. For the direct drive PTO unit, the stamping is not provided as this unit only has one ratio available.

Refer to the inset below for the Optional Ratio unit:

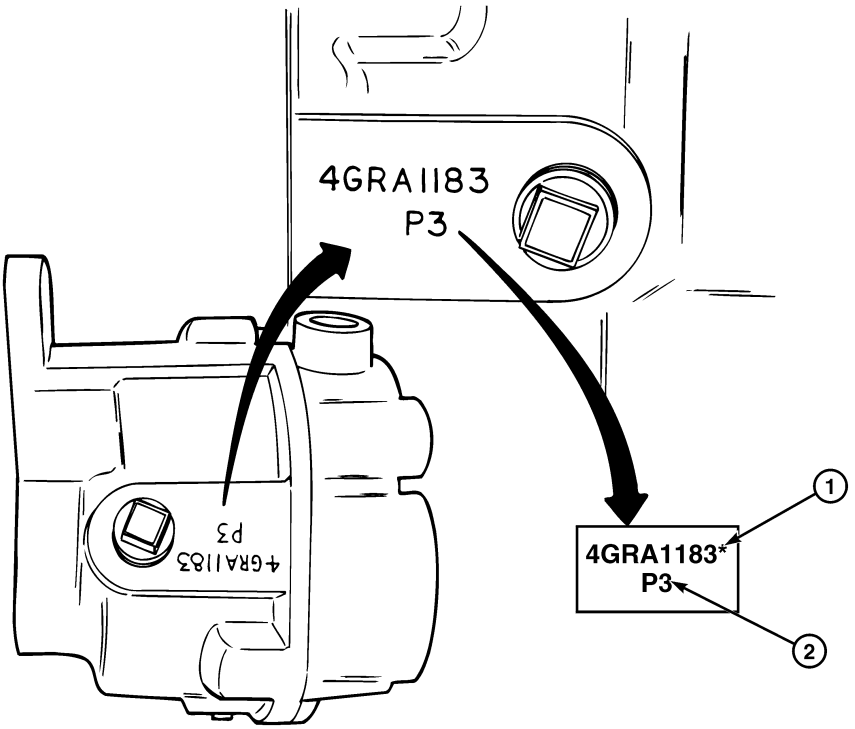

305962a

W0041007

Location of Identification Stamping on Left Side of Case

1 **RMPTO Assembly (Part) Number**

* = digits may vary

1 **Assembly Ratio Level**

— No P code = 1.47 ratio

— P2 = 1.94 ratio

— P3 = 2.20 ratio

All Rights Reserved

https://truckmanualshub.com/

PTO Programming

PTO Types

ESC (Engine Speed Control): This is a function to maintain engine speed regardless of engine load. Think of it as cruise control for the engine -only instead of maintaining a steady vehicle speed, it is maintaining engine speed. It is most often used to provide steady engine speed when operating auxiliary equipment such as hydraulic pumps or compressors

There are two types of PTO engine speed control used in MACK Trucks, Inc.

“Electronic Hand Throttle”(EHT/PTO 0): This type of engine speed control is standard equipment; it is initiated and controlled using the cruise control "ON/OFF", "RESUME/Accel", and "SET/Decel” switches. Manufacturers refer to this function by different names -Mack calls it "Electronic Hand Throttle" (EHT), In this manual we will refer to it as “EHT”, even though some of the parameters for programming this function will refer to it as "high idle" or PTO 0. (Note that in the North American market, the term "high idle" usually refers to the maximum possible engine speed under no-load conditions).

“Wired” PTO: This type PTO is most commonly associated with the engagement of engine or transmission “Wired” PTO driven accessories, where the user wishes to “remotely” activate the engine speed control function. It is usually accomplished by wiring the auxiliary equipment to the PTO function controller (VECU) so that engaging the equipment will automatically activate engine speed control (ESC).

PTO Functions with MACK Trucks, Inc.

A "PTO" icon will appear in the instrument cluster (conventional and later model MRU/LEU) only when ’Remote’ (’Wired’) PTO input is active. No icon will appear while in Electronic Hand Throttle (EHT).

Electronic Hand Throttle (EHT)

The VECU reads the cruise control switch states, and activates engine speed control (ESC) when conditions are met. These conditions are programmable in the VECU and might include a maximum vehicle speed, park brake set or not, etc. The engine ’set speed’ is selected by either pressing the cruise control "SET" button and then “Accel” button, or by using the accelerator pedal to get the desired engine speed and pressing the cruise control "SET" buttons. Once the PTO function is active, the Accel or Decel buttons can be used to adjust the PTO engine speed (within limits). Preprogrammed set speed or single speed control is also an option.

Physical/Wired PTO

This type of PTO speed control works similarly to EHT, except that the function is activated by applying an external signal to a dedicated PTO input pin on the VECU. The set speed can be adjusted using the cruise control Accel or Decel buttons or preprogrammed. Generally either PTO 1 or PTO 2 are used.

Commonly, the auxiliary device (PTO pump, bypass solenoid, etc.) is wired so as to be activated by the same switch which initiates the engine speed control function. This means that the hardware will be engaged whenever the switch is on, even if the engine speed is not being controlled (the hardware does not know whether the engine is running or not). There also is no protection against an input switch that has been accidentally activated. Therefore the VECU has a sub-function. It is possible to prevent engagement of the auxiliary equipment until certain conditions are met (park brake set, engine speed within a certain range, etc). This output is primarily controlled through the PTO 1 input.

Note: For a *m*Drive transmission the VECU enables a Transmission mounted PTO through the VECU output function. Therefore, the VECU must receive the PTO 1 input switch signal. The VECU passes this on over the J1939 databus to the TECU, depending on optional conditions.

Note: The Allison Transmission also provides a controlled output.

All Rights Reserved

https://truckmanualshub.com/

PTO Programming

Electronic Hand Throttle(EHT)/High Idle/PTO 0

Worksheet 1, EHT

Step:	Action:	Set VECU Parameter:	Allowable Range:	Default Value:	Next Step:
A	**Under what Park brake conditions will the PTO 0/EHT be used:**				
	Stationary Only (with Parking Brake set):	**AZG** = 1	0–1	**1**	B
	While moving, or do not want to require PB set:	**AZG** = 0	0–1	**1**	B
B	**What affect should Service Brake have?**				
	Service brake should have no effect on EHT:	**XP** = 0	0–1	**1**	C
	Service brake should dropout control:	**XP** = 1	0–1	**1**	C
C	**What affect should Clutch Pedal have?**				
	Pressing pedal will drop out control :	**BYR** = 2 **BYT** = 2	0–1–2	**2**	D
	Pressing Clutch has no effect:	**BYR** = 0 **BYT** = 0	0–1–2	**2**	D
D	**What affect should drive position on automatics have?**				
	Control only works in Neutral:	**BYM** = 1 **BYO** = 1	0–1–2–3		E
	Control works in Drive or Reverse also:	**BYM** = 0 **BYO** = 0	0–1–2–3		E
E	**What affect should accelerator pedal have?**				
	accelerator pedal can override set speed.	**DXH** = 0	0–1–2	**0**	F
	accelerator pedal will be ignored while control is active.	**DXH** = 1	0–1–2	**0**	F
F	**Should the set speed be adjustable with buttons?**				
	Yes, Accel/Decel can change set speed.	**BXX** = 2	0–1–2	**2**	G
	No, Pressing Set/decel causes jump to set speed. This is single speed control.	**BXX** = 0	0–1–2	**2**	H
G	**When control is started (Set/decel pressed) what should happen?**				
	Set speed will be current engine speed.	**FGO** = 0	0–1	**0**	I
	Set speed will jump to programmed set speed. (ANE - But still adjustable with buttons.)	**FGO** = 1	0–1	**0**	H
H	**What set speed?**	**ANE**	500 ~ 2500 RPM	600 RPM	I
I	**What should be the maximum allowed engine speed when trimming EHT set speed?**	**AND = desired max. adjustable speed**	500 ~ 2500 RPM	2500 RPM	J
J	**What should happen at the max engine speed?**				
	Control stops at this speed. (drops to idle unless overridden by accelerator pedal)	**FGL** = 1 = yes, dropout	0–1	**1**	K

All Rights Reserved

https://truckmanualshub.com/

Step:	Action:	Set VECU Parameter:	Allowable Range:	Default Value:	Next Step:
	This is the maximum speed regardless of buttons or accelerator pedal while EHT is active.	**DXM** = 1	0–1	**1**	K
	This is just the limit of set speed. (Note that the state of FGL also affects PTO 1 & 2)	**FGL** = 0 **DXM** = 0	0–1	**1**	K
K	**At what road speed should EHT control drop-out? What is the highest road speed to be able to activate EHT?**	**BYE** **BYG**	0 ~ 250 km/h (0—150 mph)	16 km/h (10 mph)	L
L	**Speed adjustments.**				
	While Accel or Decel are held this is the rate of change.	**BXE** **BXF**	0-250 RPM	50 RPM	DONE
	While Accel or Decel are stabbed this is the step change in RPM	**RT** **BXI**	0-250 RPM	50 RPM	DONE
	Set speeds will be held to the nearest multiple of FGF. (FGE affects all engine speed control)	**FGE** = 1 **FGF** = **RPM**	0–1	FGE = 0 FGF = 50 RPM	DONE

Notes

All Rights Reserved

https://truckmanualshub.com/

VECU PTO SETUP

If equipment triggered engine speed control is desired, input should be wired to PTO 1 or 2 or, in limited situations, 3 or 4. The worksheet below shows how to set up further features.

Definitions:

Temporary Dropout: These are dropout conditions which disable engine speed control and allow engine speed to fall to idle. However when the condition is removed engine speed will ramp to previous set speed. Standard dropout conditions require reinitializing of control inputs (PTO on, Cruise on and/or set button pressed) to restart control.

Driveshaft PTO: This is a PTO where the PTO drive is after the transmission output shaft speed sensor, i.e., on a split shaft. The VECU can suppress road speed signals (thereby stopping odometer accumulation) while the vehicle is not actually moving if the PTO feedback is input to PTO 2.

Worksheet 2, Part 1 - PTO1 Engine Speed Control SETUP

Step:	Action:	Set VECU Parameter:	Allowable Range:	Default Value:	Next Step:
A	**Under what brake conditions will the PTO1 be used:**				
	Activation condition on brakes	**BYJ** = 2 **BYL** = 2	0–1–2–3–4	**2**	B
	Service brake released (Ignore park brake)	**BYJ** = 0 **BYL** = 0	0–1–2–3–4	**2**	B
	Park brake set (Ignore service brake)	**BYJ** = 3 **BYL** = 3	0–1–2–3–4	**2**	B
B	**What affect should Clutch Pedal have?**				
	Pressing pedal will drop out control	**BYQ** = 2 **BYS** = 2	0–1–2	**2**	C
	Pressing Clutch has no effect	**BYR** = 0 **BYT** = 0	0–1–2	**2**	C
C	**What affect should drive position on automatics have?**				
	Control only works in Neutral.	**BYN** = 1 **BYP** = 1	0–1–2–3		D
	Control works in Drive or Reverse also.	**BYN** = 0 **BYP** = 0	0–1–2–3		D
D	**What affect should accelerator pedal have?**				
	accelerator pedal can override set speed.	**DXJ** = 0	0–1–2	**0**	E
	accelerator pedal will be ignored while control is active.	**DXJ** = 1	0–1–2	**0**	E
E	**What inputs activate PTO 1 control?**				
	Cruise control switch On, PTO 1 input High, press set button.	**FFA** = 0	0–1–2	**0**	F
	Cruise control switch On, PTO 1 input High	**FFA** = 2	0–1–2	**0**	F
	PTO 1 input High	**FFA** = 1	0–1–2	**0**	F
F	**Should the set speed be adjustable with buttons?**				
	Yes, Accel/Decel can change set speed.	**FDR** = 2	0–1–2	**2**	G

All Rights Reserved

https://truckmanualshub.com/

Step:	Action:	Set VECU Parameter:	Allowable Range:	Default Value:	Next Step:
	No, Pressing Set/decel causes jump to set speed. This is single speed control.	**FDR** = 0	0–1–2	**2**	I
G	**Speed adjustments.**				
	While Accel or Decel are held this is the rate of change.	**DTG** **DTH**	0-250 RPM	50 RPM	H
	While Accel or Decel are stabbed this is the step change in RPM	**FCL** **FCQ**	0-250 RPM	50 RPM	H
	Set speeds will be held to the nearest multiple of FGF.	**FGE** = 1 **FGH** = **RPM**	0–1	FGE = 0 FGF = 50 rpm	H
H	**When control is started what should happen?**				
	Set speed will be current engine speed	**FGQ** = 0	0–1	**0**	J
	Set speed will jump to programmed set speed.	**FGQ** = 1	0–1	**0**	I
I	**What set speed?**	**BXJ**	500 ~ 2500 RPM	600 rpm	J
J	**What should be the maximum allowed engine speed when trimming PTO 1 set speed?**	**BXU** = **desired max. adjustable speed**	500 ~ 2500 RPM	2500 RPM	K
K	**What should happen at the max engine speed?**				
	Control stops at this speed. (drops to idle unless overridden by accelerator pedal)	**FGL** = 1 = **yes, dropout**	0–1	**1**	L
	This is the maximum speed regardless of buttons or accelerator pedal while PTO 1 is active.	**FDE** = 1	0–1	**1**	L
	accelerator Pedal can override max engine speed.	**FDE** = 0	0–1	**1**	L
	This is the limit of set speed. (Note that the state of FGL also affects PTO 0 & 2).	**FGL** = 0	0–1	**1**	L
L	**What should happen at maximum road speed?**				
	Control should dropout at this speed.	**BYD** **BYF**	0 ~ 250 km/h (0–150 mph)	161 km/h (100 mph)	M
	Engine power should be controlled to limit to this speed. This limit will be active regardless of engine speed control activation conditions while PTO 1 input is high.	**FRO** = 1 **EAQ** = **ROAD SPEED**	0 ~ 250 km/h (0–150 mph)	161 km/h (100 mph)	M
M	**Speed adjustments.**				
	While Accel or Decel are held this is the rate of change.	**DTG** **DTH**	0-250 RPM	50 RPM	N
	While Accel or Decel are stabbed this is the step change in RPM.	**FCL** **FCQ**	0-250 RPM	50 RPM	N
	Set speeds will be held to the nearest multiple of FGH. (FGE affects all engine speed control).	**FGE** = 1 **FGH**	10–100 RPM	FGE = 0 FGH = 50 rpm	N

All Rights Reserved

https://truckmanualshub.com/

Step:	Action:	Set VECU Parameter:	Allowable Range:	Default Value:	Next Step:
N	**Optional Temporary Dropout conditions.** Examples below – more available				
	Control dropped out while service brake pressed.	**FFH** = 4	0–1–2–3–4–5	2 (not used)	
	Control dropped out until service brake pressed.	**FFH** = 3	0–1–2–3–4–5	2 (not used)	
	Control dropped out while clutch pressed	**FGE** = 2	0–1	0 (not used)	
	Control dropped out until A17 high (PTO 4) Note: this pin may not be available for this function. Check the “DCL” connector.	**FFT** = 4	0–1–2–3–4–5–6–7–8	0 (not used)	
	Control dropped out while B21 high (PTO 3) Note: this pin may not be available for this function. Check the “DCL” connector.	**FFT** = 1	0–1–2–3–4–5–6–7–8	0 (not used)	

Notes

All Rights Reserved

https://truckmanualshub.com/

Worksheet 3, Part 1- PTO1 Output or mDrive SETUP

Note: If the truck is an *m*Drive the VECU defaults will be to pass the PTO 1 input switch to the TECU unconditionally, i.e, as if the switch were directly connected to the PTO drive enable. The worksheet allows conditions to be added. If this is for another transmission, an accessory kit will be needed for the VECU to enable the output function, this would be output B18 of the VECU available also in the “DCL Connector” as “Spare Relay 1”.

Step:	Action:	Set VECU Parameter:	Allowable Range:	Default Value:	Next Step:
A	**Under what Park brake conditions will the PTO 1 be used:**				
	This is an *m*Drive and only needs to communicate to the TECU	**QP** = 1 **XO** = 0 **XN** = 1	0–1	**1**	B
	Yes, the equipment needs a wired signal. (Not available on *m*Drive)	**QP** = 1 **XO** = 1	0–1	**1**	B
	No.	**QP** = 0	0–1	**2**	**Skip this work-sheet**
B	**Under what brake pedal conditions affect PTO 1 Output:**				
	Pressing brake pedal will drop out control	**XP** = 1	0–1	**0**	C
	Pressing brake pedal has no effect	**XP** = 0	0–1	**0**	C
C	**Under what Park Brake conditions affect PTO 1 Output:**				
	Releasing Park Brake will drop out control	**XM** = 1	0–1	**0**	D
	Releasing Park Brake has no effect	**XM** = 0	0–1	**0**	D
D	**Under what Clutch Pedal conditions affect PTO 1 Output:**				
	Pressing Clutch Pedal will drop out control	**BZH** = 1	**0–2**	**0**	E
	Pressing Clutch Pedal has no effect	**BZH** = 0	0–1–2		E
E	**Under what Neutral conditions affect PTO 1 Output:**				
	Output will only be active in neutral	**BZJ** = 1	**0–2**	**0**	F
	Transmission gear status has no effect.	**BZJ** = 0	0–2	**0**	F
F	**Is there a maximum engine speed for Output activation?**				
	Yes. Output will deactivate above [RPM] engine speed.	**CVF** = 1 **BZF** = RPM	**500-3500 RPM**	**700 RPM**	G
	No. Output will activate regardless of engine speed.	**CVF** = 0	**0–1**	**0**	G
G	**Is there a maximum Vehicle Speed for Output activation?**				
	Yes. Output will deactivate above [MPH] vehicle speed.	**CVG** = 1 **BZG** = RPM	**0–150 MPH**	**1 MPH**	DONE
	No. Output will activate regardless of vehicle speed.	**CVG** = 0	**0–1**	**0**	DONE

All Rights Reserved

https://truckmanualshub.com/

Worksheet 4, Part 2 - PTO2 Engine Speed Control SETUP

PTO 2 setup is identical to PTO 1 except for the extra option of road speed suppression.

Step:	Action:	Set VECU Parameter:	Allowable Range:	Default Value:	Next Step:
A	**Under what brake conditions will the PTO2 be used:**				
	Same as EHT/PTO 0	**FEH** = 2 **FEK** = 2	0–1–2–3–4	**2**	B
	Service brake released (Ignore park brake)	**FEH** = 0 **FEK** = 0	0–1–2–3–4	**2**	B
	Park brake set (Ignore service brake)	**FEH** = 3 **FEK** = 3	0–1–2–3–4	**2**	B
B	**What affect should Clutch Pedal have?**				
	Pressing pedal will drop out control	**FET** = 2 **FEW** = 2	0–1–2	**2**	C
	Pressing Clutch has no effect	**FET** = 0 **FEW** = 0	0–1–2	**2**	C
C	**What affect should drive position on automatics have?**				
	Control only works in Neutral.	**FEN** = 1 **FEQ** = 1	0–1–2–3		D
	Control works in Drive or Reverse also.	**FEN** = 0 **FEQ** = 0	0–1–2–3		D
D	**What affect should accelerator pedal have?**				
	accelerator pedal can override set speed.	**DXK** = 0	0–1–2	**0**	E
	accelerator pedal will be ignored while control is active.	**DXK** = 1	0–1–2	**0**	E
E	**What inputs activate PTO 2 control?**				
	Cruise control switch On, PTO 2 input High, press set button.	**FFB** = 0	0–1–2	**0**	F
	Cruise control switch On, PTO 2 input High	**FFB** = 2	0–1–2	**0**	F
	PTO 2 input High	**FFB** = 1	0–1–2	**0**	F
F	**Should the set speed be adjustable with buttons?**				
	Yes, accel/decel can change set speed.	**FDS** = 2	0–1–2	**2**	G
	No, Pressing Set/decel causes jump to set speed. This is single speed control.	**FDS** = 0	0–1–2	**2**	I
G	**Speed adjustments.**				
	While Accel or Decel are held this is the rate of change.	**FCE** **FCH**	0-250 RPM	50 RPM	H
	While Accel or Decel are stabbed this is the step change in RPM	**FCR** **FCM**	0-250 RPM	50 RPM	H
	Set speeds will be held to the nearest multiple of FGF.	**FGE** = 1 **FGI** = **RPM**	0–1	FGE = 0 FGF = 50 RPM	H
H	**When control is started what should happen?**				

All Rights Reserved

https://truckmanualshub.com/

Step:	Action:	Set VECU Parameter:	Allowable Range:	Default Value:	Next Step:
	Set speed will be current engine speed	**FGR** = 0	0–1	**0**	J
	Set speed will jump to programmed set speed.	**FGR** = 1	0–1	**0**	I
I	**What set speed?**	**FCU**	500 ~ 2500 RPM	600 RPM	J
J	**What should be the maximum allowed engine speed when trimming PTO 2 set speed?**	**FDK = desired max. adjustable speed**	500 ~ 2500 RPM	2500 RPM	K
K	**What should happen at the max engine speed?**				
	Control stops at this speed. (drops to idle unless overridden by accelerator pedal)	**FGL** = 1 = **yes, dropout**	0–1	**1**	L
	This is the maximum speed regardless of buttons or accelerator pedal while PTO 2 is active.	**FDF** = 1	0–1	**1**	L
	This is the limit of set speed. (Note that the state of FGL also affects PTO 0 & 2).	**FGL** = 0 **FDF** = 0	0–1	**1**	L
L	**What should happen at maximum road speed?**				
	Control should dropout at this speed.	**FEB** **FEE**	0 ~ 250 km/h (0–150 mph)	161 km/h (100 mph)	M
	Engine power should be controlled to limit to this speed. This limit will be active regardless of engine speed control activation conditions while PTO 2 input is high.	**FRP** = 1 **EAR = ROADSPEED**	0 ~ 250 km/h (0–150 mph)	161 km/h (100 mph)	M
M	**Road speed should be disabled if ABS sees 0 road speed, park brake is on and PTO 2 input is high.**	**FGD** = 1	0–1	**0**	
N	**Optional Temporary Dropout conditions.** Examples below – more available				
	Control dropped out while service brake pressed.	**FFI** = 4	0–1–2–3–4–5	2 (not used)	
	Control dropped out until service brake pressed.	**FFI** = 3	0–1–2–3–4–5	2 (not used)	
	Control dropped out while clutch pressed.	**FFO** = 2	0–1–2	0 (not used)	
	Control dropped out until A17 high (PTO 4) Note: this pin may not be available for this function. Check the “DCL” connector.	**FFU** = 4	0–1–2–3–4–5–6–7–8	0 (not used)	
	Control dropped out while B21 high (PTO 3) Note: this pin may not be available for this function. Check the “DCL” connector.	**FFU** = 1	0–1–2–3–4–5–6–7–8	0 (not used)	

All Rights Reserved

https://truckmanualshub.com/

Parameter Programming

General

Abbreviations

- ACC Adaptive Cruise Control
- BOC Back of Cab
- CAN Controller Area Network
- CDS Custom Defined Statement (replaced by DCL)
- DCL DataMax Control Language
- ECM Engine Control Module
- EHT Electronic Hand Throttle
- EMS Engine Management System
- ESC Engine Speed Control
- FMI Failure Mode Identification
- GMT Greenwich Mean Time
- MID Message Identifier (J1587 source)
- PGN Parameter Group Number (J1939 message ID)
- PID Parameter Identification (J1587)
- PTO Power Take–off
- PTT2 Premium Tech Tool 2
- SA Source Address (J1939 unit identifier)
- SID Subsystem Identification (J1587)
- SPN Suspect Parameter Number (J1939 parameter)
- SSC Single Speed Control
- TCM Transmission Control Module
- VDA Vehicle Data Administration (OEM database)
- VECU Vehicle Electronic Control Unit
- V-MAC Vehicle Management And Control (Mack brand electronics name)

All Rights Reserved

https://truckmanualshub.com/

Programming/Common Engine Speed Control Terms According to the VECU

Level	Description
AutoSet	If the PTO is switched on, PTO engine speed control will automatically and immediately start, causing engine RPMs to go to the target speed, but without pressing the dash speed control set button. Depending on programming the Cruise/engine speed control dash switch may or may not need to be on.
Cruise Control	At vehicle speeds above a programmable MPH, the ESC (electronic speed control) function becomes a cruise control in order to maintain vehicle speed, typically at highway speeds.
Drive-Shaft PTO	PTO power is diverted after the transmission output, often to a special driveshaft. The transmission output speed sensor reads normally (drives speedometer, odometer), but typically there is no actual vehicle speed.
Drop-Out	When the engine speed control is being used, the condition may stop or ‘drop-out’ due to a programmed activation conditions. For example, if using the PTO engine speed control and the brake pedal is touched, engine speed control may drop out and the engine reverts to idle, unless overridden with the accelerator pedal.
Temporary Drop-Out	Normally a drop-out requires the engine speed control set switch button to be ‘resumed’, or the PTO reactivated to resume normal engine speed control. A temporary dropout automatically resumes the engine speed control after the condition is removed. In the above example, if the brake pedal is released, and it is programmed as a temporary dropout, engine speed control will automatically resume.
Hand Throttle or Electric Hand Throttle or PTO 0	These terms are used interchangeably now that all engines are electronically controlled. Commonly it refers to using the engine speed control or Cruise Control buttons on the dash, with the vehicle stationary, to activate engine speed controls, without a PTO switch. Use of the EHT may sometimes be referred to as PTO 0 (as opposed to PTO1, PTO2, etc.).
Single Speed Control	The VECU programming of engine speed control drives the engine speed automatically to a preset value that is not otherwise adjustable with the speed control switches (but can be overridden with the throttle pedal).

VECU

Vehicle Electronic Control Unit or MID 144 according to PTT2 . In general, it reads driver inputs and passes them to the Engine.

Notes

All Rights Reserved

https://truckmanualshub.com/

Programming

PTT2 has an operation called Parameter Programming which allows changes to settings in most ECU's. Most settings of concern to the body builder will be in the VECU which is also referred to by its J1587 designation, MID 144. Most settings are level 4, meaning they are freely changeable by PTT2. In rare cases there may be reason to change OEM data as a level 2 parameter, in which case, an accessory kit would need to be applied or tech support would change parameters in the mainframe (VDA) and then a MID reprogramming would be required. MID reprogramming may also be necessary to bring in new features as this also updates the main software and datasets.

V-MAC AND PTT2 Programming Parameter Types:

Level	Level Type	Description
2	OEM Parameters	Parameters only available to Mack. Not available or changeable with PTT2 service tool.
3	Dealer Parameters	Changeable by PTT2 with an internet connection to the OEM database, VDA. There are only a limited number of Level 3 parameters, so that Mack can retain records of dealer or customer changes.
4	Customer Parameters	Customer programmable parameters are set by the dealer or customer with PTT2 and do not require and internet connection. VMAC contains hundreds of customer programmable parameters.

Note that PTT2 is actually a sub operation or tool in Premium Tech Tool.

Notes

All Rights Reserved

https://truckmanualshub.com/

Engine Speed Control

Engine speed control refers to electronic hand throttle and PTO speed controls. These are controlled by the VECU.

Introduction

There are actually five programmable speed controls in the VECU. Electronic hand throttle (PTO 0 or High Idle Control) is enabled by the cruise control buttons engine speed control (ESC) is not to be confused with cruise control. The controls are basically the same however engine speed control, of course, sets engine speed while cruise control sets a road speed which the engine attempts to maintain while the respective function is active.

The Mack VECU can be used to change engine speed based on several conditions. The “engagement” or “activation” of this engine speed control can be started based the following depending on parameter settings:

- PTO input
- PTO input while Cruise on/off input is on. (referred to as “Autoset”)
- PTO input while Cruise on/off input is on and set button is pressed

The following can set to disable this control. There are parameters for activation, deactivation and temporary dropouts for each. Temporary dropouts can allow engine speed control to start and stop based on the condition. Standard default setup is to allow engine speed control in the state the truck would normally be parked in. In general, conditions not met on speed control will cause engine speed to drop to idle i.e., drop-out or deactivate.

- Road speed too high (default low).
- Engine speed too high or too low (default allows idle to governed speed).
- Service brake pressed or not (default not pressed).
- Park brake set or not (default set).
- Clutch pressed or not pressed (default not pressed).
- Transmission not in neutral(default not used).
- Secondary inputs (default not used).

Engine speed control can be started with a set speed that is equal to current speed or a programmable speed. The speed can then either be adjustable from there or be fixed at the programmed speed by disabling the accelerator pedal and/or buttons.

PTO 1-4 designated controls are engaged by applying 12V to the respective PTO input and may also require the cruise buttons. The PTO 1 input is usually available as a factory installed dash switch but can also be activated by input to the DCL connector or the Bodylink III/Control Link II connectors. PTO 2 usually does not have a factory installed switch but is available in the DCL connector or the Bodylink III /Control Link II connectors. Inputs for PTO 3 and 4 are not always available and then only in the DCL connector and may need other settings to use since the inputs are also used for other options.

All Rights Reserved

https://truckmanualshub.com/

Starting Engine Speed Control

EHT or PTO 0 can only be started when the cruise control button is on and set- is pressed. After set is pressed, the engine may ramp to a preprogrammed speed or holding the Accel/resume button will ramp the speed up. If control is then “dropped out” by pressing the brake pedal or changing some other dropout condition, control can be restarted by pressing Accel/resume which will command the engine speed to the previous set speed.

PTO 1-4 have options on starting speed commands. These can be summarized as follows:

- Cruise set button starts control if PTO and cruise are switched on.
- PTO input starts control if cruise control is switched on.
- PTO input starts control (regardless of cruise inputs).

Note that limits and accelerator pedal disable apply regardless of the state of engine speed control. Rather, they start based on the PTO input state only.

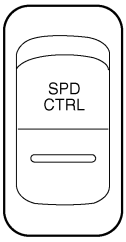

C0029211

Fig. 8 ON/OFF Switch

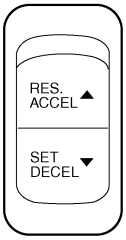

C0029150

Fig. 9 Set and Accel/Decel Switch

Parameter name	Code	Description
Enable activation of engine speed control by engaging PTO 1	FFA	0 – Control started by Cruise buttons. 1 – Control started by PTO input. 2 – Control started by PTO input if Cruise switch is on.
Enable activation of engine speed control by engaging PTO 2	FFB	
Enable activation of engine speed control by engaging PTO 3	FFC	
Enable activation of engine speed control by engaging PTO 4	FFD	

All Rights Reserved

https://truckmanualshub.com/

Speed Command Start Behavior

Engine speed control can cause the speed to jump to a preprogrammed speed or require button controls for ramp or step commands. Control will jump to a preprogrammed speed if the buttons are disabled for adjustment or if specifically enabled by “jump to”. If buttons can not otherwise adjust speed, this is generally referred to as “single speed control” and also implies disable of the accelerator pedal (shown later).

Note: A Jump to min doesn’t actually cause a jump to the minimum set speed but rather to the “resume speed” (unless the resume speed is set below the minimum)

Parameter name	Code	Description
Resume or target engine speed for PTO 0	ANE	RPM for initial command of PTO engine speed control.
Engine speed control PTO1, resume engine speed (speed selector 0)	BXJ	
Resume engine speed PTO 2	FCU	
Resume engine speed PTO 3	FCV	
Resume engine speed PTO 4	FCW	
Enable cruise button for engine speed mode (PTO 0)	BXX	0 – Set +/- do not adjust speed. RPM will jump to “resume” speed. 1 – Set +/- adjust speed while PTO is on 2 – Set +/- adjust speed while PTO and Cruise is on.
Enable cruise button for engine speed of PTO 1	FDR	
Enable cruise button for engine speed of PTO 2	FDS	
Enable cruise button for engine speed of PTO 3	FDT	
Enable cruise button for engine speed of PTO 4	FDU	
Enable "jump to min engine speed" for PTO 0	FGO	On – Control will jump to resume speed Off – Control depends on cruise settings above.
Enable "jump to min engine speed" for PTO 1	FGQ	
Enable "jjump to min engine speed" for PTO 2	FGR	
Enable "jump to min engine speed" for PTO 3	FGS	
Enable "jump to min engine speed" for PTO 4	FGT	

All Rights Reserved

https://truckmanualshub.com/

Accelerator Pedal Disable

The accelerator pedal can be set to be ignored while either PTO is active or if hand throttle is active. Two potentially important details are here.

Use of “2 – accelerator pedal ignored” is recommended because the engine will require the PTO to be deactivated and the pedal at 0 position before allowing accelerator pedal command. The “set to 0” will resume pedal control where ever it is. That could potentially have the engine ramp if the pedal were to have inadvertently been pressed.

If PTO 0 is set to disable throttle pedal, the throttle pedal will remain disabled until the cruise control switch is turned off or the resume function is disabled. The throttle pedal remains disabled while the PTO 0 is ready to resume. To disable this resume feature see parameter FGN.

Parameter name	Code	Description
Disable accelerator pedal for engine speed control PTO0	DXH	0 – no effect on accelerator pedal 1 – accelerator pedal set to 0 (not recommended) 2 – accelerator pedal ignored. While respective engine speed control is active or in “resume ready” state.
Disable accelerator pedal for engine speed control PTO1	DXJ	
Disable accelerator pedal for engine speed control PTO2	DXK	
Disable accelerator pedal for PTO 3	DXL	
Disable accelerator pedal for PTO 4	FFE	

Ramp

If engine speed control is started and the buttons are enabled to adjust speed, the rate of increase while the button is held is controlled by the ramp rate parameters. Note that this does not affect the rate at which a resume speed is reached.

Parameter name	Code	Description
Engine speed control trim ramp up	BXE	While resume/Accel is pressed engine speed will ramp up at this rate (rpm/s).
Ramp up value at increased engine speed for PTO 1	DTG	
Trim factor at engine speed trim ramp up for PTO 2	FCE	
Trim factor at engine speed trim ramp up for PTO 3	FCF	
Trim factor at engine speed trim ramp up for PTO 4	FCG	
Engine speed control trim ramp down	BXF	While Set/decel is pressed engine speed will decrease at this rate.
Ramp down value at decreased engine speed for PTO 1	DTH	
Trim factor at engine speed trim ramp down for PTO 2	FCH	
Trim factor at engine speed trim ramp down for PTO 3	FCI	
Trim factor at decreased set engine speed for PTO 4	FCD	

All Rights Reserved

https://truckmanualshub.com/

Step or Bump Adjustments

Short presses on the control buttons will cause step increases in set speed to be commanded. The step (or bump) is controlled by parameters below.

Parameter name	Code	Description
Engine speed control step up rpm (PTO0)	RT	If the resume/Accel button is pressed briefly and released engine set speed will increase by this RPM.
Engine speed step up factor for PTO 1	FCL	
Engine speed step up factor for PTO 2	FCM	
Engine speed step up factor for PTO 3	FCN	
Engine speed step up factor for PTO 4	FCO	
Engine speed control step down factor (PTO0)	BXI	If the set/Decel button is pressed briefly engine set speed will decrease by this much.
Engine speed step down factor for PTO1	FCQ	
Engine speed step down factor for PTO 2	FCR	
Engine speed step down factor for PTO 3	FCS	
Engine speed step down factor for PTO 4	FCT	
Time before PTO activation is seen as a ramp	DHA	This is the time that determines whether a press is a ramp or a step. Default is 250 ms.

Hold to Nearest (Set Speed Rounding)

The engine set speed will be whatever the engine speed is when the button is released after holding for a ramp. To prevent need to be precise about button release timing to achieve a round set speed “hold to nearest” can be used. For example, if set to 100 rpm the set speed after a ramp will be 1200, 1300, etc. by 100s rather than 1231, 1319, or any in-between value.

Parameter name	Code	Description
"Hold to nearest" step value for PTO 0	FGF	Engine speed command will be rounded to this RPM.
"Hold to nearest" step value for PTO 1	FGH	
"Hold to nearest" step value for PTO 2	FGI	
"Hold to nearest" step value for PTO 3	FGJ	
"Hold to nearest" step value for PTO 4	FGK	

All Rights Reserved

https://truckmanualshub.com/

Control Conditions

There are several possible conditions that will cancel/dropout or prevent engine ramping (ESC, engine speed control). The standard setup is to only allow engine speed control while stationary.

- Service Brakes
- Park Brake
- Road speed
- Engine speed
- Transmission state
- Clutch
- Other switch

Many of these can be set as temporary dropout. Standard dropout indicates that if the condition is not met, that engine will return to idle and PTO or cruise set will have to be reset or toggled to restart engine speed commands. Temporary dropout refers to that the engine ramp will occur as soon as the condition is cleared without any other action necessary.

Basic Brake conditions

For single control strategies these two parameters should be all that is necessary. If a PTO set speed is to be used while the truck is in motion, then AZG (park brake condition) should be disabled. However this will affect any other PTO including hand throttle/PTO 0. If one PTO is to be set up differently from another, the next sections parameters should be used to individually override these parameters.

Parameter name	Code	Description
Enable brake pedal cond for high idle	XP	Yes – Brake pedal application will prevent or dropout engine speed control for any PTO 0-4 No - Brake pedal does not affect engine speed control for any PTO
Enable parking brake cond for high idle	AZG	Yes – Park brake must be applied to allow engine speed control for any PTO 0-4 No - Park brake does not affect engine speed control for any PTO 0-4

Notes

All Rights Reserved

https://truckmanualshub.com/

PTO Specific Brake conditions

If only a single control is needed, see the previous section. If a more complicated setup is needed, the following parameters can be used to make one PTO control depend on a certain brake state while the other does not. The parameters are available separately for engine speed control enable and engine speed control disable. The enumerations are set up so that enable and disable conditions are opposite as would normally be the case (release brake pedal to start, press to stop). However, these can theoretically be set up so that start and stop conditions are not necessarily opposite. Use some care in choosing these as many combinations have no practical use.

The enumerations represent conditions enabled either to start (activate) engine speed control or to deactivate engine speed control for respective PTO inputs. These are by default set to “not used” so that the logic falls through to the primary brake conditions in the previous section.

Parameter name	Code	Description
Engine speed control PTO0, activation cond. on brakes	BYI	Brake conditions to start respective PTO engine speed control 0: Brake pedal released 1: Brake pedal pushed OR Park brake activated 2: condition not used 3: Park brake activated 4: Park brake deactivated
Engine speed control PTO1, activation condition on brakes	BYF	
Enable brake pedal cond for PTO 2 activation	FEH	
Enable brake pedal cond for PTO 3 activation	FEI	
Enable brake pedal cond for PTO 4 activation	FEJ	
Enable brake pedal cond for PTO 0 deactivation	BYK	Brake state to dropout engine speed control for respective PTO 0 Brake pedal depressed 1 Brake pedal released or parking brake deactivated 2 No condition on the brakes 3 Parking brake deactivated 4 Parking brake activated
Enable brake pedal cond for PTO 1 deactivation	BYJ	
Enable brake pedal cond for PTO 2 deactivation	FEK	
Enable brake pedal cond for PTO 3 deactivation	FEL	
Enable brake pedal cond for PTO 4 deactivation	FEM	

Notes

All Rights Reserved

https://truckmanualshub.com/

Transmission State Conditions

Factory setups normally assume speed control is used only while the clutch pedal is released or the transmission is in neutral. Mack does not offer neutral input from manual transmissions, so neutral condition is only useful for electronically controlled transmissions. Clutch state can be derived from neutral status on automatic transmissions so, are not necessarily ineffective on transmissions without clutch pedals.

Each PTO has separate enable and disable conditions that would normally be set to opposite values. For Example, if the engine speed should only increase while in neutral then neutral is an enable condition and “out of neutral” is a disable condition. One could theoretically set up a control that requires clutch-pressed to start however, clutch-released does not drop it out (or stop it).

The term “secured neutral” implies that both the selected gear and current gear are neutral rather than just one or the other. This may be important if PTO forces neutral and is expected to ramp the engine. In that case “secured neutral" would be too strict a condition and “Gearbox in neutral” might be adequate or not use the condition at all.

Parameter name	Code	Description
Enable secured neutral cond for PTO 0 activation	BYM	Neutral condition for starting respective PTO engine speed control 0 No condition on gearbox in neutral 1 Yes (Secured Neutral Enables engine speed control) 2 No (must be out of Secured Neutral to enable engine speed control) 3 Gearbox in neutral - (Current gear must be neutral for engine speed control)
Enable secured neutral cond for PTO 1 activation	BYN	
PTO2 activation neutral condition	FEQ	
PTO3 activation neutral condition	FEO	
PTO4 activation neutral condition	FEP	
Enable secured neutral cond for PTO0 deactivation	BYO	Dropout neutral condition for respective PTO engine speed control 0 No condition on gearbox in neutral 1 No (out of Secured neutral drops out engine speed control) 2 Yes (Secured neutral drops out engine speed control) 3 Gearbox in neutral (Current gear in neutral drops out control)
Enable secured neutral cond for PTO1 deactivation	BYP	
PTO2 deactivation neutral cCondition	FEN	
PTO3 deactivation neutral condition	FER	
PTO4 deactivation neutral condition	FES	
Engine speed control PTO0, activation condition on clutch	BYR	Clutch condition for starting respective PTO engine speed control 0 No condition 1 Pedal depressed (to activate engine speed control) 2 Pedal released (to activate engine speed control)
Engine speed control PTO1, activation condition on clutch	BYQ	
Enable clutch cond for PTO 2 activation	FET	
Enable clutch cond for PTO 3 activation	FEU	
Enable clutch cond for PTO 4 activation	FEV	
Clutch cond for High Idle/PTO0 deactivation	BYT	Clutch dropout condition for respective PTO 0 No condition 1 Pedal released (to deactivate engine speed control) 2 Pedal depressed (to deactivate engine speed control)
Engine speed control PTO1, deactivation condition on clutch	BYS	
Enable clutch cond for PTO 2 deactivation	FEW	
Enable clutch cond for PTO 3 deactivation	FEX	
Enable clutch cond for PTO 4 deactivation	FEY	

All Rights Reserved

https://truckmanualshub.com/

Engine Speed Conditions

There are engine speed minimums and maximums for engaging and remaining in speed control. In theory these provide some safety in case of certain malfunctions in that the engine will return to idle or defuel if engine speed falls out of range. However, many applications have no use for a minimum dropout speed and would be better served by a limit rather than a dropout condition.

Note: Note that having minimum dropout engine speed above idle results in that engine speed control will not engage unless the engine rpm is brought above that speed by the accelerator pedal before the set button is pressed. This may serve to prevent engine speed control from starting inadvertently.

These speed limits can be disabled as conditions by parameter FGL in which case these speeds are min and max set speeds. Still setting the min speed above idle may not have the desired affect without using “jump to min”.

The maximum speeds are also dropouts according to FGL but can also be enabled as limits by the parameters in the next section. Note that the accelerator pedal can override engine speed command and max set speed. If this is not desirable for the application, accelerator pedal disable or limit may serve better.

Parameter name	Code	Description
Engine speed control activation on Min-Max Engine Speed	FGL	For all PTO 0-4 0 Off – Engine speeds are not conditions for speed control 1 On – Max and Min speeds are dropout conditions
High idle/PTO 0 min engine speed	ANF	Engine speed control will not start or if started will dropout respective PTO engine speed control if engine speed is below this RPM unless FGL is disabled.
Engine speed control PTO1, Min engine speed	BXW	
Min engine speed for PTO 2	FDN	
Min engine speed for PTO 3	FDO	
Min engine speed for PTO 4	FDP	
Maximum engine speed for the engine speed control PTO0	AND	Engine speed control will not start or if started will dropout respective PTO engine speed control if engine speed is above this RPM unless FGL is disabled. If the respective limit enable is set on, this is the value of the limit.
Engine speed control PTO1, Max engine speed	BXU	
Max engine speed for PTO 2	FDK	
Max engine speed for PTO 3	FDL	
Max engine speed for PTO 4	FDM	

Notes

All Rights Reserved

https://truckmanualshub.com/

Engine Speed Limits

If the equipment attached to the PTO should not exceed some rpm, a limit can be used. This limit will apply based on the respective PTO input regardless of any other conditions for engine speed commands for set speed. PTO 0 is an exception since there is no specific input.

Note: The engine decreases fueling at this limit, so power may fluctuate. Some applications may do better with a single speed control or a set speed limit rather than run at a limit. There is also an EMS parameter to limit engine speed while stationary.

Parameter name	Code	Description
Enable engine speed limit when PTO active (PTO0)	DXM	Engine will be limited to parameter AND while PTO 0 is active.
PTO1 engine speed limit activation	FDE	Engine speed will be limited to the respective Max engine speed parameter while respective PTO input has voltage.
PTO2 engine speed limit activation	FDF	
PTO3 engine speed limit activation	FDG	
PTO4 engine speed limit activation	FDH	
Max engine speed stationary	AU/ P1ANA	Engine speed is limited to this while road speed is 0

Road Speed Dropout

If the engine speed control should only control engine speed while parked, it can be beneficial to include a dropout condition based on road speed. If this is not desired, it cannot be turned off but rather set out of the way. These are set up in pairs so that theoretically the engagement speed requirement can be lower than the dropout conditions. Normally the two should be set the same value.

Note: There have been cases where vibrations or shocks cause momentary high speeds to be registered that would cause an inadvertent dropout. Later versions of the VECU have filters to minimize or eliminate this.

Parameter name	Code	Description
Max VS to activate PTO0 engine speed control	BYE	Engine speed control will not start while road speed is above this value.
Engine speed control PTO1, activation condition, max VS	BYD	
Max vspd for activation of PTO 2	FEB	
Max vspd for activation of PTO 3	FEC	
Max vspd for activation of PTO 4	FED	
Min vspd for deactivation of PTO0	BYG	Engine speed control will dropout if road speed is above this value
Min vspd for deactivation of PTO1	BYF	
Min vspd for deactivation of PTO 2	FEE	
Min vspd for deactivation of PTO 3	FEF	
Min vspd for deactivation of PTO 4	FEG	

All Rights Reserved

https://truckmanualshub.com/

Road Speed Limits

If the equipment attached to the truck should not be operated above some speed, a road speed limit can be used. Each road speed limit has an enable parameter and a parameter to set the speed for the limit. These limits apply according to the PTO 1 or 2 input regardless of engine speed control conditions.

Earlier VECU software versions would use this speed also as a dropout condition. Later versions can have this effect disabled. This may need to be changed on older vehicles by tech support (MAO= 0).

This need not be actually a PTO, it can also be used to limit speed for dropped axles or anything that can be indicated by a switched input. However, on most trucks this will light a PTO lamp and carry with it the effects of PTO operation on the engine regarding the exhaust after treatment system. PTO independent road speed limits are also possible but not generally offered.

Parameter name	Code	Description
PTO1 road speed limit activation	FRO	0 – no road speed limit for PTO 1. 1 – use EAQ as road speed limit while PTO 1 input has 12V.
Road speed limit value for PTO1	EAQ	Speed limit for PTO 1 if FRO = 1.
PTO2 road speed limit activation	FRP	0 – no road speed limit for PTO 2. 1 – use EAQ as road speed limit while PTO 1 input has 12V.
Road speed limit value for PTO2	EAR	Speed limit for PTO 2 if FRO = 1.

Torque Limits

A torque limit can be used if the equipment operated by PTO should only receive limited torque. This can also be used for any other purpose triggered by 12V on a PTO input. This limit applies regardless of engine speed control conditions.

Parameter name	Code	Description
Enable torque limitation for PTO 0	DGZ	0 = no torque limit for respective PTO input 1 = use respective limit for PTO while input is active.
Enable torque limitation for PTO 1	DTI	
Enable torque limitation for PTO 2	FDA	
Enable torque limitation for PTO 3	FDB	
Enable torque limitation for PTO 4	FDC	
Max torque for PTO0	BXR	Torque limit in % for respective PTO if enabled.
Max torque for PTO1	BXS	
Max torque for PTO2	FCX	
Max torque for PTO3	FCY	
Max torque for PTO4	FCZ	

All Rights Reserved

https://truckmanualshub.com/

Temporary Conditions

The above conditions, if not met, require either the PTO input to be toggled or the cruise set or resume buttons to be pressed to restart engine speed control. The below conditions will only dropout engine speed control while the condition exists. For example the control could have a clutch temporary dropout which would cause engine speed control to drop out while the clutch was pressed, and automatically resume while the clutch was again released. Another application is to have the temporary dropout condition as a secondary enable. For example, the PTO engine speed control could be made ready to engage in the Cab and have a separate control to enable a ramp to set speed only while the button is held. The “CDS” pins can serve this function if not used for other purposes. Note that there are parameters to designate PTO 3 and 4 Pins as “CDS” rather than PTO 3 or 4.

Parameter name	Code	Description
Enable clutch cond for PTO 0 temp dropout	FFL	0 Not used - no condition on clutch 1 Off - dropout while clutch released 2 On - dropout while clutch pressed
Enable clutch cond for PTO 1 temp dropout	FFN	
Enable clutch cond for PTO 2 temp dropout	FFO	
Enable clutch cond for PTO 3 temp dropout	FFP	
Enable clutch cond for PTO 4 temp dropout	FFQ	
Enable CDS cond for PTO 0 temp dropout	FFF	Will dropout while: 0 Brake pedal activated 1 Brake pedal released AND Park brake released 2 Condition not used 3 Park brake released 4 Park brake activated 5 Brake pedal released
Enable brake cond for PTO 1 temp dropout	FFH	
Enable brake cond for PTO 2 temp dropout	FFI	
Enable brake cond for PTO 3 temp dropout	FFJ	
Enable brake cond for PTO 4 temp dropout	FFK	
Enable CDS cond for PTO 0 temp dropout	FFR	Will dropout while: 0 Condition not used 1 CDS1 active 2 CDS2 active 3 CDS1 inactive 4 CDS2 inactive 5 CDS1 inactive AND CDS 2 inactive 6 CDS1 active AND CDS2 inactive 7 CDS1 inactive AND CDS2 active 8 CDS1 active AND 2 active
Enable CDS cond for PTO 1 temp dropout	FFT	
Enable CDS cond for PTO 2 temp dropout	FFU	
Enable CDS cond for PTO 3 temp dropout	FFV	
Enable CDS cond for PTO 4 temp dropout	FFW	

All Rights Reserved

https://truckmanualshub.com/

PTO 3 and 4 or “CDS”

The PTO 3 and 4 inputs can also be CDS inputs to use as temporary dropout conditions rather than 3’rd and 4th PTOs.

Parameter name	Code	Description
Enable PTO 3 enable switch	FGV	0 Off - input is CDS1 1 On - input is PTO 3
Enable PTO 4 enable switch	FGW	0 Off - input is CDS2 1 On - input is PTO 4

Resume Enable

After and engine speed control has been active and then inactive, it can be resumed by pressing the resume/Accel button. This has side effects that while in this resume ready state, speed limits and accelerator pedal disable remains. Cruise control will also not work if PTO 0 has been dropped out rather than turned off. If these side effects are not desirable, resume for engine speed control can be disabled. This disable affects engine speed control but not cruise control.

Parameter name	Code	Description
Engine speed control resume enable	FGN	0 Off - dropout conditions cancel engine speed control and cannot resume but rather needs reset. 1 On - resume functions

PTO Priority

If two PTO inputs are active at the same time the one that has priority will assert the conditions and limits over the other. Note that this does not necessarily mean that the set speed will change. If two PTO inputs are to be active with one or the other switching to change speed automatically, then an OEM parameter may need to be set to make that work. (COT = 1).

Parameter name	Code	Description
PTO priority	BXB	0: 1/2/3/4 1: 1/3/2/4 2: 2/1/3/4 3: 2/3/1/4

Notes

All Rights Reserved

https://truckmanualshub.com/

PTO Output

The VECU can control an output which can conditionally control a PTO or other item such as lights. *m*Drive transmissions with transmission PTO's are set up to do this from the factory whereby the VECU output is actually transmitted by databus to the transmission. This function can also be enabled to work an output by wire from the VECU for other transmissions. However this requires OEM parameters to change [CBQ = 83, FAD=0] which tech support would need to do. This would be output B18 of the VECU available also in the "DCL Connector" as "Spare Relay 1".

The output would then depend on the PTO 1 input being active and whatever conditions are set below. By default there are no conditions set in the VECU so that PTO activation depends only on the switch input. For an *m*Drive transmission with dual PTO, there are no conditions possible to limit PTO 2 engagement from the VECU. However the *m*Drive will refuse to engage PTO's based on gear position and road speed.

Parameter name	Code	Description
PTO basic function enable	QP	0 – don't use output function 1– enable output function
Activate PTO output from vehicle control unit	XO	0 – don't use PTO output pin 1 – Use PTO output pin
Type of PTO	XN	This parameter is of use with the BBM unit which is currently not available for Mack trucks. However, it needs to remain at 1 for *m*Drive transmissions. 0 None 1 Transm. #1 2 Transm. #2 3 Engine #1 4 Engine #2
Enable brake condition for PTO	BZI	0 – no condition on 1 – pressing brake pedal will disable output
Parking brake condition to activate PTO1	XM	0 – no condition on parking brake 1 – Parking brake must be applied for PTO output
Enable clutch condition for PTO	BZH	0 – no condition on clutch pedal 1 – pressing clutch pedal will disable output
Gear in neutral condition to activate PTO1	BZJ	0 – transmission gear has no effect 1 – Output will only be active in neutral
Enable max engine speed condition to activate PTO1	CVF	0 – output will be active regardless of engine speed 1 – output will be active below engine speed (BZF)
Max engine speed to activate PTO1	BZF	RPM limit for PTO output
Enable max VS condition to activate PTO1	CVG	0 – output will be active regardless of road speed 1 – output will be active below road speed (BZG)
Max VS to activate PTO1	BZG	Road Speed limit for PTO output

All Rights Reserved

https://truckmanualshub.com/

Driveshaft PTO

PTO 2 can be designated a driveshaft PTO. The purpose of the VECU parameter designating this is to disable the road speed pickup so that the speedometer and thereby the odometer are suppressed. However, this only works if the park brake is applied and the ABS does not pick up road speed. If the vehicle does need to move while in driveshaft PTO, it is recommended to move the road speed sensor to a shaft driving road speed.

Also of concern is that there is normally an engine torque limit at low road speed to protect the driveline at takeoff in low gear. If full power is expected while stationary this torque limit needs to be disabled. Note that this parameter (JAA) is in the EMS and that this parameter has a different code beginning with 2013 production.

Parameter name	Code	Description
Enable drive shaft PTO on PTO2	FGD	0 – no driveshaft speed handling 1 – Road speed can be suppressed while PTO 2 is active
PTO is DRIVE SHAFT PTO	JAA/ P1JED	0 – no PTO exception for torque limit 1 – Low gear torque limit is disabled if PTO is on (any PTO)

mDrive PTO ratio

The *m*Drive Transmission PTOs have selectable output ratio. Note that these parameters are in the TECU and that this parameter has a different code beginning with 2013 production.

Parameter name	Code	Description
Split gear for Transmission PTO 1	GJG/ P1AO5	0 Selectable 1 Low Split 2 High Split
Split gear for Transmission PTO 2	GJH/ P1AO6	0 Selectable 1 Low Split 2 High Split

Fan Engage with PTO

The fan will engage with a digital input to any of the 4 PTO inputs if enabled. This is not recommended if the PTO is used with frequent on-off cycles.

Parameter name	Code	Description
Enable cooling fan activation from PTO	DUL	0 = Off 1 = On

All Rights Reserved

https://truckmanualshub.com/

Remote Engine Stop

An engine stop (kill switch) input can be wired to VECU pin A27 which is also available in the DCL and Bodylink III/Control Link II connectors. There can be conditions put on this so that it does not work while moving. The input for this may not be enabled if the truck was not ordered with it in which case run Accessory kit PN 85137397 to map the pin (CAX = 50).

Parameter name	Code	Description
Enables the function remote engine stop	CUK	Set to 2 Enables remote engine stop function by VECU Input.
Engine stop demand filter time	CUM	The time the button must be held to shut off engine. **Note:** Set to 0
Remote stop activation condition	CUO	0 – vehicle speed is a condition for engine shutdown 1 – (used for other brand) 2 – (used for other brand). Set to 0 for Mack. **Note:** Set to 0
Max VS to activate remote engine stop	CUN	Road speed above which remote engine shutdown will not work. **Note:** Set to 60

PTO Indicator

Most Instrument clusters have a PTO indication. This PTO indication is normally driven based on the PTO inputs to the VECU. However, the indicator can all be made to indicate based on engine speed control on Conventional trucks. This may be the only way to get an indication if the PTO input is wired to a Cummins Engine instead of the VECU

Note: This parameter is OEM only and is not visible in Premium Tech Tool (PTT). This can only be changed by tech support.

Parameter name	Code	Description
Sets the PTO lamp source (on some instrument clusters)	IEC	0 Off 1 Undefined 2 Undefined 3 Use EEC1 (PTO Lamp with Engine Speed Control) 4 Use VP2 (PTO Lamp with VECU PTO inputs)

All Rights Reserved

https://truckmanualshub.com/

Examples

Following are practical examples to be copied or as reference to build other applications. These examples may depend on other settings being set as standard from the factory. Standard settings for all parameters are listed in the last section.

Trash Packer – PTO Single Speed Control

Customer Request:

When the Packer is started the RPM should ramp to 1200 rpm. The truck will be parked. Buttons or acc pedal cannot change speed.

Wiring:

12 V to PTO 2 input when Packer is to start. Note that this can also be done on PTO 1 but with different parameter codes.

Settings:

PTO 1	**PTO 2**	Enable cruise button for engine speed of PTO	0=Off
FDR	*FDS*		
This disables the set+/decel- buttons which allows the “default resume speed” to be the set speed.			

PTO 1	**PTO 2**	Enable activation of engine speed control by engaging PTO	1=On
FFA	*FFB*		
This allows the PTO 2 input to start engine speed control without using the Cruise buttons.			

PTO 1	**PTO 2**	Resume engine speed PTO	1200 rpm
BXJ	*FCU*		
This is the speed that the rpm will jump to.			

PTO 1	**PTO 2**	Disable accelerator pedal for engine speed control PTO	2= accelerator pedal ignored
DXJ	*DXK*		
This disables the accelerator pedal.			

All Rights Reserved

https://truckmanualshub.com/

Trash Packer – PTO with Secondary Enable

Customer Request:

When the packer is engaged the rpm should stay at idle regardless of standard inputs. RPM should ramp to 1200 rpm when a second switch is engaged and only if the Cruise control button is “ON”.

Wiring:

12 V to PTO 2 input when Packer is to start. Note that this can also be done on PTO 1 but with different parameter codes.

Settings:

PTO 1	**PTO 2**	Enable cruise button for engine speed of PTO	0=Off
FDR	*FDS*		
This disables the set+/decel- buttons which allows the “default resume speed” to be the set speed.			

PTO 1	**PTO 2**	Enable activation of engine speed control by engaging PTO	2= On if CC Enable active
FFA	*FFB*		
This allows the PTO 2 input to start engine speed control but only while the Cruise Control ON/Off button is On.			

PTO 1	**PTO 2**	Resume engine speed PTO	1200 rpm
BXJ	*FCU*		
This is the speed that the rpm will jump to.			

PTO 1	**PTO 2**	Disable accelerator pedal for engine speed control PTO	2= accelerator pedal ignored
DXJ	*DXK*		
This disables the accelerator pedal.			

PTO 1	**PTO 2**	Enable CDS cond for PTO temp dropout	3= CDS1 inactive
FFT	*FFU*		
This keeps engine speed control for PTO 2 temporarily dropped out until CDS1 (VECU pin B21) is active.			

All Rights Reserved

https://truckmanualshub.com/

Hand Throttle PTO 0 as Low Speed “Cruise Control”

Customer Request:

Need to be able to set cruise control below 10 mph.

Note: Cruise control can’t set a target road speed as low as 10 mph. However, “hand throttle”(PTO 0) can set a target engine speed thereby holding a road speed while in a fixed gear. Standard PTO 0 road speed dropout is 10 mph. PTO 0 will still work parked as well. However, setting the Park brake will not drop out control.

Wiring:

No extra inputs.

Settings:

AZG	Enable parking brake cond for high idle	0=Off
This allows PTO 0 to work without having the park brake set.		

Notes

All Rights Reserved

https://truckmanualshub.com/

Concrete Pumper - Driveshaft PTO with Limits

Customer Request:

When in Driveshaft PTO, the speedometer and Odometer should not increase. Engine limited to 1800 rpm but settable with buttons and controllable with acc pedal. RPM should jump to 800 when set button is pressed.

Wiring:

12 V to PTO input when PTO is engaged.

Note: The speed suppression only works on PTO 2.

Settings:

PTO 1	**PTO 2**	Engine speed control activation on Min-Max engine speed	0=Off
FGL	*FGL*		
This keeps engine speed control from “dropping out” when the maximum speed FDK is reached.			

PTO 1	**PTO 2**	Enable "Jump to min engine speed" for PTO	1= On
FGQ	*FGR*		
This allows the engine speed to “jump” to the “resume speed” FCU when engine speed control is activated.			

PTO 1	**PTO 2**	Enable drive shaft PTO on PTO 1 or 2	1= On
Not Applicable	*FGD*		
This sets vehicle speed broadcast to 0 which stops odometer increase while Park brake is set, ABS road speed is 0 and PTO 2 input is active. This is only available for PTO 2.			

PTO 1	**PTO 2**	Resume engine speed PTO	800 rpm
BXJ	*FCU*		
This is the speed that the rpm will jump to when the set button is pressed.			

PTO 1	**PTO 2**	Max engine speed for PTO	1800 rpm
BXU	*FDK*		
Speed will be limited to this while PTO is active.			

All Rights Reserved

https://truckmanualshub.com/

Line Painter – PTO Road Speed Limit

Customer Request:

When the paint is started the road speed should be limited to 8 mph. Cruise buttons should work to set speed.

Wiring:

12 V to PTO input when paint is started.

Settings:

PTO 1	**PTO 2**	Road speed limit value for PTO	8 mph
EAQ	*EAR*		
This is the road speed limit. Note that for software for VECU 20758794 this also has the same effect as parameters FEB and FEE in that control will drop out when the speed is reached. FEB and FEE are otherwise normally out of the way at 10 mph. For VECU 21083338 EAR will not affect drop out of speed control.			

PTO 1	**PTO 2**	PTO road speed limit activation	1= On
FRO	*FRP*		
This makes the PTO road speed limit active.			

PTO 1	**PTO 2**	Enable parking brake cond for High Idle	0= Off
AZG	*AZG*		
This allows control regardless of park brake condition. Note this also affects hand throttle and other PTO controls.			

Notes

All Rights Reserved

https://truckmanualshub.com/

Line Painter – PTO Set Road Speed

Customer Request:

When the paint is started the road speed should be limited to 10 mph. When the set button is pressed, the vehicle should jump to a set speed of 8 mph.

Wiring:

12 V to PTO input when paint is started.

Settings

This is basically a combination of the above two examples.

PTO 1	**PTO 2**	Road speed limit value for PTO	8 mph
EAQ	*EAR*		
This is the road speed limit. Note that for software for VECU 20758794 this also has the same effect as parameters FEB and FEE in that control will drop out when the speed is reached. FEB and FEE are otherwise normally out of the way at 10 mph. For VECU 21083338 EAQ will not affect drop out of speed control.			

PTO 1	**PTO 2**	PTO road speed limit activation	1= On
FRO	*FRP*		
This makes the PTO road speed limit active.			

PTO 1	**PTO 2**	Enable parking brake cond for High Idle	0= Off
AZG	*AZG*		
This allows control regardless of park brake condition. Note this also affects hand throttle and other PTO controls.			

PTO 1	**PTO 2**	Enable "Jump to min engine speed" for PTO	1= On
FGQ	*FGR*		
This allows the engine speed to “jump” to the “resume speed” BXJ when the set button is pressed.			

PTO 1	**PTO 2**	Engine speed control, resume engine speed (speed selector 0)	1292 rpm
BXJ	*FCU*		
This is the speed that the rpm will jump to when the set button is pressed. The engine speed can be figured from the Road speed, the ratio of the transmission gear to be used and the desired road speed. Set speed will only be correct in that gear. RPM = (parameter MH)*(transmission gear ratio)*(desired Road speed)/(16*60) Take note that the units for MH and the road speed should both be either miles or kilometers. The last factor is 16 shaft pulses per rev and 60 min/h. For example: MH = 181919 pulses/km transmission gear ratio = 5.33 (T310M 2-low) desired Road speed = 8 mph = 12.8 km/h RPM = 18191*5.33*12.8/(16*60) = 1292 RPM			

All Rights Reserved

https://truckmanualshub.com/

Dump Truck – Configuring “Hand Throttle” PTO 0

Customer Request:

When the lift drive is connected the rpm should be limited to 1100 rpm. At that time the rpm should increase to 800 rpm. The accelerator pedal shall be disabled but the rpm can be raised using the Accel/Decel buttons up to the limit. A fast button response is desirable. The controls should be disabled unless the truck is parked. There is no feedback from the drive so the operator will use the cruise buttons to activate this control.

Wiring: None

Therefore “hand throttle” PTO 0 will be the lift drive control.

Settings

DXH	Disable accelerator pedal for engine speed control PTO 0	2 = Gas pedal ignored
This disables the throttle pedal while a set speed is active.		

AND	Maximum engine speed for the engine speed control PTO 0	1100 RPM
This is the maximum speed.		

FGL	Engine speed control activation on Min-Max engine speed	0 = Off
This keeps engine speed control from “dropping out” when the maximum speed AND is reached.		

FGO	Enable "jump to min engine speed" for PTO 0	1= On
This allows the engine speed to “jump” to the “resume speed” ANE when engine speed control is activated.		

ANE	Resume or target engine speed for PTO 0	800 rpm
This is the initial target engine speed.		

BXE	Engine speed control trim ramp up	250 rpm/s
BXF	Engine speed control trim ramp down	250 rpm/s
These increase the ramp rate for button control while the Accel/Decel button is held. Note that this doesn’t affect the jump-to speed. otherwise = 50 rpm/s		

BXI	Engine speed control step down factor (PTO 0)	100 rpm
BXF	Engine speed control step up rpm (PTO 0)	100 rpm
These are how far the RPM jumps if the Accel/Decel button is stabbed. Brake and speed settings can be left at factory settings since they will disable control if the vehicle does not have the park brake set. It will drop out of control if the brake or clutch is pressed.		

All Rights Reserved

https://truckmanualshub.com/

Trash Container Truck – Limits for PTO

Customer Request:

When the hydraulic pump is active the RPM should be limited to 1600 rpm. The truck may need to move up to 5 mph at times and in other situations would be parked and the Accel/Decel buttons would be remotely activated. These should work independently of the Cruise On/Off button position.

Wiring:

12 V to the PTO pin while the hydraulic pump is running.

Settings:

PTO 1	**PTO 2**	Enable parking brake cond for high idle	0=Off
AZG	*AZG*		
This allows control regardless of park brake condition. Note this also affects hand throttle and other PTO controls.			

PTO 1	**PTO 2**	Engine speed control PTO, Max engine speed	1600 rpm
BXU	*FCU*		
This is the RPM limit.			

PTO 1	**PTO 2**	Engine speed control activation on Min-Max engine speed	0 = Off
FGL	*FGL*		
This keeps engine speed control from “dropping out” when the maximum speed BXU is reached. This affects all engine speed control.			

PTO 1	**PTO 2**	Enable activation of engine speed control by engaging PTO	1=On
FFA	*FFB*		
This allows engine speed control to start based on PTO input regardless of cruise on/off setting.			

PTO 1	**PTO 2**	Enable cruise button for engine speed of PTO	1=On
FDR	*FDS*		
This allows the set+/decel- button to change engine set speed while PTO is on independent of the Cruise On/Off.			

All Rights Reserved

https://truckmanualshub.com/

Two Speed Control for Driveshaft PTO

Customer Request:

A concrete pump on a driveshaft PTO needs to run at 1200 rpm while in 9th gear but 1000 rpm in 10th gear. Road speed must be disabled in either gear.

Wiring:

12 V to the PTO 1 pin while the hydraulic pump is running.

Settings:

FFA	Enable activation of engine speed control by engaging PTO 1	1=On
This allows engine speed control to start based on PTO 1 input regardless of cruise on/off setting.		

FFB	Enable activation of engine speed control by engaging PTO 2	1=On
This allows engine speed control to start based on PTO 2 input regardless of cruise on/off setting.		

FDR	Enable cruise button for engine speed of PTO 1	0=Off
This disables the set+/decel- buttons which allows the “default resume speed” to be the set speed.		

FDS	Enable cruise button for engine speed of PTO 2	0=Off
This disables the set+/decel- buttons which allows the “default resume speed” to be the set speed.		

BXJ	Engine speed control PTO1, resume engine speed (speed selector 0)	1000 rpm
This is the speed that the rpm will jump to when PTO 1 is active.		

FCU	Resume engine speed PTO 2	1200 rpm
This is the speed that the rpm will jump to when PTO 2 is active.		

BXU	Engine speed control PTO 1, Max engine speed	1000 rpm
This is the RPM limit when PTO 1 is active.		

FGL	Engine speed control activation on Min-Max engine speed	0 = Off
This keeps engine speed control from “dropping out” when the maximum speed BXU is reached.		

BXB	PTO priority	0 = PTO 1 then 2
This makes PTO 1 limits apply when PTO 1 and 2 are on at the same time. i.e., PTO speed will be limited to 1000 by BXU.		

All Rights Reserved

https://truckmanualshub.com/

FGD	Enable drive shaft PTO on PTO 2	1= On
This sets vehicle speed broadcast to 0 which stops odometer increase while Park brake is set, ABS road speed is 0 and PTO 2 input is active. This works based on PTO 2 regardless of PTO 1.		

Regeneration in PTO Mode

When a vehicle is being operated in PTO mode and a diesel particulate filter (DPF) regeneration is commanded (either automatically or manually), the engine must be run at a speed above the minimum speeds listed in the tables below (according to the altitude and ambient temperature in which the vehicle is being operated) so that sufficient heat can be generated in the catalyst for regeneration to occur.

This is important to note, because the rated speed of the PTO must not be exceeded. For example; if the maximum rated speed of the PTO is 900 rpm, the regeneration will not occur while the PTO is engaged. When specifying a PTO for a chassis equipped with a DPF, a PTO having a maximum rated speed above the minimum engine speed listed in the tables below must be specified.

US07 MP7 with Catalyzed DPF

	Ambient Temperatures in Degrees C (F)		
	–30° C (–22° F)	0° C (32° F)	30° C (86° F)
Altitude in Meters (ft)	**Minimum Engine Speed, RPM**		
Sea Level	1050	1050	1050
1951 (6400)	1100	1100	1100
4267 (14,000)	1300	1300	1300

US07 MP7 with Spark Assist DPF

	Ambient Temperatures in Degrees C (F)		
	–30° C (–22° F)	0° C (32° F)	30° C (86° F)
Altitude in Meters (ft)	**Minimum Engine Speed, RPM**		
Sea Level	750	750	750
1951 (6400)	940	940	940
4267 (14,000)	1250	1250	1250

US07 MP8

	Ambient Temperatures in Degrees C (F)		
	–30° C (–22° F)	0° C (32° F)	30° C (86° F)
Altitude in Meters (ft)	**Minimum Engine Speed, RPM**		
Sea Level	1300	1200	1150
1951 (6400)	1300	1300	1200
4267 (14,000)	1300	1300	1400

All Rights Reserved

https://truckmanualshub.com/

US10 MP7 with Catalyzed DPF

	Ambient Temperatures in Degrees C (F)		
	–30° C (–22° F)	0° C (32° F)	30° C (86° F)
Altitude in Meters (ft)	**Minimum Engine Speed, RPM**		
Sea Level	1200	1200	1200
1951 (6400)	1200	1200	1200
4267 (14,000)	1250	1250	1250

US10 MP7 with Spark Assist DPF

	Ambient Temperatures in Degrees C (F)		
	–30° C (–22° F)	0° C (32° F)	30° C (86° F)
Altitude in Meters (ft)	**Minimum Engine Speed, RPM**		
Sea Level	1200	1200	1200
1951 (6400)	1200	1200	1200
4267 (14,000)	1200	1200	1200

US10 MP8

	Ambient Temperatures in Degrees C (F)		
	–30° C (–22° F)	0° C (32° F)	30° C (86° F)
Altitude in Meters (ft)	**Minimum Engine Speed, RPM**		
Sea Level	1250	1250	1250
1951 (6400)	1325	1325	1325
4267 (14,000)	1370	1370	1370

OBD13, US14, OBD15 MP7 with Conventional Chassis

	Ambient Temperatures in Degrees C (F)			
	–30° C (-22° F)	–20° C (-4° F)	–10° C (14° F)	–1° C (30° F) and above
Altitude in Meters (ft)	**Minimum Engine Speed, RPM**			
Up to 500 (1650)	1050	1050	1050	1050
1500 (4900)	1150	1150	1150	1150
2500 (8200)	1250	1250	1250	1250
4270 (14,000)	1300	1300	1300	1300

All Rights Reserved

https://truckmanualshub.com/

OBD13, US14 MP7 with Cabover Chassis

	Ambient Temperatures in Degrees C(F)			
	–30° C (-22° F)	–20° C (-4° F)	–10° C (14° F)	–1° C (30° F) and above
Altitude in Meters (ft)	**Minimum Engine Speed, RPM**			
Up to 500 (1650)	1050	1050	1050	1050
1500 (4900)	1065	1065	1065	1065
2500 (8200)	1085	1085	1085	1085
4270 (14,000)	1110	1110	1110	1110

OBD15 MP7 with Cabover Chassis

	Ambient Temperatures in Degrees C(F)			
	–30° C (-22° F)	–20° C (-4° F)	–10° C (14° F)	–1° C (30° F) and above
Altitude in Meters (ft)	**Minimum Engine Speed, RPM**			
Up to 500 (1650)	1050	1050	1050	1050
1500 (4900)	1085	1085	1085	1085
2500 (8200)	1110	1110	1110	1110
4270 (14,000)	1135	1135	1135	1135

OBD13, US14, OBD15 MP8

	Ambient Temperatures in Degrees C(F)			
	–30° C (-22° F)	–20° C (-4° F)	–10° C (14° F)	–1° C (30° F) and above
Altitude in Meters (ft)	**Minimum Engine Speed, RPM**			
Up to 500 (1650)	1100	1100	1100	1100
1500 (4900)	1175	1175	1175	1175
2500 (8200)	1251	1251	1251	1251
4270 (14,000)	1325	1325	1325	1325

All Rights Reserved

https://truckmanualshub.com/

Manual Stationary Regeneration

If manual stationary regenerations with the PTO engaged are required, the vehicle must be configured as follows:

- For US07 and US10, parameter code JAC (Enable Manual Regen during PTO) must be set to “TRUE” in VCADS. For OBD13 and beyond, it no longer exists and the feature is on by default.

  Note: A connection to central systems is necessary in order to set parameter code JAC.

- The PTO electrical interface must be connected to the vehicle electronic control unit (VECU).
- Manual stationary regeneration must be initiated by using the smart switch.
- The electronic hand throttle (engine speed control) must be active and set to an engine speed greater than the minimum speeds listed in the preceding charts, taking into account the altitude and ambient temperatures in which the vehicle is being operated.

If the vehicle is not configured as listed above, manual stationary regeneration with the PTO engaged will not occur. When regeneration does not take place, the DPF will become soot-loaded, resulting in engine derate and eventual engine shutdown.

Chassis Equipped with Clean Idle Engine

Effective January 2008, the California Air Resources Board (CARB) requires that vehicles operated in California be equipped with engines having tamper-resistant software which limits the time at which the engine can idle at speeds above low idle (550–700 rpm). With the vehicle stationary and without a PTO engaged, idle time at speeds above low idle are limited to approximately 15 minutes. After 15 minutes, the Engine Management System (EMS) will command the engine to revert back to low idle.

When installing a PTO on a vehicle equipped with a Clean Idle engine, it is very important that the PTO be activated by a switch that provides both engagement and speed inputs to the VECU so that the EMS knows when, and at what speed the PTO is operating. If the PTO is activated through a pneumatic actuator with no electrical input to the vehicle control system, the Clean Idle function will command the engine back to low idle after approximately 15 minutes, This may result in possible damage to the PTO, equipment or to the product being unloaded.

Aftertreatment System Conditioning (ASC)

Effective mid-March 2008, an Aftertreatment System Conditioning (ASC) function was implemented into the engine management system software. This function increases engine speed periodically in order to increase the temperature inside the diesel particulate filter so that unburned diesel fuel can be oxidized. On these chassis, it is important that PTO be activated by a switch which provides PTO engagement and speed input to the VECU so that the EMS knows the status of the PTO. If the engine speed control and PTO engage inputs are not enabled and the PTO is engaged, the ASC function will increase engine speed when commanded, resulting in damage to the PTO, equipment or to the product being unloaded. The ASC function will not increase engine speed if the heat mode target speed is greater than the speed selected with the engine speed control.

All Rights Reserved

https://truckmanualshub.com/

Summary of PTO Engagement Information

- For vehicles equipped with the catalyzed diesel particulate filter, the PTO MUST be activated by a switch that provides both engagement and speed information to the VECU when the PTO is engaged, and the vehicle operator must use engine speed control to set engine speed when the PTO is in operation.
- For vehicles equipped with the catalyzed diesel particulate filter, and prolonged periods of engine idle time are required, the engine speed control SHOULD NOT be used to increase engine speed. The engine must be allowed to idle as normal. If prolonged engine idling is necessary, it is recommended that the EMS ECU be programmed with CARB compliant files.
- For vehicles with either a catalyzed or a non-catalyzed diesel particulate filter and a Clean Idle engine, the PTO MUST be activated by a switch that provides engagement and speed information to the VECU when the PTO is engaged, and the vehicle operator MUST use engine speed control to set engine speed when the PTO is in operation.

Note: The optional PTO dedicated switches provide input information to the VECU only. The VECU cannot provide a signal to engage a PTO.

Note: In general, a front engine-mounted PTO does not require speed or engagement information to the VECU except for those instances where the engine speed must NOT be lowered during PTO operation. As an example, in concrete mixer applications when an increase in engine speed is required to rotate the barrel at a faster speed, PTO input to the VECU is required and engine speed control must be enabled, otherwise, engine speed may either revert to low idle or may increase due to the lack of interaction with the engine management system.

Rolling Start for mDrive: New Generation AMT-F

W9118175

Certain dump trucks are used to re-fill a road paver's hopper throughout the paving process. In this case, the paver pushes the dump truck. When the dump truck needs to move away from the paver, it is important that it does not cause the paver to change speed or the paver will leave a ripple in the road surface. Rolling Start allows the driver to go from neutral to drive without first applying the brake.

Rolling Start is **not** enabled by default. To enable Rolling Start, use Premium Tech Tool to toggle the desired parameter below.

Rolling Start can be enabled via the parameter (P1OM4 = True) setting in Premium Tech Tool (PTT). If the parameter (P1OM4) is not visible in Premium Tech Tool, contact Body Builder Support @ 877-770-7575.

Operating Instructions — When a truck is being pushed in neutral, hold the + button for two seconds while in neutral, and then let go. Move the gear selector from neutral to drive, at this point you can choose the start gear. This will override the brake interlock, when you step on the throttle you will be able to accelerate without braking. Every time you want to override the brake interlock the same action will be taken, because the instant the truck moves forward into drive the brake interlock will be re-engaged. This can only be done with a premium shifter.

All Rights Reserved

https://truckmanualshub.com/

Parameter	Value	Effect	Result
P1OM4	TRUE	Deactivates brake interlock	Vehicle can go from neutral to drive without brake application (Rolling Start enabled).
P1OM4	FALSE	Activates brake interlock	The brake is required to go from neutral to drive. (Roller Start disabled.)

mDrive Auto Neutral

Auto neutral is now available on vehicles equipped with GHG 2017 engines and the new “F” generation *m*Drive. This feature is offered on the following Mack *m*Drive transmissions:

- *m*Drive (Standard)
- *m*Drive for Severe Duty
- *m*Drive with Crawler Gears

Auto neutral will put the *m*Drive transmission into neutral when the parking brake is set. Once the park brake is released, the shifter will need to be placed in either drive (D) or reverse (R) for the transmission to go back into gear. Auto neutral improves jobsite safety for a variety of applications such as mixers where remote throttle is often utilized.

Auto neutral can be enabled via the parameter (P1NFD = True) setting in Premium Tech Tool (PTT). If the parameter (P1NFD) is not visible in Premium Tech Tool contact Body Builder Support @ 877-770-7575.

Standard Settings

The following are VECU settings if no alternate PTO options are selected. These are the settings assumed from which the above examples start. These allow a cruise button control of engine speed in any PTO including PTO 0/”hand throttle”. Control will only work while the park brake is set. Brake or clutch pedal applications will dropout control.

VECU: Standard Settings				
MID	**ID**	**Name**	**Value**	**Unit**
144	AG	Cruise control	Yes	
144	AI	Cruise control max speed	105	km/h
144	AL	Idling automatic shut-off	No	
144	AND	Maximum engine speed for the engine speed control PTO 0	2500	r/min
144	ANE	Resume or target engine speed for PTO 0	600	r/min
144	ANF	High idle/PTO 0 min engine speed	500	r/min
144	AST	Cruise control Trim step, resume	2	km/h/s
144	AZG	Enable parking brake cond for High Idle	Yes	
144	AZM	Enable second speed axle	No	
144	BK	Cruise control Min set speed	32	km/h
144	BL	Cruise control Min speed to resume	15	km/h
144	BXA	Enable engine speed control	Yes	
144	BXB	PTO priority	Prio: PTO 1-2-3-4	

All Rights Reserved

https://truckmanualshub.com/

VECU: Standard Settings				
MID	**ID**	**Name**	**Value**	**Unit**
144	BXE	Engine speed control trim ramp up	100	r/min/s
144	BXF	Engine speed control trim ramp down	100	r/min/s
144	BXI	Engine speed control Step Down Factor (PTO0)	50	r/min
144	BXJ	Engine speed control PTO1, resume engine speed (speed selector 0)	600	r/min
144	BXU	Engine speed control PTO1, Max engine speed	2100	r/min
144	BXW	Engine speed control PTO1, Min engine speed	600	r/min
144	BXX	Enable cruise buttons for engine speed mode (PTO 0)	On if CC Enable active	
144	BYD	Engine speed control PTO1, activation condition, max VS	16	km/h
144	BYE	Max VS to activate PTO 0 engine speed Control	16	km/h
144	BYF	Engine speed control PTO 1, de-activation condition, min VS	16	km/h
144	BYG	Max VS to deactivate PTO0 engine speed control	16	km/h
144	BYI	Engine speed control PTO 0, activation cond. on brakes	Condition not used	
144	BYJ	Engine speed control PTO1, activation condition on brakes	Condition not used	
144	BYK	Enable brake pedal cond for PTO 0 deactivation	Condition not used	
144	BYL	Enable brake pedal cond for PTO 1 deactivation	Condition not used	
144	BYM	Enable secured neutral cond for PTO 0 activation	Not used	
144	BYN	Enable secured neutral cond for PTO 1 activation	Not used	
144	BYO	Enable secured neutral cond for PTO 0 deactivation	Not used	
144	BYP	Enable secured neutral cond for PTO 1 deactivation	Not used	
144	BYQ	Enable clutch cond for PTO 1 activation	Off	
144	BYR	Engine speed control PTO 0, activation condition on clutch	Off	
144	BYS	Enable clutch cond for PTO 1 deactivation	On	
144	BYT	Enable clutch cond for High Idle/PTO 0 deactivation	On	
144	BZG	Max VS to activate PTO 1	2	km/h
144	CCU	Clutch delay before cruise deactivation	5	s
144	CCV	Cruise reference speed mode	Erase at power down	s
144	CCW	Default cruise reference speed	0	km/h
144	CDK	Enable velocity limit for power down	On	
144	CDX	Enable RSL 2	Off	
144	CEB	Enable RSL 3	Off	
144	CUK	Enables the function remote engine stop	Engine stop from chassis via J1939 message	
144	CUL	Enable engine start from chassis	Off	
144	CUM	Engine stop demand filter time	1.0	s

All Rights Reserved

https://truckmanualshub.com/

VECU: Standard Settings				
MID	**ID**	**Name**	**Value**	**Unit**
144	CUN	Max VS to activate remote engine stop	5	km/h
144	CWW	Time delay before power down	6	s
144	CX	Air conditioning installed	Yes	
144	DGM	Time before push is seen as a ramp	0.25	s
144	DJ	Brake cruise control, default speed	4.8	km/h
144	DSL	Max vspd for activation of PTO 0.1	12	km/h
144	DSQ	Min vspd for deactivation of PTO 0.1	12	km/h
144	DTG	Ramp up value at increased engine speed for PTO 1	100	r/min/s
144	DTH	Ramp down value at decreased engine speed for PTO 1	100	r/min/s
144	DTS	Speed sensor tamper detection	On	
144	DTW	Speed sensor tamper detection torque limit	50	%
144	DUB	Accelerator pedal calibration required	Off	
144	DUJ	Allow manual cooling fan act, vehicle moving	No	
144	DUK	Allow manual cooling fan activation vehicle parked	No	
144	DUL	Enable cooling fan activation from PTO	Off	
144	DUN	Extended cooling fan time when AC is active	60	s
144	DXH	Disable accelerator pedal for engine speed control PTO 0	Off	
144	DXJ	Disable accelerator pedal for engine speed control PTO 1	Off	
144	DXK	Disable accelerator pedal for engine speed control PTO 2	Off	
144	DXL	Disable accelerator pedal for PTO 3	Off	
144	DXM	Enable engine speed limit when PTO active (PTO 0)	On	
144	DZY	Enable brake cruise	Enabled switch / stalk dependant	
144	EAQ	Road speed limit value for PTO 1	161	km/h
144	EAR	Road speed limit value for PTO 2	161	km/h
144	EAS	Road speed limit value for PTO 3	161	km/h
144	EAT	Road speed limit value for PTO 4	161	km/h
144	EAU	Road speed limit with air suspension lowered	24	km/h
144	EAY	Enable air suspension road speed limit	On	
144	EAZ	Enable drive shaft speed limit	On	
144	EBB	Enable the Smart Engine Idle function	Off	
144	EBN	Differential lock control enable	Off	
144	ECD	Disable or enable the different modes in DRL.	Message 3	
144	ECF	Vehicle speed threshold for DRL	48	km/h
144	ECG	Override timer for DRL	600	s

All Rights Reserved

https://truckmanualshub.com/

VECU: Standard Settings				
MID	ID	Name	Value	Unit
144	ECH	Adjustable interrupt timer for DRL	1.0	s
144	FBG	Filter time for changing state of RSL 2	3.0	s
144	FBH	Filter time for changing state of RSL 3	3.0	s
144	FBT	Enable low voltage disconnect	On	
144	FBU	Enable wireless download	Off	
144	FBV	Power down torque limitation percentage	0	%
144	FBW	Power down +velocity limitation	5	km/h
144	FBY	Trim factor at increased set engine speed for PTO 2	0	r/min/s
144	FBZ	Trim factor at increased set engine speed for PTO 3	0	r/min/s
144	FCA	Trim factor at increased set engine speed for PTO 4	0	r/min/s
144	FCB	Trim factor at decreased set engine speed for PTO 2	0	r/min/s
144	FCC	Trim factor at decreased set engine speed for PTO 3	0	r/min/s
144	FCD	Trim factor at decreased set engine speed for PTO 4	0	r/min/s
144	FCE	Trim factor at engine speed trim ramp up for PTO 2	100	r/min/s
144	FCF	Trim factor at engine speed trim ramp up for PTO 3	50	r/min/s
144	FCG	Trim factor at engine speed trim ramp up for PTO 4	50	r/min/s
144	FCH	Trim factor at engine speed trim ramp down for PTO 2	100	r/min/s
144	FCI	Trim factor at engine speed trim ramp down for PTO 3	50	50
144	FCJ	Trim factor at engine speed trim ramp down for PTO 4	50	r/min/s
144	FCL	Engine speed step up factor for PTO 1	50	r/min
144	FCM	Engine speed step up factor for PTO 2	50	r/min
144	FCN	Engine speed step up factor for PTO 3	50	r/min
144	FCO	Engine speed step up factor for PTO 4	50	r/min
144	FCQ	Engine speed step down factor for PTO1	50	r/min
144	FCR	Engine speed step down factor for PTO 2	50	r/min
144	FCS	Engine speed step down factor for PTO 3	50	r/min
144	FCT	Engine speed step down factor for PTO 4	50	r/min
144	FCU	Resume engine speed PTO 2	600	r/min
144	FCV	Resume engine speed PTO 3	600	r/min
144	FCW	Resume engine speed PTO 4	600	r/min
144	FDE	PTO1 engine speed limit activation	On	
144	FDF	PTO2 engine speed limit activation	On	
144	FDG	PTO3 engine speed limit activation	On	
144	FDH	PTO4 engine speed limit activation	On	
144	FDK	Max engine speed for PTO 2	2100	r/min

All Rights Reserved

https://truckmanualshub.com/

VECU: Standard Settings				
MID	**ID**	**Name**	**Value**	**Unit**
144	FDL	Max engine speed for PTO 3	2500	r/min
144	FDM	Max engine speed for PTO 4	2500	r/min
144	FDN	Min engine speed for PTO 2	600	r/min
144	FDO	Min engine speed for PTO 3	500	r/min
144	FDP	Min engine speed for PTO 4	500	r/min
144	FDR	Enable cruise button for engine speed of PTO 1	On if CC Enable active	
144	FDS	Enable cruise button for engine speed of PTO 2	On if CC Enable active	
144	FDT	Enable cruise button for engine speed of PTO 3	On if CC Enable active	
144	FDU	Enable cruise button for engine speed of PTO 4	On if CC Enable active	
144	FDV	Acc pedal cond for PTO 2 activation	Not used	
144	FDW	Acc pedal cond for PTO 3 activation	Not used	
144	FDX	Acc pedal cond for PTO 4 activation	Not used	
144	FDY	Acc pedal cond for PTO 2 deactivation	Not used	
144	FDZ	Acc pedal cond for PTO 3 deactivation	Not used	
144	FEA	Acc pedal cond for PTO 4 deactivation	Not used	
144	FEB	Max vspd for activation of PTO 2	16	km/h
144	FEC	Max vspd for activation of PTO 3	12	km/h
144	FED	Max vspd for activation of PTO 4	12	km/h
144	FEE	Min vspd for deactivation of PTO 2	16	km/h
144	FEF	Min vspd for deactivation of PTO 3	12	km/h
144	FEG	Min vspd for deactivation of PTO 4	12	km/h
144	FEH	Enable brake pedal cond for PTO 2 activation	Condition not used	
144	FEI	Enable brake pedal cond for PTO 3 activation	Condition not used	
144	FEJ	Enable brake pedal cond for PTO 4 activation	Condition not used	
144	FEK	Enable brake pedal cond for PTO 2 deactivation	Condition not used	
144	FEL	Enable brake pedal cond for PTO 3 deactivation	Condition not used	
144	FEM	Enable brake pedal cond for PTO 4 deactivation	Condition not used	
144	FEN	PTO2 activation neutral condition	Not used	
144	FEO	PTO3 activation neutral condition	Not used	
144	FEP	PTO4 activation neutral condition	Not used	
144	FEQ	PTO2 deactivation neutral condition	Not used	
144	FER	PTO3 deactivation neutral condition	Not used	
144	FES	PTO4 deactivation neutral condition	Not used	

All Rights Reserved

https://truckmanualshub.com/

VECU: Standard Settings				
MID	ID	Name	Value	Unit
144	FET	Enable clutch cond for PTO 2 activation	Off	
144	FEU	Enable clutch cond for PTO 3 activation	Not used	
144	FEV	Enable clutch cond for PTO 4 activation	Not used	
144	FEW	Enable clutch cond for PTO 2 deactivation	On	
144	FEX	Enable clutch cond for PTO 3 deactivation	Not used	
144	FEY	Enable clutch cond for PTO 4 deactivation	Not used	
144	FFA	Enable activation of engine speed control by engaging PTO 1	Off	
144	FFB	Enable activation of engine speed control by engaging PTO 2	Off	
144	FFC	Enable activation of engine speed control by engaging PTO 3	Off	
144	FFD	Enable activation of engine speed control by engaging PTO 4	Off	
144	FFE	Disable accelerator Pedal for PTO 4	Off	
144	FFF	Enable brake cond for PTO 0 temp dropout	Condition not used	
144	FFH	Enable brake cond for PTO 1 temp dropout	Condition not used	
144	FFI	Enable brake cond for PTO 2 temp dropout	Condition not used	
144	FFJ	Enable brake cond for PTO 3 temp dropout	Condition not used	
144	FFK	Enable brake cond for PTO 4 temp dropout	Condition not used	
144	FFL	Enable clutch cond for PTO 0 temp dropout	Not used	
144	FFN	Enable clutch cond for PTO 1 temp dropout	Not used	
144	FFO	Enable clutch cond for PTO 2 temp dropout	Not used	
144	FFP	Enable clutch cond for PTO 3 temp dropout	Not used	
144	FFQ	Enable clutch cond for PTO 4 temp dropout	Not used	
144	FFR	Enable CDS cond for PTO 0 temp dropout	Condition not used	
144	FFT	Enable CDS cond for PTO 1 temp dropout	Condition not used	
144	FFU	Enable CDS cond for PTO 2 temp dropout	Condition not used	
144	FFV	Enable CDS cond for PTO 3 temp dropout	Condition not used	
144	FFW	Enable CDS cond for PTO 4 temp dropout	Condition not used	
144	FFX	Enable CDS cond for PTO 0 temp dropout	Condition not used	
144	FFZ	Enable CDS cond for PTO 1 dropout	Condition not used	
144	FGA	Enable CDS cond for PTO 2 dropout	Condition not used	
144	FGB	Enable CDS cond for PTO 3 dropout	Condition not used	
144	FGC	Enable CDS cond for PTO 4 dropout	Condition not used	
144	FGD	Enable Drive Shaft PTO on PTO2	Off	
144	FGE	Engine speed control Hold To Nearest RPM Activation	Off	
144	FGF	"Hold to nearest" step value for PTO 0	50	r/min
144	FGH	"Hold to nearest" step value for PTO 1	50	r/min
144	FGI	"Hold to nearest" step value for PTO 2	50	r/min

All Rights Reserved

https://truckmanualshub.com/

VECU: Standard Settings				
MID	ID	Name	Value	Unit
144	FGJ	"Hold to nearest" step value for PTO 3	50	r/min
144	FGK	"Hold to nearest" step value for PTO 4	50	r/min
144	FGL	Engine speed control Activation on Min-Max Engine Speed	On	
144	FGM	Enable CC Set+ as cond for engine speed control activation	Off	
144	FGN	engine speed control Dropout Activation	On	
144	FGO	Enable "jump to min engine speed " for PTO 0	Off	
144	FGQ	Enable "jump to min engine speed " for PTO 1	Off	
144	FGR	Enable "jump to min engine speed " for PTO 2	Off	
144	FGS	Enable "jump to min engine speed " for PTO 3	Off	
144	FGT	Enable "jump to min engine speed " for PTO 4	Off	
144	FGV	Enable PTO 3 enable switch	Off	
144	FGW	Enable PTO 4 enable switch	Off	
144	FML	Second accelerator pedal installed	Off	
144	FMY	Idle shutdown warm-up temperature	38	°C
144	FNA	Idle shutdown warm-up timer	300	s
144	FNV	Enable theft deterrent	Off	
144	FQZ	Enable Idle cool down	Off	
144	FRO	PTO1 road speed limit activation	Off	
144	FRP	PTO2 road speed limit activation	Off	
144	FRQ	PTO3 road speed limit activation	Off	
144	FRR	PTO4 road speed limit activation	PTO4 Road Speed Limit Activation	
144	FTH	Parking brake buzzer mode	On	
144	FZG	PTO 0 Min, enable engine speed	0	r/min
144	GEQ	Enable min engine speed condition to activate PTO 1	No	
144	GP	Cruise trim factor plus	2	km/h/s
144	IGS	Allowed relative ABS speed deviation	15.23	%
144	IQX	Limit value for PDLO RSL	24	km/h
144	IQY	Enable PDLO road speed limit	Yes	
144	JAX	Time delay before fan act upon APM compressor req	20	s
144	MH	Vehicle speed factor	18191	imp/km
144	QP	PTO basic function enable	Yes	
144	RR	Cruise trim factor, minus	2	km/h/s
144	RS	Cruise step factor	2	km/h
144	RT	Engine speed control step up rpm (PTO 0)	50	r/min
144	XJV	Qualified idle threshold time	120	s

All Rights Reserved

https://truckmanualshub.com/

VECU: Standard Settings				
MID	ID	Name	Value	Unit
144	XLZ	LOV engine over load Thrs	90	%
144	XM	Parking brake condition to activate PTO 1	No	
144	XMC	Snapshot data enabled	No	
144	XN	Type of PTO	Transm. #1	
144	XP	Enable brake pedal cond for High Idle	Yes	

Installation of Single and Double PTOs on mDrive Generation F Transmissions

With the release of GHG 2017, the *m*Drive Generation "F" was introduced into production. With the new transmission, there are several changes that will affect the PTO set-up and operation.

PTO 1 is now controlled by the Vehicle Electronic Control Unit (VECU). It is no longer controlled by the Transmission Electronic Control Unit (TECU) as on previous vehicles

PTO 2 is now controlled by the new Mack Body Builder Module (BBM). It is no longer controlled by the Transmission Electronic Control Unit as on previous vehicles.

On trucks ordered with a Single or Double PTO or PTO Prep Kit, only Customer Parameters will be required after PTO installation.

Trucks ordered without a Single PTO or PTO Prep Kit; software accessory kit, 85137335 will need to run using the Premium Tech Tool (PTT) after the PTO has been installed.

Trucks ordered without a Double PTO or PTO Prep Kit will require the addition of a Body Builder Module and overlay wiring harness. Software accessory kit 85151840 will need to run using the Premium Tech Tool after the PTO has been installed.

The following table is a list of parts that are required for the installation of a second PTO.

Item	Description	Part No.	Qty.
1	PTO 2 Overlay Harness	22552089	1
2	Body Builder Module (BBM)	22219987	1
3	Bracket , BBM Mounting Plate	84704080	1
4	Flange Lock Nut, M6*7.3	990949	4
5	Spring Nut, M6 0.5-4	993124	2
6	Spacer Sleeve, 8*12*20	975301	2
7	Washer, 6.4*18*2	994847	2
8	Six Point Socket Screw, M6*20	994796	2
9	Spacer Sleeve, 6.1*16*15	25086939	4
10	5 Amp Fuse — Install in Location 54	25151974	1
11	PTO Switch	82280762	1

See Figures 10 – 13 for module and harness installation and routing.

All Rights Reserved

https://truckmanualshub.com/

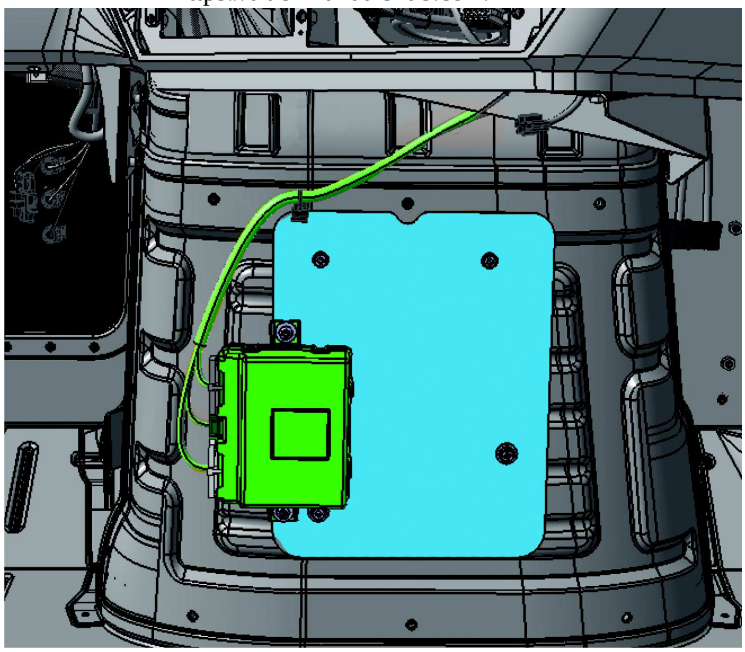

W9120929

Fig. 10 Body Builder Module Installation

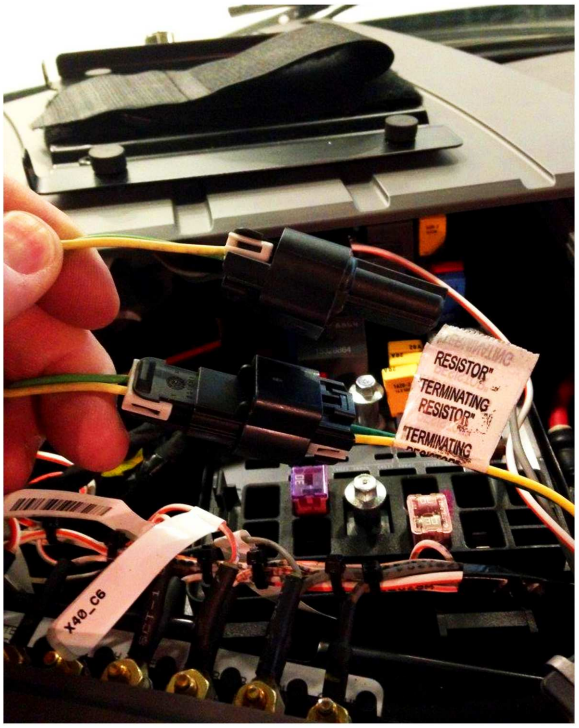

W9121343

Fig. 11 Correct Terminating Resistor Location

Note: The terminating resistor connection required to connect to the Body Builder overlay harness is located just under the center dash cover (below the CB mounting plate) by the fuse relay center (FRC). This is the only location that can be used to connect the new overlay harness. Disconnect the terminating resistor for the cab harness and connect the overlay harness in its place, then connect the removed terminating resistor to the end of the new overlay harness.

All Rights Reserved

https://truckmanualshub.com/

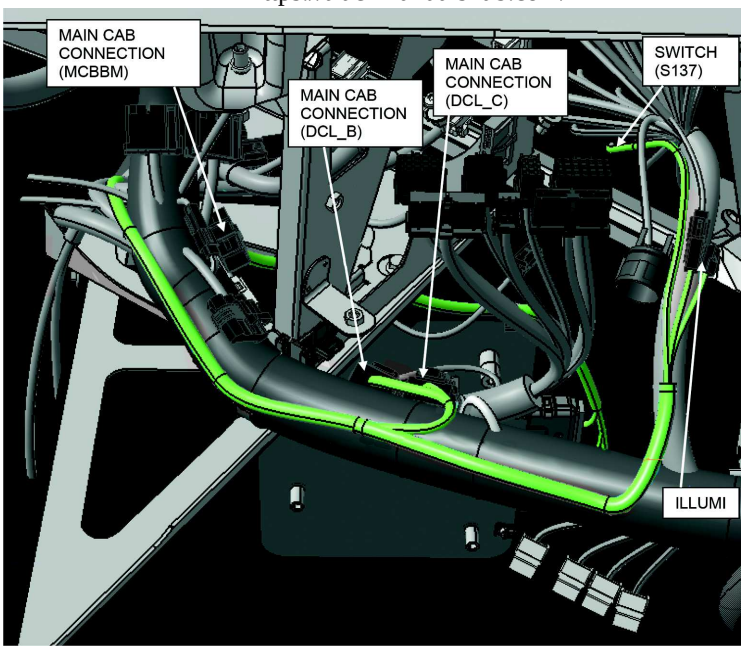

W9120931

Fig. 12 Overlay Harness

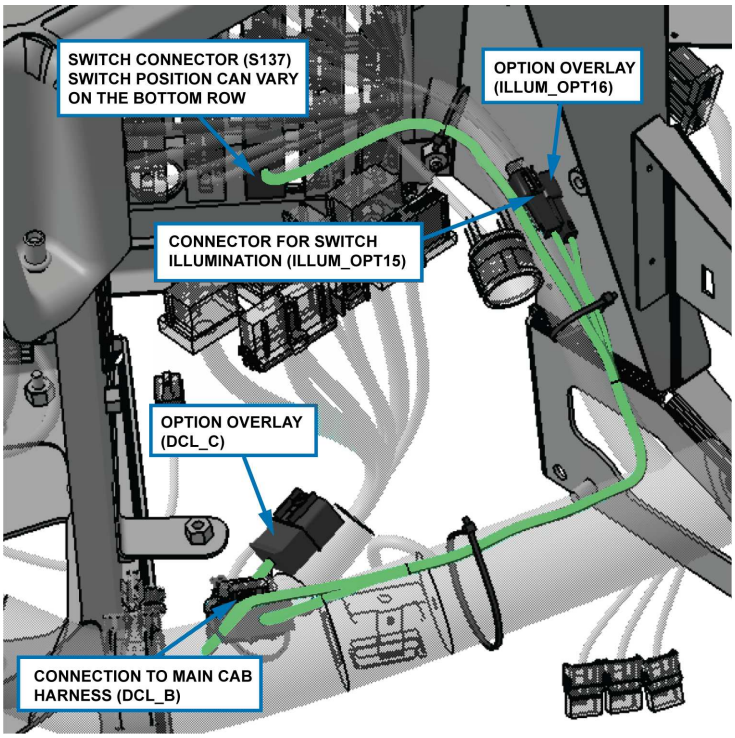

W9121512

Fig. 13 Overlay Harness Switch Connection

All Rights Reserved

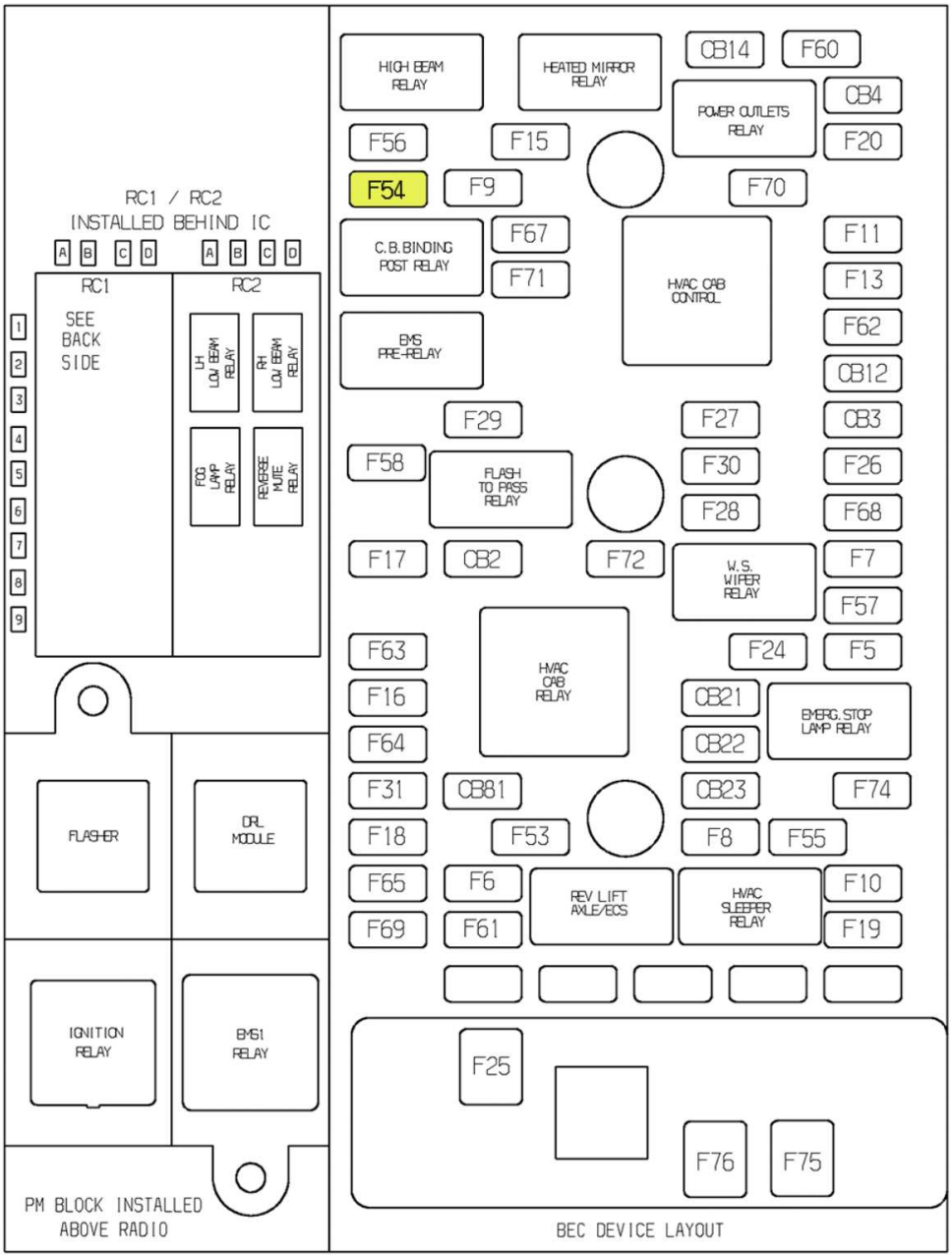

W9126206

Fig. 14 Fuse 54 Location

All Rights Reserved

https://truckmanualshub.com/

Split Shaft PTO Functionality with mDrive HD Transmissions

Factory builds as of November 13, 2017 and after have Split Shaft PTO functionality available. This programming enables the *m*Drive HD transmission to be used in applications requiring “Split Shaft” PTO to provide high horsepower and torque input. This is a common requirement for the Concrete Pumpers, Vacuum Body or High Pressure Liquid Transfer applications.

This new functionality also allows transmission start in **7th thru 12th** gears and shift to a desired continuous operation gear of 11th or 12th. This is useful if the application has a high moment of inertia.

This programming can be enabled locally using the Premium Tech Tool. This feature is not a factory selectable option. It is not an MSS selectable option.

Accessory Kit Part No. 85151005 will program the TECU and VECU for Splitbox Functionality.

Any truck with F - Series *m*Drive HD transmission built prior to the above date can also have this functionality by updating the VECU and TECU software.
Assistance from Body Builder Support Group would be required to perform the update.

Functionality and Software Parameter Flexibility (Premium Shift Pad is required for some):

- P1ISL. Select Start Gears (7 – 12) with Split Shaft PTO engaged. Gear changing is done using the plus (±) button with the gear lever in position “M”.
- P1P04. Automatic Upshift Minimum Engine Speed Limit. Transmission will start on selected split shaft start gear. When engine speed reach parameter value, transmission will upshift to next gear. Transmission will upshift automatically until direct drive gear. If the parameter value is set to maximum, manual upshifts can be done with the upshift button. Automatic upshift will be used for starting high mass equipment like wood chippers that can not start on direct drive gear.
- P1NL8. **Lowest gear for continuous split shaft operation (7 – 12).** Gear 11 for overdrive transmissions and Gear 12 for direct drive transmission recommended since 1:1 gear ratio provides strongest gear and lowest friction loss. Gear shifting is done using the plus (±) button with the gear lever in position “M”.
- *m*Drive PTO. If gearbox PTO is requested, PTO will engage when reaching direct drive gear.

All Rights Reserved

https://truckmanualshub.com/

mDrive Split - Shaft (formally Drive shaft PTO)

To Setup and Enable Split - Shaft Functionality Run Accessory Kit Part No. 85151005

Split - Shaft Functionality is primarily used for High PTO Loads such as Concrete Pumpers, VAC Trucks, Hydro Excavators, and other specialty-use vehicles.

For Split - Shaft (Drive shaft PTO) set the following parameters after Running the Accessory Kit and Calibrating the Transmission and Clutch.

Level	Parameter	Value	Description
4	P1JED	1	The PTO is Drive Shaft PTO
4	BRQ	1	Activate functionality, Split-Shaft
4	ZA	1	PTO Out 2 Mount
4	FUK	1 = On	Enable Split - Shaft condition for PTO 2
4	XN	1	Type of PTO (Trans # 1)
4	XO	1	Activate PTO output from VECU
4	LJL	1	Park brake switch, PTO Exit Condition
4	LJM	0	ABS Vehicle Speed Condition, Enable
2	EA	12	Transmission Gearbox Type
2	P1APB	1	APF - ENH Enable (Parameter set with Accessory Kit)
4	P1ISL	11	Select Start Gear (7 –12)
4	P1NL8	11	Lowest Gear for Continuous Split - Shaft Operation (7 –12)
4	P1NL9	1180	Maximum Engine Torque for Gears (7 –12) (0–3688 lb-ft)

The Parameters above require some tweaking depending on the Application.

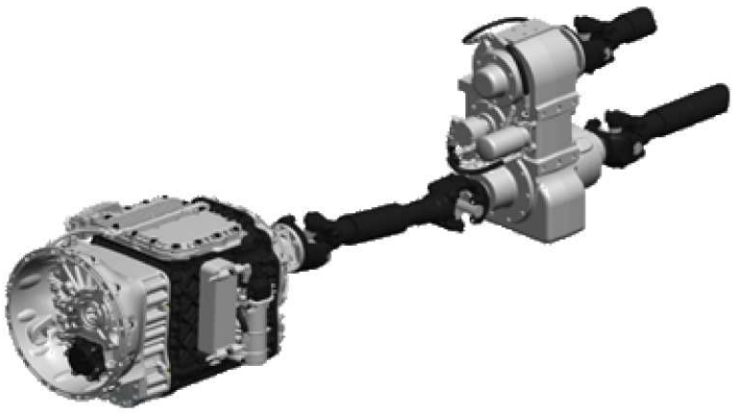

W9132851

Any Questions Please Contact Mack Trucks Body Builder Support Group at **877–770–7575**

All Rights Reserved