https://truckmanualshub.com/

Valves and Engine Injectors, Adjustment

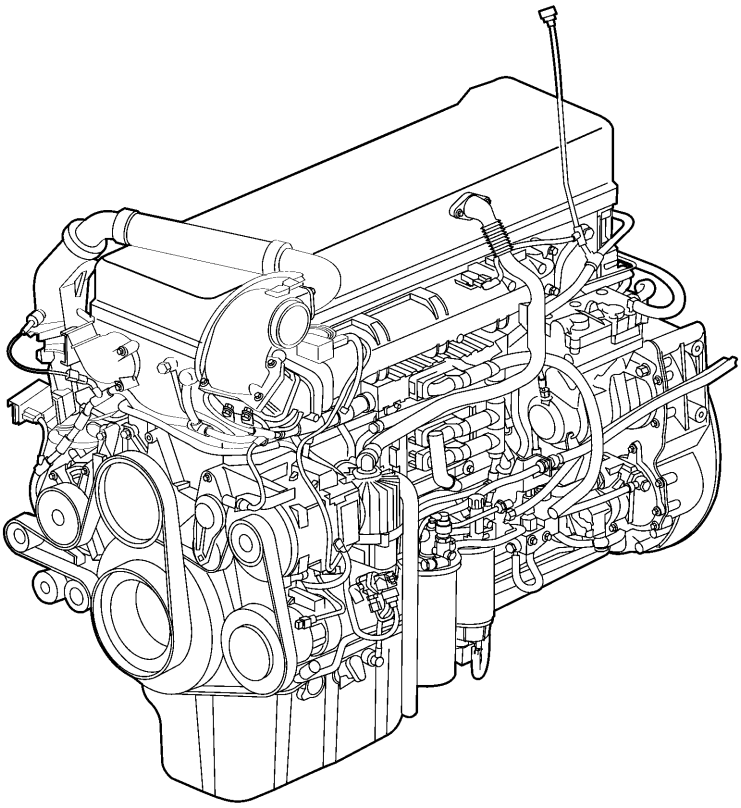

W2005941

This information covers the correct procedure for adjusting the valves and engine injectors on MACK MP8 engines.

Note: This information also applies to Mack Trucks Australia.

Contents

- "Special Tools", page 3
- "Valves and Engine Injectors, Adjustment", page 4

https://truckmanualshub.com/

Note: Information is subject to change without notice.
Illustrations are used for reference only and may differ slightly from the actual engine version. However, key components addressed in this information are represented as accurately as possible.

Tools

Special Tools

For special tools ordering instructions, refer to Tool Information, Function Group 08.

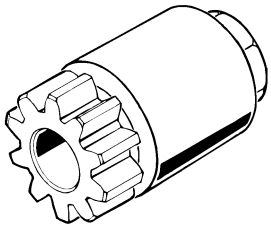

T0012612

88800014
Flywheel Turning Tool

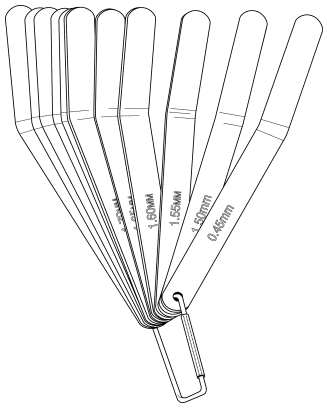

W0000416

85111377 or 88880053
Feeler Gauge Set

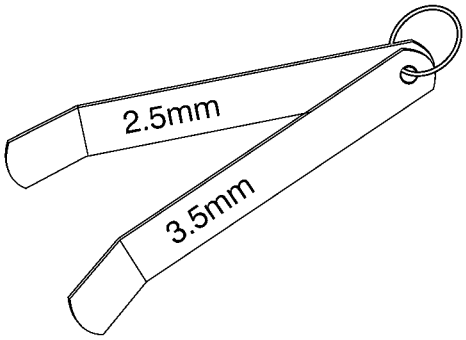

W2055377

88880052 (part of set 88880053)
Feeler Gauges

Service Procedures

Valves and Engine Injectors, Adjustment

Valve cover removed

You must read and understand the precautions and guidelines in Service Information, Function Group 20, "Engine Safety Practices" before performing this procedure. If you are not properly trained and certified in this procedure, ask your supervisor for training before you perform it.

Special tools: 3949521, 85111377 or 88880053, 88800014, 88800232, 88880052

1

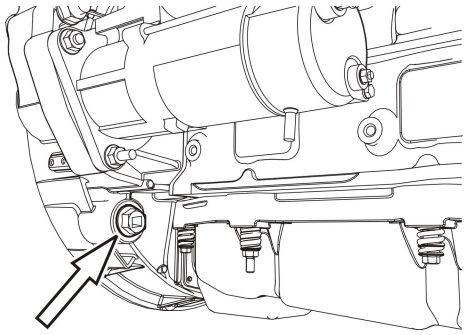

W0002368

Note: This valves and engine injectors adjustment procedure replaces all previous procedures including those found in Mack MP8 Service Manuals 5-113 and 5-117.

Remove the plug from the lower right side of the flywheel housing and install the flywheel turning tool.

88800014

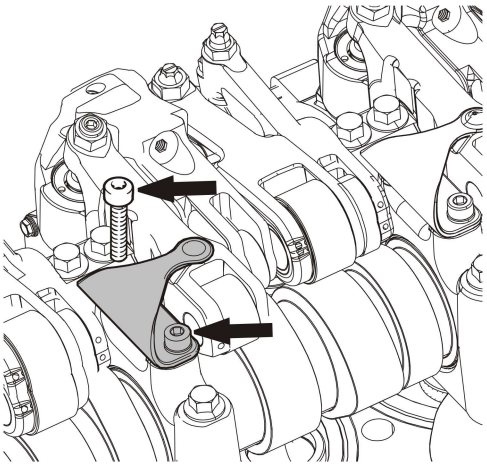

W2005753

2
Remove the fasteners retaining the leaf springs to release spring tension on the engine brake rocker arms. Remove leaf springs.

https://truckmanualshub.com/

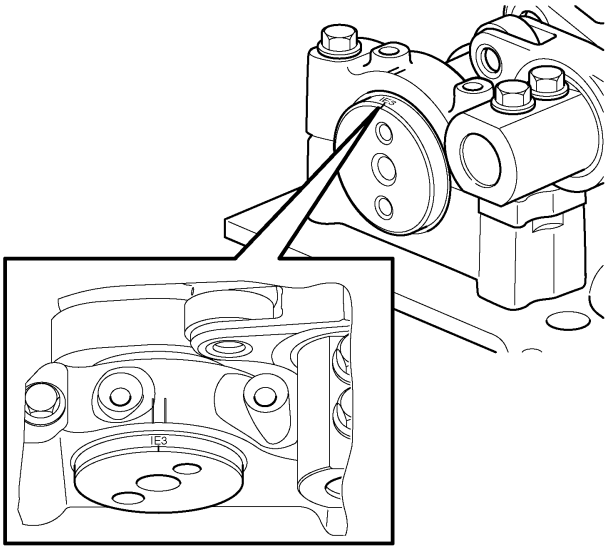

W2006171

3

Camshaft Marks for Setting Valves and Engine Injectors

- **Without engine brake:** Markings 1–6 apply to adjustment of inlet valves, exhaust valves and engine injectors.
- **With engine brake:** Markings 1–6 apply to adjustment of inlet valves and engine injector. Markings E1–E6 apply to adjustment of exhaust valves.

Valve and Injector Settings with Engine Brake

Cam Position	Injector	Intake/ Exhaust	Exhaust Engine Brake	Engine Brake Rocker
5	X	X		
E6			X	X
3	X	X		
E2			X	X
6	X	X		
E4			X	X
2	X	X		
E1			X	X
4	X	X		
E5			X	X
1	X	X		
E3			X	X

Valve and Injector Settings without Engine Brake

Cam Position	Injector	Intake	Exhaust
5	X	X	X
3	X	X	X
6	X	X	X
2	X	X	X
4	X	X	X
1	X	X	X

Note: The “V” markings on the camshaft are for cylinder TDC reference only and are not used for valve adjustment.

Intake Valves Adjustment (with or without engine brake)

4

Using the flywheel turning tool, rotate the engine to the next camshaft marking for adjustment of the intake valve. Rotate the engine until the valve and injector mark on the front end of the camshaft aligns with the stamped mark on the camshaft front bearing cap.

Note: Engine must be rotated in the normal direction of operation when advancing to the next mark.

5

With the engine cold (140°F or less), check the intake valve clearance. Push down on the back of the rocker and insert a feeler gauge of the proper specification, 0.20 ± 0.05 mm (0.008 ± 0.002 inch), between the bridge and the adjustment screw. If the inlet rocker requires adjustment, loosen the lock nut on the rocker and adjust the plunger.

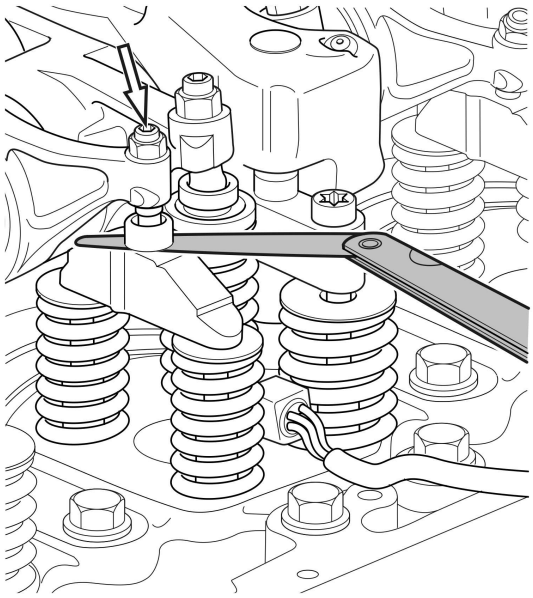

T2023322

6

Hold the adjusting screw to prevent it from turning and tighten the adjusting screw lock nut to 38 ± 4 Nm (28 ± 3 ft-lb).

7

Check the valve clearance again after the nut is tightened.

Note: Mark the rocker arm when the valve has been adjusted.

Engine Injector Adjustment

8
To adjust the injector on the same cylinder location, loosen the lock nut and back off the adjusting screw until it no longer makes contact.

9
Adjust the engine injector's rocker arm to zero clearance.

Note: The spring must not be compressed. There should not be any movement of the spring.

10
Tighten the adjusting screw an additional four flats or 240 degrees of clockwise rotation.

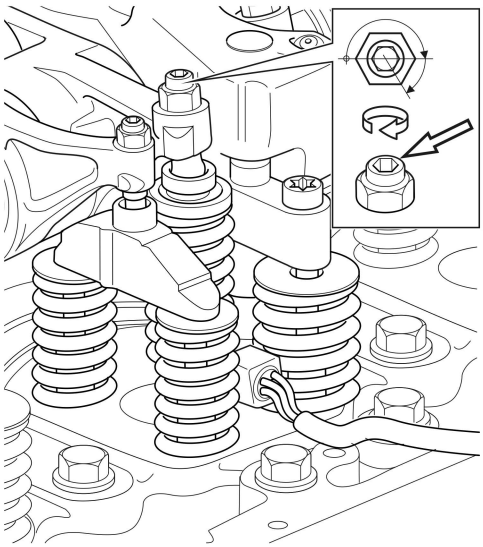

T2023323

11
Tighten the adjusting screw lock nut to 52 ± 4 Nm (38 ± 3 ft-lb).

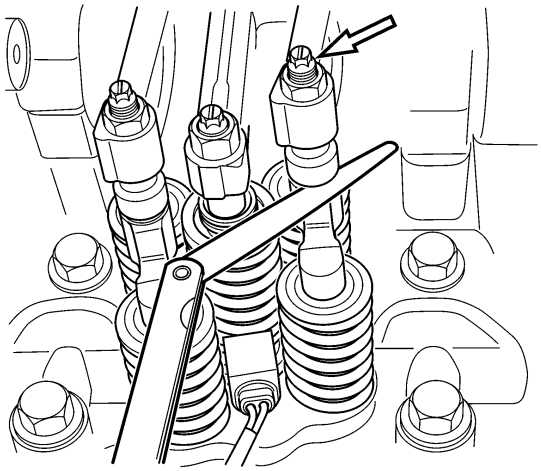

T2022277

Exhaust Valves Adjustment (without engine brake)

12
Continue adjustment on the same cylinder location by checking the exhaust rocker valve clearance. Push down on the back of the exhaust rocker and insert a 0.80 ±0.05 mm (0.031 ±0.002 inch) feeler gauge between the bridge and the adjustment screw. If the exhaust rocker requires adjustment, loosen the lock nut on the rocker and adjust the plunger.

13
Hold the adjusting screw to prevent it from turning and tighten the adjusting screw lock nut to 38 ±4 Nm (28 ±3 ft-lb).

14
Check valve clearance again after the lock nut is tightened.

Note: Mark the rocker arm when the valve has been adjusted.

Exhaust Valves Adjustment (with engine brake, with or without shims)

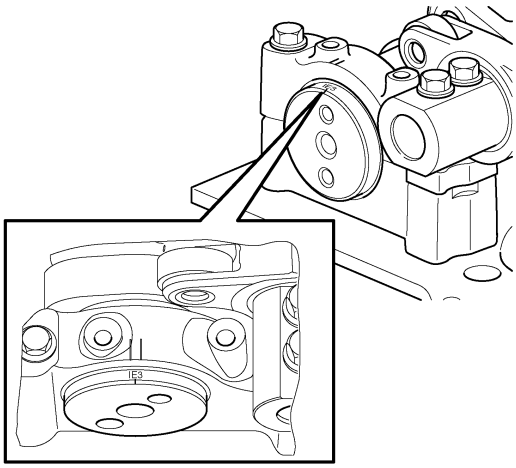

W2006171

15
Using the flywheel turning tool, rotate the engine to the next camshaft marking (number plus “E”) for the adjustment of the exhaust valves. Adjust the exhaust and brake rocker on the cylinder number following the "E".

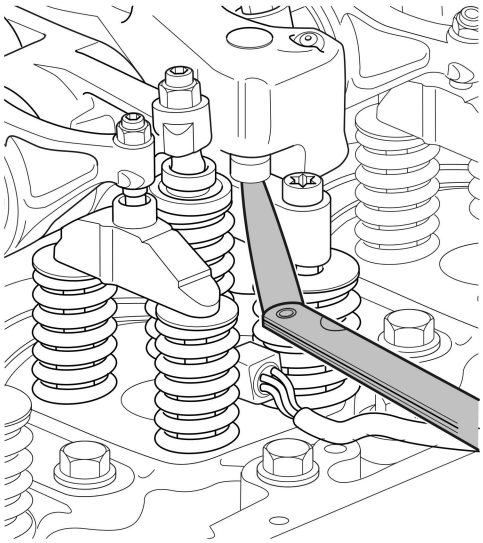

T2023324

16
Push down on the back of the exhaust rocker and insert a 1.00 ± 0.05 mm (0.039 ± 0.002 inch) feeler gauge between the bridge and the brake plunger.

17
If clearance is not within specification, adjust the clearance as required, using shims placed on top of the valve bridge. For engines without shims, loosen the lock nut on the rocker and adjust the plunger. Hold the adjusting screw to prevent it from turning and tighten the adjusting screw lock nut to 38 ±4 Nm (28 ±3 ft-lb).

Note: For engines without shims, go to Step 22.

18
Remove the shim retaining screw and remove the shim.

Note: When loosening or tightening the shim retaining screw to change the shim, the yoke must be kept fixed with a tool to avoid bending the valve stem.

19
Make sure that the valve bridge and shim(s) are clean.

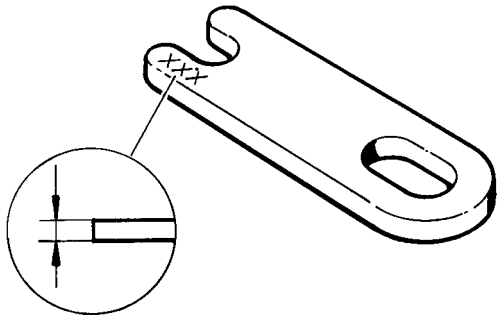

T2009008

20
Determine the thickness of the shim(s) required to match the measured clearance.

Note: DO NOT use more than two shims. Shims are available in 0.05 mm (0.002 inch) increments with the thickness marked on the surface. If two shims are required to take up the clearance, the shims should be of nearly equal thickness.

3949521

21
Place the shim(s) in position on the valve yoke, install the retaining screw and tighten to 38 ±4 Nm (28 ±3 ft-lb).

Note: When loosening or tightening the shim retaining screw to change the shim, the yoke must be kept fixed with a tool to avoid bending the valve stem.

22
Check valve clearance again after lock nut is tightened or shim is fastened. Allow feeler gauge to remain in place between the exhaust rocker arm and the valve bridge during the following engine brake rocker check.

Engine Brake Rocker Adjustment (with or without shims)

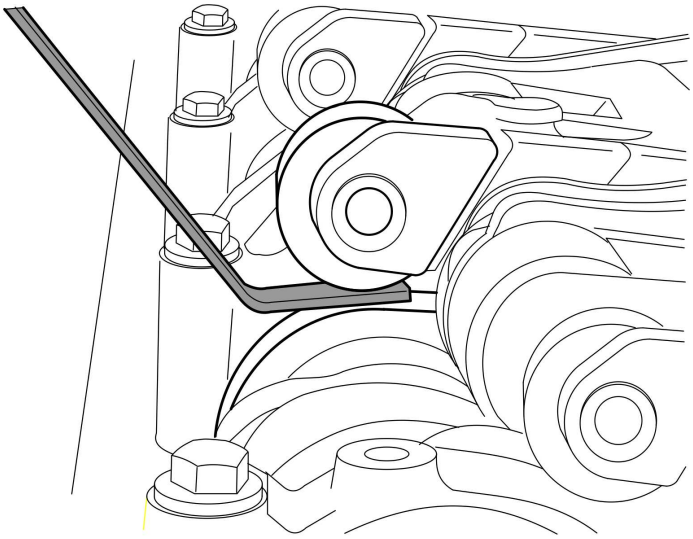

W2005815

23
Using a 2.5 mm feeler gauge, check the exhaust brake rocker arm clearance by placing the feeler gauge between the brake rocker arm roller and the cam lobe. The clearance should be 2.5 ± 0.07 mm (0.1 ± 0.003 inch).

Note: 1.00 ±0.05 mm feeler gauge should still be between exhaust rocker arm and valve bridge.

88880053

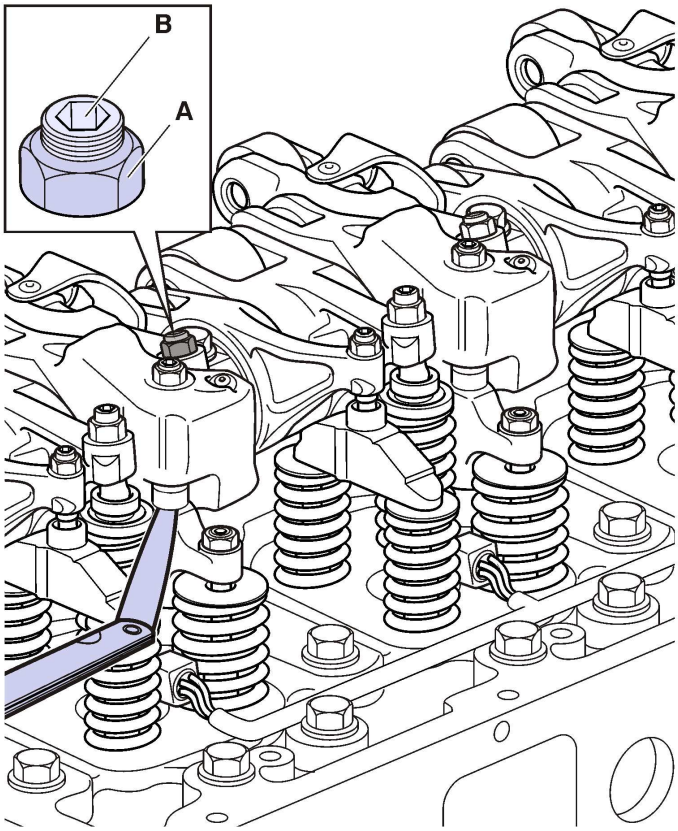

T2027091

24
If the clearance is not within specification, loosen the brake rocker arm lock nut (A) and turn the adjuster screw (B) 1/2 to 1 turn counter-clockwise. With the 2.5 mm feeler gauge in position between the rocker arm roller and cam lobe, tighten the adjuster screw (B) until it makes contact and then a further 1/2 turn until the valve yoke clearly moves down and the exhaust valve opens slightly. The engine brake mechanism is now preloaded.

25
Loosen the adjusting screw slowly until the 2.5 mm gauge can be pushed in and out with some effort. Hold the adjusting screw to prevent it from turning and tighten the lock nut to 52 ± 4 Nm (38 ± 3 ft-lb).

Engine Brake Check

26
Allow 1.00 ± 0.05 mm (0.039 ± 0.002 inch) feeler gauge to remain in place between the exhaust rocker arm and the valve bridge during the following brake rocker check.

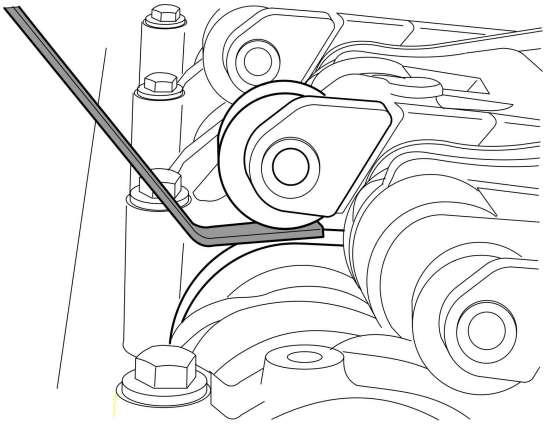

W2005815

27
Check the engine brake rocker arm clearance between the rocker arm roller and the camshaft with the 2.5 mm feeler gauge between the camshaft lobe and the rocker arm roller.

88880053

28
Clearance between the camshaft and rocker roller should meet a specification of 2.5 ± 0.07 mm (0.1 ± 0.003 inch).

29
If the clearance is not within the specification, the adjustment must be repeated per the previous adjustment.

30
Check valve clearance again after the lock nut is tightened.

Note: Mark the rocker arm when the valve has been adjusted.

31
Remove the feeler gauge from between the exhaust rocker arm and valve bridge. Check the clearance between the camshaft and the brake rocker roller with a 3.20 mm gauge - this gauge should pass with no resistance. If there is resistance then the adjustment is incorrect. Repeat the adjustment procedure.

88800232

32
Repeat the above procedure to adjust all other engine injectors and valve locations by rotating the engine to the next nearest camshaft mark.

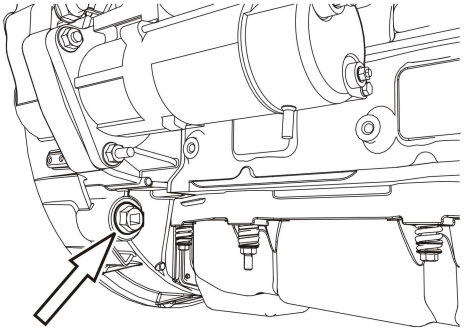

W0002368

33
After all engine injectors and valves have been checked and adjusted if necessary, clean the valve cover contact surface on the cylinder head.

34
For engines with engine brake, install brake rocker leaf springs and tighten the retaining screws on the exhaust rocker arms to 25 ± 3 Nm (18 ± 2 ft-lb). Ensure that the brake rocker arm push rod is centered and properly seated into leaf spring socket before tightening retaining screws.

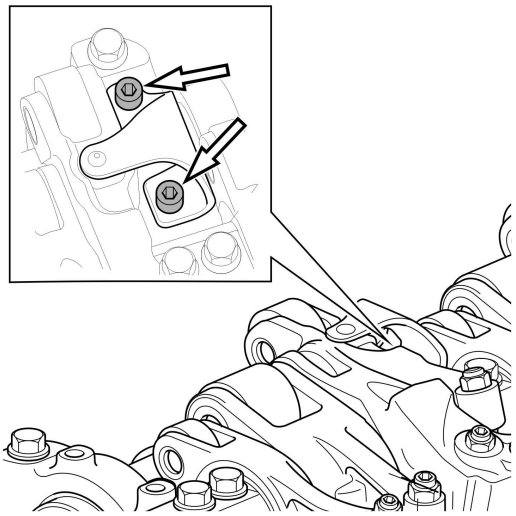

T2022951

https://truckmanualshub.com/

35
Install the valve cover. Refer to Group 211 for procedure.

36
Bring the engine to normal operating temperature. Let the engine idle for approximately 5 minutes; the system performs its own cylinder balancing in order to attain even idling.

Note: During cylinder balancing, do not use any form of power-consuming equipment, such as power take-off or air conditioning.