https://truckmanualshub.com/

AR 520

OPERATING WEIGHT	ENGINE OUTPUT	SHOVEL CAPACITY
6,450 - 7,050 kg	**80 kW (107 HP)**	**1.2 - 2.0 m³**

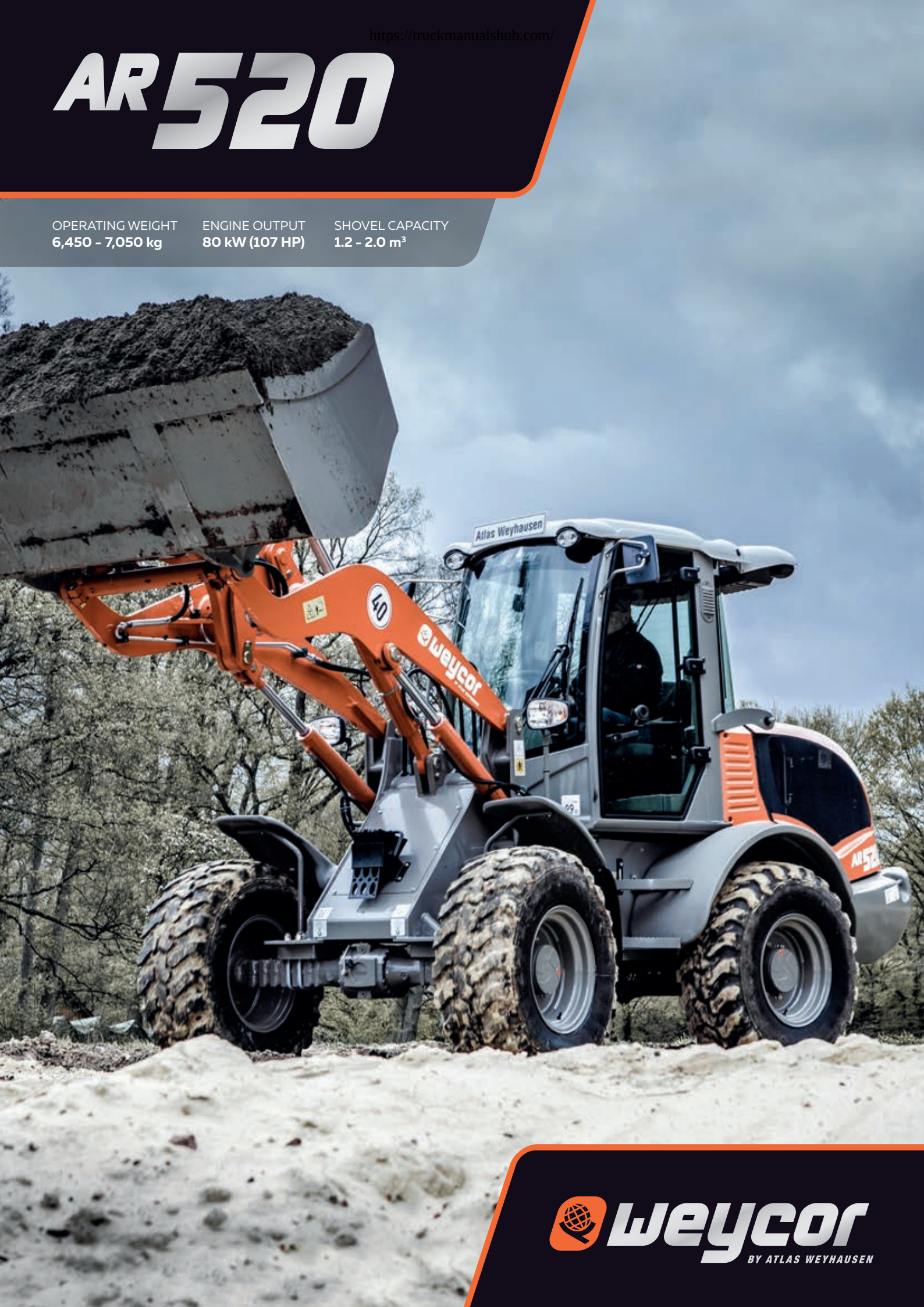

weycor
BY ATLAS WEYHAUSEN

https://truckmanualshub.com/

FIRST IMPRESSIONS COUNT!

weycor wheel loaders are more than the sum of their parts. They reflect true passion, a fascination with technology and 'Made in Germany' quality. It's thanks to the innovative spirit of our people, their dedication to detail and their passion for powerful engine technology that this new generation of wheel loaders has been developed.

6,450(1) KG
OPERATING WEIGHT

80(2) KW (107 HP)
ENGINE OUTPUT

1.2 M^3
SHOVEL CAPACITY

WEYCOR TRADITION EST. 1971

Operating data

Shovel capacity	**1.2 m^3**
Track width	**1,640 mm**
Turning radius (outer shovel edge)	**4,700 mm**
Tear out force	**6,800 daN**
Torque	**5,290 daN**
Tipping load, straight	**5,170 kg**
Tipping load, articulated	**4,565 kg**
Lifting capacity at ground level	**6,035 daN**
Operating weight	**6,450 kg**

Specifications

Differing data for use of pallet forks(3) **(500 mm distance to center of gravity)**	
Static tipping load, straight and articulated	**3,625 kg**
Lifting capacity	**4,810 daN**
Payload 80% even surface(4)	**2,900 kg**
Payload 60% uneven surface(4)	**2,175 kg**

Sound level	
Average sound power level L_WA(5)	**100.0 dB(A)**
Guaranteed sound power level L_WA(5)	**101.0 dB(A)**
Sound pressure level L_pA(6)	**75.0 dB(A)**
Vibration values hand/arm/whole body vibration(7)	**< 2.5/0.5 m/s^2**

(3) Loads must always be moved to the ground. (4) According to ISO 8313 and EN 474-3.
(5) According to 2000/14/EC and Annexes. (6) According to ISO 6396. (7) According to ISO 8041.

Important Information on Shovel Size / Shovel Contents:

The details contained in this brochure relate solely to the weycor shovels referred to in the respective data sheet, with the associated technical parameters and configurations on which the respective CE approval for the device is based. The volume of the specific usable shovel depends on the material-specific bulk weights (t/m^3) of the shovel contents, which you can take as approximations from the data sheet's TABLE OF SPECIFIC WEIGHTS IN t/m^3. Regardless of this, neither the wheel loader's permissible working weight nor its permissible tipping loads may be exceeded. If the wheel loader is equipped with shovels that are not manufactured and licenced by Atlas Weyhausen GmbH, the buyer and / or the operator is solely responsible for compliance with the relevant statutory regulations and licensing requirements – particularly those relating to road-traffic and road-traffic-licensing law.

(1) Service weight may vary with different equipment.
(2) Power output ISO 14396, exhaust gas aftertreatment according to EU 2016/1628.
All technical data refer exclusively to the standard unit.

https://truckmanualshub.com/

DETAILS THAT MAKE AN IMPRESSION

It is demanding to meet the new legal requirements for exhaust emissions. The challenge is to create also tangible benefits for our customers. We are proud to have achieved both in the development of the current wheel loader generation: more power - less consumption, plus a number of others innovations that really make a difference on tough construction sites.

Comfortable cabin
In addition to the excellent circumferential visibility in the wheel loader, its clearly arranged controls and its ergonomic design.

Easy maintenance
Low-maintenance and quick, easy servicing is achieved by central, consolidated, easy-to-reach service points.

Powerful drive unit
weycor wheel loaders are equipped with state-of-the-art engines which combine high power reserves for challenging operations with up-to-date low emission values.

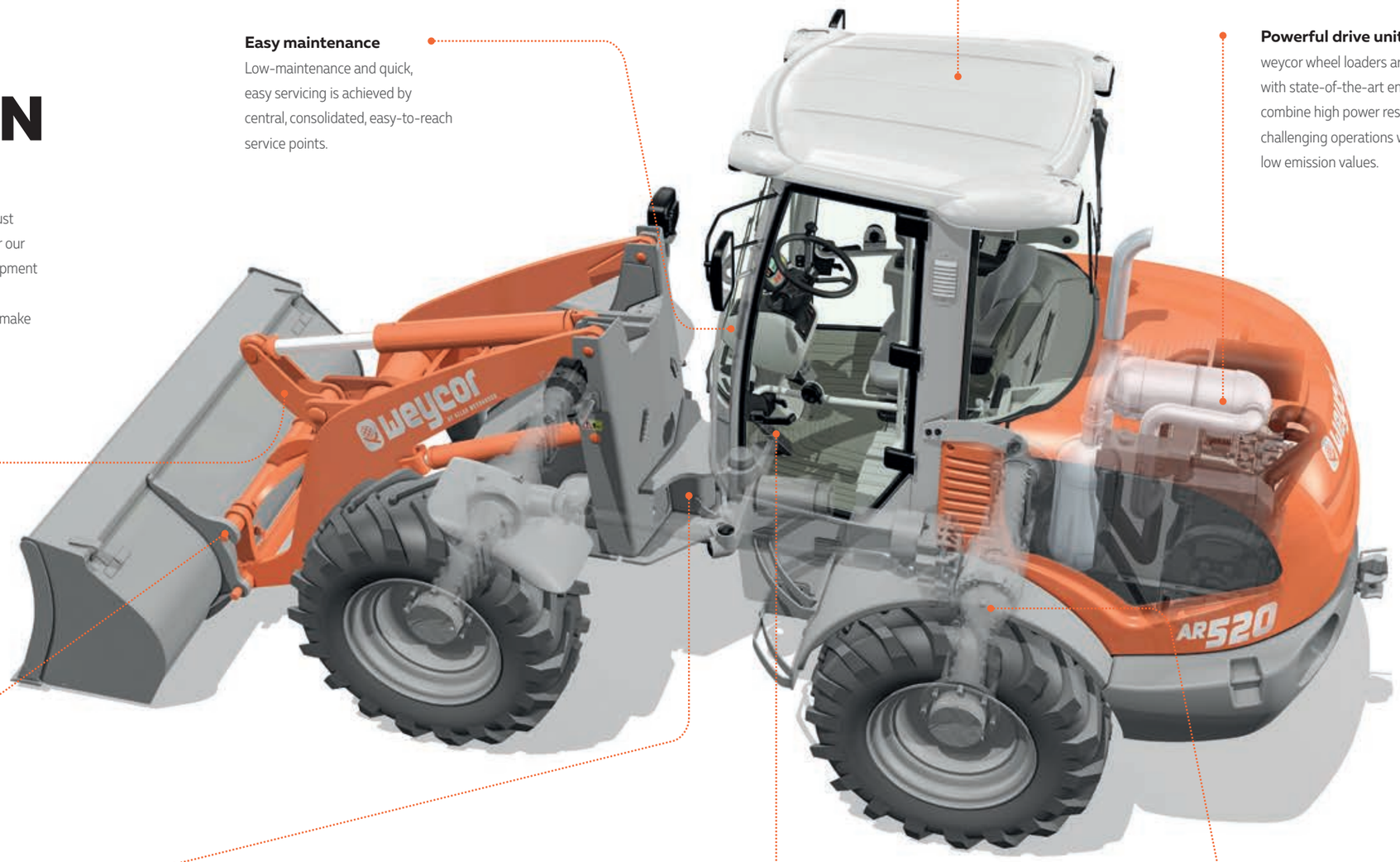

State of the art kinematics
weycor Z-kinematics is characterised by high frictional forces and excellent lifting heights. The very good parallel guide provides the optimal prerequisites for using pallet forks. When the hoist is lowered with the shovel, the shovel returns automatically to the digging position. The boom that is tapered towards the top provides the best possible view of the attachment and working area at all times, even under difficult operating conditions.

Hydraulic quick-change attachment
By allowing you to change the wheel loader's attachments in a few seconds, it turns the vehicle into an all-rounder.

Articulated-pendulum joint
In weycor wheel loaders, we use robust, low-maintenance articulated-swivel joints almost exclusively in conjunction with rigid axes. With an oscillation of ±12° in the rear carriage and an articulation angle of 40°, these provide outstanding cross-country mobility, protect the ground and offer extreme manoeuvrability. With their low centre of gravity, weycor wheel loaders have a high tilt stability even under extreme conditions.

Inching Pedal
As the only manufacturer, our wheel loaders have a separate inching pedal as standard. This prevents the possibility of moving against the operating brake, in contrast to the combination of a brake/inch pedal. A generously proportioned inching range facilitates precise distribution of shearing and lifting forces. The result: less wear and lower fuel consumption.

Spring-loaded brake
The spring-loaded or negative brake in weycor wheel loaders is a closed brake system (oil bath multiple-disc brake) which holds the wheel loader securely in position on a slope when the brake or inch function is activated and automatically locks all four wheels when the engine is at a standstill. The multiple-disc brake runs in the oil bath and is particularly low-maintenance and low-wearing as a result.

https://truckmanualshub.com/

INNOVATIVE ENGINE TECHNOLOGY

TCD 3.6 L4 – intelligent efficient
We have been convinced of the quality of Deutz engines for over 40 years. Our cooperation with Deutz also offers numerous benefits for the AR 520: such as the electronic engine control with intelligent connection to the drive management. This ensures the best engine performance with low fuel consumption.

Mighty performance
80 kW at a maximum of 2,200 rpm

Compliance with emission standards
DOC / DPF + SCR / current EU Stage V

Deutz engine technology: TCD 3.6 L4
Water-cooled 4-cylinder inline engine with cooled, external exhaust gas recirculation with turbocharging and with charge air cooling. The powerful Common Rail injection system and the electronic engine control (EMR) with intelligent link to the drive management ensure optimum engine performance at low fuel consumption.

https://truckmanualshub.com/

TECHNICAL DATA

Engine	
Model	TCD 3.6 L4
Design	water-cooled
Output	80 kW (107 HP) at 2,200 rpm
Max. torque	430 Nm at 1,300 rpm
Cubic capacity	3,621 cm^3
Number of cylinders	4 in line

Electrical system	
Operating voltage	12 V
Battery	12 V / 100 Ah
Generator	14 V / 95 A
Starter	12 V / 3,2 kW

Drive

Output-regulated hydrostatic drive with pressure cut off and closed circuit acting on all 4 wheels.
Speed with standard tires:
Operating speed range 0 – 6.5 km/h
Road speed range 0 – 20 km/h
Optional high speed 0 – 40 km/h
1st and 2nd hydraulic gear can be engaged under load, forward/backward travel also. Forward/backward travel, speed ranges and off-position operational via weycor joystick. Drive operated by accelerator and separate inching pedal for best distribution of the hydraulic power for thrust and lifting forces.

Brakes

Standard brake: Multi-disc brake in oil bath acting on all 4 wheels. Supplementary brake functions via inching pedal and hydrostatic drive acting on all 4 wheels.
Parking brake: Parking brake as springloaded brake acting on all 4 wheels. In case of standstill of engine the spring-loaded brake is automatically reactivated.

Axles

Rigid axles with planetary reduction gears in wheel hubs, connecting electrically 100%- differential lock in front and rear axle.

Steering

Fully hydraulic center pivot steering
Front and rear wheels follow the same track
Steering angle of 40° to each side, ±12° angular movement at rear of vehicle
Operating pressure of steering hydraulics 175 bar
Emergency steering function

Tires (Special tires upon request)

Standard: 405/70 R20 EM – Construction machine tires for clay, sand, gravel, asphalt, roads, gardening and landscaping
Special tires: 400/70 R20 XMCL – Construction machine tires for clay, sand, gravel, fields and greenland, fortified roads

Hydraulic system

Gear pump for loading and steering hydraulics
Priority valve favoring steering hydraulics
3rd hydraulic section serial
Loading hydraulic hydraulically pre-activated by weycor joystick, including float position
Operating pressure 280 bar, Delivery of pump 72 l/min

Fuel/oil capacities	
Diesel	130 Liter
Hydraulic oil	86 Liter
Engine oil	9.5 Liter
Front axle	4.5 Liter
Rear axle	4.2 Liter
Gear oil	2.5 Liter
Cooling liquid	17 Liter
AdBlue	10 Liter

Loading equipment	
Powerful and solid Z-kinematics with high tear out force	
Hydraulic quick change device	
Activation of all functions by weycor joystick	
Parallel movement while using pallet forks	
Automatic shovel return to excavation position	
Locking device acc. to German StVZO for road travel	
Lifting	**5.0 s**
Lowering	**3.2 s**
Tipping	**1.2 s**

Equipment – Series

Rear driving mirrors, foldable
Heatable rear screen
Comfortable access to cab from both sides
Activation of all functions by weycor joystick
Control lights for speed range, forward/backward travel
Lights acc. to German StVZO for road travel
Individually adjustable driver's seat with adjustable right arm rest
Water heating with heat exchange and 3-stage fan
Front windscreen ventilation, variable output
Sound absorbing ROPS cab
Windscreen wipe and wash unit in front and rear
Sun visor, coat hook, ceiling lamp, stow facility
Adjustable steering column
Heat protection glazing with largetinted screens
Control lights for engine oil pressure, overheating, hydraulic oil temperature, battery power, parking brake and air filter
Central dashboard with indicators for preheating, engine temperature, fuel, working hour meter
Joystick with integrated proportional steering for 3rd section
weycor diagnostic system (ADS) for monitoring engine parameters with integrated electronic anti-theft device
weycor joystick with knurled wheel and slide switch

Equipment – Option

4th hydraulic section front or rear
Stability damping system
Slow drive inching pedal
High speed version 40 km/h
Extended lifting frame
Preparation for Hydraulic hammer, Hand throttle device
Load check valve for lifting and working cylinders
Trailer coupling
Main battery switch
Corrosion prevention against salt
Special paintings and oils
Anti-theft-device with code stick
Heatable and air cushioned seats
Radio
Doors with sliding windows, left and right side
Electrically adjustable and heated exterior rearview mirrors
Telescopic steering column
Air conditioning
FOPS-II-roof
LED work light
DPF
Reverse gear alarm
12 V socket 2-pin
12 V socket 13-pin
Bucket level indicator

https://truckmanualshub.com/

TECHNICAL DATA

	AR 520 with standard shovel	AR 520 with pallet forks
A	5,655 mm	6,008 mm
B	2,820 mm	2,820 mm
C	4,285 mm	3,954 mm
C1	3,445 mm	3,275 mm
C2	2,681 mm	1,520 mm
D	12 mm	8 mm
E	776 mm	549 mm
E1	-	1,329 mm
E2	-	778 mm
F	530 mm	530 mm
G	2,199 mm	2,199 mm
H	2,079 mm	2,079 mm
I	2,150 mm	1,080 mm
K	-	1,344 mm
L	1,480 mm	1,480 mm
M	855 mm	-
R	2,050 mm	2,050 mm
R1	4,060 mm	4,060 mm
R2	4,700 mm	4,700 mm
W	4,800 mm	4,800 mm

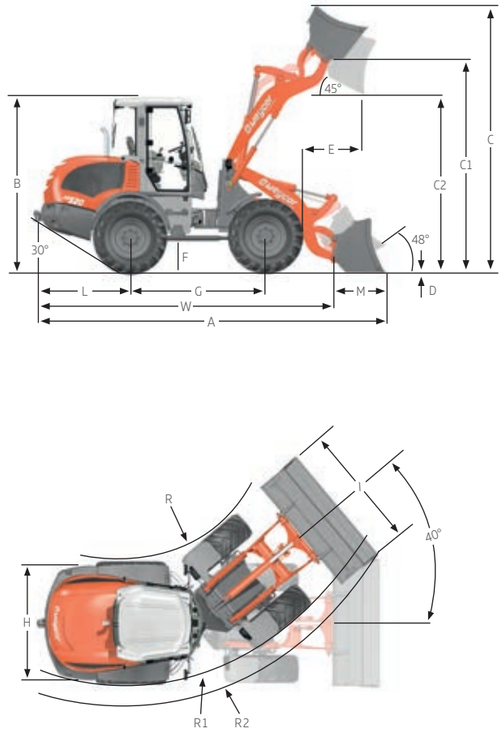

With standard shovel

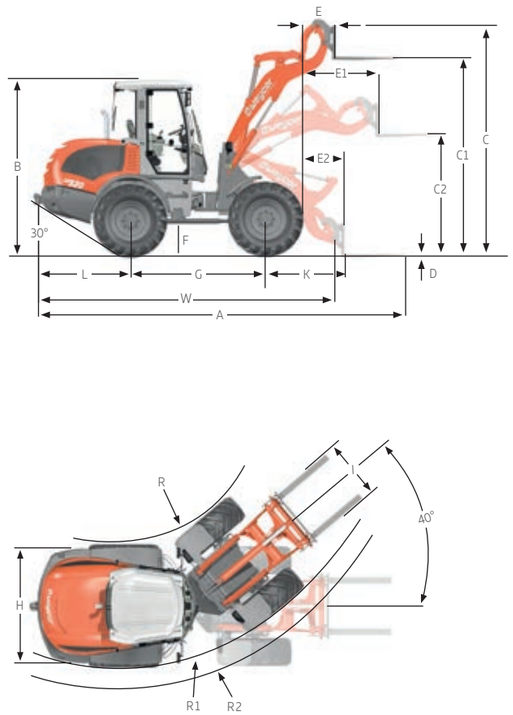

With pallet forks

Specific gravity for material handling weight (t/m³)

Construction				Industry		Landscaping, Agriculture	
Concrete	1.9	Sand (watery)	2.1	Ember	0.7	Agricultural crop	0.7
Soil (dry)	1.5	Sandstone	2.4	Brown coal briquette	0.8	Grain	0.6
Soil (watery)	2.0	Shale	2.2	Ferrous product	7.8	Hay	0.3
Rock (fill)	2.4	Sediment	2.1	Iron ore	2.3	Potash	1.1
Granite	1.8	Crushed stone	1.5	Cullet	1.9	Compost	1.0
Limestone	1.6	De-icing salt	1.3	Gas coke	0.4	Flour	0.5
Gravel (dry)	1.9	Clay	1.6	Timber	0.8	Clay (watery)	2.3
Gravel (watery)	2.1	Cement	1.7	Mineral coal	1.2	Phosphate fertiliser	2.2
Loam	1.7	Clinker (stacked)	1.8	Paper	0.9	Turf (watery)	1.1
Plaster	2.2			Slag	1.0	Turf (dry)	0.4
Sand (dry)	1.9			Slag concrete	2.7	Mineral fertiliser	1.0

https://truckmanualshub.com/

en_09_2021_005

You can find our current product range and more exciting details at: **www.weycor.de**

Under our policy of continuous improvement, we reserve the right to change specifications and design without prior notice, errors expected. The technical data refer only to the standard version, illustrations do not necessarily show the standard version of the machine. Not all products are available in all markets.

weycor is a brand of ATLAS WEYHAUSEN GMBH.

ATLAS WEYHAUSEN GMBH · D – 27793 Wildeshausen
Phone +49 (0) 44 31 – 98 10 · info@weycor.de · **www.weycor.de**

weycor BY ATLAS WEYHAUSEN