https://truckmanualshub.com/

# SHOP MANUAL

# MASSEY-HARRIS

## PONY

*(Other models begin on page MH-40)*

**IDENTIFICATION**

**Tractor serial number is located on plate on right side of front frame, above front axle.**

**Engine serial number is located on left side of cylinder block.**

BUILT IN THESE VERSIONS
Adjustable Axle—Serial Nos. PGA 1001 & Up.
Standard Axle—Serial Nos. PGS 1001 & Up.

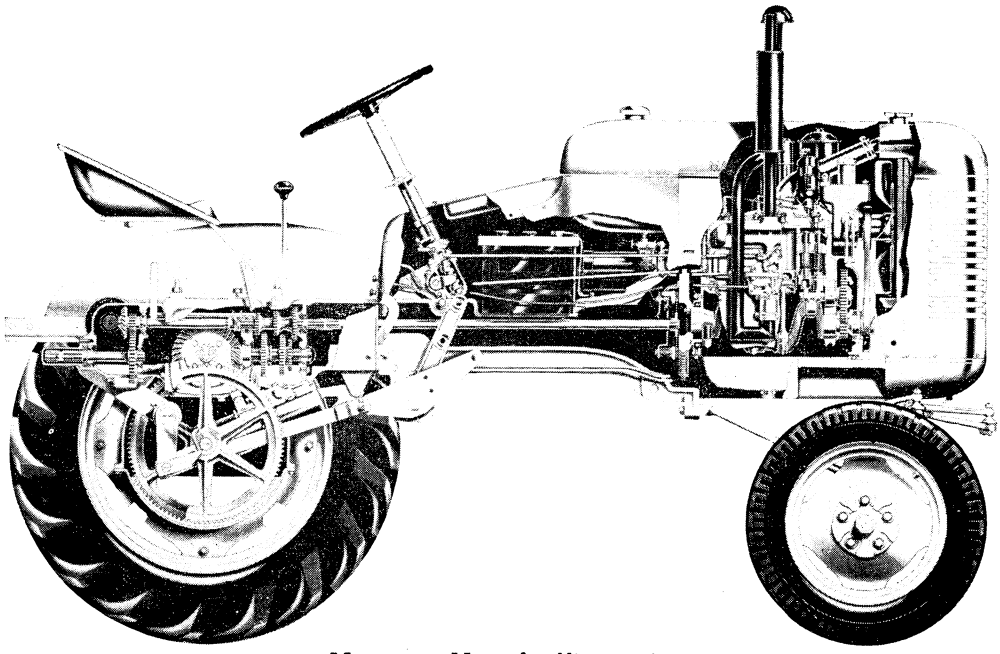

**Massey-Harris "Pony"**

## INDEX (By Starting Paragraphs)


BELT PULLEY ..... 64

BRAKES ..... 61

CARBURETOR ..... 31

CLUTCH ..... 41

COOLING SYSTEM
- Fan ..... 35
- Radiator ..... 36

DIFFERENTIAL ..... 54

ENGINE
- Cam followers ..... 15
- Camshaft ..... 20
- Connecting rods & bearings ..... 24
- Crankshaft ..... 25
- Cylinder head ..... 11
- Flywheel ..... 27
- Ignition timing ..... 38
- Main bearings ..... 25
- Oil pump ..... 29
- Oil pressure ..... 30

ENGINE CONT.
- Oil seal (front) ..... 18
- Oil seal (rear) ..... 26
- Piston rings ..... 23
- Piston pins ..... 24
- Piston & rod removal ..... 21
- Timing gears ..... 19
- Valves ..... 12
- Valve guides & springs ..... 14
- Valve seats ..... 13
- Valve timing ..... 17

FINAL DRIVE
- Axle shafts ..... 59
- Bull gears ..... 59
- Bull pinions ..... 60

FRONT SYSTEM
- Axle main member ..... 1
- Steering knuckles ..... 4
- Steering linkage ..... 2

GOVERNOR
- Adjust ..... 32
- Overhaul ..... 34

POWER LIFT
- Adjustment ..... 70
- Control valve ..... 71
- Cylinder ..... 71
- Pump ..... 73
- Trouble shooting ..... 72

POWER TAKE-OFF ..... 65

REAR AXLE ..... 59

STEERING GEAR
- Adjustment ..... 5
- Overhaul ..... 9

TRANSMISSION
- Bevel pinion shaft ..... 51
- Input shaft ..... 52
- Reverse idler ..... 53
- Shifter rails ..... 48

https://truckmanualshub.com/



# CONDENSED SERVICE DATA
## Massey-Harris Pony

### GENERAL

| | |
|---|---|
| Engine Make | Continental |
| Engine Model | N62 |
| Cylinders | 4 |
| Bore—Inches | 2⅜ |
| Stroke—Inches | 3½ |
| Displacement—Cubic Inches | 62 |
| Compression Pressure at Cranking Speed | 90-110 |
| Compression Ratio | 6.46:1 |
| Pistons Removed From: | Below |
| Main Bearings, Number of | 2 |
| Main Bearings, Adjustable | No |
| Rod Bearings, Adjustable | No |
| Cylinder Sleeves | None |
| Forward Speeds | 3 |
| Generator & Starter Make | Auto-Lite |

### TUNE UP

| | |
|---|---|
| Firing Order | 1, 3, 4, 2 |
| Valve Tappet Gap | .012C |
| Valve Seat Angle | 45° |
| Ignition Distributor Make | Auto Lite |
| Ignition Distributor Model | I.A.D. |
| Breaker Gap | 0.020 |
| Retarded Timing, Deg. | TC |
| Full Advance Timing, Deg. | 10 |
| Mark Indication: | |
| Retarded Timing | Paint, TC |
| Full Advance Timing | None |
| Mark Location | Flywheel |
| Spark Plug Make | Champion |
| Model | 8 Com. |
| Electrode Gap | 0.025 |
| Carburetor Make | M-S |
| Model | TSV |
| Float Setting | ¼ |
| Engine Low Idle rpm | 500 |
| Engine High Idle rpm | 2050 |
| Engine Loaded rpm | 1800 |
| Belt Pulley Loaded rpm | 1990 |
| PTO Loaded rpm | 540 |

### SIZES—CAPACITIES—CLEARANCES
(Clearances in thousandths)

| | |
|---|---|
| Crankshaft Journal Diameter | 1.9995 |
| Crankpin Diameter | 1.4995 |
| Camshaft Journal Diameter, Front & Center | 1.746 |
| Camshaft Journal Diameter, Rear | 1.246 |
| Piston Pin Diameter | 0.5434 |
| Valve Stem Diameter | 5/16 |
| Compression Ring Width | 3/32 |
| Oil Ring Width | 3/16 |
| Main Bearings, Diameter Clearance | 1.5-2.0 |
| Rod Bearings, Diameter Clearance | 1.5-2.0 |
| Piston Skirt Clearance | 1.5 |
| Crankshaft End Play | 3-7 |
| Camshaft Bearing Clearance | 3-4.5 |
| Cooling System—Gallons | 1 4/5 |
| Crankcase Oil—Quarts | 4 |
| Transmission & Differential—Quarts | 3 3/5 |
| Final Drive, Each—Quarts | 1 1/2 |
| Add for BP and PTO—Quarts | 3/4 |
| Fuel Tank—Gallons | 6 4/5 |

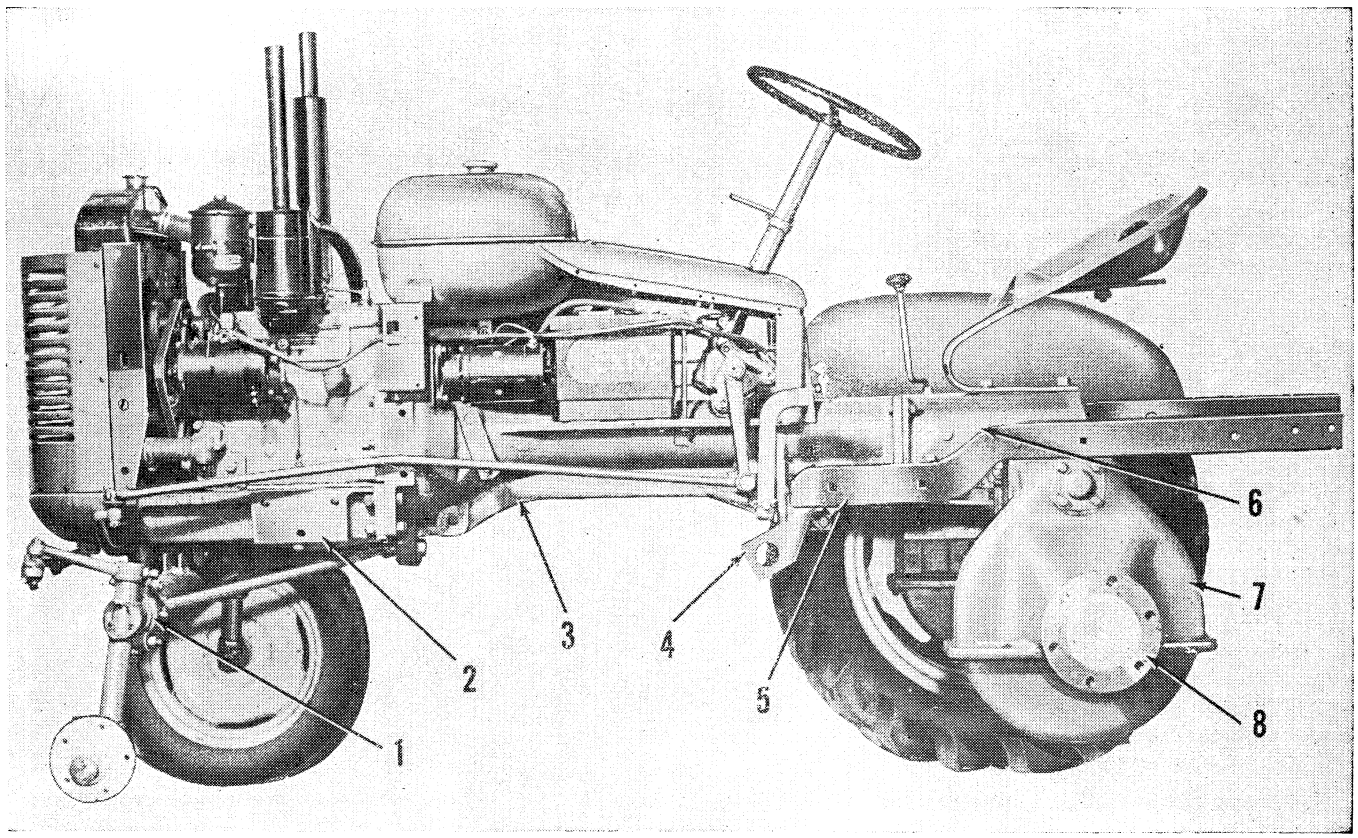


*Fig. MH1—Left side view of Massey-Harris Pony Tractor*

1. Adjustable front axle
2. Tractor front frame
3. Torque tube & clutch housing
4. Frame cross angle
5. Frame side angle
6. Transmission-differential
7. Final drive housing
8. Wheel axle shaft

https://truckmanualshub.com/



# FRONT AXLE

### AXLE MAIN MEMBER

1. On standard or non-adjustable axle, to renew the main member, jack up under torque tube and remove steering arms and Woodruff keys from upper ends of knuckles. Remove each knuckle, hub and wheel as a single unit. Remove cotter key from radius rod pivot bolt (at rear end of radius rod) and unscrew pivot bolt. Remove cotter key from axle main member pivot pin and drive pin out rearward.

For removal of main member of adjustable axle, each outer extension arm, knuckle, hub and wheel may be removed as a single unit.

### STEERING LINKAGE

#### Non-Adjustable Axle

2. A non-adjustable drag link with integral socket ends is used and attaches to left steering knuckle arm. The single tie-rod has adjustable socket ends for obtaining correct toe-in of front wheels, which should be ⅜ inch.

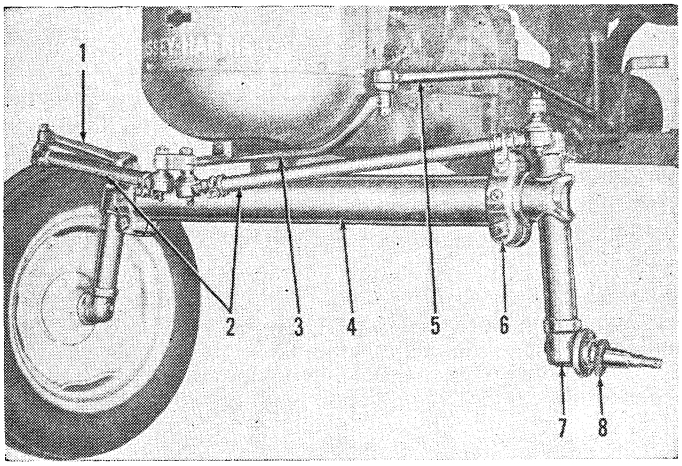


*Fig. MH2—Pony adjustable front axle and linkage.*

1. Steering arms
2. Tie rods
3. Bellcrank
4. Main member
5. Drag link
6. Extension clamp
7. Steering knuckle
8. Felt oil seal

#### Adjustable Axle

3. A non-adjustable drag link with integral socket ends attaches to bell crank (3-Fig. MH2) which pivots on a shouldered bolt in front frame (or support to engine). Two tie-rods (2) with adjustable socket ends attach to the bellcrank and to steering knuckle arms(1). Correct toe-in of ⅜ inch is obtained by adjusting the tie-rods at their inner ends. Outer ends of tie-rods extend to coordinate with main member extension arms.

### STEERING KNUCKLES

4. **REBUSH.** Jack up under axle and remove each wheel and hub as a unit. Remove steering arms and Woodruff keys from upper ends of steering knuckles and withdraw knuckles from axle. Drive the worn bushings out of axle main member (or extension arm in the case of adjustable axles) and install new bushings. Ream or hone bushings to allow I&T recommended clearance of .002-.004. Diameter of new steering knuckle journal is 1.125 inches.

# STEERING GEAR

5. **ADJUSTMENT.** Adjustment of Ross cam and lever steering on the Pony tractor is done with the right side panel removed as in Fig. MH3. All adjustments are made with front wheels raised or with drag link disconnected to relieve load on steering mechanism.

6. CAM SHAFT. To adjust cam or steering shaft bearings, loosen steering column clamp (1) and remove the three cap screws (3). Note that one of these cap screws has a copper washer under its head; replace in same position. Raise cover and separate one shim (4) from pack; split shim and remove it. Replace cover and cap screws and test for end play of bearings. All end play should be removed, but there should be no drag on steering gear except through its mid-position and then only when lever shaft is in correct (zero backlash) adjustment.

7. LEVER SHAFT. Loosen lock nut on lever shaft screw (6) and turn screw *in* until slight drag is felt when steering wheel is turned through its mid-position (front wheels raised).

8. PITMAN ARM. To synchronize steering gear to front wheels when reinstalling pitman arm on cam lever shaft, first place front wheels in their straight ahead position; turn steering wheel through its full range and count the complete number of turns, then turn back exactly halfway so that gear is in its mid-position (that is, cam lever stud is on high point of cam). Now, install pitman arm and drag link without disturbing position of steering gear or front wheels.

9. **OVERHAUL.** To remove Ross steering gear unit for overhaul, it is necessary to pull pitman arm or disconnect drag link, remove both side panels and top panel (through which steering column protrudes) and disconnect throttle-to-governor rod. Throttle quadrant assembly can be removed from gear unit after unit is removed from tractor.

Renew all worn parts in unit. The two lever shaft bushings should be honed to provide .002-.003 clearance for lever shaft. Adjust unit after reassembly.

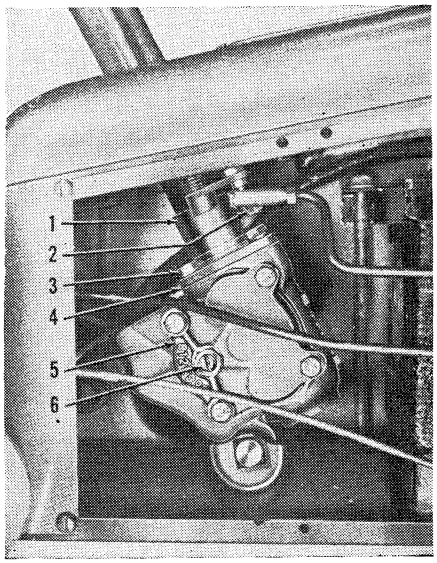


*Fig. MH3—Pony steering gear adjustment.*

1. Steering column clamp
2. Clamp bolt
3. Housing cover cap screws
4. Bearing adjusting shims
5. Housing side cover
6. Lever shaft adjusting screw

https://truckmanualshub.com/



# ENGINE AND COMPONENTS

## R&R ENGINE WITH CLUTCH

10. To remove engine and clutch unit, remove hood, grille and radiator. Disconnect choke wire at carburetor and fuel line at shut-off valve and governor spring at governor lever shaft; remove forward manifold stud nut and lift governor rod support off stud. Disconnect oil gage line from outlet at right side rear of cylinder block. Disconnect electrical harness, namely battery and field connections at generator cutout relay and ignition wire at coil. If tractor is equipped with lights, disconnect from wire harness. On models equipped with hydraulic lift, disconnect or remove hydraulic lines from pump. Support engine in a hoist and remove engine-to-front frame bolts and engine-to-torque tube bolts. Lift engine and clutch forward and out of front frame and torque tube.

Reinstall engine in reverse manner, rocking slightly to guide clutch shaft into driven member and pilot bearing.

## CYLINDER HEAD

11. Removal of cylinder head requires removal of hood and draining cooling system. On hydraulic lift models, remove hydraulic pump and reservoir unit. The air cleaner-to-carburetor tube must be removed and when cylinder head cap screws are taken out, the air cleaner is taken off and coil, ignition harness and oil filter is laid back out of way. When reinstalling head, use the proper length cap screws in each hole and tighten cap screws evenly from center outward, applying the correct torque of 37.5-42.5 foot pounds.

## VALVES

12. Exh. valves in this engine have Roto caps on their stem ends (Fig. MH4) to provide a rotating motion each time valve is lifted. This causes a wiping action between valve face and its seat and permits longer valve life. To remove valves, remove hood, cylinder head, carburetor, distributor and valve chamber cover. Stuff small bits of cloth in oil return holes in valve chamber to prevent dropping valve spring keepers into crankcase. Compress valve springs and remove keepers (exhaust valves have split half-moon keepers and inlet valves have pins). Lift valves out of guides and springs; take retainer seats and Roto caps out of chamber. Renew valves if stem diameter is less than the values given below.

| | |
|---|---|
| Exhaust stem diameter | .3124 |
| Inlet stem diameter | .3141 |
| Valve seat angle (in block) | 45° |
| Exhaust face angle | 44° |
| Intake face angle | 45° |

Refer to Standard Units Section for valve rotator maintenance.

## VALVE SEATS AND INSERTS

13. Valve seats should be refinished to 45 degree angle and the width should be reduced to $\frac{1}{16}$ inch. Valve seat inserts are supplied for service. Chill insert in kerosene and dry ice then measure outside diameter of same. To install inserts, counterbore cylinder block to same diameter as chilled insert and install same with a suitable arbor. Peen block near rim of seat recess to lock insert in place. Refinish insert seat to 45 degree angle and $\frac{1}{16}$ inch width.

## VALVE GUIDES AND SPRINGS

14. Guides in this model are straight with no shoulder. When valves are out, guides can be driven downward into valve chamber with a suitable arbor. Top of each guide should be $\frac{25}{32}$ inch below gasket surface of cylinder block. Ream guides, after installation, to provide stem-to-guide clearance of .0035 inch for exhaust valves and .0018 inch for inlet valves. The additional clearance required for the exhaust valve is provided for on exhaust valve stem, hence the same reamer may be used in both exhaust and inlet guides.

Test valve springs and renew any which do not test 15 pounds plus or minus 2 pounds when compressed to 1⅜ inches, or which are rusted, distorted or do not have protective coating. Valve spring free length is $1\frac{13}{16}$ inches.

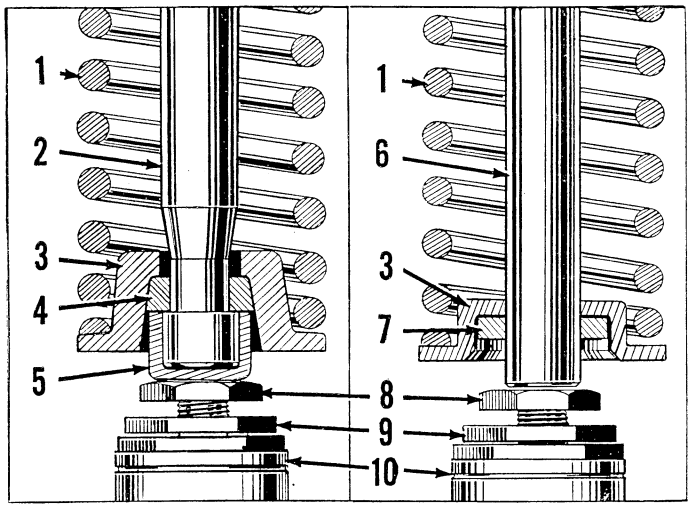


*Fig. MH4—Continental N62 exhaust and inlet valves. Valve rotators are used on exhaust valves only.*

1. Valve spring
2. Exhaust valve
3. Spring retainer
4. Split cone locks
5. Roto cap
6. Inlet valve
7. Pin type lock
8. Tappet screw
9. Lock nut
10. Tappet barrel

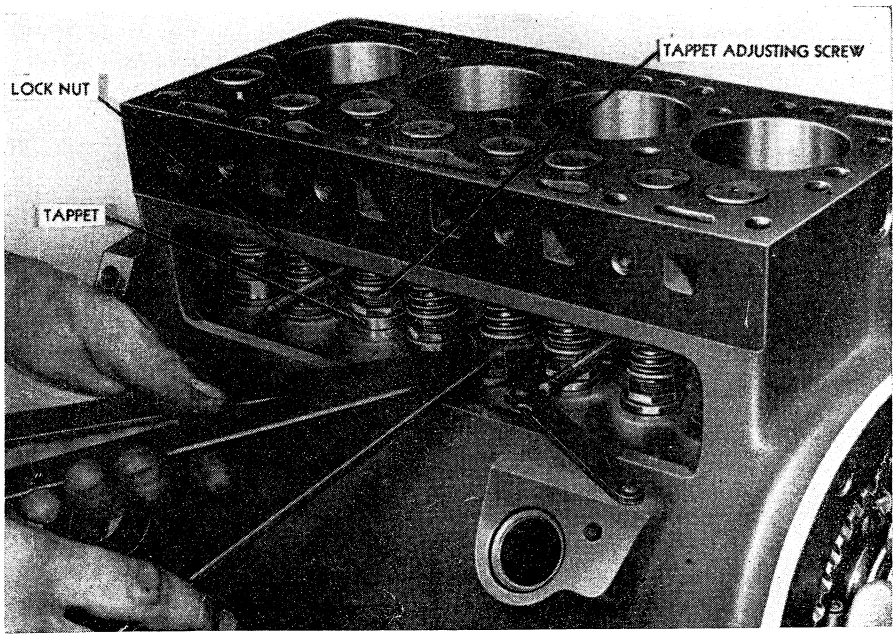


*Fig. MH5—Adjusting tappets on Continental N62 engine. A three wrench operation.*

https://truckmanualshub.com/



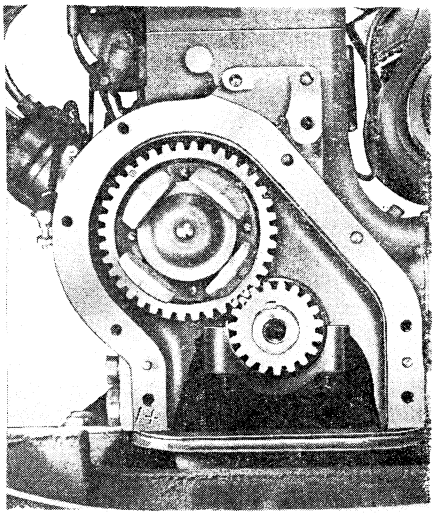

*Fig. MH6—Continental N62 timing gears and valve timing marks. Oversize marking on cam gear corresponds with 1+ mark on gear case gasket surface.*

## VALVE TAPPETS (CAM FOLLOWERS)

15. The barrel type tappets can be renewed without disturbing the camshaft or cylinder head by first removing the valve chamber cover, screwing the tappet adjusting screw completely down and removing the valve spring. While holding the valve up, remove tappet screw and lock nut from barrel and lift the barrel out of its bore. Oversize tappets are not provided for service. I&T recommended clearance of tappet in its bore should not exceed .0025 for quiet operation.

Note: If all valve tappets are to be removed, it is recommended that the cylinder head and valves be removed.

16. **ADJUST.** Adjustment of tappet clearance is a three-wrench operation (Fig. MH5). Recommended gap is .012 cold for inlet and exhaust. To adjust all of the tappets it will be necessary to remove carburetor, distributor and valve chamber cover. If only one or two tappets near the rear of block are to be adjusted, the distributor need not be removed. Adjust tappets for number one cylinder when number four piston is at top center of its compression stroke; adjust number three when number two piston is on top center of its compression stroke and proceed in the same manner for all cylinders through the firing order (1-3-4-2).

## VALVE TIMING

17. To check the timing when engine is assembled, set exhaust valve tappet of number 1 or 4 cylinder to .020 clearance. Crank engine until the piston of cylinder being checked (1 or 4) is coming up on its compression stroke and continue to crank slowly until exhaust valve closes and tappet can be rotated with the fingers. At this point, the painted mark on flywheel (indicating top center) should align with the timing pointer when viewed through timing inspection hole in right side of engine or within 4 degrees or $\frac{5}{16}$ inch either way.

If valves are incorrectly timed, remove timing gear cover and inspect relation of timing marks on camshaft gear and crankshaft gear. The punch marked tooth of crankshaft gear is meshed between the two punch marked teeth of camshaft gear.

## TIMING GEARS AND COVER

18. **TIMING GEAR COVER.** To check timing gears (without removal of same), to renew crankshaft front oil seal or to remove and reinstall governor assembly for overhaul, the timing gear cover can be removed without draining and removing radiator on models not equipped with hydraulic lift. However, on models equipped with hydraulic lift, it will be necessary to remove radiator. First, remove hood, grille and crank support. Take off fan belt and fan assembly; remove starting jaw nut and pull the crankshaft pulley. Disconnect governor linkage and remove cap screws and nuts attaching cover to engine and oil pan. Loosen all other oil pan cap screws and insert a thin knife blade or feeler between oil pan gasket and timing gear cover and separate the two. Pry cover off its dowels and studs. Timing gears may now be inspected; governor weights assembly can be removed from camshaft gear and governor lever shaft and associated parts in the cover can be inspected or repaired as required; crankshaft front oil seal (a spring loaded leather seal with lip facing inward) can be pressed out of cover and renewed.

19. **TIMING GEARS.** If the gears are to be removed, camshaft removed or crankshaft end play adjusted, the radiator must be drained and removed in addition to the work performed in the preceding paragraph. As will be noted in Fig. MH6, the timing gears are meshed so that the punch marked tooth of crankshaft gear is between the two punch marked teeth of camshaft gear.

To remove camshaft gear, take out the four machine screws fastening governor weights assembly to the gear. Remove weights assembly and camshaft gear nut. To remove gear without using a puller, rotate camshaft until the two ⅜ inch holes in gear hub are in register over shaft thrust plate retaining screws. Insert two ⅜-16 screws having 1½ inch threaded portion into gear hub holes and turn them in evenly until gear is pushed off shaft. An alternate way is to use puller as shown in Fig. MH7, being careful that governor plunger bore in camshaft is not damaged by center leg (screw) of puller.

To remove crankshaft gear when cover is off, it will be necessary to use a suitable puller.

Note markings (Fig. MH6) on gear cover gasket surface of crankcase. This indicates correct oversize or undersize gear to be used in this block. In this instance, it indicates that camshaft gear one size over standard should be used. The gear will be similarly marked on its forward face.

When installing the camshaft gear, it is advisable to remove distributor or oil pan and buck up the shaft.

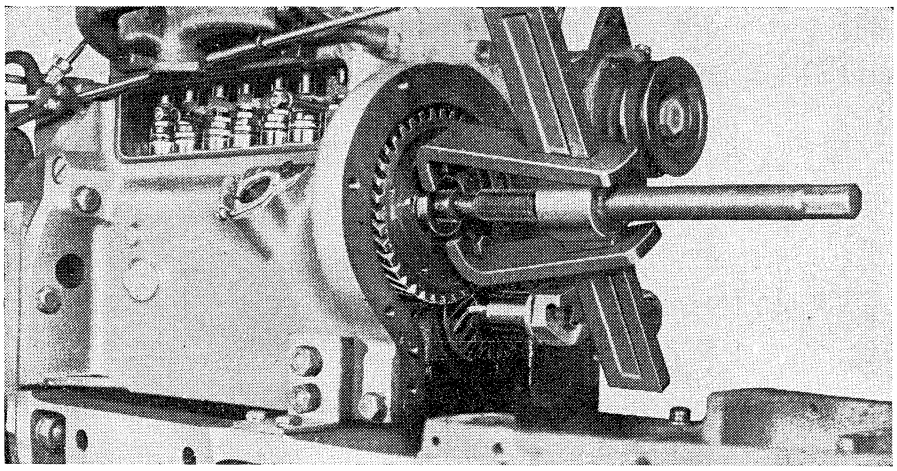

*Fig. MH7—Pulling Continental N62 cam gear. Note washer between camshaft and puller screw to protect governor plunger bore. Tappets are held up by wire under heads of tappet screws.*

https://truckmanualshub.com/



## CAMSHAFT

20. To remove camshaft, remove timing gear cover, radiator and camshaft gear. Remove cylinder head and block up valves. Raise tappets and hold them up with wire placed under heads of tappet screws. Remove thrust plate and the camshaft from its bores.

Camshaft has three bearing journals which rotate in bores cut in the cylinder block; no bushings being used or supplied for service. A bore in rear of camshaft carries the slotted oil pump drive shaft. A pin is riveted in the camshaft and passes through this rear bore, the slotted end of oil pump drive shaft engages this pin and is driven by it. A bore in the forward end of camshaft receives the governor plunger (cup and shaft assembly) as shown in Fig. MH8. A relief hole is drilled just aft of front journal to relieve any pressure created by action of plunger. This hole should be free of dirt and sludge. Dimensions of a new camshaft are as follows:

Front & center journal: 1.7455-1.7465
Rear journal: ..... 1.2455-1.2465
Inlet valve lift: ..... .241
Exhaust valve lift: ..... .243

Recommended clearance of camshaft in the block bores is .003-.0045. If the bearing clearance exceeds .0007, it will be necessary to renew the camshaft and or cylinder block, or to make up and install bushings. Camshaft end play is controlled by a thrust plate behind the camshaft gear. Renew the thrust plate if the end play exceeds .007.

## ROD AND PISTON UNITS

21. Connecting rod and piston assemblies are removed from below. The lower end of each cylinder is chamfered to facilitate installation of pistons and rings from below without using a ring compressor. An alternate method (providing cylinder head has been removed) is to install rod and pistons from below without the rings; then push pistons up through bore and out the top. Install rings on piston and use a compressor to guide piston and rings into bore. Rod spurt hole, numbers on side of rod and cap face toward camshaft side of engine. On aluminum pistons, split in skirt is placed away from camshaft. Tighten connecting rod cap bolts to 20-25 foot pounds.

## PISTONS AND CYLINDERS

22. Cast Iron pistons were originally used in this engine, but present production uses aluminum pistons. Pistons are available in standard size and oversizes of .020, .030, .040 & .060. Remove pistons as described in preceding paragraph.

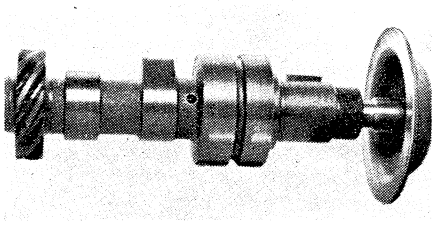

*Fig. MH8—Continental N62 camshaft with governor plunger in position. Hole aft of front journal is for relief of vacuum or pressure created in governor plunger bore.*

If new rings are to be installed, the cylinder head should be removed and the unworn ridge at top of cylinders cut out to protect piston rings from breakage or flutter. Fit of piston in cylinder is checked with ½ inch wide feeler placed between piston skirt and cylinder wall at right angle to the piston pin (thrust side of piston skirt) as shown in Fig. MH9. A pull of 5-10 pounds should be required to pull a .0015 thick feeler from between piston and cylinder wall.

## PISTON RINGS

23. Measure gap of rings in worn cylinder at lowest (unworn) portion of cylinder. Correct gap is .007-.012 for all rings. Check side clearance of rings in their grooves (after carbon is removed). Clearance for compression rings is .0015-.0035 and for oil control rings is .001-.0025. Piston rings of .020, .030, .040 & .060 oversize are available. Taper compression rings are installed with the side marked "Top" facing up.

## CONNECTING RODS AND BEARINGS, PISTON PINS AND BUSHINGS

24. Precision insert type conn. rod bearings can be renewed after removal of the oil pan. Desired clearance of bearing on the crankpin is .0015-.002. Undersize inserts of .002, .020 and .040 are available. Check rod for side play on crankpin (.006-.010) and if insufficient investigate for a mis-aligned rod, or burrs on side of rod or crankpin journal.

Piston pins are solid type, full floating and retained in piston bosses by spring steel lock rings. An application of heat to the piston or submerging piston in hot oil or water will facilitate removal and reinstallation of pin. Use new lock rings whenever old ones have been disturbed. If oversize pins (.003, .005 or .010) or new bushings are to be installed, fit them by reaming or honing. The .5433-.5435 diameter piston pin should be a light push fit in piston and should have .0003 clearance in the rod bushing. Align connecting rods whenever new pins or bushings are installed.

## CRANKSHAFT AND MAIN BEARINGS

25. Crankshaft is mounted in two precision, insert type bearings which may be renewed without removing

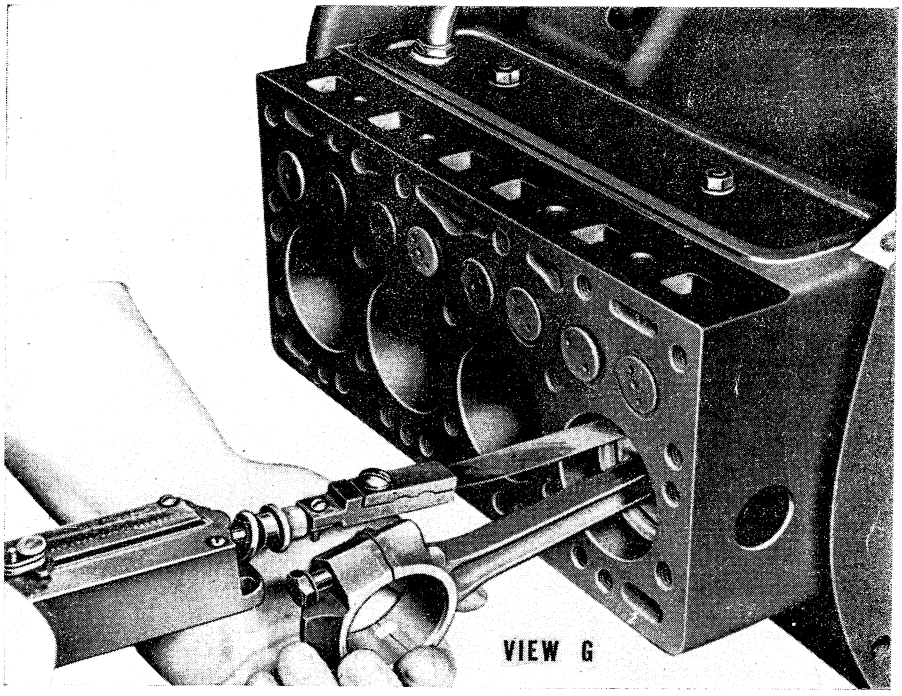


*Fig. MH9—Fitting Continental N62 piston. Use ½ inch wide feeler, .0015 thick. Correct fit requires 5-10 pounds pull.*

https://truckmanualshub.com/



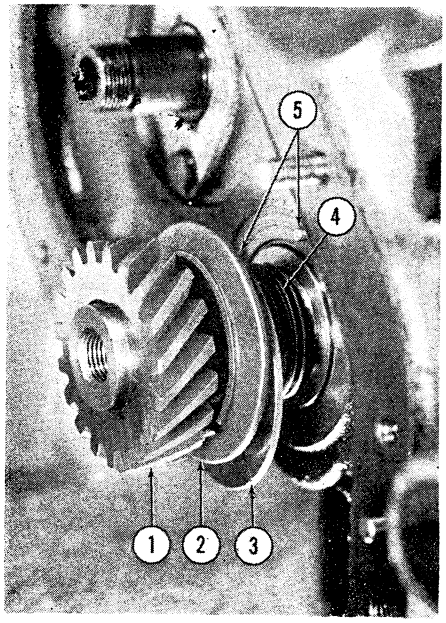


*Fig. MH10—Adjusting crankshaft end play on Continental N62. Shims (4) are varied to obtain .003-.007 end play. Locate bronze washer (3) on dowels (5) before driving thrust plate (2) and crank gear (1) in position.*

crankshaft or engine. Desired clearance of crankshaft in these bearings is .0015-.002 inch. Crankshaft journals sizes and wear limits are as follows:

| | |
|---|---|
| Mains journal diameter | 1.999-2.000 |
| Main bearing oil clearance | .0015-.002 |
| Repair if clearance exceeds | .0032 |
| Crankpin diameter | 1.499-1.500 |
| Renew or regrind shaft if journals or pins out-of-round more than | .003 |
| Main bearing cap nut torque | 92.5-97.5 ft. lb. |

Undersize bearings of .002, .020 and .040 are available for service.

Crankshaft end play of .003-.007 is controlled by shims between thrust plate (2-Fig. MH10) and front journal of crankshaft. To reduce end play, remove timing gear cover and camshaft gear. Pry off the crankshaft gear (1), thrust plate (2) and remove shims (4) as necessary to reduce end play. Shims are .002 and .008 thick. To recheck end play with timing gear cover off, the crankshaft pulley must be in place and the starting jaw nut tightened. Be sure the punch marked tooth of crankshaft gear is meshed between the two punch marked teeth of camshaft gear when reassembling.

## CRANKSHAFT REAR OIL SEAL

26. Crankshaft rear seal is a spring-loaded type, pressed into a retainer which is fastened to the rear of cylinder block as shown in Fig. MH11. Renewal of seal requires splitting the tractor as described in Clutch section and removal of clutch and flywheel. When removing seal retainer, use a thin knife blade or feeler to separate oil pan gasket from the retainer. Press new seal in retainer so that lip will face towards inside of engine. Install seal carefully using oil to lubricate lip and make guide sleeve to guide it over crankshaft flange.

## FLYWHEEL

27. Flywheel may be removed after tractor is split and the clutch removed as described in Clutch section. There is no need to mark relative position of flywheel to crankshaft flange as it can be installed in one position only. Flywheel run-out should not exceed .004 at rear face. Flywheel ring gear is renewable and should be shrunk on flywheel with bevel of teeth towards the rear for easy engagement of starter pinion gear.

## OIL PAN

28. The sheet metal pan is fastened to crankcase by cap screws. Removal of pan is complicated in early production models by the front axle pivot pin and tractor must be blocked up under forward end of torque tube and pivot pin removed before pan can be lowered. *When reinstalling pan, take care when inserting the rear cap screws as it is possible to drop these into flywheel housing and their removal from this compartment is difficult and may sometimes require splitting tractor at this point.*

## OIL PUMP

29. Pump is located on the rear machined surface of cylinder block as shown in Fig. MH11. Pump is driven by the camshaft. Removal of the pump requires splitting the tractor as outlined in Clutch section and removal of flywheel. A 0.007 thick lead gasket (8) is located between pump body (9) and cover plate (5). Between cover plate and engine is another gasket made of vellumoid. Idler gear shaft (10) is a press fit in the body; diameter of new idler shaft is .501. The body bore for drive gear and shaft assembly (7) contains bronze bushing (11); if bushing is worn it is recommended that new pump body with bushing be installed. Diameter of new drive gear shaft is .4985. Thickness of new drive gear or idler gear is .3735. Check pump for gear backlash which should not exceed 0.005. Gear to pump body side clearance should not exceed 0.004.

## OIL PRESSURE RELIEF VALVE

30. The valve assembly is located in right side of cylinder block. Valve is spring loaded, plunger type, maintaining oil pressure of 20-30 pounds at op-

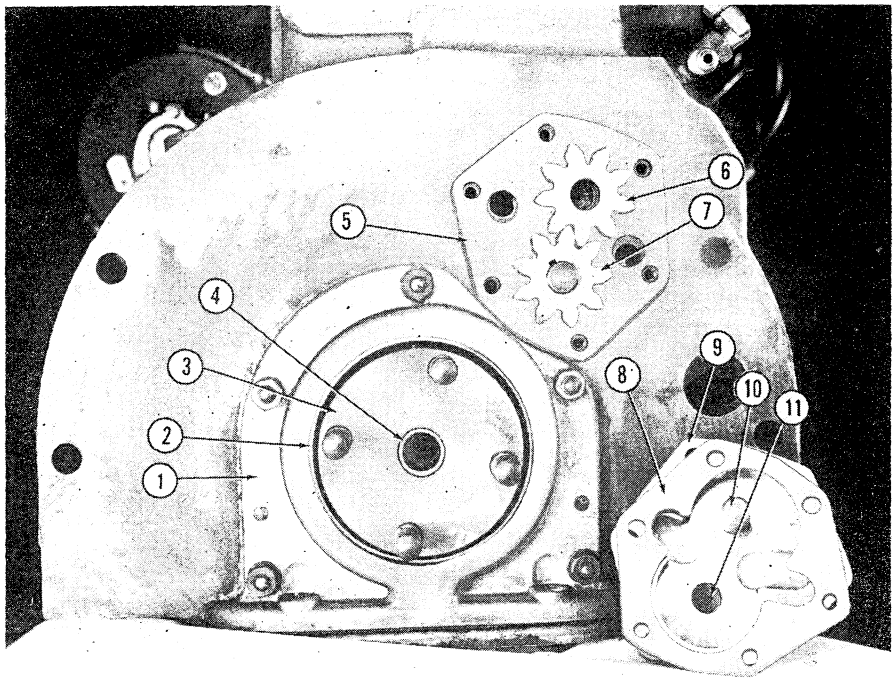


*Fig. MH11—Continental N62 oil pump assembly and crankshaft rear oil seal. Repairs on these units require removal of clutch and flywheel.*

1. Oil seal retainer
2. Oil seal
3. Crankshaft flange
4. Clutch shaft pilot bushing
5. Pump cover & gasket
6. Idler (driven) gear
7. Driving gear & shaft
8. Body-to-cover gasket
9. Oil pump body
10. Idler gear shaft
11. Drive shaft bushing

https://truckmanualshub.com/



erating speed. Two types of relief valves have been used in the Pony tractor. In engines up to serial number 6138, a bullet nose plunger, M-H part number 1500066M1 is used; engines with serial number 6138 and up contain the cylinder type plunger, M-H part number 15322A. Relief valve spring, M-H part number 21195A (painted red) should be used to obtain correct oil pressure setting.

# CARBURETOR

31. Marvel-Schebler updraft carburetor model TSV16 or model TSV24 is used. Adjustments on the TSV carburetor are limited to idling speed and idling mixture adjustments. Both should be performed when engine is warmed to operating temperature. Idling speed is 500 rpm. Float setting is ¼ inch and is measured from nearest face of float to gasket surface of bowl cover. Refer to Standard Units Section for additional data.

# GOVERNOR

32. **SPEED ADJUSTMENT.** To adjust maximum no-load governed speed, remove right side panel which exposes lower portion of throttle quadrant assembly as shown in Fig. MH12. Change the governor spring tension by turning ball and socket joint (S) on governor rod until desired speed is obtained. If engine surges at no-load speed, turn in on bumper screw (D) until surge is eliminated (this will cause slight increase in no-load speed). Correct governed speeds follow:

| | |
|---|---|
| Crankshaft rpm (Load) | 1800 |
| (No Load) | 2050 |
| Belt Pulley rpm (Load) | 1990 |
| (No Load) | 2266 |
| Power Take-Off rpm (Load) | 540 |
| (No Load) | 615 |

33. **LINKAGE ADJUSTMENT.** To check or set all linkage, first adjust carburetor-to-governor rod (R) so that there is $\frac{1}{32}$ inch clearance between throttle lever and its wide open stop at (G) when governor lever is in wide open position. Turn bumper screw (D) out so it is inoperative. Check to see that all linkage operates freely; then start engine and warm to operating temperature; then adjust as outlined in preceding paragraph.

34. **OVERHAUL GOVERNOR.** To remove governor, first remove timing gear cover as outlined under TIMING GEAR COVER section. Fig. MH13 shows position of weights and carrier, plunger and shaft in the camshaft gear. Fig. MH14 shows governor lever shaft and bumper spring and screw in timing gear cover. Inspect weights and pins for wear; also check weights for amount of wear on their plunger-contacting surface. Inspect plunger for wear on its shaft and also on weight-contacting surface of its cup. If lever shaft bearing in timing gear cover is worn, remove the rivet which attaches arm (1—Fig MH14) to lever shaft, take out cotter pin (2) and pull lever shaft from cover. Note that a steel ball is located in lower bore of cover; bottom of lever shaft rests on this ball. The worn bearing may be driven out of upper bore in cover and renewed. Renew the felt seal also. If bumper spring (5—Fig. MH14) is loose in cover, rerivet it in place.

If a newly overhauled governor does not operate properly, check for a plugged pressure relief hole in the camshaft. Refer to paragraph 20.

# COOLING SYSTEM

## FAN ASSEMBLY

35. Adjust fan belt to the correct tension by moving the generator on its adjusting strap. Fan assembly can be removed from tractor after hood and fan belt have been taken off. Radiator need not be disturbed on models without hydraulic lift. Parts for servicing the fan assembly are not supplied; the complete unit is renewed if repairs are required.

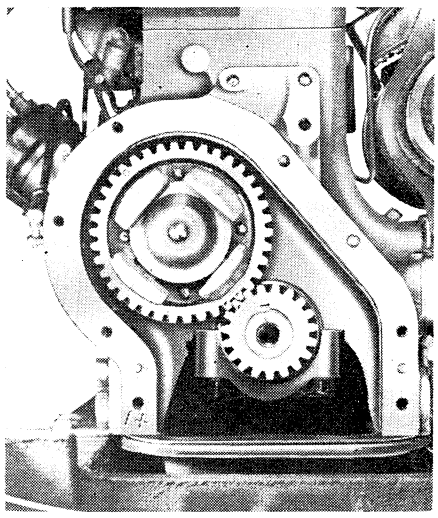

*Fig. MH13—Pony timing gears, showing position of governor weights and carrier, attached to camshaft gear.*

## RADIATOR

36. Tanks & core of radiator assembly are not detachable. Radiator is mounted to the tractor by two supports (formerly a one-piece unit) which are fastened to each side of radiator. On later Pony models, a pressure type cap is used. Radiator may be removed after hood and grille have been taken off.

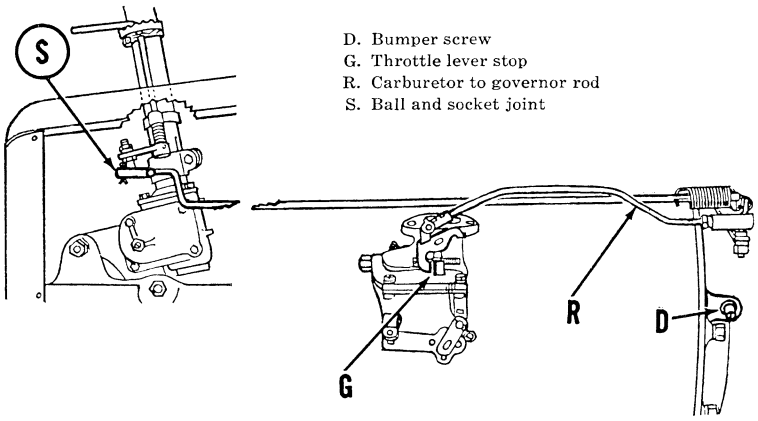


*Fig. MH12—Pony governor linkage assembly.*

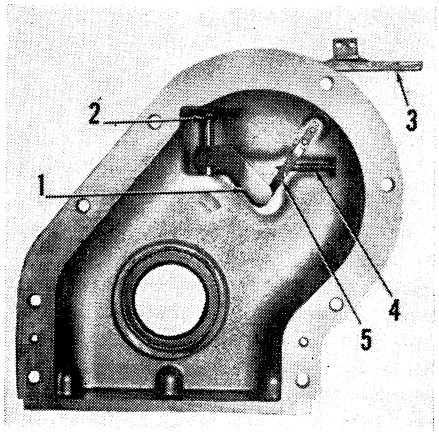


*Fig. MH14—Pony governor lever shaft assembly in timing gear cover.*

1. Arm
2. Cotter pin
3. Control lever
4. Bumper screw
5. Bumper spring

https://truckmanualshub.com/



# IGNITION SYSTEM

37. Three models of Auto-Lite distributors are used on Pony tractors; IAD 4028A, IAD 60032A or IAD 600-32G. The distributor is mounted on right side of engine. Condenser is located within the distributor. Breaker point gap is .020. For overhaul and testing procedure refer to Standard Units section.

38. **IGNITION TIMING.** To time ignition with distributor installed, crank engine until number one piston is coming up on compression and continue to crank slowly until painted mark on flywheel (Fig. MH15) aligns with timing pointer when viewed through inspection opening on right side of engine; number one piston is now at top center of its compression stroke. Turn ignition switch on and rotate distributor a few degrees clockwise; hold number one spark plug wire close to head or grounded point and very slowly rotate distributor body counter-clockwise until a spark occurs at end of plug wire; lock distributor in position. To recheck ignition with timing light, operate engine at idle speed (do not operate above 600 rpm, as automatic advance starts at this speed) and make check with timing light connected in series with either number one or number four spark plug wire. If timing is correct, the light will flash at the same instant that painted mark on flywheel aligns with timing pointer. If the two do not align as light flashes, rotate distributor body until proper register is obtained.

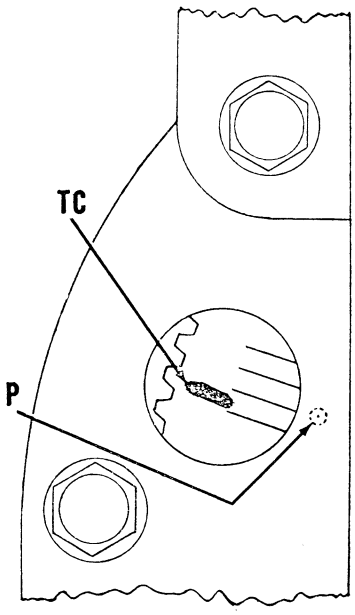


*Fig. MH15—Distributor timing mark is indicated on flywheel face by painted mark TC as shown.*

# ELECTRICAL SYSTEM

## GENERATOR

39. Third brush generator, Auto-Lite model GBM4804A5 is accessible without disturbing any other tractor parts. Generator output is manually controlled by the light switch. The switch has three positions. Position number one (button fully in) inserts a resistance into generator field circuit to reduce generator output to about three amperes; position number two (button half-way out) removes the resistance from generator field circuit and permits maximum generator output to charge a low battery; position number three (button fully out) closes the lights circuit and also removes the resistance from generator field circuit permitting maximum generator output to compensate for the current draw of the lights. Maximum generator output is controlled by the generator third brush. For testing and repair information on the generator and its cut-out relay (Auto-Lite CB4014) refer to Standard Units section.

## STARTING MOTOR

40. Auto-Lite starting motor, model MZ4146A is mounted on left side of torque tube and its pinion engages flywheel ring gear from the rear. To remove starting motor, first take off the left side panel, loosen battery hold-down bolts and lift battery up and back against steering gear housing; this will allow sufficient room to remove starting motor from torque tube. Caution: Mounting flange of starting motor is greater in area than mounting pad machined on torque tube, thus when starting motor is fastened in position there will be about $\frac{3}{32}$ inch space between torque tube and starting motor flange ears. Do not draw mounting bolts too tight as these flange ears might break off. Repair and test data for this unit are covered in Standard Units section.

# CLUTCH

41. **ADJUST.** To adjust the clutch pedal travel, refer to Fig. MH16 and adjust yoke (Y) on rod (R) until clutch pedal has a free travel of approximately one inch.

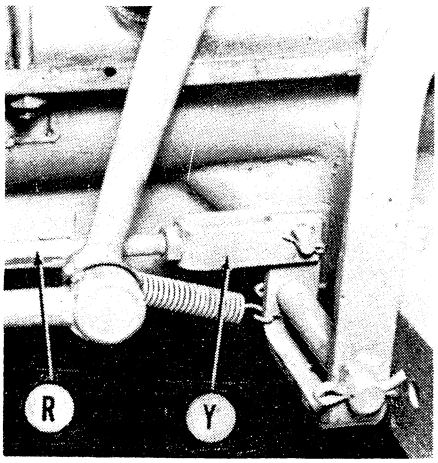


*Fig. MH16—Pony clutch pedal adjustment. Turn yoke (Y) on rod (R) until pedal has one inch free travel.*

42. **TRACTOR SPLIT FOR CLUTCH R & R.** As shown in Fig. MH17, clutch can be removed from flywheel after torque tube is split from engine and front frame. To perform this split, remove hood, detach drag link either at its front or rear joint, disconnect wire harness from generator, ignition coil and lights (if so equipped), disconnect oil gage line at right side of engine, choke wire at carburetor, governor spring at governor lever shaft and remove governor rod clip from under manifold front stud nut. Shut off fuel supply at tank and disconnect fuel line at carburetor. Disconnect hydraulic pump to cylinder lines on models so equipped. Hang engine (forward) half of tractor in hoist in a manner similar to that shown in illustration. Block up rear half of tractor by installing a rolling floor jack under torque tube. Remove front axle radius rod pivot bolt (P) from torque tube and take out bolts and cap screws which attach torque tube to engine and front frame. Separate tractor halves enough to permit removal of clutch from flywheel.

43. **R & R CLUTCH.** Clutch can be removed after tractor is split as in preceding paragraph 42 or when engine is out. When removing or reinstalling clutch on flywheel (Fig. MH18), turn alternate cover-to-flywheel cap screws evenly to prevent distortion of the clutch cover. Use a

https://truckmanualshub.com/



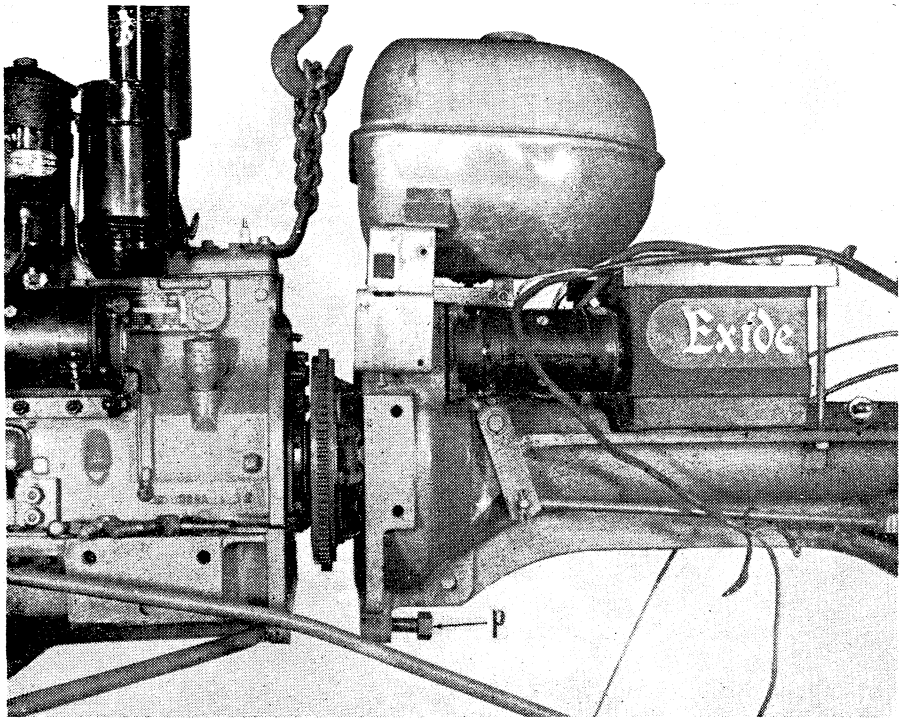


*Fig. MH17—Splitting Pony tractor for clutch removal. Note method of supporting engine and front frame. A floor jack (not shown) supports rear portion of tractor. (P) is front axle radius rod pivot bolt.*

spare clutch shaft or dummy tool to center the driven plate on flywheel when reinstalling clutch. When reassembling tractor, hand crank engine so that splines of driven plate engage splines of clutch shaft. Place transmission in gear so that clutch shaft does not turn.

44. **OVERHAUL CLUTCH.** The clutch in the Massey-Harris Pony tractor is a Rockford model 6½ RM. The clutch cover assembly on early production models was a Borg-Warner number 165-246. The clutch cover assembly on late production models is a Borg-Warner number 165320. All models of the Pony tractor are fitted with a Borg-Warner number 185005 driven (lined) plate.

Disassembly, reassembly and release lever setting procedures are covered in the Rockford clutch section in the separate Standard Units Manual. Release lever height is given in clutch table 5 in the separate Standard Units Manual.

45. **R & R CLUTCH RELEASE BEARING.** Release bearing and its collar are accessible when tractor is split for clutch removal as explained in preceding paragraphs.

The permanently lubricated bearing is pressed on its collar and can be

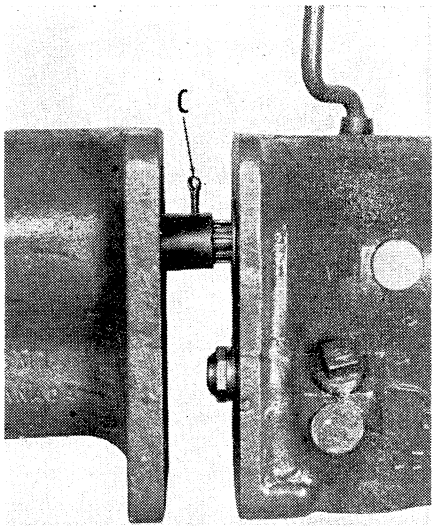


*Fig. MH18—Exploded view of Pony clutch cover assembly showing its component parts.*

R. Release lever
S. Adjusting screw
1. Driven disc
2. Back plate (cover)
3. Release lever spring
4. Pivot pin
5. Adjusting screw seat
6. Pressure spring
7. Pressure plate

easily pressed off for renewal. Remember to attach the return spring to collar when reinstalling.

Whenever clutch is being overhauled, check contact of clutch release fork against release bearing collar. Hold collar against fork and, using a 0.003 inch feeler, check each side of collar to see that the two tangs of release fork are contacting the collar. Bend tangs to obtain correct contact. The bores in the torque tube where release fork shaft rides are not bushed and no bushings are supplied for service.

46. **R & R CLUTCH SHAFT.** Renewal of clutch drive shaft requires splitting tractor at the torque tube-to-transmission joint as shown in Fig. MH19. Proceed as follows: Support forward portion of tractor by attaching hoist to the angle iron cross bar (frame cross angle) which attaches under rear of torque tube. Block up rear portion of tractor with a rolling floor jack. Disconnect brake rods at pedal shaft and remove the two carriage bolts which attach frame side angles to the frame cross angle. Remove the four transmission-to-torque tube bolts and separate tractor at the joint. As shown in the illustration, the splined coupling which is welded to rear of clutch shaft is fastened to transmission input shaft by cotter pin which must be removed to permit withdrawal of the clutch shaft.

When reassembling, install clutch shaft in torque tube so that its forward end is inserted in the tubular guide for clutch release bearing collar in forward portion of torque tube. Bring transmission and final drives assembly and the forward portion of tractor together until transmission input shaft can be inserted into clutch shaft coupling, making sure that holes in input shaft and coupling are aligned to receive the cotter pin. Insert and spread cotter pin and careful-

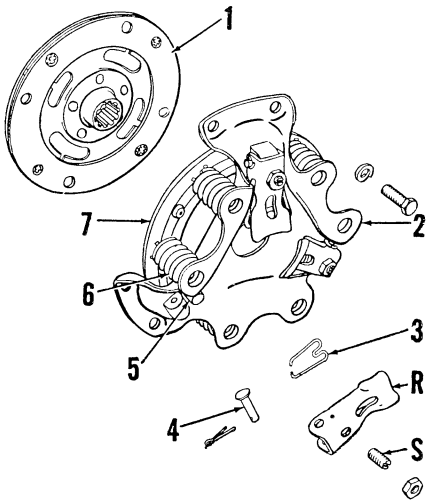


*Fig. MH19—Splitting Pony tractor at torque tube-to-transmission joint for removal of clutch shaft or transmission front seals. Note cotter pin (C) which fastens clutch shaft to transmission input shaft.*

https://truckmanualshub.com/



ly draw the two portions of tractor together, using hand crank to turn engine until splines of clutch driven plate engage splines of clutch shaft. Place transmission in gear so that clutch shaft does not turn.

# TRANSMISSION AND CONNECTIONS

47. The transmission of Pony tractor is carried in a common housing with the differential assembly; the units are separated by a wall in the housing. Transmission is a three speed unit with reverse and, as shown in Fig. MH20, three shafts are used to transmit the power. Removal of any one of the shafts or overhaul of transmission requires its removal from the tractor. Shifter rails and forks are carried in transmission side cover which can be removed while transmission is in tractor.

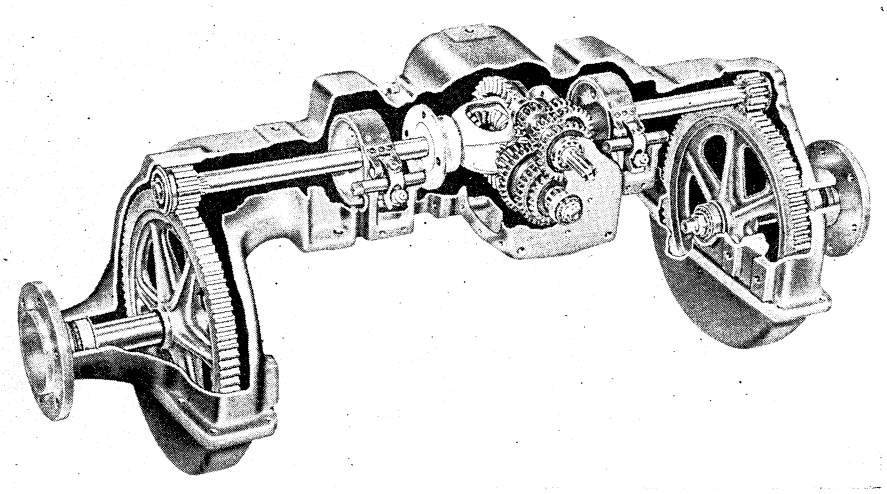

*Fig. MH20—Cutaway of Pony transmission, differential and final drives unit. A wall in the common case separates the differential from the transmission. Final drive housings are detachable from transmission case.*

48. **SHIFT RAILS AND FORKS.** To remove transmission side cover and shifter assembly (Fig. MH21), raise the dust boot on shift lever, pull out shift lever pin and remove shift lever from housing. Cover-to-transmission cap screws can then be removed and cover taken off housing. Disassembly and reassembly of the unit is apparent from a study of illustration. Rail (2) for first and reverse fork is $\frac{11}{16}$ inch long at point (L). Renew forks (1) and (5) if worn on their gear contacting surfaces and detent springs (6) if they have lost their tension.

49. **INPUT SHAFT OIL SEAL AND BEVEL PINION SHAFT FRONT CAP GASKET.** To renew either the input shaft front oil seal or gasket for bevel pinion shaft front cap, split tractor at the torque tube-to-transmission joint as explained under R & R CLUTCH SHAFT. Input shaft oil seal (Fig. MH22) can be pried out of its seat for renewal. Install seal with lip facing inward. Gasket under bevel pinion shaft front cap is made of Vellumoid.

50. **R & R TRANSMISSION.** To remove unit for overhaul or removal of any of the transmission shafts, it is first necessary to remove the final drive units and the differential as outlined in their respective sections. Remove the transmission-to-torque tube bolts and pull transmission (with clutch shaft attached) from torque tube. To reinstall transmission-differential housing, the clutch shaft should first be installed in torque tube so that its forward end is inserted in the tubular guide for clutch release bearing collar in forward portion of torque tube. Place transmission-differential housing on movable floor jack or platform and wheel into position so that transmission input shaft can be inserted in clutch shaft coupling, making sure that holes in input shaft and coupling align to receive cotter pin. Insert and spread cotter pin and carefully draw the transmission and torque tube together using hand crank to turn engine until splines of driven member engage splines of clutch shaft. Have transmission in gear so that clutch shaft does not turn. Bolt transmission and torque tube together and reinstall differential and final drive units.

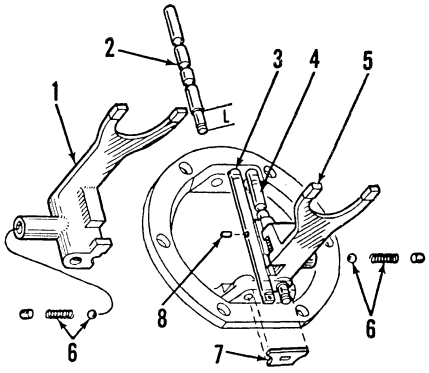


*Fig. MH21—Pony transmission shifter rails and forks in transmission side cover. First and reverse fork rail (2) can be identified by measuring length of section (L) which is 11/16 inch.*

1. First & reverse fork
2. First & reverse rail
3. Guide rail
4. Second & 3rd rail
5. Second & 3rd fork
6. Detent ball & spring
7. Rail lock
8. Interlock pin

51. **BEVEL PINION (SLIDING GEAR) SHAFT.** This shaft (18—Fig. MH23) may be removed either before or after removal of input shaft (following paragraph), but it is recommended that it be removed first so that shaft can be locked in two gears at

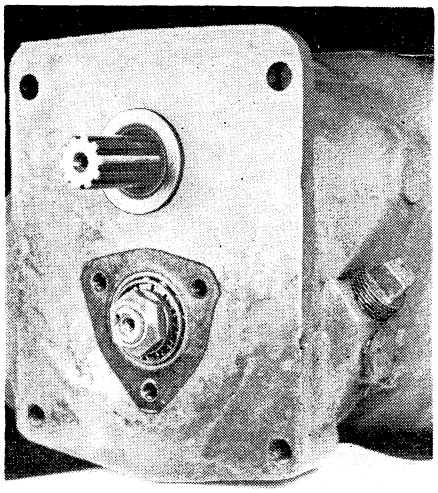

*Fig MH22—Pony transmission front seals. Input (upper) shaft seal is installed with lip facing inward. The sliding gear (lower) shaft is integral with main bevel pinion and is sealed by a cap and gasket.*

https://truckmanualshub.com/



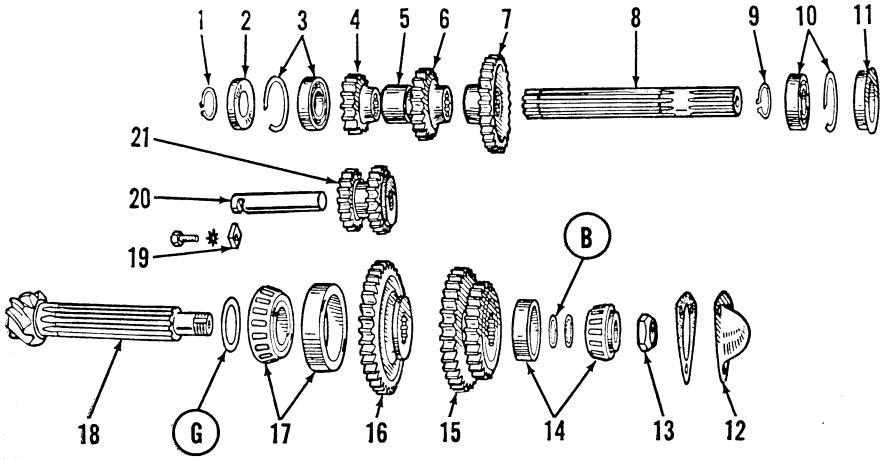


***Fig. MH23—Pony transmission assembly. Shims (B) are for bevel pinion shaft bearing adjustment. Shims (G) are for mesh adjustment of main drive bevel gears.***

1. Input shaft rear snap ring
2. Cup washer
3. Rear bearing & snap ring
4. First speed gear
5. Gear spacer
6. Second speed gear
7. Third speed gear
8. Input shaft
9. Input shaft front snap ring
10. Front bearing & snap ring
11. Input shaft oil seal
12. Bevel shaft cap & gasket
13. Shaft lock nut
14. Front bearing assembly
15. Second & 3rd sliding gear
16. First & reverse sliding gear
17. Rear bearing assembly
18. Bevel pinion shaft
19. Reverse idler shaft lock
20. Reverse idler shaft
21. Reverse idler gear

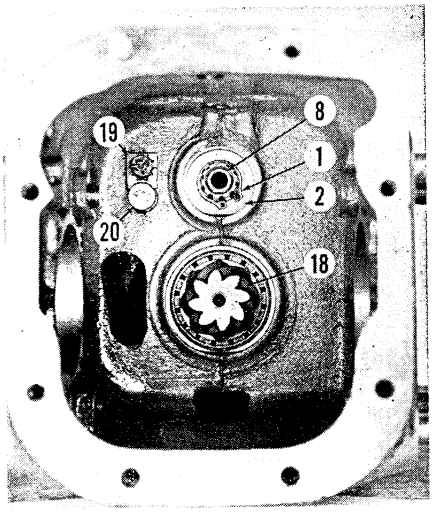


***Fig. MH24—Rear view Pony transmission with differential removed. Note etched markings on rear face of bevel pinion shaft. Identical markings will be found on bevel ring gear as these are supplied in matched sets.***

1. Snap ring
2. Cup washer
8. Input shaft
18. Bevel pinion shaft
19. Reverse idler lock
20. Reverse idler shaft

once until nut (13) can be loosened. With differential and transmission side cover removed, proceed as follows: Lock the bevel pinion shaft by meshing both sliding gears at once and remove front cap (12); drive a punch under staked portion of nut (13) and unscrew nut from bevel pinion shaft. Bump the shaft rearward into differential compartment. Front bearing cone (14) will be released as shaft is bumped rearward; both sliding gears can be removed through cover opening in right side of housing. Small shims (B) located on front end of shaft are for adjustment of bearing pre-load; the larger shims (G) located on rear end of shaft between bevel pinion and rear bearing cone (17) are for mesh adjustment of bevel gears. Bearing cups (14) and (17) may be driven out of housing if renewal is required and the rear bearing cone (17) may be pressed off shaft.

Refer to paragraph 56 for mesh adjustment of bevel gears.

To reinstall bevel pinion shaft, insert the components in the order shown in the illustration. If new bearings or bevel pinion shaft are used, adjust bearings to correct pre-load as follows: Add enough small shims (B) to provide slight amount of end play when nut (13) is tightened to 50 foot pounds torque. Measure amount of shaft end play with dial indicator and remove that amount of shims plus .0025 of shims to obtain correct pre-load of .002-.004. Shims are provided in thickness of .010, .0125, .015 and .018 to obtain the correct combination. Example: If shaft end play measures .005, a total of .0075 in shims must be removed; so remove two .010 shims and replace them with one .0125 shim. After bearings are adjusted and nut (13) tightened to 50 foot pounds, stake a portion of nut into groove in bevel pinion shaft to lock. Note: If bevel pinion shaft must be renewed, use matched gear set M-H part number 850 119 M11 and renew bevel ring gear on differential case and adjust mesh of main drive bevel gears as in paragraph 56.

52. **INPUT SHAFT.** The shaft (8) can be removed by prying out front seal (11) and removing snap rings (1) and (9); position of snap ring (1) on rear of input shaft is shown in Fig. MH24. Bump input shaft and front bearing forward and out of housing. Remove rear bearing, gears and gear spacer through cover opening in side of housing. Front bearing may be pressed off input shaft if renewal is required. Cup washer (2) may be driven rearward out of housing wall if renewal is required. Note: It is possible to remove the input shaft without removing differential assembly from the housing, but time consumed in attempting to remove rear snap ring (1) with differential in place will usually exceed the time required to R & R differential. Due to use of annular ball bearings, there are no adjustments on input shaft.

53. **REVERSE IDLER SHAFT.** This shaft can be removed after bevel pinion shaft or input shaft is out. Remove

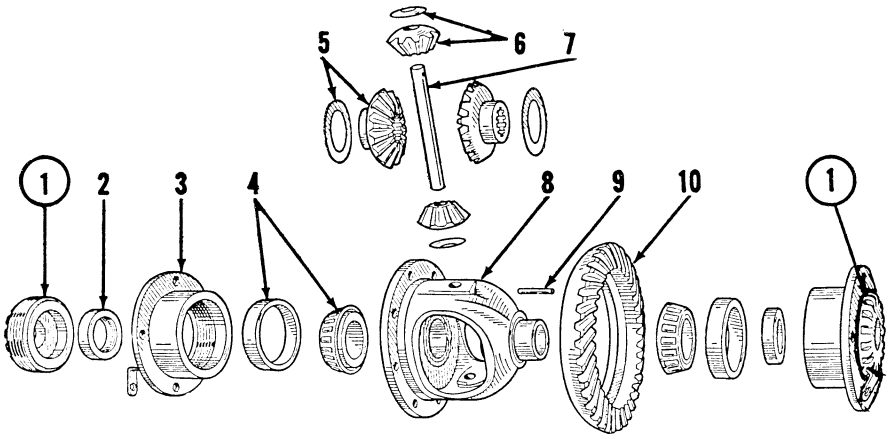


***Fig. MH25—Pony differential assembly. Bevel ring gear is retained to differential case by cap screws. Adjusting nuts (1) control preload on differential bearings and backlash (.006-.008) of main drive bevel gears.***

1. Bearing adjusting nuts
2. Differential oil seals
3. Bearing retainers
4. Differential bearings
5. Side gears & thrust washers
6. Pinions & thrust washers
7. Pinion shaft
8. Differential case
9. Pinion shaft lock pin
10. Bevel ring gear

https://truckmanualshub.com/



cap screw in differential compartment which holds shaft lock plate (19) in position. The idler shaft (20) is pulled rearward and reverse idler gear (21) is removed through cover opening in right side of housing. The two oil-absorbent bushings in reverse idler gear may be pressed out for renewal. Diameter of new idler shaft is .747 inch and bushings should be sized to .7495-.7505. Reverse idler gear is installed with larger diameter gear toward front of transmission compartment.

# DIFFERENTIAL

The differential assembly is contained in rear compartment of common transmission-differential housing. The bevel ring gear is bolted to the differential case. Differential bearings are adjusted by means of threaded nuts in bearing retainers.

54. **R&R DIFFERENTIAL.** Removal of differential assembly requires removal of final drive units. Drain transmission-differential housing while removing final drive units. Remove rear cover or combination belt pulley and power take-off if so equipped. If no work is to be done on the differential, the bearing retainers (3-Fig. MH25) and housing should be indexed for correct reassembly. Remove bearing retainers without disturbing adjusting nuts (1) and take differential out rear opening of housing.

When reinstalling differential, bevel ring gear is placed on left side of compartment when viewed through rear opening. Adjust backlash of bevel gears and differential bearing pre-load as follows: Install differential and fasten bearing retainers to housing without adjusting nut locks. Tighten both adjusting nuts (1) until heavy drag is obtained then rotate differential to assure that bearings are seated. Back off left adjusting nut until backlash of bevel gears is .006-.008 when measured with dial indicator on rim of ring gear; then turn in right adjusting nut until bearings are just slightly pre-loaded (.002-.004 pre-load recommended). Note: If bevel pinion shaft is out of transmission compartment, this pre-load can be felt as a slight drag when differential is rotated but if bevel pinion shaft is in place the pre-load on its bearings will have to be taken into account. Install adjusting nut locks, rear cover and final drive units. Note: If transmission bevel pinion shaft and bevel ring gear were renewed, adjust mesh of these

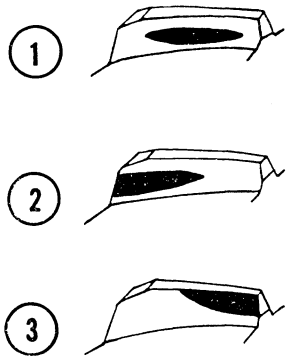


*Fig. MH26—Mesh pattern on bevel ring gear teeth. (1) is correct tooth bearing; (2) bevel pinion is too close to cone center; (3) bevel pinion is too far from cone center.*

gears as explained in MAIN DRIVE BEVEL GEARS section.

55. **OVERHAUL.** Differential (Fig. MH25) is easily disassembled after lock pin (9) is driven out of differential case. Bearing cones (4) may be pressed off case and bearing cups (4) pulled or driven from retainers (3) for renewal. When renewing oil seals (2) in adjusting nuts (1), install seals with lips facing inward. When reassembling, peen edge of case over to lock pin (9) in position. Note: If bevel ring gear must be renewed, use matched gear set, M-H part number 850 119 M11, and renew bevel pinion shaft in transmission. Ring gear-to-differential case cap screws should be tightened to torque of 40 foot pounds. Adjust mesh of bevel gears as per following paragraph. Adjust differential bearings and backlash of bevel gears as per preceding paragraph.

# MAIN DRIVE BEVEL GEARS

56. Bevel pinion shaft and bevel ring gear are supplied as a matched set and must not be renewed separately. Adjust mesh of these bevel gears as follows: Install bevel pinion shaft and differential. Coat pinion teeth with red lead or prussian blue and rotate the pinion. Observe the impressions on ring gear teeth caused by contact of bevel pinion teeth. If bevel pinion teeth contact center of ring gear teeth as shown in Fig. MH26, they are correctly meshed; if not, add or remove shims (G- Fig. MH23) between bevel pinion and bevel pinion shaft rear bearing cone (17) to move the bevel pinion into correct mesh position. Note: In order to retain correct pre-load on bevel pinion shaft bearings, whatever thickness of shims (G) is added or removed from the shaft, the same amount of shims (B) should be added or removed. Recheck backlash after mesh adjustment is completed.

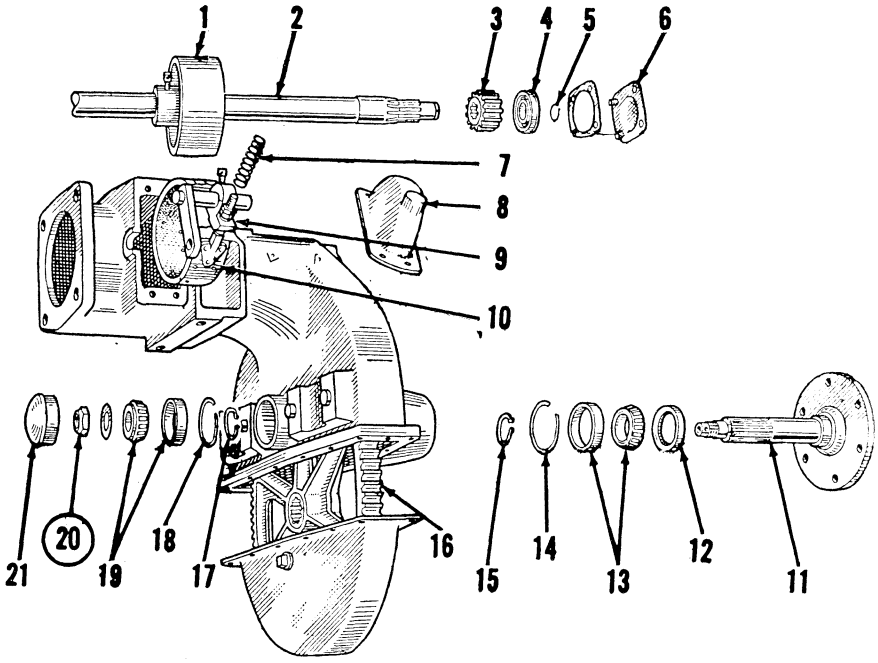


*Fig. MH27—Pony final drive assembly. Wheel axle shaft bearings are adjusted by nut (20). Brake drum (1) is keyed to final drive shaft (2).*

1. Brake drum
2. Final drive shaft
3. Bull pinion
4. Pinion bearing
5. Shaft snap ring
6. Cap & gasket
7. Brake release spring
8. Brake cover plate
9. Actuating cam
10. Brake band
11. Wheel axle shaft
12. Shaft oil seal
13. Outer bearing assembly
14. Outer bearing snap ring
15. Bull gear outer snap ring
16. Bull (master) gear
17. Bull gear inner snap ring
18. Inner bearing snap ring
19. Inner bearing
20. Axle shaft nut & washer
21. Axle shaft cap

https://truckmanualshub.com/



# FINAL DRIVE

57. Final drive assembly includes two cast housings, each fastened to side of transmission-differential housing. Enclosed in each housing is a final drive shaft on outer end of which is a splined pinion gear; this gear drives a master or bull gear located on the wheel axle shaft in lower part of housing. The brake assembly is located in upper part of housing.

58. **R & R FINAL DRIVE UNITS.** To remove one or both final drive units, block under rear of torque tube or attach hoist to frame cross angle and drive ¾ inch wooden wedges under each side of front frame at front axle pivot to prevent tractor from tipping over. Remove rear wheels and drawbar; disconnect brake rods at pedal shaft and remove the two carriage bolts which attach frame side angles to frame cross angle. Remove nuts holding one final drive housing to transmission-differential housing and pull final drive unit from tractor; repeat for other final drive.

59. **MASTER (BULL) GEAR AND WHEEL AXLE SHAFT.** Bull gear or wheel axle shaft may be removed without detaching final drive housing from tractor. Place jack under transmission and remove rear wheel and drawbar. Take down bull gear cover; remove dust cap (21-Fig. MH27) and staked nut (20). Remove inner bearing cone (19) and the bull gear inner snap ring (17) from the shaft. Install a puller as illustrated in Fig. MH28; then push the wheel axle shaft out of bull gear and housing. Outer bearing cone (13-Fig. MH27) and oil seal (12) will come out with the wheel axle shaft. Inner and outer bearing cups (19) and (13) can be pulled or driven from housing for renewal. Bull gear (16) can be reinstalled in reverse of its original position so that opposite, unworn sides of teeth are in contact with pinion and thus increase life of bull gear. When reassembling, wheel axle shaft bearings should be given a slight amount of pre-load but not enough to compress the housing. Stake nut (20) into groove of wheel axle shaft to lock. Note: If the complete final drive is being overhauled, it is advisable to install bull gear and wheel axle shaft first so that pre-load on bearings can be felt.

60. **BULL PINION AND DRIVE SHAFT.** It is possible to remove the bull pinion and shaft bearing without

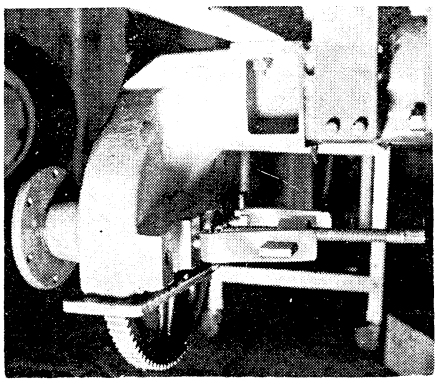

*Fig. MH28—Removing Pony wheel axle shaft and bull gear. Puller screws are threaded into drawbar mounting holes in housing.*

detaching final drive housing, however, if bearing is tight on shaft it may be necessary to detach the housing and perform work as follows: With final drive housing removed, two methods may be used to remove bull gear pinion or its shaft. Remove outer cap (6) and snap ring (5); take a brass drift and heavy hammer and bump the shaft (2) inward and thus out of bearing (4) and pinion (3). If available, a press may be used to press shaft out of housing. If press is not available and shaft will not give after a few blows with the hammer and drift, unlock set screw on brake drum (1) and bump the shaft outward far enough to install a puller on bearing and pinion. Pull bearing and pinion from shaft and remove shaft and brake drum from inner opening of housing. Bull gear pinion can be reinstalled in reverse of its original position so that opposite unworn sides of its teeth contact the bull gear teeth and thus increase pinion life. Because ball bearings are used, no adjustment is required on this assembly.

# BRAKES

61. **ADJUST.** Two adjustments can be made on brakes. As shown in Fig. MH29, the rod between brake cam shaft and pedal shaft has an adjustable clevis. These rods are adjusted only to equalize the pedals in their released position. Brake bands are adjusted by means of the adjusting nuts (6) which are exposed when front brake cover plate (2) is off as in the illustration. To adjust, loosen the lock nut and turn adjusting nut (6). With rear wheel raised, the drum should turn freely within brake band when brakes are released. Adjust bands on both sides of tractor and test by applying pressure to both pedals at once with tractor in operation and rear wheels off ground. Equalize brakes by loosening adjustment nut (6) on the tighter band.

62. **R & R BANDS.** To remove brake band, remove both front and rear brake cover plates and unscrew lock nut and adjusting nut (6) from lower

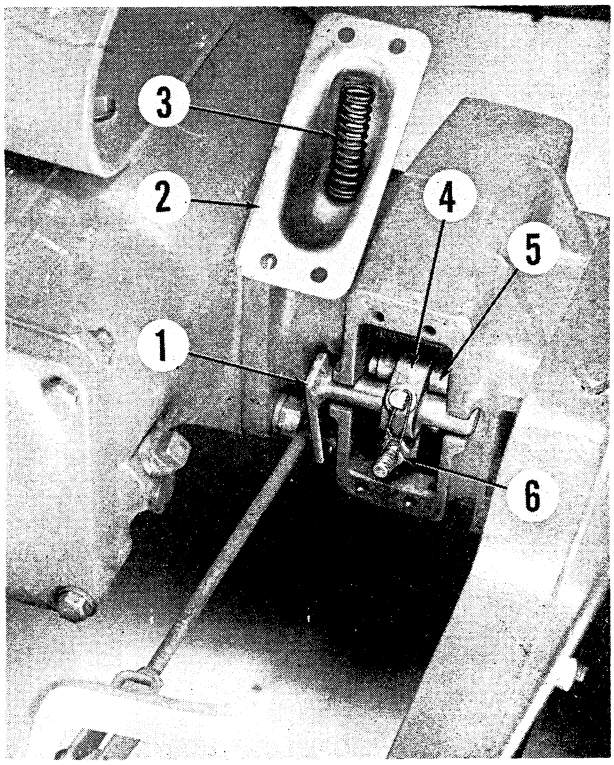


*Fig. MH29—Adjusting Pony brakes. Adjust pedal rod to equalize height of pedals. Turn adjusting nut (6) on brake band to adjust lining clearance.*

1. Brake cam shaft
2. Brake cover plate
3. Release spring
4. Actuating cam
5. Brake band
6. Adjusting nut

https://truckmanualshub.com/



end of brake band. Pivot the actuating cam (4) so that upper end of brake band is exposed enough to push out headless pin which fastens band to the cam. Thread brake band around drum and out either front or rear opening. Lining is supplied separately or complete band with riveted lining can be purchased. Adjust brakes as per preceding paragraph.

63. **R & R DRUMS.** Brake drums are removed with final drive shaft as described in preceding paragraph titled Bull Gear Pinion and Drive Shaft. Drum is keyed to shaft and locked in position by a wire-safetied set screw.

# BELT PULLEY AND POWER TAKE-OFF

64. **ADJUST PULLEY SHAFT BEARINGS.** The only adjustment which can be performed is the adjustment of belt pulley shaft bearings. Remove belt pulley retaining cap screw and belt pulley (16—Fig. MH30); then add or remove shims (13) until pulley shaft turns freely in its bearings with no end play.

65. **R & R POWER TAKE-OFF SHAFT.** Remove unit from tractor. Remove shaft cap and lower cover (23—Fig. MH30). Remove snap ring (26) and bump power take-off shaft rearward out of housing. Spur gear (22) can then be withdrawn through the opening in bottom of housing. Ball bearings (19) and (24) and seal (18) may be driven out of housing for inspection.

66. **R & R BELT PULLEY SHAFT.** Remove pulley retaining cap screw, pulley and Woodruff key from pulley shaft. Remove bearing cap (14), noting number of shims (13) between it and housing. Remove expansion plug (6) by piercing it with a chisel or punch and prying it out of its bore. Buck-up gear (9), and press belt pulley shaft out the pulley side of housing. Bearing cup and cone (12) will come out with pulley shaft. Bevel gear (9) and bearing cone (8) can then be removed from inside of housing. Bearing cup (8) will remain in its bore and may be driven out for renewal. Oil seal (15) is pressed into bearing cap (14) so that its lip faces inward. Shims (13) are provided for adjustment of pulley shaft bearings. A gasket is placed between shim pack (13) and housing.

67. **R & R DRIVE SHAFT.** Remove unit from tractor, rivet from lever (5) and tap lever off shaft (1). Pull shifter shaft and coupling (2) forward, being careful not to lose detent ball (3) as the shifter shaft is pulled from housing. Unstake and remove nut (27) from drive shaft (D). Remove snap ring (31) and tap drive shaft forward and out of housing. Bevel gear (28) will remain in the housing while bearing (30) and spur pinion (29) will be removed with drive shaft. If detent spring (3) requires renewal, it can be removed through the opening (4) when plug is removed.

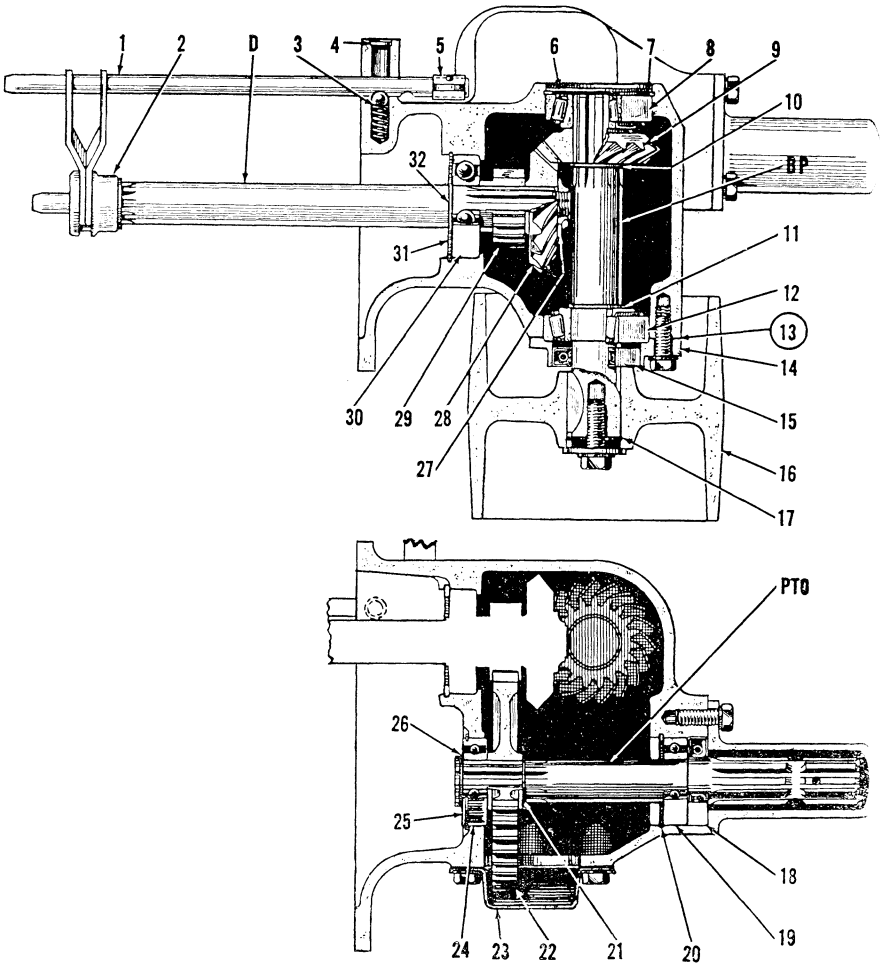


*Fig. MH30—Pony combination belt pulley and power take-off unit. Drive shaft (D) pilots in bushing in rear of transmission input shaft and coupling (2) engages splined end of input shaft to drive the unit. Shims (13) are for adjustment of pulley shaft bearings.*

***D. Drive shaft*** ***PTO. Power take-off shaft*** ***BP. Belt pulley shaft***

1. Shifter shaft
2. Shift coupling
3. Detent ball & spring
4. Plug (½)
5. Shifter lever
6. Plug (2½)
7. Bearing snap ring
8. Right hand bearing
9. Bevel driven gear
10. Gear snap ring
11. Shaft snap ring
12. Left hand bearing
13. Gasket and shims
14. Bearing cap
15. Shaft oil seal
16. Pulley
17. Pulley snap ring
18. PTO oil seal
19. PTO rear bearing
20. Rear bearing snap ring
21. Spur gear snap ring
22. Spur gear
23. Lower cover
24. PTO front bearing
25. Front bearing snap ring
26. PTO snap ring
27. Bevel gear nut
28. Bevel drive gear
29. Spur pinion
30. Drive shaft bearing
31. Bearing snap ring
32. Shaft snap ring

https://truckmanualshub.com/



# POWER LIFT

## (HYDRAULIC UNIT)

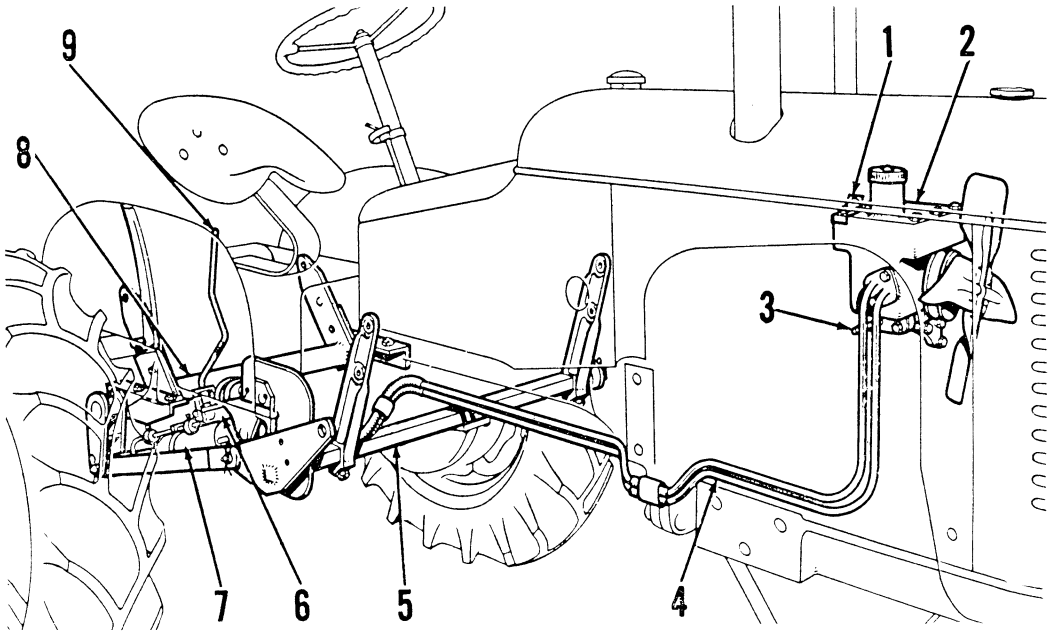


***Fig. MH31—Phantom view showing installation of hydraulic power lift system on Massey-Harris Pony tractor.***

1. Coil bracket
2. Oil reservoir
3. Reservoir drain pipe
4. Hydraulic lines
5. Front lift shaft
6. Control valve
7. Hydraulic cylinder
8. Rear lift shaft
9. Control lever

### Adjustment

70. Stops (5 & 6—Fig. MH32) may be adjusted to obtain the desired raised and lowered positions of the particular implement being used, by loosening the square head set screws (7) and moving the stops on rod (1). Adjust stop (6) to obtain the desired lowered position, and stop (5) to obtain the desired raised position.

### R & R And Overhaul Cylinder And Control Valve

71. It is recommended that hydraulic cylinder and control valve be removed from tractor as a unit so as to eliminate dirt and oil leakage which are inevitable if units are disassembled and reassembled on tractor. Remove cap from drain pipe in the oil reservoir and allow reservoir to drain. Remove hydraulic lines pad (3—Fig. MH32) from the control valve. Remove the two cylinder attaching cotter keys and pins and lower cylinder and control valve (as a unit) away from tractor. Separate control valve from cylinder by removing the two control valve attaching cap screws.

Overhaul of the cylinder normally consists of renewing packings and gaskets; however, metal parts should be renewed when they show wear. First step in disassembly is to remove the snap ring (8—Fig. MH33) and withdraw cylinder head and piston assembly from cylinder. The need and procedure for further disassembly is evident after an examination of the unit. When reassembling the unit, lubricate all internal parts with SAE No. 10 oil and install new "O" rings, seals and gaskets.

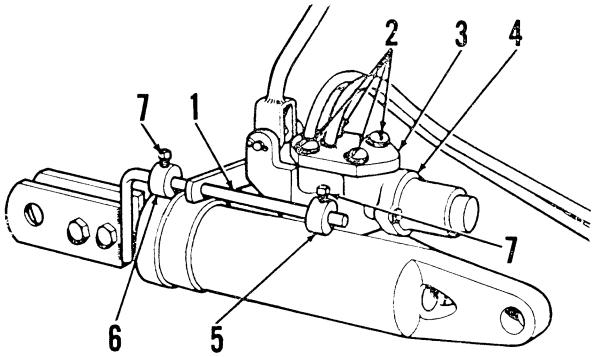


***Fig. MH32—Pony hydraulic cylinder and control valve assembly.***

1. Follow-up rod
2. Pad attaching screws
3. Hydraulic lines pad
4. Control valve
5. Adjusting stop
6. Adjusting stop
7. Set screw

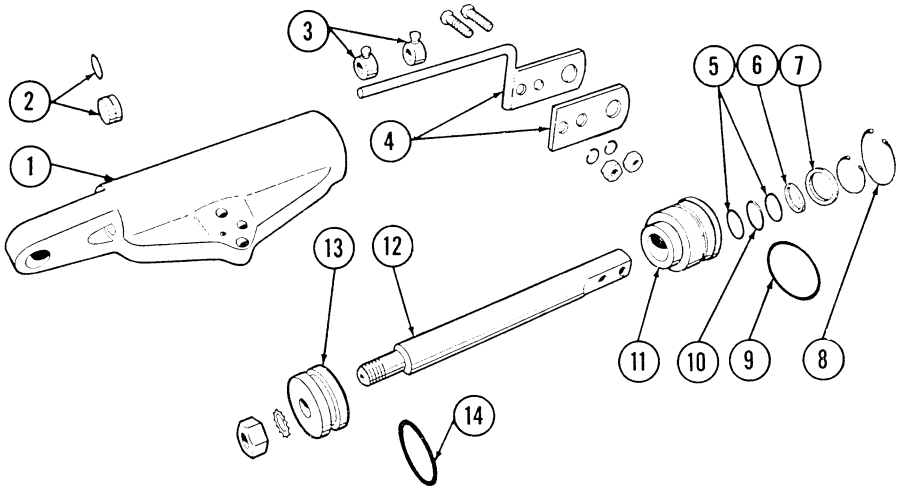


***Fig. MH33—Exploded view of Pony hydraulic lift work cylinder.***

1. Cylinder
2. Plug & ring
3. Adjusting stops
4. Stop rod & plates
5. Leather washer
6. Wiper ring
7. Retainer washer
8. Snap ring
9. "O" ring
10. Ring
11. Cylinder head
12. Shaft
13. Piston
14. "O" ring

https://truckmanualshub.com/



Procedure for disassembling the removed control valve unit is evident after an examination of the unit and reference to Fig. MH34. The parts should be washed and thoroughly examined for nicks and excessive wear. When reassembling, renew all seals and gaskets and any other questionable parts.

When reinstalling control valve to the cylinder, make certain that the two "O" ring gaskets are properly located between the parting surfaces of the control valve and cylinder. When reinstalling the hydraulic lines pad to the control valve, make certain that the "O" ring gasket (2—Fig. MH35) is properly located, and that the pad gasket does not cover relief port (1). Tighten the four round head pad attaching screws to a torque of 7-9 foot pounds **only**. Remove hood and fill reservoir up to baffle; start engine and operate power lift several times; then fill reservoir up to baffle again, and replace hood.

### Trouble Shooting

72. **LOSS OF LIFTING POWER.** Indicates that hydraulic lines pad gasket on control valve is covering relief port (1—Fig. MH35) or the "O" ring gaskets which are located between the control valve and cylinder, hydraulic lines pad and control valve, hydraulic lines pad and reservoir, and/or reservoir and pump, are improperly seated. Renew gasket between pad and control valve, and install new "O" ring gaskets.

**FLUID (OIL) LEAKS BETWEEN HYDRAULIC LINES PAD AND CONTROL VALVE.** Indicates that too much initial torque was applied when tightening the four round head pad attaching screws. Remove pad; install a new pad gasket and "O" ring gasket; reinstall and tighten screws to a torque of 7-9 foot pounds **only**.

**LIFT WILL NOT RAISE IMPLEMENT.** Indicates that oil reservoir is empty, or, if reservoir is full, it indicates that the pump, control valve, and/or cylinder has failed. Inspect and renew (or overhaul in case cylinder has failed) any faulty units.

**LIFT WILL NOT STAY IN POSITION.** Indicates that control valve is faulty or that piston seals are leaking. Renew valve, or install new piston seals.

**SHORT PISTON SEAL LIFE.** Indicates that cylinder, piston or bearing is worn. Inspect and renew worn parts.

## HYDRAULIC PUMP

73. The gear type pump is located on upper front end of the cylinder block and is driven by the fan belt. The working fluid (SAE No. 10 oil) is supplied by an oil reservoir which is attached to the pump. Hydraulic system should be drained and refilled **at least** once a year to remove any accumulation of dirt or water in the reservoir. Drain system immediately after using, while oil is still warm.

### R & R And Overhaul

74. Drain cooling system and remove hood, radiator, grille, and upper radiator hose. Remove cap from drain pipe in the oil reservoir, and allow reservoir to drain. Disconnect fan belt tensioner at hydraulic pump, and remove belt. Remove the bolt which holds the coil clamp to the coil bracket on the oil reservoir, and lay coil out of the way. Remove the two nuts which hold the hydraulic lines pad to the oil reservoir. Remove the two remaining cap screws that hold the pump to the cylinder block; lift pump, reservoir and fan assembly (as a unit) from tractor. Remove the one remaining cap screw which holds the oil reservoir to the pump, and remove reservoir. Remove fan and pulley from pump shaft.

Remove cap screws retaining pump cover to pump body and remove the cover, bearings, gears and seals. Check the component parts against the values listed below.

Gear bore in pump body (New) .....1.1665-1.167[illegible]

Renew body if gear bore is.....1.17[illegible]

Gear diameter (New)...1.1655-1.166[illegible]

Renew gears if diameter is.....1.1[illegible]

Max. diam. clearance between gears and body.....0.0[illegible]

Bearing bore (New).....0.500-0.5[illegible]

Max. allowable bearing bore....0.5[illegible]

Shaft diameter (New)...0.4975-0.49[illegible]

Min. allowable shaft dia.....0.4[illegible]

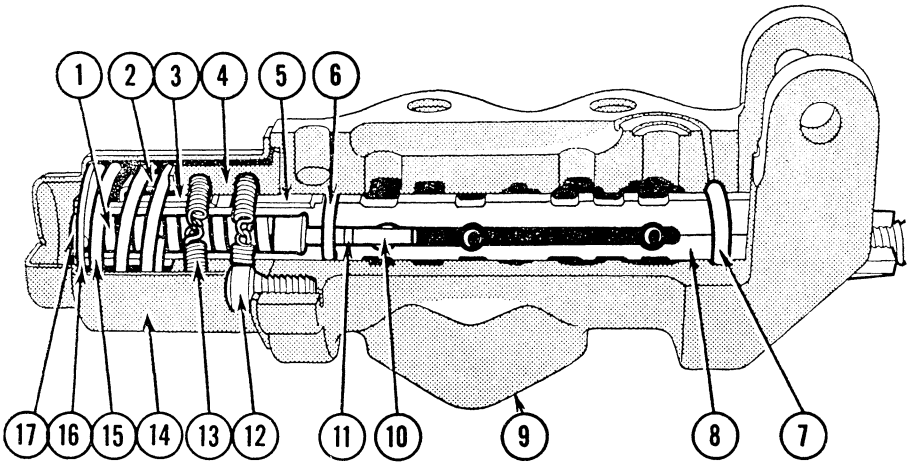


*Fig. MH34—Cut-away view of the Pony hydraulic lift control valve.*

1. Spring
2. Outer spring retainer
3. Outer spool sleeve
4. Inner spring retainer
5. Inner spool sleeve
6. Packing ring
7. Body packing
8. Spool
9. Body
10. Valve
11. Valve packing
12. Cover screws
13. Spring
14. Cover
15. Spring
16. Washer
17. Spring guide

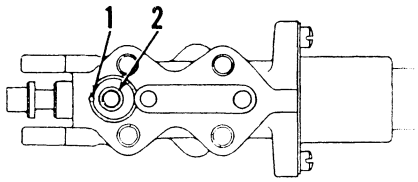


*Fig. MH35—Top view of Massey-Harris Pony control valve with hydraulic lines pad removed.*

1. Relief port
2. "O" ring gasket

https://truckmanualshub.com/



Reassemble and reinstall pump, reservoir and fan assembly (as a unit) by reversing the disassembly and removal procedure, making certain that the two "O" ring gaskets are properly located between the parting surfaces of the pump and oil reservoir. When reinstalling the hydraulic lines pad to the oil reservoir, make certain that the two "O" ring gaskets are properly located and tighten the two nuts to a torque of 20-25 foot pounds. Before replacing hood, fill reservoir up to baffle; start engine and operate power lift several times; then fill reservoir up to baffle again.

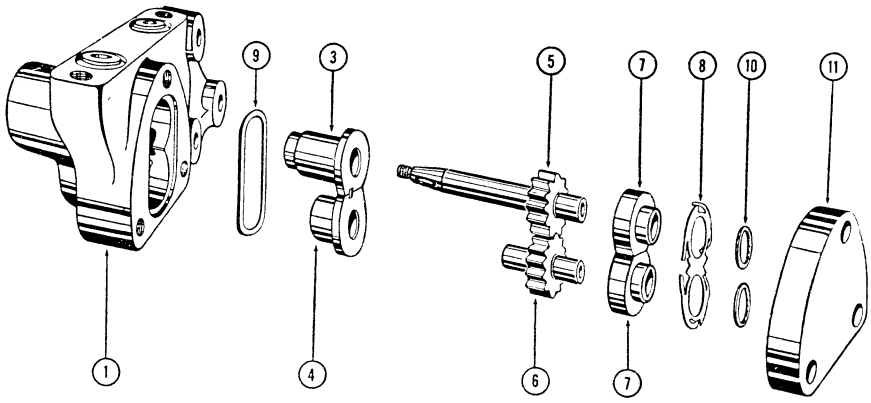


***Fig. MH36—Exploded view of Pony hydraulic lift pump.***

1. Pump body
3. Body drive gear bearing
4. Body driven gear bearing
5. Drive gear
6. Driven gear
7. Cover bearing
8. Spring
9. Seal ring
10. Seal ring
11. Cover