https://truckmanualshub.com/

Operation & Maintenance Manual

VEAM430100

WA500-6H

WHEEL LOADER

SERIAL NUMBERS H60051 and up

WARNING

Unsafe use of this machine may cause serious injury or death. Operators and maintenance personnel must read this manual before operating or maintaining this machine. This manual should be kept near the machine for reference and periodically reviewed by all personnel who will come into contact with it.

NOTICE

Komatsu has had the operating and maintenance instructions translated into all the languages of the member states in the European Union. Should you wish to have a version of the operating instructions in another language, please don't hesitate to ask at your local dealer's.

© 2006 Komatsu Hanomag GmbH
All Rights Reserved
Printed in Europ 06-2006

KOMATSU

Downloaded from www.Manualslib.com manuals search engine

https://truckmanualshub.com/

Downloaded from www.Manualslib.com manuals search engine

https://truckmanualshub.com/

1. Foreword

Downloaded from www.Manualslib.com manuals search engine

https://truckmanualshub.com/

1.1 Foreword

This manual provides rules and guidelines which will help you use this machine safely and effectively. The precautions in this manual must be followed at all times when performing operation and maintenance. Most accidents are caused by the failure to follow fundamental safety rules for the operation and maintenance of machines. Accidents can be prevented by knowing beforehand conditions that may cause a hazard when performing operation and maintenance.

WARNING

- Operators and maintenance personnel must always do as follows before beginning operation or maintenance.
- Always be sure to read and understand this manual thoroughly before performing operation and maintenance.
- Read the safety messages given in this manual and the safety labels affixed to the machine thoroughly and be sure that you understand them fully.
- Keep this manual at the storage location for the Operation and Maintenance Manual given below, and have all personnel read it periodically.
- If this manual has been lost or has become dirty and cannot be read, request a replacement manual immediately from KOMATSU or your KOMATSU distributor.
- If you sell the machine, be sure to give this manual to the new owners together with the machine.
- KOMATSU delivers machines that comply with all applicable regulations and standards of the country to which it has been shipped. If this machine has been purchased in another country or purchased from someone in another country, it may lack certain safety devices and specifications that are necessary for use in your country. If there is any question about whether your product complies with the applicable standards and regulations of your country, consult KOMATSU or your KOMATSU distributor before operating the machine.

Storage location for the Operation and Maintenance Manual:
Pocket (1) at rear of operator's seat

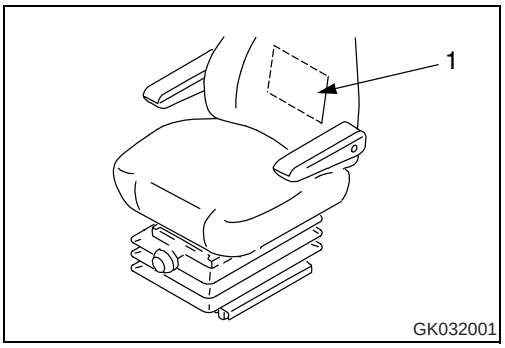

Downloaded from www.Manualslib.com manuals search engine

https://truckmanualshub.com/

1.1.1 EU Directives

Machines supplied by us fulfil the Directive for Machinery 89/392/EEC and all supplements. If the machine is being used in another country, it is possible that certain safety regulations and specifications may not be fulfilled for use in that country. For example, priority vehicle warning lamps may be used in some countries, but are forbidden in others.

Please contact our dealer before using the machine if you have any questions regarding the fulfilment of standards and regulations in a specific country.

Notes on subsequent installation of electrical and electronic equipment and components

Electrical and electronic equipment and/or components which have been installed subsequently, emit electromagnetic radiation which can influence the function of the electronic components and sections of the machine. This can have an influence on the safety of the machine and endanger persons. For this reason, please ensure that the following safety instructions are observed.

If you are installing electrical or electronic equipment and/or components in the machine and connect them to the vehicle electrical system, you must check at own responsibility that the installations do not cause any disturbance to the vehicle's electronic system or other components. Above all, you must ensure that any subsequently installed electrical and electronic components comply with the EMV Directive 89/336/EEC in its current edition and bear the CE mark.

The following requirements also have to be met for subsequent installation of mobile communication systems (e.g. radio, telephone):

- Only equipment approved by national legislation (e.g. BZT approval for Germany) may be used
- The unit must be fixed in position
- Portable or mobile units may only be used inside the vehicles if they are connected to a fixed outside antenna
- The transmitter unit must be spatially separated from the vehicle's electronic system
- Make sure when installing the antenna that this is installed correctly with good earth connection between antenna and vehicle mass

Also observe KOMATSU and manufacturer's installation instructions for wiring, installation and maximum permitted power consumption.

Downloaded from www.Manualslib.com manuals search engine

https://truckmanualshub.com/

1.2 Safety information

To enable you to use this machine safely, safety precautions and labels are given in this manual and affixed to the machine to give explanations of situations involving potential hazards and of the methods of avoiding such situations.

1.2.1 Signal words

The following signal words are used to inform you that there is a potential hazardous situation that may lead to personal injury or damage.

In this manual and on machine labels, the following signal words are used to express the potential level of hazard.

DANGER

Indicates an imminently hazardous situation which, if not avoided, will result in death or serious injury.

WARNING

Indicates a potentially hazardous situation which, if not avoided, could result in death or serious injury.

CAUTION

Indicates a potentially hazardous situation which, if not avoided, may result in minor or moderate injury. This word is used also to alert against unsafe practices that may cause property damage.

Example of safety message using signal word

WARNING

When standing up from the operator's seat, always place the work equipment lock lever in the LOCK position.
If you accidentally touch the control levers when they are not locked, this may cause a serious injury or death.

Downloaded from www.Manualslib.com manuals search engine

https://truckmanualshub.com/

Other signal words

In addition to the above, the following signal words are used to indicate precautions that should be followed to protect the machine or to give information that is useful to know.

NOTE
This word is used for precautions that must be taken to avoid actions which could shorten the life of the machine.

REMARK
This word is used for information that is useful to know.

1.2.2 Safety labels

Safety labels are affixed to the machine to inform the operator or maintenance worker on the spot when carrying out operation or maintenance of the machine that may involve hazard.

For details of safety labels, see "Safety labels (2-2)".

Safety labels using pictogram

Safety pictograms use a picture to express a level of hazardous condition equivalent to the signal word. These safety pictograms use pictures in order to let the operator or maintenance worker understand the level and type of hazardous condition at all times. Safety pictograms show the type of hazardous condition at the top or left side, and the method of avoiding the hazardous condition at the bottom or right side. In addition, the type of hazardous condition is displayed inside a triangle and the method of avoiding the hazardous condition is shown inside a circle.

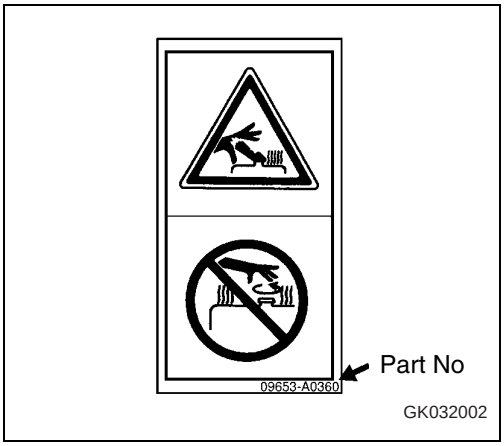

KOMATSU cannot predict every circumstance that might involve a potential hazard in operation and maintenance. Therefore, the safety messages in this manual and on the machine may not include all possible safety precautions.
If any procedures or actions not specifically recommended or allowed in this manual are used, it is your responsibility to take the necessary steps to ensure safety.
In no event should you engage in prohibited uses or actions described in this manual.

The explanations, values, and illustrations in this manual were prepared based on the latest information available at that time. Continuing improvements in the design of this machine can lead to changes in detail which may not be reflected in this manual. Consult KOMATSU or your KOMATSU distributor for the latest available information of your machine or for questions regarding information in this manual.

Downloaded from www.Manualslib.com manuals search engine

https://truckmanualshub.com/

1.3 Introduction

This loader is a machine with independent transmission, moving on chains or wheels. Driving in forward direction, the loader can load or dig material using its attachments intended for loading operations (i.e. bucket).

This KOMATSU machine is designed to be used mainly for the following work:

- Digging work
- Smoothing
- Pushing work
- Loading work

For details of the operating procedure, see "Work possible using wheel loader (3-128)".

1.3.1 Intended use

If you use the machine for any other purpose than specified above, we will not accept any responsibility for safety. All considerations concerning safety will then be up to the owner or the operating and maintenance personnel. In any case, neither you nor any other person are/is authorised to perform work and functions explicitly prohibited in these operating instructions.

The transport of persons in the work equipment is strictly forbidden!

For details of the operating procedure, see "Work possible using wheel loader (3-128)".

Downloaded from www.Manualslib.com manuals search engine

https://truckmanualshub.com/

1.3.2 Directions of machine

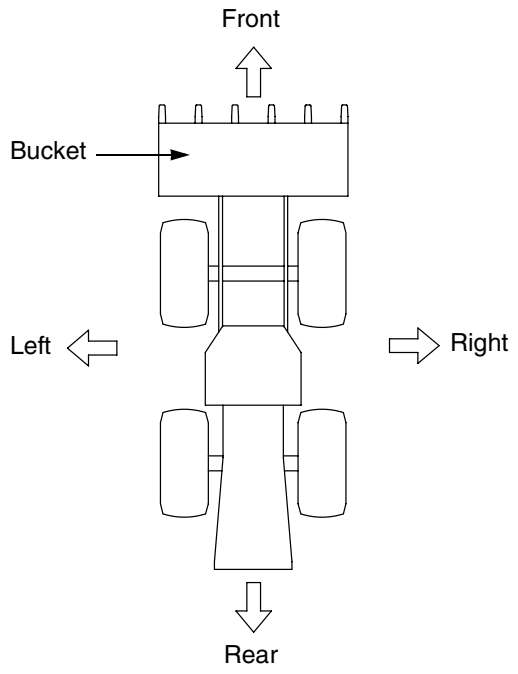

In this manual, the directions of the machine (front, rear, left, right) are determined according to the view from the operator's seat in the direction of travel (front) of the machine.

Downloaded from www.Manualslib.com manuals search engine

https://truckmanualshub.com/

1.3.3 Visibility from operator's seat

The visibility standards (ISO 5006) for this machine require a view shown in the diagram on the right side.

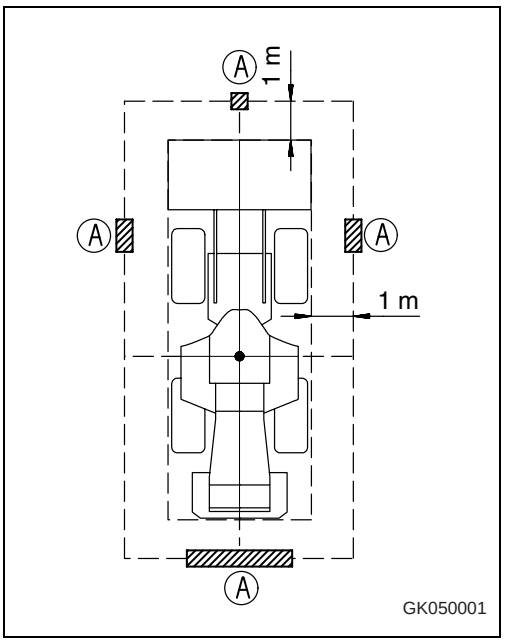

Visibility in immediate area

The visibility of this machine in the area 1 m from the outside surface of the machine at a height of 1.5 m is shown in the diagram on the right side. The hatched area (A) shows the area where the view is blocked by part of the machine when mirrors or other aids to visibility are installed as standard. Please be fully aware that there are places that cannot be seen when operating the machine.

12-M Radius visibility

The visibility at a radius of 12 m from the machine is as shown in the diagram below. The hatched areas (B) show the areas where the view is blocked when mirrors or other aids to visibility are installed as standard. Please be fully aware that there are places that cannot be seen when operating the machine.

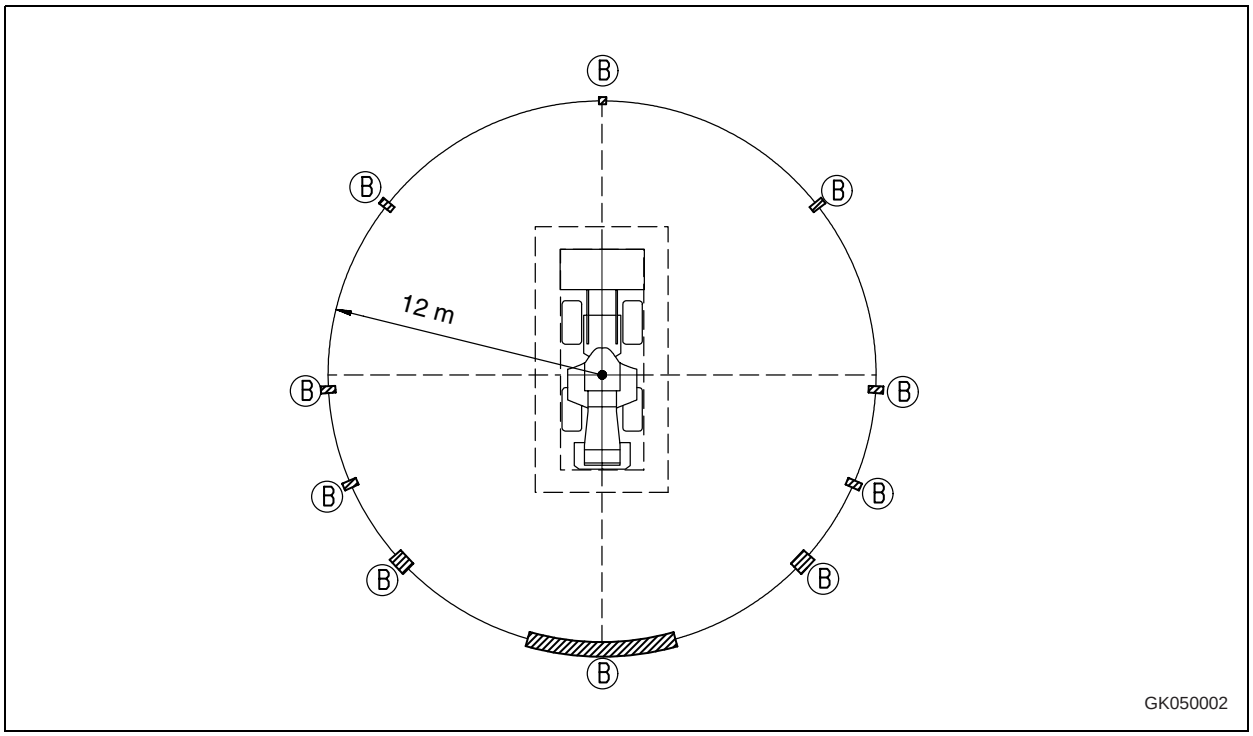

Downloaded from www.Manualslib.com manuals search engine

https://truckmanualshub.com/

1.4 Necessary information

When requesting service or ordering replacement parts, please inform your KOMATSU distributor of the following items.

1.4.1 Product Identification Number (PIN)/Machine serial no. plate and position

On the center right of the front frame.

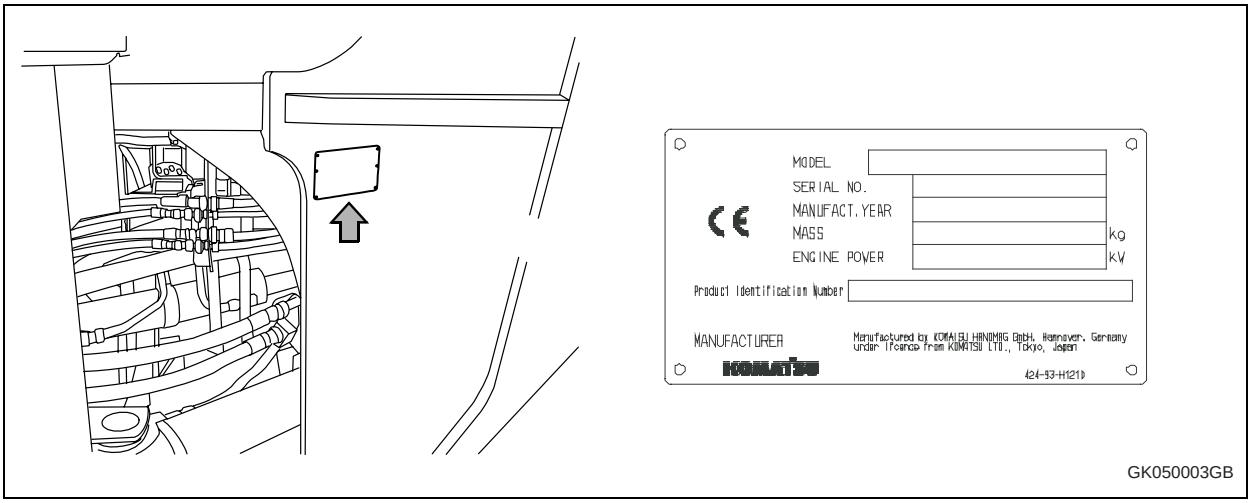

1.4.2 Engine serial no. plate and position

It is on the air conditioner compressor bracket on the right side of the machine.

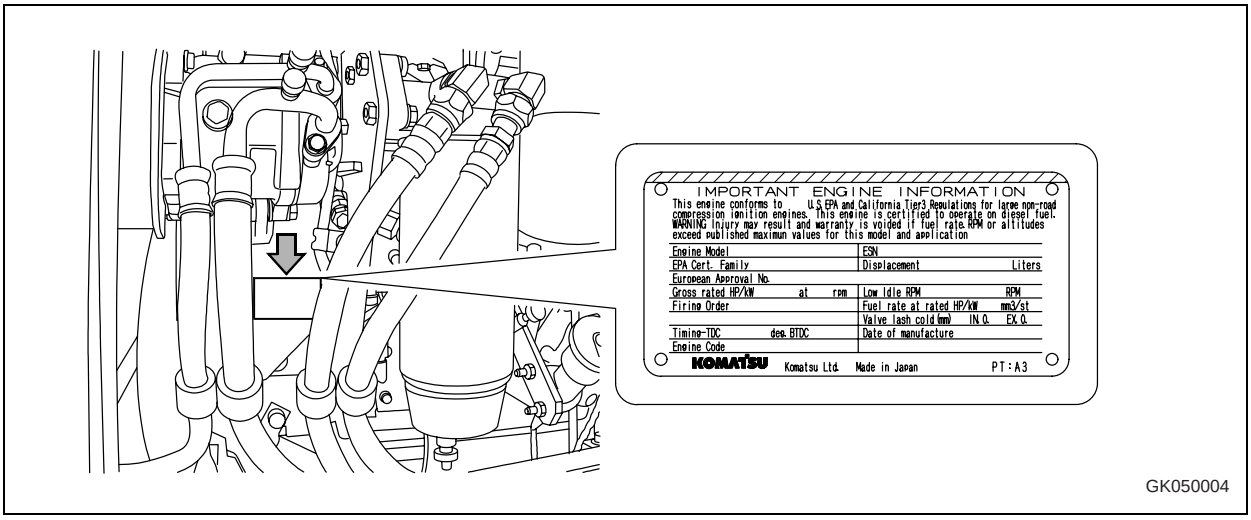

EPA: Environmental Protection Agency, U.S.A.

Downloaded from www.Manualslib.com manuals search engine

https://truckmanualshub.com/

1.4.3 ROPS/FOPS-Cab serial no. plate

This plate is located on the right inside cab on the rear beam.

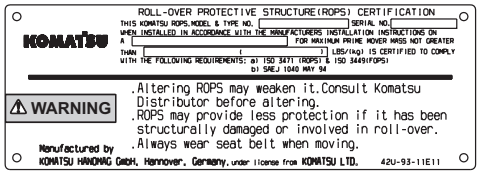

GK032006

1.4.4 Axle serial no. plate

This plate is located on the right of front axle and on the left of rear axle.

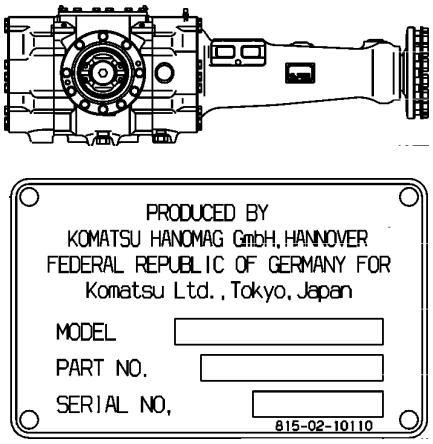

GK032007

1.4.5 Transmission serial no. plate

This plate is located in travel direction front, above the transmission output.

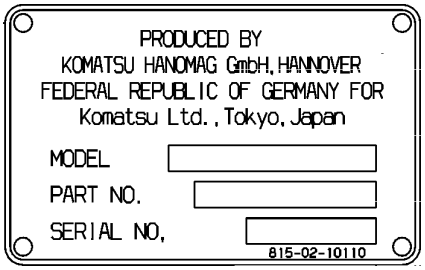

GK032008

Downloaded from www.Manualslib.com manuals search engine

https://truckmanualshub.com/

1.4.6 Seat operator serial no. plate

This plate is located in front of seat, covered by the bellows.

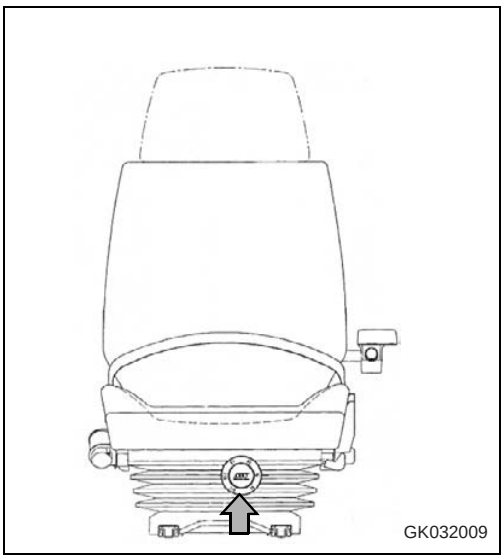

1.4.7 Position of service meter

The service meter is displayed on the character display at the bottom center of the machine monitor.

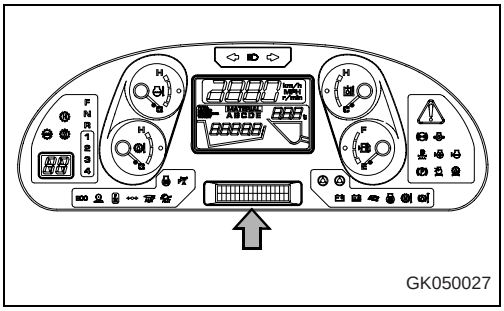

1.4.8 Table to enter serial no. and distributor

Machine serial No.	
Engine serial No.	
Product identification number (PIN)	
Distributor name Address	
Service Personnel Phone/Fax	

Downloaded from www.Manualslib.com manuals search engine

https://truckmanualshub.com/

1.5 Contents

1. Foreword 1-1

1.1 Foreword 1-2
1.1.1 EU Directives 1-3

1.2 Safety information 1-4
1.2.1 **Signal words** **1-4**
1.2.2 **Safety labels** **1-5**

1.3 Introduction 1-6
1.3.1 Intended use 1-6
1.3.2 Directions of machine 1-7
1.3.3 Visibility from operator's seat 1-8

1.4 Necessary information 1-9
1.4.1 Product Identification Number (PIN)/Machine serial no. plate and position 1-9
1.4.2 Engine serial no. plate and position 1-9
1.4.3 ROPS/FOPS-Cab serial no. plate 1-10
1.4.4 Axle serial no. plate 1-10
1.4.5 Transmission serial no. plate 1-10
1.4.6 Seat operator serial no. plate 1-11
1.4.7 Position of service meter 1-11
1.4.8 Table to enter serial no. and distributor 1-11

1.5 Contents 1-12

1.6 Dimensions, weights and operating data 1-19
1.6.1 WA500-6: Dimensions, weights and operating data 1-19

1.7 CE-Conforming equipment 1-20
1.7.1 CE-Conforming equipment 1-20
1.7.2 Manufacturer-supplied CE-Conforming equipment, according to document 419-93-H1250 1-21

2. Safety 2-1

2.1 Safety labels 2-2
2.1.1 Location of safety labels 2-2
2.1.2 Presentation of safety labels 2-3

2.2 General precautions 2-6

2.3 Precautions for operation 2-17
2.3.1 Starting engine 2-17
2.3.2 Operation 2-19
2.3.3 Transportation 2-26
2.3.4 Battery 2-28
2.3.5 Towing 2-30

2.4 Precautions for maintenance 2-31

2.5 Precautions with tires 2-40

Downloaded from www.Manualslib.com manuals search engine

https://truckmanualshub.com/

3. Operation 3-1

3.1 General view 3-2
3.1.1 General view of machine 3-2
3.1.2 General view of controls and gauges 3-3

3.2 Explanation of components 3-8
3.2.1 Machine monitor 3-8
Types of warning 3-9
Central warning lamp 3-10
Character display portion 3-11
Emergency stop item 3-17
Caution items 3-20
Inspection and maintenance item 3-24
Pilot display portion 3-28
Meter display portion 3-34
Other functions of machine monitor 3-37
3.2.2 Switches 3-46
3.2.3 Control levers, pedals 3-67
3.2.4 Steering tilt lock lever 3-74
3.2.5 Cap with lock 3-75
3.2.6 Safety bar 3-76
3.2.7 Towing pin 3-77
3.2.8 Backup alarm 3-77
3.2.9 Opening cab, window door 3-78
Open lock cancel knob for right cab door 3-78
Cab left door open lock 3-79
Cab left door open knob 3-79
Open lock cancel knob for left cab window 3-80
3.2.10 Handling cab wiper 3-80
Preventing damage to wiper arm bracket 3-80
3.2.11 Dust indicator 3-81
3.2.12 Fuse 3-81
Fuse capacity and name of circuit 3-82
3.2.13 Slow blow fuse 3-83
3.2.14 Power outlet 3-83
3.2.15 Air conditioner 3-84
General locations and function of control panel 3-84
Method of operation 3-86
Cool box 3-88
Precautions when using 3-88
Inspection and maintenance 3-89

3.3 Operation 3-90
3.3.1 Check before starting engine, adjust 3-90
Walk-around check 3-90
Check before starting 3-94
Adjustment 3-103
Safety belt 3-104
Operations and checks before starting engine 3-106

Downloaded from www.Manualslib.com manuals search engine

https://truckmanualshub.com/

3.3.2 Starting engine 3-108
Automatic warming-up operation 3-109
3.3.3 Operations and checks after starting engine 3-110
Breaking-in the machine 3-110
Normal operation 3-111
3.3.4 Stopping engine 3-112
3.3.5 Check after stopping engine 3-112
3.3.6 Moving the machine (directional, speed), stopping the machine 3-113
Preparations for moving the machine 3-113
Changing gear speed 3-116
Changing direction 3-117
Automatic shift 3-118
Stopping the machine 3-119
Transmission cut-off function 3-120
3.3.7 Turning 3-122
3.3.8 Operation of work equipment 3-123
Lift arm operation 3-124
Bucket operation 3-124
3.3.9 Semi auto digging operations 3-125
3.3.10 Remote positioner 3-126
Operating remote bucket positioner 3-126
Operating remote boom positioner 3-126
3.3.11 Work possible using wheel loader 3-128
Recommended combination of switches for operation 3-128
Digging operations 3-129
Leveling operation 3-132
Pushing operation 3-132
Load and carry operations 3-133
Loading operations 3-133
Precautions when handling blasted rock 3-135
3.3.12 Precautions for operation 3-147
Permissible water depth 3-147
If wheel brake does not work 3-147
Precautions when driving up or down slopes 3-147
3.3.13 Removal and installation of the bucket 3-150
Removing the bucket 3-150
Installing the bucket 3-151
3.3.14 Parking machine 3-154
3.3.15 Checks after completion of operation 3-155
3.3.16 Locking 3-156
3.3.17 Handling the tires 3-157
Precautions when handling tires 3-157
Tire pressure 3-157
Precautions for using load and carry method 3-158

3.4 Transportation 3-159
3.4.1 Transportation procedure 3-159
3.4.2 Loading, unloading work with trailers 3-159
Loading 3-160
Securing machine 3-160
Unloading 3-162

Downloaded from www.Manualslib.com manuals search engine

https://truckmanualshub.com/

3.4.3 Lifting machine . . . 3-163
Location of lifting position mark . . . 3-164
Lifting procedure. . . . 3-165

3.5 Cold weather operation . . . 3-166
3.5.1 Precautions for low temperature . . . 3-166
Fuel and lubricants . . . 3-166
Coolant . . . 3-166
Battery . . . 3-167
3.5.2 Precautions after completion of work . . . 3-168
3.5.3 After cold weather . . . 3-168
3.5.4 Warming-up operation for steering hydraulic circuit in cold weather . . . 3-169

3.6 Long-term storage . . . 3-170
3.6.1 Before storage . . . 3-170
3.6.2 During storage . . . 3-170
3.6.3 After storage . . . 3-171

3.7 Troubleshooting . . . 3-172
3.7.1 When machine runs out of fuel. . . . 3-172
3.7.2 Towing the machine . . . 3-174
When engine can be used . . . 3-175
When engine cannot be used. . . . 3-176
Releasing parking brake. . . . 3-176
Emergency travel operation . . . 3-178
3.7.3 If battery is discharged . . . 3-179
Removal and installation of battery . . . 3-179
Precautions for charging battery . . . 3-180
Starting engine with booster cable . . . 3-181
3.7.4 Method for lowering work equipment when engine has stopped . . . 3-183
3.7.5 Other trouble . . . 3-184
Electrical system . . . 3-184
Chassis. . . . 3-185
Engine . . . 3-187

4. Maintenance . . . 4-1

4.1 Guides to maintenance . . . 4-2

4.2 Outlines of service . . . 4-5
4.2.1 Handling oil, fuel, coolant, grease and carrying out KOWA (KOMATSU Oil Wear Analysis) . . . 4-5
Oil . . . 4-5
Fuel . . . 4-6
Coolant and water for dilution. . . . 4-7
Grease . . . 4-8
Carrying out KOWA (KOMATSU Oil Wear Analysis) . . . 4-8
Storing oil and fuel . . . 4-9
Filters . . . 4-10
4.2.2 Outline of electric system . . . 4-10

Downloaded from www.Manualslib.com manuals search engine

https://truckmanualshub.com/

4.3 Wear parts 4-11
4.3.1 Wear parts list 4-11

4.4 Fuel, coolant and lubricants 4-13
4.4.1 Lubrication chart 4-14
4.4.2 Use of fuel, coolant and lubricants according to ambient temperature 4-15
4.4.3 Recommended brands, recommended quality for products other than KOMATSU genuine oil 4-18

4.5 Standard tightening torques for bolts and nuts 4-19
4.5.1 Torque list 4-19

4.6 Periodic replacement of safety critical parts 4-21

4.7 Maintenance schedule chart 4-23
4.7.1 Maintenance schedule chart 4-23

4.8 Replace injector assembly 4-26

4.9 Service procedure 4-27
4.9.1 Initial 50 hours service (only after the first 50 hours) 4-27
Check for loose wheel hub bolts, tighten 4-27
4.9.2 Initial 250 hours service (only after the first 250 hours) 4-28
4.9.3 When required 4-28
Check, clean, or replace air cleaner element 4-28
Clean inside of cooling system 4-31
Check transmission oil level, add oil 4-36
Check axle oil level, add oil 4-38
Clean axle case breather 4-39
Clean air conditioner condenser 4-40
Check window washing fluid level, add fluid 4-40
Clean radiator fins with compressed air 4-40
Replace bucket teeth 4-42
Replace bucket tooth with segment edge 4-43
Check air conditioner 4-44
Replace slow blow fuse 4-45
Bleeding air from hydraulic tank 4-47
Checking function of accumulator 4-49
Selection and inspection of tires 4-50
4.9.4 Check before starting 4-52
Check before starting 4-52
4.9.5 Every 50 hours service 4-52
Drain water, sediment from fuel tank 4-52
4.9.6 Every 100 hours service 4-53
Lubricate rear axle pivot pin 4-53
Check oil level in hydraulic tank, add oil 4-53
Clean element in air conditioner fresh air filter 4-54
4.9.7 Every 250 hours service 4-55
Check battery electrolyte level 4-55
Check parking brake 4-57
Check alternator belt tension, adjust 4-58
Check air conditioner compressor belt tension, adjust 4-59

Downloaded from www.Manualslib.com manuals search engine

https://truckmanualshub.com/

Check for loose wheel hub bolts, tighten 4-59
Clean element in air conditioner recirculation filter. 4-60
Checking function of accumulator 4-60
Lubricating 4-61
4.9.8 Every 500 hours service. 4-64
Change oil in engine oil pan, replace engine oil filter cartridge 4-64
Replace fuel pre-filter cartridge 4-65
4.9.9 Every 1000 hours service. 4-68
Change oil in transmission case, clean strainer. 4-68
Replace transmission oil filter element. 4-70
Replace fuel filter cartridge. 4-71
Clean transmission case breather 4-73
Wash fuel tank breather 4-74
Lubricating 4-74
Replace corrosion resistor cartridge. 4-75
Check of engine air intake piping clamps for looseness 4-75
4.9.10 Every 2000 hours service. 4-76
Change oil in hydraulic tank, replace hydraulic filter element 4-76
Clean hydraulic tank strainer 4-78
Replace hydraulic tank breather element. 4-79
Change axle oil. 4-80
Replace element in air conditioner recirculation air filter, fresh air filter. 4-81
Clean PPC circuit strainer 4-82
Check alternator. 4-83
Check engine valve clearance, adjust 4-83
Check brake disc wear. 4-83
Check function of accumulator. 4-84
4.9.11 Every 4000 hours service. 4-85
Check water pump 4-85
Check starting motor 4-85
Lubricating 4-85
Checking for loose engine high-pressure piping clamps, hardening of rubber 4-87
Checking for missing fuel spray prevention cap, hardening of rubber 4-88
4.9.12 Every 8000 hours service. 4-89
Replace high-pressure piping clamp 4-89
Replace fuel spray prevention cap. 4-89
Overhaul starting motor and alternator. 4-89
4.9.13 Every 12000 hours service. 4-89
Replace injector assembly 4-89

5. Technical Data 5-1

5.1 Technical data 5-2

5.2 Noise emission levels 5-4

5.3 Vibration level 5-4

5.4 Limit values for slopes 5-7

Downloaded from www.Manualslib.com manuals search engine

https://truckmanualshub.com/

6. Attachments, Options 6-1

6.1 Handling load meter 6-2
6.1.1 Outline of load meter 6-2
6.1.2 Principle of load meter measurement 6-4
6.1.3 Points to remember to ensure high accuracy 6-5
Calibration 6-5
When measuring 6-7
6.1.4 Using load meter 6-8
Setting addition mode 6-8
Setting subtraction mode 6-9
Total load data display 6-12
Clearing total load 6-13
Stopping load meter calculation 6-14
Selecting load material category display 6-15
Calibration with empty bucket 6-16
Calibration with loaded bucket 6-18
Resetting calibration 6-20
Method of using addition mode 6-21
Method of using subtraction mode 6-24
Printout from load meter 6-28
Selection of printout mode 6-29

6.2 Joystick steering system 6-32
6.2.1 Components 6-32
6.2.2 Structure and function 6-36
Operation using joystick lever and operation using steering wheel 6-37
Getting in or out of operator's cab 6-38
Adjustment of joystick console 6-39
Seat adjustment 6-39
6.2.3 Precautions for steering with joystick 6-40
6.2.4 Operation method of joystick steering system 6-41

6.3 Handling machines equipped with KOMTRAX 6-44
6.3.1 Basic precautions 6-45

6.4 Central lubrication system 6-46
6.4.1 Operating the central lubrication system 6-46
6.4.2 Display and control unit 6-46
LED-display 6-47
Pushbuttons 6-47
6.4.3 Changing the lubrication interval times 6-48

7. Index 7-1

7.1 Index 7-2

8. Notes 8-1

Downloaded from www.Manualslib.com manuals search engine

https://truckmanualshub.com/

1.6 Dimensions, weights and operating data

1.6.1 WA500-6: Dimensions, weights and operating data

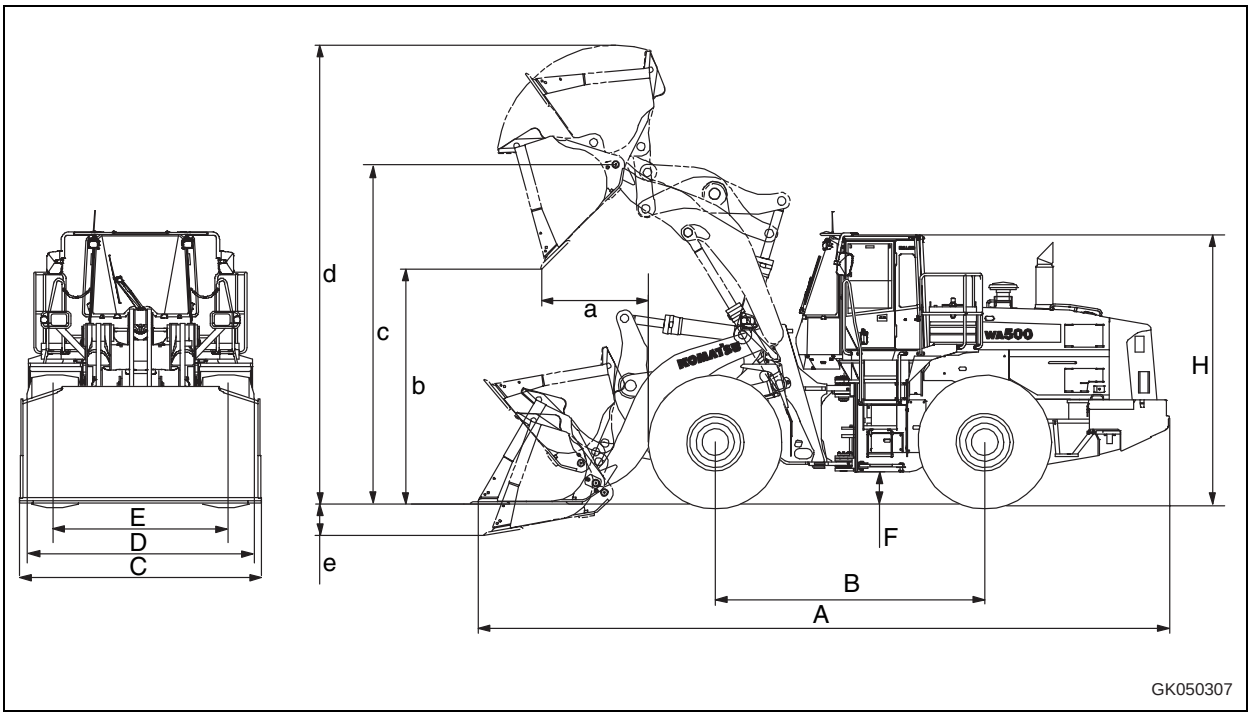

Measurements, operating data				
	Bucket capacity to ISO 7546	m³	5.3	without teeth and without BOC
	Material density	t/m³	1.8	
	Bucket weight without teeth	kg	2,676	
	Static tipping load, straight	kg	24,000	
	Static tipping load, 40° angle	kg	20,930	
	Breakout force, hydraulic	kN	286.8	
	Lifting capacity, hydraulic, on ground	kN	348.7	
	Operating weight *)	kg	31,700	
a	Reach at 45° discharge	mm	1,350	
b	Dumping height at 45° discharge	mm	3,460	
c	Lift height, hinge pin	mm	4,770	
d	Height to upper edge of bucket	mm	6,510	
e	Digging depth	mm	122	
A	Overall length, bucket on ground	mm	9,537	
B	Wheel base	mm	3,780	
C	Bucket width	mm	3,430	These values refer to machines with 29.5 R25 L3
D	Width over tyres	mm	3,150	
E	Gauge	mm	2,400	
F	Ground clearance	mm	460	*) Machine without additional counterweight
H	Overall height	mm	3,804	

Downloaded from www.Manualslib.com manuals search engine

https://truckmanualshub.com/

1.7 CE-Conforming equipment

1.7.1 CE-Conforming equipment

CE-Conforming equipment						
	1	2	3	4	5	–
	Type	Part No.	Volume m³	Load Capacity kg	Hydraulic pressure bar	Weight kg
Bucket	WA500-6H	425-71-H2800	5.3	9,540	-	2,695
		425-71-H2810	5.3	9,540	-	2,873
		425-71-H2820	5.3	10,080	-	3,012

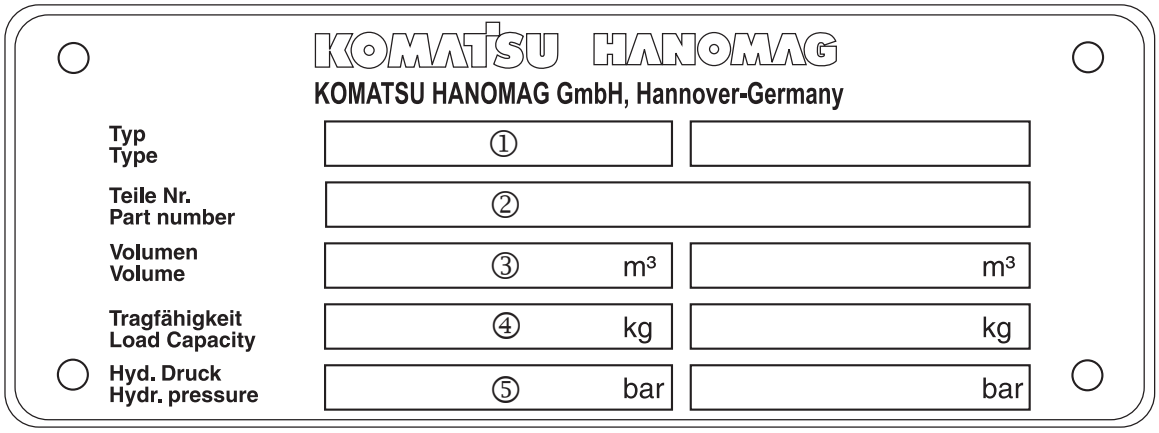

GK032012

Downloaded from www.Manualslib.com manuals search engine

https://truckmanualshub.com/

1.7.2 Manufacturer-supplied CE-Conforming equipment, according to document 419-93-H1250

The responsibility for observing valid regulations in the case of wheel loaders with "interchangeable equipment" (e.g. bucket or fork-lift) which was not supplied from works lies with the customer which was subsequently fitted to the machine.

The directives for CE conformity and road-traffic registration are deemed to have been fulfilled when the manufacturer of the equipment confirms fulfilment of the form 419-93-H1250 alongside.

The certification must be sent to the customer and the wheel loader manufacturer. The CE conformity declaration for a specific wheel loader is only legally valid once this has taken place.

The dimensions X1, X2, Y1 and Y2 must be provided by the customer for approval for use on public roads. (valid in Germany)

The dimension Sh (smallest tyre radius) must be added to the dimension D2.

The figure G (in kg) represents the maximum load (equipment and operating load) which may act upon this point.

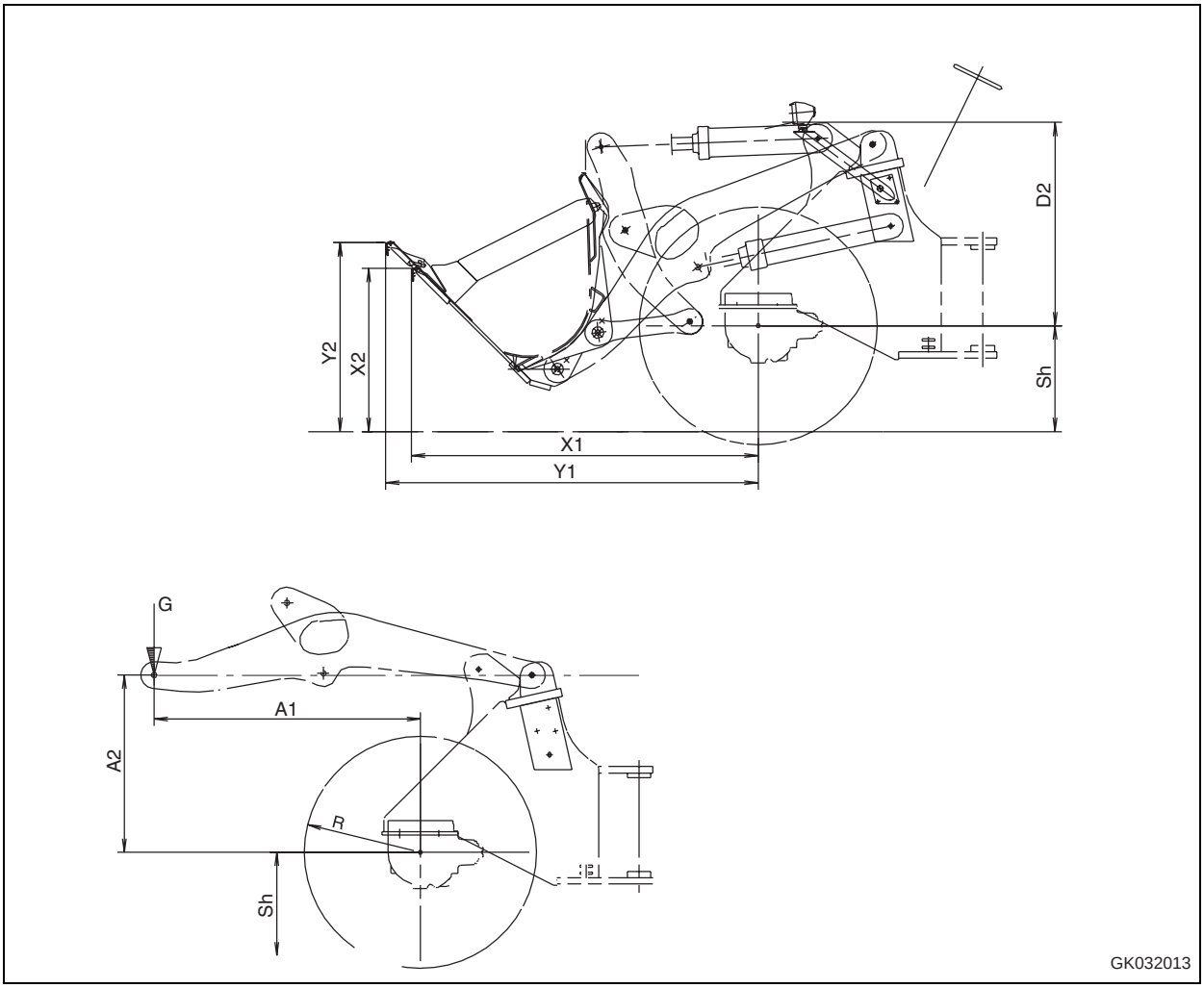

Downloaded from www.Manualslib.com manuals search engine

https://truckmanualshub.com/

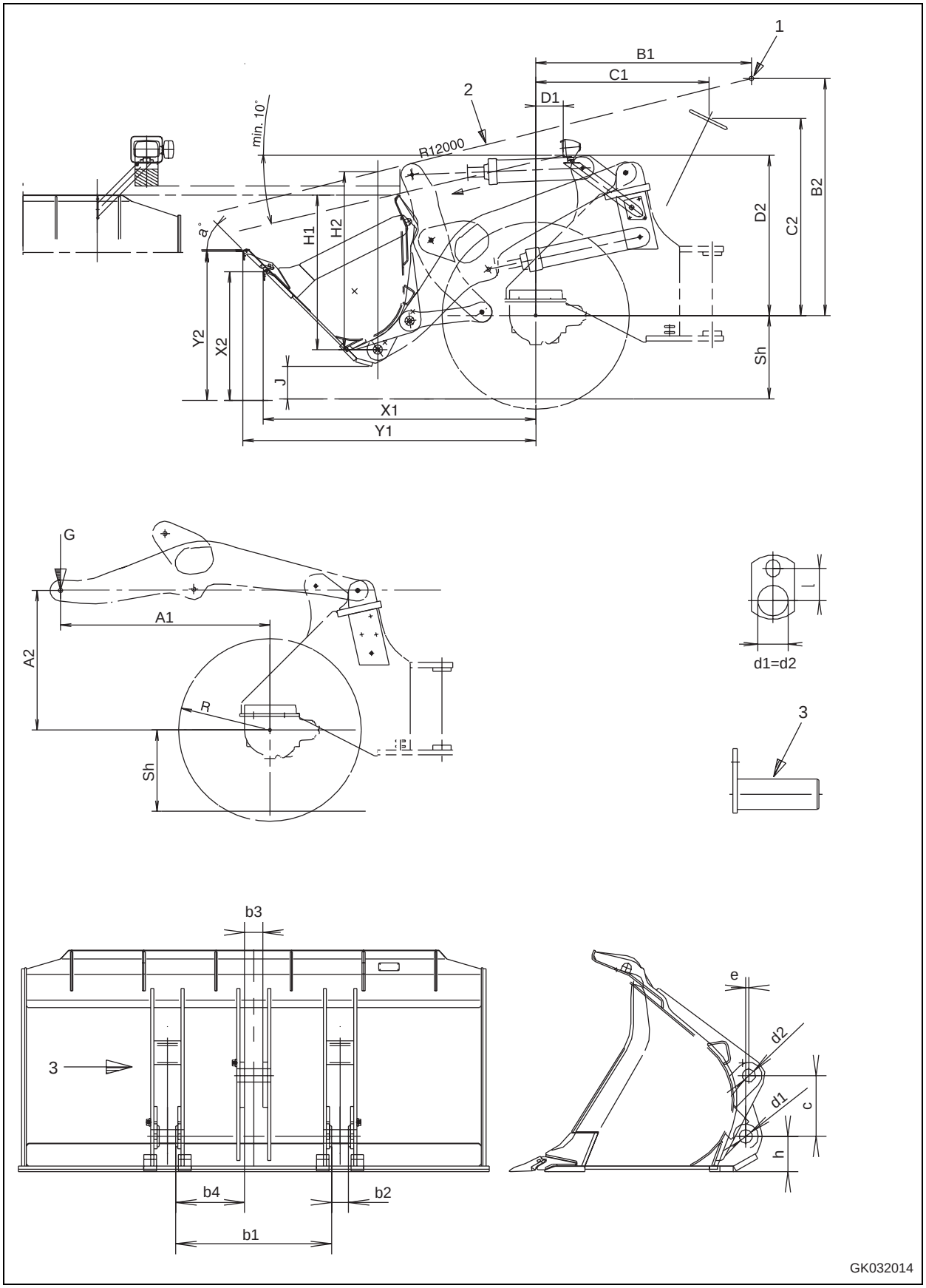

Downloaded from www.Manualslib.com manuals search engine

https://truckmanualshub.com/

Manufacturer- supplied CE-Conforming equipment, according to document 419-93-H1250

A1	Distance: bucket pivoting point - front axle, horizontal
A2	Distance: bucket pivoting point - front axle, vertical
Sh	Distance: road level - front axle
B1	Distance: driver's eye (1) - front axle, horizontal
B2	Distance: driver's eye (1) - front axle, vertical
C1	Distance: centre steering wheel - centre front axle, horizontal
C2	Distance: center steering wheel - centre front axle, vertical
D1	Distance: headlight - centre front axle, horizontal
D2	Distance: headlight - centre front axle, vertical
G	Weight of equipment and working load
H1	Distance: bucket pivoting point - bucket upper edge, vertical (carrying position)
H2	Distance: bucket pivoting point - vision line, vertical (carrying position)
J	Distance: road level - bucket bottom edge (carrying position)
X1	Distance: cutter - front axle, horizontal
X2	Distance: cutter - road level, vertical
Y1	Distance: teeth - front axle, horizontal
Y2	Distance: teeth - road level, vertical
b1	Bucket connection dimension, boom width inside
b2	Bucket connection dimension, boom arm
b3	Bucket connection dimension, tilt rod
b4	Bucket connection dimension, temporary size
c	Bucket connection dimension between d1 and d2, vertical
d1	Bucket connection dimension, bolt (3) for boom
d2	Bucket connection dimension, bolt (3) for tilt rod
e	Bucket connection dimension d1 - d2, horizontally displaced
h	Distance: bucket bottom edge - boom bolt hole
l	Distance: centre of bolt - centre of fastening screw

WA500-6H	419-93-H1250
A1	2,430
A2	1,510
Sh	884
B1	2,081
B2	2,464
C1	1,826
C2	2,064
D1	355
D2	1,617
G	12,391 kg
H1	1,739
H2	1,836
J	270
X1	3,043
X2	1,300
Y1	3,266
Y2	1,517
b1	997
b2	183
b3	183
b4	407
c	437
d1	120
d2	120
e	0
h	295
l	120
1	Driver's eye
2	Vision line
3	Bolts
Tyres	29.5 R25 L3
Bucket	425-71-H2810

Downloaded from www.Manualslib.com manuals search engine

https://truckmanualshub.com/

Downloaded from www.Manualslib.com manuals search engine

https://truckmanualshub.com/

2. Safety

WARNING

Please read and make sure that you fully understand the precautions described in this manual and the safety labels on the machine. When operating or servicing the machine, always follow these precautions strictly.

Downloaded from www.Manualslib.com manuals search engine

https://truckmanualshub.com/

2.1 Safety labels

The following safety labels are used on this machine. Be sure that you fully understand the correct position and content of these safety labels.

To ensure that the content of these safety labels can be read properly, be sure that they are in the correct place and always keep them clean. When cleaning them, use soap and water. Do not use organic solvents or gasoline. These may cause the safety labels to peel off.

If the safety labels are damaged or lost, or cannot be read, replace them with new parts. For details of the part numbers, see this manual or check on the actual part, and order the new part from your KOMATSU distributor.

There are also other labels in addition to the safety labels. Handle these labels in the same way.

2.1.1 Location of safety labels

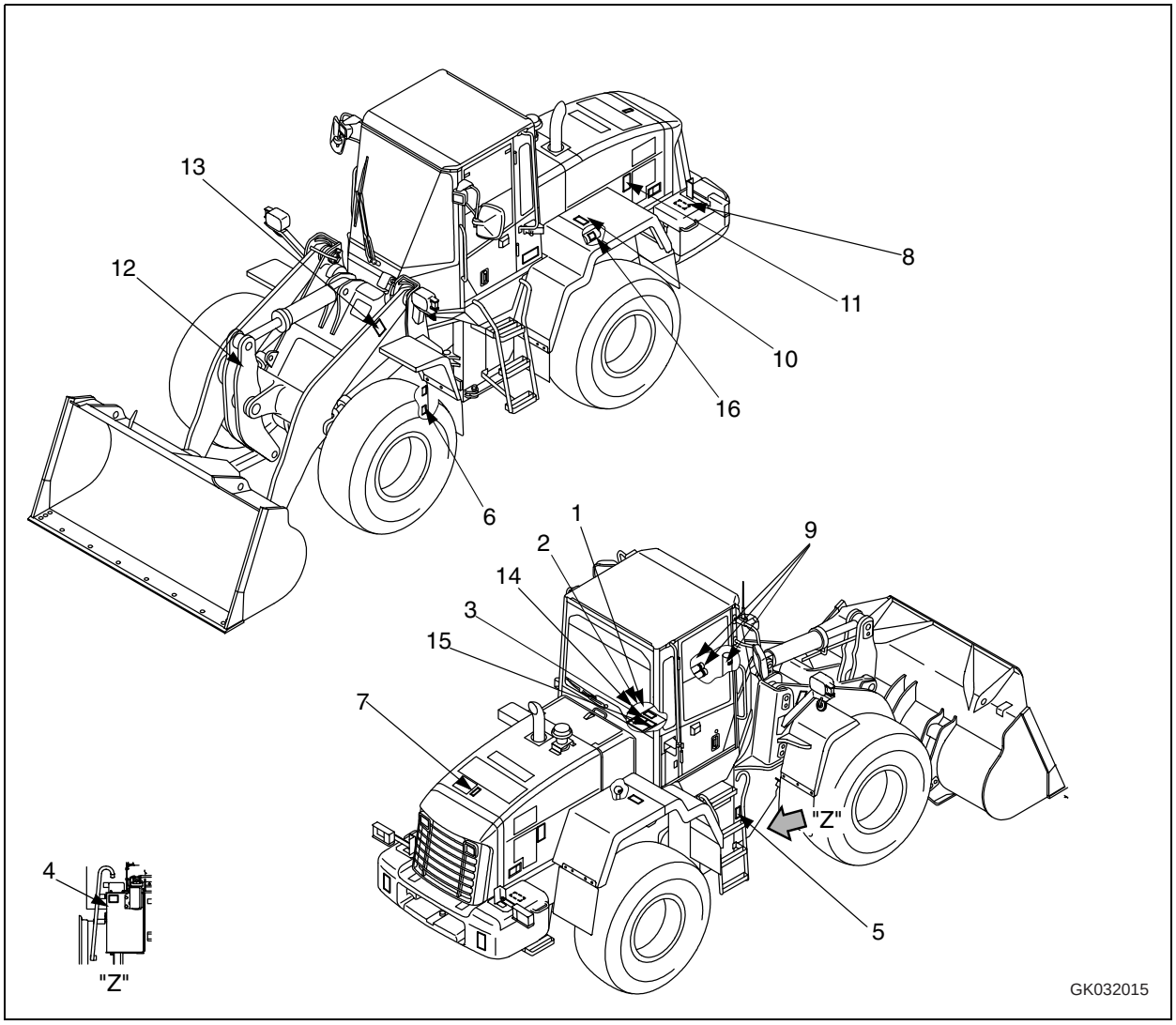

Downloaded from www.Manualslib.com manuals search engine

https://truckmanualshub.com/

2.1.2 Presentation of safety labels

1

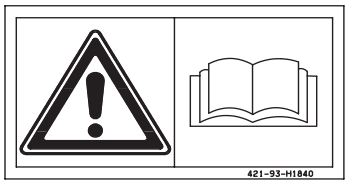

GK050308

2

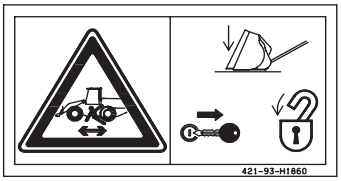

GK050309

3

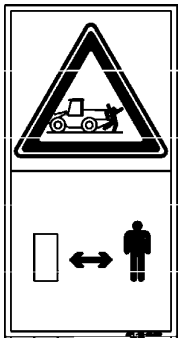

GK032018

4

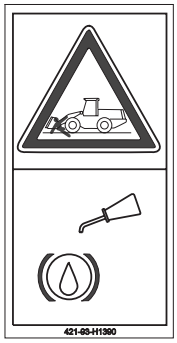

GK032019

5

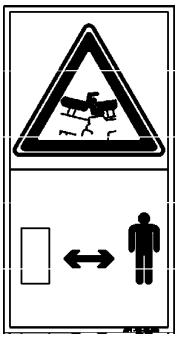

GK032020

6

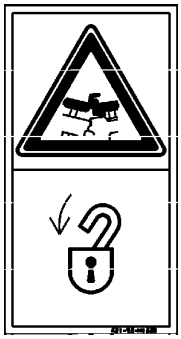

GK032021

7

GK032022

8

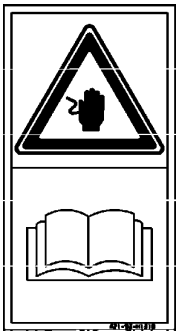

GK032023

9

GK032024

10

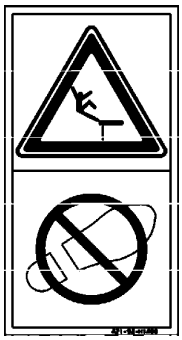

GK032025

11

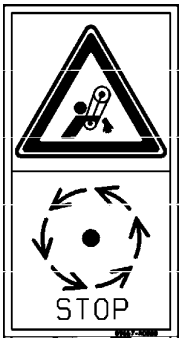

GK032026

12

GK03202

13

GK032028

14

GK032030

15

GK050310

16

GK032029

Downloaded from www.Manualslib.com manuals search engine

https://truckmanualshub.com/

1

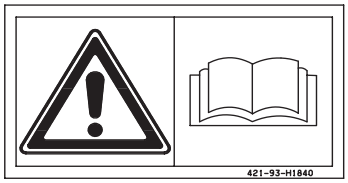

GK050308

2

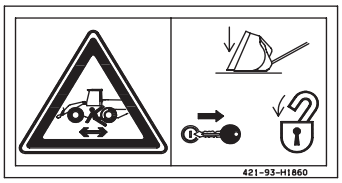

GK050309

3

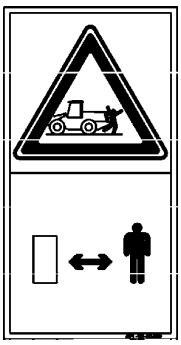

GK032018

4

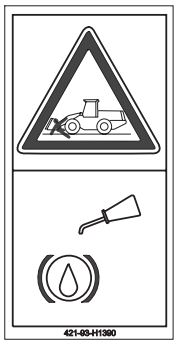

GK032019

5

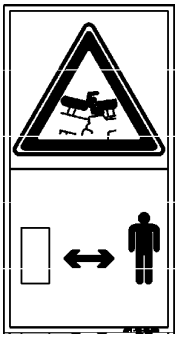

GK032020

6

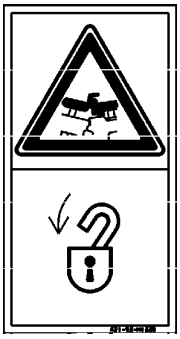

GK032021

7

GK032022

8

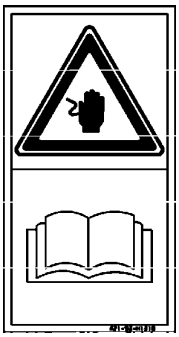

GK032023

9

GK032024

10

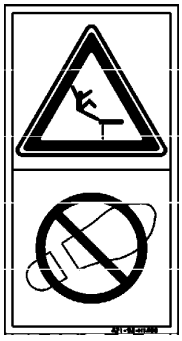

GK032025

11

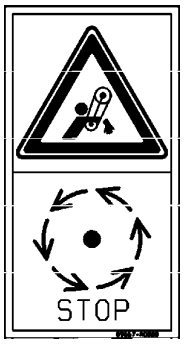

GK032026

12

GK03202

13

GK032028

14

GK032030

15

GK050310

16

GK032029

Downloaded from www.Manualslib.com manuals search engine

https://truckmanualshub.com/

1	Precautions before starting operation, inspection and maintenance (421-93-H1840) WARNING Read the Operator's Manual before startung operation, inspection, maintenance or transportation.
2	Precautions before leaving the machine (421-93-H1860) Sign indicates a hazard of unexpected moving of stopped machine. Lower working device to ground, move work equipment lock lever to lock position and take engine key with you before leaving machine.
3	Precautions when traveling in reverse (421-93-H1360) Sign indicates to prevere severe injury or death Honk to alert people nearby. Be sure no one is on or near machine. Use spotter if view is obstructed.
4	Use KOMATSU oil only (421-93-H1390)
5	Do not enter (421-93-H1320) Sign indicates a crush hazard between the articulating parts of the vehicle. Keep away from the vehicle when it is move.
6	Precautions for safety bar (421-93-H1330) Sign indicates a crush hazard between the articulating parts of vehicle. Lock vehicle with lock bar to avoid movement during maintenance, inspection and transportation.
7	Precautions when coolant is at high temperature (421-93-H1280) Sign indicates a burn hazard from spurting hot water if radiator is uncapped while hot. Allow coolant to cool before removing cap.
8	Precautions when handling battery cable (421-93-H1310) Sign indicates an electric hazard from handling the cable. Read manual for safe and proper handling.
9	High pressure warning (421-93-H1300) There is a hazard of explosion injury. Do not disassembly the accumulator, make holes in it, weld it cut it, hit it, roll it or bring it near flame.
10	Do not climb on fender (421-93-H1400) Sign indicates a hazard of falling. Do not stand on this place here.
11	Do not open when engine is running (09667-A0880) Sign indicates a hazard of rotating parts, such as belt. Turn off engine before inspection and maintenance.
12	"Do not come under machine" sign (421-93-H1370) Sign indicates a hazard of being run over by moving vehicle. Keep a safe distance from vehicle when it is moving.
13	"Do not go under work equipment" sign (421-93-H1380) Sign indicate a crush hazard from falling off of working device. Keep away when the working device is raised.
14	Safety measures before starting work (421-93-H1340)
15	Keep a safe distance from electric power lines (09801-C0481) Sign indicates an electrocution hazard if machine is brought too near electric power lines.
16	Jump start prohibited. Only start machine from driver's seat. Do not attemp to start the engine by short-circuiting the engine starting circuit. Such an act may cause a serious bodily injury or fire.

Downloaded from www.Manualslib.com manuals search engine

https://truckmanualshub.com/

2.2 General precautions

Safety rules

- Only trained and authorized personnel can operate and maintain the machine.
- Follow all safety rules, precautions and instructions when operating or performing maintenance on the machine.
- If you are under the influence of alcohol or medication, your ability to safely operate or repair your machine may be severly impaired putting yourself and everyone else on your jobsite in danger.
- When working with another operator or with a person on worksite traffic duty, be sure that all personnel understand all hand signals that are to be used.

If abnormalities are found

If you find any abnormality in the machine during operation or maintenance (noise, vibration, smell, incorrect gauges, smoke, oil leakage, etc., or any abnormal display on the warning devices or monitor), report to the person in charge and have the necessary action taken. Do not operate the machine until the abnormality has been corrected.

Clothing and personal protective items

- Do not wear loose clothing and accessories. There is a hazard that they may catch on control levers or other protruding parts.
- If you have long hair and it hangs out from your hard hat, there is a hazard that it may get caught up in the machine, so tie your hair up and be careful not to let it get caught.
- Always wear a hard hat and safety shoes. If the nature of the work requires it, wear safety glasses, mask, gloves, ear plugs, and safety belt when operating or maintaining the machine.
- Check that all protective equipment functions properly before using it.

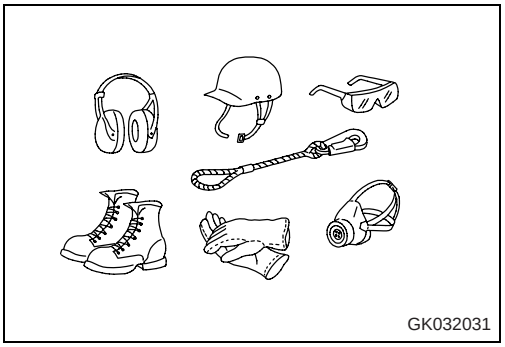

Downloaded from www.Manualslib.com manuals search engine

https://truckmanualshub.com/

Fire extinguisher and first aid kit

Always follow the precautions below to prepare for action if any injury or fire should occur.

- The fire extinguisher can be fastened to the inside cabin wall on the left.
- If, in the course of certain operations, there is danger of fire, fire extinguishers must be at hand. Familiarise with the use of the fire extinguishers.
- Inform yourself on measures to be taken in the event of a fire.
- The first-aid kit can be positioned on the right of the cabin's interior.
- Make sure that you know all telephone numbers of the persons that you need to contact in an emergency.

Fastening points

Safety features

- Be sure that all guards and covers are in their proper position. Have guards and covers repaired immediately if they are damaged.
- Understand the method of use of safety features and use them properly.
- Never remove any safety features. Always keep them in good operating condition.

Keep machine clean

- If water gets into the electrical system, there is a hazard that it will cause malfunctions or misoperation. Do not use water or steam to wash the electrical system (sensors, connectors).
- If inspection and maintenance is carried out when the machine is still dirty with mud or oil, there is a hazard that you will slip and fall, or that dirt or mud will get into your eyes. Always keep the machine clean.

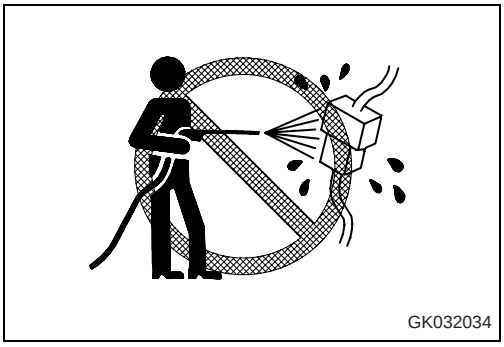

Downloaded from www.Manualslib.com manuals search engine

https://truckmanualshub.com/

Inside operator's compartment

- When entering the operator's compartment, always remove all mud and oil from the soles of your shoes.

  If you operate the pedal with mud or oil affixed to your shoes, your foot may slip and this may cause a serious accident.

- Do not leave parts or tools lying around the operator's compartment.
- Do not stick suction pads to the window glass. Suction pads act as a lens and may cause fire.
- Do not use cellular telephones inside the operator's compartment when driving or operating the machine.
- Never bring any dangerous objects such as flammable or explosive items into the operator's compartment.

Always apply lock when leaving operator's seat

- When standing up from the operator's seat to adjust the operator's seat, or when leaving the machine, always lower the work equipment to the ground, set work equipment lock lever (1) to the LOCK position, then turn parking brake switch (2) ON, and stop the engine.

  If the control lever is touched by accident, there is danger that the machine may suddenly move and cause serious personal injury.

- When leaving the machine, lock all parts, and always takes the key with you and leave it in the specified place.

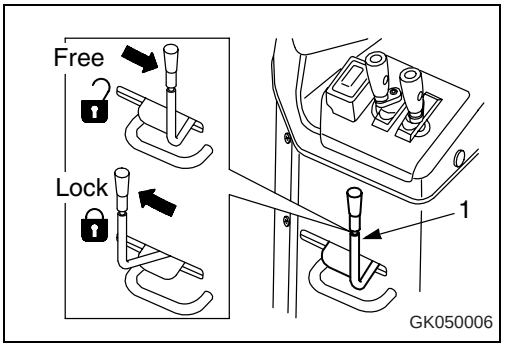

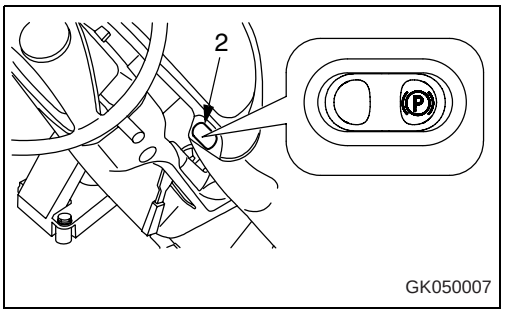

Downloaded from www.Manualslib.com manuals search engine

https://truckmanualshub.com/

Handrails and steps

To prevent personal injury caused by slipping or falling off the machine, always do as follows.

- Use the handrails and steps marked by arrows in the diagram on the right when getting on or off the machine.
- To ensure safety, always face the machine and maintain three-point contact (both feet and one hand, or both hands and one foot) with the handrails and steps to ensure that you support yourself.
- When entering the cab, stand on the top step before opening the door.
- Do not grip the control levers, or work equipment lock lever when getting on or off the machine.
- Never climb on the engine hood or covers where there are no non-slip pads.
- Never move from the step at the rear of the machine or the step at the side of the cab to stand on top of the tire.
- Before getting on or off the machine, check the handrails and steps, and if there is any oil, grease, or mud on them, wipe it off immediately. In addition, repair any damage and tighten any loose bolts.
- Do not get on or off the machine while holding tools in your hand.

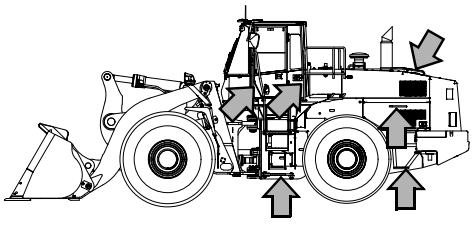
GK050008

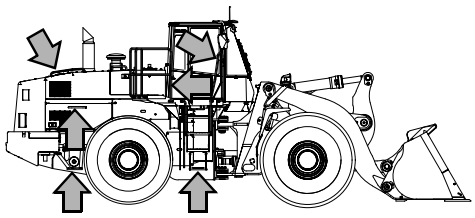
GK050009

GK032039

Precautions when cleaning cab glass

- Always keep the cab glass clean to ensure good visibility when operating.

  When cleaning the front glass, articulate the machine and climb on the step at the center of the front frame.

- Clean the cab glass only on the side to which the machine is articulated. Using the step in the center of the front frame to move to the opposite side from the side which is articulated is extremely dangerous. Do not do this.

  When cleaning the opposite side, first articulate the machine in the opposite direction, then carry out the cleaning.

- When articulating the machine, articulate it to an angle of at least 38° from the line to the front. If the angle of articulation is small, it is a long distance to the step in the center of the front frame, and this creates a dangerous situation.

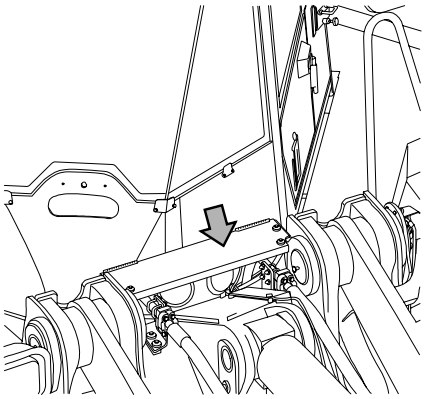
GK050010

Downloaded from www.Manualslib.com manuals search engine

https://truckmanualshub.com/

Mounting and dismounting

- Never jump on or off the machine. Never get on or off a moving machine.
- If the machine starts to move when there is no operator on the machine, do not jump on to the machine and try to stop it.

No people on attachments

Never let anyone ride on the work equipment, or other attachments. There is a hazard of falling and suffering serious injury.

Do not get caught in articulated portion

- If the clearance at the articulating portion changes, it will lead to serious personal injury.

  Do not allow anyone to come inside the articulation range.

- Never enter or put your hand, arm, or any part of your body in the movable portion between the work equipment and machine or between the cylinder and the work equipment. If someone operates the control levers by mistake, the gap between the work equipment and machine and between the cylinder and work equipment will change, and you, your hand, or arm will be caught and you may suffer serious injury.

  If you have to go into a movable portion, always take action to secure the work equipment and ensure that it cannot move.

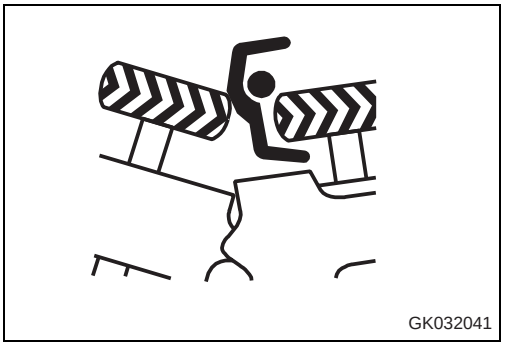
GK032041

Prevention of burns

Hot coolant

- To prevent burns from hot water or steam spurting out when checking or draining the coolant, wait for the water to cool to a temperature where it is possible to touch the radiator cap by hand before starting the operation. Even when the coolant has cooled down, loosen the cap slowly to relieve the pressure inside the radiator before removing the cap.

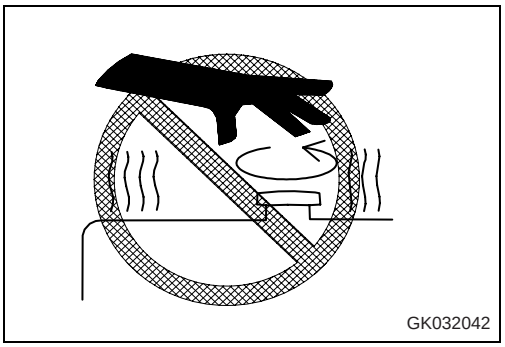
GK032042

Hot oil

- To prevent burns when checking or draining the oil, wait for the oil to cool to a temperature where it is possible to touch the plug by hand before starting the operation. Even when the oil has cooled down, loosen the plug slowly to relieve the internal pressure before removing the plug.

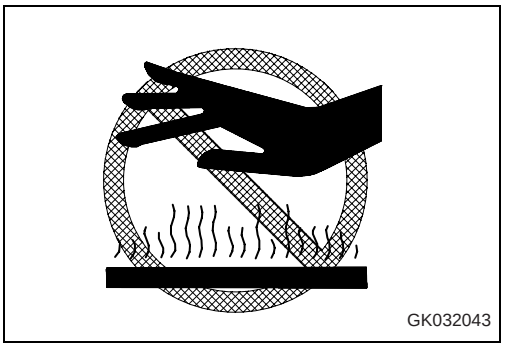
GK032043

Downloaded from www.Manualslib.com manuals search engine

https://truckmanualshub.com/

Fire prevention

- Fire caused by fuel or oil

  Fuel, oil, antifreeze, and window washer liquid are particularly flammable and can be hazardous. To prevent fire, always observe the following:

  - Do not smoke or use any flame near fuel or oil.
  - Stop the engine before refueling.
  - Do not leave the machine while adding fuel or oil.
  - Tighten all fuel and oil caps securely.
  - Do not spill fuel on overheated surfaces or on parts of the electrical system.
  - Use well-ventilated areas for adding or storing oil and fuel.
  - Keep oil and fuel in the determined place and do not allow unauthorized persons to enter.
  - After adding fuel or oil, wipe up any spilled fuel or oil.
  - When carrying out grinding or welding work on the chassis, move any flammable materials to a safe place before starting.
  - When washing parts with oil, use a non-flammable oil. Diesel oil and gasoline may catch fire, so do not use them.
  - Put greasy rags and other flammable materials into a safe container to maintain safety at the work place.
  - Do not weld or use a cutting torch to cut any pipes or tubes that contain flammable liquids.

GK032044

GK032045

- Fire caused by accumulation of flammable material.

  Remove any dry leaves, chips, pieces of paper, dust, or any other flammable materials accumulated or affixed around the engine, exhaust manifold, muffler, or battery, or inside the undercovers.

- Fire coming from electric wiring

  Short circuits in the electrical system can cause fire.

  - Always keep electric wiring connections clean and securely tightened.
  - Check the wiring every day for looseness or damage. Tighten any loose connectors or wiring clamps. Repair or replace any damaged wiring.

Downloaded from www.Manualslib.com manuals search engine

https://truckmanualshub.com/

- Fire coming from hydraulic line

  Check that all the hose and tube clamps, guards, and cushions are securely fixed in position.

  If they are loose, they may vibrate during operation and rub against other parts. This may lead to damage to the hoses, and cause high-pressure oil to spurt out, leading to fire damage or serious injury.

- Explosion caused by lighting equipment

  - When checking fuel, oil, battery electrolyte, window washer fluid, or coolant, always use lighting with anti-explosion specifications. If such lighting equipment is not used, there is danger of explosion that may cause serious injury.

  - When taking the electrical power for the lighting from the machine itself, follow the instructions in this manual.

Action if fire occurs

If a fire occurs, escape from the machine as follows.

- Turn the start switch OFF to stop the engine.

- Use the handrails and steps to get off the machine.

Window washer liquid

Use an ethyl alcohol base washer liquid.

Methyl alcohol base washer liquid may irritate your eyes, so do not use it.

ROPS (Roll Over Protective Structure)

- The roll-over protection system (ROPS) protects the operator and absorbs load and impact energy, if the machine should roll over.

- The ROPS is a fixed component of the cab. The machine must not be operated without this roll-over protection system.

- The ROPS meets the regulations of all member states of the EU. If, however, the ROPS is modified, damaged, or repaired without permission, its stability is impaired. In this case, the ROPS must be replaced, since its correct function can no longer be guaranteed.

- The ROPS can only provide maximum protection, if the driver wears the safety belt correctly. For this reason, the safety belt is to be worn when the machine is in operation.

Downloaded from www.Manualslib.com manuals search engine

https://truckmanualshub.com/

Attachment for protection against falling objects (FOPS)

When you work on a site where there is danger of falling rocks or other objects, the machines must be equipped with a FOPS. If the FOPS is modified without permission or damaged, its stability is impaired. In this case, the FOPS must be replaced, since its correct function can no longer be guaranteed.

Precautions for attachments, options

- When installing optional parts or attachments, there may be problems with safety or legal restrictions. Therefore contact your KOMATSU distributor for advice.
- Any injuries, accidents, or product failures resulting from the use of unauthorized attachments or parts will not be the responsibility of KOMATSU.
- When installing and using optional attachments, read the instruction manual for the attachment, and the general information related to attachments in this manual.

Unauthorized modification

If this machine is modified without permission from KOMATSU, there is danger that problems may occur with safety and that this may lead to serious personal injury. Modifications may have an adverse effect on items such as machine strength and visibility.

Before making a modification, consult your KOMATSU distributor.

KOMATSU will not be responsible for any injuries, accidents, product failures or other property damages resulting from modifications made without authorization from KOMATSU.

Safety at worksite

- Before starting operations, thoroughly check the work area for dangerous working conditions.
- Inspect the surface of the soil in the working area and determine the optimum and safest procedure.
- When carrying out operations near combustible materials such as thatched roofs, dry leaves or dry grass, there is a hazard of fire, so be careful when operating.
- Determine the required safety measures against dangers on public roads in co-operation with the owners, users, and responsible authorities.
- On sites where there are underground water pipes, gas pipes, or conduits for high voltage cables, contact the responsible supply company to determine the lines' positions. Ensure that these facilities will not be damaged.
- When working with water or crossing sand banks, first check the subsoil and depth and flow rate of the water. Ensure that the permitted water depth will not be exceeded.

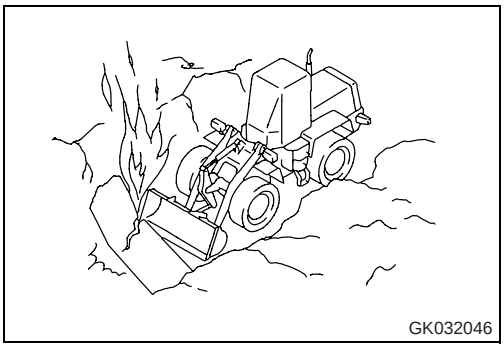
GK032046

Downloaded from www.Manualslib.com manuals search engine

https://truckmanualshub.com/

- Take action to prevent unauthorized people from approaching the jobsite.

Working on loose ground

- Avoid travelling or operating your machine too close to the edge of cliffs, overhangs and deep ditches. The ground may be week in such areas. If the ground should collapse under the weight of vibration of the machine, there is a hazard that the machine may fall or tip over. Remember that the soil after heavy rain or blasting or after earthquakes is weak in these areas.
- When working on embankments or near excavated ditches, there is a hazard that the weight or vibration of the machine will cause the soil of collapse. Before starting operations, take steps to ensure that the ground is safe and to prevent the machine from rolling over or falling.

Do not go close to high-voltage cables

Do not travel or operate the machine near electric cables. There is a hazard of electric shock, which may cause serious injury or property damage. On jobsites where the machine may go close to electric cables, always do as follows.

- Before starting work near electric cables, inform the local power company of the work to be performed, and ask them to take the necessary action.

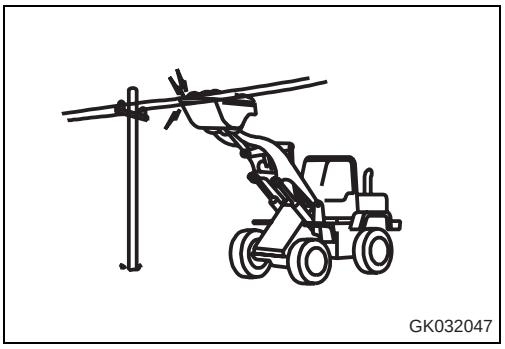
GK032047

- Even going close to high-voltage cables can cause electric shock, which may cause serious burns or even death. Always maintain a safe distance (see the table on the right) between the machine and the electric cable. Check with the local power company about safe operating procedure before starting operations.
- To prepare for any possible emergencies, wear rubber shoes and gloves. Lay a rubber sheet on top of the seat, and be careful not to touch the chassis with any exposed part of your body.
- Use a signalman to give warning if the machine approaches too close to the electric cables.
- When carrying out operations near high voltage cables, do not let anyone come close to the machine.
- If the machine should come too close or touch the electric cable, to prevent electric shock, the operator should not leave the operator's compartment until it has been confirmed that the electricity has been shut off.

  Also, do not let anyone come close to the machine.

Nominal Voltage		Safety Distance
	up to 1000 V	1 m
over 1 kV	up to 110 kV	3 m
over 110 kV	up to 220 kV	4 m
over 220 kV	up to 380 kV	5 m
with unknown nominal voltage		5 m

Downloaded from www.Manualslib.com manuals search engine

https://truckmanualshub.com/

Ensure good visibility

This machine is equipped with mirrors to improve the visibility, but even with mirrors, there are places, which cannot be seen from the operator's seat, so always be careful when operating.

When operating or traveling in places with poor visibility, if it is impossible to confirm the condition of the job side or obstacle is in the area around the machine, there is danger that the machine may suffer damage or the operator may suffer serious personal injury. When operating or traveling in places with poor visibility, always observe the following items strictly.

- If the visibility cannot be sufficiently assured, position a flagman if necessary. The operator should pay careful attention to the signs and follow the instructions of the signalman.
- Only one signalman should give signals.
- When working in dark places, turn on the working lamp and front lamps installed to the machine, and set up additional lighting in the work area if necessary.
- Stop operations if the visibility is poor, such as in mist, snow, rain, or dust.
- Check the mirrors on the machine before starting operations every day. Clean off any dirt and adjust the view to ensure good visibility.

Precautions related to ventilation exhaust gas

Engine exhaust gas includes substances that may harm your health or even kill. Always select a place with good ventilation when starting the engine or operating the machine.

If it is necessary to start the engine or run the machine inside a building or underground, where the ventilation is poor, take steps to remove the exhaust gas and bring in ample fresh air.

GK032048

Downloaded from www.Manualslib.com manuals search engine

https://truckmanualshub.com/

Checking signalman's signals and signs

- Set up signs to inform of road shoulders and soft ground. If the visibility is not good, position a signalman if necessary. Operators should pay careful attention to the signs and follow the instructions from the signalman.
- Only one signalman should give signals.
- Make sure that all workers understand the meaning of all signals and signs before starting work.

Emergency exit from operator's cab

Machines equipped with a cab have doors on the left and right sides. If the door on the one side does not open, escape from the door on the other side.

Be careful about asbestos dust

Asbestos dust in the air can cause lung cancer if it is inhaled. There is danger of inhaling asbestos when working on jobsites handling demolition work or work handling industrial waste. Always observe the following.

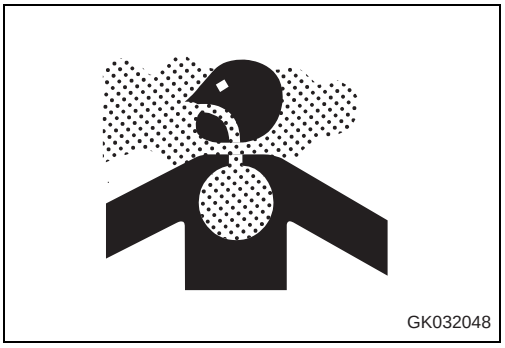

- Spray water to keep down the dust when cleaning. Do not use compressed air for cleaning.
- If there is danger that there may be asbestos dust in the air, always operate the machine from an upwind position. All workers should use an approved respirator.
- Do not allow other persons to approach during the operation.
- Always observe the rules and regulations for the work site and environmental standards.

This machine does not use asbestos, but there is a danger that imitation parts may contain asbestos, so always use genuine KOMATSU parts.

Downloaded from www.Manualslib.com manuals search engine

https://truckmanualshub.com/

2.3 Precautions for operation

2.3.1 Starting engine

If there is a warning tag hanging from the work equipment control lever, do not start the engine or touch the levers.

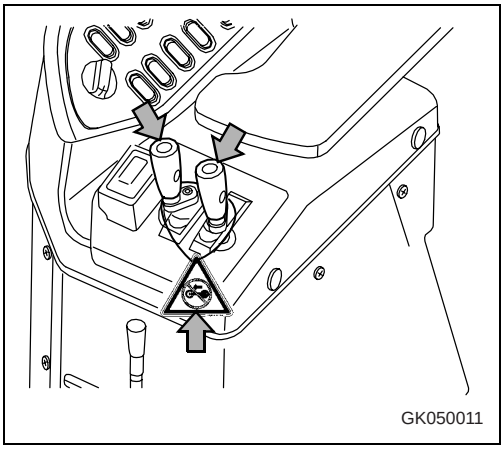
GK050011

GK050012

Checks before starting engine

Carry out the following checks before starting the engine at the beginning of the day's work.

- Remove all dirt from the surface of the window glass to ensure a good view.
- Remove all dirt from the surface of the lens of the front lamps, working lamps, and rear combination lamp, and check that they light up correctly.
- Check the coolant level, fuel level, and oil level in engine oil pan, check for clogging of the air cleaner, and check for damage to the electric wiring.
- Check that there is no mud or dust accumulated around the movable parts of the accelerator pedal or brake pedal, and check that the pedals work properly.
- Adjust the operator's seat to a position where it is easy to carry out operations, and check that there is no damage or wear to the seat belt or mounting clamps.
- Check the operation of the instruments and gauges, check the angle of the mirror, and check that the control levers are all at the neutral position.
- Before starting the engine, make sure that the work equipment lock lever is in the LOCK position.
- Adjust the mirrors so that the rear of the machine can be seen clearly from the operator's seat. See "Adjusting mirrors (3-105)".
- Check that there are no persons or obstacles above, below, or in the area around the machine.

Downloaded from www.Manualslib.com manuals search engine

https://truckmanualshub.com/

Precautions when starting

- Start and operate the machine only while seated. Never try to start the engine by hot-wiring the ignition. This can cause fire, grave injuries or death.
- Do not attempt to start the engine by short-circuiting the engine starting circuit. Such an act may cause a serious bodily injury or fire.
- When starting the engine, sound the horn as a warning.
- Do not allow anyone apart from the operator to ride on the machine.
- For machines equipped with a back-up alarm, check that the alarm works properly.

Precautions in cold areas

- Carry out the warming-up operation thoroughly. If the machine is not thoroughly warmed up before the control levers are operated, the reaction of the machine will be slow, and this may lead to unexpected accidents.
- If the battery electrolyte is frozen, do not charge the battery or start the engine with a different power source. There is a hazard that this will ignite the battery and cause the battery to explode.

  Before charging or starting the engine with a different power source, melt the battery electrolyte and check that there is no leakage of electrolyte before starting.

Downloaded from www.Manualslib.com manuals search engine

https://truckmanualshub.com/

2.3.2 Operation

Checks before operation

When carrying out the checks, move the machine to a wide area where there are no obstructions, and operate slowly. Do not allow anyone near the machine.

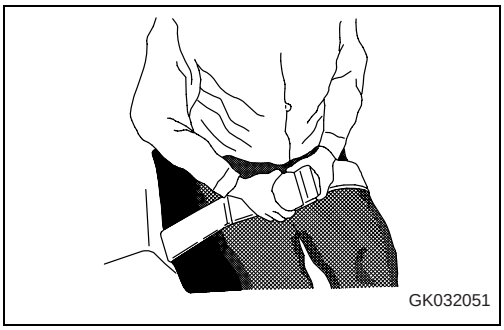

- Always fasten your seat belt.
- Check the operation of travel, steering and brake systems, and work equipment control system.
- Check for any abnormality in the sound of the machine, vibration, heat, smell, or gauges; check also that there is no leakage of oil or fuel.
- If any abnormality is found, carry out repairs immediately.
- Before driving the machine or starting operations, check that safety bar (1) is securely fixed at the FREE position.

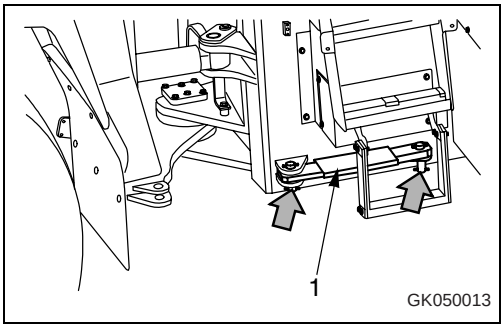

Precautions when traveling in forward or reverse

- Before travelling, check again that there is no one in the surrounding area, and that there are no obstacles.
- Before travelling, sound the horn to warn people in the area.
- Always operate the machine only when seated.
- Do not allow anyone apart from the operator to ride on the machine.
- Check that the back-up alarm (alarm buzzer when machine travels in reverse) works properly.
- Always lock the door and windows of the operator's compartment in position (open or closed).

  On jobsites where there is a hazard of flying objects or of objects entering the operator's compartment, check that the door and windows are securely closed.
- If there is an area to the rear of the machine which cannot be seen, position a signal person. Take special care not to hit other machines or people when turning or swinging the machine.

  Always be sure to carry out the above precautions even when the machine is equipped with mirrors.

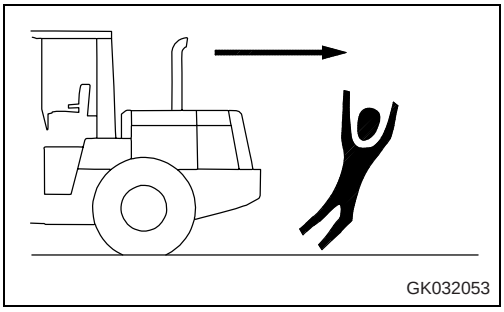

Downloaded from www.Manualslib.com manuals search engine

https://truckmanualshub.com/

Precautions when traveling

- Never turn the key in the starting switch to the OFF position. It is dangerous if the engine stops when the machine is traveling, because the steering becomes heavy. If the engine stops, depress the brake pedal immediately to stop the machine.
- When traveling on level ground, keep the work equipment at height of 270 mm (10 to 11 in) from the ground.
- When traveling, do not operate the work equipment control levers. If the work equipment control levers have to be operated, stop the machine first, then operate the levers.
- When traveling on rough ground, travel at low speed and do not operate the steering suddenly. There is danger that the machine may turn over. The work equipment may hit the ground surface and cause the machine to lose its balance, or may damage the machine or structures in the area.
- Avoid traveling over obstacles when possible. If the machine has to travel over an obstacle, keep the work equipment close to the ground and travel at low speed. Never travel over obstacles which make the machine tilt strongly to one side.
- When traveling or carrying out operations, always keep a safe distance from people, structures, or other machines to avoid coming into contact with them.
- When passing over bridges or structures, check first that the structure is strong enough to support the weight of the machine.
- When operating in tunnels, under bridges, under electric wires, or other places where the height is limited, operate slowly and be extremely careful not to let the work equipment hit anything.
- Always obey the traffic regulations when traveling on public roads. This machine travels at a lower speed than normal automobiles, so keep to the side of the road and be careful to leave the center of the road free for other vehicles.
- If you drive the machine at high speed continuously for a long time, the tires will overheat and the internal pressure will become abnormally high. This may cause the tires to burst. If a tire bursts, it produces an extremely large destructive force, and this may cause serious injury or accident.
- If you are going to travel continuously, please consult your KOMATSU distributor.

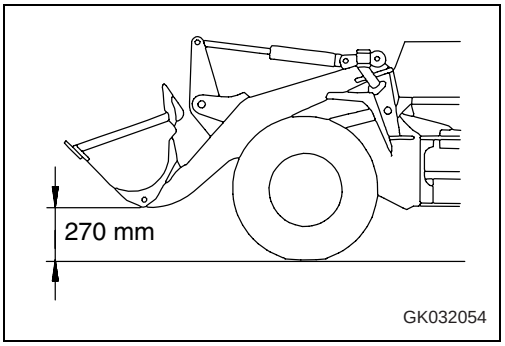

Downloaded from www.Manualslib.com manuals search engine

https://truckmanualshub.com/

Traveling on slopes

To prevent the machine from tipping over or slipping to the side, always do as follows.

- When traveling on slopes, keep the bucket at height “A“ of approximately 200 to 300 mm (8 to 12 in) above the ground. In case of emergency, quickly lower the bucket to the ground to help the machine to stop.

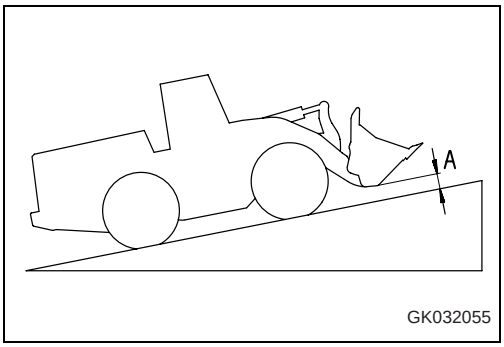

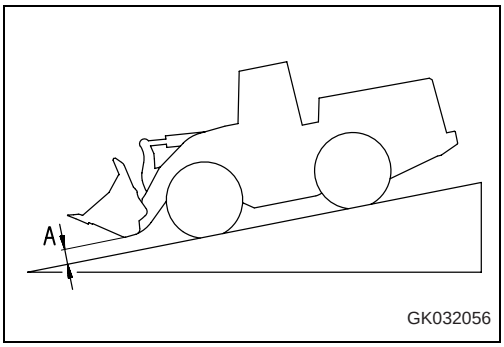

- Always travel straight up or down a slope. Traveling at an angle or across the slope is extremely dangerous.
- Do not turn on slopes or travel across slopes. Always go down to a flat place to change the position of the machine, then travel on to the slope again.
- Travel on grass, fallen leaves, or wet steel plates with low speed. Even with slight slopes there is a hazard that the machine may slip.
- If the engine stops, depress the brake pedal immediately, lower the bucket to the ground, and apply the parking brake to stop the machine.
- When traveling downhill, never shift gear or place the transmission at neutral. It is dangerous not to use the braking force of the engine. Always place the transmission in a low gear before starting to travel downhill.
- When traveling downhill, travel slowly. If necessary, use the braking force of the engine together with the brake pedal to control the travel speed.
- When traveling up or down hills with a loaded bucket, always travel with the bucket facing uphill. If the machine travels with the bucket facing downhill, there is danger that the machine may tip over.

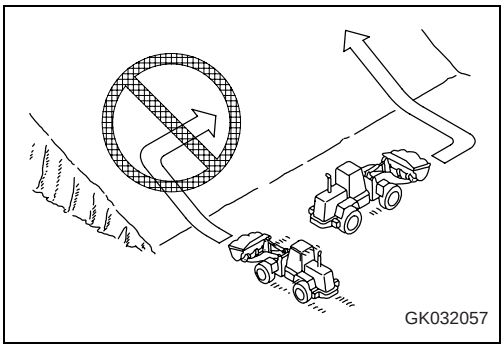

Downloaded from www.Manualslib.com manuals search engine

https://truckmanualshub.com/

Prohibited operations

- It is dangerous to excavate the bottom of a rock face. Never do this.
- When digging, never thrust the bucket into a load at an angle. This will bring an excessive load to bear on the machine and will reduce the service life of the machine.
- It is dangerous to apply drive force when excavating a rock face. In addition, an excessive load will be brought to bear on the machine and this will cause damage to the machine.
- Never carry out digging operations on a downhill slope. An excessive load will be brought to bear on the machine and this will cause damage to the machine.
- It is dangerous to use the bucket or lift arm for crane operations, so do not carry out such operations.
- Do not pass the bucket over the head of other workers or over the operator's seat of dump trucks or other hauling equipment. The load may spill or the bucket may hit the dump truck and cause serious injury or property damage.

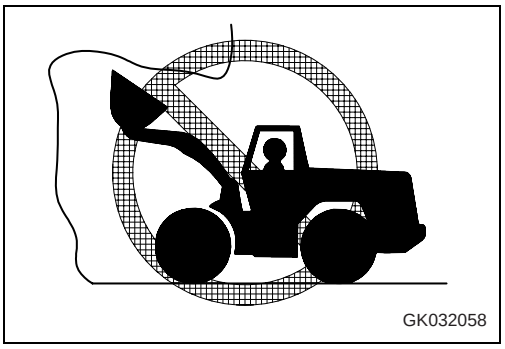

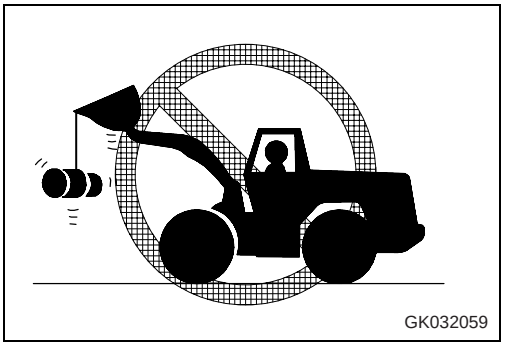

Emergency lowering system

When the engine is not running, you can lower the work unit by means of the lift arm control lever.

1. Turn the key in ignition switch (1) to ON.
2. Then slowly press the lift arm control lever (2) forward to the "LOWER" position.

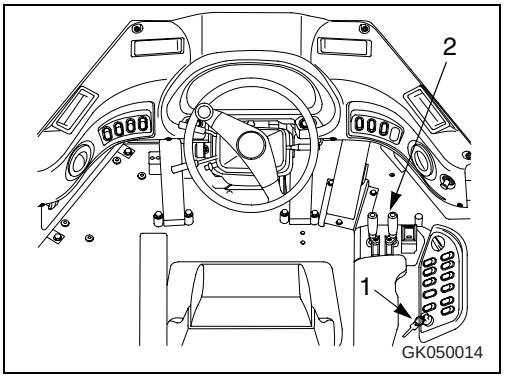

Downloaded from www.Manualslib.com manuals search engine

https://truckmanualshub.com/

Precautions when operating

- When using the machine, to prevent the machine from overturning due to overloading and to avoid damage to the work equipment, do not exceed the maximum permitted load or performance of the machine.
- If the engine cannot be started again after it has stopped, immediately operate the work equipment control levers to lower the work equipment to the ground. (After the engine stops, the accumulator allows the work equipment to be operated for a limited time.)
- Be careful not to approach too close to the edge of cliffs. When making embankments or landfills, or when dropping soil over a cliff, dump one pile, then use the next pile of soil to push the first pile.
- The load suddenly becomes lighter when the soil is pushed over a cliff or when the machine reaches the top of a slope. When this happens, there is danger that the travel speed will suddenly increase, so be sure to reduce the speed.
- When the bucket is fully loaded, never start, turn, or stop the machine suddenly. There is danger of the machine turning over.

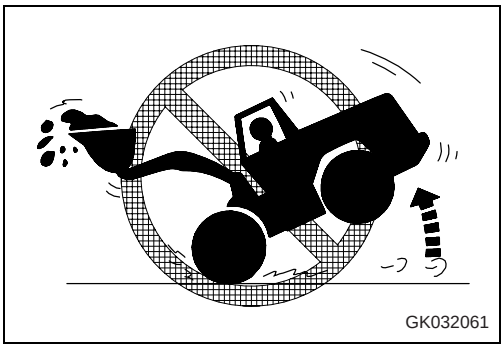
GK032061

- When handling unstable loads, such as round or cylindrical objects, or piled sheets, if the work equipment is raised high, there is danger that the load may fall on top of the operator' compartment and cause serious injury or damage.
- When handling unstable loads, be careful not to raise the work equipment too high or tip the bucket back too much.
- If the work equipment is suddenly lowered or suddenly stopped, the reaction may cause the machine to tip over. Particularly when carrying a load, be sure to operate the work equipment carefully.

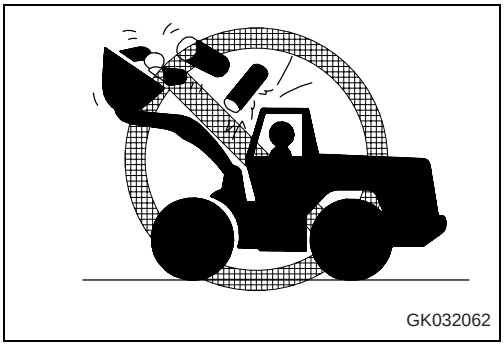
GK032062

- When operating in tunnels, under bridges, under electric wires, or other places where the height is limited, be extremely careful not to let the work equipment hit anything.
- To prevent accidents caused by hitting other objects, always operate the machine at a speed which is safe for operation, particular in confined spaces, indoors, and in places where there are other machines.

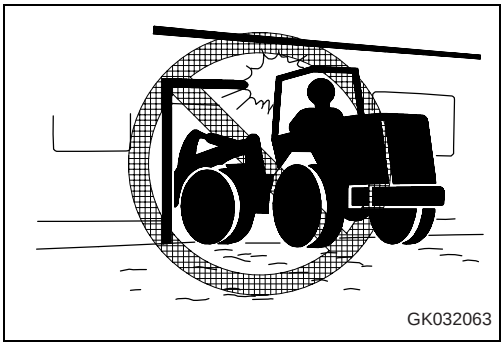
GK032063

Downloaded from www.Manualslib.com manuals search engine

https://truckmanualshub.com/

Methods of using brake

- When the machine is traveling, do not rest your foot on the brake pedal. If you travel with your foot resting on the pedal, the brake will always be applied, and this will cause the brakes to overheat and fail.
- Do not depress the brake pedal repeatedly if not necessary.
- When traveling downhill, use the braking force of the engine. If necessary, use the brake pedal at the same time.

Operate carefully on snow

- Snow-covered or frozen surfaces are slippery, so be extremely careful when travelling or operating the machine and do not operate the levers suddenly. Even a slight slope may cause the machine to slip, so be particularly careful when working on slopes.
- With frozen ground surfaces, the ground becomes soft when the temperatures rises and this may cause the machine to tip over.
- If the machine enters deep snow, there is a hazard that it may tip over or become buried in the snow. Be careful not to leave the road shoulder or to get trapped in a snow drift.
- When clearing snow, the road shoulder and and objects placed beside the road are buried in the snow and cannot be seen. There is a hazard of the machine tipping over or hitting covered objects, so always carry out operations carefully.
- When travelling on snow-covered roads, always fit tire chains.
- When travelling on snow covered slopes, never apply the foot brake suddenly. Reduce the speed and use the engine as a brake while applying the foot brake intermittenly (depress the brake intermittenly several times). If nessecary, lower the bucket to the ground to stop the machine.

Downloaded from www.Manualslib.com manuals search engine

https://truckmanualshub.com/

Parking machine

- Park the machine on firm, level ground.
- Select a place where there is no hazard of falling rocks or landslides, or of flooding if the land is low.
- Lower the work equipment completely to the ground.

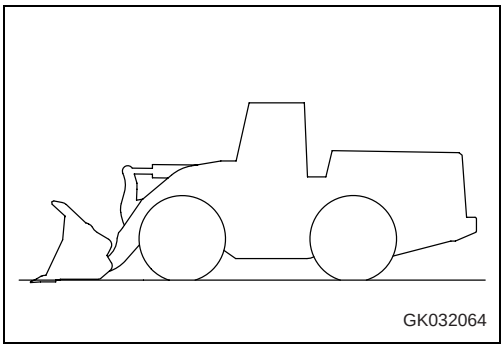

- When leaving the machine, set work equipment lock lever (1) to the LOCK position and parking brake switch (2) to the ON position, then stop the engine.
- Lock all points that can be locked and store the key in a safe place.
- When parking the machine on public roads, ensure that it does not obstruct traffic. Put up signal lamps and required warning signs to ensure that passing traffic can clearly see the machine.
- Adhere to all regulations on parking vehicles and securing building sites

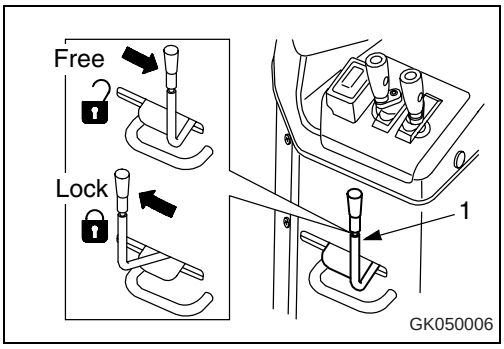

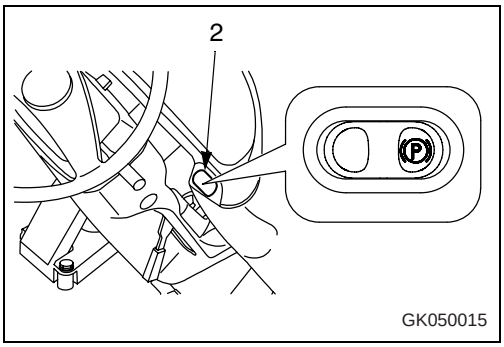

- If it is necessary to park the machine on a slope, set blocks under the wheels to prevent the machine from moving.

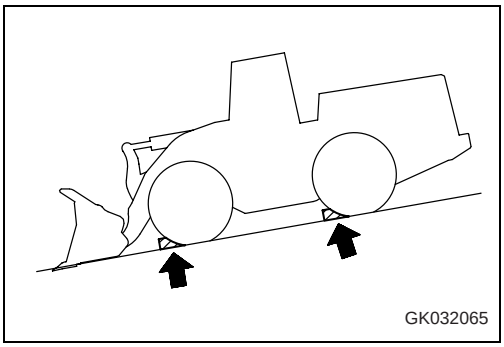

Downloaded from www.Manualslib.com manuals search engine

https://truckmanualshub.com/

2.3.3 Transportation

The machine can be divided into parts for transportation, so when transportating the machine, please contact your KOMATSU distributor to have the work carried out.

Loading and unloading

- When loading or unloading the machine, mistaken operation may bring the hazard of the machine tipping over or falling, so particular care is necessary. Always do as follows.
- Perform loading and unloading on firm, level ground only. Maintain a safe distance from the edge of the road or cliff.
- Always use ramps of adequate strength. Be sure that the ramps are wide, long, and thick enough to provide a safe loading slope. Take suitable steps to prevent the ramps from moving out of position or coming off.
- Be sure the ramp surface is clean and free of grease, oil, ice and loose materials. Remove dirt from machine-tracks. On a rainy day, in particular, be extremely careful since the ramp surface is slippery.
- Run the engine at low idling and operate sololy at low speed.
- Never correct your steering on the ramps. If necessary, drive off the ramps, correct the direction, then enter the ramps again.
- When loading or unloading to an embankment or platform, make sure that it has suitable width, strength, and grade.
- For machines equipped with a cab, always lock the door after boarding the machine. If this is not done, the door may suddenly open during transportation.

  Refer to "Transportation procedure (3-159)".

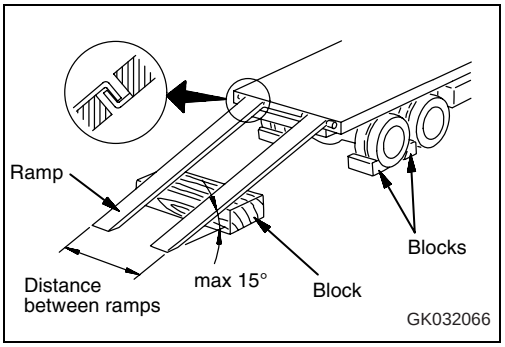

Downloaded from www.Manualslib.com manuals search engine

https://truckmanualshub.com/

Shipping

- When shipping the machine on a trailer, do as follows.
- The weight, transportation height, and overall length of the machine differ according to the work equipment, so be sure to confirm the dimensions.
- When passing over bridges or structures on private land, check first that the structure is strong enough to support the weight of the machine. When traveling on public roads, check first with the relevant authorities and follow their instructions.
- Lock the frame with the safety bar to prevent the machine from articulating.
- Fit chains to the front frame and the rear frame to hold the machine securely in position.
- For details of the shipping procedure, see "Transportation procedure (3-159)".

Downloaded from www.Manualslib.com manuals search engine

https://truckmanualshub.com/

2.3.4 Battery

Battery hazard prevention

Battery electrolyte contains sulphuric acid, and batteries generate flammable hydrogen gas, which may explode. Mistaken handling can lead to serious injury or fire. For this reason, always observe the following precautions.

- Do not use or charge the battery if the battery electrolyte level is below the LOWER LEVEL line. This may cause an explosion. Always check the battery electrolyte level periodically and add distilled water to bring the electrolyte level to the UPPER LEVEL line.
- When working with batteries, always wear safety glasses and rubber gloves.
- Never smoke or use any flame near the battery.
- If you spill acid on your clothes or skin, immediately flush the area with large amount of water.
- If acid gets into your eyes, flush them immediately with large amount of water and seek medical attention.
- Before working with batteries, turn the starting switch to the OFF position.

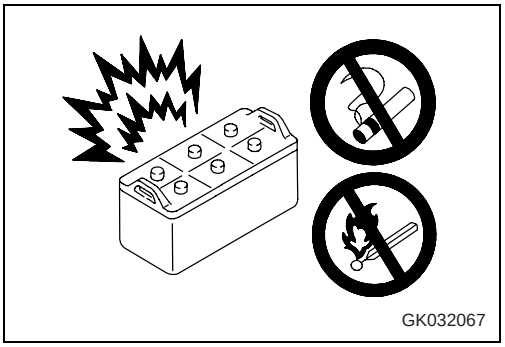
GK032067

As there is a hazard that sparks will be generated, always do as follows.

- Do not let tools or other metal objects make any contact between the battery terminals. Do not leave tools or other metal objects lying around near the battery.
- Always disconnect the negative (-) terminal (ground side) first when removing the battery; when installing the battery, connect the positive (+) terminal first, and connect the ground last.
- Attach the battery terminal securely.
- Flammable hydrogen gas is generated when the battery is charged, so remove the battery from the chassis, take it to a well-ventilated place, and remove the battery caps before charging it.
- Tighten the battery caps securely.
- Install the battery securely to the determined place.

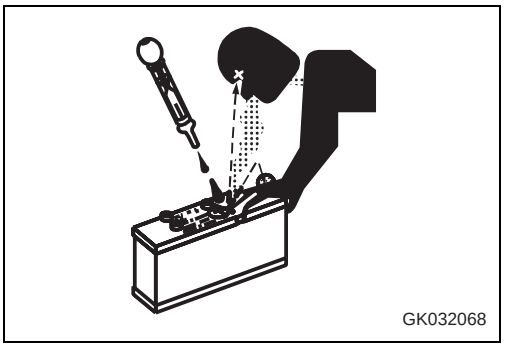
GK032068

Downloaded from www.Manualslib.com manuals search engine

https://truckmanualshub.com/

Starting with booster cables

If any mistake is made in the method of connecting the booster cables, it may cause the battery to explode, so always do as follows.

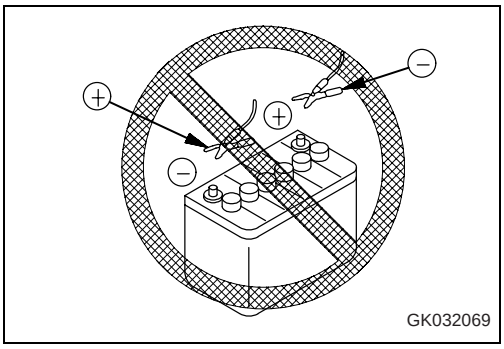

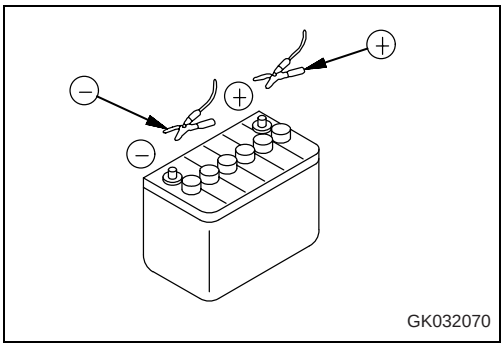

- When starting with a booster cable, carry out the starting operation with two workers (one worker sitting in the operator's seat and the other working with the battery).
- When starting from another machine, do not allow the two machines to touch.
- When connecting the booster cables, turn the starting switch OFF for both the normal machine and problem machine. There is a hazard that the machine will move when the power is connected.
- Be sure to connect the positive (+) cable first when installing the booster cables. Disconnect the negative (-) cable (ground side) first when removing them.
- When removing the booster cables, be careful not to let the booster cable clips touch each other or to let the clips touch the machine.
- Always wear safety goggles and rubber gloves when starting the engine with booster cables.
- When connecting a normal machine to a problem machine with booster cables, always use a normal machine with the same battery voltage as the problem machine.
- For details of the starting procedure when using booster cables, see "Starting engine with booster cable (3-181)".

Downloaded from www.Manualslib.com manuals search engine

https://truckmanualshub.com/

2.3.5 Towing

When towing

Serious injury or death could result if a disabled machine is towed incorrectly or if there is a mistake in the selection or inspection of the wire rope.

For towing, see "Towing the machine (3-174)".

- Always be sure to check carefully that the capacity of the wire rope used for towing is ample for the weight of the towed machine.
- Never use a wire rope which has cut strands (A), reduced diameter (B), or kinks (C). There is danger that the rope may break during the towing operation.
- Always wear leather gloves when handling wire rope.
- Never tow a machine on a slope.
- During the towing operation, never stand between the towing machine and the machine being towed.
- Move the machine slowly and be sure not to apply any sudden load on the wire rope.
- Connect a wire rope to the part indicated with the arrow in the diagram at right.

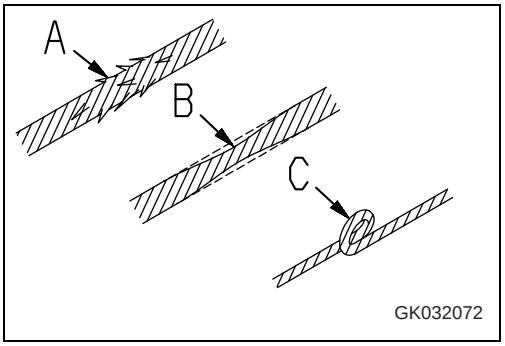

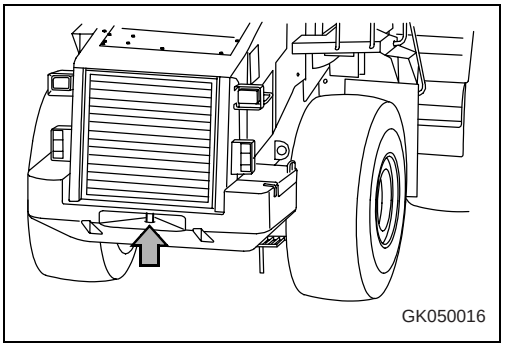

Downloaded from www.Manualslib.com manuals search engine

https://truckmanualshub.com/

2.4 Precautions for maintenance

Warning tag

- Always attach the “DO NOT OPERATE“ warning tag to the work equipment control lever in the operator's cab to alert others that you are performing service or maintenance on the machine. Attach additional warning tags around the machine if necessary.

  Keep this warning tag in the tool box while it is not used. If there is not the tool box, keep the tag in the operation manual pocket.

- If others start the engine, or touch or operate the work equipment control lever while you are performing service or maintenance, you could suffer serious injury or property damage.

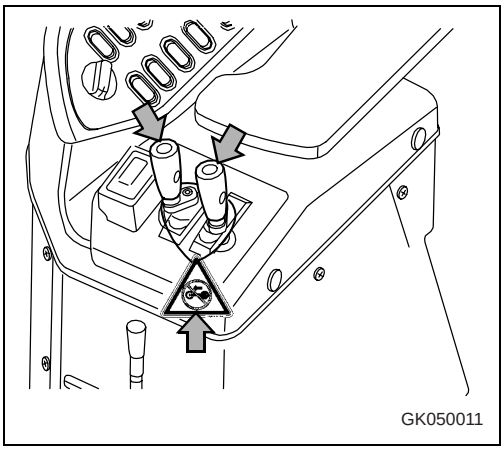

Keep work place clean and tidy

Do not leave hammers or other tools lying around in the work place. Wipe up all grease, oil, or other substances that will cause you to slip. Always keep the work place clean the tidy to enable you to carry out operations safely. If the work place is not kept claen and tidy, there is the danger that you will trip, slip, or fall over and injure yourself.

Appoint leader when working with others

When repairing the machine or when removing and installing the work equipment, appoint a leader and follow his instructions during the operation.

When working with others, misunderstandings between workers can lead to serious accidents.

Downloaded from www.Manualslib.com manuals search engine

https://truckmanualshub.com/

Maintenance with engine running

- Stop the machine on firm, level ground.
- Select a place where there is no hazard of falling rocks or landslides, or of flooding if the land is low.
- Lower the work equipment completely to the ground and stop the engine.

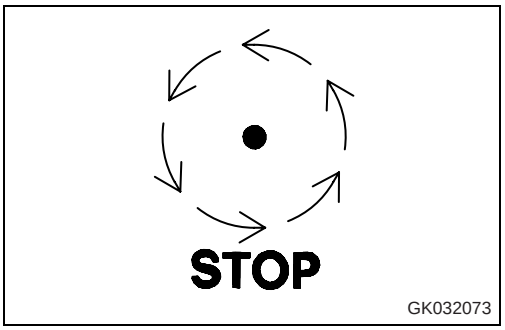

- After stopping the engine, turn the starting switch to the ON position, operate work equipment control lever (1) fully in the RAISE and LOWER directions 2 - 3 times to release the remaining pressure in the hydraulic circuit, then set work equipment lock lever (2) to the LOCK position.

  After releasing the remaining pressure in the hydraulic circuit, turn the starting switch to the OFF position.

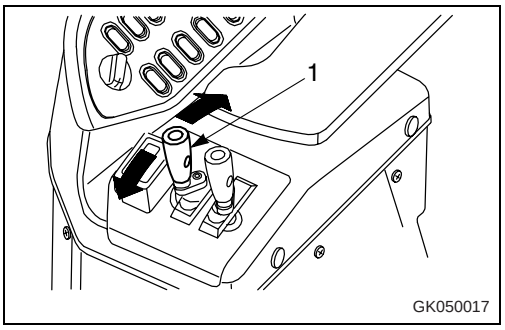

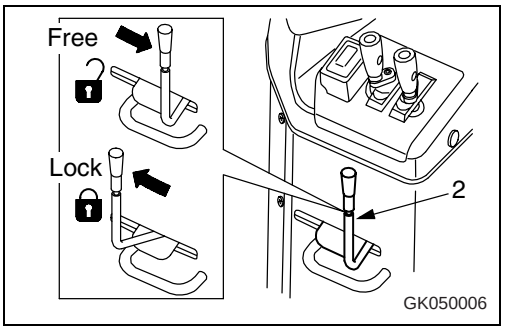

- Set parking brake switch (3) to the ON position, then put blocks under the front and the rear of the tires.

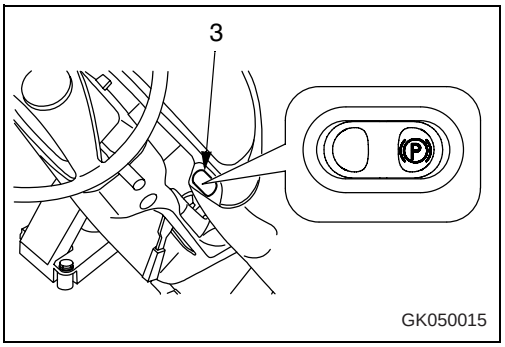

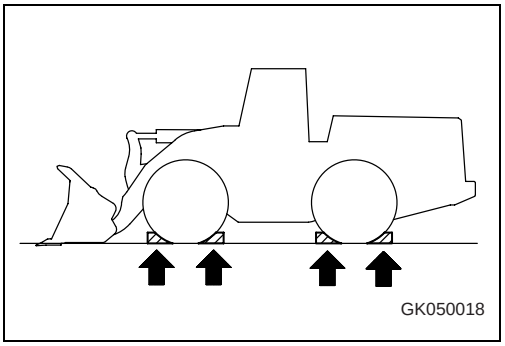

Downloaded from www.Manualslib.com manuals search engine

https://truckmanualshub.com/

- Lock the front and rear frames with safety bar (4).

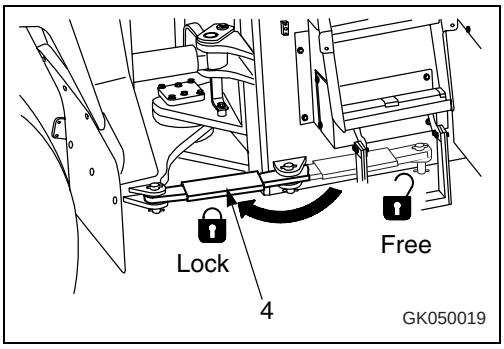

Two workers for maintenance when engine is running

To prevent injury, do not carry out maintenance with the engine running. If maintenance must be carried out with the engine running, carry out the operation with at least two workers and do as follows.

- One worker must always sit in the operator's seat and be ready to stop the engine at any time. All workers must maintain contact with the other workers.
- When carrying out operations near the fan, fan belt, or other rotating parts, there is a hazard of being caught in the parts, so be careful not to come close.
- Never drop or insert tools or other objects into the fan or fan belt. Parts may break or be sent flying.

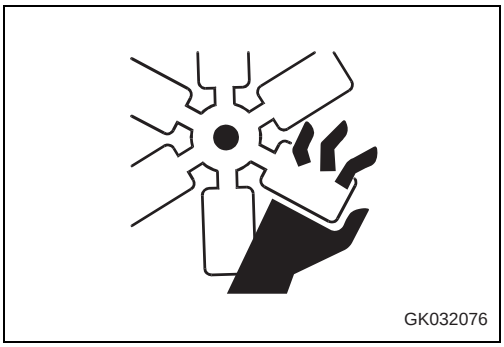

- Set work equipment lock lever (1) to the LOCK position to prevent the work equipment from moving. Then set parking brake switch (2) to the ON position to prevent the machine from moving.
- Do not touch any control levers. If any control lever must be operated, give a signal to the other workers to warn them to move to a safe place.

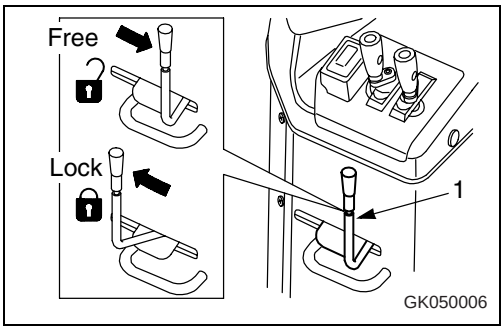

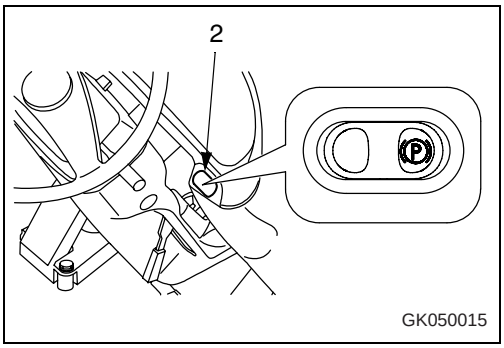

Downloaded from www.Manualslib.com manuals search engine

https://truckmanualshub.com/

Inspection and maintenance after turning E.C.S.S. switch off

For machines equipped with a E.C.S.S. lower the bucket to the ground, turn the E.C.S.S. switch OFF, and stop the engine before starting inspection or maintenance. NEVER turn the switch ON during inspection or maintenance.

Proper tools

Use only tools suited to the task and be sure to use the tools correctly. Using damaged, low quality, faulty, makeshift tools or improper use of the tools could cause serious personal injury.

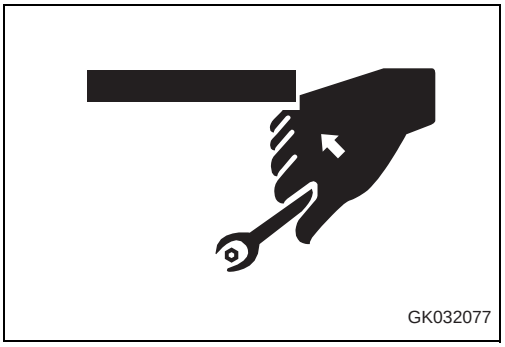

Accumulator

WARNING

Danger of injury! Pressure accumulator is filled with highly pressurised nitrogen. Do not open or damage the pressure accumulator.

The accumulator is charged with high-pressure nitrogen gas. When handling the accumulator, careless procedure may cause an explosion which could lead to serious injury or property damage. For this reason, always observe the following precautions.

- Do not disassemble the accumulator.
- Do not bring it near flame or dispose of it in fire.
- Do not make holes in it, weld it, or use a cutting torch.
- Do not hit or roll the accumulator, or subject it to any impact.
- When disposing of the accumulator, the gas must be released. Please contact your KOMATSU distributor to have this work performed.

Personnel

Only authorized personnel can service and repair the machine. Do not allow unauthorized personnel into the area. If necessary, employ an observer.

Downloaded from www.Manualslib.com manuals search engine

https://truckmanualshub.com/

Attachments

- Appoint a leader before starting removal or installation operations for attachments.
- Place attachments that have been removed from the machine in a stable condition so that they do not fall. And take steps to prevent unauthorized persons from entering the storage area.

Working under the raised boom

WARNING

Danger of injury! The raised boom may suddenly fall! For safety reasons, a raised boom must be secured against dropping before you pass or stand under it.

- The boom must be secured against moving if any work is to be carried out under it when it is in a raised position. For this purpose you should use a supporting prop (1) which is to be positioned below the boom.
- Park the machine on level, solid ground.
- Apply the parking brake.
- Place wheel chocks in front of the wheels to prevent the machine from inadvertently rolling away.
- Lift the arm far enough to allow the supporting prop to be placed beneath the boom.
- Switch off the engine.
- With the engine switched off, lower the boom slowly until it rests on the supporting prop.
- Set the control lever to "NEUTRAL" and secure it with the work equipment lock lever (2) (locked).

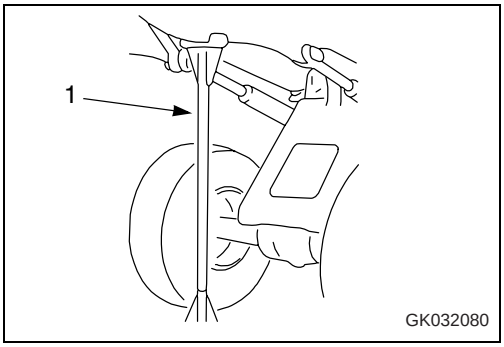

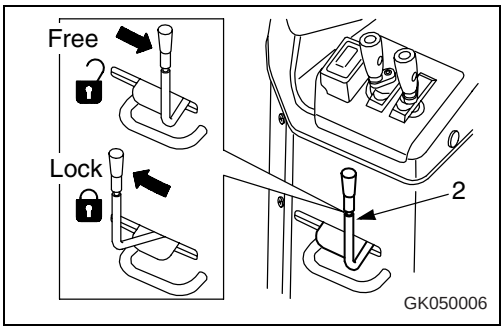

Downloaded from www.Manualslib.com manuals search engine

https://truckmanualshub.com/

Precautions when using hammer

When using a hammer, pins may fly out or metal particles may be scattered. This may lead to serious injury. Always do as follows.

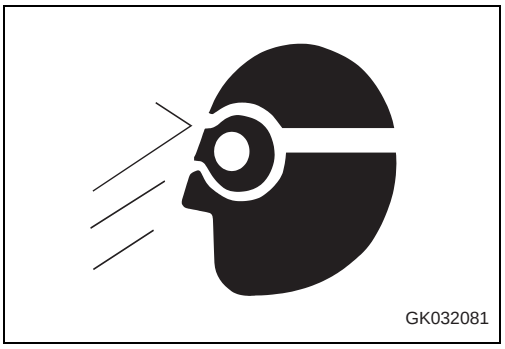

- If hard metal parts such as pins, bucket teeth, cutting edges, or bearings are hit with a hammer, there is a hazard that pieces might be scattered and cause injury. Always wear safety goggles and gloves.
- When hitting pins or bucket teeth, there is a hazard that broken pieces might be sent flying and injure people in the surrounding area. Always check that there is no one in the surrounding area.
- There is a hazard that the pin hit with strong force may fly out and injure people in the surrounding area.

Repair welding

Welding operations must always be carried out by a qualified welder and in a place equipped with proper equipment. There is a hazard of gas, fire, or electrocution when carrying out welding, so never allow any unqualified personnel to carry out welding.

Removing battery terminal

When repairing the electrical system or when carrying out electrical welding, remove the negative (-) terminal of the battery to prevent the flow of current.

Downloaded from www.Manualslib.com manuals search engine

https://truckmanualshub.com/

Precautions with high-pressure oil

The hydraulic system is always under internal pressure. In addition, the fuel piping is also under internal pressure when the engine is running and immediately after the engine is stopped. When carrying out inspection or replacement of the piping or hoses, check that the internal pressure in the circuit has been released. If this is not done, it may lead to serious personal injury. Always do as follows.

- When carrying out inspection and maintenance of the pressure, release the pressure before starting. For details, see "Maintenance with engine running (2-32)". Do not carry out inspection or replacement work with the circuit under pressure.
- If there is any leakage from the piping or hoses, the surrounding area will be wet, so check for cracks in the piping and hoses and for swelling in the hoses.

  When carry out inspection, wear safety glasses and leather gloves.
- There is a hazard that high-pressure oil leaking from small holes may penetrate your skin or cause blindness if it contacts your eyes directly. If you are hit by a jet of high-pressure oil and suffer injury to your skin or eyes, wash the place with clean water, and consult a doctor immediately for medical attention.
- The pressure in the E.C.S.S. circuit is stored by an accumulator. Do not remove the E.C.S.S. piping or components.
  If it is necessary to remove them, please ask your KOMATSU distributor to carry out the removal operation.

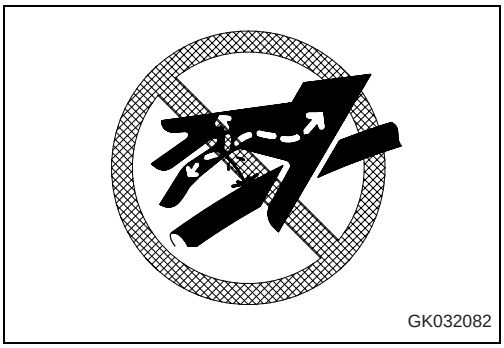
GK032082

Precautions for high-pressure fuel

High pressure is generated inside the engine fuel piping when the engine is running. When carrying out inspection or maintenance of the fuel piping system, wait for at least 30 seconds after stopping the engine to let the internal pressure go down before starting inspection or maintenance.

Downloaded from www.Manualslib.com manuals search engine

https://truckmanualshub.com/

Handling high-pressure hoses

- If oil or fuel leaks from high-pressure hoses, there is danger that it may cause fire or defective operation, which may lead to serious injury or fire. If there are any loose hoses or piping, or any leakage of oil or fuel from the hose or piping mount, stop operation and tighten to the specified torque.
- If any damaged hoses are found, stop operations immediately and contact your KOMATSU distributor.
- Replace all hoses every 2 years at the latest. The shelf life of the hose should not exceed 2 years.
- Hoses must be replaced as soon as the following damage is noticeable:
  - damage to the outer layer through to the intermediate layer,
  - brittleness in the outer layer,
  - distortions in pressurised or unpressurised state not conforming with the original shape of the installed hose,
  - leakages,
  - damage to the hose fittings or to the connection between fittings and hose,
  - storage damage.
- When replacing the hoses, always replace the O-rings, gaskets, and other such parts at the same time.
- See "Periodic replacement of safety critical parts (4-21)".

Precautions for high voltage

When the engine is running or immediately after it has stopped, high voltage is generated at the injector terminal and inside the engine controller, so there is danger of electrocution. Never touch the injector terminal or the inside of the engine controller. If it is necessary to touch the injector terminal or the inside of the engine controller, please contact your KOMATSU distributor.

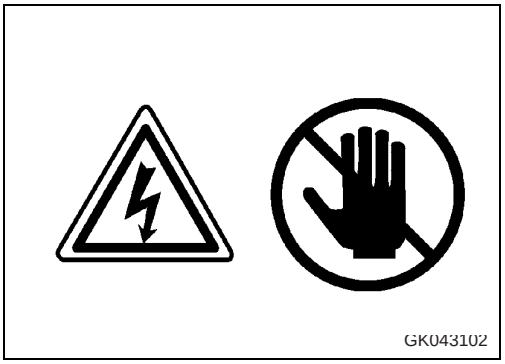

Downloaded from www.Manualslib.com manuals search engine

https://truckmanualshub.com/

Waste materials

To prevent pollution, pay careful attention to the method of disposing of waste materials.

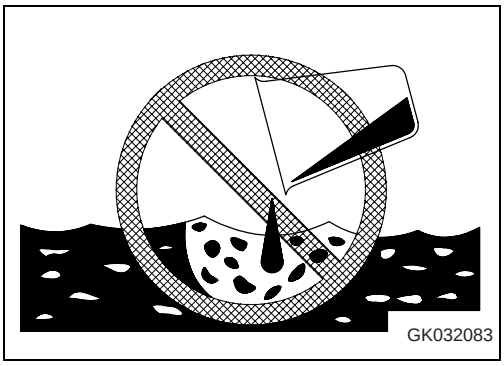

- Always put oil drained from your machine in containers. Never drain oil directly onto the ground or dump into the sewage system, rivers, the sea, or lakes.
- Obey appropriate laws and regulations when disposing of harmful objects such as oil, fuel, coolant, solvent, filters, and batteries.

Maintenance of air conditioner

- If air conditioner refrigerant gets into your eyes, it may cause blindness; if it touches your skin, it may cause frostbite.
- Never touch refrigerant.

Compressed air

- When carrying out cleaning with compressed air, there is a hazard of serious injury caused by flying particles.
- When using compressed air to clean elements or the radiator, always wear safety goggles, dust mask, gloves, and other protective equipment.

Periodic replacement of safety critical parts

- In order for the machine to be operated safely for a long time, it is necessary to add oil and to carry out service and maintenance at periodic intervals. In order to further increase safety, components with a strong relationship to safety, such as hoses and seat belts, must be replaced at periodic intervals.

  Replacement of safety critical parts: See "Periodic replacement of safety critical parts (4-21)".

- The material of these components naturally changes over time, and repeated use causes deterioration, wear, and fatigue. As a result, there is a hazard that these components may fail and cause serious injury or death. It is difficult to judge the remaining life of these components from external inspection or the feeling when operating, so always replace them at the specified interval.
- Replace or repair safety-critical parts if any defect is found, even when they have not reached the time specified interval.
- Replace all hoses every 2 years at the latest. The shelf life of the hose should not exceed 2 years.

Downloaded from www.Manualslib.com manuals search engine

https://truckmanualshub.com/

2.5 Precautions with tires

Handling tires

See also "Handling the tires (3-157)".

If tires or rims are handled mistakenly, there is danger that the tire may explode or be damaged, or that the rim may fly off and cause serious injury or death.

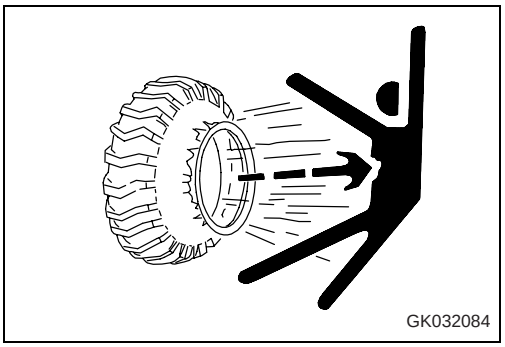
GK032084

To maintain safety, always do as follows.

- Maintenance, disassembly, repair, and assembly of the tires and rims requires special equipment and special technology, so always ask your KOMATSU distributor to carry out these operations.
- Inflate tyres up to the defined pressure. If the tyre pressure is too low, the tyres may heat up and burst. If the tyre pressure is too high, there is also danger that the tyre may burst.
- If a tyre heats up considerably, inflammable gases are produced. A burning tyre may burst very easily, thus spreading fire over a large area.
- Check the tyre pressure when the tyres are still cold. Do not let off pressure, when the pressure in a warm tyre has increased.
- Do not light a fire and do not carry out welding near the tyre.
- Keep the working area free of pointed or sharp objects that may damage the tyre.
- Avoid any overload.
- The values for tyre pressure and permitted speed given in this manual correspond to the manufacturers' values. See also "Handling the tires (3-157)".
- For details, please refer to your KOMATSU distributor or the tyre manufacturer.

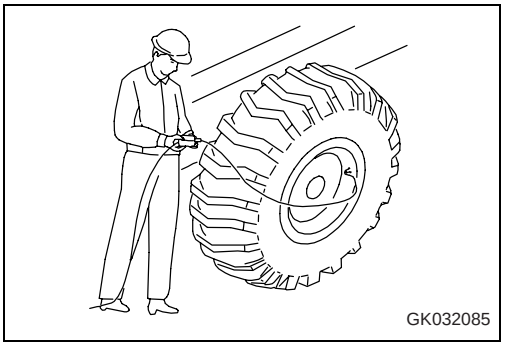
GK032085

Precautions when storing tires

Tires for construction equipment are extremely heavy, so they may cause serious personal injury.

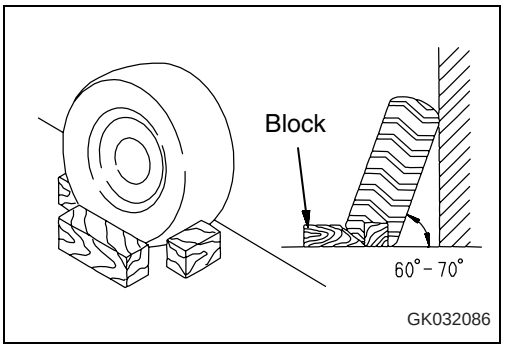

GK032086

- Basically, tyres must be stored in a protected room that cannot be accessed by unauthorised persons.
- Place the tyres on an even surface and incline them 60° to 70° against a solid stopper. Secure the tyres with wheel chocks so that they cannot roll away, tip over, or slip.
- If, however, a tyre tips over despite this safety measure, do not try to stop it, but get out of the way as quickly as possible, since tyres for construction machines are very heavy and may cause serious injuries.

Downloaded from www.Manualslib.com manuals search engine

https://truckmanualshub.com/

3. Operation

WARNING

Please read and make sure that you understand the SAFETY section before reading this section.

Downloaded from www.Manualslib.com manuals search engine

https://truckmanualshub.com/

3.1 General view

3.1.1 General view of machine

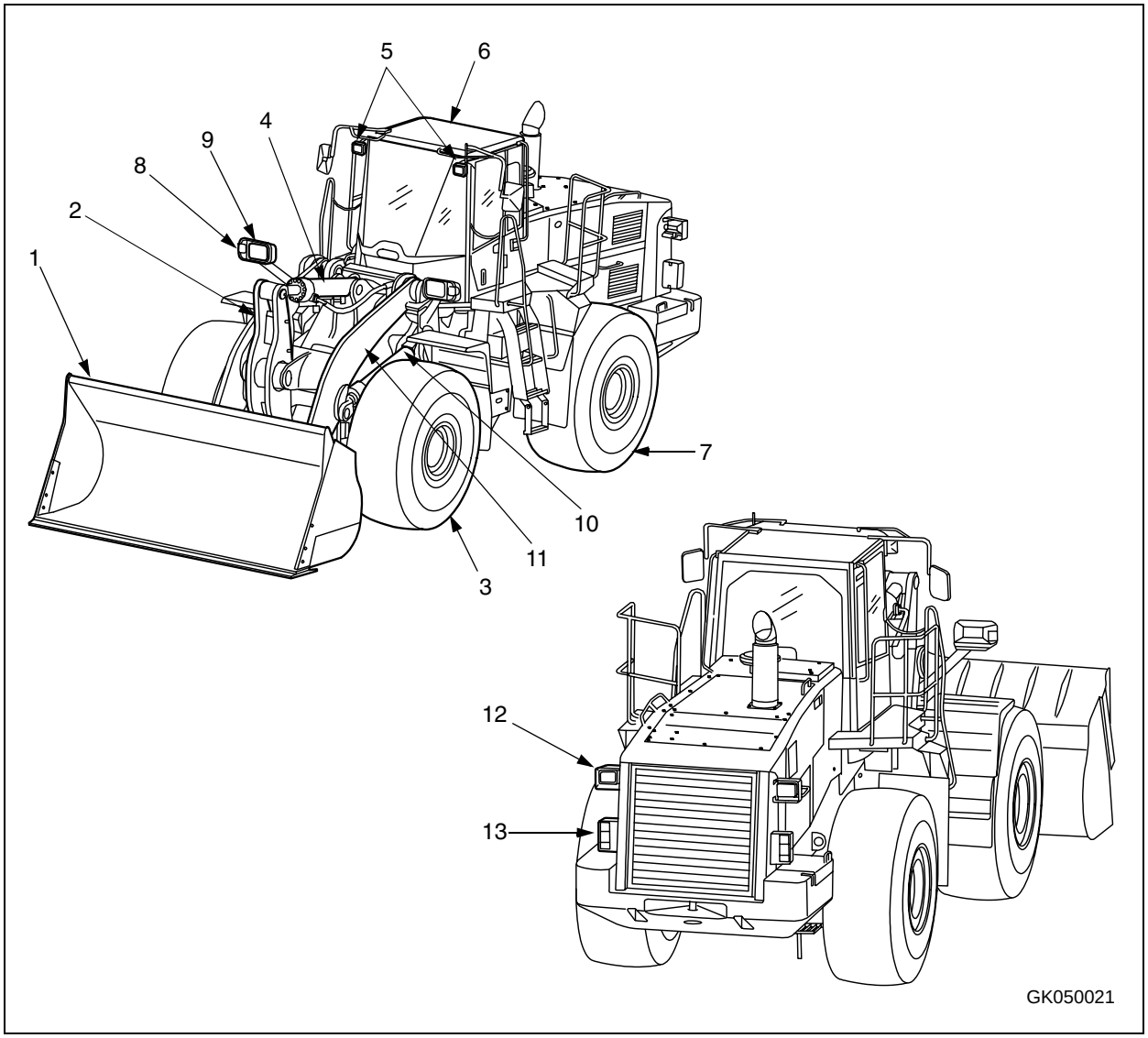

(1) Bucket	(8) Turn signal lamp
(2) Tilt lever	(9) Head lamp
(3) Front wheel	(10) Lift cylinder
(4) Bucket cylinder	(11) Lift arm
(5) Front working lamp	(12) Rear working lamp
(6) ROPS cab	(13) Rear combination lamp
(7) Rear wheel	

Downloaded from www.Manualslib.com manuals search engine

https://truckmanualshub.com/

3.1.2 General view of controls and gauges

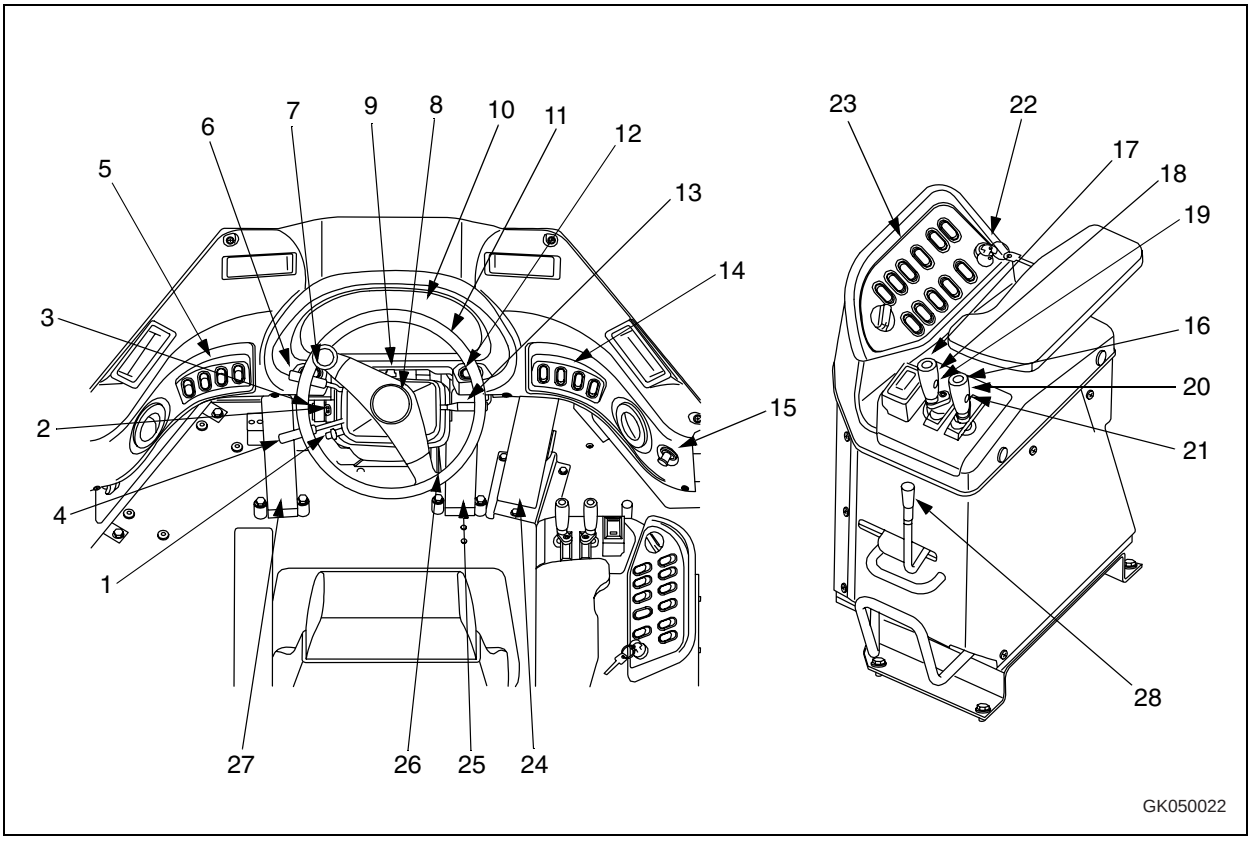

(1) Gearshift lever stopper	(14) Front switch panel (right)
(2) Rear wiper switch	(15) Cigarette lighter
(3) Front wiper switch	(16) Load meter cancel switch (Option)
(4) Gearshift lever	(17) Kickdown switch
(5) Front switch panel (left)	(18) Lift arm control lever
(6) Directional lever	(19) Hold switch
(7) E.C.S.S. switch (*) (Option)	(20) Bucket control lever
(8) Horn button	(21) Load meter sub-total switch (Option)
(9) Hazard lamp switch	(22) Starting switch
(10) Monitor	(23) Right switch panel
(11) Steering wheel	(24) Accelelator pedal
(12) Parking brake switch	(25) Right brake pedal
(13) Lamp switch	(26) Steering tilt lock lever
(13) Turn signal lever	(27) Left brake pedal
(13) Dimmer switch	(28) Work equipment lock lever

(*) E.C.S.S.: Electrically Controlled Suspension System

Downloaded from www.Manualslib.com manuals search engine

https://truckmanualshub.com/

Front switch panel

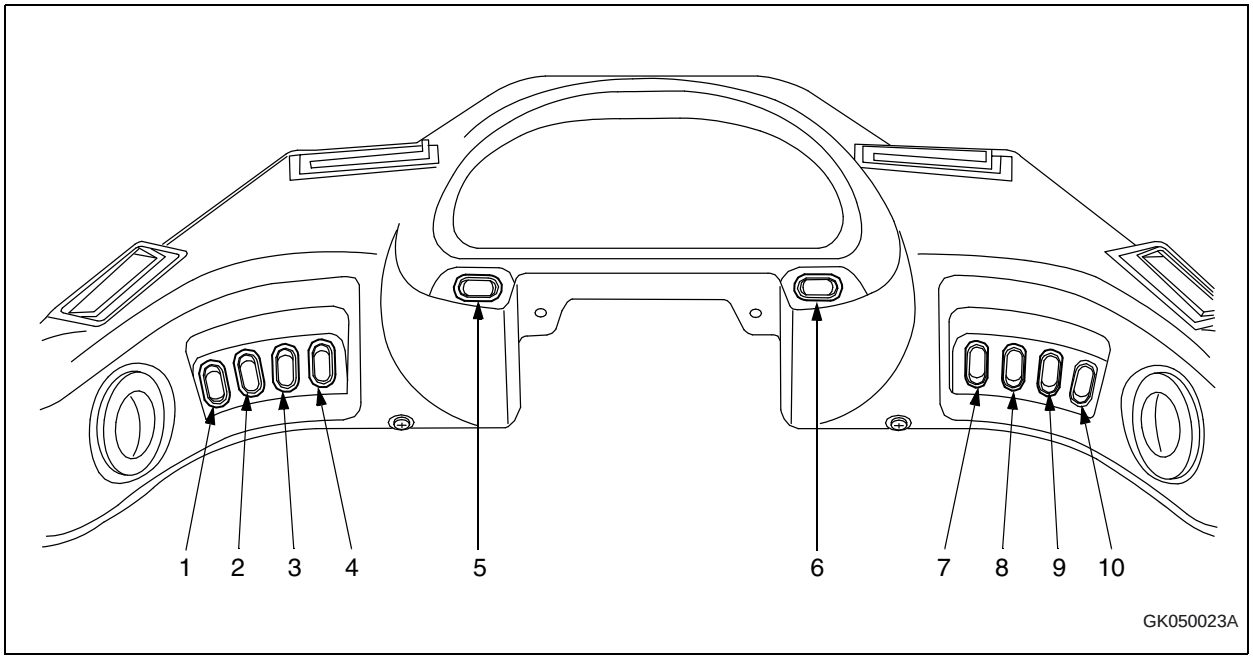

(1) Load meter display selector switch (Option)
(2) Load meter mode selector switch (Option)
(3) Character display mode selector switch
(4) Character display item selector switch
(5) E.C.S.S. switch (*) (Option)
(6) Parking brake switch
(7) Front working lamp switch
(8) Rear working lamp switch
(9) Beacon lamp switch (Option)
(10) Auto-greasing switch

(*) E.C.S.S.: Electrically Controlled Suspension System

Downloaded from www.Manualslib.com manuals search engine

https://truckmanualshub.com/

Right switch panel

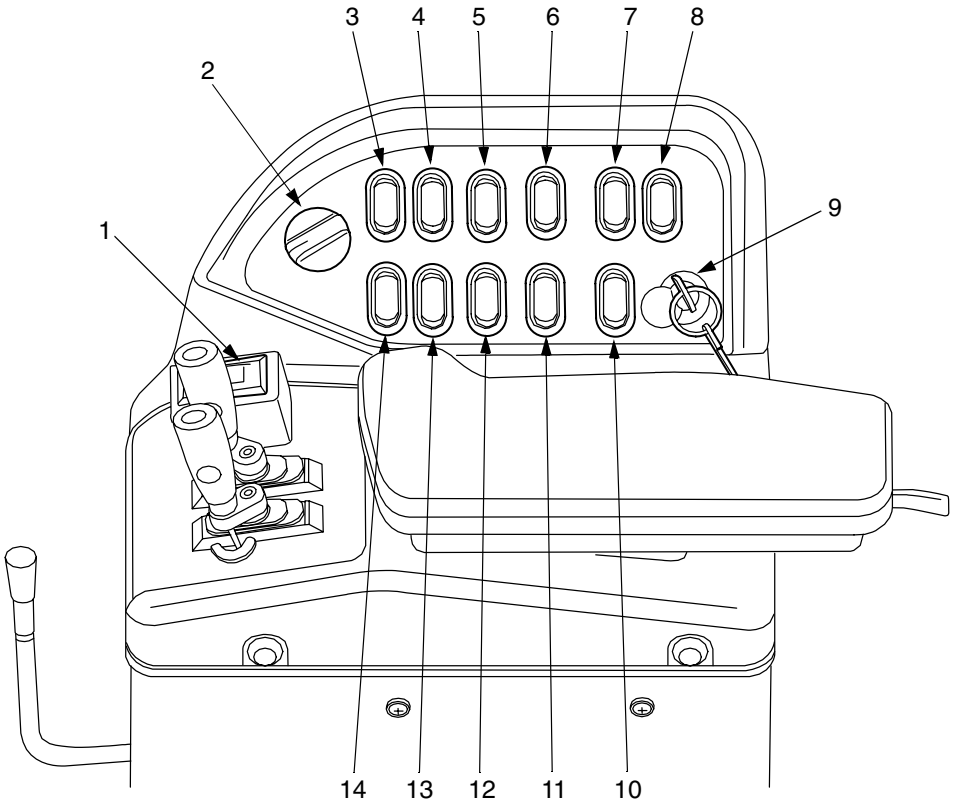

(1) Directional selector switch
(2) Transmission auto shift/manual selector switch
(3) Transmission cut-off switch
(4) Transmission cut-off set switch
(5) Remote positioner raise/lower set switch
(6) Remote positioner bucket angle set switch
(7) RPM set ON-OFF switch
(8) RPM set idling up-down selector switch
(9) Starting switch
(10) Cooling fan reverse rotation switch
(11) Semi auto digging switch
(12) Directional selector ON/OFF switch
(13) Torque converter lock-up switch (Option)
(14) Engine power mode selector switch

Downloaded from www.Manualslib.com manuals search engine

https://truckmanualshub.com/

Overhead portion

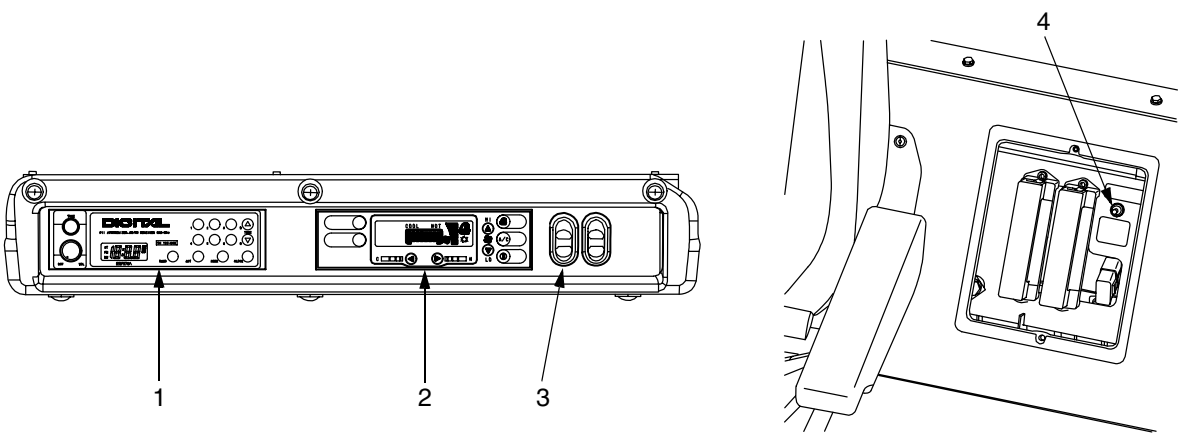

Right overhead portion	Rear of operator's seat
(1) Cassette stereo with AM/FM radio (Option)	(4) Emergency parking brake cancel switch
(2) Air conditioner control panel	
(3) Rear heated wire glass switch	

Downloaded from www.Manualslib.com manuals search engine

https://truckmanualshub.com/

Machine monitor

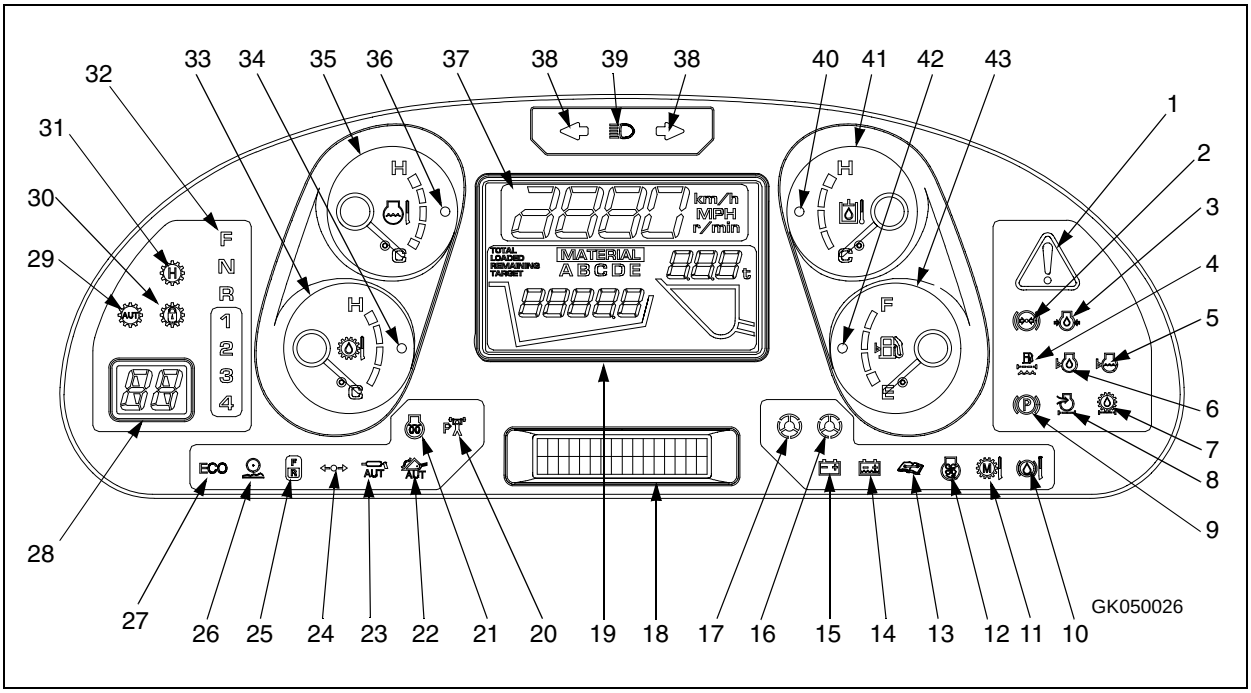

(1) Central warning lamp	(23) Auto-greasingpilot lamp (Option)
(2) Brake oil pressure caution lamp	(24) Joystick pilot lamp (Option)
(3) Engine oil pressure caution lamp	(25) Directional selector pilot lamp (Option)
(4) Fuel filter water detection caution lamp	(26) E.C.S.S. pilot lamp (*)
(5) Radiator coolant level caution lamp	(27) Economy mode operation display lamp
(6) Engine oil level caution lamp	(28) Shift indicator
(7) Transmission oil filter clogging caution lamp	(29) Autoshift pilot lamp
(8) Air cleaner clogging caution lamp	(30) Lock-up pilot lamp (Option)
(9) Parking brake pilot lamp	(31) Shift hold pilot lamp
(10) Axle oil temperature caution lamp	(32) Shift lever position pilot lamp
(11) Modulation clutch temperature caution lamp	(33) Torque converter oil temperature gauge
(12) Cooling fan reverse rotation pilot lamp	(34) Torque converter oil temperature caution lamp
(13) Maintenance caution lamp	(35) Engine coolant temperature gauge
(14) Battery fluid level caution lamp (Option)	(36) Engine coolant temperature caution lamp
(15) Battery charge circuit caution lamp	(37) Speedometer or tachometer
(16) Steering oil pressure caution lamp	(38) Turn signal pilot lamp
(17) Emergency steering pilot lamp	(39) Head lamp high beam pilot lamp
(18) Character diaplay	(40) Hydraulic oil temperature caution lamp
(19) Load meter (Option)	(41) Hydraulic oil temperature gauge
(20) Output mode pilot lamp (power mode)	(42) Fuel level caution lamp
(21) Preheating pilot lamp	(43) Fuel gauge
(22) Semi auto digging pilot lamp	

(*) E.C.S.S.: Electrically Controlled Suspension System

Downloaded from www.Manualslib.com manuals search engine

https://truckmanualshub.com/

3.2 Explanation of components

The following is an explanation of the devices needed for operating the machine.

To carry out suitable operations correctly and safely, it is important to understand fully the methods of operating the equipment and the meanings of the displays.

3.2.1 Machine monitor

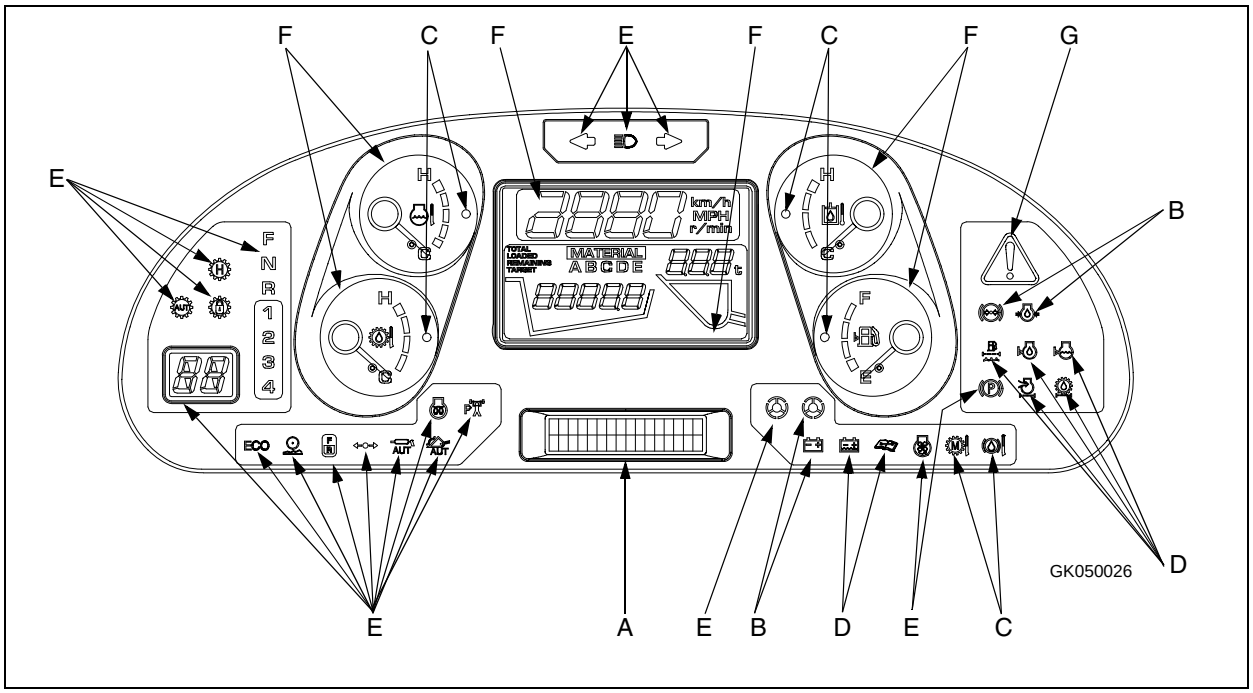

A: Character display	E: Pilot display
B: Emergency stop items	F: Meter display
C: Caution items	G: Central warning lamp
D: Inspection and maintenance items	

NOTE

When turning the starting switch to the ON position before starting the engine, the central warning lamp, caution lamps, and pilot lamps light up for 2 seconds to check the system.
After the alarm buzzer sounds for 2 seconds, it goes off if the condition is normal.
The shift indicator display shows “88“ for 2 seconds.
The indicator gauges and meters are actuated after the above system check is completed.
The character display shows “KOMATSU WA500“ for 3 seconds.
If the lamps do not light up, there is probably a failure or disconnection, so contact your KOMATSU distributor for inspection.

Downloaded from www.Manualslib.com manuals search engine

https://truckmanualshub.com/

Types of warning

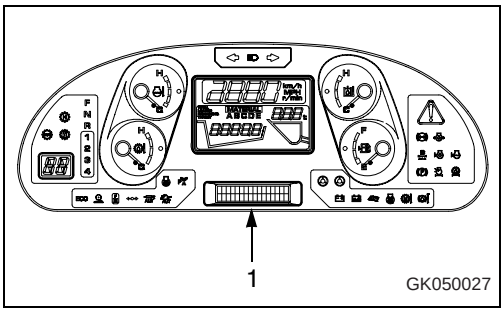

If an abnormality occurs on the machine, or if any switch or lever is operated accidently, the monitor display and buzzer give a warning to inform the operator.

Following are the types of warning depending on the level of danger.

REMARK

For details of action codes “E03“ to “E00“, see "Action code display (3-12)".

Emergency stop

This warning is given if there is a serious failure that affects the normal operation of the machine or if the setting is incorrect.

The central warning lamp on the monitor and the caution lamp for the location of the abnormality light up, and at the same time, the alarm buzzer sounds and action code “E03“ is displayed on character display (1).

REMARK

The alarm buzzer sounds in a 1.6 second cycle. (0.8 sec. “ON“ -> 0.8 sec. “OFF“) (The same cycle for ON, OFF)

Caution

This warning is given if the cooling water or lubricating oil overheat.

The central warning lamp on the monitor and the individual caution lamps light up, and at the same time, the alarm buzzer sounds and action code “E02“ is displayed on character display (1).

REMARK

The alarm buzzer sounds in a 1.6 second cycle. (0.8 sec. “ON“ -> 0.8 sec. “OFF“) (The same cycle for ON, OFF)

Mistaken operation

This warning is given if any switch or lever is operated mistakenly.

The central warning lamp on the monitor lights up and the alarm buzzer sounds at the same time.

(The ON and OFF cycles have a different length.)

In addition, if the travel speed overruns, “OVERRUN PROTECT“ is displayed on the character display.

REMARK

The alarm buzzer sounds in a 0.25 second cycle. (0.2 sec. “ON“ -> 0.05 sec. “OFF“) (The ON and OFF cycles have a different length)

Downloaded from www.Manualslib.com manuals search engine

https://truckmanualshub.com/

Inspection and maintenance

This warning is given if it is necessary to carry out inspection and maintenance of wear parts, or if it is necessary to check the oil or cooling water level.

The individual caution lamp on the monitor lights up, and at the same time, action code “E01“ is displayed on character display (1).

In the case of this warning, the central warning lamp does not light up and the alarm buzzer does not sound.

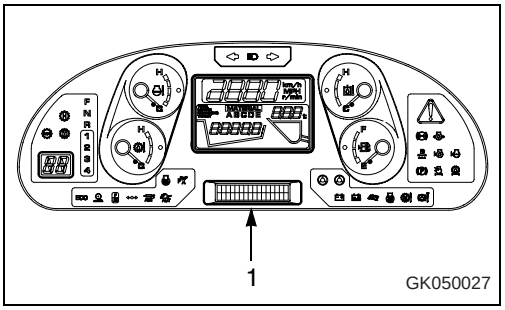

Central warning lamp

This display portion (1) lights up if any emergency stop item, caution item, or mistaken operation of any switch or lever occurs. At the same time, the alarm buzzer sounds.

Check the content of the display and carry out the specified action for the item.

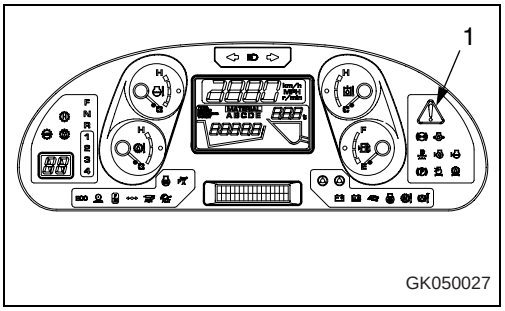

Downloaded from www.Manualslib.com manuals search engine

https://truckmanualshub.com/

Character display portion

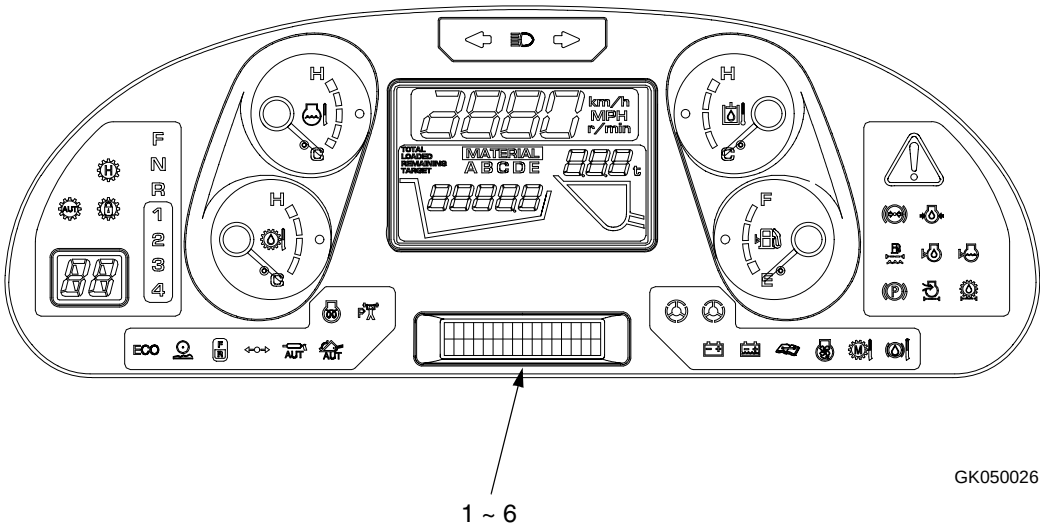

(1) Service meter
(2) Clock
(3) Action code display
(4) Failure code display
(5) Filter, oil replacement time display
(6) Engine speed (or travel speed) display

Normally, the service meter is displayed on the character display.

If the machine has failed, or if there has been excessive load on the machine, or if it is necessary to carry out inspection and maintenance, an action code is displayed to recommend suitable action.

When the time for replacing the filter or changing the oil is reached, after completion of the system check with the starting switch at the ON position, the maintenance monitor caution lamps flash or light up, and at the same time, the filter or oil to be replaced is displayed.

NOTE

Information regarding the failure of the machine or maintenance is displayed on the character display when the starting switch is at the ON position, check the display to confirm that there is no abnormality before starting to travel.

Downloaded from www.Manualslib.com manuals search engine

https://truckmanualshub.com/

1. Service meter

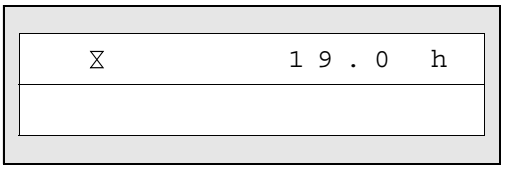

This meter (1) shows the total time that the machine has been operating.

While the engine is running, the service meter advances even if the machine is not moving.

The meter advances by 1 for every hour of operation, regardless of the engine speed.

Even if the starting switch is OFF, the service meter is displayed on the top line if the top (◇) portion of the character display mode selector switch is kept pressed.

NOTE

If the starting switch is OFF and service meter is displayed even when the top (◇) portion of the character display mode selector switch is not being pressed, there is probably a problem with the gauge, so ask your KOMATSU distributor to carry out inspection.

2. Clock

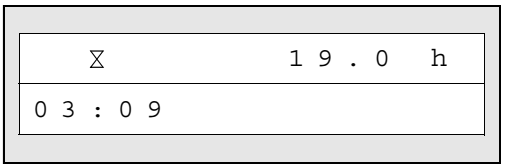

This meter (2) shows the time.

For details of the method for setting the time, see "Method of adjusting clock (3-43)".

Even when the starting switch is OFF, the time is displayed on the bottom line if the top (◇) portion of the character display mode selector switch is kept pressed.

3. Action code display

⚠ WARNING

If action code E03 is displayed, stop the machine immediately and check the failure code. For details, see "Failure code display (3-14)".
Inform your KOMATSU distributor of the failure code and ask for repairs.

If there is a failure on the machine, or it is necessary to change the method of operation, or if inspection or maintenance must be carried out, action code E01, E02, or E03 is displayed on the character display in display portion.
If different failures occur at the same time, the action code for the more serious problem is displayed.

The level of seriousness is as follows, starting with the most serious: E03, E02, E01.
In the case of action codes E02, and E03, the alarm buzzer sounds intermittently and the central warning lamp lights up.

If action codes E01, E02, or E03 are displayed on the character display, stop operations, check the content of the display, and take the following action.

Downloaded from www.Manualslib.com manuals search engine

https://truckmanualshub.com/

E03: When this code is displayed, stop the machine immediately, check the failure code, and contact your KOMATSU distributor for repairs.

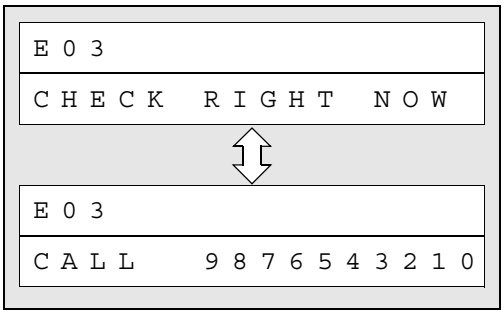

REMARK

"E03" is displayed on the top line of the character display and "CHECK RIGHT NOW" and "CALL" are displayed in turn on the bottom line for 3 seconds each.
The telephone number is displayed to the right of "CALL". If no telephone number has been set, the display is blank. For details of the method of inputting the telephone number, see Section ""Input method for telephone number (3-40)"".

E02: If the overheat related display is given, stop the machine and run the engine under no load at a mid-range speed.

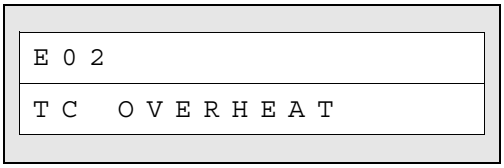

If an action code is still displayed after doing this, check the failure code and contact your KOMATSU distributor for repairs.

REMARK

The top line of the character display displays "E02" and the bottom line displays the condition of the machine related to overheating.

E01: When a failure occurs in the mechanical system, such as a drop in the level of the engine cooling water, the maintenance location is displayed. If the maintenance caution lamp lights up at the same time, carry out inspection and maintenance of the item indicated after completion of the day's work or when changing shifts. If "MAINTENANCE" is displayed together with E01, check the failure code and ask for repairs to be carried out.

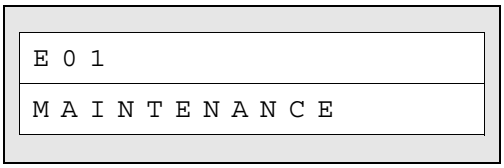

REMARK

"E01" is displayed on the top line of the character display, and "MAINTENANCE" or the part of the machine requiring inspection, filling of fluid, or replacement is displayed on the bottom line.

If any display related to overrun is given, reduce the engine speed or machine travel speed, and continue operations.

Downloaded from www.Manualslib.com manuals search engine

https://truckmanualshub.com/

4. Failure code display

If an action code is displayed on the character display, check the failure code according to the failure code display method given below.

When contacting your KOMATSU distributor to request repairs, please inform your distributor of the failure code.

Method of displaying failure code

1. If an action code is displayed on the character display of display portion, press the top (>) of of character display item selector switch (1).

   The action code will change to the failure code.

   - The failure code is displayed with the first 6 digits on the left side of the character display.
   - The code displayed after the space on the right side of the failure code indicates the controller that detected the failure code.
   - The component that has caused the problem is shown at the bottom of the character display.

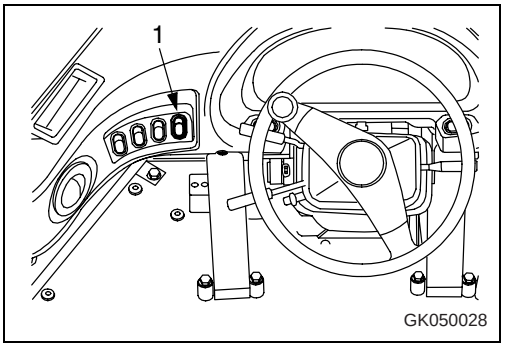

D D T L K A T M
T R A N S M I S S I O N

Right code	Controller detecting failure code
MON	Machine monitor
TM	Transmission controller
ENG	Engine controller
WRK	Work equipment controller (Option)

2. Press the top (>) portion of character display item selector switch (1).

   If the condition is normal, the service meter is displayed for several seconds, then the display returns to the action code.

   If more than one failure has occurred at the same time, the next failure code is displayed.

Downloaded from www.Manualslib.com manuals search engine

https://truckmanualshub.com/

5. Filter, oil replacement time display

```
13:TM  FILT
    10h    :     5
```

After completion of the system check and when the starting switch is in the ON position, if any filter or oil item is approaching the replacement time, this display (5) shows the item for approx. 30 seconds. When this happens, the maintenance caution lamp also flashes or lights up.

After replacing the filter or changing the oil, reset the time for replacement. For details, see "Reset method for filter, oil replacement time (3-38)".

REMARK

The ID number and name of the item needing replacement is displayed on the top line of the character display. The bottom line shows the time remaining to replacement and the total number of times that the item has been replaced.
If the replacement time has already passed, a minus (-) sign appears before the time.
After the display has been given for 30 seconds, it does not appear again until the starting switch is turned to the ON position.
The message in the illustration above is not shown on the character display if an action code is being displayed.
If there are two or more items to be displayed, they are displayed repeatedly in turn. If there are more than 10 items, all the items are displayed once each, then the display returns to the normal display.
The filter or oil replacement time is displayed when the remaining time reaches 30 hours. When the replacement interval has passed, the remaining time up to 30 hours is marked with a - mark. Note that when more than 30 hours have passed after the replacement interval, the item is not displayed again.
The maintenance caution lamp flashes as the replacement time approaches, and after the replacement time has passed, it lights up.

Items for display of filter, oil replacement time

Item	Replacement interval (H)	Character display	ID number
Engine oil	500	ENG OIL	01
Engine oil filter	500	ENG OIL FILTER	02
Fuel pre-filter	500	FUEL P FILT	41
Transmission oil filter	500	TRANSM FILTER	13
Fuel filter	1000	FUEL FILTER	03
Transmission oil	1000	TRANSM OIL	12
Corrosion resistor	1000	CORR-RESISTER	06
Hydraulic tank breather element	2000	HYD BREATHER	05
Hydraulic filter	2000	HYD FILT	04
Hydraulic oil	2000	HYD OIL	10
Axle oil	2000	AXLE OIL	15

Downloaded from www.Manualslib.com manuals search engine

https://truckmanualshub.com/

REMARK

See the section below for details of the procedure for replacing the filter and oil.

- *Engine oil*
  "Change oil in engine oil pan, replace engine oil filter cartridge (4-64)"
- *Engine oil filter*
  "Change oil in engine oil pan, replace engine oil filter cartridge (4-64)"
- *Fuel pre-filter cartridge*
  "Replace fuel pre-filter cartridge (4-65)"
- *Transmission oil filter*
  "Replace transmission oil filter element (4-70)"
- *Fuel filter*
  "Replace fuel pre-filter cartridge (4-65)"
- *Transmission oil*
  "Change oil in transmission case, clean strainer (4-68)"
- *Corrosion resistor*
  "Replace corrosion resistor cartridge (4-75)"
- *Hydraulic tank breather element*
  "Replace hydraulic tank breather element (4-79)"
- *Hydraulic filter*
  "Change oil in hydraulic tank, replace hydraulic filter element (4-76)"
- *Hydraulic oil*
  "Change oil in hydraulic tank, replace hydraulic filter element (4-76)"
- *Axle oil*
  "Change axle oil (4-80)"

6. Engine speed (or travel speed) display

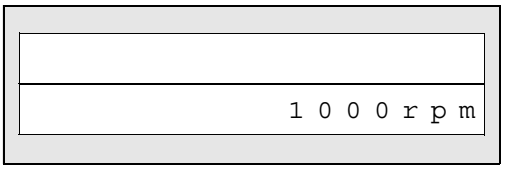

When the machine monitor meter displays the travel speed, this display shows the engine speed.

When the machine monitor meter displays the engine speed, this display shows the travel speed.

For details, see "Method of switching travel speed/engine speed display/non display (3-45)".

Downloaded from www.Manualslib.com manuals search engine

https://truckmanualshub.com/

Emergency stop item

CAUTION

If these lamps light up and the buzzer sounds, stop operations immediately and carry out inspection and maintenance of the applicable location.

If any abnormality is found in the emergency stop items, the alarm buzzer will sound intermittently, and the lamp for the location of the abnormality and the central warning lamp will light up.

At the same time, “E03 CHECK RIGHT NOW“ is displayed on the character display, so stop the machine immediately, then stop the engine and carry out inspection.

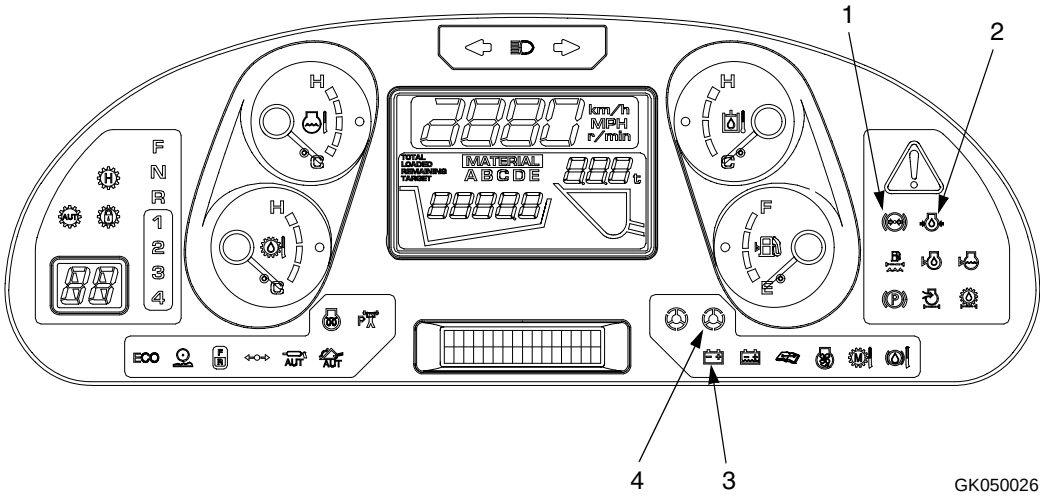

(1) Brake oil pressure caution lamp
(2) Engine oil pressure caution lamp
(3) Battery charge circuit caution lamp
(4) Steering oil pressure caution lamp

Downloaded from www.Manualslib.com manuals search engine

https://truckmanualshub.com/

1. Brake oil pressure caution lamp

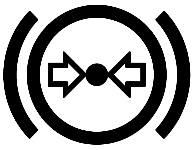

GK032093

This lamp (1) lights up when the brake oil pressure goes below the specified value.

During checks before starting (when the starting switch is turned to the ON position but the engine is not started), the brake circuit is not actuated while the engine is stopped, so the brake oil pressure caution lamp and central warning lamp do not light up and the alarm buzzer does not sound.

During operation (engine running)

If the brake oil pressure goes down during operation, the brake oil pressure caution lamp and central warning lamp light up and the alarm buzzer sounds intermittently.

At the same time, “E03 CHECK RIGHT NOW“ is displayed on the character display, so stop the machine immediately, then stop the engine and carry out inspection.

When the brake oil pressure caution lamp lights up during operation, if the oil pressure drops further, the parking brake is automatically actuated.

Immediately after the engine starts, the accumulator is in the process of storing pressure, so the brake oil pressure caution lamp lights up, but the central warning lamp does not light up and the alarm buzzer does not sound.

Do not move the machine until the brake oil pressure caution lamp goes out. Keep the parking brake applied.

2. Engine oil pressure caution lamp

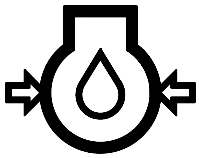

GK032094

This lamp (2) lights up to warn the operator that the engine lubricating oil pressure has dropped.

During checks before starting (starting switch at the ON position, engine stopped) the lamps are lighted up, and when the engine is started, the lamps go out.

During operation (engine running)

If the engine lubricating oil pressure goes down during operation, the engine lubricating oil pressure caution lamp and central warning lamp light up and the alarm buzzer sounds intermittently.

At the same time, “E03 CHECK RIGHT NOW“ is displayed on the character display, so stop the machine immediately, then stop the engine and carry out inspection.

Downloaded from www.Manualslib.com manuals search engine

https://truckmanualshub.com/

3. Battery charge circuit caution lamp

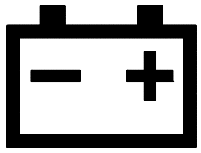
GK032095

This lamp (3) lights up when the engine is running to warn the operator that an abnormality has occurrred in the charging circuit.

During checks before starting (starting switch at the ON position, engine stopped) the lamps are lighted up, and when the engine is started, the lamps go out.

During operation (engine running)

If an abnormality occurrs in the charging circuit during operation, the battery charge circuit caution lamp and central warning lamp light up and the alarm buzzer sounds intermittently.

At the same time, “E03 CHECK RIGHT NOW“ is displayed on the character display, so stop the machine immediately, then stop the engine and carry out inspection.

4. Steering oil pressure caution lamp

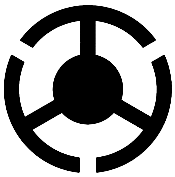
GK032096

(Red)

This lamp (4) lights up to warn the operator that the steering oil pressure has dropped.

During checks before starting (starting switch at the ON position, engine stopped) the lamps are lighted up, and when the engine is started, the lamps go out.

During operation (engine running)

If the steering oil pressure goes down during operation, the steering oil pressure caution lamp and central warning lamp light up and the alarm buzzer sounds intermittently.

At the same time, “E03 CHECK RIGHT NOW“ is displayed on the character display, so stop the machine immediately, then stop the engine and carry out inspection.

Downloaded from www.Manualslib.com manuals search engine

https://truckmanualshub.com/

Caution items

CAUTION

If these lamps light up, stop operations quickly and carry out the following action.

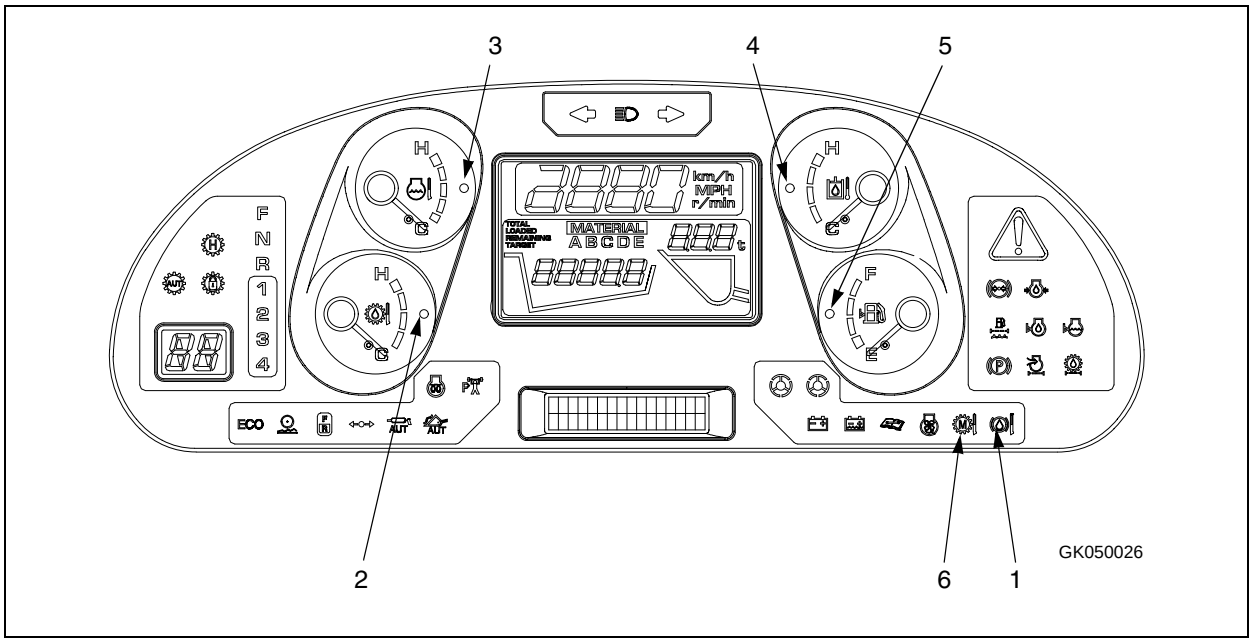

(1) Axle oil temperature caution lamp
(2) Torque converter oil temperature caution lamp
(3) Engine coolant temperature caution lamp
(4) Hydraulic oil temperature caution lamp
(5) Fuel level caution lamp
(6) Modulation clutch temperature caution lamp

Downloaded from www.Manualslib.com manuals search engine

https://truckmanualshub.com/

1. Axle oil temperature caution lamp

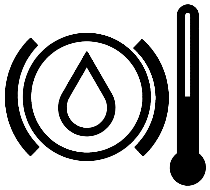
GK032097

This lamp (1) lights up to warn the operator that the axle oil temperature has risen.

During checks before starting (when the starting switch is turned to the ON position but the engine is not started), this monitor does not light up.

During operation (engine running)

When heavy-duty operations are carried out continuously or the brake has been used frequently when traveling long distances downhill, the axle oil temperature becomes high and the axle oil temperature caution lamp flashes. If the axle oil temperature becomes even higher, the axle oil temperature caution lamp lights up and the alarm buzzer sounds intermittently.

At the same time, “E02 BRAKE OVERHEAT“ is displayed on the character display, so take the following action.

1. Release the accelerator pedal and move the speed range selector switch down one range to reduce the travel speed.
2. Avoid using the brake.
3. Do not keep the brake pedal depressed continuously; use the brake only intermittently.

If use of the brake is reduced for a short time in the way recommended above, the axle oil temperature will go down and the caution lamp will go out.

2. Torque converter oil temperature caution lamp

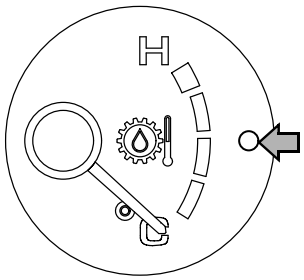

GK050041

This lamp (2) lights up to warn the operator that the torque converter oil temperature has risen.

During checks before starting (when the starting switch is turned to the ON position but the engine is not started), this monitor does not light up.

During operation (engine running)

If the torque converter oil temperature rises, the torque converter oil temperature caution lamp only will light up.

If the oil temperature rises further, the central warning lamp will light up and the alarm buzzer will sound intermittently.

The central warning lamp lights up and “E02 TC OVERHEAT“ is displayed on the character display, so stop the machine and run the engine under no load at a mid-range speed until the lamp goes out.

Downloaded from www.Manualslib.com manuals search engine

https://truckmanualshub.com/

3. Engine coolant temperature caution lamp

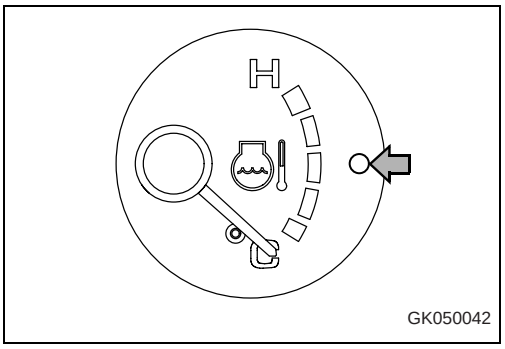

This lamp (3) lights up to warn the operator that the engine coolant water temperature has risen.

During checks before starting (when the starting switch is turned to the ON position but the engine is not started), this monitor does not light up.

During operation (engine running)

If the engine coolant temperature rises, only the engine coolant water temperature caution lamp will light up.

If the coolant temperature rises further, the central warning lamp will light up and the alarm buzzer will sound intermittently.

The central warning lamp lights up and “E02 ENGINE OVERHEAT“ is displayed on the character display, so stop the machine and run the engine under no load at a mid-range speed until the lamp goes out.

4. Hydraulic oil temperature caution lamp

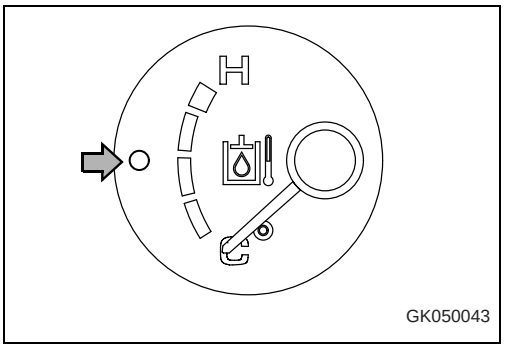

This lamp (4) lights up to warn the operator that the hydraulic oil temperature has risen.

During checks before starting (when the starting switch is turned to the ON position but the engine is not started), this monitor does not light up.

During operation (engine running)

If the hydraulic oil temperature rises, the hydraulic oil temperature caution lamp, the central warning lamp will light up, and the alarm buzzer will sound intermittently.

At the same time, “E02 HYD OVERHEAT“ is displayed on the character display, so stop the machine and run the engine under no load at a mid-range speed until the lamp goes out.

5. Fuel level caution lamp

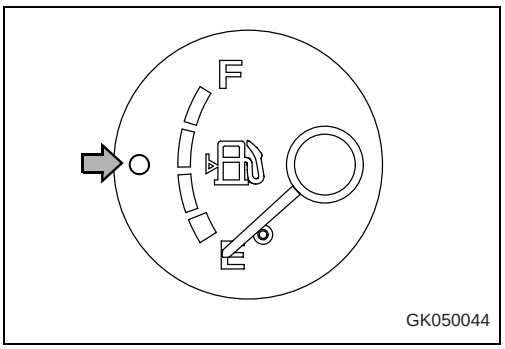

This lamp (5) lights up if the amount of fuel remaining in the fuel tank goes below 53 liters (14.0 US gal).

If it lights up, check and add fuel as soon as possible.

For details, see "Check fuel level, add fuel (3-98)".

REMARK

Even if the caution lamp lights up, action code “E02“ is not displayed on the character display.

Downloaded from www.Manualslib.com manuals search engine

https://truckmanualshub.com/

6. Modulation clutch temperature caution lamp

This lamp (6) is not active.

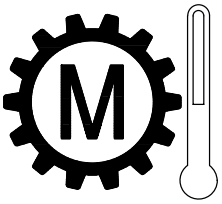

GK050029

Downloaded from www.Manualslib.com manuals search engine

https://truckmanualshub.com/

Inspection and maintenance item

CAUTION

If these lamps light up, stop operations quickly and carry out the following action.

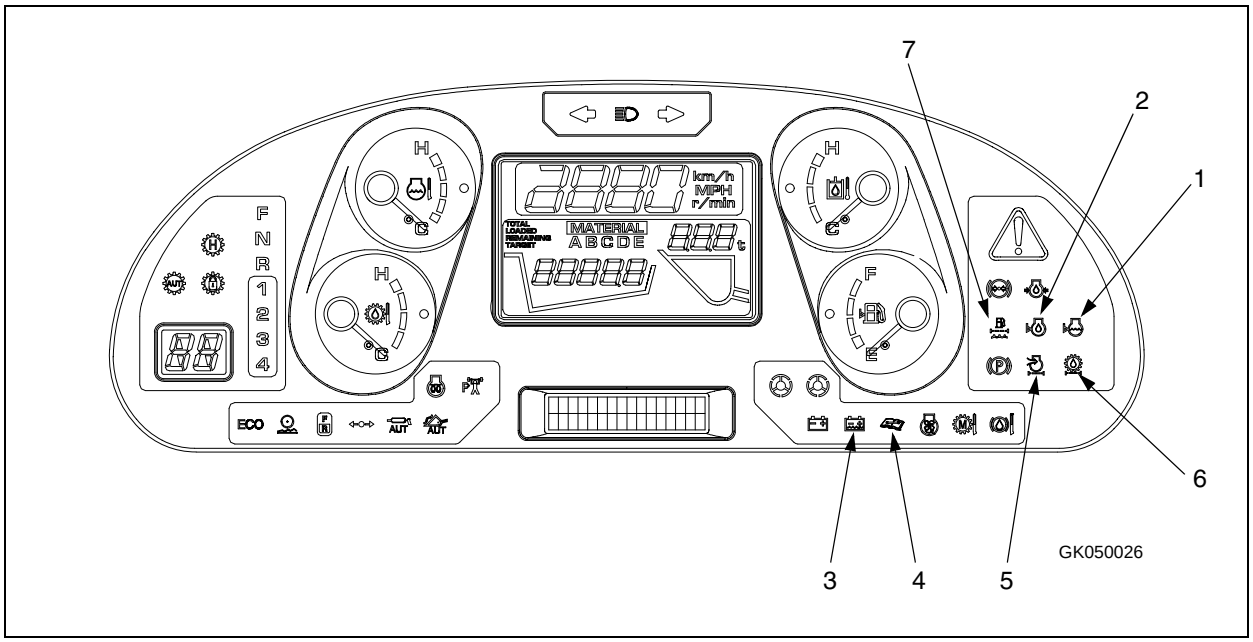

(1) Radiator coolant level caution lamp
(2) Engine oil level caution lamp
(3) Battery electrolyte level caution lamp (Option)
(4) Maintenance caution lamp
(5) Air cleaner clogging caution lamp
(6) Transmission oil filter clogging caution lamp
(7) Fuel filter water detection caution lamp

Downloaded from www.Manualslib.com manuals search engine

https://truckmanualshub.com/

1. Radiator coolant level caution lamp

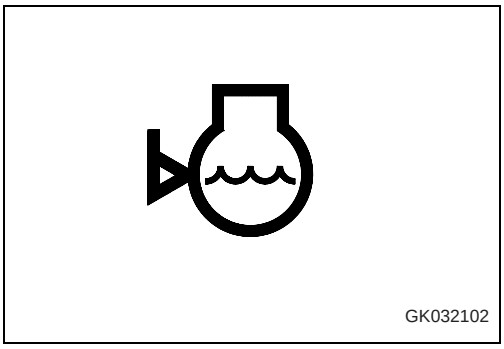
GK032102

This lamp (1) lights up to warn the operator that the coolant level in the radiator has gone down.

During checks before starting (when the starting switch is turned to the ON position but the engine is not started), this monitor lights up if the coolant level in the radiator is low.

At the same time, “E01 COOLANT LOW“ is displayed, so check the water level in the radiator sub-tank, and add water.

During operation (engine running)

If the coolant level in the radiator becomes too low, the radiator coolant level caution lamp will light up.

At the same time, “E01 COOLANT LOW“ is displayed, so stop the engine, check the water level in the radiator sub-tank, and add water.

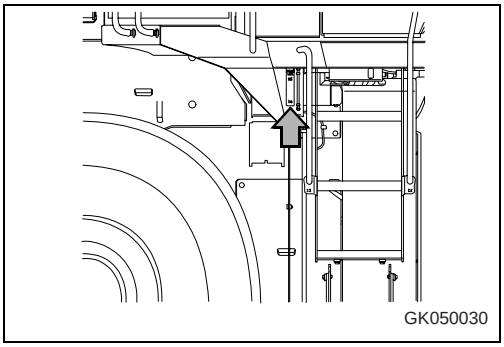
GK050030

2. Engine oil level caution lamp

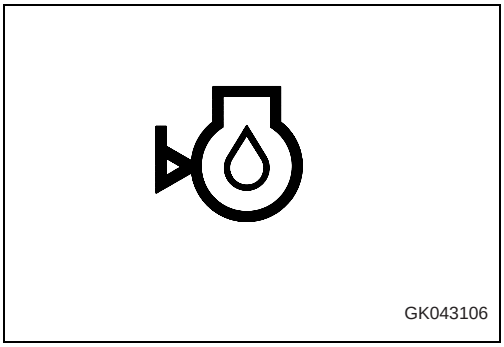
GK043106

This lamp is not active.

3. Battery electrolyte level caution lamp

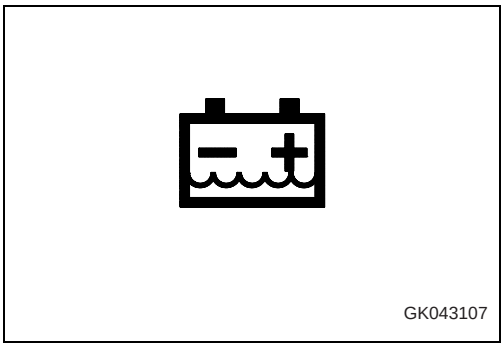
GK043107

(Option)

This lamp (3) lights up to warn the operator that the battery electrolyte level has gone down.

During checks before starting (when the starting switch is turned to the ON position but the engine is not started), this monitor lights up if the battery electrolyte level is low.

At the same time, “E01 BATTERY LEV LOW“ is displayed, so check the level of the battery electrolyte and add distilled water.

During operation (engine running)

If the battery electrolyte level becomes too low, the battery electrolyte level caution lamp will light up.

At the same time, “E01 BATTERY LEV LOW“ is displayed, so check the level of the battery electrolyte and add distilled water.

Downloaded from www.Manualslib.com manuals search engine

https://truckmanualshub.com/

4. Maintenance caution lamp

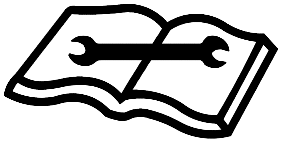

GK032104

CAUTION

If the caution lamp lights up, repair the problem as soon as possible. If this is left as it is, it will lead to failure.

When the time for filter and oil change is reached, this lamp (4) flashes or lights up for approx. 30 seconds after completion of the system check when the starting switch is at the ON position.

REMARK

The maintenance caution lamp flashes when there is less than 30 hours to the replacement time, and after the replacement time has passed, it stay on.

For details of the items covered by filter and oil replacement, see "Filter, oil replacement time display (3-15)".

After replacing the filter or changing the oil, reset time for the replacement. For details, see "Reset method for filter, oil replacement time (3-38)".

5. Air cleaner clogging caution lamp

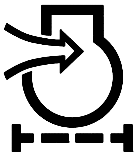

GK043108

This lamp (5) lights up if the air cleaner element becomes clogged when the engine is running.

During checks before starting (when the starting switch is turned to the ON position but the engine is not started), this monitor does not light up.

During operation (engine running)

The lamp lights up if the air cleaner element becomes clogged.

At the same time, “E01 AIR FILTER“ is displayed, so stop the engine, and clean or replace the element.

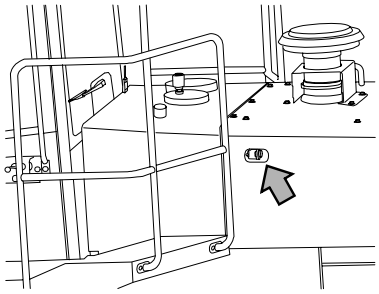

GK050031

REMARK

It is possible to check the condition of clogging of the air cleaner with the dust indicator installed at the side of the air cleaner.

Downloaded from www.Manualslib.com manuals search engine

https://truckmanualshub.com/

6. Transmission oil filter clogging caution lamp

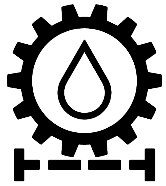
GK032105

This lamp (6) lights up when the transmission oil filter is clogged.

When the transmission oil filter is clogged, the transmission clogging caution lamp lights up.

At the same time, “E01 TRANSM FILTER“ is displayed, so stop the engine, and replace the element.

REMARK

If the engine is stopped or the torque converter oil temperature is low, the transmission oil filter clogging caution lamp does not light up.

7. Fuel filter water detection caution lamp

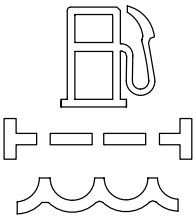
GK050032

This lamp is not active.

Downloaded from www.Manualslib.com manuals search engine

https://truckmanualshub.com/

Pilot display portion

When the starting switch is ON, the pilot display lights up when the display items are functioning.

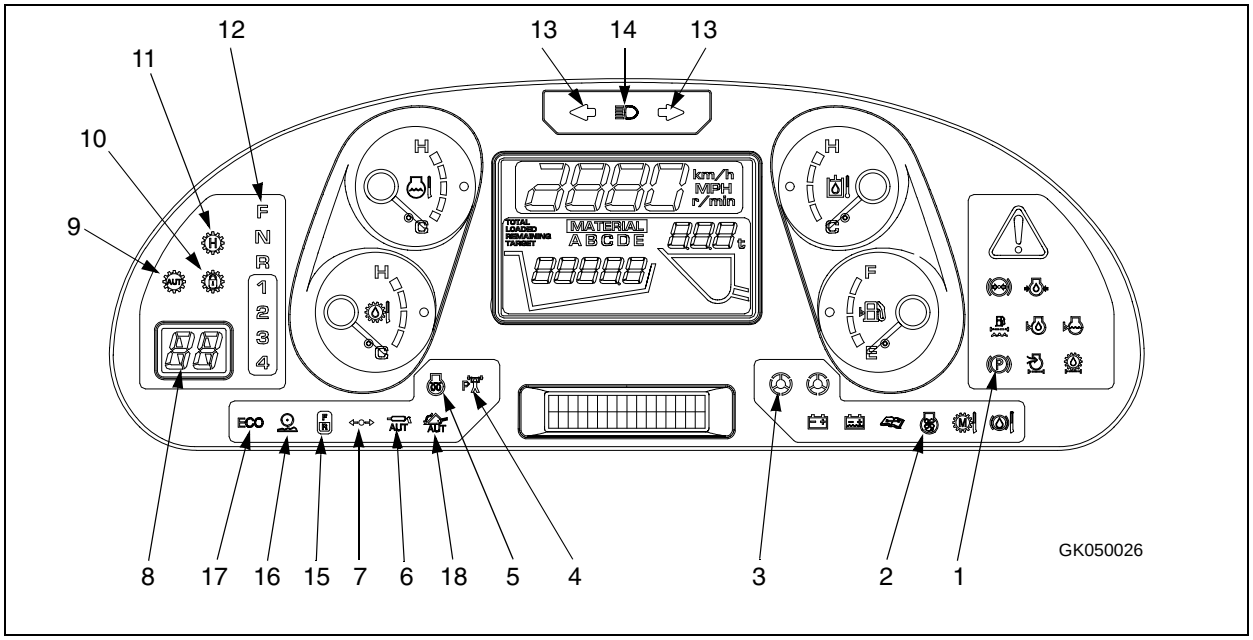

(1) Parking brake pilot lamp
(2) Cooling fan reverse rotation pilot lamp
(3) Emergency steering pilot lamp
(4) Output mode pilot lamp (power mode)
(5) Preheating pilot lamp
(6) Auto-greasing pilot lamp
(7) Joystick pilot lamp (Option)
(8) Shift indicator
(9) Auto-shift pilot lamp
(10) Lockup pilot lamp (Option)
(11) Shift hold pilot lamp
(12) Shift lever position pilot lamp
(13) Turn signal pilot lamp
(14) Head lamp high beam pilot lamp
(15) Directional selector pilot lamp
(16) E.C.S.S. pilot lamp (*)
(17) Economy operation display lamp
(18) Semi auto digging pilot lamp

(*) E.C.S.S.: Electrically Controlled Suspension System

Downloaded from www.Manualslib.com manuals search engine

https://truckmanualshub.com/

1. Parking brake pilot lamp

This lamp (1) lights up when the parking brake is applied.

When the parking brake switch is turned ON, the parking brake pilot lamp lights up.

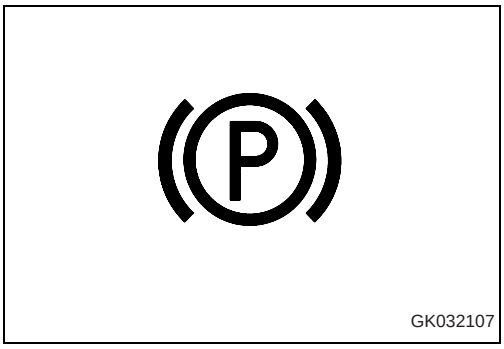

2. Cooling fan reverse rotation pilot lamp

This lamp (2) lights up when the direction of rotation of the cooling fan is reversed.

When the cooling fan reverse rotation switch is turned ON and the fan rotates in reverse, the cooling fan reverse rotation pilot lamp lights up.

At the same time, “COOLING FAN REVERSE“ is displayed on the character display.

For details, see "Cooling fan reverse rotation switch (3-62)".

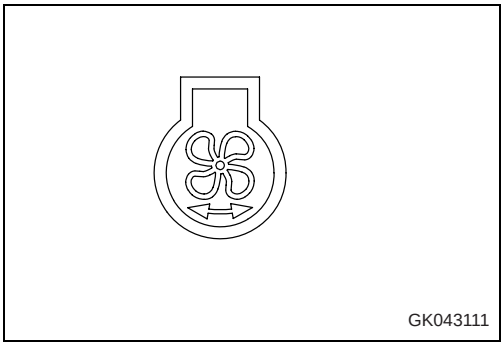

REMARK

When the engine is running, even if the cooling fan reverse switch is operated, the fan does not rotate in reverse.
In this case, the position of the switch and the actual direction of rotation of the fan are different, so the cooling fan reverse rotation pilot lamp flashes.
Return the switch to its original position or stop the engine and operate the switch.

3. Emergency steering pilot lamp

(Green)

This lamp (3) lights up during travel operations if the steering pressure drops and the emergency steering pump is actuated.

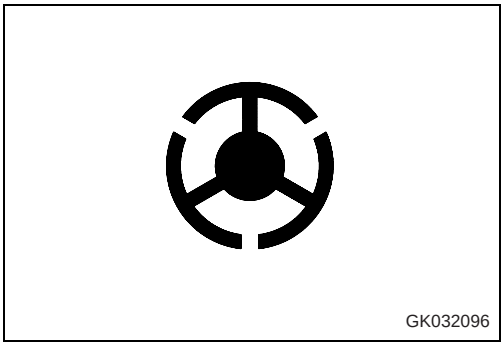

Downloaded from www.Manualslib.com manuals search engine

https://truckmanualshub.com/

4. Output mode pilot lamp (power mode)

This lamp (4) lights up when the power mode is selected.

When the engine power mode selector switch is used to select power mode, the pilot lamp lights up.

For details, see "Engine power mode selector switch (3-65)".

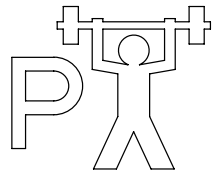

GK043112

5. Preheating pilot lamp

This lamp (5) lights up when the engine preheating electric heater is actuated.

In cold weather, when the starting switch is turned to the ON position, this lamp lights up, and when the preheating is completed, it goes out.

The preheating time differs according to the engine water temperature.

For details, see "Starting engine (3-108)".

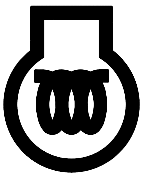
GK032108

6. Auto-greasing pilot lamp

This lamp (6) shows that the auto-greasing is being actuated.

When the auto-greasing is being actuated, the pilot lamp lights up.

When the grease tank is empty, the lamp flashes (1 Hz), and when there is an abnormality in the auto-greasing device, it flashes rapidly (2 Hz).

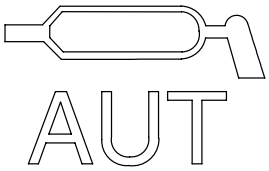

GK050033

7. Joystick pilot lamp

(Option)

This lamp (7) lights up when the joystick ON/OFF switch is at the ON position and the joystick console is tilted to the front.

For details, see "Joystick steering system (6-32)".

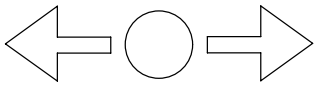
GK050034

Downloaded from www.Manualslib.com manuals search engine

https://truckmanualshub.com/

8. Shift indicator

This indicator (8) indicates the transmission gear range (actual travel speed range).

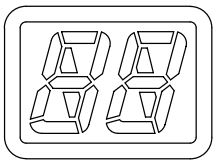

GK043113

9. Auto-shift pilot lamp

This lamp (9) lights up when the auto-shift function is selected.

When the transmission auto shift/manual shift selector switch is set to auto shift, the pilot lamp lights up.

Use the transmission auto shift/manual shift selector switch to select the shift mode.

With the auto shift, select “H“ or “L“ to give different shift points.

For details, see "Transmission auto shift/manual shift selector switch (3-58)".

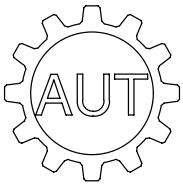

GK043115

10. Lockup pilot lamp

(Option)

This lamp (10) shows that the torque converter has entered the lock-up.

When the torque converter lock-up switch is turned ON, the pilot lamp lights up.

(It lights up when the transmission actually enters direct drive.)

For details of the lock-up, see "Torque converter lock-up switch (3-64)".

GK050035

11. Shift hold pilot lamp

This lamp (11) lights up when the shift hold is actuated.

When the hold switch is pressed, the pilot lamp lights up. When the switch is pressed again, the pilot lamp goes out.

For detail, see "Hold switch (3-57)".

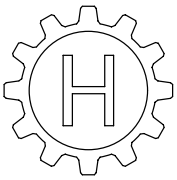

GK043116

Downloaded from www.Manualslib.com manuals search engine

https://truckmanualshub.com/

12. Shift lever position pilot lamp

This lamp (12) displays the transmission position of the gearshift lever.

When auto shift has been selected, it shows the maximum speed range selected by the automatic transmission. The maximum speed range can be selected by the shift-up switch and shift-down switch.

GK043117

13. Turn signal pilot lamp

When the turn signal lamp flashes, this lamp (13) also flashes.

REMARK
If there is a disconnection in the turn signal lamp, the flashing interval becomes shorter.

GK050036

14. Head lamp high beam pilot lamp

This lamp (14) lights up when the head lamp is at high beam.

When the dimmer switch is used to set the head lamp to high beam, the pilot lamp lights up.

GK050037

15. Directional selector pilot lamp

The lamp in this switch (15) lights up when the directional selector ON/OFF switch is turned to the ON position.

It shows that it is possible to switch the direction of travel between FORWARD and REVERSE with the directional switch at the side of the lift arm control lever.

For details, see "Changing direction (3-117)".

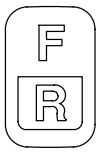

GK043114

Downloaded from www.Manualslib.com manuals search engine

https://truckmanualshub.com/

16. E.C.S.S. pilot lamp

(*) E.C.S.S.: Electrically Controlled Suspension System

This lamp (16) is not active.

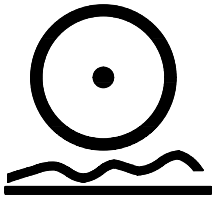

GK050038

17. Economy operation display lamp

This lamp (17) lights up to show that the economy mode is being used (economy operation).

It does not light up when the setting is power mode.

This lamp is interconnected with the accelerator pedal and lights up or goes out according to the operation of the accelerator pedal, so use it as a guideline for economy operation.

GK050039

18. Semi auto digging pilot lamp

This lamp (18) shows that the semi auto digging function has been actuated.

When the semi auto digging selector switch is set to ROCK mode or LOOSE mode, the pilot lamp lights up.

GK050040

Downloaded from www.Manualslib.com manuals search engine

https://truckmanualshub.com/

Meter display portion

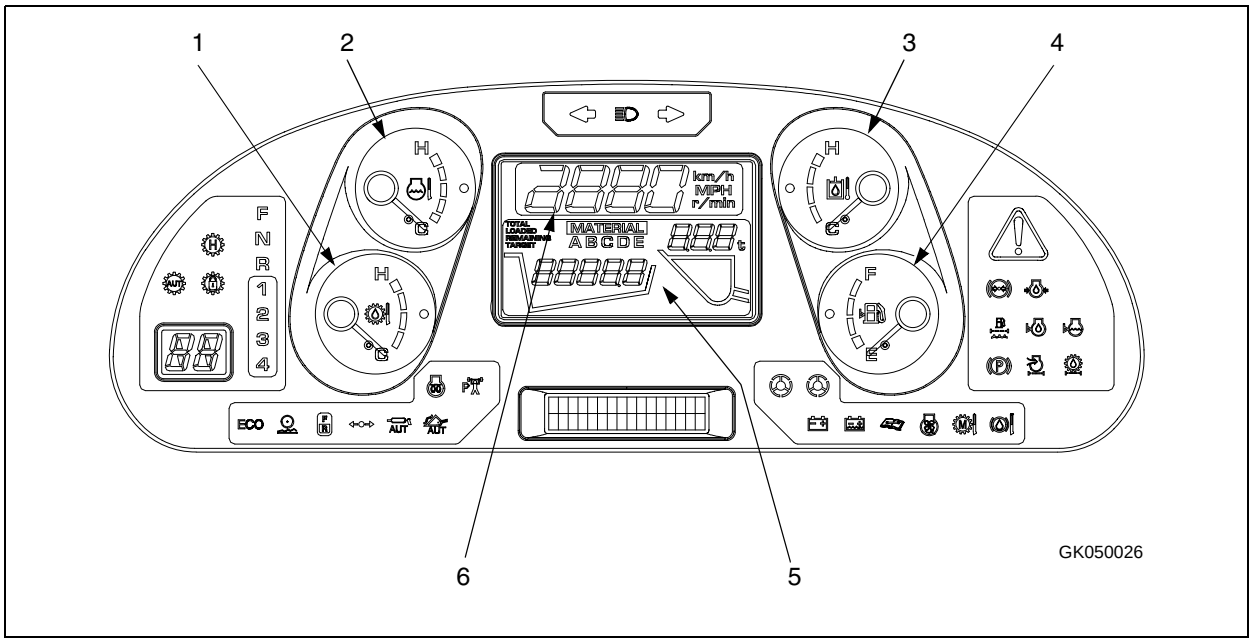

(1) Torque converter oil temperature gauge
(2) Engine cooling water temperature gauge
(3) Hydraulic temperature gauge
(4) Fuel gauge
(5) Load meter (Option)
(6) Speedometer

Downloaded from www.Manualslib.com manuals search engine

https://truckmanualshub.com/

1. Torque converter oil temperature gauge

This meter (1) indicates the torque converter oil temperature.

During normal operations, it should be in the green range.

If it enters the red range during operations, the alarm buzzer sounds, the central warning lamp lights up, and “E02 TC OVER-HEAT“ is displayed on the character display.

Run the engine under no load at a mid-range speed and wait until the indicator returns to the green range.

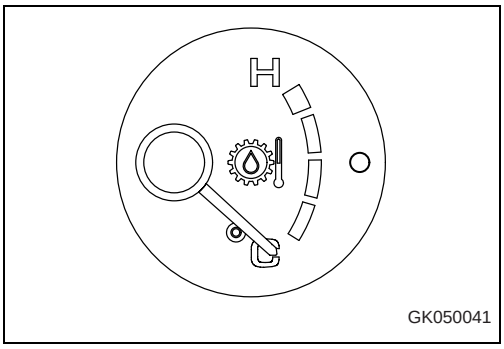

2. Engine cooling water temperature gauge

This meter (2) indicates the engine coolant temperature.

During normal operations, it should be in the green range.

If it enters the red range during operations, the alarm buzzer sounds, the central warning lamp lights up, and “E02 ENGINE OVERHEAT“ is displayed on the character display.

Run the engine under no load at a mid-range speed and wait until the indicator returns to the green range.

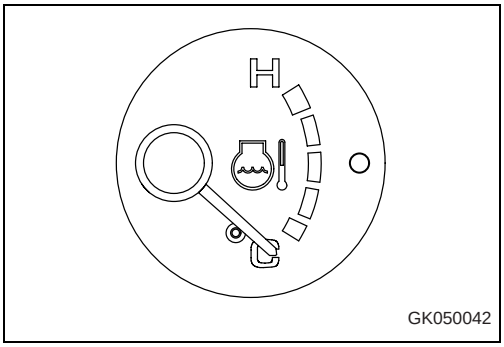

3. Hydraulic temperature gauge

This meter (3) indicates the hydraulic oil temperature.

During normal operations, it should be in the green range.

If it enters the red range during operations, the alarm buzzer sounds, the central warning lamp lights up, and “E02 HYD OVERHEAT“ is displayed on the character display.

Run the engine under no load at a mid-range speed and wait until the indicator returns to the green range.

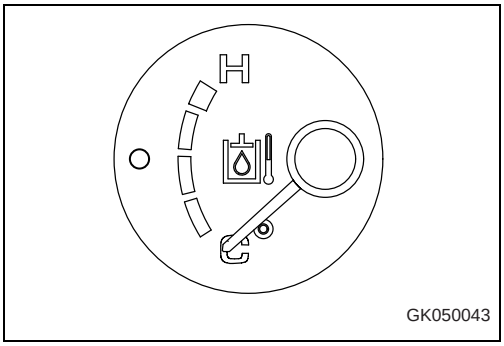

4. Fuel gauge

This meter (4) indicates the amount of fuel remaining in the fuel tank.

If the indicator is at the F position, it indicates that the tank is full.

If the indicator is at the E position, it indicates that there is little fuel remaining. When the amount of remaining fuel goes below 53 liters (14.0 US gal) (range A), the caution lamp inside the fuel gauge lights up.

If it lights up, check the fuel level and add fuel.

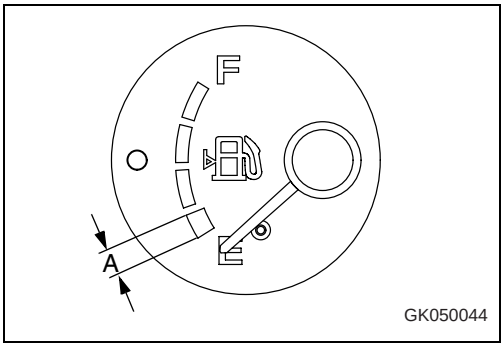

Downloaded from www.Manualslib.com manuals search engine

https://truckmanualshub.com/

5. Load meter

(Option)

This display (5) shows the amount that is loaded.

For details, see "Handling load meter (6-2)".

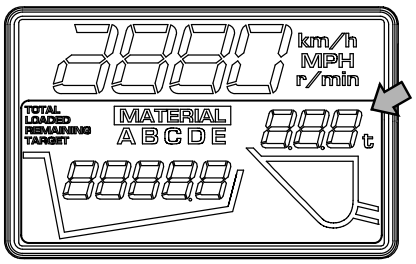

GK050045

6. Speedometer

This display (6) shows the travel speed or engine speed.

For details of the method of switching the display, see "Method of switching travel speed/engine speed display (3-44)".

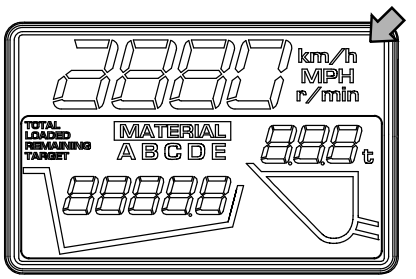

GK050045

Downloaded from www.Manualslib.com manuals search engine

https://truckmanualshub.com/

Other functions of machine monitor

The machine monitor also has the following functions.

When the (◇) portion of the character display mode selector switch is pressed from the standard screen (service meter display) or warning screen, the display changes to “ODO“. Press the (>) or (<) portion of the character display item selector switch and move to the following menus. (If a load meter is installed, when the character display mode selector switch (◇) is pressed, the screen changes to “LOAD METER“.)

To return from each menu to the standard menu, press the (■) of the character display mode selector switch.

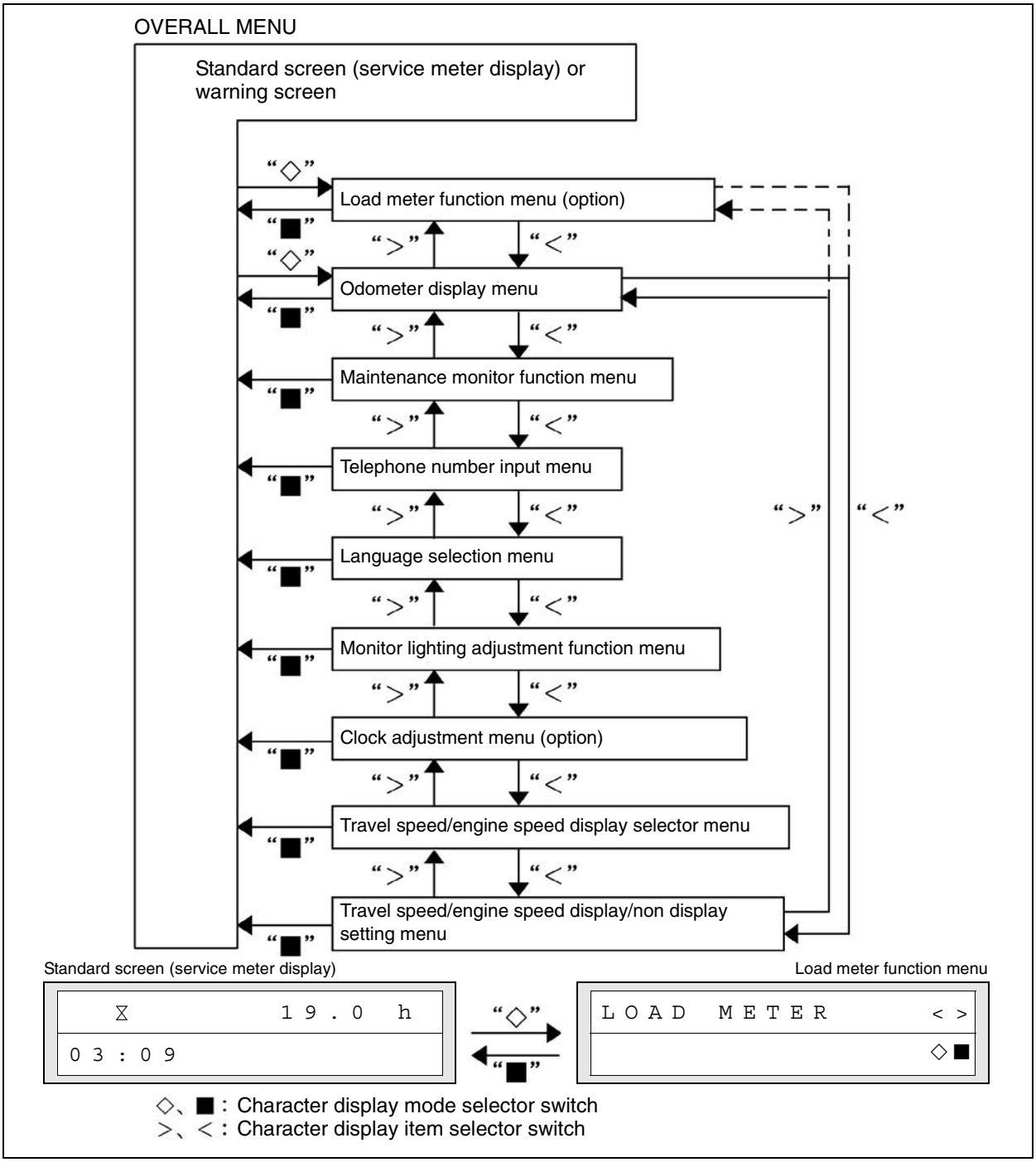

Downloaded from www.Manualslib.com manuals search engine

https://truckmanualshub.com/

Method of displaying odometer

Use this when checking the total distance that the machine has traveled.

1. Check that the character display is showing the service meter or the action code. If it is giving any other display, turn the starting switch OFF, then turn the starting switch to the ON position and wait for the above display to be given.

```
ODO                    < >
   1234.5  km          ■
```

2. Press the (◇) portion of the character display mode selector switch to display “ODO“ (odometer).

REMARK

If a load meter is installed, when the (◇) portion of the character display mode selector switch is pressed, the screen displays “LOAD METER“.
If the (>) or (<) portion of the character display item selector switch is then pressed, the display changes to “ODO“ (odometer).

```
LOAD  METER            < >
                       ◇■
```

3. After checking the screen, press the (■) portion of the character display mode selector switch or turn the starting switch OFF.

Reset method for filter, oil replacement time

The filter and oil replacement time is displayed on the character display, so if the filter and oil have been replaced, reset the filter and oil change time.

1. Press the (◇) portion of the character display mode selector switch to display “ODO“ (odometer).

```
ODO                    < >
   1234.5  km          ■
```

REMARK

If a load meter is installed, when the (◇) portion of the character display mode selector switch is pressed, the screen displays “LOAD METER“.
If the (>) or (<) portion of the character display item selector switch is then pressed, the display changes to “ODO“ (odometer).

```
LOAD  METER            < >
                       ◇■
```

2. Press the (>) or (<) portion of the character display item selector switch to display “MAINTENANCE MONITOR“.

```
MAINTENANCE            < >
MONITOR                ◇■
```

3. Press the (◇) portion of the character display mode selector switch. The screen switches to the display shown on the right.

   The replacement interval is shown on the bottom line at the left and the number of times of replacement is shown on the right.

```
03:FUEL  FILT          < >
 1000h:    99          ◇■
```


Downloaded from www.Manualslib.com manuals search engine

https://truckmanualshub.com/

4. Press the (>) or (<) portion of the character display item selector switch to display the filter or oil item that has been replaced.

   For details of the items to reset, see "Filter, oil replacement time display (3-15)".

5. Press the (◇) portion of the character display mode selector switch. The screen switches to the display shown on the right.

   “RESET“ and “ITEM TO RESET“ are displayed on the top line in turn.

6. When resetting the replacement interval, press the (>) or (<) portion of the character display item selector switch, set the cursor on “YES“, then press the (■) portion of the character display mode selector switch. The time is reset and the screen returns to the previous screen.

   To abort the operation, set the cursor on “NO“, then press the (■) portion of the character display mode selector switch.

7. When resetting the replacement time for another item, carry out the procedure from Step 4. After completing the resetting operation, press the (■) portion of the character display mode selector switch twice or turn the starting switch OFF.

```
RESET
YES  <>  NO  ■ENTER
```


Downloaded from www.Manualslib.com manuals search engine

https://truckmanualshub.com/

Input method for telephone number

It is possible to display the telephone number on the right side of “CALL“ displayed on the character display when action code “E03“ is generated.

1. Press the (◇) portion of the character display mode selector switch to display “ODO“ (odometer).

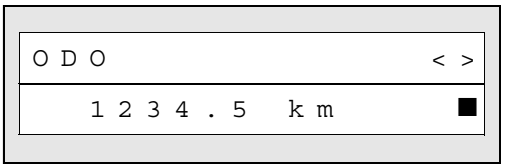

REMARK

If a load meter is installed, when the (◇) portion of the character display mode selector switch is pressed, the screen displays “LOAD METER“.
If the (>) or (<) portion of the character display item selector switch is then pressed, the display changes to “ODO“ (odometer).

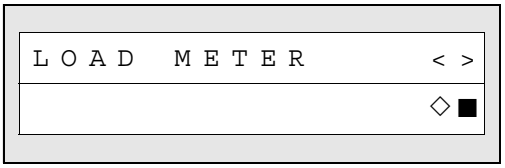

2. Press the (>) or (<) portion of the character display item selector switch to display “TEL“.

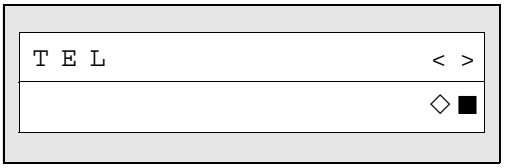

3. Press the (◇) portion of the character display mode selector switch. The screen switches to the display shown on the right.

   Once the telephone number is input, the input number will be displayed next time.

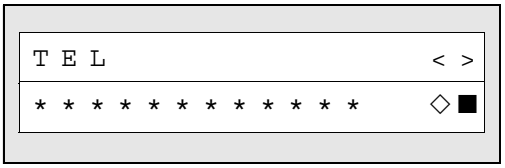

4. The telephone number can be displayed up to 12 digits. Input in order starting from the first digit on the left.

   The cursor is displayed at the input position. Press the (>) or (<) portion of the character display item selector switch to input “0 - 9“. To leave a blank, input “*“.

   After selecting the input value, press the (◇) portion of the character display mode selector switch. The input value is accepted and the cursor moves to the next digit.

5. Repeat the procedure in Step 4 until the last digit has been input. At the last digit, press the (◇) portion of the character display mode selector switch. The input values are accepted and the screen returns to the previous screen.

   If the wrong number is input or the input operation is to be aborted, press the (■) portion of the character display mode selector switch. The screen returns to the previous screen.

6. After completing the operation, press the (■) portion of the character display mode selector switch twice or turn the starting switch OFF.

Downloaded from www.Manualslib.com manuals search engine

https://truckmanualshub.com/

Method for selecting language

Use this when switching the language displayed on the character display.

The following explanation is for when English is set as the language for the character display.

1. Press the (◇) portion of the character display mode selector switch to display “ODO“ (odometer).

```
O D O                    < >
   1 2 3 4 . 5   k m      ■
```

REMARK

If a load meter is installed, when the (◇) portion of the character display mode selector switch is pressed, the screen displays “LOAD METER“.
If the (>) or (<) portion of the character display item selector switch is then pressed, the display changes to “ODO“ (odometer).

```
L O A D   M E T E R      < >
                         ◇ ■
```

2. Press the (>) or (<) portion of the character display item selector switch to display “LANGUAGE“.

```
L A N G U A G E          < >
                         ◇ ■
```

3. Press the (◇)portion of the character display mode selector switch. The presently selected language is displayed.

4. Press the (>) or (<) portion of the character display item selector switch to select the desired language.

```
E N G L I S H            < >
                         ◇ ■
```

NOTE

The available languages are English, Japanese, German, French, Italian, Spanish, and Swedish.

5. After selecting the desired language, press the (◇) portion of the character display mode selector switch.

   To accept the selected language, set the cursor on “YES“, then press the (■) portion of the character display mode selector switch. The language is set and the screen returns to the previous screen.

   To abort the operation, set the cursor on “NO“, then press the (■) portion of the character display mode selector switch.

```
E N G L I S H
Y E S   < >   N O   ■ E N T E R
```

6. After completing the operation, press the (■) portion of the character display mode selector switch twice or turn the starting switch OFF.

Downloaded from www.Manualslib.com manuals search engine

https://truckmanualshub.com/

Method of adjusting monitor brightness

Do as follows to adjust the brightness of the monitor.

1. Press the (◇) portion of the character display mode selector switch to display “ODO“ (odometer).

```
ODO                    < >
   1234.5  km          ■
```

REMARK

If a load meter is installed, when the (◇) portion of the character display mode selector switch is pressed, the screen displays “LOAD METER“.
If the (>) or (<) portion of the character display item selector switch is then pressed, the display changes to “ODO“ (odometer).

```
LOAD  METER            < >
                       ◇■
```

2. Press the (>) or (<) portion of the character display item selector switch to display “BRIGHTNESS ADJUST“.

```
BRIGHTNESS             < >
ADJUST                 ◇■
```

3. Press the(◇) of the character display mode selector switch. “MONITOR PANEL“ is displayed on the bottom line, and it becomes possible to adjust the monitor brightness (excluding the liquid crystal display).

```
BRIGHTNESS             < >
MONITOR  PANEL         ◇■
```

   The brightness can be adjusted separately for the monitor overall (excluding the liquid crystal display) and for the liquid crystal display (LCD).

   If it is desired to adjust only the liquid crystal display (LCD), press the (>) or (<) of the character display item selector switch to switch to the “LCD PANEL“ display.

```
BRIGHTNESS             < >
LCD  PANEL             ◇■
```

4. Press the (◇) portion of the character display mode selector switch. The screen switches to the display shown on the right and it becomes possible to adjust the brightness.

```
ADJUST                 < >
L     ■      H  ■ENTER
```

5. Press the (>) or (<) portion of the character display item selector switch to adjust the brightness between L and H (7 levels).

6. After selecting the desired brightness, press the (■) portion of the character display mode selector switch.

   The brightness is set and the screen returns to the previous screen.

7. After completing the operation, press the (■) portion of the character display mode selector switch twice or turn the starting switch OFF.

Downloaded from www.Manualslib.com manuals search engine

https://truckmanualshub.com/

Method of adjusting clock

1. Check that the normal service meter and time are displayed on the character display.

```
   ⧖          1 9 . 0   h
0 3 : 0 9
```

2. Press the (◇) portion of the character display mode selector switch to display “ODO“ (odometer).

```
O D O                  < >
   1 2 3 4 . 5   k m     ■
```

REMARK

If a load meter is installed, when the (◇) portion of the character display mode selector switch is pressed, the screen displays “LOAD METER“.
If the (>) or (<) portion of the character display item selector switch is then pressed, the display changes to “ODO“ (odometer).

```
L O A D   M E T E R    < >
                       ◇■
```

3. Press the (◇) portion of the character display mode selector switch, then press the (>) or (<) portion of the character display item selector switch to display “DAY & TIME ADJUST“.

```
D A Y   &   T I M E    < >
A D J U S T            ◇■
```

4. Press the (◇) portion of the character display mode selector switch.

   The top line displays “ADJUST 23:59“.

   The bottom line displays “2000/01/01“.

   Once the time is input, the clock will show the correct time from that time on.

```
A D J U S T    2 3 : 5 9  < >
2 0 0 0 / 0 1 / 0 1       ◇■
```

5. Input the time.

   The cursor is displayed in turn at the input position for the date and time. Press the (>) or (<) portion of the character display item selector switch to input “0 - 9“.

6. After selecting the input value, press the (◇) portion of the character display mode selector switch.

   The input value is accepted and the cursor moves to the next input position.

   Repeat Steps 5 and 6 to input and select the numbers from the year to the minute.

7. At the last digit for the minute units, press the (◇) portion of the character display mode selector switch. The input values are accepted and the display portion of the character display returns to the service meter and clock display on the standard screen.

```
   ⧖          1 9 . 0   h
0 3 : 0 9
```

8. If the wrong number is input or the input operation is to be aborted, press the (■) portion of the character display mode selector switch. The screen returns to the previous screen.

Downloaded from www.Manualslib.com manuals search engine

https://truckmanualshub.com/

Method of switching travel speed/engine speed display

Use this when switching between the travel speed (km/h, MPH) and the engine speed display.

1. Press the (◇) portion of the character display mode selector switch to display “ODO“ (odometer).

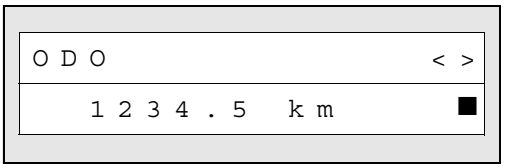

REMARK

If a load meter is installed, when the (◇) portion of the character display mode selector switch is pressed, the screen displays “LOAD METER“.
If the (>) or (<) portion of the character display item selector switch is then pressed, the display changes to “ODO“ (odometer).

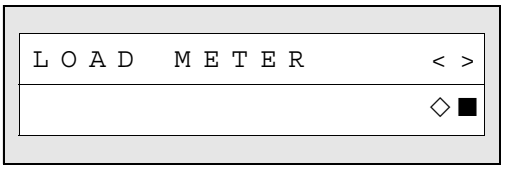

2. Press the (>) or (<) of the character display item selector switch to display “SELECT SPEED“ or “SELECT r/min“.

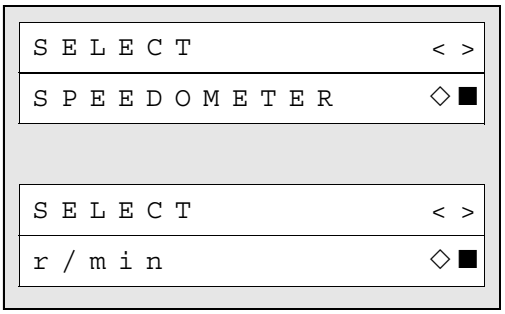

3. Press the (◇) portion of the character display mode selector switch.

   The display changes and returns to the service meter display.

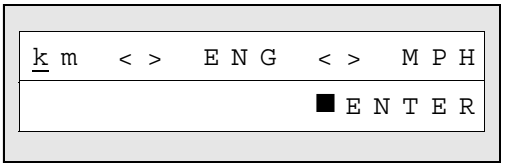

Downloaded from www.Manualslib.com manuals search engine

https://truckmanualshub.com/

Method of switching travel speed/engine speed display/non display

Use the following method to display the travel speed or engine speed or to have no display on the character display.

1. Press the (◇) portion of the character display mode selector switch to display “ODO“ (odometer).

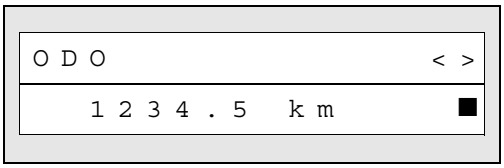

REMARK

If a load meter is installed, when the (◇) portion of the character display mode selector switch is pressed, the screen displays “LOAD METER“.
If the (>) or (<) portion of the character display item selector switch is then pressed, the display changes to “ODO“ (odometer).

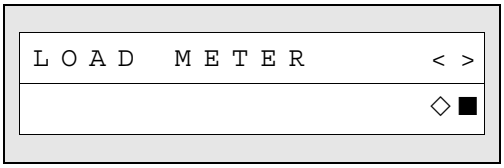

2. Press the (>) or (<) of the character display item selector switch to display “rpm ON - OFF“ or “km/h ON - OFF“.

   To set to no display for the travel speed or engine speed on the character display, display “rpm OFF - ON“ or “km/h OFF - ON“.

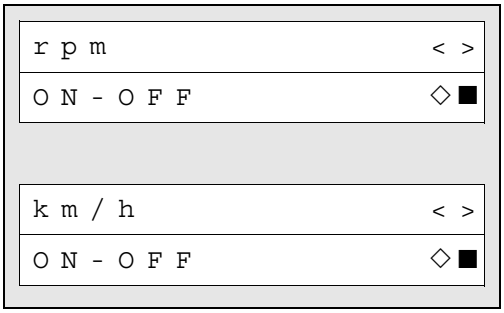

3. Press the (◇) of the character display mode selector switch.

   The item that was being displayed changes to non-display, and the item that was not displayed, is displayed, and the screen returns to the service meter display.

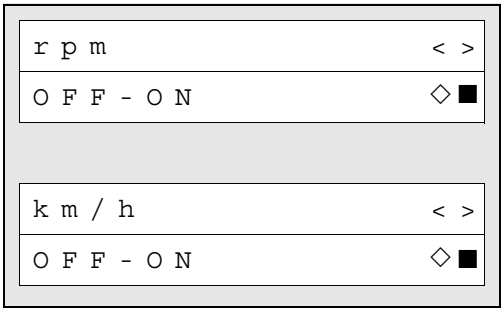

Downloaded from www.Manualslib.com manuals search engine

https://truckmanualshub.com/

3.2.2 Switches

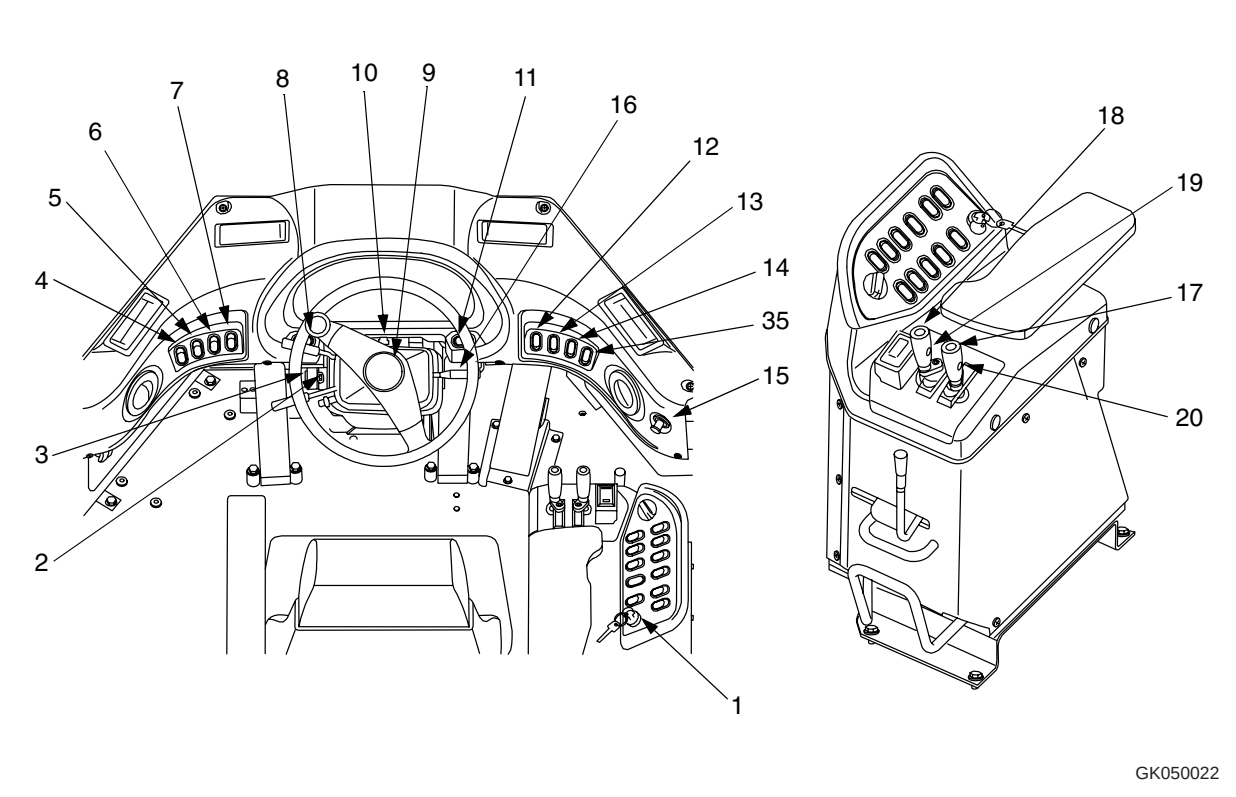

(1) Starting switch	(13) Rear working lamp switch
(2) Rear wiper switch	(14) Beacon lamp switch (Option)
(3) Front wiper switch	(15) Cigarette lighter
(4) Load meter display selector switch (Option)	(16) Lamp switch
(5) Load meter mode selector switch (Option)	(16) Turn signal lever
(6) Character display mode selector switch	(16) Dimmer switch
(7) Character display item selector switch	(17) Load meter cancel switch (Option)
(8) E.C.S.S. switch (*) (Option)	(18) Kickdown switch
(9) Horn button	(19) Hold switch
(10) Hazard lamp switch	(20) Load meter subtotal switch (Option)
(11) Parking brake switch	(35) Auto-greasing switch
(12) Front working lamp switch	

(*) E.C.S.S.: Electrically Controlled Suspension System

Downloaded from www.Manualslib.com manuals search engine

https://truckmanualshub.com/

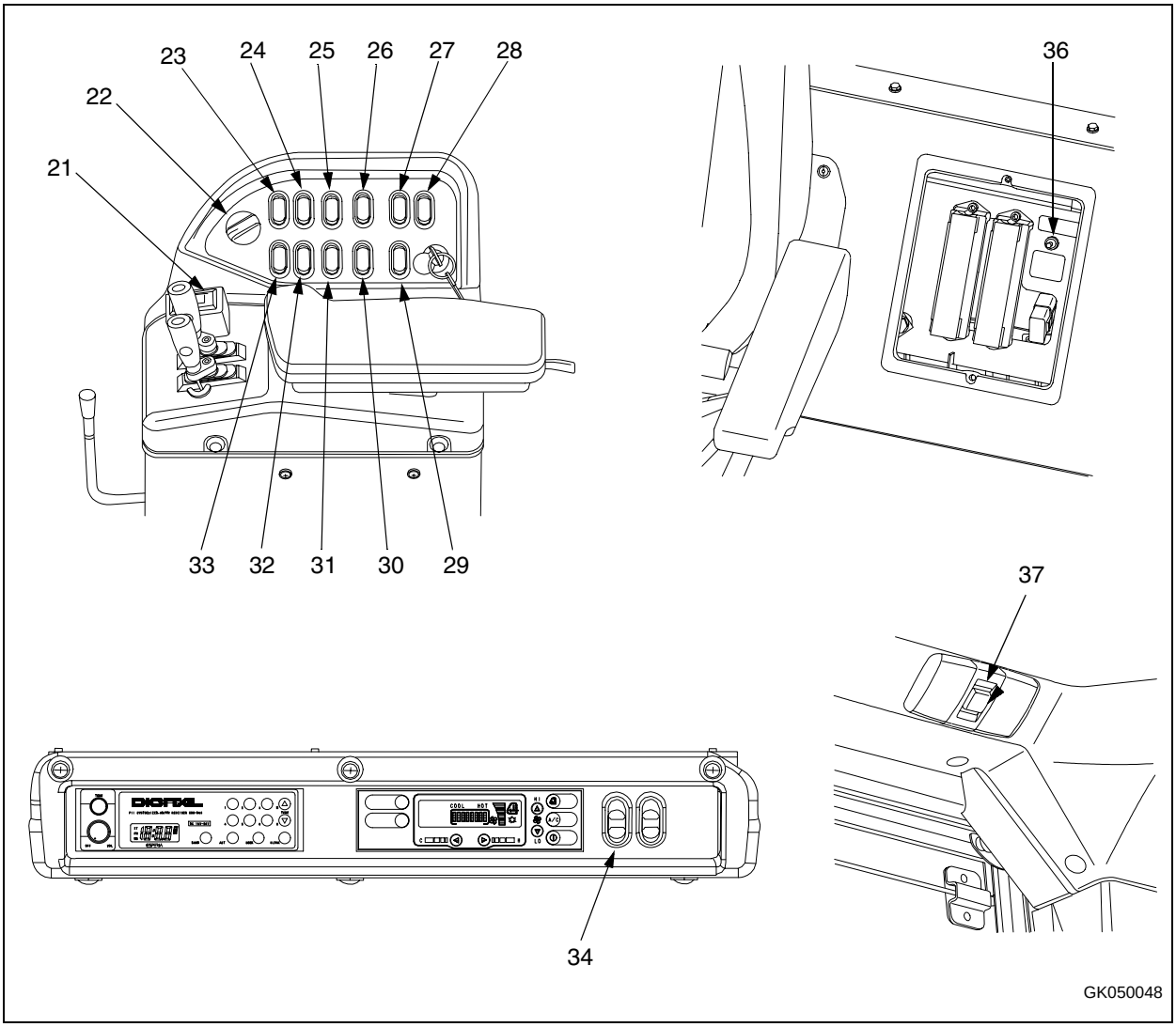

(21) Directional selector switch	(30) Semi auto digging switch
(22) Transmission auto shift/manual shift selector switch	(31) Directional selector ON/OFF switch
(23) Transmission cut-off switch	(32) Torque converter selector switch (Option)
(24) Transmission cut-off set switch	(33) Engine power mode selector switch
(25) Remote positioner raise/lower set switch	(34) Rear heated wire glass switch
(26) Remote positioner bucket angle set switch	(35) Auto-greasing switch (see page 3-46)
(27) RPM set ON-OFF switch	(36) Emergency parking brake cancel switch
(28) RPM set idle up-down selector switch	(37) Room lamp switch
(29) Cooling fan reverse rotation switch	

Downloaded from www.Manualslib.com manuals search engine

https://truckmanualshub.com/

1. Starting switch

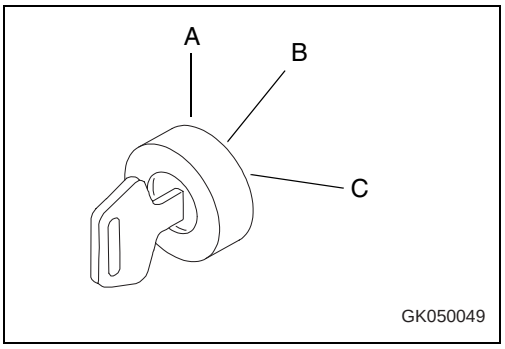

This switch (1) is used to start or stop the engine.

(A): OFF position
It is possible to insert and remove the starting switch key, all the electric system switches are turned off, and the engine stops. In addition, the parking brake is automatically applied.

(B): ON position
In this position, electric current flows in the charging and lamp circuits and accessory circuit.
Keep the starting switch key at the ON position while the engine is running.

If the engine water temperature is below 7°C (44.6°F) when the engine is started, the preheating pilot lamp will light up automatically and preheating will start.
The preheating time differs according to the water temperature when the engine is started.
If the preheating pilot lamp lights up, wait for it to go out, then turn the key to the START position.

(C): START position
This is the position to start the engine. Hold the key at this position while cranking the engine. Release the key immediately after the engine has been started. The key will return to ON position (B) when released

2. Rear wiper switch

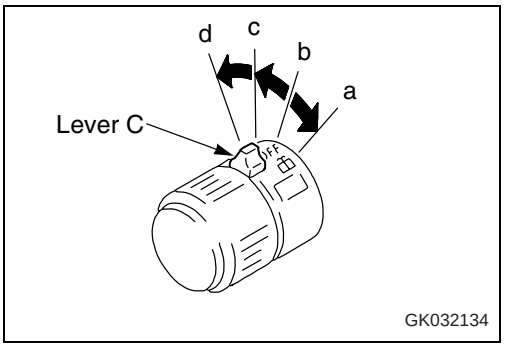

When lever (C) of this switch (2) is turned, the rear wiper will move.

Position (a):
Washer liquid is sprayed out

Position (b): OFF

Position (c):
Wiper is operated

Position (d):
Washer liquid is sprayed out, wiper is operated

Downloaded from www.Manualslib.com manuals search engine

https://truckmanualshub.com/

3. Front wiper switch

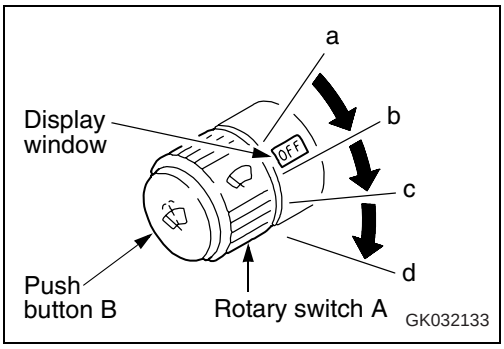

When rotary switch (A) of this switch (3) is turned, the front wiper will move.

If push button (B) is pressed, washer liquid will be sprayed out onto the front glass while the button is being pressed.

It is possible to check the position of the switch in display window (G).

Position (a): (OFF)
Stop

Position (b): (INT)
Intermittent wiper

Position (c):
Low-speed wiper

Position (d):
High-speed wiper

4. Load meter display selector switch

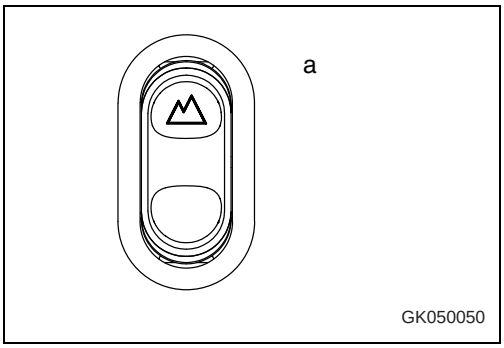

(Option)

Use this switch (4) to switch the load meter display.

When the switch is released, it automatically returns to its original position.

The switch is operated as follows.

Position (a):
Use this position when switching to total load display

5. Load meter mode selector switch

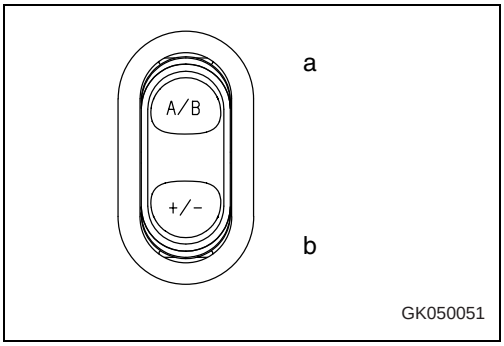

(Option)

Use this switch (5) to switch the load meter.

When the switch is released, it automatically returns to its original position.

The switch is operated as follows.

Position (a):
Use this position when switching to the display for the target material.

Each time the switch is pressed, it changes A -> B -> C -> D -> E -> A -> · · ·

Position (b):
Use this position when switching between Addition mode and Subtraction mode.

Downloaded from www.Manualslib.com manuals search engine

https://truckmanualshub.com/

6. Character display mode selector switch

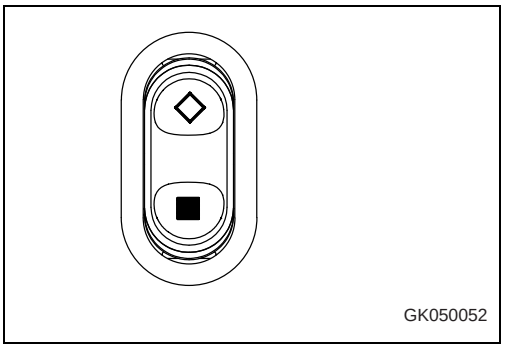

This switch (6) is used to switch the function of the character display.

When the switch is released, it automatically returns to its original position.

The basic operation is as follows.

Position (◇):
Press here to select (confirm) each mode or operation

Position (■):
Press here to cancel each mode or operation

7. Character display item selector switch

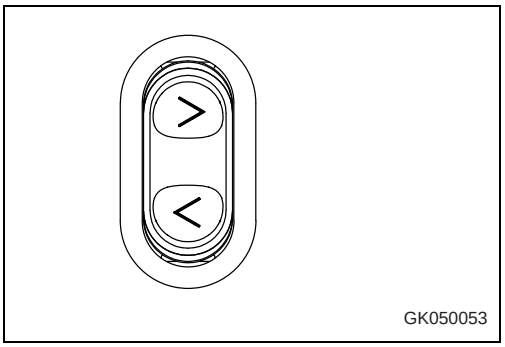

This switch (7) is used to switch the function of the character display.

When the switch is released, it automatically returns to its original position.

The basic operation is as follows.

Position (>):
Press here to go on to the next screen, or to move the cursor forward, or to increase the number when entering numerals

Position (<):
Press here to go back to the previous screen, or to move the cursor back, or to reduce the number when entering numerals

Downloaded from www.Manualslib.com manuals search engine

https://truckmanualshub.com/

8. E.C.S.S. switch

(Option)

(*) E.C.S.S.: Electrically Controlled Suspension System

WARNING

- If the machine is traveling or the work equipment is raised, the moment the E.C.S.S. switch is turned ON, the work equipment will move.
- If the E.C.S.S. system is switched on, the work equipment may move.
- Never turn the E.C.S.S. switch ON during inspection or maintenance. The work equipment will move and this will create a dangerous situation.

NOTE

- *Always stop the machine and lower the work equipment to the ground before operating the E.C.S.S. switch.*
- *When carrying out inspection and maintenance, first lower the work equipment to the ground, then turn the E.C.S.S. switch OFF before starting the inspection and maintenance operation.*
- *When carrying out leveling work, turn the E.C.S.S. switch OFF.*

REMARK

The E.C.S.S. is a device that uses the hydraulic spring effect of an accumulator to absorb the vibration of the chassis during travel and allows the machine to travel smoothly and at high speed.
When traveling in 1st, the E.C.S.S. is not actuated.
When the speed range is 2nd to 4th, and the travel speed becomes more than 5 km/h (3.1 MPH), the E.C.S.S. is automatically actuated; when the travel speed goes below 3 km/h (1.9 MPH), it is automatically disengaged.

This switch (8) is used to turn the E.C.S.S. ON and OFF.

Position (a): ON
The pilot lamp inside the switch lights up and the E.C.S.S. is actuated.

Position (b): OFF
The E.C.S.S. is not actuated.

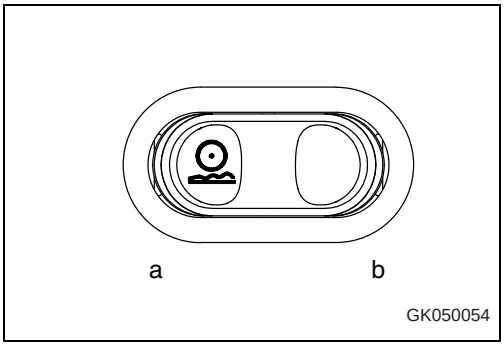

Downloaded from www.Manualslib.com manuals search engine

https://truckmanualshub.com/

9. Horn button

When the horn button (9) in the center of the steering wheel is pressed, the horn will sound.

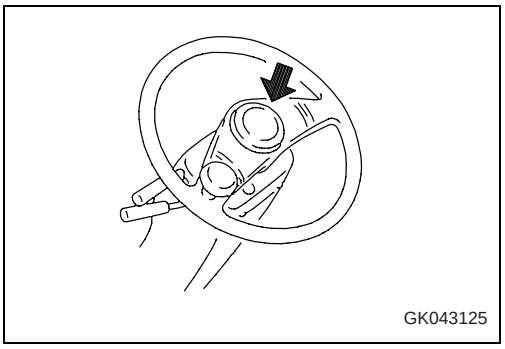

10. Hazard lamp switch

WARNING

Use the hazard lamp only in emergencies. Using the hazard lamp when traveling may cause confusion for other machine operators.

This switch (10) is used in emergencies, such as when the machine breaks down and has to be parked on the road.

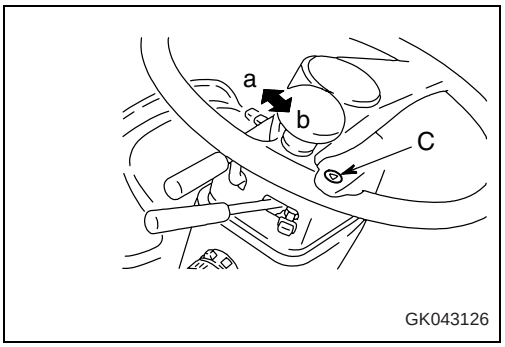

Position (a):
Turn signal lamps, turn signal pilot lamp flash, and pilot lamp (C) lights up at same time.

Position (b):
Lamps are OFF.

Downloaded from www.Manualslib.com manuals search engine

https://truckmanualshub.com/

11. Parking brake switch

WARNING

Always apply the parking brake when leaving the machine or when parking it.
Even if the parking brake switch is turned ON, there is danger until the parking brake pilot lamp lights up, so keep the brake pedal depressed.

NOTE

- *Never use the parking brake switch to apply the brakes when traveling, except in an emergency. The parking brake may be damaged and this may lead to a serious accident. Apply the parking brake only after the machine has stopped.*
- *If the parking brake has been used as an emergency brake when traveling at high speed, contact your KOMATSU distributor to have the parking brake checked for any abnormality.*

This switch (11) operates the parking brake.

Position (a): ON
The parking brake is applied, and the parking brake pilot lamp lights up.

Position (b): OFF
The parking brake is released.

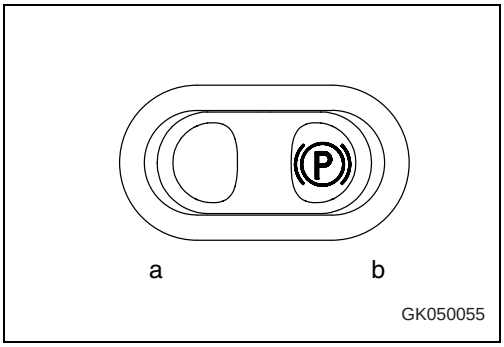

REMARK

If the directional lever is placed in F (FORWARD) or R (REVERSE) with the parking brake applied, the warning lamp will flash and the alarm buzzer will sound.
If the machine is left with the engine stopped but the parking brake switch is at the "OFF" position, or if the starting switch is at the "OFF" position and the parking brake switch is set to the "OFF" position, when the starting switch is turned to the "ON" position, the parking brake is applied even if the parking brake switch is at the "OFF" position. If this happens, after starting the engine, turn the parking brake switch to the "ON" position, then to the "OFF" position to release the parking brake.
The machine does not start when the directional lever is operated with the parking brake applied.

Downloaded from www.Manualslib.com manuals search engine

https://truckmanualshub.com/

12. Front working lamp switch

WARNING

Always turn the working lamp off before traveling on public roads.

When turning the front working lamp ON, operate the lamp switch to turn the side clearance lamp ON or the head lamp ON, then operate this switch (12).

Position (a): Working lamp lights up

Position (b): Working lamp goes out

If position (a) is pressed, the pilot lamp will light up and the working lamp circuit will be switched ON.

If the lamp switch is not at the ON position for the side clearance lamp or head lamp, the working lamp will not light up.

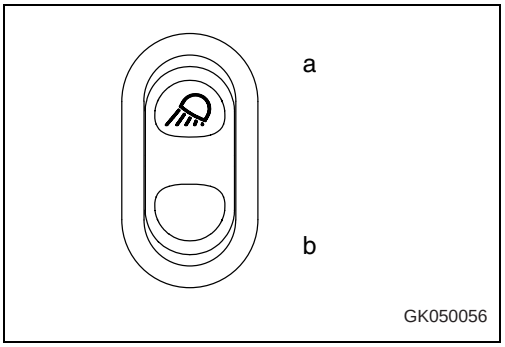

13. Rear working lamp switch

WARNING

Always turn the working lamp off before traveling on public roads.

When turning the rear working lamp ON, operate the lamp switch to turn the side clearance lamp ON or the head lamp ON, then operate this switch (13).

Position (a): Working lamp lights up

Position (b): Working lamp goes out

If position (a) is pressed, the pilot lamp will light up and the working lamp circuit will be switched ON.

If the lamp switch is not at the ON position for the side clearance lamp or head lamp, the working lamp will not light up.

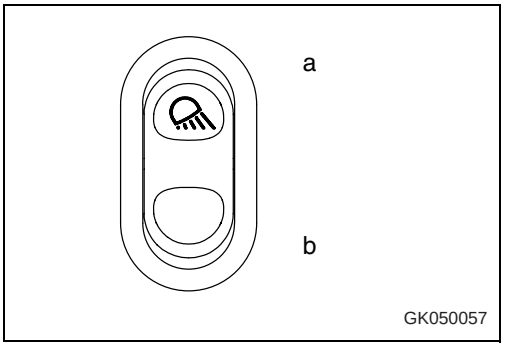

14. Beacon lamp switch

(Option)

Use this switch (14) to turn the beacon lamp ON-OFF.

Position (a): ON

Position (b): OFF

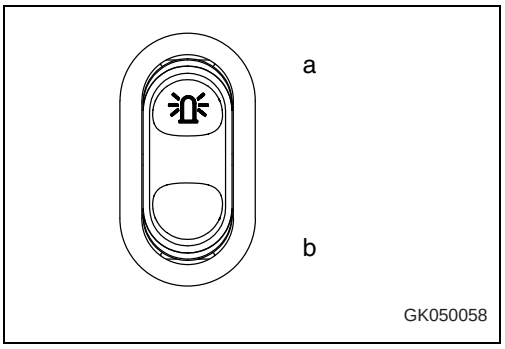

Downloaded from www.Manualslib.com manuals search engine

https://truckmanualshub.com/

15. Cigarette lighter

This is used to light cigarettes.

After cigarette lighter (15) is pushed in, it will return to its original position after a few seconds, then you may pull it out and light a cigarette.

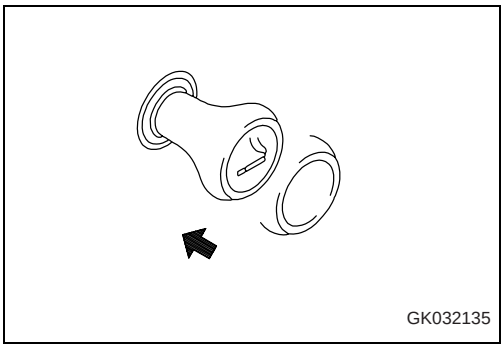

16. Lamp switch

This switch (16) is used to light up the front lamps, side clearance lamps, tail lamps, and instrument panel.

Position (a): OFF

Position (b):
Side clearance lamps, tail lamps, and instrument panel light up

Position (c):
Head lamps light up in addition to lamps at (b) position

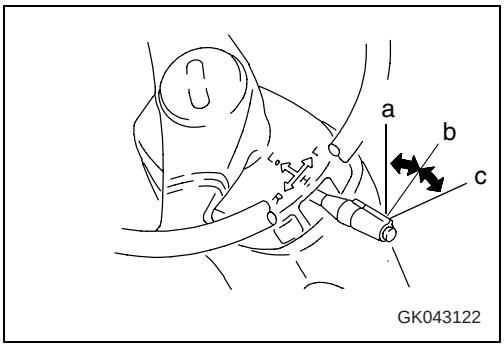

REMARK

The lamp switch can be operated regardless of the position of the lever.

16. Turn signal lever

This switch (16) is used to operate the turn signal lamp.

Position (a): LEFT TURN (Push lever FORWARD.)

Position (b): OFF

Position (c): RIGHT TURN (Pull lever BACK.)

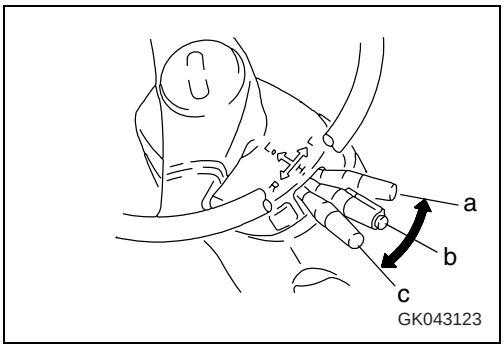

REMARK

When the lever is operated, the turn signal pilot lamp also flashes.
When the steering wheel is turned back, the lever automatically returns to its original position. If it does not return, return it manually.

Downloaded from www.Manualslib.com manuals search engine

https://truckmanualshub.com/

16. Dimmer switch

This switch (16) is used to switch the head lamps between high beam and low beam.

When the head lamps are at high beam, the high beam pilot lamp lights up.

Position (a): Low beam

Position (b): High beam

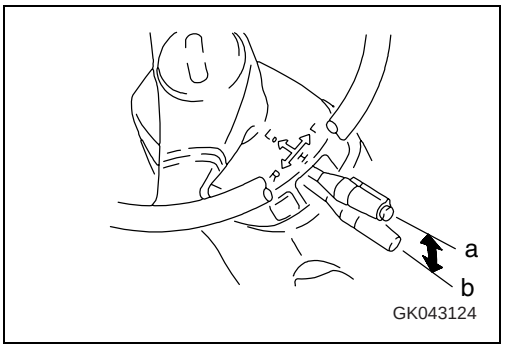

17. Load meter cancel switch

(Option)

When carrying out operations using the load meter, it ispossible to cancel the measured data.

When switch (17) at the top of the bucket control lever is pressed, the data that were just added are cancelled and the display returns to the value before the measurement was made.

The display can be cancelled within 15 seconds after the load is displayed or before the next load is measured.

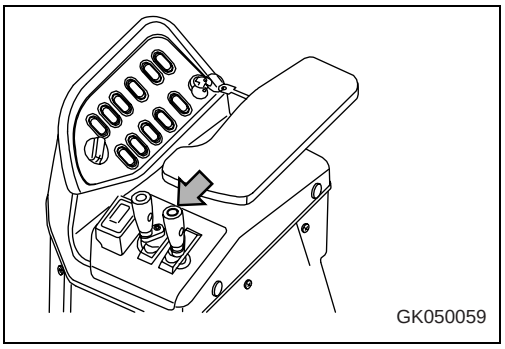

18. Kickdown switch

When the gearshift lever is in 2nd, if switch (18) on the head of the lift arm control lever is pressed, the transmission will shift down to 1st.

Use this when you need to increase the drawbar pull in digging operations.

If the transmission is in auto-shift, and the travel speed is below 12.5 km/h (7.8 MPH) in any speed range when traveling in either forward or in reverse, the kick-down switch is actuated and it is possible to shift down to 1st.

This makes it easy to carry out load and carry operations.
Even if the travel speed is more than 12.5 km/h (7.8 MPH), this switch can be used to shift the transmission down. Each time the kick-down switch is pressed, the speed range will shift down one range at a time (F4 -> F3 -> F2).

When the torque converter is in the lock-up condition (if equipped), the lock-up is canceled.

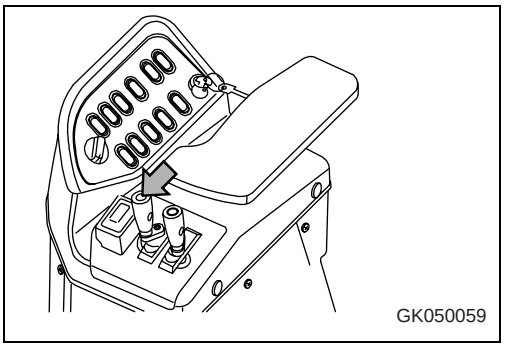

REMARK

When canceling the kick-down, operate the directional lever. In manual shift, the kick-down can be canceled by operating the gearshift lever to any position other than 2nd. It is also possible to cancel the kick-down by turning the starting switch OFF.
In auto-shift, if the travel speed becomes high after the kick-down, the gear will be shifted up by the auto-shift.
In auto-shift, when traveling at more than 25 km/h (15.5 MPH) in 3rd or at more than 35 km/h (21.7 MPH) in 4th, even if the kick-down switch is pressed, the transmission will not shift down. This is to prevent overrun of the engine.

Downloaded from www.Manualslib.com manuals search engine

https://truckmanualshub.com/

19. Hold switch

To fix the speed range when traveling in automatic transmission, press switch (19) at the side of the lift arm control lever knob. The transmission will be fixed in the speed range displayed on shift indicator (A) on the machine monitor and shift hold pilot lamp (B) will light up.

When the switch is pressed again, the HOLD condition is cancelled and the display goes out.

Use this function to select the desired speed range when traveling up or down hills or when carrying out operations such as grading.

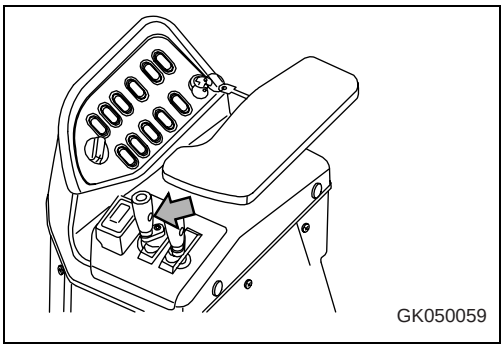
GK050059

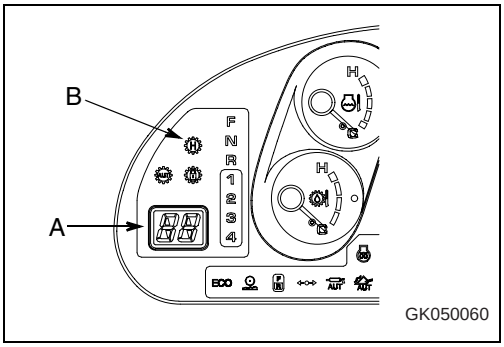

GK050060

REMARK

When the torque converter is locked up (Option), the shift is not fixed.
When canceling the shift hold, operate the directional lever or gearshift lever or operate the transmission shift mode selector switch to MANUAL. It is also possible to cancel the hold shift by turning the starting switch OFF.

20. Load meter subtotal switch

(Option)

It is possible to return the load meter to 0 for the overall load (when in addition mode) or remaining load (when in subtraction mode). Press switch (20) on the side of the bucket control lever. The overall load display will return to 0.

For details, see "Handling load meter (6-2)".

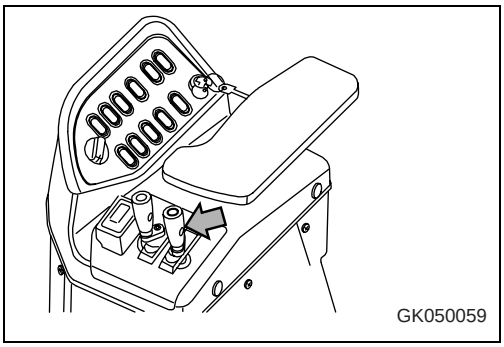
GK050059

21. Directional selector switch

This switch (21) is used to switch the direction of travel of the machine between forward and reverse.

F Position: FORWARD

N Position: Neutral

R Position: REVERSE

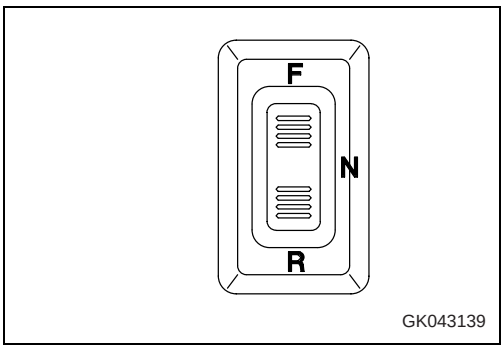

GK043139

Before operating this switch, check that the condition is as follows.

- Directional lever is at N
- Directional selector switch actuation switch is at ON

If the condition is not as above, the switch will not work.

For details, see "Changingdirection (3-117)".

Downloaded from www.Manualslib.com manuals search engine

https://truckmanualshub.com/

22. Transmission auto shift/manual shift selector switch

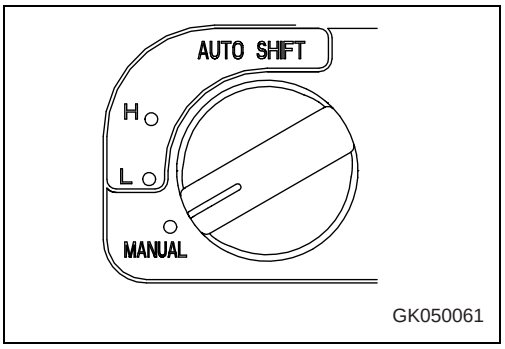

This switch (22) is used to switch the transmission between auto shift and manual shift and to set the shift point for auto shift.

At the “L“ and “H“ positions, the transmission shifts to auto shift and the auto shift pilot lamp on the machine monitor lights up. Normally, set to auto shift.

MANUAL position:
Transmission is set to manual shift and speed range is range displayed by shift indicator.

L position:
Travel speed when shifting up is low
(normal travel, travel on flat ground)

H position:
Travel speed when shifting up is high
(travel on slope, full speed travel)

For details of the manual shift, see "Manual shift (3-68)".

For details of the auto-shift, see "Automatic shift (3-68)".

23. Transmission cut-off switch

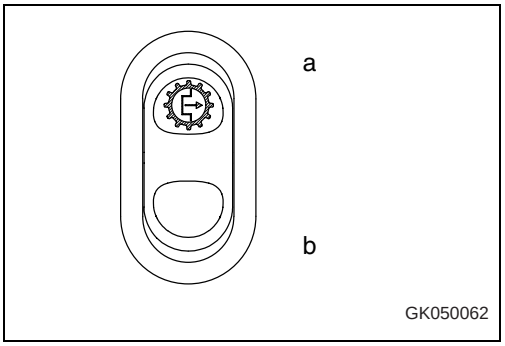

WARNING

When moving the machine off on an uphill slope, set the transmission cut-off switch to the OFF position, depress the accelerator pedal while keeping the left brake pedal depressed, then gradually release the brake pedal and allow the machine to move. In this way the machine can be prevented from traveling backwards.

Press this switch (23) to turn on and off the transmission cut-off system.

When the switch is pressed, the pilot lamp lights up and the system is turned ON. The transmission is shifted to neutral at the adjusted brake pedal depression position.

Normally, keep the switch at the ON position.

For details of the method of adjusting the cut-off position, see "Adjusting transmission cut-off position (3-121)".

Position (a): ON
The left brake pedal acts in the same way as the normal brake, and at the same time, sets the transmission to neutral.

Position (b): OFF
The left brake pedal acts in the same way as the normal brake (right brake pedal).

The brake pedal position where the cut-off system is actuated can be adjusted by using the transmission cut-off set switch on the right switch panel.

Downloaded from www.Manualslib.com manuals search engine

https://truckmanualshub.com/

24. Transmission cut-off set switch

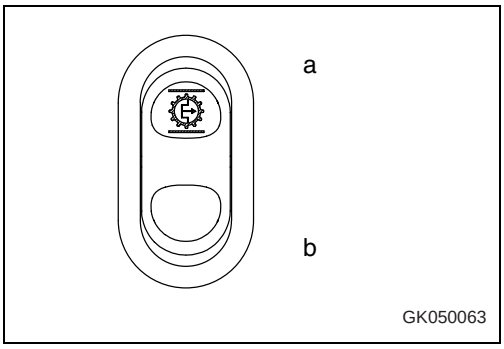

CAUTION

Apply the parking brake before adjusting the transmission cut-off position.

Turn this switch (24) ON to adjust the brake pedal position where the transmission is automatically shifted to Neutral.

Position (a): ON
Cut-off position can be adjusted

When the switch is released, it automatically returns to its original position.

For details of the method of adjusting the cut-off position, see "Adjusting transmission cut-off position (3-121)".

25. Remote positioner raise/lower set switch

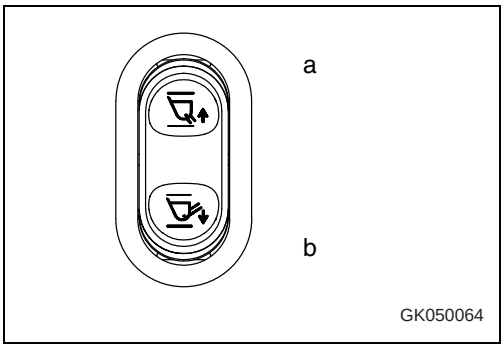

Use this switch (25) to set the kick-out position for the lift arm.

Position (a):
When the lift arm is above the horizontal position, raise the lift arm to the position to set the kick-out. Press the top (a) of this switch to set the kick-out for the RAISE operation at that position.

Position (b):
When the lift arm is below the horizontal position, lower the lift arm to the position to set the kick-out. Press the bottom (b) of this switch to set the kick-out for the LOWER operation at that position.

If the setting has been made without problem, the buzzer emits short sounds.

If it was not possible to make the setting, the buzzer does not sound.

If the switch is kept pressed for more than 1 second, the buzzer emits a long sound and the kick-out position setting is cancelled.

For details, see "Operating remote boom positioner (3-126)".

Downloaded from www.Manualslib.com manuals search engine

https://truckmanualshub.com/

26. Remote positioner bucket angle set switch

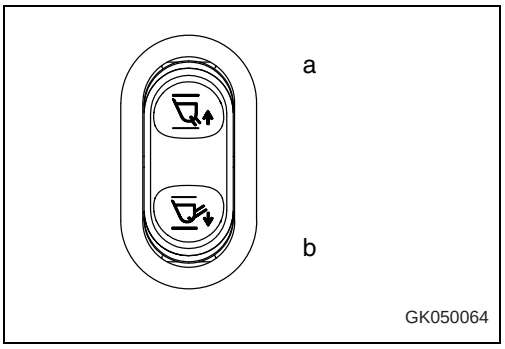

When setting the angle of the bucket, set the bucket control lever to the HOLD position and stop the machine. If the bucket control lever is not at HOLD and the machine is not stopped, the setting cannot be carried out.

When this switch (26) is pressed, the bucket lower is actuated and the angle of the cutting edge is set to the desired angle when the tilt operation is stopped on the ground.

Each time (a) is pressed, the stop position when the leveler is actuated is set to face up one stage.

Each time (b) is pressed, the stop position when the leveler is actuated is set to face down one stage.

When setting the bucket facing up or down, it is possible to set up or down five stages (± 5) from the horizontal. The angle changes approx. 1° for each stage.

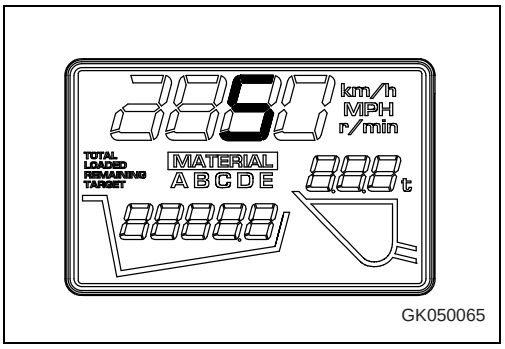

When remote positioner bucket angle setting switch (a) or (b) is pressed, the travel speed display on the machine monitor changes to only numerals. (No unit is displayed.)

When the initial setting is made, “0“ is displayed.

The display shows +5 (up) and -5 (down).

Each time remote positioner bucket angle set switch (a) or (b) is pressed, the display changes +1 or -1, and the buzzer emits short sounds.

When operation of the switch is stopped at the set value, the setting is saved to memory after 3 seconds, and the display switches to the travel speed or engine speed.

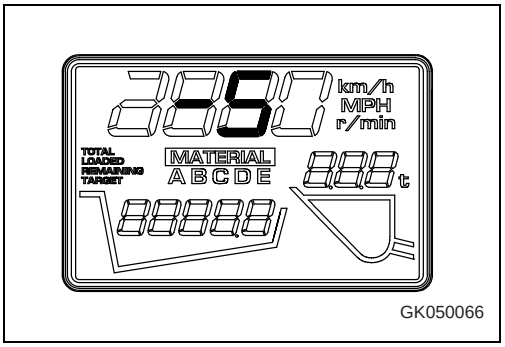

Stop the machine before setting the bucket angle.

REMARK

If the switch is not operated for 3 seconds after the monitor display changes to numerals only, the present setting is retained and the display returns to the travel speed or engine speed display.
When the setting has been changed the maximum of +5° or -5°, and the remote positioner bucket angle setting switch (a) or (b) is pressed, the buzzer will emit a long sound.
When digging hard rock, set the bucket angle facing down; when digging soft rock, set the bucket horizontal.
For details of operations, see "Work possible using wheel loader (3-128)" in "Digging operations (3-129)" and "Digging and loading on level ground (3-131)".

The angle of the bucket doesn’t change when the remote positioner bucket angle set switch is pushed. The bucket stops at the set angle by operating the bucket leveller after the angle is set.

For details, see "Operating remote bucket positioner (3-126)".

Downloaded from www.Manualslib.com manuals search engine

https://truckmanualshub.com/

27. Rpm set on-off switch

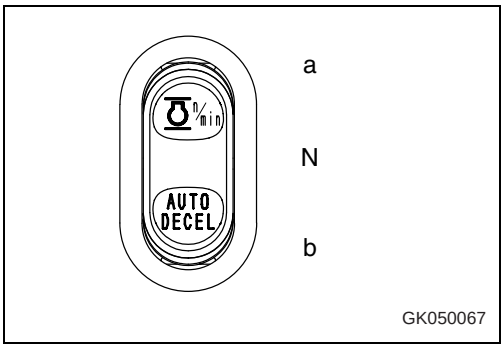

Use this switch (27) to turn the RPM SET system ON-OFF.

Position (a): System ON
Indicator lamp lights up.

Position (N): System OFF
Indicator lamp goes out.

Position (b): System ON, auto deceleration ON
Indicator lamp lights up.

In this case, if the transmission shift is at neutral and the work equipment control lever is not operated for a certain time (5-10 seconds), the engine automatically returns to low idling speed. If the accelerator pedal is depressed and the engine speed exceeds the set speed, the engine will return to its original speed.

In addition, even if the work equipment control lever is operated, the engine will return to its original speed.

28. Rpm set idle up-down selector switch

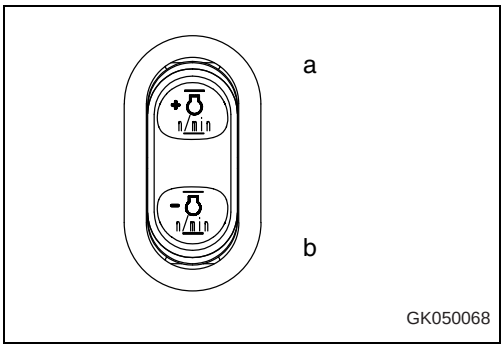

CAUTION

If the RPM set ON-OFF switch or engine starting switch are turned OFF, the idle-up or idle-down speed data in memory are cleared. When setting again, start the procedure from the beginning. To actuate this switch, check that the RPM set ON/OFF switch is at the ON position or the auto deceleration is at the ON position. If they are at the ON position, the ON/OFF switch indicator lights up. The setting can be cancelled by turning the RPM set ON-OFF switch or by depressing the right brake.

Use this switch (28) to hold the engine speed at the desired speed.

Position (a):
Use this position when setting the engine speed and when raising the set speed.

- When using the accelerator pedal
  Depress the accelerator pedal to raise the engine speed to the desired speed, then press portion (a) of the switch. The speed is recorded in memory.
- When using the RPM set idling up/down selector switch
  Keep portion (a) of the switch pressed for at least 0.5 sec to raise the engine speed. When the engine reaches the desired speed, release the switch. The new speed is recorded to memory and the setting is made.

Downloaded from www.Manualslib.com manuals search engine

https://truckmanualshub.com/

Position (b):
Use this position when lowering the engine speed or when resetting after canceling the RPM set ON/OFF switch.

- When using the RPM set up/down selector switch
  Keep portion (b) of the switch pressed for at least 0.5 sec to lower the engine speed. When the engine reaches the desired speed, release the switch. The new speed is recorded to memory and the setting is made.

29. Cooling fan reverse rotation switch

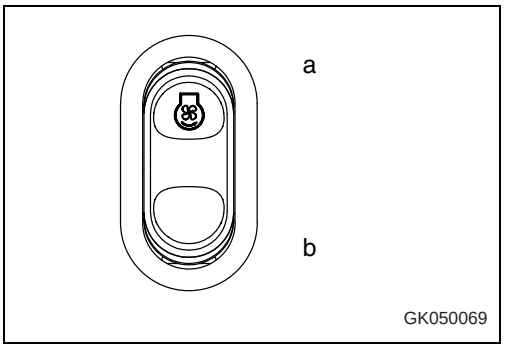

This switch (29) is used to rotate the cooling fan in the reverse direction when cleaning the radiator.

Position (a): ON
The pilot lamp inside the switch and the cooling fan reverse rotation pilot lamp on the machine monitor light up. At the same time, “COOLING FAN REVERSE“ is displayed on the character display, and the fan is set to rotate in reverse.

Position (b): OFF
The cooling fan is set to rotate in the normal direction.

Stop the engine before operating the switch.

Switching normal rotation -> reverse rotation: With the engine stopped, do as follows: Starting switch ON -> reverse rotation switch ON -> check machine monitor -> starting switch START -> fan reverse rotation

Switching reverse rotation -> normal rotation: Engine at low speed -> starting switch OFF -> starting switch ON -> reverse rotation switch OFF -> starting switch START -> fan normal rotation

For details, see "Clean radiator fins with compressed air (4-40)".

REMARK

When the engine is running, even if the switch is pressed, the direction of rotation of the fan does not change, but the cooling fan reverse rotation pilot lamp on the machine monitor flashes.
Use the reverse rotation of the fan only for cleaning. For normal operations, rotate the fan in the normal direction. If operations are carried out with the fan rotating in the reverse direction, the machine will not display its full function and will tend to overheat.

Downloaded from www.Manualslib.com manuals search engine

https://truckmanualshub.com/

30. Semi auto digging switch

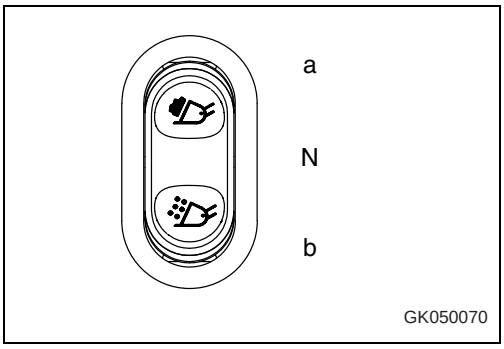

This switch (30) turns the semi auto digging ON-OFF.

Position (a): ROCK mode
Use this mode when heavy loads are being handled and the bucket tilt operation is carried out intermittently.

Position (b): LOOSE mode
Use this mode when light loads, such as blasted rock, are being handled and the bucket tilt operation is carried out continuously.

N position: Semi auto digging is switched OFF

At positions (a) and (b), the pilot lamp inside the machine monitor lights up.

For details, see "Semi auto digging operations (3-125)".

31. Directional selector switch

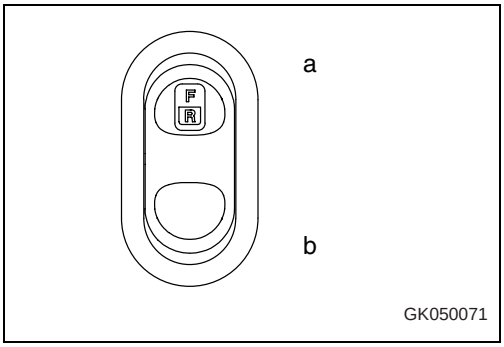

This switch (31) is the power switch for the directional selector switch.

Position (a):
Directional selector switch system ON

Position (b):
Directional selector switch system OFF

Downloaded from www.Manualslib.com manuals search engine

https://truckmanualshub.com/

32. Torque converter lock-up switch

(Option)

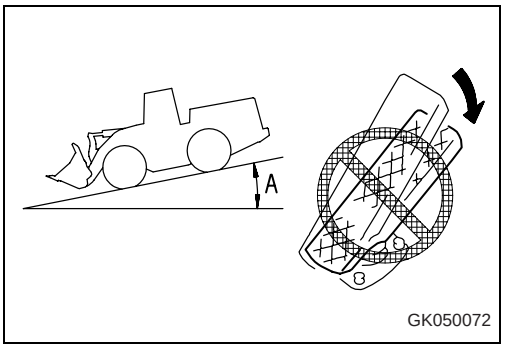

WARNING

When traveling down slopes of a grade of more than 6°, never depress the accelerator pedal fully, regardless of whether the torque converter lock-up switch is ON or OFF. It is extremely dangerous to drive too fast.

NOTE

To prevent overrun when the machine next travels at high speed, do not shift down.
When traveling in F3 at a speed of 17 km/h (10.6 MPH) or more, do not shift down to F2.
When traveling in F4 at a speed of 30 km/h (18.6 MPH) or more, do not shift down to F3.

If the transmission is shifted down under the above conditions, the overrun prevention function is actuated and the speed range is maintained until the travel speed is reduced to the condition for shifting gear.

When the actual travel speed range is 2nd - 4th in both forward and reverse, the torque converter lock-up function is actuated according to the travel speed and the transmission changes to direct drive.

Use this switch (32) to operate the torque converter lock-up function.

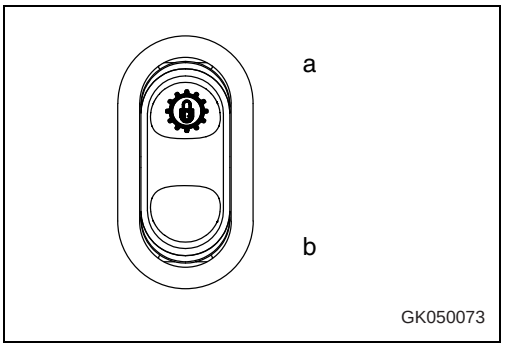

Position (a): ON
The pilot lamp inside the switch lights up and the lock-up is actuated according to the travel speed. When the lock-up is in use, the lock-up pilot lamp on the machine monitor lights up.

Position (b): OFF
Press this to cancel the lock-up.

REMARK

The torque converter lock-up function makes it possible to improve the efficiency of power transmission when traveling at high speed and also reduces the fuel consumption.
When traveling downhill and using the braking force of the engine, actuate the torque converter lock-up.

Downloaded from www.Manualslib.com manuals search engine

https://truckmanualshub.com/

33. Engine power mode selector switch

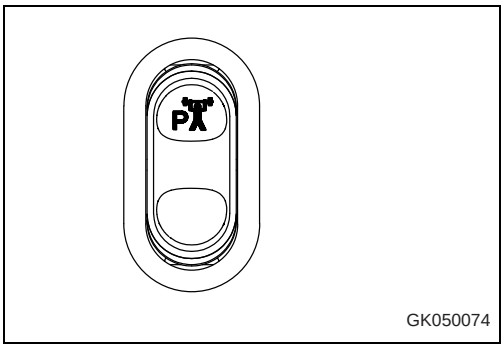

Use this switch (33) to switch the engine output to match the purpose of the operation.

When the power mode, the output mode pilot lamp (power mode) on the machine monitor lights up. In addition, the economy mode pilot lamp (ECO) goes out.

- Power mode (high engine output)
  Fast operations with emphasis on production.
- Economy mode (low engine output)
  Operations with time to spare in the cycle time with emphasis on fuel consumption.

REMARK

For normal operations, use the economy mode to improve the fuel consumption.
When used together with the accelerator, it helps to reduce fuel consumption.
With the power mode, the maximum output is provided according to the amount of the accelerator pedal is depressed.
Use this particularly when the work must be completed in a short cycle time.
Even if the engine is stopped in power mode, when the engine is started again, it will start in economy mode.
(In some territories, the default mode is set to power mode. If it is desired to change the default to the economy mode, please consult your KOMATSU distributor.)

34. Rear heated wire glass switch

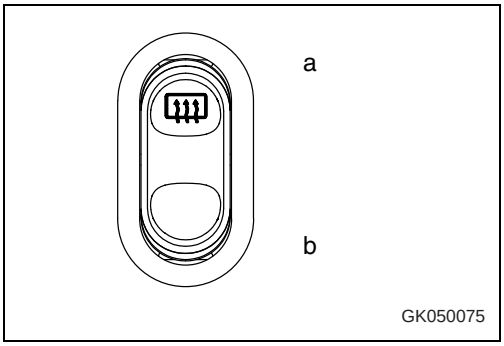

When this switch (34) is pressed, electric current flows through the heated wire glass at the rear and the mist is removed from the glass.

Position (a): ON (removes mist from glass)

Position (b): OFF

35. Auto-greasing switch

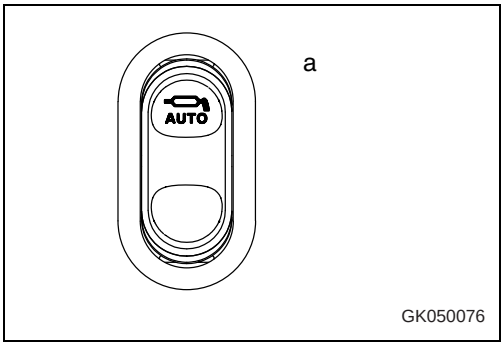

Use this switch (35) to start the auto-greasing system.

Position (a): It is possible to operate the greasing for one cycle when desired, regardless of the time that has passed.

For details, see "Central lubrication system (6-46)"

Downloaded from www.Manualslib.com manuals search engine

https://truckmanualshub.com/

36. Emergency parking brake cancel switch

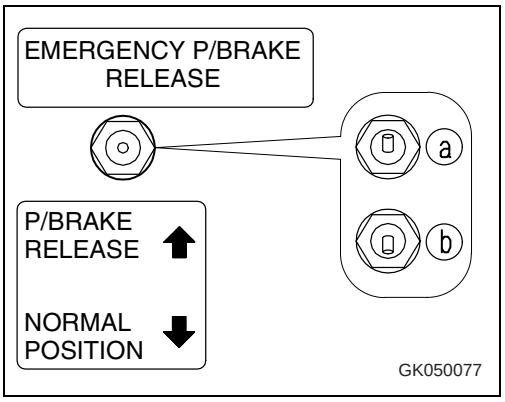

WARNING

When the emergency parking brake cancel switch is released, the machine may move.
When releasing the emergency parking brake switch, see "Method of releasing brake by using emergency parking brake cancel switch (3-177)".

If the engine will not start for some reason, use this switch (36) to release the parking brake. Please contact your KOMATSU distributor to have the brake released.

Position (a): Release

Position (b): Normal position

37. Room lamp switch

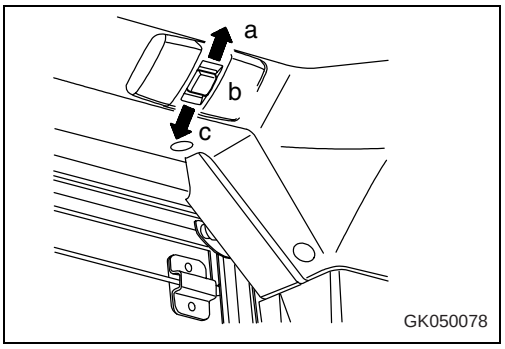

The switch (37) is used to turn the room lamp ON and OFF.

Position (a): OFF

Position (b): Lights up when the cab door opens

Position (c): Lights up

REMARK

The room lamp lights up even when the main switch is OFF, so when leaving the operator's compartment, turn the switch to position (a) (OFF) or (b).
When operating with the cab door fully open, set the switch to position (a) (OFF).

Downloaded from www.Manualslib.com manuals search engine

https://truckmanualshub.com/

3.2.3 Control levers, pedals

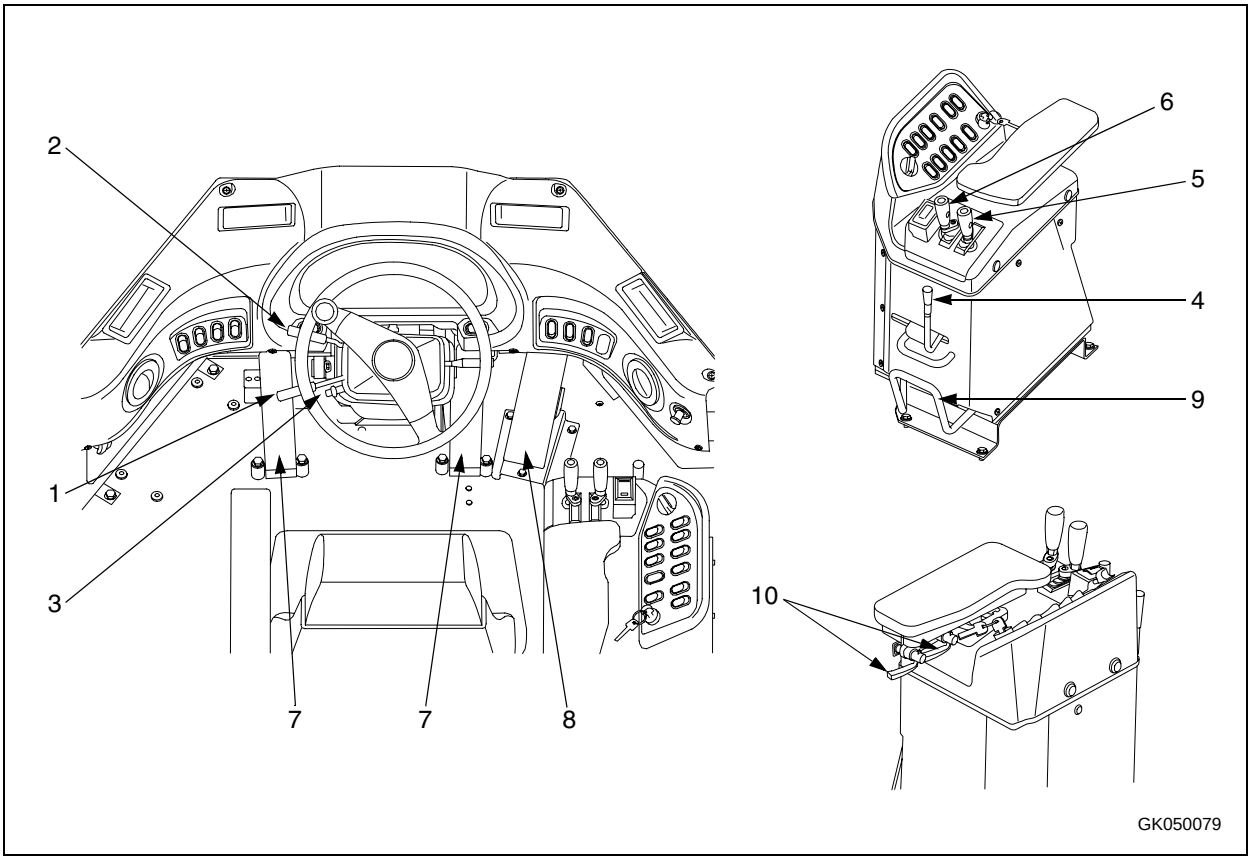

(1) Gearshift lever
(2) Directional lever
(3) Gearshift lever stopper
(4) Work equipment lock lever
(5) Bucket control lever
(6) Lift arm control lever
(7) Brake pedal
(8) Accelerator pedal
(9) Handle for adjusting fore-and-aft position of work equipment control lever
(10) Lever for adjusting right armrest up/down angle

Downloaded from www.Manualslib.com manuals search engine

https://truckmanualshub.com/

1. Gearshift lever

This lever (1) changes the speed range of the transmission.

Manual shift

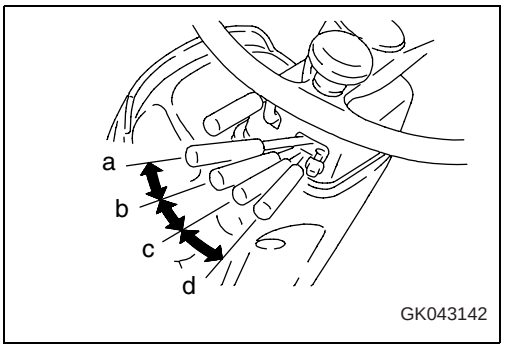

This machine has a 4-FORWARD, 4-REVERSE speed transmission.

Place the gearshift lever in a suitable position to obtain the desired speed range.

- 1st and 2nd speeds are used for working.
- 3rd and 4th speeds are used for traveling.

However, when the gearshift lever stopper is being used, it is impossible to shift to 3rd or 4th. Disengage the gearshift lever stopper before trying to shift gear.

Position (a): 1st

Position (b): 2nd

Position (c): 3rd

Position (d): 4th

REMARK

The length of the lever can be adjusted to 3 stages (positions (A), (B), (C)). To adjust the length, remove the screw (E) at the bottom of the lever knob (D), slide the knob to the desired position, then tighten the screw (E) again.
(The lever is installed to position (B) when it is shipped from the factory.)

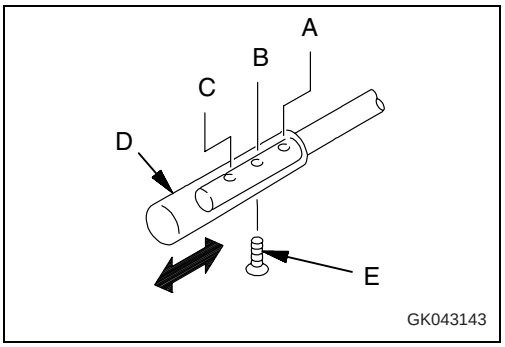

Automatic shift

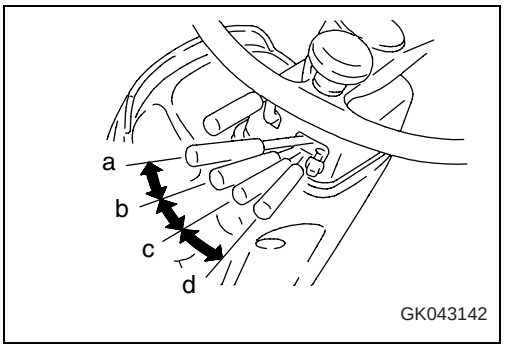

Automatic gear shifting can be carried out in the 2nd through 4th speed range of the four forward and reverse speeds depending on the travel conditions.

Position (a): 1st

Position (b): 2nd

Position (c): 3rd

Position (d): 4th

The range of speeds during automatic gear shifting is determined by the position of the gearshift lever as shown in the chart on the right.

Gear shift lever positions	Speed range
2nd	2nd
3rd	2nd <-> 3rd
4th	2nd <-> 3rd <-> 4th

Downloaded from www.Manualslib.com manuals search engine

https://truckmanualshub.com/

REMARK

The 1st position for the gearshift lever fixes the transmission in 1st. There is no automatic shifting of the transmission.
When shifting down from 2nd to 1st, press the kick-down switch on the lift arm control lever.
If the transmission is in auto-shift and the travel speed is below 12.5 km/h (7.8 MPH) in any speed range when traveling in either forward or in reverse, the kick-down switch is actuated and makes it possible to shift down to 1st.
This makes it easy to carry out load and carry operations.
Even if the travel speed is more than 12.5 km/h (7.8 MPH), this switch can be used to shift the transmission down. Each time the kick-down switch is pressed, the speed range will shift down one range at a time (when in 4th: F4 -> F3 -> F2; when in 3rd: F3 -> F2).
If the torque converter is locked up, the lock-up is cancelled.

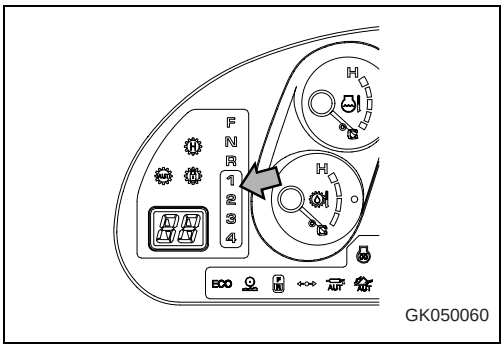

GK050060

To set to the desired speed range when traveling uphill or downhill, or when carrying out grading, do as follows.

- When fixing the speed range
  Press the HOLD switch on the lift arm control lever.
  The speed range is fixed at the speed range displayed on the transmission indicator on the main monitor.

- When shifting up or down from set speed range
  Shift gear with the gearshift lever.

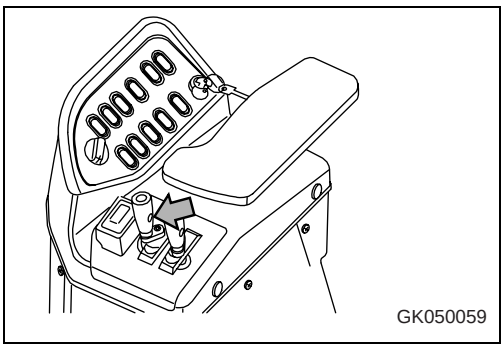
GK050059

REMARK

When the transmission has been shifted down from 2nd to 1st with the kickdown switch, it will shift up from 1st to 2nd when the travel speed increases.

2. Directional lever

This lever (2) is used to switch the direction of travel of the machine between forward and reverse.

When starting the engine, if the directional lever is not at the N position, the engine will not start.

In this case, the central warning lamp will light up and the buzzer will sound.

Return the gearshift lever to the N position and start the engine.

Position F: FORWARD

Position N: NEUTRAL

Position R: REVERSE

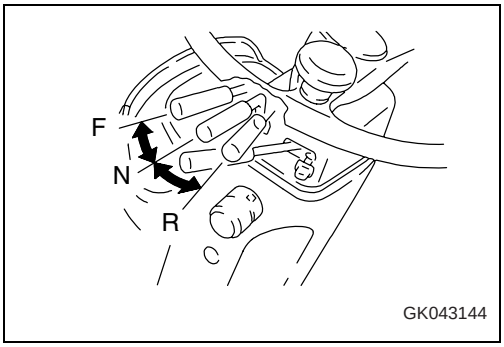

GK043144

Downloaded from www.Manualslib.com manuals search engine

https://truckmanualshub.com/

REMARK

The length of the lever can be adjusted to 3 stages (positions (A), (B), (C)). To adjust the length, remove the screw (E) at the bottom of the lever knob (D), slide the knob to the desired position, then tighten the screw (E) again.
(The lever is installed to position (B) when it is shipped from the factory.)

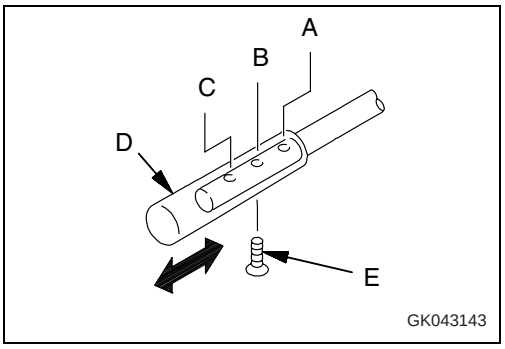

3. Gearshift lever stopper

This stopper (3) prevents the gearshift lever from entering the 3rd or 4th positions when working.

Position (a): Stopper actuated.

Position (b): Stopper released.

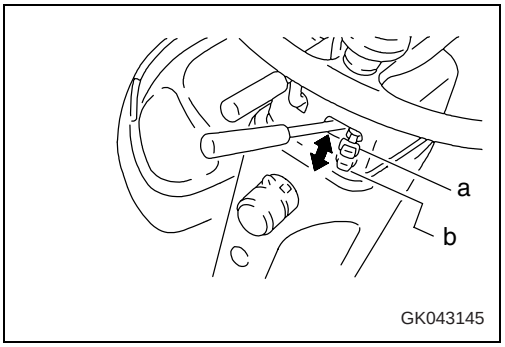

4. Work equipment lock lever

WARNING

- Before leaving the operator's seat, set the work equipment lock lever securely to the LOCK position. If the work equipment lock lever is not at the LOCK position, and work equipment control lever is touched by mistake, it may lead to a serious accident.
- If the work equipment lock lever is not placed securely at the LOCK position, the work equipment control lever may move, and this may lead to a serious accident or personal injury. Check that the lever is in the LOCK position.
- When operating the work equipment lock lever, check that the work equipment control lever is held securely at the HOLD position.
- When pulling up or pushing down the work equipment lock lever, be careful not to touch work equipment control lever (A).

This lever (4) is a lock device for the work equipment control lever.

Push the work equipment lock lever to the outside to lock it.

REMARK

If the work equipment lock lever is at the LOCK position, the work equipment will not move even when the work equipment control lever is operated.

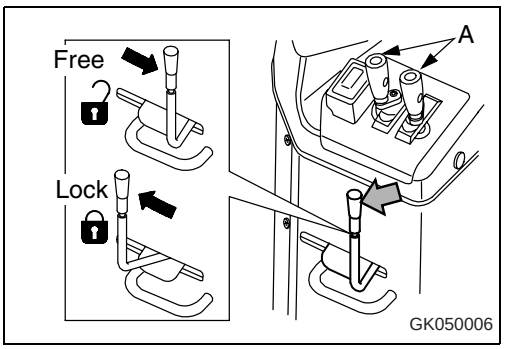

Downloaded from www.Manualslib.com manuals search engine

https://truckmanualshub.com/

5. Bucket control lever

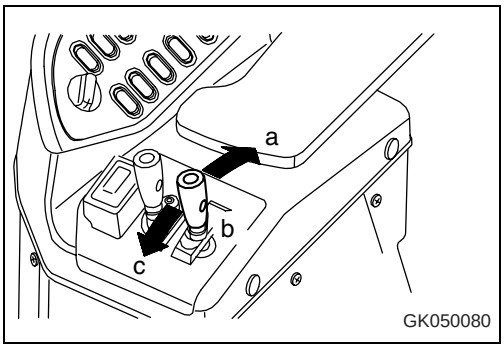

This lever (5) operates the bucket.

Position (a): TILT
When the lever is pulled further from the TILT position, the lever stays at that position (detent position), and returns to the HOLD position when the bucket reaches the position set for the bucket positioner.

Position (b): HOLD
The bucket is kept in the same position.

Position (c): DUMP

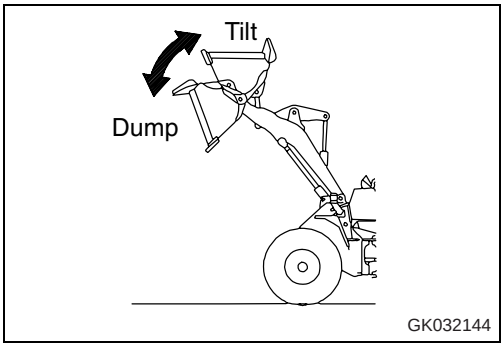

REMARK
If the engine is stopped or the work equipment lock lever is at the LOCK position, the lever does not stop at the detent position. In addition, if the bucket is operated towards the tilt position from near the horizontal position, the lever also does not stop at the detent position.

6. Lift arm control lever

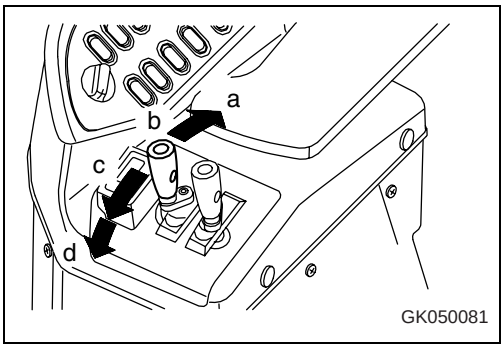

This lever (6) is used to operate the lift arm.

Position (a): RAISE
When the lever is pulled further from the RAISE position, the lever stops in this position (detent position). When the lift arm reaches the maximum height, the lever returns to the HOLD position.

Position (b): HOLD
The lift arm is kept in the same position.

Position (c): LOWER

Position (d): FLOAT
The lift arm moves freely under external force.

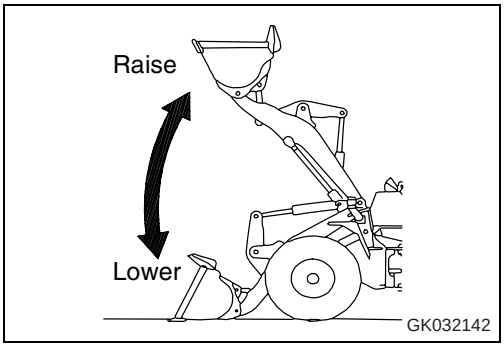

REMARK
If the engine is stopped or the work equipment lock lever is at the LOCK position, the lever does not stop at the detent position.

For details of the method of operation when using the remote position, see "Remote positioner (3-126)".

Downloaded from www.Manualslib.com manuals search engine

https://truckmanualshub.com/

7. Brake pedal

WARNING

- When traveling downhill, always use the right brake pedal, and use the braking force of the engine together with the brake.
- Do not use the brake pedal excessively. If the brake is used too frequently, the brake will overheat. If this happens, the brakes will not work and may lead to a serious accident.
- Do not put your foot on the brake pedal unless necessary.

These pedals (7) operate the brakes.

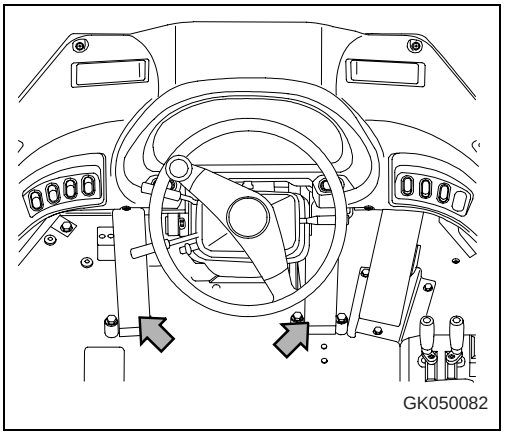
GK050082

Right brake pedal

The right brake pedal operates the wheel brakes.

Use the right brake pedal for normal braking operations.

Left brake pedal

The left brake pedal operates the wheel brakes.

When the transmission cut-off switch is in the ON position, and if this brake pedal is depressed, wheel brakes are applied and the transmission is set to the neutral position at the same time.

If the transmission cut-off switch is at OFF, the left brake pedal acts in the same way as the right brake pedal.

REMARK
When the accelerator is being used for operating the work equipment, always set the transmission cut-off switch to the ON position and use the left brake pedal to slow or stop the machine.

8. Accelerator pedal

This pedal (8) controls the engine speed and output.

The engine speed can be freely controlled between low idling and full speed.

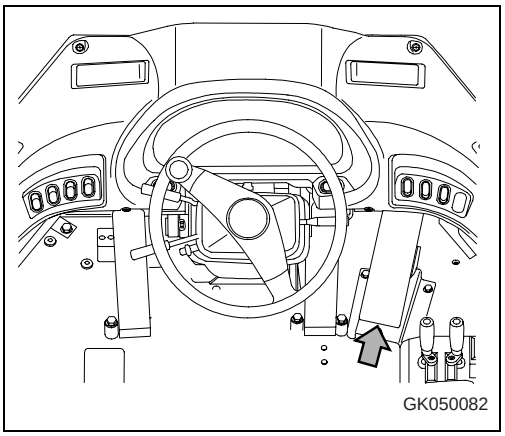
GK050082

Downloaded from www.Manualslib.com manuals search engine

https://truckmanualshub.com/

9. Handle for adjusting fore-and-aft position of work equipment control lever

WARNING

When operating the fore-and-aft adjustment handle for the work equipment control lever, always stop the machine and set the work equipment lock lever to the LOCK position.

With this handle (9) is possible to move the work equipment control lever (right console) to the front or rear within range (a) of 180 mm (7 in) (10 mm (0.4 in) x 18 stages).

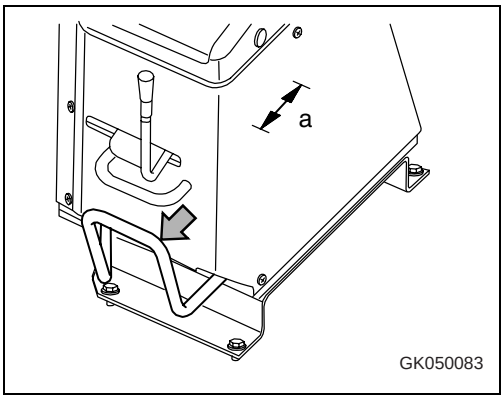

10. Lever for adjusting right armrest up/down angle

With this lever (10) it is possible to adjust the armrest up or down within range (a) of approx. 30 mm (1.2 in) and the angle within range (b) of approx. 20°.

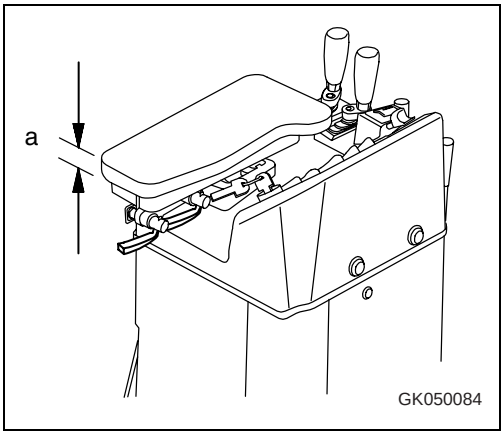

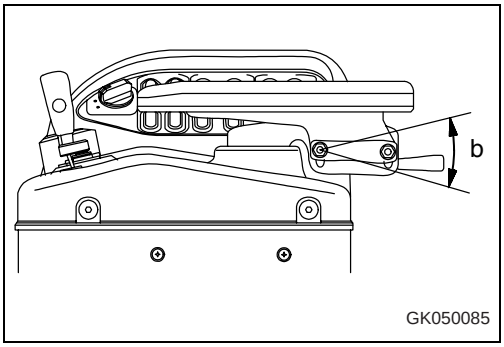

Downloaded from www.Manualslib.com manuals search engine

https://truckmanualshub.com/

3.2.4 Steering tilt lock lever

WARNING

Stop the machine before adjusting the tilt of the steering wheel. If this operation (adjustment) is carried out while the machine is moving, it may lead to a serious accident or personal injury.

This lever is used to unlock and lock the steering column when adjusting the position of the steering column to the front or rear or up or down.

(F) FREE position:
Steering wheel can be moved to front, rear, up, and down

(L) LOCK position:
Steering wheel is held in position
The adjustment amounts are as follows.

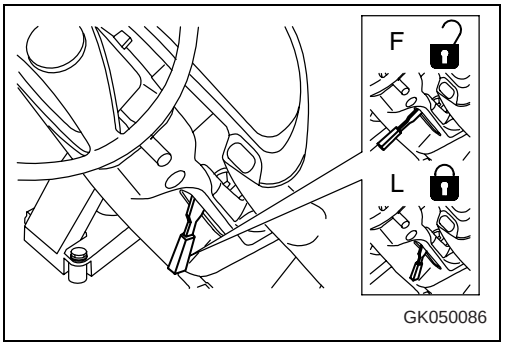

Up-down movement	When at 0 mm (0 in)	When moved up to 40 mm (1.6 in)
Tilt amount	0 - 105 mm (0 - 4.1 in)	0 - 130 mm (0 - 5.1 in)

Downloaded from www.Manualslib.com manuals search engine

https://truckmanualshub.com/

3.2.5 Cap with lock

Use the starting key to open and close the locks on the caps.

The fuel tank filler port and the hydraulic tank filler port are equipped with locks.

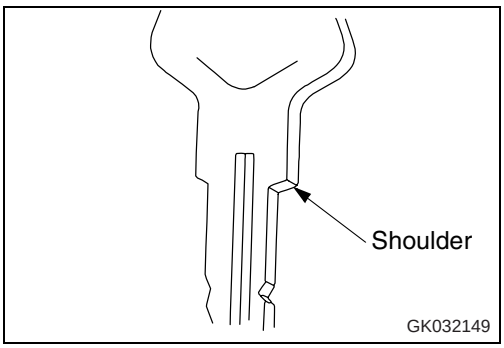

Method of opening and closing cap with lock (for the fuel tank filler port)

To open the cap

1. Insert the key into the key slot.
2. Turn the key clockwise, align the key slot with the match mark on the cap, then open the cap.

To lock the cap

1. Turn the cap until tight, then insert the key into the key slot.
2. Turn the key counterclockwise and take the key out.

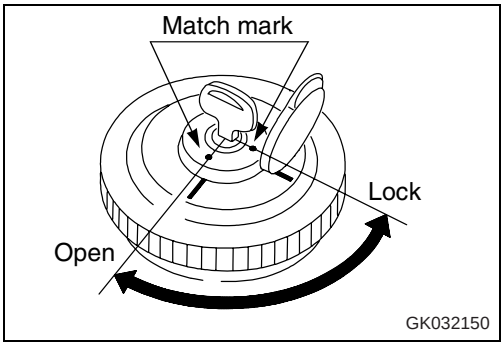

Method of opening and closing cap with lock (for the hydraulik tank filler port)

To open the cap

1. Insert the key into the key slot.
2. Turn the starting switch key counterclockwise and bring the rotor groove in line with the aligning mark (1) on the cap. Turn the cap slowly until a “clicking“ sound is made. This releases the lock and allows the cap to be opened.

   Position (a): OPEN
   Position (b): LOCK

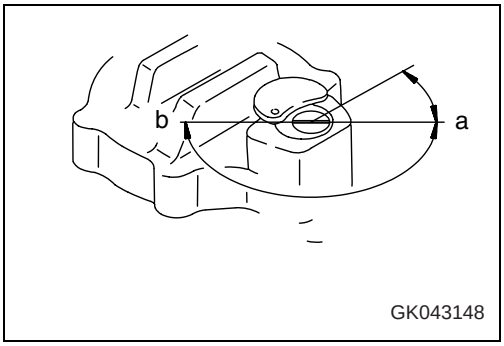

To lock the cap

1. Screw the cap into place.
2. Turn the starting switch key to LOCK position (b), then remove the key.

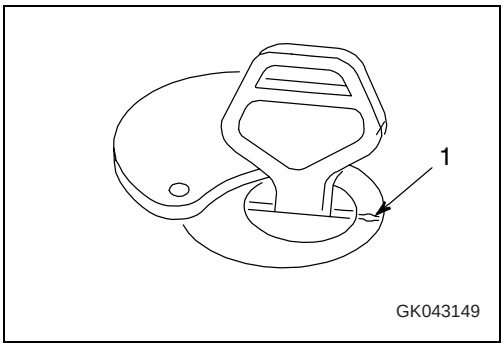

Downloaded from www.Manualslib.com manuals search engine

https://truckmanualshub.com/

3.2.6 Safety bar

WARNING

- When carrying out maintenance or transporting the machine, always set the safety bar to the LOCK position.
- If the machine is transported or lifted when the safety bar is not locking the frame, the machine may suddenly articulate. If the machine articulates, it may cause serious personal injury to people in the surrounding area.
- Always lock the frame lock bar when transporting or lifting the machine. Always remove the safety bar for travel operations. If it is not removed, the steering wheel cannot be used for steering, and this may lead to serious damage or injury.

The safety bar is a device to lock the front frame and rear frame so that machine does not articulate.

LOCK position:
Always set to this position when transporting or lifting machine.

FREE position:
Always set to this position when machine travels.

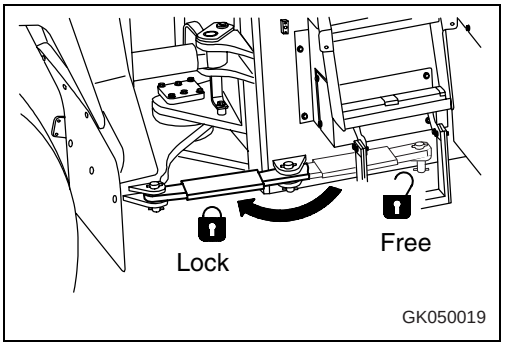

WARNING

Insert the lock pin of the safety bar securely, then fit the linchpin. If it is not inserted fully and a load is applied, there is danger that it might come out and that the safetybar may be deformed.

When locking the safety bar, lock it as follows.

1. Insert safety lock pin (1) securely into hinge (2) at the bottom of the front frame.
2. Always secure it with supplied linchpin (3).

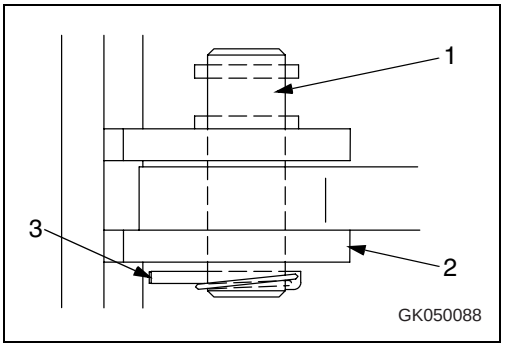

Downloaded from www.Manualslib.com manuals search engine

https://truckmanualshub.com/

3.2.7 Towing pin

1. Insert towing pin (1) into hole (2) in the counterweight.

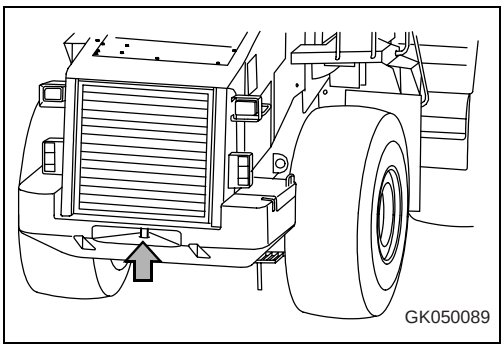

2. Use linch pin (3) to set so that the towing pin does not come out.

   Reverse this operation to remove the pin.

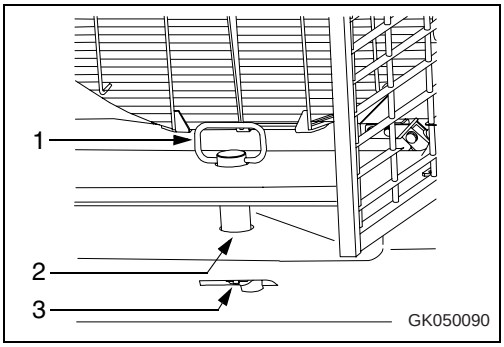

3.2.8 Backup alarm

This sounds an alarm when the directional lever is set to the R position. It is used to warn people behind the machine that the machine will travel in reverse.

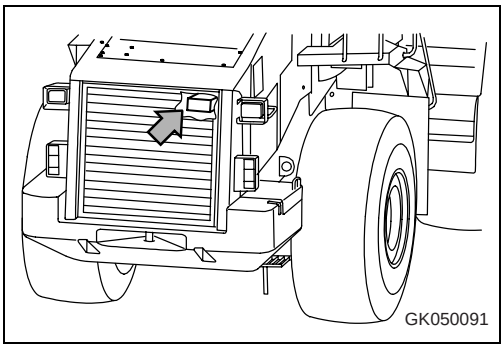

Downloaded from www.Manualslib.com manuals search engine

https://truckmanualshub.com/

3.2.9 Opening cab, window door

Open lock cancel knob for right cab door

CAUTION

The right cab door is for use when escaping in an emergency. In normal situations, do not use it for getting in or out of the operator's compartment.
It is dangerous to keep the right window fully open when traveling or during operations. Do not leave it fully open.

NOTE

When closing the right window of the cab, insert lock release knob (1) into catch (2), then lower the lock release knob. If the door is closed with the lock release knob already lowered, the lock release knob may be broken.

Use this when it is desired to open the right window.

Pull lock cancel knob (1) up to open the right window.

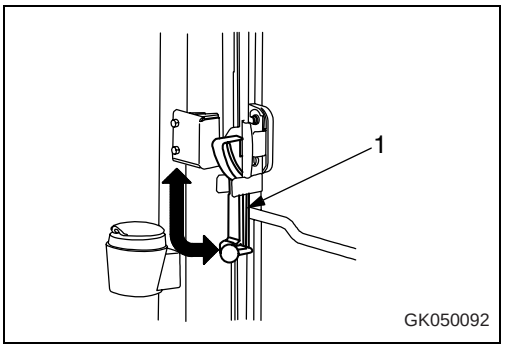

If lock cancel knob (1) is pulled further, it is possible to open the right window fully.

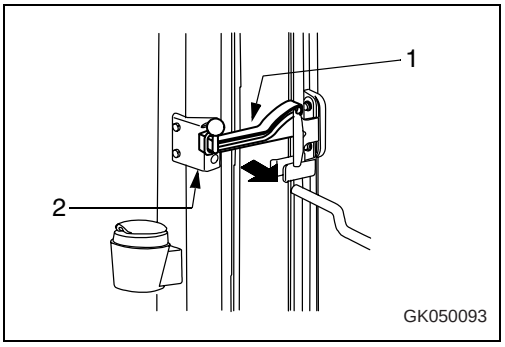

REMARK

The right window of the cab cannot be opened or closed from the outside.

NOTE

The gas damper is not a lock device to keep the cab door open. Do not travel or carry out operations with the cab door left open.

Downloaded from www.Manualslib.com manuals search engine

https://truckmanualshub.com/

Cab left door open lock

When getting in or out of the operator's compartment, or when operating with the door open, use this lock to hold the door in position.

1. Push the door against catch (1) to lock it in position.
2. When attaching the door in position, lock it firmly to the catch.
3. When getting on or off the machine, hold the handrail on the inside.

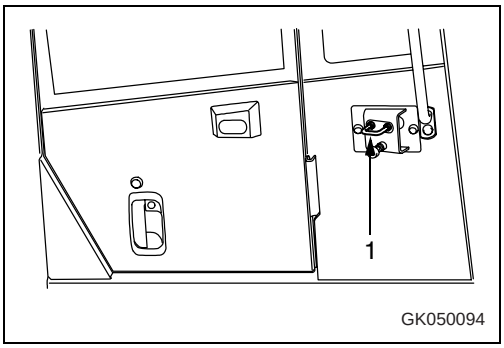

4. When closing the door from the operator's seat, push knob (2) to release the catch.
5. When closing the door after getting off the machine, pull knob (3) to release the catch.

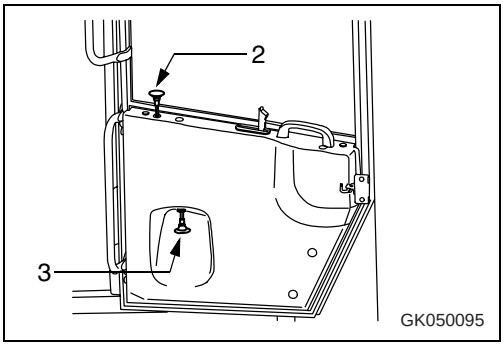

Cab left door open knob

Pull open knob (1) to open the left door fully.

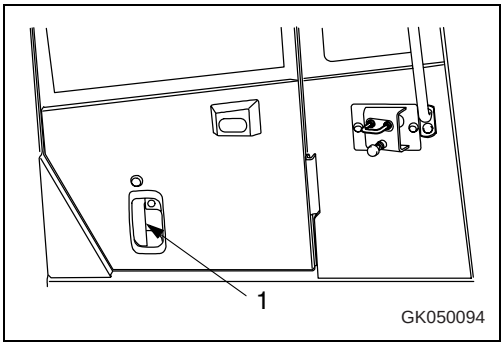

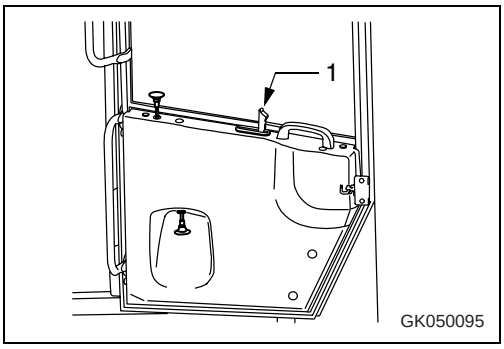

Downloaded from www.Manualslib.com manuals search engine

https://truckmanualshub.com/

Open lock cancel knob for left cab window

Use this knob when you want to move the door window glass up or down to open or close it.

Grip lock cancel knob (1) to release the lock, and move it down to a lower lock position. Release lock cancel knob (1).

There are 3 points for lock position (A).

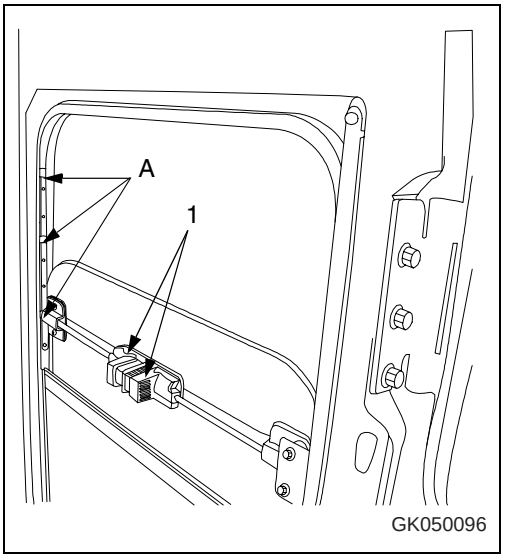

3.2.10 Handling cab wiper

Preventing damage to wiper arm bracket

NOTE

When angling the wiper arm (1) to the front, check that the wiper blade is hanging free.

When angling the wiper arm (1) to the front, such as when wiping the glass clean, if the wiper arm (1) is angled with the wiper blade (2) locked to the arm (the bottom of the blade is caught on the arm), abnormal force is brought to bear on the mounting bracket and the bracket may break.

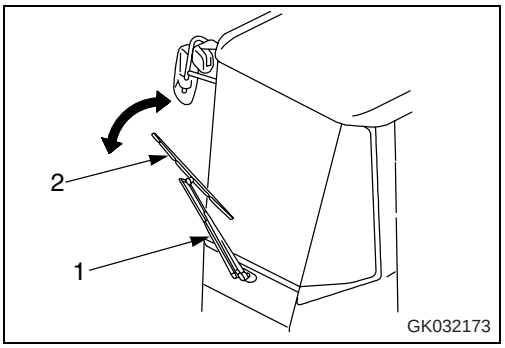

Downloaded from www.Manualslib.com manuals search engine

https://truckmanualshub.com/

3.2.11 Dust indicator

The dust indicator is inside the engine hood on the left side of the machine.

The display is given in five stages according to the degree of clogging of the element.

If the air cleaner is clogged, the air cleaner clogging caution lamp on the machine monitor lights up to inform the operator that the air cleaner needs to be cleaned.

After cleaning, press the reset button to cancel the lamp.

For details of the method of cleaning, see "Cleaning or replacing outer element (4-29)".

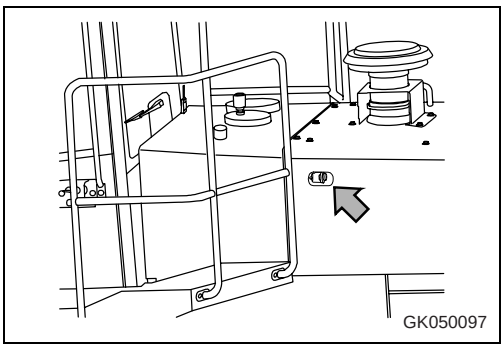

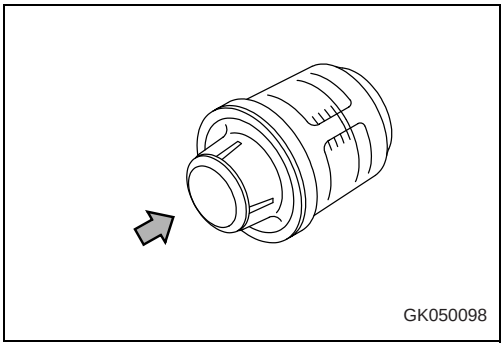

3.2.12 Fuse

NOTE

Before replacing a fuse, be sure to turn off the starting switch.

The fuses protect the electrical equipment and wiring from burning out.

If the fuse becomes corroded, or white powder can be seen, or the fuse is loose in the fuse holder, replace the fuse.

Replace the fuse with another of the same capacity.

Inside rear console box
Loosen knob (1) at two places, then remove cover (2). The fuse boxes are A and B.

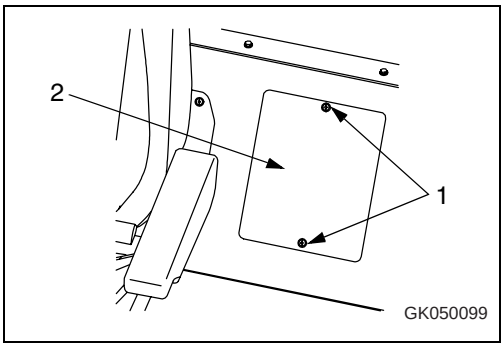

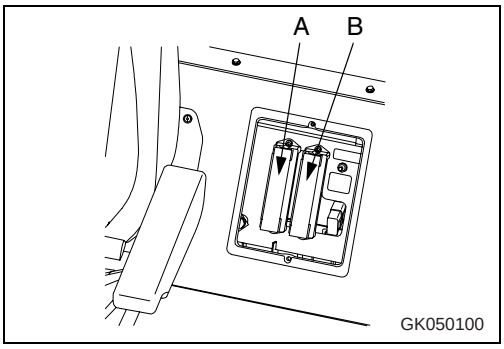

Downloaded from www.Manualslib.com manuals search engine

https://truckmanualshub.com/

Fuse capacity and name of circuit

Fuse box A

No.	Fuse capacity	Name of circuit
(1)	5A	Starting switch accessory
(2)	10A	Starting switch
(3)	30A	Engine controller
(4)	10A	Hazard lamp
(5)	10A	Car radio, Auto-greasing
(6)	10A	Transmission controller (B)
(7)	10A	Work equipment controller (B)
(8)	10A	Machine monitor (B)
(9)	10A	Horn
(10)	20A	Air conditioner blower
(11)	5A	Air conditioner compressor
(12)	20A	Rear heated wire glass
(13)	10A	Car radio, Auto-greasing
(14)	20A	Air suspension seat, 12V converter
(15)	10A	(KOMTRAX)

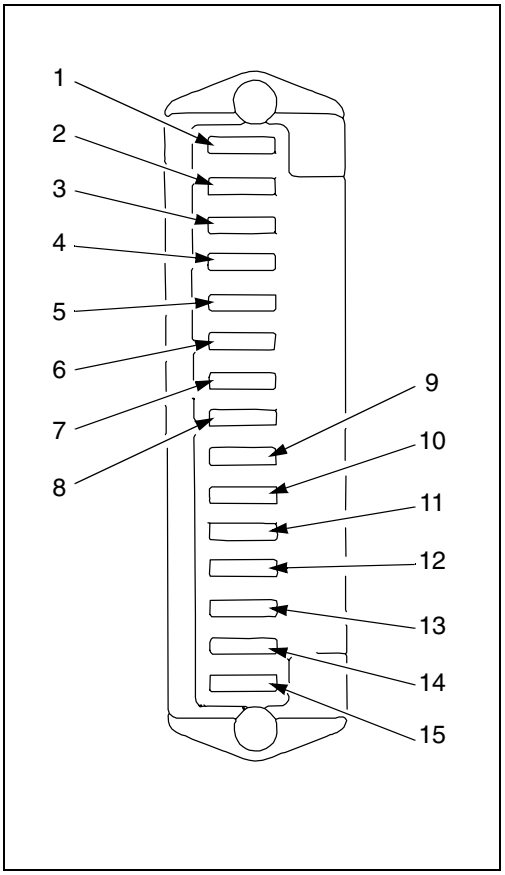

Fuse box B

No.	Fuse capacity	Name of circuit
(1)	10A	Turn signal indicator
(2)	10A	Backup lamp, brake lamp
(3)	20A	Front working lamp
(4)	20A	Rear working lamp
(5)	10A	Transmission controller (A)
(6)	10A	Parking brake
(7)	10A	Work equipment controller (A)
(8)	10A	Machine monitor (A)
(9)	20A	Wiper, washer
(10)	10A	Spare
(11)	20A	Main lamp circuit
(12)	10A	Right side clearance lamp
(13)	10A	Left side clearance lamp
(14)	10A	Right head lamp
(15)	10A	Left head lamp

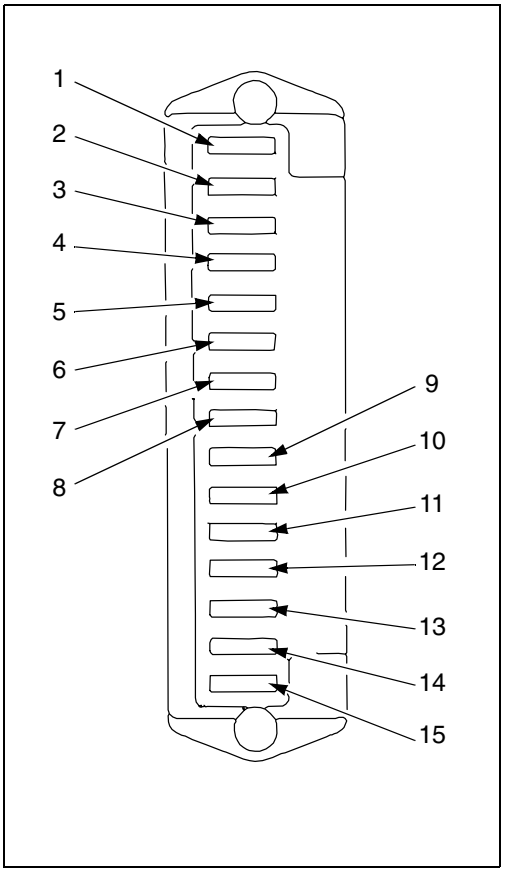

Downloaded from www.Manualslib.com manuals search engine

https://truckmanualshub.com/

3.2.13 Slow blow fuse

If the power does not come on when the starting switch is turned ON, the slow blow fuse may be blown. Check and replace it.

The slow blow fuse is beside the engine on the left side of the machine.

Slow blow fuse

(1)	50A	Battery power (starting switch, hazard, controller)
(2)	80A	Main power source (horn, air conditioner, heated wire glass)
	120A	Main power source (working lamp, machine monitor, transmission controller)
(3)	250A	Heater relay (electrical intake air heater)

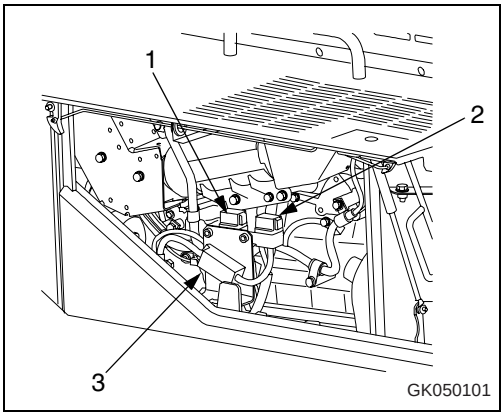

3.2.14 Power outlet

NOTE

- *There are two power sources: 12V and 24V*
  Check the voltage of the electrical equipment and select the appropriate power source.
  Mistaken use, such as using 24V as the power source for 12V equipment, will cause failure of the equipment.
- *When using the electric power source, do not install any equipment which will exceed the maximum amperage.*

When cigarette lighter (1) is removed, the lighter socket can be used as a 24V power source.

Maximum amperage: 9A (216W)

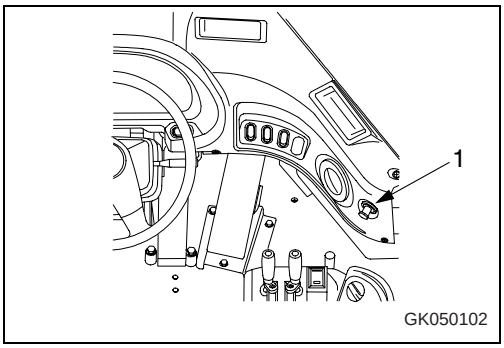

Electric power source (2) can be used as a 12V power source.

(Option)

Maximum amperage: 10A (120W)

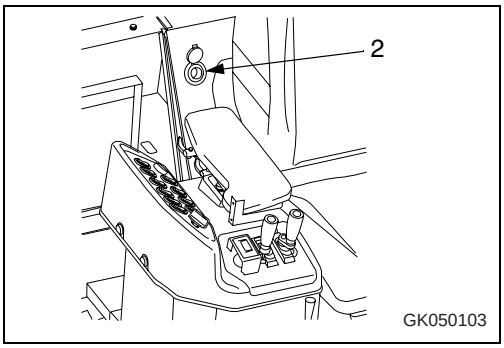

Downloaded from www.Manualslib.com manuals search engine

https://truckmanualshub.com/

3.2.15 Air conditioner

By taking fresh air into the cab through a filter, it is possible to raise the pressure inside the cab. This makes it possible to provide a pleasant working environment even on dusty jobsites.

General locations and function of control panel

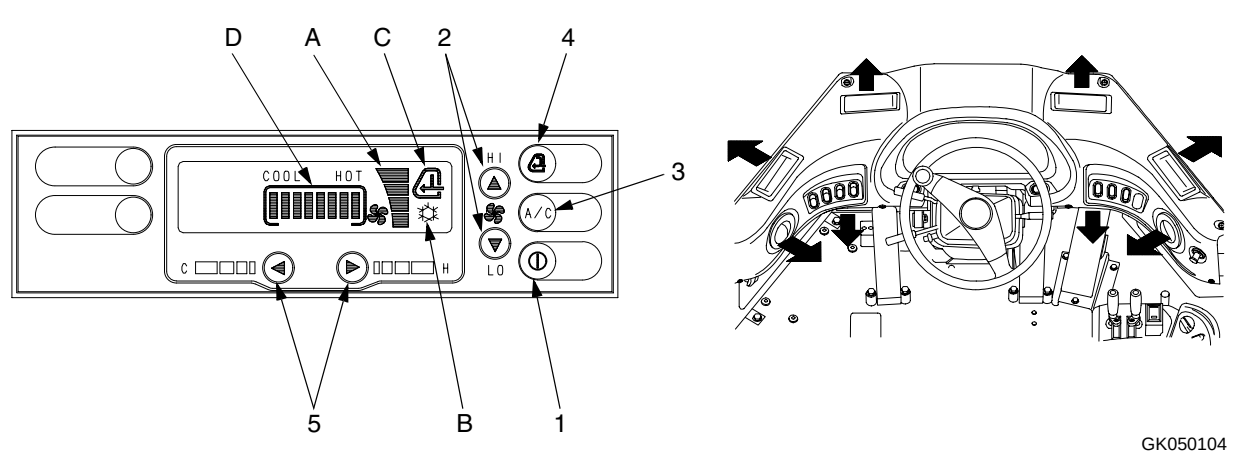

(1) ON/OFF switch	(4) FRESH/RECIRC switch
(2) Fan switch	(5) Temperature control switch
(3) Air conditioner switch	

Air conditioner monitor

(A) Air flow bar	(C) RECIRC/FRESH selector symbol
(B) Air conditioner operation symbol	(D) Temperature bar

1. ON/OFF switch

Use this switch (1) to turn the air conditioner ON/OFF.

When the switch is turned ON, the air conditioner monitor displays the setting being used when the switch was previously turned OFF.

2. Fan switch

This switch (2) can be used to adjust the air flow to four stages.

Press the ▲ switch to increase the air flow; press the ▼ switch to reduce the air flow.

The air flow is shown in air flow bar (A) on the air conditioner monitor.

Downloaded from www.Manualslib.com manuals search engine

https://truckmanualshub.com/

3. Air conditioner switch

Use this switch (3) to actuate the cooling, heating, or dehumidifying functions, or to stop the air conditioner.

When the switch is pressed, air conditioner operation symbol (B) is displayed on the air conditioner monitor. When the switch is pressed again, the air conditioner is switched OFF and the operation symbol goes out.

4. Fresh/Recirc selector switch

Use this switch (4) to switch between recirculation of the internal air (RECIRC) or intake of external air (FRESH). When the switch is pressed, the display of RECIRC/FRESH selector symbol (C) on the air conditioner monitor changes.

It changes in the order RECIRC, FRESH, RECIRC.

Air conditioner monitor display	Condition of vents
	RECIRC
	FRESH

RECIRC:
Only the air inside the cab is circulated. Use this position when it is needed to carry out quick heating or cooling of the cab, or when the outside air is dirty (smells or is dusty).

FRESH:
Fresh air is taken in from the outside for normal heating or cooling of the cab. Use this position to make the air inside the cab fresh or to remove the mist from the cab windows.

When the air conditioner takes in fresh air from the outside, the pressure inside the cab rises and this prevents the entry of dirt. The higher the position of the fan switch, the more efficient this becomes.

5. Temperature control switch

Use this switch (5) to adjust the temperature of the air blowing out from the vents. The adjustment can be made to 8 levels from low temperature to high temperature.

The temperature of the air blowing out from the vents is displayed on temperature bar (D) on the monitor. The lower the number of segments lighted up on the bar, the lower the temperature is.

Press the > switch to raise the temperature; press the < switch to lower the temperature.

The settings for each mode are retained in memory even when the starting switch is turned OFF.

However, in the following cases, the settings must be made again.

- When the machine has been out of use for more than 7 days
- When the battery voltage is extremely low
- When there has been abnormal interference from outside
- When the fan switch has been turned OFF (only the air conditioner switch setting is retained)

Downloaded from www.Manualslib.com manuals search engine

https://truckmanualshub.com/

Method of operation

Vent selection

The vents are all opened or closed manually.

A): Front vents (2 places)

(B): Foot vent (2 place)

(C): Defroster vents (4 places)

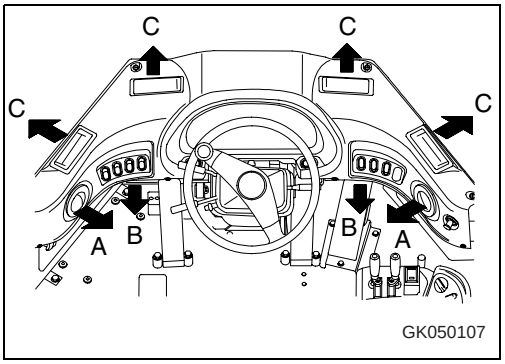

Cooling

1. Press ON/OFF switch (1) to turn on the air conditioner power.
2. Press fan switch (2) to set the air flow to the maximum.
3. Press temperature control switch (3) to lower the temperature.
4. Press air conditioner switch (4) to set to COOLING.
5. Press RECIRC/FRESH selector switch (5) to set to RECIRC.
6. When the temperature inside the cab goes down, set to the desired temperature and air flow.

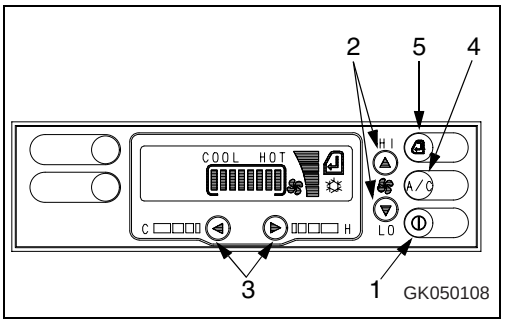

NOTE

- *If operations are continued for a long time with the air conditioner set to the lowest temperature and minimum air flow, there is danger that the receiver drier may freeze.*
- *If it freezes and no cold air comes out, stop using the cooling, and set to a higher temperature and the maximum air flow. Run for a short time under these conditions, then return.*

Heating

1. Press ON/OFF switch (1) to turn on the air conditioner power.
2. Press fan switch (2) to set the air flow to the maximum.
3. Press temperature control switch (3) to raise the temperature.
4. Press RECIRC/FRESH selector switch (4) to set to FRESH.
5. When the temperature inside the cab goes up, set to the desired temperature and air flow.

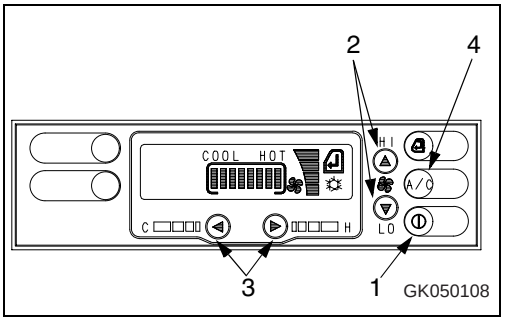

REMARK

The heating uses the heat from the engine cooling water, so it is effective only when the cooling water is hot.

Downloaded from www.Manualslib.com manuals search engine

https://truckmanualshub.com/

Dehumidifying, defrosting

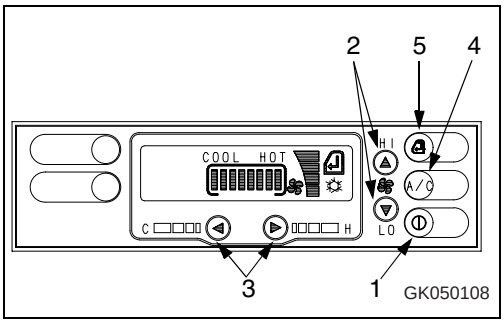

1. Press ON/OFF switch (1) to turn on the air conditioner power.
2. Press fan switch (2) to set to the desired air flow.
3. Press temperature control switch (3) to set to the desired temperature.
4. Press RECIRC/FRESH selector switch (4) to set to FRESH.
5. Press air conditioner switch (5) to operate the cooling.

REMARK

If the ambient temperature is below 0°C (32°F), the air conditioner cooling may not work. In this case, set to RECIRC and warm up the inside of the cab, then turn the air conditioner switch ON to operate the cooling.
When defrosting, if the temperature control switch is pressed to set the temperature bar to the maximum (all 8 segments on the bar light up), this will improve the efficiency of removing the frost and preventing mist.

Downloaded from www.Manualslib.com manuals search engine

https://truckmanualshub.com/

Cool box

When the cooling is being used, this can be used for keeping drinks and other things cool.

When the heating is being used, it can be used to keep things warm.

When using the box, open the vent grill.

When not using the box, close the grill.

Do not use the cool box for things which smell or leak water or break easily.

Do not use it as a holder for tools or other small objects.

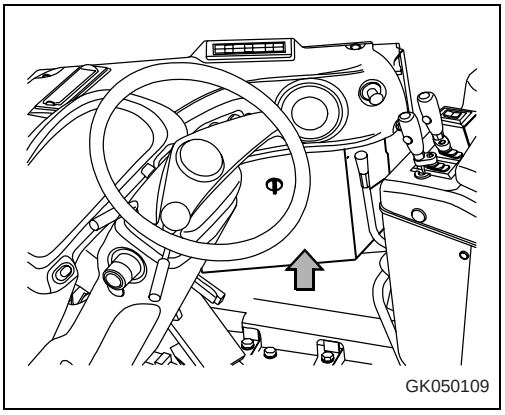

Precautions when using

To prevent putting any excessive load on the engine or compressor, turn the air conditioner ON only when the engine is running.

Ventilation

- When turning the cooling on, if the temperature inside the cab is high, open the doors and windows to bring in fresh air before starting the air conditioner.
- If you smoke when using the cooling, your eyes may sting. If this happens, switch temporarily to cooling and ventilation to remove the smoke.
- When using the air conditioner for a long period of time, carry out ventilation process at least once every hour.

Temperature control

For reasons of health, the optimum setting for cooling is considered to be when it feels slightly cool (5 or 6°C (9 or 10.8°F) lower than the ambient temperature) when you enter the cab. Do not make the temperature inside the cab too low or direct the air flow directly onto your skin.

Be extremely careful to select the appropriate temperature.

When cooling is not being used (Off-season)

To prevent leakage of the refrigerant from the air conditioner cooling circuit, operate the air conditioner for several minutes 2 or 3 times a month during the off-season. If the air conditioner is left for a long time when the refrigerant is leaking, it may cause internal rust.

Downloaded from www.Manualslib.com manuals search engine

https://truckmanualshub.com/

Inspection and maintenance

When the air conditioner is not being used, to prevent loss of the oil film at various parts of the compressor, run the compressor at low speed for several minutes once a week.

Run the engine at low speed and set the temperature to a medium temperature.

For details of the method for cleaning the air filter and inspecting the refrigerant, see "Clean element in air conditioner fresh air filter (4-54)", "Clean element in air conditioner recirculation filter (4-60)" and "Check level of refrigerant (gas) (4-44)".

To enable the air conditioner to perform to the full and to maintain a pleasant working environment, always contact your KOMATSU distributor to have the air conditioner refilled with refrigerant and to carry out other checks.

Downloaded from www.Manualslib.com manuals search engine

https://truckmanualshub.com/

3.3 Operation

3.3.1 Check before starting engine, adjust

Walk-around check

Before starting the engine, walk around the machine and look to the underside of chassis for anything unusual like looseness of the bolts and nuts, leakage of fuel, oil and cooling water. Also check the condition of the work equipment and the hydraulic system.

Check also for loose wiring, play, and collection of dust at places which reach high temperature.

WARNING

- Always hang a warning sign on the work equipment control levers.
- Remove any flammable materials from around the battery or engine muffler, turbocharger, or other high temperature engine parts. Leakage of fuel or oil will cause the machine to catch fire. Check carefully, and be sure to repair any abnormalities, or please contact your KOMATSU distributor.
- Always repair any damage to the handrails and steps, and tighten any loose bolts. Failure to do this may cause workers to fall and suffer serious personal injury.

If the machine is at an angle, reposition it level before checking. Carry out the following inspections and cleanings every day before starting the engine for the day´s work.

1. Check for damage, wear, play in work equipment, cylinders, linkage and hoses.

   Check that there are no cracks, excessive wear, or play in the work equipment, cylinders, linkage or hoses. If any abnormality is found, repair it.

2. Remove dirt and dust from around engine, battery and radiator.

   Check if there is any dirt or dust accumulated around the engine or radiator. Check also if there is any flammable material (dead leaves, twigs, etc.) accumulated around the battery or high temperature engine parts, such as the engine muffler or turbocharger. Remove all such dirt or flammable material.

3. Check for coolant or oil leakage around engine.

   Check that there is no oil leakage from the engine or coolant leakage from the cooling system. If any abnormality is found, repair it.

Downloaded from www.Manualslib.com manuals search engine

https://truckmanualshub.com/

4. Check for oil leakage from transmission case, axle, hydraulic tank, hoses, joints.

   Check that there is no oil leakage. If any abnormality is found, repair the leakage.

5. Check for oil leakage from brake line.

   Check that there is no oil leakage. If any abnormality is found, repair the leakage.

6. Check for damage or wear to tires and loose mounting bolts.

   Check for cracks or peeling of the tires and for cracks or wear to the wheels (side rim, rim base, lock ring). Tighten any loose wheel nuts. If any abnormality is found, repair or replace the part.

   If any valve caps are missing, install new caps.

7. Check for damage and loose bolts on handrail and steps.

   Repair any damage and tighten any loose bolts.

8. Check for damage to gauges, lamps on instrument panel and loose bolts.

   Check for damage to the panel, gauges and lamps. If any abnormality is found, replace the parts. Clean off any dirt on the surface. Tighten any loose bolts.

NOTE

- *Before starting operations, clean all dirt from the surface of the lamps. If the lamps are used with mud stuck to the surface, the lamp may overheat and suffer damage.*
- *If there is mud on a lamp and the lamp has overheated, cleaning the lamp may cause a sudden change in temperature which will crack the lens. Turn the lamp off and wait for the temperature to go down before cleaning the lamp.*

9. Check for loose air cleaner mounting bolts.

   Check for the loose bolts, and if loose, tighten up.

10. Check for loose battery terminals.

    Tighten any loose terminal.

Downloaded from www.Manualslib.com manuals search engine

https://truckmanualshub.com/

11. Check for damage to seat belt and mounting clamps.

    Check that there are no loose bolts on the equipment mounting the seat belt to the machine, and tighten if necessary.

    If the belt is damaged or fluff is starting to form, or if there is any damage or deformation of the seat belt holders, replace the seat belt.

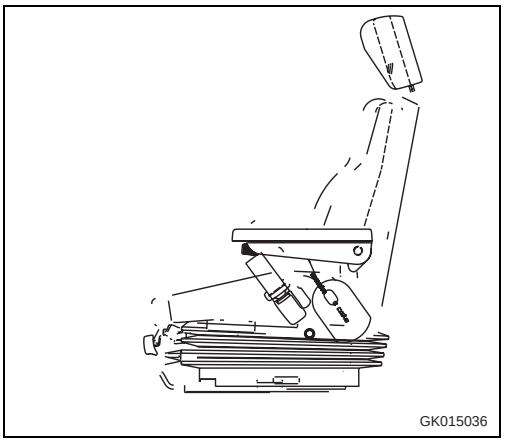

12. Clean cab window.

    Clean the cab window to ensure good visibility when operating the machine.

    When cleaning the front glass, articulate the machine and climb on the step at the center of the front frame.

    Clean the cab glass only on the side to which the machine is articulated. Using the step in the center of the front frame to move to the opposite side from the side which is articulated is extremely dangerous. Do not do this.

    When cleaning the opposite side, first articulate the machine in the opposite direction, then carry out the cleaning.

    When articulating the machine, articulate it to an angle of at least 38° from the line to the front. If the angle of articulation is small, it is a long distance to the step in the center of the front frame, and this creates a dangerous situation.

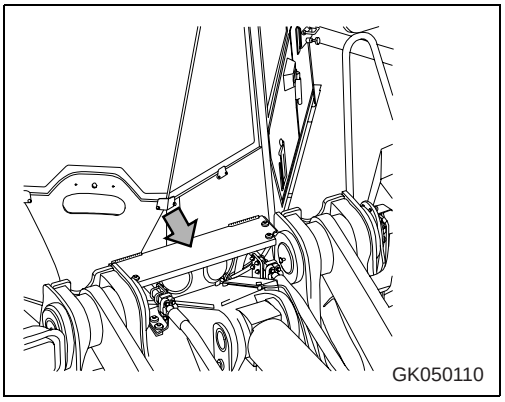

13. Check and cleaning of the rear view mirrors.

    Check the rear view mirrors for breakage, and replace any broken one. Clean the surface of each mirror and adjust the angle so that the rear view can be seen clearly from the operator's platform.

Downloaded from www.Manualslib.com manuals search engine

https://truckmanualshub.com/

14. Inspect tires.

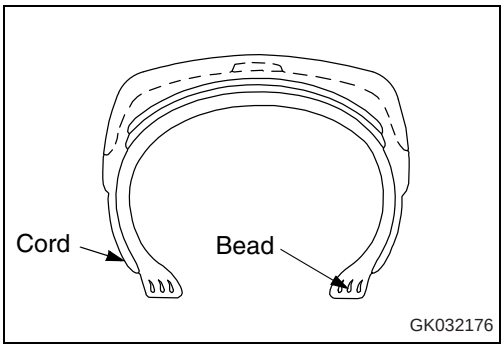

WARNING

If worn or damaged tires are used, they may burst and cause serious injury or death.
To ensure safety, do not use the following tires.
Wear:
Tires with a tread groove of less than 15% of that of a new tire
Tires with extreme uneven wear or with stepped-type wear
Damage:
Tires with damage which has reached the cords, or with cracks in the rubber
Tires with cut or pulled cords
Tires with peeled (separated) surface
Tires with damaged bead
Leaking or improperly repaired tubeless tires
Deteriorated, deformed or abnormally damaged tires which do not seem usable

15. Inspect rims.

WARNING

Check the rims (wheels) and rings for deformation, corrosion and cracks.
In particular, check the side rings, lock rings and rim flanges thoroughly.

Downloaded from www.Manualslib.com manuals search engine

https://truckmanualshub.com/

Check before starting

If the machine is at an angle, reposition it level before checking. Carry out the following inspections and cleanings every day before starting the engine for the day´s work.

Check monitor panel

1. Turn starting switch to the ON position (B).

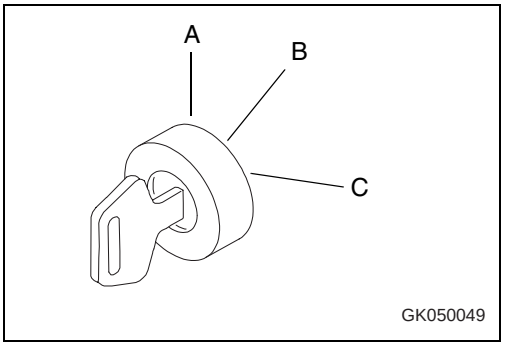

2. Check that all the monitors, gauges, and the central warning lamp light up for approx. 2 seconds and the alarm buzzer sounds for approx. 2 sec.
   If the lamps do not light up, there is probably a failure or disconnection. Contact your KOMATSU distributor for inspection.

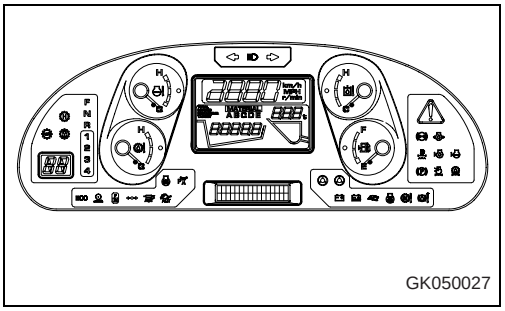

Check dust indicator

1. If air cleaner clogging caution lamp (1) on the machine monitor lights up, clean the air cleaner element.

   For details of the method of cleaning, see "Cleaning or replacing outer element (4-29)".

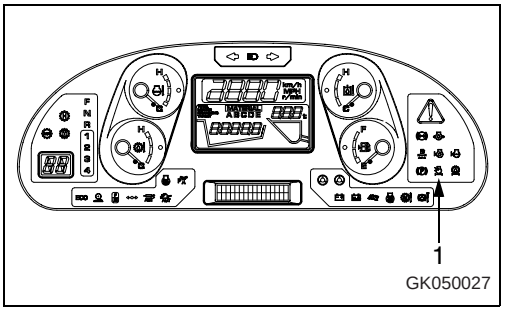

REMARK

A dust indicator is installed inside the engine hood on the left side of the machine. The dust indicator shows the condition of clogging of the air cleaner in 5 stages. This makes it possible to check how clean the element is and when it should be replaced.

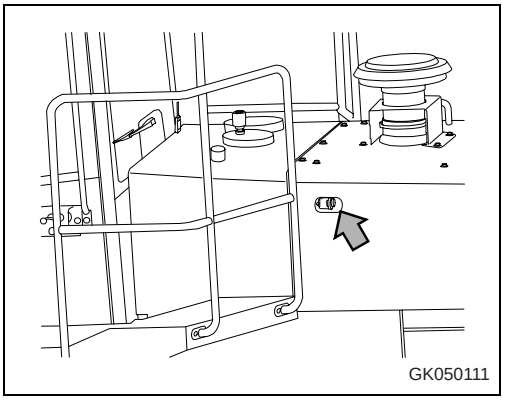

Downloaded from www.Manualslib.com manuals search engine

https://truckmanualshub.com/

2. After cleaning and replacing the element, push the dust indicator button to return the red display to its original position.

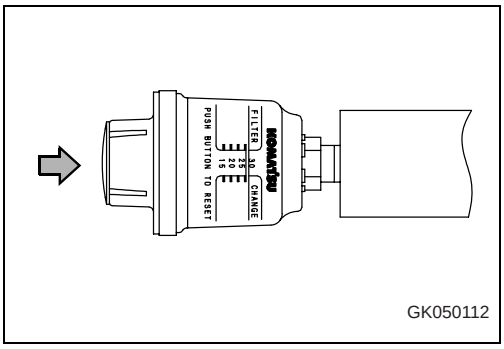

Drain water from fuel pre-filter

1. Check if any water is accumulated in cap (1) at the bottom of the filter.
2. If there is water accumulated in the cap (1), loosen drain plug (2) and drain the water.
3. Tighten drain plug (2).

   Tightening torque:
   0.2 to 0.45 N·m {0.02 to 0.046 kgf·m, 0.1 to 0.3 lbft}

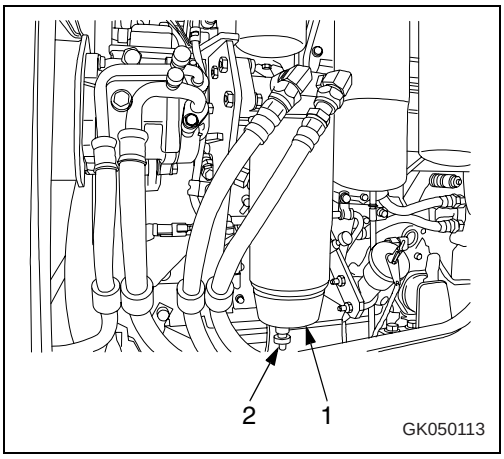

Downloaded from www.Manualslib.com manuals search engine

https://truckmanualshub.com/

Check coolant level, add coolant

WARNING

- Do not open the radiator cap unless necessary. When checking the coolant, always wait for the engine to cool down and check the sub tank.
- Immediately after the engine is stopped, the coolant is at a high temperature and the radiator is under high internal pressure. If the cap is removed to check the coolant level in this condition, there is a hazard of burns. Wait for the temperature to go down, then turn the cap slowly to release the pressure before removing it.

CAUTION

When adding coolant, use the step and handrail provided, and support your body securely.

1. Check that the cooling water level is in the range between the FULL and LOW marks on sight gauge (G) of the sub tank.

   If the water level is low, open the cover at the top of the platform and and water through sub tank filler port (1) to the FULL level.

2. After adding coolant, tighten the cap securely.
3. If the sub-tank is empty, check for water leakage. After checking, fill the radiator with water, then fill the sub-tank with water.

   If the volume of coolant added is more than usual, check for possible leakage.

   Confirm that there is no oil in the coolant.

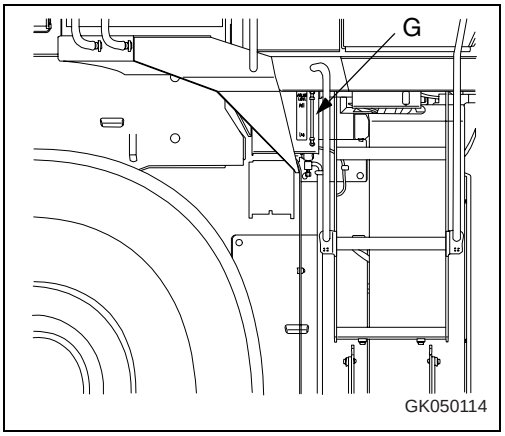

GK050114

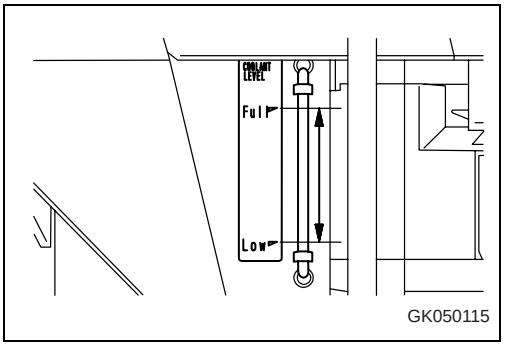

GK050115

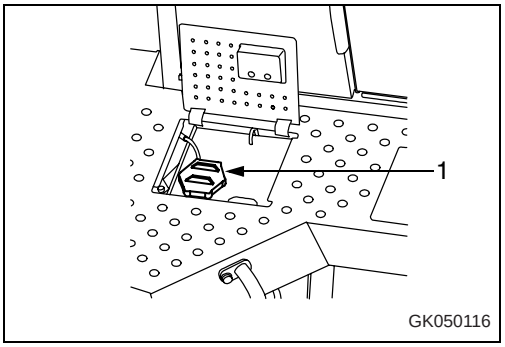

GK050116

Downloaded from www.Manualslib.com manuals search engine

https://truckmanualshub.com/

Check oil level in engine oil pan, add oil

WARNING

Engine parts and oil are at high temperature immediately after the engine is stopped, and may cause serious burns. Wait for the temperature to go down before starting the operation.

1. Stop the engine and wait for the temperature at all parts to go down.
2. Open the inspection cover of the right side at the rear of the machine.
3. Take out the dipstick (G) and wipe off the oil with cloth.
4. Completely insert dipstick (G) fully in the oil filler pipe (F), then take it out again.
5. The oil level should be between the H and L marks on dipstick (G).

   If the oil level is below the L mark, add oil through oil filler (F).

   The dipstick has level markings on both sides. One side gives the levels for measuring when the engine is stopped (ENGINE STOPPED) and the other side gives the levels for when the engine is idling (ENGINE IDLING).

   When measuring the oil level, measure with the engine stopped and use the side of the dipstick marked “ENGINE STOPPED“.
6. If the oil is above the H line, open drain valve (P), drain the excess engine oil, then check the oil level again.
7. If the oil level is correct, tighten oil filler cap (F) securely and close the inspection window.

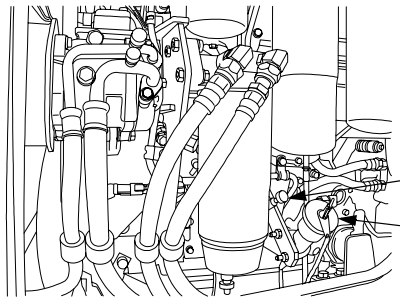

GK050117

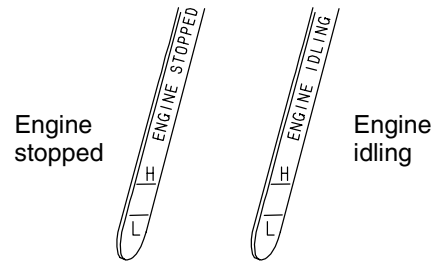

GK050118

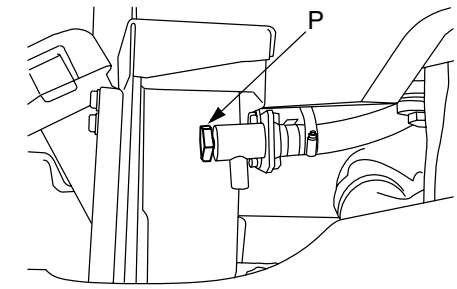

GK050119

REMARK

When checking the oil level after the engine has been operated, wait for at least 15 minutes after stopping the engine before checking.
If the machine is at an angle, make it horizontal before checking.

REMARK

Checking the oil level with the engine idling may be allowed, if the following precautions are thoroughly satisfied:

- *Check that the engine water temperature gauge shows green range.*
- *Use the side of the dipstick marked “ENGINE IDLING“.*
- *Remove the oil filler cap.*

Downloaded from www.Manualslib.com manuals search engine

https://truckmanualshub.com/

Check fuel level, add fuel

WARNING

When adding fuel, never let the fuel overflow. This may cause a fire. If any fuel is spilled, wipe it up completely. Never bring flames near fuel because it is highly flammable and dangerous.

NOTE

If the engine has run out of fuel and has stopped, it is necessary to operate the priming pump to bleed the air completely from the fuel line before starting the engine again.
Take care not to let the engine stop because of lack of fuel.
If the engine has run out of fuel, the air bleeding operation can be carried out more quickly if the fuel tank is completely filled with fuel.

1. Turn the engine starting switch to the ON position (B) and check the fuel level with fuel level gauge (G).

   After checking, turn the switch back to the OFF position (A).

2. After the day's work is finished, open cover (1) and refill fuel through fuel filler port (F) until the fuel tank is full.

   For details of the method for opening and closing the cap, see "Method of opening and closing cap with lock (for the fuel tank filler port) (3-75)".

3. After adding fuel, tighten the cap securely.

   Fuel tank capacity: 473 liters (124.9 US gal)

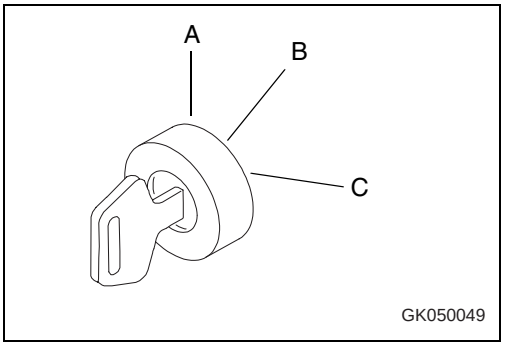

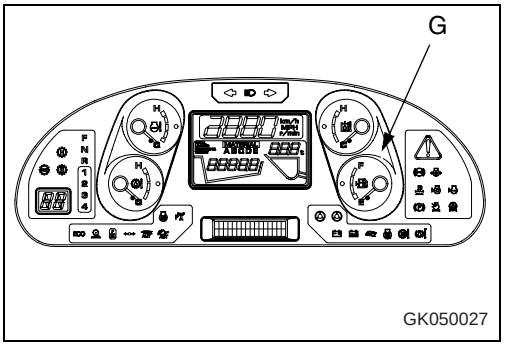

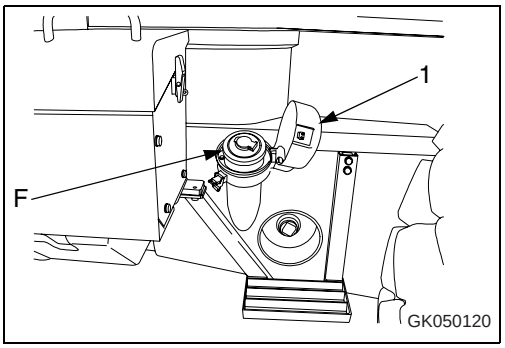

Downloaded from www.Manualslib.com manuals search engine

https://truckmanualshub.com/

Clean radiator fins by rotating cooling fan in reverse

WARNING

- If compressed air, high-pressure water, or steam hits your body directly or dirt is sent flying by the compressed air, high-pressure water, or steam, there is danger of personal injyury. Always wear protective glasses, dust mask, and other protective equipment.
- Before carrying out cleaning and inspection, always stop the engine and check that the fan does not rotate. When rotating the fan, always install the fan net and close the radiator to prevent anyone from touching the fan.

NOTE

When rotating the fan in reverse, be careful of flying dust and take steps to prevent cloth or other objects from getting caught in the fan.

On jobsites where it is easy for dirt to stick to the radiator or cooler, turn cooling fan reverse rotation switch (1) ON to rotate the fan in reverse. This will blow off the dirt and dust stuck to the radiator or cooler, and can extend the cleaning interval.

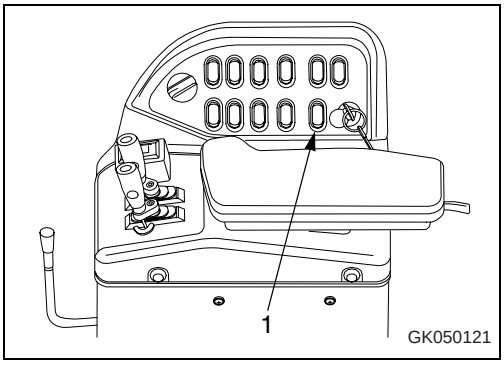

Method of rotating fan in reverse

NOTE

- *When the engine is running, even if the cooling fan reverse rotation switch is operated, the fan will not rotate in reverse, but the cooling fan reverse rotation pilot lamp on the main monitor will flash. Operate this switch only when the engine is stopped.*
- *When the fan is rotating in reverse, the pilot lamp on the main monitor lights up. Do not carry out operations while the lamp is lighted up. If the fan is run in the reverse direction during operations, the machine will be unable to display its performance fully and the engine will tend to overheat. During normal operations, always run the fan in the normal direction.*
- *When stopping the engine with the fan rotating in reverse, first run the engine at low idling before stopping it.*
- *When cleaning the fins by the rotating the cooling fan in reverse, clean after finishing operations or after warming-up the hydraulic oil. If the temperature of the hydraulic oil is low, the fan is held at low speed to protect the hydraulic circuit, so it will be unable to display its cleaning performance properly.*

Downloaded from www.Manualslib.com manuals search engine

https://truckmanualshub.com/

1. Stop the machine on horizontal ground and turn the parking brake switch ON.
2. Stop the engine.
3. Turn the starting switch to the ON position.
4. Set cooling fan reverse rotation switch (1) to position (a) (ON).
5. Check that the pilot lamp inside the switch cooling fan and the reverse rotation pilot lamp on the main monitor are lighted up.

   At the same time, “COOLING FAN REVERSE“ is displayed on the character display and the fan is set to reverse rotation.
6. Turn the key in the starting switch to the START position and start the engine.

   The cooling fan will rotate in reverse.

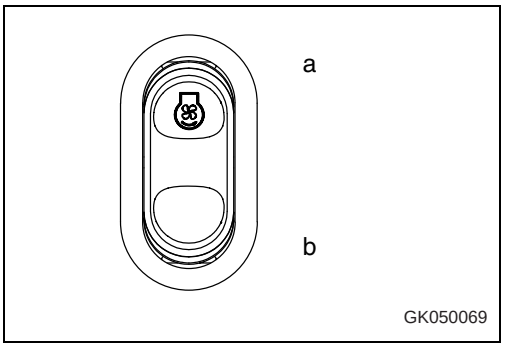

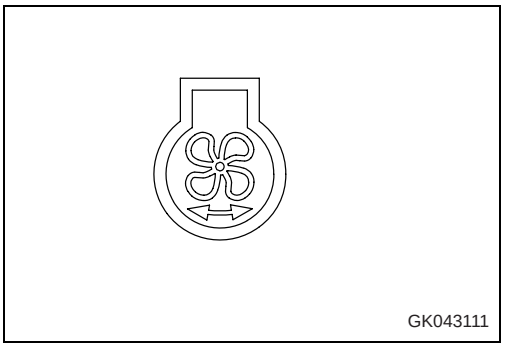

REMARK

The normal flow of air from the cooling fan is from the engine to the rear of the machine. During cleaning operations, if the fan is rotated in reverse, the flow of air is from the rear of the machine to the engine, and this blows out the dirt from the radiator fins.

7. Run the engine at high idle.

   Select the time for running the engine at high idle as follows according to the condition of clogging.

   Normal clogging: 1 to 2 minutes

   Excessive clogging: 2 to 3 minutes

REMARK

If there are many pieces of wood or chips stuck to the radiator fins, open the cleaning cover (2) and run the engine at high idling. The pieces of wood and chips will be blown out through the opening of the cleaning cover. The pieces of wood and chips will be blown out into the surrounding area, so to ensure safety, check that there is no one in the surrounding area before carrying out the operation.

8. After completing the cleaning, run the engine at low idle for approx. 10 seconds.
9. Turn the starting switch to the OFF position and stop the engine.

Downloaded from www.Manualslib.com manuals search engine

https://truckmanualshub.com/

10. After stopping rotation of the fan, open cleaning cover (2).

11. Use compressed air to blow out the dirt to the side of the machine.

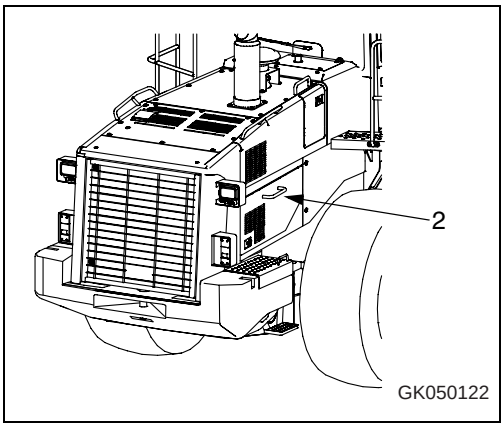

NOTE

- *If the steam jet nozzle is brought too close the radiator fins, it may damage the fins, so keep the nozzle a suitable distance away from the fins when cleaning.*

- *The guideline for the spray pressure is 9.8 MPa {100 kgf/cm2, 1420 PSI}. With a nozzle diameter of 2 mm (0.1 in), keep at least 100 mm (3.9 in) away.*

REMARK

Steam or water can be used instead of compressed air.

12. After blowing out the dirt, close cleaning cover (2).

13. Turn starting switch key to the ON position.

14. Set cooling fan reverse rotation switch (1) to position (b) (OFF) to cancel the reverse rotation.

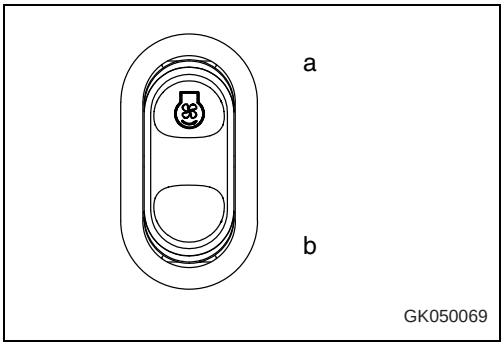

15. Check the rubber hose. Replace with a new one if the hose is found to have cracks or to be hardened by aging.

    Also, check hose clamps for looseness.

Downloaded from www.Manualslib.com manuals search engine

https://truckmanualshub.com/

Check electric wiring

CAUTION

If fuses are frequently blown or if there are traces of short-circuiting on the electrical wiring, promptly ask your KOMATSU distributor to locate the cause and make the repair.
Keep the top surface of the battery clean and check the breather hole in the battery cap. If it is clogged with dirt or dust, wash the battery cap to clear the breather hole.

Check for damage and wrong capacity of the fuse and any sign of disconnection or short circuit in the electric wiring. Check also for loose terminals and tighten any loose parts.

Particularly, check the wiring of the “battery“, “starting motor“ and “alternator“ carefully.

When carrying out checks around the battery, always check if there is any accumulation of flammable material around the battery, and remove such flammable material.

Please contact your KOMATSU distributor for investigation and correction.

Check parking brake

Check that the parking brake works properly.

If there is any abnormality in the operation of the parking brake or the brake does not provide the proper braking effect, please contact your KOMATSU distributor for adjustment.

Check brake pedal

Drive the machine forward and check the effect of the brakes.

If there is any abnormality in the actuation of the brakes, please contact your KOMATSU distributor to have the brakes adjusted.

Check inflation pressure of tires

Measure the inflation pressure with a tire pressure gauge while the tires are cool before starting work.

Check for damage or wear to the tires and the rims. Check for loose wheel hub nuts (bolts).

The appropriate inflation pressure differs according to the type of work, see "Handling the tires (3-157)".

Downloaded from www.Manualslib.com manuals search engine

https://truckmanualshub.com/

Adjustment

Seat adjustment

WARNING

When adjusting the position of the operator's seat, always set the work equipment lock lever to the LOCK position to prevent any accidental contact to the control levers.

- Always adjust the operator's seat before starting each operation or when the operators change shift.
- When adjusting the seat, put your back against the backrest and adjust to a position where the brake pedal can be fully depressed.

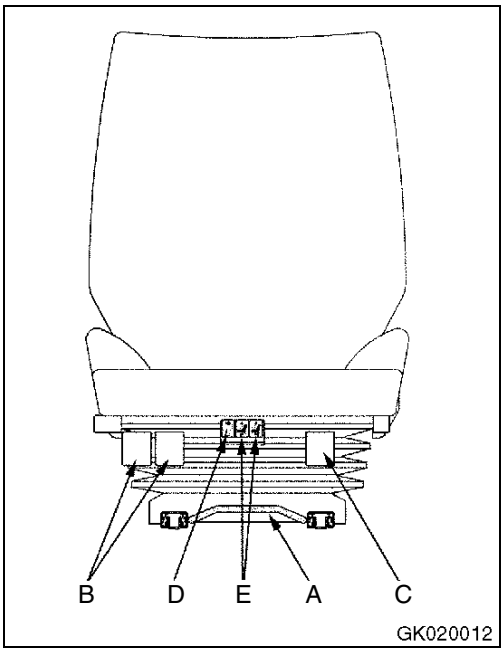

(A) Horizontal adjustment

Lift lever and move seat forwards/backwards.

Release the lever to lock the seat.

(B) Height and Slope adjustment

Pull lever and adjust the seat position in height and slope by loading/unloading the front/rear seat cushion area.

(C) Backrest adjustment

Adjust the position of the backrest by pulling the lever whilst a load is applied to the backrest.

(D) Weight adjustment

Push button to adjust the suspension to the driver's weight in the middle swing position.

Careful! No height adjustment.

(E) Lumbar support

Push buttons to inflate/deflate the air chambers of the integrated pneumatic system.

This allows the operator to match the shape of the backrest individually to the body contours.

Downloaded from www.Manualslib.com manuals search engine

https://truckmanualshub.com/

Safety belt

WARNING

- Danger of injury! A damaged safety belt, a safety belt that has been stretched in an accident, or a safety belt the belt fixings or fastening screws of which have not been mounted correctly will not protect you sufficiently in case of accident!
- Replace the safety belt, if it is damaged, or if the machine has been involved in an accident. Check that the belt fixings and fastening screws are in perfect condition, before you put on the safety belt.
- If you have not put on the safety belt and are involved in an accident, this may lead to severe injuries!
- Put on the safety belt, before you start work and do not take it off during work. Put on the safety belt in such a way that it is not twisted and fits tightly.

The machine is provided with a lap belt which automatically retracts. When pulled slowly, automatic belts ensure full freedom of action, but block immediately, if you suddenly brake or accelerate, or if you drive downhill or take corners.

Putting on the safety belt

1. Sit down on the driver's seat.
2. Slowly and continuously pull out the belt (1).
3. Insert the lock tongue (2) into the lock socket (3) until the lock engages.
4. Then, pull the belt to check whether or not the lock tongue is fully engaged.

   The belt cannot be pulled out unless it is completely wound up.

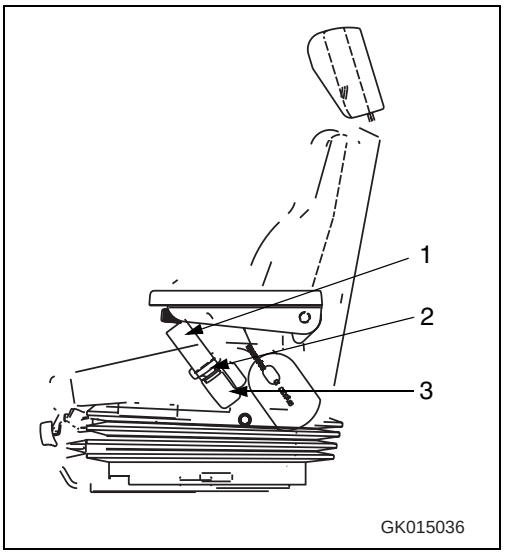

Taking off the safety belt

Press the orange button to release the lock of the safety belt and allow the belt to wind up.

Downloaded from www.Manualslib.com manuals search engine

https://truckmanualshub.com/

Adjusting mirrors

WARNING

Be sure to adjust the mirrors before starting work. If they are not adjusted properly, you cannot secure the visibility and may be injured or may injure someone seriously.

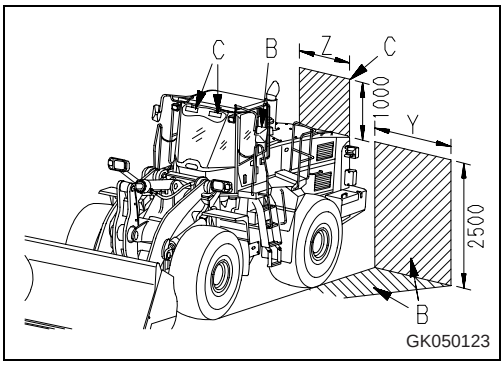

Range of view X (right): 2000mm (6 ft 7 in)

Range of view Y (left): 2000mm (6 ft 7 in)

Range of view Z (room): 1500mm (4 ft 11 in)

Mirror A:
Must be possible to see hatched portion (A)

Mirror B:
Must be possible to see hatched portion (B)

Mirror C:
Must be possible to see hatched portion (C)

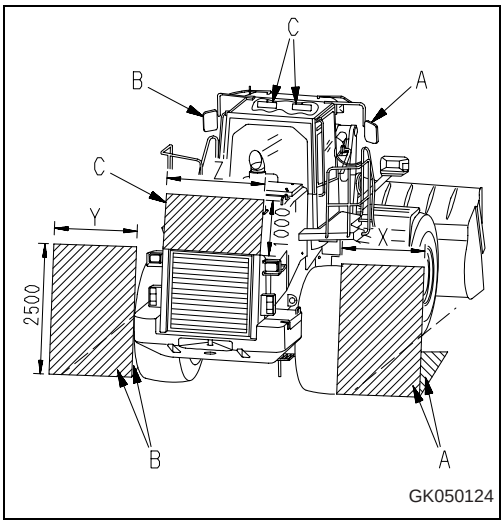

Downloaded from www.Manualslib.com manuals search engine

https://truckmanualshub.com/

Operations and checks before starting engine

WARNING

Before starting the engine, check that the work equipment lock lever (3) is securely at the LOCK position.
If the work equipment control lever is touched by accident when starting the engine, the work equipment may move unexpectedly and cause serious damage or personal injury.

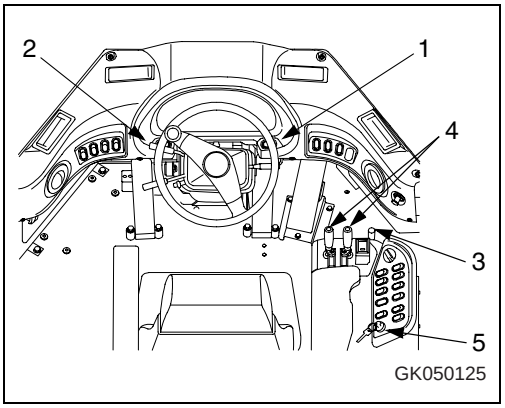

1. Check that parking brake switch (1) is at the ON position (A).

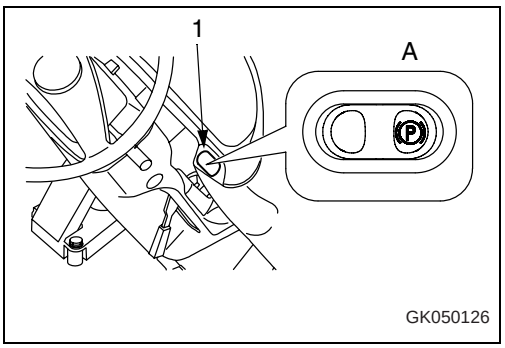

2. Check that directional lever (2) is at the N position.

   If directional lever (2) is not set to the N position, the engine will not start.

REMARK

If the directional lever is not at the N position, the alarm buzzer will emit short sounds.

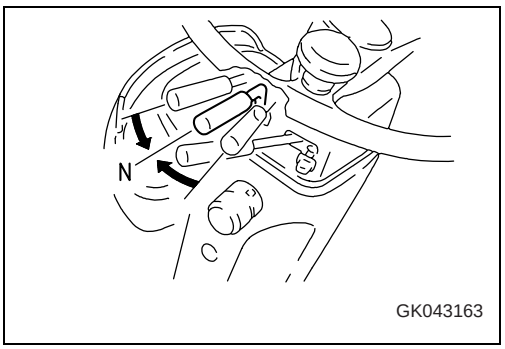

3. Lower the bucket to the ground and check that work equipment control lever (4) are locked by work equipment lock lever (3).

   For details, see "Operation of work equipment (3-123)".

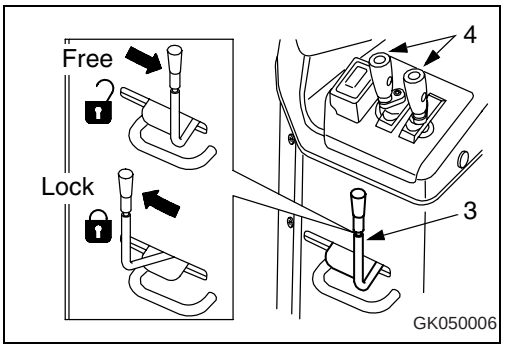

Downloaded from www.Manualslib.com manuals search engine

https://truckmanualshub.com/

4. Insert the key in starting switch (5), turn the key to the ON position (B), and check that the machine monitor system works.

   When the starting switch is turned to the ON position before starting the engine, monitors, gauges, and central warning lamp light up for approx. 2 seconds, and the alarm buzzer sounds for approx. 2 sec.

   If any monitor does not light up, there is probably a failure or disconnection, so contact your KOMATSU distributor for inspection.

   If any monitor does not light up, there is probably a failure or disconnection. Contact your KOMATSU distributor for inspection.

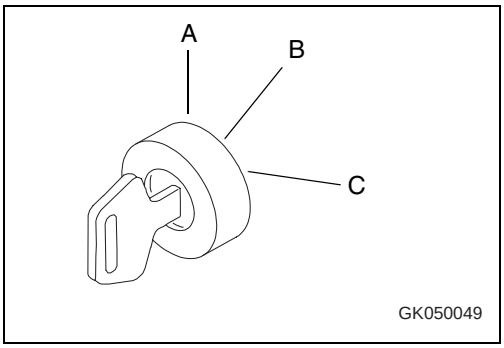

Downloaded from www.Manualslib.com manuals search engine

https://truckmanualshub.com/

3.3.2 Starting engine

WARNING

- Start the engine only after sitting down in the operator's seat.
- Do not attempt to start the engine by short-circuiting the engine starting circuit. Such an act may cause serious bodily injury or fire.
- Check that there are no persons or obstacles in the surrounding area, then sound the horn and start the engine.
- Exhaust gas is toxic. When starting the engine in confined spaces, be particularly careful to ensure good ventilation.

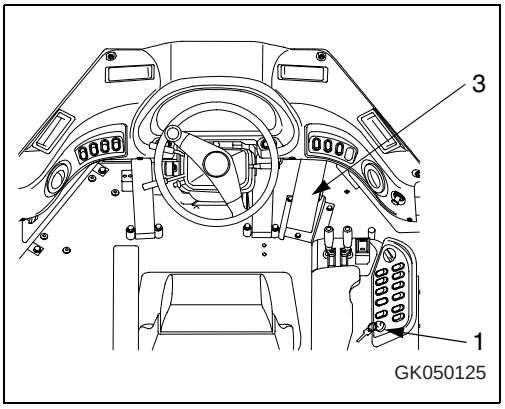

NOTE

- *Do not start the engine with the accelerator pedal fully depressed. There is danger that the engine parts may be damaged.*
- *Do not keep the starting motor rotating continuously for more than 20 seconds.*
  If the engine does not start, wait for at least 2 minutes before trying to start the engine again.
  Avoid the sudden acceleration of the engine until it is warmed up.

1. Turn the key of starting switch (1) to the ON position (B). The automatic preheating will start and the preheating pilot lamp (2) will light up.

   Automatic pre-heating is actuated when the cooling water temperature is less than -5°C (23°F).

   The preheating time varies according to the engine water temperature when the engine is started.

   The table shown below gives a guide to preheating time.

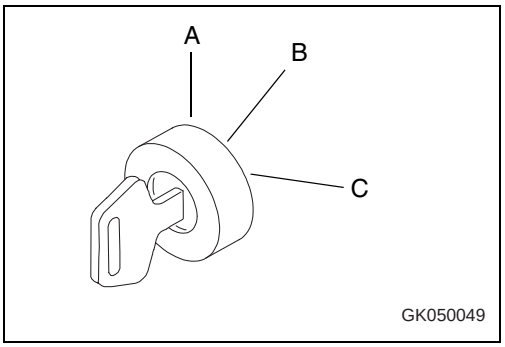

Engine water temperature [°C (°F)]	Preheating time (sec)
above -5 (23)	0
-5 (23)	20
below -20 (-4)	40

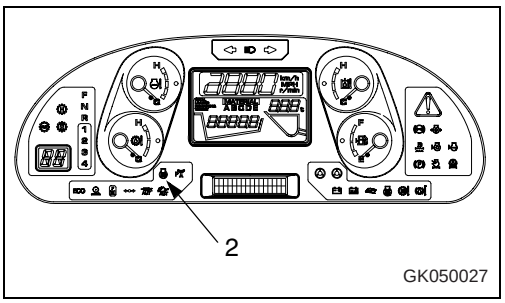

2. Keep the accelerator pedal (3) free without depressing it.

Downloaded from www.Manualslib.com manuals search engine

https://truckmanualshub.com/

3. After the preheating pilot lamp (2) goes out, turn the key of starting switch (1) to the START position (C) to start the engine.

4. After the engine starts, release the key in starting switch (1). The key will automatically return to the ON position (B).

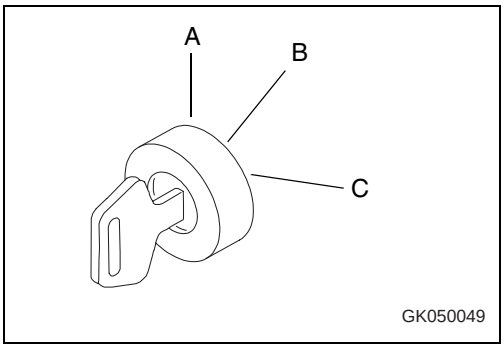

5. Immediately after starting the engine, run the engine at idling without depressing accelerator pedal (3) for at least 10 seconds in warm weather and for at least 15 seconds in cold weather.

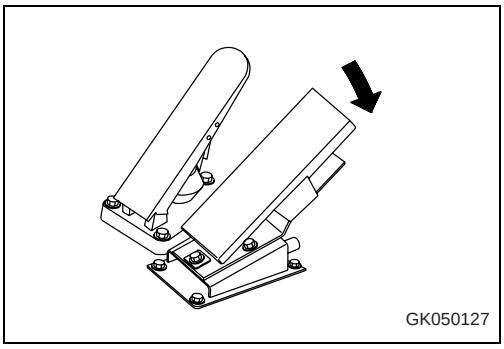

REMARK

Immediately after the engine is started, the turbo protect function is actuated. Even if the accelerator pedal is depressed, the engine speed will not rise above 1,000 rpm.

- If the accelerator pedal is kept depressed, the engine speed will suddenly rise after the turbo protect time. To prevent this, release the accelerator pedal.
- The turbocharger rotates at extremely high speed. Immediately after the engine is started, the pressure of the lubricating oil has not risen sufficiently, so if the engine speed is suddenly raised, it may lead to damage or seizure of the turbocharger bearing. The turbo protect function acts to prevent this problem. It uses electronic control to prevent the engine speed from rising above a certain speed for the first few seconds after the engine started.

Engine water temperature [°C (°F)]	Turbo protect time (sec)
above 0 (32)	0
-5 (23)	3
below -10 (14)	5

Automatic warming-up operation

A function of engine warming-up run (engine rpm: 1000 rpm) is automatically actuated after the engine is started up, when the engine water temperature is low (below 30°C (86°F)). It is gradually released either when the engine water temperature rises over 30°C (86°F), or when 10 minutes have passed since the engine start-up.

Downloaded from www.Manualslib.com manuals search engine

https://truckmanualshub.com/

3.3.3 Operations and checks after starting engine

WARNING

- Emergency stop
  If the operation is abnormal or any other trouble occurs, turn the key in the starting switch to the OFF position.
- If the work equipment is operated without warming up the machine sufficiently, the response of the work equipment to the movement of the control lever will be slow, and the work equipment may not move as the operator desires, so always carry out the warming-up operation. Particularly in cold areas, be sure to carry out the warming-up operation fully.

NOTE

When the hydraulic oil temperature is low, do not carry out operations under heavy load or at high speed. There is danger that the pump may be broken.

Breaking-in the machine

CAUTION

Your KOMATSU machine has been thoroughly adjusted and tested before shipment. However, operating the machine under severe conditions at the beginning can adversely affect the performance and shorten the machine life.
Be sure to break-in the machine for the initial 100 hours (as indicated by the service meter).
During breaking-in operations, follow the precautions described in this manual.

- Idle the engine for 5 minutes after starting it up.
- Avoid operation with heavy loads or at high speeds.
- Immediately after starting the engine, avoid sudden starts, sudden acceleration, unnecessary sudden stops, and sudden changes in direction.

Downloaded from www.Manualslib.com manuals search engine

https://truckmanualshub.com/

Normal operation

After starting the engine, do not immediately start operations. First, carry out the following operations and checks.

NOTE

Do not suddenly accelerate the engine before the warming-up operation is completed.
Do not run the engine at low idling or high idling continuously for more than 20 minutes.
If it is necessary to run the engine at idling, apply a load from time to time or run the engine at a mid-range speed.

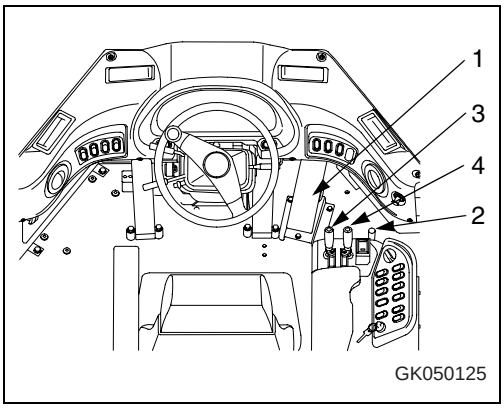

1. Immediately after starting the engine, without depressing the accelerator pedal (1), run the engine at idle for at least 10 seconds during the warm weather and for at least 15 seconds during the cold weather.

2. Depress accelerator pedal (1) lightly and run the engine with no load at midrange speed for about 5 minutes.

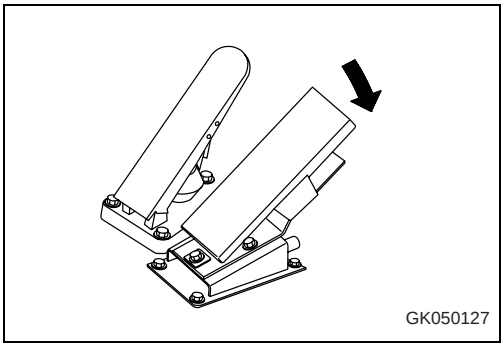

3. In cold weather only, carry out the following operation to warm up the hydraulic oil.

   After carrying out the warming-up operation, check that the engine rotation is smooth, then set work equipment lock lever (2) to the FREE position. Operate bucket control lever (3) for 30 seconds, then operate lift arm control lever (4) for 30 seconds. Operate these levers fully in turn for 5 minutes to warm up the hydraulic oil.

   If this method is used, the hydraulic oil is warmed up more quickly.

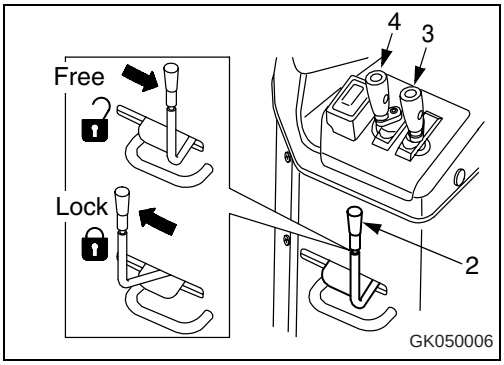

4. After carrying out the warming-up operation, check that the meters, gauges and pilot lamps work properly.

   If there is any abnormality, carry out maintenance or repair.

   Run the engine under a light load until engine cooling water temperature gauge (5) and torque converter oil temperature gauge (6) are in the green range.

5. Check that there is no abnormal exhaust gas color, noise or vibration. If any abnormality is found, contact your KOMATSU distributor.

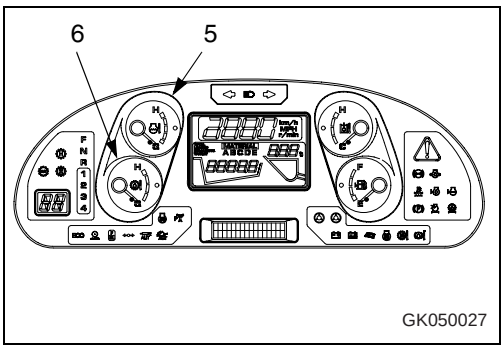

Downloaded from www.Manualslib.com manuals search engine

https://truckmanualshub.com/

REMARK

The rotating speed of the cooling fan differs according to the following conditions, but this does not indicate any abnormality.
The cooling fan speed increases when the hydraulic oil temperature, engine coolant temperature, or transmission oil temperature are high. If the air conditioner is beeing operated, the cooling fan speed rises even when the temperature is low.
However, when the cooling fan is rotating in reverse, it rotates at a fixed speed proportional to the engine speed, regardless of any oil or coolant temperature.

3.3.4 Stopping engine

NOTE

If the engine is abruptly stopped before it has cooled down, engine life may be greatly shortened. Consequently, do not abruptly stop the engine except for an emergency.
In particular, if the engine has overheated, do not abruptly stop it but run it at medium speed to allow it to cool gradually, then stop it.

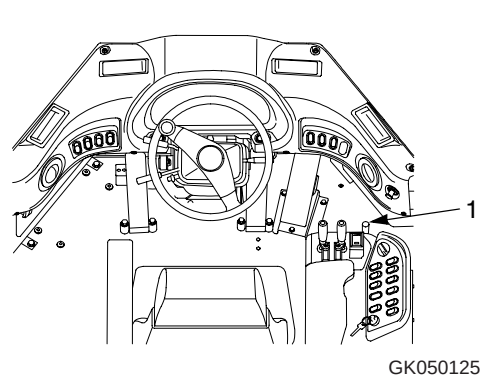

GK050125

1. Run the engine at low idling for about 5 minutes to cool down gradually.
2. Turn the key of starting switch (1) to the OFF position (A) to stop the engine.
3. Remove the key from starting switch (1).

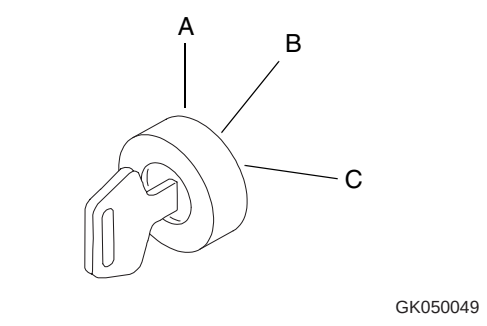

GK050049

3.3.5 Check after stopping engine

1. Walk around the machine and check the work equipment, bodywork, and undercarriage, and check also for oil and water leakage.
2. Fill the fuel tank.
3. Check the engine compartment for paper and debris. Clean out any paper and debris to avoid a fire hazard.
4. Remove any mud affixed to the undercarriage.

Downloaded from www.Manualslib.com manuals search engine

https://truckmanualshub.com/

3.3.6 Moving the machine (directional, speed), stopping the machine

WARNING

- Always remove the frame lock bar for travel operations. If it is not removed, the steering wheel cannot be used for steering, and this may lead to serious damage or injury.
- When moving the machine, check that the area around the machine is safe, then sound the horn before starting.
- Do not allow people to get near the machine.
- Clear the machine's travel path of any obstacle.
- Pay particular attention to the blind spot at the rear of the machine when traveling in reverse.
- When starting the machine off up a slope, set the transmission cut-off switch to the OFF position, depress the left brake pedal. Then depress the accelerator pedal and gradually release the brake pedal to start the machine off. This makes it possible to prevent the machine from rolling back.

Preparations for moving the machine

1. Check that warning pilot lamp (1) is not lighted up.

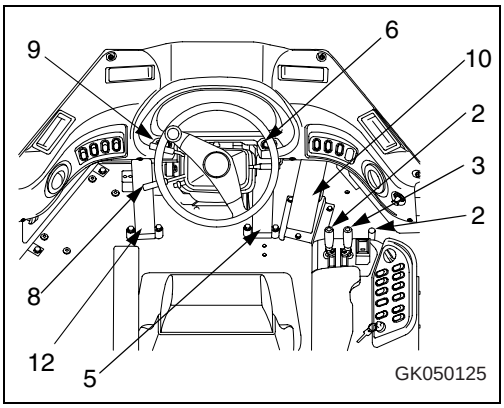

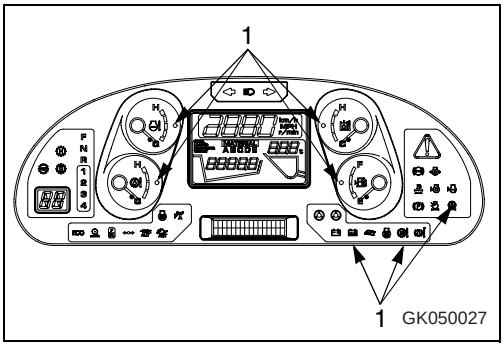

Downloaded from www.Manualslib.com manuals search engine

https://truckmanualshub.com/

2. Set work equipment lock lever (4) of bucket control lever (2) and lift arm control lever (3) to the Free position.

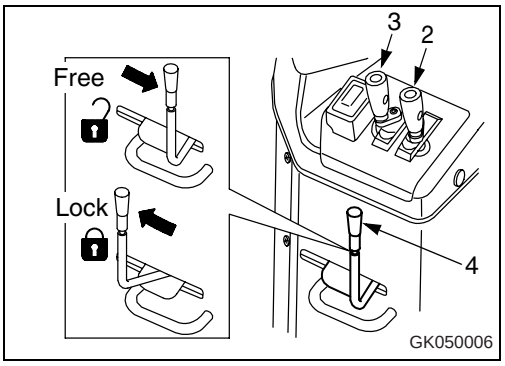

3. Operate lift arm control lever (3) to set the work equipment to the travel posture shown in the diagram on the right.

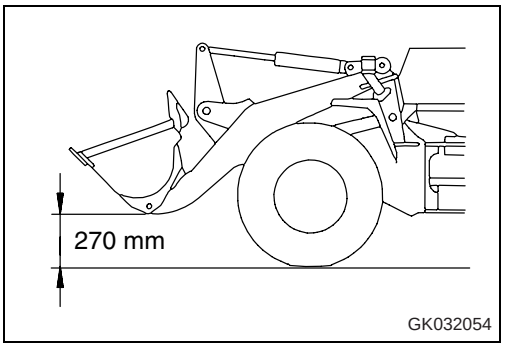

4. Depress right brake pedal (5) and turn parking brake switch (6) to the OFF position (B) to release the parking brake.

REMARK

If the parking brake is still actuated when parking brake switch (6) is at the OFF position (B), turn the parking brake switch ON position (A), then turn it OFF position (B) again.

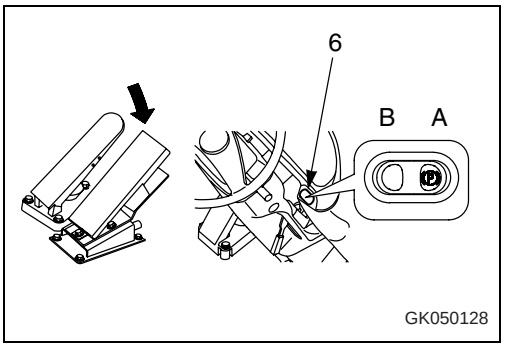

5. Set to the desired speed range position.

   Set the speed range position as follows.

   [A] Use transmission auto shift/manual shift selector switch (7) to select auto shift (L or H) or manual shift.

   - L or H position: Auto shift mode
     If the system is set to this position, the shift range is set to the last shift range used in the previous operation in auto shift mode.
     The speed range is displayed by the 1st, 2nd, 3rd, or 4th lamp at the bottom of the machine monitor.

   - MANUAL position: Manual shift mode
     If the system is switched from auto shift mode to manual mode, the shift range being used in auto shift mode is engaged in manual shift mode.

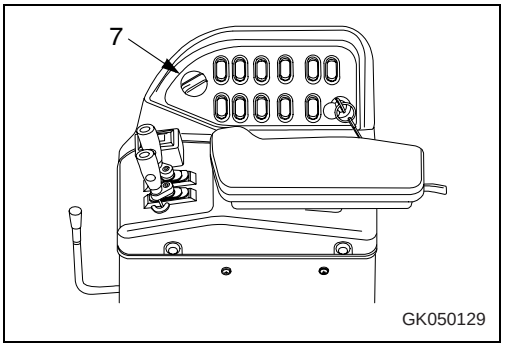

Downloaded from www.Manualslib.com manuals search engine

https://truckmanualshub.com/

[B] When making any shift operation not set in Step **[A]**, use gear shift lever (8).

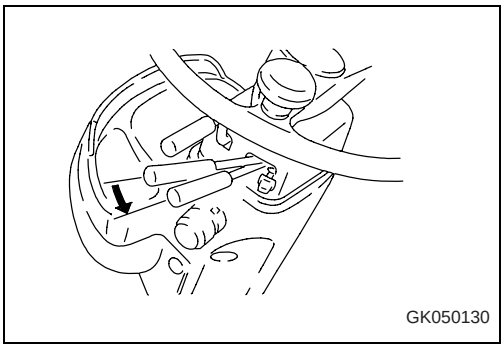

6. Set directional lever (9) to the desired position.

   Position (a): FORWARD

   Position N: NEUTRAL

   Position (b): REVERSE

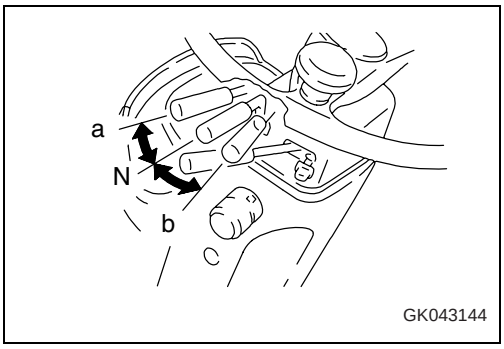

REMARK

Check that the backup alarm sounds when the directional lever is set to REVERSE. If the backup alarm does not sound, please contact your KOMATSU distributor for repairs.

7. Release right brake pedal (5), then depress accelerator pedal (10) to move the machine.

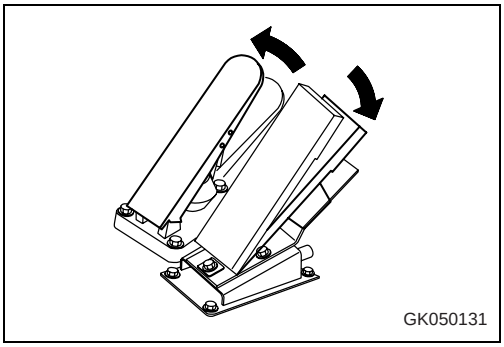

REMARK

When starting off up a slope, turn the transmission cut-of switch (11) to the OFF position, depress left brake pedal (12), and operate the gear shift lever. Depress accelerator pedal (10) and gradually release left brake pedal (12) to let the machine move off. This makes it possible to prevent the machine from rolling back.

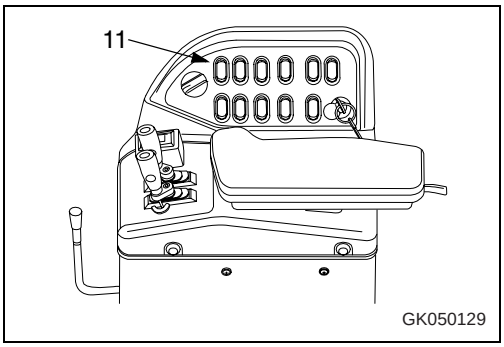

Downloaded from www.Manualslib.com manuals search engine

https://truckmanualshub.com/

Changing gear speed

WARNING

- When traveling at high speed, do not shift gear suddenly. Use the brake to reduce the travel speed before shifting gear.
- Do not switch between FORWARD and REVERSE when traveling at high speed.
- When switching between FORWARD and REVERSE, depress the brake to reduce the travel speed sufficiently, then change the direction of travel. (Max.speed for changing direction: 12 km/h)

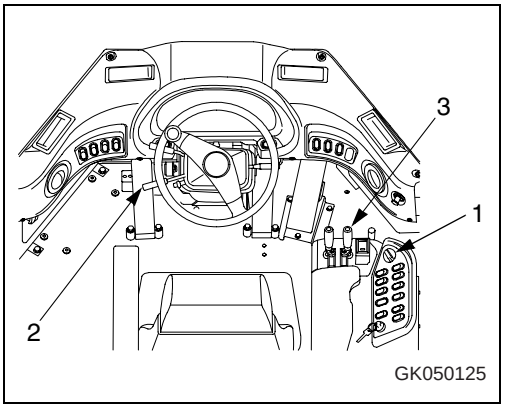

Shift gear as follows.

When shifting gear, use the auto shift/manual shift selector switch (1) to select the mode and gear shift lever (2) to set the speed range.

Position (a): 1st

Position (b): 2nd

Position (c): 3rd

Position (d): 4th

For details, see "Preparations for moving the machine (3-113)".

When carrying out digging and loading operations, 1st and 2nd are used, so use the gearshift lever stopper (2).

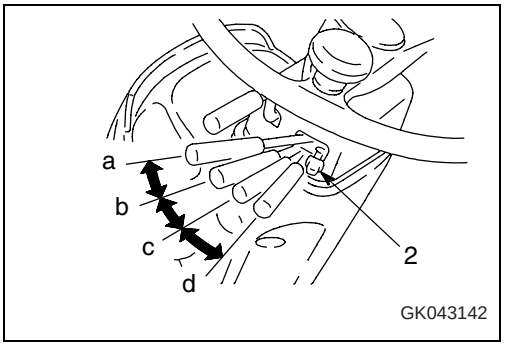

REMARK

This machine is equipped with a kickdown switch (3) that shifts the gear down to 1st if the button at the tip of the lift arm control lever is pushed when the machine is traveling in 2nd gear. We recommend the use of the kickdown switch when carrying out digging or loading operations in 1st or 2nd gear.
For details of use, see "Kickdown switch (3-56)".

- This machine is equipped with an auto-shift system that automatically shifts the gear. For details of the method of use, see “"Transmission auto shift/manual shift selector switch (3-58)"“ and “"Automatic shift (3-68)"“.
- When traveling at high speed with the accelerator pedal depressed, even if the transmission is shifted down from 4th -> 3rd or 4th -> 2nd, to protect the engine from overrunning, the transmission does not shift down. In this case, the central warning lamp lights up and the alarm buzzer sounds. At the same time, “OVERRUN PROTECT“ is displayed on the character display.
- If the alarm buzzer sounds, let the accelerator pedal back immediately, depress the brake pedal to reduce the travel speed, then shift gear.

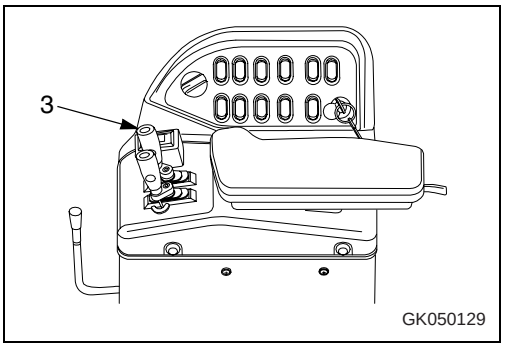

Downloaded from www.Manualslib.com manuals search engine

https://truckmanualshub.com/

REMARK

To protect the transmission, immediately after the direction has been shifted between forward and reverse and immediately after the speed range has changed, even if the directional selector is operated, or the gearshift lever is operated, or the kickdown switch is operated, the direction or speed range may not change immediately, but this does not indicate any abnormality.

Changing direction

WARNING

- When changing direction between FORWARD and REVERSE, check that the new direction of travel is safe. There is a blind spot behind the machine, so be particularly careful when changing direction to travel in reverse.
- Do not switch between FORWARD and REVERSE when traveling at high speed.
  When switching between FORWARD and REVERSE, depress the brake to reduce the travel speed sufficiently, then change the direction of travel. (Max. speed for changing direction: 12 km/h (7.5 MPH))

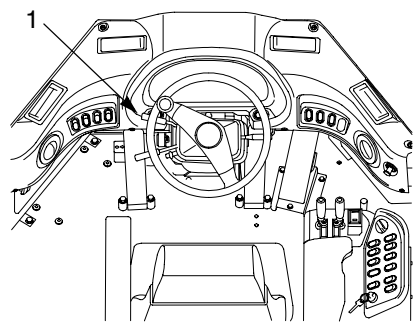

GK050125

There is no need to stop the machine even when switching between FORWARD and REVERSE.

Place directional lever (1) in the desired position.

Position (a): FORWARD

Position N: NEUTRAL

Position (b): REVERSE

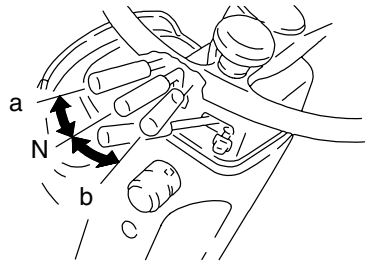

GK043144

Check that the backup alarm sounds when the directional lever is set to REVERSE. If the backup alarm does not sound, please contact your KOMATSU distributor for repairs.

REMARK

If the directional lever is operated slowly or is stopped between directions, the central warning lamp may light up and the alarm buzzer may sound. This does not indicate any failure, but please operate the directional lever so that the shift is completed within 2 seconds.
To protect the transmission, immediately after the direction has been shifted between forward and reverse and immediately after the speed range has changed, even if the directional selector is operated, or the gearshift lever is operated, or the kickdown switch is operated, the direction or speed range may not change immediately, but this does not indicate any abnormality.

Downloaded from www.Manualslib.com manuals search engine

https://truckmanualshub.com/

Automatic shift

If an attempt is made to switch the direction between forward and reverse when the auto-shift is ON, normally, the gearshift range will switch F3 -> R2, F4 -> R2, or R3 -> F2, R4 -> F2 to make it possible to move the machine off quickly.

Control for change of travel direction at high speed

If the travel direction is changed when the machine is traveling at high speed, when the travel speed and engine speed are in areas I or II in the chart, the central warning lamp lights up and the alarm buzzer sounds. At the same time, " OVERRUN PROTECT" is displayed on the character display.

If the alarm buzzer sounds, depress the brake immediately to reduce speed sufficiently before changing the travel direction.

Changing the direction of travel at high speed will have an adverse effect on the durability of the transmission.

If the direction of travel is changed in area II, the alarm buzzer will sound, and at the same time the controller will automatically control the speed range to ensure the durability. Note that compared with area I, the deceleration of the machine is weaker.

Auto shift (shift position speed range: other than 1st) and manual shift 2nd, 3rd, 4th

Gear speed before changing between FORWARD and REVERSE	Gear speed after changing between FORWARD and REVERSE
F2	R3 or R4
F3	R3 or R4
F4	R3 or R4
R2	F3 or F4
R3	F3 or F4
R4	F3 or F4

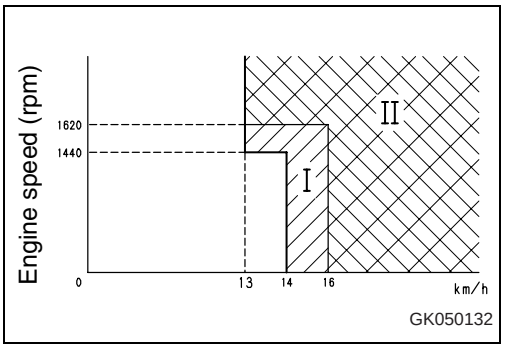

Auto shift (shift position speed range: 1st) and manual shift 1st

Gear speed before changing between FORWARD and REVERSE	Gear speed after changing between FORWARD and REVERSE
F1	R2 or R3 or R4
R1	F2 or F3 or F4

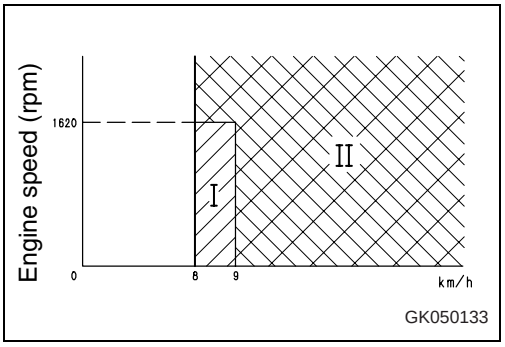

Downloaded from www.Manualslib.com manuals search engine

https://truckmanualshub.com/

Stopping the machine

WARNING

- Avoid sudden stopping. As far as possible, always leave a margin when stopping the machine.
- Avoid parking the machine on a slope. If it is necessary to park the machine on a slope, stop the machine facing directly down the slope, fit blocks under the tires and lower the bucket to the ground to prevent the machine from moving.
- If the work equipment control lever is touched by mistake, there is danger that the work equipment or machine may move suddenly and cause a serious accident. Before leaving the operator's compartment, always set the work equipment lock lever securely to the LOCK position.
- When the parking brake switch is turned ON, it is dangerous to release the brake pedal immediately. Always keep the brake pedal depressed until the parking brake pilot lamp lights up.

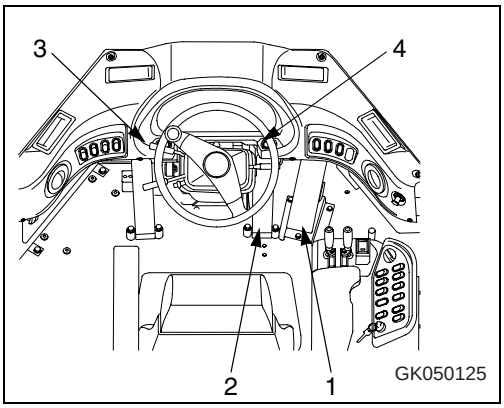

NOTE

Never use the parking brake lever to brake the machine when traveling except in an emergency. Apply the parking brake only after the machine has stopped.

1. Release accelerator pedal (1), then depress brake pedal (2) to stop the machine.

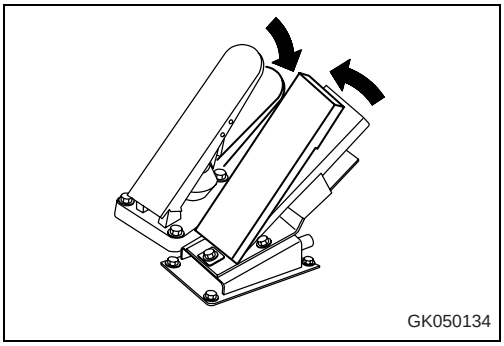

2. Place directional lever (3) in N (neutral) position.

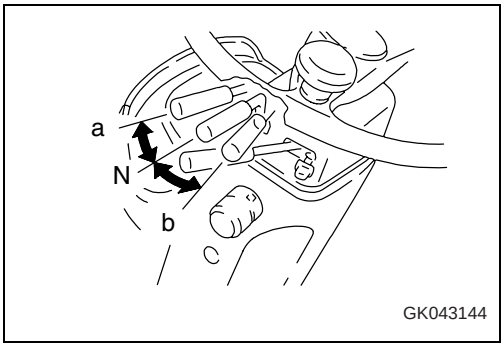

Downloaded from www.Manualslib.com manuals search engine

https://truckmanualshub.com/

3. Set parking brake switch (4) to the ON position (A) to apply the parking brake.

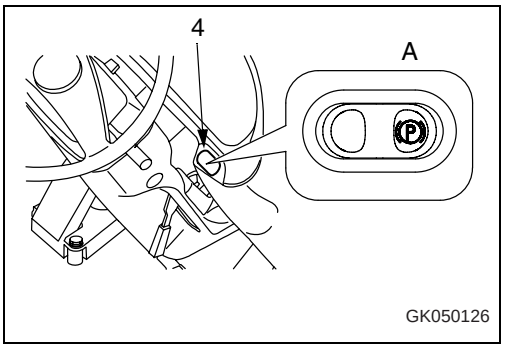

REMARK

When the parking brake is applied, the transmission is automatically returned to neutral.

Transmission cut-off function

When the transmission cut-off switch is turned ON, the pilot lamp lights up and the following transmission cut-off function is actuated.

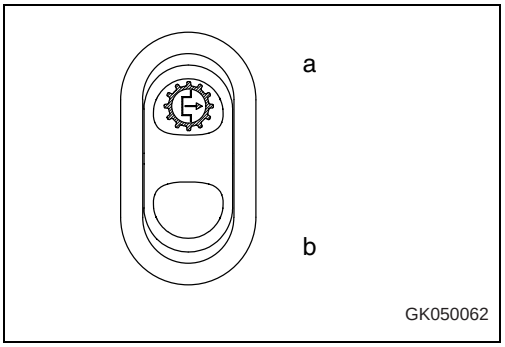

Position (a): ON

Position (b): OFF

When the left brake pedal is depressed, the brake is actuated, and in addition, the transmission is shifted to neutral at the pre-selected brake pedal depression position.

REMARK

The cut-off function is actuated only with the left brake pedal.
When the transmission cut-off switch is at the OFF position, the left brake pedal works in the same way as the right brake pedal.
For details of adjusting the brake pedal depression position, see "Adjusting transmission cut-off position (3-121)"".
Raise or lower the pre-selected brake pedal depression position to adjust the cut-off to match the type of work shown below.

- When carrying out scooping-up work, lower the brake pedal depression position for the cut-off (transmission shifted to neutral). In this setting, the transmission driving force is cut at a point where there is ample braking force, so this prevents the machine from slipping down.

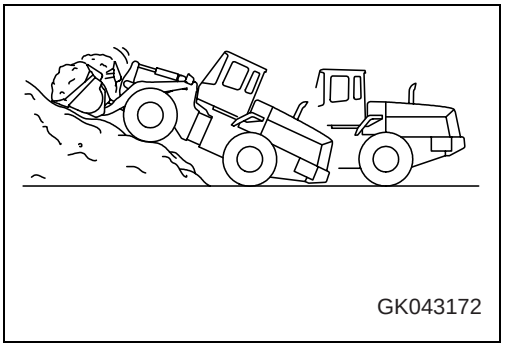

- When approaching dump trucks during loading operations, raise the brake pedal depression position for the cut-off (transmission shifted to neutral). In this setting, the fine control of the braking immediately before dumping the load can be carried out with the brake only, so this makes it easy to control and allows the machine to be brought to a soft stop.

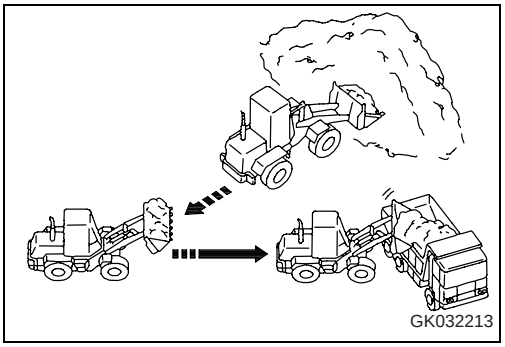

Downloaded from www.Manualslib.com manuals search engine

https://truckmanualshub.com/

Adjusting transmission cut-off position

WARNING

Apply the parking brake before adjusting the transmission cut-off position.

Adjust the depression position of the left brake pedal used to shift the transmission to neutral at the position to match the operation.

1. Start the engine with starting switch (1), then set parking brake switch (2) to the ON position.
2. Set transmission cut-off switch (3) to the ON position.
3. Depress left brake pedal (4) and set it to the desired position to shift the transmission to neutral.

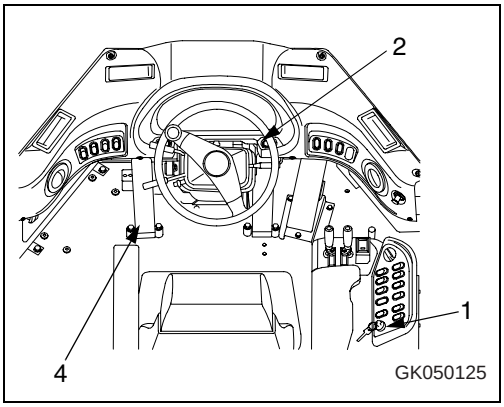

4. Press transmission cut-off set switch (5), then release it. When the switch is released, the buzzer will sound with a repeated short sound, and the cut-off position is set.

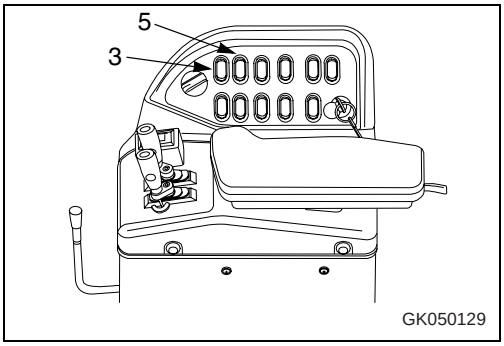

Method of canceling cut-off position

5. After the buzzer sounds in Step 4 of the adjustment procedure, the transmission cut-off switch flashes for 2 seconds. While it is flashing, press transmission cut-off set switch (5) again and release it.
6. The buzzer will sound with a long sound and the adjusted cut-off position is canceled.

Stopping when transmission cut-off is on

When the transmission cut-off switch is at the ON position and the left brake pedal is depressed, the transmission is shifted to neutral at the pre-selected brake pedal depression position.
The transmission is not shifted to neutral when the right brake pedal is operated.

REMARK

When the transmission cut-off switch is OFF, the left brake pedal acts in the same way as the right brake pedal, and the transmission is not shifted to neutral.

Downloaded from www.Manualslib.com manuals search engine

https://truckmanualshub.com/

3.3.7 Turning

WARNING

- Operating the steering wheel suddenly at high speed or operating the steering wheel on steep slopes is dangerous. Do not operate the steering wheel in such situations.
- If the engine stops when the machine is traveling, the emergency steering is actuated. Note that this system is only for steering in emergencies, so never stop the engine.
- It is particularly dangerous if the engine stops when the machine is traveling on slopes, so never let the engine stop when traveling on slopes.
  If the engine stops, stop the machine immediately at a safe place.

When traveling, use steering wheel (1) to turn the machine.

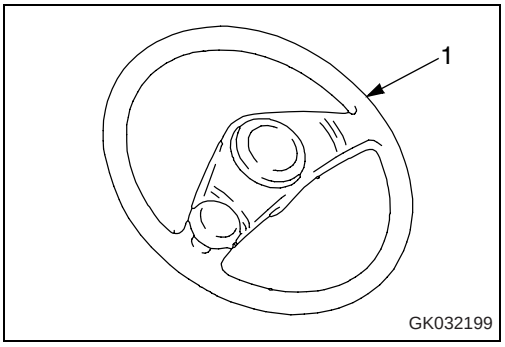

With this machine, the front frame is joined to the rear frame at the center of the machine by the center pin. The front and rear frames bend at this point, and the rear wheels follow in the same track as the front wheels when turning.

Turn the steering wheel lightly to follow the machine as it turns.

NOTE

When the steering wheel is turned fully, if it reaches the end of its stroke, do not try to turn it further.
Check that there is a play of 50 to 100 mm (2.0 to 3.9 in) in the steering wheel. Check also that the steering works properly. If any abnormality is found, please contact your KOMATSU distributor for inspection.

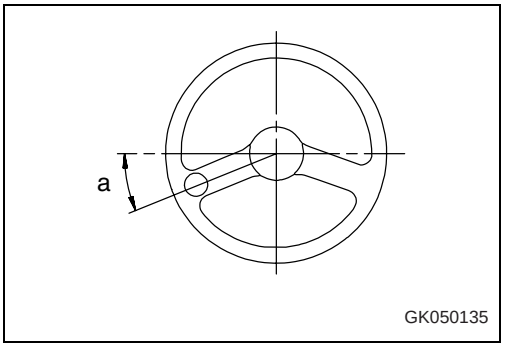

When the emergency steering system detects that the oil pressure in the steering circuit has been restored, the actuation of the emergency steering system is stopped.

Downloaded from www.Manualslib.com manuals search engine

https://truckmanualshub.com/

3.3.8 Operation of work equipment

WARNING

- When standing up from the operator's seat, always set the work equipment lock lever securely to the LOCK position. If the work equipment lock lever is not locked, and work equipment control lever (A) is touched by mistake, this may lead to serious personal injury.
- If the work equipment lock lever is not securely at the LOCK position, the work equipment may move and this may lead to serious personal injury. Always check that the condition is as shown in the diagram.
- When pulling the work equipment lock lever up or pushing it down, be careful not to touch work equipment control lever (A).

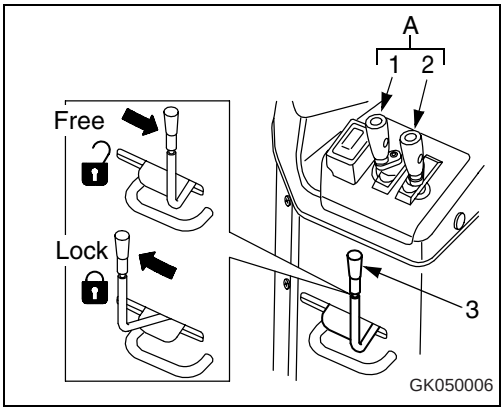

Work equipment lock lever (3) is a lock device for work equipment control lever (A).

Push the work equipment lock lever to the outside to apply the lock.

REMARK

This lever locks the hydraulic circuit for the work equipment electrically, so if it is in the LOCK position, the work equipment will not move even if work equipment control lever (A) is operated.

Lift arm control lever (1) and bucket control lever (2) can be used to operate the lift arm and bucket as follows.

Downloaded from www.Manualslib.com manuals search engine

https://truckmanualshub.com/

Lift arm operation

Set the work equipment lock lever to the FREE position before operating the control lever.

Position (a): RAISE

Position (b): HOLD

The lift arm is stopped and held in position.

Position (c): LOWER

Position (d): FLOAT

The lift arm moves freely under external force.

When the lever is pulled further from the RAISE position, the lever stops at that position. When the lift arm reaches the maximum height, the lever returns to the HOLD position.

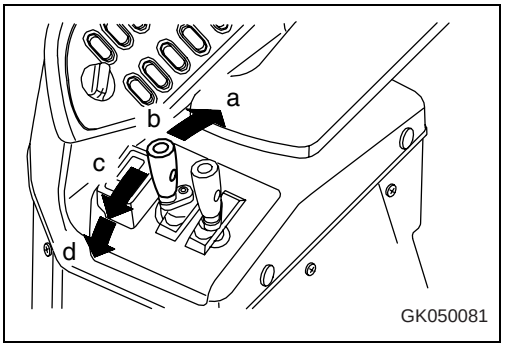

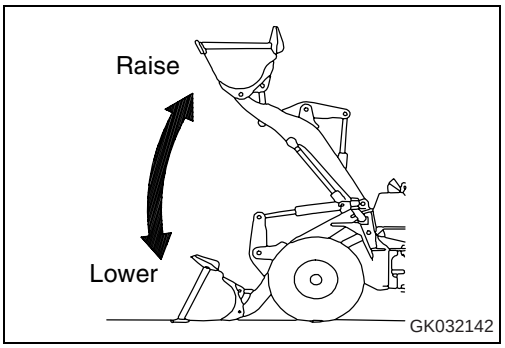

Bucket operation

Set the work equipment lock lever to the FREE position before operating the control lever.

Position (a): TILT

Position (b): HOLD

The bucket is kept in the same position.

Position (c): DUMP

When the bucket control lever is pulled further from the TILT position, the lever is stopped in this position until the bucket reaches the preset position of the positioner, and the lever is returned to the HOLD position.

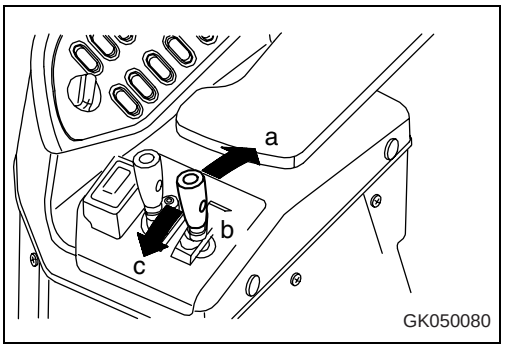

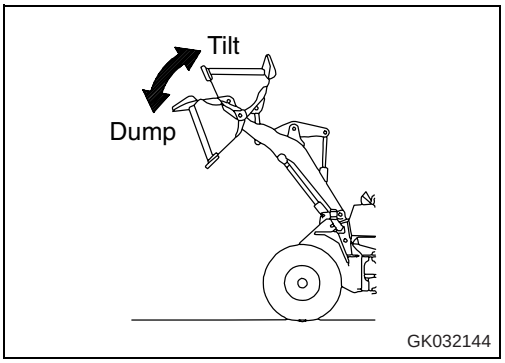

Downloaded from www.Manualslib.com manuals search engine

https://truckmanualshub.com/

3.3.9 Semi auto digging operations

Semi auto digging function

With semi auto digging, the bucket tilt operation is automatically controlled. The purpose of this is to make bucket operations easier and relieve the load on the operator.

For details of the work that can be carried out with a wheel loader, see "Digging operations (3-129)".

Actuation of semi auto digging

Set the semi auto digging selector switch to ROCK mode or LOOSE mode to match the material being handled.

1. Drive the machine forward and lower the bucket to a position approx. 300 mm (11.8 in) above the ground.
2. Press the kickdown switch to shift down to F1.
3. Depress the accelerator pedal and dig the cutting edge of the bucket into the stockpile.
4. Operate the lift arm in the RAISE direction, then return it to HOLD, or set the lift arm control lever to the detent position. This is taken as the starting signal, and semi auto digging will start after approx. 1 second.

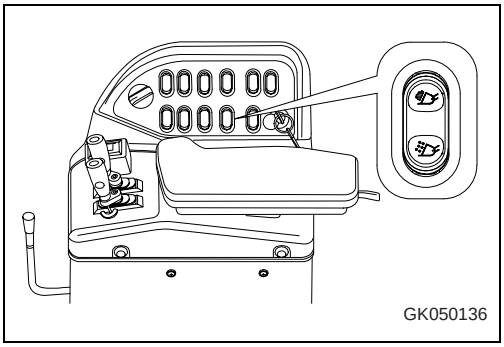

During semi auto digging operations, the tilt is operated automatically and the lift arm rises at the same time, even when the lift arm control lever is at the HOLD position.

REMARK

When carrying out digging operations with the speed range in 1st, if the kickdown switch is pressed, the mode will enter the semi auto digging mode.

Finishing semi auto digging

The semi auto digging finishes when the following condition is reached or the following operation is carried out, and the automatic tilt operation and automatic lift arm RAISE operation stop.

- When the automatic tilt operation sets the bucket to the full tilt position.
- When the lift arm rises above the horizontal position.
- When the directional lever is operated to a position other than FORWARD.
- When the semi auto digging selector switch is turned OFF.

Downloaded from www.Manualslib.com manuals search engine

https://truckmanualshub.com/

3.3.10 Remote positioner

This machine is equipped with the functions of a remote bucket positioner and remote boom positioner.

Operating remote bucket positioner

1. Raise the lift arm and dump the bucket.
2. Operate the bucket control lever to the tilt detent position, then release the lever.
3. The bucket will tilt, and when the bucket control lever returns from the detent position to the HOLD position, the bucket tilt operation will stop.
4. When the lift arm is lowered to near the ground level, the cutting edge of the bucket will be set to the position determined by the remote positioner bucket angle set switch.
5. If it is desired to stop the cutting angle of the bucket further towards the tilt position (facing up) or dump position (facing down), operate the remote positioner bucket angle set switch to change the stopping angle of the bucket.

   It is possible to set the angle up or down five stages (± 5). The angle changes approx. 1° for each stage.

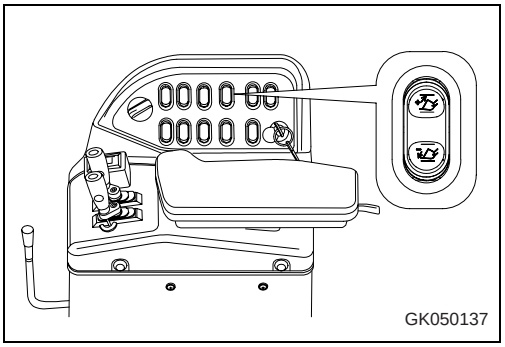
GK050137

Operating remote boom positioner

Operating raise remote boom positioner

1. Set the lift arm to the desired stop position above horizontal.
2. Operate the lift arm control lever to the HOLD position and press the top of the remote positioner raise/lower set switch. The buzzer will emit short sounds, the position is set, and the lamp inside the switch lights up.

Method of checking actuation

- Lower the lift arm, operate the lift arm in the RAISE direction to raise to the detent position, then release the lever.
- The lift arm will go up, and when the lift arm control lever returns from the detent position to the HOLD position, the lift arm operation will stop.

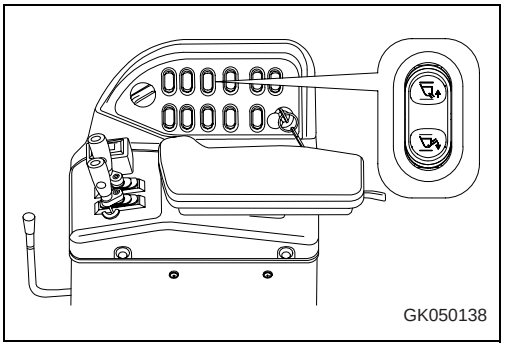
GK050138

Downloaded from www.Manualslib.com manuals search engine

https://truckmanualshub.com/

Cancelling raised remote boom positioner

Set the lift arm control lever to the HOLD position and keep the top of the remote positioner raise/lower set switch pressed for at least 1 second. The buzzer will emit a long sound, the stop position is reset, and the lamp inside the switch goes out.

When it has been reset and the lift arm control lever is set to the detent position, if the lift arm is raised to near the maximum height and it returns from the detent position to the HOLD position, the lift arm operation will stop.

Operating lower remote boom positioner

1. Set the lift arm to the desired stop position between a point below horizontal and a point approx. 300 mm (11.8 in) above the ground surface.

   (If it is less than 300 mm (11.8 in) from the ground, the stop position cannot be set.)

2. Operate the lift arm control lever to the HOLD position and press the top of the remote positioner raise/lower set switch. The buzzer will emit short sounds, the position is set, and the lamp inside the switch lights up.

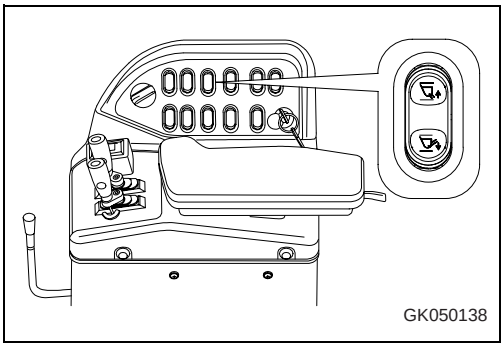

Method of checking actuation

- Raise the lift arm above horizontal, operate the lift arm control lever to the FLOAT position, then release the lever.

REMARK

If the lift arm is below horizontal and the lift arm control lever is set to the FLOAT position, the lift arm is only set to FLOAT and it does not automatically stop.

- The lift arm will go down, and when the lift arm control lever returns from the FLOAT position to the HOLD position, the lift arm operation will stop.

Cancelling lower remote boom positioner

Set the lift arm control lever to the HOLD position and keep the bottom of the remote positioner raise/lower set switch pressed for at least 1 second. The buzzer will emit a long sound, the stop position is reset, and the lamp inside the switch goes out.

When it has been reset and the lift arm control lever is set to the FLOAT position, the lift arm is set to FLOAT and it moves under external force.

Downloaded from www.Manualslib.com manuals search engine

https://truckmanualshub.com/

3.3.11 Work possible using wheel loader

This section explains about general operations. Be sure to operate the machine correctly.

For details, see "Precautions when handling blasted rock (3-135)".

In addition to the following, it is possible to further increase the range of applications by using various attachments.

Recommended combination of switches for operation

To improve fuel efficiency and to increase the service life of the machine, we recommend the combination of switches shown in the table below to match the operating conditions.

(1) Transmission auto shift/manual shift selector switch
(2) Torque converter lock-up switch
(3) Engine power mode selector switch

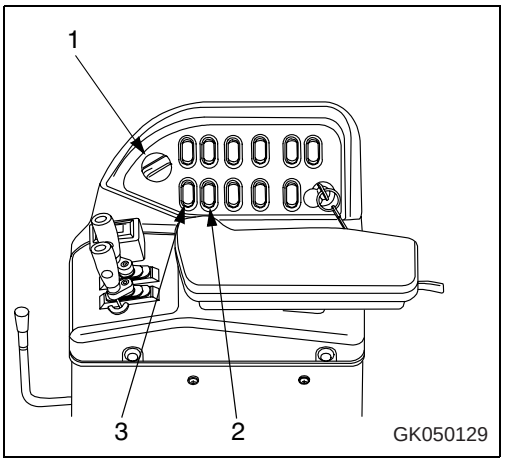

			(1)			(2)		(3)	
Operation	Material	Working area	Auto shift			Lock up		Engine power	
			Manual	L	H	ON	OFF	Economy	Power
V-Shape loading	Stock piling	Flat & Solid ground	•				•	•	
		Slippery ground	•				•	•	
	Rock	Flat & Solid ground	•				•	•	
		Slippery ground	•				•	•	
	When high production is reguired		•				•		•
Load & Carry		Level ground		•		•		•	
		Uphill grade			•	•			•
Traveling		Level ground		•		•		•	
		Uphill grade			•	•			•

Downloaded from www.Manualslib.com manuals search engine

https://truckmanualshub.com/

Digging operations

WARNING

- Always set the machine facing directly to the front when carrying out digging or scooping operations. Never carry out these operations with the machine articulated.
- When the machine is traveling or the work equipment is raised, the moment that the E.C.S.S. switch is turned ON, the work equipment will move.
- If operations are carried out with the E.C.S.S. switch left at the ON position, the moment that the E.C.S.S switch is turned ON, the work equipment will move.

NOTE

If the tires slip, the tire life will be reduced, so do not allow the tires to slip during operation.

Loading piled soil or blasted rock

When loading piled soil or blasted rock,drive the machine forward as follows to load. To prevent cutting of the tires caused by the tires slipping, be careful of the following points during the operation.

- Always keep the operating jobsite flat, and remove any fallen rocks.
- When working with stockpiles, operate the machine in 1st or 2nd gear; when loading blasted rock operate the machine in 1st gear.

1. When driving the machine forward and lowering the bucket, stop the bucket at height (A) approx. 30 cm (12 in) from the ground, then lower it slowly.

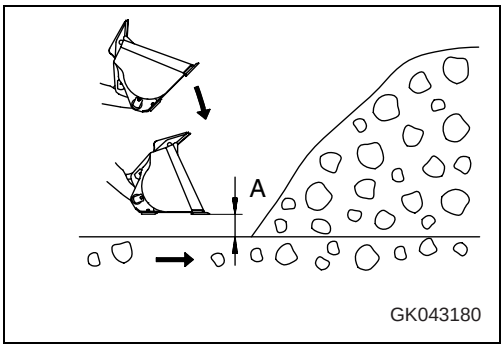

REMARK

If the bucket hits the ground, the front tires will come off the ground, and the tires will slip.

2. Shift down immediately in front of the material to be loaded. When completing the shift down, depress the accelerator pedal at the same time and thrust the bucket into the material.

REMARK

To reduce fuel consumption, depress the accelerator pedal the minimum possible amount. If it is depressed fully, the fuel consumption will increase, but there will be no increase in the amount loaded.

3. When the material is in a stockpile, keep the cutting edge of the bucket horizontal; when loading blasted rock, have the bucket tilting slightly down.

   Be careful not to get blasted rock under the bucket. This will make the front tires come off the ground and slip.

Downloaded from www.Manualslib.com manuals search engine

https://truckmanualshub.com/

Try to keep the load in the center of the bucket; if the load is on one side of the bucket, the load will be unbalanced.

- Stock pile

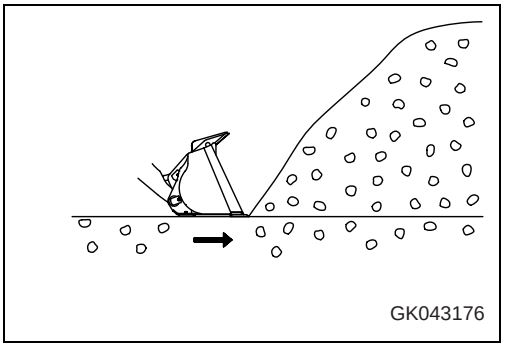

- Blasted rock

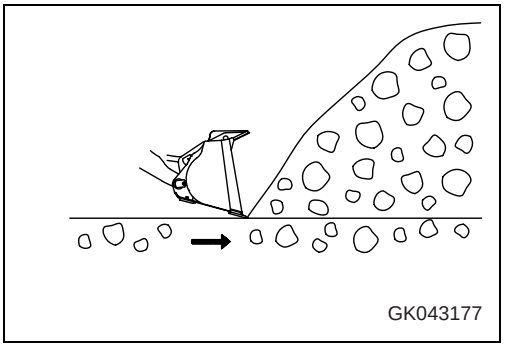

4. At the same time as thrusting the bucket into the material, raise the lift arm to prevent the bucket from going in too far. By raising the lift arm, ample traction will be produced by the front tires.

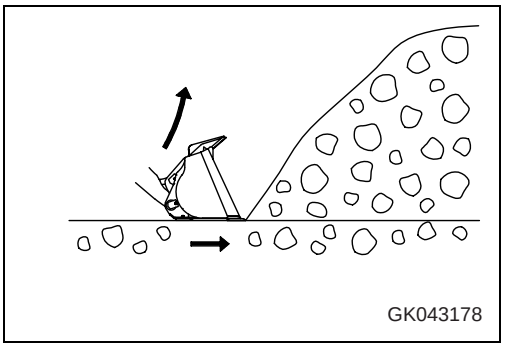

REMARK

If the bucket is thrust too much and the lift arm stops rising or the machine stops moving forward, release the accelerator pedal a little. Proper operation of the accelerator pedal for each type of the soil is effective for saving of fuel and prevention of wear of the tires.

5. Check that there is enough material loaded into the bucket, then operate the bucket control lever to tilt the bucket and load the bucket fully.

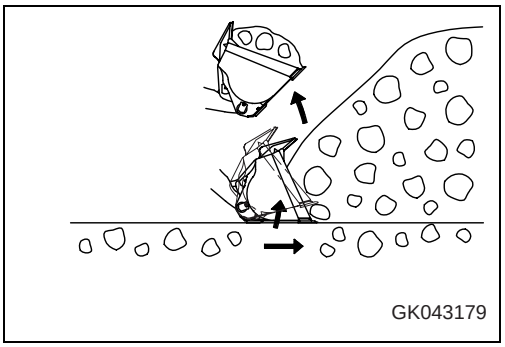

REMARK

If the bucket edge is moved up and down while pushing in the bucket and digging, the front tires will come off the ground and this will cause the tires to slip.

Downloaded from www.Manualslib.com manuals search engine

https://truckmanualshub.com/

6. If there is too much material loaded in the bucket, dump and tilt the bucket quickly to remove the excessive load. This prevents spillage of the load during hauling.

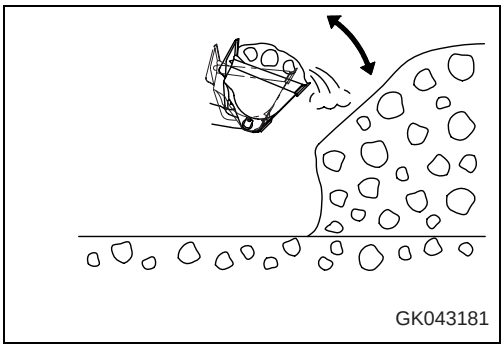

Digging and loading on level ground

When digging and loading on level ground, set the bucket edge facing down slightly as follows and drive the machine forward. Always be careful not to load the bucket on one side and cause an unbalanced load.

This operation should be carried out in 1st gear.

CAUTION

Do not set the bucket facing down more than 8 degrees.

1. Set the edge of the bucket facing slightly down.

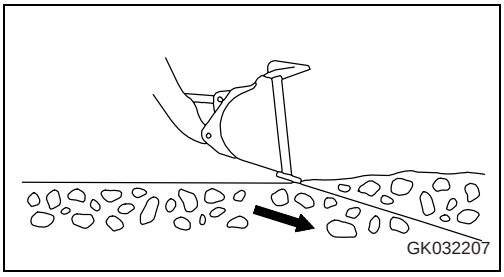

CAUTION

If the bucket hits the rocks in the ground first, a large shock is generated and this may damage the machine.

2. Drive the machine slowly forward, push the lift arm control lever slightly to the front, and dig in to scoop up the load a little at a time.

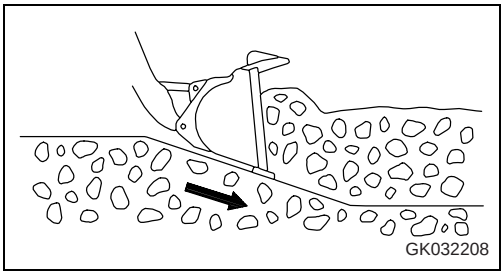

3. Operate the lift arm control lever slightly up and down to reduce the resistance when driving the machine forward.

   When digging with the bucket, avoid imposing the digging force onto only one side of the bucket.

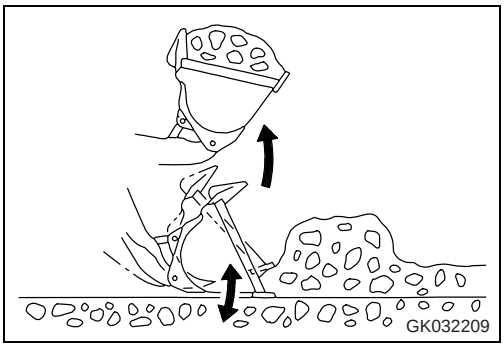

Downloaded from www.Manualslib.com manuals search engine

https://truckmanualshub.com/

Leveling operation

NOTE

- *Always operate the machine in reverse when carrying out leveling operations.*
  If it is necessary to carry out leveling operations when traveling forward, do not set the bucket dumping angle to more than 8 degrees.
- *Turn the E.C.S.S. switch OFF when carrying out leveling operations.*

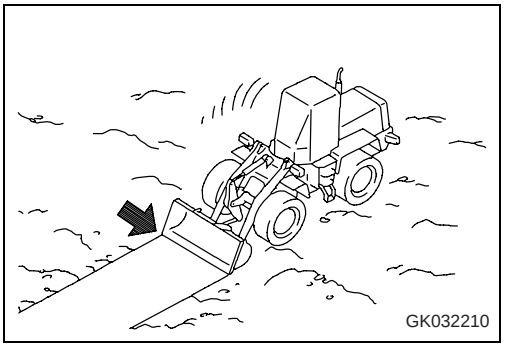

1. Scoop soil into the bucket. Move the machine backward while spreading soil from the bucket little by little.
2. Go over the spread soil with the bucket teeth touching the ground and level the ground by back-dragging.
3. Scoop some more soil into the bucket, put the lift arm control lever in FLOAT position, level the bucket at ground level, and smooth the ground by moving backward.

Pushing operation

CAUTION

Never set the bucket to the DUMP position when carrying out pushing operation.

When carrying out pushing operations, set the bottom of the bucket parallel to the ground surface.

Downloaded from www.Manualslib.com manuals search engine

https://truckmanualshub.com/

Load and carry operations

WARNING

- When carrying a load, lower the bucket to lower the center of gravity when traveling.
- When the machine is traveling or the work equipment is raised, the moment that the E.C.S.S. switch is turned ON, the work equipment will move.
- If operations are carried out with the E.C.S.S. switch left at the ON position, the moment that the E.C.S.S switch is turned ON, the work equipment will move.

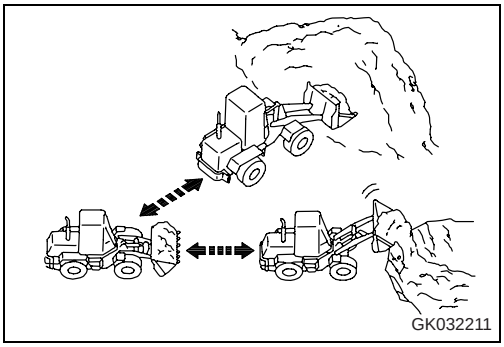

The load and carry method for wheel loaders consists of a cycle of scooping -> hauling ->loading (into a hopper, truck, etc.)

Always keep the travel path properly maintained.

When using the load and carry method, see "Precautions for using load and carry method (3-158)".

Loading operations

Select the method of operation which will give the minimum amount of turning and travel in order to provide the most efficient method for the jobsite.

WARNING

- Always keep the jobsite level. When the lift arm is raised with the bucket loaded, it is dangerous to operate the steering suddenly or apply the brakes suddenly. Do not carry out such operations.
- It is dangerous to thrust the bucket into the material to be loaded (borrow pit, crushed rock, etc.) at high speed. Do not carry out such digging operations.
- When traveling or when the work equipment is raised, if the E.C.S.S. swith is turned ON, the work equipment will move at that instant, so operate carefully.
- If operations are carried out with the E.C.S.S. switch ON, the work equipment may move at the instant the E.C.S.S. is actuated, so operate carefully.

NOTE

- *If the tires slip, the tire life will be reduced, so do not allow the tires to slip during operation.*
- *Avoid excessive bucket shaking.*

Downloaded from www.Manualslib.com manuals search engine

https://truckmanualshub.com/

Cross drive loading

Always set the wheel loader facing at a right angle to the stock-pile. After digging in and scooping up the load, drive the machine straight back in reverse, then bring the dump truck in between the stock pile and the wheel loader.

This method requires the least time for loading, and is extremely effective in reducing the cycle time.

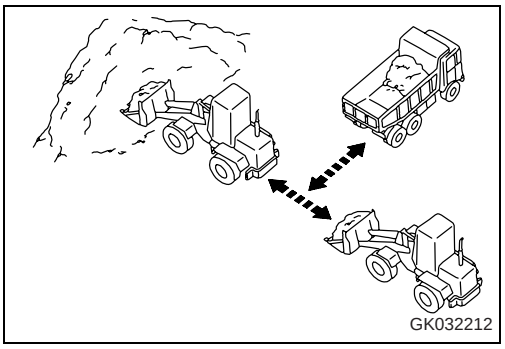

V-shape loading

Position the dump truck so that the direction of approach of the wheel loader is approx. 60 degrees from the direction of approach to the stockpile. After loading the bucket, drive the wheel loader in reverse, then turn it to face the dump truck and travel forward to load the dump truck.

The smaller the turning angle of the wheel loader is, the more efficient the operation becomes.

When loading a full bucket and raising it to the maximum height, first shake the bucket to stabilize the load before raising the bucket. This will prevent the load from spilling to the rear.

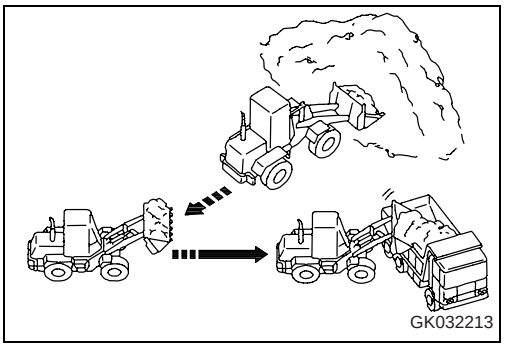

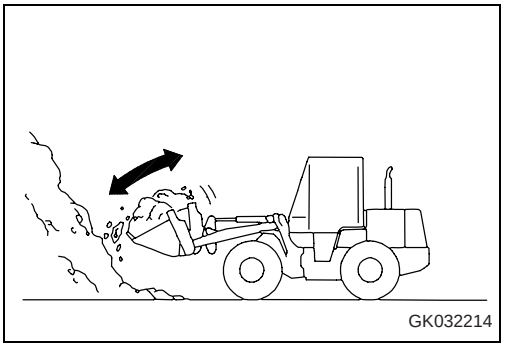

Precautions when piling up loads

When forming products into a pile, be careful not to let the rear counterweight come into contact with the ground.

Do not set the bucket to the DUMP position when piling-up loads.

REMARK

As far as possible, do not use the transmission cut-off function during screaping-up operation. This will prevent the machine from rolling back.

Downloaded from www.Manualslib.com manuals search engine

https://truckmanualshub.com/

Precautions when handling blasted rock

If the target load is blasted rock, pay careful attention to the following items when carrying out the operation in order to extend the service life of the machine.

Operating procedure to prevent damage to machine

Handling bucket

When approaching the facing and lowering the bucket to the ground, do not drop the bucket suddenly into contact with the ground. If the bucket is dropped suddenly, the bucket, work equipment, area around the pins, and the machine frame will be subjected to excessive shock, and this will lead to damage or deformation of various parts of the machine.

In addition, the front wheels were come off the ground, so this will cause the machine to slip.

When lowering the bucket to the ground, reduce the lowering speed of the bucket when it is close to the ground and bring it slowly into contact with the ground.

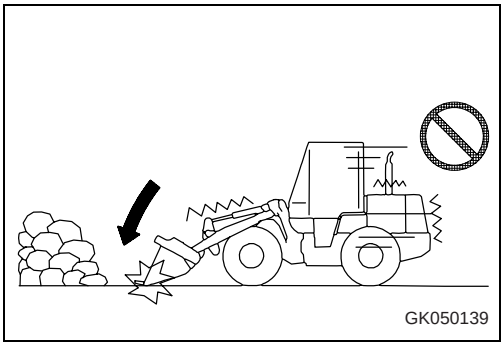
GK050139

Shifting transmission when thrusting bucket in

When thrusting the bucket into the facing to carry out excavation, do not shift down with the accelerator pedal depressed (with the engine speed raised). If the transmission shifts down when the engine speed is high, there will be an excessive load on the engine, torque converter, transmission, axles, final drive, and the whole power train.

When shifting down to 1st and thrusting the bucket into the facing, release the accelerator pedal to reduce the engine speed before shifting down. Then gradually depress the accelerator pedal. If the accelerator is operated suddenly after shifting down, there will be excessive load brought to bear on the engine and power train.

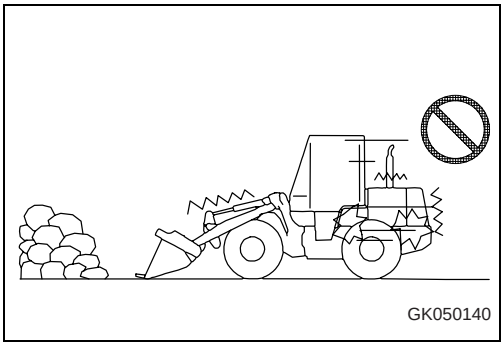
GK050140

Articulating machine during digging operations

Do not carry out operations with the machine articulated. If the machine is articulated, the direction of force will be different for the front wheels and rear wheels. As a result, the power when traveling will not be transmitted fully to the front wheels, so this will reduce the digging force and bring an excessive load to bear on the center hinge pin. In addition, even with the front wheels, the power will not be transmitted uniformly to the left and right wheels. The load will be brought to bear on one wheel, so this will reduce the service life of the tire on one side.

If digging work is carried out with the machine articulated, the overall stability of the machine will be poor and there is danger of the machine tipping over.

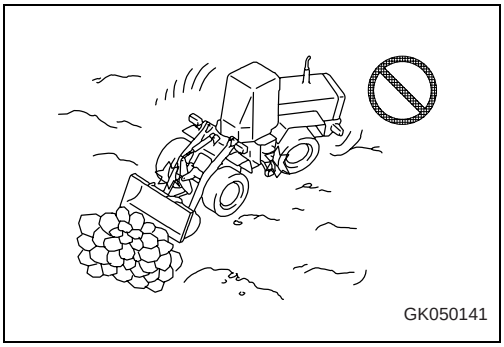
GK050141

Downloaded from www.Manualslib.com manuals search engine

https://truckmanualshub.com/

When carrying out operations, do not articulate the machine. Drive straight forward and thrust the bucket in. If this is done, the load on the bucket will be uniform, so this makes it possible to avoid load on one side and makes it easier to load the bucket.

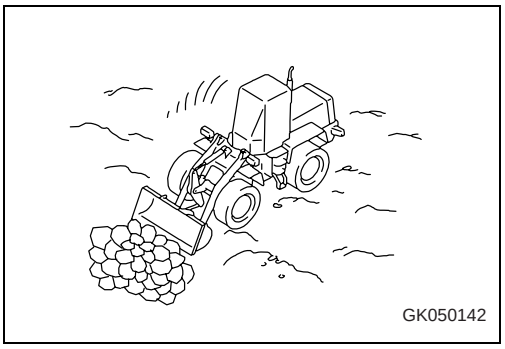

Bucket dump angle when digging or lowering roadbed

Do not set the cutting edge of the bucket at a large angle to the ground surface when digging or lowering the roadbed. Keep angle (a) between the bucket and the ground surface to a maximum of 8°. If angle (a) between the cutting edge of the bucket and the ground surface is more than 8° when digging or lowering the roadbed, there is danger of damage to the work equipment.

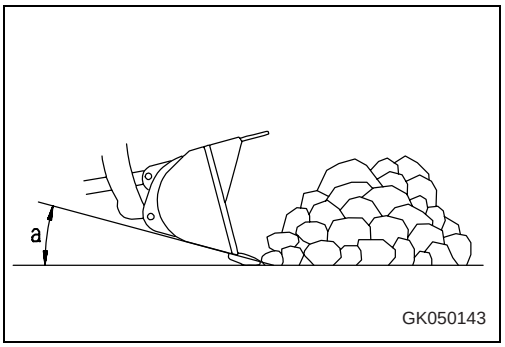

Bucket dump angle when levelling

Drive the machine in reverse when carrying out leveling operations.

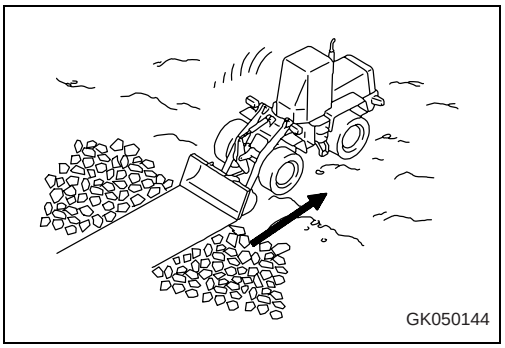

If leveling operations are carried out with the machine traveling forward, do not make angle (a) between the cutting edge of the bucket and the ground surface facing down more than 8°. If leveling operations are carried out when driving forward with angle (a) between the cutting edge of the bucket and the ground surface facing down more than 8°, the bucket cylinder will be pushed by the pushing force of the machine. This will cause the cylinder to retract and the bucket will face down at a greater angle, so there is danger of the work equipment breaking.

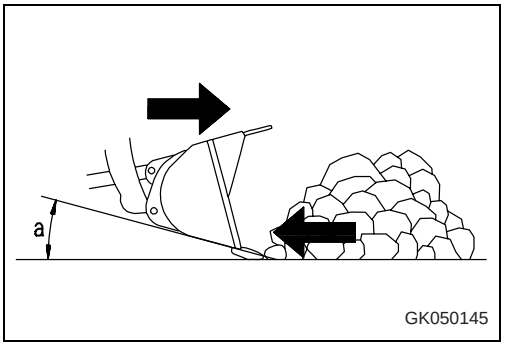

Downloaded from www.Manualslib.com manuals search engine

https://truckmanualshub.com/

Loading bucket

Do not load the bucket or scoop up the load with the load on the corner of the bucket or the load on one side of the bucket. This will cause the machine to twist and will reduce the service life of the work equipment and the frame.

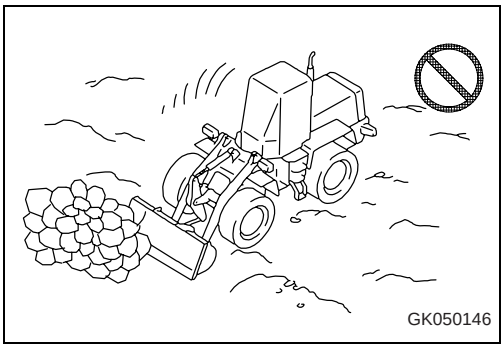

When carrying out digging or scooping-up operations, thrust the center of the bucket into the load.

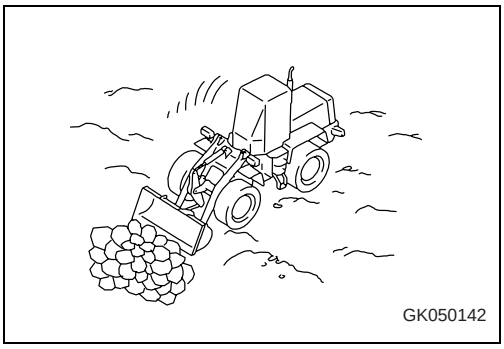

Bucket dump operation when digging

Do not operate the bucket in the DUMP direction when digging. If the bucket control lever is operated to the DUMP position during digging, the machine will not be able to travel forward, the tires will slip, and an excessive load will be brought to bear on the work equipment.

Carry out the scooping-up operations as follows.

1. When thrusting the bucket in, raise the lift arm slightly at the same time. Ample driving force will work on the front wheels.
2. To fill the bucket, operate the bucket tilt and lift 2 - 3 times repeatedly when thrusting the bucket in.

   Operate the control lever slowly near the end of the bucket tilt.
3. When the bucket reaches the end of the tilt stroke, depress the brake pedal to stop the machine.

   When doing this, do not push the bottom of the bucket against the dilution. If the bucket is pushed against the dilution, the bucket, cylinders, and work equipment will be damaged.
4. When the scooping-up operation is completed, operate the bucket tilt and dump, and apply the brakes when traveling in reverse to stabilize the load inside the bucket and prevent spillage of the load.

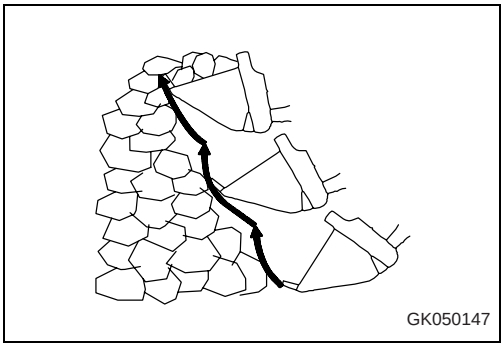

Downloaded from www.Manualslib.com manuals search engine

https://truckmanualshub.com/

REMARK

To reduce the generation of heat by the torque converter, keep the target time for the digging operation within 10 seconds from the start of thrusting in to the completion of scooping up.
The fuel consumption increases while digging working. Fuel cost is saved by shortening the digging time.

Front wheels going on blasted rock

Do not carry out operations that make the front wheels ride up on blasted rock. If the front wheels go on top of blasted rock, there is danger that the sharp parts of the blasted rock will cut the tires.

In particular, avoid pushing the bucket in too far, and when operating near natural rock after blasting (roots), do not let the front wheels ride up on the natural rock (roots). For scooping-up operations near natural rock (roots), do not use a wheel loader. Use a bulldozer or hydraulic excavator.

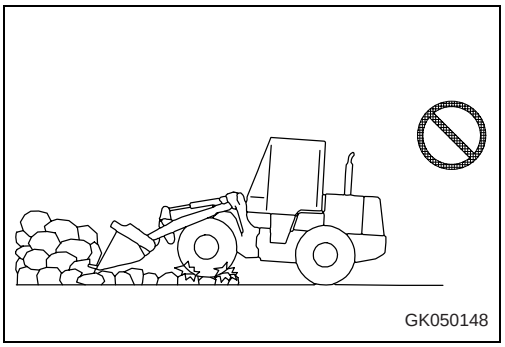
GK050148

Treatment of loosened boulders

WARNING

Do not use this machine to deal with loosened boulders. If the boulder is dropped by mistake when handling it, there is danger that it may fall on top of the operator's compartment and cause serious personal injury.

Do not use this machine to deal with loosened boulders. If the loosened boulder cannot be handled, there is danger that it may be dropped during operations and fall on the machine or operator's compartment. If dropped boulders hit the work equipment cylinders, there is danger that the cylinder will bend and be unable to move. If the boulder is dropped on the operator's compartment, there is danger of serious personal injury.

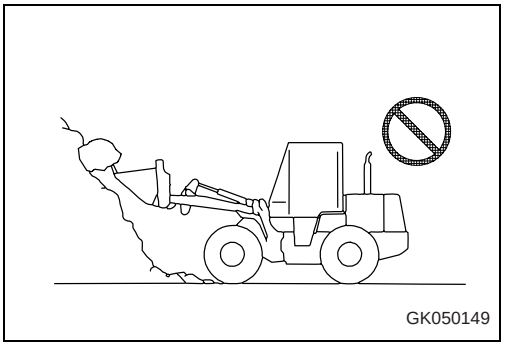
GK050149

Pit excavation

Do not try to shave off natural rock (roots) remaining from blasting. Excessive force will be applied to the machine, and there is danger that this may damage the work equipment or frame. For pit excavation operations, do not use a wheel loader. Use a bulldozer or hydraulic excavator.

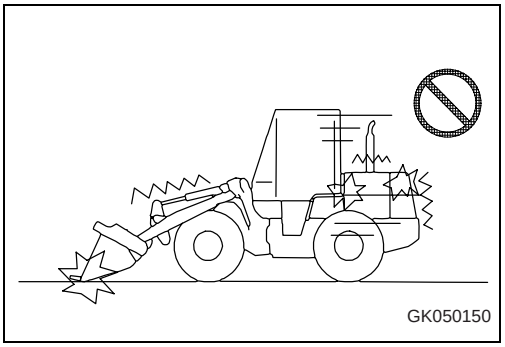
GK050150

Downloaded from www.Manualslib.com manuals search engine

https://truckmanualshub.com/

Cutting face operations

Do not excavate cutting faces. If the cutting face is excavated, excessive force will be applied to the machine, and there is danger that this may damage the bucket, work equipment, or frame. In particular, do not excavate with the bucket raised to a height above the travel posture. For excavation of cutting faces, use a hydraulic excavator.

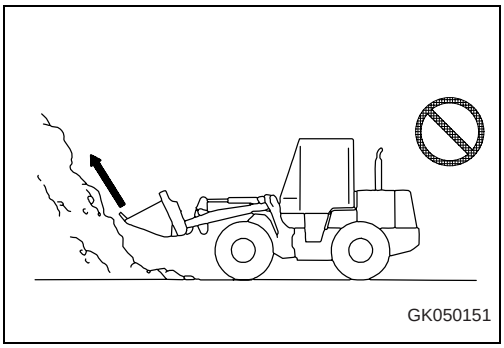

Switching between forward and reverse

Do not switch the direction of travel of the machine between forward and reverse when traveling at high speed or when the accelerator pedal is depressed. When the machine is traveling at high speed or when the accelerator pedal is depressed, the engine speed is high, and if the direction of travel is switched between forward and reverse. In this condition, an excessive load will be applied to the engine, torque converter, transmission, and other parts of the power train, and this will reduce the service life of the machine.

When switching between forward and reverse, travel at low speed, reduce the engine speed, then stop the machine and switch the direction of travel.

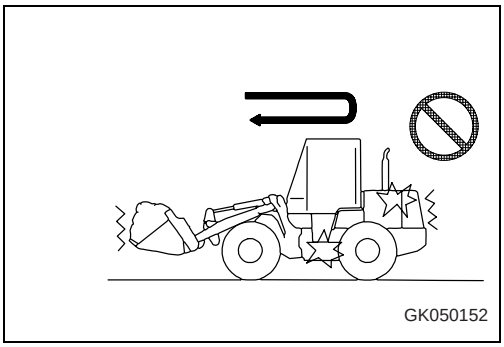

Turning when tires are stationary

Do not operate the steering when the machine is stationary. If the steering is operated when the machine is stationary, it will cause wear or cuts in the tires. In addition, it will reduce the durability of the frame and the undercarriage.

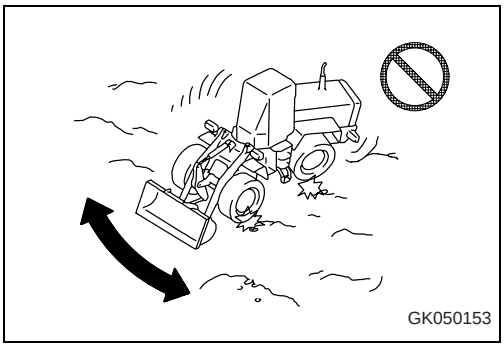

Downloaded from www.Manualslib.com manuals search engine

https://truckmanualshub.com/

Procedure for operations using v-shape loading of dump trucks

Preparations for loading, gathering rocks

Always keep the job area level and remove any rocks or boulders.

NOTE

- *When gathering rocks, if the operation is carried out over an area longer than the length of the machine, there is danger that the machine will ride up on boulders and suffer cuts to the tires. When gathering rocks, always carry out the operation in an area shorter than the length of the machine.*
- *When carrying out operations with the bucket in contact with the ground, do not articulate the machine. This will cause tire slippage and damage to the machine.*

1. Put the bucket horizontally in contact with the ground, drive forward, and gather the rocks that have been scattered after loading and after splitting or blasting.
2. After collecting the rocks in an area the length of the machine, change the direction of the machine to gather rocks and increase the area of level ground.

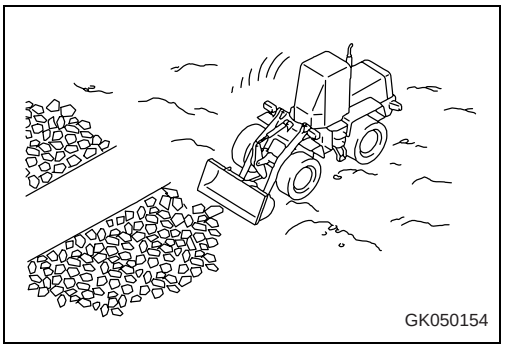

Approaching facing

NOTE

- *When lowering the bucket to the ground, reduce the lowering speed of the bucket when it is close to the ground and bring it slowly into contact with the ground. If the bucket is dropped suddenly, the machine frame will be subjected to excessive shock, and this will lead to damage. In addition, the tires will slip and suffer premature wear.*
- *When digging or lowering the roadbed, keep the angle between the bucket and the ground surface to a maximum of 8°. There is danger of damage to the work equipment.*
- *Do not load the bucket or scoop up the load with the load on the corner of the bucket or the load on one side of the bucket. This will cause the machine to twist and will reduce the service life of the work equipment and the frame.*

1. Set the machine to the travel posture.
2. Set the shift position to F2, then gradually depress the accelerator pedal and raise the travel speed.

Downloaded from www.Manualslib.com manuals search engine

https://truckmanualshub.com/

3. When lowering the bucket to the ground, reduce the lowering speed of the bucket when it is close to the ground and bring it slowly into contact with the ground.

4. Make angle (a) between the bucket and the ground surface a maximum of 8°, and operate the tilt and dump so that only the cutting edge comes in contact with the ground.

5. Drive forward at right angles to the rock and change the direction that the machine is facing.

6. Operate the accelerator to match the condition of the road surface so that the tires do not slip.

7. Scoop up the gathered rock. Load hard cutting face rock or boulders in the middle of the bucket.

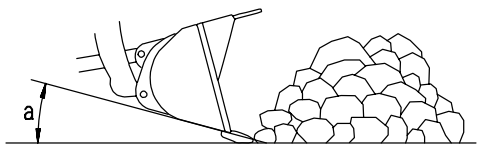

GK050143

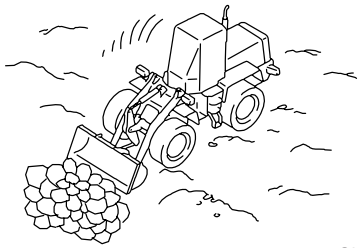
GK050142

Digging

NOTE

- *Do not shift down with the accelerator pedal depressed (with the engine speed raised). If the transmission is shifted down when the engine speed is high, there will be an excessive load on the engine, torque converter, transmission, axles, final drive, and the whole power train.*

- *When thrusting the bucket in, shift down to 1st. If the bucket is thrust in at high speed, there will be an impact load on the machine and this will reduce the service life of the machine.*

- *When shifting down, release the accelerator pedal to reduce the engine speed before shifting down. Then gradually depress the accelerator pedal. If the accelerator is operated suddenly after shifting down, there will be excessive load brought to bear on the engine and power train.*

- *Do not carry out operations with the machine articulated. If the machine is articulated, the direction of force will be different on the front wheels and rear wheels. As a result, the power when traveling will not be transmitted fully to the front wheels, so this will reduce the digging force and bring an excessive load to bear on the center hinge pin. In addition, even with the front wheels, the power will not be transmitted uniformly to the left and right wheels. The load will be brought to bear on one wheel, so this will reduce the service life of the tire on one side.*

Downloaded from www.Manualslib.com manuals search engine

https://truckmanualshub.com/

- *Do not push the machine in too far. If it is pushed in too far, a high load will be brought to bear on the machine and this will reduce the service life of the work equipment and frame.*
- *Operate the control lever slowly near the end of the bucket tilt operation. If the control lever is operated suddenly, an impact load will be brought to bear on the tilt cylinder, and there is danger that the cylinder may be damaged.*
- *When close to pit excavation, do not let the front wheels rise up on the cutting face. This will cause cuts to the tires.*

1. Immediately in front of the rock, let the accelerator pedal back and shift down from 2nd to 1st.
2. After shifting down, depress the accelerator pedal gradually and push the rock.
3. Raise the lift arm slightly and increase the driving force of the front wheels. When doing this, do not push in too far.

REMARK

When digging up large rocks, in some cases it may be better not to raise the lift arm too high. If the lift arm is raised too high, the rear wheels may come off the ground.

4. After loading the rock completely into the bucket, operate the bucket tilt and lift 2 - 3 times repeatedly to fill the bucket.
5. Let back the accelerator pedal, operate the control levers slowly, and tilt the bucket back fully.
6. To prevent the load from falling out of the bucket, after completing the scooping-up operation, operate in the dump and tilt direction when the bucket is near the full tilt to stabilize the load.

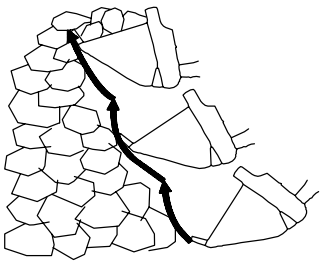
GK050147

REMARK

If the brakes are operated lightly before traveling in reverse, it is possible to stabilize the load in the bucket.
To prevent generation of heat in the torque converter, keep the standard time for digging to within 10 seconds from the start of pushing in to the completion of scooping up.

Downloaded from www.Manualslib.com manuals search engine

https://truckmanualshub.com/

Traveling in reverse after excavating

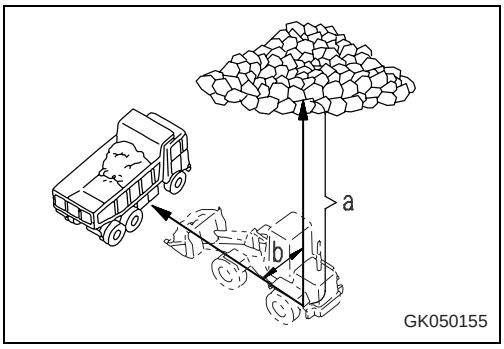

NOTE

- *Do not operate the steering immediately after starting to travel in reverse. The bucket is still thrust into the rocks, so if the steering is operated, excessive force will be brought to bear on the bucket or frame, and there is danger of damage to the frame.*
- *After shifting the transmission, operate the accelerator pedal slowly. If the accelerator pedal is operated suddenly, the tires will slip and this will cause wear or cutting of the tires.*

1. After completing the excavation, shift to R2 and travel in reverse without operating the steering.
2. As a guideline, reverse travel distance (a) should be 1.2 -1.5 times the length of the machine. At this distance, the rolling of the tires can prevent wear to the tires.

   In addition, keep an angle (b) of 60° at the intersection between the straight line from the dilution and the straight line from the dump truck.

REMARK

Decide the steering procedure to match the stopping point of the dump truck and the condition of the dilution. When doing this, decide the stopping point for the dump truck so that the operating angle for the steering is less than 20°.

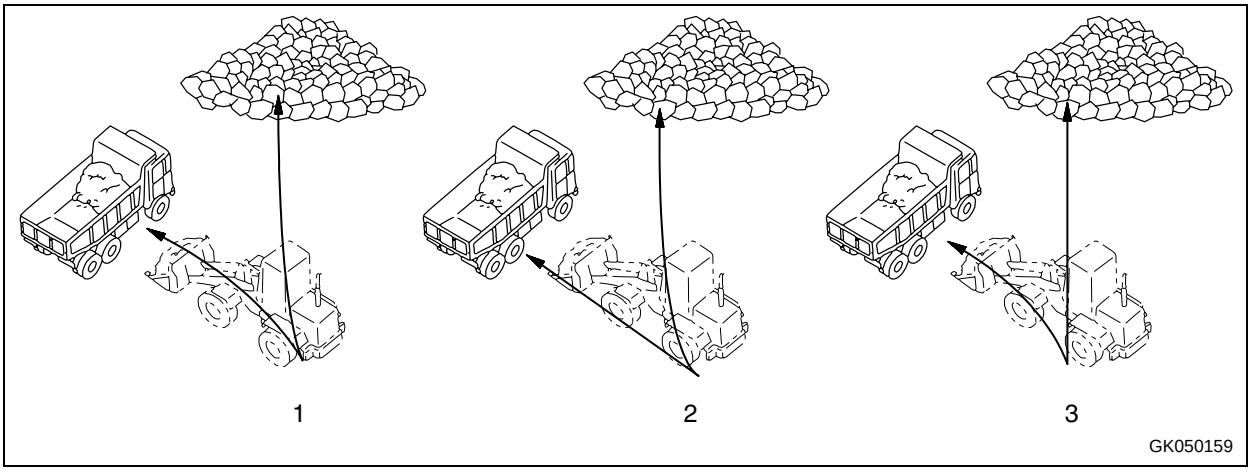

(1) Gradual steering to left or right
(2) Gradual steering to dilution
(3) Direct line to dilution

3. When driving in reverse, do not raise the bucket more than necessary.

   Consider the position of the dump truck, the condition of the road surface, the travel speed, and the speed of the work equipment when deciding the height of the bucket. However, do not raise the bucket so that the top of the load is higher than the horizontal line of sight from the operator.

Downloaded from www.Manualslib.com manuals search engine

https://truckmanualshub.com/

Approaching dump truck

WARNING

Do not operate the steering suddenly when the bucket is raised. If the steering is operated when the bucket is raised, there is danger that the machine may tip over and cause serious personal injury.

NOTE

- *Do not shift down with the accelerator pedal depressed (with the engine speed raised). If the transmission is shifted down when the engine speed is high, there will be an excessive load on the engine, torque converter, transmission, axles, final drive, and the whole power train. In addition, the tires will slip and this will cause wear of the tires.*
- *Do not operate the steering immediately after switching between forward and reverse (when the machine is stationary). If the steering is operated when the machine is stationary, it will cause wear or cuts to the tires.*
- *If there is transmission cut off, do not turn the transmission cut-off switch to the OFF position and depress the brakes or raise the bucket. If the brakes are actuated in this condition, heat will be generated in the brake chamber and this will cause heat fatigue of the parts inside the axle.*

1. Let the accelerator pedal back to reduce the engine speed, then depress the parking brake pedal to stop the machine.
2. Shift gear from R2 to F2.
3. Operate the steering to set the load that at right angles to the dump truck, then drive forward.

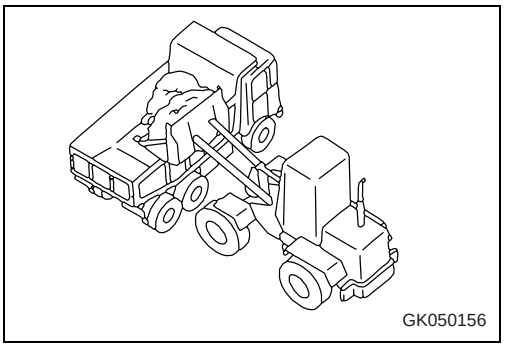
GK050156

REMARK

Operate the steering in the following order: let accelerator pedal back -> switch between forward and reverse -> depress accelerator pedal to drive forward -> approach dump truck. If these operations are carried out at the same time, the engine acceleration will be poor and this will result in poor fuel consumption.

4. Raise the bucket to adjust the bucket height so that when the bucket is tilted down, the cutting edge of the bucket does not hit the bottom face of the dump body or the dilution.

Downloaded from www.Manualslib.com manuals search engine

https://truckmanualshub.com/

Loading dump truck

NOTE

- *Do not load the dump truck suddenly from a high position. If the dump truck is loaded like this, the dump truck will suffer impact load and there is danger that this may damage the body.*
- *Do not operate the dump or stop operations when the engine is running at high speed. There is danger of impact pressure being generated in the hydraulic equipment and causing damage to the hydraulic equipment.*
- *Do not shake the bucket violently to dump the load inside the bucket. The machine will sway greatly and there is danger of damage to the machine. In addition, there is danger of impact pressure being generated in the hydraulic equipment and causing damage to the hydraulic equipment.*
- *When loading the dump truck, do not pushed forcibly with the bucket. This machine and the dump truck will suffer impact shock, and this will cause damage. When pushing the load with the bucket to prevent rocks from falling, carry out the operation softly.*
- *When loading large rocks, first load with sand or soil to act as a cushion. Then load the large rocks on top. If large rocks are loaded directly, they will cause deformation or damage to the dump body.*

1. When loading the dump truck, load at a low point that does not hit with the dump truck or dilution.

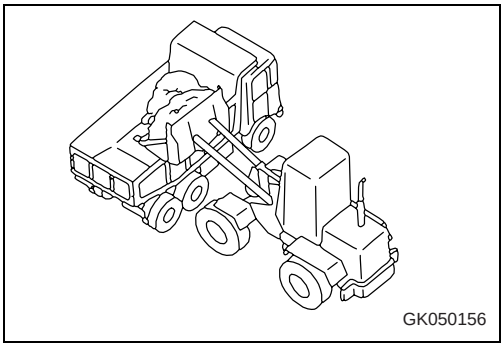
GK050156

2. After completing the loading, if there is danger of rocks falling off, push the load softly with the bucket.

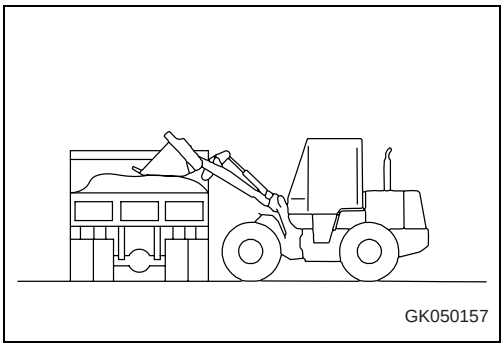
GK050157

Downloaded from www.Manualslib.com manuals search engine

https://truckmanualshub.com/

Reversing away from dump truck

NOTE

- *Do not shift down with the accelerator pedal depressed (with the engine speed raised). If the transmission is shifted down when the engine speed is high, there will be an excessive load on the engine, torque converter, transmission, axles, final drive, and the whole power train. In addition, the tires will slip and this will cause wear of the tires.*
- *Do not operate the steering immediately after switching between forward and reverse (when the machine is stationary). If the steering is operated when the machine is stationary, it will cause wear or cuts to the tires.*

1. Switch to R2 and drive in reverse.
2. While driving in reverse, lower the lift arm and operate the steering to face the position for scooping up.
3. Depress the brake pedal and stop the machine.
4. Let back the accelerator pedal to reduce the engine speed, then switch from R2 to F2.
5. Lower the bucket to the ground and drive forward to clear the surface (remove all boulders).

   Do not operate the steering when carrying out the leveling operation. Travel forward with the machine facing directly to the front.

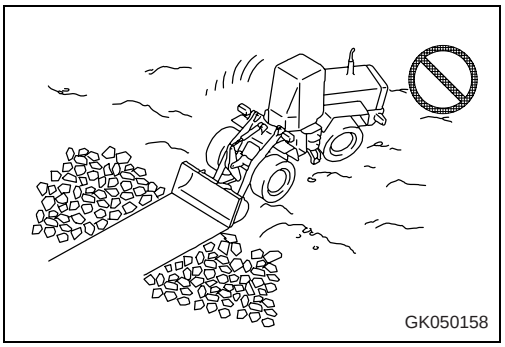
GK050158

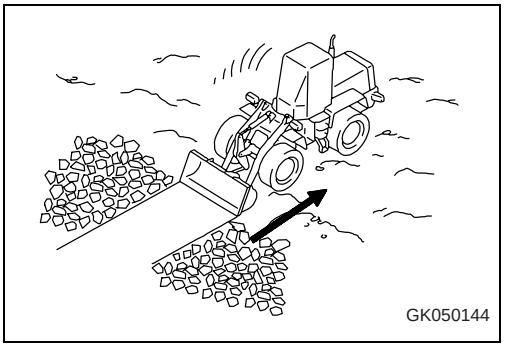
GK050144

Downloaded from www.Manualslib.com manuals search engine

https://truckmanualshub.com/

3.3.12 Precautions for operation

Permissible water depth

When working in water or on swampy ground, do not let the water come above the bottom of the axle housing.

After finishing the operation, wash and check the lubricating points.

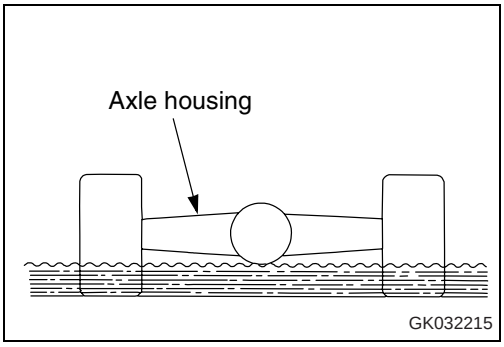

If wheel brake does not work

If the machine is not stopped by depressing the brake pedal, use the parking brake to stop the machine.

NOTE

If the parking brake has been used as an emergency brake, contact your KOMATSU distributor to have the parking brake checked for any abnormality.

Precautions when driving up or down slopes

Lower the center of gravity when turning

When turning on slopes, lower the work equipment to lower the center of gravity before turning. It is dangerous to turn the machine suddenly on slopes.

Breaking on downhill slope

If the foot brake is used excessively when traveling downhill, there is danger that the brake may overheat and be damaged. To prevent this, use the shift-down switch to lower the speed range, and use the braking force of the engine to reduce the speed when traveling downhill.

Normally, the most suitable speed range when traveling down a slope is the speed range needed when traveling up that slope.

Use the right brake pedal for braking.

If the correct speed range is not used, the torque converter oil may overheat. If this happens, shift down one speed to reduce the oil temperature.

If the indicator does not enter the green range even in 1st, stop the machine, place the directional selector lever at the N position, and run at the engine at a mid-range speed until the gauge enters the green range.

Downloaded from www.Manualslib.com manuals search engine

https://truckmanualshub.com/

REMARK

If there is danger of the engine overrunning, the central warning lamp lights up and the buzzer sounds intermittently. At the same time, the engine speed flashes on the meter display. Limit the engine speed and machine travel speed when operating.
If the engine speed goes up more, to prevent the engine from overrunning, if the torque converter is locked up, the lock-up is cancelled and the speed range automatically shifts up one speed. At the same time, "OVERRUN PROTECT" is displayed on the character display. When the engine speed goes down, the transmission automatically returns to the normal speed range control.

If engine stops

If the engine stops on a slope, apply the parking brake immediately, and lower the work equipment to the ground and stop the machine. Then put the directional lever in neutral position, and start the engine again.

Precautions when driving machine

When the machine travels at high speed for a long distance, the tires become extremely hot. This causes early wear of the tires, so it should be avoided as much as possible. If the machine must be driven for a long distance, take the following precautions.

- Follow the regulations related to this machine, and drive carefully.
- Before driving the machine, carry out the checks before starting.
- The most suitable tire pressure, travel speed, or tire type differ according to the condition of the travel surface. Contact your KOMATSU distributor or tire dealer for information.
- The guideline for appropriate tire inflation pressure and appropriate travel speed when traveling on a paved surface with the standard tires is as follows.

  Tire inflation pressure:

  - Front wheels: 0.44MPa {4.5kgf/cm², 63.9PSI}
  - Rear wheels: 0.39MPa {4.0kgf/cm², 56.8PSI}
  - Travel speed: 13km/h (8.1 MPH)
- Check the tire pressure before starting, when the tire is cool.
- For longer drives, breaks have to be taken at regular intervals, otherwise the tires will be damaged. Ask your tire dealer for drive and break times for the tire type on your machine.
- After travelling for one hour, stop for 30 minutes. Check the tires and other parts for damage; also check the oil and coolant levels.

Downloaded from www.Manualslib.com manuals search engine

https://truckmanualshub.com/

- Always travel with the bucket empty.
- Never put “calcium chloride“ or “dry ballast“ in the tires when traveling.

Downloaded from www.Manualslib.com manuals search engine

https://truckmanualshub.com/

3.3.13 Removal and installation of the bucket

WARNING

- When pins are knocked in with a hammer, pieces of metal may fly and cause serious injury.
- When carrying out this operation, always wear goggles, hard hat, gloves, and other protective equipment.
- When the bucket is removed, place it in a stable condition.
- If pins are hit with a strong force, there is a hazard that the pin may fly out and injure people in the surrounding area. Make sure that there is no one in the surrounding area before starting the operation.
- When removing the pins, do not stand behind the bucket. In addition, be extremely careful not to put your foot under the bucket while standing at the side for the work.
- When removing or inserting pins, be extremely careful not to get your fingers caught.
- Never insert your fingers into the pin holes when aligning the holes.

Remove or install the bucket in the following manner, if so required for the convenience of transportation.

Removing the bucket

1. Remove mounting bolt (1).

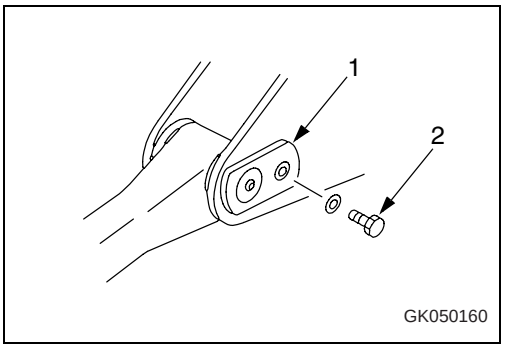

2. Sling the bucket link, then pull out bucket link pin (2).

   Secure the bucket link to the tilt lever with wires.

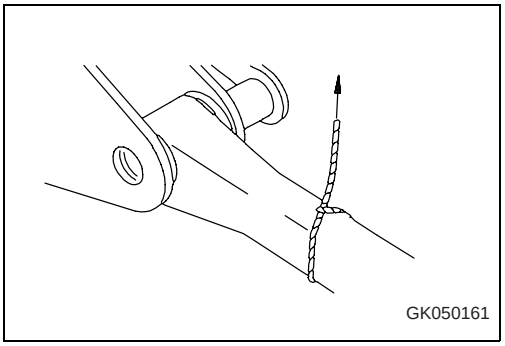

Downloaded from www.Manualslib.com manuals search engine

https://truckmanualshub.com/

3. Remove mounting bolt (3).

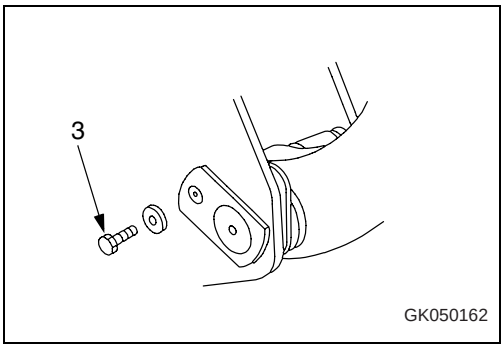

4. Pull out and remove bucket hinge pin (4) on both sides of the bucket.

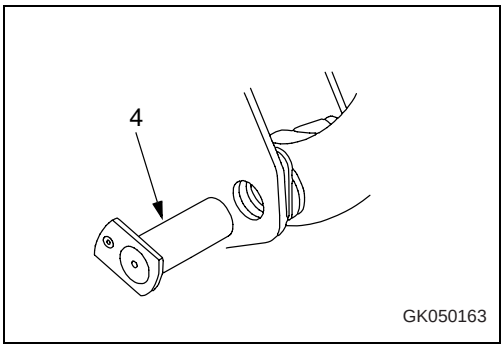

5. Disconnect the lift arm and bucket.

   (A) Lift arm

   (B) Bucket link

   (C) Bucket

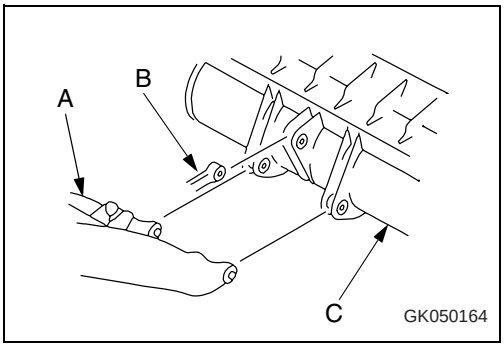

Installing the bucket

Before installing the bucket, remove all grease and sand or mud from around the pins, pin holes, and boss, then wash the parts. After washing, coat the pins and the inside of the pin holes with fresh grease.

1. Set cord ring (2) on top of lift arm boss (1) as shown in the diagram.

   After completion of assembly of the bucket and adjustment with shims in step 6, move the cord ring down to the groove.

2. Coat dust seal lip portion (3) with grease.

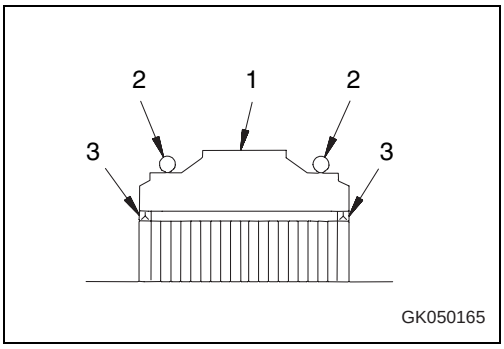

Downloaded from www.Manualslib.com manuals search engine

https://truckmanualshub.com/

3. Align the left and right bucket pin holes.

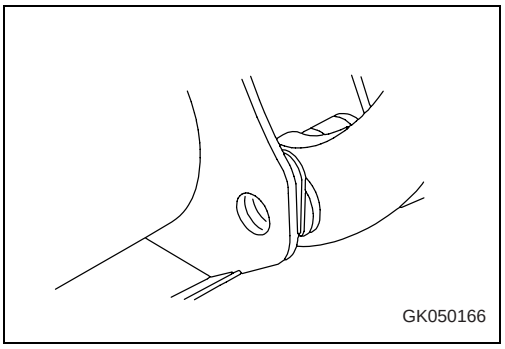

4. Select the number of shims so that clearances “A“ between bucket hinge boss (4) and lift arm boss (1) are less than 1.0 mm (0.0394 in).

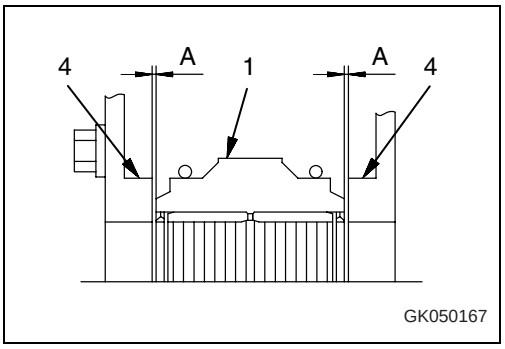

5. Assemble the shims selected in Step 4, align the pin holes, then insert bucket hinge pin (5).

   Coat with grease to prevent damage to the dust seal when inserting the bucket hinge pin.

   Use a bucket hinge pin that has a grease hole.

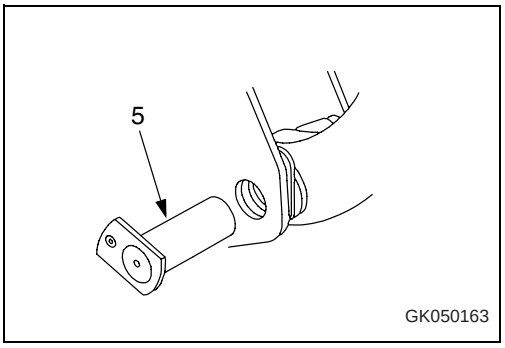

6. Install mounting bolt (6).

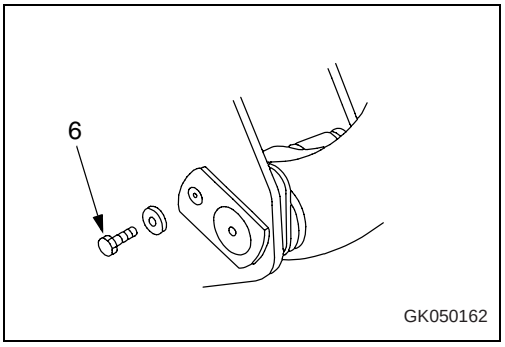

7. Coat the groove of cord ring (2) with grease.

8. Move cord ring (2) down to the groove.

NOTE

Coat the groove of the cord ring with grease before installing it. If the cord ring is installed while the groove is dry, force will be applied to the cord ring when the bucket is operated and this will cause damage to the cord ring.

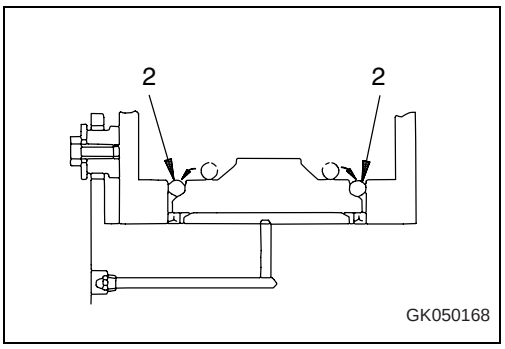

Downloaded from www.Manualslib.com manuals search engine

https://truckmanualshub.com/

9. Use the same procedure as in steps 1 to 7 to install the bucket link pin.

   Assemble a pin that has no grease hole at the bucket link.

10. Coat the bucket hinge pin and bucket link pin with grease.

    For details, see "Lubricating (4-61)".

    For details of removing and installing the bucket, please contact your KOMATSU distributor.

Downloaded from www.Manualslib.com manuals search engine

https://truckmanualshub.com/

3.3.14 Parking machine

WARNING

- Avoid stopping suddenly. Give yourself ample room when stopping.
- Do not park the machine on slopes.
  If the machine has to be parked on a slope, set it facing directly down the slope, then dig the bucket into the ground and put blocks under the tires to prevent the machine from moving.
- If the control lever is touched by accident, the work equipment or the machine may move suddenly, and this may lead to a serious accident. Before leaving the operator's compartment, always set the work equipment lock lever securely to the LOCK position.
- When the parking brake switch is turned ON, it is dangerous to release the brake pedal immediately. Always keep the brake pedal depressed until the parking brake pilot lamp lights up.

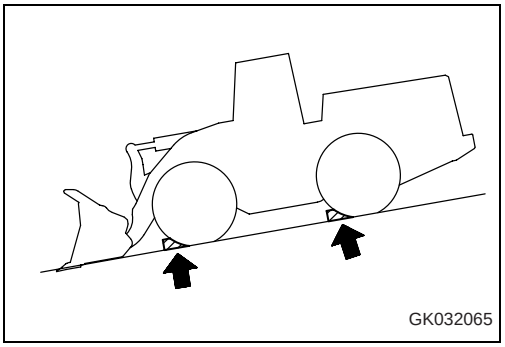
GK032065

NOTE

Never use the parking brake switch to brake the machine when traveling except in an emergency. Apply the parking brake only after the machine has stopped.

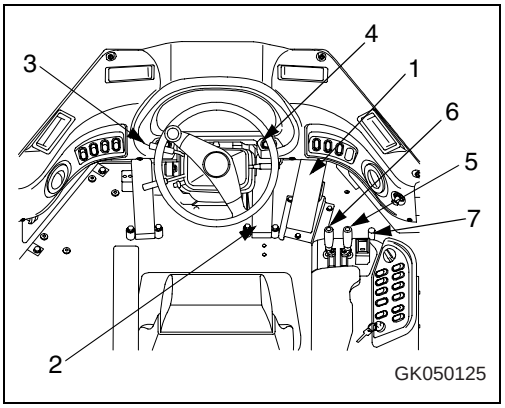

GK050125

1. Release accelerator pedal (1), then depress brake pedal (2) to stop the machine.

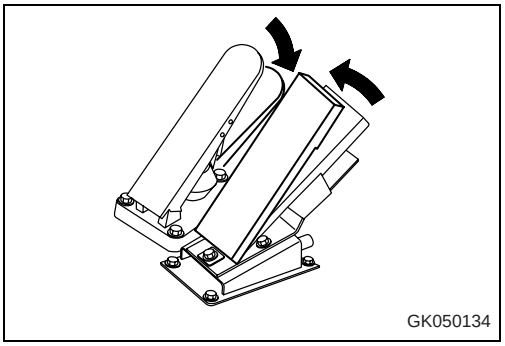
GK050134

2. Place directional lever (3) in N (neutral) position.

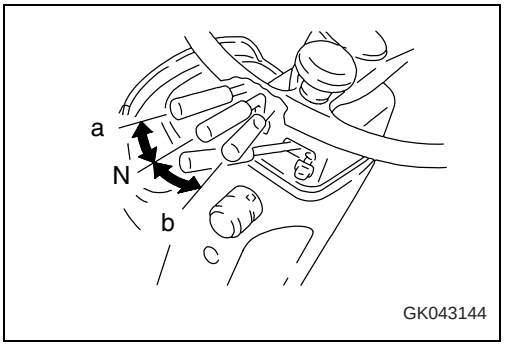

GK043144

Downloaded from www.Manualslib.com manuals search engine

https://truckmanualshub.com/

3. Set parking brake switch (4) to the ON position (A) to apply the parking brake.

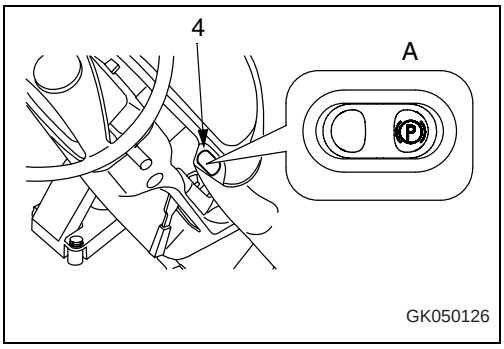

NOTE

When the parking brake is applied, the transmission is automatically returned to neutral.

4. Operate lift arm control lever (5) to lower the bucket to the ground.

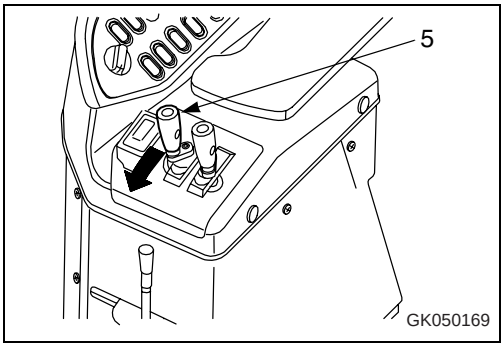

5. Check that the lift arm control lever (5) and bucket control lever (6) is at the HOLD position, then set the work equipment lock lever (7) to the LOCK position.

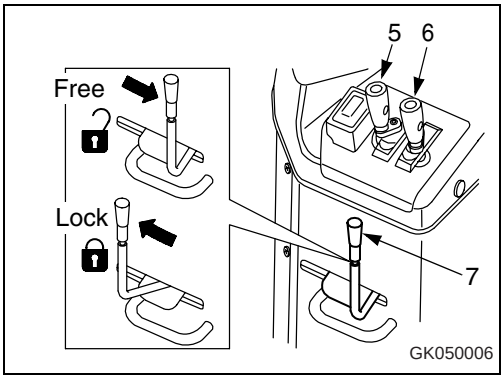

3.3.15 Checks after completion of operation

1. Walk around the machine and check the work equipment, body work, and undercarriage, and check also for oil and water leakage.
2. Fill the fuel tank.
3. Check the engine compartment for paper and debris. Clean out any paper and debris to avoid a fire hazard.
4. Remove any mud affixed to the undercarriage.

Downloaded from www.Manualslib.com manuals search engine

https://truckmanualshub.com/

3.3.16 Locking

Always lock the following parts.

(1) Fuel tank filler cap

(2) Engine side cover (2 places)

(3) Cab door (1 place)

(4) Engine hood (1 place) (Air cleaner inspection cover)

REMARK
The starting switch key is used also for locks (1), (2), (3) and (4).

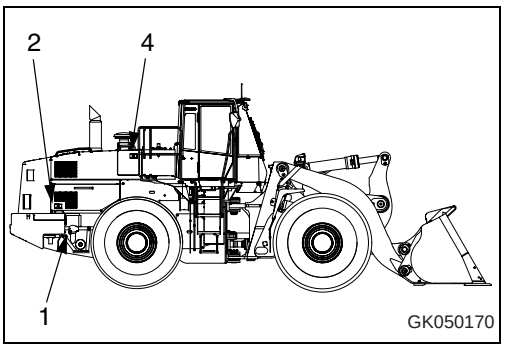

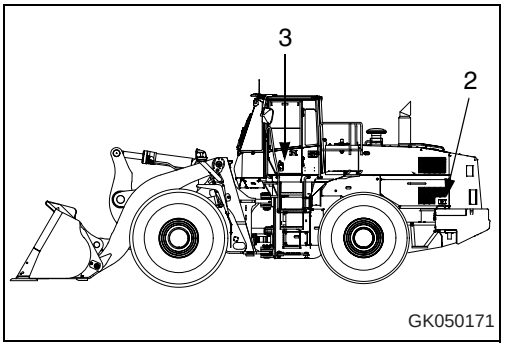

Downloaded from www.Manualslib.com manuals search engine

https://truckmanualshub.com/

3.3.17 Handling the tires

Precautions when handling tires

CAUTION

- If the following defects are found in tyres, they must be replaced for safety reasons.
- Bead wire is broken or bent, or the tyre is greatly deformed.
- Excessive wear and the carcass ply (excluding breaker) is exposed for more than 1/4 of the circumference.
- Damage to the carcass exceeds 1/3 of the tire width.
- Tyre layers are separated.
- Radial cracks reach the carcass.
- Deformation or damage which makes the tyre unsuitable for use.

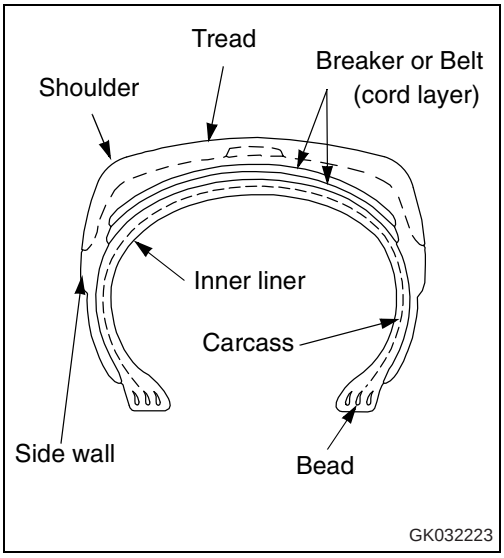

Please contact your KOMATSU distributor when replacing the tires. It is dangerous to jack up the machine without taking due care.

Tire pressure

Measure the tire pressure before starting operations, when the tires are cool.

If the tire inflation pressure is too low, there will be overload; if it is too high, it will cause tire cuts and shock burst. To prevent these problems, adjust the tire inflation pressure according to the following table.

Deflection ratio = H - h / H x 100

As a guideline that can be checked visibly, the deflection ratio of the front tire (deflection/free height) is as follows.

When carrying normal load (lift arm horizontal):
Approx. 15 to 25 %

When digging (rear wheels off ground):
Approx. 25 to 35 %

When checking the tire inflation pressure, check also for small scratches or peeling of the tire, for nails or pieces of metal which may cause punctures, and for any abnormal wear.

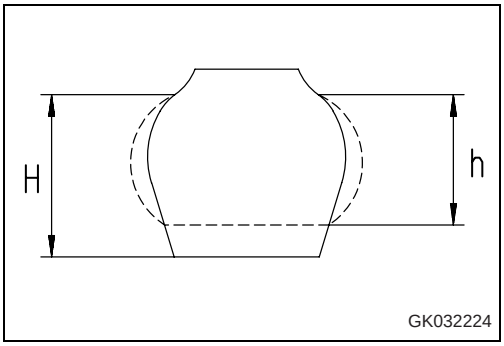

Downloaded from www.Manualslib.com manuals search engine

https://truckmanualshub.com/

Clearing fallen stones and rocks from the operating area and maintaining the surface will extend the tire life and give improved economy.

- For operations on normal road surfaces, rock digging operations: High end of range in air pressure chart
- Stockpile operations on soft ground: Average pressure in air pressure chart
- Operations on sand (operations not using much digging force): Low end of range in air pressure chart

If the deflection of the tire is excessive, raise the inflation pressure within the limits given in the table to give a suitable deflection (see deflection ratio).

Tire size (Pattern)	H Free Height (mm)	Inflation pressure MPa {kgf/cm², PSI}				
		Soft ground (sandy ground)		Normal road		When shipped from factory
		Stockpile	Digging	Stockpile	Digging	
29.5-25-22PR (L3 Rock) (Standard)	529	Front tire: 0.39 {4.0, 56.8} Rear tire: 0.34 {3.5, 49.7}	Front tire:0.44 {4.5, 63.9} Rear tire: 0.39 {4.0, 56.8}	Front tire: 0.44 {4.5, 63.9} Rear tire: 0.39 {4.0, 56.8}	Front tire: 0.44 {4.5, 63.9} Rear tire: 0.39 {4.0, 56.8}	Front tire: 0.44 {4.5, 63.9} Rear tire: 0.39 {4.0, 56.8}

The specified air pressure values might deviate from the standard values under special conditions. If this is the case, please contact an authorised KOMATSU dealer.

Stockpile operations mean the loading of sand and other loose materials.

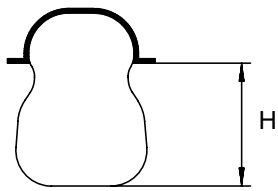

GK043173

Precautions for using load and carry method

When traveling continuously with load and carry operations, choose the correct tires to match the operating conditions, or choose the operating conditions to match the tires. If this is not done, the tires will be damaged, so contact your KOMATSU distributor or tire dealer when selecting tires.

Downloaded from www.Manualslib.com manuals search engine

https://truckmanualshub.com/

3.4 Transportation

When transporting the machine, observe all related laws and regulations, and be careful to assure safety.

3.4.1 Transportation procedure

As a basic rule, always transport the machine on a trailer.

When selecting the trailer, see the weights and dimensions given in Section "Technical data (5-2)".

Note that the specifications for the weights and dimensions for transportation differ according to the type of tires and type of bucket.

3.4.2 Loading, unloading work with trailers

WARNING

- When loading or unloading the machine, run the engine at low speed, travel at low speed, and operate slowly.
- When loading or unloading the machine, stop the trailer on firm level ground.
  In addition, keep well away from the road shoulder.
- Use ramps of ample width, length, thickness, and strength, and install them securely at an angle of less than 15°.
  When using an embankment, compact the fill soil thoroughly and make sure that the slope face does not collapse.
- Remove the mud stuck to the undercarriage to prevent the machine from slipping to the side on the ramps.
  In addition, remove any water, snow, ice, grease, or oil from the ramps.
- Never change direction on the ramps. There is danger that the machine may tip over.
  If it is necessary to change direction, return to the ground surface or the trailer platform, correct the direction, and start again.
- The position of the center of gravity of the machine will change suddenly at the connection of the ramp and trailer, and there is danger of the machine losing its balance. Always drive slowly over this point.

When loading or unloading, always use ramps or a platform and carry out the operation as follows.

Downloaded from www.Manualslib.com manuals search engine

https://truckmanualshub.com/

Loading

1. Load and unload on firm level ground only.

   Maintain a safe distance from the edge of a road.

2. Apply the brakes on the trailer securely and insert blocks under the tires to ensure that the trailer does not move.

   Then fix the ramps in line with the centers of the trailer and the machine.

   Be sure that the two sides are at the same height as one another.

   Make the angle of the ramps a maximum of 15º.

   Set the distance between the ramps to match the center of the tires.

   If the ramp sags appreciably, reinforce it with blocks, etc.

3. Determine the direction of the ramp, then slowly load the machine.

4. Load the machine correctly in the specified position on the trailer.

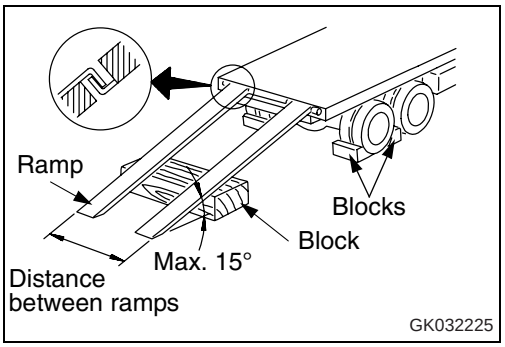

Securing machine

DANGER

If the machine is insufficiently secured, it may start to skid or fall off the transport vehicle and cause severe accidents! Always secure the machine with ropes and wheel chocks or wedges to avoid falling down and skidding.

Load the machine on to a trailer as follows.

1. Lower the work equipment slowly.

2. Check that the work equipment control lever is at the HOLD position, then set the work equipment lock lever to the LOCK position.

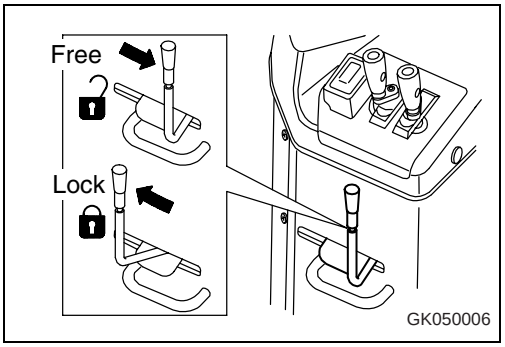

Downloaded from www.Manualslib.com manuals search engine

https://truckmanualshub.com/

3. Set the parking brake switch to ON position (A) to apply the parking brake securely.
4. Turn the starting switch to the OFF position to stop the engine, and pull out the starting switch key.

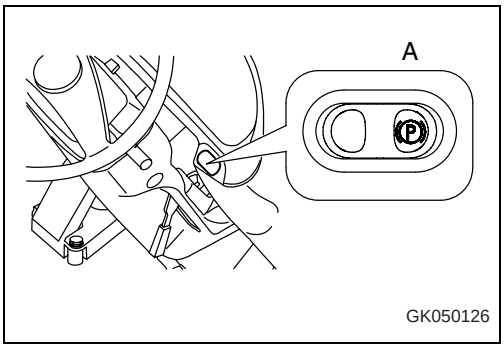

5. Lock front frame and rear frame with frame lock bar.

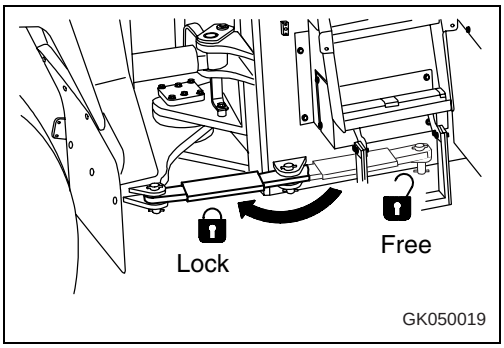

CAUTION

Incorrectly attached ropes may damage the machine! Only fasten the eye hooks of the stay ropes at the marked attachment points.

6. Put blocks in front and behind the wheels, and secure the machine with chains or wire rope to prevent the machine from moving during transportation.

   In particular, attach the machine securely to prevent it from slipping sideways.

   To avoid damage to the machine, only fasten the eye hooks of the stay ropes at the marked attachment points on the machine as shown in the diagram on the right.
7. Always retract the car radio antenna fully.

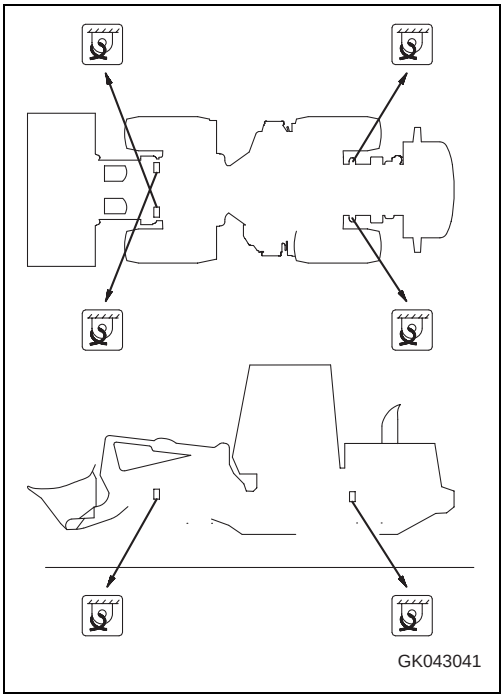

Downloaded from www.Manualslib.com manuals search engine

https://truckmanualshub.com/

Unloading

1. Load and unload on firm level ground only. Maintain a safe distance from the edge of a road.

2. Apply the brakes on the trailer securely and insert blocks under the tires to ensure that the trailer does not move.

   Then fix the ramps in line with the centers of the trailer and the machine.

   Be sure that the two sides are at the same height as one another.

   Make the angle of the ramps a maximum of 15º.

   Set the distance between the ramps to match the center of the tires.

   If the ramp sags appreciably, reinforce it with blocks, etc.

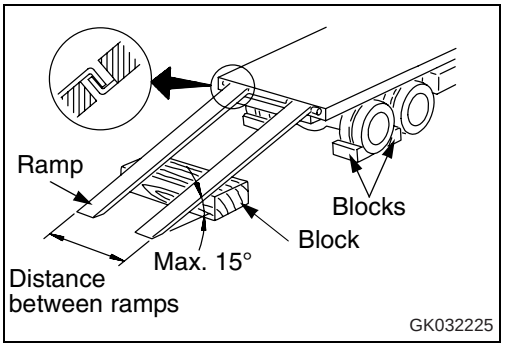

3. Remove the chains and wire ropes fastening the machine.

4. Set the frame lock bar to FREE position.

5. Start the engine.

   Warm the engine up fully.

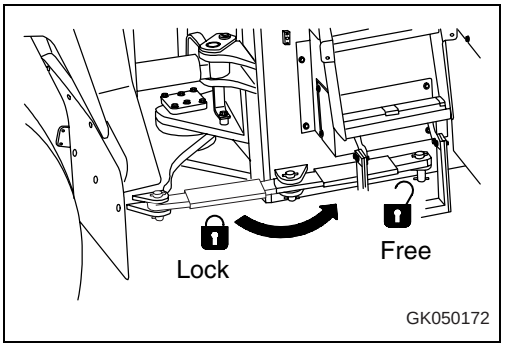

6. Check that the work equipment control lever is at the HOLD position, then set the work equipment lock lever to the FREE position.

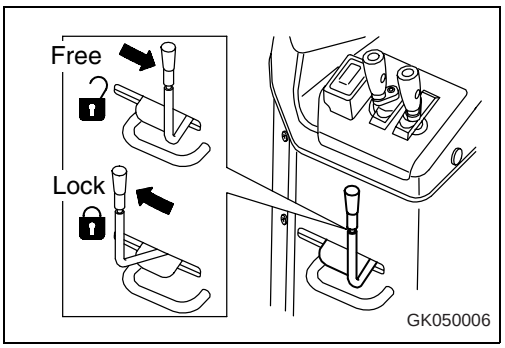

7. Depress the right brake pedal, then set the parking brake switch to OFF position (B) to release the parking brake.

   Keep the right brake pedal depressed.

8. Determine the direction of the ramps, then drive the machine slowly down the ramps to unload the machine.

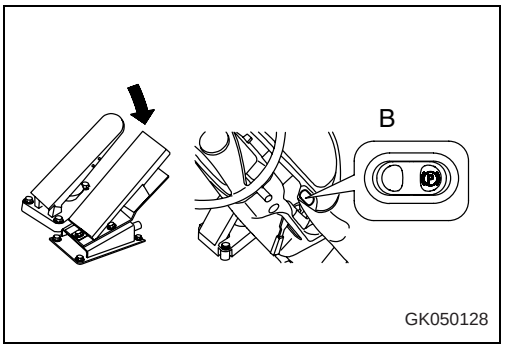

Downloaded from www.Manualslib.com manuals search engine

https://truckmanualshub.com/

3.4.3 Lifting machine

WARNING

- The person using the crane to carry out lifting operations must be a qualified crane operator.
- Never carry out lifting operations if any person is on the machine beeing lifted.
- Never raise the machine with any worker on it.
- Keep the machine horizontal when lifting it.
- When carrying out lifting operations, do as follows to prevent the machine from moving unexpectedly.
  Set the parking brake switch to the ON position.
  Set the work equipment lock lever to the LOCK position.
  Set the frame lock bar to the LOCK position.
- Never enter the area under or around a raised machine.
- There is a danger of the machine losing its balance.
  Use the procedure below to set the machine in the proper posture and use the lifting equipment when lifting the machine.

CAUTION

Incorrectly attached ropes may damage the machine! Only fasten lifting hooks at the marked attachment points.
When the machine is raised, check that there is no oil leakage from the hydraulic circuits.
When carrying out the lifting operation, please contact your KOMATSU distributor.

NOTE

The lifting procedure applies to machines with standard specifications.
The method of lifting differs according to the attachments and options actually installed. In such cases, please contact your KOMATSU distributor for information.

For details of the weight, see "Technical data (5-2)".

Downloaded from www.Manualslib.com manuals search engine

https://truckmanualshub.com/

Location of lifting position mark

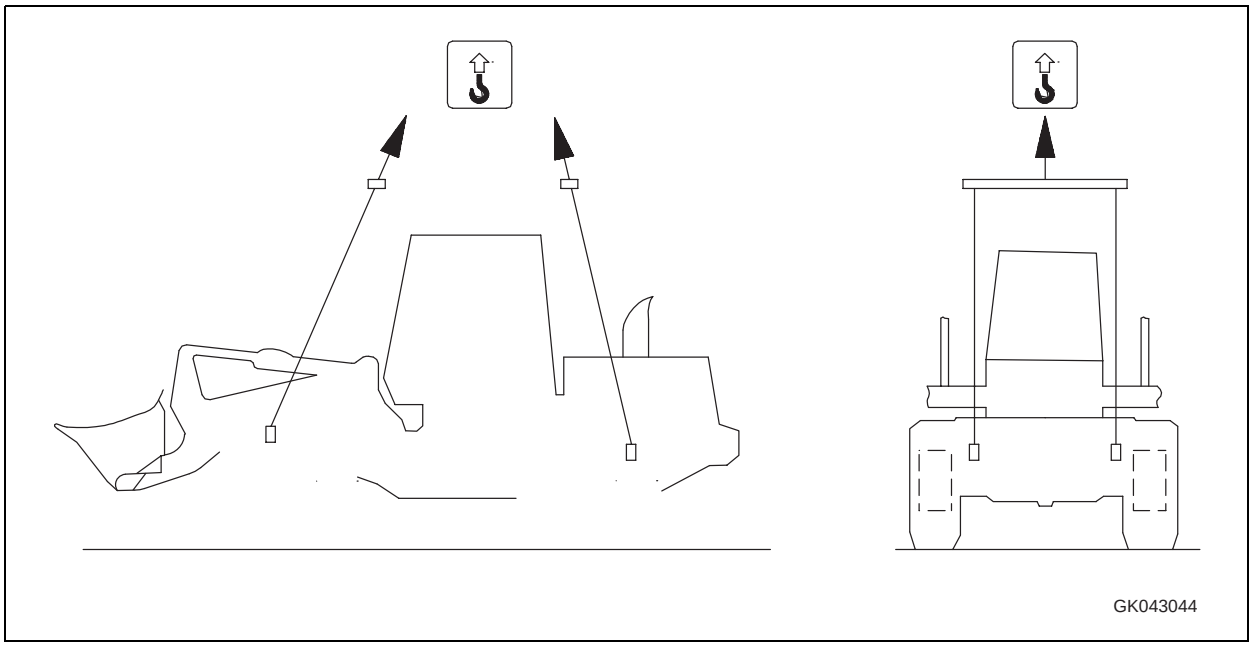

Lifting hooks (A) are located at 4 places on the machine as shown in the diagram on the right.

Use only these 4 places when lifting; do not use any other places. There is a serious danger that the machine will lose its balance.

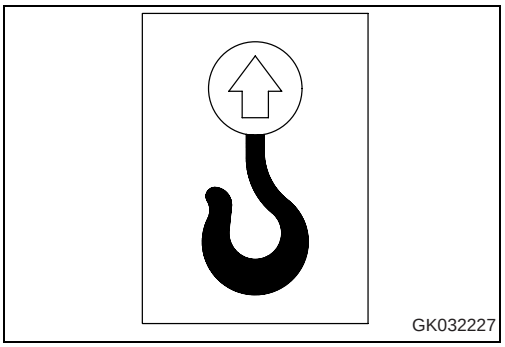

Downloaded from www.Manualslib.com manuals search engine

https://truckmanualshub.com/

Lifting procedure

CAUTION

When the machine is raised, check that there is no oil leakage from the hydraulic circuits.
When carrying out the lifting operation, please contact your KOMATSU distributor.

Lifting work can be carried out only for machines with lifting marks. Before starting the lifting operation, stop the machine in a horizontal place and do as follows.

1. Start the engine, make sure that the machine is horizontal, then set the work equipment to the travel posture.

   For details, see "Preparations for moving the machine (3-113)".

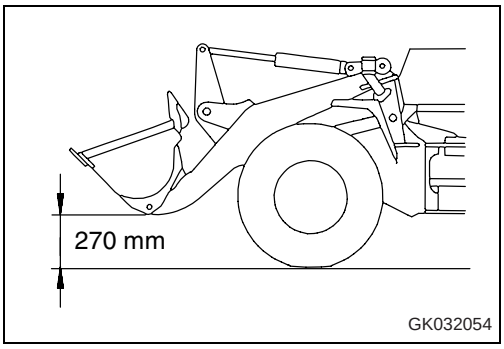

2. Check that the work equipment control lever is at the HOLD position, then set the work equipment lock lever to the LOCK position.

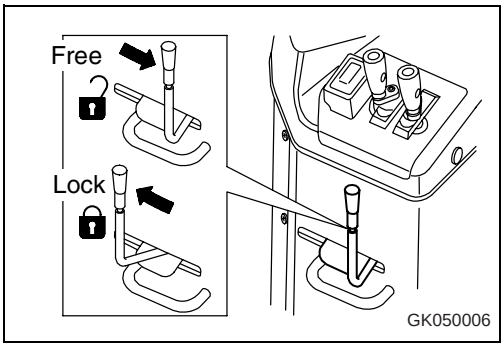

3. Stop the engine, check that the area around the operator's compartment is safe, then lock with the safety bar so that the front frame and rear frame do not articulate.

4. Use wire ropes and slings that match the weight of the machine, and wind the wire rope and fix it to the lifting points as shown in the figure.

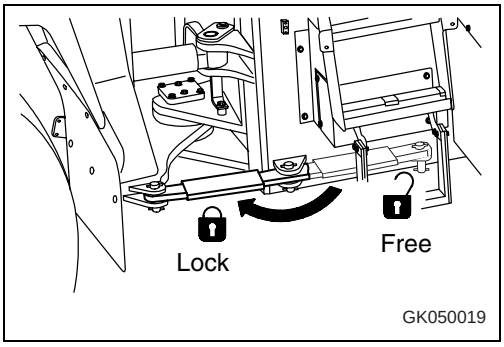

NOTE

- *Use protectors, etc. so that the wire ropes will not be broken at sharp edges or narrow places.*
- *Use spreaders and bars having sufficient width so that they will not touch the machine.*
- *For machines equipped with a rear full fender, remove the rear full fender before carrying out the operation.*

5. After setting the wire ropes, lift up the machine and stop at 100 to 200 mm (3.9 to 7.9 in) above the ground, and check that the wire ropes are not slack and the machine is level, then lift up slowly.

Downloaded from www.Manualslib.com manuals search engine

https://truckmanualshub.com/

3.5 Cold weather operation

3.5.1 Precautions for low temperature

If the temperature becomes low, it becomes difficult to start the engine, and the coolant may freeze, so do as follows.

Fuel and lubricants

Change to fuel and oil with low viscosity for all components. For details of the specified visicosity, see "Fuel, coolant and lubricants (4-13)".

Coolant

WARNING

- Antifreeze is toxic. Be careful not to get it into your eyes or on your skin. If it should get into your eyes or on your skin, wash it off with large amount of fresh water and see a doctor at once.
- When changing the coolant or when handling coolant containing antifreeze that has been drained when repairing the radiator, please contact your KOMATSU distributor. Antifreeze is toxic, so do not let it flow into drainage ditches or spray it on to the ground surface.
- Antifreeze is flammable, so do not bring any flame close. Do not smoke when handling antifreeze.

NOTE

- *Use KOMATSU Supercoolant (AF-NAC) wherever available, or use permanent type antifreeze coolant.*
- *Never use methanol, ethanol or propanol based antifreeze.*
- *Avoid using any leak-preventing agent, regardless if it is sold separately or in antifreeze.*
- *Do not mix one antifreeze with a different brand.*
- *When using KOMATSU Supercoolant (AF-NAC), there is no need to use a corrosion resistor.*

  For details, see "Clean inside of cooling system (4-31)".

For details of the antifreeze mixture when changing the coolant, see "Clean inside of cooling system (4-31)".

Downloaded from www.Manualslib.com manuals search engine

https://truckmanualshub.com/

Battery

WARNING

- The battery generates flammable gas, so do not bring fire or sparks near the battery.
- Battery electrolyte is dangerous. If it gets in your eyes or on your skin, wash it off with a large amount of water and consult a doctor.
- Battery electrolyte dissolves paint. If it gets on to the bodywork, wash it off immediately with water.
- If the battery electrolyte is frozen, do not charge the battery or start the engine with a different power source. There is danger that the battery may explode.
- Battery electrolyte is toxic, so do not let it flow into drainage ditches or spray it on to the ground surface.

When the ambient temperature drops, the capacity of the battery will also drop. If the battery charge ratio is low, the battery electrolyte may freeze. Maintain the battery charge as close as possible to 100%, and insulate it against cold temperature so that the machine can be started easily the next morning.

REMARK

Measure the specific gravity and calculate the rate of charge from the following conversion table.

Charging Rate(%)	Temperature (°C)			
	20	0	-10	-20
100	1.28	1.29	1.30	1.31
90	1.26	1.27	1.28	1.29
80	1.24	1.25	1.26	1.27
75	1.23	1.24	1.25	1.26

- As the battery capacity drops markedly in low temperatures, cover the battery or remove it from the machine, keep it in a warm place, and install it again the next morning.
- If the electrolyte level is low, add distilled water in the morning before beginning work. Do not add the water after the day's work to prevent fluid in the battery from freezing in the night.

Downloaded from www.Manualslib.com manuals search engine

https://truckmanualshub.com/

3.5.2 Precautions after completion of work

To prevent mud, water, or the undercarriage from freezing and making it impossible for the machine to move on the following morning, always observe the following precautions.

- Remove all the mud and water from the machine body. In particular, wipe the hydraulic cylinder rod clean to prevent damage to the seal caused by mud or dirt on the rod surface getting inside the seal together with drops of water.
- Park the machine on hard, dry ground.

  If this is impossible, park the machine on wooden boards.

  The boards help protect the wheels from being frozen in soil and the machine can start next morning.
- Open the drain valve and drain any water collected in the fuel system to prevent it from freezing.
- Fill the fuel tank to the full in order to prevent moisture from forming dew in the tank room, as the ambient temperature goes down.

3.5.3 After cold weather

When season changes and the weather becomes warmer, do as follows.

- Replace the fuel and oil for all parts with oil of the viscosity specified.

  For details, see "Fuel, coolant and lubricants (4-13)".

Downloaded from www.Manualslib.com manuals search engine

https://truckmanualshub.com/

3.5.4 Warming-up operation for steering hydraulic circuit in cold weather

WARNING

If the steering wheel is operated and stopped while the oil temperature is low, there may be a time lag before the machine stops turning.
In this case, use the safety bar to ensure safety, and perform the warm-up operation in a wide place.
Do not load up the hydraulic oil in the circuit continuously for more than 5 seconds.

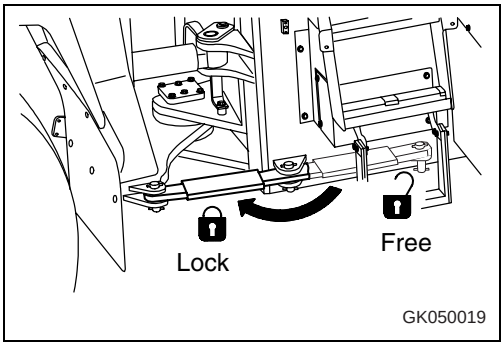

When the temperature is low, do not start the operation of the machine immediately after starting the engine.

Warming up steering hydraulic circuit

Slowly operate the steering wheel to the left and right to warm up the oil in the steering valve. (Repeat this operation for about 10 minutes to warm up the oil.)

NOTE

Turn the steering wheel a little and stop in that position. Confirm that machine turns by an angle equivalent to the amount that the steering wheel is turned.

Recommended oil

Select the oil from the table below according to the ambient temperature.

Reservoir	Fluid Type	Ambient Temperature									
		-22	-4	14	32	50	68	86	104	122	°F
		-30	-20	-10	0	10	20	30	40	50	°C
Hydraulic system	Engine oil	TO10									
		SAE 5W-20CD									

If SAE5W-20CD is used in the cold season, replace it with TO10 oil when the cold season finishes.

Downloaded from www.Manualslib.com manuals search engine

https://truckmanualshub.com/

3.6 Long-term storage

3.6.1 Before storage

When keeping in long-term storage (more than one month), store as follows.

- Clean and wash all parts, then store the machine indoors. If the machine has to be stored outdoors, select level ground and cover the machine with a sheet.
- Fill the fuel tank to prevent moisture from accumulating.
- Lubricate and change the oil before storage.
- Coat the exposed portion of the hydraulic cylinder piston rod with grease.
- Disconnect the negative terminals of the battery and cover it or remove it from the machine and store it separately.
- Lock each control lever with the lock lever.
- To prevent corrosion, be sure to fill the cooling system with Supercoolant (AF-NAC) or permanent type antifreeze (density between 30% and 68%).

3.6.2 During storage

WARNING

If it is unavoidably necessary to carry out the rust-preventive operation while the machine is indoors, open the doors and windows to improve ventilation and prevent gas poisoning.

- During storage, always operate the machine once a month so that a new film of oil will be coated over movable parts and component surfaces. At the same time, also charge the battery.
- When operating the work equipment, wipe off all the grease from the hydraulic cylinder rod.
- If the machine is equipped with an air conditioner, operate it for 3 to 5 minutes once a month to lubricate each portion of its compressor. Be sure to idle the engine at low speed for this purpose. Also, check the quantity of refrigerant twice a year.

Downloaded from www.Manualslib.com manuals search engine

https://truckmanualshub.com/

3.6.3 After storage

NOTE

If the machine is to be used when the monthly rust prevention operation has not been carried out, please contact your KOMATSU distributor.

When using the machine after long-term storage, do as follows before using it.

- Wipe off the grease from the hydraulic cylinder rods.
- Add oil and grease to all lubrication points.
- When a machine is stored for a long period, moisture in the air will get into the oil. Check the oil for presence of water before and after starting the engine. If there is water in the oil, change the oil.

Downloaded from www.Manualslib.com manuals search engine

https://truckmanualshub.com/

3.7 Troubleshooting

3.7.1 When machine runs out of fuel

WARNING

When starting the engine again, check carefully that the area around the engine is safe before cranking the engine.

When starting the engine after running out of fuel, fill with fuel and bleed the air from the fuel system before starting.

Always watch the fuel level and be careful not to run out of fuel.

If the engine has stopped because of lack of fuel, it is necessary to use the priming pump to bleed the air completely from the fuel circuit.

Procedure for bleeding air

WARNING

When opening air bleed plug (2) at the top of the fuel filter head or the supply pump air bleeder, there is still remaining pressure, so fuel may spurt out. Loosen carefully before opening.

1. Loosen plug (1) at the top of the fuel filter head, then remove other plug (2).

NOTE

Do not loosen the plug of the fuel pre-filter head. This is at the suction end, so if it is loosened, it will be impossible to bleed the air.

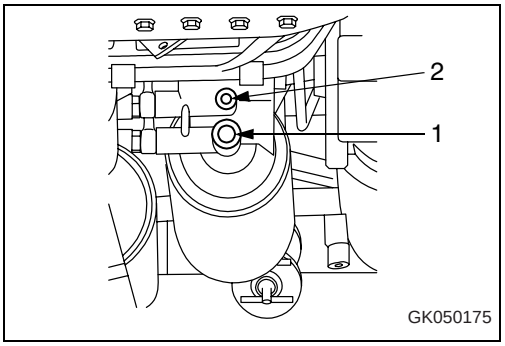

2. Loosen butterfly nut (3) holding the lever of the priming pump.
3. Operate the lever of the priming pump to prime with fuel. Fuel will come out from plug (2) at the top of the fuel filter head. Continue priming slowly until no more bubbles come out with the fuel. Fit sealing tape to plug (2), then tighten it.
4. Continue priming a further 1 - 2 times. Check that fuel comes out from plug (1), then tighten plug (1).

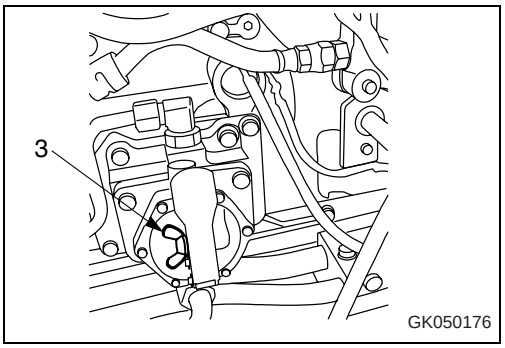

Downloaded from www.Manualslib.com manuals search engine

https://truckmanualshub.com/

5. Loosen air bleeder (4) of the supply pump and the operator the priming pump to prime with fuel.

   Fuel will overflow from air bleeder (4). Continue priming until no more bubbles come out with the fuel, then tighten air bleeder (4).

   Tightening torque:
   4.9 to 6.9N·m {0.5 to 0.7kgf·m, 3.6 to 5.1 lbft}

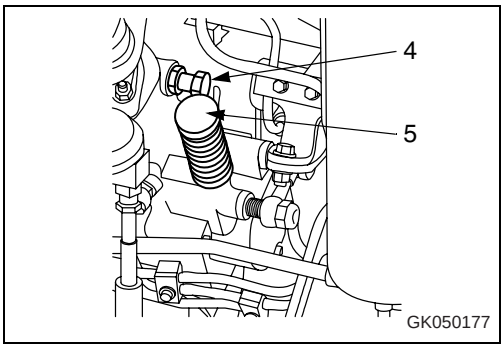

NOTE

Do not use feed pump (5) supplied with the supply pump.

6. Carry out priming a further approx. 20 times, then securely tighten wing nut (3) holding the lever of the priming pump.

   Tightening torque:
   11.8N·m {1.2kg·m, 8.7lbft}

7. Turn the starting switch to the START position. The engine will start.

Downloaded from www.Manualslib.com manuals search engine

https://truckmanualshub.com/

3.7.2 Towing the machine

WARNING

- Serious injury or death could result if there is any mistake in the selection of wire rope or method of towing a disabled machine.
- Check that the wire rope is of ample strength for the weight of the machine being towed.
- Never use a wire rope which has cut strands (A), reduced diameter (B), or kinks (C). There is danger that the rope may break during the towing operation.
- Always wear leather gloves when handling wire rope.
- Never tow a machine on a slope.
- During the towing operation, never stand between the towing machine and the machine being towed.
- Move the machine slowly and be sure not to apply any sudden load on the wire rope.
- If there is a failure in the brake line, the brakes cannot be used, so be extremely careful when towing.

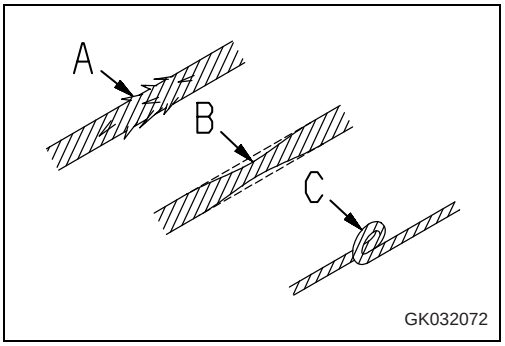

NOTE

- *Towing is for moving the machine to a place where inspection and maintenance can be carried out, and not for moving it long distances.*
  The machine must not be towed for long distances.
- *For details of the permissible towing load for this machine, see "Technical data (5-2)".*
- *For details of the procedure for towing a machine when it has broken down, please contact your KOMATSU distributor.*

This machine must not be towed except in emergencies. When towing the machine, take the following precautions.

- Before releasing the brakes, put blocks under the wheels to prevent the machine from moving. If the wheels are not blocked, the machine may suddenly move.
- When towing a machine, tow it at a low speed of less than 2 km/h, and for a distance of a few meters to a place where repairs can be carried out. The machine should be towed only in emergencies. If the machine must be moved long distances, use a transporter.
- If it is impossible to operate the steering and brakes of the machine being towed, do not let anyone ride on the machine.

Downloaded from www.Manualslib.com manuals search engine

https://truckmanualshub.com/

- Check that the tow rope or bar is of ample strength for the weight of the machine being towed. If the machine being towed must travel through mud or up hills, use a tow rope or bar of a strength of at least 1.5 times the weight of the machine being towed.
- Keep the angle of the tow rope as small as possible. Keep the angle between the center lines of the two machines to within 30 degrees.
- If the machine is moved suddenly, the tow rope or bar will be subjected to an excessive load, and it may break. Start the machine gradually and travel at a constant speed.
- The towing machine should normally be of the same class as the machine being towed. Check that the towing machine has ample braking power, weight, and rimpull to allow it to control both machines on slopes or on the tow road.
- When towing a machine downhill, use a larger machine for towing to provide ample rimpull and braking power, or connect another machine to the rear of the machine being towed. This way it is possible to prevent the machine from losing control and turning over.
- Towing may be carried out under various differing conditions, so it is impossible to determine beforehand the requirements for towing. Towing on flat horizontal roads will require the minimum rimpull, while towing on slopes or on uneven road surfaces will require the maximum rimpull.
- Connect a wire rope to the part indicated with the arrow in the diagram at right.

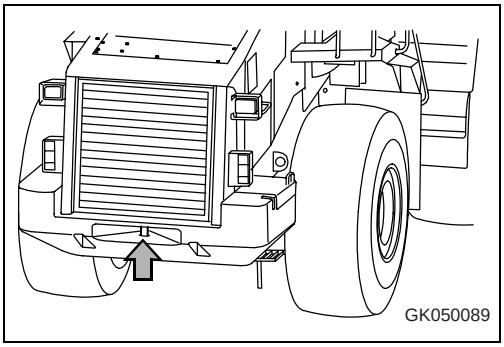

When engine can be used

- If the transmission and steering wheel can be operated, and the engine is running, it is possible to tow the machine out of mud or to move it for a short distance to the edge of the road.
- The operator should sit on the machine being towed and operate the steering in the direction that the machine is towed.

Downloaded from www.Manualslib.com manuals search engine

https://truckmanualshub.com/

When engine cannot be used

When towing a machine with the engine stopped, use the following procedure.

1. The transfer oil does not lubricate the system, so remove the front and rear drive shafts. If necessary, block the tires to prevent the machine from moving.

2. The steering cannot be operated, so remove the steering cylinder.

   Even if the brakes are in good condition, the brakes can only be used a limited number of times. There is no change in the operating force for the brake pedal, but the braking force is reduced each time the pedal is depressed.

3. Connect the towing equipment securely. When carrying out towing operations, use two machines of at least the same class as the machine being towed. Connect one machine each to the front and rear of the machine being towed, then remove the blocks from the tires and tow the machine.

4. Parking brake

   The parking brake cannont be turned OFF. To release the parking brake, do as follows.

Releasing parking brake

Please ask your KOMATSU distributor to release the parking brake.

WARNING

- When releasing the parking brake, stop the machine on level ground and check that the surrounding area is safe. If it is necessary to release the brake on a slope in an emergency, block the tires before starting the operation.

- If the parking brake is released, the brake cannot be used, so check the safety carefully when moving the machine.

If the engine will not run for some reason, use the following methods to release the parking brake and tow the machine.

Downloaded from www.Manualslib.com manuals search engine

https://truckmanualshub.com/

Method of releasing brake by using emergency parking brake cancel switch

CAUTION

When the parking brake switch is at the OFF position and the emergency parking brake release valve is opened, the parking brake is released immediately.
In this condition, even if you feel danger and try to stop the machine, the parking brake will not be applied immediately even if you close the emergency parking brake release valve.

If the pressure in the brake accumulator is high, do as follows.

1. Turn starting switch to the ON position (B).

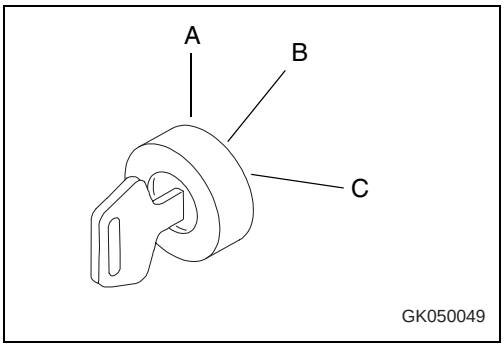

2. Set the emergency parking brake switch to the “RELEASE“ position.

   When doing this, check that the warning lamp for the parking brake goes out. When the switch is turned to the “RELEASE“ position, the alarm buzzer sounds continuously.

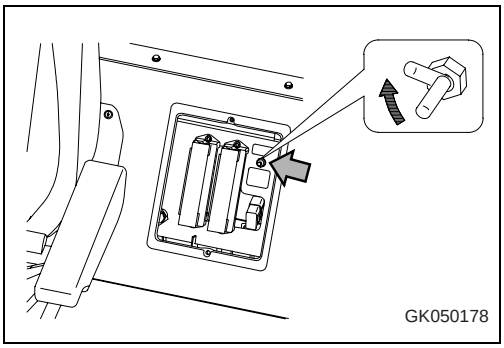

REMARK

Normally, keep this switch at the “NORMAL“ position.
If the brake accumulator pressure is low, the parking brake warning lamp may not go out and the alarm buzzer may make a continuous high-pitched sound.
If this happens, release the brake. For details, see "Method of releasing mechanically (3-178)".

Downloaded from www.Manualslib.com manuals search engine

https://truckmanualshub.com/

Method of releasing mechanically

1. Remove plugs (1) and (2) at the rear of the transmission case.
2. Remove bolts (3) (2 out of 12) at portion (A) installing the parking brake chamber cover.
3. Screw bolts (3) into the holes from which plugs (1) and (2) were removed and tighten uniformly until they stop.

   This releases the parking brake.

   (B) Therad hole M12 for releasing

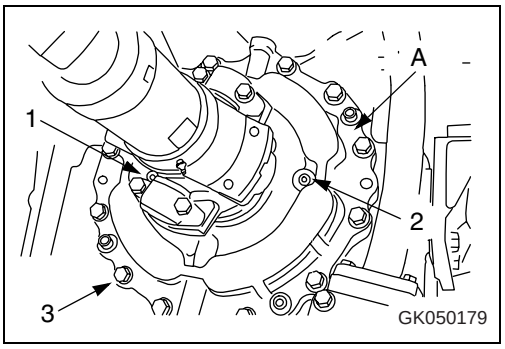

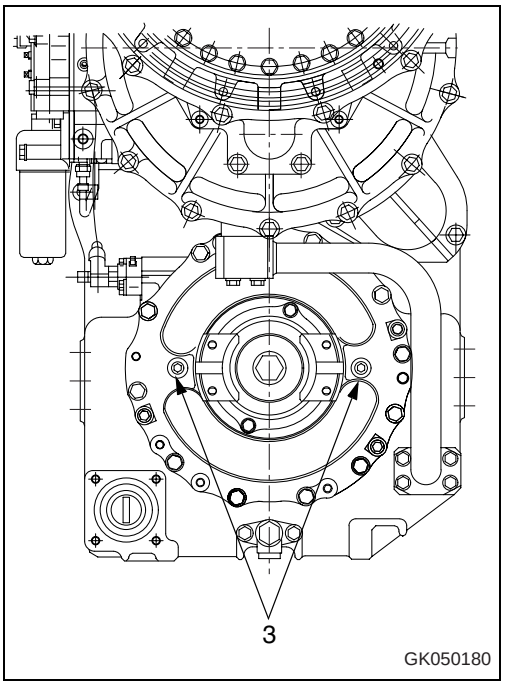

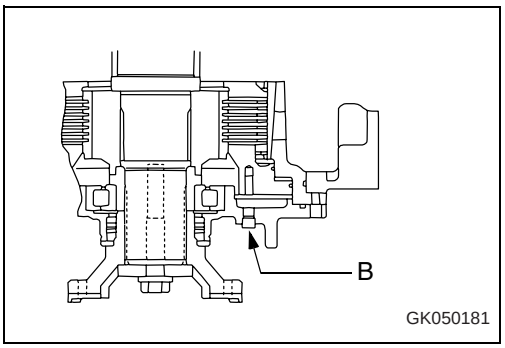

Emergency travel operation

The normal gear shifting operation is carried out by electric signals. If there should be a failure in the electrical system and the machine does not move, please contact your KOMATSU distributor to have the machine moved.

NOTE

Always request your KOMATSU distributor to carry out the emergency travel operation.

Downloaded from www.Manualslib.com manuals search engine

https://truckmanualshub.com/

3.7.3 If battery is discharged

WARNING

- It is dangerous to charge a battery when mounted on a machine. Make sure that it is dismounted before charging.
- When checking or handling the battery, stop the engine and turn the starting switch key to the OFF position.
- The battery generates hydrogen gas, so there is a hazard of explosion. Do not bring lighted cigarettes near the battery, or do anything that will cause sparks.
- Battery electrolyte is dilute sulphuric acid, and it will attack your clothes and skin. If it gets on your clothes or on your skin, immediately wash it off with a large amount of water. If it gets in your eyes, wash it out with fresh water and consult a doctor.
- When handling batteries, always wear protective goggles and rubber gloves.
- When removing the battery, first disconnect the cable from the ground (normally the negative (-) terminal). When installing, install the positive (+) terminal first.
  If a tool touches the positive terminal and the chassis, there is danger that it will cause a spark, so be extremely careful.
- If the terminals are loose, there is danger that the defective contact may generate sparks that will cause an explosion.
- When removing or installing the terminals, check which is the positive (+) terminal and which is the negative (-) terminal.

When removing, disconnect the cable from the ground (-) terminal first.

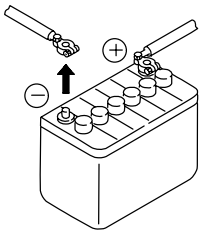

When installing, connect the cable to the positive (+) terminal first.

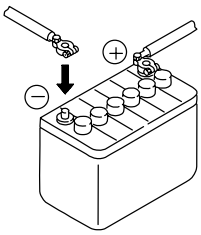

GK032229

Removal and installation of battery

1. Before removing battery, remove the ground cable (normally connected to the negetive (-) terminal). If any tool touches between the positive terminal and the chassis, there is danger of sparks being generated. Loosen the nuts of terminal and remove the wires from the battery.
2. After installing the battery, fix it with the battery fitting securely.

   Tightening torque: 2 to 2.9 N·m
   (0.2 to 0.3 kgf·m, 1.4 to 2.2 lbft)
3. When installing the battery, connect the ground cable last.

   Insert the hole of the terminal on the battery and tighten the nut.

   Tightening torque: 5.9 to 9.8 N·m
   (0.6 to 1.0 kgf·m, 4.3 to 7.2 lbft)

REMARK

The batteries are on both sides at the rear of the machine. The battery used for the ground is on the right side of the machine.

Downloaded from www.Manualslib.com manuals search engine

https://truckmanualshub.com/

Precautions for charging battery

When charging the battery, if the battery is not handled correctly, there is danger that the battery may explode. Always follow the instructions in "Battery (3-167)" and the instruction manual accompanying the charger, and do as follows.

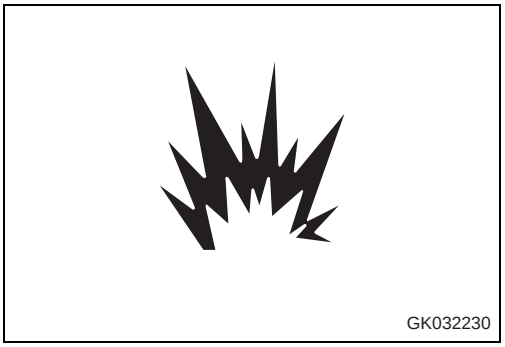

- Do not use or charge the battery if the battery electrolyte level is below the LOWER LEVEL line. This may cause an explosion. Always check the battery electrolyte level periodically and add distilled water to bring the electrolyte level to the UPPER LEVEL line.
- Set the voltage of the charger to match the voltage of the battery to be charged. If the voltage is not selected correctly, the charger may overheat and cause an explosion.
- Connect the positive (+) charger clip of the charger to the positive (+) terminal of the battery, then connect the negative (-) charger clip of the charger to the negative (-) terminal of the battery. Be sure to fix the clips securely.
- Set the charging current to 1/10 of the value of the rated battery capacity; when carrying out rapid charging, set it to less than the rated battery capacity.

  If the charger current is too high, the electrolyte will leak or dry up, and this may cause the battery to catch fire and explode.
- If the battery electrolyte is frozen, do not charge the battery or start the engine with a different power source. There is a hazard that this will ignite the battery electrolyte and cause the battery to explode.

Downloaded from www.Manualslib.com manuals search engine

https://truckmanualshub.com/

Starting engine with booster cable

When starting the engine with a booster cable, do as follows:

Precautions when connecting and disconnecting booster cable

WARNING

- When connecting the cables, never contact the positive (+) and negative (-) terminals.
- When starting the engine with a booster cable, always wear safety glasses and rubber gloves.
- Be careful not to let the normal machine and problem machine contact each other. This prevents sparks from generating near the battery which could ignite the hydrogen gas given off by the battery.
- Make sure that there is no mistake in the booster cable connections. The final connection is to the engine block of the problem machine, but sparks will be generated when this is done, so connect to a place as far as possible from the battery.
- When disconnecting the booster cable, take care not to bring the clips in contact with each other or with the machine body.

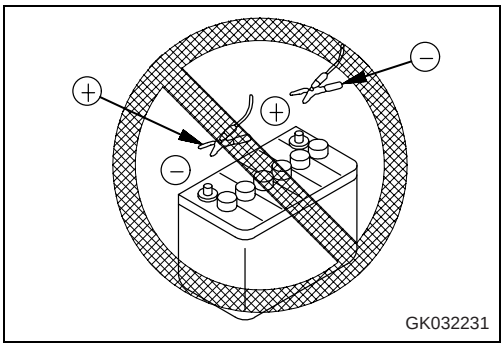

NOTE

- *The size of the booster cable and clip should be suitable for the battery size.*
- *The battery of the normal machine must be the same capacity as that of the engine to be started.*
- *Check the cables and clips for damage or corrosion.*
- *Make sure that the cables and clips are firmly connected.*
- *Check that the work equipment lock levers and parking brake levers of both machines are in the LOCK position.*
- *Check that each lever is in the NEUTRAL position.*

Downloaded from www.Manualslib.com manuals search engine

https://truckmanualshub.com/

Connecting the booster cable

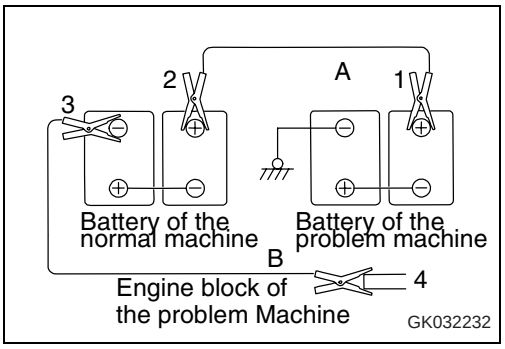

Keep the starting switch of the normal machine and problem machine at the OFF position.

Connect the booster cable as follows, in the order of the numbers marked in the diagram.

1. Connect one clip of booster cable (A) to the positive (+) terminal of the problem machine.
2. Connect the other clip of booster cable (A) to the positive (+) terminal of the normal machine.
3. Connect one clip of booster cable (B) to the negative (-) terminal of the normal machine.
4. Connect the other clip of booster cable (B) to the engine block of the problem machine.

Starting engine

WARNING

Always check that the work equipment lock lever is set to the LOCK position, regardless of whether the machine is working normally or has failed. Check also that all the control levers are at the HOLD or NEUTRAL position.

1. Make sure the clips are firmly connected to the battery terminals.
2. Start the engine of the normal machine and keep it to run at high idling speed.
3. Turn the starting switch of the problem machine to the START position and start the engine.

   If the engine doesn't start at first, wait for at least 2 minutes before trying again.

Disconnecting the booster cable

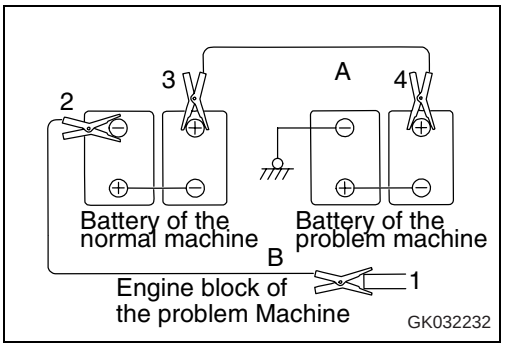

After the engine has started, disconnect the booster cables in the reverse of the order in which they were connected.

1. Remove one clip of booster cable (B) from the engine block of the problem machine.
2. Remove the other clip of booster cable (B) from the negative (-) terminal of the normal machine.
3. Remove one clip of booster cable (A) from the positive (+) terminal of the normal machine.
4. Remove the other clip of booster cable (A) from the positive (+) terminal of the problem machine.

Downloaded from www.Manualslib.com manuals search engine

https://truckmanualshub.com/

3.7.4 Method for lowering work equipment when engine has stopped

WARNING

Check that the surrounding area is safe, then lower the work equipment.

1. Turn starting switch to the ON position (B).

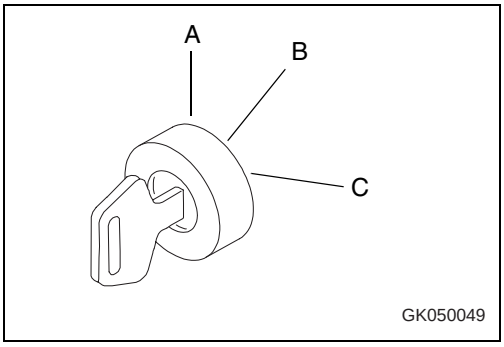

2. Set the work equipment lock lever to the FREE position.

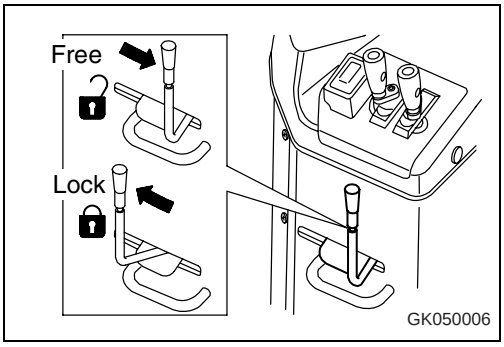

3. Operate the lift arm control lever to lower the bucket to the ground.
4. Set the work equipment lock lever to the LOCK position.

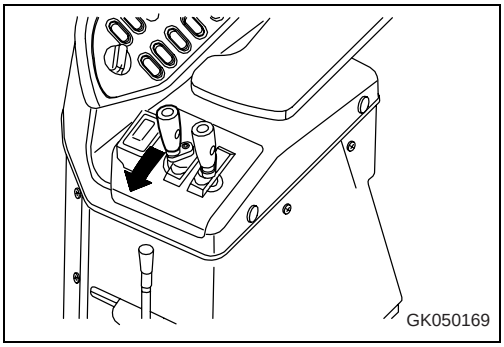

5. Turn starting switch to the OFF position (A) and stop the engine.

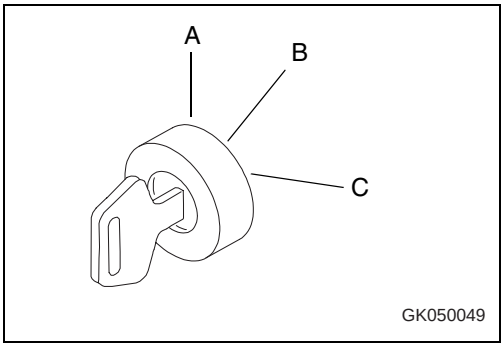

Downloaded from www.Manualslib.com manuals search engine

https://truckmanualshub.com/

3.7.5 Other trouble

Electrical system

- ( ): Always contact your KOMATSU distributor when dealing with these items.
- In cases of abnormalities or causes which are not listed below, please contact your KOMATSU distributor for repairs.

Problem	Main causes	Remedy
Lamp does not glow brightly even when the engine runs at high speed Lamp flickers while engine is running	• Defective wiring • Defective adjustment of alternator belt tension	• (Check, repair loose terminals, disconnections) • Adjust alternator belt tension For details, see EVERY 250 HOURS SERVICE
Even when engine is running, battery charge circuit caution lamp does not go out	• Defective alternator • Defective wiring • Defective adjustment of belt tension	• (Replace) • (Check, repair) • Adjust alternator belt tension For details, see EVERY 250 HOURS SERVICE
Abnormal noise is generated from alternator	• Defective alternator	• (Replace)
Starting motor does not turn when starting switch is turned to START	• Defective wiring • Insufficient battery charge • Defective starting motor	• (Check, repair) • Charge • (Check, repair)
Pinion of starting motor keeps going in and out	• Insufficient battery charge	• Charge
Starting motor turns engine sluggishly	• Insufficient battery charge • Defective starting motor	• Charge • (Replace)
Starting motor disengages before engine starts	• Defective wiring • Insufficient battery charge	• (Check, repair) • Charge
Engine pre-heating pilot lamp does not light up	• Defective wiring • Defective heater relay, preheating water temperature sensor • Defective preheating pilot lamp	• (Check, repair) • (Replace) (Replace)
Even when engine is stopped, battery charge curcuit caution pilot lamp does not light up (starting switch at ON position)	• Defective wiring • Defective monitor	• (Check, repair) • (Replace)
Even when engine is stopped, engine oil pressure caution pilot lamp does not light up (starting switch at ON position)	• Defective pilot lamp • Defective pressure caution lamp • Defective monitor	• (Replace) • (Replace) • (Replace)

Downloaded from www.Manualslib.com manuals search engine

https://truckmanualshub.com/

Chassis

- ( ): Always contact your KOMATSU distributor when dealing with these items.
- In cases of abnormalities or causes which are not listed below, please contact your KOMATSU distributor for repairs.

Problem	Main causes	Remedy
Transmission		
Engine is running but machine does not move	• Parking brake is applied • Directional selector switch not completely switched to travel direction position • Lack of oil in transmission case	• Release parking brake • Operate switch fully • Add oil to specified level. See WHEN REQUIRED
Even when engine is run at full throttle, machine only moves slowly and lacks power	• Lack of oil in transmission case • Screen is colgged	• Add oil to specified level. See WHEN REQUIRED • Disassemble, clean
Oil overheats	• Too much oil or too little oil • Machine is not traveling in correct speed range • Torque converter is stalled for long periods • Engine is overheating	• Add or drain oil to specified level. See WHEN REQUIRED • Place in correct speed range • Reduce stall time • (Check engine)
Noise generated	• Lack of oil	• Add or drain oil to specified level. See WHEN REQUIRED
Axle		
Noise generated	• Lack of oil • Improper oil used (for machines with limited-slip differential)	• Add or drain oil to specified level. See WHEN REQUIRED • Change to specified oil
Brake		
Brake is not applied when pedal is depressed	• Disc has reached wear limit • Defective hydraulic system • Lack of oil • Air in brake line	• (Replace disc) • (Check, repair) • Add oil to specified level. See EVERY 100 HOURS SERVICE • Bleed air. See WHEN REQUIRED
Brake drags or remains applied	• Vent hole of brake valve is clogged	• Clean
Brakes squeal	• Disc is worn • Large amount of water in axle oil • Deteriorated axle oil due to over-use of brake	• (Replace disc) • Change axle oil • Change axle oil
Steering		
Steering wheel is heavy	• Defective hydraulik system • Lack of oil	• (Check, repair) • Add oil to specified level. See EVERY 100 HOURS SERVICE

Downloaded from www.Manualslib.com manuals search engine

https://truckmanualshub.com/

Problem	Main causes	Remedy
Steering wheel is loose	• Play in steering cylinder pin • Defective hydraulik system • Lack of oil	• Grease bearing or replace pin and bushing where there is play • (Check, repair) • Add oil to specified level. See EVERY 100 HOURS SERVICE
Parking brake		
Brake does not work well	• Disc is worn	• (Replace disc)
Brake drags or remains applied	• Lack of oil in transmission case • Screen is clogged	• Add or drain oil to specified level. See WHEN REQUIRED • (Disassemble, clean)
Hydraulic system		
Bucket lacks lifting power Bucket takes time to go up	• Lack of oil • Clogged hydraulic filter	• Add oil to specified level. See EVERY 100 HOURS SERVICE • Replace cartridge. See EVERY 2000 HOURS SERVICE
Excessive bubbles in oil	• Low quality oil being used • Oil level is low • Air entering oil line	• Replace with good quality oil • Add oil to specified level. See EVERY 100 HOURS SERVICE • Bleed air. See WHEN REQUIRED
Hydraulic pressure is low	• Oil level is low and pump is sucking in air.	• Add oil to specified level. See EVERY 100 HOURS SERVICE • Bleed air. See WHEN REQUIRED
Irregular movement of cylinder	• Oil level is low	• Add oil to specified level. See EVERY 100 HOURS SERVICE

Downloaded from www.Manualslib.com manuals search engine

https://truckmanualshub.com/

Engine

- ( ): Always contact your KOMATSU distributor when dealing with these items.
- In cases of abnormalities or causes which are not listed below, please contact your KOMATSU distributor for repairs.

Problem	Main causes	Remedy
Engine oil pressure caution pilot lamp lights up	• Low engine oil pan oil level (sucking in air) • Clogged oil filter cartridge • Defective tightening of oil pipe joint, oil leakage from damaged part • Defective monitor	• Add oil to specified level. See CHECK BEFORE STARTING • Replace cartridge. See EVERY 500 HOURS SERVICE • (Check, repair) • (Replace)
Steam is emitted from top part of radiator (pressure valve) Water temperature gauge is in red range Coolant temperature monitor lights up	• Low cooling water level, leakage of water • Dirt or scale accumulated in cooling system • Clogged radiator fin or damaged fin • Defective thermostat • Defective thermostat seal • Loose radiator filler cap (high altitude operation) • Defective monitor	• Check, add cooling water, repair. See WHEN REQUIRED • Change cooling water, clean inside of cooling system. See WHEN REQUIRED • Clean or repair See WHEN REQUIRED • (Replace thermostat) • (Replace thermostat seal) • Tighten cap or replace packing • (Replace)
Water temperature gauge is in white range below	• Defective thermostat • Defective monitor	• (Replace thermostat) • (Replace)
Engine does not start when starting motor is turned	• Lack of fuel • Air in fuel system • No fuel in fuel filter • Defective injection pump or nozzle • Starting motor cranks engine too slowly • Starting motor does not turn • Preheating pilot lamp does not light up • Defective valve clearance (Defective compression)	• Add fuel. See CHECK BEFORE STARTING • Repair place where air is sucked in • Fuel filter with fuel. See EVERY 500 HOURS SERVICE • (Replace pump or nozzle) See ELECTRICAL SYSTEM • (Adjust valve clearance)
Exhaust gas is white or blue	• Too much oil in oil pan • Improper fuel	• Add oil to specified level. See CHECK BEFORE STARTING • Change to specified fuel
Exhaust gas occasionally turns black	• Clogged air cleaner element • Defective nozzle • Defective compression • Defective turbocharger	• Clean or replace. See WHEN REQUIRED • (Replace nozzle) • (See defective compression above) • Clean or replace turbocharger
Abnormal noise generated (combustion or mechanical)	• Low grade fuel being used • Overheating • Damage inside muffler • Excessive valve clearance	• Change to specified fuel • Refer to “Water temperature gauge is in red range“ as above • (Replace muffler) (Adjust valve clearance)

Downloaded from www.Manualslib.com manuals search engine

https://truckmanualshub.com/

Downloaded from www.Manualslib.com manuals search engine

https://truckmanualshub.com/

4. Maintenance

WARNING

Please read and make sure that you understand the SAFETY section before reading this section.

Downloaded from www.Manualslib.com manuals search engine

https://truckmanualshub.com/

4.1 Guides to maintenance

Do not carry out any inspection and maintenance operation that is not found in this manual.

Check service meter:

Check the service meter reading every day to see if the time has come for any necessary maintenance to be carried out.

KOMATSU genuine replacement parts:

Use KOMATSU genuine parts specified in the Parts Book as replacement parts.

KOMATSU genuine oils:

Use KOMATSU genuine oils and grease. Choose oils and grease with proper viscosities specified for ambient temperature.

Always use clean washer fluid:

Use automobile window washer fluid, and be careful not to let any dirt get into it.

Always use clean oil and grease:

Use clean oil and grease. Also, keep the containers of the oil and grease clean. Keep foreign materials away from oil and grease.

Checking for foreign materials in drained oil and on filters:

After oil is changed or filters are replaced, check the old oil and filters for metal particles and foreign materials. If large quantity of metal particles or foreign materials are found, always report to the person in charge, and carry out suitable action.

Fuel strainer:

Do not remove the strainer from the filler port when adding fuel.

Welding instructions:

- Turn off the engine starting switch.
- Do not apply more than 200V continuously.
- Connect grounding cable within 1m (3.3 ft) from the area to be welded. If grounding cable is connected near instruments, connectors, etc., the instruments may malfunction.
- If a seal or bearing happen to come between the welding part and grounding point, change the grounding point to avoid such parts.

Downloaded from www.Manualslib.com manuals search engine

https://truckmanualshub.com/

- Do not use the area around the work equipment pins or the hydraulic cylinders as the grounding point.
- Remove the negative (-) terminal of the battery to stop the flow of electric current.

Do not drop things inside machine:

- When opening inspection windows or the oil filler port of the tank to carry out inspection, be careful not to drop nuts, bolts, or tools inside the machine.

  If such things are dropped inside the machine, it will cause damage and malfunction of the machine, and will lead to failure. If you drop anything inside the machine, always remove it immediately.
- Do not put unnecessary things in your pockets. Carry only things which are necessary for inspection.

Dusty worksites:

When working at dusty worksites, do as follows:

- Check the air cleaner clogging caution lamp more frequently to check the degree of clogging of the air cleaner.

  Clean the air cleaner element more frequently.
- Clean the radiator core frequently to avoid clogging.
- Clean and replace the fuel filter frequently.
- Clean electrical components, especially the starting motor and alternator, to avoid accumulation of dust.
- When inspecting or changing the oil, move the machine to a place that is free of dust to prevent dirt from getting into the oil.

Avoid mixing oil:

If a different brand or grade of oil has to be added, drain the old oil and replace all the oil with the new brand or grade of oil. Never mix different brands or grades of oil.

Locking inspection covers:

Lock inspection cover in position securely with the lock bar. If inspection or maintenance is carried out with the inspection cover not locked in position, there is a hazard that it may be suddenly blown shut by the wind and cause injury to the worker.

Downloaded from www.Manualslib.com manuals search engine

https://truckmanualshub.com/

Bleeding air from hydraulic circuit:

After repairing or replacing the parts of hydraulic circuit, or removing the piping of hydraulic circuit, it is necessary to bleed the air from inside of the circuit.

See "Bleeding air from hydraulic tank (4-47)".

Precautions when installing hydraulic hoses:

- When removing parts at locations where there are O-rings or gasket seals, clean the mounting surface, and replace with new parts.

  When doing this, be careful not to forget to assemble the O-rings and gaskets.

- When installing the hoses, do not twist them or bend them into loops with a small radius.

  This will cause damage to the hose and markedly reduce its service life.

Checks after inspection and maintenance:

If you forget carrying out the checks after inspection and maintenance, unexpected problems may occur, and this may lead to serious injury or property damage. Always do as follows.

- Checks after operation (with engine stopped)
  - Have any inspection and maintenance points been forgotten?
  - Have all inspection and maintenance items been carried out correctly?
  - Have any tools or parts been dropped inside the machine? It is particularly dangerous if parts are dropped inside the machine and get caught in the lever linkage mechanism.
  - Is there any leakage of water or oil? Have all the bolts been tightened?
- Check when the engine is running
  - See "Two workers for maintenance when engine is running (2-33)" in the section on safety for checking when the engine is running. Pay attention to safety.
  - Check if the inspected and maintenance area is operating normally.
  - Increase the engine speed to check for fuel and oil leakage.

Downloaded from www.Manualslib.com manuals search engine

https://truckmanualshub.com/

4.2 Outlines of service

- Always use KOMATSU genuine parts replacement parts, grease or oil.
- When changing the oil or adding oil, do not mix different types of oil. When changing the type of oil, drain all the old oil and fill completely with the new oil. Always replace the filter at the same time. (There is no problem if the small amount of oil remaining in the piping mixes with the new oil.)
- Unless there is any specific request, the oil, fuel, and coolant used on the machine when it is shipped from the factory are as shown in the table below.

Item	Type
Engine oil pan	Engine oil EO15W40DH (KOMATSU genuine parts)
Transmission case	Power train oil TO30 (KOMATSU genuine parts)
Hydraulic system	Power train oil TO10 (KOMATSU genuine parts)
Axle	Axle oil AXO80 (KOMATSU genuine parts)
Radiator	Supercoolant AF-NAC (Density: 30% or above) (KOMATSU genuine parts)

4.2.1 Handling oil, fuel, coolant, grease and carrying out KOWA (KOMATSU Oil Wear Analysis)

Oil

- Oil is used in the engine and work equipment under extremely severe conditions (high temperature, high pressure), and deteriorates with use.

  Always use oil that matches the grade and temperature for use given in the Operation and Maintenance Manual.

  Even if the oil is not dirty, always change the oil after the specified interval.
- Oil corresponds to blood in the human body, so always be careful when handling it to prevent any impurities (water, metal particles, dirt, etc.) from getting in.

  The majority of problems with machines are caused by the entry of such impurities.

  Take particular care not to let any impurities get in when storing or adding oil.
- Never mix oils of different grades or brands.
- Always add the specified amount of oil.

  Having too much oil or too little oil are both causes of problems.

Downloaded from www.Manualslib.com manuals search engine

https://truckmanualshub.com/

- If the oil in the work equipment is not clear, there is probably water or air getting into the circuit. In such cases, please contact your KOMATSU distributor.
- When changing the oil, always replace the related filters at the same time.
- We recommend you have an analysis made of the oil periodically to check the condition of the machine. For those who wish to use this service, please contact your KOMATSU distributor.
- When using commercially available oil, it may be necessary to reduce the oil change interval.

  We recommend that you use the KOMATSU oil clinic to carry out a detailed checks of the characteristics of the oil.

Fuel

- The fuel pump is a precision instrument, and if fuel containing water or dirt is used, it cannot work properly.
- Be extremely careful not to let impurities get in when storing or adding fuel.
- Always use the fuel specified in the Operation and Maintenance Manual.

  If the fuel is used at temperatures lower than the specified temperature (particularly at temperatures below -15°C (5°F), the fuel will solidify.

  If the fuel is used at temperatures higher than the specified temperature, the viscosity will drop, and this may result in problems such as a drop in output.
- To prevent the moisture in the air from condensing and forming water inside the fuel tank, always fill the fuel tank after completing the day's work.
- Before starting the engine, or when 10 minutes have passed after adding fuel, drain the sediment and water from the fuel tank.
- If the engine runs out of fuel, or if the filters have been replaced, it is necessary to bleed the air from the circuit.
- If there is any foreign material in the fuel tank, wash the tank and fuel system.

NOTE

Always use diesel fuel. Never use any other fuel.
The engine on this machine uses electronic control and high-pressure fuel injection equipment to enable it to provide good fuel consumption and good exhaust gas characteristics. For this reason, high-precision parts and lubricating ability are demanded. Using low-viscosity fuel with poor lubricating ability will cause a marked reduction in the durability of the engine.

Downloaded from www.Manualslib.com manuals search engine

https://truckmanualshub.com/

Coolant and water for dilution

- The coolant has the important function of preventing corrosion as well as preventing freezing.

  Even in the areas where freezing is not an issue, the use of antifreeze coolant is essential.

  KOMATSU machines are supplied with KOMATSU Supercoolant (AF-NAC). KOMATSU Supercoolant (AF-NAC) has excellent anticorrosion, antifreeze and cooling properties and can be used continuously for 2 years or 4000 hours.

  KOMATSU Supercoolant (AF-NAC) is strongly recommended wherever available.

- When using KOMATSU Supercoolant (AF-NAC), there is no need to use a corrosion resistor.

  For details, see "Clean inside of cooling system (4-31)".

- When diluting the antifreeze coolant, use distilled water or tap water (soft water).

- Natural water, such as a river water or well water (hard water), contains large amounts of minerals (calcium, magnesium, etc.), and this makes it easier for scale to form inside the engine or radiator. Once scale is deposited inside the engine or radiator, it is extremely difficult to remove. It also causes overheating due to poor heat exchange, so when you dilute the coolant, we recommend that you use water with an overall hardness of less than 100 PPM.

- When using antifreeze, always observe the precautions given in the Operation and Maintenance Manual.

- Antifreeze is flammable, so be extremely careful not to expose it to flame or fire.

- The ratio of Supercoolant (AF-NAC) to water differs according to the ambient temperature.

  For details of the mixing proportions, see "Clean inside of cooling system (4-31)".

  Supercoolant (AF-NAC) may be supplied already mixed. In such cases, never dilute with water.

- If the engine overheats, wait for the engine to cool before adding coolant.

- If the coolant level is low, it will cause overheating and will also cause problems with corrosion from the air in the coolant.

Downloaded from www.Manualslib.com manuals search engine

https://truckmanualshub.com/

Grease

- Grease is used to prevent twisting and noise at the joints.
- This construction equipment is used under heavy-duty conditions. Always use the recommended grease and follow the change intervals and recommended ambient temperatures given in this Operation and Maintenance Manual.
- The nipples not included in the maintenance section are nipples for overhaul, so they do not need grease.

  When using the machine after it has been in storage for a long time, carry out greasing if there is any stiffness or screeching.
- Always wipe off all of the old grease that is pushed out when greasing.

  Be particularly careful to wipe off the old grease in places where sand or dirt sticking in the grease would cause wear of the rotating parts.

Carrying out KOWA (KOMATSU Oil Wear Analysis)

KOWA is a maintenance service that makes it possible to prevent machine failures and downtime. With KOWA, the oil is periodically sampled and analyzed. This enables early detection of wear of the machine drive parts and other abnormalities.

We strongly recommend you to use this service. The oil analysis is carried out at actual cost, so the cost is low, and the results of the analysis are reported together with recommendations which will reduce repair costs and machine downtime.

Periodic use of KOWA makes the following possible:

- It enables abnormalities to be detected early, leading to reduction of repair costs and machine downtime.
- It enables repair schedules to be planned, leading to improved machine availability.

KOWA analysis items

- Analysis of metal wear particles

  This uses an ICP (Inductively Coupled Plasma) analyzer to measure the density of metal wear particles in the oil.

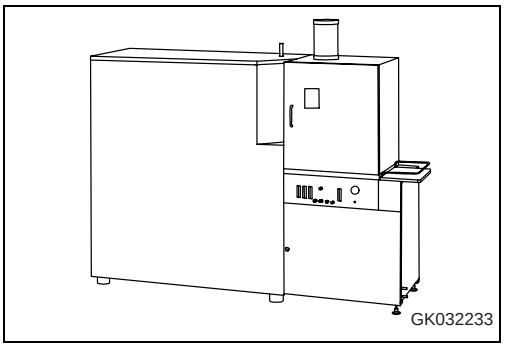

Downloaded from www.Manualslib.com manuals search engine

https://truckmanualshub.com/

- Measurement of particle quantity

  This uses a particle quantifier index measurement machine to measure the quantity of iron particles of 5μ or more, enabling early detection of failures.

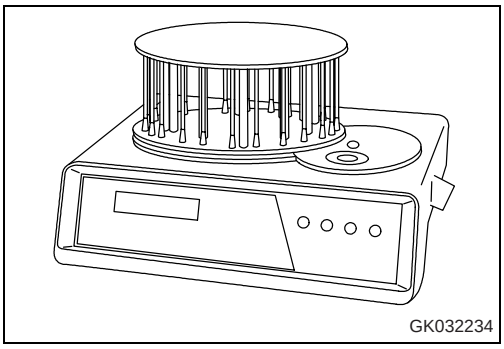

- Others

  Measurements are made of items such as the ratio of water in the oil, density of the antifreeze coolant, ratio of fuel in the oil, and dynamic viscosity, enabling a highly precise diagnosis of the machine's health.

Oil sampling

- Sampling interval

  250 hours: Engine

  500 hours: Other components

- Precautions when sampling
  - Make sure that the oil is well mixed before sampling.
  - Carry out sampling regularly at fixed intervals.
  - Do not carry out sampling on rainy or windy days when water or dust can get into the oil.

For further details of KOWA, please contact your KOMATSU distributor.

Storing oil and fuel

- Keep indoors to prevent any water, dirt, or other impurities from getting in.
- When keeping drum cans for a long period, put the drum on its side so that the filler port of the drum can is at the side to prevent moisture from being sucked in.

  If drum cans have to be stored outside, cover them with a waterproof sheet or take other measures to protect them.

- To prevent any change in quality during long-term storage, be sure to use in the order of first in - first out (use the oldest oil or fuel first).

Downloaded from www.Manualslib.com manuals search engine

https://truckmanualshub.com/

Filters

- Filters are extremely important safety parts. They prevent impurities in the fuel and air circuits from entering important equipment and causing problems.

  Replace all filters periodically. For details, see the Operation and Maintenance Manual.

  However, when working in severe conditions, replace the filters at shorter intervals according to the oil and fuel (sulfur content) being used.

- Never try to clean the filters (cartridge type) and use them again. Always replace with new filters.

- When replacing oil filters, check if any metal particles are affixed to the old filter. If any metal particles are found, please contact your KOMATSU distributor.

- Do not open packs of spare filters until just before they are to be used.

- Always use KOMATSU genuine filters.

4.2.2 Outline of electric system

- It is extremely dangerous if the electrical equipment becomes wet or the covering of the wiring is damaged. This will cause an electrical short circuit and may lead to malfunction of the machine. Do not wash the inside of the operator's cab with water. When washing the machine, be careful not to let water get into the electrical components.

- Service relating to the electric system is checking fan belt tension, checking damage or wear in the fan belt and checking battery fluid level.

- Never install any electric components other than those specified by KOMATSU.

- External electro-magnetic interference may cause malfunction of the control system controller, so before installing a radio receiver or other wireless equipment, please contact your KOMATSU distributor.

- When working at the seashore, carefully clean the electric system to prevent corrosion.

- The optional power source must never be connected to the fuse, starting switch, or battery relay.

Downloaded from www.Manualslib.com manuals search engine

https://truckmanualshub.com/

4.3 Wear parts

Replace wear parts such as the filter element or air cleaner element at the time of periodic maintenance or before they reach the wear limit. The wear parts should be replaced correctly in order to ensure more economic use of the machine. When replacing parts, always use KOMATSU genuine parts.

As a result of our continuous efforts to improve product quality, the part number may change, so inform your KOMATSU distributor of the machine serial number and check the latest part number when ordering parts.

4.3.1 Wear parts list

The parts in parentheses are to be replaced at the same time.

*: See Part No. in Parts Book (KOMATSU).

Item		Part No.	Part Name	Q'ty	Replacement frequency
Engine oil filter		*	Cartridge	2	EVERY 500 HOURS
Fuel pre-filter		*	Cartridge	1	EVERY 500 HOURS
Transmission oil filter		*	Element (O-ring) (O-ring)	2 (2) (2)	EVERY 500 HOURS
Fuel filter		*	Cartridge	1	EVERY 1000 HOURS
Corrosion resistor		*	Cartridge	1	EVERY 1000 HOURS
Hydraulic filter		*	Element (O-ring)	1 (1)	EVERY 2000 HOURS
Hydraulic tank breather		*	Element	1	EVERY 2000 HOURS
Air conditioner filter	Fresh	*	Element	1	EVERY 2000 HOURS
	Recirc	*	Element	1	EVERY 2000 HOURS
Air cleaner		*	Element ass'y (Outer element) (Inner element) (O-ring)	1 (1) (1) (1)	-
Bolt on cutting edge		*	Edge Edge Bolt Nut Washer	2 2 (18) (18) (18)	-
1-piece bucket tooth		*	Tooth Bolt Nut Shim (0.5mm) Shim (1.0mm)	6 18 18 12 6	-

Downloaded from www.Manualslib.com manuals search engine

https://truckmanualshub.com/

1-piece corner tooth	*	Right corner tooth Left corner tooth Bolt Bolt Washer Nut Shim (0.5mm) Shim (1.0mm)	1 1 2 4 2 6 4 2	-
Tip tooth	*	Tooth Pin	8 8	-
Segment edge	*	Edge Bolt Washer Nut	7 14 14 14	-

Downloaded from www.Manualslib.com manuals search engine

https://truckmanualshub.com/

4.4 Fuel, coolant and lubricants

- KOMATSU genuine oils are adjusted to maintain the reliability and durability of KOMATSU construction equipment and components.
- In order to keep your machine in the best conditioner for long periods of time, it is essential to follow the instructions in this Operation and Maintenance Manual.
- Failure to follow these recommendations may result in shortened life or excess wear of the engine, power train, cooling system, and/or other components.
- Commercially available lubricant additives may be good for the machine, but they may also cause harm. KOMATSU does not recommend any commercially available lubricant additive.
- Use the oil recommended according to the ambient temperature in the chart below.
- Specified capacity means the total amount of oil including the oil in the tank and the piping. Refill capacity means the amount of oil needed to refill the system during inspection and maintenance.
- When starting the engine in temperatures below 0°C (32°F), be sure to use the recommended multi-grade oil, even if the ambient temperature may become higher during the course of the day.
- If the machine is operated at a temperature below -20°C (-4°F), a separate device is needed, so consult your KOMATSU distributor.
- When the fuel sulfur content is less than 0.2%, change the engine oil according to the period inspection table given in this Operation and Maintenance Manual.

  If the fuel sulfur content is more than 0.2%, change the oil according to the following table.

Fuel sulfur content	Engine oil change interval
0.2 to 0.5%	1/2 of regular interval
Above 0.5%	Do not use

Downloaded from www.Manualslib.com manuals search engine

https://truckmanualshub.com/

4.4.1 Lubrication chart

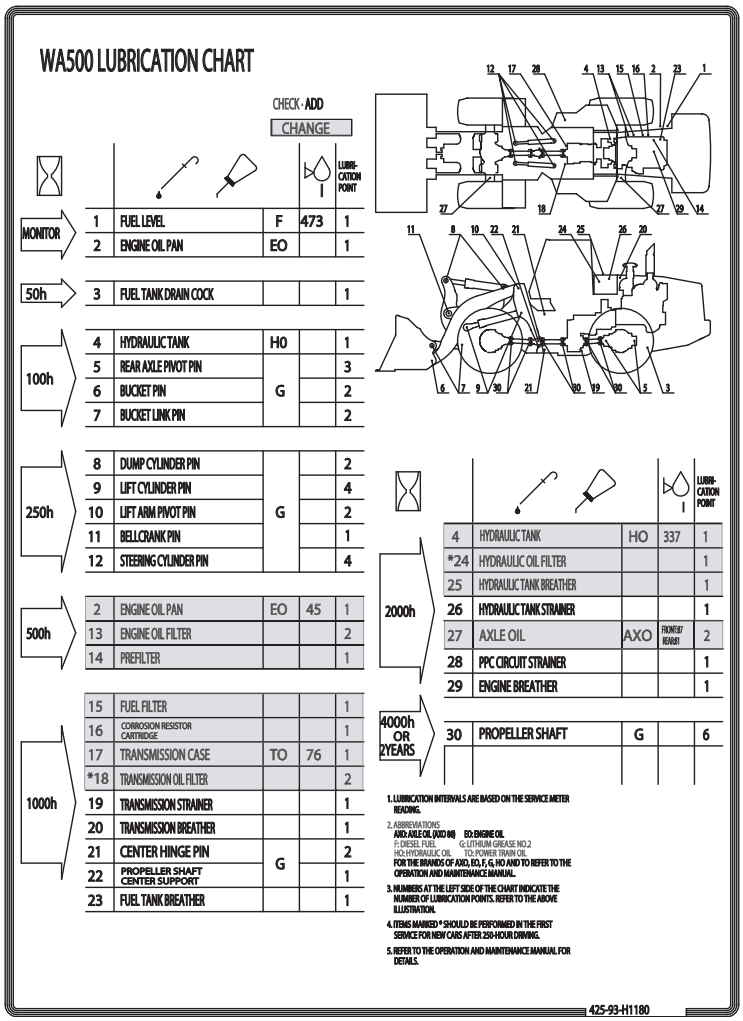

1. Lubrication intervals are based on the service meter reading.
2. Abbreviations:

   EO = Engine Oil, G = Lithium Grease No. 2, F = Diesel Fuel, AXO = Axle Oil, HO = Hydraulic Oil.

3. Numbers at the left side of the chart indicate the number of lubrication points. Refer to the above illustration.
4. Fuel filter, engine oil filter, HST filter element should be renewed after the initial 250-hour operation and thereafter at change period as shown in this chart.
5. Refer to operation and maintenance manual for details.

REMARK

Binding is the maintenance schedule chart in operation and maintenance manual, see "Maintenance schedule chart (4-23)".

Downloaded from www.Manualslib.com manuals search engine

https://truckmanualshub.com/

4.4.2 Use of fuel, coolant and lubricants according to ambient temperature

Reservoir	Fluid Type	Ambient Temperature (-22 -4 14 32 50 68 86 104 122 °F / -30 -20 -10 0 10 20 30 40 50 °C)	Recommended KOMATSU Fluids
Engine oil pan	Engine oil	SAE0W30EOS and HTHS 3,5min. (Note 1)	KOMATSU EOS0W30
		SAE5W40EOS and HTHS 3,5min. (Note 1)	KOMATSU EOS5W40
		SAE10W30DH	KOMATSU EO10W30-DH
		SAE15W40DH	KOMATSU EO15W40-DH
		SAE30DH	KOMATSU EO30-DH
Transmission case	Power train oil (Note 2)	TO30	TO30
		TO10	TO10
Hydraulic system	Power train oil	TO10	TO10
	Hydraulic oil	HO46-HM	HO46-HM
		HO-MVK	HO-MVK
	Engine oil	SAE10W30DH	KOMATSU EO10W30-DH
		SAE15W40DH	KOMATSU EO15W40-DH
Axle	Axle oil (Note 3)	AXO80	AXO80
	Engine oil	(Note 4)	EO50-CD
Pin/Bushing Grease fitting	Hyper grease (Note 5)	G2-T, G2-TE	G2-T, G2-TE
	Lithium EP grease	G2-LI	G2-LI
Cooling system	Supercoolant AF-NAC	AF-NAC (Note 6)	AF-NAC
Fuel tank	Diesel fuel	No.2-D	ASTM No.2-D
		No.1-D	ASTM No.1-D

Reservoir Capacity		Engine oil pan	Transmis-sion case	Hydraulic system	Front axle	Rear axle	Cooling system	Fuel tank
Specified	Liters	45	95	460	87	81	120	473
	US gal	11.8	25.1	121.5	22.9	21.4	31.7	124.9
Refill	Liters	45 (37)	76	337	87	81	-	-
	US gal	11.8 (9.7)	20.0	89.0	22.9	21.4	-	-

The figures in ( ) are the values for the oil in the engine oil pan only.

Downloaded from www.Manualslib.com manuals search engine

https://truckmanualshub.com/

NOTE

Use only diesel fuel.
The engine mounted on this machine employs electronic control and a high-pressure fuel injection device to obtain good fuel consumption and good exhaust gas characteristics. For this reason, it requires high precision for the parts and good lubrication. If kerosene or other fuel with low lubricating ability is used, there will be a big drop in durability.

Always use the fuel specified for the temperature in the Operation and Maintenance Manual.

- If the fuel is used at temperatures lower than the specified temperature (particularly at temperatures below -15°C (5°F)), the fuel will solidify.
- If the fuel is used at temperatures higher than the specified temperature, the viscosity will drop, and this may result in problems such as a drop in output.

Note 1:
SAE0W30EOS and SAE5W40EOS must be fully synthetic and HTHS (High-Temperature High-Shear Viscosity @ 150°C), specified by ASTM D4741 must be equal to or higher than 3.5mPa-S (3.5cP). KOMATSU EOS0W30 and EOS5W40 are the most suitable oils.

If these oils are not available, follow the instruction"Recommended brands, recommended quality for products other than KOMATSU genuine oil (4-18)" at the end of this chapter.

Note 2:
Power train of oil has different properties from engine oil. Be sure to use the recommended oil.

Note 3:
Axle oil AXO80 has the function of preventing squealing from the brakes and LSD (Limited Slip Differential).

If only AXO80 is recommended, use KOMATSU genuine AXO80 or equivalent.

Note 4:
When the ambient temperature is higher than 45°C (113°F) and the machine operation hour is longer than 12 hours/day, then the use of EO50-CD instead of AXO80 is recommended.

Squealing of the brakes may occur with EO50-CD, but there is no problem with the brake performance or durability.

Note 5:
Hypergrease (G2- T, G2-TE) is high-performance grease.

In the following cases, we recommend use of G2-T or G2-TE.

1. Every 10 hours greasing for the first 50 hours on a new machine while it is being broken in
2. When it is needed to improve the lubrication of the grease to prevent squealing of the pin or bushing

Downloaded from www.Manualslib.com manuals search engine

https://truckmanualshub.com/

Note 6:
Supercoolant (AF-NAC)

1. The coolant has the important function of preventing corrosion as well as preventing freezing.

   Even in the areas where freezing is not an issue, the use of antifreeze coolant is essential.

   KOMATSU machines are supplied with KOMATSU Supercoolant (AF-NAC). KOMATSU Supercoolant (AF-NAC) has excellent anticorrosion, antifreeze and cooling properties and can be used continuously for 2 years or 4000 hours.

   KOMATSU Supercoolant (AF-NAC) is strongly recommended wherever available.

   When using KOMATSU Supercoolant (AF-NAC), there is no need to use a corrosion resistor.

   For details, see "Clean inside of cooling system (4-31)".

2. For details of the ratio when diluting super coolant with water, see "Clean inside of cooling system (4-31)".

   When the machine is shipped from the factory, it may be filled with coolant containing 30% or more Supercoolant (AF-NAC). In this case, no adjustment is needed for temperatures down to -10°C (14°F). (never dilute with water)

3. To maintain the anticorrosion properties of Supercoolant (AF-NAC), always keep the density of Supercoolant between 30% and 68%.

Downloaded from www.Manualslib.com manuals search engine

https://truckmanualshub.com/

4.4.3 Recommended brands, recommended quality for products other than KOMATSU genuine oil

When using commercially available oils other than KOMATSU genuine oil, or when checking the latest specifications, refer to the KOMATSU web page or consult your KOMATSU distributor.

Downloaded from www.Manualslib.com manuals search engine

https://truckmanualshub.com/

4.5 Standard tightening torques for bolts and nuts

4.5.1 Torque list

CAUTION

If nuts, bolts, or other parts are not tightened to the specified torque, it will cause looseness or damage to the tightened parts, and this will cause failure of the machine or problems with operation.
Always pay careful attention when tightening parts.

Unless otherwise specified, tighten the metric nuts and bolts to the torque shown in the table below.

If it is necessary to replace any nut or bolt, always use a KOMATSU genuine part of the same size as the part that was replaced.

Thread diameter of bolt (a)(mm)	Width across flats (b)(mm)	Tightening torque					
		Target value			Service limit		
		N·m	kgf·m	lbft	N·m	kgf·m	lbft
6	10	13.2	1.35	9.8	11.8-14.7	1.2-1.5	8.7-10.8
8	13	31	3.2	23.1	27-34	2.8-3.5	20.3-25.3
10	17	66	6.7	48.5	59-74	6.0-7.5	43.4-54.2
12	19	113	11.5	83.2	98-123	10.0-12.5	72.3-90.4
14	22	172	17.5	126.6	153-190	15.5-19.5	112.1-141
16	24	260	26.5	191.7	235-285	23.5-29.5	170.0-213.4
18	27	360	37	267.6	320-400	33.0-41.0	238.7-296.6
20	30	510	52.3	378.3	455-565	46.5-58.0	336.3-419.5
22	32	688	70.3	508.5	610-765	62.5-78.0	452.1-564.2
24	36	883	90	651	785-980	80.0-100.0	578.6-723.3
27	41	1295	132.5	958.4	1150-1440	118.0-147.0	853.5-1063.3
30	46	1720	175.0	1265.8	1520-1910	155.0-195.0	1121.1-1410.4
33	50	2210	225.0	1627.4	1960-2450	200.0-250.0	1446.6-1808.3
36	55	2750	280.0	2025.2	2450-3040	250.0-310.0	1808.3-2242.2
39	60	3280	335.0	2423.1	2890-3630	295.0-370.0	2133.7-2676.2

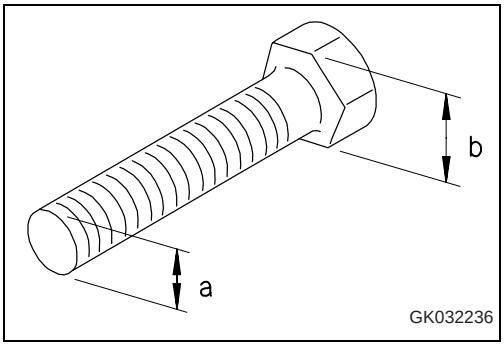

Downloaded from www.Manualslib.com manuals search engine

https://truckmanualshub.com/

Apply the following table for hydraulic hose.

- Taper seal

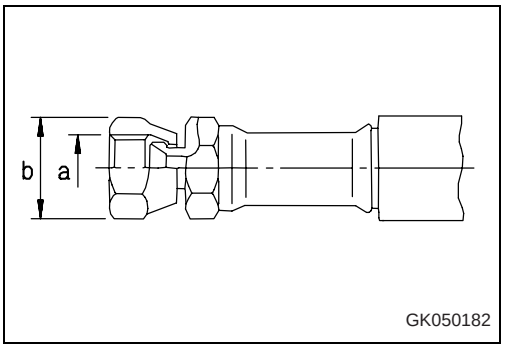

Thread diameter (a) (mm)	Width across flats (b) (mm)	Tightening torque					
		Target value			Permissible range		
		N·m	kgf·m	lbft	N·m	kgf·m	lbft
10	14	14.7	1.5	10.8	12.7 - 16.7	1.3 - 1.7	9.4 - 12.3
14	19	29.4	3.0	21.7	27.5 - 39.2	2.8 - 4.0	20.3 - 28.9
18	24	78.5	8.0	57.9	58.8 - 98.1	6.0 - 10.0	43.4 - 72.3
22	27	117.7	12.0	86.6	88.3 - 137.3	9.0 - 14.0	65.1 - 101.3
24	32	147.1	15.0	108.5	117.7 - 176.5	12.0 - 18.0	86.8 - 130.2
30	36	215.7	22.0	159.1	176.5 - 245.2	18.0 - 25.0	130.2 - 180.8
33	41	255.0	26.0	188.1	215.7 - 284.4	22.0 - 29.0	159.1 - 209.8

- Face seal

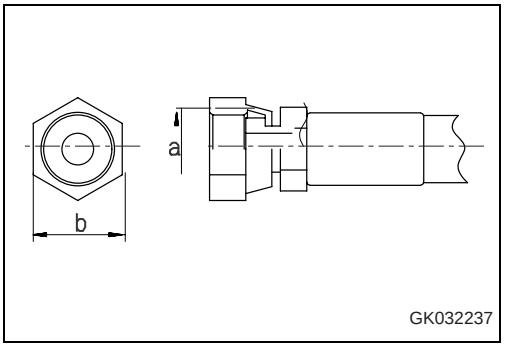

Nominal - No. of threads (a)	Width across flats (b) (mm)	Tightening torque					
		Target value			Permissible range		
		N·m	kgf·m	lbft	N·m	kgf·m	lbft
9/16 -18UNF	19	44	4.5	32.5	35 - 63	3.5 - 6.5	25.3 - 47.0
11/16 -16UN	22	74	7.5	54.2	54 - 93	5.5 - 9.5	39.8 - 68.7
13/16 -16UN	27	103	10.5	75.9	84 - 132	8.5 - 13.5	61.5 - 97.6
1 -14UNS	32	157	16.0	115.7	128 - 186	13.0 - 19.0	94.0 - 137.4
13/16 -12UN	36	216	22.0	159.1	177 - 245	18.0 - 25.0	130.2 - 180.8

Downloaded from www.Manualslib.com manuals search engine

https://truckmanualshub.com/

4.6 Periodic replacement of safety critical parts

To ensure safety at all times when operating or driving the machine, the user of the machine must always carry out periodic maintenance. In addition, to further improve safety, the parts in the safety-critical parts list on the next page must also be replaced at the specified interval. These parts are particularly closely connected to safety and fire prevention, so please contact your KOMATSU distributor to have them replaced.

Material quality of these parts can change as time passes and they are likely to wear out or deteriorate. However, it is difficult to determine the extent of wear or deterioration at the time of periodic maintenance. Hence, it is required to replace them with new ones regardless of their condition after a certain period of usage. This is important to ensure that these parts maintain their full performance at all times.

Furthermore, should anything abnormal be found on any of these parts, replace it with a new one even if the periodic replacement time for the part has not yet arrived.

If any of the hose clamps show deterioration like deformation or cracking, replace the clamps at the same time as the hoses.

Also carry out the following checks with hydraulic hoses which need not be replaced periodically. Tighten a loosened clamp or replace a defective hose, as required.

When replacing the hoses, always replace the O-rings, gaskets, and other such parts at the same time.

Ask your KOMATSU distributor to replace the critical parts.

Downloaded from www.Manualslib.com manuals search engine

https://truckmanualshub.com/

No.	Safety critical parts for periodic replacement	Q'ty	Replacement interval
1	Fuel hose (fuel tank - fuel pre-filter)	1	Every 2 years or every 4000 hours
2	Fuel hose (Fuel pre-filter - hand pump)	1	
3	Fuel hose (feed pump - controller cooling)	1	
4	Fuel hose (controller cooling - fuel filter)	1	
5	Fuel hose (fuel injection pump return)	1	
6	Fuel hose (fuel spill return)	1	
7	Steering hose (pump - steering valve)	1	
8	Steering hose (steering valve -joint)	2	
9	Steering hose (joint - steering cylinder)	4	
10	Steering hose (steering valve - stop valve)	2	
11	Steering hose (orbitrol valve - stop valve	2	
12	Steering hose (orbitrol valve - charge valve)	1	
13	Steering hose (orbitrol valve - joint to tnak)	1	
14	Brake hose (pump - accumulator charge valve)	2	
15	Brake hose (accumulator charge valve - accumulator)	2	
16	Brake hose (accumulator - brake valve)	4	
17	Brake hose (brake valve - front brake)	3	
18	Brake hose (brake valve - rear brake)	4	
19	Brake hose (brake valve - hydraulic tank)	1	
20	Brake hose (brake accumulator - reduction valve for emergencyb parking brake cancel)	1	
21	Brake hose (transmission valve - reduction valve)	1	
22	Brake hose (reduction valve - parking brake chamber)	1	
23	Brake hose (reduction valve - charge valve drain)	1	
24	High-pressure piping clamp	15	Every 8000 hours
25	Fuel spray prevention cap	16	

Downloaded from www.Manualslib.com manuals search engine

https://truckmanualshub.com/

4.7 Maintenance schedule chart

4.7.1 Maintenance schedule chart

Service procedure		see page
4.9.1	**Initial 50 hours service (only after the first 50 hours)**	
	Check for loose wheel hub bolts, tighten	4-27
4.9.2	**Initial 250 hours service (only after the first 250 hours)**	
	Replace transmission oil filter element	4-28
	Replace hydraulic filter element	4-28
4.9.3	**When required**	
	Check, clean, or replace air cleaner element	4-28
	Clean inside of cooling system	4-31
	Check transmission oil level, add oil	4-36
	Check axle oil level, add oil	4-38
	Clean axle case breather	4-39
	Clean air conditioner condenser	4-40
	Check window washing fluid level, add fluid	4-40
	Clean radiator fins with compressed air	4-40
	Replace bucket teeth	4-42
	Replace bucket tooth with segment edge	4-43
	Check air conditioner	4-44
	Replace slow blow fuse	4-45
	Bleeding air from hydraulic tank	4-47
	Checking function of accumulator	4-49
	Selection and inspection of tires	4-50
4.9.4	**Check before starting**	
	Check before starting	4-52
4.9.5	**Every 50 hours service**	
	Drain water, sediment from fuel tank	4-52
4.9.6	**Every 100 hours service**	
	Lubricate rear axle pivot pin	4-53
	Check oil level in hydraulic tank, add oil	4-53
	Clean element in air conditioner fresh air filter	4-54

Downloaded from www.Manualslib.com manuals search engine

https://truckmanualshub.com/

Service procedure		see page
4.9.7	**Every 250 hours service**	
	Check battery electrolyte level	4-55
	Check parking brake	4-57
	Check alternator belt tension, adjust	4-58
	Check air conditioner compressor belt tension, adjust	4-59
	Check for loose wheel hub bolts, tighten	4-59
	Clean element in air conditioner recirculation filter	4-60
	Checking function of accumulator	4-60
	Lubricating	4-61
4.9.8	**Every 500 hours service**	
	Change oil in engine oil pan, replace engine oil filter cartridge	4-64
	Replace fuel pre-filter cartridge	4-65
4.9.9	**Every 1000 hours service**	
	Change oil in transmission case, clean strainer	4-68
	Replace transmission oil filter element	4-70
	Replace fuel filter cartridge	4-71
	Clean transmission case breather	4-73
	Wash fuel tank breather	4-74
	Lubricating	4-74
	Replace corrosion resistor cartridge	4-75
	Check of engine air intake piping clamps for looseness	4-75
4.9.10	**Every 2000 hours service**	
	Change oil in hydraulic tank, replace hydraulic filter element	4-76
	Clean hydraulic tank strainer	4-78
	Replace hydraulic tank breather element	4-79
	Change axle oil	4-80
NOTE:	The interval of 2000 hours for changing the axle oil is for standard operations. If the brake is used frequently or the brakes make a sound, change the oil after a shorter interval.	
	Replace element in air conditioner recirculation air filter, fresh air filter	4-81
	Clean PPC circuit strainer	4-82
	Check alternator	4-83
	Check engine valve clearance, adjust	4-83
	Check brake disc wear	4-83
	Check function of accumulator	4-84

Downloaded from www.Manualslib.com manuals search engine

https://truckmanualshub.com/

Service procedure		see page
4.9.11	**Every 4000 hours service**	
	Check water pump	4-85
	Check starting motor	4-85
	Lubricating	4-85
	Checking for loose engine high-pressure piping clamps, hardening of rubber	4-87
	Checking for missing fuel spray prevention cap, hardening of rubber	4-88
4.9.12	**Every 8000 hours service**	
	Replace high-pressure piping clamp	4-89
	Replace fuel spray prevention cap	4-89
	Overhaul starting motor and alternator	4-89
4.9.13	**Every 12000 hours service**	
	Replace injector assembly	4-89

Downloaded from www.Manualslib.com manuals search engine

https://truckmanualshub.com/

4.8 Replace injector assembly

This machine uses an engine that conforms with all exhaust gas regulations.

The exhaust gas regulations differ according to the applicable area. To ensure that the engine conforms with the regulations in the area of use and can fully display its performance, keep to the following periodic maintenance intervals when adjusting the injector.

If the periodic maintenance intervals are not observed correctly, the engine may not be able to display its performance fully, and it may also not conform with the regulations.

NOTE

When transporting a machine from an A regulation area to a B regulation area, always replace all the injector assemblies before transporting the machine to the new area.
Check with your Komatsu distributor to confirm if your area of operation is an A regulation area or a B regulation area.

- A Regulation area
  EPA regulation areas and areas with the regulations equivalent to EPA regulations.
- B Regulation area
  Areas not applying EPA regulations or areas not applying regulations equivalent to EPA regulations.

EVERY 12000 HOURS SERVICE

Replace injector assembly

Check the exhaust gas color visually. If there is any abnormality in the exhaust gas color, please ask your Komatsu distributor to carry out inspection or replacement. For details of the procedure if any abnormality is found, see "Engine (3-187)"“.

Downloaded from www.Manualslib.com manuals search engine

https://truckmanualshub.com/

4.9 Service procedure

4.9.1 Initial 50 hours service (only after the first 50 hours)

Carry out the following maintenance only after the first 50 hours.

Check for loose wheel hub bolts, tighten

If wheel hub nuts (1) are loose, tire wear will be increased and may cause accidents.

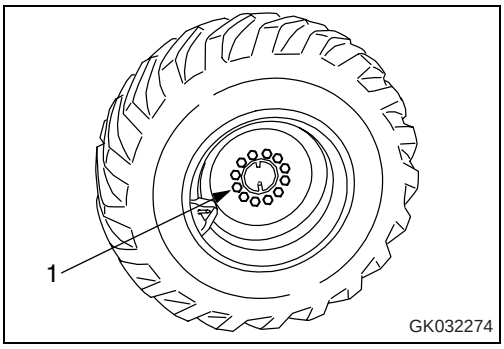

1. Check for loose nuts, and tighten if necessary.

   When checking for loose nuts, always turn the nuts in the direction of tightening to check.

   Tightening torque:
   927 ± 103 N·m (94.5 ± 10.5 kgf·m, 683.5 ± 75.9 lbft)

2. If any stud bolt is broken, replace all the stud bolts for that wheel.

Downloaded from www.Manualslib.com manuals search engine

https://truckmanualshub.com/

4.9.2 Initial 250 hours service (only after the first 250 hours)

Carry out the following maintenance only after the first 250 hours.

Replace transmission oil filter element

For details, see "Replace transmission oil filter element (4-70)".

Replace hydraulic filter element

For details, see "Change oil in hydraulic tank, replace hydraulic filter element (4-76)"

4.9.3 When required

Check, clean, or replace air cleaner element

WARNING

- If inspection, cleaning, or maintenance is carried out with the engine running, dirt will get into the engine and damage it. Always stop the engine before carrying out these operations.
- When using compressed air, there is danger that dirt may be blown around and cause serious injury.
  Always use safety glasses, dust mask, and other protective equipment.

Checking

If air cleaner clogging caution lamp (1) on the machine monitor lights up, clean the air cleaner element.

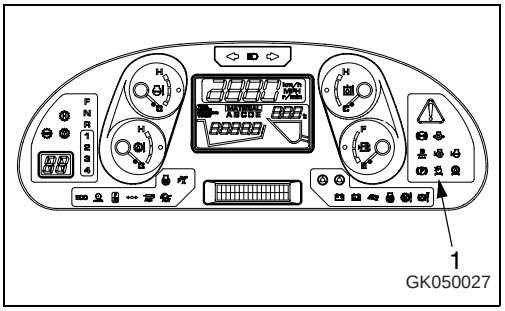

NOTE

Do not clean the element until the air cleaner clogging caution lamp lights up.
If the element is cleaned frequently before the air cleaner clogging caution lamp lights up, the air cleaner will not be able to display its performance fully and the cleaning efficiency will drop.
In addition, the frequency of dirt stuck to the element falling inside the inner element will increase.

A dust indicator is installed inside the engine hood on the left side of the machine. The dust indicator shows the condition of clogging of the air cleaner in 5 stages. This makes it possible to check how clean the element is and when it should be replaced.

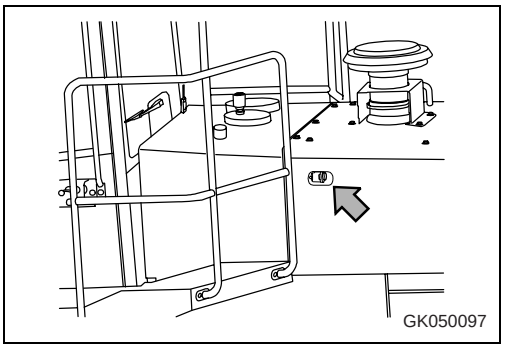

Downloaded from www.Manualslib.com manuals search engine

https://truckmanualshub.com/

Cleaning or replacing outer element

1. Open air cleaner inspection cover (2) on the right side of the engine hood.
2. Remove lock (3) of the cover, then remove cover (4).
3. Remove outer element.

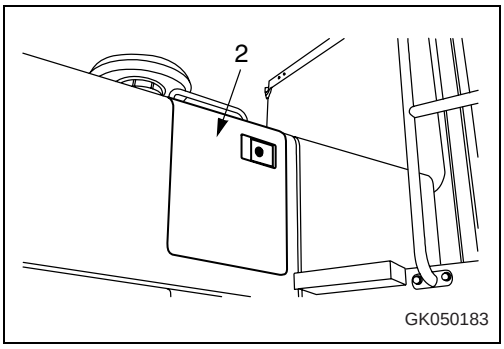

4. Clean the inside and the cover of the air cleaner body.

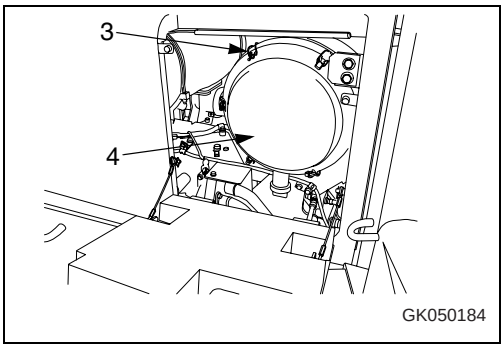

5. Direct dry compressed air (Max. 0.69 MPa (7 kgf/cm², 99.4 PSI)) from the inside of the outer element along its folds. Then direct the compressed air from the outside along the folds, and again from the inside.

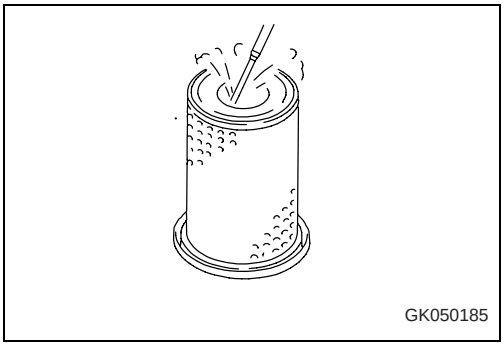

NOTE

- *After cleaning and drying the element, check it by shining a light through it. If any small holes or thin cracks are found, replace the element.*
- When cleaning the element, do not hit it or beat it against anything.
- Do not use an element that has damaged folds, gaskets, or seals.

6. After cleaning the element, install it, then install cover (4).

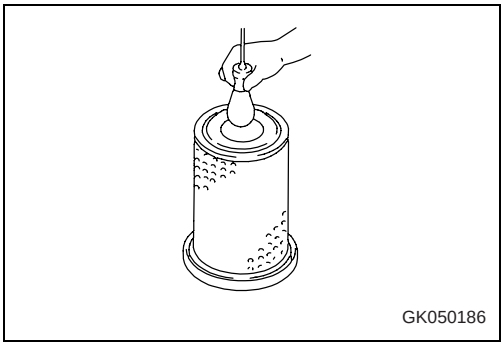

Downloaded from www.Manualslib.com manuals search engine

https://truckmanualshub.com/

7. After cleaning and replacing the element, push the dust indicator button to return the red display to its original position.

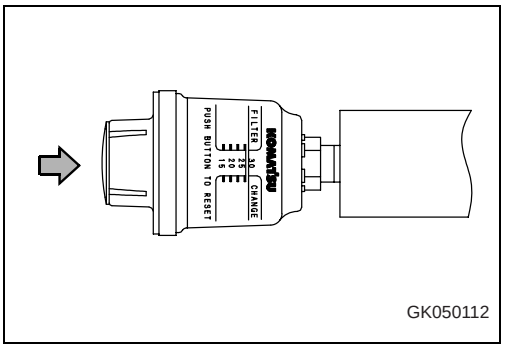

REMARK

After cleaning the element, press the button of the dust indicator. If the dust indicator shows the 5th stage even when the button is pressed, replace the element.
After the element is cleaned or replaced with a new element, the dust indicator may show the 3rd stage.

Replacing inner element

1. First remove the outer element, and then remove the inner element.
2. Cover the air connector side (outlet side) with a clean cloth or tape.
3. Clean the inside of the air cleaner body, then remove the cover installed in Step 2.
4. Fit a new inner element to the connector and tighten it with nuts.

NOTE

The inner element must not be used again even after cleaning. When replacing the outer element, replace the inner element at the same time.

5. Install the outer element and the cover.
6. After replacing the element, return the red display of the dust indicator to its original position.

Downloaded from www.Manualslib.com manuals search engine

https://truckmanualshub.com/

Clean inside of cooling system

WARNING

- Immediately after the engine is stopped, the engine coolant is hot and the pressure inside the radiator is high. Removing the cap and draining the water under this condition could cause burns. Allow the engine to cool down.
- Start the engine and flush the system. When standing up or leaving the operator's seat, set the work equipment lock lever to the LOCK position.
- For details of starting the engine, see "Check before starting engine, adjust (3-90)" and "Starting engine (3-108)" in the OPERATION section of the Operation and Maintenance Manual.
- When the undercover is removed, there is danger of touching the fan.
  Never go to the rear of the machine when the engine is running.

Clean the inside of the cooling system, change the coolant and replace the corrosion resistor according to the table below.

Antifreeze coolant	Interval of cleaning inside of cooling system and changeing antifreeze coolant	Replacing corrosion resistor
KOMATSU supercoolant (AF-NAC)	Every two years or every 4000 hours whichever comes first	unnecessary
Permanent type antifreeze (All-season type, *)	Every year (autumn) or every 2000 hours whichever comes first.	Every 1000 hours and when cleaning the inside of the cooling system and when changing coolant.

Permanent type antifreeze shall meet the requirements of ASTM D3306-03.

Stop the machine on level ground when cleaning or changing the coolant.

The coolant has the important function of preventing corrosion as well as preventing freezing.

Even in the areas where freezing is not an issue, the use of antifreeze coolant is essential.

KOMATSU machines are supplied with KOMATSU Supercoolant (AF-NAC). KOMATSU Supercoolant (AF-NAC) has excellent anticorrosion, antifreeze and cooling properties and can be used continuously for 2 years or 4000 hours.
KOMATSU Supercoolant (AF-NAC) is strongly recommended wherever available.

Downloaded from www.Manualslib.com manuals search engine

https://truckmanualshub.com/

To maintain the anticorrosion properties of Supercoolant (AF-NAC), always keep the density of Supercoolant between 30% and 68%.

When using KOMATSU Supercoolant (AF-NAC), there is no need to use a corrosion resistor.

When no corrosion resistor is used, use the special cover (600-411-9000). Please consult your KOMATSU distributor about the method of installing.

When deciding the ratio of antifreeze to water, check the lowest temperature in the past, and decide from the mixing table given below.

It is actually better to estimate a temperature about 10°C (18°F) lower when deciding the mixing rate.

The mixing ratio depends on the ambient temperature, but it should always be a minimum of 30% by volume (antifreeze/total amount of coolant x 100).

The freezing temperature of undiluted antifreeze is -15°C (5°F). Do not store undiluted antifreeze at a temperature of below -15°C (5°F).

Mixing rate of water and antifreeze

Min. atmospheric temperature	**°C**	-10	-15	-20	-25	-30
	°F	14	5	-4	-13	-22
Amount of antifreeze	**Liter**	36	43	49	55	60
	US gal	9.51	11.41	13.00	14.58	15.85
Amount of water	**Liter**	84	77	71	65	60
	US gal	22.29	20.29	18.70	17.12	15.85
Ratio	**%**	30	36	41	46	50

If the jobsite changes frequently and it is difficult to manage the density of the antifreeze, a density of up to 50% can be permitted.

Downloaded from www.Manualslib.com manuals search engine

https://truckmanualshub.com/

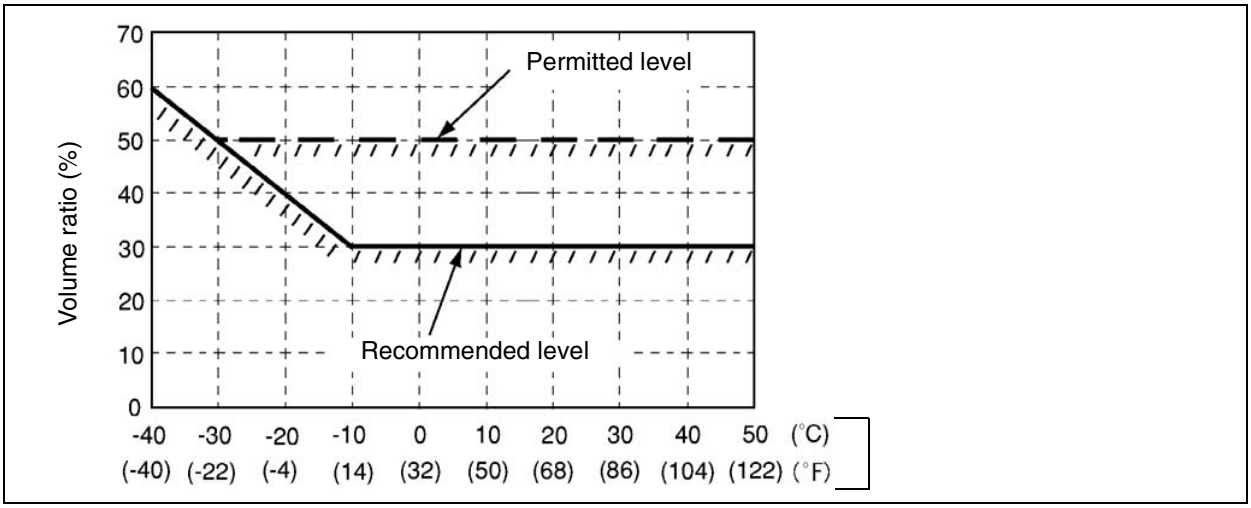

WARNING

Antifreeze is flammable, so keep it away from flame.
Antifreeze is toxic. When removing the drain plug, be careful not to get water containing antifreeze on you. If it gets in your eyes, flush your eyes with large amount of fresh water and see a doctor at once.

Always use KOMATSU genuine super coolant (AF-NAC) for the coolant.

Use tap water to dilute the coolant. If river water, well water or other such water supply must be used, contact your KOMATSU distributor.

We recommend use of an antifreeze density gauge to control the mixing proportions.

- Prepare a container whose capacity is larger than the specified coolant volume to catch drained coolant.
- Prepare a water inlet hose.

1. Stop the machine in a horizontal place.
2. Stop the engine.
3. Open engine side cover (1) on the right side of the machine.

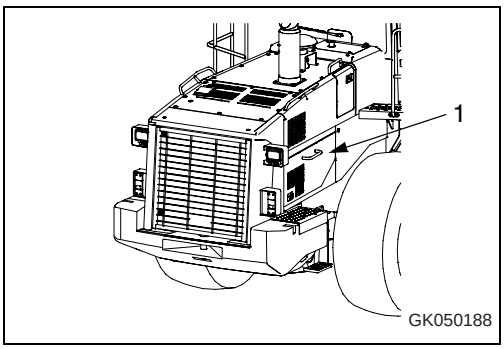

Downloaded from www.Manualslib.com manuals search engine

4. Tighten valve (3) of corrosion resistor (2).

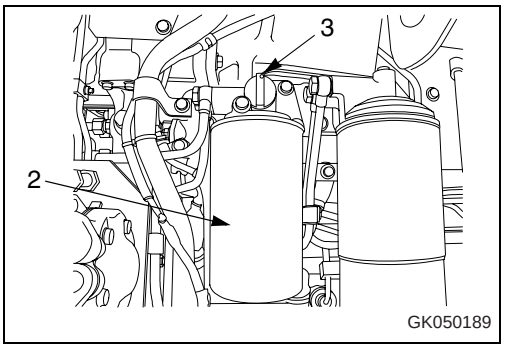

5. Check that the surface of the radiator cap sign is cool enough to be touched by hand, then slowly turn radiator cap (4) until it contacts the stopper to release the pressure.
6. Push radiator cap (4) further, turn it until it contacts the stopper, then remove it.
7. Remove air bleed plug (5).
8. Prepare a container to catch the supercoolant mix.

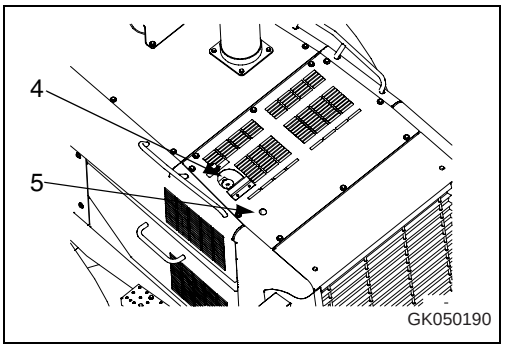

9. Open radiator drain valve (6) and oil cooler drain valve (7), and drain the water.
10. After draining the water, close radiator drain valve (6) and oil cooler drain valve (7).
11. Add tap water through radiator water filler (4).
12. When the radiator is full, start the engine, and run it at low idle.

    Keep the engine running at low idle for 10 minutes until the coolant temperature reaches more than 90°C (194°F).
13. Stop the engine.
14. Open radiator drain valve (6) and oil cooler drain valve (7), and drain the water.
15. After draining the water, close radiator drain valve (6) and oil cooler drain valve (7).

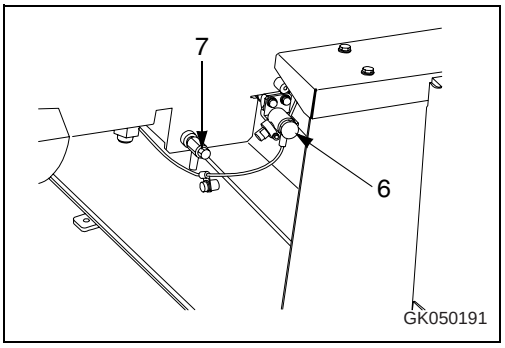

16. Replace corrosion resistor (2).

    For details of the procedure for replacing the corrosion resistor, see "Replace corrosion resistor cartridge (4-75)".
17. Open valve (3) of corrosion resistor (2).

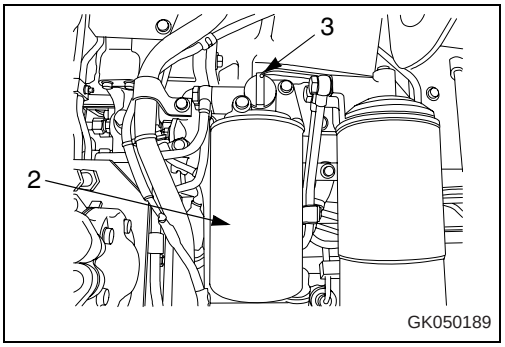

Downloaded from www.Manualslib.com manuals search engine

https://truckmanualshub.com/

18. Add undiluted supercoolant through radiator water filler (4).

19. Add tap water up to the mouth of the air bleed plug (5), then tighten plug (5).

    Tightening torque:
    22 ± 2.5 N·m {2.25 ± 0.25 kgf·m, 16.3 ± 1.8 lbft.}

20. Add tap water up to the mouth of radiator water filler (4).

    For details of the ratio for mixing supercoolant and water, see "Water and supercoolant mix ratio table".

21. Drain the coolant from sub-tank (8), then clean the inside of the sub-tank.

22. Add coolant to sub-tank (8) to a point between the FULL and LOW lines.

23. Start the engine, run at low idling for 5 minutes, then run at high idling for another 5 minutes. (This is to remove the air from the coolant.)

24. Stop the engine and wait for 3 minutes.

25. Loosen radiator cap (4) slightly to release the pressure, then remove the cap.

26. Add tap water through radiator water filler (4).

27. Tighten radiator cap (4).

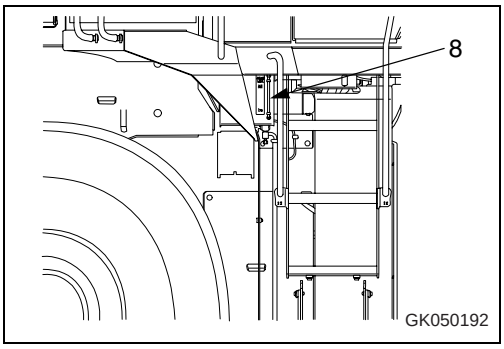

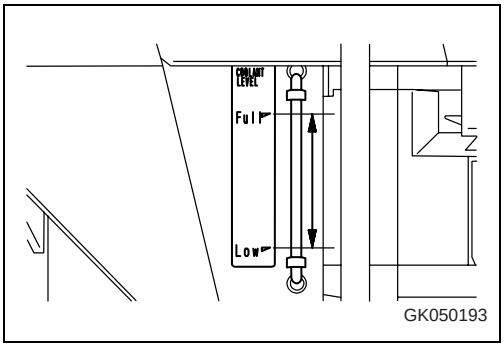

Downloaded from www.Manualslib.com manuals search engine

https://truckmanualshub.com/

Check transmission oil level, add oil

WARNING

The parts and oil are at high temperature immediately after the engine is stopped, and may cause burns. Wait for the temperature to go down before starting the work.

Carry out this procedure if there is any sign of oil on the transmission case or if there is oil mixed with the cooling water.

1. Stop the engine.

REMARK

Wait for at least 12 hours after stopping the engine before carrying out the inspection. If this is not done, there will be oil remaining at various places and it will be impossible to check the oil level correctly.

2. Open the cap of oil filler port (F), remove dipstick (G), and wipe the oil off with a cloth.

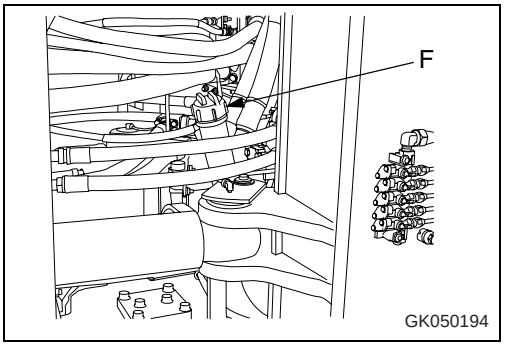

3. Insert dipstick (G) fully in the oil filler pipe (F), then take it out again.

4. The oil level should be between the H and L marks on dipstick (G).

   If the oil level is below the L mark, add oil through oil filler (F).

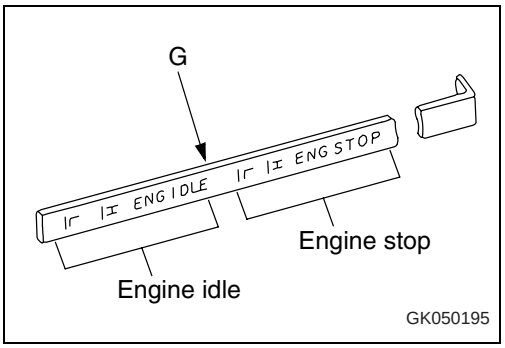

5. If the oil is above the H mark, drain the excess engine oil from drain plug (P), and check the oil level again.

6. If the oil level is correct, insert dipstick (G) in the dipstick guide, then tighten the cap.

   The dipstick has 2 level marks on one side: ENG STOP (for measuring when the engine is stopped) and ENG IDLE (for measuring when the engine is idling).

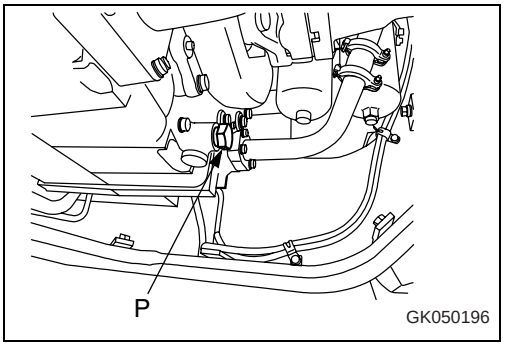

Downloaded from www.Manualslib.com manuals search engine

https://truckmanualshub.com/

Check the oil level at least 12 hours after the engine has stopped, and use the ENGINE STOP position.

It is also possible to check when the engine is running at low idling, but in that case, do as follows.

Method of checking level at idling

- When checking after leaving at idling (when heat is balanced in whole transmission as after actual work.

  User operating continuously.
  (check during lunch time or check during change of shift)

  - Run at idling for at least 15 minutes, then leave.
  - Check when torque converter oil temperature gauge is in middle of bottom scale.

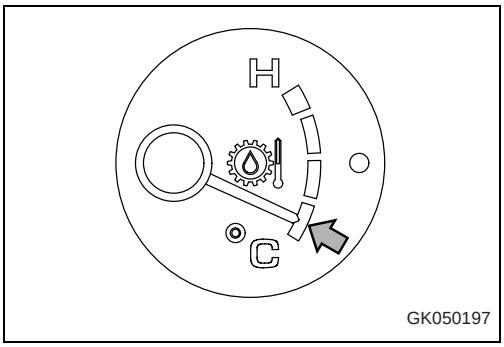

GK050197

- When checking after raising temperature with stall.

  When shipped from factory, etc.

  - When raising temperature with stall, check when torque converter oil gauge is between bottom scale and second scale from bottom.
  - Run at idling for at least 15 minutes, then leave.

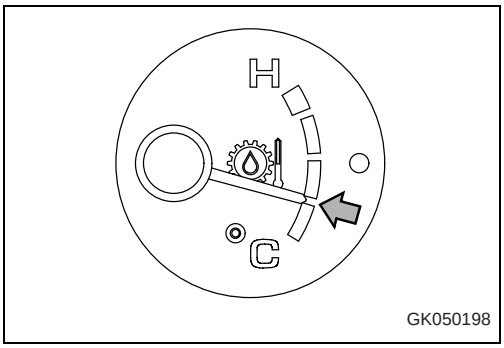

GK050198

Downloaded from www.Manualslib.com manuals search engine

https://truckmanualshub.com/

Check axle oil level, add oil

WARNING

- When checking the oil level, apply the parking brake and secure the front and rear frames with the safety bar.
- After stopping the engine, the parts and oil are at a high temperature. Wait for the temperature to go down before starting the operation.

Carry out this procedure if there is any sign of oil on the axle case.

Carry out the inspection with the machine on a horizontal road surface.

(If the road surface is at an angle, the oil level cannot be checked correctly.)

- A: Front
- B: Rear

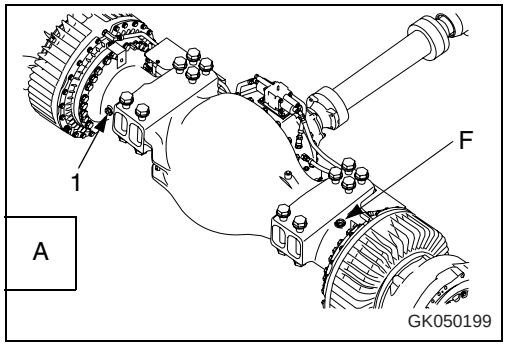

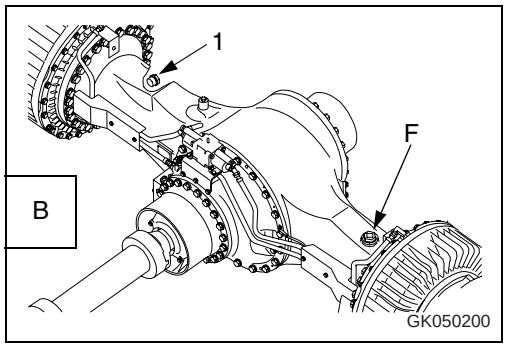

1. Stop the machine in a horizontal place.
2. Stop the engine, then wait for the oil temperature to go down.

REMARK

Remove the mud and dirt from around plug (1), then remove the plug.

3. Remove level plug (1).
4. Check that the oil level reaches the bottom of the plug hole.
5. If the oil is not near the bottom edge of the hole, add oil through oil filler (F).
6. If the oil level is correct, install plug (1).

   Tightening torque:
   152 ± 24 N·m {15.5 ± 2.5 kgf·m, 112 ± 18 lbft}

Downloaded from www.Manualslib.com manuals search engine

https://truckmanualshub.com/

Clean axle case breather

WARNING

When cleaning the axle breather, apply the parking brake and secure the front and rear frames with the safety bar.

- A: Front
- B: Rear

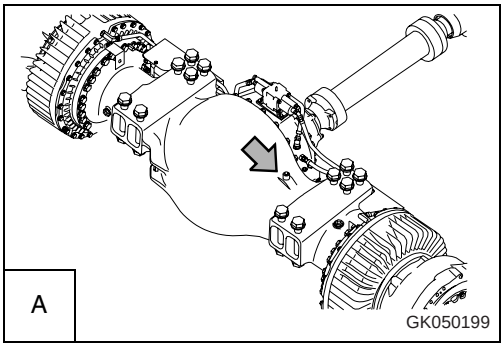

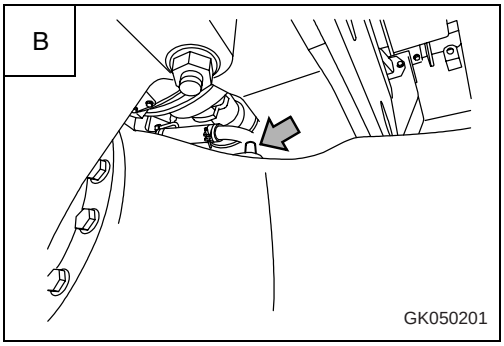

1. Stop the machine in a horizontal place.
2. Stop the engine.
3. Remove all mud and dirt from around the breather with a brush.
4. After removing the mud or dirt from around the breather, remove the breather, immerse it in cleaning fluid and clean it.

   When cleaning the breather, clean the breathers at two places (front and rear).

   After removing the breather, take steps to prevent dirt or dust from entering the mount.
5. Install the breather.

Downloaded from www.Manualslib.com manuals search engine

https://truckmanualshub.com/

Clean air conditioner condenser

WARNING

- Do not wash the condenser with a steam cleaner. There is danger that the condenser could overheat.
- If high-pressure water hits your body directly or dirt is sent flying, there is danger of personal injury. Always wear protective glasses, dust mask, and other protective equipment.

If there is mud or dust on the air conditioner condenser, clean it with water.

If the water pressure is too high, the fins may get deformed. When washing with a high pressure washing machine, apply the water from a reasonable distance.

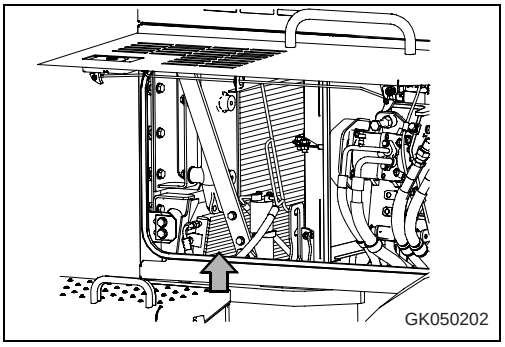

Check window washing fluid level, add fluid

Check the washing fluid levels in washer tank (1). When the fluid has run low, add automotive window washing fluid.

Be careful not to let dust get into the fluid.

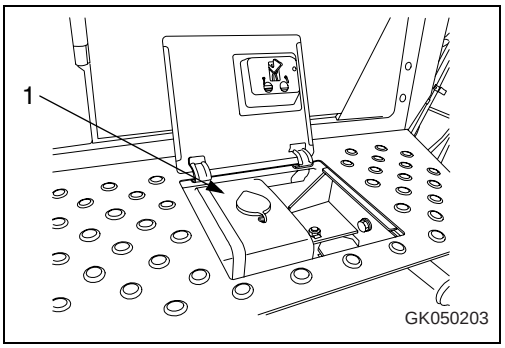

Clean radiator fins with compressed air

WARNING

- Never open the engine side cover when the engine is running. Stop the engine completely before starting the cleaning operation.
- If compressed air, pressurized water, or steam hits your body directly, or causes dirt to fly, it may lead to personal injury. Always wear safety glasses, dust mask, or other protective equipment.

Clean the radiator or cleaner if mud or dirt is stuck to it

Downloaded from www.Manualslib.com manuals search engine

https://truckmanualshub.com/

1. Stop the machine on horizontal ground and turn the parking brake switch ON.
2. Stop the engine.
3. Remove bolt (1) and open radiator grill (2).
4. Remove bolts (3), then swing the fan towards the grill.
5. Use compressed air to blow off the mud, dirt, or leaves clogging radiator fins.

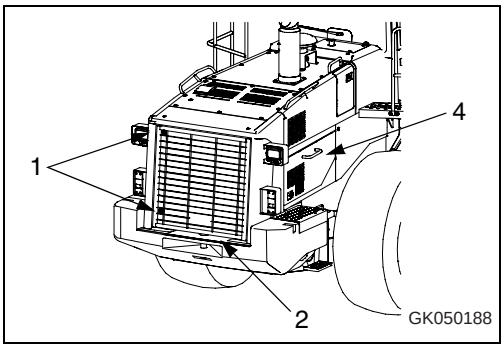

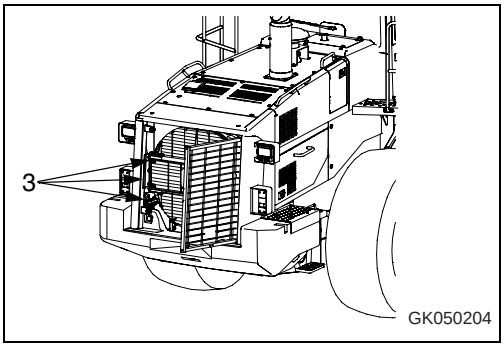

NOTE

- *If the steam jet nozzle is brought too close the radiator fins, it may damage the fins, so keep the nozzle a suitable distance away from the fins when cleaning.*
- *The guideline for the spray pressure is 9.8 MPa {100 kgf/cm², 1420 PSI}. With a nozzle diameter of 2 mm (0.1 in), keep at least 100 mm (3.9 in) away.*

REMARK

Steam or water can be used instead of compressed air.

6. Open cleaning cover (4) and blow out the dust from the front and rear.
7. Check the rubber hose. Replace with a new one if the hose is found to have cracks or to be hardened by aging.

   Also, check hose clamps for looseness.
8. After blowing out the dirt, close cleaning cover (4).
9. Close the fan and tighten bolts (3).
10. Close radiator grill (2), then tighten bolts (1).

NOTE

If the steam jet nozzle is brought too close to the radiator fins, it may damage the fins, so keep the nozzle a suitable distance away from the fins when cleaning.

Downloaded from www.Manualslib.com manuals search engine

https://truckmanualshub.com/

Replace bucket teeth

WARNING

- It is dangerous if the work equipment moves by mistake when the teeth are being replaced.
  Set the work equipment in a stable condition, stop the engine, and lock the work equipment control levers securely with the work equipment lock lever.
- If the pin is hit out with strong force, there is danger that the pin may fly out. Check that there is no one in the surrounding area.
- There is danger of pieces flying during the replacement operation, so always wear protective clothing, such as safety glasses and gloves.

Bucket with tip tooth

Replace the teeth before they wear down as far as the adapter.

1. Raise the bucket to a suitable height, then put blocks under the bucket to prevent the bucket from coming down.

   Raise the bucket so that the bottom surface of the bucket is horizontal.

2. After lowering the bucket onto the block, stabilize it, then stop the engine.

3. Remove pin (2) installed to the bucket, then remove tooth (1).

   Put a rod (slightly narrower than the pin) in contact with the hatched portion (either left or right) and tap pin (2) out to the opposite side.

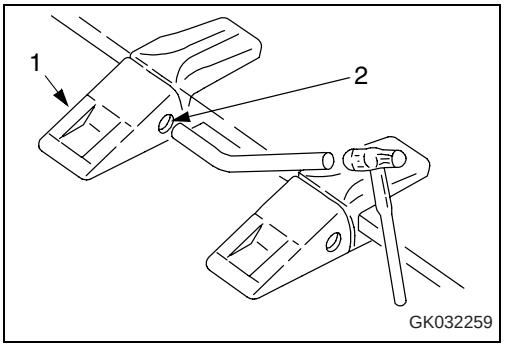

REMARK

If it cannot be removed by this method, for safety reasons, always contact your KOMATSU distributor to have the replacement carried out.

4. Fit new tooth (1) in adapter (3), push in pin (2) partially by hand, then knock it in with a hammer.

5. After operating the machine for a few hours, check that the pin does not come out.

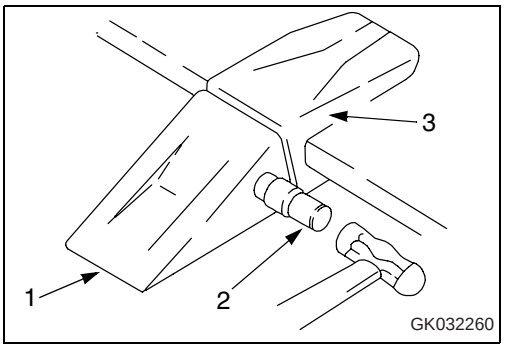

Downloaded from www.Manualslib.com manuals search engine

https://truckmanualshub.com/

Replace bucket tooth with segment edge

WARNING

- It is dangerous if the work equipment moves by mistake when the teeth are being replaced. Set the work equipment in a stable condition, stop the engine, and lock the work equipment control levers securely with the work equipment lock lever.
- Pieces may fly during the replacement operation, so always wear protective glasses, gloves, and other protective equipment.

Replace the bucket teeth and the segment edges before they wear down to the end face of the bucket.

1. Raise the bucket to a height greater than the height of the block.
2. Set the bucket so that the bottom of the bucket is horizontal to the block, then set the center of the bucket bottom on the block.
3. After lowering the bucket onto the block, stabilize it, then stop the engine.
4. Remove the bolt and nuts (1) and (2), then remove bucket tooth (3) and segment edge (4).
5. Clean the installation surface of bucket tooth (3) and segment edge (4).
6. Install a new tooth and segment edge to the bucket. When doing this, insert shims to remove any clearance between the tooth and top surface of the bucket.
7. Tighten the nut temporarily so that there is no clearance between the tooth and tip of the bucket, then hit the tip of the tooth with a hammer.

   Mounting bolt tightening torque

   - Mounting bolt for bucket tooth:
     883 to 1200N·m (90 to 122kgf·m, 651 to 882lbft)
   - Mounting bolt for segment edge:
     1600 to 2160N·m (163 to 220kgf·m, 1179 to 1591lbft)

   The segment edge can be turned over and used again.
8. After operating the machine for a few hours, tighten the mounting nuts again.

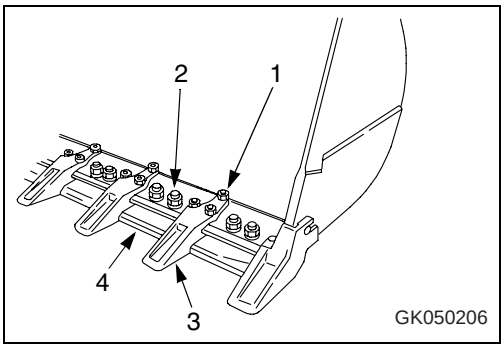

Downloaded from www.Manualslib.com manuals search engine

https://truckmanualshub.com/

Check air conditioner

Check level of refrigerant (gas)

WARNING

If the refrigerant of the conditioner system gets into your eyes or on your hands, it may cause loss of sight or frostbite. Do not touch the refrigerant. Never loosen any part of the refrigerant circuit.
Do not bring any flame close to any point where the refrigerant gas is leaking.

If the cooling effect of the air conditioner is poor, there may be lack of refrigerant (gas).

In this case, check sight glass (2) of receiver drier (1) on the right inside of the engine side cover.

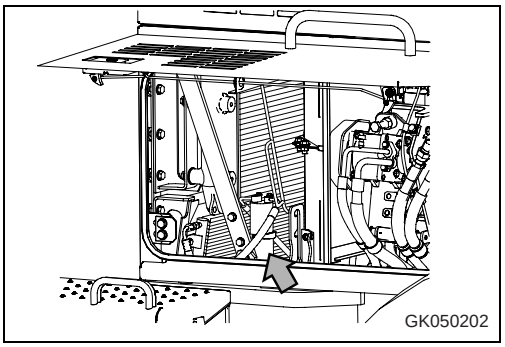

Before carrying out inspection, set to the following conditions.

- Start the engine and run it at approx. 1,500 rpm.
- Turn the air conditioner ON/OFF switch to the ON position.
- Set the air flow to the maximum position.
- Set the temperature to the lowest position.
- Open the doors and windows fully.
- Turn the air conditioner switch ON.

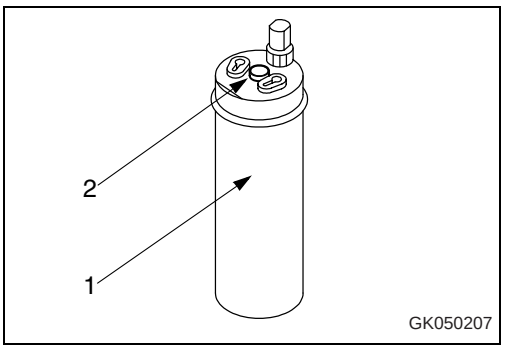

If the condition of sight glass (2) is “correct“ as shown in the diagram on the right, the condition is normal. (After the air conditioner switch is turned ON, a small number of bubbles will be seen, but after that, the fluid becomes a transparent, milky white color.)

If the condition of sight glass (2) is “insufficient“ as shown in the diagram on the right, there is lack of refrigerant, so ask your KOMATSU distributor to charge with refrigerant. (After the air conditioner switch is turned ON, bubbles can be seen continuously.)

Refrigerant	Condition in sight glass
Correct	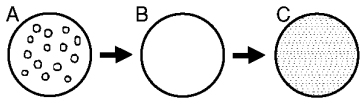
Insufficient	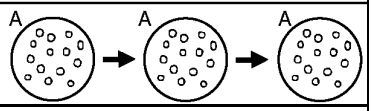

(A) Bubbles mixed with liquid refrigerant

(B) All refrigerant is clear liquid

(C) Oil and refrigerant are separated; liquid is thin milky white

Downloaded from www.Manualslib.com manuals search engine

https://truckmanualshub.com/

Operating the air conditioner off-season

Even during the off-season, operate the air conditioner for 3 - 5 minutes once a month to maintain the oil film at all parts of the compressor.

Replace slow blow fuse

Replacing slow blow fuse (A) and (B)

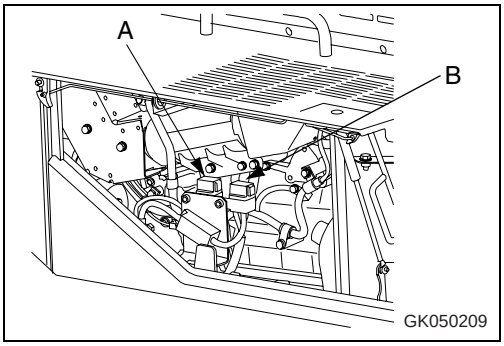

NOTE

- *Always turn the power OFF when replacing the slow blow fuse (turn the starting switch to the OFF position (A)).*
- *Always replace the slow blow fuse with a fuse of the same capacity.*

1. Turn the starting switch to the OFF position (A).
2. Remove the slow blow fuse box from the chassis.

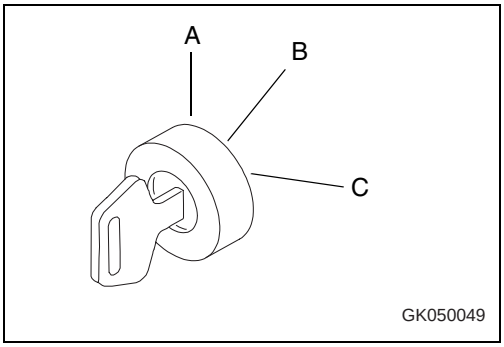

3. Open covers (1), (2), and (3) of the slow blow fuse box.

   Covers (2) and (3) can be removed easily by using protrusion (A) on the body as a fulcrum and levering the catch of the cover with a flat-headed screwdriver to release it.

4. Loosen screws (4) and (5), and remove.

   When screws (4) and (5) are removed, slow blow fuse (6) will also come off together with electric wiring (7) and (8).

5. Using screws (4) and (5), install a new slow blow fuse together with electric wiring 7 and 8 to the slow blow fuse box, then close covers (1), (2), and (3).
6. Install the slow blow fuse box to the chassis.

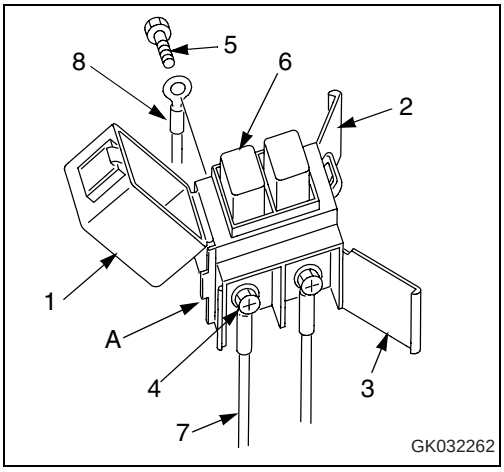

Downloaded from www.Manualslib.com manuals search engine

https://truckmanualshub.com/

Replacing slow blow fuse (C)

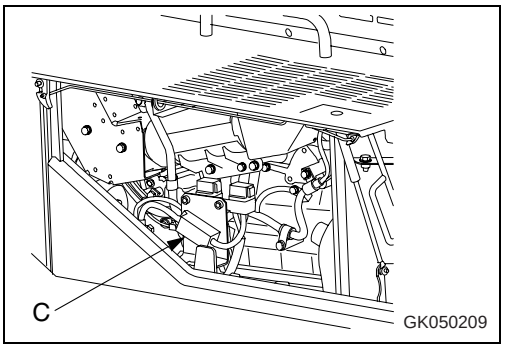

NOTE

- *Always turn the power OFF when replacing the slow blow fuse (turn the starting switch to the OFF position (A)).*
- *Always replace the slow blow fuse with a fuse of the same capacity.*

1. Turn the starting switch to the OFF position (A).

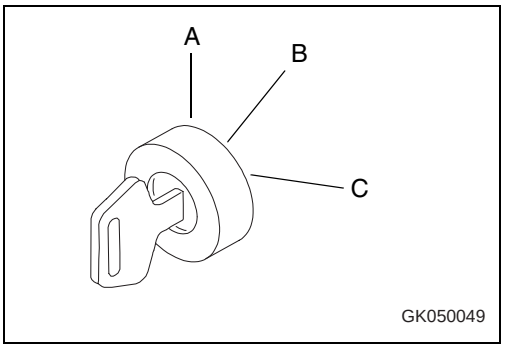

2. Open cover (1).
3. Remove nut (2), then replace fuse (3) with a new fuse.
4. Tighten nut (2).
5. Then close cover (1).

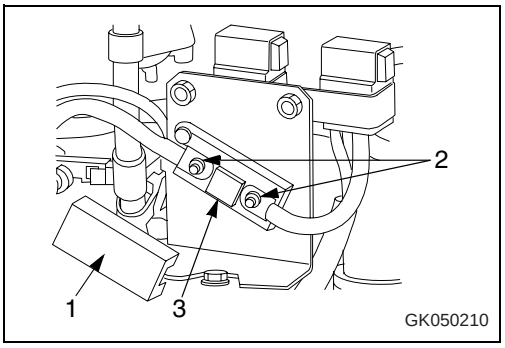

Downloaded from www.Manualslib.com manuals search engine

https://truckmanualshub.com/

Bleeding air from hydraulic tank

After replacing oil and filter element or cleaning strainer, bleed the air from the circuit.

When changing the oil in the hydraulic tank, or removing the piston pump, or removing the piping of the piston pump, bleed the air in the following way after assembling.

After bleeding air from piston pump, bleed air from hydraulic circuit.

Bleeding air from piston pump

NOTE

If the air is not bleed completely, the piston pump may be damaged, so always carry out the air bleeding operation correctly.

Before bleeding the air from the piston pump, check that the hydraulic is filled with oil up to the top of the sight gauge. (If the oil level is low, add oil.) The cap of the hydraulic tank remains removing, until the air bleeding of the piston pump finishes.

Leave the hydraulic tank cap off until the air is completely bled from the piston pump.

1. Start the engine.
2. Loosen air bleeders (1), (2), and (3), on the top of the piston pump.
3. Completely bleed the air until oil overflows from air bleeders (1), (2), and (3), tighten air bleeders (1), (2), and (3).
4. Check the oil level. If the oil level is low, add oil to the specified level.

   For details, see "Check oil level in hydraulic tank, add oil (4-53)".

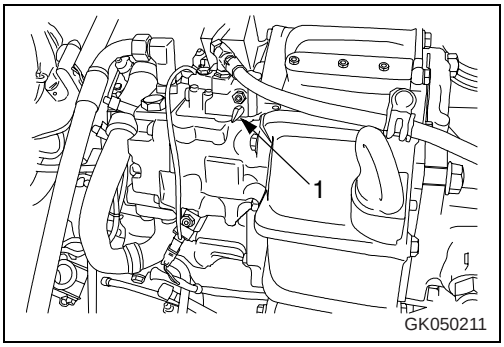

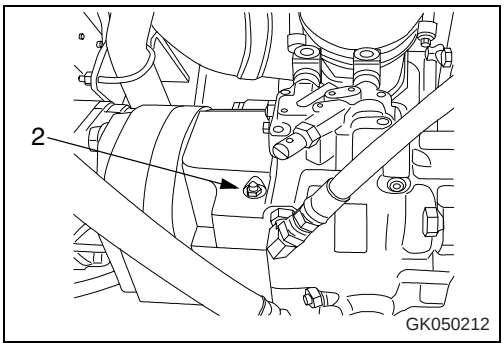

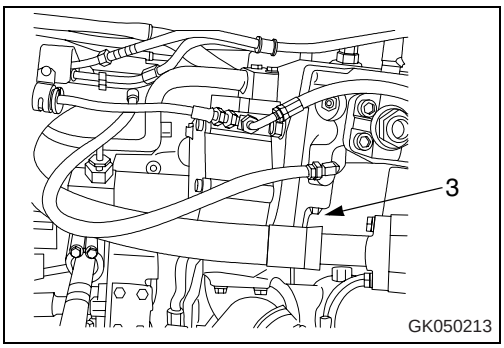

Downloaded from www.Manualslib.com manuals search engine

https://truckmanualshub.com/

Bleeding air from hydraulic circuit

1. Lower the bucket to the ground, stop the engine, and wait for approx. 5 minutes.

2. Check the hydraulic oil level. If the oil level is low, add oil to the specified level.

   For details, see "Check oil level in hydraulic tank, add oil (4-53)".

REMARK

Do not run the engine at high speed or operate the levers to the end of the stroke from the beginning. There is danger that the air inside the cylinder will damage the cylinder packing and reduce the operating force of the cylinder.

3. Run the engine at low idling and operate each hydraulic cylinders (of steering, bucket and lift arm) 4 to 5 times, stopping 100 mm (3.94 in) from stroke end.

4. Next, operate each hydraulic cylinder (steering, bucket, lift arm) 3 to 4 times to the end of the stroke.

5. Stop the engine.

6. Loosen air bleed plug (1) of the hydraulic tank and bleed the air from the hydraulic tank.

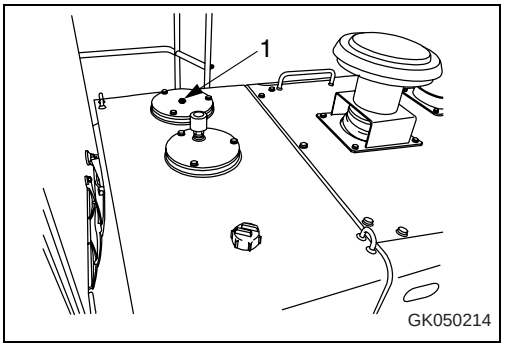

7. Tighten air bleed plug (1) of the hydraulic tank.

8. Check the hydraulic oil level. If the oil level is low, add oil to the specified level.

   For details, see "Check oil level in hydraulic tank, add oil (4-53)".

9. Start the engine and run at low idling.

10. Loosen air bleed plug (1) of the hydraulic tank and bleed the air from the filter tank.

11. Next, raise the engine speed and repeat the air bleeding procedure in Steps 3 to 8. Repeat this operation until no more air comes out from the plug.

    If the engine is run at high speed at first, or if the cylinder is moved to the end of its stroke, the air in the cylinder may damage the piston packing, etc.

12. After bleeding the air, tighten the air bleeding plug (1).

    Tightening torque of the plug:
    11.3 ± 1.47 N·m (1.15 ± 0.15 kgf·m, 8.3 ± 1.1 lbft)

13. Check the hydraulic oil level. If the oil level is low, add oil to the specified level.

    For details, see "Check oil level in hydraulic tank, add oil (4-53)".

Downloaded from www.Manualslib.com manuals search engine

https://truckmanualshub.com/

Checking function of accumulator

For details of handling the accumulator, see Section "Accumulator (2-34)".

Accumulator for E.C.S.S.

When the E.C.S.S. switch is ON, the hydraulic spring effect of the accumulator absorbs the up-and-down motion of the machine during travel and reduces the swaying.

Drive the machine and compare the up-and-down movement of the machine during travel when the E.C.S.S. switch is ON and when it is OFF.

If there is no change in the up-and-down movement of the machine, the gas pressure in the accumulator has probably dropped.

Please contact your KOMATSU distributor to have the accumulator inspected.

REMARK

Carry out the inspection with the speed range set to 2 - 4, with the machine traveling at a speed of at least 5 km/h. If the speed range is 1st or the machine is traveling at a speed of less than 5 km/h, the E.C.S.S. will not be actuated even if the E.C.S.S. switch is turned ON.

Downloaded from www.Manualslib.com manuals search engine

https://truckmanualshub.com/

Selection and inspection of tires

WARNING

If a tire or a rim is handled wrongly, the tire may burst or may be damaged and the rim may be broken and scattered, and that can cause serious injury or death.
Since maintenance, disassembly, repair and assembly of the tires and rims require special equipment and skill, be sure to ask a tire repair shop to carry out the work.
Do not heat or weld the rim to which the tire is installed. Do not make a fire near the tire.

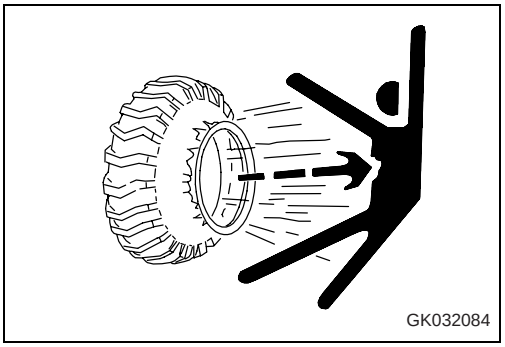

Selection of tires

WARNING

Select the tires according to the conditions of use and the weight of the attachments on the machine. Use only specified tires and inflate them to the specified pressure.

Select the tires according to the conditions of use and the weight of the attachments of the machine. Use the following table.

Since the travel speed indicated on the speedometer varies with the tire size, consult your KOMATSU distributor when using optional tires.

		Maximum load [kg (lb)]	Tire size	Remark
Standard	Front	15,900 (35,060)	29.5-25-22PR (L3 Rock)	Type 3 for conatruc-tion
Standard	Rear	15,900 (35,060)	29.5-25-22PR (L3 Rock)	

Downloaded from www.Manualslib.com manuals search engine

https://truckmanualshub.com/

Check inflation pressure of tires

WARNING

When inflating a tire, check that no one will enter the working area. Use an air chuck which has a clip and which can be fixed to the air valve.
While inflating the tire, check the inflation pressure occasionally so that it will not rise too high.
If the rim is not fitted normally, it may be broken and scattered while the tire is inflated. To ensure safety, place a guard around the tire and do not work in front of the rim but work on the tread side of the tire.
Abnormal drop of inflation pressure and abnormal fitting of the rim indicate trouble in the tire or rim. In this case, be sure to ask a tire repair shop to carry out repairs.
Be sure to observe the specified inflation pressure.
Do not adjust the inflation pressure of the tires just after high-speed travel or heavy-duty work.

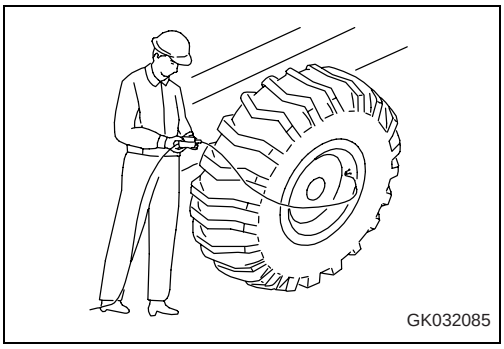

Check

Measure the inflation pressure with a tire pressure gauge while the tires are cool before starting work.

Inflation of tires

Adjust the inflation pressure properly.

When inflating a tire, use an air chuck which can be fixed to the air valve of the tire as shown in the figure. Do not work in front of the rim but work on the tread side of the tire.

The proper inflation pressure is shown below.

Supplier	Tire size	Front wheels		Rear wheels	
		bar	PSI	bar	PSI
Standard	29.5-25-22PR (L3 Rock)	4.5	69.3	4.0	56.8

NOTE
The optimum inflation pressure differs according to the type of work. For details, see "Handling the tires (3-157)".

Downloaded from www.Manualslib.com manuals search engine

https://truckmanualshub.com/

4.9.4 Check before starting

Check before starting

For the following items, see "Check before starting (3-94)".

- Check monitor panel
- Check dust indicator
- Drain water from fuel pre-filter
- Check coolant level, add coolant
- Check oil level in engine oil pan, add oil
- Check fuel level, add fuel
- Clean radiator fins by rotating cooling fan in reverse
- Check electric wiring
- Check parking brake
- Check brake pedal
- Check inflation pressure of tires

4.9.5 Every 50 hours service

Drain water, sediment from fuel tank

1. Prepare a container to catch the fuel and place it under the fuel tank.
2. Open the drain valve on the right side of the fuel tank and drain out all the water and sediment collected at the bottom of the tank.
3. When all the water and sediment has drained out, close the drain valve.

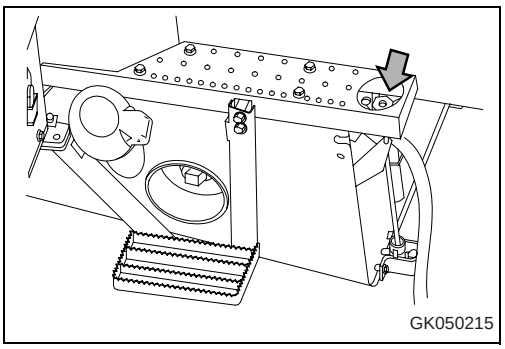

Downloaded from www.Manualslib.com manuals search engine

https://truckmanualshub.com/

4.9.6 Every 100 hours service

Maintenance for every 50 hours service should be carried out at the same time.

Lubricate rear axle pivot pin

(3 places)

1. Using a grease pump, pump in grease through the grease fittings marked by the arrows.
2. After greasing, wipe off any old grease that was pushed out.

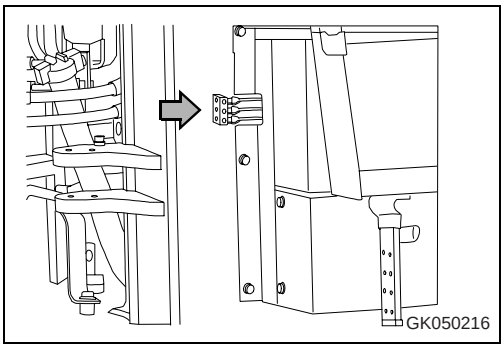

Check oil level in hydraulic tank, add oil

WARNING

- The parts and oil are at high temperature after the engine is stopped, and may cause burns. Wait for the temperature to go down before starting the work.
- When removing the oil filler cap, turn it slowly to release the internal pressure, then remove it.

1. Lower the bucket horizontally to the ground and stop the engine. Wait for 5 minutes, then check sight gauge (G). The oil level should be between the H and L marks.

NOTE

Do not add oil above the H line. This will damage the hydraulic circuit or cause the oil to spurt out. If oil has been added to above the H level, stop the engine and wait for the hydraulic oil to cool down, then drain the excess oil from drain plug.

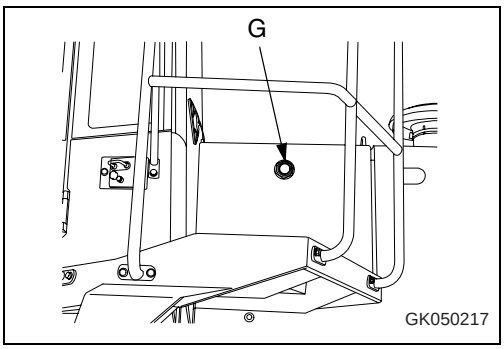

2. If level is below the L mark, add oil through filler (F) at top of the hydraulic tank.

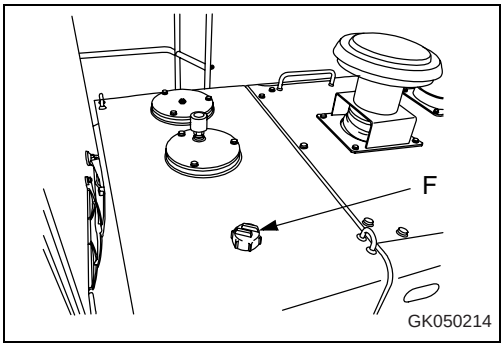

Downloaded from www.Manualslib.com manuals search engine

https://truckmanualshub.com/

Clean element in air conditioner fresh air filter

WARNING

If compressed air is used, there is danger that dirt may fly and cause personal injury.
Always wear safety glasses, dust mask, and other protective equipment.

If the air conditioner has been used, the air filter should be cleaned.

Stop the air conditioner before cleaning the element.

1. Stop the engine.
2. Open cover (1).
3. Remove element (2) and clean it.
4. Direct dry compressed air (less than 0.69 MPa (7 kgf/cm², 99.4 PSI)) to the element from inside along its folds, then direct it from outside along its folds and again from inside.
5. Install element (2).
6. Close the cover (1)

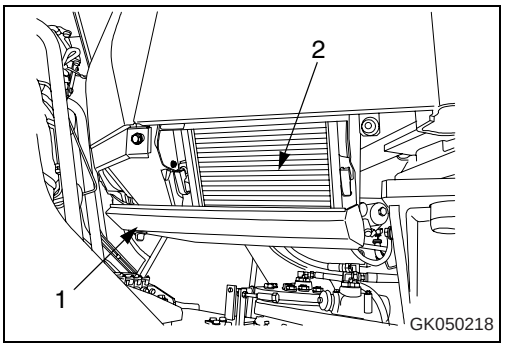

Downloaded from www.Manualslib.com manuals search engine

https://truckmanualshub.com/

4.9.7 Every 250 hours service

Maintenance for every 50 and 100 hours service should be carried out at the same time.

Check battery electrolyte level

Carry out this check before operating the machine.

WARNING

- Do not use the battery if the battery electrolyte level is below the (MINIMUM) LOWER LEVEL line. This will accelerate deterioration of the inside of the battery and reduce the service life of the battery. In addition, it may also cause an explosion.
- The battery generates flammable gas and there is danger of explosion, so do not bring fire or sparks near the battery.
- Battery electrolyte is dangerous. If it gets in your eyes or on your skin, wash it off with a large amount of water and consult a doctor.
- When adding distilled water to the battery, do not allow the battery electrolyte to go above the (MAXIMUM) UPPER LEVEL line. If the electrolyte level is too high, it may leak and cause damage to the paint surface or corrode other parts.

NOTE

When adding distilled water in cold weather, add it before starting operations in the morning to prevent the electrolyte from freezing.

Try to check the electrolyte level on the daily basis. Be sure to check it at least once a month.

When checking electrolyte level from side of battery

If it is possible to check the electrolyte level from the side of the battery, check as follows.

1. Use a wet cloth to clean the area around the electrolyte level lines and check that the electrolyte level is between the UPPER LEVEL (U.L.) and LOWER LEVEL (L.L.) lines.
   If the battery is wiped with a dry cloth, static electricity may cause a fire or explosion.

   If the battery is wiped with a dry cloth, static electricity may cause a fire or explosion.

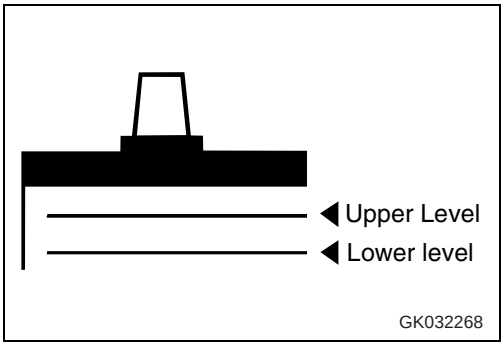

Downloaded from www.Manualslib.com manuals search engine

https://truckmanualshub.com/

2. If the electrolyte level is below the midway point between the UPPER LEVEL (U.L.) and LOWER LEVEL (L.L.) lines, remove cap (1) and add distilled water to the U.L. line.

3. If distilled water has been added to any cell of cap (1), add distilled water also to the other cells.

4. Clean the vents of the battery caps, then close the caps securely.

   Keep the top of the battery clean and wipe it with a wet cloth.

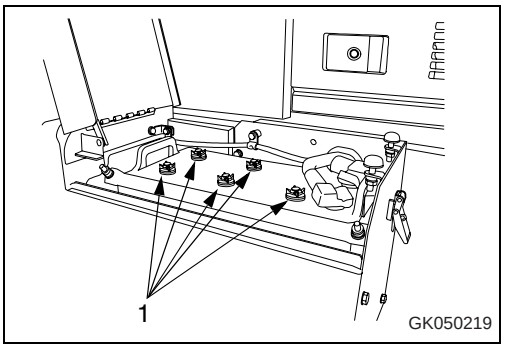

REMARK

If distilled water is added to above the UPPER LEVEL (U.L.) line, use a syringe to lower the level to the UPPER LEVEL (U.L.) line. Neutralize the removed fluid with baking soda (sodium bicarbonate), then flush it away with a large amount of water or consult your KOMATSU distributor or battery maker.

When it is impossible to check electrolyte level from side of battery

If it is impossible to check the electrolyte level from the side of the battery, or there is no display of the UPPER LEVEL line on the side of the battery, check as follows.

1. Remove cap (1) at the top of the battery, look through the water filler port, and check the electrolyte surface. If the electrolyte does not reach the sleeve, add distilled water so that the level reaches the bottom of the sleeve (MAXIMUM) (UPPER LEVEL line) without fail.

2. If distilled water has been added to any cell of cap (1), add distilled water also to the other cells.

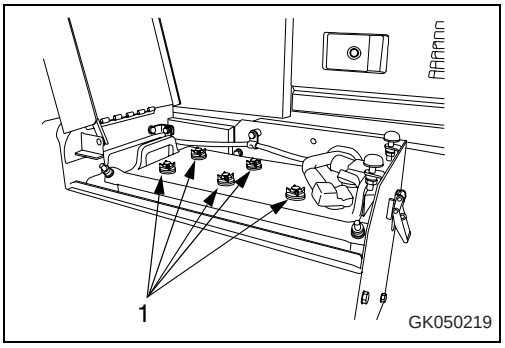

Use the diagram below for reference, and check if the electrolyte reaches the bottom of the sleeve.

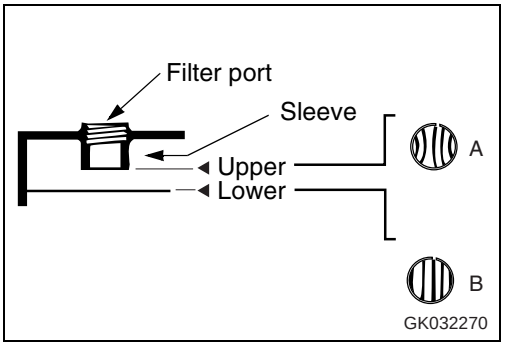

A	Correct level The electrolyte level is up to the bottom of the sleeve, so the surface tension causes the surface to rise and the plate appears to be warped.
B	Too low (level) The electrolyte level is not up to the bottom of the sleeve, so the plate appears to be normal.

Downloaded from www.Manualslib.com manuals search engine

https://truckmanualshub.com/

3. After adding distilled water, tighten cap (1) securely.

REMARK

If distilled water is added to above the bottom of the sleeve, use a syringe to lower the level to the bottom of the sleeve. Neutralize the removed fluid with baking soda (sodium bicarbonate), then flush it away with a large amount of water or consult your KOMATSU distributor or battery maker.

When it is possible to use indicator to check electrolyte level

If it is possible to use an indicator to check the electrolyte level, follow the instructions given.

Check parking brake

1. Set the machine on a dry downhill slope, press the parking brake switch to the ON position, and check if the parking brake hold the machine in position.
2. If any problem is found, please contact your KOMATSU distributor.

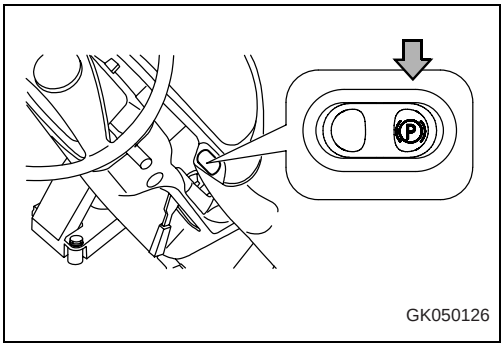

Downloaded from www.Manualslib.com manuals search engine

https://truckmanualshub.com/

Check alternator belt tension, adjust

Checking

The standard deflection for the drive belt is about 15 mm (0.6 in) when pressed by thumb 58.8 N (about 6 kgf, 43.4lb) at a point midway between the drive pulley and alternator pulley.

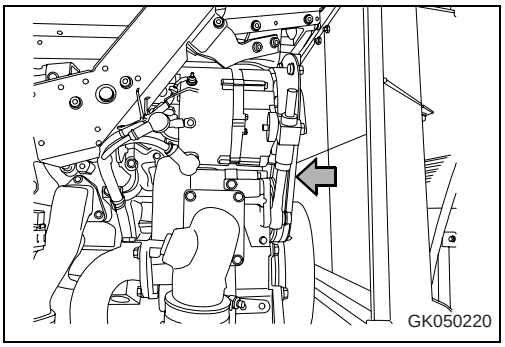

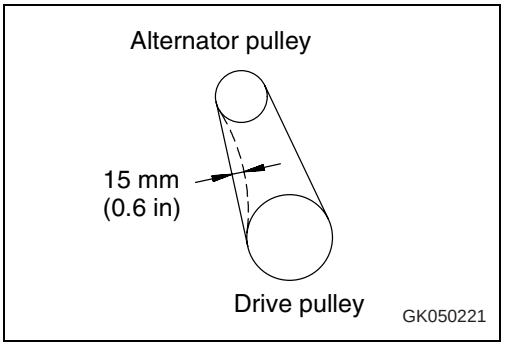

Adjusting

1. Loosen bolts (1), (2) and nut (3).
1. Turn nut (4) to the right to move alternator (5) and adjust so that the deflection of the belt is approx. 15 mm (0.6 in) {approx. 58.8 N {6 kgf)}.

   Tighten nut (4) to increase the tension of the belt; loosen nut (4) to reduce the tension of the belt.
2. Tighten bolts (1), (2) and nut (3) to secure alternator (5).
3. Check each pulley for damage, wear of the V-groove, and wear of the V-belt. Be particularly careful to check that the V-belt is not in contact with the bottom of the V-groove.
4. If the belt has elongated and there is no more allowance for adjustment, or if the belt is cut or cracked, replace the belt.
5. After replacing the belt, operate for one hour, then adjust again.

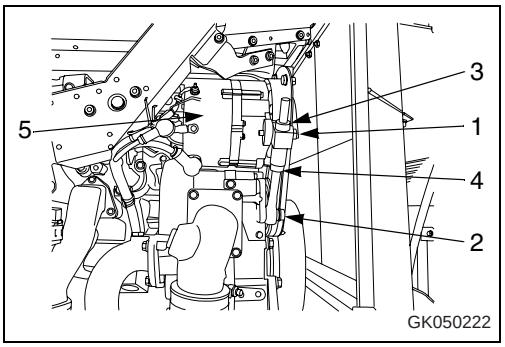

Downloaded from www.Manualslib.com manuals search engine

https://truckmanualshub.com/

Check air conditioner compressor belt tension, adjust

Checking

Belt deflection (a) should be 5 to 10 mm (0.2 to 0.4 in) when pressed with a finger force of approx. 58.8 N (6kgf) at a point midway between the air compressor pulley and drive pulley.

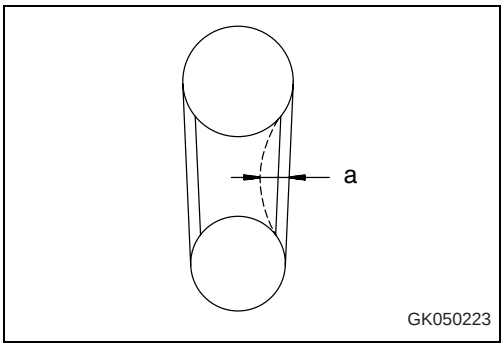

Adjusting

1. Loosen bolts (1), (2) and nut (3).
2. Use adjustment bolt (4) to adjust the belt tension so that deflection (a) is 5 -10 mm (0.2 - 0.4 in) when a point midway between the air conditioner compressor pulley and the drive pulley is pressed with the thumb with a force of approx. 58.8 N {6 kgf}.
3. Tighten the adjustment bolt to reduce the tension of the belt; loosen the adjustment bolt to increase the tension of the belt.
4. Tighten bolt (4) and secure in position with locknut (3).
5. Tighten bolt (1) and secure the air conditioner compressor in position.
6. Check each pulley for damage, wear of the V-groove, and wear of the V-belt. Be particularly careful to check that the V-belt is not in contact with the bottom of the V-groove.
7. If the belt has elongated and there is no more allowance for adjustment, or if the belt is cut or cracked, replace the belt.

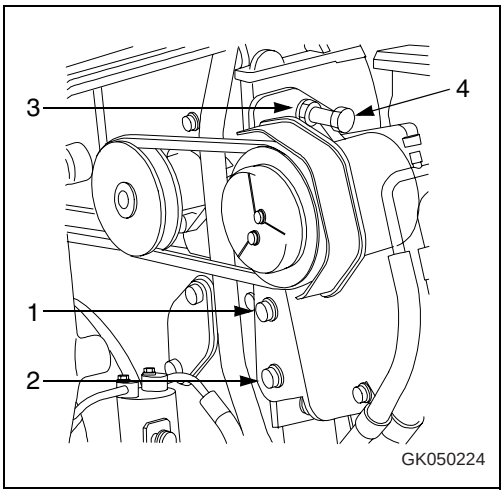

Check for loose wheel hub bolts, tighten

If wheel hub nuts (1) are loose, tire wear will be increased and may cause accidents.

1. Check for loose nuts, and tighten if necessary.

   When checking for loose nuts, always turn the nuts in the direction of tightening to check.

   Tightening torque:
   927 ± 103 N·m (94.5 ± 10.5 kgf·m, 683.5 ± 75.9 lbft)

2. If any stud bolt is broken, replace all the stud bolts for that wheel.

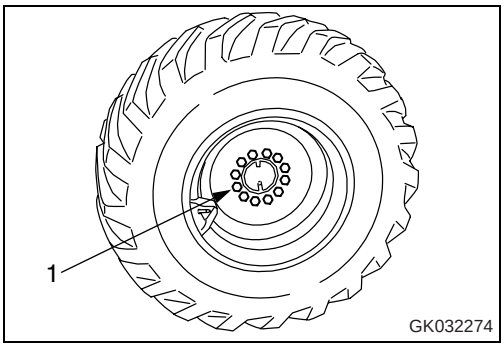

Downloaded from www.Manualslib.com manuals search engine

https://truckmanualshub.com/

Clean element in air conditioner recirculation filter

1. Open filter inspection lid (1) and pull out filter (2).
2. Clean with compressed air in the same way as for the fresh air filter.

   If the filter is extremely dirty, rinse it in water.

   After rinsing the filter, dry it completely before installing it again.

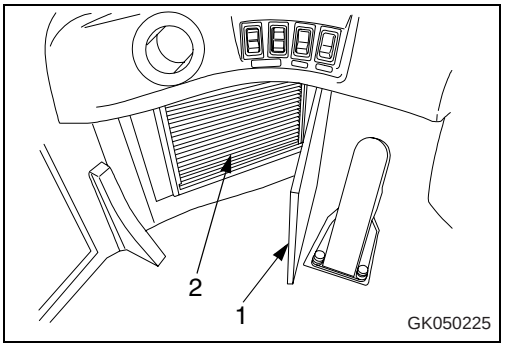

Checking function of accumulator

For details of handling the accumulator, see "Accumulator (2-34)".

Brake accumulator

If the engine stops when the machine is traveling, the oil pressure in the accumulator can be used to apply the brake as an emergency measure.

1. Stop the machine on level ground and lower the work equipment completely to the ground.
2. Apply the parking brake.
3. Start the engine, run it at a mid-range speed for 1 minute, then stop the engine.
4. Turn the starting switch key to the ON position and depress the brake pedal repeatedly.
   - If the brake oil pressure caution lamp does not light up even when the brake is depressed 6 times, the gas pressure in the accumulator is normal.
   - If the brake oil pressure caution lamp lights up when the brake has been depressed 5 or less times, the gas pressure in the accumulator has probably dropped. Please contact your KOMATSU distributor to have the accumulator inspected.

REMARK

Carry out the check within 5 minutes after stopping the engine. If the machine is left with the engine stopped, the accumulator pressure will drop and it will be impossible to check the cause of the problem.

Downloaded from www.Manualslib.com manuals search engine

https://truckmanualshub.com/

Lubricating

NOTE

On jobsites where there is a lot of heavy-duty work, or on jobsites where operations are carried out continuously for more than eight hours, reduce the greasing interval and carry out greasing more frequently.

1. Put the work equipment horizontally in contact with the ground, then stop the engine.
2. Using a grease pump, pump in grease through the grease fittings marked by the arrows.
3. After greasing, wipe off any old grease that was pushed out.

NOTE

- *During the initial breaking in for a new machine, carry out lubrication every 10 hours for the first 50 hours of operation.*
- *We recommend use of Hypergrease (G2-T or G2-TE) for lubrication until the initial breaking in is completed.*

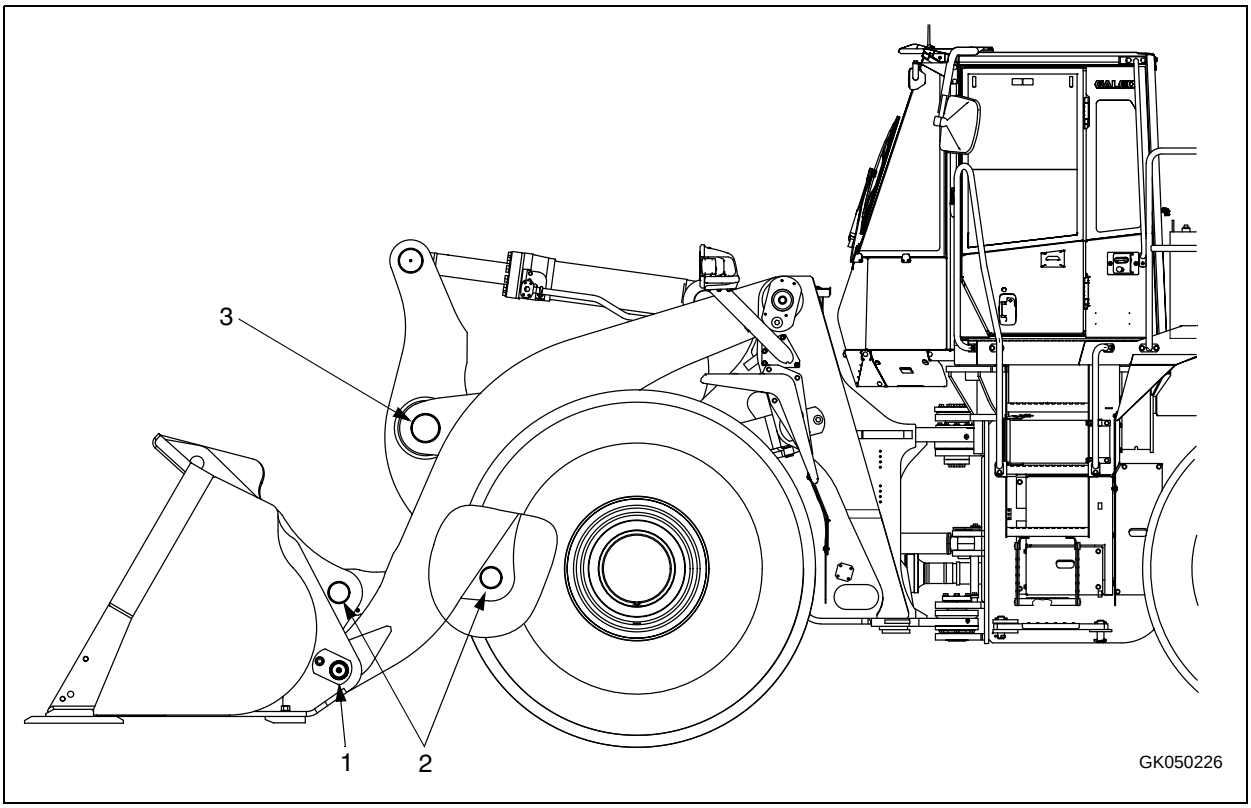

Downloaded from www.Manualslib.com manuals search engine

https://truckmanualshub.com/

(1) Bucket pin (2 places)

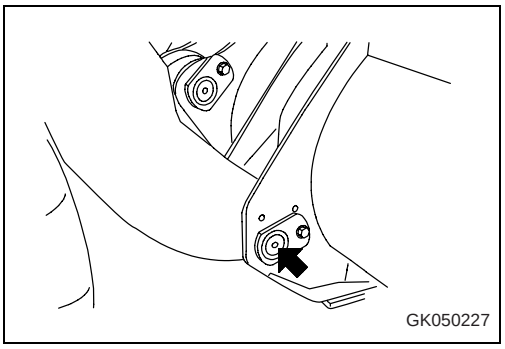

(2) Bucket link pin (2 places)

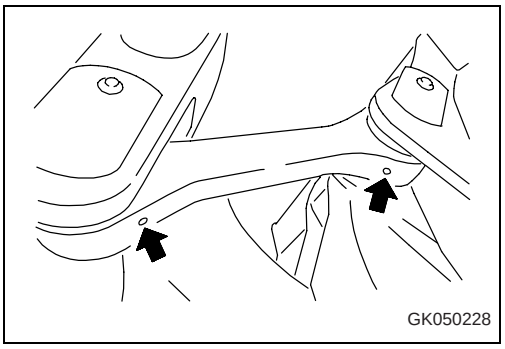

(3) Tilt lever pin (1 place)

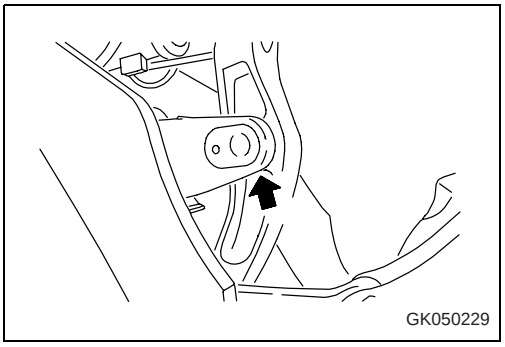

(4) Lift cylinder pin (4 places)

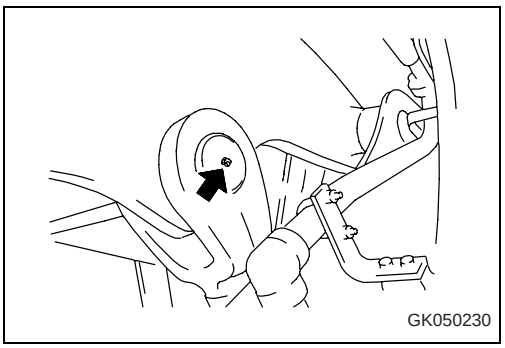

(5) Steering cylinder bottom end (2 places)

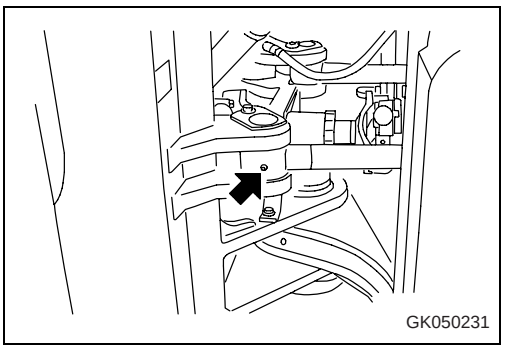

Downloaded from www.Manualslib.com manuals search engine

https://truckmanualshub.com/

(6) Dump cylinder rod end (1 place)

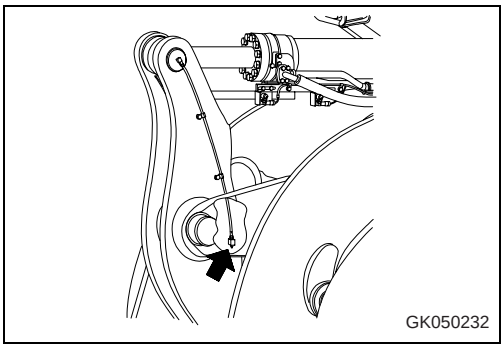

(7) Lift arm pivot pin (left)

(8) Lift arm pivot pin (right)

(9) Dump cylinder bottom pin

(10) Lift cylinder pin (right)

(11) Lift cylinder pin (left)

(12) Steering cylinder rod end (right)

(13) Steering cylinder rod end (left)

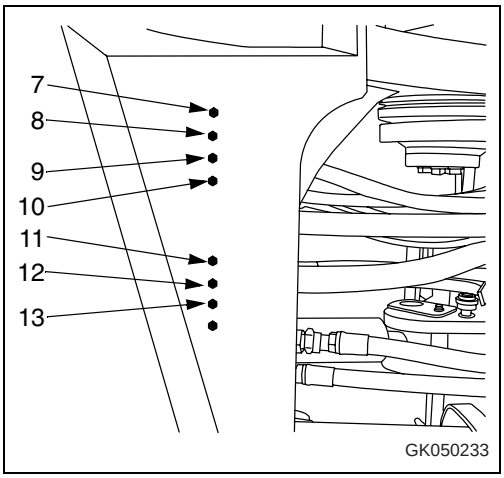

Downloaded from www.Manualslib.com manuals search engine

https://truckmanualshub.com/

4.9.8 Every 500 hours service

Maintenance for every 50, 100 and 250 hours service should be carried out at the same time.

Change oil in engine oil pan, replace engine oil filter cartridge

WARNING

- The parts and oil are at high temperature after the engine is stopped, and may cause burns. Wait for the temperature to go down before starting the work.
- When removing the oil filler cap, turn it slowly to release the internal pressure, then remove it.

- Refill capacity: 45 liters (11.88 US gal)
- Prepare a filter wrench

1. Stop the engine and wait for the temperature at all parts to go down.
2. Open the engine side cover on the right side of the chassis.
3. Open oil filler (F).

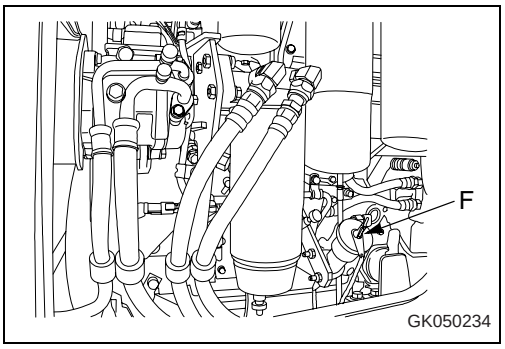

4. Place a container to catch the oil under drain plug (P).
5. Loosen drain plug (P) and drain the oil. Be careful not to get oil on yourself.
6. Check the drained oil, and if there are excessive metal particles or foreign material, please contact your KOMATSU distributor.
7. Tighten drain plug (P).

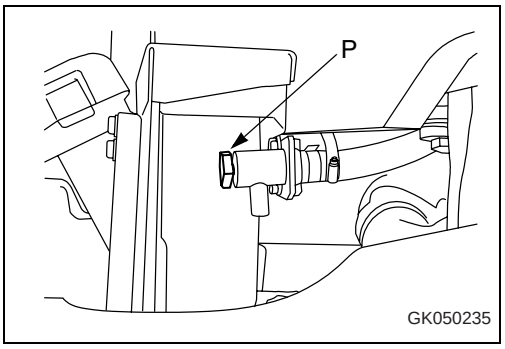

8. Using the filter wrench, turn filter cartridge (1) counterclockwise to remove it.

   In particular, if this operation is carried out immediately after stopping the engine, a large amount of oil will come out, so wait for 10 minutes before starting the operation.
9. Clean the filter holder, fill the new filter cartridge with engine oil, then coat the seal and thread of the filter cartridge with engine oil (or coat thinly with grease) and install.
10. When installing the seal, tighten it so its surface comes into contact with the filter holder, then tighten another 3/4 turn.

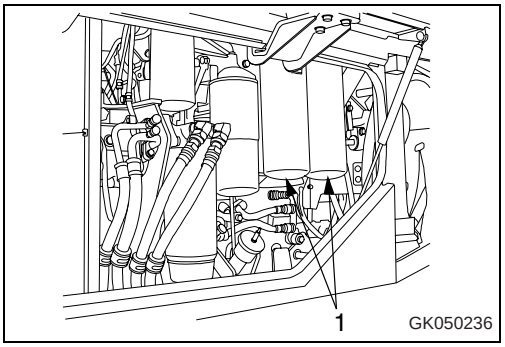

Downloaded from www.Manualslib.com manuals search engine

https://truckmanualshub.com/

11. After replacing the filter cartridge, add oil through oil filler (F) until the oil level is between the H and L marks on the dipstick (G).

12. Run the engine at low idling for short time, then stop the engine, and check that the oil is between the H and L marks on the dipstick. For details, see "Check oil level in engine oil pan, add oil (3-97)".

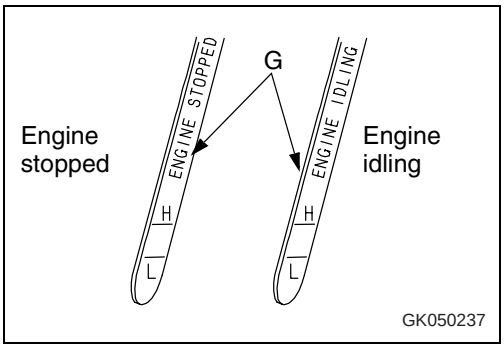

Replace fuel pre-filter cartridge

WARNING

- Engine is at high temperature immediately after the machine has been operated. Wait for engine to cool down before replacing the filter.
- High pressure is generated inside the engine fuel piping system when the engine is running.
  When replacing the filter, wait for at least 30 seconds after stopping the engine to let the internal pressure go down before replacing the filter.
- Do not bring fire or sparks near the fuel.

NOTE

- *Genuine KOMATSU fuel filter cartridges use a special filter that has highly efficient filtering ability. When replacing the filter cartridge, always use a genuine KOMATSU part.*
- *The common rail fuel injection system used on this machine consists of more precise parts than the conventional injection pump and nozzle.*
  If any part other than a genuine KOMATSU filter cartridge is used, dust or dirt may get in and cause problems with the injection system. Always avoid using substitute parts.
- *When carrying out inspection or maintenance of the fuel system, pay more attention than normal to the entry of dirt. If dirt is stuck to any part, use fuel to wash it off completely.*
- Prepare a container to catch drain fuel.
- Prepare a filter wrench.

Downloaded from www.Manualslib.com manuals search engine

https://truckmanualshub.com/

1. Close the fuel valve.
2. Remove transparent cup (2) from the filter and inspect it. If it is broken or damaged, replace it with a new part.
3. Set the container to catch the fuel under the filter cartridge (1).
4. Using a filter wrench, turn filter cartridge (1) counterclockwise to remove it.

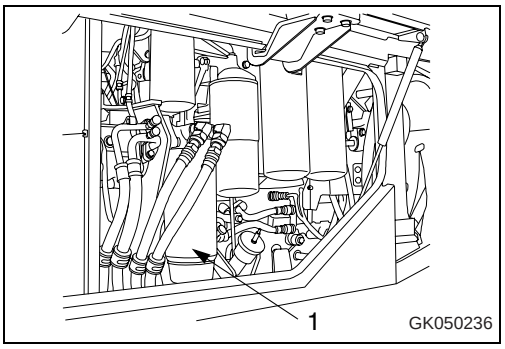

5. Clean transparent cup (2) and remove seal (3). Coat the new seal with clean fuel or oil.
6. Install transparent cup (2) to the new filter cartridge.

   Tightening torque for cup:
   10 N·m (1.0 kgf·m, 7.2 lbft)
7. Clean the filter holder.

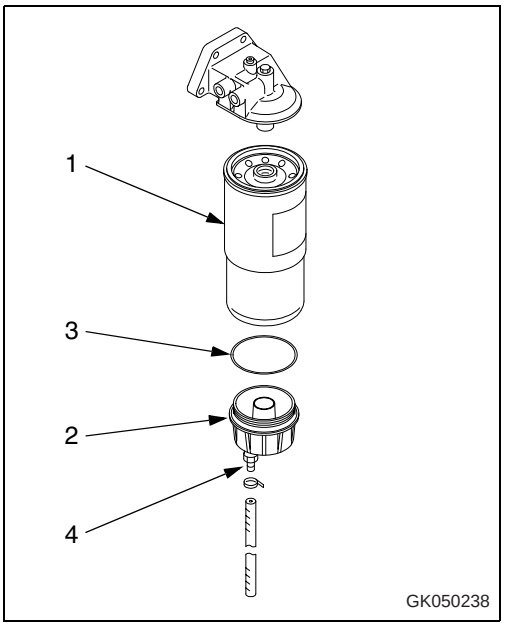

8. Check that cap (B) is installed to the new filter cartridge, then fill with clean fuel.

NOTE

When filling with fuel, always use fresh fuel and be careful not to let any dirt or dust get in. Fill with fuel through 8 small holes (A) (dirty side). Cap (B) is to prevent oil containing dirt from getting into the clean side. Always add the oil with cap (B) installed.

When replacing the filter cartridge, check that drain plug (4) at the bottom of transparent cup (2) is securely tightened.

Tightening torque:
0.2-0.4 N·m (0.02 - 0.046 kgf·m, 0.1 - 0.3 lbft

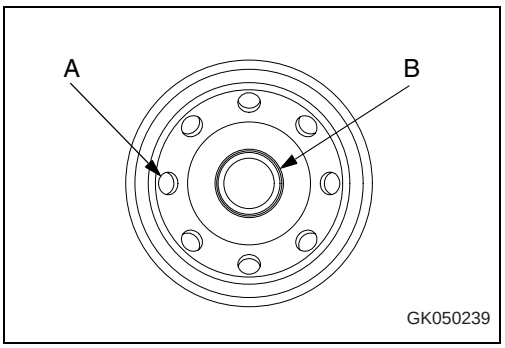

9. Coat the packing surface of the filter cartridge with oil.
10. Remove filter cartridge cap (B) and install to the filter holder.

Downloaded from www.Manualslib.com manuals search engine

https://truckmanualshub.com/

11. When installing, tighten until the packing surface contacts the seal surface of the filter holder, then tighten it up 1/2 to 3/4 of a turn.

    If the filter cartridge is tightened too far, the packing will be damaged and this will lead to leakage of fuel. If the filter cartridge is too loose, fuel will also leak from the packing, so always tighten to the correct amount.

12. Replace the filter cartridge and bleed the air. When replacing the fuel filter cartridge, see "Replace fuel filter cartridge (4-71)".

13. Open the fuel valve, start the engine, and run the engine for approx. 10 minutes at low idling until the engine speed stabilizes. Check for any leakage of oil from the filter cartridge seal surface or transparent cup, and check for any sucking in of air.

Downloaded from www.Manualslib.com manuals search engine

https://truckmanualshub.com/

4.9.9 Every 1000 hours service

Maintenance for every 50, 100, 250 and 500 hours service should be carried out at the same time.

Change oil in transmission case, clean strainer

WARNING

- The parts and oil are at high temperature after the engine is stopped, and may cause burns. Wait for the temperature to go down before starting the work.
- When removing the oil filler cap, turn it slowly to release the internal pressure, then remove it.

- Refill capacity: 76 liters (20.08 US gal)

1. Stop the engine and wait for the temperature at all parts to go down.
2. Set a container to catch the drained oil directly under the drain plug (1).
3. Remove drain plug (1), then loosen plug (2) and drain the oil.

   To prevent the oil from spurting out, loosen drain plug (2) slowly, then gradually remove it.
4. After draining the oil, tighten drain plug (1) and plug (2).
5. Set a container to catch the oil under the transmission filter.
6. Replace the element. For details, see "Replace transmission oil filter element (4-70)".
7. Remove bolt (3), U-clamp (4), and tube (5).

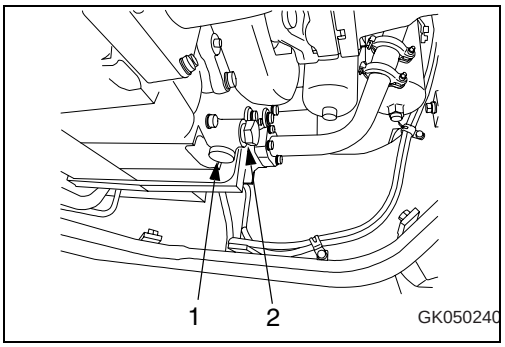

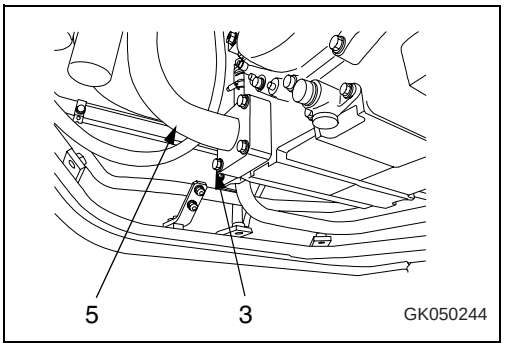

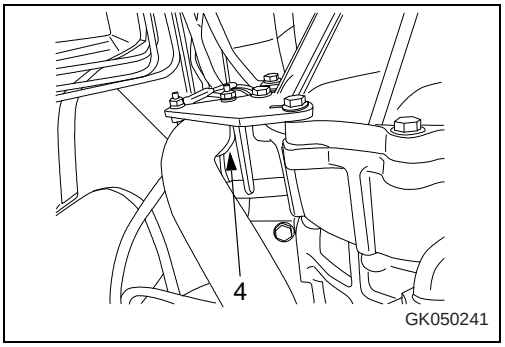

Downloaded from www.Manualslib.com manuals search engine

https://truckmanualshub.com/

8. Pull out strainer (6).
9. Remove the dirt stuck to strainer (6), then wash in clean diesel oil or flushing oil. If strainer (6) is damaged, replace it with a new part.
10. Install strainer (6), tube (5), and U-clamp (4), then tighten bolts (3).

    Replace O-ring (7) at the strainer portion with a new part, then install the cover.

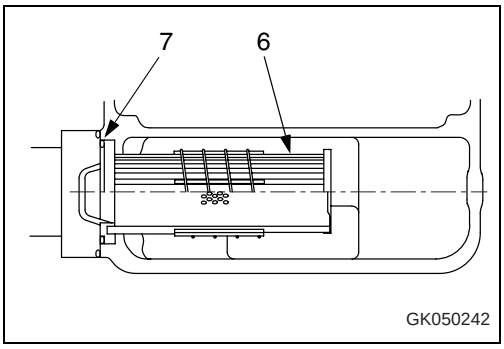

11. Pour in the specified amount of engine oil from oil filler (F).
12. After adding oil, check that the oil is at the specified level.

    For details, see "Check transmission oil level, add oil (4-36)".
13. Check that there is no leakage of oil from the transmission case or oil filter.

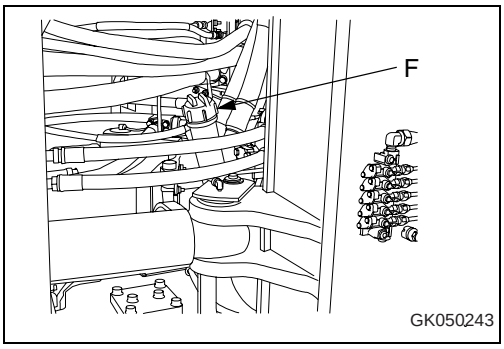

Downloaded from www.Manualslib.com manuals search engine

https://truckmanualshub.com/

Replace transmission oil filter element

WARNING

- The parts and oil are at high temperature after the engine is stopped, and may cause serious burns. Wait for the temperature to go down before cleaning the engine breather.
- When using compressed air, there is a hazard that dirt may be blown up and cause serious injury.
- Always use safety glasses, dust mask, or other protective equipment.

1. Remove cover (1) and set the container to catch the oil under the filter case.

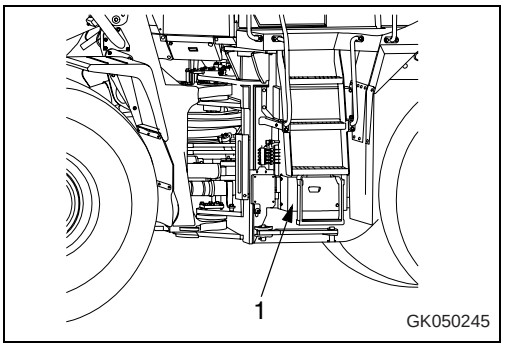

2. Remove drain plug (2) at the bottom of the filter case, drain the oil, then tighten the plug again.

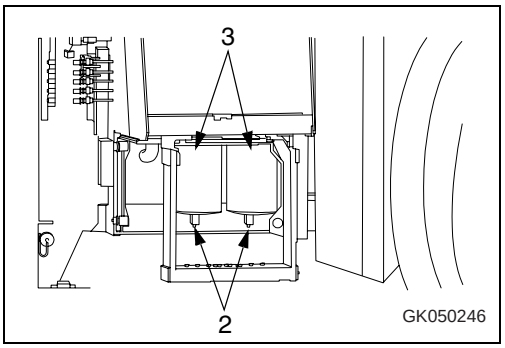

3. Loosen hexagonal portion (4) of case (3), then remove case (3).
4. Take out element, then clean the inside of the case.
5. Replace the filter gasket and O-ring with new parts. Coat the gasket and O-ring thinly with clean engine oil before installing.
6. Install a new element, then install case (6) and tighten it using hexagon part (7).

   Drain mount tightening torque:
   49 to 58.8 N·m (5 to 6 kgf·m, 36.2 to 43.4 lbft)

   Case tightening torque:
   58.8 to 78.5 N·m (6 to 8 kgf·m, 43.4 to 57.9 lbft)

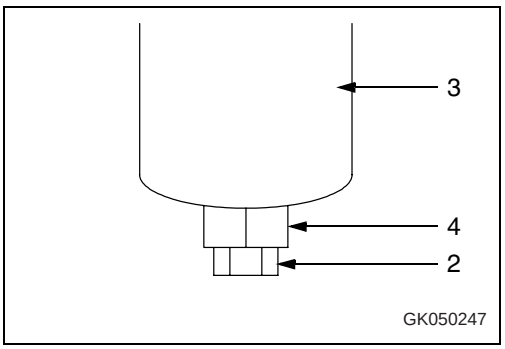

7. Run the engine for a short time at idling, then check that the oil is at the specified level.

   For details, see "Check transmission oil level, add oil (4-36)".

Downloaded from www.Manualslib.com manuals search engine

https://truckmanualshub.com/

Replace fuel filter cartridge

WARNING

- Engine is at high temperature immediately after the machine has been operated. Wait for engine to cool down before replacing the filter.
- High pressure is generated inside the engine fuel piping system when the engine is running.
  When replacing the filter, wait for at least 30 seconds after stopping the engine to let the internal pressure go down before replacing the filter.
- Do not bring fire or sparks near the fuel.

NOTE

- *Genuine KOMATSU fuel filter cartridges use a special filter that has highly efficient filtering ability. When replacing the filter cartridge, always use a genuine KOMATSU part.*
- *The common rail fuel injection system used on this machine consists of more precise parts than the conventional injection pump and nozzle.*
  If any part other than a genuine KOMATSU filter cartridge is used, dust or dirt may get in and cause problems with the injection system. Always avoid using substitute parts.
- *When carrying out inspection or maintenance of the fuel system, pay more attention than normal to the entry of dirt. If dirt is stuck to any part, use fuel to wash it off completely.*

- Prepare a container to catch drain fuel.
- Prepare a filter wrench

1. Close the fuel valve.
2. Set the container to catch the fuel under the filter cartridge (1).
3. Using a filter wrench, turn filter cartridge (1) counterclockwise to remove it.
4. Clean the filter holder.

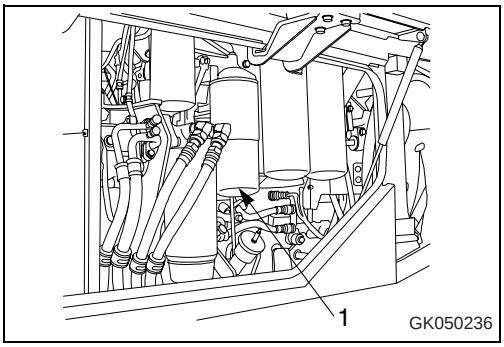

Downloaded from www.Manualslib.com manuals search engine

https://truckmanualshub.com/

5. Check that cap (B) is installed to the new filter cartridge, then fill with clean fuel.

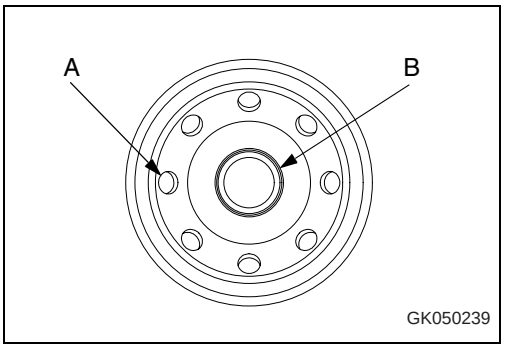

NOTE

When filling with fuel, always use fresh fuel and be careful not to let any dirt or dust get in. Fill with fuel through 8 small holes (A) (dirty side). Cap (B) is to prevent oil containing dirt from getting into the clean side. Always add the oil with cap (B) installed.

If clean fuel is not available, do not add fuel. In this case, when bleeding the air from the fuel circuit, the number of times needed for priming increases.

6. Coat the packing surface of the filter cartridge with oil.

7. Remove filter cartridge cap (B) and install to the filter holder.

8. When installing, tighten until the packing surface contacts the seal surface of the filter holder, then tighten it up 1/2 to 3/4 of a turn.

   If the filter cartridge is tightened too far, the packing will be damaged and this will lead to leakage of fuel. If the filter cartridge is too loose, fuel will also leak from the packing, so always tighten to the correct amount.

9. Replace the filter cartridge and bleed the air as follows:

10. Open the fuel valve.

11. Loosen plug (2) at the top of the fuel filter head, then remove other plug (3).

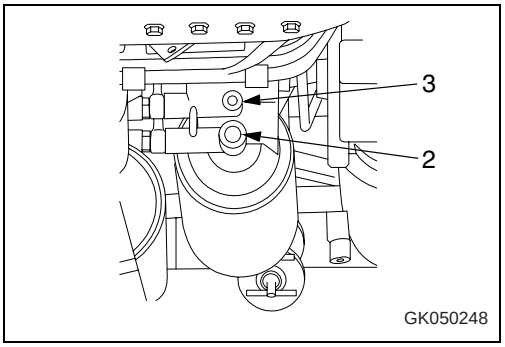

NOTE

Do not loosen the plug of the fuel pre-filter head. This is at the suction end, so if it is loosened, it will be impossible to bleed the air.

Downloaded from www.Manualslib.com manuals search engine

https://truckmanualshub.com/

12. Loosen butterfly nut (4) holding the lever of the priming pump.

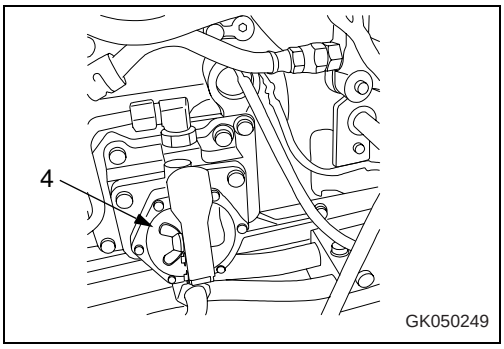

13. Operate the lever of the priming pump to prime with fuel. Fuel will come out from plug (3) at the top of the fuel filter head. Continue priming slowly until no more bubbles come out with the fuel. Fit sealing tape to plug (3), then tighten it.

14. Continue priming a further 1 - 2 times. Check that fuel comes out from plug (2), then tighten plug (2).

15. Loosen air bleeder (5) of the supply pump and the operator the priming pump to prime with fuel.

    Fuel will overflow from air bleeder (5). Continue priming until no more bubbles come out with the fuel, then tighten air bleeder (5).

    Tightening torque:
    4.9 to 6.9N·m {0.5 to 0.7kgf·m, 3.6 to 5.1 lbft}

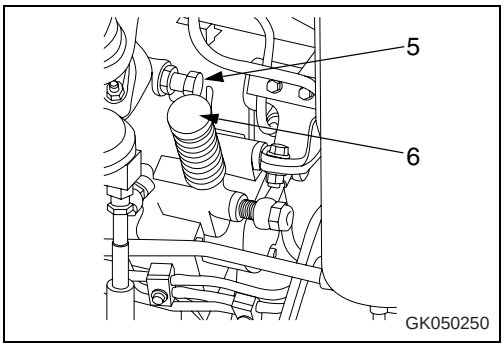

NOTE

Do not use feed pump (6) supplied with the supply pump.

16. Carry out priming a further approx. 20 times, then securely tighten wing nut (4) holding the lever of the priming pump.

    Tightening torque:
    11.8N·m {1.2kg·m, 8.7lbft}

17. After replacing the filter cartridge, start the engine and check for any leakage of fuel from the filter seal surface. If any leakage of fuel is found, check the tightening of the filter cartridge. If there is still leakage of fuel, repeat Steps 1 - 3 to remove the filter cartridge. If there is any damage or embedded material in the packing surface, replace the cartridge with a new part and repeat Steps 4 -17 to install.

Clean transmission case breather

1. Stop the engine and wait for the temperature at all parts to go down.

2. Remove all mud and dirt from around the breather.

3. Remove the breather and fit a cover to the breather mounting hole to prevent dirt from entering.

4. Soak the breather in flushing liquid and wash it.

5. Install the breather.

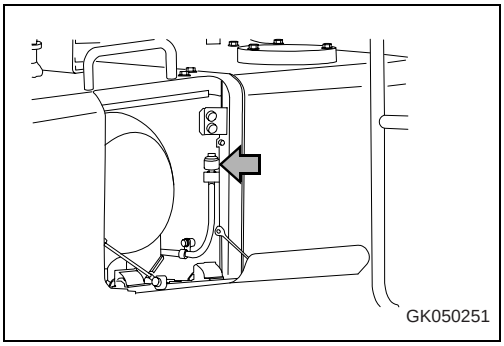

Downloaded from www.Manualslib.com manuals search engine

https://truckmanualshub.com/

Wash fuel tank breather

1. Stop the engine and wait for the temperature at all parts to go down.
2. Remove all mud and dirt from around the breather.
3. Remove the breather and fit a cover to the breather mounting hole to prevent dirt from entering.
4. Soak the breather in flushing liquid and wash it.
5. Install the breather.

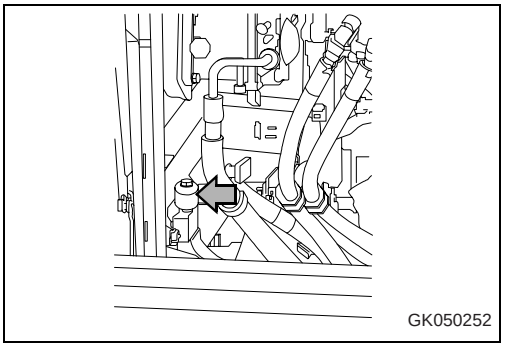

Lubricating

1. Using a grease pump, pump in grease through the grease fittings marked by the arrows.
2. After greasing, wipe off any old grease that was pushed out.

(1) Center hinge pin (2 places)

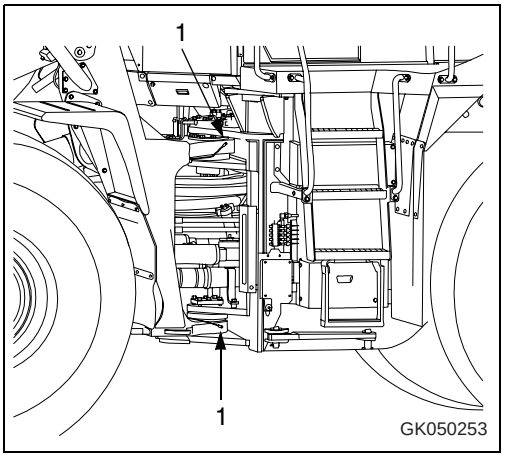

(2) Drive shaft center support (1 place)

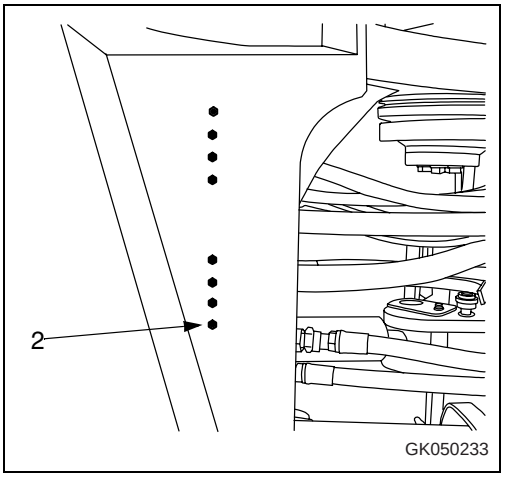

Downloaded from www.Manualslib.com manuals search engine

https://truckmanualshub.com/

Replace corrosion resistor cartridge

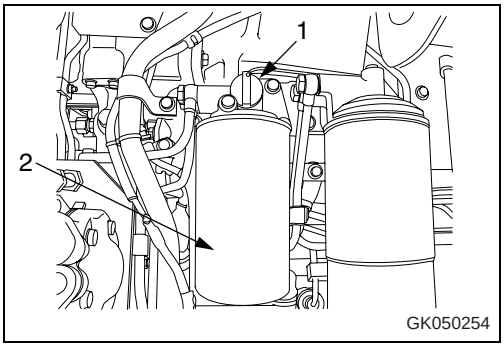

1. Open the engine side cover located on the right of the engine hood.
2. Set valve (1) at the side of the corrosion resistor to the CLOSED position.
3. Using a filter wrench, turn cartridge (2) to the left to remove it.
4. Apply engine oil to the sealing surface of a new cartridge, then install it to the filter holder.
5. Bring the packing surface into contact with the seal surface of the filter holder, then tighten it further approx. 2/3 turn.
6. Set valve (1) to the OPEN position.
7. After replacing the cartridge, start the engine and check that there is no leakage of water from the cartridge seal surface.

Check of engine air intake piping clamps for looseness

Check the clamps between the air cleaner, turbocharger, after-cooler, and engine for looseness. If any clamp is loosened, retighten it.

Downloaded from www.Manualslib.com manuals search engine

https://truckmanualshub.com/

4.9.10 Every 2000 hours service

Maintenance for every 50, 100, 250, 500 and 1000 hours service should be carried out at the same time.

Change oil in hydraulic tank, replace hydraulic filter element

WARNING

- The parts and oil are at high temperature after the engine is stopped, and may cause burns. Wait for the temperature to go down before starting the work.
- When removing the oil filler cap, turn it slowly to release the internal pressure, then remove it.

- Refill capacity: 337 liters (89.0 US gal)

1. Lower the bucket horizontally to the ground and apply the parking brake, then stop the engine.
2. Stop the engine and wait for the temperature at all parts to go down.
3. Remove oil filler (F) and plug (1) from the filter case.

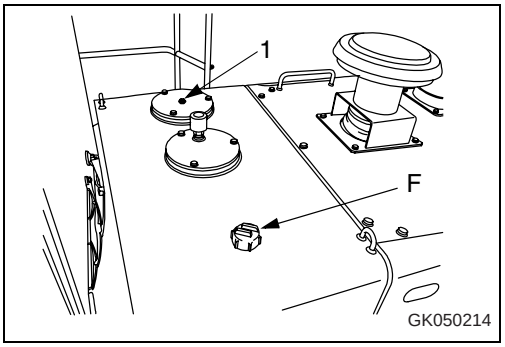

4. Remove side cover (2) on the right side of the machine.
5. Insert the supplied hose into the drain tube and set a container in position to catch the drained oil.

   The hose is with the supplied tools.
6. Loosen drain valve (3) gradually and drain the oil.
7. After draining the oil, tighten drain valve (3).
8. Install side cover (2).

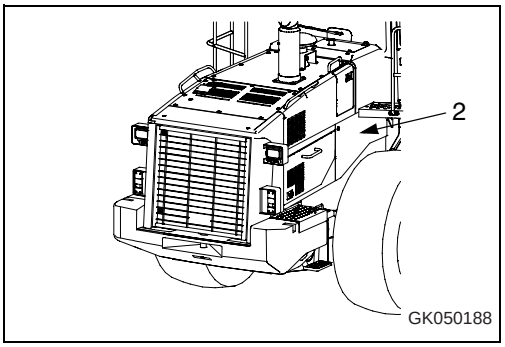

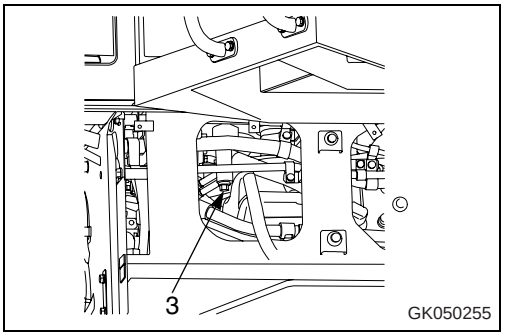

Downloaded from www.Manualslib.com manuals search engine

https://truckmanualshub.com/

CAUTION

When removing the filter cover, keep the filter pressed down by hand. The filter cover is being pushed by a spring, so if the filter cover mounting bolts are removed carelessly, there is danger that the filter cover will spring out and cause injury.

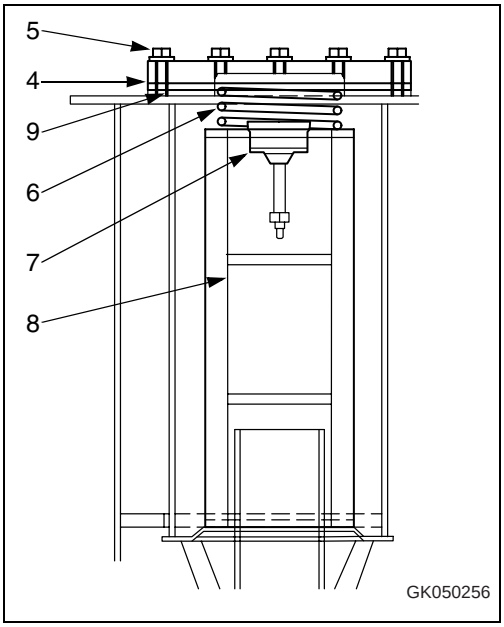

9. Hold filter cover (4) at the top of the hydraulic tank down by hand, remove mounting bolts (5), then remove the cover slowly.
10. Remove spring (6) and bypass valve (7), then take out element (8).
11. Check that there is no foreign material inside the tank, then clean it.
12. Install a new element, then place bypass valve (7), spring (6), and cover (4) into the tank.
13. Replace cover O-ring (9) with a new one.
14. Hold filter cover (4) down by hand and tighten the mounting bolts uniformly.
15. Add engine oil through oil filler port (F) to the specified level, then install cap.
16. Check that the hydraulic oil is at the specified level.

    For details, see "Check oil level in hydraulic tank, add oil (4-53)".
17. Run the engine at low idling, and extend and retract the steering, bucket, and lift arm cylinders 4 to 5 times. Be careful not to operate the cylinder to the end of its stroke (stop approx.100 mm (3.9 in) before the end of stroke).

NOTE

If the engine is run immediately at high speed or the cylinder is operated to the end of its stroke, the air inside the cylinder will cause damage to the piston packing.

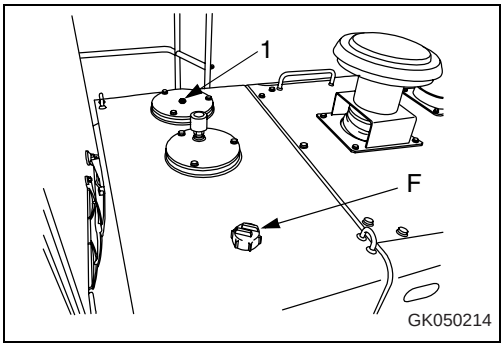

18. Next, operate the steering, bucket, and lift arm cylinders to the end of their stroke 3 to 4 times, then stop the engine and loosen vent plug (1) to bleed the air from the hydraulic tank. After bleeding the air, tighten plug (1) again.
19. Check the hydraulic oil level and add oil to the specified level.

    For details, see "Check oil level in hydraulic tank, add oil (4-53)".
20. Run the engine at low idle, loosen the air bleeding plug (1) to bleed the air from inside the filter tank.
21. Next, increase the engine speed and repeat the procedure in Step 16 to bleed the air. Continue this operation until no more air comes out from plug (1).

Downloaded from www.Manualslib.com manuals search engine

https://truckmanualshub.com/

22. After completing the air bleed operation, tighten plug (1).

    Tightening torque:
    11.3 ± 1.5 N·m (1.15 ± 0.15 kgf·m, 8.3 ± 1.1 lbft)

23. Check that the hydraulic oil is at the standard level.

    For details, see "Check oil level in hydraulic tank, add oil (4-53)".

24. Check that there is no leakage of oil from the filter cover mount.

Clean hydraulic tank strainer

When changing the oil in the hydraulic tank, drain the oil from the tank and clean the strainer.

1. Lower the bucket horizontally to the ground and turn the parking brake switch ON.
2. Stop the engine and wait for the temperature at all parts to go down.
3. Loosen bolt (1), then remove strainer cover (2).
4. Remove strainer (5) together with rod (3) and spring (4).
5. Remove any dirt stuck to strainer (5), then wash it in clean diesel oil or flushing oil. If strainer (5) is damaged, replace it with a new part.
6. Install rod (3), spring (4), and strainer (5).
7. Install cover (2).

   When doing this, look through the mounting hole in the cover (2) and check that the guide pin of the strainer is fitted into the guide hole.

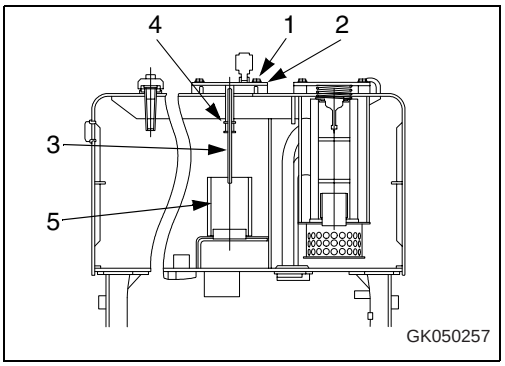

Downloaded from www.Manualslib.com manuals search engine

https://truckmanualshub.com/

Replace hydraulic tank breather element

WARNING

- The parts and oil are at high temperature after the engine is stopped, and may cause burns. Wait for the temperature to go down before starting the work.
- When removing the oil filler cap, turn it slowly to release the internal pressure, then remove it.

1. Lower the bucket horizontally to the ground and turn the parking brake switch ON.
2. Stop the engine and wait for the temperature at all parts to go down.
3. Remove the cap of oil filler (F).
4. Remove the snap ring from breather (1), then remove the breather cap.
5. Replace the filter element with a new part, then install the breather cap and snap ring.
6. Tighten the cap of oil filler (F).

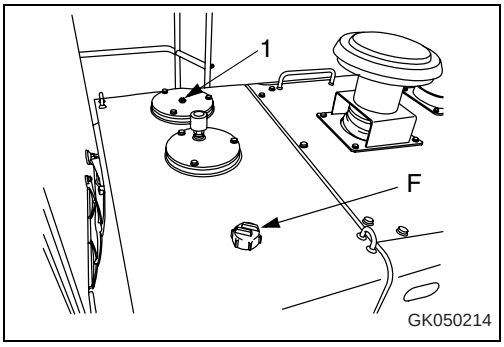

REMARK

It is possible to replace the element with the breather installed in the tank. However, if the breather is removed, do not wrap the taper thread of the breather with seal tape when assembling again, and be careful not to tighten too much.

Downloaded from www.Manualslib.com manuals search engine

https://truckmanualshub.com/

Change axle oil

WARNING

- When changing the oil, apply the parking brake and secure the front and rear frames with the safety bar.
- After the engine is stopped, the parts and oil are at high temperature, and may cause burns. Wait for the temperature to go down before starting the operation.
- When the plug is removed, oil may spurt out, so turn it slowly to release the internal pressure, then remove it carefully.

Refill capacity front: 87 liters (22.9 US gal)

Refill capacity rear: 81 liters (21.4 US gal)

To prevent the drained oil from coming into contact with the tires, do as follows.

1. Move the machine so that drain plug (1) of the final drive is at the top. Remove plug (1), install the nipple of the supplied tool, then insert the hose.
2. Move the machine so that plug (1) is at the bottom, then remove oil filler plug (2) and drain the oil through the hose.

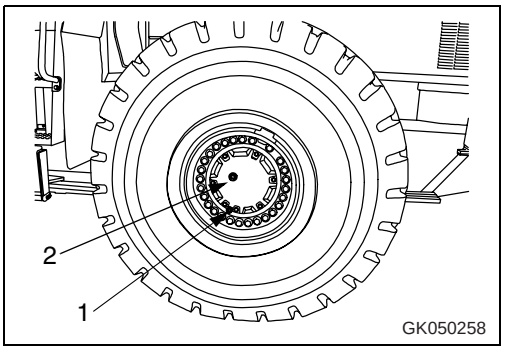

3. Remove front and rear oil filler plugs (F), then remove level plug (3) and drain plug (4) to drain the oil.

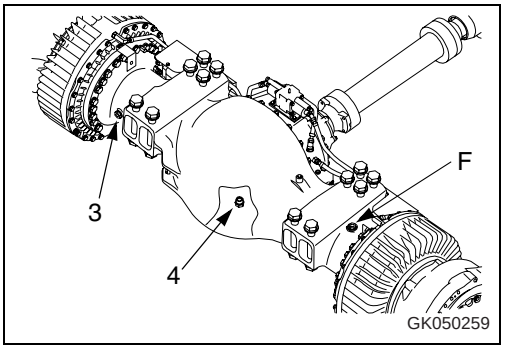

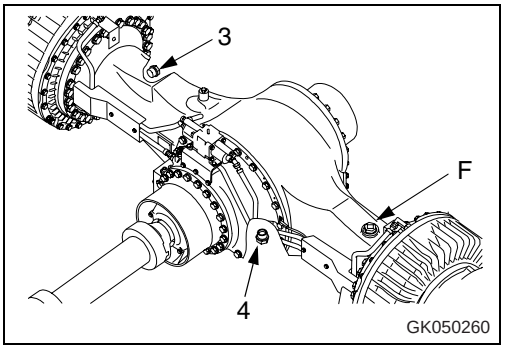

Downloaded from www.Manualslib.com manuals search engine

https://truckmanualshub.com/

4. Remove drain plug (5) and attach the tool (nipple and hose) to drain the oil.
5. After draining the oil, clean drain plugs (1), (4) and (5), then install them.
6. Add oil to the specified level through the oil filler ports (F) and (2) of the axle housing and left and right final drives.
7. After adding oil, check at level plug (3) that the oil is at the specified level.

   For details, see "Check axle oil level, add oil (4-38)".

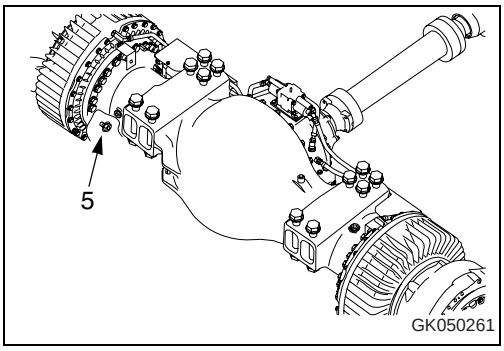

REMARK

For operations where the brake is used frequently, change the axle oil at shorter intervals.

Replace element in air conditioner recirculation air filter, fresh air filter

Remove both the recircuration air filter and fresh air filter in the same way as when cleaning, and replace them with new parts.

For details of cleaning the recircuration air filter, see "Clean element in air conditioner recirculation filter (4-60)".

For details of cleaning the fresh air filter, see "Clean element in air conditioner fresh air filter (4-54)".

Downloaded from www.Manualslib.com manuals search engine

https://truckmanualshub.com/

Clean PPC circuit strainer

1. Lower the bucket horizontally to the ground and turn the parking brake switch ON.
2. Stop the engine and wait for the temperature at all parts to go down.
3. Remove covers (1) at the accumulator mount on the right side of the rear frame.

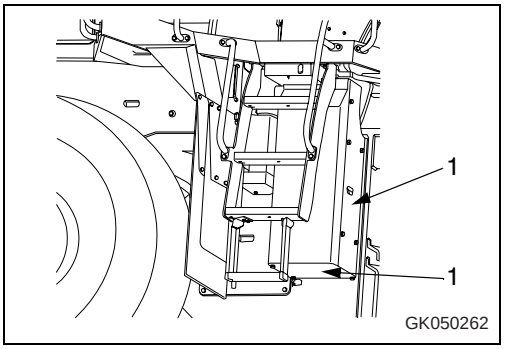

4. Remove outlet hose (2) of the PPC circuit strainer.

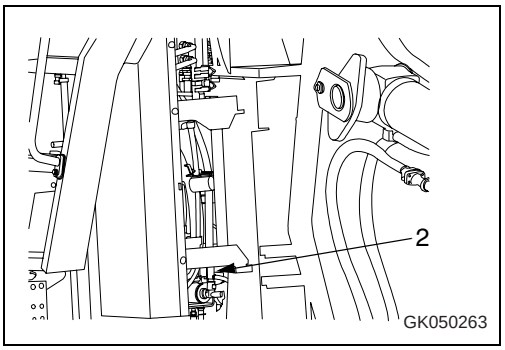

5. Remove cap (4) from strainer case (3), then take out strainer (5).
6. Wash strainer (5) in clean diesel oil.
7. Install strainer (5) so that the covered end of strainer case (3) is on the inside, then tighten cap (4).
8. Install outlet hose (2) of the PPC circuit strainer to cap (4).
9. Install covers (1) at the accumulator mount on the right side of the rear frame.
10. Operate the bucket control lever to the TILT position and the boom control lever to the FLOAT position. When the cylinder reaches the end of its stroke, hold it there for one minute.
11. Operate the bucket control lever to the DUMP position and the lift arm control lever to the RAISE position. When the cylinder reaches the end of its stroke, hold it there for one minute.

    For details of the procedure for bleeding air from the hydraulic circuit, please contact your KOMATSU distributor.

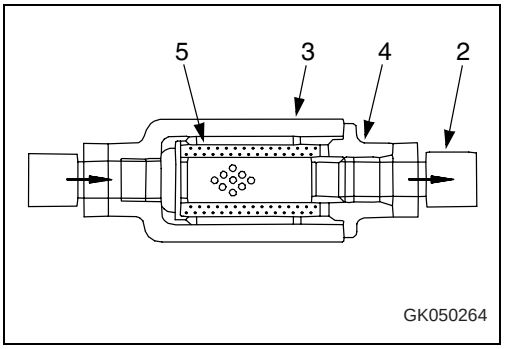

Downloaded from www.Manualslib.com manuals search engine

https://truckmanualshub.com/

Check alternator

When carrying out the EVERY 2000 HOURS SERVICE or EVERY YEAR SERVICE, remove the belt and check that the alternator rotates smoothly. If it does not rotate smoothly, please ask your KOMATSU distributor to carry out inspection and repair.

Check engine valve clearance, adjust

As special tool is required for removing and adjusting the parts, request your KOMATSU distributor for service.

Check brake disc wear

A special tool is required for checking and adjusting the parts, request KOMATSU distributor for service.

Downloaded from www.Manualslib.com manuals search engine

https://truckmanualshub.com/

Check function of accumulator

For details of handling the accumulator, see "Accumulator (2-34)".

PPC accumulator

If the engine stops with the work equipment raised, and it is impossible to start the engine again, it is possible as an emergency measure to actuate the valve with the oil pressure stored in the accumulator and lower the work equipment to the ground.

1. Apply the parking brake.
2. Raise the work equipment to the maximum height, then operate the lift arm control lever to HOLD position (b).
3. Stop the engine.
4. Leave the work equipment lock lever in the FREE position.
5. Check that the area around the machine is safe, then turn the starting switch to the ON position, set the lift arm control lever to FLOAT position (d), and lower the work equipment to a point 1 m (3 ft 3 in) above the ground.

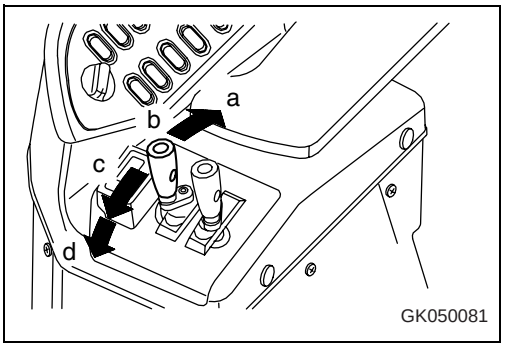

6. When the lift arm comes to the 1m position, return the lift arm control lever to LOWER position (c), and lower the work equipment slowly to the ground.

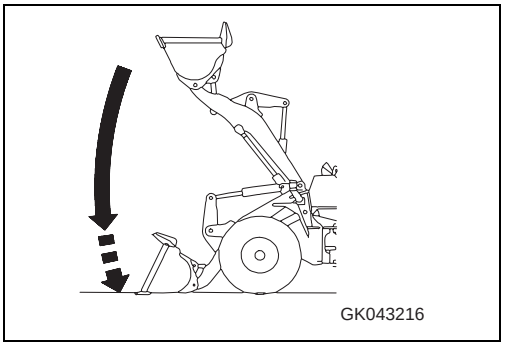

REMARK
Carry out the check within 2 minutes after stopping the engine. If the machine is left with the engine stopped, the accumulator pressure will drop and it will be impossible to check the cause of the problem.

If the work equipment stops while it is moving, the gas pressure in the accumulator has probably dropped.

Please contact your KOMATSU distributor to have the accumulator inspected.

Replace the accumulator every 4000 hours or every 2 years.

Downloaded from www.Manualslib.com manuals search engine

https://truckmanualshub.com/

4.9.11 Every 4000 hours service

Maintenance for every 50, 100, 250, 500, 1000 and 2000 hours service should be carried out at the same time.

Check water pump

Check that there is no play in the pulley or any grease leakage, water leakage, or clogging of the drain hole. If any abnormality is found, contact your KOMATSU distributor for disassembly and repair or replacement.

Check starting motor

The brush may be worn or have no grease on the bearing, so contact your KOMATSU distributor for inspection or repair.

If the engine is started frequently, carry out inspection every 1000 hours.

Lubricating

CAUTION

If you fail to grease the drive shaft, the shaft will break, and there is danger that the broken shaft will cause serious damage to the machine. To avoid this problem always maintain the specified greasing interval strictly.

1. Using a grease pump, pump in grease through the grease fittings marked by the arrows.
2. After greasing, wipe off any old grease that was pushed out.

(1) Front drive shaft (4 places)

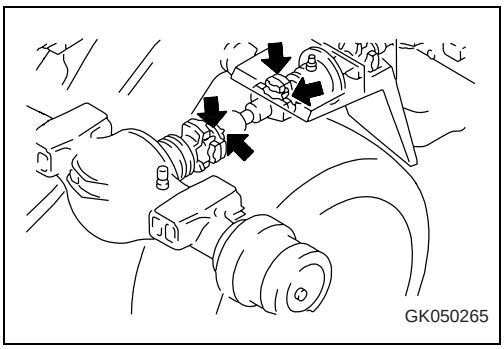

(2) Rear drive shaft (4 places)

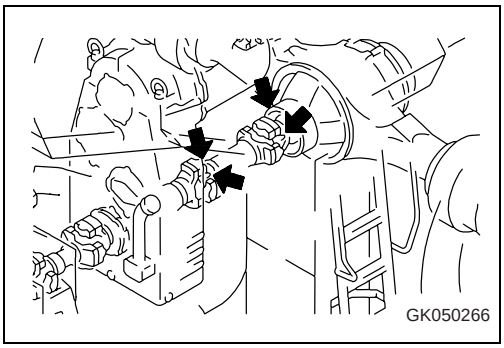

Downloaded from www.Manualslib.com manuals search engine

https://truckmanualshub.com/

(3) Center drive shaft (4 places)

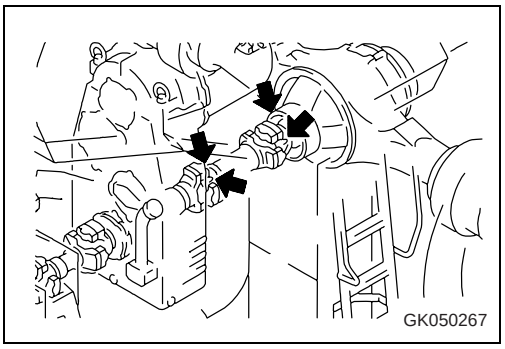

Downloaded from www.Manualslib.com manuals search engine

https://truckmanualshub.com/

Checking for loose engine high-pressure piping clamps, hardening of rubber

Check visually and touch by hand to check that there are no loose mounting bolts for high-pressure piping clamps in the diagram and no hardening of any rubber parts. If any problem is found, the part must be replaced. In this case, please ask your KOMATSU distributor to carry out the replacement.

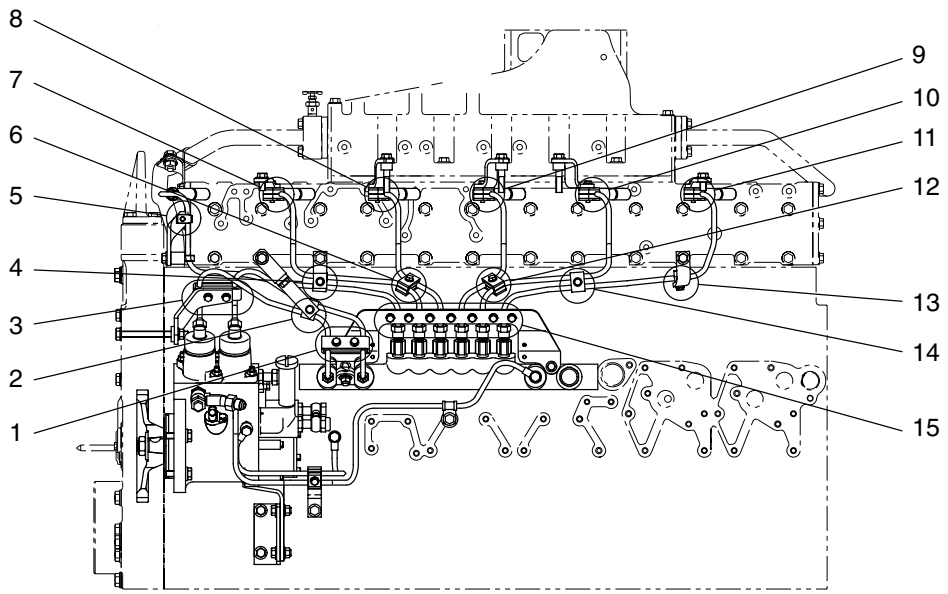

GK050268

NOTE

If the engine continues to be used when there are loose bolts, hardened rubber, or missing parts, there is danger of damage or breakage occurring due to vibration and wear at the connections of high-pressure piping. Always check that the proper high-pressure piping clamps are correctly installed.

Downloaded from www.Manualslib.com manuals search engine

https://truckmanualshub.com/

Checking for missing fuel spray prevention cap, hardening of rubber

Fuel spray prevention caps are protective parts installed to prevent fire caused by fuel leaking and spraying out on to high temperature parts of the engine. Check visually that there are no missing caps or loose bolts, and feel with your finger to check that the rubber has not hardened. If there is any problem, the problem part must be replaced. Contact your KOMATSU distributor for part replacement.

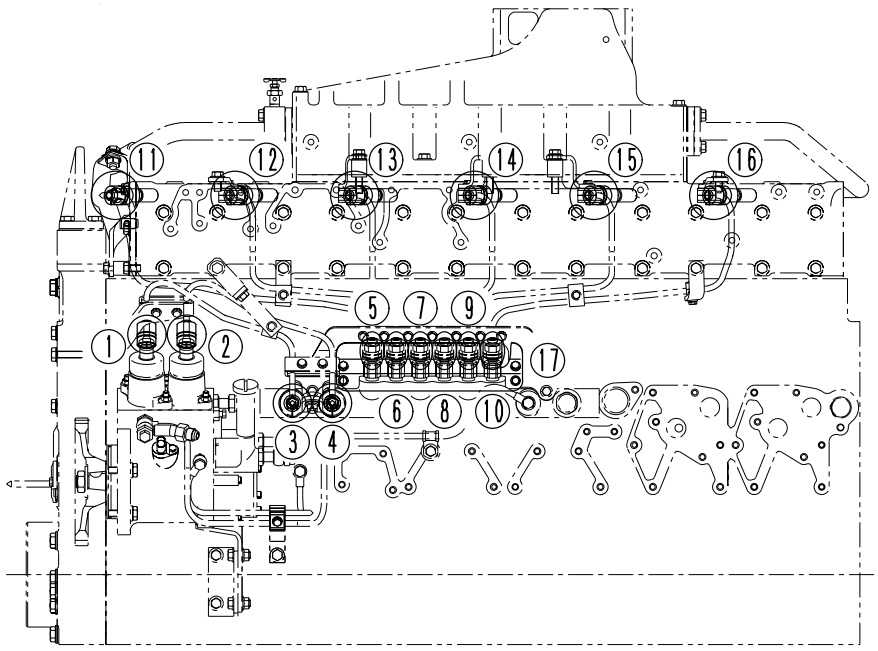

GK050269

Downloaded from www.Manualslib.com manuals search engine

https://truckmanualshub.com/

4.9.12 Every 8000 hours service

Maintenance for every 50, 250, 500, 1000, 2000 and 4000 hours service should be carried out at the same time.

Replace high-pressure piping clamp

Ask your Komatsu distributor to carry out this work.

Replace fuel spray prevention cap

Contact your KOMATSU distributor to have the fuel spray prevention cap replaced.

Overhaul starting motor and alternator

As special tool is required for checking and adjusting the parts, request KOMATSU distributor for service.

4.9.13 Every 12000 hours service

Replace injector assembly

For details, see "Replace injector assembly (4-26)".

Downloaded from www.Manualslib.com manuals search engine

https://truckmanualshub.com/

Downloaded from www.Manualslib.com manuals search engine

https://truckmanualshub.com/

5. Technical Data

Downloaded from www.Manualslib.com manuals search engine

https://truckmanualshub.com/

5.1 Technical data

	Item			Unit	WA500-6H (In power mode)
	Operating weight (including 1 operator: 80 kg (176 lb)			kg (lb)	32,480 (71,606)
	Normal load			kg (lb)	9,250 (20,396)
	Bucket capacity (with bolt on cutting edge (BOC))			m³ (cu.yd)	5.6 (7.3)
	Engine model			-	KOMATSU SA6D140E-5 diesel engine
	Flywheel horsepower			kW(HP)/rpm	358{353}/1,900
A	Overall length (Tip of bucket / BOC)			mm (ft in)	9,670 (31' 9“)/9,815 (32' 2“)
B	Overall height			mm (ft in)	3,758 (12' 5“)
C	Max. dimension when shaking bucket			mm (ft in)	6,430 (21' 1“)
D	Overall width			mm (ft in)	3,190 (10' 6“)
E	Min. ground clearance			mm (ft in)	450 (1' 6“)
F	Bucket width (cutting edge width)			mm (ft in)	3,400 (11' 2“)
G	Clearance	Tip of bucket		mm (ft in)	3,295 (10' 10“)
		BOC		mm (ft in)	3,395 (11' 2“)
H	Reach	Tip of bucket		mm (ft in)	1,400 (4' 7“)
		BOC		mm (ft in)	1,500 (4' 11“)
I	Dump angle			degrees	45
	Min. turning radius	Outside of chassis (Tip of bucket / BOC)		mm (ft in)	7,610 (25')/7,650 (25' 1“)
		Center of outside tire		mm (ft in)	6,430 (21' 1“)
	Permissible towing load			kg (N)	24,360 (238,890)
	Travel speed [in lock up]	Forward	1st	km/h (MPH)	7.7 (4.8)
			2nd	km/h (MPH)	12.5 (7.8) [14.2 (8.9)]
			3rd	km/h (MPH)	22.3 (13.9) [23.4 (14.6)]
			4th	km/h (MPH)	35.5 (22.1) [38.8 (24.3)]
		Reverse	1st	km/h (MPH)	8.6 (5.3)
			2nd	km/h (MPH)	13.0 (8.1) [15.9 (9.9)]
			3rd	km/h (MPH)	24.8 (15.4) [26.2 (16.4)]
			4th	km/h (MPH)	37.7 (23.4) [43.2 (27.0)]
	Hydraulic pressure	Lift circuit Tilt circuit Third control circuit		bar	320 320 210

Downloaded from www.Manualslib.com manuals search engine

https://truckmanualshub.com/

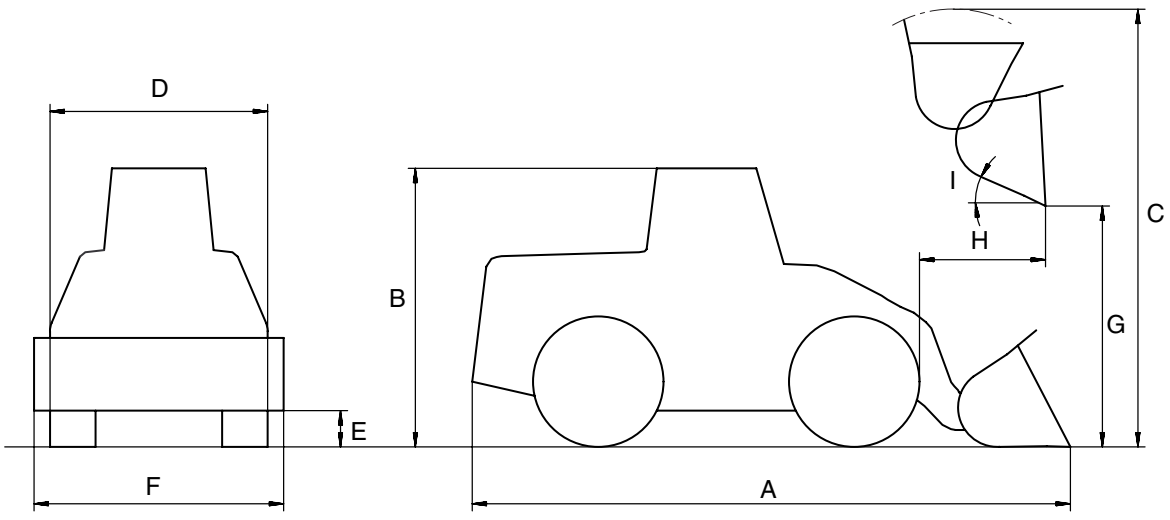

Downloaded from www.Manualslib.com manuals search engine

https://truckmanualshub.com/

5.2 Noise emission levels

Two signs are attached to the machine that state the noise level produced.

- Sound pressure level at the operator's station, measured according to ISO6396 (Dynamic test method, simulated working cycle).

- Sound power level emitted by the machine, measured according to ISO 6395 (Dynamic test method, simulated working cycle). This is the guaranteed value as specified in European directive 2000/14/EC

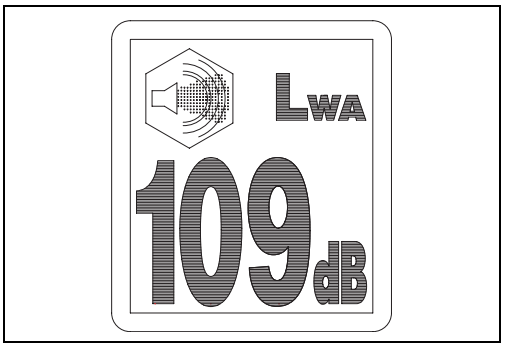

No alterations may be made to the machine which could have an influence on the noise emission levels.

5.3 Vibration level

When used for its intended purpose, levels of vibration for the earth-moving machine transmitted from the operator's seat are lower than or equal to the tested vibrations for the relative machinery class in compliance with ISO 7096.

The actual acceleration value for the hands and arms is less than or equal to 2.5 m/s². The actual acceleration value for the body is less than or equal to 0.5 m/s².

These values were determined using a representative machine and measured during the typical operating condition indicated below according to the measurement procedures that are defined in the standards ISO 2631/1 and ISO 5349.

Operating condition:

Wheel loader: V-shape loading

Downloaded from www.Manualslib.com manuals search engine

https://truckmanualshub.com/

Guide to reduce vibration levels on machine

The following guides can help an operator of this machine to reduce the whole body vibration levels:

1. Use the correct equipment and attachments.
2. Maintain the machine according to this manual
   - Tire pressures (for wheeled machines), tension of crawler (for crawler machines)
   - Brake and steering systems
   - Controls, hydraulic system and linkages
3. Keep the terrain where the machine is working and traveling in good condition
   - Remove any large rocks or obstacles
   - Fill any ditches and holes
   - Site manager should provide machine operators with machine and schedule time to maintain terrain conditions
4. Use a seat that meets ISO 7096 and keep the seat maintained and adjusted
   - Adjust the seat and suspension for the weight and size of the operator
   - Wear seat belt
   - Inspect and maintain the seat suspension and adjustment mechanisms
5. Steer, brake, accelerate, shift gears (for wheeled machines), and move the attachment levers and pedals slowly so that the machine moves smoothly
6. Adjust the machine speed and travel path to minimize the vibration level
   - When pushing with bucket or blade, avoid sudden loading; load gradually
   - Drive around obstacles and rough terrain conditions
   - Slow down when it is necessary to go over rough terrain
   - Make the curve radius of traveling path as large as possible
   - Travel at low speed when traveling around sharp curves
7. Minimize vibrations for long work cycle or long distance traveling
   - Reduce speed to prevent bounce
   - Transport machines long distances between worksites

Downloaded from www.Manualslib.com manuals search engine

https://truckmanualshub.com/

8. The following guidelines can be effective to minimize risks of low back pain
   - Operate the machine only when you are in good health.
   - Provide breaks to reduce long periods of sitting in the same posture
   - Do not jump down from the cab or machine
   - Do not repeatedly handle and lift loads

Downloaded from www.Manualslib.com manuals search engine

https://truckmanualshub.com/

5.4 Limit values for slopes

Maximum slope angle for machine operation

If operating the machine on a slope, its angle must not exceed ° uphill, downhill or sideways. If you angle the machine at more than ° during operation, the motor, transmission, hydraulic system or axles, will not be supplied with sufficient oil and can be damaged.

A	uphill	25°
B	downhill	35°
C	sideways	16°

Tipping angle, theoretically

The tipping angle is a calculated value. This states the angle at which the machine at rest can stand on a slope without tipping over. You must not work with the machine at these angles as the motor, transmission, hydraulic system or axles, will not be supplied with sufficient oil and can be damaged. The specified angle refers to the transport position. The angle changes if you raise or lower the work unit.

A	uphill with operating load uphill without operating load	61.9° 52.4°
B	downhill with operating load downhill without operating load	36.0° 54.0°
C	lateral with operating load lateral without operating load	40.4° 41.2°

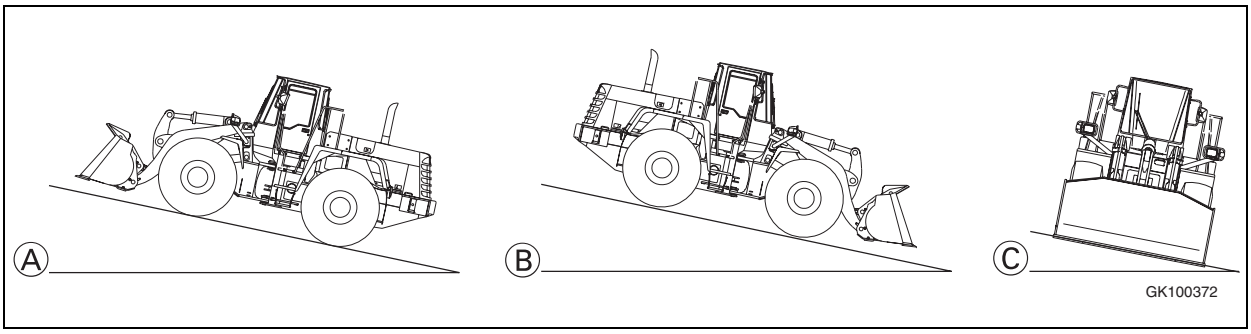

Downloaded from www.Manualslib.com manuals search engine

https://truckmanualshub.com/

Downloaded from www.Manualslib.com manuals search engine

https://truckmanualshub.com/

6. Attachments, Options

WARNING

Please read and make sure that you understand the SAFETY section before reading this section.

Downloaded from www.Manualslib.com manuals search engine

https://truckmanualshub.com/

6.1 Handling load meter

6.1.1 Outline of load meter

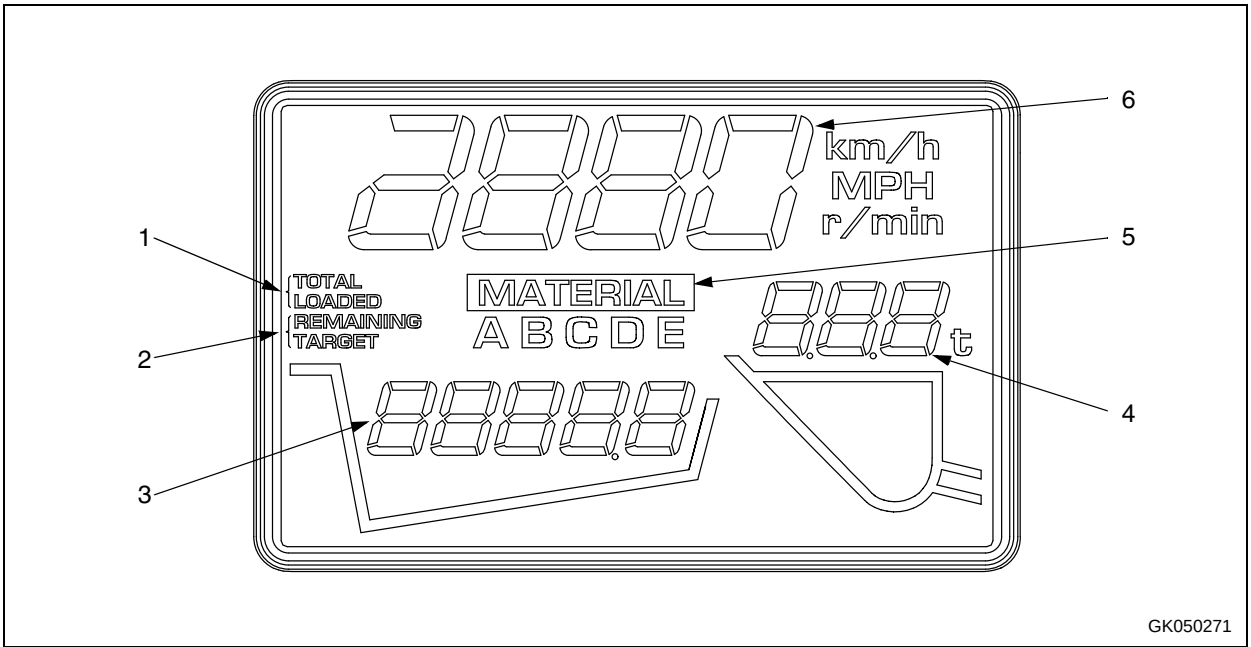

(1) Addition mode display
(2) Subtraction mode display
(3) Total load display/load remaining to target load display
(4) Bucket load display
(5) Target load display
(6) Travel speed display/engine speed display

The load meter divides the type of material being handled into five categories. It measures the load in the bucket and displays the total load or the load remaining to the target load.

The total load or load remaining to the target load can be displayed from 0.1 tons to a maximum of 99999 tons, but up to 9999.9 tons, the digit shown after the decimal point displays the load in units of 100 kg. When the load exceeds 10000 tons, the decimal point disappears and the display is shown in units of 1 ton.

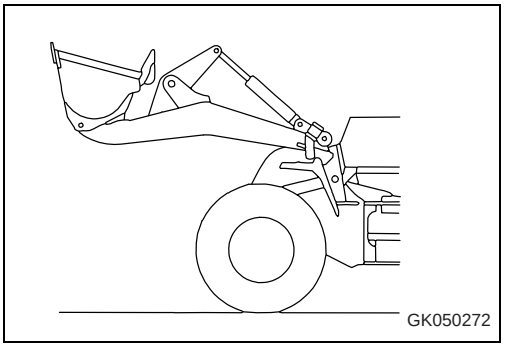

Downloaded from www.Manualslib.com manuals search engine

https://truckmanualshub.com/

The load meter has two modes: addition mode and subtraction mode.

Addition mode:

The display shows the load in the bucket added to the existing total load. This is useful for calculating the production within a fixed time or when loading a dump truck or hopper.

For details of setting the addition mode, "Setting addition mode (6-8)".

Subtraction mode:

The display shows the load in the bucket subtracted from the remaining target load. When the target load becomes “0“, the loading is completed.

This is useful for calculating a fixed load.

For details of setting the subtraction mode, see "Setting subtraction mode (6-9)".

The load meter can divide the type of material being handled into five categories. It can save to memory the total load or the load remaining to the target load for each category.

For details of setting the load material category, see "Stopping load meter calculation (6-14)".

It is possible to display only the travel speed or engine speed without carrying out the load meter calculation or displaying the result.

For details about setting to no-display, see "Stopping load meter calculation (6-14)".

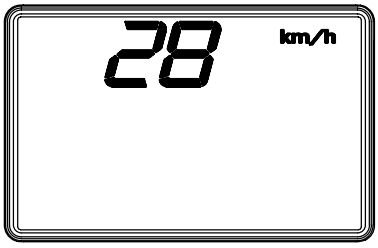

GK050273

It is possible to switch the load meter display from the machine travel speed to the engine speed display or from the engine speed display to the machine travel speed display.

For details of the method of switching the display, see "Method of switching travel speed/engine speed display (3-44)".

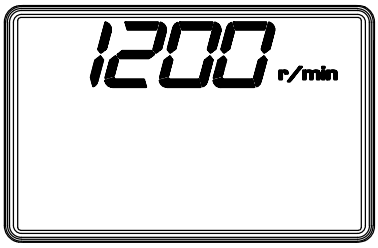

GK050274

Downloaded from www.Manualslib.com manuals search engine

https://truckmanualshub.com/

6.1.2 Principle of load meter measurement

To allow you to obtain precise measurements with the load meter, it is necessary first to understand the measurement principle. When carrying out calibration and when making actual measurements, it is important to remember the following points.

Conditions for starting measurement

The conditions for starting the measurement must fulfill the following.

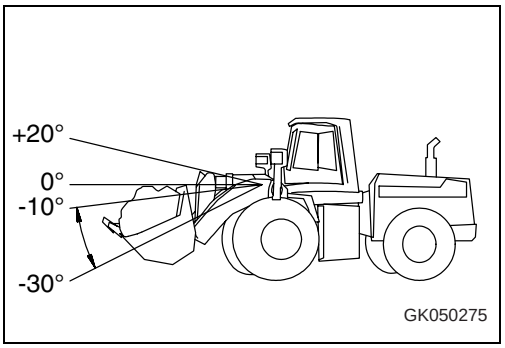

The lift arm angle (the angle between the horizontal and the line connecting the lift arm pin and bucket pin) must be within -30° and -10° (horizontal is 0°, so the angle must be below horizontal (marked with a - sign); the angle above horizontal is marked with a + sign).

When the lift arm is raised, if the lift arm starts from an angle below -30°, no measurement is carried out until the lift arm reaches -30°.

If the lift arm is operated RAISE -> STOP -> RAISE AGAIN, this is judged as one load, and no measurement is carried out when the lift arm is raised again.

If the lift arm is lowered and then raised, the next measurement is carried out.

Conditions for completing measurement

The measurement is completed if any of the following conditions are fulfilled.

- When the lift arm is stopped (angle speed: less than 0.5°/sec)
- When the lift arm angle exceeds +20°
- When the lift arm RAISE speed is greatly reduced (less than 70% of angle speed for previous 1 second)

Conditions for successful measurement

To complete the measurement successfully, it is necessary to continue to raise the lift arm for at least 1.5 seconds after starting the measurement. If the lift arm is stopped before 1.5 seconds has passed, the operation will be ended without making any measurement. (The display stays at 0 tons.)

Downloaded from www.Manualslib.com manuals search engine

https://truckmanualshub.com/

Method of calculation and display

The load is calculated from the pressure on the lift arm cylinder (bottom, head), the lift arm angle, and the angle speed.

Even if the bucket holds a load of the same weight, if the center of gravity is different (in particular, to the front or rear), the pressure on the lift arm cylinder changes. If the calibration is carried out with the load in the actual load posture, and the load is measured in the same posture, the measurement will be more accurate. When the load is measured, if the load is to the front of the position when the load calibration was carried out, the load display will show a greater weight than the actual load. The more the load is to the front, the greater the weight display becomes.

The calculation is made once in 1 second, but for the first 0.5 seconds after the lift arm starts to rise, the pressure changes, so no measurement is made. If the lift arm RAISE operation continues for 1.5 - 2.5 seconds, the measurement is carried out once; if it continues for 2.5 - 3.5 seconds, the measurement is carried out twice; if it continues for more than 3.5 seconds, the measurement is carried out three times. The final calculation is the average of the measurements. The more measurements that are made, the more accurate the measurement becomes.

If the lift arm RAISE operation continues for 1.5 - 2.5 seconds (starting from the point where the lift arm goes above -30°), only one measurement is made, so the accuracy may be poor. In this case, the result of the measurement will appear in a flashing display. If this happens, press the load meter cancel switch and carry out the measurement again.

6.1.3 Points to remember to ensure high accuracy

Calibration

1. Necessity

The pressure when unloaded and loaded (rated load, 1/2 rated load) <-> load map is registered in the machine monitor panel. However, there are variations in each machine, so it is necessary to compensate for the variations in each machine in order to ensure at accuracy of the load meter. For this reason, there is a calibration system (unloaded, loaded). Calibration must be carried out in the following cases.

- When new machine is delivered
- When lift arm is changed
- When machine monitor panel is replaced
- When the pressure sensor, lift arm angle sensor is replaced
- Periodically (every 3 months)

Downloaded from www.Manualslib.com manuals search engine

https://truckmanualshub.com/

2. Points to remember when carrying out calibration

When carrying out calibration, remember the following points.

- When calibrating the load, the known weight is needed. It is necessary to use the known weight or to calculate the weight from the measurements of the machine when unloaded and the machine when it is loaded. Using the actual load will give higher accuracy.
- Payload:

  Calibrate the load using the rated load and 1/2 rated load as a guideline.
- Load the posture:

  Carry out the load calibration in the same posture as when carrying out actual operations.
- Warming up:

  Carry out warming up to set the hydraulic oil temperature to the normal working range, then carry out normal operations (including raising and lowering the lift arm) for at least 10 minutes (preferably more than 30 minutes).
- Lift arm RAISE speed:

  To make the lift arm RAISE speed constant, carry out at the lift arm RAISE detent.
- Accelerator pedal:

  Depress the accelerator pedal to the same angle as for actual operations. Do not change the angle of the accelerator pedal. Always keep it constant.
- Bucket posture:

  Measure at full tilt. Carry out calibration also at full tilt.

For details of the method of calibration, see the Operation and Maintenance Manual.

Downloaded from www.Manualslib.com manuals search engine

https://truckmanualshub.com/

When measuring

1. Load posture

If the center of gravity of the load changes (in particular, to the front or rear), the pressure on the lift arm cylinder changes, and the accuracy becomes poor. Carry out the load calibration in the same load posture as when measuring.

2. Warming up

If the hydraulic oil temperature is low, the accuracy may be poor. Carry out normal operations (including raising and lowering the lift arm) for at least 10 minutes (if possible, 30 minutes) before starting measurement.

3. Lift arm operation

If the lift arm RAISE speed changes during the measurement, the lift arm cylinder pressure also changes and the accuracy of the measurement becomes poor. In the measurement range (-30° and above), keep the lift arm speed constant as far as possible (keep the movement of the lift arm control lever constant).

4. Bucket operation

If the bucket tilt angle changes, the center of gravity of the load changes and the accuracy of the measurement becomes poor. During calibration and measurement, operate so that the bucket is tilted fully.

5. Travel

Always stop the machine when measuring. Do not travel. If the machine has to travel, travel at low speed (5 km/h (3.1 MPH)) and avoid accelerating or decelerating.

6. Angle of ground

If the measurement is carried out on a slope, the accuracy of the measurement becomes poor. Always measure on level ground.

Downloaded from www.Manualslib.com manuals search engine

https://truckmanualshub.com/

6.1.4 Using load meter

Setting addition mode

1. Press the load meter mode selector switch (+/-) to display “TOTAL LOADED“ on the load meter.

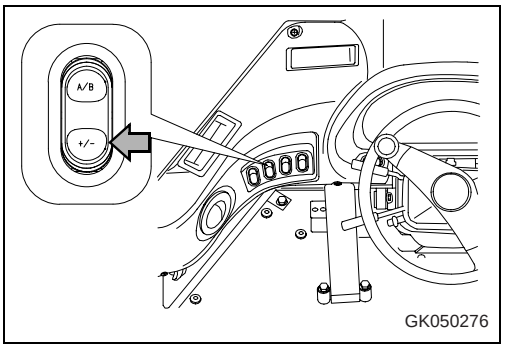

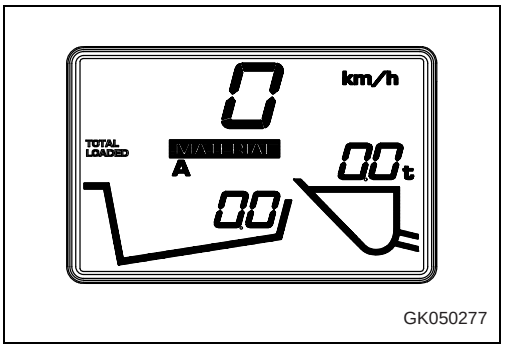

2. Press the load meter mode selector switch (A/B) to select the category of load material.

   This completes the setting of the addition mode. Calculation starts.

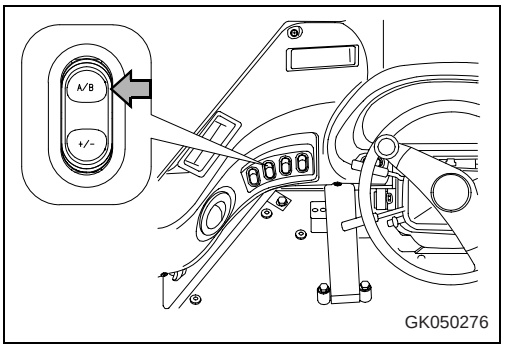

REMARK

When the load meter is set to the addition mode, even when the starting switch is turned OFF and operations are stopped, when operations begin again with the same type of mode, there is no need to reset. The new load is added to the load existing before operations were stopped.

Downloaded from www.Manualslib.com manuals search engine

https://truckmanualshub.com/

Setting subtraction mode

1. Press the load meter mode selector switch (A/B) to select the category of load material.

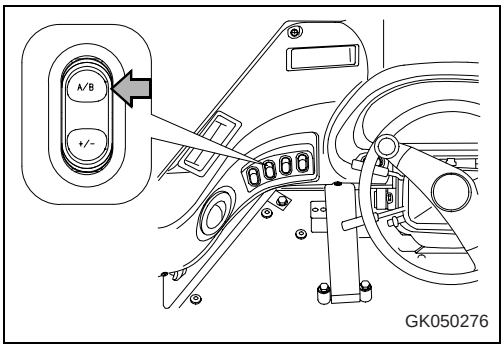

REMARK

When load meter mode selector switch (+/-) is pressed on the subtraction mode input screen, the buzzer sounds and the setting changes to the addition mode. To return to the subtraction mode, press load meter mode selector switch (+/-) again.

2. Press the load meter mode selector switch (+/-) to display “REMAINING TARGET“ on the load meter.

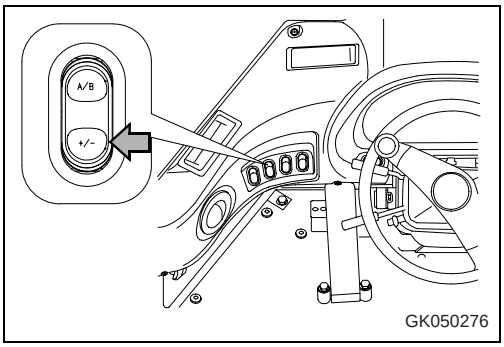

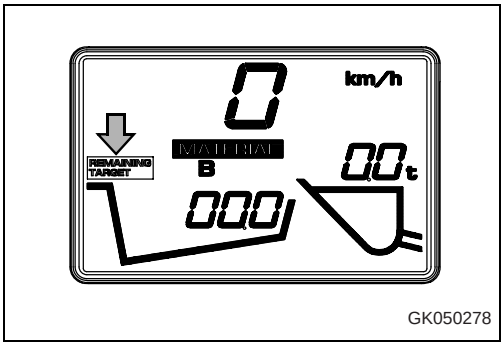

3. Use the (◇) portion of the character display mode selector switch and the (>) or (<) portion of the character display item selector switch to input the target load.

   The character display before input displays 00000.0t and the cursor is on the 10000 digit.

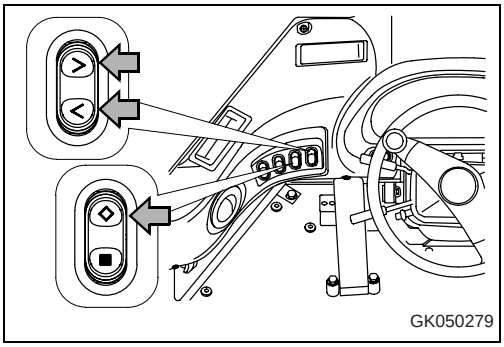

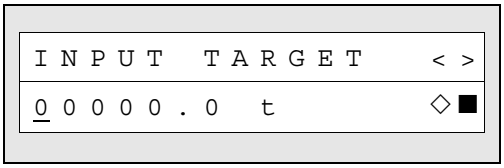

REMARK

The (◇) portion of the character display mode selector switch is used to accept the display on the character display. When the switch is pressed, the input for the digit marked by the cursor is accepted and the cursor moves to the next digit. Use the (>) or (<) portion of the character display item selector switch to change the input value. Press the (>) portion to increase the value; press the (<) to decrease the value. After using the (>) or (<) portion of the character display item selector switch to change the input value, press the (◇) portion of the character display mode selector switch to accept the input value for the digit marked by the cursor.

Downloaded from www.Manualslib.com manuals search engine

https://truckmanualshub.com/

The following explanation uses a target load of 300t as an example.

1. Press the (◇) portion of the character display mode selector switch. Accept “0“ for the 10000 digit for the target load on the character display.

   The cursor then moves from the 10000 digit to the 1000 digit.

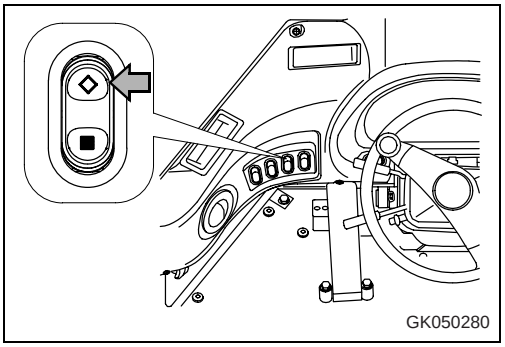


```
INPUT  TARGET    < >
00000.0  t       ◇■
```

2. Press the (◇) portion of the character display mode selector switch. Accept “0“ for the 1000 digit for the target load on the character display.

   The cursor then moves from the 1000 digit to the 100 digit.

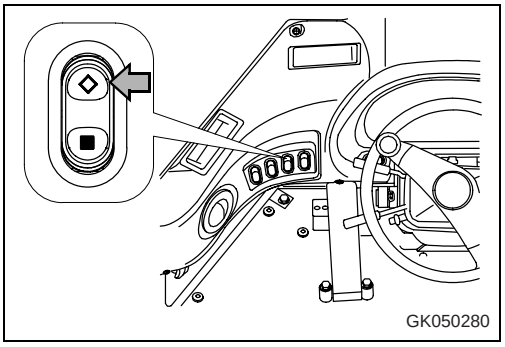


```
INPUT  TARGET    < >
00000.0  t       ◇■
```

3. Press the (>) or (<) portion of the character display item selector switch to change the input value to “3“ for the target load on the character display.

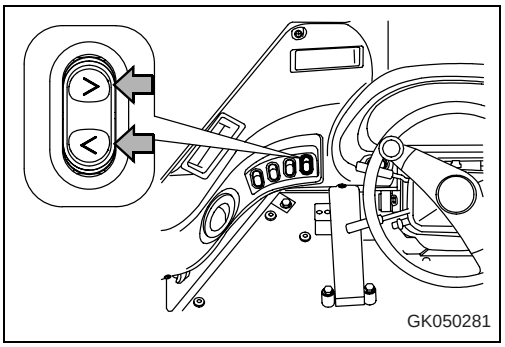


```
INPUT  TARGET    < >
00300.0  t       ◇■
```


Downloaded from www.Manualslib.com manuals search engine

https://truckmanualshub.com/

4. Press the (◇) portion of the character display mode selector switch. Accept “3“ for the 100 digit for the target load on the character display.

   The cursor then moves from the 100 digit to the 10 digit.

5. The value for the 10 digit, the 1 digit and the first place of decimal stays as 0, so press the(◇) portion of the character display mode selector switch twice.

   This completes the input.

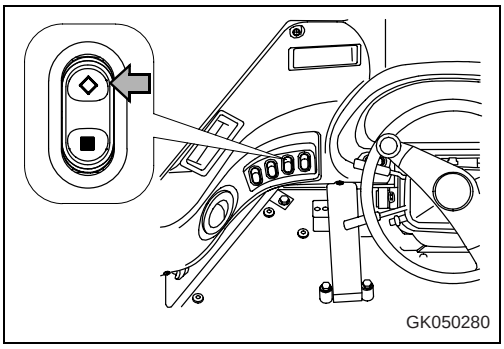

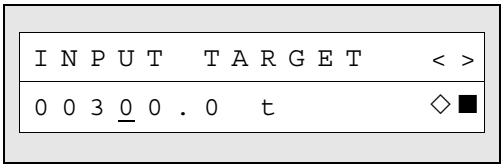

Downloaded from www.Manualslib.com manuals search engine

https://truckmanualshub.com/

Total load data display

1. Press the top of the load meter display selector switch. “TOTAL DATA“ is displayed on the character display.

   The bottom line shows the time that the loading was carried out.

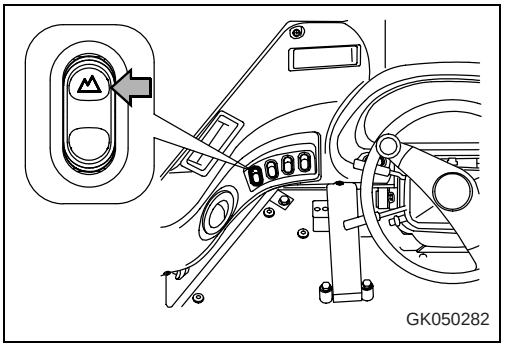

2. Press the load meter mode selector switch (A/B).

   Each time the switch is pressed, “MATERIAL“ changes from A -> B -> C -> D -> E -> A.

   When this happens, the load for the category of material displayed in “MATERIAL“ is displayed on load meter display portion (2) and the number of loads is displayed on load meter display portion (3).

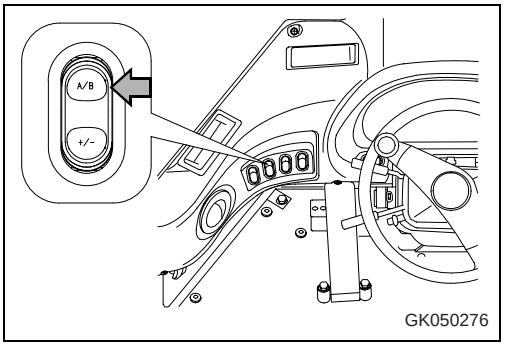

REMARK

A, B, C, D, E (all lamps light up) displays the load, regardless of material category A, B, C, D, E.

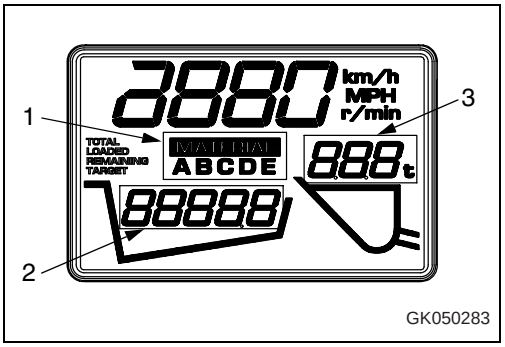

Downloaded from www.Manualslib.com manuals search engine

https://truckmanualshub.com/

Clearing total load

The calculated total load can be cleared as follows.

1. Press the (>) or (<) portion of the character display item selector switch to select the category of load displayed for “MATERIAL“.

2. With the total load displayed, keep the top of the load meter display selector switch pressed for at least 4 seconds. The data for the total load for the selected material will be cleared.

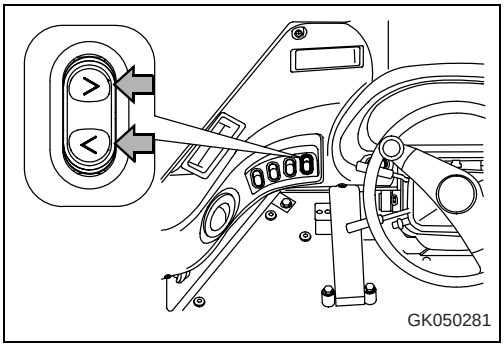

3. When it is cleared, the buzzer sounds and the character display returns to the normal service meter and clock display.

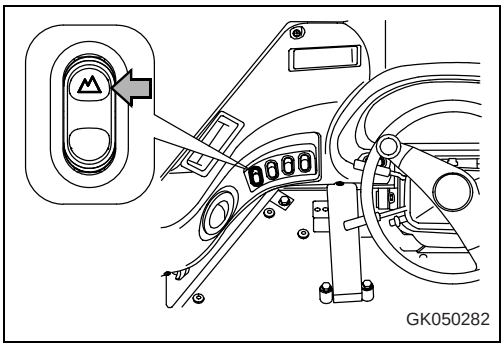

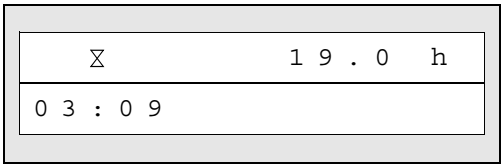

REMARK

If the display for the category of material on the load meter is A, B, C, D, E (all lamps light up), all the total load data are cleared. If top of the load meter display selector switch is pressed when the total load data are being displayed, the load meter returns to the normal service meter and clock display.

- If operations are started when the load meter is displaying the calculated data and measurements are made by the load meter, the load meter returns to the normal service meter and clock display.

- The display for the number of loads has a maximum of 500. Even if the actual number of loads has exceeded 500, the display remains at 500.

Downloaded from www.Manualslib.com manuals search engine

https://truckmanualshub.com/

Stopping load meter calculation

When the load meter calculation is stopped and is not used, the load meter gives no display.

1. Check that the standard service meter and time is displayed on the character display.

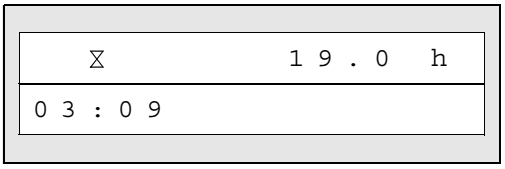

2. Press the (◇) portion of the character display mode selector switch and display “LOAD METER“ on the character display.

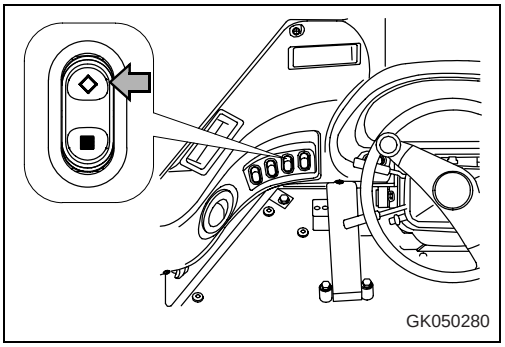

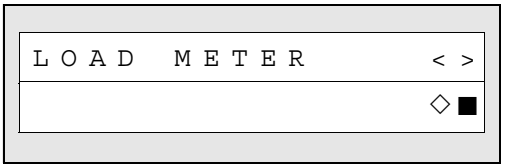

3. Use the (◇) portion of the character display mode selector switch and the (>) or (<) portion of the character display item selector switch to display “OFF“ on the character display.

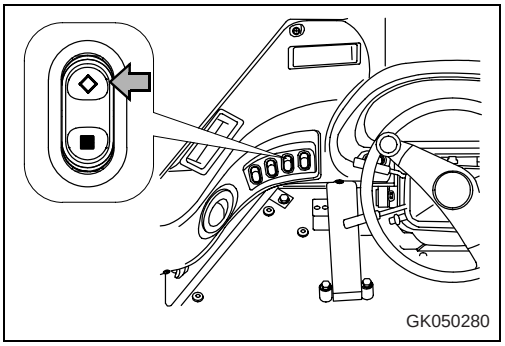

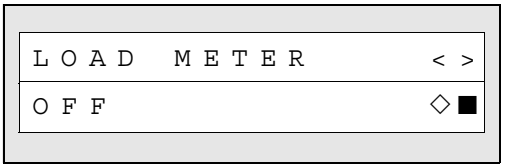

4. Press the (◇) portion of the character display mode selector switch. No other display is given on the load meter.

5. If you want to start measurement again, carry out Steps 1 and 2, then press the character display mode selector switch (◇) to select the “LOAD METER“ menu.

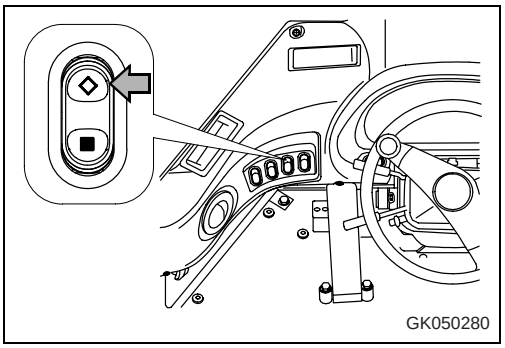

Downloaded from www.Manualslib.com manuals search engine

https://truckmanualshub.com/

Selecting load material category display

The type of material being handled can be divided into five categories. It is possible to record the total load or the load remaining to the target load for each category.

The load material category is displayed from A to E on the bottom line of “MATERIAL“ (1) on the load meter.

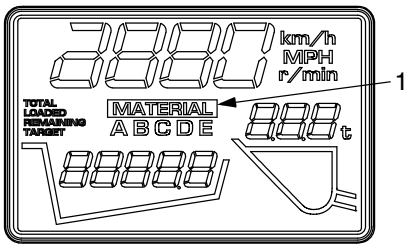

GK050284

1. Press the load meter mode selector switch (A/B). Each time the switch is pressed, the category of material on the bottom line of “MATERIAL“ changes from A -> B -> C -> D -> E -> A. Set to the desired display.

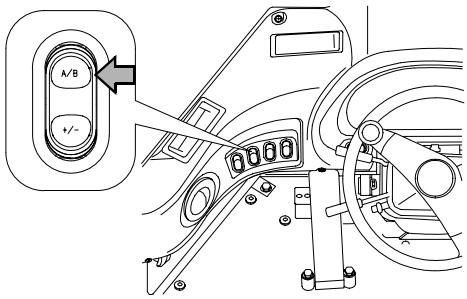

GK050276

NOTE

It is possible to switch the display for the category of material on both the addition mode and subtraction mode.

Downloaded from www.Manualslib.com manuals search engine

https://truckmanualshub.com/

Calibration with empty bucket

1. Before carrying out calibration, set the machine in the following condition.
   - Empty the bucket.
   - Carry out the warming-up operation.

   Carry out warming up to set the hydraulic oil temperature to the normal working range, then carry out normal operations (including raising and lowering the lift arm) for at least 10 minutes (preferably more than 30 minutes).

2. Set so that the character display shows the normal service meter and clock display.

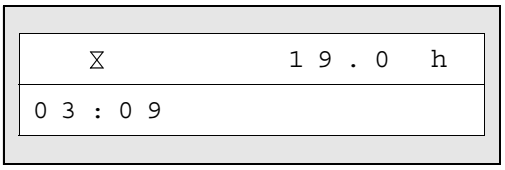

3. Press the (◇) portion of the character display mode selector switch.

   "LOAD METER" is displayed on the top line of the character display.

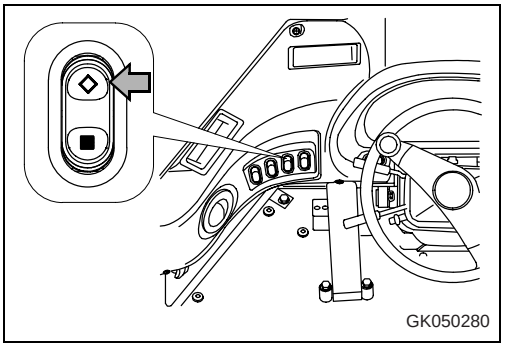

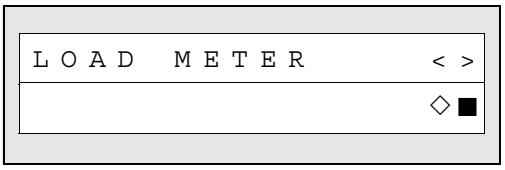

4. Use the (◇) portion of the character display mode selector switch and the (>) or (<) portion of the character display item selector switch to display "CALIBRATION" on the character display.

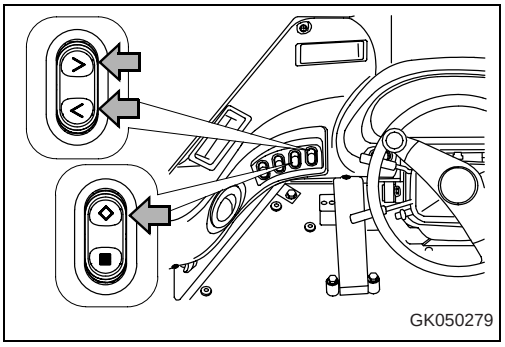

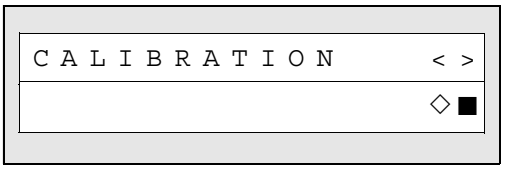

Downloaded from www.Manualslib.com manuals search engine

https://truckmanualshub.com/

5. Press the (◇) portion of the character display mode selector switch.

   "CALIBRATION EMPTY BUCKET" is displayed on the character display.

```
CALIBRATION      < >
EMPTY  BUCKET    ◇■
```

6. Press the (Ø) portion of the character display mode selector switch.

   "STEP 1" is displayed on the top line of the character display, and "FULLY ROLL BACK" and "AT CARRY POSI" are displayed in turn for 3 seconds each on the bottom line.

```
STEP  1
FULLY  ROLL  BACK■
⇕
STEP  1
AT  CARRY  POSI  ■
```

7. Tilt the bucket back fully, then lower the lift arm to set to the travel posture.

   When the lift arm is lowered, the display on the character display changes to "STEP 2 RAISE TO TOP".

```
STEP  2
RAISE  TO  TOP   ■
```

8. Raise the lift arm to the maximum height at the same speed as for actual operations.

   Depress the accelerator pedal to the same angle as for actual operations. Do not change the angle of the accelerator pedal. Always keep it constant. To make the lift arm RAISE speed constant, carry out at the lift arm RAISE detent.

   This completes the calibration with empty bucket.

   If the calibration is completed correctly, the buzzer sounds and the character display returns to the normal service meter and clock display.

```
  ⧖          19.0  h
03:09
```

   If the calibration with empty bucket cannot be completed correctly, the buzzer sounds and the character display shows "CALIBRATION" on the top line and "EMPTY BUCKET" on the bottom line.

```
CALIBRATION      < >
EMPTY  BUCKET    ◇■
```

9. If the calibration with empty bucket cannot be completed correctly, carry out the procedure from Step 6 again.

Downloaded from www.Manualslib.com manuals search engine

https://truckmanualshub.com/

Calibration with loaded bucket

1. Before carrying out calibration, set the machine in the following condition.

   ❍ Carry out the warming-up operation.

   Carry out warming up to set the hydraulic oil temperature to the normal working range, then carry out normal operations (including raising and lowering the lift arm) for at least 10 minutes (preferably more than 30 minutes).

   ❍ Load the bucket with a known weight.

   Be careful that the center of gravity of the load does not change when raising or lowering the lift arm.

2. Set so that the character display shows the normal service meter and clock display.

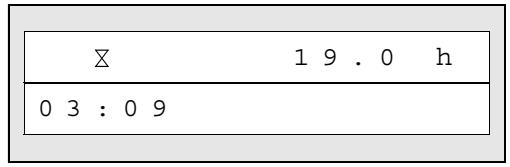

3. Press the (◇) portion of the character display mode selector switch.

   "LOAD METER" is displayed on the top line of the character display.

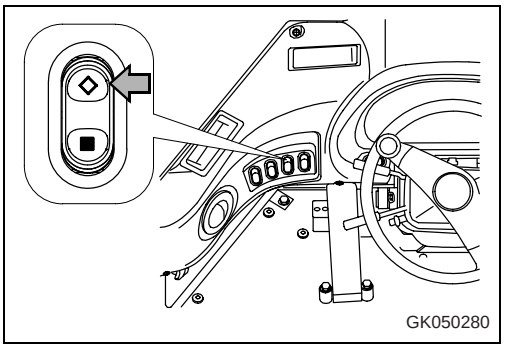

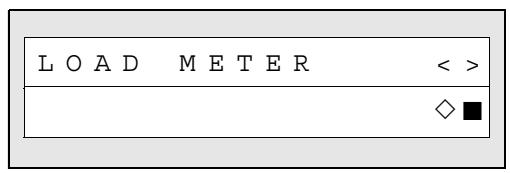

4. Use the (◇) portion of the character display mode selector switch and the (>) or (<) portion of the character display item selector switch to display "CALIBRATION" on the character display.

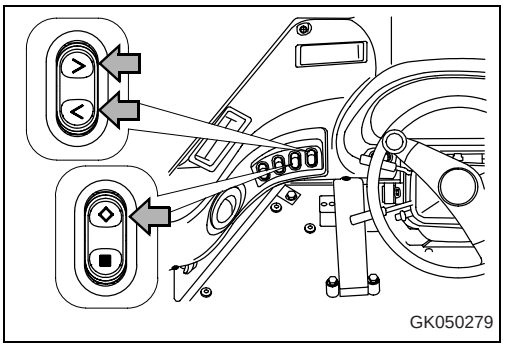

Downloaded from www.Manualslib.com manuals search engine

https://truckmanualshub.com/

5. Press the (◇) portion of the character display mode selector switch.

   "CALIBRATION EMPTY BUCKET" is displayed on the character display.

```
CALIBRATION      < >
EMPTY  BUCKET    ◇■
```

6. Press the character display item selector switch (>). "CALIBRATION" is displayed on the top line of the character display, and "LOAD BUCKET" and the previously input weight are displayed for 3 seconds each.

```
CALIBRATION      < >
LOAD   BUCKET    ◇■
```

```
CALIBRATION      < >
  5.99   11.51   ◇■
```

7. Press the (◇) portion of the character display mode selector switch.

   "STEP 1" is displayed on the top line of the character display, and "FULLY ROLL BACK" and "AT CARRY POSI" are displayed in turn for 3 seconds each on the bottom line.

```
STEP  1
FULLY  ROLL  BACK■
```

```
STEP  1
AT  CARRY  POSI  ■
```

8. Tilt the bucket back fully, then lower the lift arm to set to the travel posture.

   When the lift arm is lowered, the display on the character display changes to "STEP 2 RAISE TO TOP".

```
STEP  2
RAISE  TO  TOP   ■
```

9. Raise the lift arm to the maximum height at the same speed as for actual operations.

   Depress the accelerator pedal to the same angle as for actual operations. Keep the accelerator angle constant and do not change it. Carry out the lift arm RAISE at the detent.

10. When the calibration is completed correctly, the screen for inputting the weight is displayed.

```
INPUT  LOAD      < >
00.00t           ◇■
```

REMARK

For details of the method of inputting, see "Setting subtraction mode (6-9)".
The load meter automatically judges if it is "1/2 rated load calibration" or "rated load calibration", and rewrites the data. Even if the input value is the same as the previous value, input the weight.

When the weight is input, the buzzer sounds and the character display returns to the normal service meter and clock display.

```
   ⧖          19.0  h
03:09
```


Downloaded from www.Manualslib.com manuals search engine

https://truckmanualshub.com/

If the calibration when loaded cannot be completed normally, the buzzer sounds, “CALIBRATION“ appears on the top line of the character display, and “LOAD BUCKET“ appears on the bottom line.

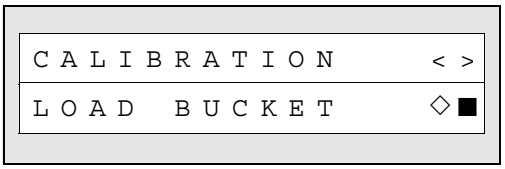

11. If the calibration when loaded cannot be completed normally, carry out the operation again from Step 6.

Resetting calibration

1. Check that the standard service meter and time is displayed on the character display.

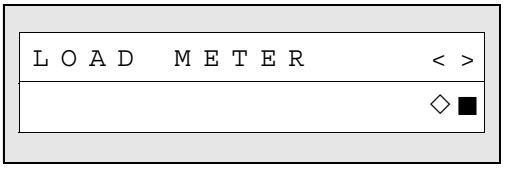

2. Press the (◇) portion of the character display mode selector switch to display “LOAD METER“.

3. Press character display mode selector switch (◇), then press character display item selector switch (>) or (<) to display “CALIBRATION RESET“ on the character display.

4. Press character display mode selector switch (◇), press character display item selector switch (<) to move the cursor to “YES“, then press character display mode selector switch (■).

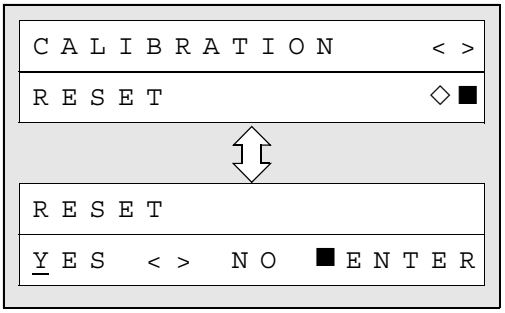

Downloaded from www.Manualslib.com manuals search engine

https://truckmanualshub.com/

Method of using addition mode

1. Set the load meter to the addition mode.

   For details, see "Setting addition mode (6-8)".

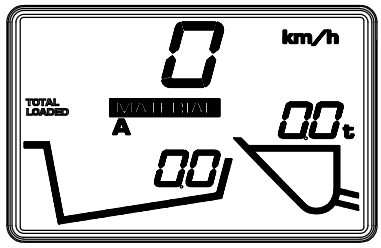

GK050277

The following explanation uses “A“ selected as the “MATERIAL“ as an example.

2. Fill the bucket with the first load, tilt the bucket fully, raise the lift arm above the horizontal position, then load the dump truck.

   Let us take the load as 5.1t.

   The display shows the bucket load as 5.1t, and the total load display shows 5.1.

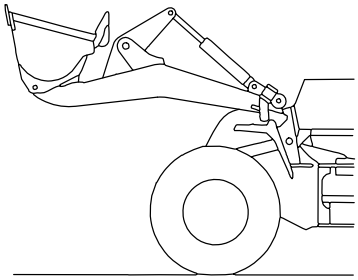
GK050272

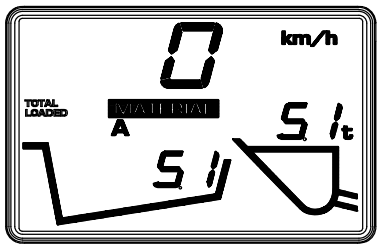

GK050285

When 15 seconds have passed since the start of the measurement, the bucket load display goes out and returns to 0.0t. The total load display shows 5.1.

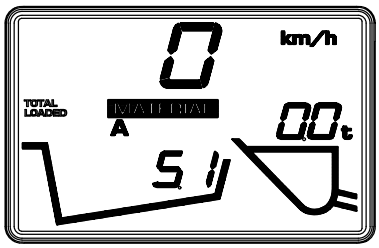

GK050286

Downloaded from www.Manualslib.com manuals search engine

https://truckmanualshub.com/

REMARK

When the bucket is tilted back fully and the lift arm is raised above the travel posture, the measurement of the load starts. If the first load is not discharged in Step 1, and the lift arm is lowered to the travel posture, then raised again to the horizontal position, the load will be measured as the second load, even though it has not been discharged. In this case, the bucket load display will show 5.1t, and the total load display will show 10.2. To cancel the mistaken second load data, press the load meter cancel switch. The measurement is cancelled and the total load display returns to 5.1. It is possible to cancel the measurement 15 seconds after the load is displayed or before measuring the next load.

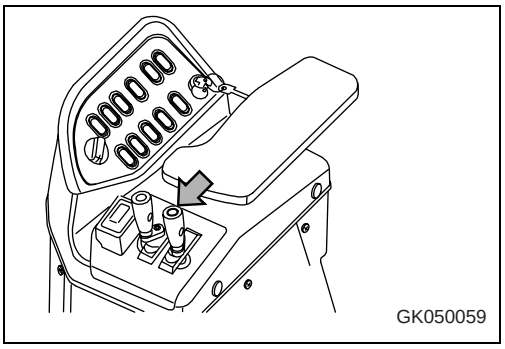
GK050059

3. Fill the bucket with the second load, tilt the bucket back fully, raise the lift arm above the horizontal position, then load the dump truck.

   Let us take the load in this case as 4.9t.

   The display shows the bucket load as 4.9t, and the total load display shows 10.0.

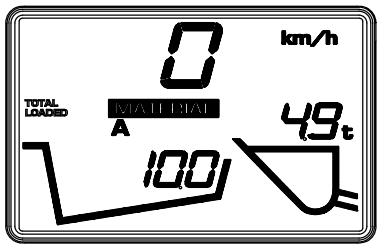

GK050287

   When 15 seconds have passed since the start of the measurement, the bucket load display goes out and returns to 0.0t. The total load display shows 10.0.

   Repeat Step 3 for the third and following loads. The total load display shows the total amount that has been loaded.

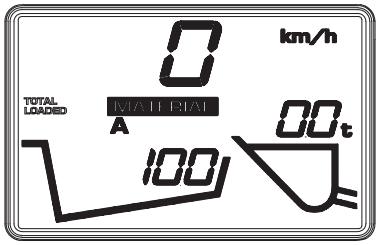

GK050306

Downloaded from www.Manualslib.com manuals search engine

https://truckmanualshub.com/

4. When resetting the total load in order to carry out the next loading cycle, press the load meter sub-total switch.

   The load meter display returns to the initial condition.

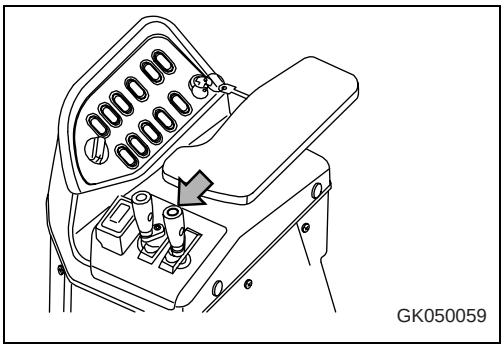

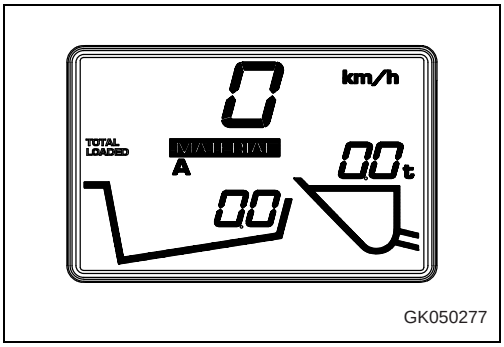

REMARK

To reset, keep the load meter sub-total switch pressed for at least 2 seconds.
When printer is connected
If the load meter sub-total switch is released after less than 2 seconds, the data are printed out but the data are not reset.
If the load meter sub-total switch is kept pressed for more than 2 seconds, the data are not printed out, but the data are reset.

Downloaded from www.Manualslib.com manuals search engine

https://truckmanualshub.com/

Method of using subtraction mode

1. Set the load meter to the subtraction mode.

   For details, see "Setting subtraction mode (6-9)".

Let us take the target load as 12.0t.

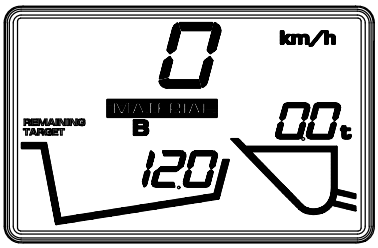

GK050288

2. Fill the bucket with the first load, tilt the bucket back fully, raise the lift arm above the horizontal position, then load the dump truck.

   Let us take the load as 5.1t.

   The display shows the bucket load as 5.1t, and the total load display shows 6.9.

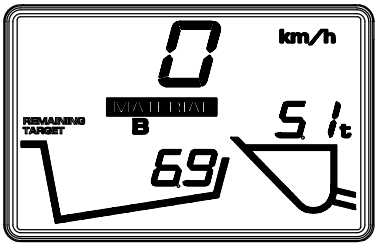

GK050289

   When 15 seconds has passed since the start of the measurement, the bucket load display goes out and returns to 0.0t. The total load display shows 6.9.

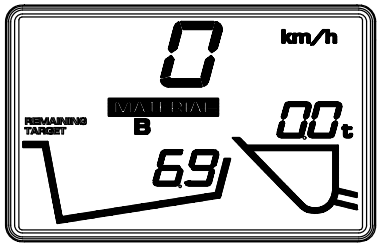

GK050290

REMARK

When the bucket is tilted back fully and the lift arm is raised above the travel posture, the measurement of the load starts. If the first load is not discharged in Step 1, and the lift arm is lowered to the travel posture, then raised again to the horizontal position, the load will be measured as the second load, even though is has not been discharged. In this case, the bucket load display will show 5.1t, and the total load display will show 1.8. To cancel the mistaken second load data, press the load meter cancel switch. The measurement is cancelled and the total load display returns to 6.9.

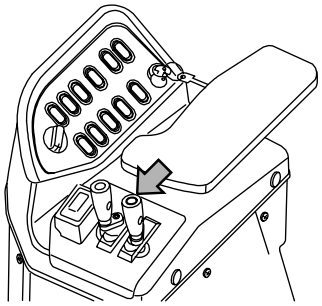

GK050059

Downloaded from www.Manualslib.com manuals search engine

https://truckmanualshub.com/

3. Fill the bucket with the second load, tilt the bucket back fully, raise the lift arm above the horizontal position, then load the dump truck.

   Let us take the load in this case as 4.9t.

   The display shows the bucket load as 4.9t, and the total load display shows 2.0.

   When 15 seconds has passed since the start of the measurement, the bucket load display goes out and returns to 0.0t. The total load display shows 2.0.

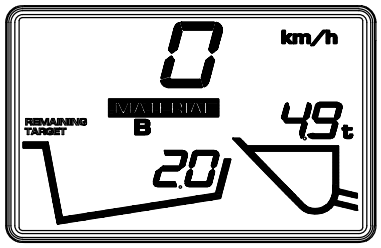

GK050291

4. Fill the bucket with the third load, tilt the bucket back fully, then raise the lift arm above the horizontal position.

   Let us take the load in this case as 5.0t.

   The display shows the bucket load as 5.0 t, and the total load display shows - 3.0. This means that the total load is 3.0t over the target load.

   The buzzer sounds and “TARGET OVER“ is displayed for 5 seconds after the target load shows -3.0. After 5 seconds, the total load display changes to 2.0.

   This is the target load after completion of loading the second bucket. The bucket at present has a load of 5.0t, but only 2.0t of this needs to be loaded.

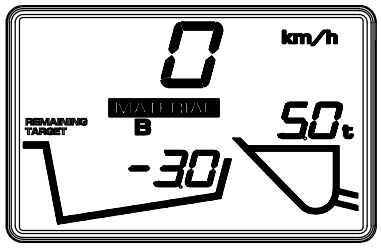

GK050292

5. Using 2.0t as the target, load part of the present 5.0t load into the dump truck from the bucket.

   The target load of 2.0 flashes.

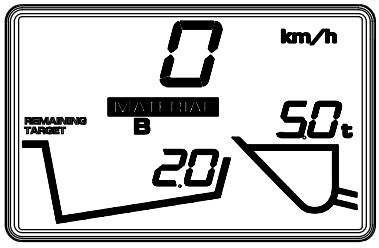

GK050293

6. After loading, lower the bucket to the travel posture, then raise the lift arm and measure the remaining load in the bucket. If we take the remaining load in the bucket as 3.5t, the target load becomes 0.5.

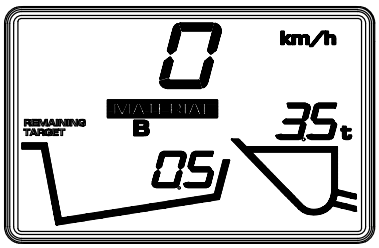

GK050294

Downloaded from www.Manualslib.com manuals search engine

https://truckmanualshub.com/

REMARK

If the actual load exceeds the target load and 2.2t is loaded when the target load is 2.0t, the alarm buzzer sounds. At the same time, "TARGET OVER" is displayed on the character display. Press the load meter cancel switch. The alarm buzzer will stop.
Notice that even if the starting switch is turned off, the alarm buzzer does not stop.

7. Using 0.5t as the target, load part of the remaining 3.5t load into the dump truck from the bucket.

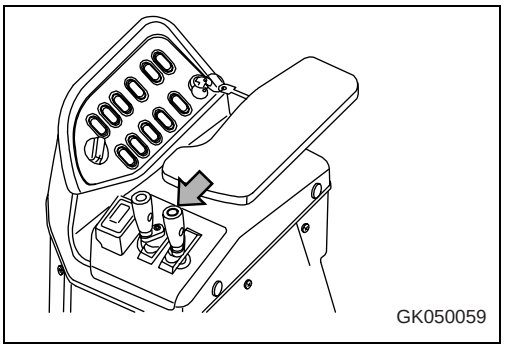

8. After loading, lower the bucket to the travel posture, then raise the lift arm and measure the remaining load in the bucket. If we take the remaining load in the bucket as 3.1t, the target load becomes 0.1.

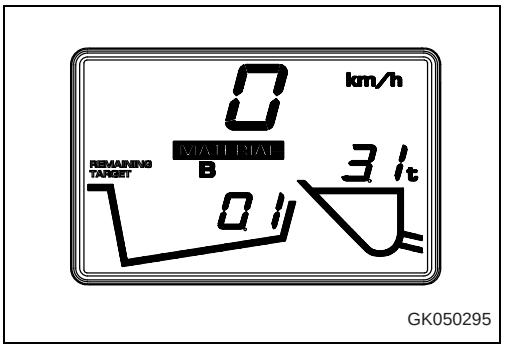

9. When resetting the total load in order to carry out the next loading cycle, press the load meter sub-total switch. This completes the first loading operation.

   In this case, the load remaining in the bucket becomes the target load for the second cycle.

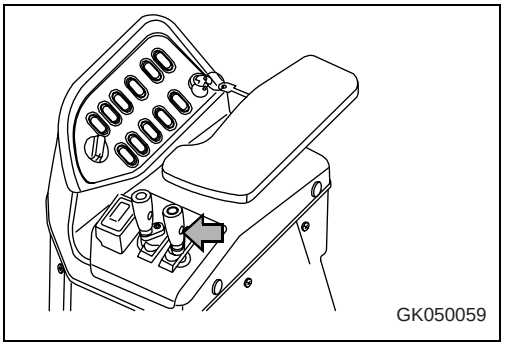

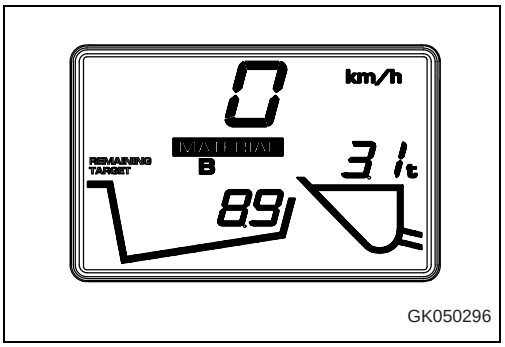

Downloaded from www.Manualslib.com manuals search engine

https://truckmanualshub.com/

10. Dump the load in the bucket into the dump truck and start the second loading cycle.

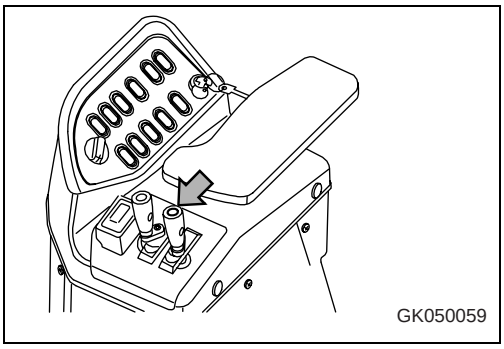

REMARK

If the load remaining in the bucket is not used, dump the load and press the load meter cancel switch. The target load returns to the initial value of 12.0.

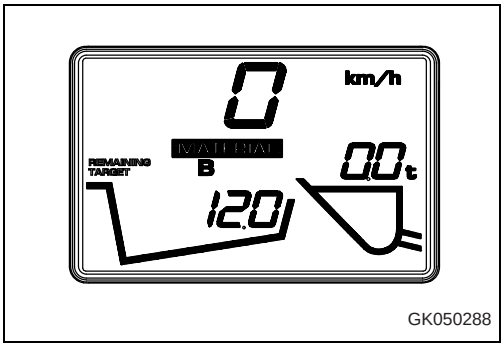

Downloaded from www.Manualslib.com manuals search engine

https://truckmanualshub.com/

Printout from load meter

If a printer is installed, it is possible to print out the content of the load.

There are three types of load meter printout (A, B, C).

For details of the output mode of the printout type, see "Selection of printout mode (6-29)".

- A mode: Total printout

  The number of loads for each category of material and the total load are printed out.

- B mode: Sub-Total printout

  The load each time and the total load for each category of material, together with the overall total load are printed out.

- C mode:

  The data for A mode are printed out together with addition of the maintenance items and time remaining to maintenance.

The printouts shown below are examples of the load meter printouts for the WA600-6.

Ex:

Output with mode A

WA600-6 #60001

25/OCT/2005 17:30

Material	Times	Total Load
A	1	2.62t
B	2	6.04t
C	3	7.11t
D	4	9.04t
E	5	14.82t
Total	15	39.63t

Output with mode B

WA600-6 #60001

25/OCT/2005 17:30

Material A
1: 2.62t
Total: 1 times 2.62t

Material B
1: 2.62t 2: 3.42t
Total: 2 times 6.04t

Material C
1: 3.43t 2: 2.25t
3: 1.43t
Total: 3 times 7.11t

Material D
1: 1.43t 2: 2.27t
3: 2.05t 4: 3.38t
Total: 4 times 9.13t

Material E
1: 3.48t 2: 2.94t
3: 3.64t 4: 1.97t
5: 2.79t
Total: 5 times 14.82t

Output with mode C

WA600-6 #60001

Start time
25/OCT/2005 9:15
Service meter 00043.0h
End time
25/OCT/2005 17:30
Service meter 00051.2h

Material	Times	Total Load
A	1	2.62t
B	2	6.04t
C	3	7.11t
D	4	9.04t
E	5	14.82t
Total	15	39.63t

Maintenance

Engine oil	500h
Transmission oil	1000h
Hydraulic oil	2000h
Axle oil	2000h
Engine oil filter	500h
Transmission oil filter	500h
Hydraulic oil filter	2000h
Axle pivot pin	100h
Boom pin	250h
Steering cylinder pin	250h
Center hinge pin	250h

Downloaded from www.Manualslib.com manuals search engine

https://truckmanualshub.com/

Selection of printout mode

1. Check that the character display shows the normal service meter and clock display.

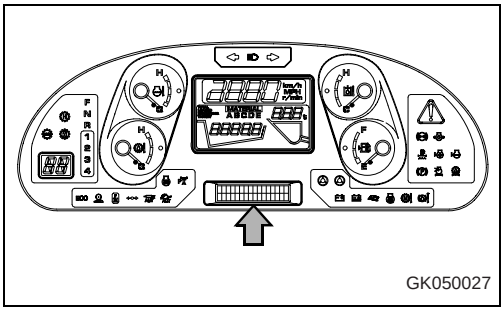

⧖	1 9 . 0 h
0 3 : 0 9	

2. Press the (◇) portion of the character display mode selector switch and display “LOAD METER“ on the character display.

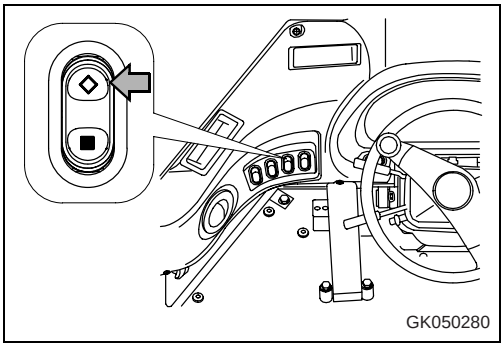

L O A D M E T E R	< >
	◇ ■

3. Use the (◇) portion of the character display mode selector switch and the (>) or (<) portion of the character display item selector switch to display “PRINT TYPE“ on the character display.

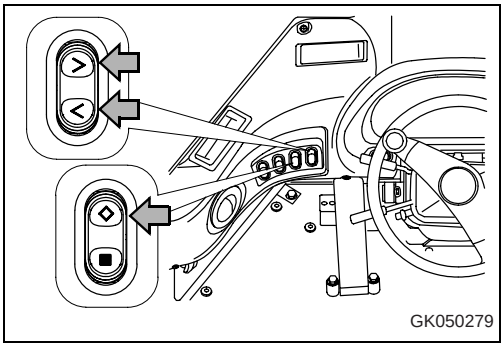

P R I N T T Y P E	< >
	◇ ■

Downloaded from www.Manualslib.com manuals search engine

https://truckmanualshub.com/

4. Press the (◇) portion of the character display mode selector switch.

   “A<>B<>C“ is displayed on the bottom line of the character display.

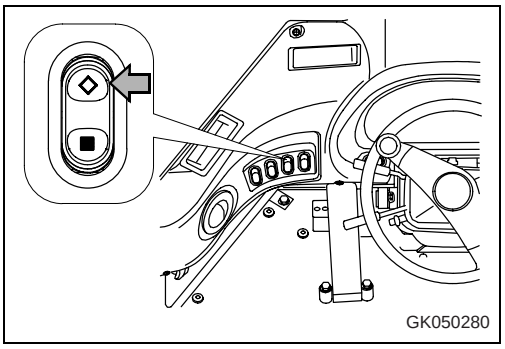

P R I N T T Y P E	< >
A < > B < > C	■ E N T E R

5. Press the (>) or (<) portion of the character display item selector switch to move the cursor under A, B, or C to set the desired load meter printout mode.

   For details, see "Printout from load meter (6-28)".

   The type of printout can be selected from the three printout modes.

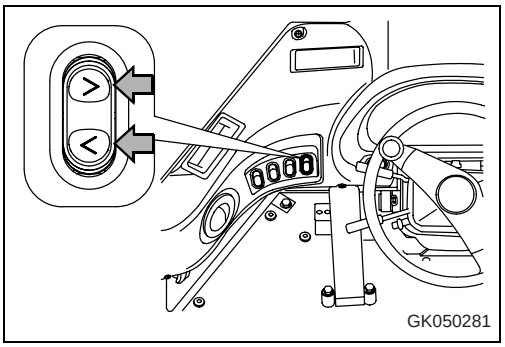

6. When the system is set to C mode, the data are printed out when the setting is made and the print mode returns to A or B.

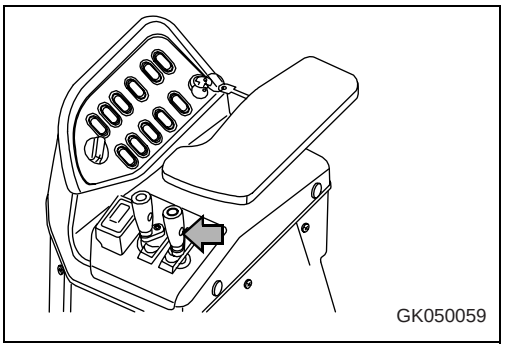

7. To print out in A or B mode, press the load meter sub-total switch.

   The data are printed out.

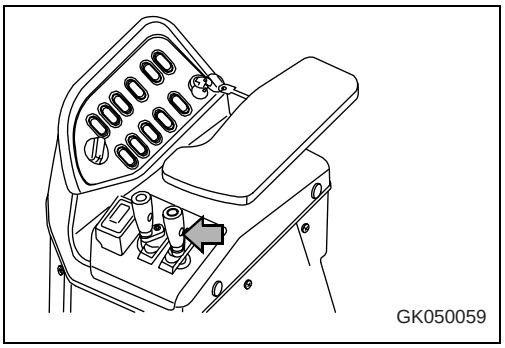

Downloaded from www.Manualslib.com manuals search engine

https://truckmanualshub.com/

REMARK

If you make a mistake in the setting, press the(■) portion of the character display mode selector switch.
The display will return to the previous display.

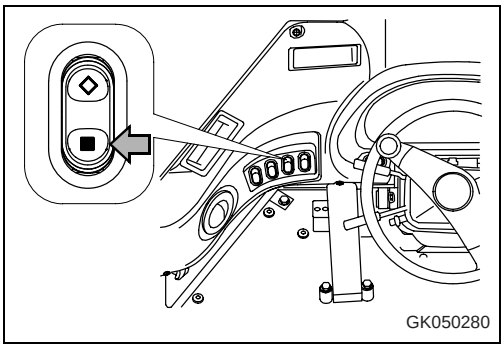

Downloaded from www.Manualslib.com manuals search engine

https://truckmanualshub.com/

6.2 Joystick steering system

To enable you to use the joystick steering safely and efficiently, please read the following before using it.

6.2.1 Components

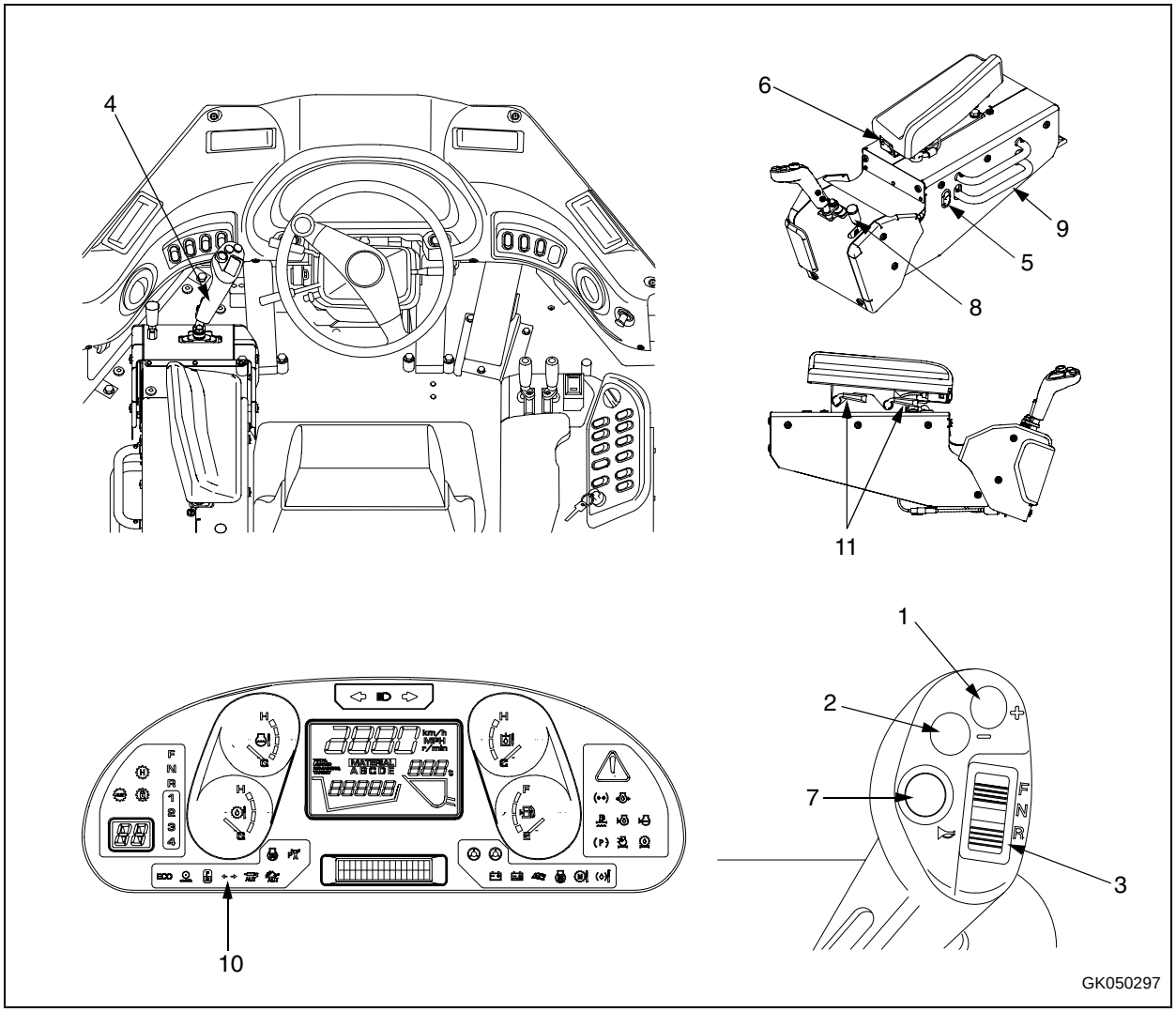

(1) Shift up switch	(7) Horn switch
(2) Shift down switch	(8) Console tilt lever
(3) FNR switch	(9) Console fore-and-aft adjustment lever
(4) Joystick steering lever	(10) Joystick pilot lamp
(5) Joystick ON/OFF switch	(11) Armrest adjustment lever
(6) HI/LOW selector switch	

Downloaded from www.Manualslib.com manuals search engine

https://truckmanualshub.com/

1. Shift up switch

2. Shift down switch

This switches (1) an (2) are used when shifting up or down, regardless of whether the transmission is in the manual shift mode or auto shift mode.

Press (1): Shift up

Press (2): Shift down

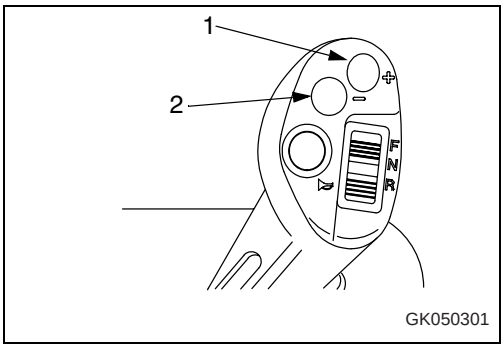

3. F-N-R Switch

The F/N/R switch (3) at the top of the joystick steering lever is used to switch the transmission between FORWARD and REVERSE.

(F) position: FORWARD

(N) position: NEUTRAL

(R) position: REVERSE

Use the shift up and shift down switches at the top of the joystick to change the speed range.

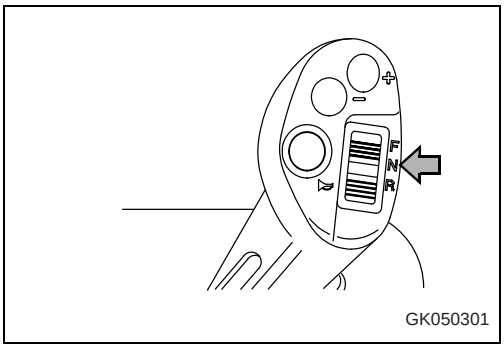

4. Joystick steering lever

Use this lever (4) to steer the machine to the left or right.

When traveling, operate this lever in the direction to turn the machine.

(a): Left turn

(b): Right turn

(N): Neutral

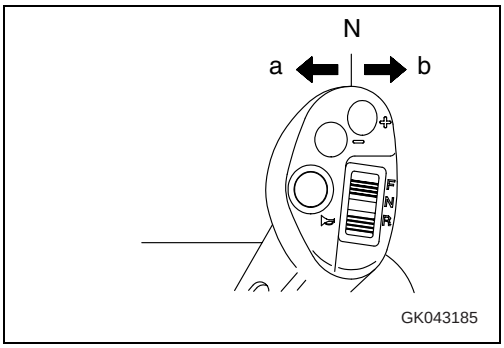

5. Joystick on/off switch

When this switch (5) is turned ON, the joystick steering is switched ON.

Position (a): ON (possible to steer with joystick)

Position (b): OFF (impossible to steer with joystick)

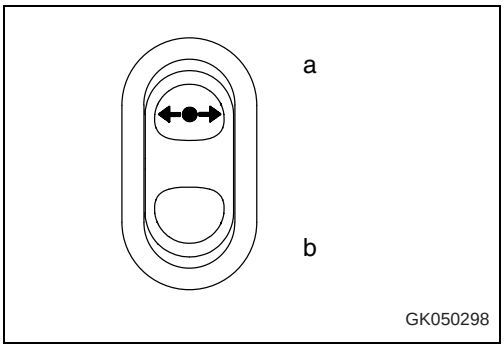

Downloaded from www.Manualslib.com manuals search engine

https://truckmanualshub.com/

6. HI/LOW Selector switch

This switch (6) is used to switch the steering speed between HIGH and LOW.

Position (a): HI

The articulating speed of the machine is high in relationship to the operation of the joystick, so this setting is suitable for comparatively fast cycle times.

Position (b): LOW

The articulating speed of the machine is low in relationship to the operation of the joystick, so this setting is suitable for operations loading loose materials and materials that easily spill.

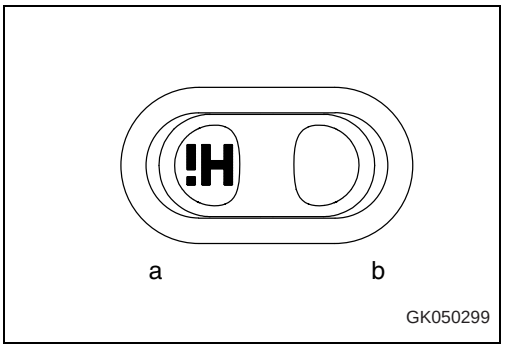

7. Horn switch

Press this switch (7) at the top of the joystick to sound the horn.

By using this switch, it is possible to sound the horn without taking your hand off the joystick.

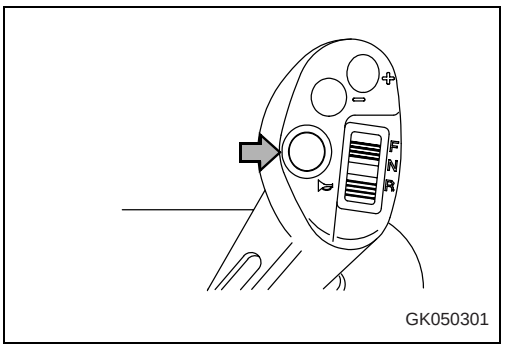

8. Console tilt lever

Use this lever (8) to tilt the lever portion of the joystick console.

Position (a):
Joystick steering system is actuated

Position (b):
Joystick steering system is not actuated (system is turned OFF)

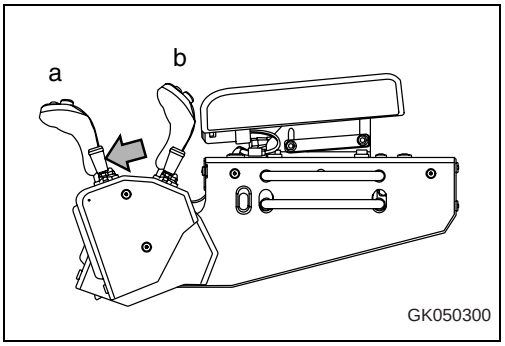

9. Console fore-and-aft adjustment lever

Use this lever (9) when sliding the whole joystick console to the front or rear.

For details, see "Adjustment of joystick console (6-39)".

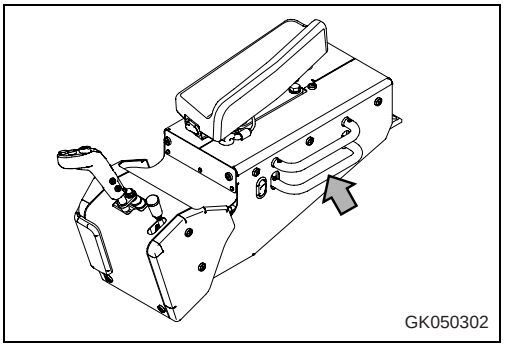

Downloaded from www.Manualslib.com manuals search engine

https://truckmanualshub.com/

10. Joystick pilot lamp

This lamp (10) lights up when the joystick ON/OFF switch is at the ON position and the joystick console is tilted to the front.

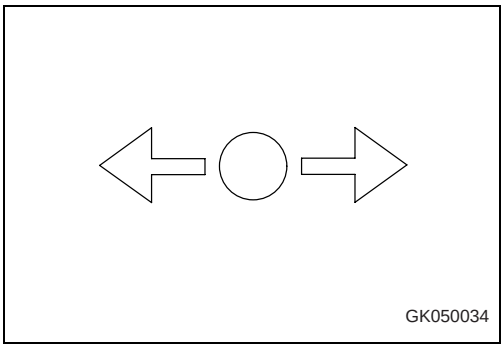

11. Armrest adjustment lever

Pull this lever (11) to adjust the height of the armrest within range (a) of 26 mm (1.0 in).

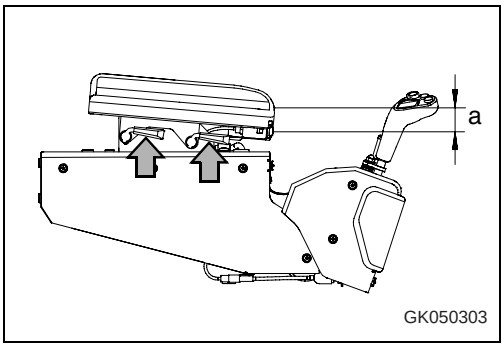

It is possible to adjust the angle within range (b) of approx. 7°.

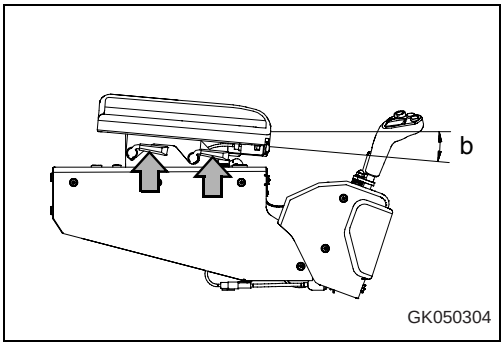

Downloaded from www.Manualslib.com manuals search engine

https://truckmanualshub.com/

6.2.2 Structure and function

The joystick steering system is a system used to steer wheel loaders with a lever instead of a steering wheel.

The joystick enables steering with small, light movements, and helps to reduce operator fatigue.

When joystick ON/OFF switch (1) is turned ON, it becomes possible to operate the steering with the joystick.

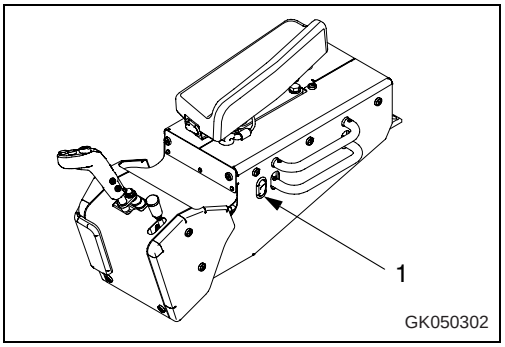

When the joystick steering is in use, the joystick pilot lamp on the machine monitor lights up.

On machines equipped with the joystick steering system, it is possible to use joystick ON/OFF switch (1) to select the steering and transmission operation method as shown in the table below.

In addition, on machines equipped with joystick steering, the transmission auto shift function is also included.

The differences between operation using the joystick and operation using the steering wheel are as follows.

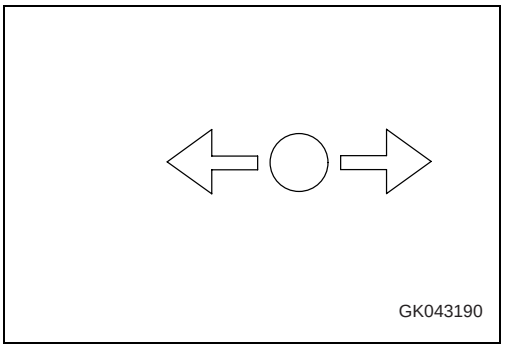

Selection		Operation using joystick		Operation using steering wheel	
Joystick ON/OFF switch		ON		OFF	
Steering		Steering using joystick (steering with steering wheel is also possible)		Steering using steering wheel	
Trans-mission	F/N/R	Operation using FNR switch at top of joystick		Operation using transmission directional lever	
	Transmission type	Auto		Auto	
	Transmission auto shift/manual shift selector switch	Manual	Auto (L, H)	Manual	Auto (L, H)
	Selection of speed range	Speed range selection using shift up, shift down switches at top of joy-stick*	Automatic gear-shifting accord-ing to travel speed	Operation using gearshift lever	Automatic gearshifting according to travel speed

*: Does not shift up above speed range of gearshift lever.

Downloaded from www.Manualslib.com manuals search engine

https://truckmanualshub.com/

Operation using joystick lever and operation using steering wheel

CAUTION

- If the directional lever and joystick FNR switch are not at the neutral position, the neutral interlock circuit makes it impossible to switch the transmission directional control (when the joystick ON/OFF switch is ON, it is switched from the directional lever to the joystick FNR switch; when the joystick ON/OFF switch is OFF, it is switched from the joystick FNR switch to the directional lever).
- Do not use the joystick when traveling on public roads.

Select joystick operation or steering wheel operation according to the work.

Steering using joystick

This is suited for continuous loading operations on jobsites with ample space where the loading operation can be carried out with a comparatively relaxed cycle time.

Because operations can be carried out with a small movements and light operating effort, this is also suitable for reducing operator fatigue when operating continuously.

Steering using steering wheel

This provides excellent fine control and ability to travel straight, so it is suitable for travel between jobsites and for load and carry operations. In addition, it is also suitable for short cycle loading operations because the upper part of the operator's body is supported by the steering wheel when frequently switching between FORWARD and REVERSE.

Downloaded from www.Manualslib.com manuals search engine

https://truckmanualshub.com/

Getting in or out of operator's cab

WARNING

Before getting in or out of the operator's cab, turn the joystick ON/OFF switch to the OFF position, slide the joystick console fully to the rear, and lock it in position. If you grip the console tilt lever and tilt the lever portion of the joystick console to the rear, the joystick steering system power is turned OFF and the joystick is made inactive.

The joystick console slides a maximum of 220 mm (8.7 in) to the rear to make it easier to get in or out of the operator's cab.

When the engine is running, there is danger that if the joystick lever is moved by mistake, the machine may articulate unexpectedly. To avoid this, always turn the joystick ON/OFF switch to the OFF position when not operating the machine.

1. Turn joystick ON/OFF switch (1) to the OFF position.

   The power is turned OFF and the joystick steering system is made inactive.

2. When starting operations, turn joystick ON/OFF switch (1) to the ON position.

   The power is turned ON and the joystick steering system is made active.

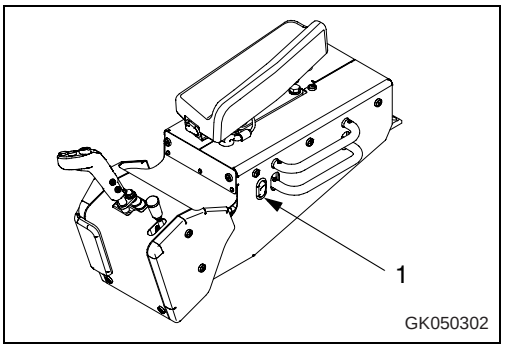

Downloaded from www.Manualslib.com manuals search engine

https://truckmanualshub.com/

Adjustment of joystick console

WARNING

- Stop the machine on level ground in a safe place when carrying out the adjustment.
- Carry out the adjustment before starting operations or when changing operator shifts.
- Put your back against the backrest of the operator's seat and adjust the seat so that it is possible to depress the brake fully, then adjust the console.

Grip console fore-and-aft adjustment lever (1) and adjust the position of the joystick console to the front or rear.

If you grip the console fore-and-aft adjustment lever (1), lever portion (2) of the joystick console automatically tilts to the rear.

Maximum slide to rear when getting on or off: 220 mm (8.7 in)

Fore-and-aft adjustment when operating joystick: 160 mm (6.3 in) (16 mm (0.6 in) x 10 stages)

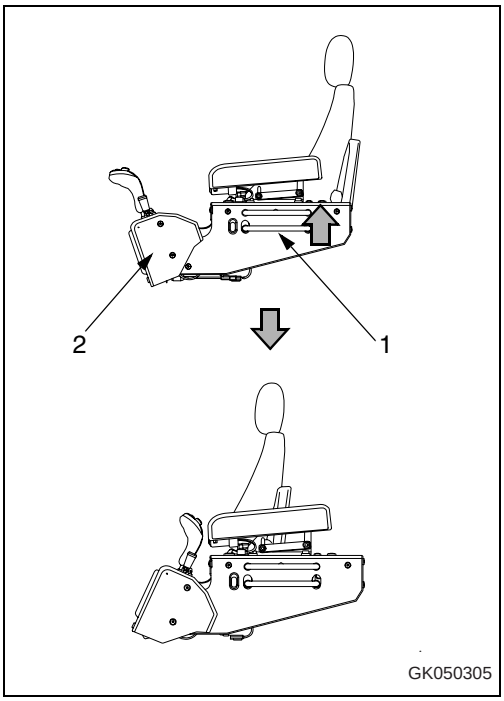

Seat adjustment

WARNING

- When adjusting the operator's seat, stop the machine in a safe place before starting the operation.
- Adjust the seat before starting operations for the day or when changing operators.
- When adjusting the seat, put your back against the backrest and adjust to a position where the brake pedal can be fully depressed.

For details of seat adjustment, see "Seat adjustment (3-103)".

Downloaded from www.Manualslib.com manuals search engine

https://truckmanualshub.com/

6.2.3 Precautions for steering with joystick

WARNING

- If the machine and transmission cannot be operated normally with the joystick, or if the warning lamp lights up, stop the machine with the brake first. Then, turn off the joystick ON/OFF switch and move to a safe place by using the steering wheel and directional lever.
- Before starting the operation of the machine again, find out and repair the troubled part and confirm that the function is normal. For the troubleshooting and repair, please contact your KOMATSU distributor.
- Never operate the machine before it is repaired completely.

- If the machine is steered with the steering wheel, its turning angle is fixed when turning of the latter is stopped.If the machine is steered with the joystick and the latter is held turned, however, the machine is steered to the articulate end.

  Since the feel of steering of the joystick is different from the steering wheel, take care sufficiently until you are get accustomed to the joystick.

- If the forward/reverse lever is not at the neutral position, when the joystick ON/OFF switch is turned off, the neutral interlock circuit prevents it from turning to the forward/reverse lever side. Since the transmission is kept at the neutral position, the vehicle cannot move either forward or in reverse. In this case, turn the forward/reverse lever to the N (Neutral) position.

- If the electric circuit of the joystick steering system or transmission control system has trouble, the central caution lamp (Red) on the left side of the machine monitor flashes to notify the trouble to the operator.

  Since both steering system and transmission are set in the respective neutral positions, turn off the joystick ON/OFF switch, then drive the machine with the steering wheel and the directional lever.

Downloaded from www.Manualslib.com manuals search engine

https://truckmanualshub.com/

6.2.4 Operation method of joystick steering system

WARNING

- It is dangerous to turn the machine suddenly at high speed, or to turn on steep hills. Do not operate the steering in such conditions.
- When turning, the articulation stops at the position where the steering wheel is turned to, but if the joystick is held in the tilted position, the body will articulate fully.
- The feeling when operating the steering with the joystick is different from when operating with the steering wheel, so be extremely careful until you have become used to operating the joystick.
- When the joystick ON/OFF switch is at the ON position, if the directional lever is operated to F or R, the machine will travel in forward or reverse according to the operation of the directional lever, regardless of the position of the directional selecotr switch on the head of the joystick lever. Priority is given to the operation of the directional lever, so be careful when operating.
  When this is done, the central warning lamp lights up and the alarm buzzer sounds.
  Set the directional lever and directional selector switch on the head of the joystick to the N position.

Check the adjustment and operation before starting the engine. For details, see "Check before starting engine, adjust (3-90)".

1. Before starting the engine, check the operation of the joystick lever steering, check that the transmission directional lever is at N, and that the surrounding area is safe.

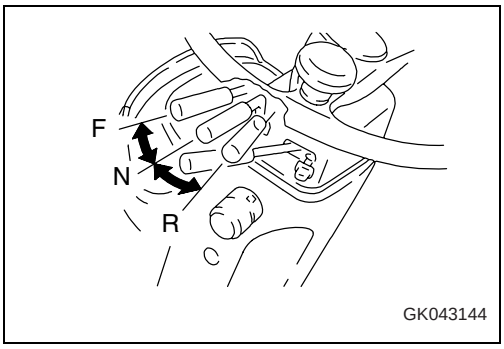

REMARK

Under the following conditions, a warning may be given when the engine is started.

- If the FNR switch on the joystick is at F or R, the joystick pilot lamp flashes, the central warning lamp lights up, and the alarm buzzer sounds.

  In this condition, the engine will not start, so set the FNR switch to N.

- If the joystick is not at the N position, the joystick pilot lamp flashes, the central warning lamp lights up, and the alarm buzzer sounds.

  In this condition, the engine will not start, so set the joystick to the N position.

Downloaded from www.Manualslib.com manuals search engine

https://truckmanualshub.com/

2. Press the (a) part of the joystick ON/OFF switch to turn it ON.

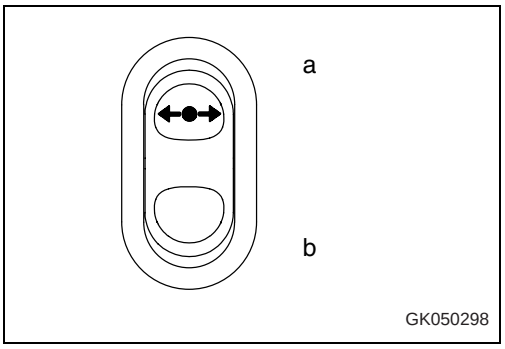

3. Operate the joystick in direction (b) to turn the machine to the right; operate it in direction (a) to turn the machine to the right; operate it in direction (a) to turn the machine to the left.

   The greater the angle of operation, the faster the articulating speed becomes.

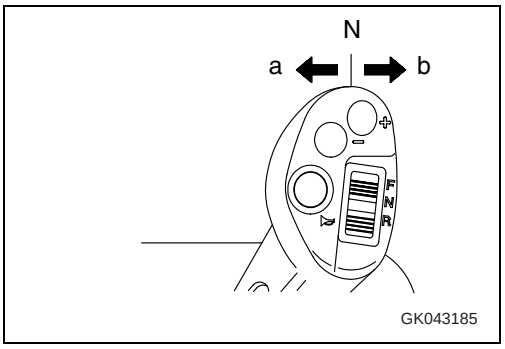

4. It is possible to switch the articulating speed with the HI/LOW selector switch.

   Select the speed to match the operation.

5. When the machine has articulated to the desired angle, return the joystick to the N position.

   The joystick will return automatically to the N position.

6. To return the direction of travel of the machine so that it travels in a straight line, operate the joystick in the opposite direction from the N position (for example, when the machine is articulated to the right, operate the joystick to the left).

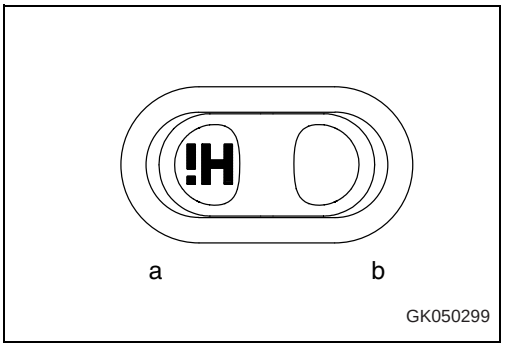

7. Use the FNR switch at the top of the joystick lever to set the transmission to the direction of travel.

   N position: NEUTRAL

   F position: FORWARD

   R position: REVERSE

   If the position of the directional lever and the FNR switch are different, the joystick pilot lamp flashes, the warning lamp lights up, and the alarm buzzer sounds.

   In this condition, the machine will travel in the direction set by the directional lever, so set the directional lever to N.

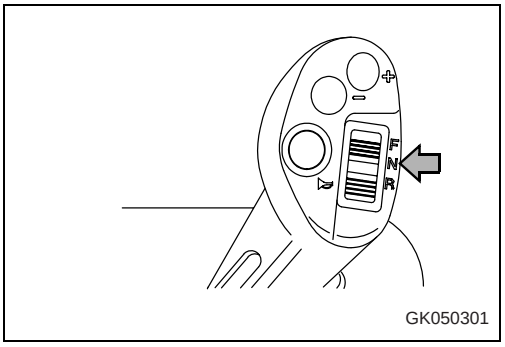

Downloaded from www.Manualslib.com manuals search engine

https://truckmanualshub.com/

8. To change the speed range, use shift up switch (1) or shift down switch (2) on the joystick.

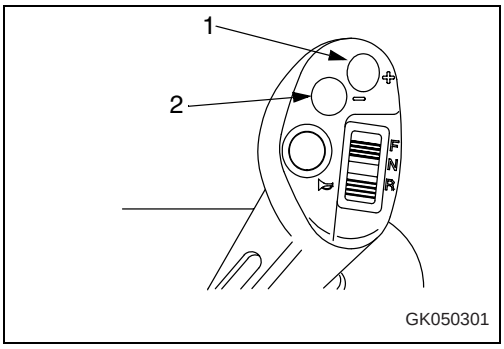

9. Press part (b) of the joystick ON/OFF switch to turn it OFF.

   The joystick operation is then canceled.

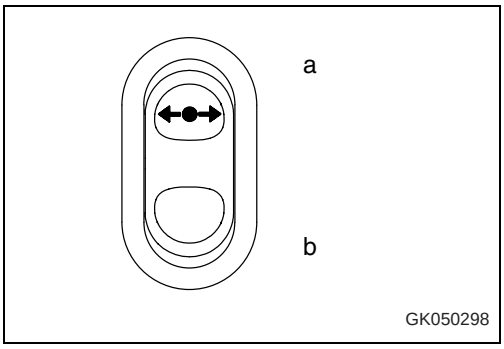

Downloaded from www.Manualslib.com manuals search engine

https://truckmanualshub.com/

6.3 Handling machines equipped with KOMTRAX

KOMTRAX is a machine management system that uses wireless communications.

A contract with your KOMATSU distributor is necessary before the KOMTRAX system can be used. Any customers desiring to use the KOMTRAX system should consult their KOMATSU distributor.

The KOMTRAX equipment is a wireless device using radio waves, so it is necessary to obtain authorization and conform to the laws of the country or territory where the machine equipped with KOMTRAX is being used. Always contact your KOMATSU distributor before selling or exporting any machine equipped with KOMTRAX.

When selling or exporting the machine or at other times when your KOMATSU distributor considers it necessary, it may be necessary for your KOMATSU distributor to remove the KOMTRAX equipment or to carry out action to stop communications.

If you do not obey the above precautions, neither KOMATSU nor your KOMATSU distributor can take any responsibility for any problem that is caused or for any loss that results.

Downloaded from www.Manualslib.com manuals search engine

https://truckmanualshub.com/

6.3.1 Basic precautions

WARNING

- Never disassemble, repair, modify, or move the communications terminal, antenna, or cables. This may cause failure or fire on the KOMTRAX equipment or the machine itself. (Your KOMATSU distributor will carry out removal and installation of KOMTRAX.)
- Do not allow cables or cords to become caught; do not damage or pull cables or cords by force. Short circuits or disconnected wires may cause failure or fire on the KOMTRAX equipment or the machine itself.
- For anyone wearing a pacemaker, make sure that the communications antenna is at least 22 cm (8.7 in) from the pacemaker. The radio waves may have an adverse effect on the operation of the pacemaker.

NOTE

- *Even when the key in the starting switch of the KOMTRAX system is at the OFF position, a small amount of electric power is consumed. When putting the machine into long-term storage, take the action given in "Long-term storage (3-170)".*
- *Please contact your KOMATSU distributor before installing a top guard or other attachment that covers the cab roof.*
- *Be careful not to get water on the communications terminal or wiring.*

REMARK

The KOMTRAX system uses wireless communications, so it cannot be used inside tunnels, underground, inside buildings, or in mountain areas where radio waves cannot be received. Even when the machine is outside, it cannot be used in areas where the radio signal is weak or in areas outside the wireless communication service area.
There is absolutely no need to inspect or operate the KOMTRAX communications terminal, but if any abnormality is found, please consult your KOMATSU distributor.

Downloaded from www.Manualslib.com manuals search engine

https://truckmanualshub.com/

6.4 Central lubrication system

6.4.1 Operating the central lubrication system

The pump with the grease container is located at the left of the engine bonnet, above the fender.

1. Turn the ignition switch to ON position (B).

   This switches on the grease pump.

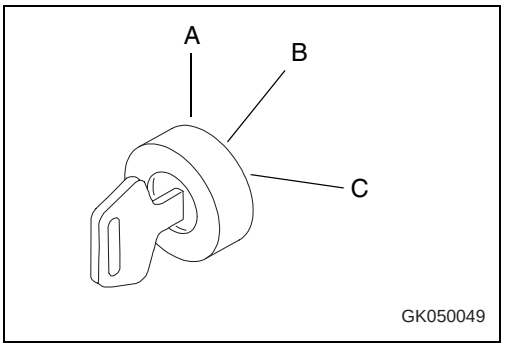

2. Watch the grease container.

   If the mixer blades are turning inside the grease container, the lubrication system is OK.

   If the mixer blades are not turning, no automatic lubrication is taking place.

   To eliminate the malfunction, contact your KOMATSU dealer.

6.4.2 Display and control unit

The display and control unit is protected by a transparent plastic cover against splashing water and mechanical damage. For programming, the cover has to be dismounted and, following programming, reattached with a screwdriver.

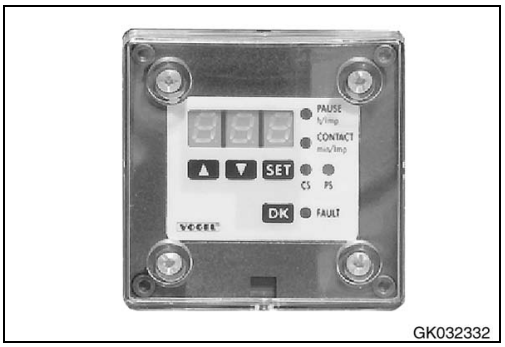

Downloaded from www.Manualslib.com manuals search engine

https://truckmanualshub.com/

LED-display

1. Seven-segment display: Values and operating state
2. Pause time (PAUSE h/lmp)
3. Pump operation (CONTACT min/lmp)
4. Monitoring of system function by means of an external cycle switch (CS)
5. Monitoring of system function by means of an external pressure switch (PS)
6. Fault message (FAULT)

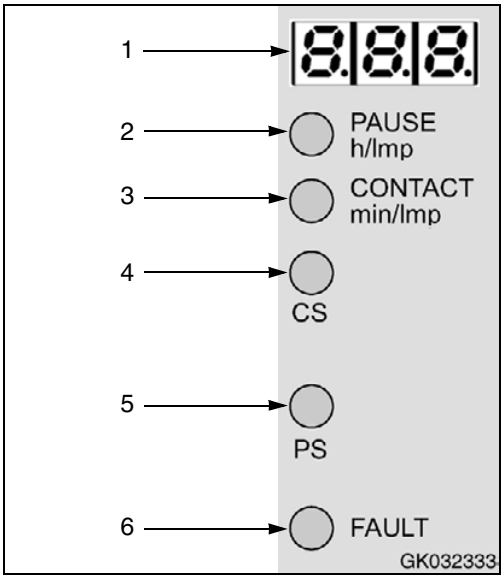

Pushbuttons

1. Turn on display

   Display values and parameters

   Set values and parameters
2. Change between programming and display mode

   Confirm values (SET)
3. Activatev intermediate lubrication

   Clear fault message (DK)

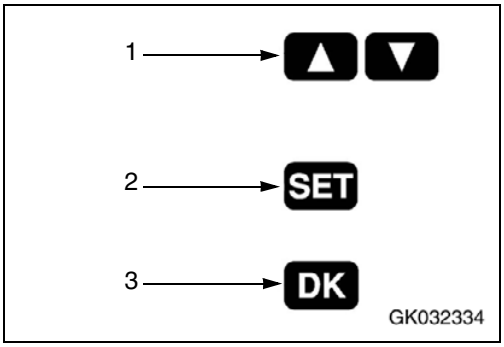

Downloaded from www.Manualslib.com manuals search engine

https://truckmanualshub.com/

6.4.3 Changing the lubrication interval times

The settings when shipping from factory are as follows:

Greasing interval: after 0.5 hour

Greasing time: 9 minutes.

Step	Key	Display
1	SET Press for more than 2s	000 in display flashes
2	SET Press briefly (confirm code)	Automatically indicates first parameter **Example:** „Pause in timer operation“ LED „Pause“ flashes
3	SET Press briefly	Pause time 1 h
4	▲ ▼	Set new value **Example:** 6.8 h = 6 h 48 min
5	SET Press briefly (confirm new value)	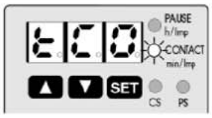 Indicates next parameter „Pump running time in timer mode“ LED „Contact“ flashes
6	SET Press briefly	Pump running time 4 min
7	▲ ▼	Set new value **Example:** 3 min
8	SET Press briefly	Confirm new value
9	SET Press for more than 2s	Changes are written to the memory, and the LED indicators extinguish.

GK032335_GB

Downloaded from www.Manualslib.com manuals search engine

https://truckmanualshub.com/

7. Index

Downloaded from www.Manualslib.com manuals search engine

https://truckmanualshub.com/

7.1 Index

A

Accelerator pedal 3-72
Accumulator, safety for maintenance 2-34
Action codes
  Display 3-12
  E01 3-13
  E02 3-13
  E03 3-13
Adjustments, before starting engine 3-103
Air cleaner 4-28
Air conditioner 3-84, 4-40, 4-44, 4-59
  Cool box 3-88
  Cooling 3-86
  Defrosting 3-87
  Dehumidifying 3-87
  Heating 3-86
  Inspection and maintenance 3-89
  Precautions 3-88
  Vent selection 3-86
Alternator 4-83, 4-89
Alternator belt tension 4-58
Auto-greasing switch 3-65
Automatic shift 3-68
Axle case breather 4-39
Axle oil 4-38, 4-80

B

Backup alarm 3-77
Battery 2-28, 4-55
  Discharged 3-179
  Precautions for charging 3-180
  Removal, installation 3-179
Beacon lamp switch 3-54
Bleeding air
  Hydraulic circuit 4-48
  Piston pump 4-47
Booster cable 3-181
Booster cables, starting 2-29
Brake disc wear 4-83
Brake pedal 3-72
Breaking-in machine 3-110
Bucket
  Installation 3-151
  Removal 3-150
Bucket control lever 3-71
Bucket teeth 4-42
Bucket tooth with segment edge 4-43
Bucket, operation 3-124

C

Cab door, left 3-79
Cab door, right 3-78
Cap wiper, handling 3-80
Cap with lock 3-75
Caution lamps, explanation 3-17, 3-20, 3-24
Cautions lamps, overview 3-7
CE-Conforming equipment 1-20
Central lubrication system 6-46
Changing direction 3-117
Character display item selector switch 3-50
Character display mode selector switch 3-50
Cigarette lighter 3-55
Control levers, explanation 3-67
Controls, general view 3-3
Cool box 3-88
Cooling fan reverse rotation switch 3-62
Cooling system 4-31
Cover with lock 3-75

D

Digging operations 3-129
Dimensions, machine 1-19
Dimmer switch 3-56
Directional lever 3-69
Directional selector switch 3-57, 3-63
Directions, machine 1-7
Display
  Action code 3-12
  Engine speed or travel speed 3-16
  Failure code 3-14
  Items for display 3-15
  Oil replacement time 3-15
  Service meter 3-12
Dust indicator 3-81

E

E.C.S.S. switch 3-51
E01 3-13
E02 3-13
E03 3-13
Emergency lowering system 2-22
Emergency parking brake cancel switch 3-66
Engine
  Check after stopping engine 3-112
  Starting 3-108
  Starting with booster cable 3-181
  Stopping 3-112
Engine high-pressure piping clamps 4-87, 4-89
Engine oil 4-64
Engine power mode selector switch 3-65
Engine valve clearance 4-83
EU Directives 1-3

F

Failure code display 3-14
Fire extinguisher 2-7
Fire prevention 2-11
First aid kit 2-7
F-N-R Switch 6-33
FOPS 2-13
Fresh air filter 4-54
Front wiper switch 3-49
Front working lamp switch 3-54
Fuel filter 4-71

Downloaded from www.Manualslib.com manuals search engine

https://truckmanualshub.com/

Fuel pre-filter 4-65
Fuel spray prevention cap 4-88, 4-89
Fuel tank 4-52
Fuel tank breather 4-74
Fuse, explanation 3-81

G

Gauges, explanation 3-34
Gauges, general view 3-3
Gearshift lever 3-68
Gearshift lever stopper 3-70
General view
- Controls 3-3
- Front switch panel 3-4
- Gauges 3-3
- Machine 3-2
- Machine monitor 3-7
- Overhead portion 3-6
- Right switch panel 3-5

H

HI/LOW Selector switch 6-34
Hold switch 3-57
Horn button 3-52
Horn switch 6-34
Hydraulic oil 4-55, 4-76
Hydraulic tank breather 4-79
Hydraulic tank stainer 4-78
Hydraulic tank, bleeding air 4-47

I

Injector assembly, replace 4-89
Intended use 1-6

J

Joystick on/off switch 6-33
Joystick steering lever 6-33
Joystick steering system 6-32
- Components 6-32
- Operation 6-41
- Precautions 6-40
- Structure and function 6-36

K

Kickdown switch 3-56
KOMTRAX 6-44
KOWA (KOMATSU Oil Wear Analysis) 4-5

L

Lamp switch 3-55
Leveling operation 3-132
Lever
- Bucket control lever 3-71
- Directional lever 3-69
- Gearshift lever 3-68
- Joystick steering lever 6-33
- Lift arm control lever 3-71
- Turn signal lever 3-67
- Work equipment lock lever 3-70

Lift arm control lever 3-71
Lift arm, operation 3-124
Lifting, machine 3-163
Load and carry operations 3-133
Load meter 6-2
- Addition mode 6-8
- Calibration with empty bucket 6-16
- Calibration with loaded bucket 6-18
- Clearing total load 6-13
- Outline 6-2
- Points to remember 6-5
- Principle of measurement 6-4
- Printout 6-28
- Resetting calibration 6-20
- Select category display 6-15
- Selection of printout mode 6-29
- Stopping calculation 6-14
- Subtraction mode 6-9
- Total load display 6-12
- Using 6-8
- Using addition mode 6-21
- Using subtraction mode 6-24

Load meter cancel switch 3-56
Load meter display selector switch 3-49
Load meter mode selector switch 3-49
Load meter subtotal switch 3-57
Loading operations 3-133
Locking machine 3-156
Lubricants, fuels and filling capacities 4-15
Lubrication 4-53, 4-61, 4-85
Lubrication chart 4-14

M

Machine
- CE-Conforming equipment 1-20
- Dimensions 1-19
- Directions 1-7
- Engine serial no. plate 1-9
- General view 3-2
- Intended use 1-6
- Lifting 3-163
- Lifting, position marks 3-164
- Locking 3-156
- Long-term storage 3-170
- Machine serial no. plate 1-9
- Moving 3-113
- Operating data 1-19
- Parking 3-154
- Stopping 3-119
- Technical data 5-2
- Towing 3-174
- Transportation 3-159
- Troubleshooting 3-172
- Turning 3-122
- Weights 1-19

Machine monitor
- Explanation 3-8
- General view 3-7

Maintenance
- Air cleaner 4-28
- Air conditioner 4-40, 4-44, 4-59
- Alternator 4-83, 4-89

Downloaded from www.Manualslib.com manuals search engine

https://truckmanualshub.com/

Alternator belt tension 4-58
Axle case breather 4-39
Axle oil 4-38, 4-80
Battery 4-55
Bleeding air from hydraulic tank 4-47
Brake disc wear 4-83
Bucket teeth 4-42
Bucket tooth with segment edge 4-43
Cooling system 4-31
Engine high-pressure piping clamps . . . 4-87, 4-89
Engine oil 4-64
Engine valve clearance 4-83
Fresh air filter 4-54
Fuel filter 4-71
Fuel pre-filter 4-65
Fuel spray prevention cap 4-88, 4-89
Fuel tank 4-52
Fuel tank breather 4-74
Guidelines 4-2
Hydraulic oil 4-55, 4-76
Hydraulic tank breather 4-79
Hydraulic tank strainer 4-78
Injector assembly, replace 4-89
Lubrication 4-53, 4-61, 4-85
Lubrication chart 4-14
Oil level 4-36
Parking brake 4-57
PPC circuit strainer 4-82
Radiator fins 4-40
Safety critical parts 4-21
Schedule chart 4-23
Slow blow fuse 4-45
Starting motor 4-85, 4-89
Tires 4-50
Transmission case breather 4-73
Transmission case, oil change 4-68
Transmission oil filter element, replace . 4-28, 4-70
Water pump 4-85
Wheel hubs 4-27, 4-59
Manual shift 3-68
Monitor
Brightness 3-42
Clock 3-43
Functions 3-37
Language 3-41
Odometer 3-38
Other functions 3-37
Reset methods 3-38
Telephone number 3-40
Travel speed/engine speed display 3-44
Monitor system 3-9

N

Noise emission 5-4

O

Oil level 4-36
Operating data, machine 1-19
Operation
Adjustments 3-103
Breaking-in machine 3-110
Bucket 3-124
Changing direction 3-117
Check after starting engine 3-110
Check after stopping engine 3-112
Check before starting engine 3-94
Checks after completion 3-155
Cold weather 3-166
Lift arm 3-124
Moving machine 3-113
Parking machine 3-154
Precautions 2-17, 3-147
Remote positioner 3-126
Semi auto digging operations 3-125
Starting engine 3-108
Stopping engine 3-112
Stopping machine 3-119
Turning 3-122
Walk around check 3-90
Work equipment 3-123
Operator seat 3-103
Overhead portion 3-6

P

Parking brake 4-57
Parking brake switch 3-53
Parking machine 3-154
Pedals
Accelerator pedal 3-72
Brake pedal 3-72
Pedals, explanation 3-67
Pilot lamps, explanation 3-28
Pilot lamps, overview 3-7
PIN 1-9
Power outlet, explanation 3-83
PPC circuit strainer 4-82
Precautions
General 2-6
Maintenance 2-31
Operation 2-17, 2-23
Tires 2-40
Traveling 2-20
Traveling on slopes 2-21

R

Radiator fins 4-40
Rear heated wire glass switch 3-65
Rear wiper switch 3-48
Rear working lamp switch 3-54
Remote positioner 3-126
Remote positioner bucket angle set switch 3-60
Remote positioner raise/lower set switch 3-59
Room lamp switch 3-66
ROPS 2-12, 2-13
Rpm set idle up-down selector switch 3-61
Rpm set on-off switch 3-61

S

Safety
Battery 2-28
Emergency lowering system 2-22

Downloaded from www.Manualslib.com manuals search engine

https://truckmanualshub.com/

Fire extinguisher 2-7
First aid kit 2-7
FOPS 2-13
General precautions 2-6
Maintenance 2-31
Operation 2-17
Parking machine 2-25
Prohibited operations 2-22
ROPS 2-12, 2-13
Safety labels 1-5, 2-2
Signal words 1-4
Starting with booster cables 2-29
Tires 2-40
Towing 2-30
Transportation 2-26
Work equipment lock lever 2-8
Safety bar 3-76
Safety critical parts 4-21
Safety labels 1-5, 2-2
Location 2-2
Presentation 2-3
Seat adjustment 3-103
Semi auto digging operations 3-125
Semi auto digging switch 3-63
Serial no. plate
Axle 1-10
Engine 1-9
FOPS 1-10
Machine 1-9
Operator seat 1-11
ROPS 1-10
Transmission 1-10
Service meter 3-12
Explanation 3-12
Position 1-11
Service procedure
After the first 250 hours 4-28
After the first 50 hours 4-27
Every 100 hours 4-53
Every 1000 hours 4-68
Every 12000 hours 4-89
Every 2000 hours 4-76
Every 250 hours 4-55
Every 4000 hours 4-85
Every 50 hours 4-52
Every 500 hours 4-64
Every 8000 hours 4-89
When required 4-28
Shift up, shift down switch 6-33
Slow blow fuse 4-45
Explanation 3-83
Replacing 4-45
Starting engine
Check after 3-110
Check before 3-94
Starting motor 4-85, 4-89
Starting switch 3-48
Steering tilt lock lever 3-74
Storage, long-term 3-170
Switch panel, front 3-4
Switch panel, right 3-5
Switches
Auto-greasing switch 3-65
Beacon lamp switch 3-54
Character display item selector switch 3-50
Character display mode selector switch 3-50
Cooling fan reverse rotation switch 3-62
Dimmer switch 3-56
Directional selector switch 3-57, 3-63
E.C.S.S. switch 3-51
Emergency parking brake cancel switch 3-66
Engine power mode selector switch 3-65
F-N-R Switch 6-33
Front wiper switch 3-49
Front working lamp switch 3-54
HI/LOW Selector switch 6-34
Hold switch 3-57
Horn button 3-52
Horn switc 6-34
Joystick on/off switch 6-33
Kickdown switch 3-56
Lamp switch 3-55
Load meter cancel switch 3-56
Load meter display selector switch 3-49
Load meter mode selector switch 3-49
Load meter subtotal switch 3-57
Parking brake switch 3-53
Rear heated wire glass switch 3-65
Rear wiper switch 3-48
Rear working lamp switch 3-54
Remote positioner bucket angle set switch . . 3-60
Remote positioner raise/lower set switch 3-59
Room lamp switch 3-66
Rpm set idle up-down selector switch 3-61
Rpm set on-off switch 3-61
Semi auto digging switch 3-63
Shift up, shift down switch 6-33
Starting switch 3-48
Torque converter lock-up switch 3-64
Transmission auto shift/manual shift selector switch 3-58
Transmission cut-off set switch 3-59
Transmission cut-off switch 3-58
Turn signal lever 3-55
Switches, explanation 3-46

T

Technical data 5-2
Noise emission 5-4
Vibration level 5-4
Tires 2-40
Handling 3-157
Maintenance 4-50
Precautions 3-157
Pressure 3-157
Torque converter lock-up switch 3-64
Torque list 4-19
Towing 2-30
Towing pin 3-77
Towing, machine 3-174
Transmission auto shift/manual shift selector switch 3-58

Downloaded from www.Manualslib.com manuals search engine

https://truckmanualshub.com/

Transmission case breather 4-73
Transmission case, oil change 4-68
Transmission cut-off set switch 3-59
Transmission cut-off switch 3-58
Transmission oil filter element, replace . . . 4-28, 4-70
Transportation, machine 2-26, 3-159
Troubleshooting 3-172
Battery discharges 3-179
Booster cable 3-181
Chassis 3-185
Electrical system 3-184
Engine 3-187
Towing machine 3-174
Turn signal lever 3-55, 3-67
Turning 3-122

V

Vibration level 5-4

W

Water pump 4-85
Wear parts 4-11
Weights, machine 1-19
Wheel hubs 4-27, 4-59
Window washing fluid 4-40
Work equipment lock lever 2-8, 3-70
Work equipment, operation 3-123

Downloaded from www.Manualslib.com manuals search engine

https://truckmanualshub.com/

8. Notes

Downloaded from www.Manualslib.com manuals search engine

https://truckmanualshub.com/

Downloaded from www.Manualslib.com manuals search engine

https://truckmanualshub.com/

Downloaded from www.Manualslib.com manuals search engine

https://truckmanualshub.com/

Downloaded from www.Manualslib.com manuals search engine

https://truckmanualshub.com/

Downloaded from www.Manualslib.com manuals search engine

https://truckmanualshub.com/

Downloaded from www.Manualslib.com manuals search engine