https://truckmanualshub.com/

NOBLELIFT

Scan it, for more Information

INSTRUCTION MANUAL

Electric Stacker PSE10L-C

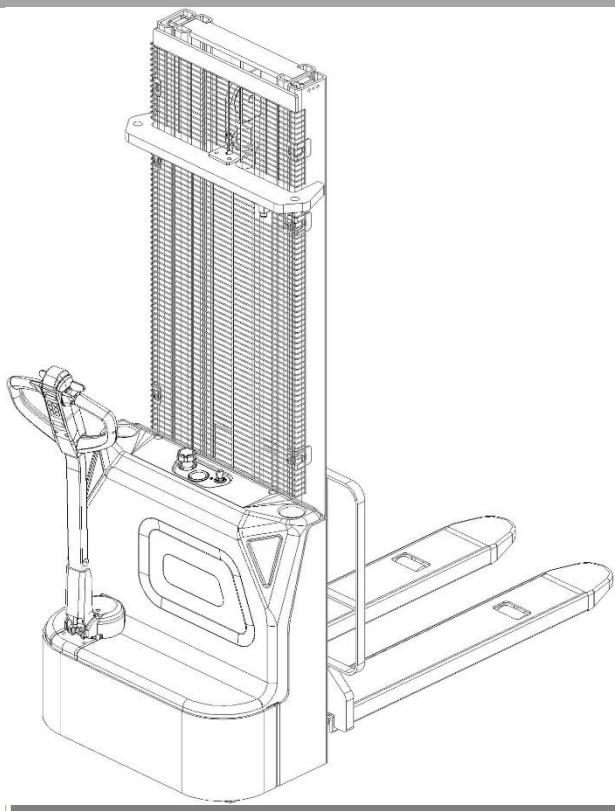

WARNING

Do not use the electric truck before reading and understanding these operating instructions.

NOTE:

- **Please check the designation of your present type at the last page of this document as well as on the ID-plate.**
- **Keep for future reference.**

This truck should be used in factories, tourist attractions and playgrounds only.

Version 11/2020

PSE10L-C-SMS-002-EN

https://truckmanualshub.com/

FOREWORD

Before operating the stacker, read this ORIGINAL INSTRUCTION MANUAL carefully and understand the usage of the stacker completely. Improper operation could create danger.

This manual describes the usage of different electric power stackers. When operating and servicing the stacker, make sure, that it applies to your type.

Keep this manual for future reference. If this or the warning/ caution labels are damaged or got lost, please contact your local dealer for replacement.

This stacker complies with the requirements according to EN 3691-1; -5 (Industrial trucks- safety requirements and verification, part 1; part 5), EN 12895 (Industrial trucks- electromagnetic compatibility), EN 12053 (Safety of industrial trucks- test methods for measuring noise emissions), EN 1175 (Industrial truck safety – electrical requirements), assumed the truck is used according to the described purpose.

ATTENTION:

- Environmentally hazardous waste, such as batteries, oil and electronics, will have a negative effect on the environment, or health, if handled incorrectly.

- The waste packages should be sorted and put into solid dustbins according to the materials and be collected disposal by local special environment protection bureau. To avoid pollution, it’s forbidden to throw away the wastes randomly.

- To avoid leaking during the use of the products, the user should prepare some absorbable materials (scraps of wooden or dry duster cloth) to absorb the leaking oil in time. To avoid second pollution to the environment, the used absorbable materials should be handed in to special departments in terms of local authorities.

- Our products are subject to ongoing developments. Because this handbook is only for the purpose of operating /servicing the pallet truck, therefore please have understanding, that there is no guarantee out of particular features out of this handbook.

NOTE: On this manual, the left sign means warning and danger, which can lead to death or serious injury if not followed.

Copyright

The copyright remains with the company, mentioned on the CE- certificate at the end of this document or, if sold within the USA, with the company, mentioned on the company sticker.

https://truckmanualshub.com/

Table of Contents

1.CORRECT APPLICATION....3
2.DESCRIPTION OF THE ELECTRIC STACKER....4
a.Overview of the main parts....4
b.Main technical data....8
c. Description of safety devices and warning labels(Europe and others, except USA)....10
d.Identification plate....10
3. WARNINGS, RESIDUAL RISK AND SAFETY INSTRUCTIONS....11
4. COMMISSIONING, TRANSPORTING, DECOMMISSIONING....12
a.Commissioning....12
b.Hoisting/ transportation....12
c.Decommissioning....13
5.DAILY INSPECTION....13
6.OPERATION INSTRUCTIONS....13
a.Parking....14
b.Residual lift diagram....14
c.Lifting....14
d.Lowering....14
e.Driving....14
f.Steering....15
g.Braking....15
h.Malfunctions....15
i.Emergency....15
7. BATTERY CHARGING AND REPLACEMENT....16
a.Replacement....16
b.Battery Indicator....16
c.Charging....17
8. REGULAR MAINTENANCE....17
a.Maintenance checklist....18
b.Lubricating points....19
c.Check and refill hydraulic oil....19
d.Check the electrical fuses....20
e.Remove and reassemble the protective mesh....20
9. TROUBLE SHOOTING....20
10. WIRING/ CIRCUIT DIAGRAM....22
a.Electrical circuit diagram....22
b.Electrical circuit diagram....24
c.Hydraulic circuit diagram....26

https://truckmanualshub.com/

1.CORRECT APPLICATION

It is only allowed to use this electric pallet stacker according to this instruction manual.

The stackers described in this manual are self-propelled electric power pallet stackers. The stackers are designed to lift, lower and transport palletized loads.

A wrong usage can cause human injuries or can damage the stacker.

The operator/ the operating company has to ensure the correct usage and has to ensure, that this pallet stacker is used only by staff, which is trained and authorized to use this truck.

The pallet stacker has to be used on substantially firm, smooth, prepared, level and adequate surfaces. The stacker is intended to be used for indoor applications with ambient temperatures between +5℃ and + 40℃ and for various transportation applications without crossing permanent obstacles or potholes. The work on ramps is allowed if ramp is not exceeding the allowed angle. While operating, the load must be placed approximately on the longitudinal centre plane of the stacker .

Lifting or transporting people is not allowed. If so, the loads must be lowered to lifting position (<300MM).

The stacker is not allowed to be used on lifting board or loading ramps.

The capacity is marked on capacity sticker as well on the Identification plate. The operator has to consider the warnings and safety instructions.
Operating lighting must be minimum 50 Lux.

<u>Modification</u>
No modifications or alterations to this pallet truck which may affect, for example, capacity, stability or safety requirements of the truck, shall be made without the prior written approval of the original truck manufacturer, its authorized representative, or a successor thereof. This includes changes affecting, for example braking, steering, visibility and the addition of removable attachments. When the manufacturer or its successor approve a modification or alteration, they shall also make and approve appropriate changes to capacity plate, decals, tags and operation and maintenance handbooks. By not observing these instructions, the warranty becomes void.

https://truckmanualshub.com/

2.DESCRIPTION OF THE ELECTRIC STACKER

a.Overview of the main parts

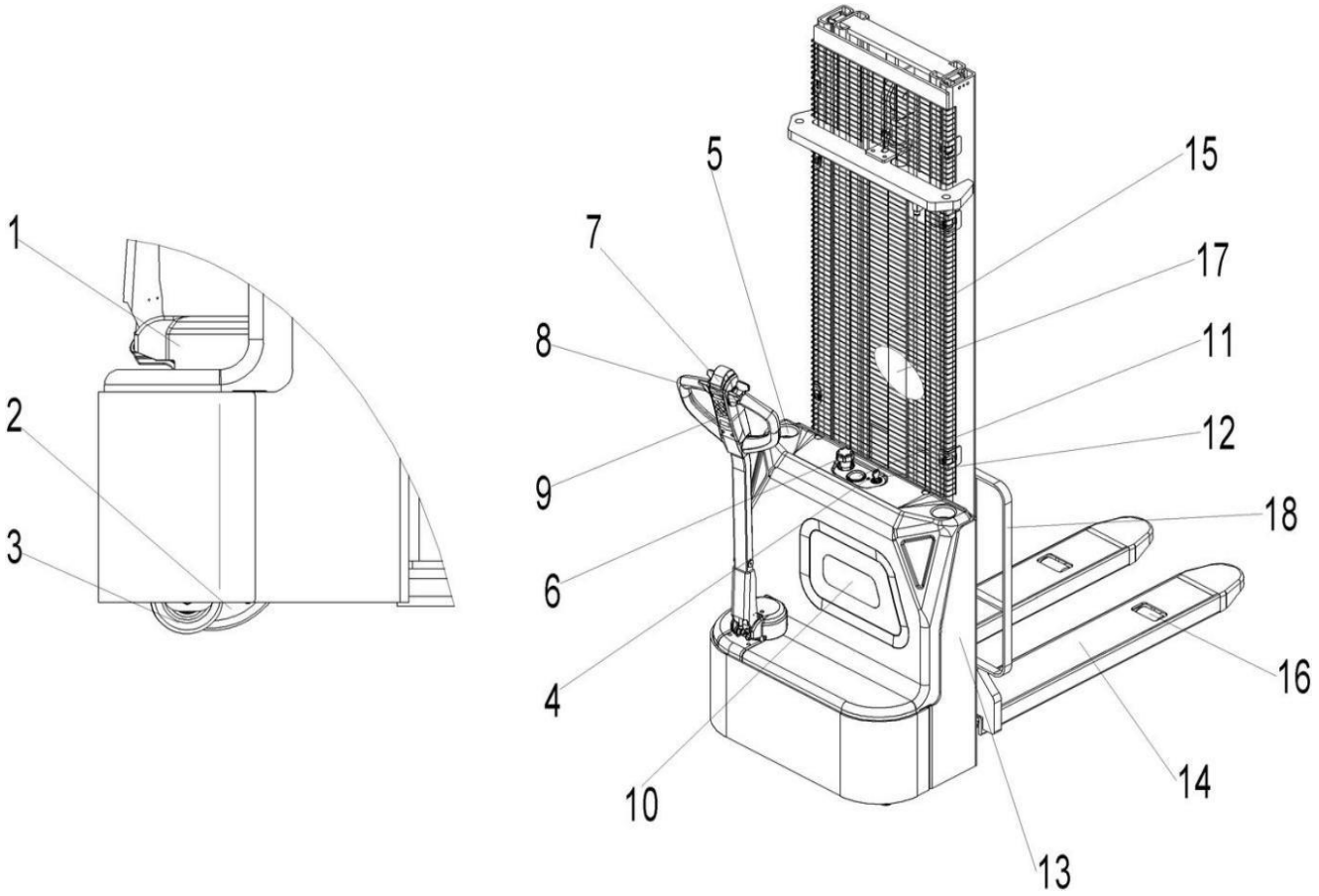

Fig. 1: Overview main parts

1	Motor cover	10	Front cover
2	Drive wheel	11	Battery indicator
3	Steering wheel	12	Key switch
4	Charging indicator	13	Truck body
5	Charging	14	Fork
6	Emergency button	15	Metal mesh
7	Belly button	16	Load wheel
8	Accelerator knob (butterfly knob)	17	Hydraulic system
9	Multi-function tiller	18	Load backrest (optional)

https://truckmanualshub.com/

b.Main technical data

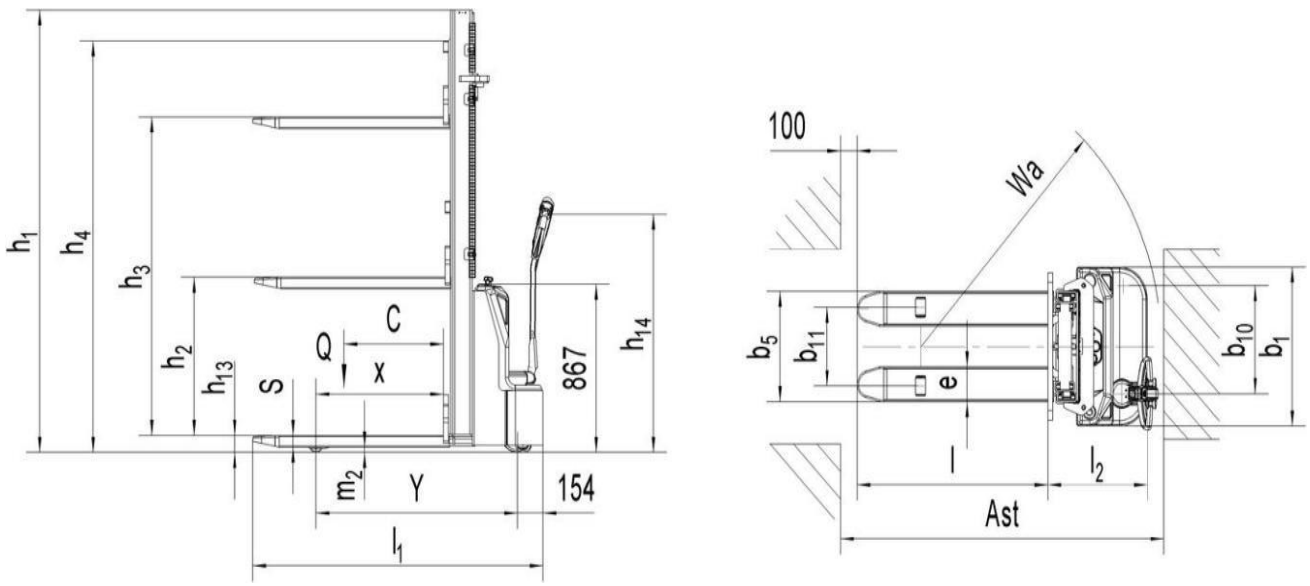

Fig. 2: Technical data

Table1: Main technical data for standard version

Type sheet for industrial order picker according to VDI 2198					
Distinguishing mark	1.2	Manufacturer's type designation		PSE10L-C	
				1600	3500
	1.3	Drive: electric (battery type, mains...), diesel, petrol, fuel		Electric	
	1.4	Operator type (hand, pedestrian, standing, industrial truck)		Pedestrian	
	1.5	Rated capacity/ rated load	Q(t)	1.0	
	1.6	Load centre distance	C(mm)	600	
	1.8	Load distance, centre of drive axle to fork	X(mm)	769	
	1.9	Wheelbase	Y(mm)	1215	
Weight	2.1	Service weight	kg	450	570
	2.2	Axle loading, laden front/rear	kg	490/960	540/1030
	2.3	Axle loading, unladen front/rear	kg	330/120	415/155
Tires	3.1	Tires: solid rubber, superelastic, pneumatic, polyurethane		Polyurethane (PU)	
	3.2	Tyre size, front	∅ x w (mm)	Φ210×70	
	3.3	Tyre size, rear	∅ x w (mm)	Φ80×70	
	3.4	Additional wheels (dimensions)	∅ x w (mm)	Φ100×50	
	3.5	Wheels, number front/ rear(x=driven wheels)		1x+1/2	
	3.6	Thread, front	b_{10}(mm)	557	
	3.7	Thread, rear	b_{11}(mm)	410/525	
Dimensions	4.2	Height, mast lowered	h_1 (mm)	2057	2282
	4.3	Free lift	h_2 (mm)	1513	-
	4.4	Lift	h_3 (mm)	1513	3413
	4.5	Height, mast extended	h_4 (mm)	2057	3989

https://truckmanualshub.com/

	4.9	Height drawbar in driving position min./max.	h_{14}mm	700/1188
	4.15	Height, lowered	h_{13}mm	87
	4.19	Overall length	l_1(mm)	1750
	4.20	Length to face of forks	l_2(mm)	600
	4.21	Overall width	b_1(mm)	820
	4.22	Fork dimensions DIN ISO 2331	s/ e/ l(mm)	60/180/1150
	4.25	Fork spread	b_5 (mm)	570/685
	4.32	Ground clearance, centre of wheelbase	m_2(mm)	32
	4.34.1	Aisle width for pallets 1000X1200 crossways	Ast (mm)	2293
	4.34.2	Aisle width for pallets 800×1200 lengthways	Ast (mm)	2238
	4.35	Turing radius	Wa (mm)	1450
Performance data	5.1	Travel speed, laden/ unladen	km/h	4.0/4.3
	5.2	Lift speed, laden/ unladen	m/s	0.119/0.195
	5.3	Lowering, laden/ unladen	m/s	0.166/0.159
	5.8	Max. gradeability, laden/ unladen	%	5/10
	5.10	Service brake		Electromagnetic
	6.1	Drive motor rating S2 60min	kW	0.75
Electric-engine	6.2	Lift motor rating S3 10%	kW	2.2
	6.3	Battery according to DIN 43531/35/36 A, B, C, no		no
	6.4	Battery voltage/ nominal capacity K_5	V/Ah	2x12/85
	6.5	Battery weight	kg	2x26
	6.6	Energy consumption according to DIN EN 16796	kWh/h	0.48
Addition data	8.1	Type of drive unit		AC
	8.4	Sound pressure at the driver's seat according to DIN EN 12053	dB (A)	<70

Optional: 60Ah lithium battery (19kg)

Specification		**Height, mast lowered h1 (mm)**	**Height, free lift h2 (mm)**	**Lift height h3 (mm)**	**Maximum height, mast extended h4 (mm)**	**Maximum lift height h3+h13 (mm)**
Mono-mast	**1600**	2057	1513	1513	2057	1600
	2000	2257	1913	1913	2257	2000
Two stage mast	**2900**	1982	-	2813	3389	2900
	3200	2132	-	3113	3689	3200
	3500	2282	-	3413	3989	3500

https://truckmanualshub.com/

c. Description of safety devices and warning labels(Europe and others, except USA)

A Decal (crane hook)
B Warning decal (do not stand under or on the forks)
C Label (load curve)
D Decal (read and follow these instructions)
E Decal (no passenger)
F Label (ID plate)
G Label (oil filling)

The truck equips with an emergency button (6) which stops all lifting-, lowering-, driving- functions and engages the fail-safe electromagnetic brake when it is pressed. After checking the functions of the controller, by pulling this button out the stacker can be operated. Before operating the stacker, insert the key and turn the switch (12) clockwise to activate the stacker. To prevent against unauthorized access, turn the key counterclockwise and pull it out. The stacker equips with a safety (belly) button (7) which switches the driving function away from the operator if the stacker travels towards the operator and the tiller is activated in operation zone. Follow the instructions indicated on the labels and decals, if they are damaged or missed, replace them with new one in time.

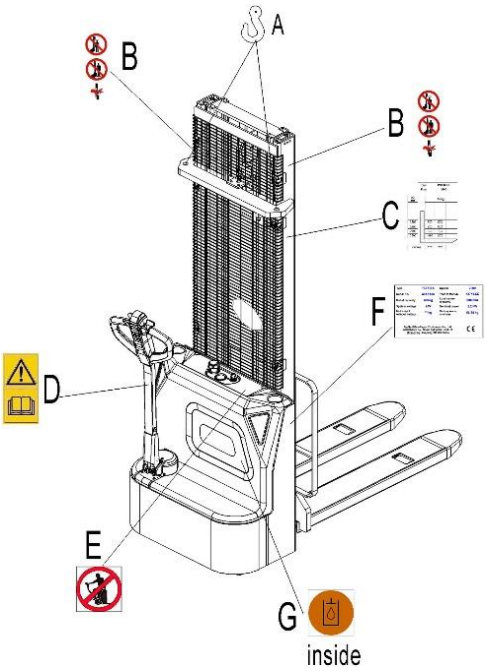

Fig.3 Safety devices and warning labels

d.Identification plate

Electric Stacker			
Special Equipment Manufacturing License No.			
Type	xxxx	Rated capacity	xxxx kg
Rated voltage	xx V	Service weight	xxxx kg
Battery weight, maximum	xxx kg	Battery weight, minimum	xxx kg
Weight, without load and battery	xxx kg	Lift height, maximum	xxxx mm
Serial number	xxxxxxxxxx	Equipment code	xxxxxxxxxx
Name of manufacturer XXXXXXXXXXXXXXX Address of manufacturer XXXXXXXXXXXXXXX			

Fig. 4: Identification plate

https://truckmanualshub.com/

3. WARNINGS, RESIDUAL RISK AND SAFETY INSTRUCTIONS

DO NOT

- Lift the load higher than the lift point when operating the stacker outdoors.
- Put feet or hands under or inside the lifting mechanical structure.
- Allow other person than the operator to stand in front of or behind the stacker when it is moving or lifting/ lowering.
- Overload the stacker.
- Put feet in front of the wheels, otherwise you may get injured.
- Lift people. People could fall down and suffer severe injury.
- Push or pull the loads.
- Operate the stacker on ramps.
- Use a truck without a protective mesh (Fig 1, item 15-protective mesh).
- Load the goods on sides or tines. Load must be distributed evenly on the forks.
- Load the stacker with unstable or unbalanced goods.
- Operate truck without manufacturer's written consent.
- Supply the truck with AC voltage other than 110V or 220V required by the charger.

Watch difference in floor levels when driving. Load could fall down or the truck could lose control. Keep watching the condition of load. Stop operating the truck if load becomes unstable. Brake the truck and activate the emergency button (6) by pushing when sliding load on or off the truck. If the truck has any malfunctions, follow chapter 6.
Practice maintenance work according to regular inspection. This truck is not designed to be water resistant. Use the truck under dry condition. Prolonged continuous operation might cause damage of the power pack. Stop operation if temperature of hydraulic oil is too high.

- When operating the electric pallet stacker, the operator has to wear safety shoes.
- The truck should be used indoors with ambient temperatures between +5℃ and + 40℃.
- The minimum operating lighting must be more than 50 Lux.
- Use the truck on ramps.
- To prevent unintended sudden movements when not operating the truck (i.e. from another person, etc.), turn off the power for non operation.
- Lift loads may influence the operation view, take safety actions or with the help of auxiliary means to keep good view for the operator.
- Avoid collision between the folding pedal and other articles, especially the collision and shearing when traveling forwards. Keep safe operating speed at all times based on the environment.

https://truckmanualshub.com/

4. COMMISSIONING, TRANSPORTING, DECOMMISSIONING

a.Commissioning

Table 2: Commissioning data

Type	PSE10L-C/1600	PSE10L-C/3500
Commissioning weight [kg]	465	585
Dimensions [mm]	1600	3500

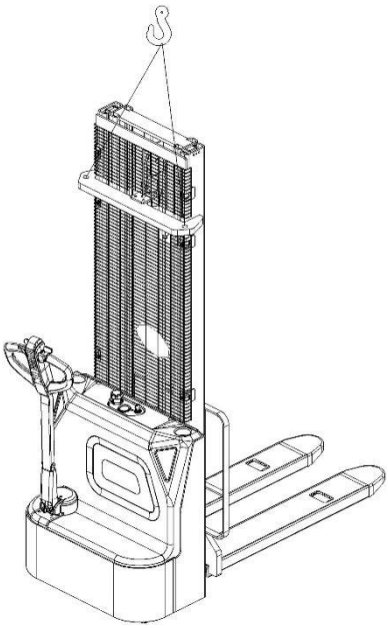

Fig. 5: Hoist with a crane

After receiving our new pallet stacker or for re-commissioning you have to do following before (firstly) operating the truck:

- Check if are all parts included and not damaged
- Check the package and charging of the battery (follow chapter 7)
- Operate the truck according to the daily inspections as well as the functional checks.

b.Hoisting/ transportation

For transporting, remove the load, lower the forks to the lowest position and fasten the truck safely with dedicated crane or hoisting equipment according to Fig. 5.

Hoisting

Use dedicated crane and hoisting equipment.
Do not stand under the swaying load.
Do not walk into hazardous area during hoisting.

Park the truck securely and lash the truck according to the points identified in Fig. 6. Hoist the truck to its destination and place the truck securely before removing the hoisting equipment.

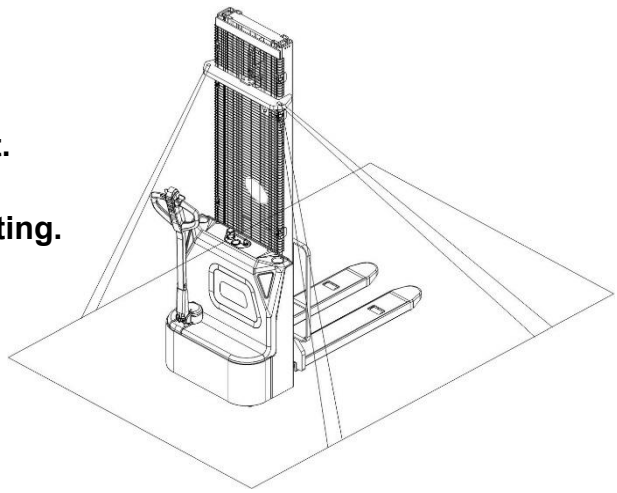

Fig. 6: Fixing points

Transportation

ALWAYS FASTEN TRUCK SECURELY DURING TRANSPORTATION ON A LORRY OR TRUCK.

Lower the forks and park the truck securely. Fasten the truck according to Fig. 6 by fixing dedicated lashing belts to chassis and mast, and fasten the other side at the transporting lorry.

https://truckmanualshub.com/

c.Decommissioning

For storage, remove the load, lower the truck to the lowest position, grease all greasing points mentioned in this handbook (regular inspection), and eventually protect the truck against corrosion and dust. Remove the batteries and jack the truck safely, so that there will be no crush after storage.

For final decommissioning hand in the truck to a designated recycling company. Oil, batteries and electric components must be recycled due to legal regulations.

5.DAILY INSPECTION

This chapter describes pre-work checks before operating the truck.
Daily inspection is effective to find the malfunction or fault on this truck. Check the truck on the following points before operation.

REMOVE LOAD FROM TRUCK AND LOWER THE FORKS.
DO NOT USE THE TRUCK IF ANY MALFUNCTION IS FOUND.

- Check for scratches, deformation or cracks.
- Check if there is any oil leakage from the cylinder.
- Check the function of driving with tiller in its vertical position.
- Check the chain and rollers for any damage or corrosion.
- Check the smooth movement of the wheels.
- Check the function of the emergency brake by activating the emergency button.
- Check the functions of braking by activating the switches of the tiller.
- Check the lifting and lowering functions by operating the buttons.
- Check whether the protective mesh is damaged and assembled correctly.
- Check the horn.
- Check if all bolts and nuts are tightened firmly.
- Check the function of the key switch.
- Check the speed limit sensor.
- Visual check if there are any broken oil pipes or electric wires.
- If supplied with a load backrest, check it for damages and correct assembling.

6.OPERATION INSTRUCTIONS

PLEASE FOLLOW THE WARNINGS AND SAFETY INSTRUCTIONS (CHAPTER 2) BEFORE PERATING THIS STACKER.

MAKE SURE LOADS OR OTHER EQUIPMENT WILL NOT CAUSE POOR VISIBILITY BEFORE OPERATING THIS STACKER.

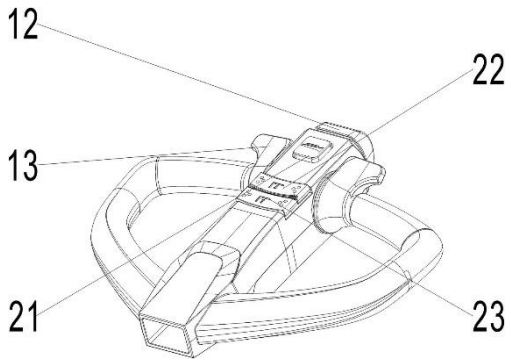

Fig.7: Tiller operating controls

Make sure that the load is placed horizontally and stably and the daily inspection is carried out. When you start the

https://truckmanualshub.com/

truck, insert the key and turn it clockwise to "ON". The key can only be used on a pedestrian electric stacker. Before you insert the key, pull the emergency button up carefully.
Press the horn button (21) to activate the horn.

a.Parking

DO NOT PARK THE TRUCK ON INCLINED SURFACES.

The truck equips with an electromagnetic fail-safe stopping and parking brake. Always lower the forks fully and park the truck in safe area. Turn the key counterclockwise to "OFF" and pull out the key.

b.Residual lift diagram

The residual lift diagram indicates the maximum capacity Q [kg] for a given load centre c [mm] and the corresponding lift height H [mm] for the truck with horizontal load.
For example, with a load centre of gravity distance c of 600 mm and a maximum lift height H of 3500 mm, the maximum capacity Q is 500 kg.

Type	PSE10LC
Mast	3500

h3 (mm)	Q (kg)		
3500	500	400	
3200	600	500	
2900	800	700	
2500	1000	800	
c(mm)	600	700	

Fig. 9: Residual lift diagram

c.Lifting

DO NOT OVERLOAD THE TRUCK! MAXIMUM CAPACITY IS 1000KG FOR THIS TRUCK.
LIFT ONLY THE CAPACITY ALLOWED ACCORDING TO THE RESIDUAL LIFT DIAGRAM.

Travel with the fully lowered forks on the fork legs and press the lifting button (22) until you reach the desired lifting height.

d.Lowering

If the forks are in the racking, firstly travel out of the racking carefully with or without the pallet. By travelling out of the racking, take care that the forks are not touching the racking.
Press the lowering button (23) carefully. Lower the load until the forks are clear of the pallet, then drive the truck carefully out of the load.

e.Driving

DRIVE ON INCLINES ONLY WITH THE LOAD FACING UPHILL.
DO NOT TRAVEL ON INCLINES MORE THAN SPECIFIED TECHNICAL DATA.
DRIVING IS ONLY ALLOWED IF THE FORKS ARE LOWERED DOWN TO THE LIFTING POSITION (<300MM).

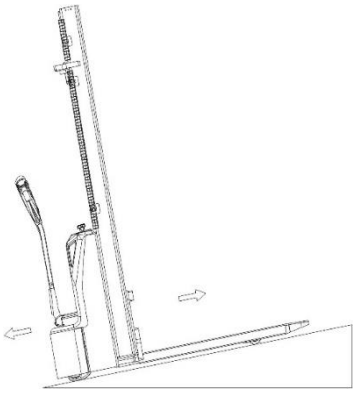

Fig. 10: Load facing uphill

Turn the inserted key to "ON" (Fig. 8), pull up the emergency button carefully, start the truck, and move the tiller within the operating area 'F' (Fig. 11).
Turn the accelerator knob to the desired direction forward ‘Fw.’ Or backwards ‘Bw.’(Fig. 11).Control the driving speed by carefully moving accelerator knob (13) until the desired speed is reached.If you move the accelerator knob back to the neutral position, the controller will decelerate the truck until it stops.

https://truckmanualshub.com/

If the truck stops, the parking brake will be engaged.
Carefully drive the truck to the destination. Watch the route conditions and adjust the driving speed via the accelerator knob.

f.Steering

Steer the truck by moving the tiller to left or right side.

g.Braking

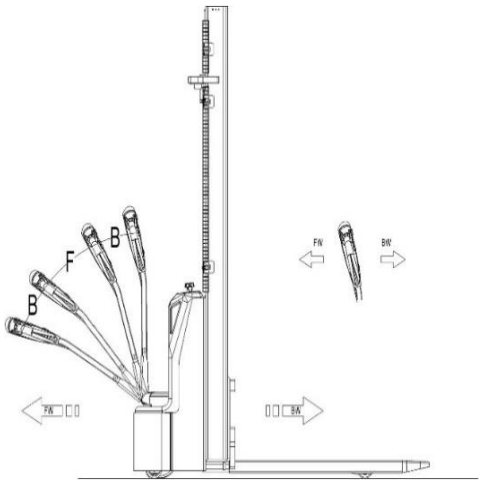

Fig.11: Operating direction

THE BRAKING PERFORMANCE DEPENDS ON THE TRACK CONDITIONS AND THE LOAD CONDITIONS OF THE TRUCK

- The braking function can be activated in several ways (Fig.7, Fig. 11):
- By moving the accelerator knob (13) back to the initial ‘0’ position or by releasing the knob, the regenerative braking is activated. The truck starts braking until it stops.
- By moving the accelerator knob (13) from one driving direction directly to the opposite direction, the truck brakes regenerative until it starts traveling into the opposite direction.
- The truck brakes, if the tiller is moved up or down to the braking zone (‘B’). If the tiller is released, the tiller moves automatically up to the upper baking zone (‘B’).The truck starts braking until it stops.
- The safety (belly) button (12) prevents the operator from being crushed. If this button is activated, the truck decelerates and/ or starts traveling backwards (‘Bw.’) for a short distance and stops. Please consider, that this button also operates, if the truck is not traveling and the tiller is in the operating zone.

h.Malfunctions

If there are any malfunctions or the truck cannot be operated, please stop using the truck and activate the emergency button (6) by pressing it. If possible, park the truck in a safe area, turn the key switch (12) counterclockwise and then pull out the key.
Inform immediately the manager and/ or call your after-sales service. If necessary, move the truck out of the operating area by using dedicated towering/ lifting equipment.

i.Emergency

In emergencies or in the event of tipping over, keep safe distance please. If possible, press the emergency button (6). All electrical functions will be blocked.

https://truckmanualshub.com/

7. BATTERY CHARGING AND REPLACEMENT

- Only qualified personnel are allowed to service or charge the batteries. Must follow the instructions of this manual and the explanations of the manufacturer.
- The battery is maintenance-free; refilling is not allowed.
- Recycling of batteries undergoes national regulations. Follow the regulations.
- By handling batteries, open fire is not allowed, as it may cause gas explosion.
- In the area of battery charging neither burning materials nor burning liquids are allowed. Smoking is prohibited and the area must be ventilated.
- Park the truck securely before starting charging or assembling/replacing batteries.
- Before finishing the maintenance work, make sure that all cables are connected correctly and there are no disturbing towards other parts of the truck.

For lead-acid battery model, the stacker equips with:

12V/ 85Ah lead-acid battery, 2pcs

For lithium battery model, the stacker equips with:

24V/ 60Ah lithium battery, 1pc

THE WEIGHT OF BATTERY WILL AFFECT OPERATION OF THE TRUCK.
PLEASE CONSIDER THE MAXIMUM OPERATING TEMPERATURE OF LEAD ACID BATTERIES.

a.Replacement

Park the truck safely, turn off the stacker with the key (12) and press the emergency button (6). Unscrew the 2 screws on the main cover and remove the main cover. Remove the screws on the negative anode from the two batteries (indicated as '-'), then remove the screws on the positive anode (indicated as '+'), put the wire harness aside, loosen the battery cover and remove it. Observe when removing the battery and do not touch the upper electrical indicator display or the oil tank on the side. Remove the second battery of the lower position (only for lead-acid truck) in the same way,The installation way is in reverse way. Please connect the positive anode of the battery first. Otherwise, the truck will be damaged.

② two lead-acid batteries;

③ A lithium battery;

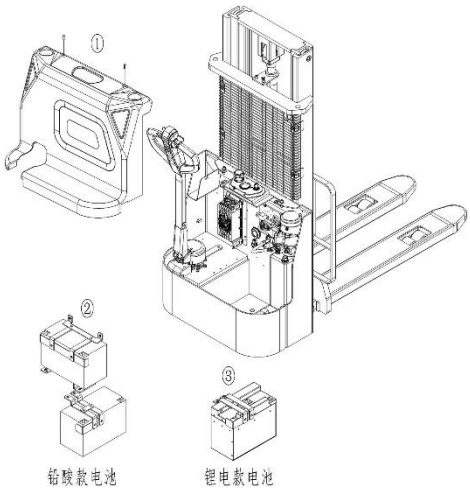

Fig. 12: Battery replacement

b.Battery Indicator

1. The battery capacity is indicated as percentage, and the full charge is 100%.
2. The "wrench" symbol on the indicator display indicates that the controller is malfunctioning. It is not displayed if there is no fault.
3. "FC" is the abbreviation of "Fault Code", which means fault code;

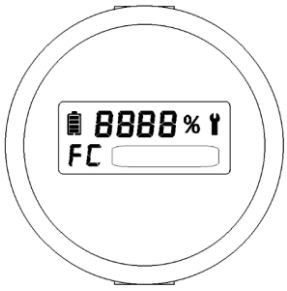

Fig. 13: Battery indicator

https://truckmanualshub.com/

It is not displayed if there is no fault.

4. The content of the box behind "FC" is the specific fault code, if there is no fault, only the hour meter will be displayed.

c.Charging

- The truck equips with a built-in charger, other chargers are not allowed to charge the battery.
- The truck equips with a built-in charger, other chargers are not allowed to charge the battery.Please fully understand the instructions for the charger before using it.
- The room where you charge the battery must be ventilated.
- The fully-charged status can be only checked from the discharge indicator. To control the status, the charging must be interrupted and the truck must be started.

Park the truck at a dedicated and secured area with power supply.
Lower the forks and remove the goods;
Switch off the truck, pull out the charger spring cable (Fig. 5), and insert the plug into the required power socket.
The charger starts to charge the battery.
If the green charging LED indicator (Fig. 14) is on, the charging is completed. The charger will enter a floating charging mode to prevent battery damage. The following table shows the function of the LED indicators:

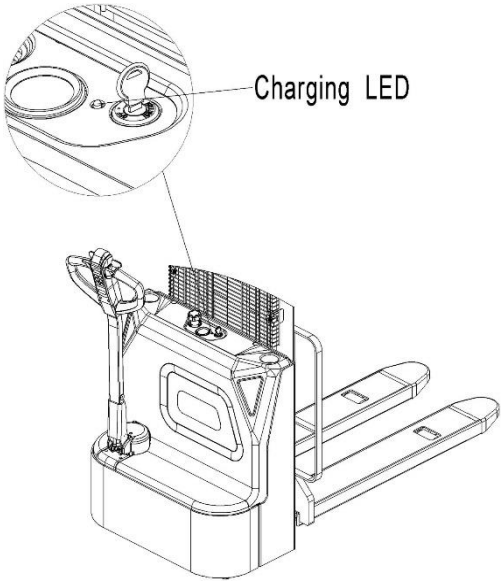

Fig. 14: LED indicator status

Table 3: LED indicator status

LED indicator	Battery status
Red	Discharging
Orange	Charging
Green	Fully-charged

After charging, remove the connector from the socket and put the spring cable back to the truck.

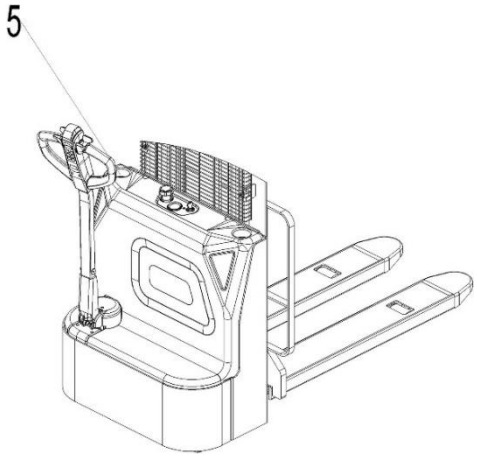

Fig. 15 Battery charging

8. REGULAR MAINTENANCE

- Only qualified and trained personnel are allowed to do maintenance on this truck.
- Before maintaining, remove the load from the forks and lower the forks to the lowest position.
- If you need to lift the order picker, please use the specific binding equipment or lifting equipment mentioned in Chapter 4. Before lifting the order picker, please put the safety device (for instance designated jack, wedge, or wooden blocks) under the order picker to avoid accidental fall,

https://truckmanualshub.com/

movement or sliding.

- Please pay attention by maintain the tiller arm. The gas pressure springs are assembled by compression. Carelessness causes injury.
- Use approved and from your dealer released original spare parts.
- Please consider that oil leakage of hydraulic fluid can cause failures and accidents.
- If you need to replace the wheel, please follow the instructions above. Casters must be round and free from abnormal wear.
- Check the key items emphasized in the maintenance checklist.

a.Maintenance checklist

Table 4: Maintenance checklist

		Interval (month)			
		1	3	6	12
	Hydraulic unit				
1	Check the hydraulic cylinder, piston for damage noise and leakage		•		
2	Check the hydraulic joints and hose for damage and leakage		•		
3	Check the hydraulic oil level, refill if necessary		•		
4	Refill the hydraulic oil (12 month or 1500 working hours)				•
5	Check and adjust the function of the pressure valve (1000 kg +0/ +10%)				•
	Mechanical system				
6	Check the forks for deformation and cracks		•		
7	Check the chassis for deformation and cracks		•		
8	Check if all screws are fixed		•		
9	Check mast and chain for deformation or damages, replace if necessary	•			
10	Check the gearbox for noise and leakage		•		
11	Check the wheels for deformation and damages, replace if necessary		•		
12	Lubricate the steering bearing				•
13	Check and lubricate the pivot points		•		
14	Lubricate the grease nipples	•			
15	Replace the damaged protections and/or protection board	•			
	Electric system				
16	Inspect the electric wiring for damage		•		
17	Check the electric connectors and terminals		•		
18	Test the Emergency switch function		•		
19	Check the electric drive motor for noise and damages		•		
20	Test the display		•		
21	Check if correct fuses are used, if necessary replace.		•		
22	Test the audio warning signal		•		
23	Check the contactors		•		
24	Check the frame leakage (insulation test)		•		
25	Check function and wear of the accelerator		•		
26	Check the electrical system of the drive motor		•		
	Braking system				
27	Check brake performance, if necessary replace brake disc or adjust air gap		•		
	Battery				

https://truckmanualshub.com/

28	Check the battery voltage		•		
29	Clean and grease the terminals and check for corrosion and damage		•		
30	Check the battery housing for damages		•		
	Charger				
31	Check the main power cable for damages			•	
32	Check the fail-safe protection during charging			•	
	Function				
33	Check the horn function	•			
34	Check the air gap of the electromagnetic brake	•			
35	Test the emergency braking	•			
36	Test the reverse and regenerative braking	•			
37	Test the safety (belly) button function	•			
38	Check the steering function	•			
39	Check the lifting and lowering function	•			
40	Check the buttons on the tiller	•			
41	Check whether the key switch is damaged and check the function	•			
42	Check the speed limit sensor (lift height >~300mm)	•			
	General				
43	Check if all decals are legible and complete	•			
44	Check and ensure that the protection board and/or protections are not damaged	•			
45	Check the casters, adjust the height or replace the worn wheel		•		
46	Carry out a test run	•			

b.Lubricating points

Lubricate the marked points according to the maintenance checklist. The required grease specification is: DIN 51825, standard grease.

1. Bearings on load rollers
2. Mast
3. Chain
4. Steering bearing
5. Gearbox
6. Side wheel bearing

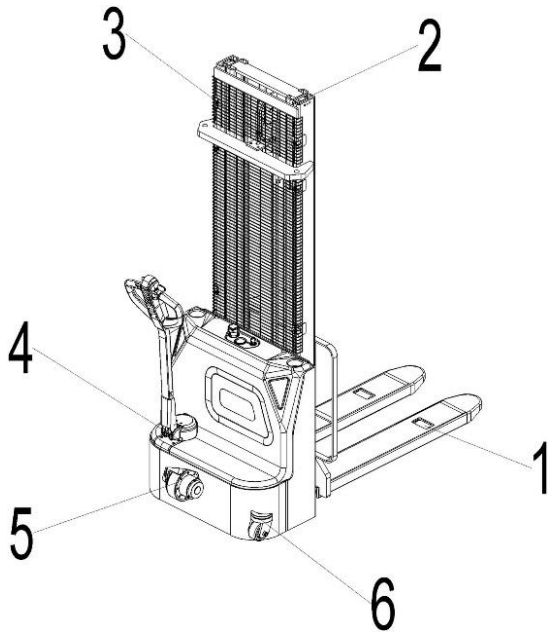

Fig. 16: Lubricating points

c.Check and refill hydraulic oil

The required hydraulic l type is:

https://truckmanualshub.com/

Temperature	–5℃~25℃	>25℃
Hydraulic oil type	HVLP 32, DIN 51524	HLP 46, DIN 51524
Viscosity	28.8-35.2	41.4-47
Oil volume	4L (refer to the truck type)	

Waste material like used oil, waste batteries or others must be properly disposed and recycled according to the national regulations and bring the waste material to a recycling company if necessary.

d.Check the electrical fuses

Remove the main cover. The fuse is located in the position shown in Fig. 17. Check Table 5 for the specifications.

Table 5: Specifications of the fuses

	Specification
FU1	10A
FU2	0.5A
FU 01	60A
FU 02	150A

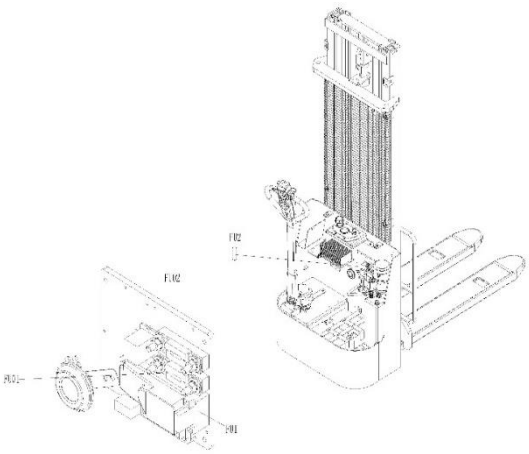

Fig. 17: Location of

e.Remove and reassemble the protective mesh

Do not use this truck if the protective mesh is damaged or not assembled correctly!

If you want to remove the protective mesh, remove the fixed screws and carefully remove the protective mesh. The screws are still on the truck. When you reassemble the protective mesh, place the mesh and fix each screw correctly. If you need to replace spare parts, please contact after-sales service.

9. TROUBLE SHOOTING

IF THE TRUCK HAS MALFUNCTIONS FOLLOW THE INSTRUCTIONS THAT MENTIONED IN CHAPTER 6.

Table 6: Trouble shooting

TROUBLE	CAUSE	REPAIR
Loads cannot be lifted	Load weight is too high	Load the truck within rated capacity.
	Battery discharged	Charge the battery.
	Lifting fuse faulty	Check and replace the lifting fuse.

https://truckmanualshub.com/

	Hydraulic oil level too low	Check and refill hydraulic oil.
	Oil leakage	Check and repair the seal performance of the oil hoses and/or cylinder.
Oil suction failure	Excessive quantity of oil.	Reduce oil quantity.
Loads cannot be lowered	Dirty oil blocks the control valve.	Check the hydraulic oil and clean the control valve. Replace hydraulic oil if necessary.
	The lowering electromagnetic valve is not activated or it is damaged.	Check or replace the lowering electromagnetic valve .
Stacker cannot be operated	Battery is charging	Charge the battery completely and then remove the main power plug form the electrical socket.
	Battery not connected	Connect the battery correctly.
	Fuse failure	Check and eventually replace fuses.
	The battery is discharged.	Charge the battery.
	The truck is not powered on.	Check emergency switch, key switch and other switches.
	The sequence of operations is wrong.	Move the tiller bar to the braking position and put the tiller bar back to the operating position, then operate the accelerator
Stacker only travels in one direction	The accelerator and the connectors are damaged.	Check the accelerator and the connectors.
Stacker travels very slowly	The battery is discharged.	Check the battery status by the discharge indicator.
	The electromagnetic brake is engaged.	Check the electromagnetic brake.
	The relating tiller cables are disconnected or damaged	Check the tiller cables and connectors.
Stacker starts up suddenly	The controller is damaged.	Replace the controller.
	The accelerator cannot turn back to its neutral position.	Repair or replace the accelerator.

If the truck has malfunctions and can’t be operated out of the working zone, jack the truck up and go with a load handler under the truck and ensure the truck safety. Then move the truck out of the aisle.

https://truckmanualshub.com/

10. WIRING/ CIRCUIT DIAGRAM

a.Electrical circuit diagram(lead-acid)

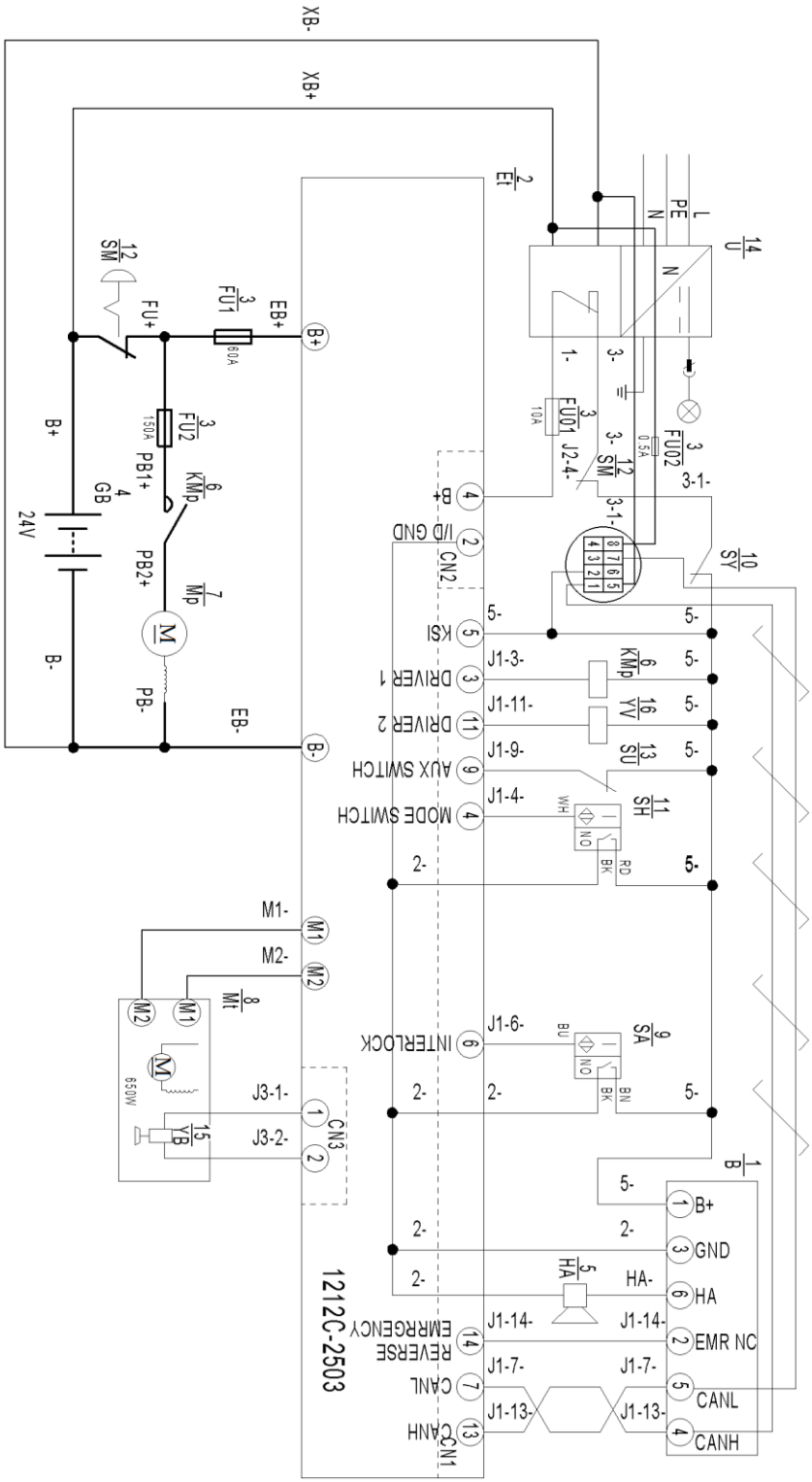

Fig. 18: Electrical circuit diagram(lead-acid)

https://truckmanualshub.com/

Table 7: Description of electrical components

Code	Item	Code	Item
B	Tiller	U	Charger
Et	Controller	YB	Electromagnetic brake
FU	Fuse	YV	Lowering electromagnetic valve
GB	Battery	SA	Interlock switch
HA	Horn	SY	Key switch
KMP	Oil pump contactor	SH	Lifting speed limit switch
MP	Oil pump motor	SM	DC power switch
MT	Traction motor	SU	Height limit micro switch

https://truckmanualshub.com/

b.Electrical circuit diagram(Li)

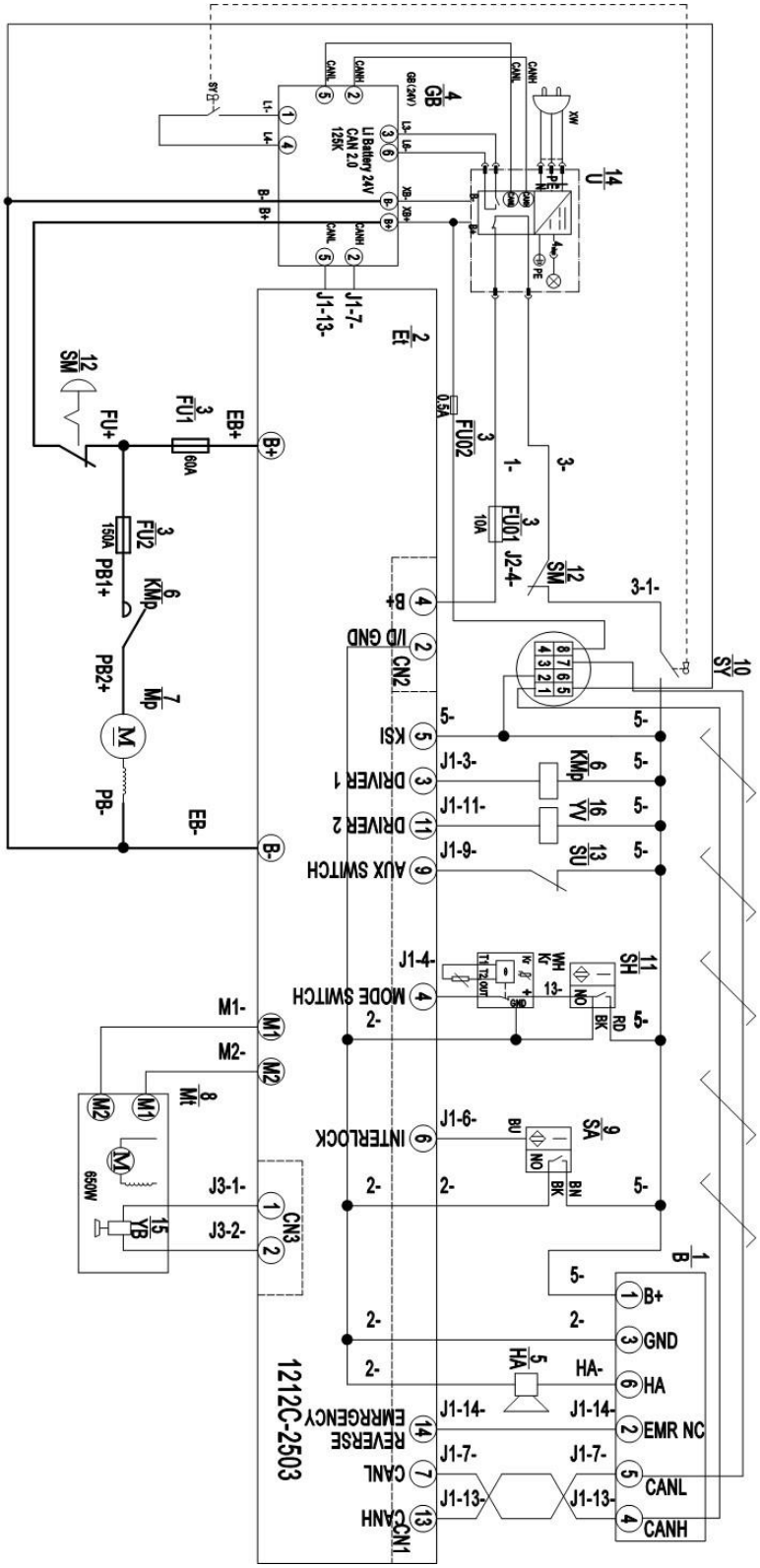

Electrical circuit diagram(Li)

https://truckmanualshub.com/

表 8: 符号说明

Code	Item	Code	Item
B	Tiller	U	Charger
Et	Controller	YB	EM brake
FU	Fuse	YV	Lowering EM valve
GB	Battery		
HA	Horn		
KMP	Pump contactor		
MP	Pump motor		
MT	Traction motor		
SA	Interlock switch		
SY	Key switch		
SH	Lifting limit sensor		
SM	DC power switch		
SU	Micro switch		

https://truckmanualshub.com/

c.Hydraulic circuit diagram

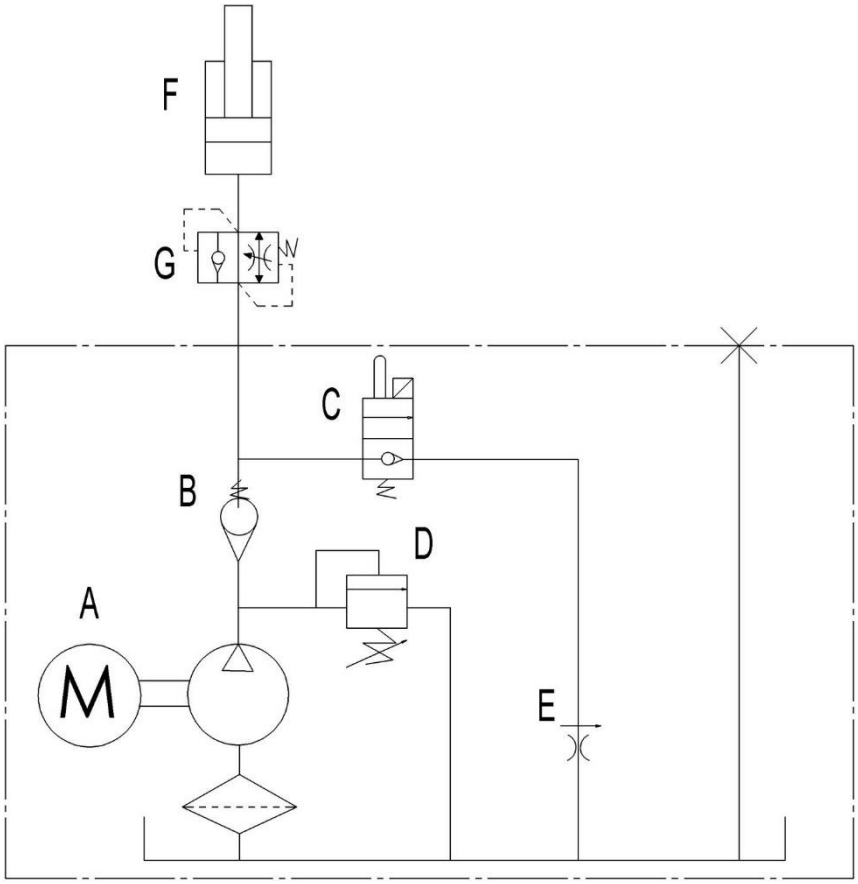

Fig. 19: Hydraulic circuit diagram

Table 9: Description of hydraulic components

Code	Item	Code	Item
A	Hydraulic power unit (motor and oil pump)	E	Throttle valve
B	One-way valve	F	Cylinder
C	Electromagnetic valve	G	Safety valve
D	Overflow valve		