https://truckmanualshub.com/

WORK SHOP MANUAL

9 LD series Engine, code 1-5302-286

9 LD 561-2
9 LD 561-2/L
9 LD 625-2

2nd edition

LOMBARDINI

SERVICE

COMPILER TECO/ATL	REG. CODE	MODEL N°	DATE OF ISSUE	REVISION 01	DATE	ENDORSED	
	1-5302-286	50494	06-88		30.03.2003		1

https://truckmanualshub.com/

LOMBARDINI

PREFACE

Every attempt has been made to present within this service manual, accurate and up to date technical information. However, development on the Lombardini series is continuos. Therefore, the information within this manual is subject to change without notice and without obligation.

The information contained within this service manual is the sole property of Lombardini. As such, no reproduction or replication in whole or part is allowed without the express written permission of Lombardini.

Information presented within this manual assumes the following:

1- The person or persons performing service work on Lombardini series engines is properly trained and equipped to safely and professionally perform the subject operation;

2- The person or persons performing service work on Lombardini series engines possesses adequate hand and Lombardini special tools to safely and professionally perform the subject service operation;

3- The person or persons performing service work on Lombardini series engines has read the pertinent information regarding the subject service operations and fully understands the operation at hand.

GENERAL SERVICE MANUAL NOTES:

1- Use only genuine Lombardini repair parts. Failure to use genuine Lombardini parts could result in sub-standard performance and low longevity.
2- All data presented are in metric format. That is, dimensions are presented in millimeters (mm), torque is presented in Newton-meters (Nm), weight is presented in kilograms (Kg), volume is presented in liters or cubic centimeters (cc) and pressure is presented in barometric units (bar).

LOMBARDINI
SERVICE

https://truckmanualshub.com/

WARRANTY CERTIFICATE

The products manufactured by Lombardini Srl are warranted to be free from conformity defects for a period of 24 months from the date of delivery to the first end user.
For engines fitted to stationary equipment, working at constant load and at constant and/or slightly variable speed within the setting limits, the warranty covers a period up to a limit of 2000 working hours, if the above mentioned period (24 months) is not expired.
If no hour-meter is fitted , 12 working hours per calendar day will be considered.
For what concerns the parts subject to wear and deterioration (injection/feeding system, electrical system, cooling system, sealing parts, non-metallic pipes, belts) warranty covers a maximum limit of 2000 working hours, if the above mentioned period (24 months) is not expired.
For correct maintenance and replacement of these parts, it is necessary to follow the instructions reported in the documentation supplied with each engine.
To ensure the engine warranty is valid, the engine installation, considering the product technical features, must be carried out by qualified personnel only.
The list of the Lombardini authorized dealers is reported in the “Service” booklet, supplied with each engine.
Special applications involving considerable modifications to the cooling/lubricating system (for ex.: dry oil sump), filtering system, turbo-charged models, will require special written warranty agreements.
Within the above stated periods Lombardini Srl directly or through its authorized network will repair and/or replace free of charge any own part or component that, upon examination by Lombardini or by an authorized Lombardini agent, is found to be defective in conformity, workmanship or materials.
Any other responsibility/obligation for different expenses, damages and direct/indirect losses deriving from the engine use or from both the total or partial impossibility of use, is excluded.
The repair or replacement of any component will not extend or renew the warranty period.

Lombardini warranty obligations here above described will be cancelled if:

- Lombardini engines are not correctly installed and as a consequence the correct functional parameters are not respected and altered.
- Lombardini engines are not used according to the instructions reported in the “Use and Maintenance” booklet supplied with each engine.
- Any seal affixed to the engine by Lombardini has been tampered with or removed.
- Spare parts used are not original Lombardini.
- Feeding and injection systems are damaged by unauthorized or poor quality fuel types.
- Electrical system failure is due to components, connected to this system, which are not supplied or installed by Lombardini.
- Engines have been disassembled, repaired or altered by any part other than an authorized Lombardini agent.

Following expiration of the above stated warranty periods and working hours, Lombardini will have no further responsibility for warranty and will consider its here above mentioned obligations for warranty complete.
Any warranty request related to a non-conformity of the product must be addressed to the Lombardini Srl service agents.

https://truckmanualshub.com/

INTRODUCTION

This manual contains pertinent information regarding the repair of LOMBARDINI air-cooled, direct injection Diesel engines type **9 LD 561-2, 9 LD 561-2/L, 9 LD 625-2:** updated March 30, 2003.

TABLE OF CONTENTS

I TROUBLESHOOTING — **Pag. 9**

II SAFETY DECALS - SAFETY INSTRUCTIONS — **" 10-11**

III MODEL NUMBER AND IDENTIFICATION — **" 12**

IV TECHNICAL DATA — **" 13**

V CHARACTERISTIC CURVES — **" 15**

VI OVERALL DIMENSIONS — **" 16-17**

VII MAINTENANCE- RECOMMENDED OIL TYPE - REFILLING — **" 18-19**

VIII DISASSEMBLY / REASSEMBLY — **" 21-45**

0il vapour separator . . . 22
0il-bath air cleaner . . . 21
Alternator . . . 24
CAMSHAFT . . . 39
Camshaft end play . . . 40
Camshaft timing . . . 40
Checking main journals and crank pins . . . 36
Checks and cylinder roughness . . . 30
Clearance between main journals/crank pins and connecting rod bearings (mm) . . . 37
Clogging indicator . . . 22
Compression release (optional) . . . 25
CONNECTING ROD . . . 32
Connecting rod alignment . . . 33
Connecting rod big end bearing . . . 33
Connecting rod small end bushing . . . 32
Connecting rod weight . . . 33
Cooling fan . . . 23
CRANKSHAFT . . . 35
Crankshaft center main bearing support . . . 35
Crankshaft end play . . . 38
Crankshaft journal radii . . . 36
Crankshaft lubrication ducts . . . 36
Crankshaft removal . . . 35
Crankshaft timing gear . . . 34
CYLINDER . . . 30
CYLINDER HEAD . . . 26
Dimensions and clearance between guides and valves (mm) . . . 28
Dimensions of camshaft journals and housings (mm) . . . 39
Dry air cleaner . . . 21
ELECTRONIC SPEED GOVERNOR . . . 44
Electronic speed governor . . . 44
Electronic speed governor control box . . . 45
Electronic speed governor layout . . . 44
Engine running with electronic speed governor . . . 45
Exhaust manifold . . . 23
Flywheel . . . 25
Governor springs with rocker arm . . . 43

https://truckmanualshub.com/

Governor springs with rocker arm 43
How to measure intake/exhaust cam height 39
How to measure main bearing inside diameter 37
Hub 24
Hydraulic pump p.t.o. 42
Hydraulic pump p.t.o. (1 P) 42
Injector 26
Injector projection 26
Intake manifold 22
Main bearing and connecting rod big end bearing inside diameter 37
Main bearing housings 38
Main bearing support, flywheel side 34
Main bearing support, gear side 34
Main bearíng supports 38
Main journal and crank pin diameter (mm) 36
MECHANICAL SPEED GOVERNOR 42
Mechanical speed governor 42
PISTON 30
Piston - Refitting 32
Piston clearance 32
Piston rings - End gaps (mm) 31
Piston rings - Fitting sequence 31
Piston weight 31
Pistons ringis - Clearance between grooves (mm) 31
Pulley guard - Shroud - Side plates 23
Pushrod tube 29
Rocker arm assembly 25
Shroud support (Gear cover plate) 24
Spring for extra fuel supply at starting 43
Starting with electronic speed governor 45
Tank 24
Valve / rocker arm clearance 25
Valve guide insertion 28
Valve guides and valve guide housings 28
Valve material 27
Valve seat grinding 29
Valve seats and housings 29
Valve springs 27
Valve timing check 41
Valve timing without considering timing marks 40
Valves 27

IX LUBRICATION SYSTEM 46-48

Lubrication system 46
OIL PUMP 47
Oil filter cartridge (internal) 47
Oil pressure relief valve 47
Oil pressure check 47
Oil pressure curve at idling speed 48
Oil pressure curve at full speed 48

IX FUEL SYSTEM 49-55

(STATIC) INJECTION TIMING 53
Check window for injection timing reference mark 54
Fuel feeding pump 49
Fuel feeding pump drive rod protrusion 49
Fuel feeding/injection circuit 49
Fuel filter (inside fuel tank) 49
How to check injection pump delivery valve sealing 51
How to check plunger and barrel for internal leakage 51
How to mount injection pump on the engine 52
How to reassemble injection pump components 52

https://truckmanualshub.com/

INJECTION PUMP 50
Injection pump 50
Injection pump/mechanical speed governor timing 52
Injection timing check 53
Injection timing check 54
Injection timing checking device 53
Injection timing correction 54
INJECTOR 55
Injector setting 55
Nozzle 55
Plunger and Barrel Assembly 50
Test data for injection pump delivery 51

XI ELECTRIC SYSTEM 56-63

12 V, 24 A special voltage regulator 60
12.5 V, 14 A Alternator 56
14 V, 33 A Bosch G1 alternator battery charger curve 61
Alternator battery charger curve (12 V, 18 A) 60
Alternator battery charger curve (12.5 V, 14A) 57
Alternator type Bosch G1 14 V, 33 A 61
Alternator type Bosch G1 14 V, 33 A layout 61
Bosch starting motor type GIF - 12 V, class 1.5 62
Characteristic curves for starting motor type Bosch DW (R), 12 V, 1.7 kW 63
Characteristic curves for starting motor type Bosch GF -12 V, class 1.5 63
Characteristic curves for starting motor type Magneti Marelli E100, 1.5/12 V 62
Checking for cable continuity 57
Electrical starting layout with battery charging light 56
How to check voltage regulator for proper operation 59
Magneti Marelli starting motor type E100, 1,5/12 V 62
Magnetization checking tool (Part No. 7000-9727-001) 57
OPTIONAL ELECTRIC EQUIPMENT 60
STANDARD ELECTRIC EQUIPMENT 56
STARTING MOTOR 62
Starting motor type Bosch DW (R) 12 V, 1.7 kW 63
VOLTAGE REGULATOR 58

XII SETTINGS 64-66

SETTINGS 64
Full speed setting in no-load conditions (standard) 64
Injection pump delivery setting 64
Injection pump delivery limiting and extra fuel device 64
Injection pump delivery setting with engine at the torque dynamometer 65
Required settings (as most commonly applies) 65
Stop setting 66

XIII STORAGE 67

STORAGE 67
Temporary protection (1÷6 months) 67
Permanent protection (over 6 months) 67
How to prepare the engine for operation 67

XIV TORQUE SPECIFICATIONS 68-69

MAIN TORQUE SPECIFICATIONS 68
STANDARD BOLT TORQUE SPECIFICATION 69

https://truckmanualshub.com/

NOTE

https://truckmanualshub.com/

NOTE

https://truckmanualshub.com/

POSSIBLE CAUSES AND TROUBLE SHOOTING

The following table contains the possible cause of some failures which may occur during operation. Always perform the simplest checks before removing or replacing any part.

	POSSIBLE CAUSE	TROUBLE										
		Engine does not start	Engine starts but stops	No acceleration	Non uniform speed	Black smoke	Withe smoke	Too low oil pressure				
FUEL CIRCUIT	Clogged pipings	■										
	Clogged fuel filter	■	■	■								
	Air inside fuel circuit	■	■	■								
	Clogged tank breather	■	■	■								
	Faulty feed pump	■	■									
	Stuck injector	■										
	Stuck injection pump valve	■										
	Wrong injector setting					■						
	Sticking injection pump rack	■		■	■							
	Wrong injection pump setting			■		■						
LUBRICATION	Too high oil level				■		■					
	Stuck pressure relief valve							■				
	Incorrect relief valve setting							■				
	Worn-oil pump							■				
	Air inside oil suction pipe							■				
	Faulty pressure gauge or switch							■				
	Clogged oil suction pipe							■				
ELECTRIC SYSTEM	Battery dis-charged	■										
	Wrong or inefficient cable connection	■										
	Defective starter switch	■										
	Defective starter	■										
MAINTE-NANCE	Clogged air filter	■		■		■						
	Excessive idle operation						■					
	Incomplete running-in						■					
	Engine overloaded			■		■						
SETTINGS/REPAIRS	Advanced injection	■										
	Retarded injection					■						
	Incorrect governor linkage adjustment	■			■							
	Broken or loose governor spring			■								
	Too low idle-speed		■									
	Worn-out or stuck piston rings						■					
	Worn-out cylinders						■					
	Sticking valves	■										
	Worn-out bearings							■				
	Governor linkage not freely operating	■	■		■							
	Crankshaft not turning freely					■						

https://truckmanualshub.com/

SAFETY AND WARNING DECALS

DANGER

Failure to comply with the instructions could result in damage to persons and property

CAUTION

Failure to comply with the instructions could lead to technical damage to the machine and/or system

SAFETY INSTRUCTIONS

- Lombardini Engines are built to supply their performances in a safe and long-lasting way. To obtain these results, it is essential for users to comply with the servicing instructions given in the relative manual along with the safety recommendations listed below.
- The engine has been made according to a machine manufacturer's specifications and all actions required to meet the essential safety and health safeguarding requisites have been taken, as prescribed by the current laws in merit. All uses of the engine beyond those specifically established cannot therefore be considered as conforming to the use defined by Lombardini which thus declines all liability for any accidents deriving from such operations.
- The following indications are dedicated to the user of the machine in order to reduce or eliminate risks concerning engine operation in particular, along with the relative routine maintenance work.
- The user must read these instructions carefully and become familiar with the operations described. Failure to do this could lead to serious danger for his personal safety and health and that of any persons who may be in the vicinity of the machine.
- The engine may only be used or assembled on a machine by technicians who are adequately trained about its operation and the deriving dangers. This condition is also essential when it comes to routine and, above all, extraordinary maintenance operations which, in the latter case, must only be carried out by persons specifically trained by Lombardini and who work in compliance with the existing documentation.
- Variations to the functional parameters of the engine, adjustments to the fuel flow rate and rotation speed, removal of seals, demounting and refitting of parts not described in the operation and maintenance manual by unauthorized personnel shall relieve Lombardini from all and every liability for deriving accidents or for failure to comply with the laws in merit.
- On starting, make sure that the engine is as horizontal as possible, unless the machine specifications differ. In the case of manual start-ups, make sure that the relative actions can take place without the risk of hitting walls or dangerous objects, also considering the movements made by the operator. Pull-starting with a free cord (thus excluding self-winding starting only), is not permitted even in an emergency.
- Make sure that the machine is stable to prevent the risk of overturning.
- Become familiar with how to adjust the rotation speed and stop the engine.
- Never start the engine in a closed place or where there is insufficient ventilation. Combustion creates carbon monoxide, an odourless and highly poisonous gas. Lengthy stays in places where the engine freely exhausts this gas can lead to unconsciousness and death.

https://truckmanualshub.com/

- The engine must not operate in places containing inflammable materials, in explosive atmospheres, where there is dust that can easily catch fire unles specific, adequate and clearly indicated precautions have been taken and have been certified for the machine.
- To prevent fire hazards, always keep the machine at least one meter from buildings or from other machinery.
- Children and animals must be kept at a due distance from operating machines in order to prevent hazards deriving from their operation.
- Fuel is inflammable. The tank must only be filled when the engine is off. Thoroughly dry any spilt fuel and move the fuel container away along with any rags soaked in fuel or oil. Make sure that no soundproofing panels made of porous material are soaked in fuel or oil. Make sure that the ground or floor on which the machine is standing has not soaked up any fuel or oil.
- Fully tighten the tank plug each time after refuelling. Do not fill the tank right to the top but leave an adequate space for the fuel to expand.
- Fuel vapour is highly toxic. Only refuel outdoors or in a well ventilated place.
- Do not smoke or use naked flames when refuelling.
- The engine must be started in compliance with the specific instructions in the operation manual of the engine and/or machine itself. Do not use auxiliary starting aids that were not installed on the original machine (e.g. Startpilot').
- Before starting, remove any tools that were used to service the engine and/or machine. Make sure that all guards have been refitted.
- During operation, the surface of the engine can become dangerously hot. Avoid touching the exhaust system in particular.
- Before proceeding with any operation on the engine, stop it and allow it to cool. Never carry out any operation whilst the engine is running.
- The coolant fluid circuit is under pressure. Never carry out any inspections until the engine has cooled and even in this case, only open the radiator plug or expansion chamber with the utmost caution, wearing protective garments and goggles. If there is an electric fan, do not approach the engine whilst it is still hot as the fan could also start operating when the engine is at a standstill. Only clean the coolant system when the engine is at a standstill.
- When cleaning the oil-cooled air filter, make sure that the old oil is disposed of in the correct way in order to safeguard the environment. The spongy filtering material in oil-cooled air filters must not be soaked in oil. The reservoir of the separator pre-filter must not be filled with oil.
- The oil must be drained whilst the engine is hot (oil T ~ 80°C). Particular care is required to prevent burns. Do not allow the oil to come into contact with the skin.
- Make sure that the drained oil, the oil filter and the oil it contains are disposed of in the correct way in order to safeguard the environment.
- Pay attention to the temperature of the oil filter when the filter itself is replaced.
- Only check, top up and change the coolant fluid when the engine is off and cold. Take care to prevent fluids containing nitrites from being mixed with others that do not contain these substances since "Nitrosamine", dangerous for the health, can form. The coolant fluid is polluting and must therefore be disposed of in the correct way to safeguard the environment.
- During operations that involve access to moving parts of the engine and/or removal of rotating guards, disconnect and insulate the positive wire of the battery to prevent accidental short-circuits and to stop the starter motor from being energized.
- Only check belt tension when the engine is off.
- Only use the eyebolts installed by Lombardini to move the engine. These lifting points are not suitable for the entire machine; in this case, the eyebolts installed by the manufacturer should be used.

https://truckmanualshub.com/

Tipo motore
Type moteur
Engine type
Motortype
Tipo motor

Matricola identificazione motore
Matricule d'identification moteur
Serial number
Motornummer
Matricula identificación motor

Codice cliente
Code client
Customer code ('K' No.)
Kundennummer
Código cliente

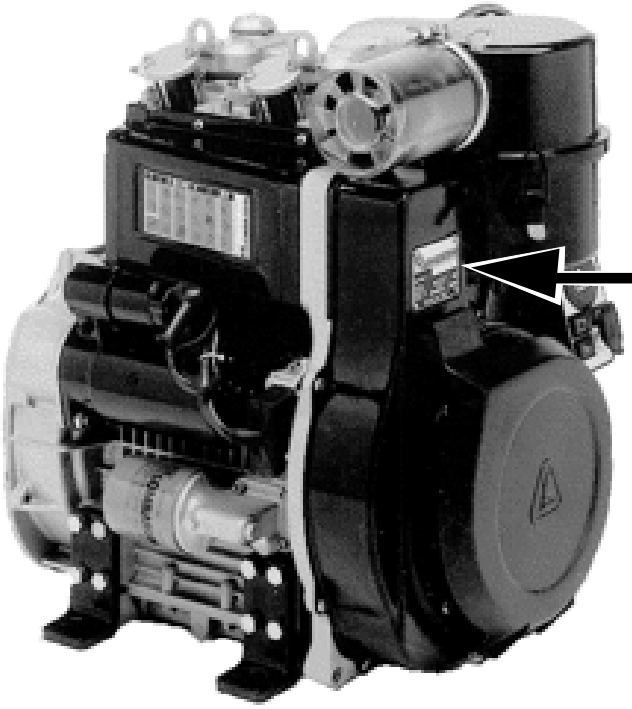

https://truckmanualshub.com/

CHARACTERISTICS 9 LD 561-2 / 9 ld 561-2/L / 9 LD 625-2

ENGINE TYPE			9 LD 561-2	9 LD 561-2/L	9 LD 625-2
Number of cylinders		N°	2	2	2
Bore		mm	90	90	95
Stroke		mm	88	88	88
Displacement		Cm³	1120	1120	1248
Compression ratio			17.5:1	17.5:1	17.5:1
R.P.M.			3000	2200	3000
Power KW/CV	N DIN 70020		19.0/25.8	-----	21/28.5
	NB DIN 6270		16.9/23.0	13.30/18.0	19.2/26.0
	NA DIN 6270		15.4/21.0	12.00/16.3	17.7/24.0
Max. torque *		Kgm	6.55	6.0	7.5
			@ 2200	@ 2000	@ 2200
Max. torque at 3rd p.t.o.		Kgm	3.0	3.0	3.0
Specific fuel consumption*		g/h	198	179	186
Tank capacity		l.	10	10	10
Oil consumption ***		Kg/h	0.050	0.050	0.058
Oil sump capacity		l.	3.0	3.0	3.0
Dry weight		kg.	110	110	110
Combustion air volume at 3000 r.p.m.		l./1'	1440	1056 **	1500
Cooling air volume at 3000 r.p.m.		l./1'	24000	17600**	26300
Max. permissible driving shaft axial load in both directions		Kg.	300	300	300
Max. inclination	momentary	α	35°	35°	35°
	lasting up to 1 h.	α	25°	25°	25°
	permanent	α	***	***	***

* Referred to max. NB power
** At 2200 r.p.m.
*** Depending on the application

Note: For engines type 9LD560-2, currently out of production, follow the same repair instructions listed above.

https://truckmanualshub.com/

NOTE

https://truckmanualshub.com/

CHARACTERISTIC POWER, TORQUE AND SPECIFIC CONSUMPTION CURVES

9LD561-2

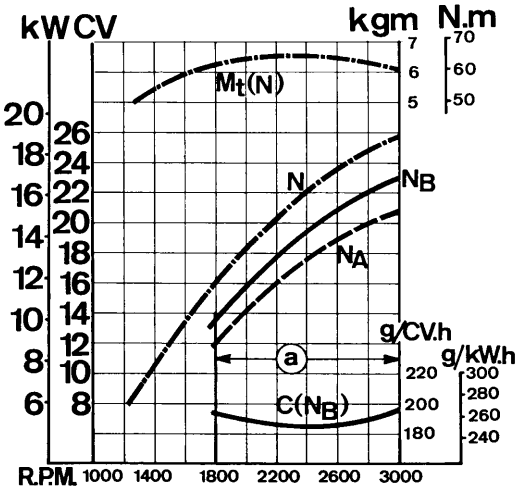

9LD561-2/L

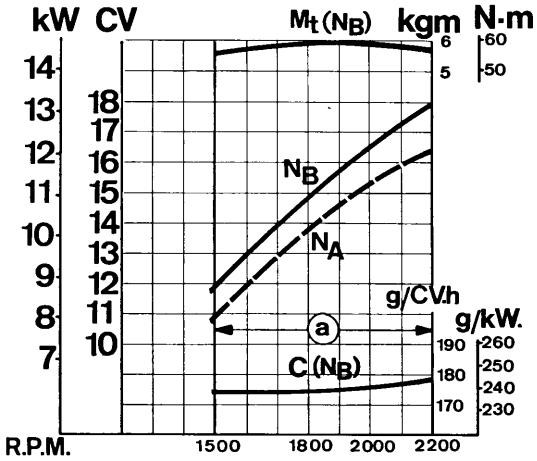

9LD625-2

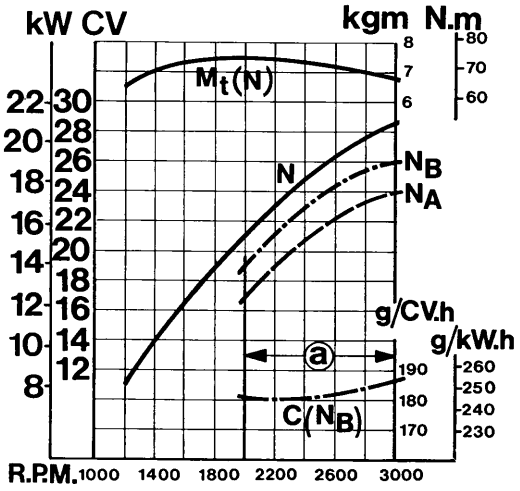

N (DIN 70020)Automotive rating, intermittent operation with variable speed and variable load.
NB (DIN 6270)Rating with no overload capability, continuous light duty operation with constant speed and variable load.
NA (DIN 6270)Continuous rating with overload capability, continuous heavy duty with constant speed and constant load..

C (NB) : Specific fuel consumption at NB power
Mt : Torque at N (at NB power for 9LD561-2/L).
a : Range of application for continuous operation. In case of application outside this range please contact LOMBARDINI.

The above power values refer to an engine fitted with air cleaner and standard muffler, after testing and at the environmental conditions of 20°C and 1 bar.
Max. power tolerance is 5%.
Power decreases by approximately 1% every 100 m di altitude and by 2% every 5°C above 25°C.

Note: Consult LOMBARDINI for power, torque curves and specific consumptions at rates differing from those given above.

https://truckmanualshub.com/

VI OVERALL DIMENSION

9 LD 561-2 , 9 LD 561-2/L

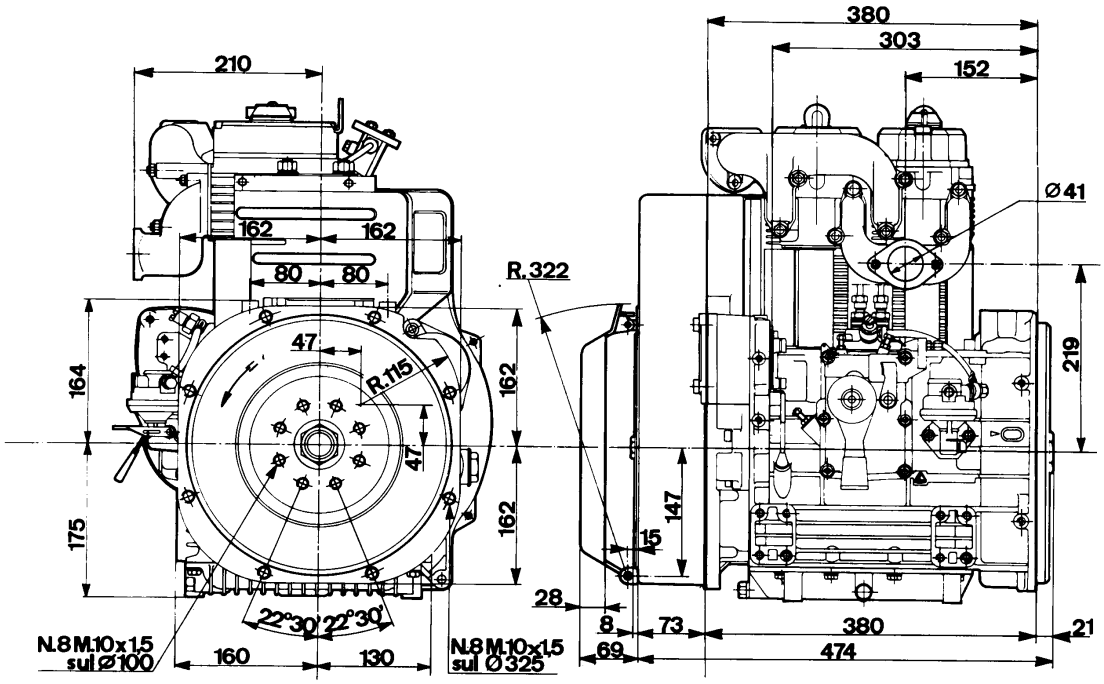

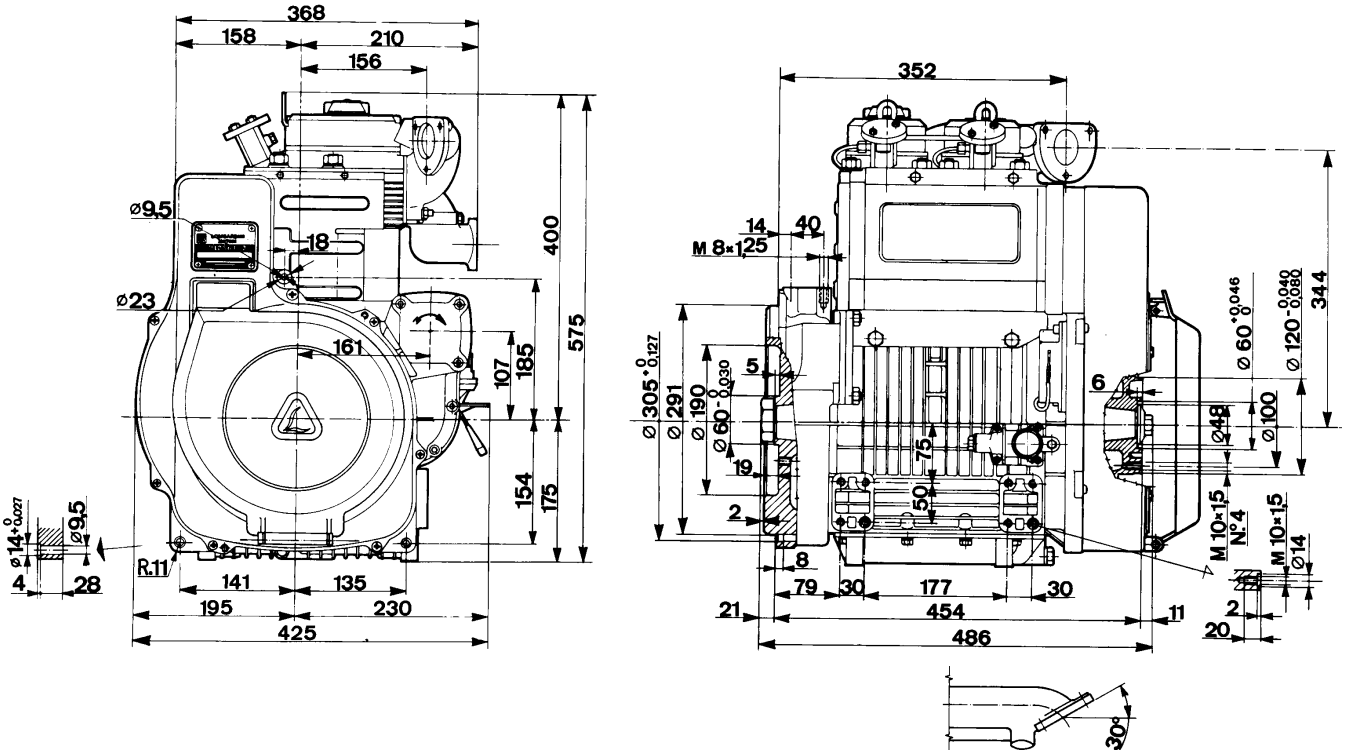

https://truckmanualshub.com/

9 LD 625-2

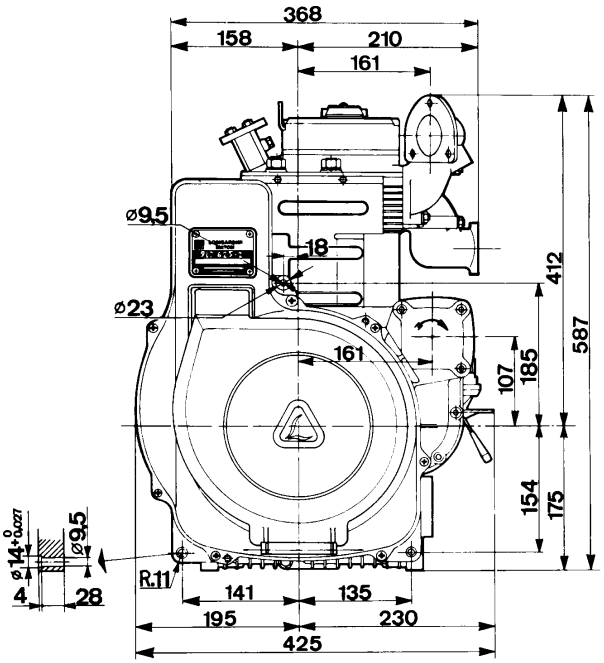

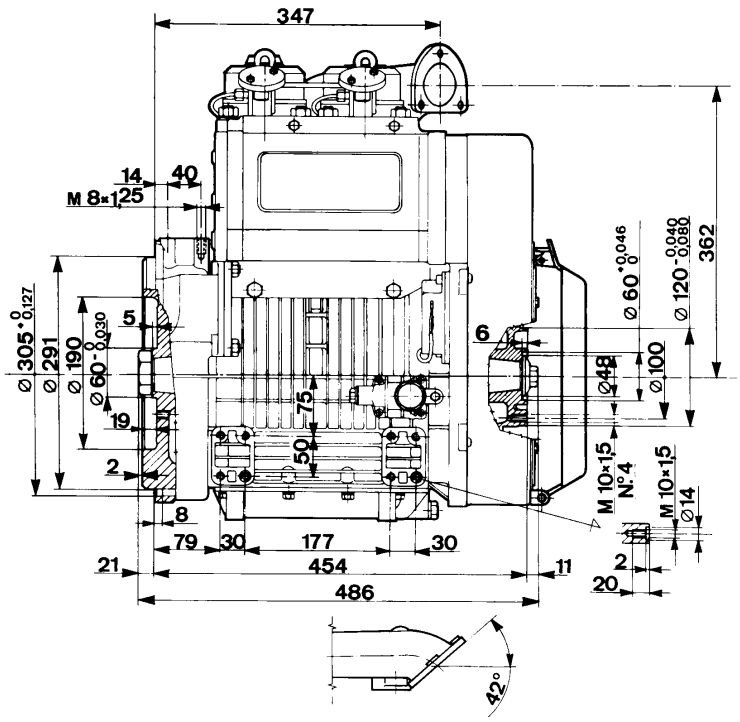

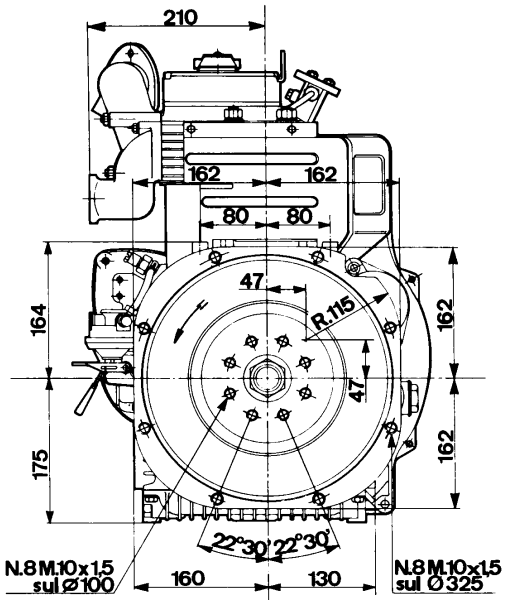

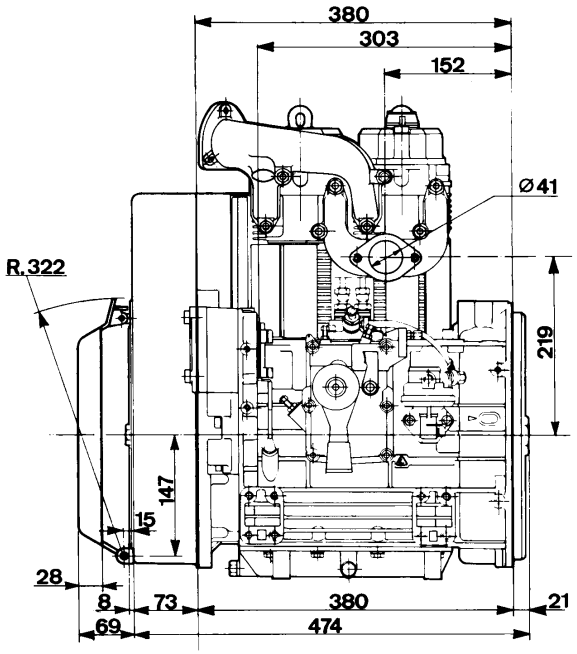

https://truckmanualshub.com/

! Failure to carry out the operations described in the table may lead to technical damage to the machine and/or system

ENGINE MAINTENANCE 9 LD 561-2 / 561-2/L - 625-2

OPERATION	COMPONENT		INTERVAL (HOURS)								
				8	100	300	2500	5000			
CLEANING	(OIL BATH) AIR CLEANER		(*)	■							
	FEED PUMP FILTER				■						
	HEAD AND CYLINDER FINS		(*)		■						
	FUEL TANK					■					
	INJECTORS					■					
	INTERNAL OIL FILTER					■					
CHECK	LEVEL	AIR CLEANER OIL		■							
		CRANKCASE OIL		■							
		BATTERY FLUID									
	DELIVERY VALVE TIGHTNESS					■					
	VALVE AND ROCKER ARM CLEARANCE					■					
	INJECTOR SPRAY PATTERN					■					
REPLACEMENT	OIL	AIR CLEANER	(**) (***)	■							
		CRANKCASE	(***)			■					
	OIL FILTER CARTRIDGE					■					
	FUEL FILTER CARTRIDGE					■					
	DRY AIR CLEANER CARTRIDGE		(O)								
OVERHAUL INSPECTION	PARTIAL		(****)				■				
	COMPLETE							■			

(*) Under special working conditions clean daily.
(**) Under extremely dusty conditions clean every 4-5 hours.
(***) See reccomended oil type.
(****) Includes checking cylinders, piston rings, guides, springs, grinding valve seats, scaling heads and cylinders as well as checking injection pump and injectors.
(O) When clogging indicator shows the need for replacement.

CAPACITIES (liters)

Standard fuel tank 10,0

https://truckmanualshub.com/

The engine could be damaged if allowed to operate with insufficient oil. It is also dangerous to add too much oil as its combustion could sharply increase the rotation speed.
Use a suitable oil in order to protect the engine.
The lubrication oil influences the performances and life of the engine in an incredible way.
The risk of piston seizure, jammed piston rings and rapid wear of the cylinder liner, the bearings and all moving parts increases if oil whose characteristics differ from the recommended type is used, or if the oil is not regularly changed. All this notably reduces engine life.
Oil viscosity must suit the ambient temperature in which the engine operates.

Old oil can cause skin cancer if repeatedly left in contact with the skin and for long periods of time. If contact with the oil is inevitable, you are advised to thoroughly wash your hands with soap and water as soon as possible.
Appropriate protective gloves etc should be wore during this operation.
Old oil is highly polluting and must be disposed of in the correct way. Do not litter.

RECOMMENDED OIL

AGIP SUPERDIESEL MULTIGRADE 15W40 specifications API CF-4/SG ACEA E2,B2 MIL-L-46152 D/E.
In the countries where AGIP products are not available, use oil API SJ/CF for Diesel engines or oil corresponding to the military specification MIL-L-46152 D/E.

OIL SUPPLY (liters) 9 LD 561-2 / 561-2/L / 625-2

filter included	**3.3**
filter escluded	**3.0**
Air cleaner oil tank	**0.3**

GRADE

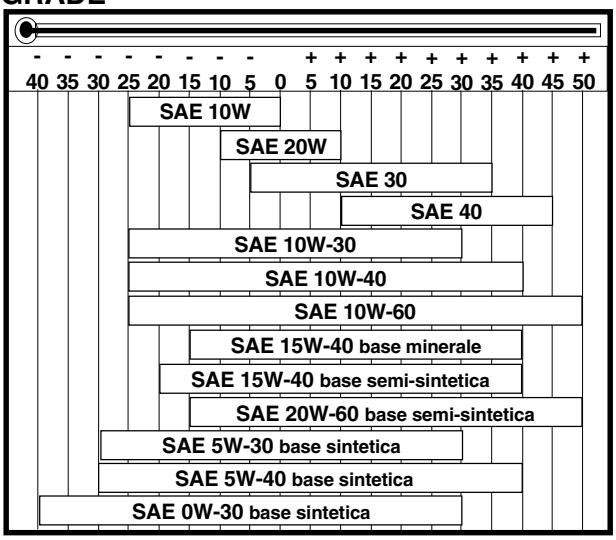

ACEA SEQUENCES

A = Gasoline (Petrol)
B = Light Diesel fuels
E = Heavy Diesel fuels

Required levels :

A1-96
A2-96
A3-96

B1-96
B2-96
B3-96

E1-96
E2-96
E3-96

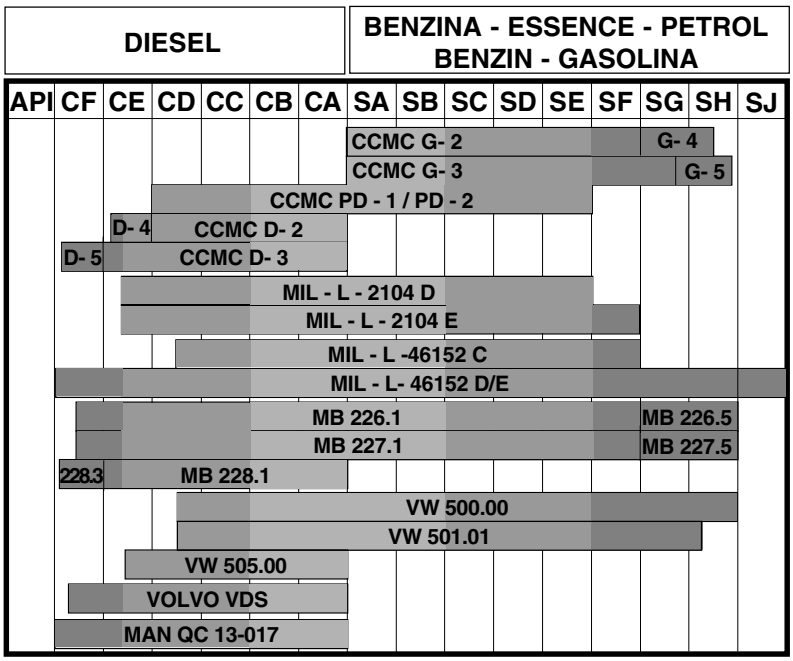

https://truckmanualshub.com/

NOTE

https://truckmanualshub.com/

! WARNINGS!
During repair operations, when using compressed air, wear eye protection.

DISASSEMBLY AND REASSEMBLY

Besides disassembly and reassembly operations this chapter also includes checking and setting specifications, dimensions, repair and operating instructions. Always use original LOMBARDINI spare parts for proper repair operations.

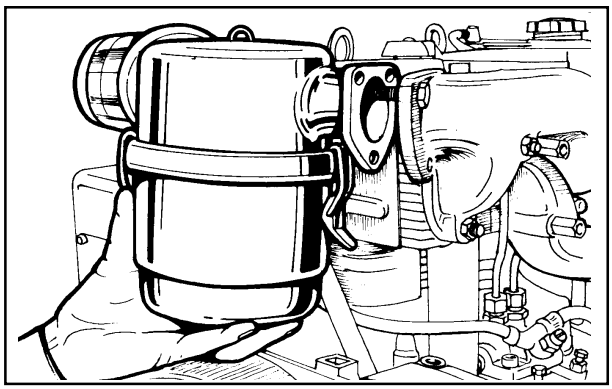

1

0il-bath air cleaner

Check gaskets and replace if necessary.
Check that flange weld is free of porosity or defective spots.
Carefully clean bowl and filtering element with Diesel oil and blow through with compressed air.
Top up with engine oil to the mark. When refitting tighten nuts at 2.5 Kgm.
See page 18 for periodic maintenance details.

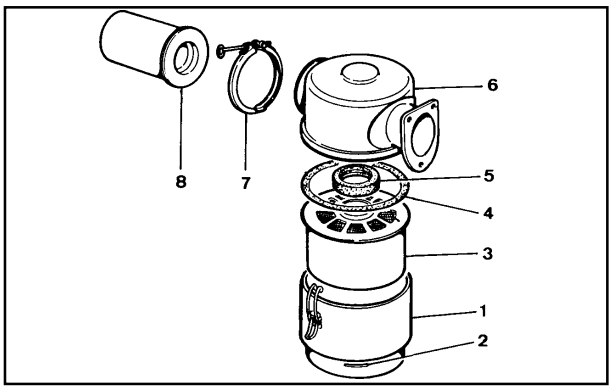

2

Components:

1 Bowl
2 Oil level mark
3 Filtering element
4 Seal ring
5 Internal seal ring
6 Cover
7 Clamp
8 Prefilter

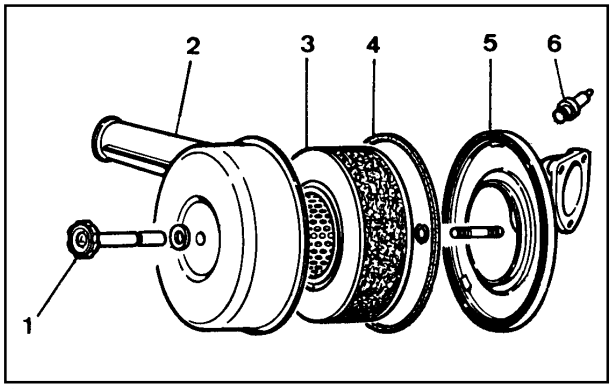

3

Dry air cleaner
(optional for models 9LD561 and 9LD561-2/L)

1 Hand wheel
2 Cover
3 Cartridge
4 Seal ring
5 Bracket
6 Clogging indicator

Note: Replace cartridge immediately when indicator shows that is clogged.

https://truckmanualshub.com/

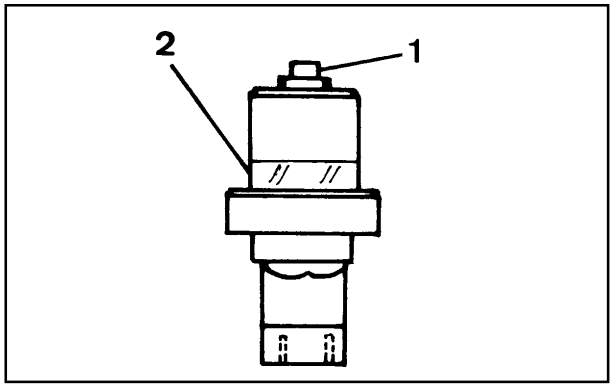

4

Clogging indicator

Components:
1 Reset button
2 Transparent indicator

Note: Indicator is calibrated at 600÷650 mm. column of water.

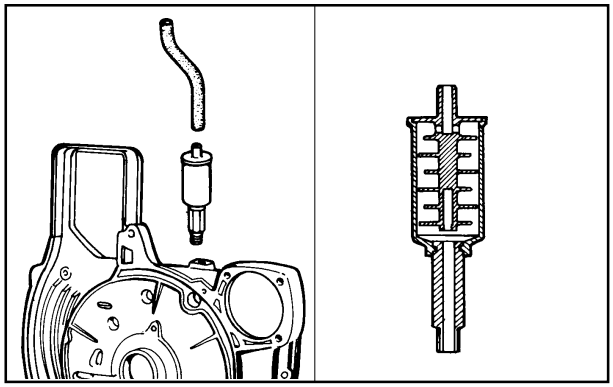

5 6

Oil vapour separator

Fitted to engines with dry air cleaner.
Screw it out of the shroud bracket, carefully wash with gasoline inside and blow out with compressed air.
When refitting connect with intake manifold by means of the special rubber hose.

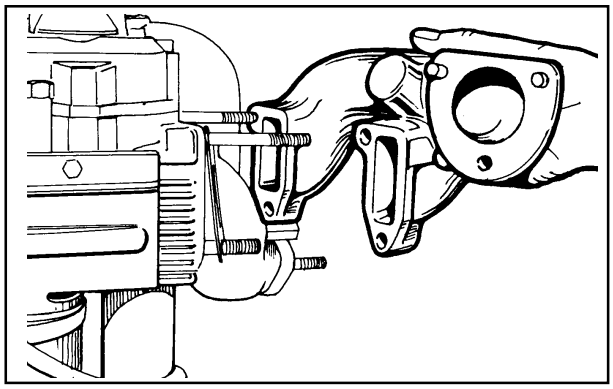

7

Intake manifold

Check flange surface for warpage and correct if necessary. Before refitting check that heads are in line. Replace gaskets. Tighten nuts at 2.5 Kgm.

Note: In case of low temperature starting we can supply a manifold with possibility of fitting a glow plug with air preheating.

https://truckmanualshub.com/

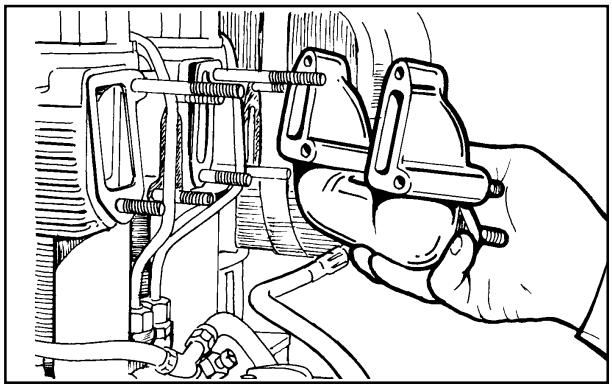

8

Exhaust manifold

Check that the inside is clean.
To avoid flange breakage check that heads are in line before tightening nuts. Replace gaskets.
Tighten nuts at 2 Kgm.

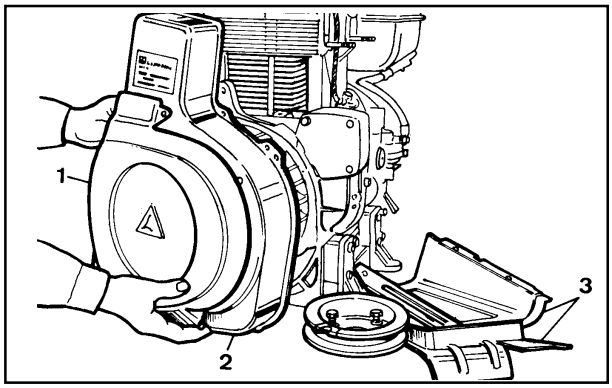

9

Pulley guard - Shroud - Side plates

Components:
1 Pulley guard
2 Shroud
3 Side plates

The pulley guard is made of sound deadening material: it reduces the noise that both the pulley and the fan tend to amplify.
Shroud and side plates are made of ANTIFON, an elastic layer which absorbs the noise caused by the plate vibrations.

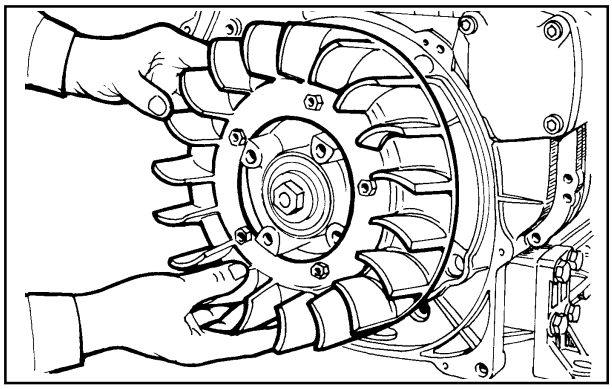

10

Cooling fan

Carefully clean and check all blades: if any are damaged, replace the whole fan.
See page 13 for cooling air volume.

https://truckmanualshub.com/

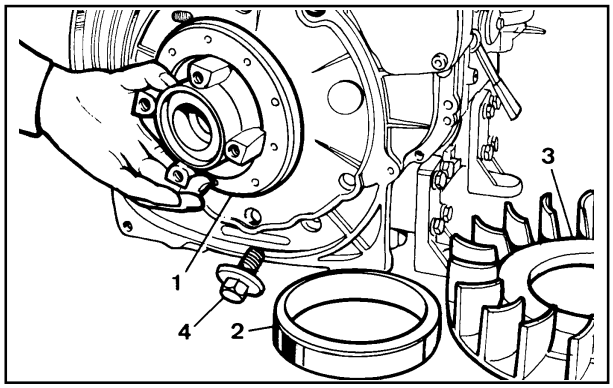

16

Hub

Components:
1 Hub
2 Alternator rotor
3 Fan
4 Bolt

The hub holds the alternator rotor and the cooling fan.
Unscrew the bolt clockwise and tighten at 16 Kgm when refitting.

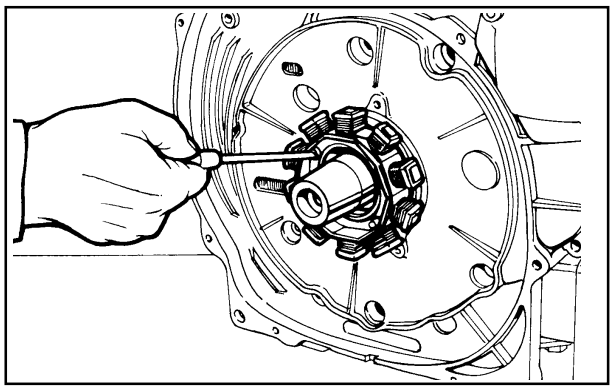

17

Alternator

Remove stator and place it inside the rotor to prevent metal particles from being attracted by the magnets.
When refitting tighten rotor screws and stator bolts at 1 Kgm.
See page 56-57 for alternator characteristics.

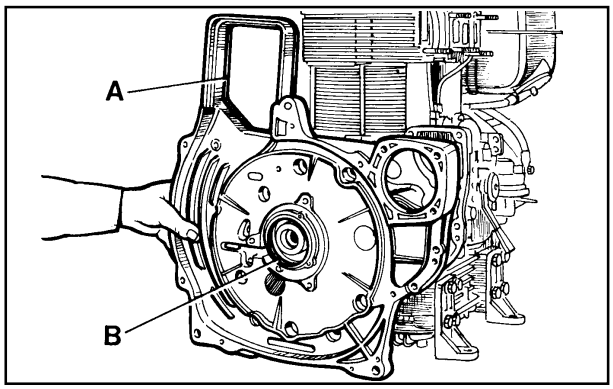

18

Shroud support (Gear cover plate)

Loosen screws and remove shroud support very carefully to avoid damage to the oil seal ring.
When refitting check that gaskets **A** and oil seal ring **B** are well inside their housings.
Tighten screws at 2.5 Kgm.

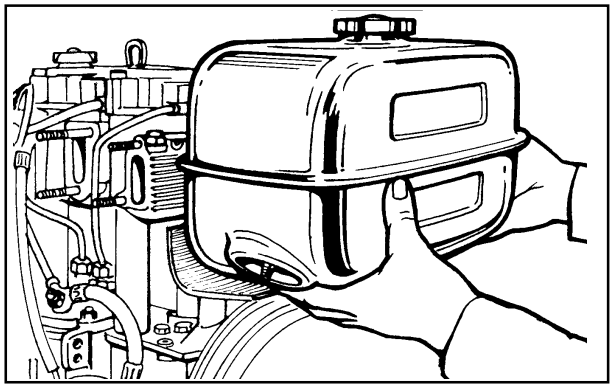

19

Tank

Remove fuel filter and loosen clamp screws.
Completely empty the tank and check that no impurities are found inside.
Check that cap breather hole is not clogged.
When refitting tighten bracket screws at 4 Kgm.
See page 49 for refitting fuel filter.

https://truckmanualshub.com/

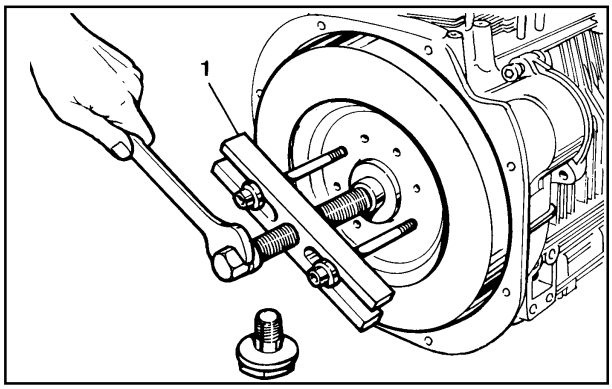

15

Flywheel

Remove flywhee] with puller 1 (part No. 7271-3595-048).
Check starter ring gear and tapered crankshaft mating surfaces.
When refitting tighten bolt al 30 Kgm.

Note: To replace starter ring gear heat it up lo 200÷250°C and rapidly drive it onto the flywheel.

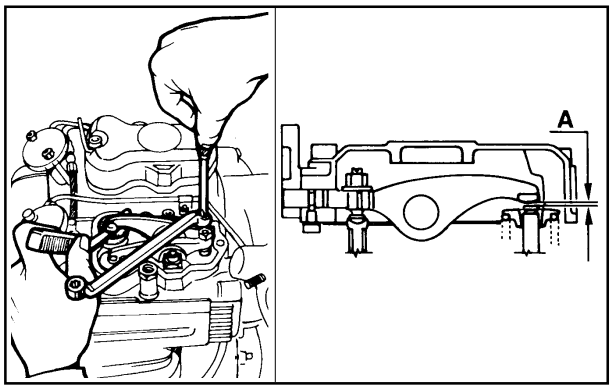

16 17

Valve / rocker arm clearance

Remove rocker arm cover and check gaskets for breakage.
Setting should be performed when the engine is cold: bring each cylinder piston to top dead center on the compression stroke and set clearance **A** al 0.15÷0.20 mm.
When refitting tighten cover screws by 2 Kgm.

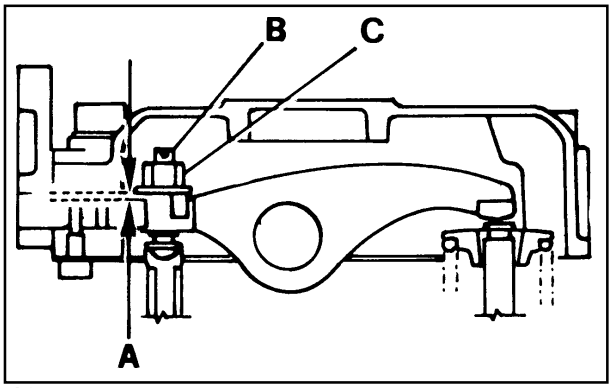

18

Compression release (optional)

Bring piston to top dead center on the compression stroke.
Unscrew rocker arm cover side plug and measure clearance **A**. It must be 0.30÷0.40 mm.
For setting purposes remove rocker arm cover, unscrew lock nut and set clearance **A**, by adding or removing shims under steel plate (point **B**).

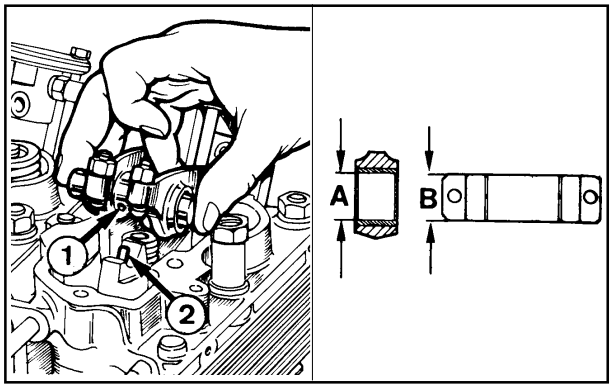

19 20

Rocker arm assembly

Components:
1 Bore
2 Lubrication tube

Dimensions (mm):
A = 18.032÷18.050
B = 17.989÷18.000
If clearance (A-B) exceeds 0. 135 mm. replace shaft and rocker arms.
When retitting check that lubrication tube perfectly matches with the journal bore.
Tighten screws al 2.5 Kgm.

https://truckmanualshub.com/

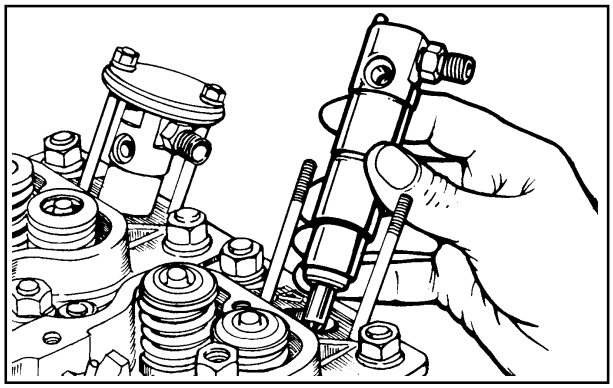

21

Injector

Clean injector and cheek calibrated pressure as indicated on page 55.
When refitting cheek that it correctly protrudes from the cylinder head plane.
Tighten the fixing nuts at 1 Kgm.

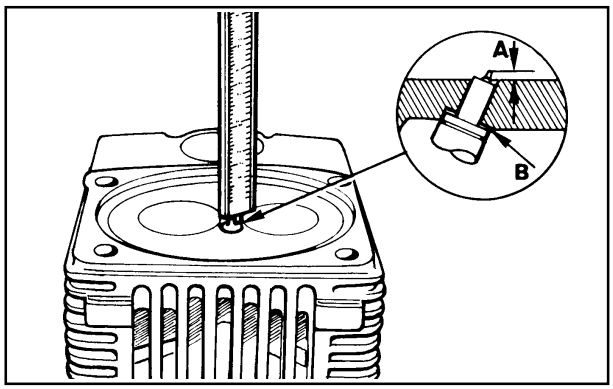

22

Injector projection

The end of nozzle **A** should project 3.0÷3.5 mm. from the cylinder head plane.
Adjust injector projection by means of copper shims **B** measuring 0.5 and 1.00 mm. in thickness.

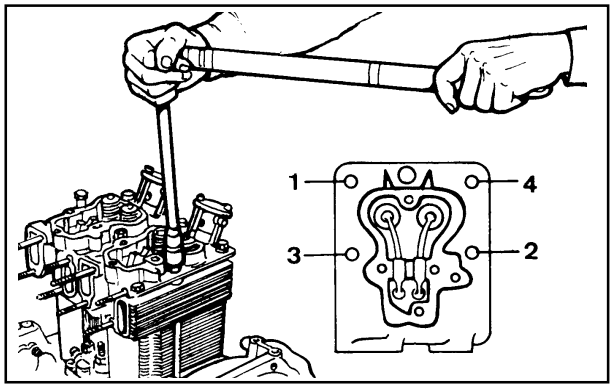

23

CYLINDER HEAD

Do not remove it when hot to avoid deformation. If cylinder head is deformed level it off by removing a maximum of 0.3 mm.
When refitting tighten only if sure that rocker arm lubrication tube is well inside its holes and that both heads are well in line.
Always replace copper head gasket: see page 32 for choosing the right thickness.
Progressively tighten nuts in the **1, 2, 3, 4** sequence at 5.5 Kgm.

https://truckmanualshub.com/

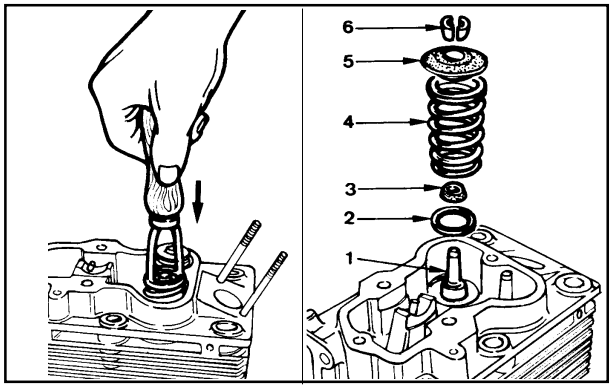

24 25

Valves

Components:
1 Intake valve
2 Spring seat
3 Valve stem oil seal
4 Spring
5 Retainer
6 Half collets
To remove half collets firmly press down as shown in the figure.

Note: Valve stem oil seal, **3** must be fitted to the intake valve only.

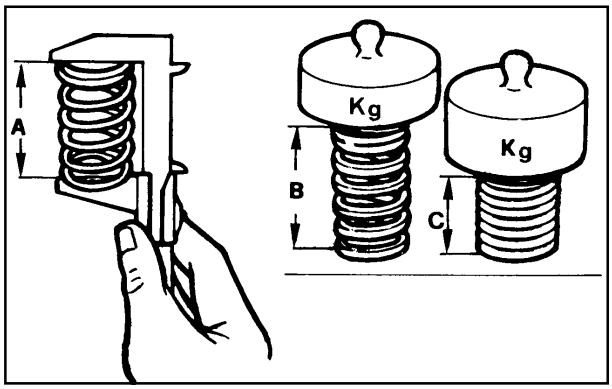

26

Valve springs

Measure free length with a gauge.
Using a dynamometer check that the spring length under two dìfferent loads corresponds to the values below:

Engine type 9LD561-2
Free length **A** = 52 mm
Length **B** compressed by a 21 Kg weight = 34.8 mm
Length **C** compressed by a 32 Kg weight = 25.8 mm
Engine type 9LD625-2
Free length **A** = 47 mm
Length **B** compressed by a 20.6 Kg weight = 36.4 mm
Length **C** compressed by a 40.6 Kg weight = 26.1 mm
Replace spring if length is 1 mm or more below the stated values.

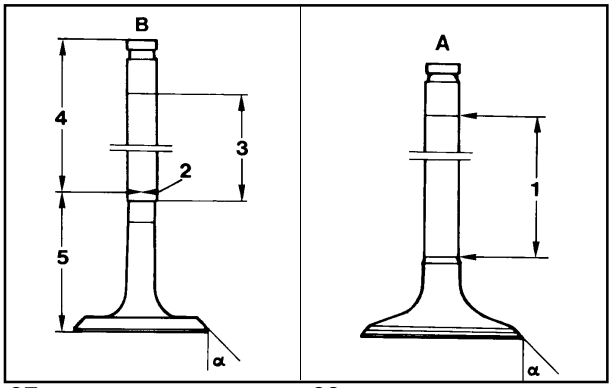

27 28

Valve material

Intake valves A
Material: X 45 Cr Si 8 UNI 3992
1 Chromium-plated portion
a 45°15'÷45°25'

Exhaust valve B
Shaft and head are made of 2 different materials.
2 Welded portion
3 Chromium-plated portion
4 Portion made of X 45 Cr Si 8 UNI 3992
5 Portion made of X 70 Cr Mn Ni N 216 UNI 3992
a 45°15'÷45°25'

https://truckmanualshub.com/

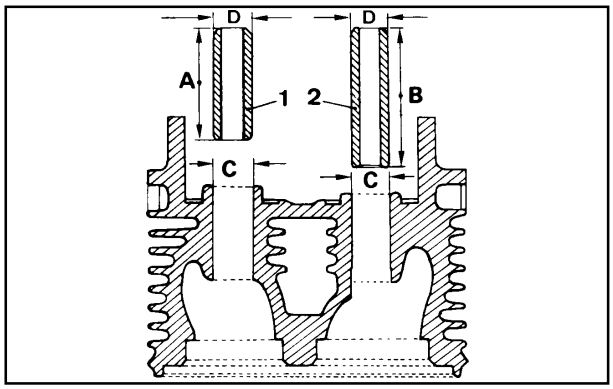

29

Valve guides and valve guide housings

Starting from engine No. 2883619 intake and exhaust valve guides are both made of phosphoric cast iron.
Components:
1 = Exhaust valve guide
2 = Intake valve guide
Dimensions (mm):
A = 42,0
B ={48,5 (for 9LD561-2 and 9LD561-2/L)
53,5 (for 9LD625-2)
C = 14,000÷14,018
D = 14,050÷14,060
Valve guides with outside diameter increased by 0.5 mm. are also available;in such cases valve guide bore **C** shouid also be increased by 0.5 mm.

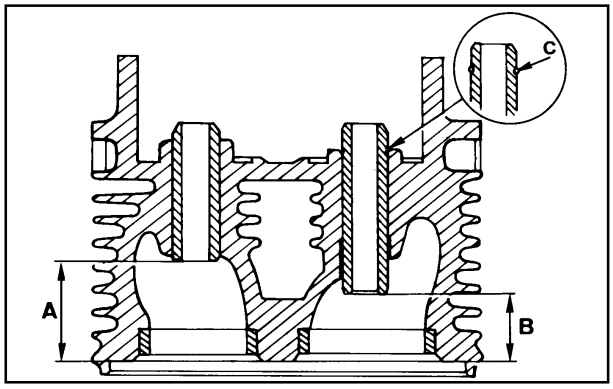

30

Valve guide insertion

Heat cylinder head up to 160÷180°C
Press guides considering the **A** and **B** distances from the head plane.
Dimensions (mm):
A = 30.80÷31.20
B = 24.80÷25.20 (for 9LD561-2 and 9LD561-2/L)
C = 20.3÷20.7 (for 9LD625-2)

Note: If guides are seated with stop ring **C**, first locate the ring in place and then position guides without considering **A** and **B**.

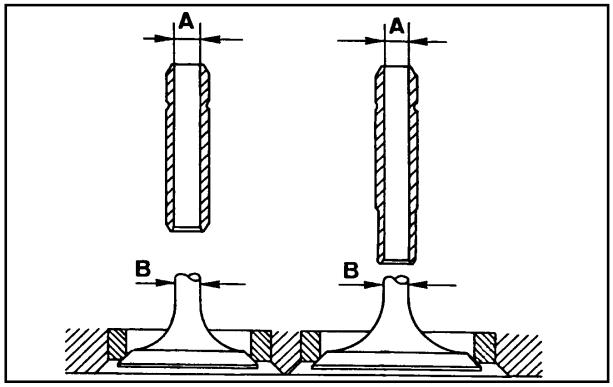

31

Dimensions and clearance between guides and valves (mm)

A = 8.030÷8.045
B = 7.985÷8.000
(A-B) = 0.030÷0.060
(A-B)limit value = 0.15

https://truckmanualshub.com/

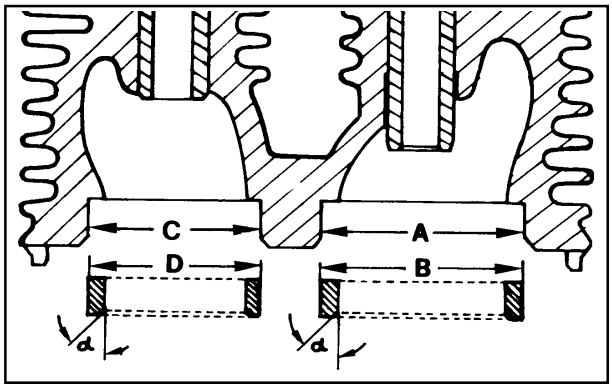

32

Valve seats and housings

Dimensions (mm.):
A = 40.000÷40.016 (intake valve housing dia.)
B = 40.120÷40.140 (intake valve seat dia.)
C = 34.000÷34.016 (exhaust valve housing dia.)
D = 34.120÷34.140 (exhaust valve seat dia.)
Press valve seats into the housings and cut ot at 45°

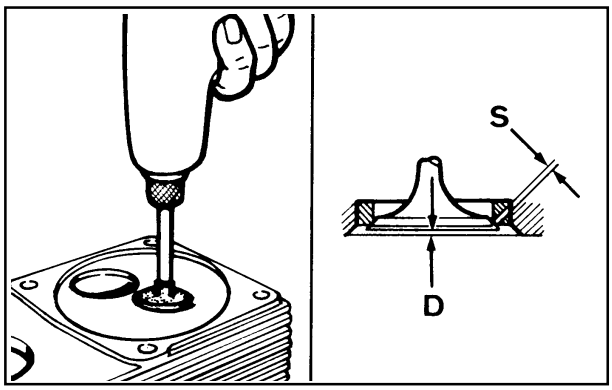

33 34

Valve seat grinding

After cutting grind valve seats with fine emery paste in oil suspension. The sealing surface **S** should not exceed 2 mm.
Valve recess after grinding **D** = 0.75÷1.25 mm; maximum worn limit 1.65 mm.

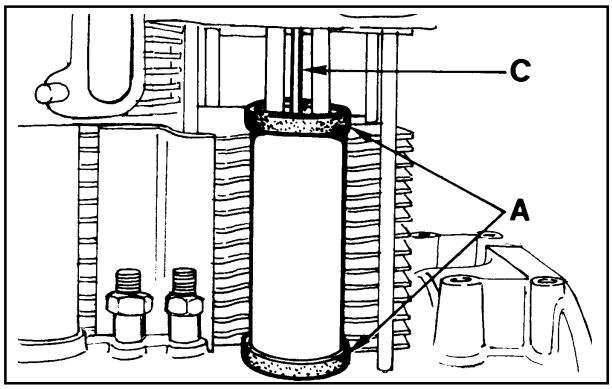

35

Pushrod tube

When refitting cheek that gaskets **A** and rocker arm lubricatíon tube **C** are well inside their seats.

https://truckmanualshub.com/

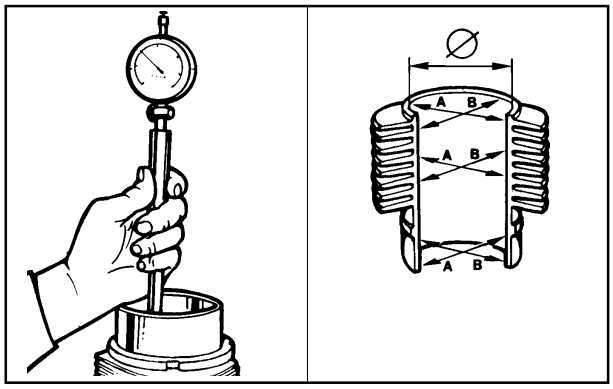

36 37

CYLINDER

Measure diameter size between two diametrically opposed points at three different heights.
For 9LD561-2 and 9LD561-2/L Ø = 90.00 ÷ 90.02 mm
For 9LD625-2 Ø = 95.00 ÷ 95.02 mm.
In case wear exceeds 0.10 mm, bore the cylinder and fit oversize piston and rings.
In case of less wear replace piston rings only.

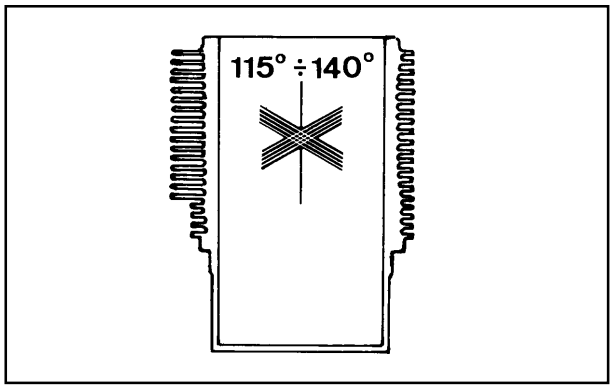

38

Checks and cylinder roughness

The cylinder should show no blowholes or porosities.
Seal both ends of cylinder and pressurize with compressed air at 4 Bar for 30 secs. Immerse in water and check for leakage.
Fins must be intact.
Cross hatch pattern must range between 115°÷140°: they must be uniform and clear in both directions.
Average roughness should range between 0.5 and 1 µ.

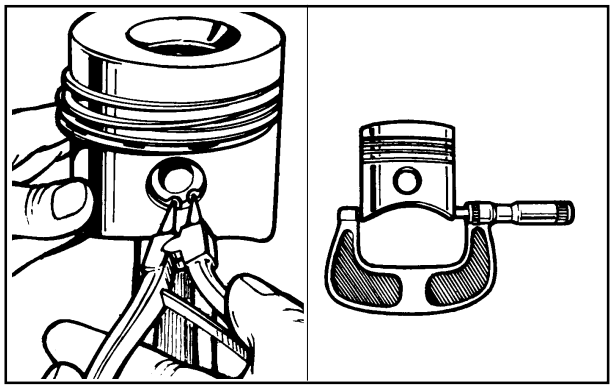

39 40

PISTON

Remove circlips and remove piston pin.
Remove piston rings and clean grooves.
Measure diameter at 2 mm from the bottom of skirt.
For 9LD561-2 and 9LD561-2/L Ø = 89.90 ÷ 89.92 mm
For 9LD625-2 Ø = 94.93 ÷ 94.95 mm
In case of diameter wear above 0.05 mm replace piston and piston rings.

Note: Oversize pistons of 0.5 and 1 .0 mm are available.

https://truckmanualshub.com/

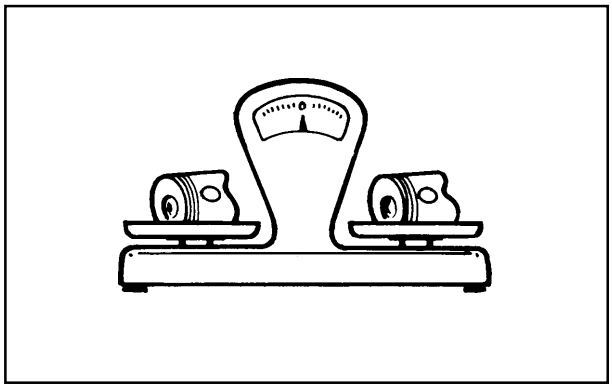

41

Piston weight

Weigh pistons when replacing them in order to avoid unbalance. The difference in weight should not exceed 6 g.

42

Piston rings - End gaps (mm)

Place piston rings squarely into the unworn part of the lower cylinder and measure the end gap.

For 9LD561-2 and 9LD561-2/L

1° Chromium-plated ring	**A**	=	0.40÷0.65
2° Torsional (internal tapered) ring	**A**	=	0.40÷0.65
3° Oil control ring	**A**	=	0.25÷0.40

For 9LD625-2

1° Chromium-plated ring	**A**	=	0.40÷0.65
2° Torsional (internal tapered) ring	**A**	=	0.40÷0.65
3° Oil control ring	**A**	=	0.30÷0.60

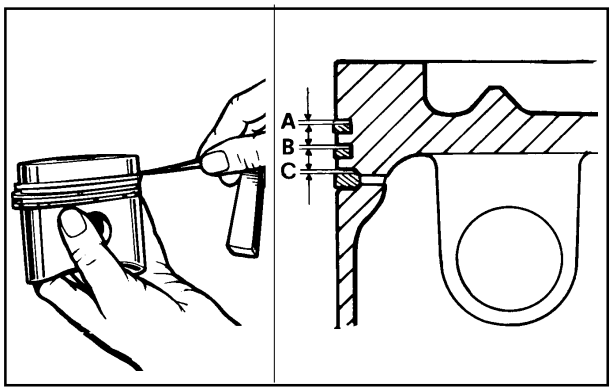

43 44

Pistons ringis - Clearance between grooves (mm)

For 9LD561-2 and 9LD561-2/L
A = 0.11÷0.15; limit value = 0.25
B = 0.06÷0.10; limit value = 0.18
C = 0.05÷0.10; limit value = 0.18

For 9LD625-2
A = 0.07÷0.11; limit value = 0.20
B = 0.05÷0.09; limit value = 0.16
C = 0.04÷0.08; limit value = 0.15

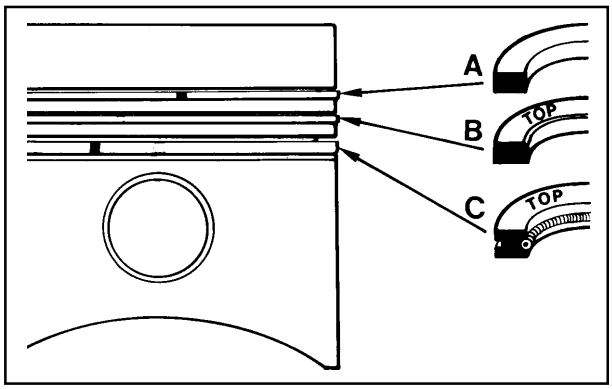

45

Piston rings - Fitting sequence

A = 1° Chromium-plated ring
B = 2° Torsional (internal tapered) ring
C = 3° oil control ring

Note: Before fitting the piston into the cylinder stagger the ring gaps at 120°.

https://truckmanualshub.com/

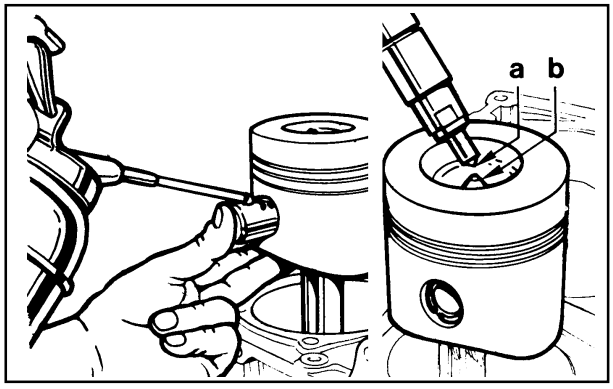

46 47

Piston - Refitting

Connect piston to connecting rod in a way that the combustion chamber centre **b** is at right angle under nozzle tip **a**.
Lubricate piston pin and introduce it into the piston by exerting pressure with your thumb.
Check that both circlips are well inside their seats.

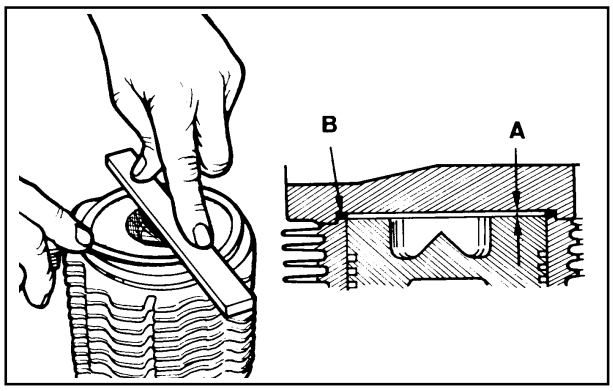

48 49

Piston clearance

A = Piston clearance
B = Copper head gasket

A (0.65÷0.7 mm) is determined by placing the piston at top dead center and measuring with a feeler gauge and straight edge, the distance the piston is below or above the cylinder face. A copper gasket (available in various thicknesses) is them selected to ensure the clearance is correct.
Gaskets are available in the following thicknesses 0.45, 0.5, 0.55, 0.6, 0.65, 0.7, 0.75, 0.8, 0.85, 0.9, 0.95, 1.00 mm.

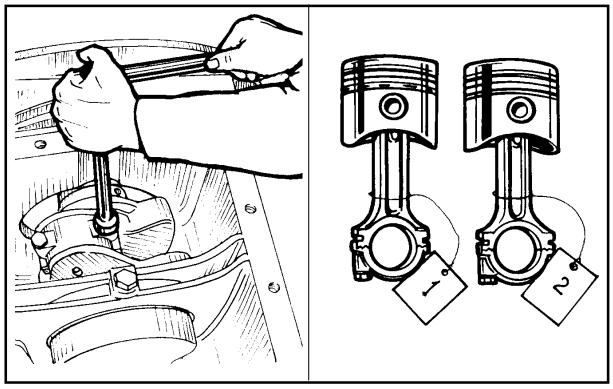

50 51

CONNECTING ROD

Remove oil pan.
Remove connecting rods and check as follows.
Both connecting rod/piston units should be fitted back into the corresponding cylinders; mark them to avoid mistakes.
See page 33 for specifications as to the tightening of the connecting rod big end bearing.

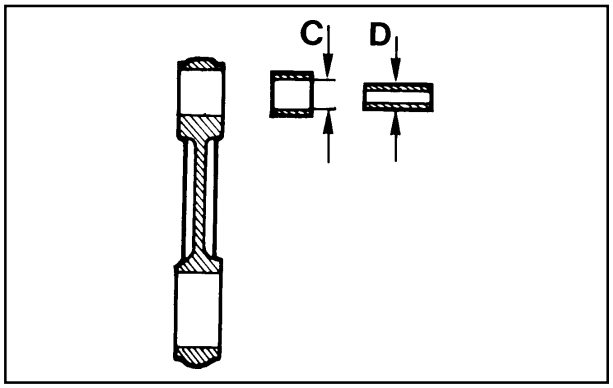

52

Connecting rod small end bushing

Dimensions and clearance (mm):
C = 25.020÷25.030 (with machined bushing in place)
D = 24.995÷25.000
(C-D) = 0.020÷0.035
(C-D) maximum worn limit = 0.070

https://truckmanualshub.com/

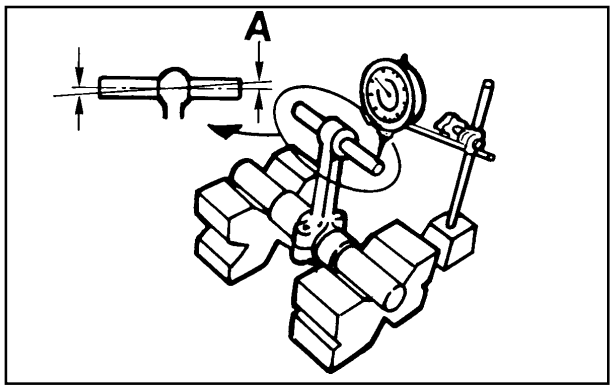

53

Connecting rod alignment

Check alignment of small end and big end bearing bores using fitted mandrels; axial mis-alignment **A** = 0.02 mm; maximum limit = 0.05 mm Moderate warpage may be corrected by gradually working with a press.

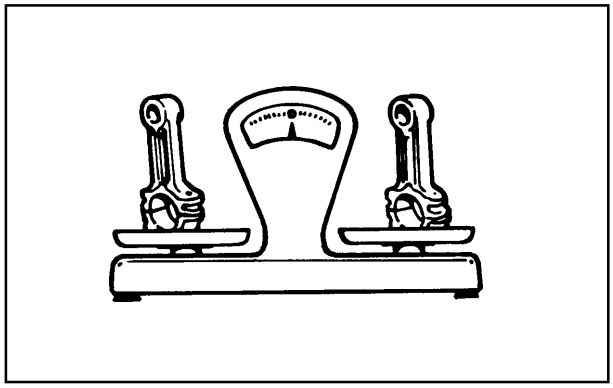

54

Connecting rod weight

Weigh connecting rods when replacing them in order to avoid unbalance.
The difference in weight should not exceed 10 g.

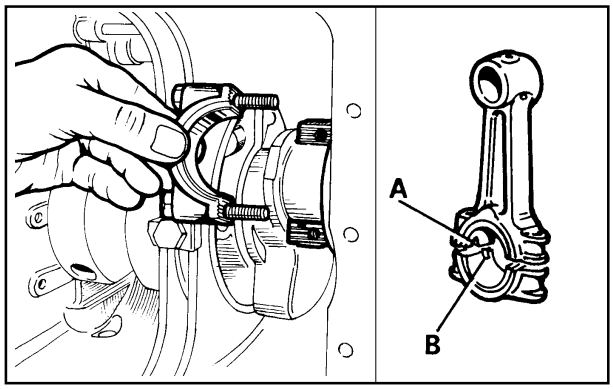

55 56

Connecting rod big end bearing

Both centering notches **A** and **B** must be on the same side when refitting. Tighten bolts at 4 Kgm.
See page 32 for dimensions.

https://truckmanualshub.com/

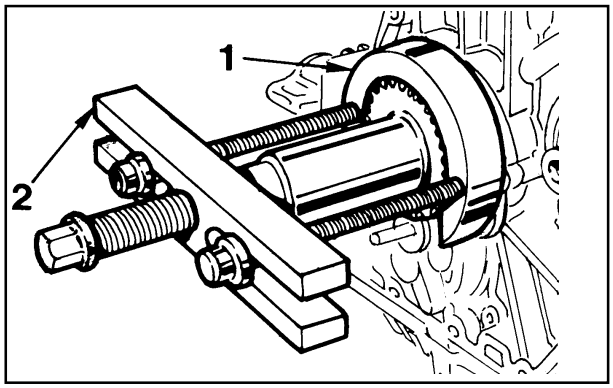

57

Crankshaft timing gear

Use tool **1** (Part No. 7560-4000-052) and puller **2** (Part No. 7271-3595-048) to remove the gear.

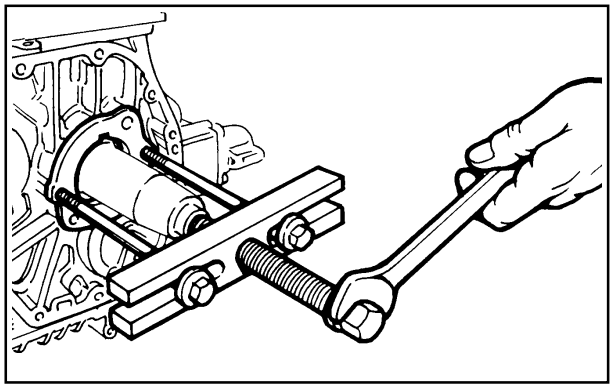

58

Main bearing support, gear side

Remove main bearing by means of two M8x1.25 screws with fully threaded length of 40 mm or a puller (Part No. 7271-3595-048).

Note: To avoid deformation it is not recomended to replace the bearing bushing, complete assembly's of bushing and support are available in standard, 0.25 mm and 0.50 mm undersize configurations as spare parts.
See page 32 for dimensions.

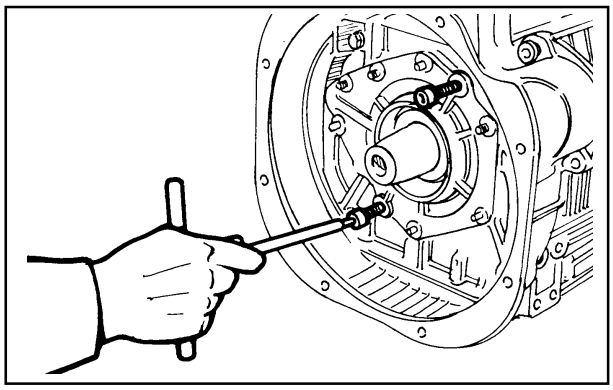

59

Main bearing support, flywheel side

Remove it by means of two M8x1.25 screws with fully threaded length of 40 mm.
Check oil seal ring and replace if warped, hardened or worn-out. When refitting, tighten nuts at 2.5 Kgm.
See end float on page 31 for gasket replacement detaiis.
See page 31 for dimensions.

https://truckmanualshub.com/

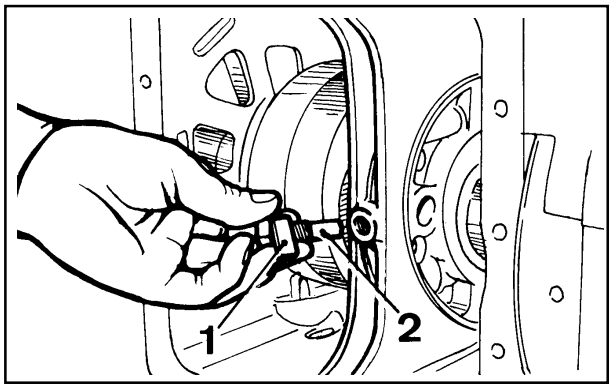

60

CRANKSHAFT

Center main bearing support, locating bolt.
Straighten plate **1** and unscrew bolt **2** before removing crankshaft.

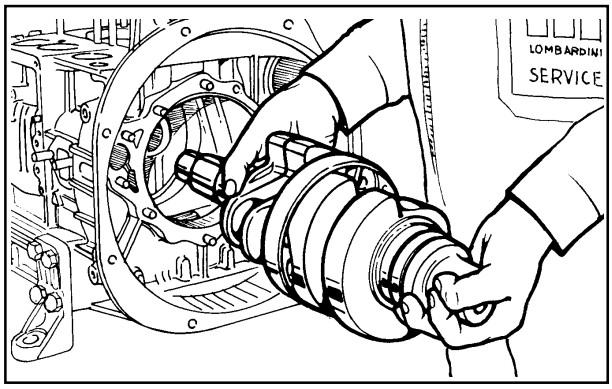

61

Crankshaft removal

To pull out the crankshaft tap lightfy on the timing side end using a copper-headed hammer.
When refitting align center main bearing support so that the locating bolt hole coincides with the crankcase hole.

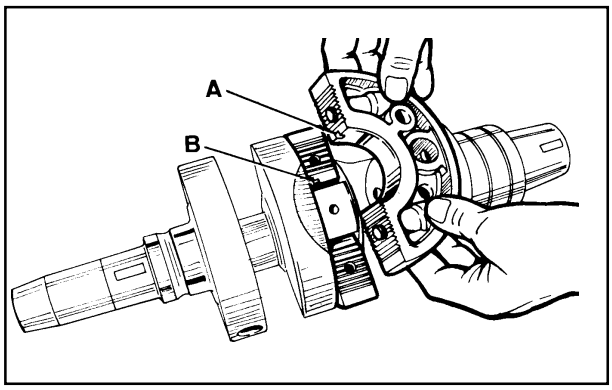

62

Crankshaft center main bearing support

When refitting, both centering notches **A** and **B** must be located on the same side.
Tighten screws at 2.5 Kgm.
See page 31 for dimensions.

https://truckmanualshub.com/

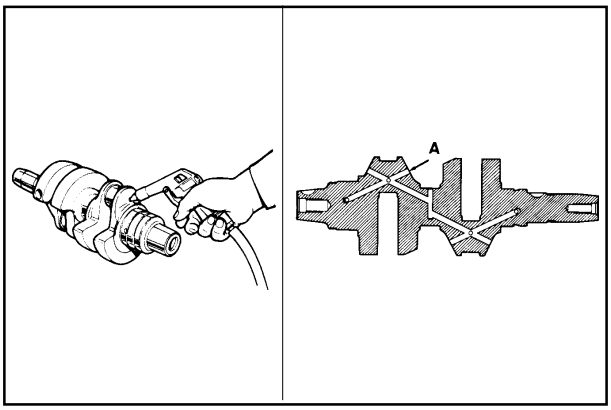

63 64

Crankshaft lubrication ducts

Remove plugs, clean duct **A** with a pointed tool and blow in compressed air.
Screw plugs again and check for sealing.

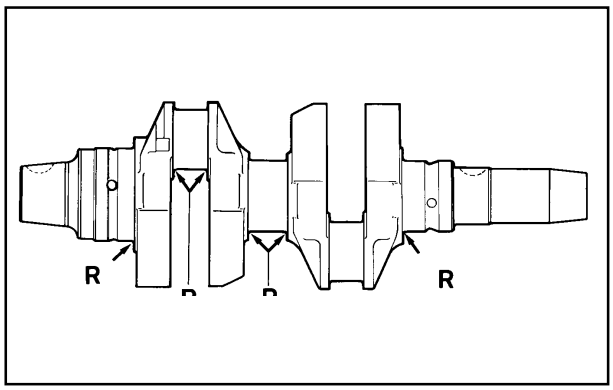

65

Crankshaft journal radius
The radius **R** connecting journals to shoulders is 2.8÷3.2 mm.

Note: When grinding main journals or crank pins restore the **R** value to original specification.

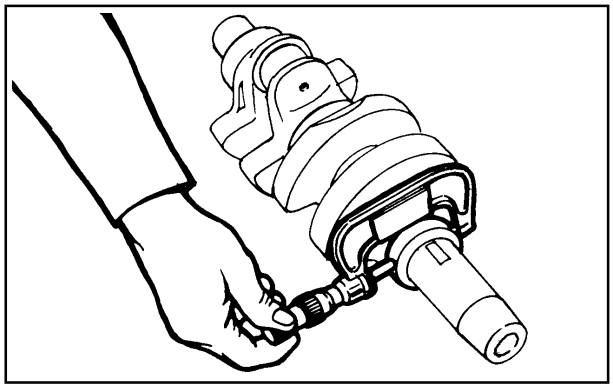

66

Checking main journals and crank pins

Use an outside micrometer gauge.

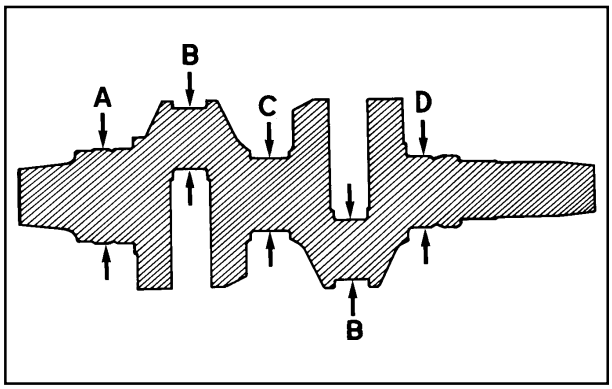

67

Main journal and crank pin diameter (mm)

A = 71.981÷72.000
B = 45.500÷45.516
C = 55.331÷55.350
D = 54.931÷54.950

https://truckmanualshub.com/

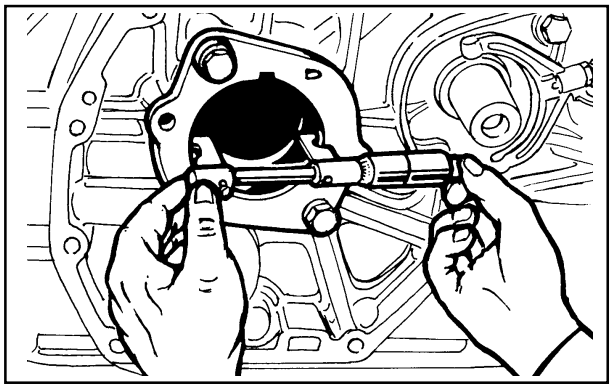

68

How to measure main bearing inside diameter

Use an inside micrometer gauge.

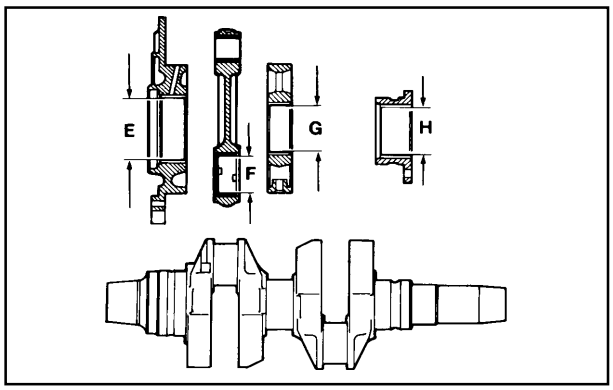

69

Main bearing and connecting rod big end bearing inside diameter

Dimensions (mm):
E = 72.070÷72.090
F = 45.548÷45.578
G = 55.404÷55.435
H = 55.000÷55.020
The above dimensions refer to driven in or tightened bearings.

Note: Both main bearings and connecting rod big end bearings are available with inside diameter size measuring 0.25 and 0.50 mm less than the standard version.

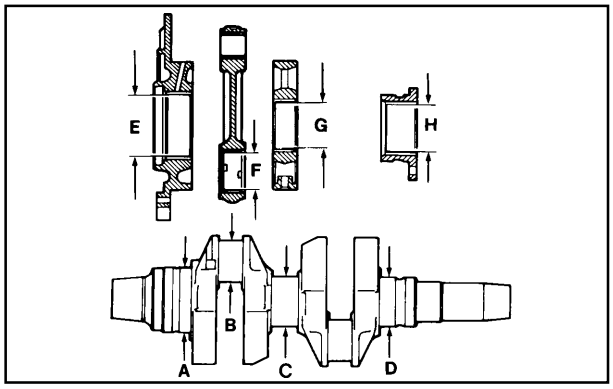

70

Clearance between main journals/crank pins and connecting rod bearings (mm)

(E-A) = 0.070÷0.109; limit value = 0.195
(F-B) = 0.032÷0.078; limit value = 0.150
(G-C) = 0.054÷0.104; limit value = 0.190
(H-D) = 0,050÷0.089; limit value = 0.180

https://truckmanualshub.com/

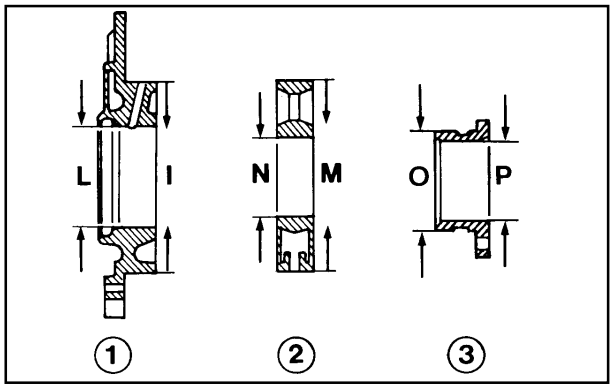

71

Main bearíng supports

1 Flywheel side
2 Central
3 Gear side

Dimensions (mm):
I = 149. 000÷149.020
L = 76.980÷77.020
M =147. 010÷147.020
N = 59.074÷59.092
0 = 75.990÷76.010
P =60.000÷60.020

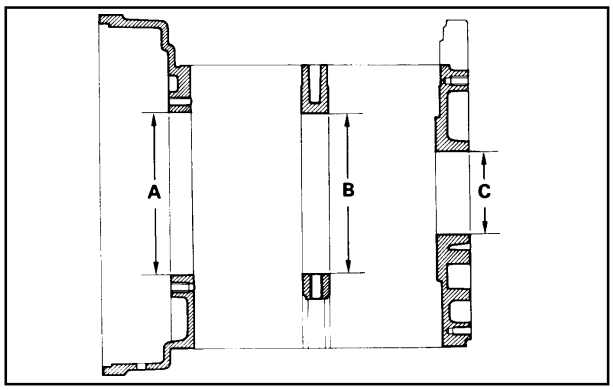

72

Main bearing housings

Dimensions (mm):
A = 149.000÷149.020
B = 147.000÷147.020
C = 76.000÷76.020

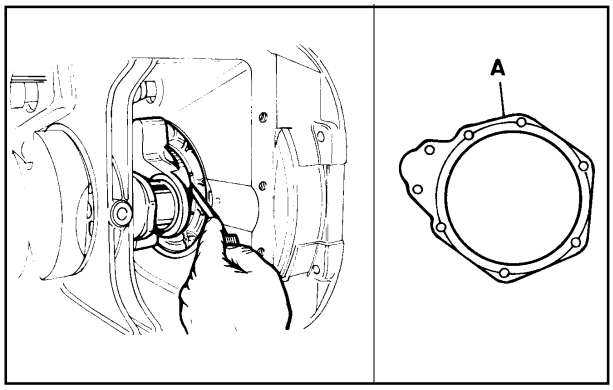

73

Crankshaft end play

When refitting crankshaft check end play by means of a thickness gauge; this value should be 0.08÷ 0.38 mm and can be set by changing the thickness of gasket **A** which is located on the flywheel-side main bearings.
Gaskets with thickness of 0.10, 0.20 and 0.4 mm can be supplied.

https://truckmanualshub.com/

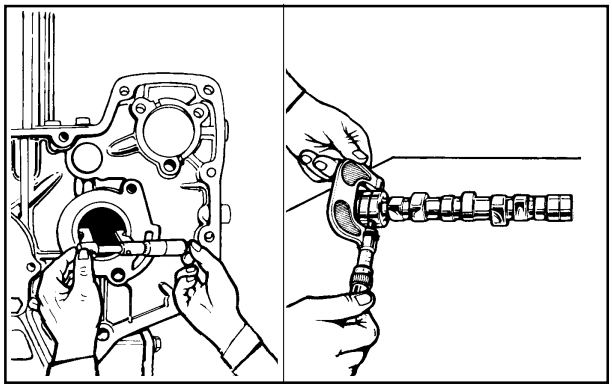

74 75

CAMSHAFT

How to measure camshaft journals and housings
Use an inside micrometer gauge for housings and an outside micrometer gauge for journals.

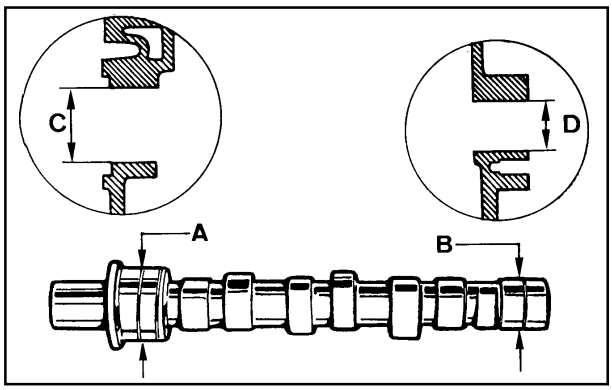

76

Dimensions of camshaft journals and housings (mm)

A = 41.940÷41.960
B = 27.940÷27.960
C = 42.000÷42.025
D = 28.000÷28.020

Clearance (mm)
(C-A) = 0.040÷0.085;**(C-A)** limit value = 0.160
(D-B) = 0.040÷0.080;**(D-B)** limit value = 0.150

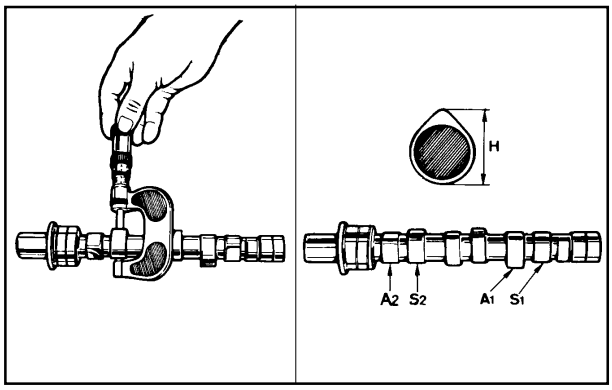

77 78

How to measure intake/exhaust cam height

A1 = 1 st cylinder intake cam
S1 = 1 st cylinder exhaust cam
A2 = 2nd cylinder intake cam
S2 = 2nd cylinder exhaust cam
Exhaust and intake cams feature the same height **H**.
For 9LD561-2 and 9LD561-21L, **H** = 33.95÷34-05 mm
For 9LD625-2, **H** = 33.55÷33.65 mm
Replace camshaft if **H** is 0.1 mm below the given value.

https://truckmanualshub.com/

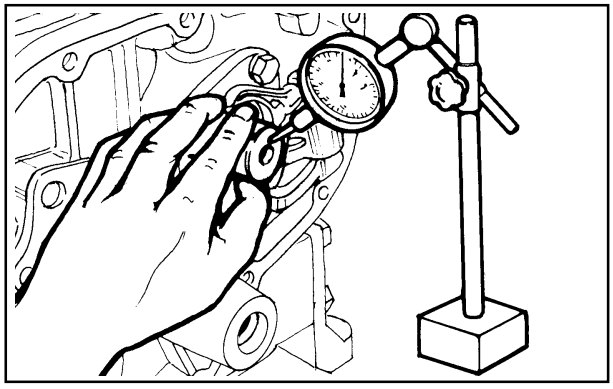

79

Camshaft end play

End play should be 0.10÷0.26 mm; check by means of a dial gauge pushing or pulling camshaft as required.

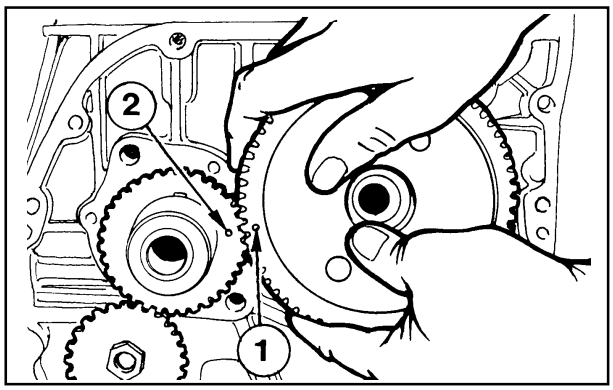

80

Camshaft timing

Fit camshaft gear by making timing mark **1** coincide with timing -mark **2** on the crankshaft timing gear.
Tighten camshaft boll at 6 Kgm.

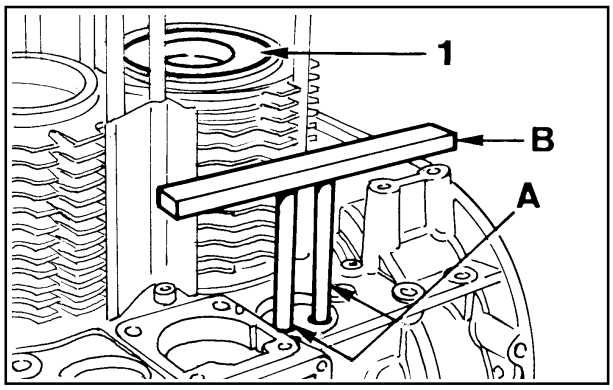

81

Valve timing without considering timing marks

Locate piston 1 (on flywheel side) at the top dead centre.
Position two small cylinders **A** of the same height onto the tappets.
Rotate camshaft stopping when cylinder 1 tappets are in overlap position (intake open, exhaust closed).
By means of ruler **B** check that tappets are at the same height.
Engage camshaft gear with crankshaft gear.

https://truckmanualshub.com/

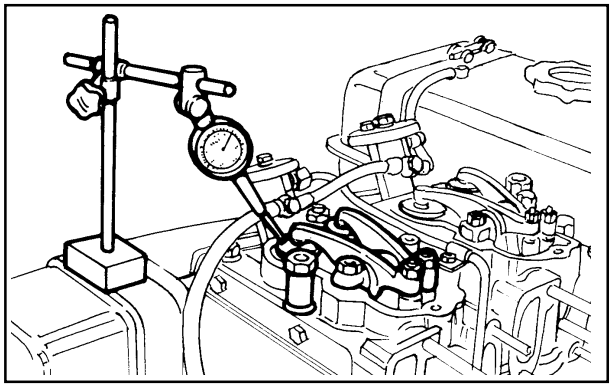

82

Valve timing check

Check valve timing at the crankshaft.
The values shown are checked at the flywheel circumference (with flywheel of 291 mm. diameter each degree corresponds to 2.5 mm). Set valve clearance at 0.65÷0.70 mm (after checking restore the value at 0. 15÷0.20 mm). Set dial gauge on intake valve to a zero value; by rotating the driving shaft according to its direction of rotation you can measure **a** (intake valve opening advance referred to top dead centre S) and **ß** (intake valve closing delay referred to bottom (**I**) dead centre). Follow the same procedure for exhaust valves checking y (exhaust valve opening advance) and **6** (exhaust valve closing delay): in the case of 9LD625-2 **6** is advanced by 1° compared to **S**.

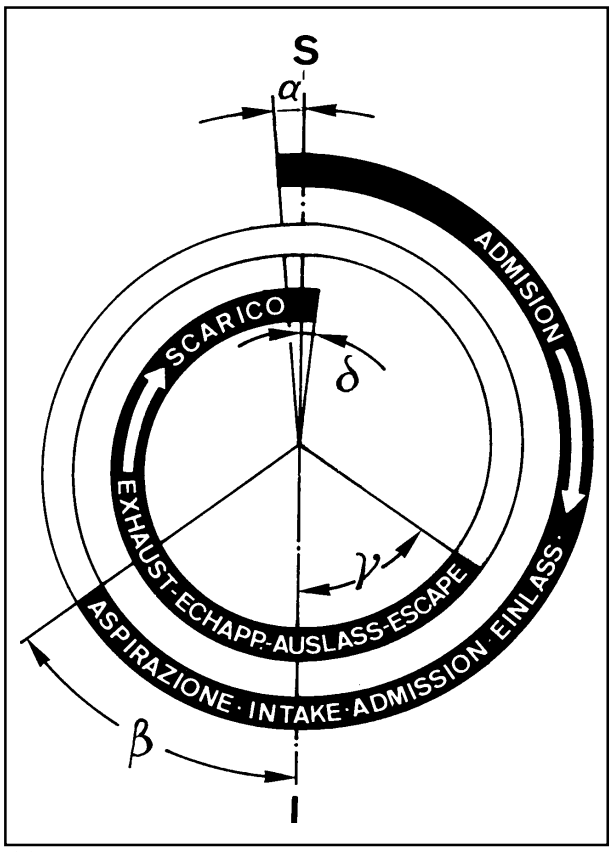

83

9LD561-2 α = 2°
β = 34°
γ = 34°
δ = 2°

9LD625-2 α = 1°
β = 21°
γ = 23°
δ = 1°

https://truckmanualshub.com/

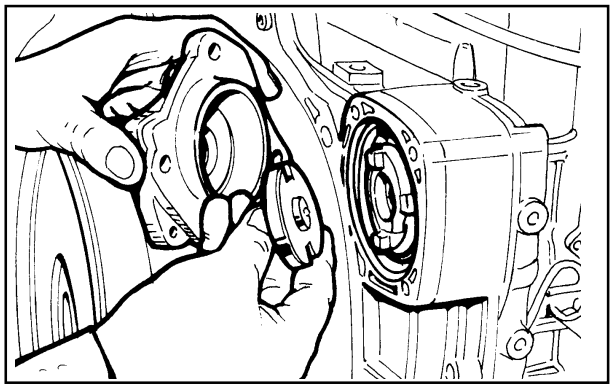

84

Hydraulic pump p.t.o.

A hydraulic pump of group 1 (1 P) or 2 (2P) can be installed on the gear side, 3rd p.t.o.

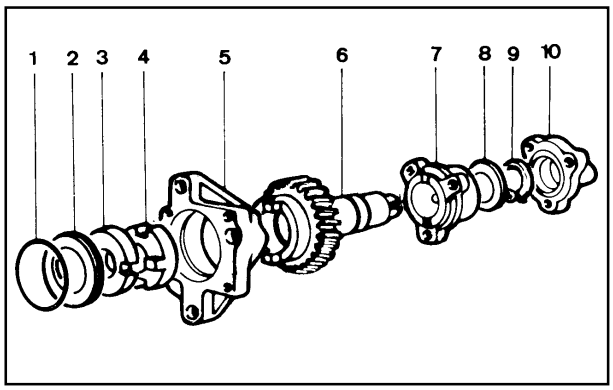

85

Hydraulic pump p.t.o. (1 P)

Components:
1 Seal ring
2 Centering ring
3 Coupling
4 Half coupling
5 Flange
6 Gear
7 Bracket
8 Thrust washer
9 Stop ring
10 Cover
The maximum total torque is thus 3 Kgm corresponding to 12.5 HP at 3000 r.p.m. Reduction ratio 1:1

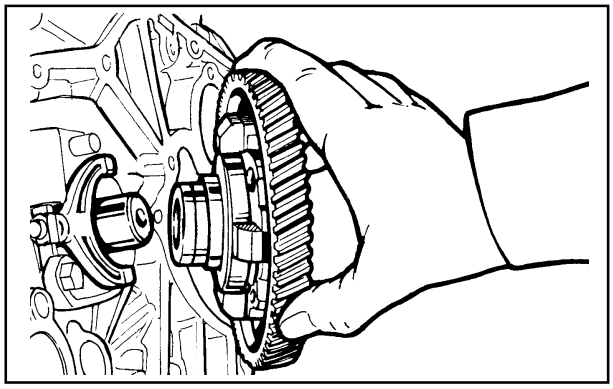

86

MECHANICAL SPEED GOVERNOR

Weight-type governor housed inside the camshaft drive gear.

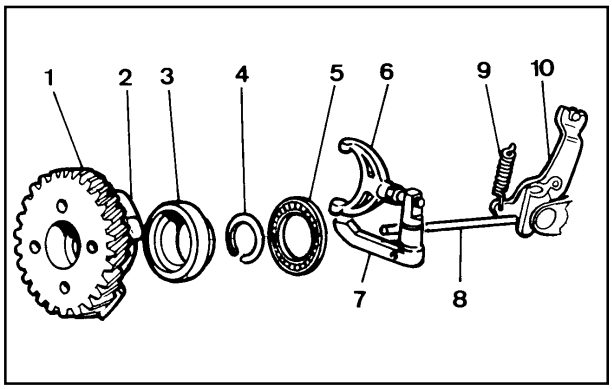

87

Mechanical speed governor

Components:

1 Gear	**2** Weight
3 Mobile bell	**4** Stop ring
5 Thrust washer	**6** Yoke
7 Lever	**8** Drive rod
9 Governor spring	**10** Rack control lever

Weights are moved to the periphery by the centrifugal force and thus axially shift a mobile bell connected to the injection pump rack control lever by a linkage. A spring placed under tension by the accelerator control offset the weight centrifugal force. Balance between the two forces keeps speed at an almost constant level in spite of load variations. See page 44 for timing.

https://truckmanualshub.com/

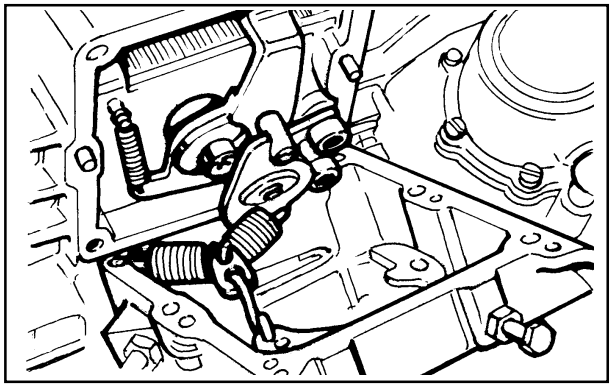

88

Governor springs with rocker arm

The system features two springs anchored to a rocker arm and allows for minimal r.p.m. changes at low speed levels.

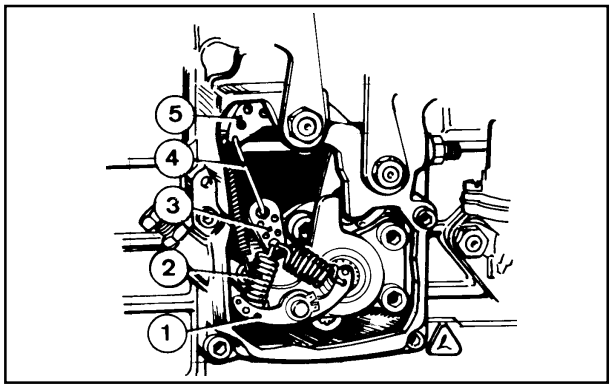

89

Governor springs with rocker arm

Components:
1 Rocker arm for spring anchoring
2 Governor springs
3 Plate
4 Link
5 Lever

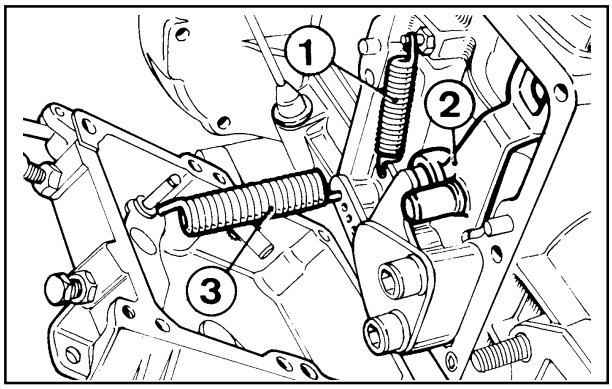

90

Spring for extra fuel supply at starting

Components:
1 Extra fuel spring
2 Injection pump control yoke
3 Governor spring.

The device is operated automatically: when the engine is stopped spring **1** acts on injection pump control yoke **2** providing maximum fuel delivery, until the engine starts and the governor controls the iniection pump rack.

https://truckmanualshub.com/

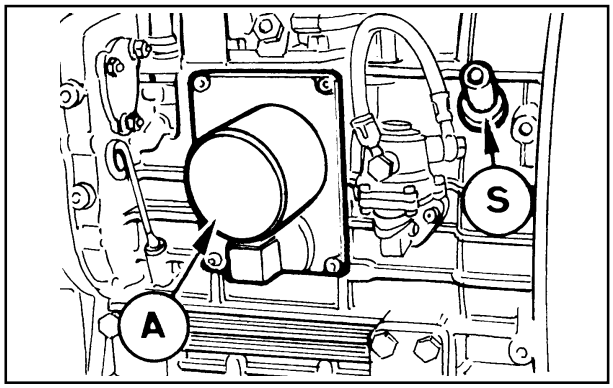

91

ELECTRONIC SPEED GOVERNOR
(optional)

A = Actuator
S = r.p.m. sensor

An electronic speed governor can be fitted upon request to engines with serial number greater than 2907859. The crankcase features a hole for sensor **S** introduction.

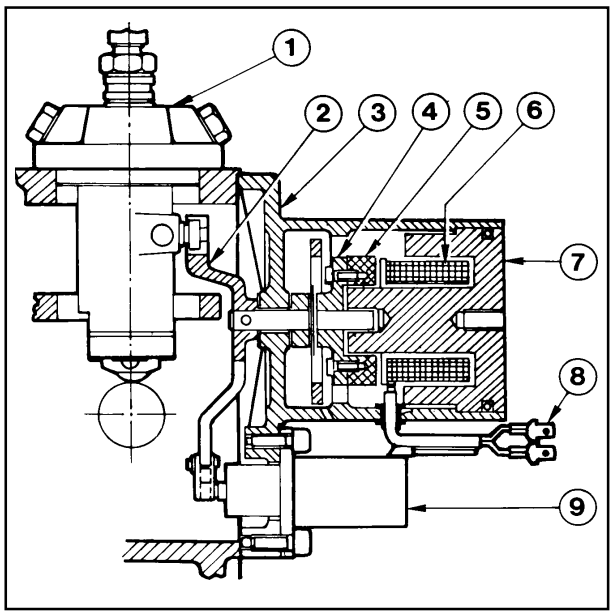

92

Electronic speed governor

Components:
1 Injection pump
2 Delivery control lever
3 Actuator **A** mounting flange
4 Mobile retainer
5 Actuator magnet
6 Stator coils
7 Stator
8 Cable ends for connection to control box **E**
9 Electromagnet

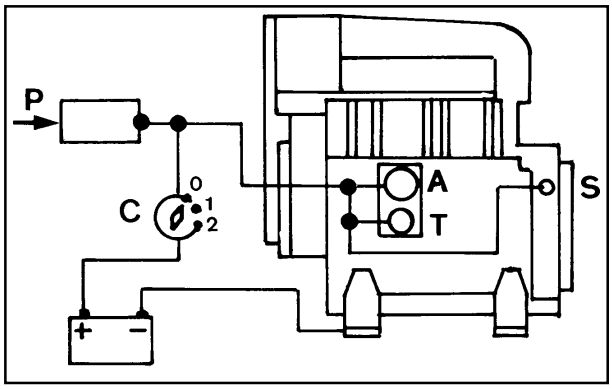

93

Electronic speed governor layout

Components: **A** = actuator; **C** = key; **P** = potentiometer; **T** =electromagnet; **S** = sensor
The device consists of an actuator **A** controlling injection pump rack, an r.p.m. sensor **S** and an electromagnet **T** controlling fuel delivery and supplying extra fuel at starting. Control box **E** (see page 35) controls fuel delivery as a function of the load and of the speed set through potentiometer **P**.
The potentiometer can be fitted on the control box or on the control panel **P1** (see page 35).
The whole system makes it possible to keep the engine speed constant independently of the load conditions. It detects speed through the r.p.m. sensor mounted on the crankcase at the ring gear level. As the number of revolutions changes the device immediately performs the required corrections by means of the actuator acting on the injection pump. Electromagnet **T** responds to max. fuel delivery (fuel flow setting) and (when energized) enables the injection pump rack rod to reach its maximum stroke (extra fuel supplied at starting).

https://truckmanualshub.com/

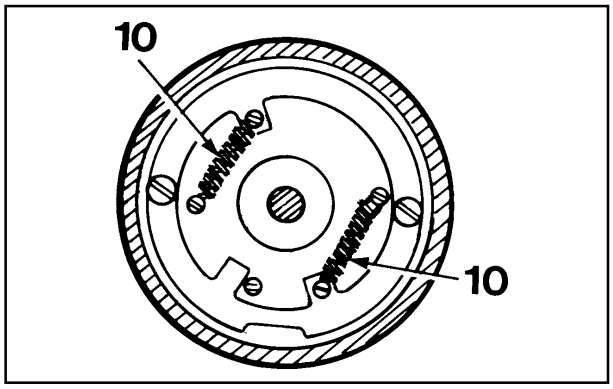

94

Starting with electronic speed governor
(see lay-out on page 44)

In position **O** the engine is not working and no part is energized. The rack rod is in stop position (retained by two springs **10** inside actuator **A**). By rotating key **C** to position **2** the electromagnet with draws allowing the rack rod to reach its highest delivery being connected to the actuator at its max. level of energization. When the engine, immediately after starting, reaches 1000 r.p.m. the controller reduces the actuator position, after 1 second swìtches off the electromagnet **T** and after more 0.5 seconds returns at his normal position with the engine speed set as per position of potentiometer **P1**.

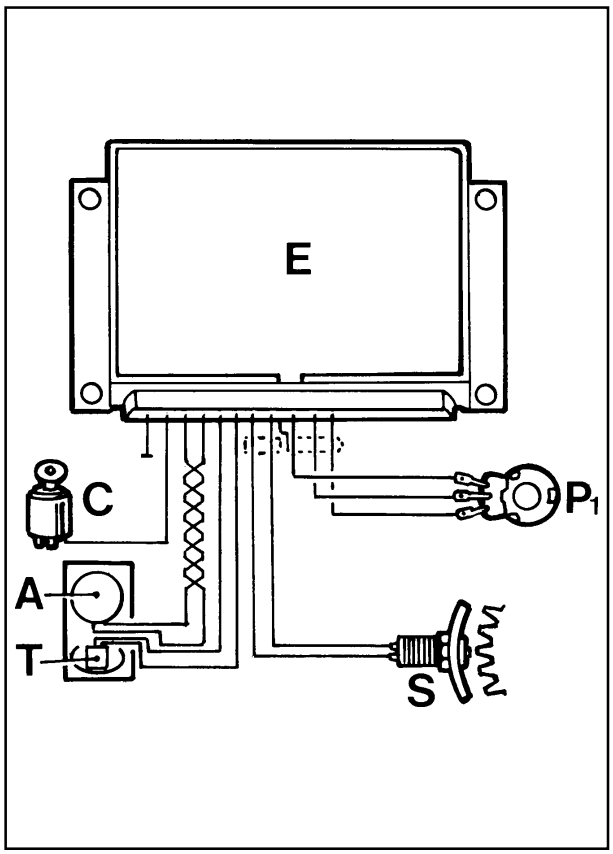

95

Engine running with electronic speed governor

The engine starts running at the pre-set speed.
Potentiometer **P** is located either inside the control box **E** or on control panel P1.
In case of an external potentiometer **P1** the engine speed can be set at any point between the idling and full speed in on-load conditions (setting performed on the control box in the test room).
The electronic control box **E** controls actuator **A** (by sending or cutting off the power supply) to keep the speed set through **P1** constant independently of the absorbed load.
Control box **E** prevents the engine from starting (or stops it) in case of no power supply or in case connection with r.p.m. sensor **S** is broken (or short-circuited).

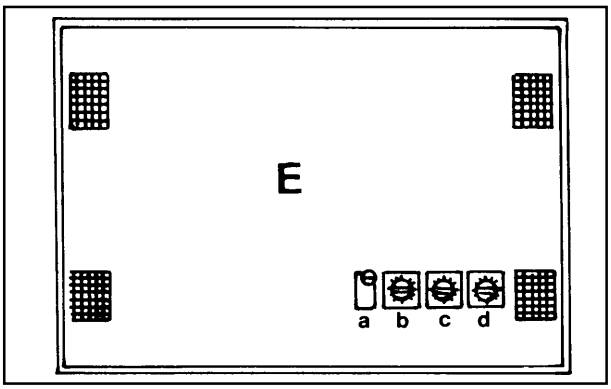

96

Electronic speed governor control box

Control box **E** features four setscrews which must be positioned on the test bed (torque dynamometer) along with the engine.
a) Setscrew for speed control (r.p.m.)
b) Setscrew for sensitivity adjustment when the engine is running at full speed.
c) Setscrew for sensitivity adjustment at low speed.
d) Setscrew for extra fuel release; once correctly positioned, this set-screw is generally sealed.

https://truckmanualshub.com/

IX LUBRICATION SYSTEM

The engine can be damaged if allowed to operate with insufficient oil. It is also dangerous to add too much oil because its combustion may lead to a sharp increase in the rotation speed.
Use suitable oil in order to protect the engine.
Nothing more than lubrication oil can influence the performances and life of an engine.
Use of an inferior quality oil or failure to regularly change the oil will increase the risk of piston seizure, will cause the piston rings to jam and will lead to rapid wear on the cylinder liner, the bearings and all other moving parts. Engine life will also be notably reduced.
The oil viscosity must suit the ambient temperature in which the engine operates.

Old engine oil can cause skin cancer if repeatedly left in contact with the skin and for long periods of time. Wear protective gloves to avoid touching used oil. If contact with the oil is unavoidable, you are advised to wash your hands with soap and water as soon as possible. Dispose of old oil in the correct way as it is highly polluting.

LUBRICATION SYSTEM AND BREATHER RECIRCULATION SYSTEM

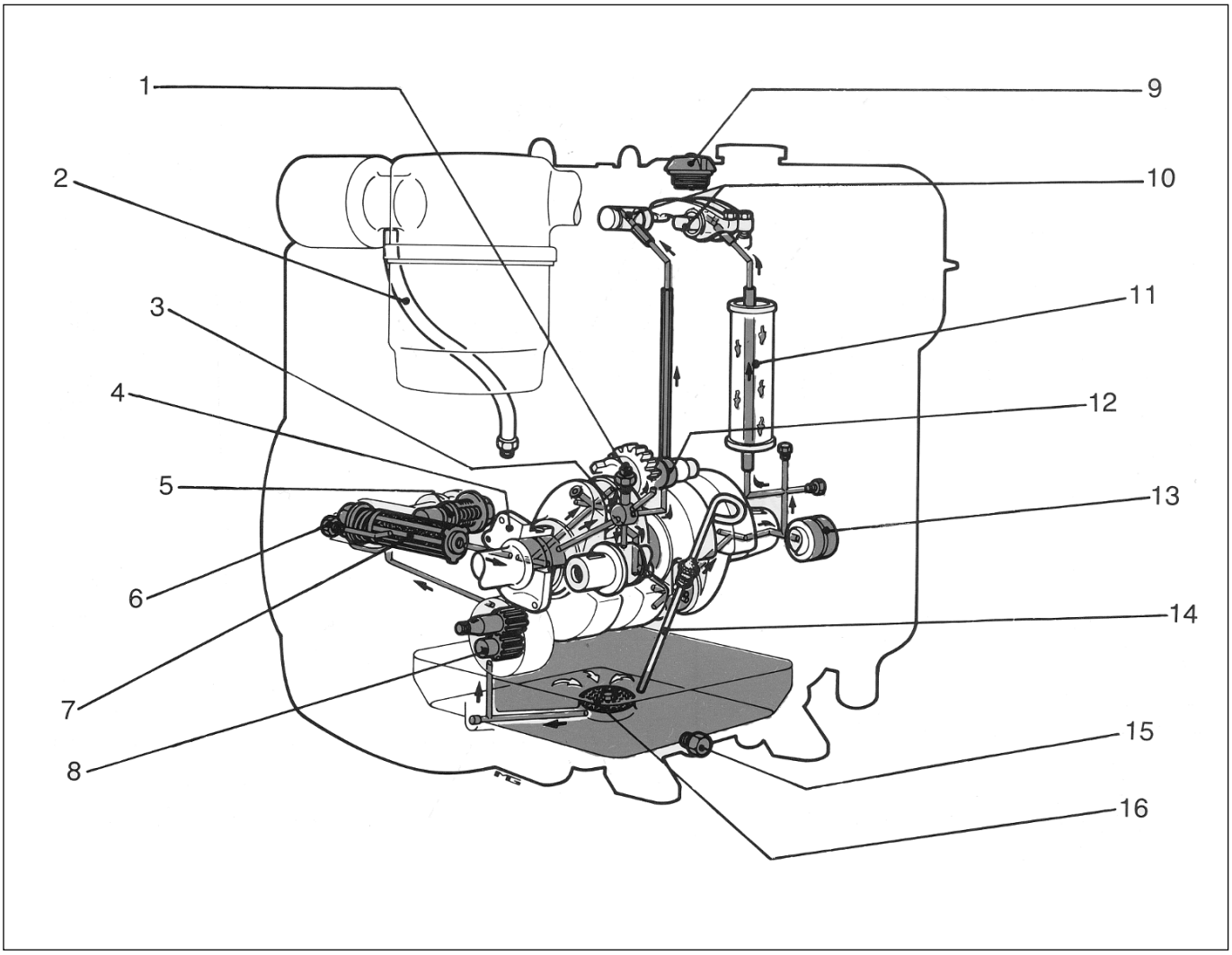

97

Components:

1) Oil pressure switch - 2) Breather - 3) Connecting rod big end bearing - 4) Crankshaft main bearing on gear side - 5) Oíl pressure relief valve - 6) Fitting tor pressure gauge connecl:lon - 7) Cartridge filter , 8) Oil pump - 9) Oil fill plug - 10) Rocker arm shafts 11) Pushrod protection tube - 12) Hydraulic pump gear - 13) Camshaft joumal on fiywheel side - 1,~) Oìl dipstick - 15) Drain plug . 16) Internal filter

https://truckmanualshub.com/

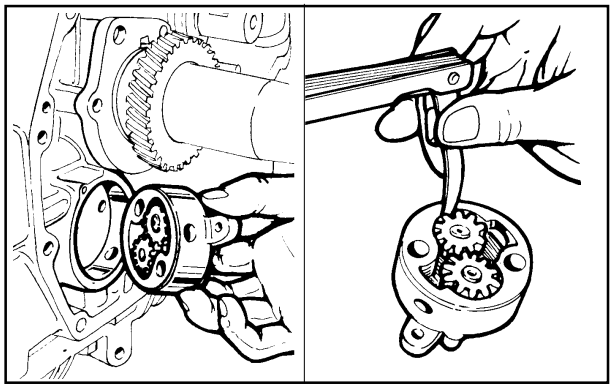

98 99

OIL PUMP

Check that gear teeth are intact and that clearance between gear edge and pump body does not exceed 0.15 mm.
Further more check that control shaft is free to rotate with end float not exceeding 0.15 mm.
Oil pump delivery al 3000 r.p.m. is 9 liters/min.

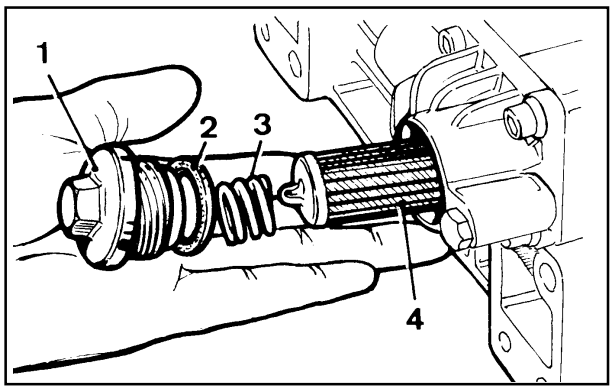

100

Oil filter cartridge (internal)

Components:
1 Plug
2 Seal ring
3 Spring
4 Cartridge
Features:
Type of filtration: 70 µ
By-pass valve opening pressure: 0.60÷0.75 bar.
Max. working pressure: 4.5 bar.

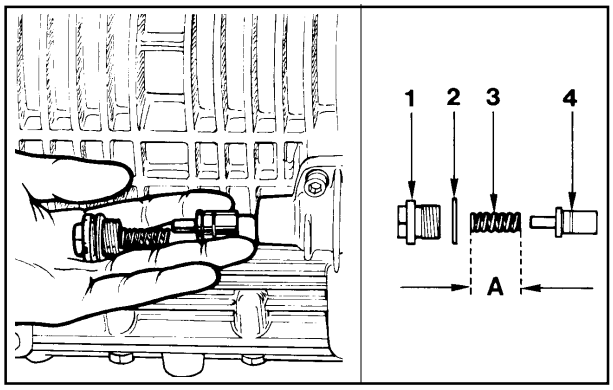

101 102

Oil pressure relief valve

Components:
1 Plug
2 Gasket
3 Spring
4 Valve
A = 37 mm
Carefully clean all components and check spring **A** length.

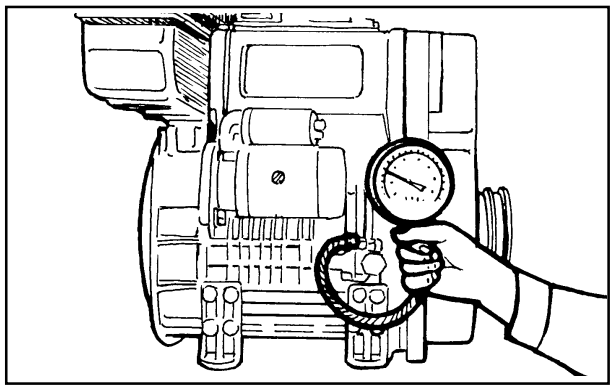

103

Oil pressure check

Once the engine is fitted fill with oil and fuel; connect a 10 bar pressure gauge to the oil filter fitting.
Start the engine and check pressure as a function of the oil temperature (see page 48)

https://truckmanualshub.com/

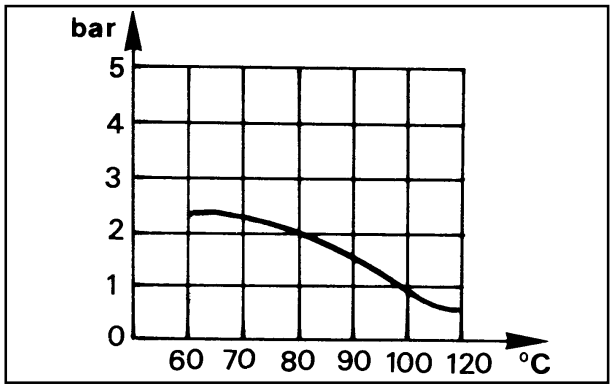

104

Oil pressure curve at idling speed

The curve is obtained at the oil filter lever with constant engine speed of 1200 r.p.m. in no-load conditions and at a room temperature of + 25°C.
Pressure is given in bar and temperature in centigrades.

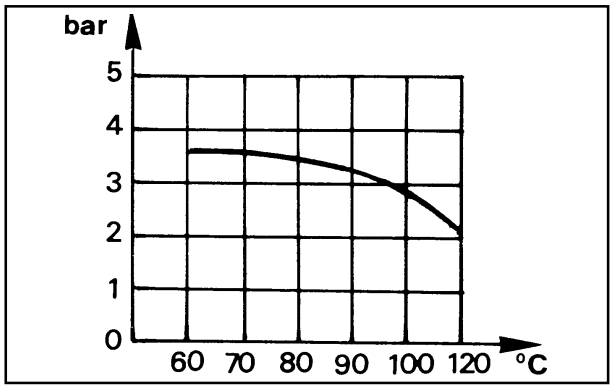

105

Oil pressure curve at full speed

The curve is obtained at the oil filter level with engine working at 3000 r.p.m. and 25.84 HP at + 25°C room temperature.
Pressure is given in bar and temperature in centigrades.

https://truckmanualshub.com/

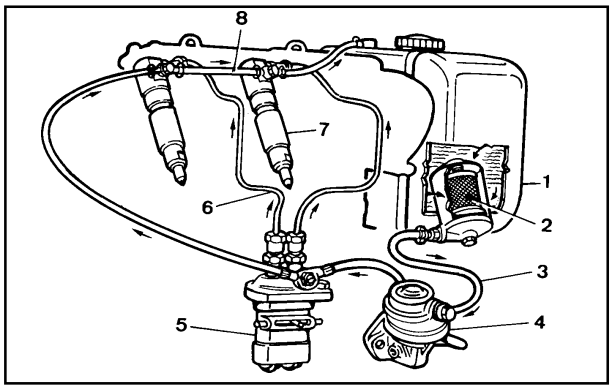

106

Fuel feeding/injection circuit

Components:
1 Tank
2 Filter
3 Fuel feeding tube
4 Fuel feeding pump
5 Injection pump
6 Injection line
7 Injector
8 Injector leak off line and self bleeding system

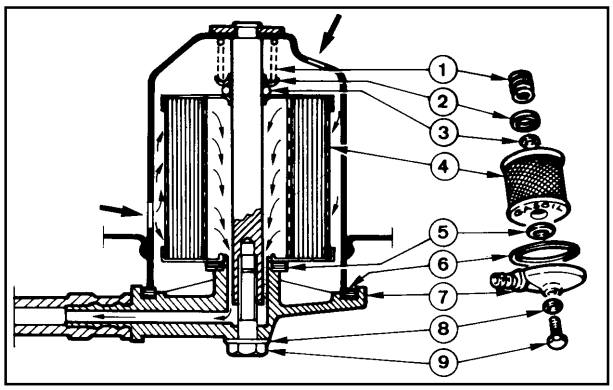

107

Fuel filter (inside fuel tank)

Components:
1 Spring
2 Disc
3 Ring
4 Cartridge
5 Gasket
6 Gasket
7 Cap
8 Ring
9 Bolt

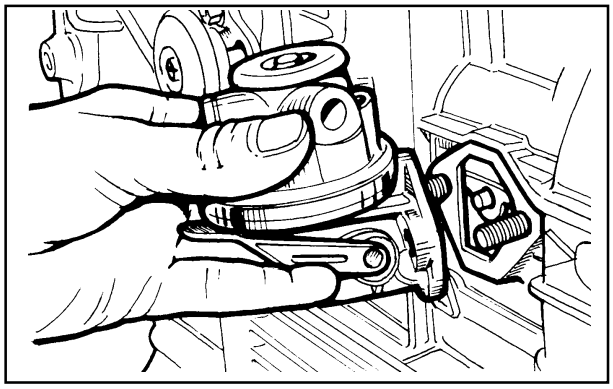

108

Fuel feeding pump

The fuel feeding pump is of the diaphgragm type operated by a camshaft eccentric through a drive rod. It features an external lever for manual operation.
Characteristics: when the control eccentric rotates at 1500 r.p.m. rninimum delivery is 64 l/h while self-regulation pressure is 4÷5 m water column.

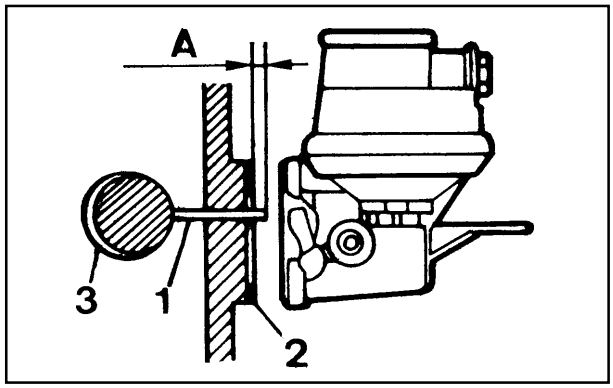

109

Fuel feeding pump drive rod protrusion

Components:
1 Drive rod
2 Gasket
3 Camshaft eccentric
Drive rod **A** protrudes 0.8-1.2 mm from the crankcase; it can be adjusted by means of gaskets.
Gaskets are supplied in the following thicknesses: 0.50, 0.80 and 1.0 mm.

Note: This setting is performed when the rod is on the base of the cam lobe (i.e. minimum protrusion).

https://truckmanualshub.com/

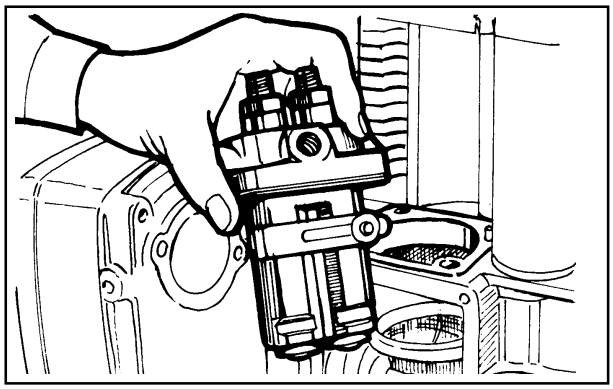

110

INJECTION PUMP

The Bosch injection system consists of a single-body pump with plungers featuring constant stroke and feeding one cylinder each. The pump, mounted on the crankcase is directly operated by the camshaft. Speed governor, extra fuel and stop device are separate from the pump (see page 42, 43 and 66).

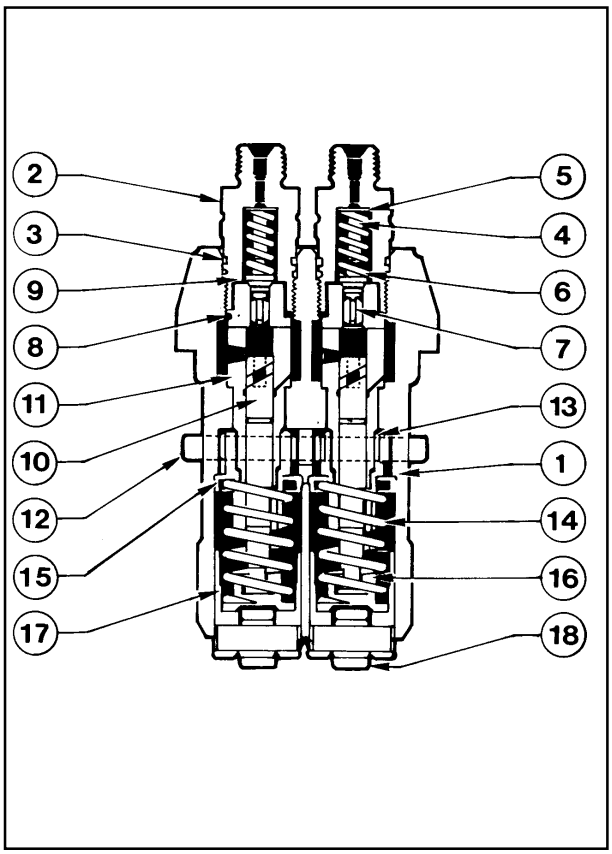

111

Injection pump

Components:

1 Pump body
2 Fitting
3 Seal ring
4 Filter
5 Shim
6 Spring
7 Delivery valve
8 Seat
9 Gasket
10 Plunger
11 Barrel
12 Rack rod
13 Sector gear
14 Spring
15 Upper retainer
16 Lower retainer
17 Tappet
18 Tappet roller

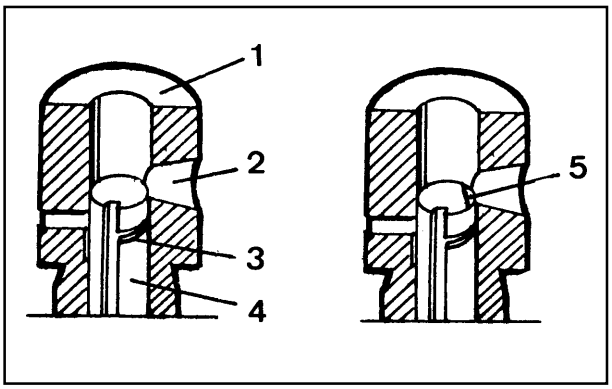

112

Plunger and Barrel Assembly

1 Barrel
2 Fuel feeding port
3 Control helix
4 Plunger
5 Retardation notch (only for 9LD625-2)
Plunger diameter is 7 mm for 9LD561-2 and 9LD561-2/L and 7.5 mm for 9LD625-2.

Note: Every plunger matches with its own barrel. For this reason they are not interchangeable.

https://truckmanualshub.com/

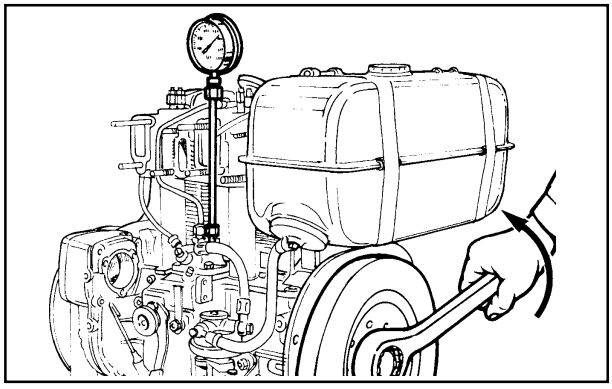

113

How to check plunger and barrel for internal leakage

This operation is only indicative since pressure changes depending on the pumping speed.
Connect the delivery union with a 600 bar pressure gauge with safety valve. Adjust rack rod at half-stroke. Turn flywheel according to its direction of rotation so that the plunger puts the circuit under pressure. Replace plunger if the displayed pressure is below 300 bar. Repeat the same operation for the other plunger.

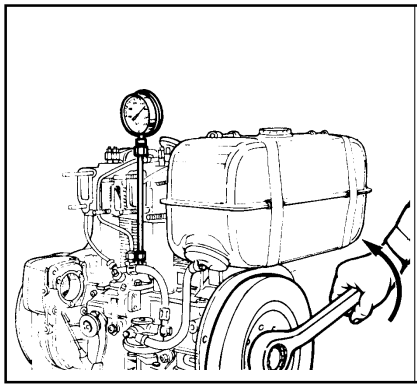

114

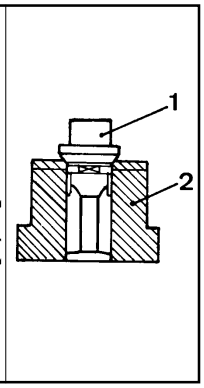

115

How to check injection pump delivery valve sealing

Components:
1 Valves
2 Seat
Adjust pump rack at half-stroke. Turn flywheel according to its direction of rotation so that the plunger puts the circuit under pressure.
During this operation the displayed pressure will gradually reach a peak followed by a sudden drop which corresponds to valve closing. Pressure drop should be 30÷50 bar. Replace the valve if pressure drop is below this value.
Repeat the same operation for the other plunger.

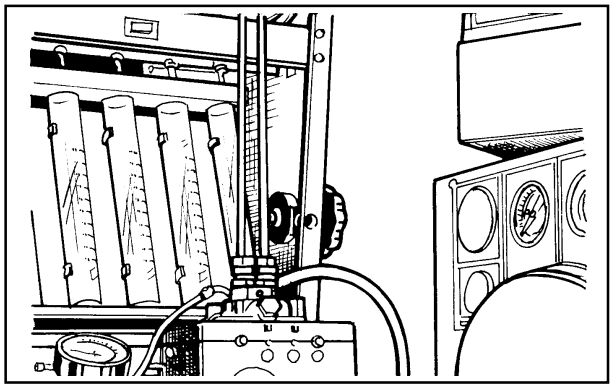

116

Test data for injection pump delivery

For 9LD561-2 and 9LD561-2/L

Control rod max. force	Rod stroke from max deliv. point	R.P.M.	dELIVERY	Max. plunger difference
Newton	mm		mm^3/stroke	mm^3/stroke
0,50	10	1500	27÷37	4
	0	150	75÷90	-------
	---- *	500	10	4

Check only maximum plunger difference by positioning rack rod according to the indicated delivery value.

For 9LD625-2

Control rod max. force	Rod stroke from max deliv. point	R.P.M.	Delivery	Max. plunger difference
Newton	mm		mm^3/stroke	mm^3/stroke
0,50	10	1500	34÷37	3
	13	500	7÷11	3
	0	150	70÷78	--------
	10	500	22÷26	3

https://truckmanualshub.com/

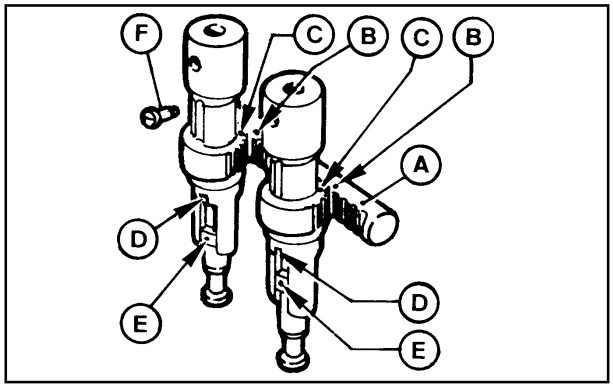

117

How to reassemble injection pump components

After replacing the worn-out components, reassemble the pump as follows:
Introduce sector gears into the pump body by making reference points **C** match with the **B** points on the rack.
Fix barrels with the eccentric screws **F** on the pump body.
Fit valves with seats, springs, fillers and delivery unions tightening them at 3.5÷4 Kgm.
Fit plungers by making reference points **E** match with the sector gear **D** points.
Fix retainers and springs; lock tappet with special stop.
Check that both plungers have the same delivery by performing the necessary measurements at the test bed; if delivery is not the same set screw **F**.

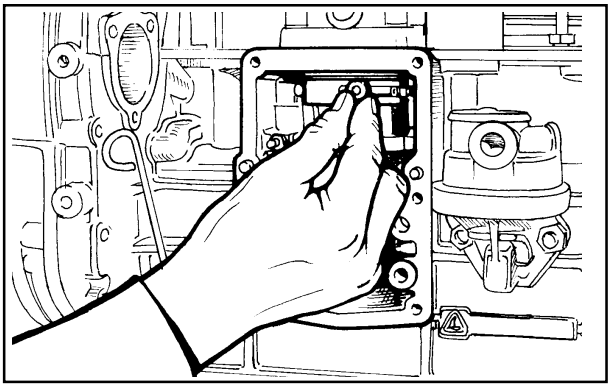

118

How to mount injection pump on the engine

Tighten screws at 2.5 Kgm
Check that rack rod slides smoothly: if not, the engine may fail to start or hunt.

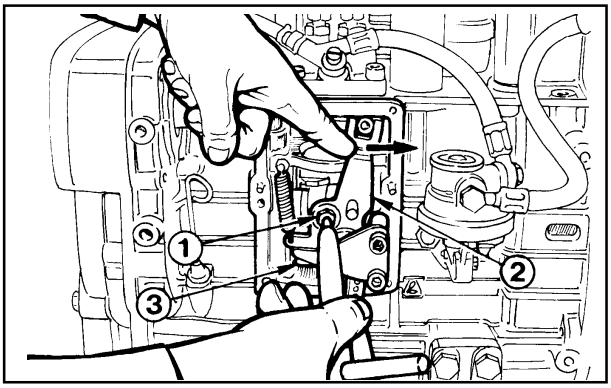

119

Injection pump/mechanical speed governor timing

Loosen screw **1**
Move injection pump lever **2** to maximum delivery (to the right).
Check that drive rod **3** closes the speed governor; keeping lever **2** pressed to the right the drive rod should have no clearance.
Tighten screw **1**.

https://truckmanualshub.com/

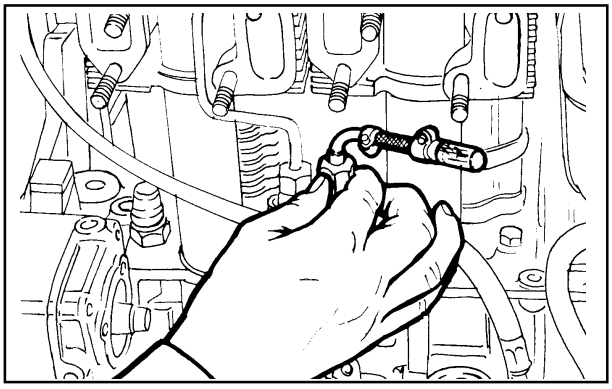

120

(STATIC) INJECTION TIMING

Disconnect injection line on cylinder **1** making sure not to loosen the pump delivery union. Attach the timing tool shown below.

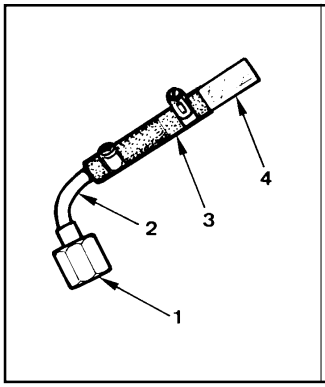

121

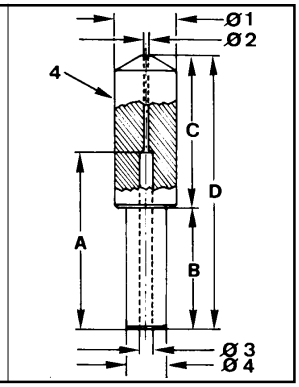

122

Injection timing checking device

Components:
1 Union
2 Tube
3 Sleeve
4 Transparent body, seria] No. 7271-9727-003.
This device allows for immediate monitoring of the fuel flow through its transparent portion.
Dimensìons (mm):
Ø1 = 10.00; Ø2 = 0.60; Ø3 = 2.00; Ø4 = 6.50.
A = 29.00; **B** = 20.00; **C** = 25.00; **D** = 45.00

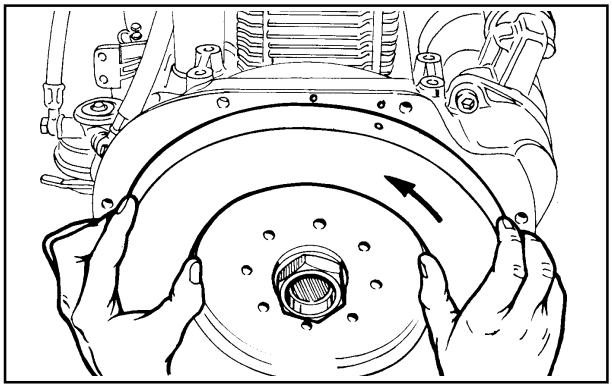

123

Injection timing check

Top up the tank checking that fuel level is at least 10 cm above cheeking device.
Adjust injection pump rack rod at half-stroke.
Turn the flywheel according to the engine direction of rotation and check that fuel reaches the checking device.
Repeat this last operation; during compression proceed slowly and stop immediately when the fuel is seen to pass through the checking device hole; bring flywheel back by 5 mm: this is the so-called static injection timing.

https://truckmanualshub.com/

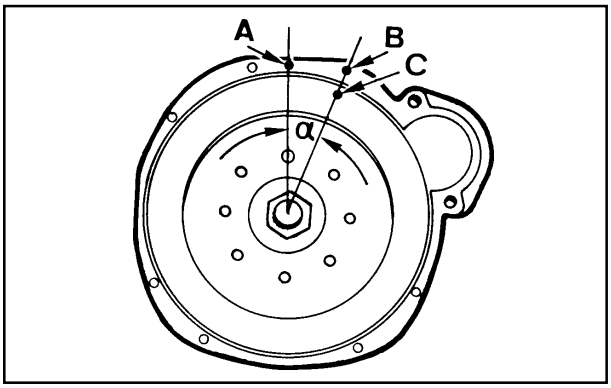

124

Injection timing reference marks on crankcase and flywheel

A = Piston reference mark at the top dead centre
B = Injection timing reference mark compared to **A**
A ÷ B = Distance in mm.
C = Piston reference mark in injection timing position.
a = Reference angle in degrees.

Engine type	(A-B) mm	ci
9LD561-2	61÷ 66	24°÷ 26°
9LD561-2/L	56÷61	22°÷24°
9LD625-2	63,5 ÷68,5	25°÷ 27°

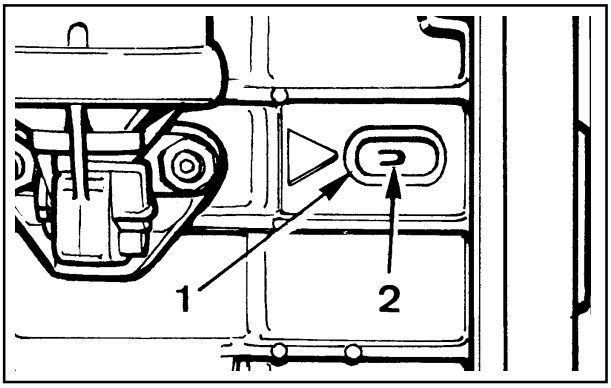

125

Check window for injection timing reference mark

Components:
1) Window
2) Injection timing reference mark
A window is provided to identify the reference mark corresponding to the above mark **C**.

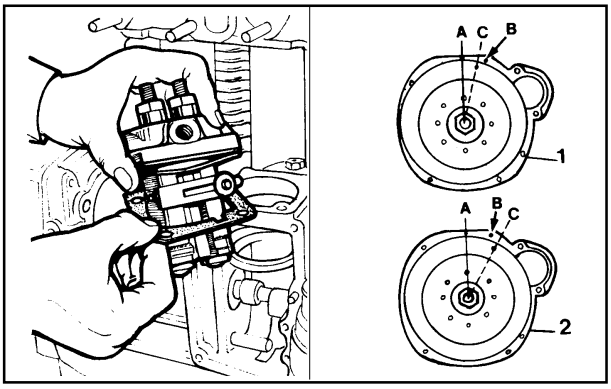

126 127

Injection timing correction

If reference mark C does not match with **B** follow examples 1 and 2.
1) Example of late injection timing: remove shims under the pump to make **C** match with **B**.
2) Example of early injection timing add shim under the pump to make **C** match with **B**.

Note: By adding or removing a 0.1 mm shim under the pump C is delayed or advanced by approximately 3 mm.

https://truckmanualshub.com/

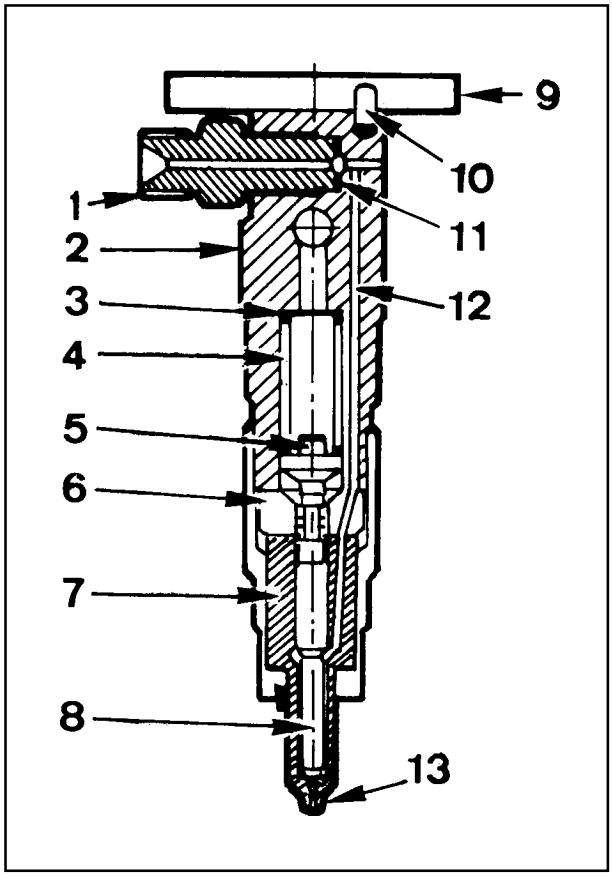

128

INJECTOR

Components:
1 Intake fitting
2 Nozzle holder
3 Shim
4 Spring
5 Pressure rod
6 Intermediate flange
7 Nozzle
8 Needle valve
9 Fixing flange
10 Taper pin
11 Gasket
12 System duct
13 Sump

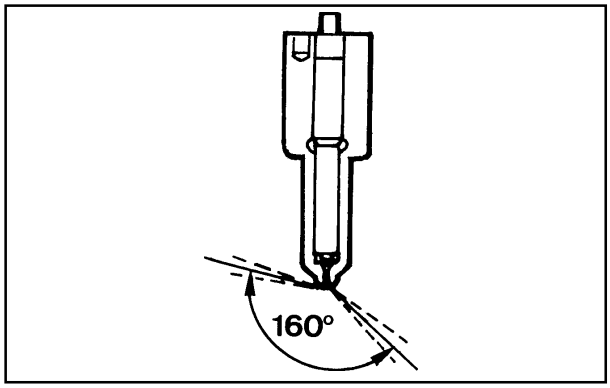

129

Nozzle

Features:
Hole number and diameter 4x0.28 mm.
Jet angles = 160°.
Needle valve elevation = 0.20 ÷ 0.22 mm
Hole length = 0.7 mm
Sump diameter and length = 1x1.5 mm

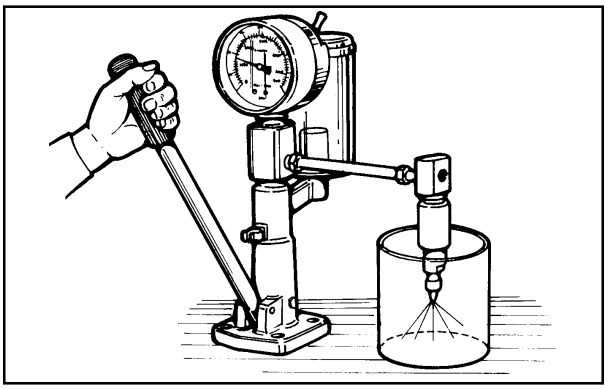

130

Injector setting

Conect injector to a hand pump and cheek that setting pressure is 210 ÷220 bar; make the required adjustments, if any, by changing the shim over the spring.
When replacing the spring, setting should be performed at a 10 bar greater pressure (220÷230 bar) to allow for bedding during operation.
Check needle valve sealing by slowly moving hand pump until approximately 180 bar.
Replace nozzle in case of dripping.

https://truckmanualshub.com/

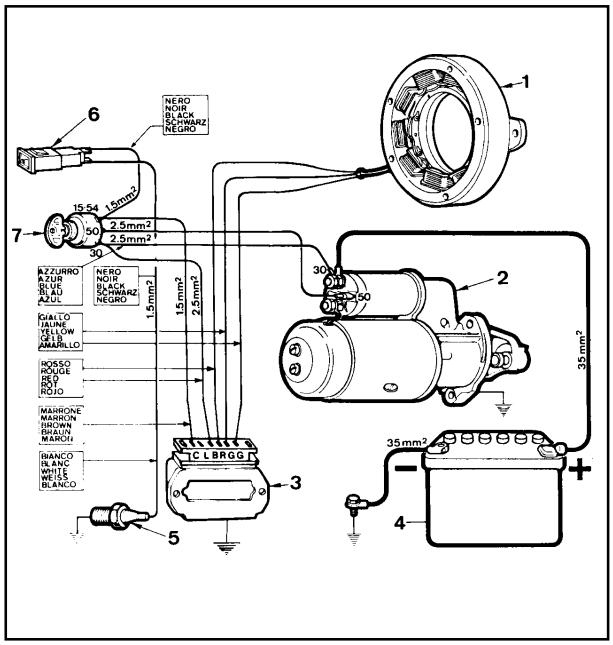

131

STANDARD ELECTRIC EQUIPMENT

Electric starting layout without battery charging light

Components:
1 Alternator
2 Starting motor
3 Voltage regulator
4 Battery
5 Pressure switch
6 Oil pressure warning light
7 Key switch

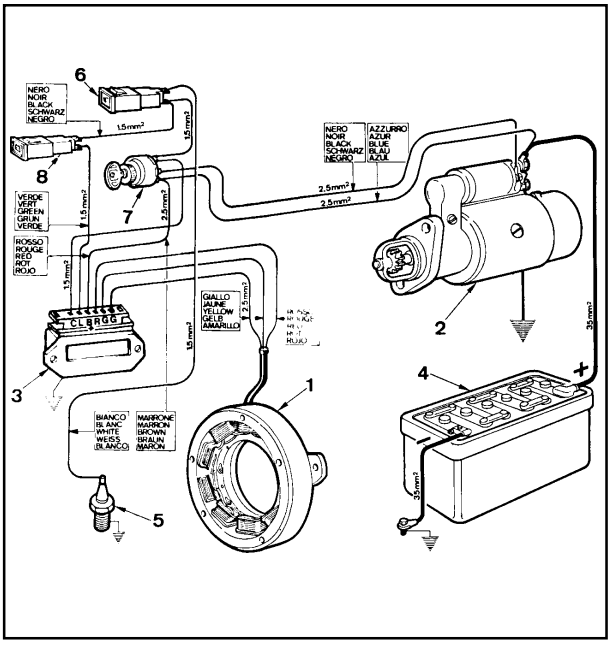

132

Electrical starting layout with battery charging light

Components:
1 Alternator
2 Starting motor
3 Voltage regulator
4 Battery
5 Pressure switch
6 Oil pressure warning light
7 Key switch
8 Battery charging light

Note: Battery, which is not supplied by Lombardini, should feature 12 V voltage and capacity not below 70 Ah.

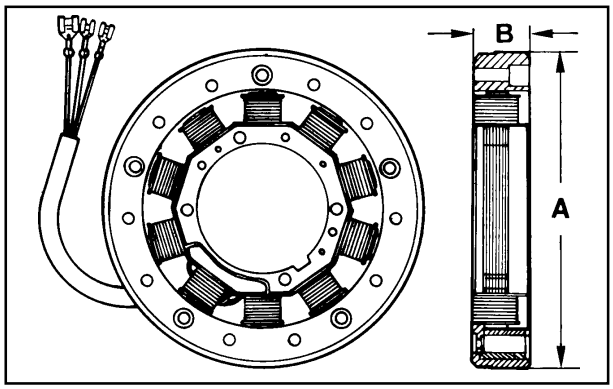

133

12.5 V, 14 A Alternator

Features a fixed armature winding mounted on the air shroud bracket. The rotating permanent magnet inductor is located in the fan spindle.
Dimensions (mm):
A = 158.80÷159.20
B = 27.50÷27.90

Note: Clearance between armature winding and inductor (air gap) should be 0.48÷0.60 mm.

https://truckmanualshub.com/

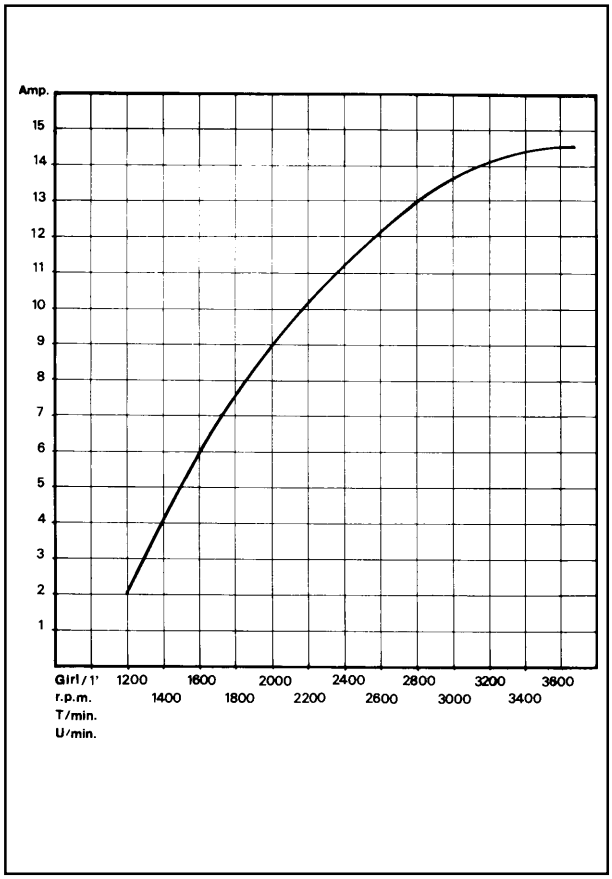

134

Alternator battery charger curve (12.5 V, 14A)

The curve was obtained at room temperature of + 25°C with 12.5 V battery voltage

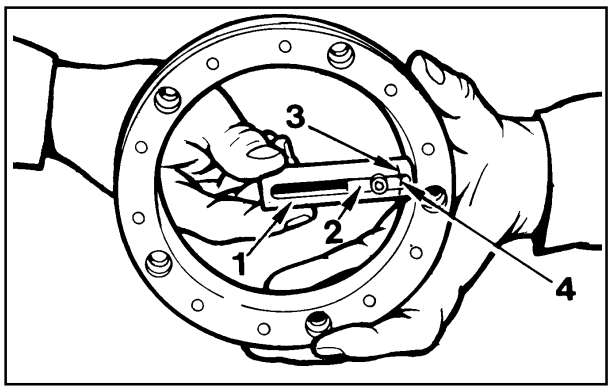

135

Magnetization checking tool (Part No. 7000-9727-001)

Components:
1 Casing
2 Slider
3 Casing reference line
4 Slider reference line
Rest the tool end horizontally onto the magnetic poles. Hold slider so that its reference line coincides with the casing reference line. Release slider: if no attraction occurs the rotor is demagnetized; therefore replace alternator.

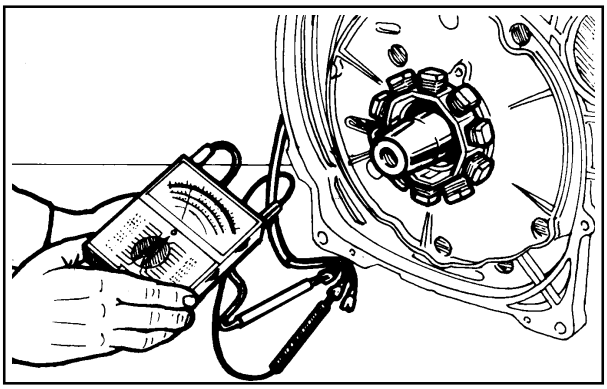

136

Checking for cable continuity

Check that stator windings have no unsoldered connections, burnt areas or grounded wìres.
Using an ohmmeter check for continuity between the red cable and the two yellow ones.
Furthermore, check that they are insulated from the ground.

https://truckmanualshub.com/

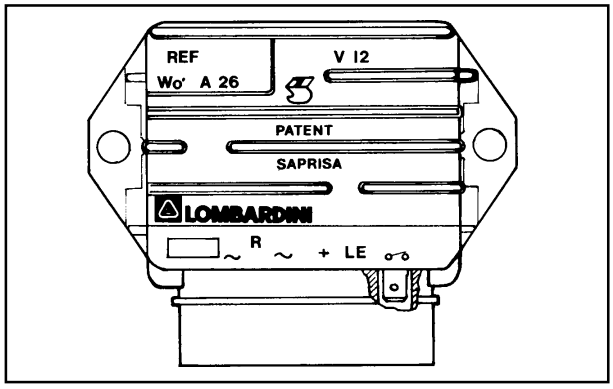

137

VOLTAGE REGULATOR

Type LOMBARDINI, supplied by SAPRISA and DUCATI: Voltage 12 V, max. current 26A. References for SAPRISA connections with the corresponding DUCATI connections

SAPRISA	DUCATI
~	G
R	R
+	B
LE	L
o o	C

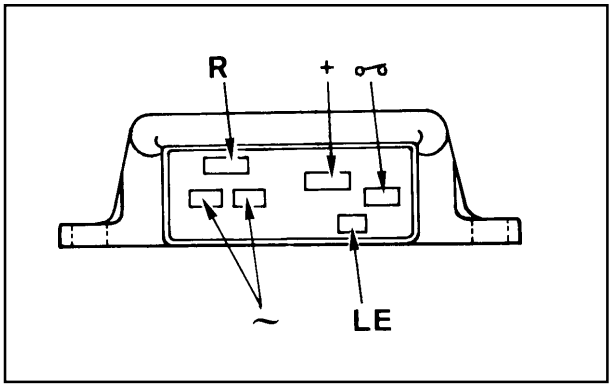

138

To avoid wrong connections 3 different sizes are supplied.

SAPRISA	DUCATI	CONNECTION SIZE mm	
		WIDTH	THICKNESS
~	G	6.25	0.8
R	R	9.50	1.2
+	B	9.50	1.2
LE	L	4.75	0.5
o o	C	6.25	0.8

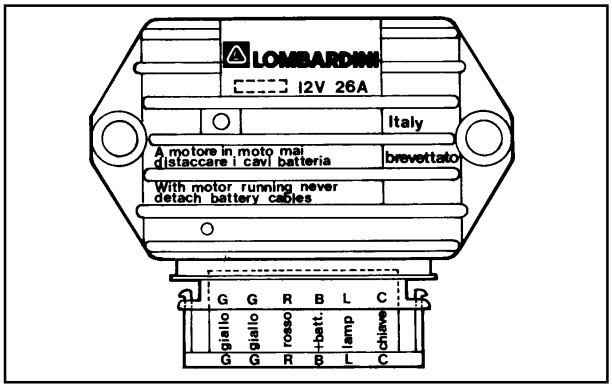

139

The voltage regulator fits to both circuits with and without battery charging light; in the latter case connections LE (SAPRISA) and L (DUCATI) are not used.

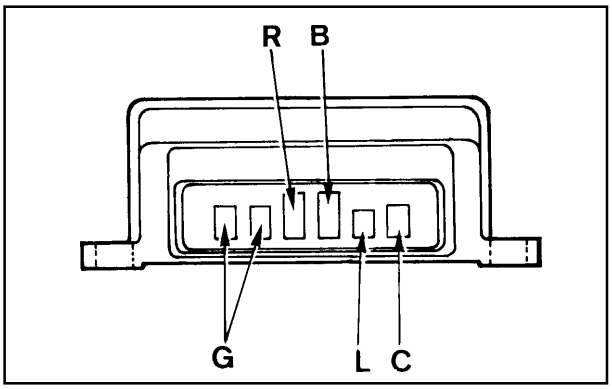

140

https://truckmanualshub.com/

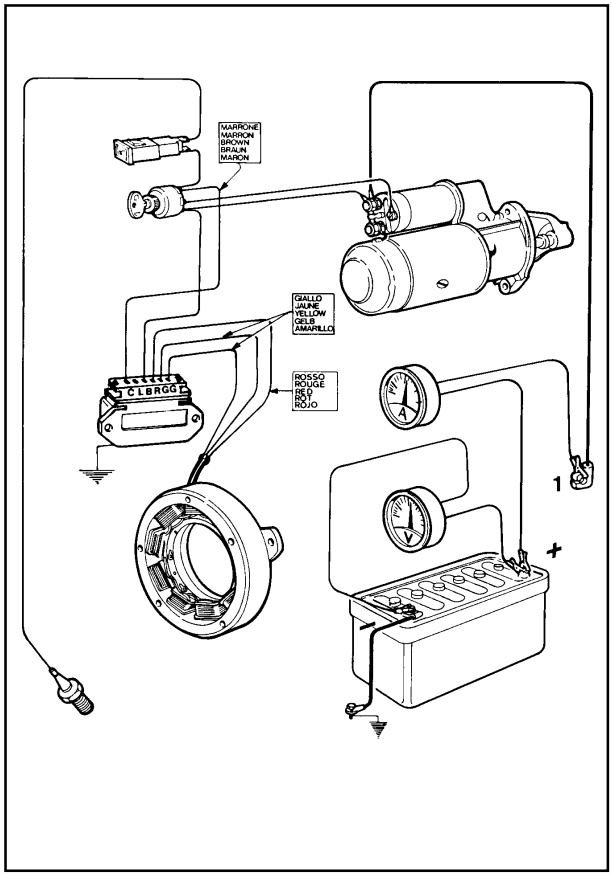

141

How to check voltage regulator for proper operation

Check that connections correspond to the layout.
Disconnect the terminal from the battery positive pole.
Connect a d.c. voltmeter between the two battery poles.
Fit an ammeter between the positive pole and the corresponding cable 1 terminal.
Start a couple of times until battery voltage drops below 13 V.
When battery voltage reaches 14.5 V the ammeter current suddenly drops down to almost zero.
Replace regulator if recharge current is zero with voltage below 14 V.

Warning: When the engine is running do not disconnect battery cables or remove the key from the control panel.
Keep regulator away from heat sources since temperatures above 75°C might damage it.
No electric welding on engine or application.

https://truckmanualshub.com/

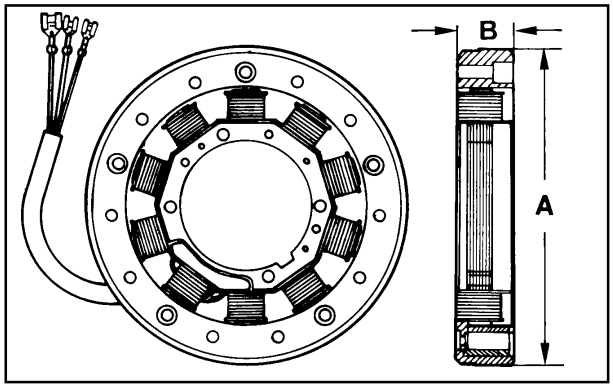

142

OPTIONAL ELECTRIC EQUIPMENT

12 V, 18A Alternator
Only two yellow cables are at output.
Dimensions (mm):
A = 158.80÷159.20
B = 27.50÷27.90

Note: Clearance between armature wìnding and inductor (air gap) must be 0.48÷0.60 m m.

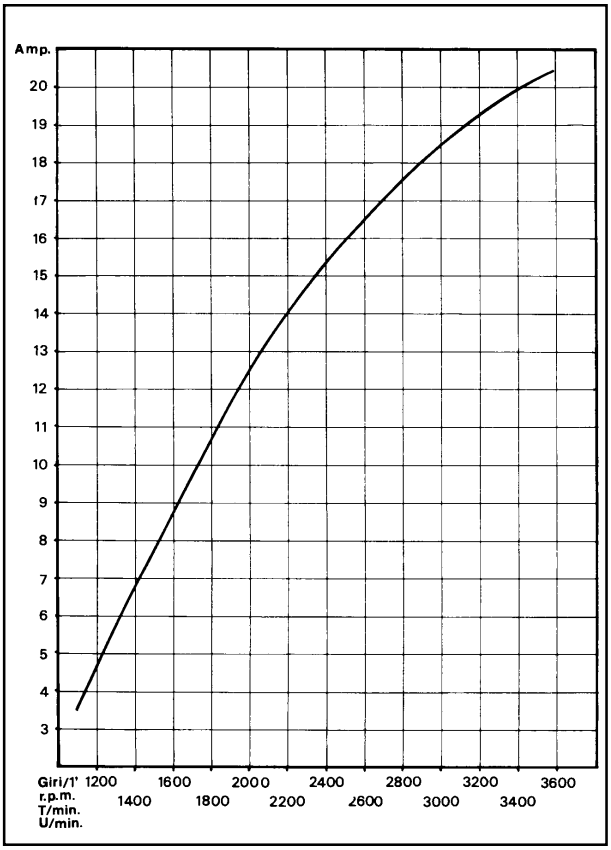

143

Alternator battery charger curve (12 V, 18 A)

This curve is obtained at +25°C with 12.5 V battery voltage.

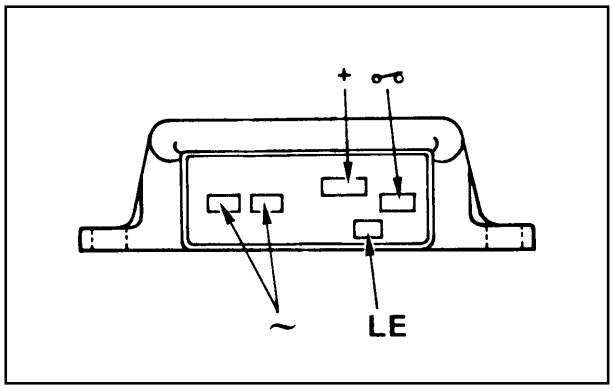

144

12 V, 24 A special voltage regulator

The special LOMBARDINI SAPRISA voltage regulator is of the bridge type.
See page 48 for tag dimensions.

https://truckmanualshub.com/

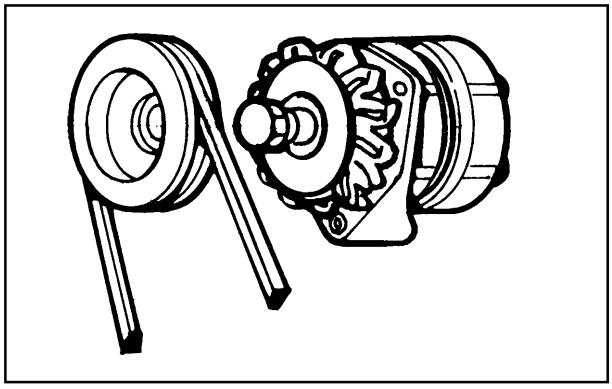

145

Alternator type Bosch G1 14 V, 33 A

The alternator is of the claw-pole rotor type with built-in voltage regulator. The rotating motion is conveyed by the engine through a "V" belt and sheave.
Features: 12 V rated voltage. Max. current 33 A at 7000 alternator r.p.m.. RH direction of rotation

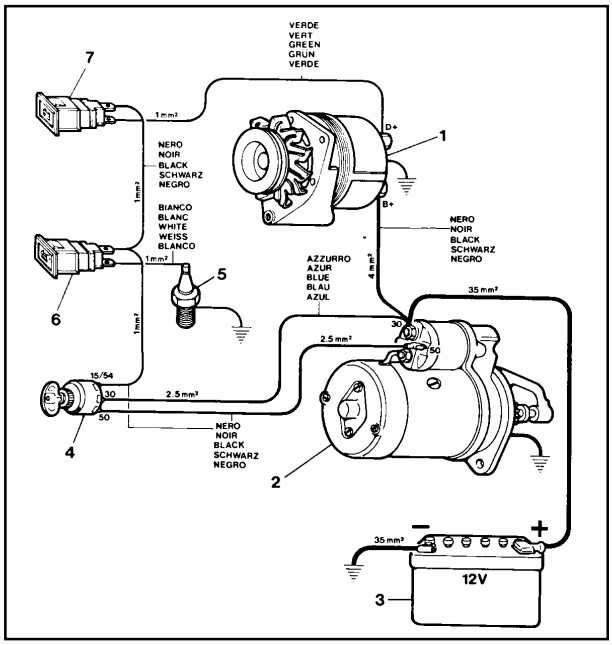

146

Alternator type Bosch G1 14 V, 33 A layout

Components:
1 Alternator
2 Starting motor
3 Battery
4 Key switch
5 Pressure switch
6 Oil pressure warning light
7 Battery charging light

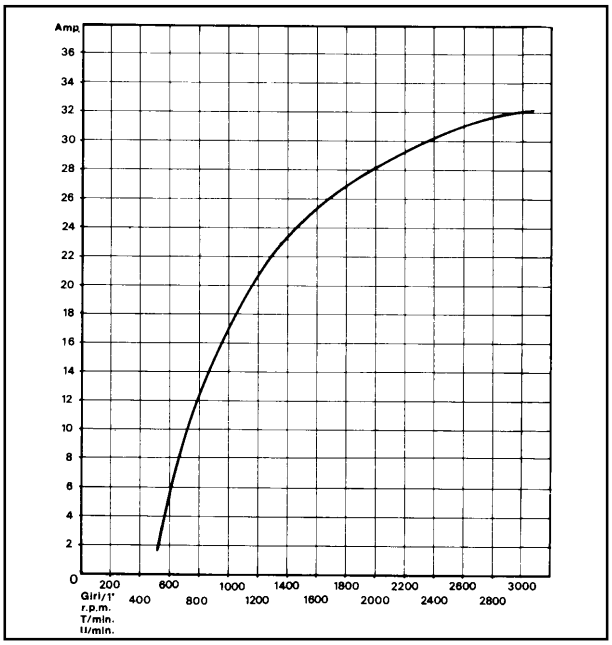

147

14 V, 33 A Bosch G1 alternator battery charger curve

The curve was obtained at room temperature of + 25°C. Battery terminal voltage is 12.5 V.
The r.p.m. shown on the table reters to the engine.

https://truckmanualshub.com/

STARTING MOTOR
Made by MARELLI and BOSCH.
Apply to their distributors for any type of repair.

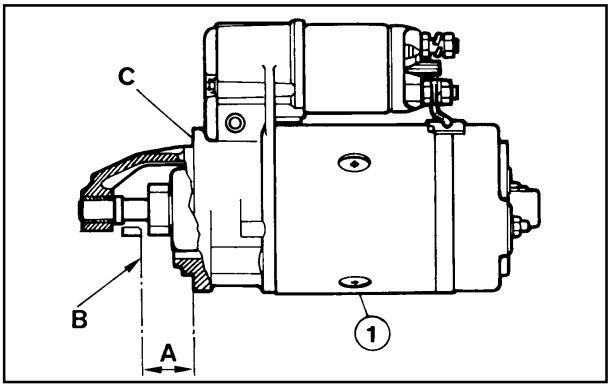

148

1) **Magneti Marelli starting motor type E100, 1,5/12 V**

RH direction of rotation
A = 29.5÷31.5 mm
B = Ring gear plane
C = Flange plane

Warning: The fiywheel should not project from ring gear plane **B**.

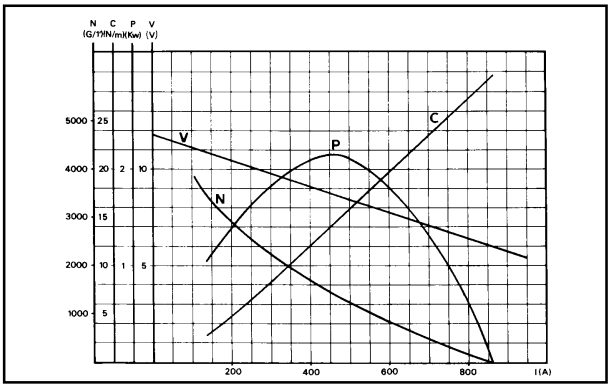

149

Characteristic curves for starting motor type Magneti Marelli E100, 1.5/12 V

Curves were obtained at room temperature of + 20°C with 88 Ah batteries.
V = Motor terminal voltage in Volt
P = Power in kW
C = Torque in N/m
N = Motor speed in r.p.m.
I (A) = Absorbed current in Ampere

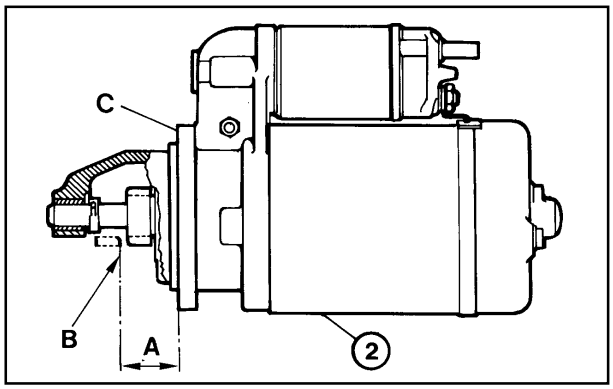

150

2) **Bosch starting motor type GIF - 12 V, class 1.5**

RH direction of rotation.
A = 29.5÷31.5 mm
B = Ring gear plane
C = Flange plane

Warning: Flywheel should not project from ring gear plane **B**.

https://truckmanualshub.com/

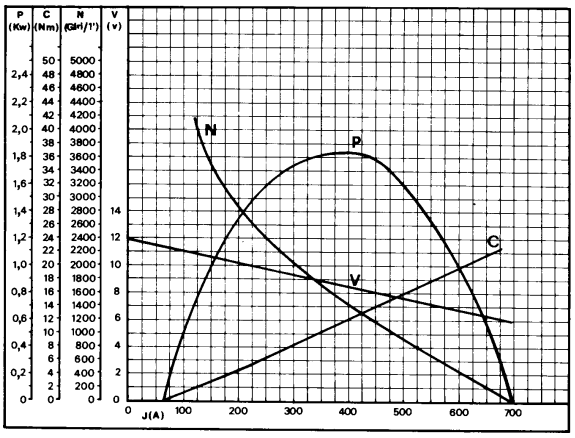

151

Characteristic curves for starting motor type Bosch GF -12 V, class 1.5

Curves are obtained at room temperature of + 20°C with 66 Ah battery.
V = Motor terminal voltage in Volt
P = Power in kW
C = Torque in N/m
N = Motor speed in r.p.m6.
J (A) = Absorbed current in Ampere.

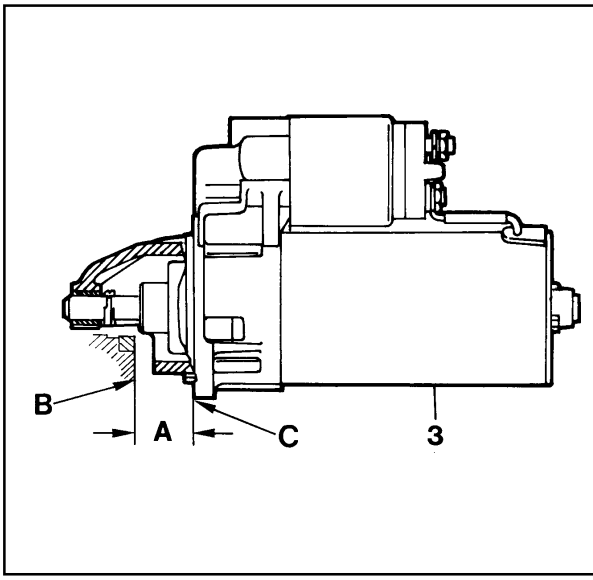

152

3) **Starting motor type Bosch DW (R) 12 V, 1.7 kW**

RH direction of rotation.
Note: This motor is of the epicyclic type with reduction ratio of 3.3:1 between rotor and pinion gear.

A = 29.5÷31.5 mm
B = Ring gear plane
C = Flange plane

Warning: Flywheel should not project from ring gear plane **B**.

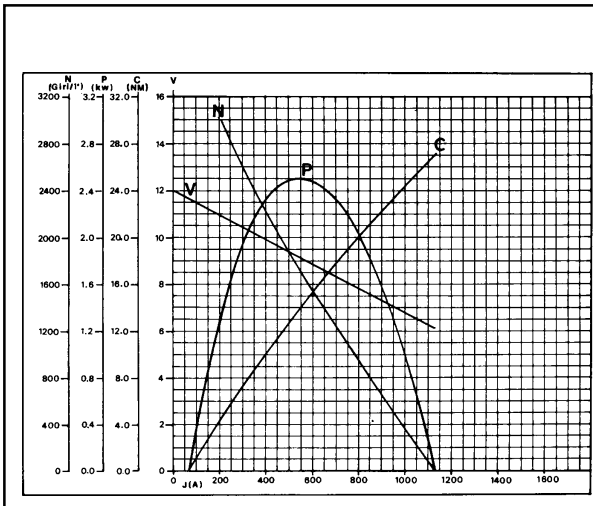

153

Characteristic curves for starting motor type Bosch DW (R), 12 V, 1.7 kW

Curves were obtained at the temperature of + 20°C with 88 Ah battery.

V = Motor terminal voltage in Volt
P = Power in kW
C = Torque in N/m
N = Motor speed in r.p.m.
J (A) = Absorbed current in Ampere.

https://truckmanualshub.com/

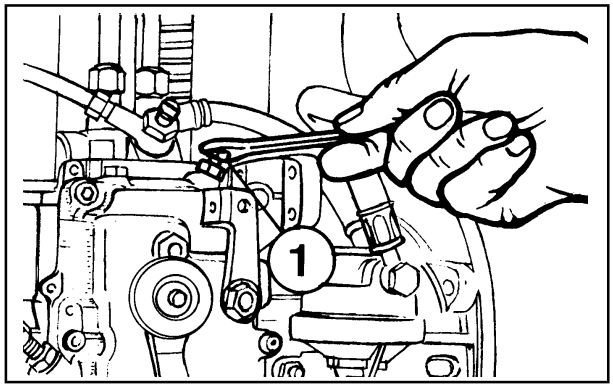

154

SETTINGS

1) **Idling speed setting in no-load conditions**
After filling with oil and fuel, start the engine and let it warm up for 10 minutes.
Adjust idling speed at 1200÷1300 r.p.m. by turning setscrew **1**; then tighten lock nut.

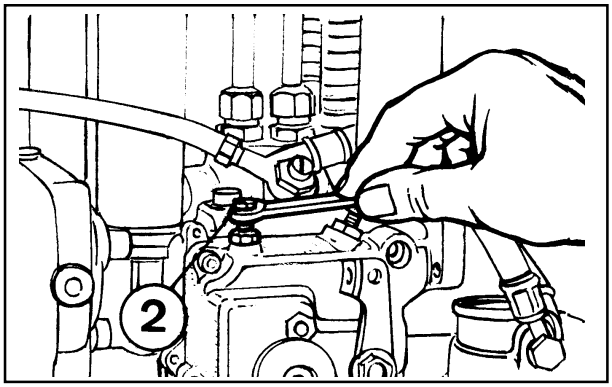

155

2) **Full speed setting in no-load conditions (standard)**

After setting idle speed turn screw **2** and set full speed in no-load conditions at 3200 r.p.m.; then tighten lock nut.

Note: When the engine reaches the pre-set power full speed stabilizes at 3000 r. p. m.

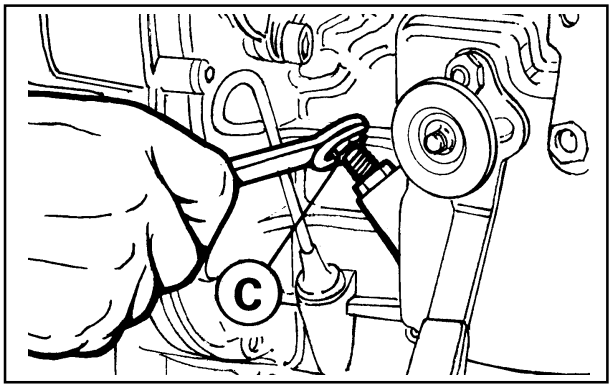

156

Injection pump delivery setting

This setting should be performed at the torque dynamometer. If not, setting is oniy approximate.
The following steps are required:
Loosen delivery limiting device **C** by 5 turns.
Bring engine to full speed in no-load conditions i.e. 3200 r.p.m.. Tighten limiting device until the engine shows a drop in r.p.m..
Unscrew limiting device **C** by 1/½ turn. Tighten lock nut.

Note: If the engine, under full load, generates too much smoke tighten **C**; if no smoke is observed at the exhaust and the engine cannot reach its full power unscrew **C**.

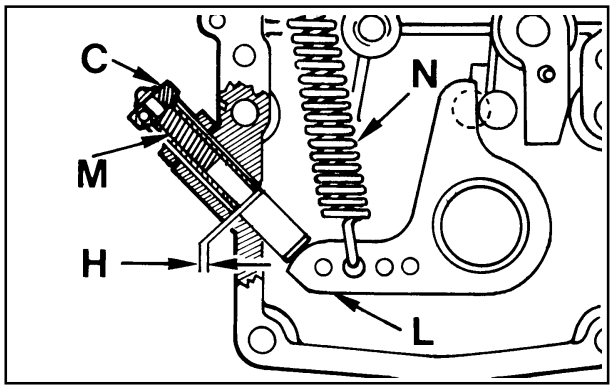

157

Injection pump delivery limiting and extra fuel device

Limiting device **C** limits the injection pump maximum delivery. It also acts as a torque setting device since spring **N** opposes the resistence of spring **M** inside the cylinder through lever **L**.
The torque setting device allows lever **L** to move over stroke **H** corresponding to 0.15÷0.25 mm.
This consequently increases injection pump delivery with torque reaching its peak value.

Note: In generator sets and power welders, the torque setting device acts as a delivery limiter only. It therefore does not feature spring **M** or stroke **H**.

https://truckmanualshub.com/

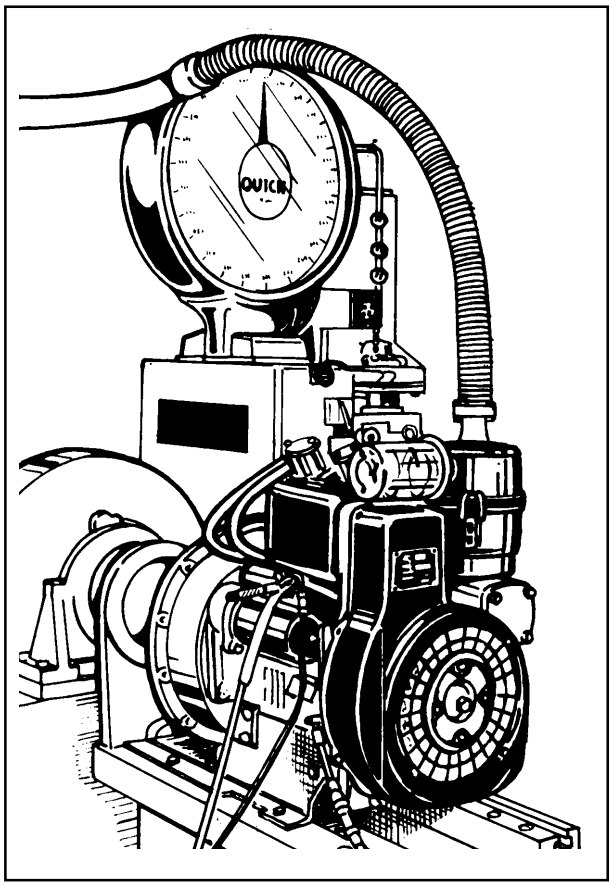

158

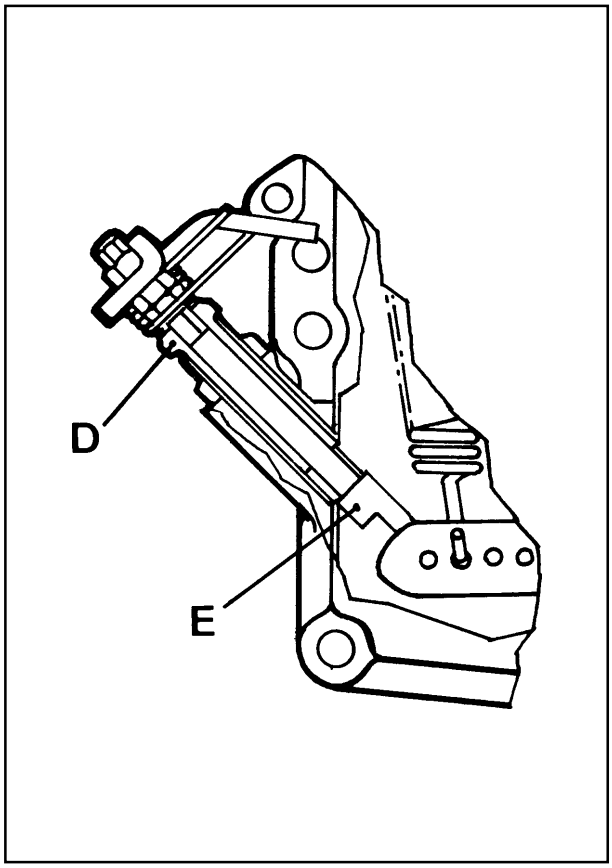

159

Injection pump delivery setting with engine at the torque dynamometer

1) Bring engine to idling speed
2) Unscrew delivery limiting device **C** (see page 64)
3) Bring engine to the power and r.p.m. required by the manufacturer of the device.
4) Check that consumption falls within the table specifications (see below). If consumption is not as indicated change balance conditions at the torque dynamometer by varying the load and adjusting the governor. Under stable engine conditions check consumption again.
5) Tighten limiting device **C** until the engine r.p.m. decreases.
Lock the limiting device by means of lock nut.
In versions with manually-operated mechanical extra fuel feeding **D** perform this operation keeping drive rod **E** as shown in the figure.
6) Release brake completely and check at what speed the engine becomes stable.
Speed governor should comply with the requirements of the class indicated by the manufacturer of the device.
7) Stop the engine
8) Check valve clearance when the engine has cooled down.

Required settings (as most commonly applies)

Engine	R.P.M.	Power HP (kW)	Specific fuel consumption*	
			Time (sec) per 100 cmc	rev/HP h (g/kW h)
9 LD 561-2	3000	N 25,84 (19)	553÷56	206÷218 (280÷296)
9 LD 561/2	3000	NB 23,12 (17)	63÷66	195÷205 (280÷278)
9 LD 561-2L	2200	NB 18 (13,24)	89÷95	175÷185 (238÷278)
9 LD 561-2L	1800	NB 15 (11)	107÷113	175÷185 (238÷252)
9 LD 561-2L	1500	NB 12 (8,82)	138÷146	170÷180 (231÷245)
9 LD 625-2	3000	N 28 (20,59)	53÷56	197÷207 (268÷282)
9 LD 625-2	3000	NB 26 (19,12)	60÷63	190÷200 (258÷272)
9 LD 625-2	1800	NB 18,5 (13,6)	90÷95	171÷181 (233÷246)
9 LD 625-2	1800	NA 16,5 (12,13)	104÷110	163÷173 (223÷235)
9 LD 625-2	1500	NB 14,8 (10,88)	110÷116	175÷185 (239÷252)
9 LD 625-2	1500	NA 13,3 (9,78)	125÷132	169÷178 (230÷243)

Theindicatedspecificfuelconsumptionreferstotheperiodfollowing approximately 30 working hours.

https://truckmanualshub.com/

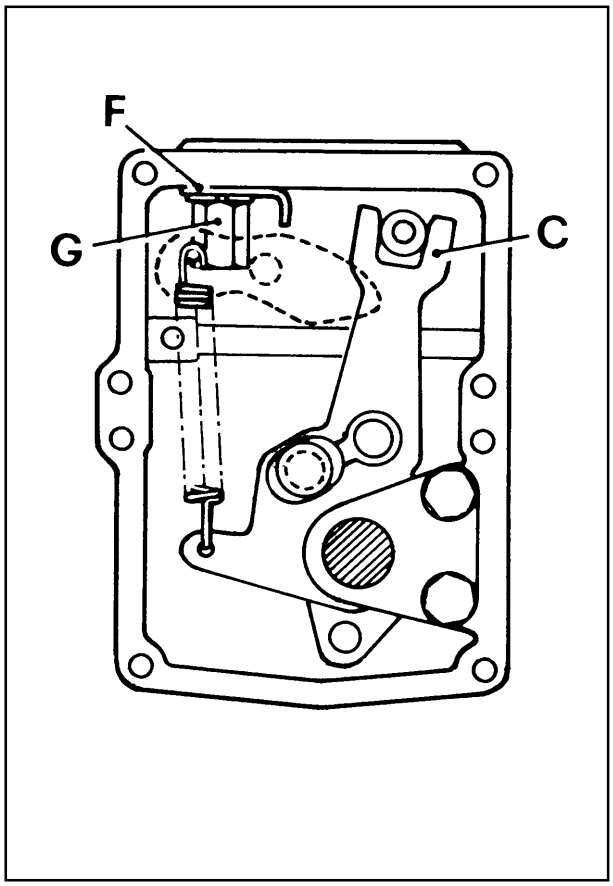

160

Stop setting

1) Completely turn lever **C** counterclockwise and keep it in this position. Retainer **F** should not be in contact with lever **C**.
2) Unscrew nut **G** and bring retainer **F** in contact with lever **C**
3) Push retainer **F** so that lever **C** is moved backwards clockwise by 1.0÷1.5 mm.
4) Lock retainer **F** by screwing nut **G**

Note: Under these conditions no damage can be caused to the injection pump rack rod stops by sudden impacts due to the available electric stops.

https://truckmanualshub.com/

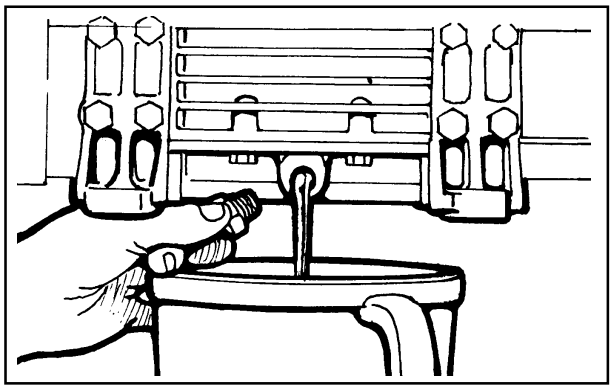

161

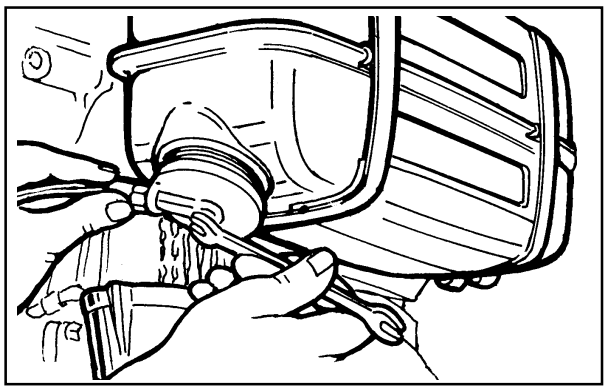

162

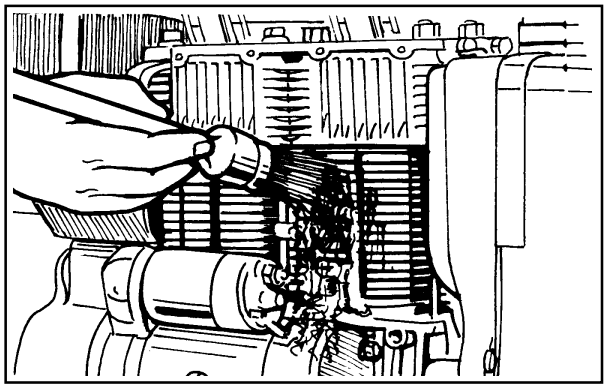

163

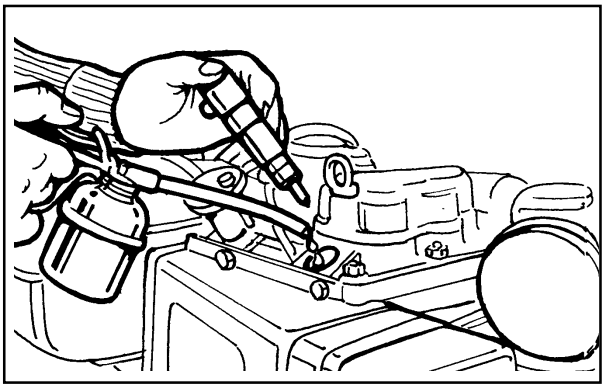

164

STORAGE

Prepare engines as follows for storage over 30 days:

Temporary protection (1÷6 months).

• Let engine work at idling speed in no-load conditions for 15 minutes.
• Fill crankcase with protection oil MIL-1-644-P9 and let engine run at 3/4 f ull speed for 5 ÷ 10 minutes.
-When engine is warm empty oil pan and fill with standard new oil. ---
Remove fuel tube and empty the tank.
Remove fuel filter, replace cartridge if dirty and refit. Carefully clean cylinder fins, heads and fan.
Seal all openings with tape.
Remove injectors, pour a spoonful of oil type SAE 30 into the cylinders and rotate manually to distribute the oil. Refit injectors.
Spray oil type SAE 10W into exhaust and intake manifolds, rocker arms, valves, tappet etc. Grease all unpainted parts.
Loosen belt.
Wrap the engine in a plastic film.
Store in a dry place, if possible not directly on the soil and far from high voltage electric lines.

Permanent protection (over 6 months)

The following is recommended apart from the above instructions:
• For the lubrication and injection system as well as for moving parts use rustproof oil type MiL-L-21260 P10, grade 2, SAE 30 (Ex. ESSO RUST - BAN 623 - AGIP, RUSTIA C. SAE 30). Let the engine run with rustproof oil and drain any excess.
• Coat external unpainted surfaces with antirust type MIL-C-16173D,grade 3 (Ex. ESSO RUST BAN 398 - AGIP, RUSTIA 1001F).

How to prepare the engine for operation

• Clean engine outside
• Remove protections and covers.
• Remove antirust by an appropriate solvent or degreaser.
• Remove injectors, fili with standard oil, turn crankshaft by a few revolutions, remove oil pan and drain the protective oil.
• Check injectors, valve clearance, belt tension, head tightening, oil filter and air cleaner for proper setting. If the engine is stored over a long period of time (over 6 months) check one of the bushings for corrosion.

https://truckmanualshub.com/

MAIN TORQUE SPECIFICATIONS

POSITION	Diam. and pitch (mm)	Torque (Nm)
Connecting rod	8x1.25	4.0
Injection pump delivery valve union	18x1.5	4.0
Rocker arm cover	8x1.25	2.0
Center main bearing support	8x1.25	2.5
Intake manifold	8x1.25	2.5
Exhaust manifold	8x1.25	2.0
Air shroud	6x1.0	0.6
Accelerator cover	6x1.0	1.0
Oil filter housing	6x1.0	1.25
Internal oil filter cover	6x1.0	1.0
Hydraulic pump flange	8x1.25	2.5
Camshaft gear	10x1.5	6.0
Oil pump gear	10x1.5	3.5
Starting motor	10x1.5	4.5
Blower hub	14x1.5	16
Rocker arm shaft	8x1.25	2.5
Gear cover plate	8x1.25	2.5
Engine mounting foot	10x1.5	4.0
Fuel feeding pump	8x1.25	2.5
Injection pump	8x1.25	2.5
Oil pump	8x1.25	2
Nozzle holder	6x1.0	1
Oil pan	8x1.25	2.5
Starting pulley	10x1.5	4.5
Main bearing support, gear case side	8x1.25	2.5
Main bearing support, flywheel side	8x1.25	2.5
Center main bearing support	10x1.5	3.0
Hydraulic pump gear support	8x1.25	2.5
Governor fork support	8x1.25	2.5
Fuel tank bracket	8x1.25	4.0
Cylinder head	10x1.5	5.5
Blower	6x1.0	1.0
Flywheel	20x1.5	30.0

https://truckmanualshub.com/

STANDARD BOLT TORQUE SPECIFICATIONS

DESCRIPTION						
Diameter per Pitch (mm)	R ≥ 800 N/mm2		R ≥ 1000 N/mm2		R ≥ 1200 N/mm2	
	Nm	Kgm	Nm	Kgm	Nm	Kgm
4x0,70	3,6	0,37	5,1	0,52	6	0,62
5x0,80	7	0,72	9,9	1,01	11,9	1,22
6x1,00	12	1,23	17	1,73	20,4	2,08
7x1,00	19,8	2,02	27,8	2,84	33	3,40
8x1,25	29,6	3,02	41,6	4,25	50	5,10
9x1,25	38	3,88	53,4	5,45	64,2	6,55
10x1,50	52,5	5,36	73,8	7,54	88,7	9,05
12x1,75	89	9,09	125	12,80	150	15,30
14x2,00	135	13,80	190	19,40	228	23,30
16x2,00	205	21,00	289	29,50	347	35,40
18x2,50	257	26,30	362	37,00	435	44,40
20x2,50	358	36,60	504	51,50	605	61,80
22x2,50	435	44,40	611	62,40	734	74,90
24x3,00	557	56,90	784	80,00	940	96,00

https://truckmanualshub.com/

42100 Reggio Emilia – Italia - ITALY
Via Cav. del Lavoro Adelmo Lombardini, 2 - Cas. Post. 1074
Tel. (+39) 0522 3891 - Telex 530003 Motlom I – Telegr.: Lombarmotor
R.E.A. 227083 - Reg. Impr. RE 10875
Cod. fiscale e Partita IVA 01829970357 - CEE Code IT 01829970357
E-MAIL: atl@lombardini.it
Internet: http://www.lombardini.it

La Lombardini si riserva il diritto di modificare in qualunque momento i dati contenuti in questa pubblicazione.
Lombardini se rèserve le droit de modifier, à n'importe quel moment, les données reportées dans cette publication.
Data reported in this issue can be modified at any time by Lombardini.
Lombardini vorbehält alle Rechte, diese Angabe jederzeit verändern.
La Lombardini se reserva el derecho de modificar sin previo aviso los datos de esta publicación.