https://truckmanualshub.com/

TAYLOR®

Safety CHECK

2nd Edition

- Man
- Machine
- Environment

IMPORTANT!

Read contents carefully prior to operation.

https://truckmanualshub.com/

⚠ WARNING

DEATH OR SERIOUS INJURY MAY RESULT FROM IMPROPER OPERATION OF THIS MACHINE!

- Operator must be trained and knowledgeable of the operators guide, safety manual, and OSHA STANDARD 29 CFR, 1910.178 for powered industrial trucks.
- Capacity is determined by load position (reach and height.) Refer to detail rating plate for values.
- Capacity greatly decreases with high load lifting, acceleration, braking, sharp turning, high wind velocity, and poor yard conditions.
- Visibility may be impaired by structural design (ALWAYS look in the direction of travel; DO NOT rely on mirrors or camera.)
- Do not operate with bystanders present.
- Travel only with load in defined travel position: load centered, boom retracted, cab fully lowered, and container bottom no higher than operator eye level.
- Always wear seat belt while machine is in operation.
- Do not attempt to jump from machine in event of tip over. Remain seated with seat belt fastened.

TAYLOR MACHINE WORKS, INC.
650 NORTH CHURCH AVENUE
LOUISVILLE, MISSISSIPPI 39339-2017

3377 075

https://truckmanualshub.com/

Foreword

This manual's purpose is to remind users of potential dangers associated with using equipment without proper instruction, knowledge, and safety practices.

No single rule in the booklet can be followed to the exclusion of others. Each rule must be considered in light of the other rules, the knowledge and training of the **man** (operator), the limitations of the **machine,** and the workplace **environment.**

This manual, of course, cannot cover all circumstances and situations. We urge all **users** of equipment to obtain necessary training and instruction; make sure the **equipment** has been serviced and systems are functioning properly before operation; make sure the **environment** is proper for the operation of the machine, and always be alert and cautious.

https://truckmanualshub.com/

https://truckmanualshub.com/

Table of Contents

Foreword
Introduction 1
Man Check 3
Machine Check 4
Environment Check 6
A. Stability Related Accidents 9
B. Operations Related Accidents 27
C. Pedestrian Related Accidents 47
Audible And Visual Warning Devices 49
D. Slip And Fall Accidents 67
E. Maintenance / Servicing Accidents 71

Appendices A-1
A - OSHA Safety and Health Standards
(29 CFR 1910.178)
Powered Industrial Trucks A-3
B - ASME/ANSI B56.1
Part II For The User A-12

https://truckmanualshub.com/

https://truckmanualshub.com/

Introduction

Powered industrial trucks with a variable reach pivoting boom, commonly called reach stackers, come in many shapes and sizes, and are intended for use in general industry. They lift, carry, and deposit many different types, sizes, and weights of loads. They are under the control of an operator who works in an environment controlled by the employer. The reach stacker can be a safe tool, but only if the operator himself is safe and works in an environment made safe by the employer. Safe operation does not just happen. It is the result of hard work and planning. Knowing the types of accidents that commonly occur with reach stackers can help both the operator and the employer plan ahead. The most common types of accidents are:

A. Stability Related Accidents
   1. Forward tip over
   2. Lateral tip over
B. Operations Related Accidents
C. Pedestrian Related Accidents
   1. Forward
   2. Reverse
   3. Tailswing
D. Slip and Fall Accidents
E. Maintenance / Servicing Accidents

Safe operation requires a systematic check of
the Man
the Machine
and the Environment.

The following checklists can be used as guides to fulfill your responsibility for reach stacker safety.

https://truckmanualshub.com/

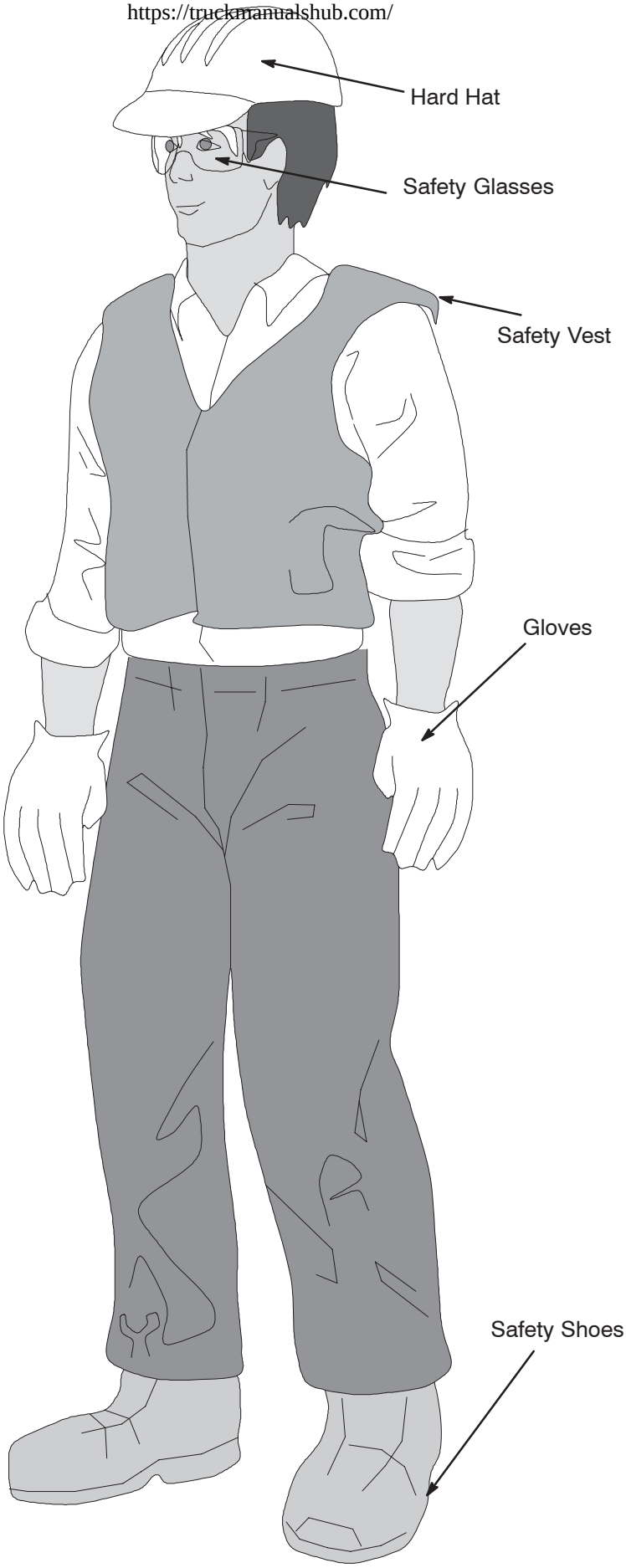

https://truckmanualshub.com/

Man Check

The Operator should fully understand:

- ☑ OSHA operating rules found in 29 CFR 1910.178; Appendix A in this booklet
- ☑ ANSI B56.1 rules for operating a powered industrial truck; Appendix B in this booklet
- ☑ The Operator's Guide for the reach stacker
- ☑ Manufacturer's Safety Booklet
- ☑ Manufacturer's Safety Video
- ☑ Manufacturer's Service Bulletins
- ☑ Content and meaning of all machine decals

The operator should:

- ☑ Be 18 years of age or older per OSHA 29 CFR 570.58 (order 7)
- ☑ Satisfactorily complete manufacturer's written test
- ☑ Satisfactorily demonstrate driving skills to the employer
- ☑ Satisfactorily complete independent testing (company's written and hands-on certification course)
- ☑ Know employer's safety rules
- ☑ Be in good health and not be suffering from any physical limitations that would inhibit safe reach stacker operation
- ☑ Not be under the influence of drugs or alcohol including prescription or over-the-counter medications
- ☑ Wear protective clothing needed for safe operation
  - ☑ hard hat
  - ☑ safety shoes
  - ☑ safety glasses
  - ☑ heavy gloves
  - ☑ hearing protection
  - ☑ reflective clothing
- ☑ Know where fire extinguishers are located and how to use the extinguishers
- ☑ Know where first aid accessories are located and how to summon help
- ☑ Be familiar with all reach stacker functions and safety related equipment
- ☑ Be fully knowledgeable of the environment in which the reach stacker will be operating

https://truckmanualshub.com/

Machine Check

Check Daily Before The Reach Stacker Is Placed In Service:

- ☑ Parking brake set / wheels chocked if on an incline
- ☑ Attachment is fully lowered
- ☑ All operational and safety literature in the Vehicle Information Package (VIP) behind the seat
- ☑ The cab is free of clutter
- ☑ Mirrors in place, clean, and properly adjusted
- ☑ All glass is clean and unbroken
- ☑ All machine safety / operation decals are in place and legible
- ☑ Steps, walkways, and handholds
  - ☑ Free of oil, grease, hydraulic fluid, ice, snow, debris, etc.
  - ☑ Anti-slip pads are in place
  - ☑ Free of any damage
- ☑ Tires are undamaged and properly inflated
- ☑ Cylinders are not leaking or damaged
  - ☑ Lift
  - ☑ Boom extension
  - ☑ Expansion
  - ☑ Steering
  - ☑ Damping
  - ☑ Sideshift
  - ☑ Twistlocks
  - ☑ Pile Slope (if equipped)
  - ☑ Cab Raise (if equipped)
- ☑ Electrical connectors, wires, cables, and junction boxes are not loose or damaged
- ☑ Hydraulic hoses and connectors are not leaking nor damaged
- ☑ Boom, attachment, and frame are free of cracks, broken welds, loose bolts, dents, and other obvious damage
- ☑ Attachment linkages, twistlocks, guide blocks, plungers, switches, expansion pads, etc.
- ☑ Engine compartment hood-lock in place and functional
- ☑ Engine compartment is clean; hoses, clamps, and belts are in place and free of damage
- ☑ Fire extinguishers are fully charged and functional
- ☑ Operator cab structure, braces, machine structure - no breaks, cracks, or broken welds
- ☑ Doors and latches are in good condition and functional
- ☑ Engine has no unusual noise
- ☑ All gauges and indicators are functional
- ☑ Air pressure is at proper level
- ☑ Fluids – see the Maintenance Manual for the reach stacker
  - ☑ Screens free of dirt and debris
  - ☑ Fuel
  - ☑ Engine oil
  - ☑ Transmission oil
  - ☑ Hydraulic fluid
- ☑ Coolant level
- ☑ Battery electrolyte
- ☑ Battery terminals free from corrosion
- ☑ Filters
  - ☑ Air cleaner
  - ☑ Hydraulic fluid

https://truckmanualshub.com/

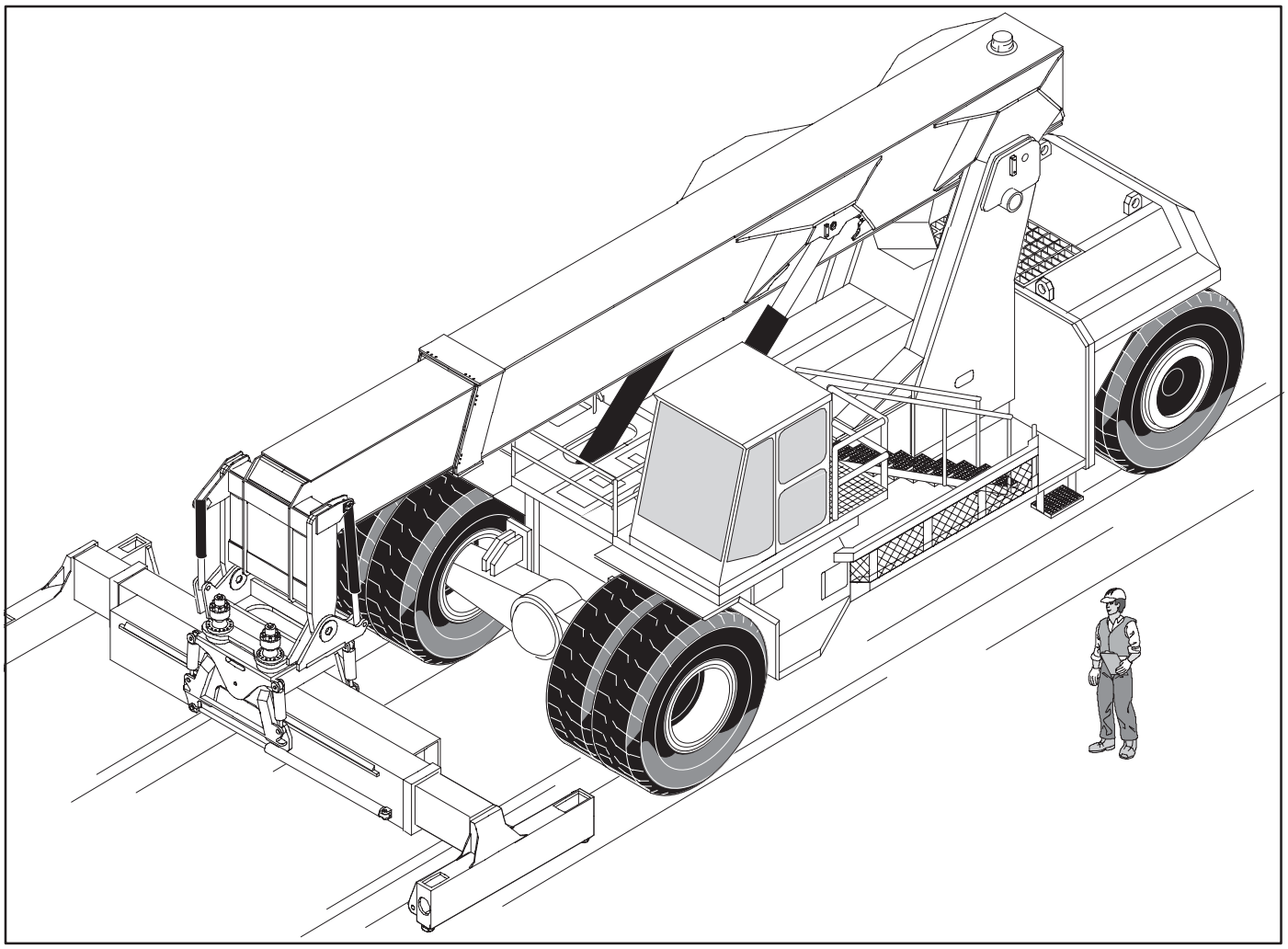

- ☐ All reach stacker functions operate properly
  - ☐ Attachment expansion
  - ☐ Pile slope
  - ☐ Attachment rotation
  - ☐ Side shift
  - ☐ Boom lift
  - ☐ Boom extension
  - ☐ Twistlocks
- ☐ Brakes functional – service, spotting, and mechanical
- ☐ Steering is functional
- ☐ Operator controlled horn is functional
- ☐ Alarms and beacons are functional
  - ☐ Reverse
  - ☐ Forward
  - ☐ Other
- ☐ Flashing beacons are functional
- ☐ Camera system is functional
- ☐ Seat belt is functional
- ☐ All daily checks shown in the Operator's Guide have been checked
- ☐ Ensure wheels are not chocked
- ☐ Cab Positioning System

https://truckmanualshub.com/

Environment Check

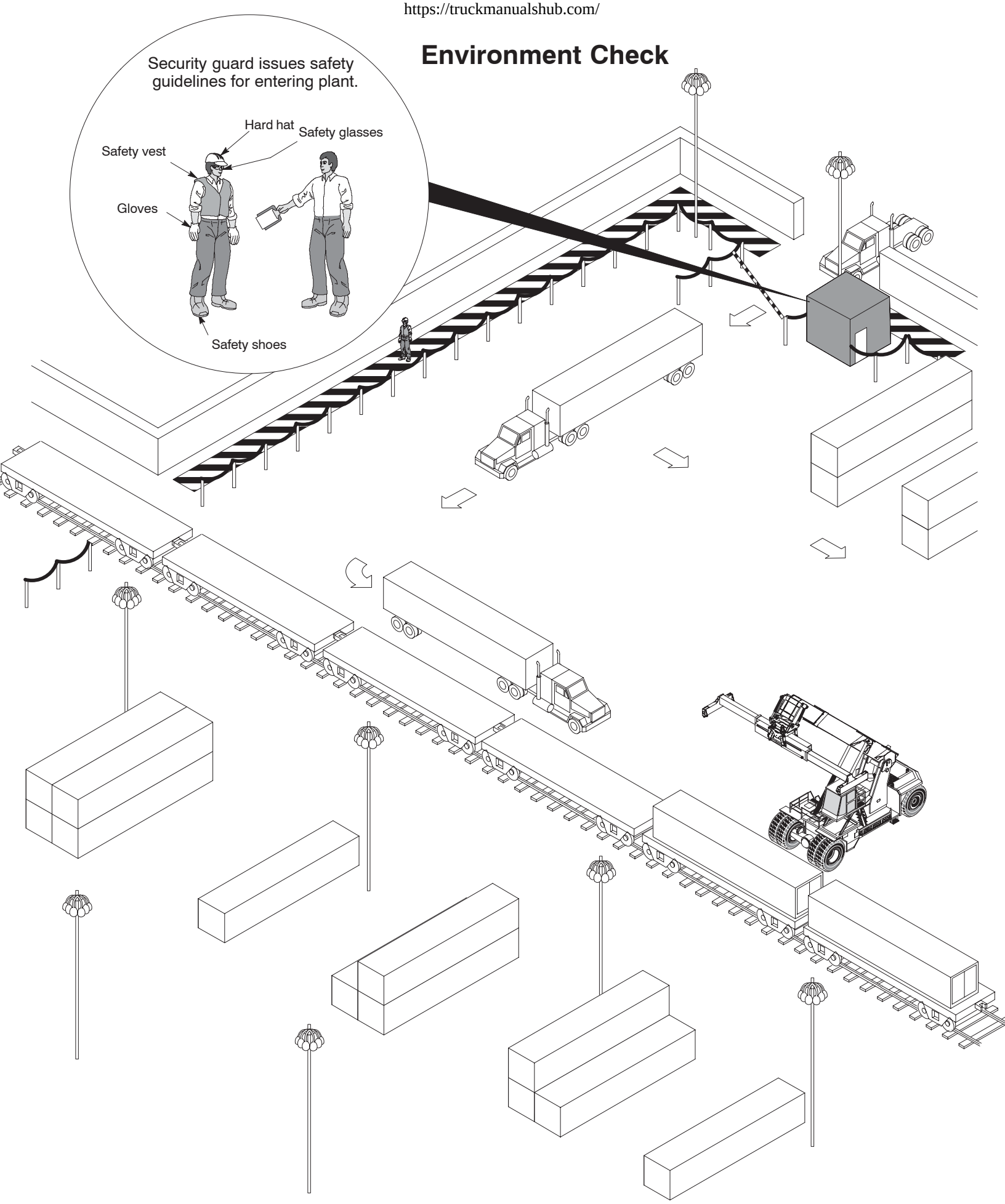

https://truckmanualshub.com/

Check The Work Area Daily Before Operating The Machine.
Make Sure:

- ☑ Pedestrians are restricted from reach stacker operation areas
- ☑ Pedestrian walk paths are clearly marked and guarded
- ☑ Reach stacker travel lanes are clearly marked
- ☑ Pedestrian barriers are in place
- ☑ Pedestrians are wearing high visibility vests and hats
- ☑ Transient personnel (truck drivers) have received written rules on:
  - ☑ dismounting trucks
  - ☑ staying clear of reach stacker operations
- ☑ Safe access is provided to restrooms and break areas
- ☑ Control measures are in place at pedestrian / machine intersections
- ☑ Aisleway mirrors at blind intersections are in place and clean
- ☑ All persons are knowledgeable of workplace dangers
- ☑ Adequate lighting is in place
- ☑ Work rules are in place and enforced
- ☑ Reach stacker operator/pedestrian communications are in place and operable
- ☑ Operating surfaces are free of potholes and debris
- ☑ Safe speed limits are established, posted, and enforced

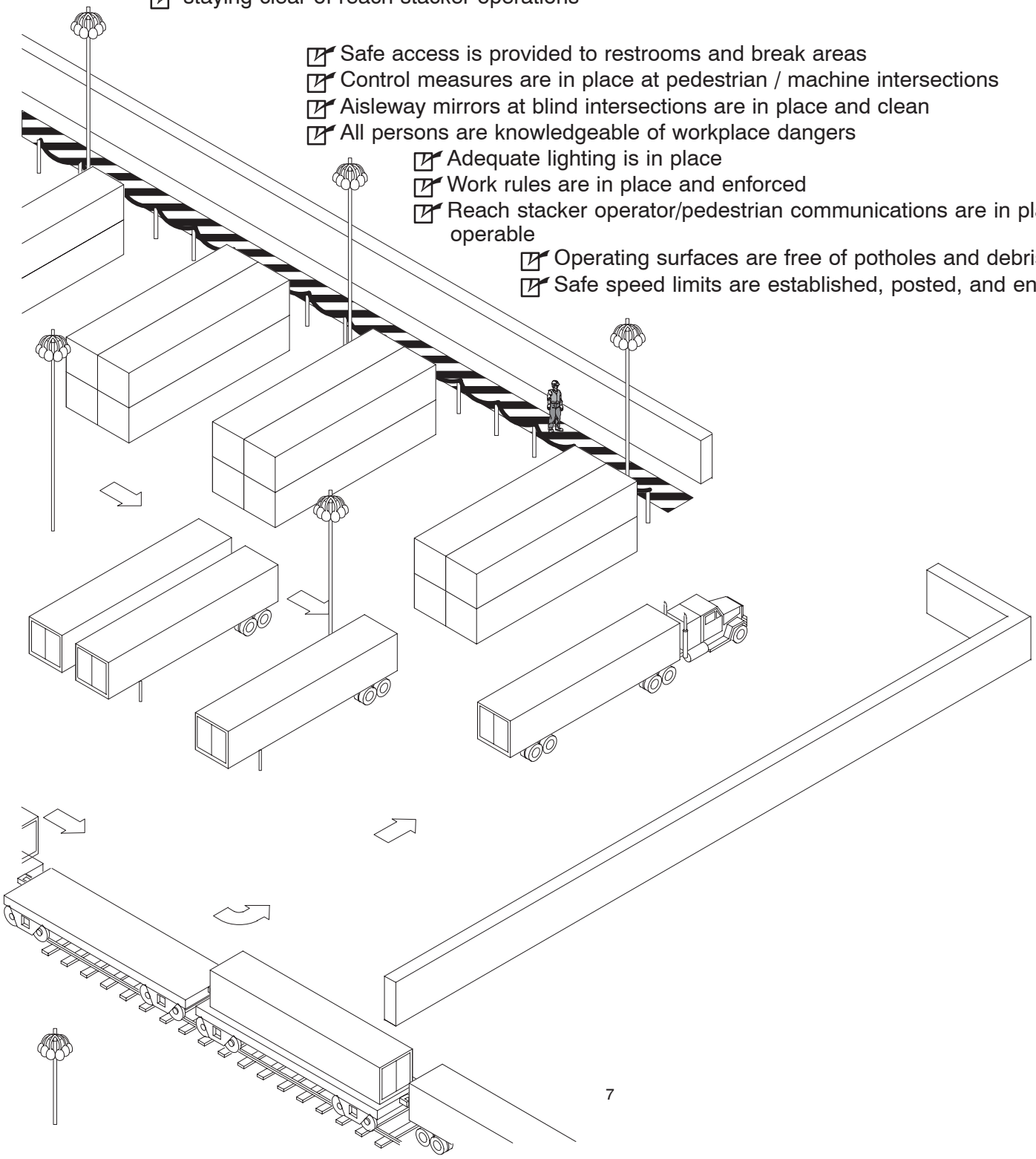

https://truckmanualshub.com/

TAYLOR MACHINE WORKS, INC.
LOUISVILLE, MISSISSIPPI

MODEL: _____ **SERIAL NO:** _____

DATE OF MANUFACTURE: _____

ATTACHMENT: _____

BASIC MODEL CAPACITY _____ @ _____ **TO** _____ **HIGH**

TOTAL VEHICLE WEIGHT: _____

STEER AXLE WEIGHT: _____

CAPACITY WITH ATTACHMENT LISTED ABOVE.

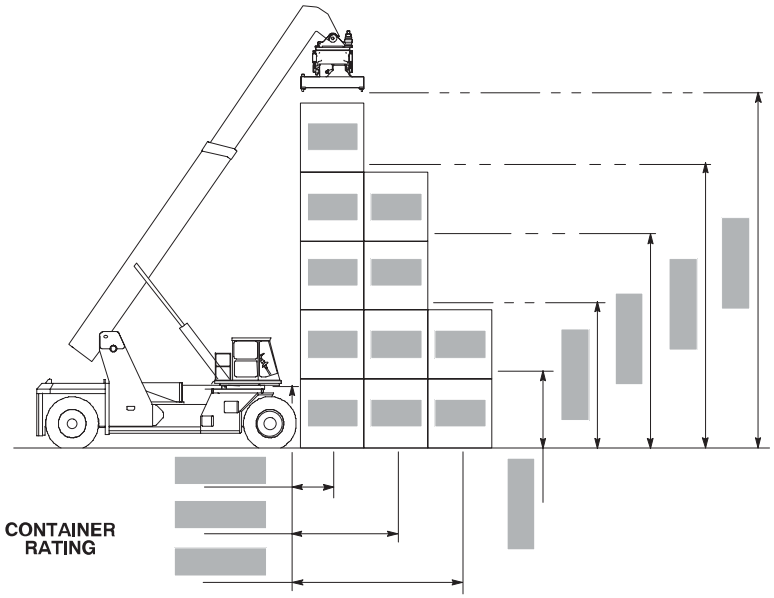

RATINGS ARE X 1000

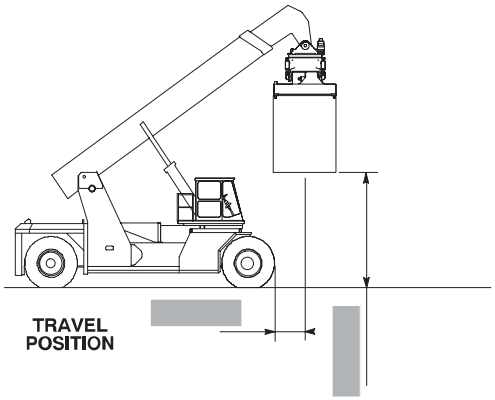

TRAVEL ONLY WITH CONTAINER AT TRAVEL POSITION AS SHOWN. RATING SHOWN WITH LOAD CENTERED LEFT TO RIGHT. CAB FULLY LOWERED, AND BOOM RETRACTED. FOR OTHER CAPACITIES CONSULT THE MANUFACTURER.

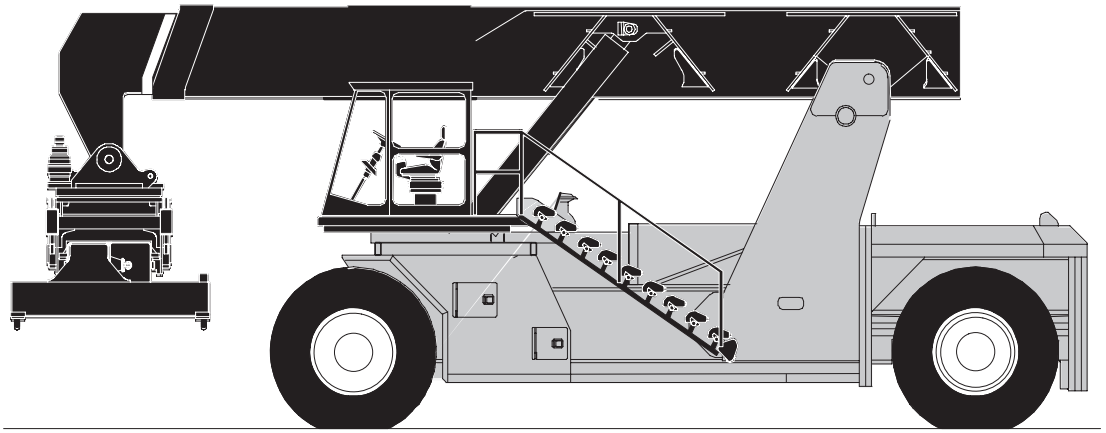

https://truckmanualshub.com/

A. Stability Related Accidents

Some causes of stability related accidents are:

- Operating the reach stacker without proper training.
- Operating the machine without understanding that rated capacity is dependent on boom position.
- Braking too hard or too quickly with a load; accelerating too quickly.
- Turning too sharply or too quickly; turn the steering wheel slowly.
- Raising the load when wind velocity is excessive.
- Operating the machine on uneven surfaces or in unstable yard conditions.
- Extending or lowering the boom with a load not over a stack, or railcar.
- Traveling with the load raised too high or extended too far.
- Traveling without the seat belt fastened.
- Jumping from a moving or tipping machine.
- Handling an off-center load improperly.
- Traveling on an incline with the load downhill
- Backing away from a load in a rack or stack without completely releasing the load
- Operating the machine in areas with inadequate overhead clearance

Understanding the following definitions is critical to understanding the principles of stability.

Center of Gravity
that point of an object at which all of the weight of an object can be considered to be concentrated.

Counterweight
is the weight that is a part of the basic structure of a truck that is used to offset the weight of a load and to maximize the resistance of the vehicle to tipping over.

Fulcrum
is the axis of rotation of the truck when it tips over.

Grade
is the slope of any surface that is usually measured as the number of feet of rise or fall over a hundred foot horizontal distance (this measurement is designated as a percent).

Lateral stability
is the resistance of a truck to tipping over sideways.

Line of action
is an imaginary vertical line through the center of gravity of an object.

Load center
is the horizontal distance from the front tires to the line of action through the center of gravity of the load.

Longitudinal stability
is the resistance of a truck to overturning forward or rearward.

Moment
is the product of the weight of the object times the distance from a fixed point. In the case of a reach stacker, the distance is measured from the point that the truck will tip over to the line of action of the load. The distance is always measured perpendicular to the line of action.

Track
is the distance between wheels on the same axle of a vehicle.

Wheelbase
is the distance between the centerline of the front and rear wheels of a vehicle.

https://truckmanualshub.com/

Figure 1

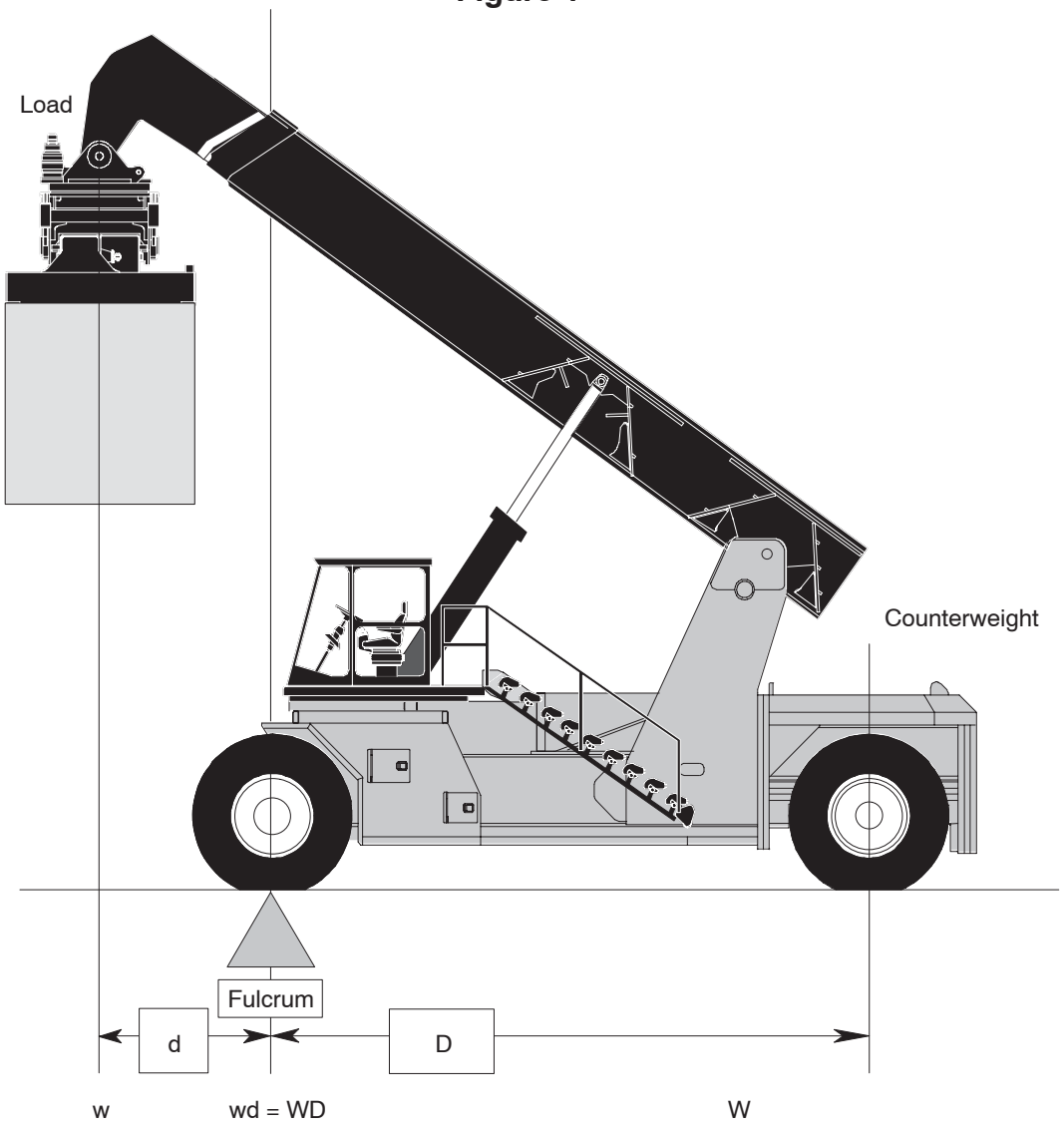

Figure 2

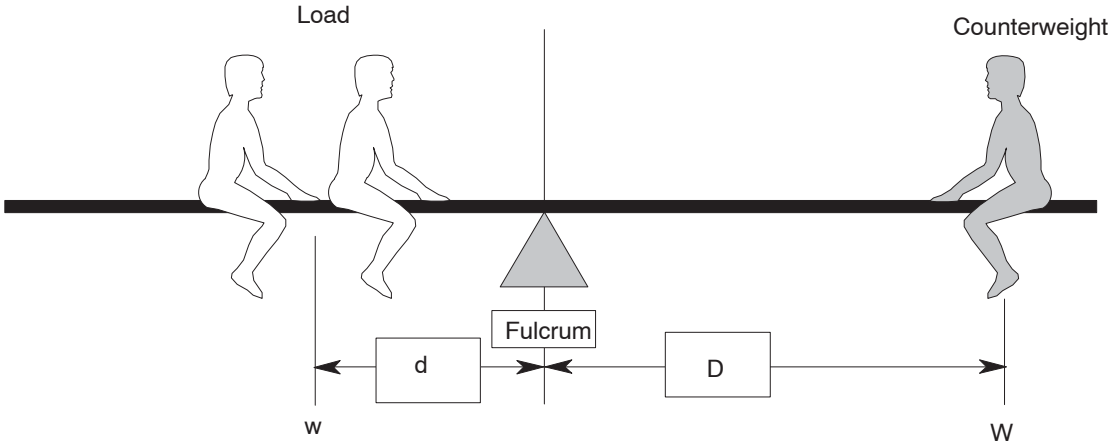

weight (w) multiplied by distance (d) = Weight (W) multiplied by Distance (D)
or wd = WD

https://truckmanualshub.com/

The Principles of Counterbalance

A reach stacker (like the see-saw or any counterbalanced equipment) has a balance point or fulcrum. The fulcrum for the longitudinal (forward and rearward) axis of the machine is the centerline of the front tires.

The principles of counterbalance can be explained as follows.

The weight of the portion of the reach stacker located rearward of the front tire centerline, Figure 1, represents the weight of one child located at distance “D” from the fulcrum, Figure 2.

The weight of the boom attachment, and the load itself, Figure 1, represent the weight of the children, Figure 2, located at distance “d” from the fulcrum.

On the see-saw, the children move either in or out from the fulcrum, relocating their weight at distances “d” or “D” until they balance each other. The see-saw balance can be illustrated by stating that weight “w” multiplied by distance “d” equals weight “W” multiplied by distance “D”. This illustrates that various combinations of weight “multiplied by distance” can create a balanced condition.

The principles of stability in a reach stacker are like a see-saw in that the weight of the load and its distance from the fulcrum determine counterbalance requirements.

Remember that the reach stacker **is different** because the weight rearward of the drive axle centerline (fulcrum) multiplied by the distance to the “CG” (center of gravity) of that weight must always be greater **by a wide margin** than the weight forward of the drive axle multiplied by the distance to its “CG.” If a balanced condition is approached, dynamic forces involved in **stopping**, **traveling,** or **tilting** can cause a dangerous vehicle upset.

The weight of the reach stacker located rearward of the fulcrum and the “CG” of this weight does not change; therefore, **counterbalance is always a fixed value.**

The weight of the **boom and attachment is also a fixed weight;** but, the distance to the **“CG” forward** of the **fulcrum is variable** depending on the **angle and extension** of the **boom.**

The **moment** of the **load changes** as its **location forward** of the **fulcrum changes**. Its **location** is **dependent** upon the boom angle, and the extended length, of the boom.

The operator **must control** these **variables** and ensure that the **total weight forward** of the **fulcrum multiplied** by the **location** of the **combined center of gravity** plus the **other dynamic forces of operation never exceed the counterbalance of the reach stacker.**

Following these safety rules and using good, common-sense judgement will help ensure safe operation of the reach stacker.

Reach stackers are designed to keep everything in proper balance; many different factors affect this balance:

- capacity of the machine (at a specified load center)
- weight of the load and its center of gravity
- position of the load on the attachment
- type and weight of the attachment
- acceleration or braking
- condition of the ground surface and grade angle
- lift and extension of the boom
- weather conditions

The operator must consider these factors before operating the machine. Each of these factors can affect safe operation of the machine.

The balance for proper operation is safe if all different parts of the machine are properly maintained AND the machine is safely operated by you, the operator.

For example, the rated capacity of a machine is set for a special combination of the machine, boom, and attachment.

If the attachment or boom is changed, the capacity may change. You must know what the actual changes are and what the actual capacity is. (See Appendix A, paragraph a.4.)

https://truckmanualshub.com/

For your safety you **must:**

– **know** the reach stacker's size
– **know** the reach stacker's operating capacity
– **know** how to operate the reach stacker
– **know** what safety features are available
– **know** the safe operating procedures at your work site
– **check** the reach stacker daily for proper operation
– **use** every safety feature
– **follow** safe operating procedures
– **be alert** and use common sense

WARNING: *Death or serious injury may result from improper operation of this machine.*

Many safety features are designed into reach stackers to help protect you (the operator), your fellow workers, and the property in the area where you work.

But . . .

NO safety feature . . NO safety equipment is effective unless you operate the machine properly – every time!

The instructions in this manual, the OSHA Standards, and ASME/ANSI B56.1 are all intended to advise how to operate this vehicle safely. These instructions are primarily directed at one or the other of the two basic modes of reach stacker operation. They are (a) the loading or stacking mode, and (b) the traveling mode.

The transitional operation between these modes must be accomplished with extreme care.

Regardless of all the safety features we build into our equipment, safe operation still largely depends upon the operator's safe, cautious observance of safety rules.

Operation and Stability

The rated capacity of a counterbalanced reach stacker applies only when the truck is on level ground and the load is at the proper height and distance from the front wheels.

It is important that you understand this capacity is reduced and the truck is less stable when:

– the boom is raised
– the boom is extended
– the truck is on an incline

Reach stacker stability is dependent on the truck's three point suspension represented by Figure 3.

The truck is supported on the drive axle tires (points A and B) and the centerline of the steer axle pivot (point C).

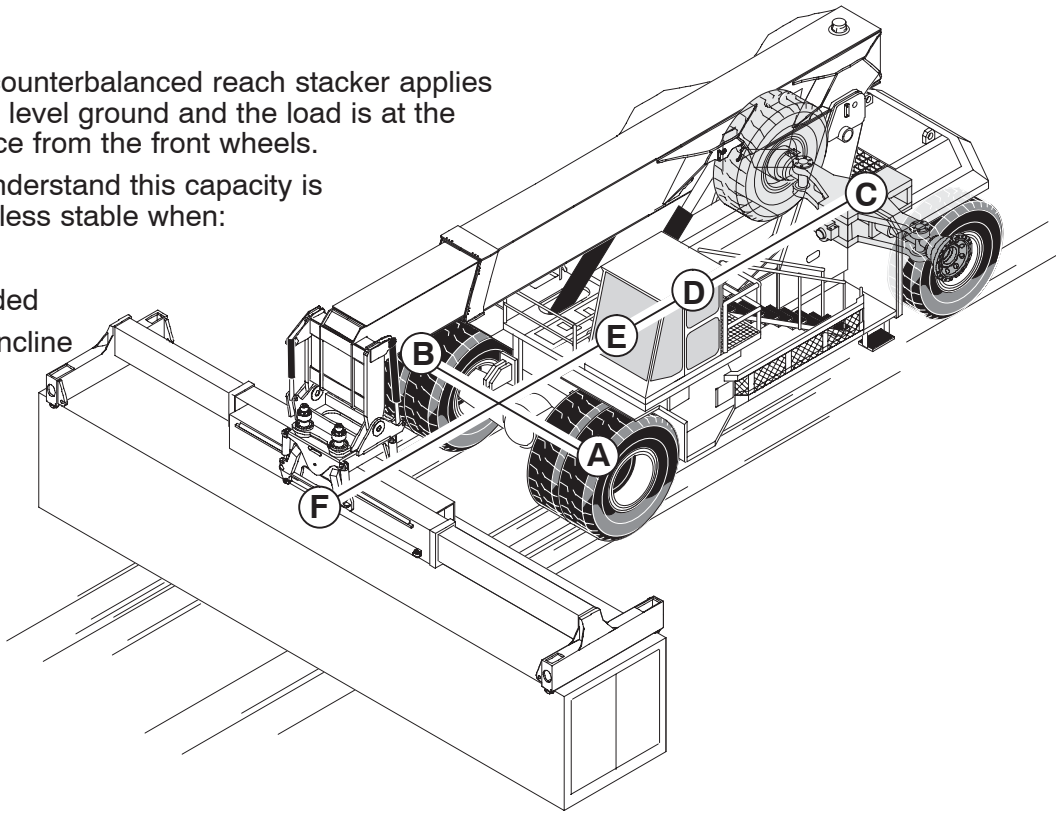

Figure 3

https://truckmanualshub.com/

Point D represents the location of the center of gravity of a truck without a load. Point F represents the center of gravity of the load. Point E represents the **combined** center of gravity of both the empty truck and the load.

The combined center of gravity (point E) must remain within the triangle formed by points A, B, and C. Stability depends on how close point E comes to the edge of this triangle. If for any reason this point exceeds the triangle's boundary, the truck will tip.

Forward Stability

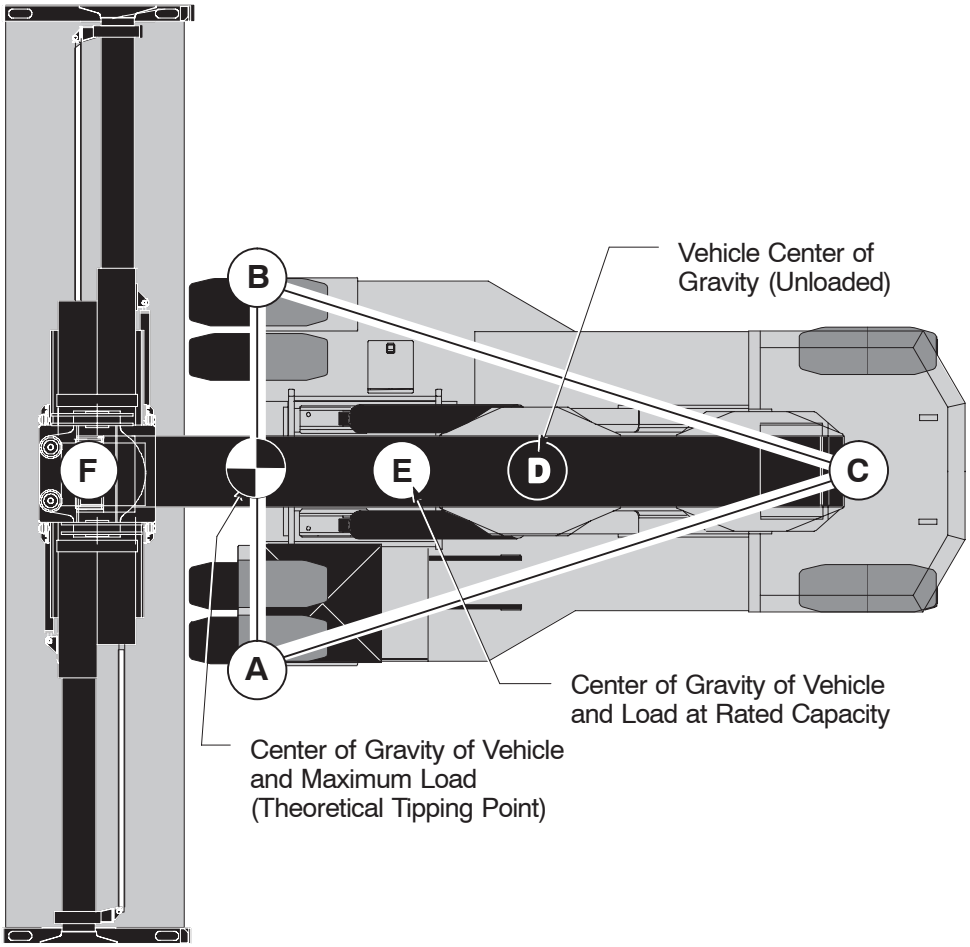

NOTES:

1. When the vehicle is loaded, the combined center of gravity shifts toward line A-B. Theoretically a load that will cause forward tipover will result in the CG at or past the line A-B. **Therefore, in actual practice, the combined CG should never be at line A-B.** Rated loads will result in the combined CG always being well within the stability triangle.
2. Simply adding additional counterweight will not solve forward stability issues, because added counterweight will cause the truck center of gravity to shift toward point C and will result in a truck that is less stable laterally.

Forward stability is directly affected by how close Point E is to the line connecting points A and B. If for any reason the combined center of gravity of both truck **and** load crosses line AB, the truck will tip forward.

https://truckmanualshub.com/

WARNING: *This can occur when:*
- *the load exceeds rated capacity for boom position being used*
- *the boom is lowered or extended with the load elevated*
- *stopping the truck while the load is elevated*
- *accelerating the truck rearward too fast while the load is elevated.*

Exercise **extreme caution** when traveling or stacking and unstacking loads. Sudden stops, forward tilts, or any movements that allow the load to shift forward will cause point E to move forward toward line AB, reducing forward stability.

Side Stability

The distance point E is from the lines connecting points A and C and points B and C affects side stability. If point E approaches or exceeds either line, the truck will tip sideways.

WARNING: *This can occur when:*
- *loads are handled off-center (side shifting the load)*
- *stacking sideways on an incline*
- *turning sharply with the attachment elevated either **with** or **without** a load.*

Exercise extreme caution when traveling, stacking, or unstacking loads because side movement or side tipping of the truck due to an elevated attachment and an elevated load causes point E to move toward lines AC or BC and reduce side stability.

OSHA 29 CFR Part 1910, Appendix B-7.1, Dynamic Stability

Up to this point, we have covered stability of a reach stacker without consideration of the dynamic forces that result when the vehicle and load are put into motion. The transfer of weight and the resultant shift in the center of gravity due to the dynamic forces created when the machine is moving, braking, cornering, lifting, tilting, and lowering loads, etc., are important stability considerations.

Additional care must be taken when handling swinging loads such as those suspended by slings or cables or those loads handled by special attachments such as hooks. Swinging loads cause additional forces from the dynamics of the swinging motion to be added to the static forces acting on the machine. These dynamic forces reduce the stability margin and must be taken into account during operation.

https://truckmanualshub.com/

⚠ WARNING

Dangerous Action
Operating this machine without proper training.

What Can Happen
You can cause death or serious injury to yourself or someone else.

Or, you can cause physical damage to surrounding structures or property.

How to Avoid the Danger
Refuse to operate the machine without proper training.

Additionally, OSHA requires refresher training and evaluation of the effectiveness of that training to ensure the operator has the knowledge and skills needed to operate the truck safely.

Refer to the complete OSHA 29 CFR 1910.178 text in Appendix A for more information on training and safe truck operation. Training assistance can be obtained by contacting the dealer from which the machine was purchased or leased.

Training booklets shipped with the machine are to be used in combination with OSHA Standard 29 CFR 1910.178 (included as Appendix A), ANSI B56.1 For the User (included as Appendix B), and your employer's instructions.

Training assistance can be obtained by contacting the dealer from which the machine was purchased or leased.

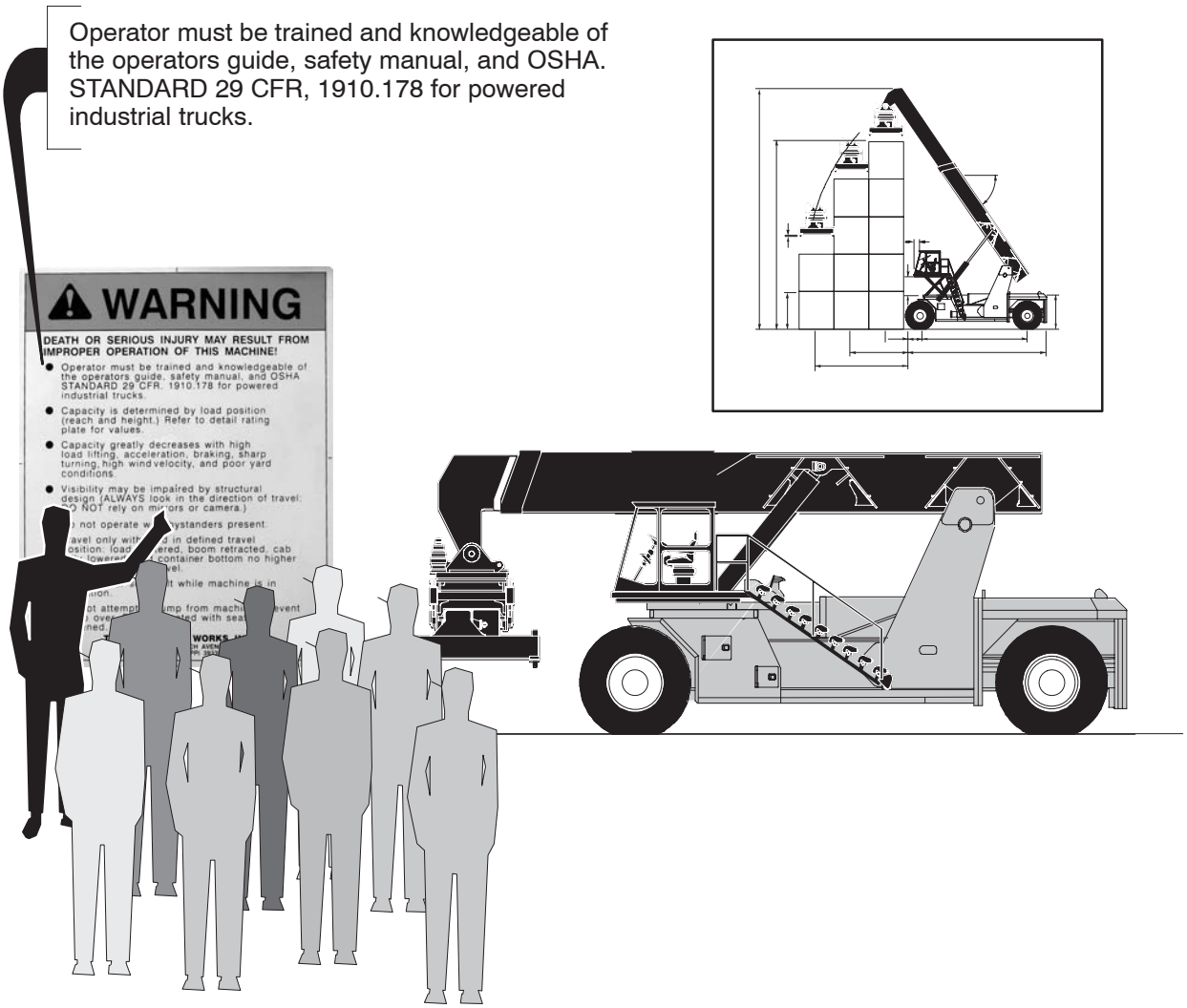

https://truckmanualshub.com/

⚠ WARNING

Operators should receive training in the following areas:

A. Operating instructions, warnings, and precautions for the specific type of truck the operator will be authorized to operate;

B. Differences between the truck and the automobile;

C. Truck controls and instrumentation;

D. Engine or motor operation;

E. Steering and maneuvering;

F. Visibility;

G. Attachment operation;

H. Vehicle capacity;

I. Vehicle stability;

J. Vehicle inspections and maintenance;

K. Refueling and recharging of batteries;

L. Operating limitations;

M. Surface conditions where the vehicle will be operated;

N. Composition of loads and load stability;

O. Load manipulation, stacking and unstacking;

P. Pedestrian traffic;

Q. Narrow aisles and other restricted places where the vehicle will be operated;

R. Hazardous locations;

S. Ramps and other sloped surfaces;

T. Closed environments and carbon monoxide or diesel exhaust hazards

U. Other unique or potentially hazardous environmental conditions in the workplace that could affect safe operation.

Additionally, OSHA requires refresher training and evaluation of the effectiveness of that training to ensure the operator has the knowledge and skills needed to operate the truck safely.

Refer to the complete OSHA 29 CFR 1910.178 text in Appendix A for more information on training and safe truck operation. Training assistance can be obtained by contacting the dealer from which the machine was purchased or leased.

https://truckmanualshub.com/

⚠ WARNING

Dangerous Action

Operating the machine without understanding that rated capacity is dependent on boom position.

What Can Happen

Death or serious injury could occur.

The machine could tip over.

How to Avoid the Danger

Understand that the machine's rated load capacity is based on the tilt of the boom and the amount the boom is extended. Refer to the detailed rating plate in the cab for the capacity at various boom positions.

Capacity is determined by load position (reach and height.) Refer to detail rating plate for values.

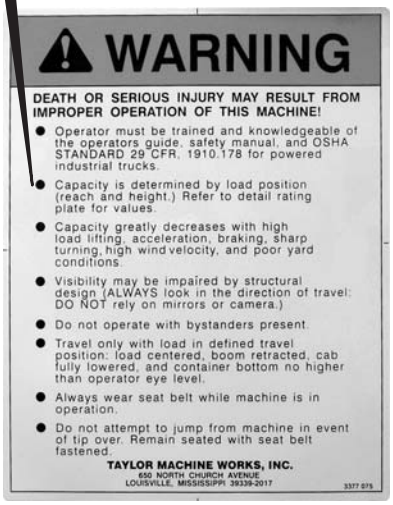

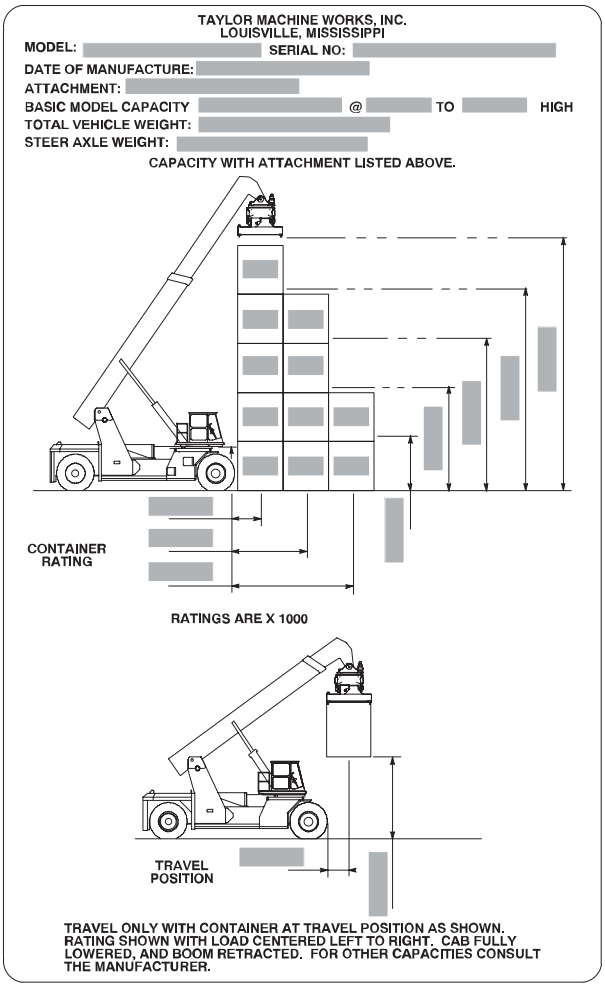

https://truckmanualshub.com/

⚠ WARNING

Dangerous Action
Braking too hard or too quickly with a load or accelerating too quickly.

What Can Happen
The machine can tip over.

How to Avoid the Danger
Apply the brakes smoothly and evenly. Accelerate in a like manner.

A sharp braking action can slow the machine, but can not slow the load; the proper balance of the machine and the load will be shifted. A quick acceleration action could likewise cause the load to be lost or the machine to be tipped.

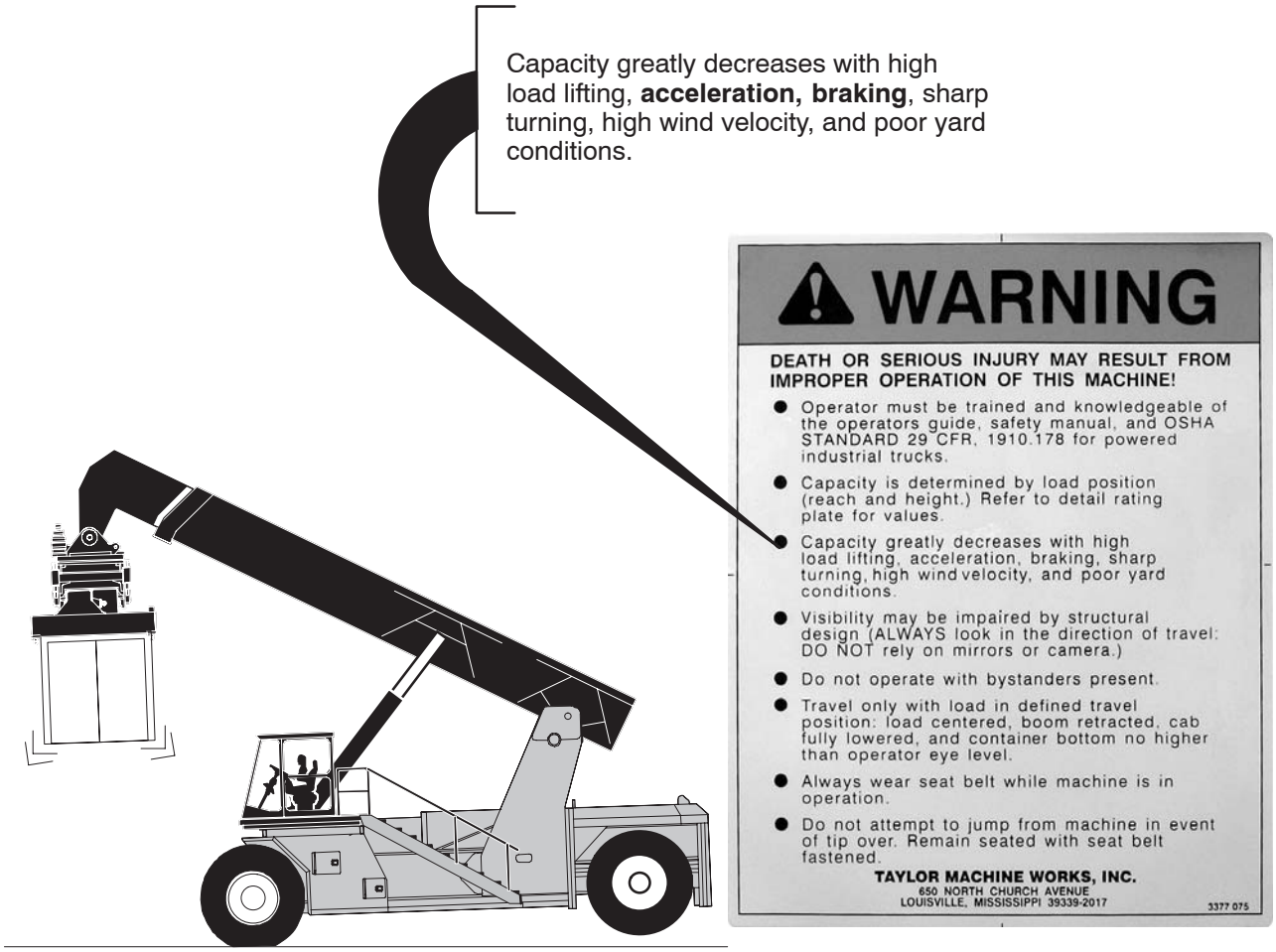

https://truckmanualshub.com/

⚠ WARNING

Dangerous Action
Turning too sharply or too quickly.

What Can Happen
The machine can tip over.

How to Avoid the Danger
Make turns smoothly and evenly; turn the steering wheel slowly.

Because the load is securely attached to the lift truck the machine may tip over because of improper turning.

https://truckmanualshub.com/

⚠ WARNING

Dangerous Action
Raising the load when wind velocity is excessive.

What Can Happen
The machine can tip over.

How To Avoid The Danger
Do **not** raise the load to high elevations when wind velocity is excessive (wind speeds of 30 mph or greater). The load will act as a sail and “push” the load too much.

https://truckmanualshub.com/

⚠ WARNING

Dangerous Action
Operating the machine on uneven surfaces or in unstable yard conditions.

What Can Happen
Machine control can be lost; the machine and load can jerk or tip.

How to Avoid the Danger
Do **not** operate the machine when pot holes or objects create an unsafe yard. Report pot holes to your supervisor.

Do **not** run over boards, rocks, or trash on the yard.

Remove the obstacles or have them removed.

https://truckmanualshub.com/

⚠ WARNING

Dangerous Action
Extending or lowering the boom with a load not over a stack or railcar.

What Can Happen
The machine and its load can tip over causing death or serious injury.

How to Avoid the Danger
Lower the load vertically by retracting the boom as the boom is being lowered. Know the load being lifted and observe the rating plate values.

https://truckmanualshub.com/

⚠ WARNING

Dangerous Action
Traveling with the load raised too high.

What Can Happen
The machine could tip over causing death or serious injury.

How to Avoid the Danger
Lower the load immediately after clearing a stack!

Travel with the load in the lowest posible position that allows good visibility. Never travel with the load higher than the operator's line of sight!

Capacity greatly decreases with high **load lifting**, acceleration, braking, sharp turning, high wind velocity, and poor yard conditions.

Travel **only** with load in **defined travel position**: load centered, boom retracted, **cab fully lowered**, and container bottom no higher than operator eye level.

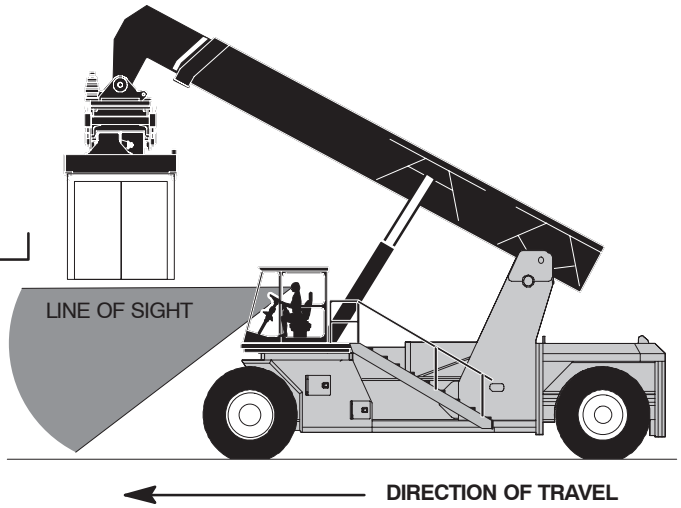

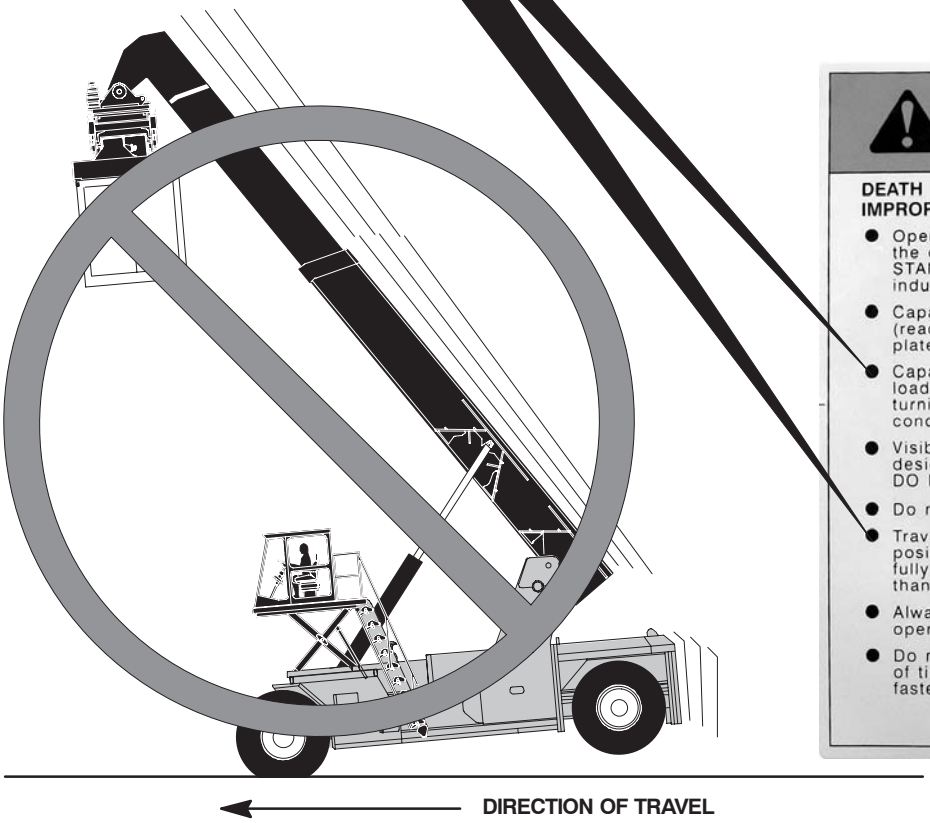

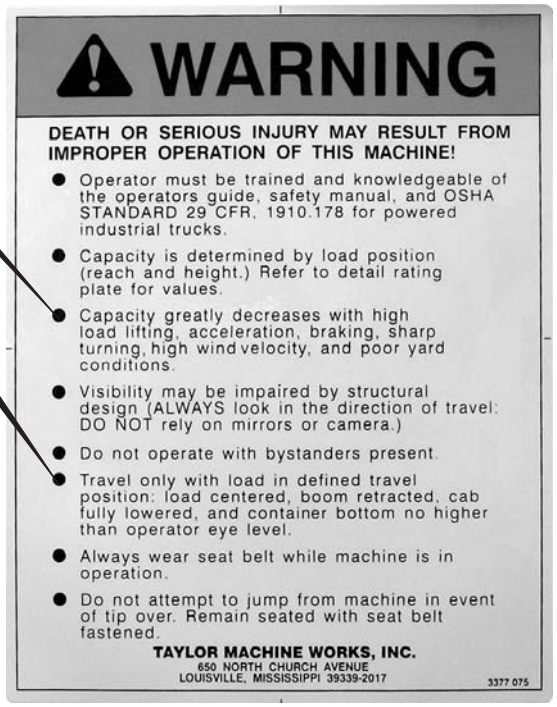

⚠ WARNING

DEATH OR SERIOUS INJURY MAY RESULT FROM IMPROPER OPERATION OF THIS MACHINE!

- Operator must be trained and knowledgeable of the operators guide, safety manual, and OSHA STANDARD 29 CFR, 1910.178 for powered industrial trucks.
- Capacity is determined by load position (reach and height.) Refer to detail rating plate for values.
- Capacity greatly decreases with high load lifting, acceleration, braking, sharp turning, high wind velocity, and poor yard conditions.
- Visibility may be impaired by structural design (ALWAYS look in the direction of travel: DO NOT rely on mirrors or camera.)
- Do not operate with bystanders present.
- Travel only with load in defined travel position: load centered, boom retracted, cab fully lowered, and container bottom no higher than operator eye level.
- Always wear seat belt while machine is in operation.
- Do not attempt to jump from machine in event of tip over. Remain seated with seat belt fastened.

TAYLOR MACHINE WORKS, INC.
650 NORTH CHURCH AVENUE
LOUISVILLE, MISSISSIPPI 39339-2017

3377 075

https://truckmanualshub.com/

⚠ WARNING

Dangerous Action
Traveling without the seat belt fastened.

What Can Happen
Death or serious injury could occur if the machine should tip over or if you lose control and strike a fixed object.

How to Avoid the Danger
Always travel with your seat belt properly and securely fastened. Do not allow riders.

https://truckmanualshub.com/

⚠ WARNING

Dangerous Action
Jumping from a moving or tipping machine.

What Can Happen
Death or serious injury could occur if you jump from a tipping machine.

How to Avoid the Danger
Remain seated in the operator's station with the seat belt securely and properly fastened whenever the machine is in motion. If the machine tips:

- do not jump
- brace your feet firmly on the floor
- grip the steering wheel tightly
- lean away from the direction of the fall.

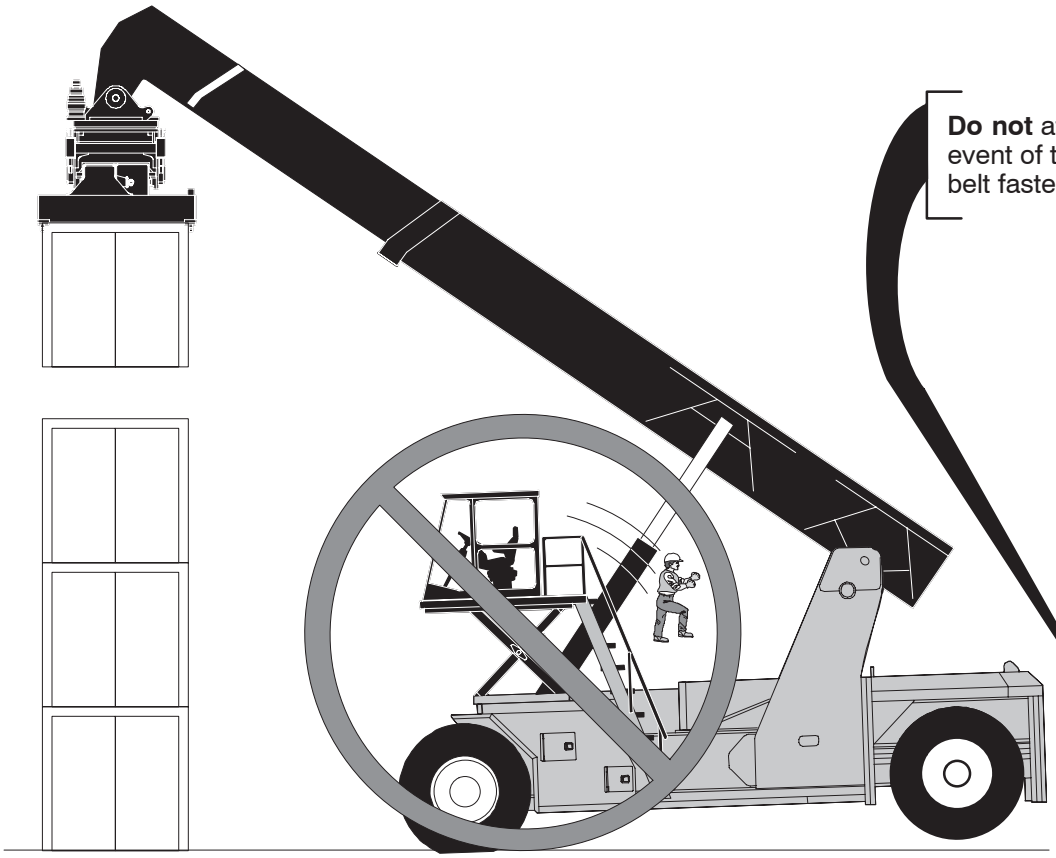

Do not attempt to jump from machine in event of tip over. Remain seated with seat belt fastened.

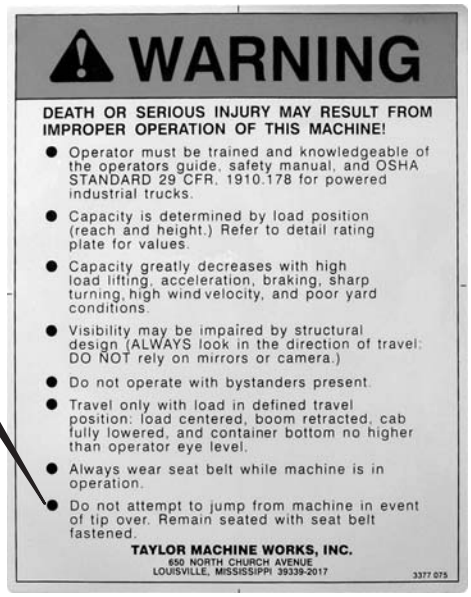

https://truckmanualshub.com/

⚠ WARNING

Dangerous Action
Handling an off-center load improperly.

What Can Happen
Death or serious injury can result.

The lifting action can be restricted, the load dropped, and / or the machine tipped over.

How To Avoid The Danger
Always lift the load properly in accordance with procedures described in this booklet and the “Operator’s Guide”.

Use the attachment side shift to properly balance the load before traveling.

Never attempt to lift an out-of-balance load without using extreme caution.

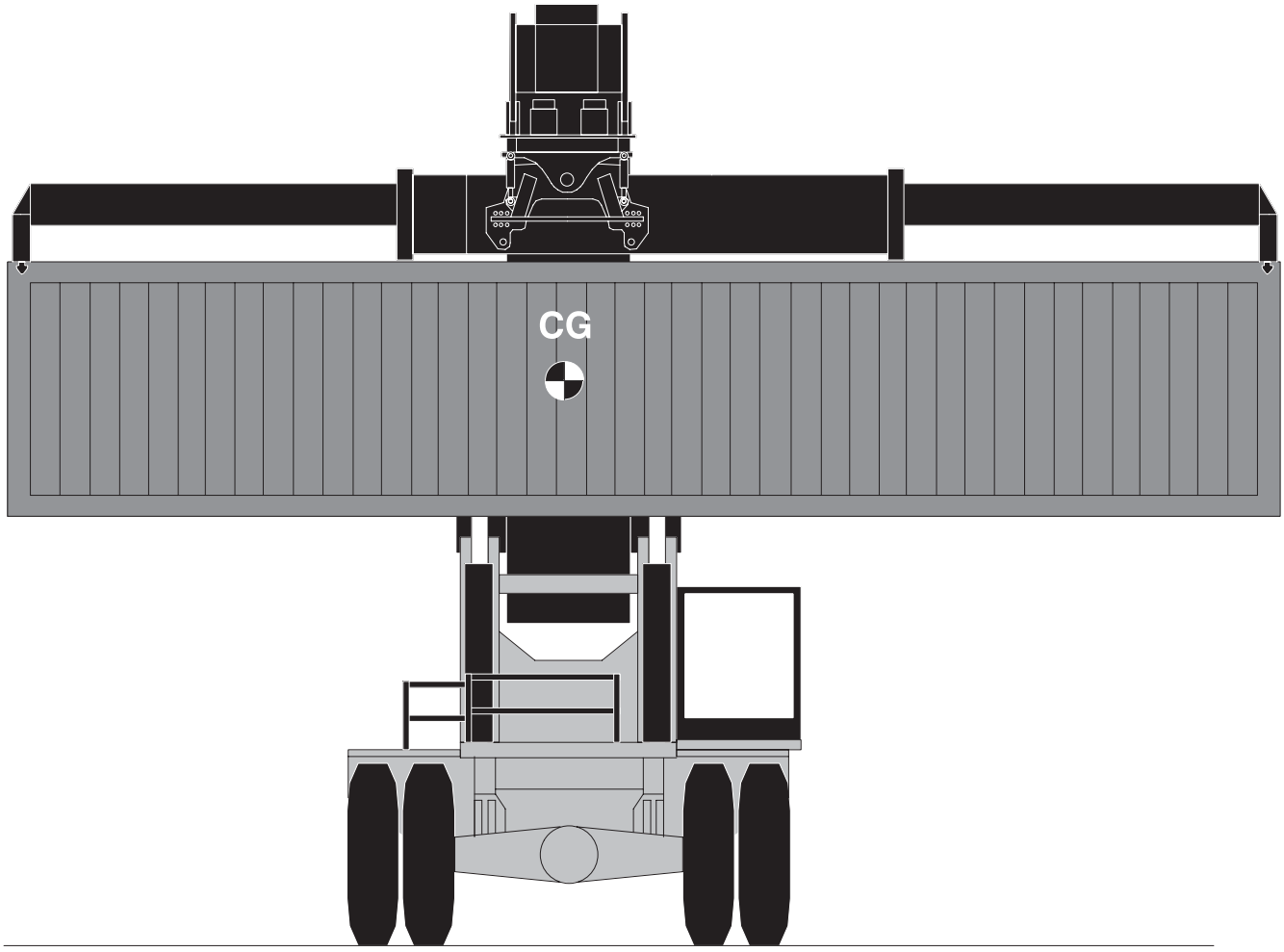

https://truckmanualshub.com/

B. Operations Related Accidents

Some causes of operations related accidents are:

- Operating the reach stacker before checking for proper operation of all functions and safety devices.
- Moving or lowering the cab before checking the area around and below the cab and around the cab stairs.
- Allowing personnel under the attachment or load.
- Operating the reach stacker when it needs maintenance, when safety devices are not functioning properly or are missing, when ground personnel are working in an unsafe manner, when the wind is too high, when the grade is too steep, or if any other unsafe condition exists.
- Operating or parking the reach stacker in an area where the slope is too steep, or has insufficient strength to support the weight of the machine.
- For reach stackers with moveable cabs, traveling the reach stacker when the cab is not properly positioned.
- For reach stackers with stationary cabs, traveling the reach stacker when the cab is not properly secured.
- Lifting a load that exceeds the rated capacity of the reach stacker.
- Raising the load so it is directly over the reach stacker cab.
- Lifting a container without all four twistlocks fully locked.
- Leaving the reach stacker with a load suspended.
- Backing away from the load in a rack or stack without complete release of the load.
- Starting the engine if a “Do Not Operate” tag is on the operator’s controls, ignition switch, battery disconnect switch, or engine control panel.
- Parking the reach stacker in an unsafe area (in areas not designed for reach stacker travel, or on grades that are too steep).
- Operating the reach stacker while personnel are on any part of the machine.
- Operating a reach stacker in areas without proper overhead clearance.
- Operating a reach stacker in areas where power lines are present.

For your safety you **must:**

– **know** the reach stacker’s size
– **know** the reach stacker’s operating capacity at various boom positions
– **know** how to operate the reach stacker
– **know** what safety features are available
– **know** the safe operating procedures at your work site
– **check** the reach stacker daily for proper operation
– **use** every safety feature
– **follow** safe operating procedures
– **be alert** and use common sense
– **know** the reach stacker’s two basic modes of operation
  A - Traveling mode
  B - Maneuvering mode

https://truckmanualshub.com/

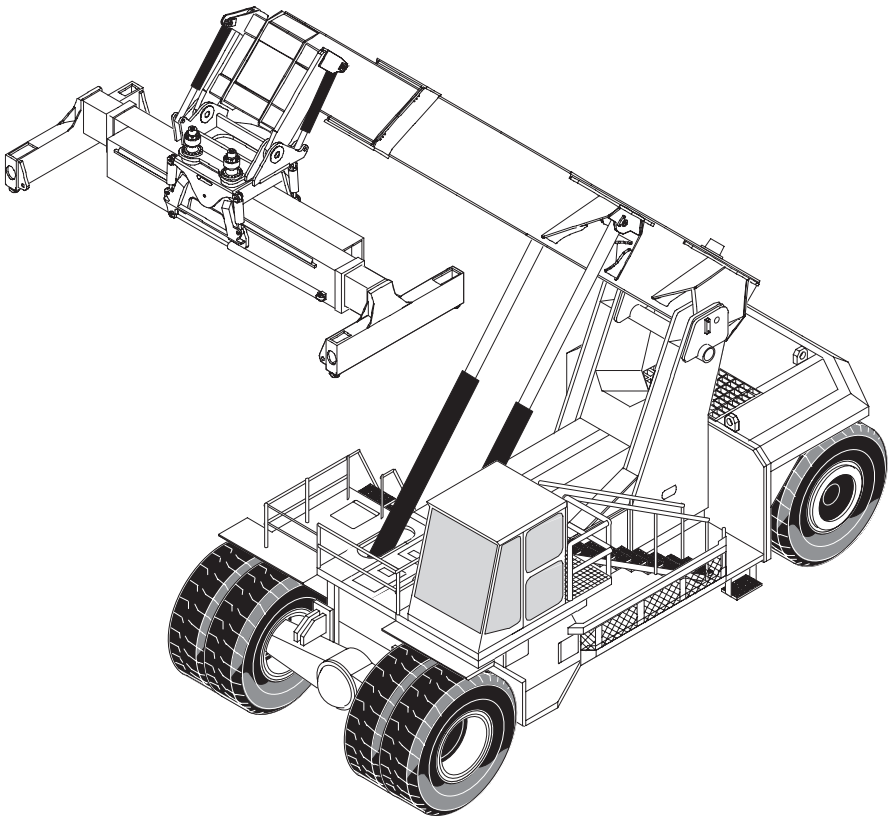

WARNING: *Death or serious injury may result from improper operation of this reach stacker.*

Many electrical, mechanical, and hydraulic safety features are designed into the reach stackers to help protect you (the operator), your fellow workers, and the property in the area where you work.

But . . .

NO safety feature . . NO safety equipment is effective unless you operate the machine properly – every time!

The instructions in this manual, the OSHA Standards, and ANSI B56.1 are all intended to advise how to operate this reach stacker safely. Operating instructions, warnings, and caution labels are placed on the reach stacker to alert you to dangers and advise you of proper operating procedures. Do not remove or obscure any of these labels or disconnect any of the safety devices on the reach stacker.

Regardless of all the safety features we build into our equipment, safe operation still largely depends upon the operator's safe, cautious observance of safety rules. Remember, good operators always follow these four simple rules.

1. Start all motions slowly.
2. Stop all motions slowly.
3. Learn to judge the drift of all motions.
4. Handle the load in a safe manner; make sure the area is free of personnel and obstructions.

https://truckmanualshub.com/

⚠ WARNING

Dangerous Action
Operating this reach stacker before checking for proper operation of all functions and safety devices.

What Can Happen
You can cause death or serious injury to yourself or someone else, or you can cause physical damage to surrounding structures, equipment, or property.

How to Avoid the Danger
Check all reach stacker functions and safety devices as described on the daily checks listed in both the Operator's Guide and this manual.

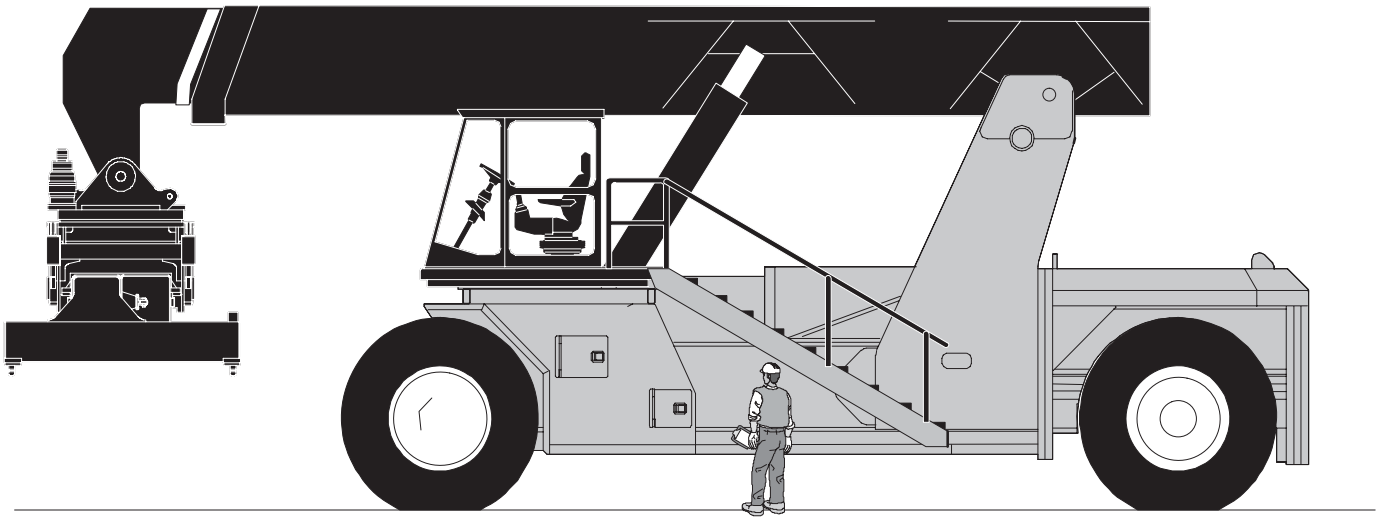

https://truckmanualshub.com/

⚠ WARNING

Dangerous Action
Moving or lowering the cab before checking the area around and below the cab and around the cab stairs.

What Can Happen
Personnel on the frame could be struck by the cab or cab stairs causing death or serious injury.

How to Avoid the Danger
Do Not move the cab until the operator has checked around and beneath the cab and around the cab stairs. Check below the cab and cab structure before lowering.

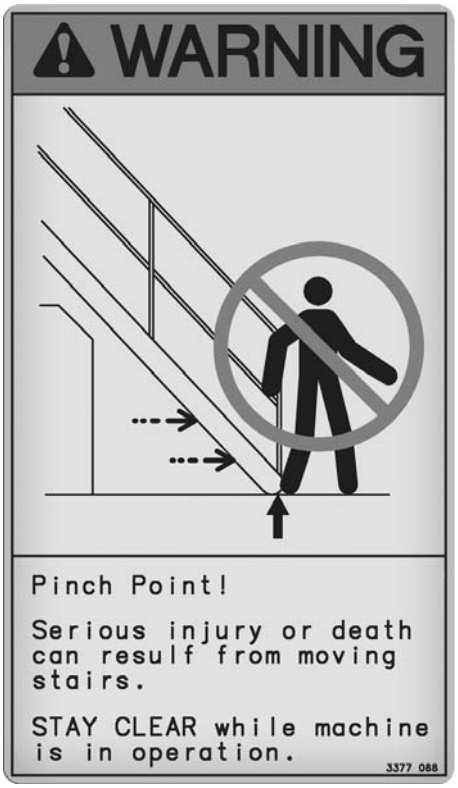

https://truckmanualshub.com/

⚠ WARNING

Dangerous Action
Allowing personnel under the attachment or load.

What Can Happen
Personnel could be hit by the attachment or load while they are being lowered, or struck by the load if it should drop, causing death or serious injury.

How to Avoid the Danger
Never move the load or the attachment over ground personnel. Instruct ground personnel to stay away from and never to stand under the cab, attachment, or load. Check the area under the attachment and load before lowering.

https://truckmanualshub.com/

⚠ WARNING

Dangerous Action
Operating the reach stacker when it needs maintenance, when safety devices are not functioning properly or are missing, when ground personnel are working in an unsafe manner, when the wind is too high, when the grade is too steep, or if any other unsafe condition exists.

What Can Happen
Death or serious injury to yourself or other personnel, physical damage to surrounding structures, the equipment itself, or other property could occur.

How to Avoid the Danger
Check all reach stacker functions and safety devices as described on the daily check list in the Operator's Guide and this manual. Make sure ground personnel know the rules and regulations and follow them. Check the work area before beginning operation to make sure no unsafe condition, such as debris, broken pavement, potholes, etc., exists in the work area. Do not operate the reach stacker in high winds. If winds are high, immediately stop operation; lower and retract the boom. **Do not** operate the reach stacker if the grade is too steep.

Refuse to operate the reach stacker if any unsafe condition exists.

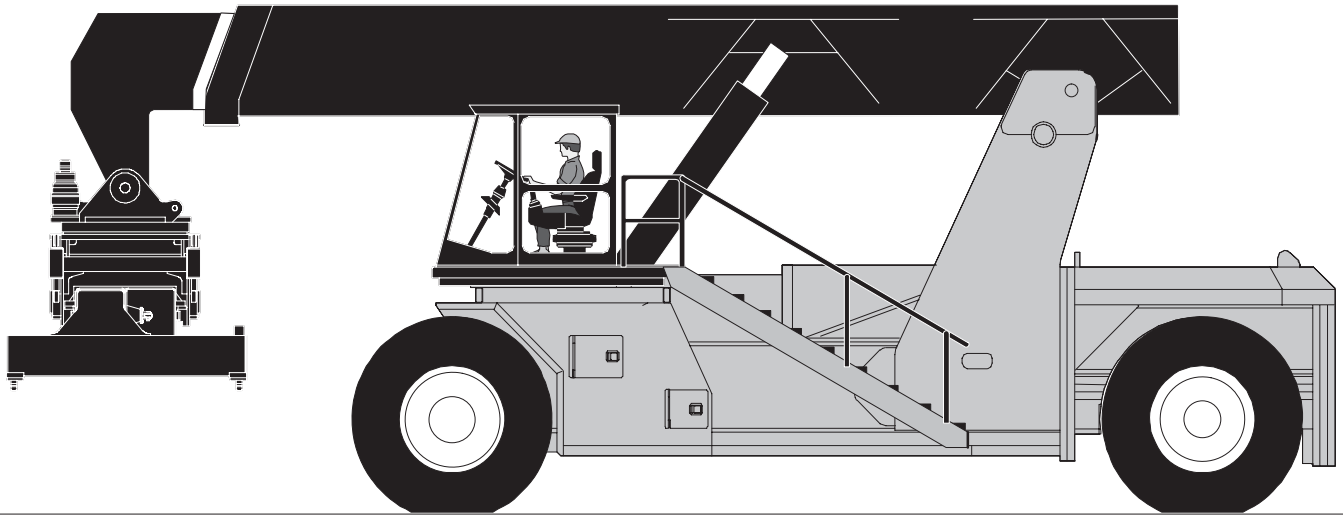

https://truckmanualshub.com/

⚠ WARNING

Dangerous Action
Operating or parking the reach stacker in an area where the slope is too steep, or with insufficient strength to support the weight of the machine.

What Can Happen
Control of the machine can be lost; the machine and load can shift and turn over.

How to Avoid the Danger
Do **not** operate on steep grades not designated for reach stacker operation.

Grades shall be ascended or descended slowly.

a. *When ascending or descending grades,* ***loaded trucks*** *shall be driven with the load upgrade.*

b. ***Unloaded trucks*** *should be operated on all grades with the load engaging means downgrade.*

c. *On all grades the load and load engaging means shall be tilted back if applicable, and raised only as far as necessary to clear the road surface.*

If the load blocks forward visibility on ramps use a ground guide to assist the operator. Sound the horn and travel slowly. Travel lanes should always be clearly marked. **Pedestrians and industrial trucks do not mix!**

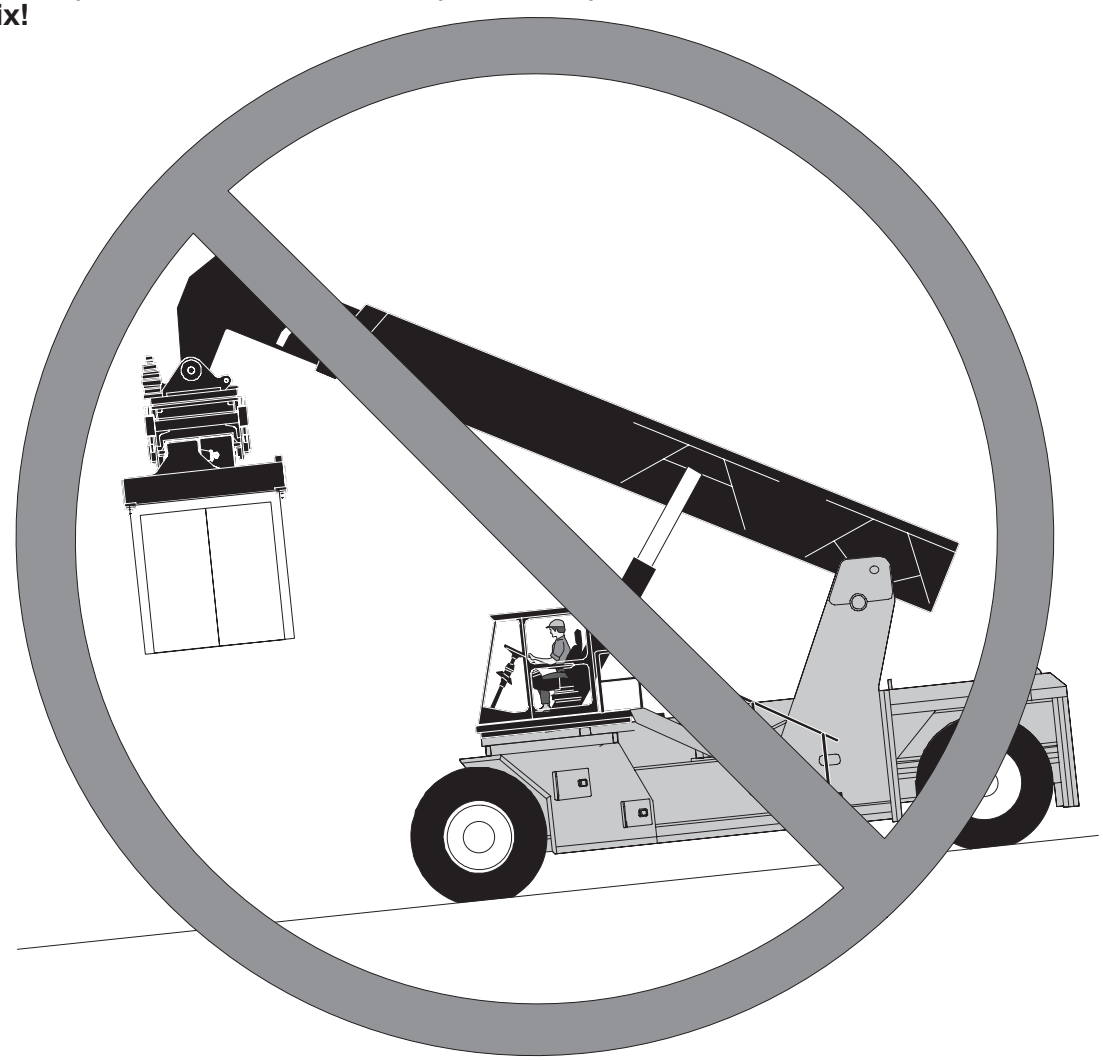

https://truckmanualshub.com/

⚠ WARNING

Dangerous Action
Traveling the reach stacker when the **elevating cab** is not fully lowered (if so equipped).

What Can Happen
You could strike a pedestrian causing serious injury or death.

How to Avoid the Danger
After checking beneath the cab and in the stair area, fully lower the cab and properly position the boom before traveling. **Do not** travel until you have a clear view of the path of travel.

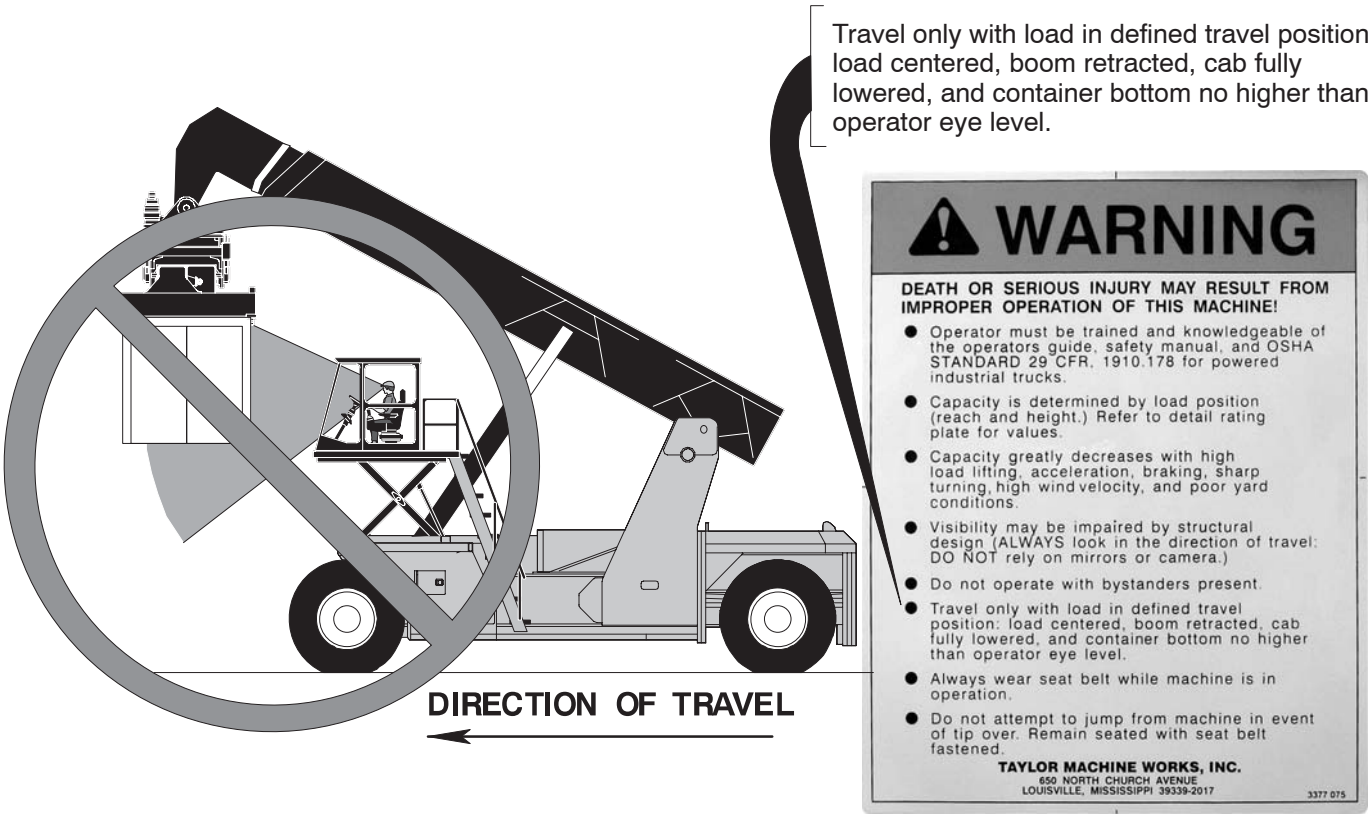

https://truckmanualshub.com/

⚠ WARNING

Dangerous Action
Traveling the reach stacker when the **manually positioned** cab is not properly secured in the rear position (if so equipped).

What Can Happen
The cab can move striking other personnel, causing injury to the operator, or causing property damage.

How to Avoid the Danger
Always ensure cab is locked in the rear position before operating.

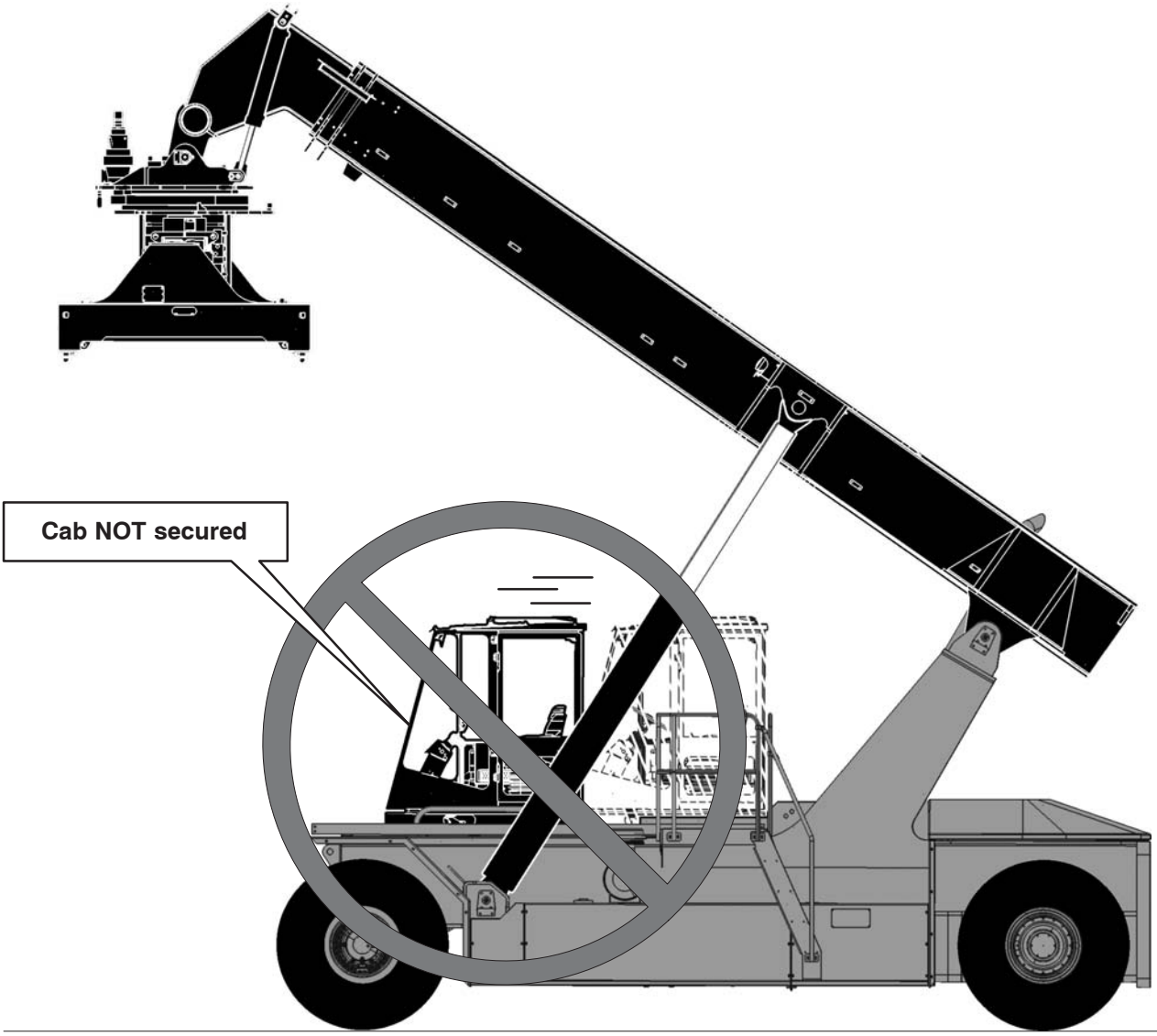

https://truckmanualshub.com/

⚠ WARNING

Dangerous Action
Lifting a load that exceeds the rated capacity of the reach stacker.

What Can Happen
Death or serious injury could occur (to yourself or other personnel). The reach stacker, surrounding equipment, or structures could be physically damaged.

How to Avoid the Danger
Know the rated capacity of the reach stacker as shown on the detailed rating plate. Know the weight of the trailer or container being lifted. If the load appears heavier than shown on the bill of lading, or if the reach stacker has trouble lifting the load, do not continue lifting. Place the load back down and ask your supervisor how to proceed.

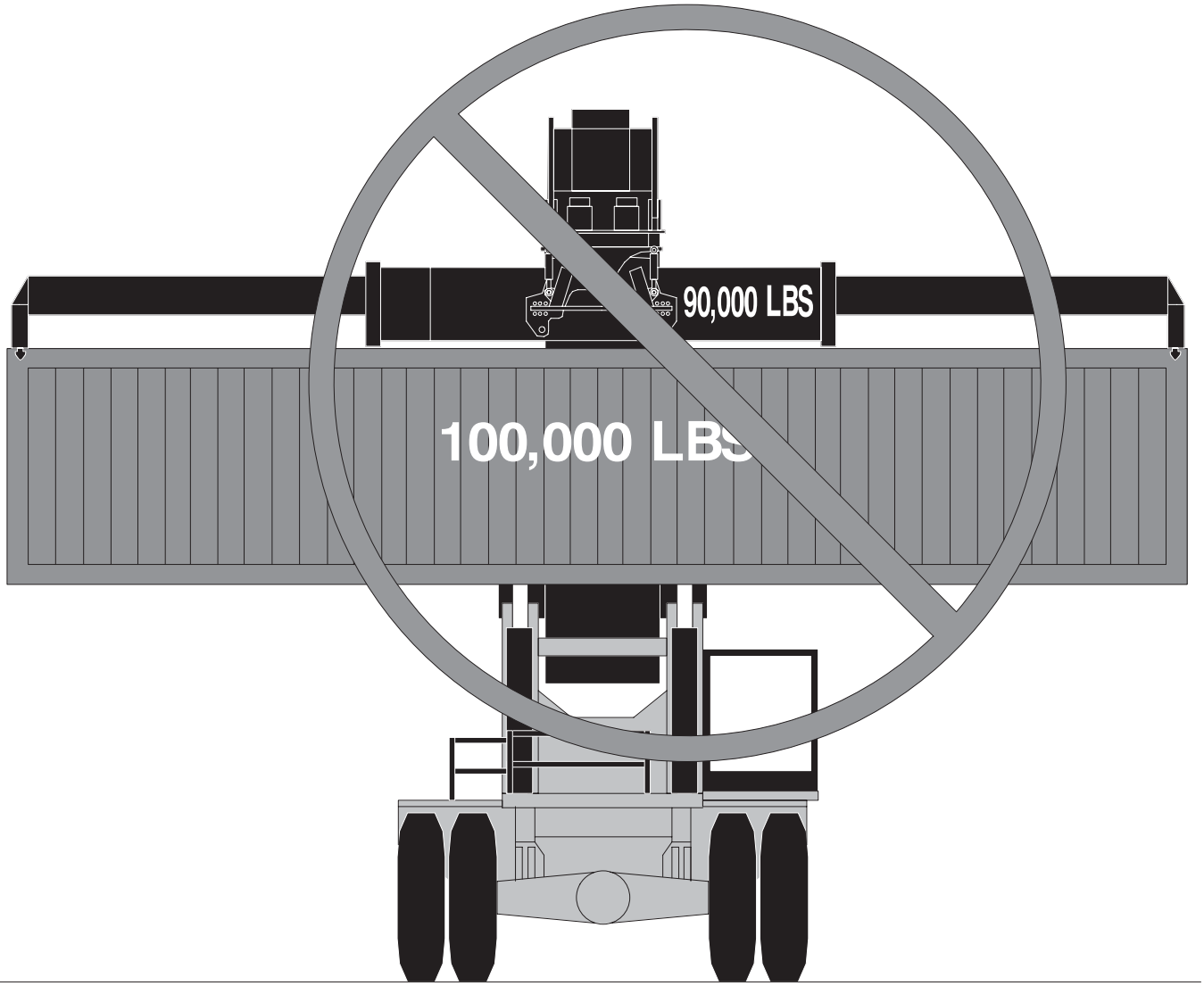

https://truckmanualshub.com/

⚠ WARNING

Dangerous Action
Raising the load so it is directly over the reach stacker cab.

What Can Happen
The container could come free causing death or serious injury to the operator.

How to Avoid the Danger
Extend the boom to maintain proper clearance between the load and the cab.

Never position the load behind the front edge of the cab.

https://truckmanualshub.com/

⚠ WARNING

Dangerous Action
Lifting a container without all four twistlocks fully locked.

What Can Happen
The container could fall from the attachment causing death or serious injury to ground personnel or physical damage to the container, the reach stacker, or other yard equipment.

How to Avoid the Danger
Before locking the twistlocks make sure the proper amber indicating light on the attachment is illuminated. If the green light should go out while the load is raised, set the container down and correct the problem before continuing operations.

Refer to the Operator's Guide for proper procedures.

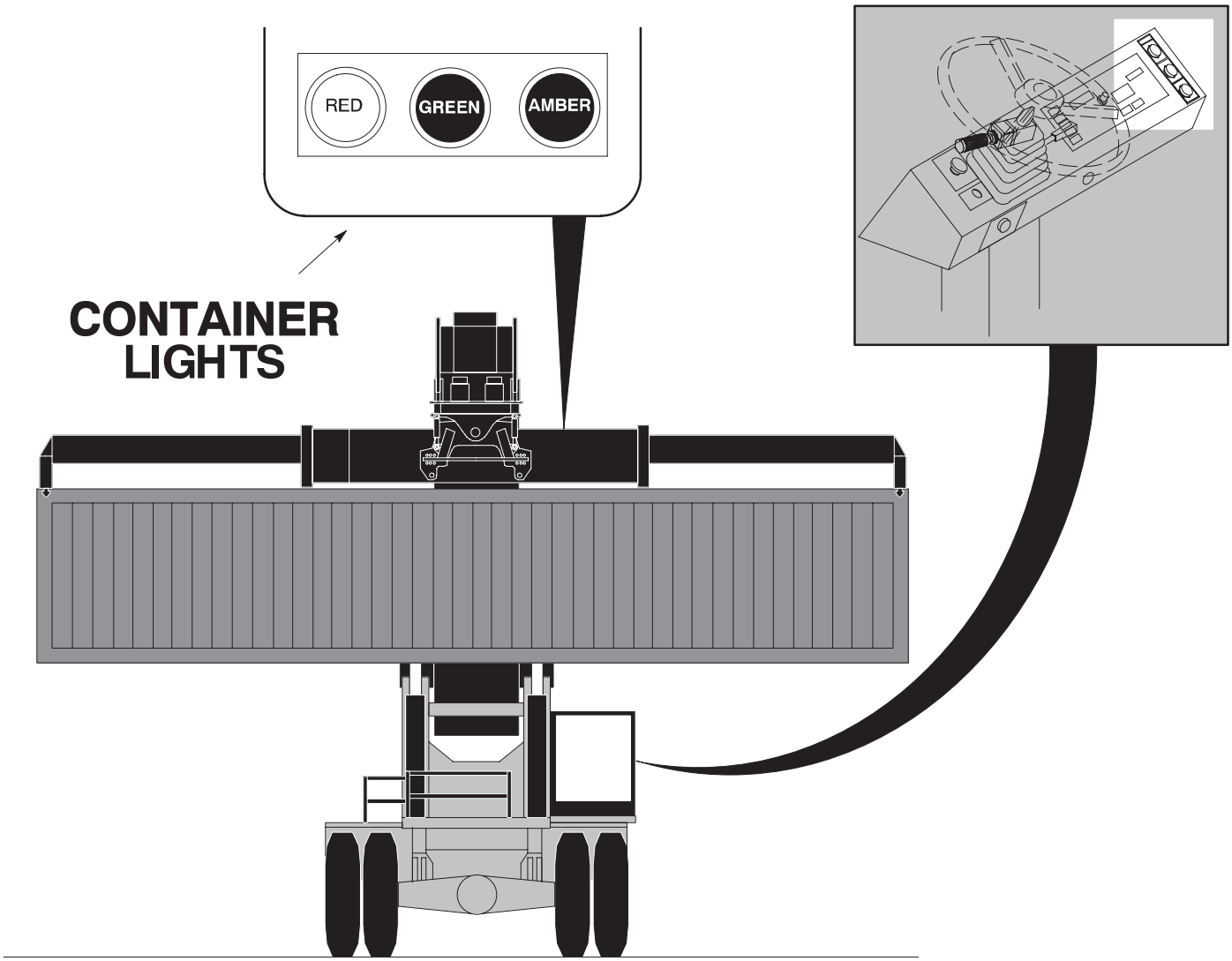

https://truckmanualshub.com/

⚠ WARNING

Dangerous Action
Leaving the reach stacker with a load suspended.

What Can Happen
The lift system could drift down allowing the load to interfere with yard traffic or strike equipment left beneath or traveling under the load. This could cause death or serious injury to ground personnel or physical damage to the load, the reach stacker, or yard equipment.

How to Avoid the Danger
The operator should never leave the cab while the load is suspended. Before leaving the cab always lower and release the load. Park the reach stacker in a safe level area; set the parking brake, neutralize the controls, shut off the power, and remove the key. If the machine is parked on an incline, block the wheels.

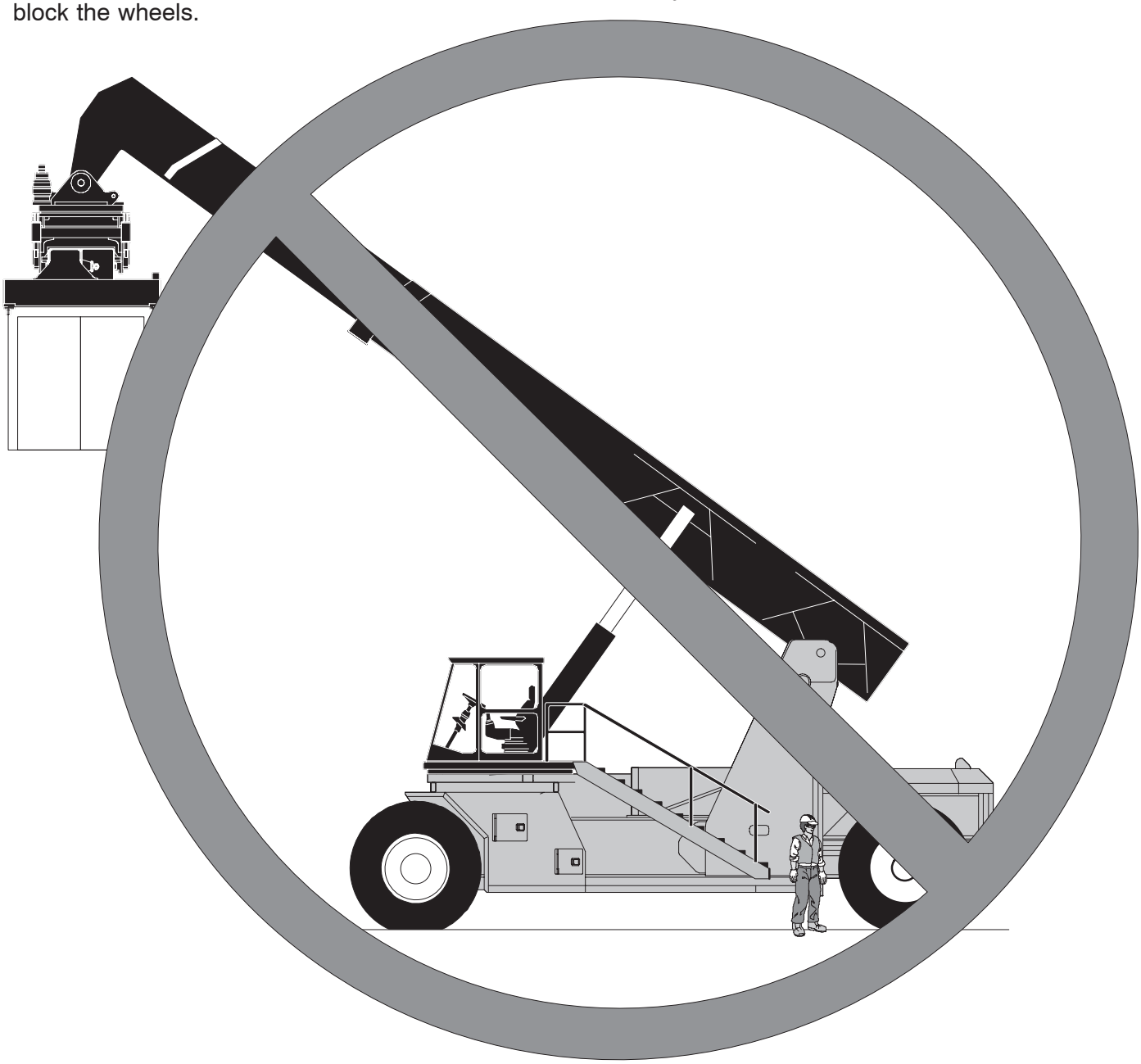

https://truckmanualshub.com/

⚠ WARNING

Dangerous Action
Improperly traveling on grades.

What Can Happen
You can lose control of the machine and the load.

How to Avoid the Danger
Grades shall be ascended or descended slowly.

d. *When ascending or descending grades,* ***loaded trucks*** *shall be driven with the load upgrade.*

e. ***Unloaded trucks*** *should be operated on all grades with the load engaging means downgrade.*

f. *On all grades the load and load engaging means shall be tilted back if applicable, and raised only as far as necessary to clear the road surface.*

If the load blocks forward visibility on ramps use a ground guide to assist the operator. Sound the horn and travel slowly. Travel lanes should always be clearly marked. **Pedestrians and reachstackers do not mix!**

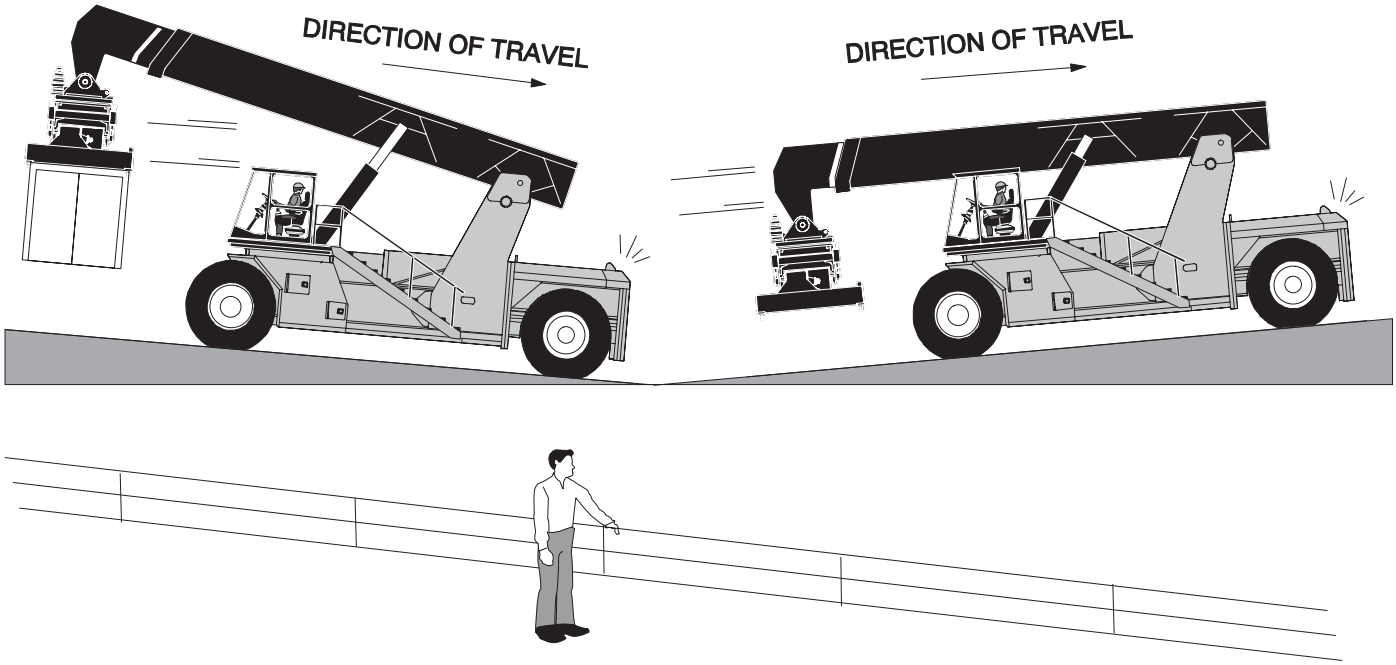

https://truckmanualshub.com/

⚠WARNING

Dangerous Action
Backing away from the load in a rack or stack without complete release of the load.

What Can Happen
Death, serious bodily injury, and property damage can be caused by dropping the load on your machine, or a bystander, or on the ground.

How To Avoid The Danger
Be certain the load is properly placed and completely released from holding devices (such as slings, twistlocks, or clamps) **before** backing away from the stack.

Back away slowly and visually check to see if the load is being pulled with the machine because part or all of the load has not been released. If part of the load has failed to release, the entire load could be pulled from the rack or stack and dropped by the backing action and momentum of the machine.

Always inspect holding devices such as twistlocks, slings, and/or clamps for proper action **before** placing the machine into service **each day**.

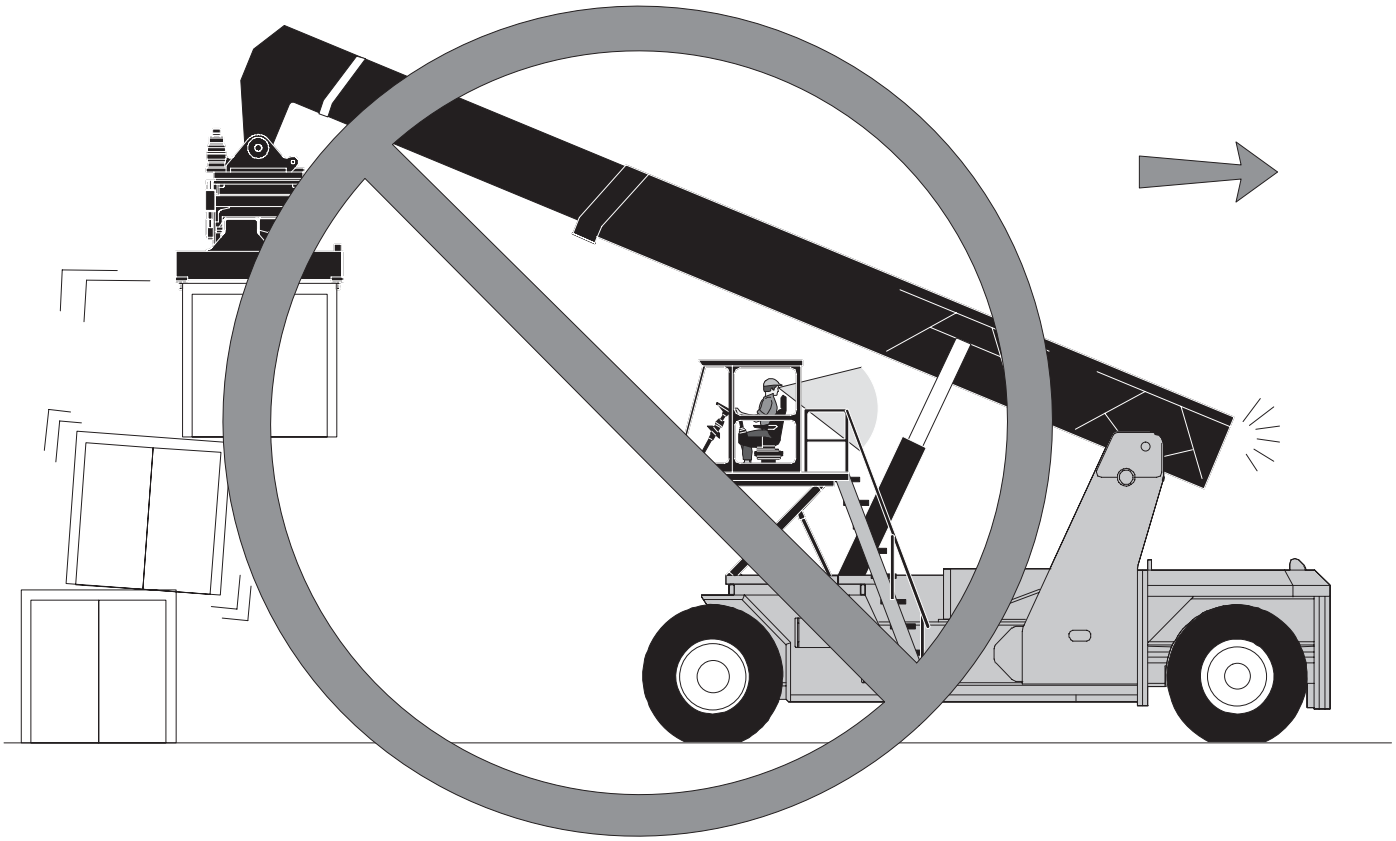

https://truckmanualshub.com/

⚠ WARNING

Dangerous Action
Starting the engine if a “Do Not Operate” tag is on the operator’s controls, ignition switch, battery disconnect switch, or engine control panel.

What Can Happen
Maintenance personnel who are working on the reach stacker may be struck by moving components of the reach stacker causing death or serious injury. The reach stacker may not be safe to operate due to incomplete maintenance work which could cause death or serious injury to ground personnel or physical damage to the reach stacker or other yard equipment or property.

How to Avoid the Danger
Never start a reach stacker that has a “Do Not Operate” tag on the controls. Before operating the reach stacker find out who placed the tag on the controls, make sure that all work is complete, that all personnel are clear, and that the responsible individual has removed the tag.

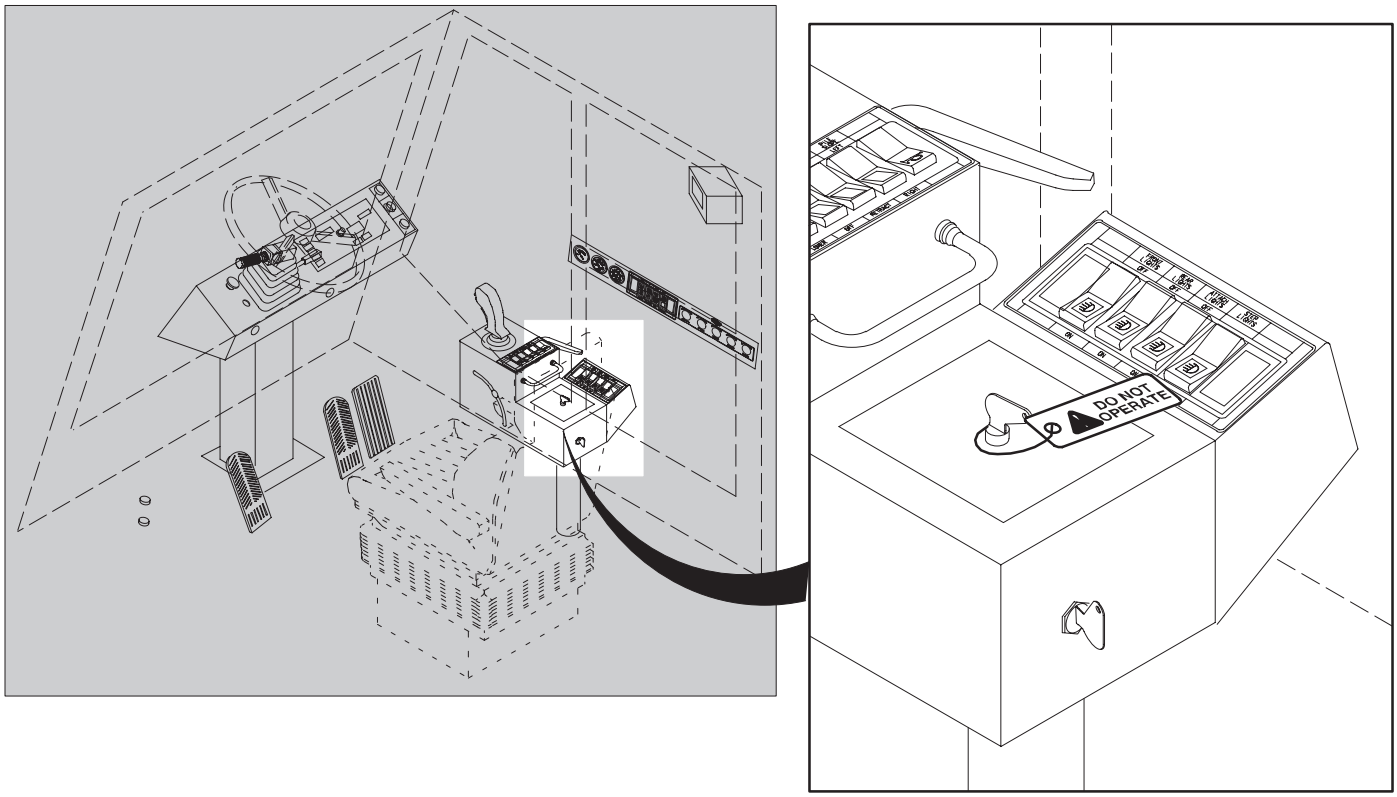

https://truckmanualshub.com/

⚠ WARNING

Dangerous Action
Parking the reach stacker in an unsafe area (in areas not designed for reach stacker travel, or on grades that are too steep).

What Can Happen
The reach stacker could be struck by moving trucks or railcars, the tires could break through the pavement, or the parking brake could release allowing the reach stacker to roll down hill. This could cause death or serious injury to ground personnel or physical damage to the reach stacker, or other yard equipment or property.

How to Avoid the Danger
Always park the reach stacker in a safe level area away from rail tracks and truck lanes and on a surface with adequate strength to support the tire loads. Place wheel chocks against the tires before leaving or servicing the reach stacker if parked on an incline.

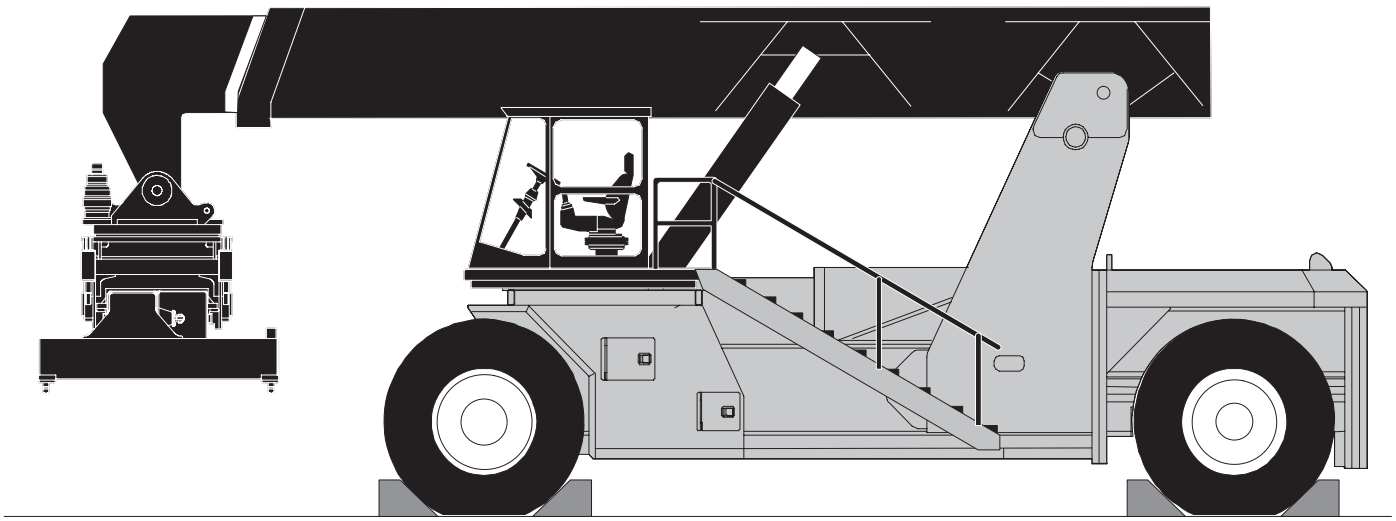

https://truckmanualshub.com/

⚠ WARNING

Dangerous Action
Operating the reach stacker while personnel are on any part of the machine.

What Can Happen
Personnel on the reach stacker could fall, be hit by moving parts, or be struck by the load causing death or serious injury.

How to Avoid the Danger
Before entering the operator's cab, check to make sure that no one is on the reach stacker. Be alert to personnel entering the work area; if they approach the reach stacker or climb onto the reach stacker **stop immediately.** Do not resume operation until all personnel are clear of the reach stacker.

The reach stacker is not designed for riders.

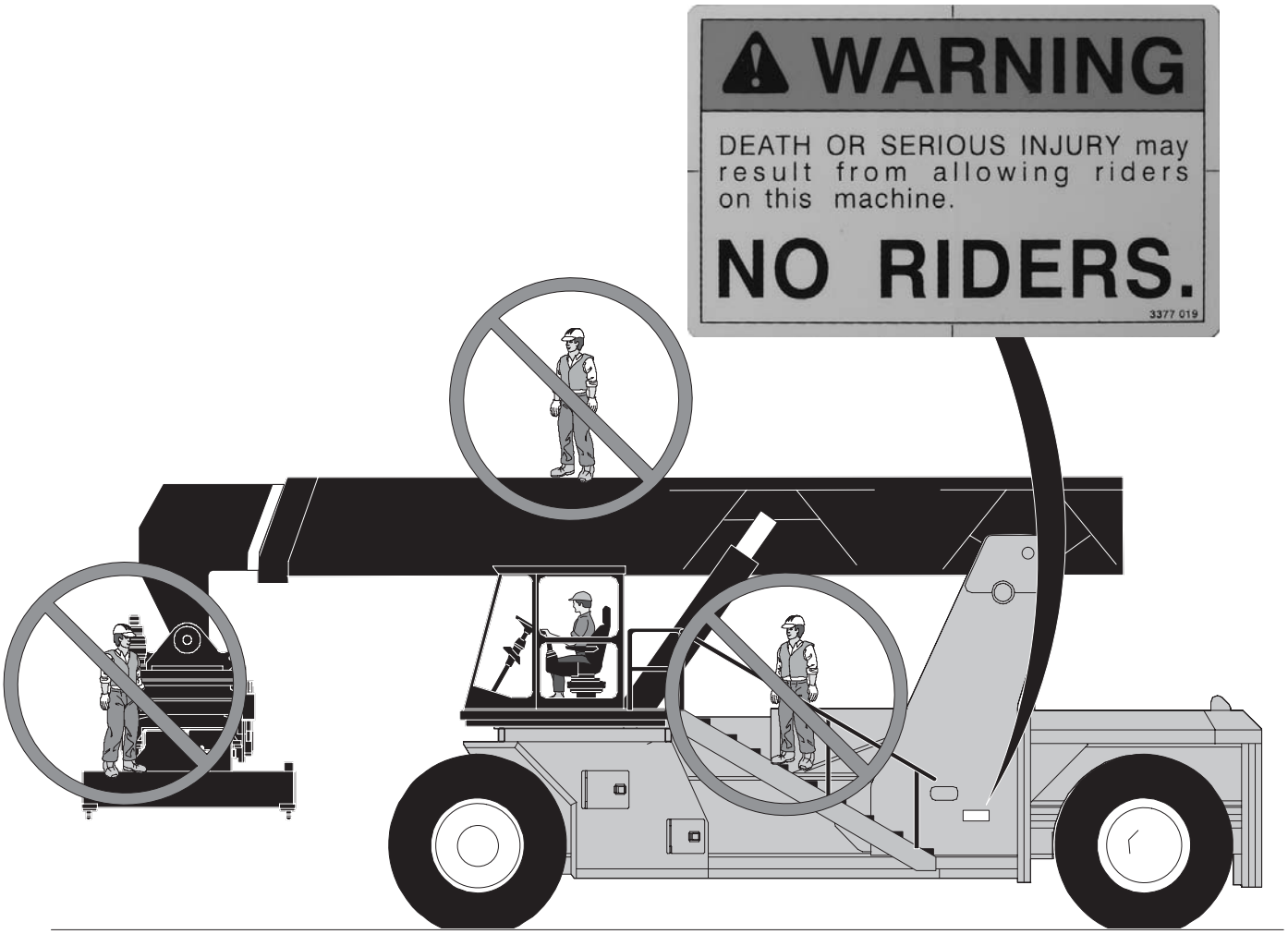

https://truckmanualshub.com/

⚠ WARNING

Dangerous Action
Operating a reach stacker in areas without proper overhead clearance.

What Can Happen
Death or serious injury can be caused by electrocution, the reach stacker can be damaged, goods or buildings can be damaged.

How To Avoid The Danger
Understand that this equipment is not electrically insulated. Electrocution can occur without direct contact. Ensure that sufficient headroom exists under overhead installations, power lines, lights, doors, pipes, sprinkler systems, structural beams, etc.

Ergonomically design machine paths and operations to avoid interaction with overhead obstructions including power lines.

Treat all wires and electrical equipment as energized until the power company representative at the job site de–energizes, grounds, or barricades the line.

Use a qualified ground guide whenever the lift truck is within proximity to power lines.

Don't rely on proximity warning devices or any other similar device as each type has serious limitations.

Always allow proper clearance. Do not operate this machine near energized power lines or power supply. Power line clearances required for safe operation are as follows:

OVERHEAD POWER LINE VOLTAGE	POWER LINE CLEARANCE FOR SAFE OPERATION
50,000V or less	10 ft (3.1 m)
Over 50,000V up to and including 750,000V	10 ft (3.1 m) plus 0.4 in. (10.2mm) for each 1,000V over 50,000V
EXAMPLES:	50,000V = 10 ft (3.1 m) 250,000V = 17 ft (5.2 m) 500,000V = 25 ft (7.6 m) 750,000V = 34 ft (10.4 m)

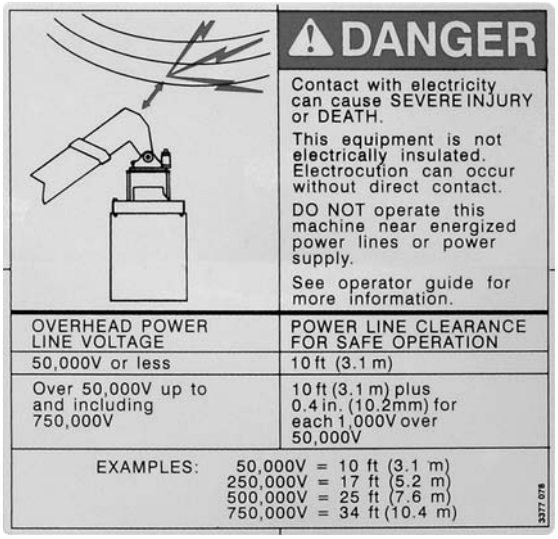

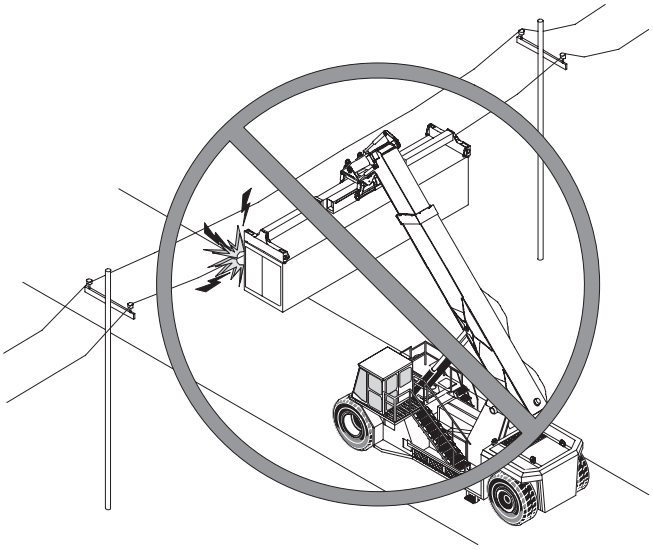

https://truckmanualshub.com/

⚠ WARNING

If Contact With Electrical Lines Occurs

The best way to avoid an accident is to always stay clear of power lines. Although experts disagree, some suggestions for what to do if contact occurs are:

- The operator should attempt to move the machine off and away from the line if possible.
- All other personnel should keep away from the machine, lines, and load since the ground around the machine may be energized.
- If the machine cannot be moved away or disentangled from the line, the operator should remain in the cab until the power company de–energizes the circuit and confirms that conditions are safe. Do not touch any metal surface if possible.
- If the operator must leave the machine, follow these bail–out procedures:
  - DO NOT step down from the vehicle. Under no circumstances should you step down from the vehicle, allowing part of your body to be in contact with the ground while any other part is touching the machine.
  - JUMP CLEAR of the machine with your feet together, as far away as possible, and away from the power lines. Because there may be hazardous voltage differential in the ground, you should jump with both feet together, maintain your balance, and shuffle slowly or hop with feet together across the affected area. Do not, under any circumstances, take large steps, making it possible for one foot to be in a high voltage area and the other to be in a lower voltage area.
  - Do not touch any person who is in contact with energized equipment.

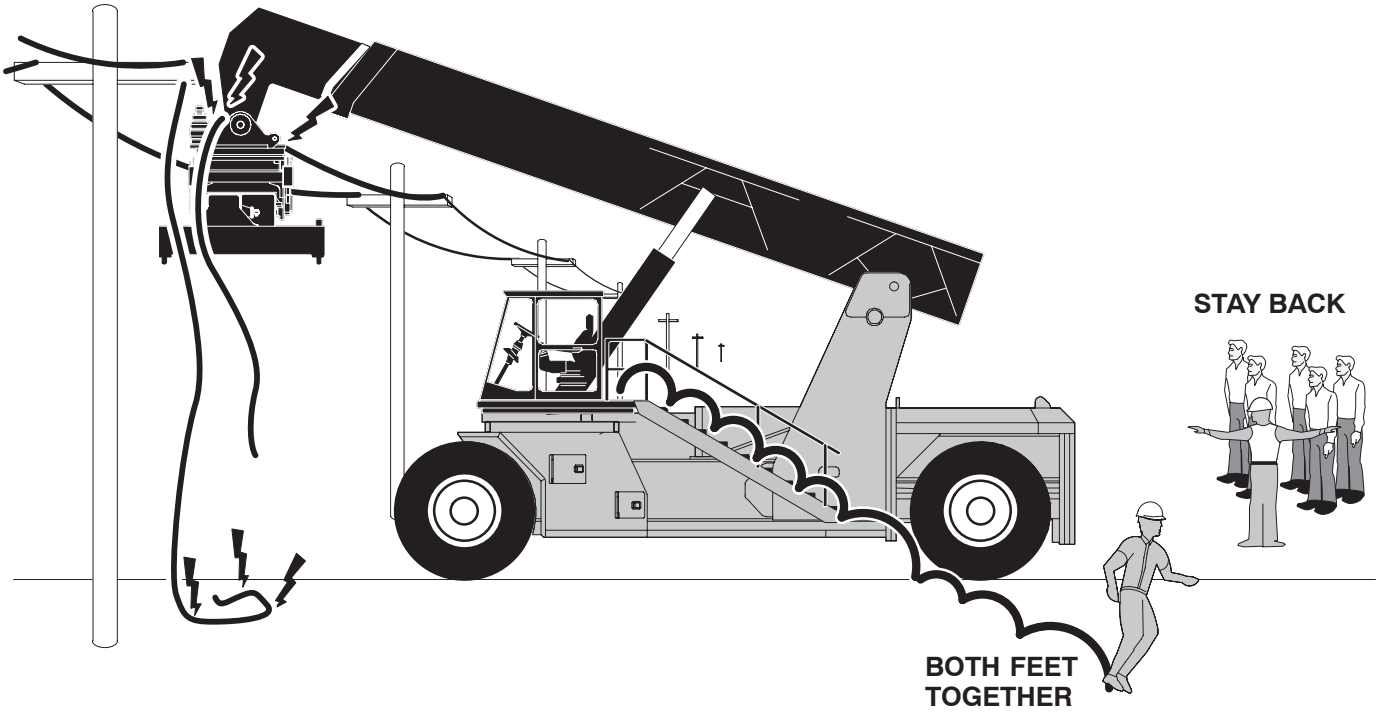

https://truckmanualshub.com/

C. Pedestrian Related Accidents

Reasons for some Pedestrian Runover Accidents are listed below.

- Operating the reach stacker in an environment that is not ergonomically designed.
- Traveling forward with a load that blocks visibility.
- Walking or standing between a machine and/or a load, a rack, stack, or other object.
- Operating a machine with riders on the truck.
- Groundsmen or other personnel in “blind spots.”
- Moving a machine without clearing all blind spots.
- Relying on a back-up alarm or flashing light and not looking in the direction of travel.
- Failure to properly instruct and safeguard transients.
- Relying on mirrors.
- Relying on cameras.
- Not ensuring the path of the machine’s tailswing is clear.

Three things must coincide in order for a reach stacker / pedestrian accident to occur.

1. **The operator must fail to “look in the direction of and keep a clear view of the path of travel.”** Assuming the reach stacker / pedestrian contact was not intentional, the operator may have relied on mirrors thus not having a completely clear view of the path of travel, may have used an improper carry position thus blocking his view of the path of travel, or simply may not have looked, instead relying on motion alarms, strobe lights, or engine noise to alert pedestrians to the machine’s presence. The operator must lean side to side and forward and back to clear all blind spots before putting the reach stacker in motion.
2. **The pedestrian must be located within an area in which reach stackers travel and fail to keep a proper lookout.** While the operator plays a large part in safe reach stacker operation, safety can not be solely the operator’s responsibility. Pedestrians who work in and around reach stackers have a responsibility to watch out for reach stacker travel and stay clear of the reach stacker. Pedestrians should wear high visibility vests, maintain eye contact with reach stacker operator at all times, and stay out of marked reach stacker travel lanes, or stay within marked pedestrian lanes. Pedestrians must never assume that the operator sees them, and must keep a proper lookout.
3. **The employer must fail to either establish reach stacker / pedestrian lanes, or to enforce the restrictions.** Employers govern the activities of each and every person on the work premises. Employers can not assume that operators nor pedestrians know the dangers of the workplace. The employer must therefore educate operators and pedestrians and take affirmative steps to separate reach stacker travel from pedestrian travel. The employer, ultimately, has the means at its disposal to prevent reach stacker / pedestrian accidents. Accidents do not just happen, they are caused by someone. Likewise, safety does not just happen, it is caused by someone.

https://truckmanualshub.com/

Security Guard issues guidelines

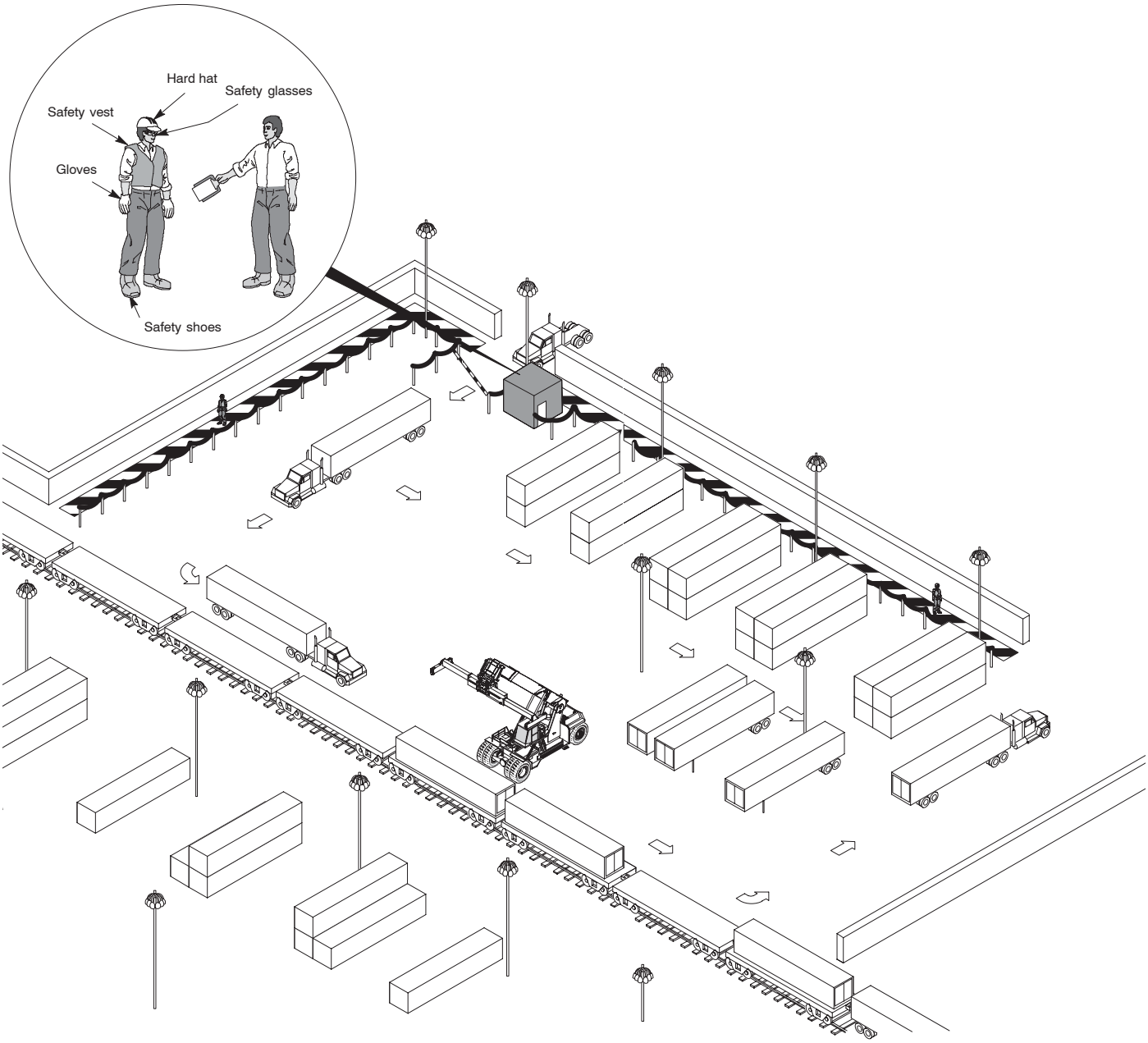

Pedestrian runover accidents are among the most tragic workplace accidents. The only reliable way to prevent these accidents is to ergonomically design the **environment** so that **pedestrians** and reach stackers cannot cross paths and for **operators** to always follow the OSHA rules to:

- **always** look in the direction of and keep a clear view of the path of travel;
- **slow down and sound the horn** at cross aisles and other locations where vision is obstructed;
- **travel with the load in defined travel position** for optimum visibility;
- Travel with the load trailing if forward visibility is obstructed.

and follow the Operator's Guide to:

- **Do Not** operate the vehicle until both forward and reverse travel paths are clear;
- Be sure tailswing paths are clear;
- **Do Not** operate the vehicle when bystanders are present;
- Ensure all travel alarms and strobes are functioning and the video cameras are working properly.

https://truckmanualshub.com/

Audible And Visual Warning Devices

Ergonomics is the study of the interaction of man, machine and environment. Manufacturers of reach stackers have no control over work site ergonomics, and only have control of the machine during the manufacturing process. Man, operators and pedestrians, as well as the environment (in which they interact), are under the control of the **USER**. This is why only the user can determine which audible and visual warning devices should be on a reach stacker. One situation does not fit all! This is not only true practically; it is true legally. OSHA 29 CFR 1910.178 requires powered industrial trucks to be built by the manufacturers and **operated by the users** (you) in accordance with ANSI B56.1 which provides in paragraph 4.15.2 (see Appendix B), that

> "The user shall determine if operating conditions require the truck to be equipped with additional sound-producing or visual (such as lights or blinkers) devices, and be responsible for providing and maintaining such devices."

Manufacturers of reach stackers make certain audible and visual warning devices available. The decision as to which devices, if any, are needed for your environment can only be made by you. Consider the following to make an informed decision:

- Are loud sounding alarms needed?
- Are flashing lights needed?
- Are cameras needed?
- Are mirror systems needed?

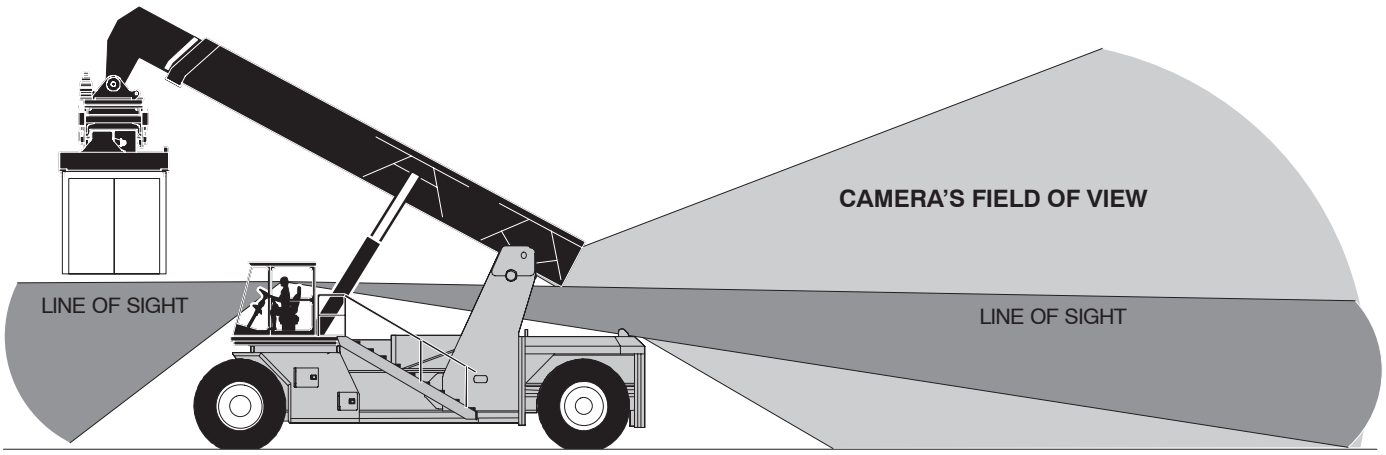

https://truckmanualshub.com/

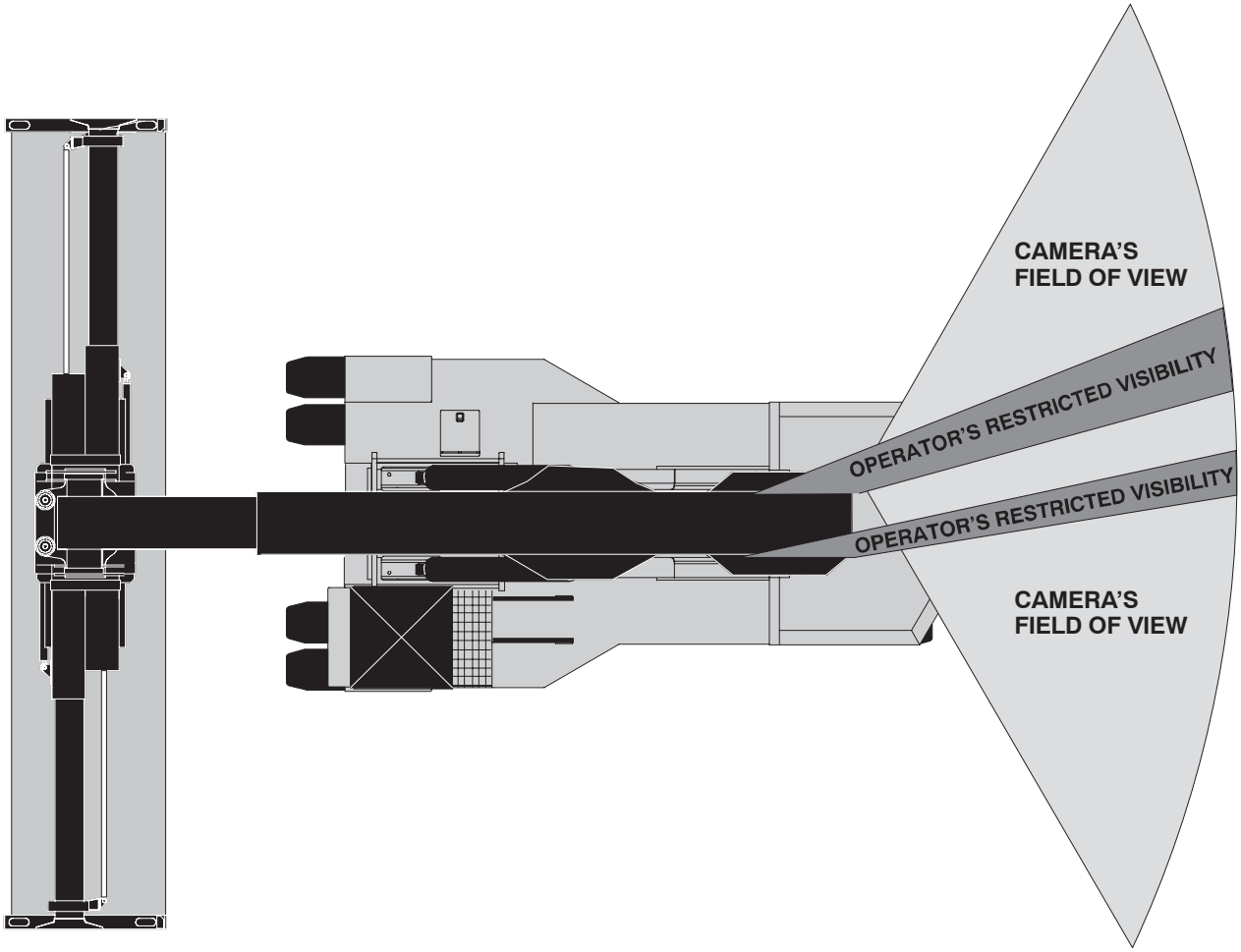

Alarms

Commonly called **Back Up Alarms**, these devices can also be pointed toward the front and wired to sound when the truck is moving forward. Other actuation methods can also be used, such as raising or lowering of loads, or switched to operator control for use when crossing certain areas, etc.

Ambient noise is the noise level existing in the surrounding environment apart from the noise of the alarm. If ambient noise is very loud, these alarms may not be effective. The engine noise of a reach stacker is also considered ambient noise. Alarm levels must be appropriate for the ambient noise level of the workplace environment for the alarm to be effective.

Habituation may occur when a person hears the same sound so often that he/she fails to recognize the sound as a warning. The person gets conditioned to the sound of a chime or coo coo clock in their home. While visitors may hear the clock, residents have tuned it out.

Filtering

People can concentrate on subjects, sounds, and senses that are important and block out other subjects, sounds, and senses that are less important. Workers on the ground have jobs to do and may block out the senses that should alert them to the presence of a reach stacker.

Dependency by the operator may occur when the operator grows so accustomed to people responding to the alarm and moving out of harm's way that he (the operator) soon becomes less vigilant and fails to keep a clear view of the path of travel. Habituation and filtering, mixed with dependency, is a recipe for disaster.

Fatigue can be caused by excessive exposure to noise. OSHA has workplace rules limiting both the level and duration of workplace noise. Too many alarms working in a confined area may be confusing, making it impossible for people to determine the appropriate safe action to take. Many times operators purposefully disconnect alarms; this is in violation of safe work practices and against the law.

https://truckmanualshub.com/

Workplace pedestrian / reach stacker accidents may be prevented by the proper use of alarms. ANSI requires the employer to make an informed choice about which alarm(s) may be most effective in the workplace environment. If you need assistance contact a safety professional.

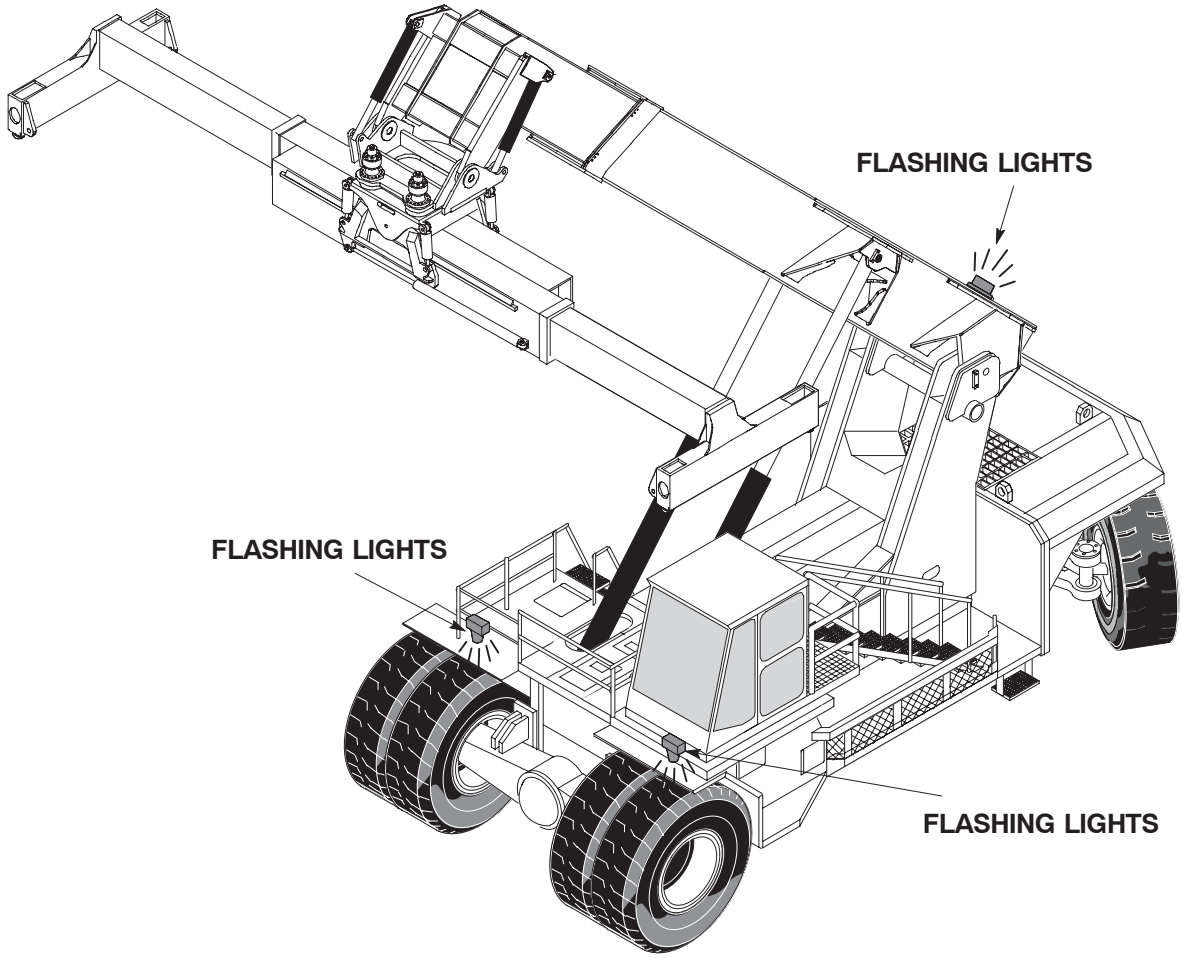

Flashing Lights

Flashing lights are commonly referred to as “Roto Beacons” or “Strobes.” They typically are placed on the reach stacker and are most effective for night time or inside operations (such as inside a warehouse). The idea is that a pedestrian will see the light, either directly or indirectly, as it reflects and bounces off fixed objects in the workplace and notifies the pedestrians of the presence of a machine. Any number of beacons can be placed on a reach stacker at any number of locations. Some users have placed beacons around the truck perimeter and/or on the front of the truck for environments that are typically dark, especially when ambient noise levels are high or when concerns for fatigue, habituation, and dependency on noise alarms is great. Automatically flashing lights are also limited in effectiveness by habituation and dependency.

https://truckmanualshub.com/

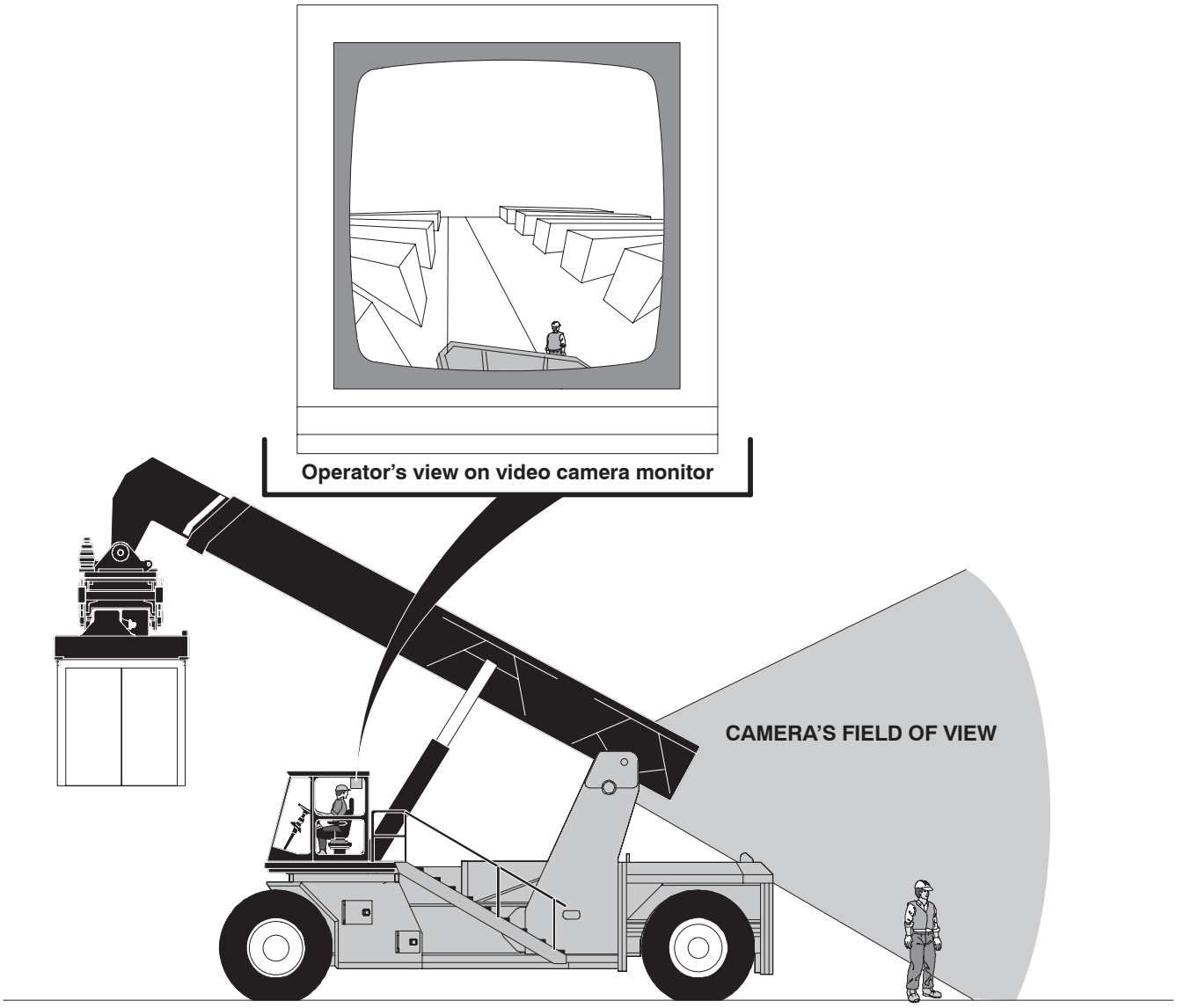

Cameras

Cameras are not substitutes for looking in the direction of and keeping a clear view of the path of travel. Tough, rugged monitors and camera systems are now available with switching mechanisms that activate the rear camera when the truck is shifted into reverse and activate the forward camera when the truck is shifted into forward or neutral. Split monitor screens are also available. Wide angle camera lenses provide the operator an excellent view around the truck. When strategically placed, cameras give the operator the edge when machine design limitations or difficult loads, and / or operating conditions hinder visibility. Your workplace may benefit from the use of cameras, but **remember,** they cannot "see" everywhere and must be kept clean and in good operating condition.

https://truckmanualshub.com/

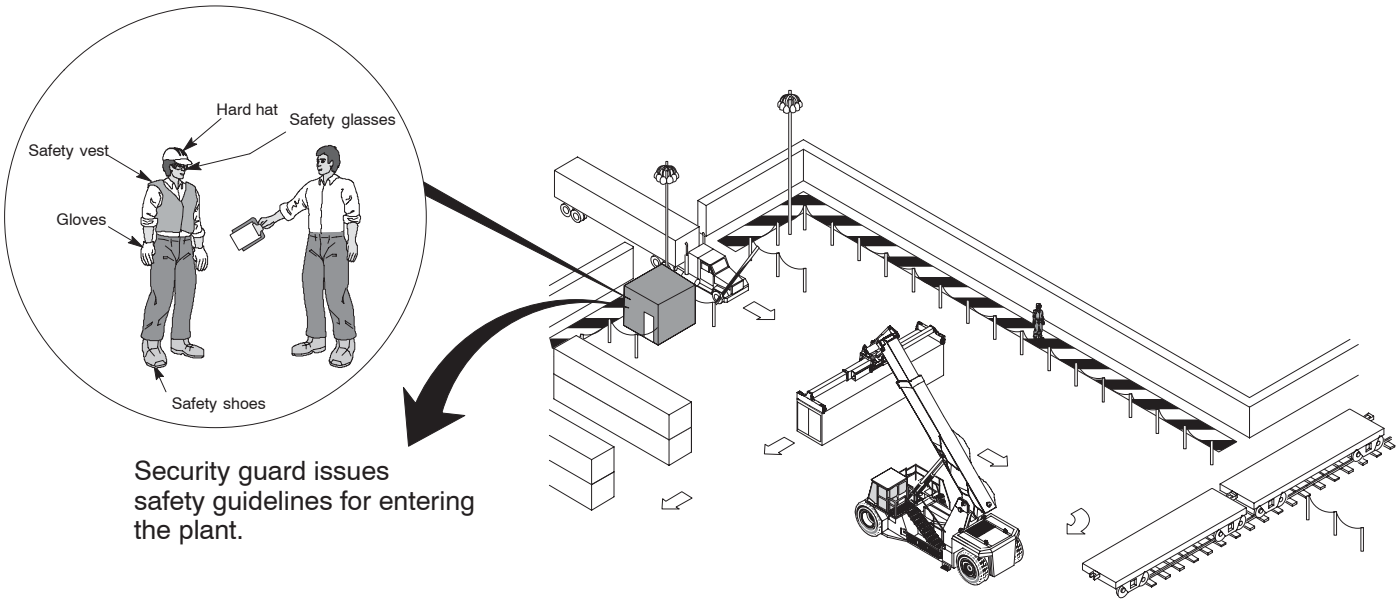

Transients

If outside people such as truck drivers, delivery people, or suppliers come into your workplace, you are responsible for their safety. Give them copies of applicable work rules; provide them with a safe place to stay, and a safe way to get there. If they must be in areas where reach stackers work, provide them with necessary safety equipment such as high-visibility vests and hats.

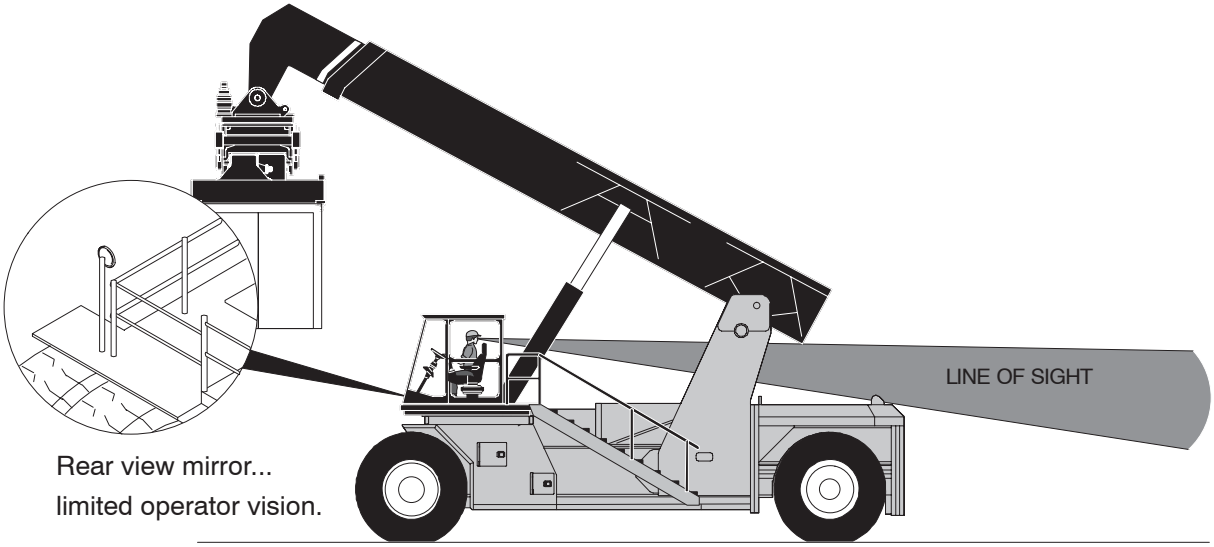

Mirrors

Mirrors come in all shapes, sizes, and degrees of flatness or concaveness. Different workplace environments call for different mirrors. Operators are prohibited from relying on mirrors when driving in reverse because of the limited view available in any mirror. Machine vibration and weather (whether rain, bright sunshine, or dark shadows), all contribute to the ineffectiveness of mirrors as traveling aides.

The user must consider many issues when deciding what, if any, audible and visual warning devices are needed in the workplace environment. The only factor that is not an issue is cost. **Human life is priceless.**

https://truckmanualshub.com/

⚠ WARNING

Dangerous Action
Operating the reach stacker in an environment that is not ergonomically designed.

What Can Happen
Pedestrians can be struck and seriously injured or killed.

How to Avoid the Danger
Discuss the ergonomics of the operating environment with your employer.

Ergonomics is the study of the interaction of **man, the machine,** and the **environment**. A reach stacker work environment should be designed so the paths of the reach stackers never cross with the paths of pedestrians. Paths of reach stackers and paths of pedestrians should be predetermined, marked, and enforced by strict work rules. **Barriers** can be installed to prevent unintentional crossings. **Shortcuts can** cause accidents. If the crossing of paths is unavoidable, **control** measures must be put into place. Operators should **slow down and sound the horn** if they must cross a pedestrian cross-walk. Some employers give the right-of-way to reach stackers; others give the right-of-way to pedestrians. Make sure everyone knows the rules regardless of the workplace policy chosen. Pedestrians who must regularly work in the area should wear **high visibility vests and hats** and maintain contact with operators. Signs should be in place and all personnel should be required to acknowledge workplace rules in writing. **Third party personnel,** such as truck drivers, should be given rules to follow while in your facility; every step outside their truck must be pre-planned and they must not be allowed to wander. In-plant mirrors can be used to add vision to blind intersections for both operators and pedestrians.

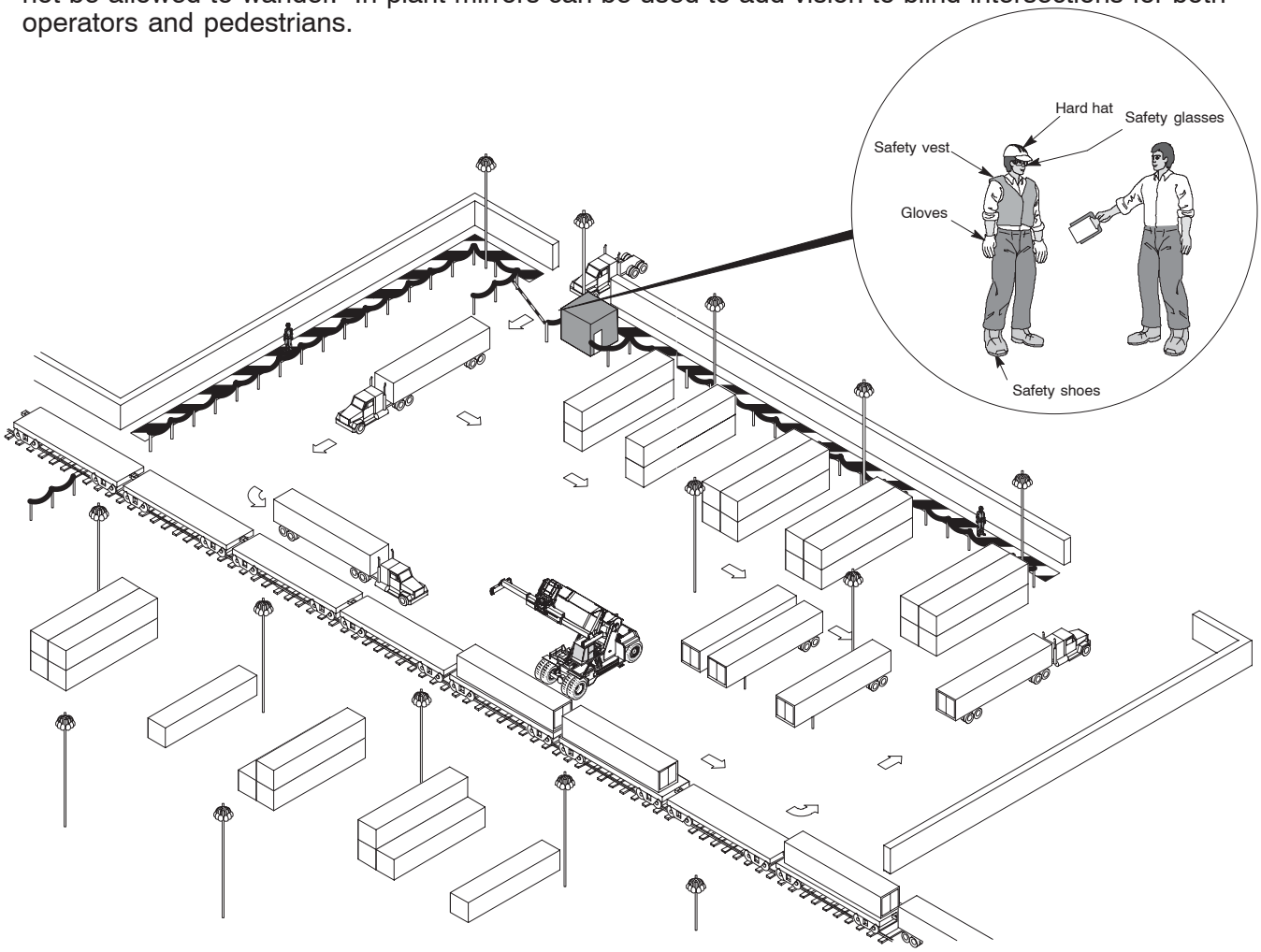

https://truckmanualshub.com/

⚠ WARNING

Dangerous Action
Travelling forward with a load that blocks visibility.

What Can Happen
You could strike a pedestrian causing serious injury or death.

How To Avoid The Danger
Travel forward only if you can keep a clear view of the path of travel. Drive in reverse if the load blocks forward view.

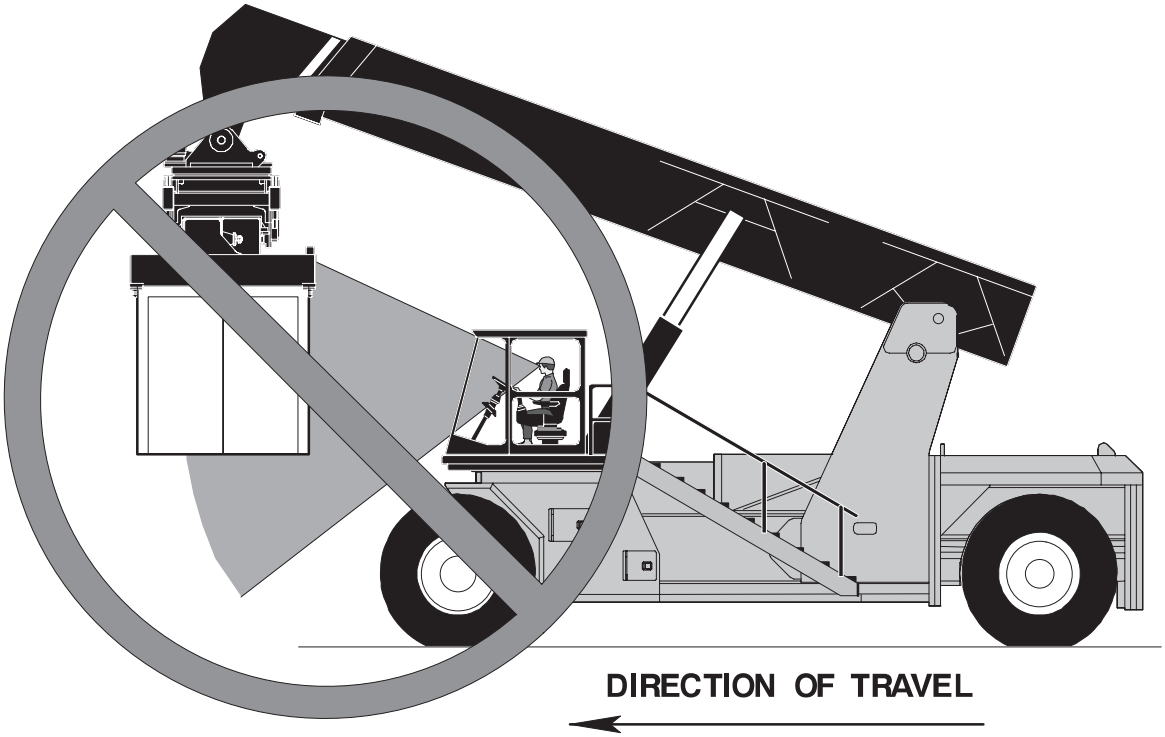

- **Always** carry loads in the defined travel position.
- In some cases the inner boom is marked with a stripe to indicate correct boom extension for traveling. In some cases the truck's control system provides information concerning proper load position for traveling. Position the boom lift with the bottom of the load even with the operator's line of sight. There are indicator lights inside the cab or on the main control screen that illuminate when proper height and length for travel are reached. The operator should not rely only on the lights. The operator should visually look and be sure the boom is at the proper travel position.

https://truckmanualshub.com/

- **Always** carry large, bulky loads, or near capacity loads low.
- **Never** carry a load higher than the operator's line of sight.

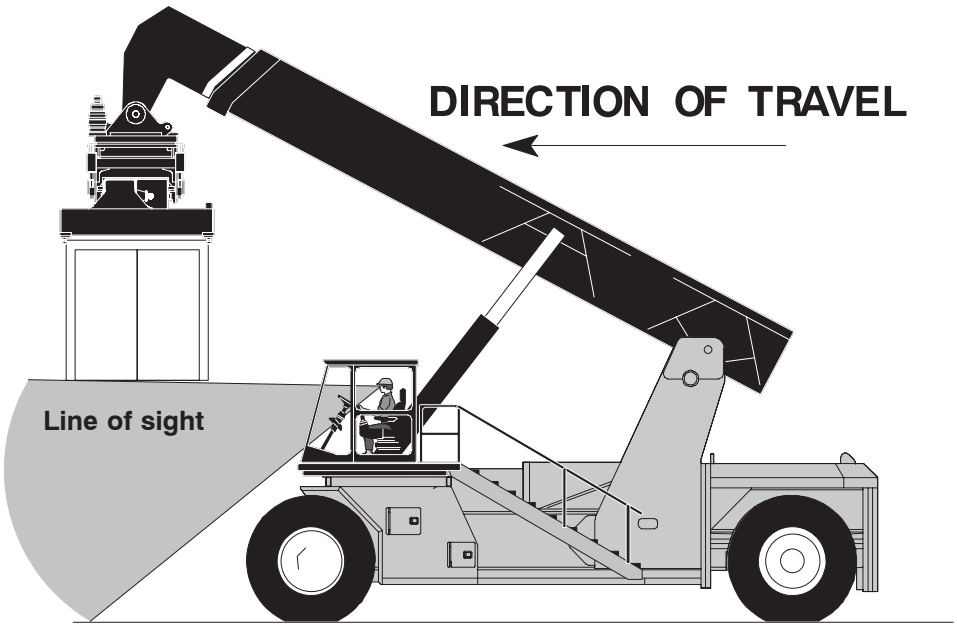

- Never drive forward with a load that blocks visibility unless you:
  - on reach stackers with moveable cabs, place the cab in the position for best visibility
  - use a ground guide
  - drive slowly
  - sound the horn
  - travel only in a marked travel lane; if you lose sight of your ground guide, **stop**. Find out where he is before moving, **and**
  - discuss with your employer the need for additional sound producing or visual devices.

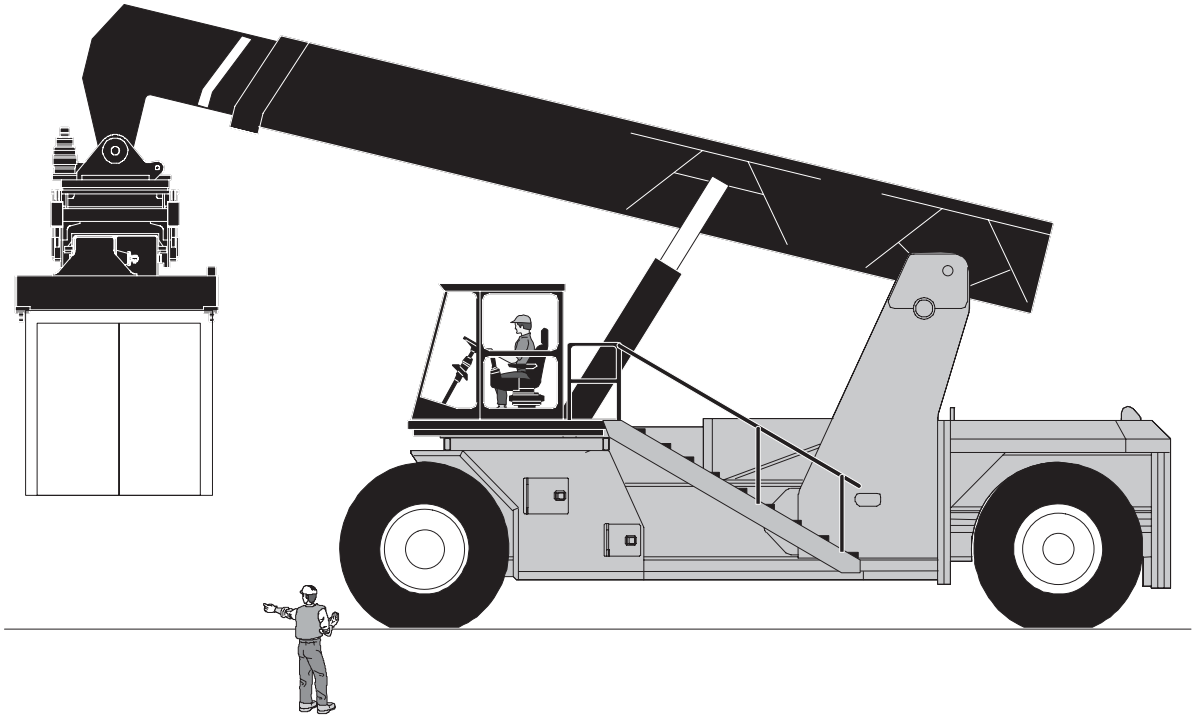

https://truckmanualshub.com/

⚠ WARNING

Dangerous Action
Walking or standing between a machine and/or a load, a rack, stack, or other object.

What Can Happen
Death or serious injury can be caused by the machine moving forward and crushing anyone between the machine and the load or other obstacles.

How To Avoid The Danger
Never walk or stand between the machine and a load, or other physical obstructions.

Never allow anyone to stand under a machine, near a machine, or between a machine and its load or other physical obstructions.

Never leave the machine unattended with only the spotting brake applied. Always place the machine in neutral, apply the parking brake, and **lower the load completely to the ground.**

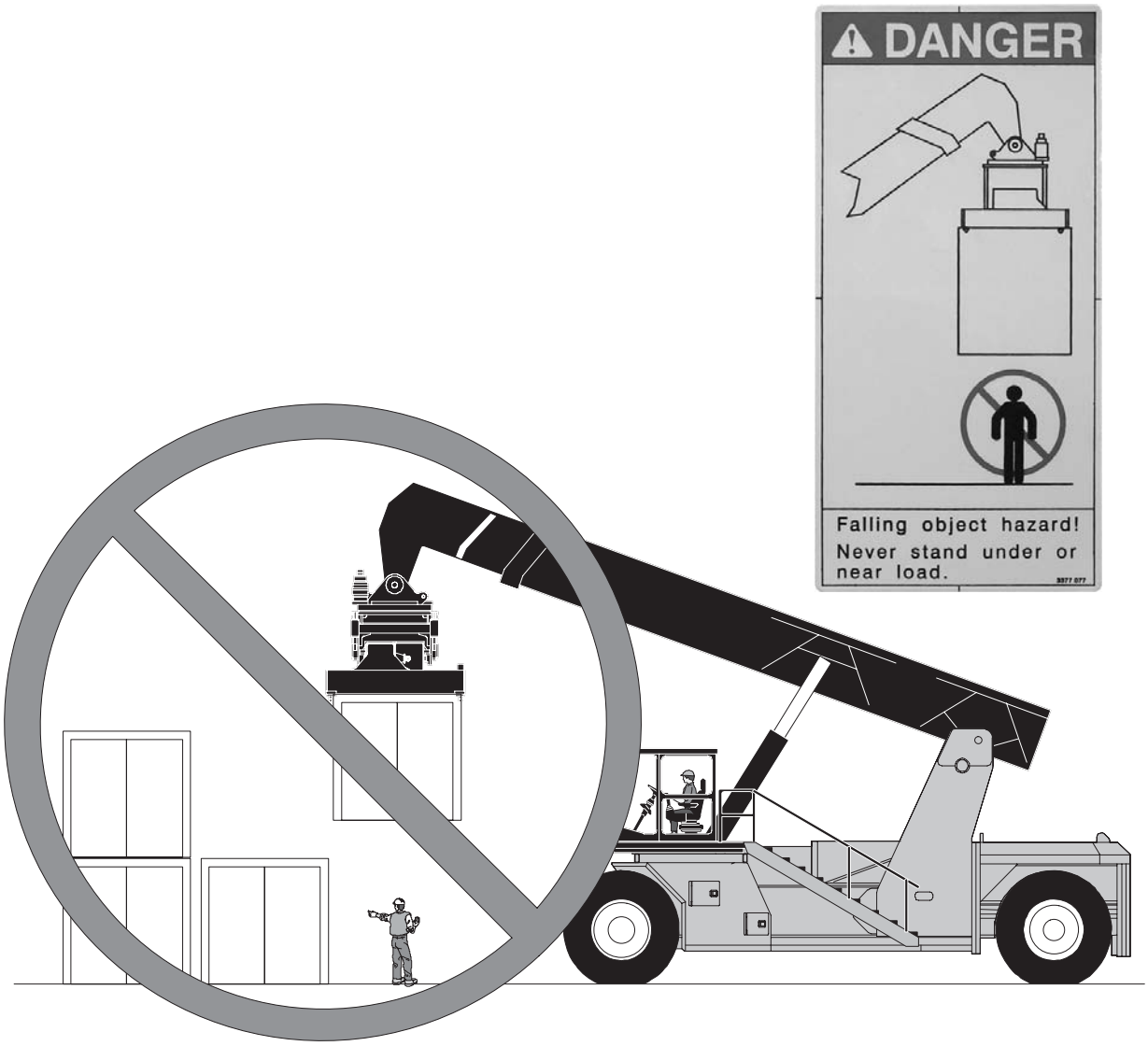

https://truckmanualshub.com/

⚠ WARNING

Dangerous Action
Operating the reach stacker while personnel are on any part of the machine.

What Can Happen
Personnel on the reach stacker could fall, be hit by moving parts, or be struck by the load causing death or serious injury.

How to Avoid the Danger
Before entering the operator's cab, check to make sure that no one is on the reach stacker. Be alert to personnel entering the work area; if they approach the reach stacker or climb onto the reach stacker **stop immediately.** Do not resume operation until all personnel are clear of the reach stacker.

The reach stacker is not designed for riders.

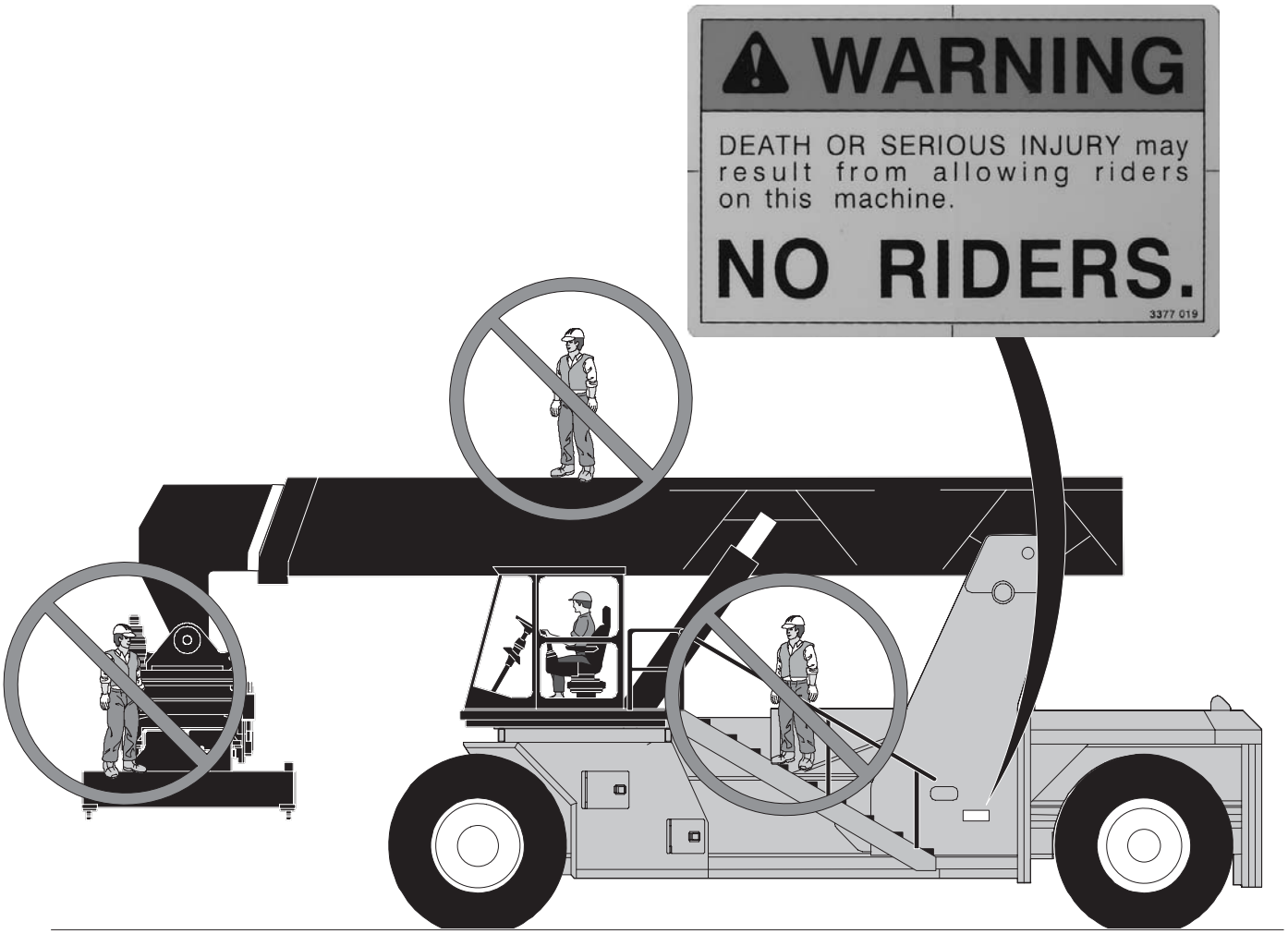

https://truckmanualshub.com/

⚠ WARNING

Dangerous Action
Groundsmen or other personnel in “blind spots.”

What Can Happen
Death or serious injury could occur to groundsmen or other personnel.

How to Avoid the Danger
Stacks of materials, railcars, or containers can cause “blind spots” for the operator. For safe operation, **Stay Clear** of “blind spots.”

Ground personnel must stay within sight of the operator at all times.

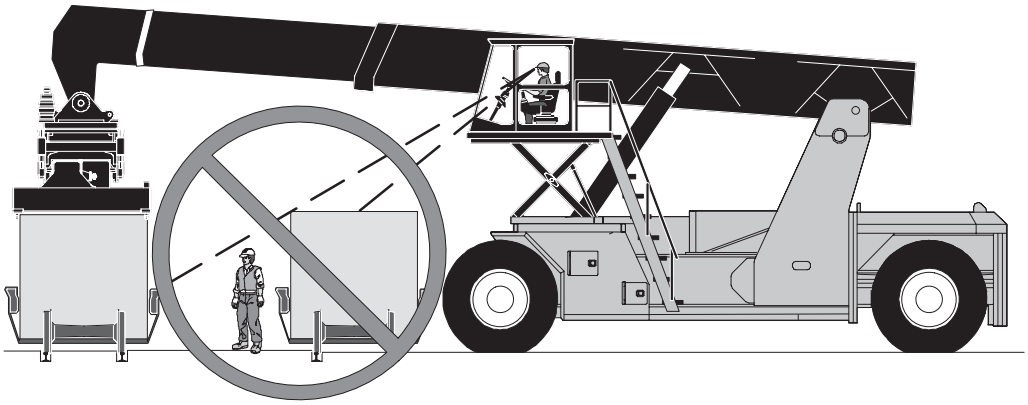

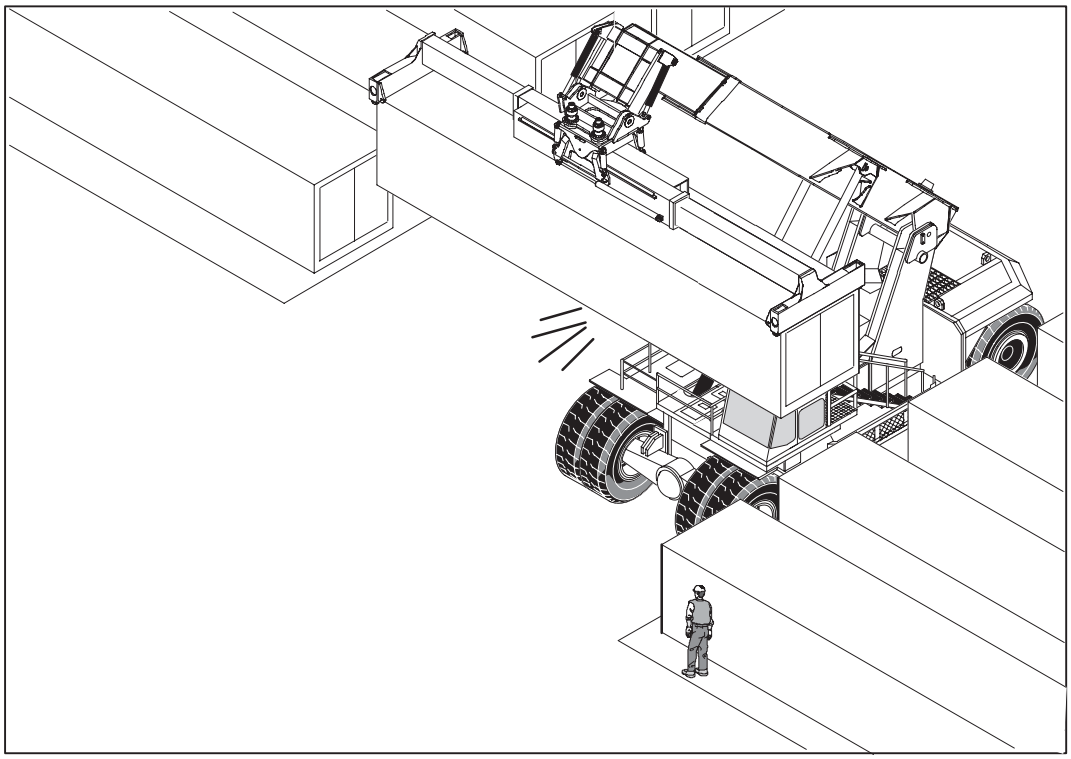

https://truckmanualshub.com/

⚠ WARNING

Dangerous Action
Moving a machine without clearing all blind spots.

What Can Happen
Death or serious injury could occur.

How To Avoid The Danger
Never move the machine without checking all possible blind spots to see if people are too close to the machine or load.

As in an automobile, cab supports of a machine may cause blind spots in the operator's line of vision from certain positions. Cab supports are necessary to provide overhead protection for the operator. Reach stackers must have a boom and rugged frame to support the attachment and the load which necessarily limits visibility. All attempts to design a machine without heavy supports and capable of performing its tasks have been unsuccessful.

Always look around supports and load engaging apparatus completely before putting the machine or load into motion. Shift your head or body as necessary to inspect **all** the area **around** and **in front** of the machine to make sure it is clear. Keep a clear view of the path of travel.

Refuse to operate the machine if bystanders are present.

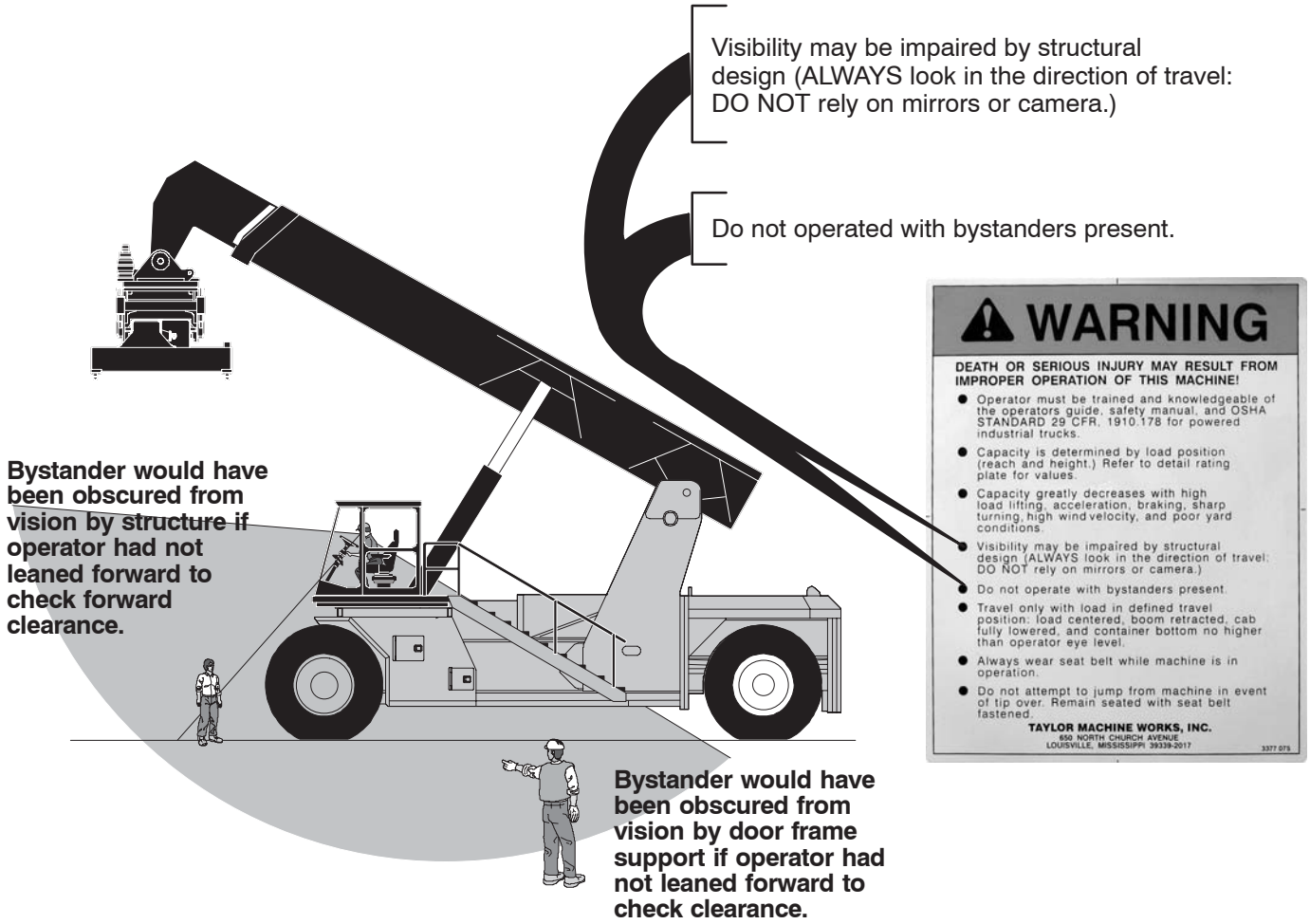

https://truckmanualshub.com/

⚠WARNING

Dangerous Action
Relying on a back-up alarm or flashing light and not looking in the direction of travel.

What Can Happen
You could cause death or serious injury to someone.

How To Avoid The Danger
Never rely upon a back-up alarm or flashing light (if the machine you operate is equipped with one) to warn bystanders of machine approach.

The American National Standards Institute (ANSI) requires the user of a machine to determine if a back-up alarm is needed in a specific work application.

Back-up alarms are standard on all machines; **however,** bystanders may become conditioned to the sound of back-up alarms. **(This conditioning may result from frequent use of a truck traveling in reverse with the alarm sounding, and/or the presence of many machines in the area, with each sounding an alarm when placed in reverse.)** As a result, many bystanders do not consciously recognize the sound as a warning and respond accordingly.

Refuse to operate the machine if bystanders are present. Discuss the need for and advisability of additional back-up alarms or flashing lights with your employer.

Do Not operate with bystanders present.

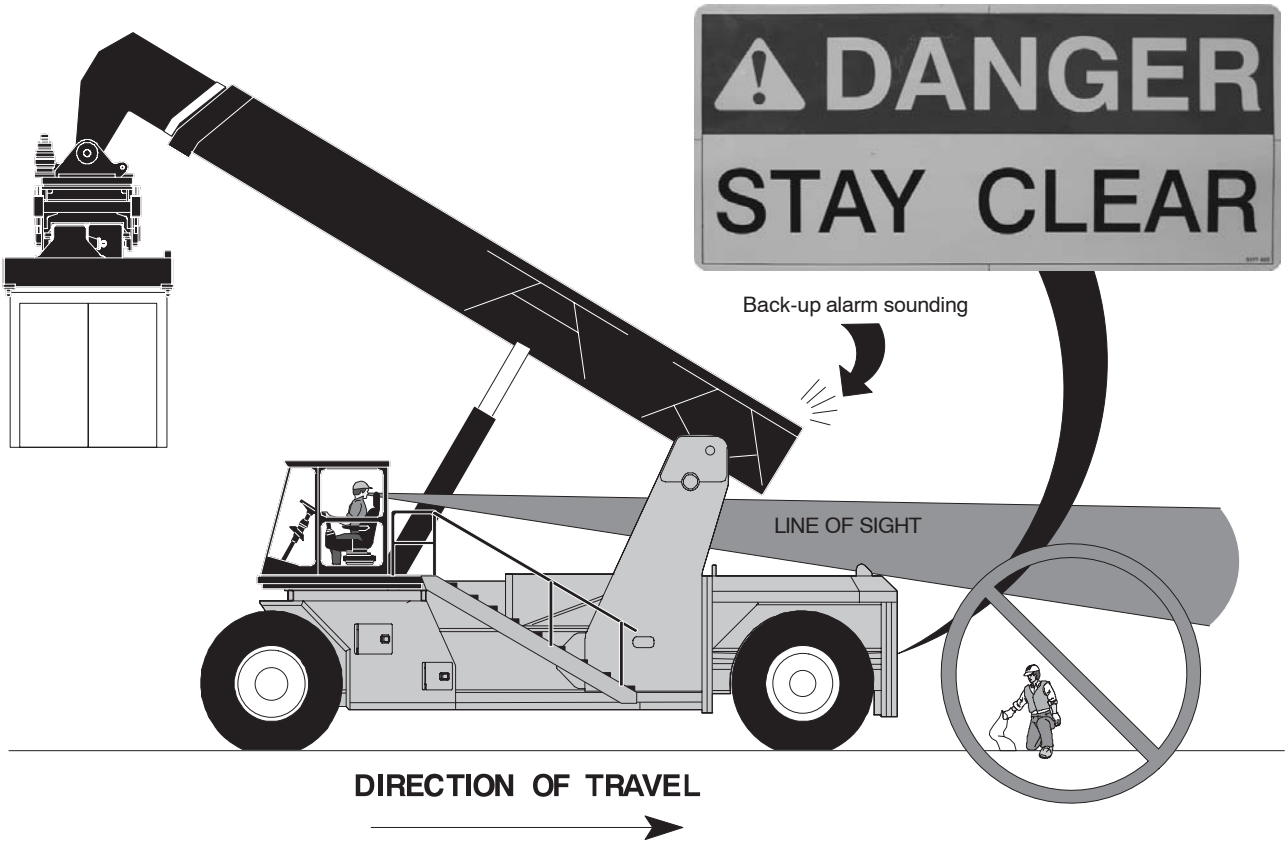

https://truckmanualshub.com/

⚠ WARNING

Dangerous Action
Failure to properly instruct and safeguard transients.

What Can Happen
They could be runover and killed or seriously injured.

How To Avoid The Danger
Always instruct transients on workplace traffic rules. It should be mandatory for them to sign an acknowledgement of their understanding of these rules. Ensure transients have a safe place to stay and a safe way to get there. If they must be in areas where reach stackers operate, provide them with necessary safety equipment such as high-visibility vests and hats.

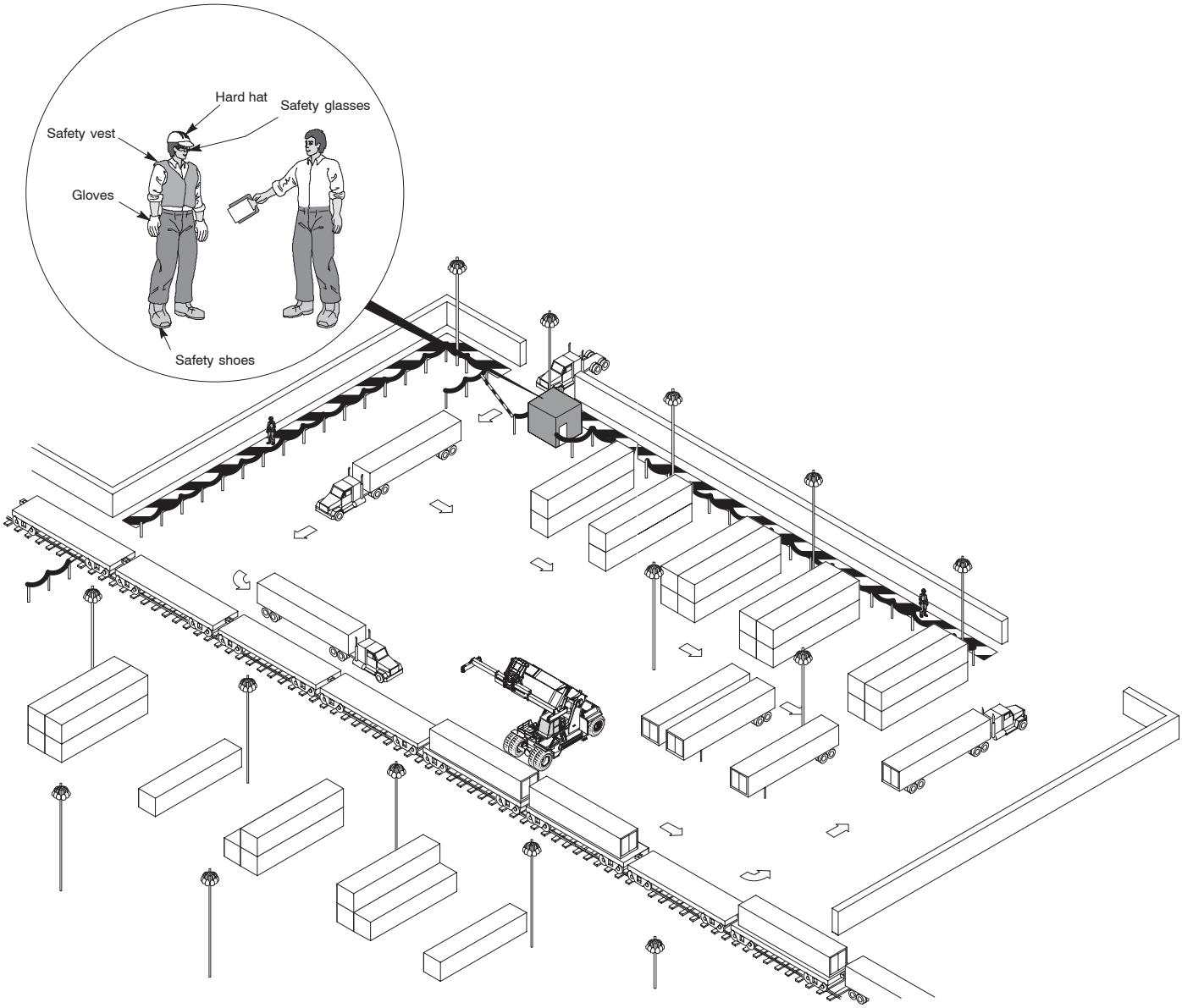

https://truckmanualshub.com/

⚠WARNING

Dangerous Action
Relying on mirrors while backing up or traveling in reverse.

What Can Happen
You could cause death or serious injury to someone.

How to Avoid the Danger
Never rely on mirrors (if the machine you operate is equipped with them) for visual guidance when backing up or traveling in reverse.

OSHA regulations state that the operator **must** look in the direction of travel. Mirrors are to be used **only** for visual reference to operators of potential hazards approaching the machine (such as trucks) from the rear and at a distance. The location of mirrors on a machine may encourage inappropriate use and reliance on them. As a result, the manufacturer discourages the use of mirrors for visual guidance.

The potential problems associated with blind spots may be made worse by reliance on mirrors because the area of vision is limited in a mirror. Repositioning the cab will change the field of view of the mirrors.

Never rely on mirrors to guide you when backing up; **always** look in the direction of travel.

Never rely on mirrors to warn you of hazards located close to the machine. Keep a clear view of the path of travel.

Always look over the entire area before placing the machine in motion; **and,** look in the direction of machine travel while moving with or without a load.

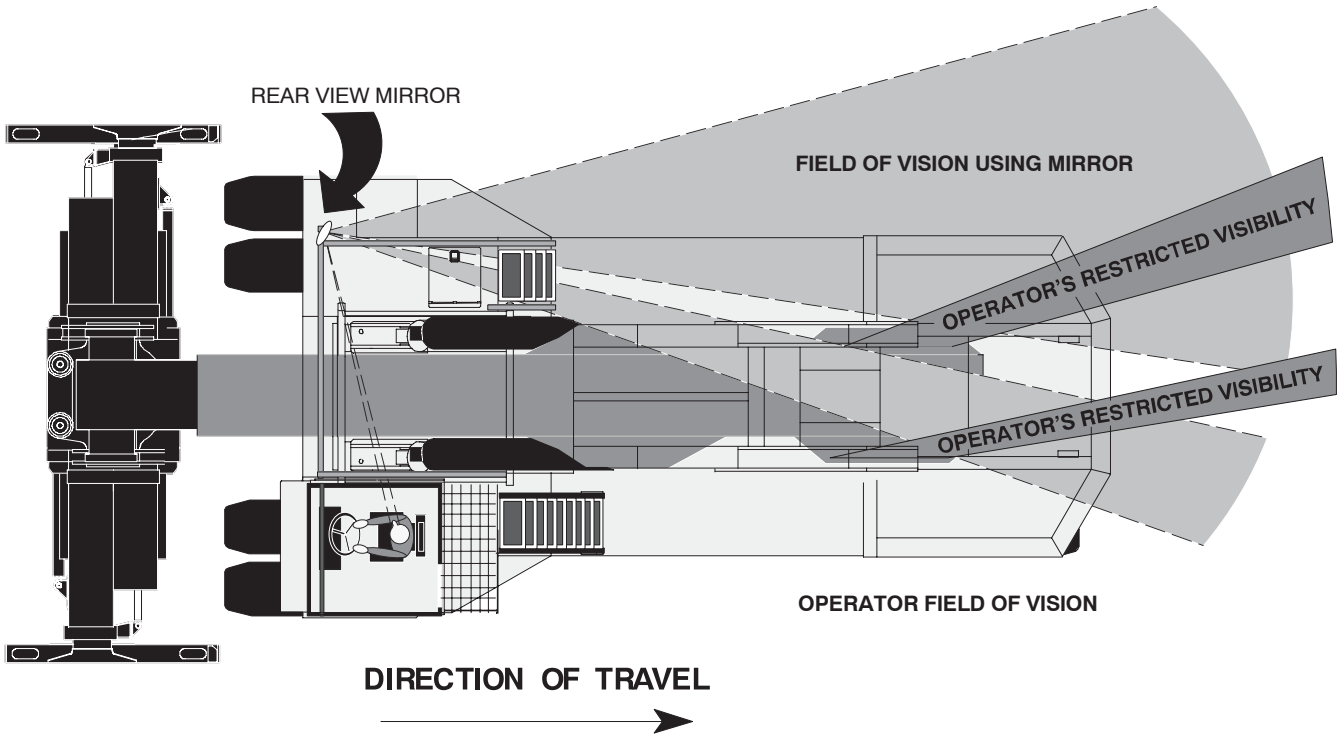

https://truckmanualshub.com/

⚠ WARNING

Dangerous Action
Relying on cameras while backing up or traveling in reverse.

What Can Happen
You could cause death or serious injury to someone.

How to Avoid the Danger
Never travel in reverse. Use reverse only for stacking and retrieving containers.

Never rely solely on cameras for visual guidance when maneuvering in reverse. The camera image may be distorted by weather conditions and lighting.

OSHA regulations state that the operator **must** look in the direction of travel. Cameras are to be used **only** for visual advice to operators of potential hazards approaching the machine (such as trucks) from the rear and at a distance. The location of cameras on a reach stacker may encourage inappropriate use and reliance on them. As a result, the manufacturer discourages the use of cameras for visual guidance.

The potential problems associated with blind spots may be made worse by reliance on cameras because the area of vision is limited.

Never rely on cameras to guide you when traveling; always look in the direction of travel.

Never rely on cameras to warn you of hazards located close to the reach stacker. Keep a clear view of the path of travel.

Always look over the entire area before placing the reach stacker in motion; **and**, look in the direction of travel while moving with or without a load.

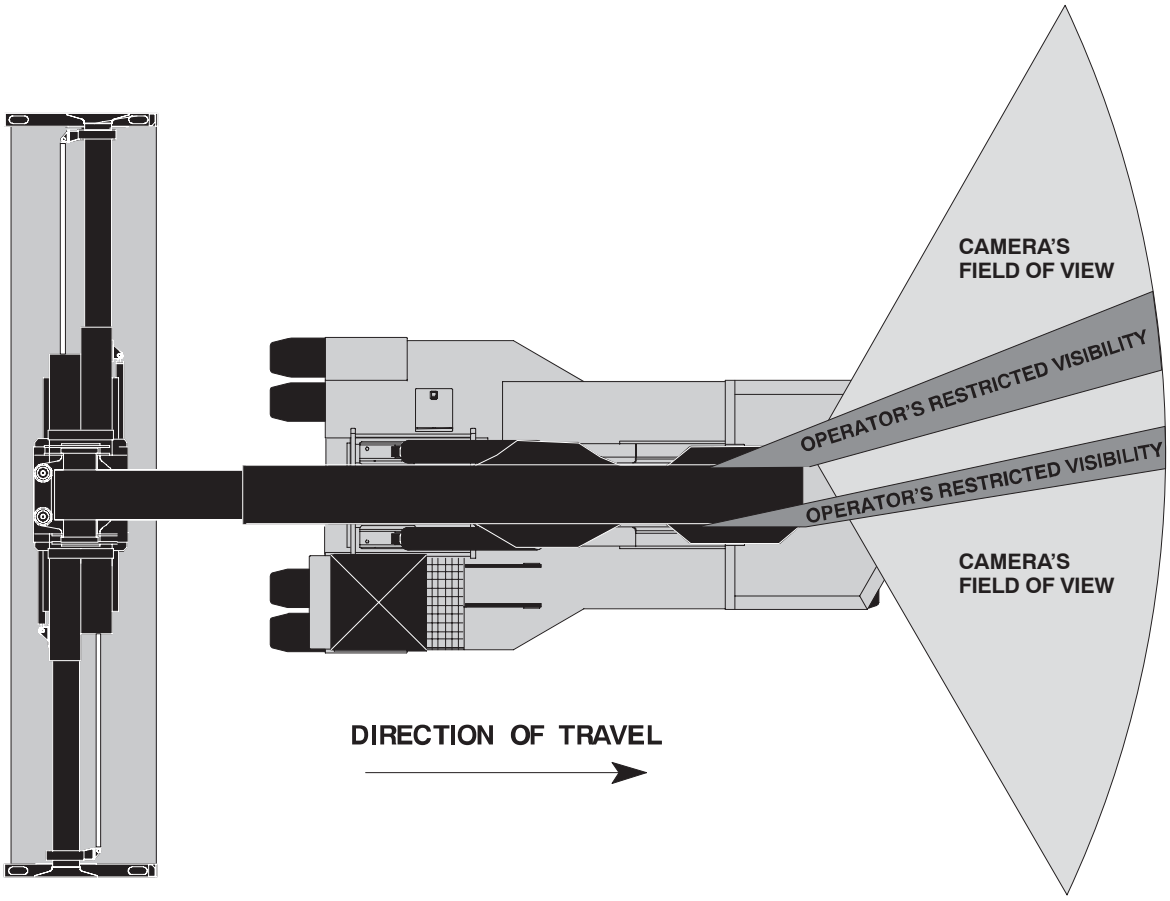

https://truckmanualshub.com/

⚠WARNING

Dangerous Action
Not ensuring the path of the machine's tailswing is clear.

What Can Happen
You could cause death or serious injury to someone or damage to the truck or other property.

How to Avoid the Danger
Do **not** operate the machine or move the load if other people are near the machine or load. Understand machine tailswing.

Steer axles on reach stackers are located at the rear of the machine. This means the major swing of the machine, when it turns in the forward mode, is at the back. As a result, a movement to shift a load at the front six inches left or right, for example, will cause the rear of the truck to move 18 to 24 inches or *more* in a direction opposite to the front. This steer action and tailswing will occur if the machine is in either **forward** or **reverse.** And if, for example, a movement at the front is greater than six inches, the swing of the rear end can be much greater than the 18 to 24 inches mentioned above.

The operator's attention is focused on the load movement. When the front end of the machine and the load are moved the rear end of the machine may inadvertently strike a bystander who is also watching the load and does not consider how much movement may occur at the steer axle.

The operator must remember that the tailswing may be greater than expected. The operator should **refuse to operate** the machine if bystanders are present.

Start turns on the inside of aisles to ensure adequate clearance for tailswing. Slow down and sound the horn at cross aisles and other locations where vision is obstructed (such as corners of buildings). Make sure the path of the machine's tailswing is clear!

Property damage can occur if the counterweight strikes stacked goods, corners of buildings, etc.

Slow down and sound the horn when approaching blind corners; but, **never** attempt to "blast" your way through with a horn.

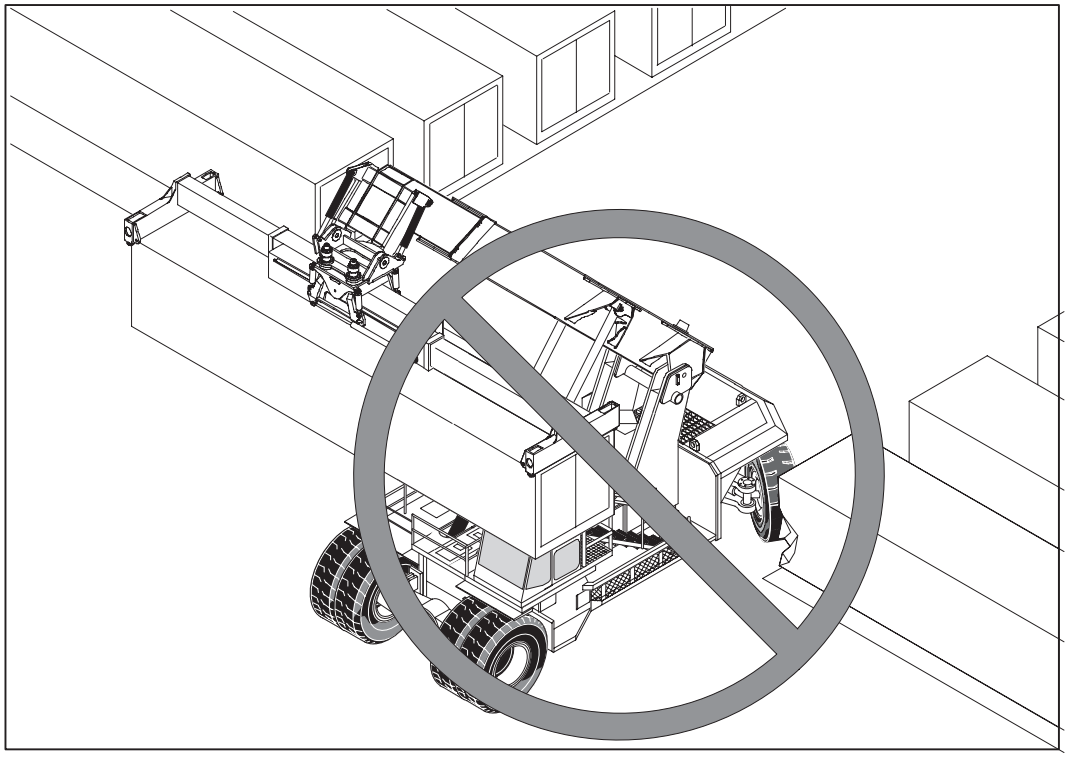

https://truckmanualshub.com/

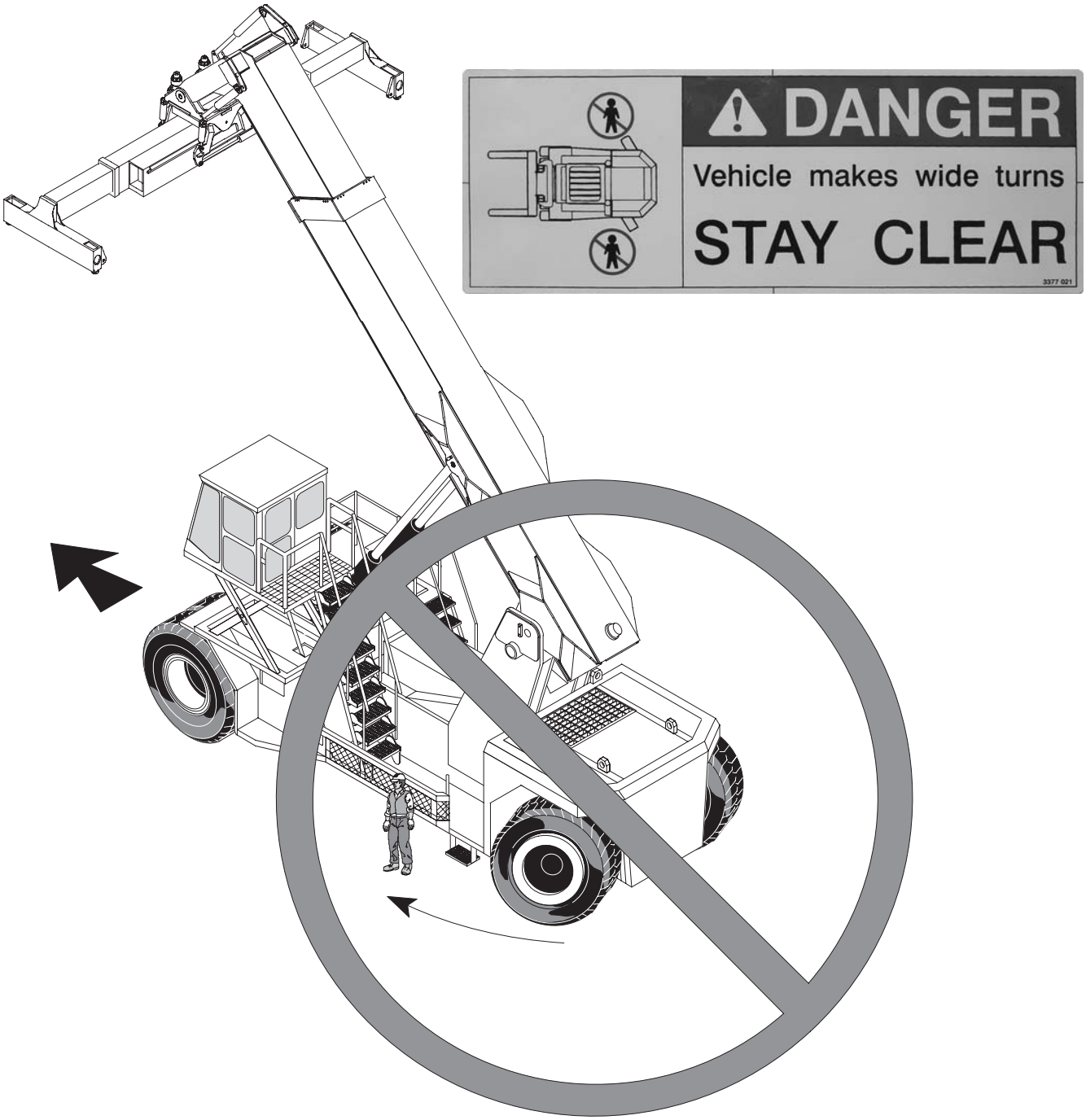

https://truckmanualshub.com/

D. Slip And Fall Accidents

Some causes of slip and fall accidents are:

- Improperly mounting or dismounting the reach stacker.
- Not keeping the reach stacker clean, free of oil, grease, and fuel.
- Operating the reach stacker while personnel are on any part of the machine.

Note!

- The most common work place accidents are slip and fall accidents. They are also the easiest accidents to prevent.
- Follow safe mounting and dismounting procedures.

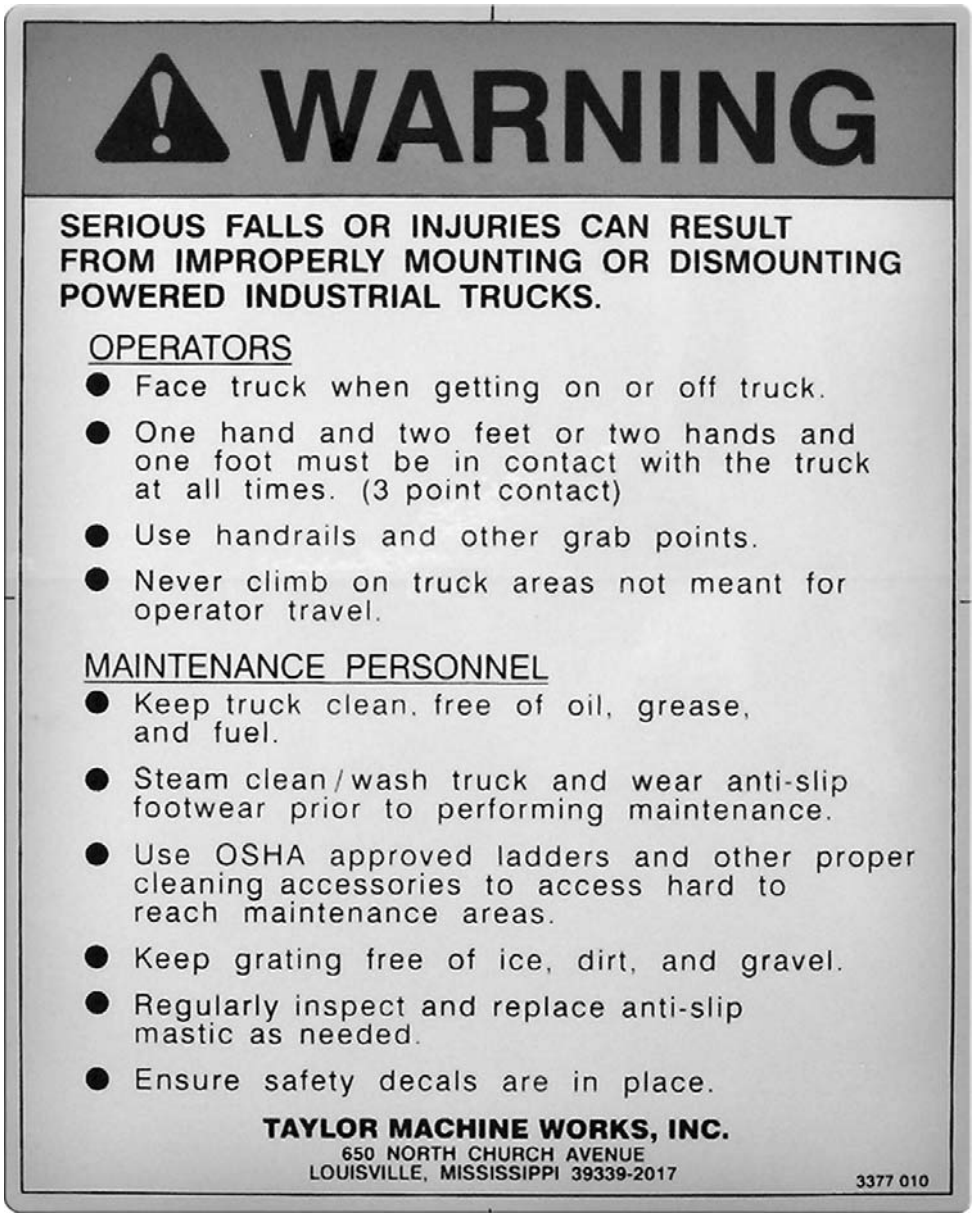

https://truckmanualshub.com/

⚠ WARNING

Dangerous Action
Improperly mounting or dismounting the reach stacker.

What Can Happen
You could slip, fall, and be seriously injured.

How to Avoid the Danger
Follow all the manufacturer's access instructions including:

- **Face ladder** when getting on or off reach stacker.
- One hand and two feet or two hands and one foot must be in contact with the reach stacker at all times (3-point contact).
- Use **handrails** and other grab points.
- **Never climb** on reach stacker areas not meant for operator travel.

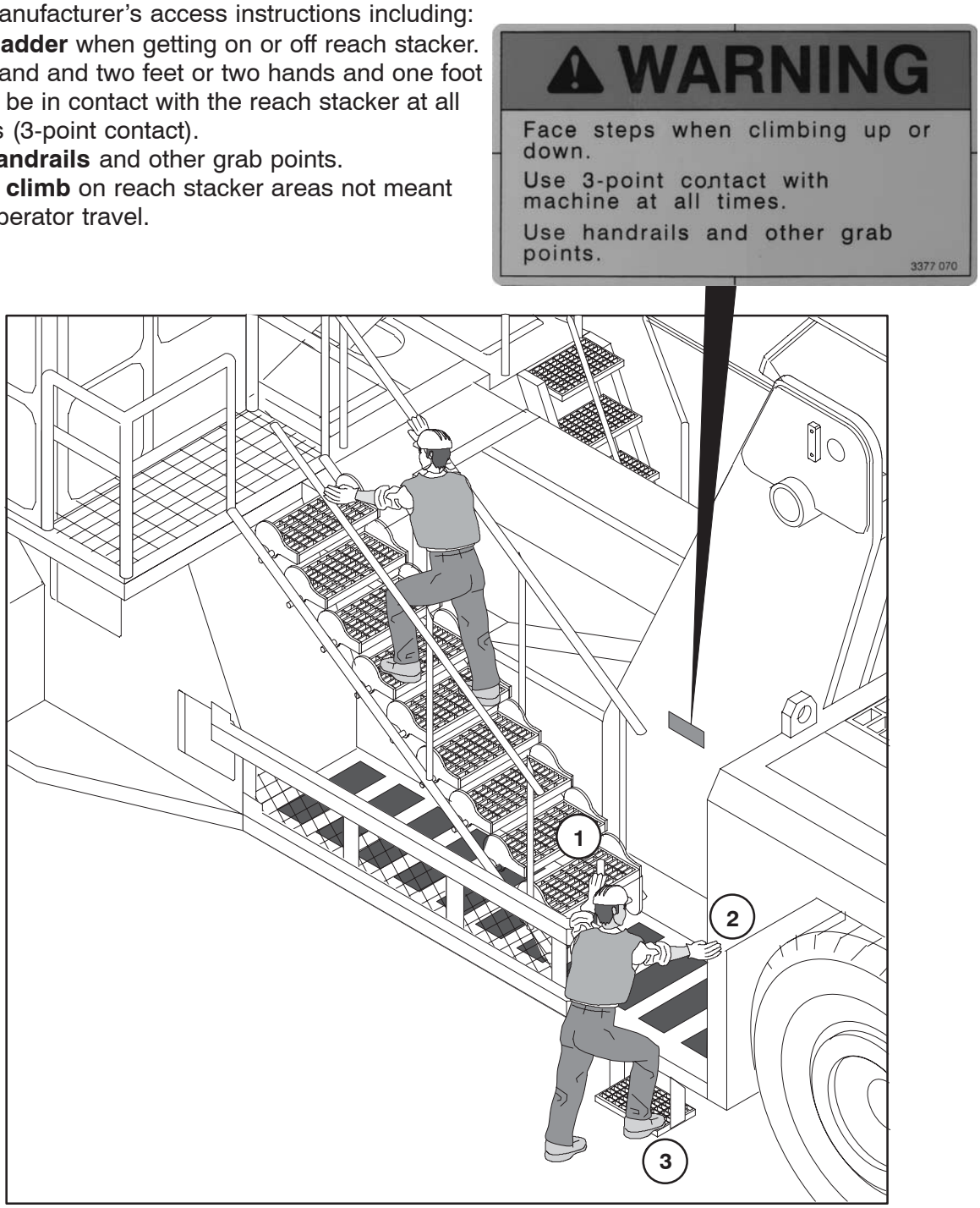

https://truckmanualshub.com/

⚠ WARNING

Dangerous Action
Not keeping the reach stacker clean, free of oil, grease, and fuel.

What Can Happen
You or someone else could slip, fall, and be seriously injured.

How To Avoid The Danger
Follow all the manufacturer's maintenance instructions including:

- **Keep reach stacker clean,** free of oil, grease, and fuel.
- **Steam clean/wash** reach stacker and wear anti-slip footwear prior to performing maintenance.
- Use **OSHA approved** ladders and other proper cleaning accessories to access hard to reach maintenance places.
- Keep grating **free of ice, dirt, and gravel.**
- Regularly **inspect** and **replace anti-slip** mastic as needed.
- Ensure **safety decals** are in place.

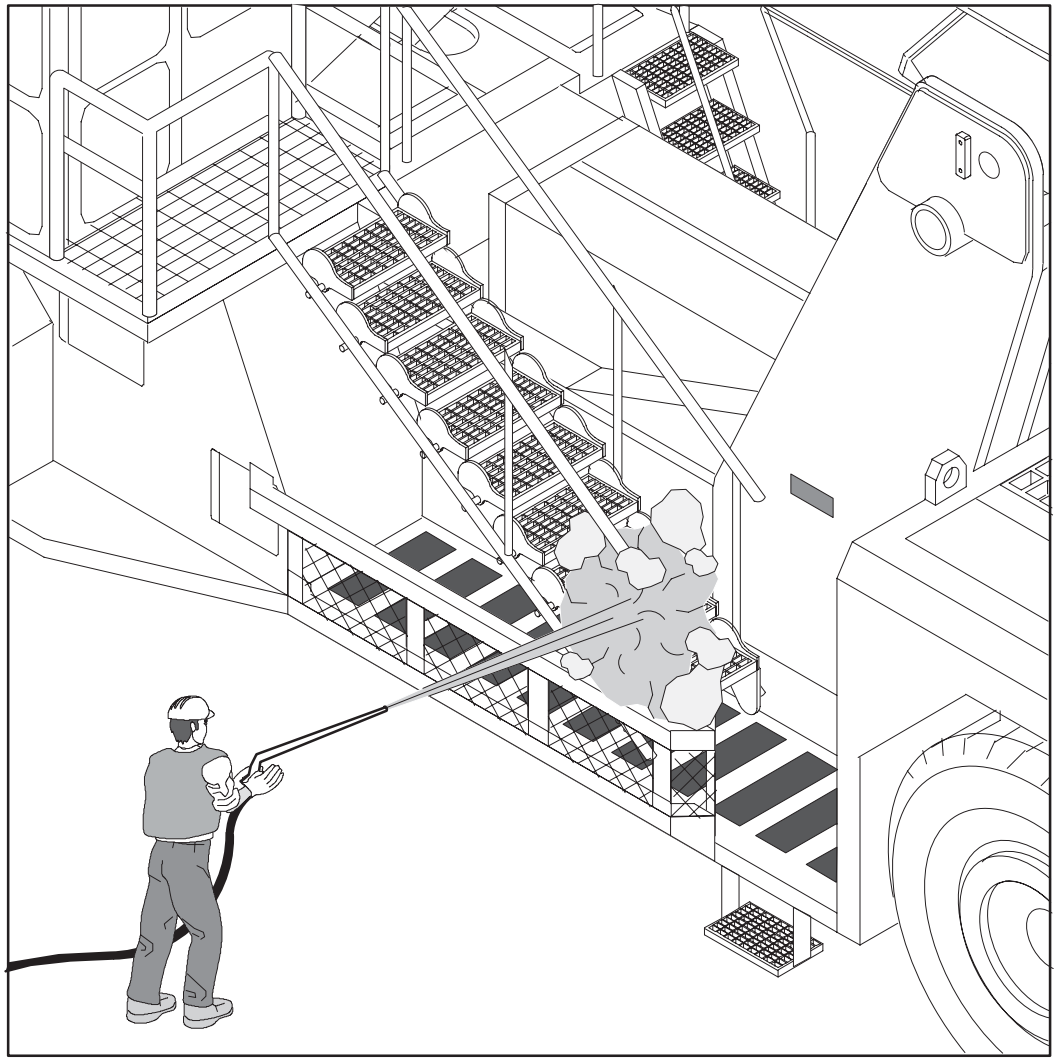

https://truckmanualshub.com/

⚠ WARNING

Dangerous Action
Operating the reach stacker while personnel are on any part of the machine.

What Can Happen
Personnel on the reach stacker could fall and be seriously injured.

How to Avoid the Danger
Before entering the operator's cab, check to make sure that no one is on the reach stacker. Be alert to personnel entering the work area; if they approach the reach stacker or climb onto the reach stacker **stop immediately.** Do not resume operation until all personnel are clear of the reach stacker.

The reach stacker is not designed for riders.

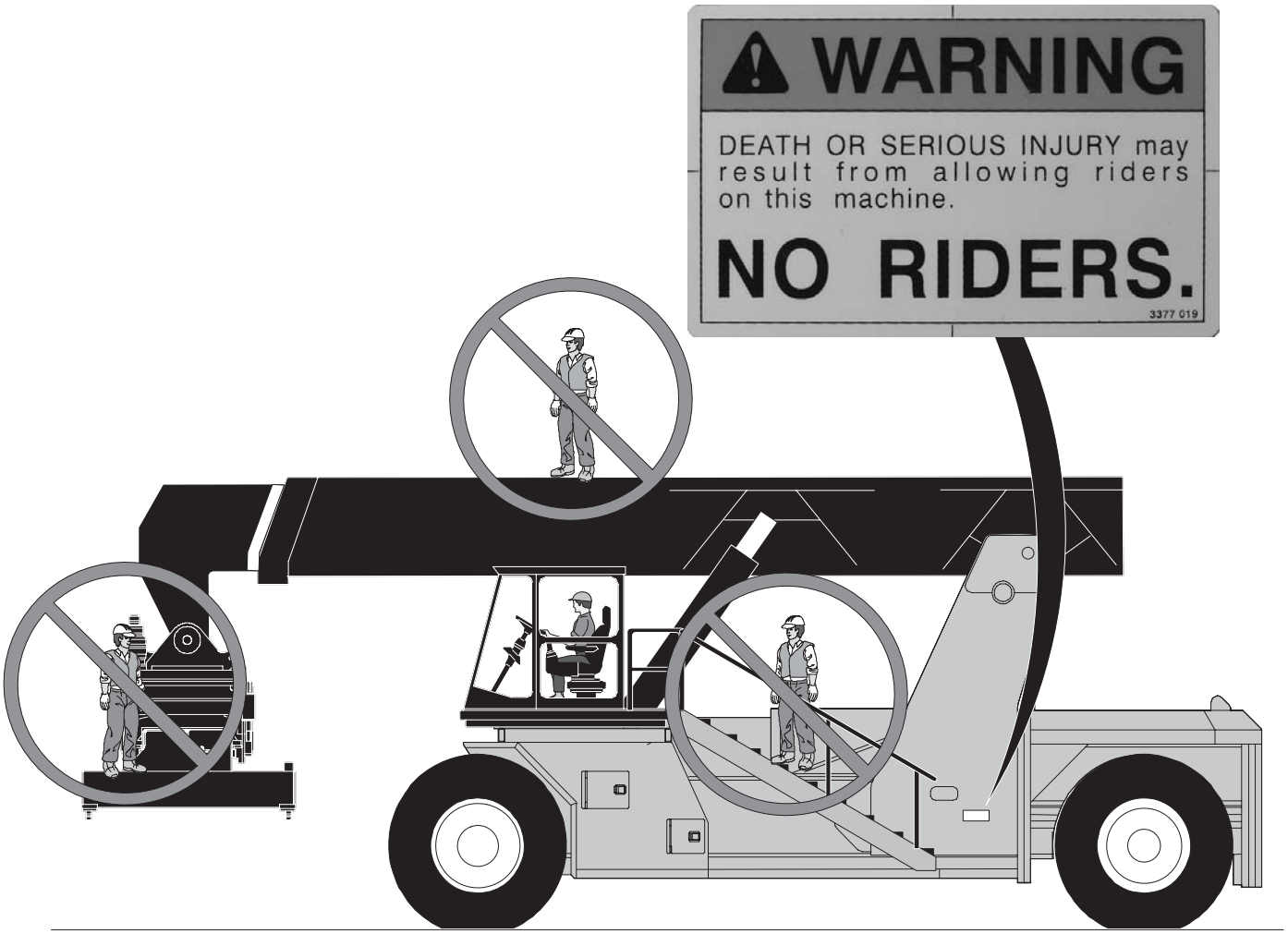

https://truckmanualshub.com/

E. Maintenance / Servicing Accidents

Some causes of maintenance / servicing accidents are:

- Improperly fueling the reach stacker.
- Improperly checking for hydraulic leaks or diesel fuel leaks.
- Improperly checking the engine cooling system.
- Improperly checking battery fluid levels or “jump” starting engines.
- Putting air in a multi-piece tire and rim assembly without proper tools and training.
- Attempting to service a multi-piece tire and rim assembly without proper tools and training.
- Entering the area around the steer tires.
- Using an improper chain while performing maintenance.
- Improperly relying on jacks or hoists to support heavy loads.
- Operating a truck that is damaged or in need of repair.
- Climbing on the attachment, boom, top of the cab, or other high places on the machine.
- Operating a machine that has been modified without the manufacturer’s approval. This includes the attachment, counterweight, tires, etc.
- Lifting people with an attachment not properly equipped for elevating personnel.
- Using replacement parts not approved by the manufacturer.
- Performing maintenance around the cab without pinning and locking out the cab raise/lower.
- Performing maintenance around the fan or radiator while the engine is running.
- Maintaining or operating the reach stacker without the drive line guard in place.

⚠ WARNING

Before opening the engine compartment doors or performing other maintenance on the reach stacker, the following precautions must be taken to prevent accidental start-up, operation, or movement of the reach stacker while maintenance is being performed:

1. Move the reach stacker to a safe parking area, away from rail tracks and truck lanes.
2. Make sure the reach stacker is on a level surface and on ground/pavement with adequate strength to support the machine’s weight.
3. Chock each tire with SAE type chocks.
4. Turn off the ignition switch, place the transmission and hydraulic controls in the neutral position, and pull the parking brake control to the out position to activate the brakes.
5. Ensure the cab is properly secured and remove the ignition key.
6. Tag out the controls or the ignition switch.
7. Turn off the battery disconnect switch and remove the key.
8. After the maintenance work is complete make sure all guards are properly secured; then, remove all warning tags, turn the battery disconnect and cab lift/lower disconnect switches on, and return all keys to the proper location.

https://truckmanualshub.com/

⚠ WARNING

Operating this reach stacker when it is in need of repair can result in death or serious injury to the operator or other personnel or cause severe property damage.

Machine checks must be performed daily:

1. **before** the machine is placed in service,
2. by **qualified, trained, and skilled** personnel who have proper tools and knowledge and
3. performed in accordance with the **Operator's Guide**, the **Maintenance Manual**, the **Service Manual**, and the **Safety Check** booklet.

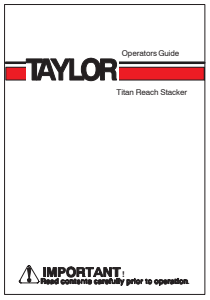

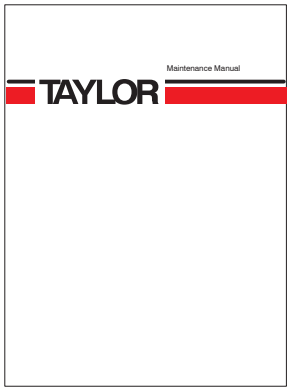

Regularly Scheduled maintenance, lubrication, and safety inspections will help ensure a safe and productive work life for the machine and the operator(s).

⚠ **WARNING: Do not operate the truck if it is in need of repair. Remove the ignition key and attach a "Lockout" tag.**

⚠ **WARNING: Do not attempt to perform maintenance procedures unless you have been thoroughly trained and you have the proper tools.**

⚠ **WARNING: Use only genuine Taylor replacement parts. Lesser quality parts may fail resulting in property damage, personal injury, or death.**

Maintenance personnel who find it necessary to operate this machine, even for a short period of time, must fully understand all operational literature including:

- OSHA operating rules found in 29 CFR 1910.178; Appendix A in **Safety Check**
- ANSI B56.1 rules for operating a powered industrial truck; Appendix B in **Safety Check**
- The Operator's Guide for the machine
- The manufacturer's Safety Booklet
- The manufacturer's Safety Video
- The manufacturer's Service Bulletins

https://truckmanualshub.com/

- The content and meaning of all machine decals

WARNING: If maintenance requires running the engine indoors, ensure the room has adequate flow-through ventilation!

WARNING: Remove all rings, watches, chains, other jewelry, and all loose clothing before working around moving parts!

WARNING: Know how to avoid accidents such as those described in the Maintenance/Service Accidents Section of "Safety Check":

- Improperly refueling the truck.
- Improperly checking for hydraulic leaks or diesel fuel leaks.
- Improperly checking the engine cooling system.
- Improperly checking battery fluid levels or "jump" starting engines.
- Putting air in a multi-piece tire and rim assembly without proper tools and training.
- Attempting to service a multi-piece tire and rim assembly without proper tools and training.
- Using an improperly suited chain while performing maintenance.
- Relying on jacks or hoists to support heavy loads.
- Operating a truck that is damaged or in need of repair.
- Climbing on the attachment, boom, the top of the cab, or other high places on the machine.
- Operating a machine which has been modified without the manufacturer's approval. This includes the attachment, counterweight, tires, etc.
- Lifting people with a reach stacker.

WARNING: Do not operate the vehicle or attempt to perform maintenance on the vehicle while under the influence of alcohol, drugs, or any other medications or substances that slow reflexes, alter safe judgement, or cause drowsiness.

WARNING: Know how to avoid slip and fall accidents such as those described in the Slip and Fall Accidents Section of "Safety Check."

Maintenance Personnel:

- **Keep the truck clean**, free of oil, grease, and fuel.
- **Steam clean/wash** the truck prior to performing maintenance. Wear anti-slip footwear when performing maintenance procedures.
- Use **OSHA approved** ladders and other proper cleaning accessories to access hard to reach maintenance places.
- Keep gratings **free of ice, dirt, and gravel.**
- Regularly **inspect** and **replace anti-slip** mastic on the vehicle as needed.
- Ensure all **safety decals** are in place on the vehicle.

https://truckmanualshub.com/

⚠ WARNING

Dangerous Action
Improperly fueling the reach stacker.

What Can Happen
An explosion could occur causing serious bodily injury or death.

How To Avoid The Danger
Never fill the fuel tank while the engine is running, while smoking, or when near an open flame.

Never overfill the tank or spill fuel or any other petroleum based fluid. If a spill occurs, clean it up immediately using a commercially available oil absorbent.

Ground the fuel funnel or nozzle against the filler neck to prevent sparks.

Be sure to replace the fuel tank cap.

Make sure you know where fire extinguishers are; and be sure you know how to use them.

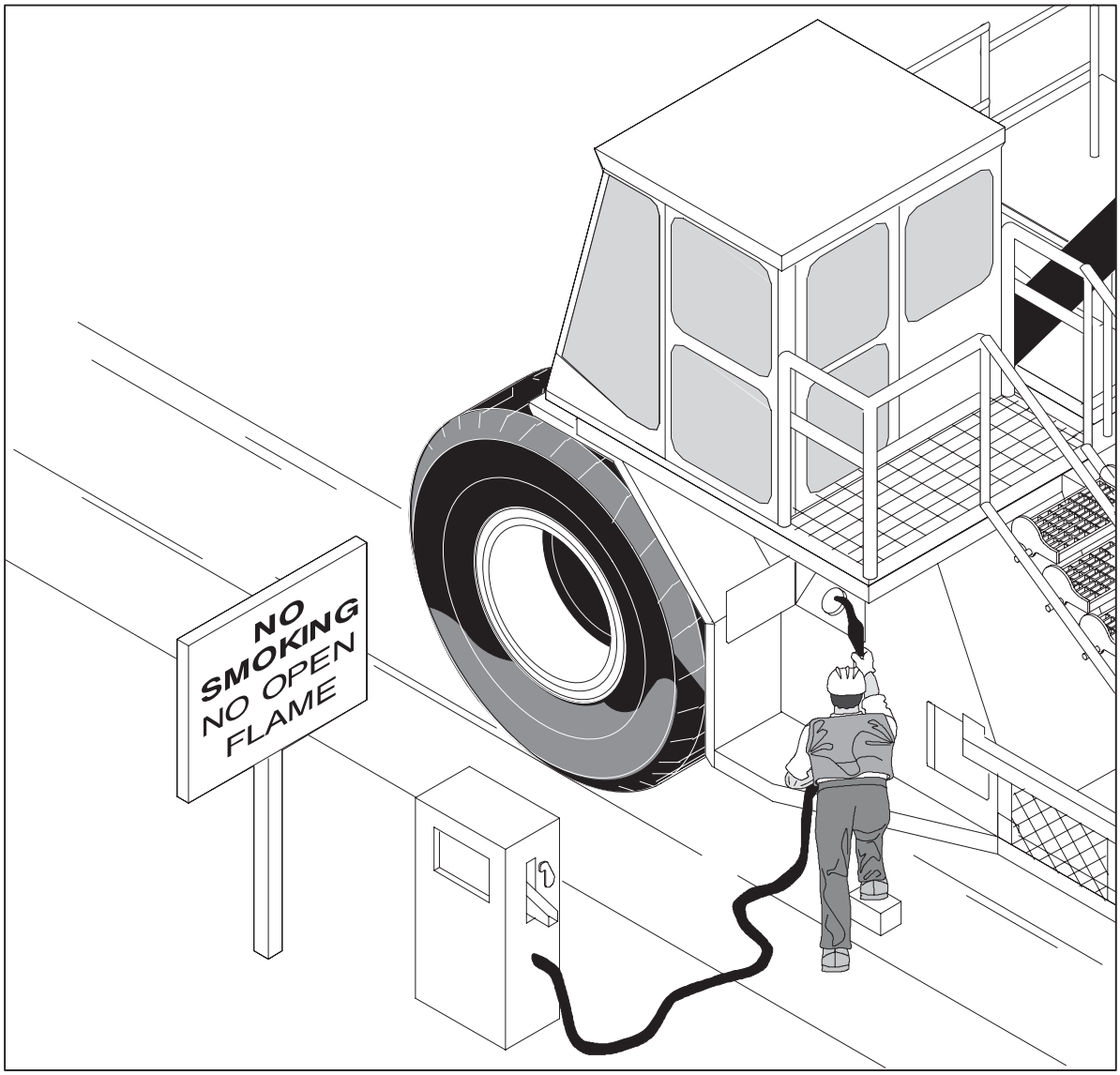

https://truckmanualshub.com/

⚠ WARNING

Dangerous Action
Improperly checking for hydraulic leaks or diesel fuel leaks.

What Can Happen
Hydraulic fluid under pressure can penetrate skin or injure eyes and cause you to lose your hands or to be blinded. Wires in worn hydraulic hoses can cut your hands.

How to Avoid the Danger
Wear heavy gloves and safety goggles when checking for hydraulic leaks, diesel leaks and worn or damaged hydraulic hoses. Use a piece of cardboard or wood to find leaks. Remember, a hydraulic system is under pressure whenever the engine is running and may hold pressure even after engine shut down. Replace any hydraulic hose that is worn or frayed or shows any sign of damage. Get immediate medical attention if fluid enters the eyes or skin, get immediate attention.

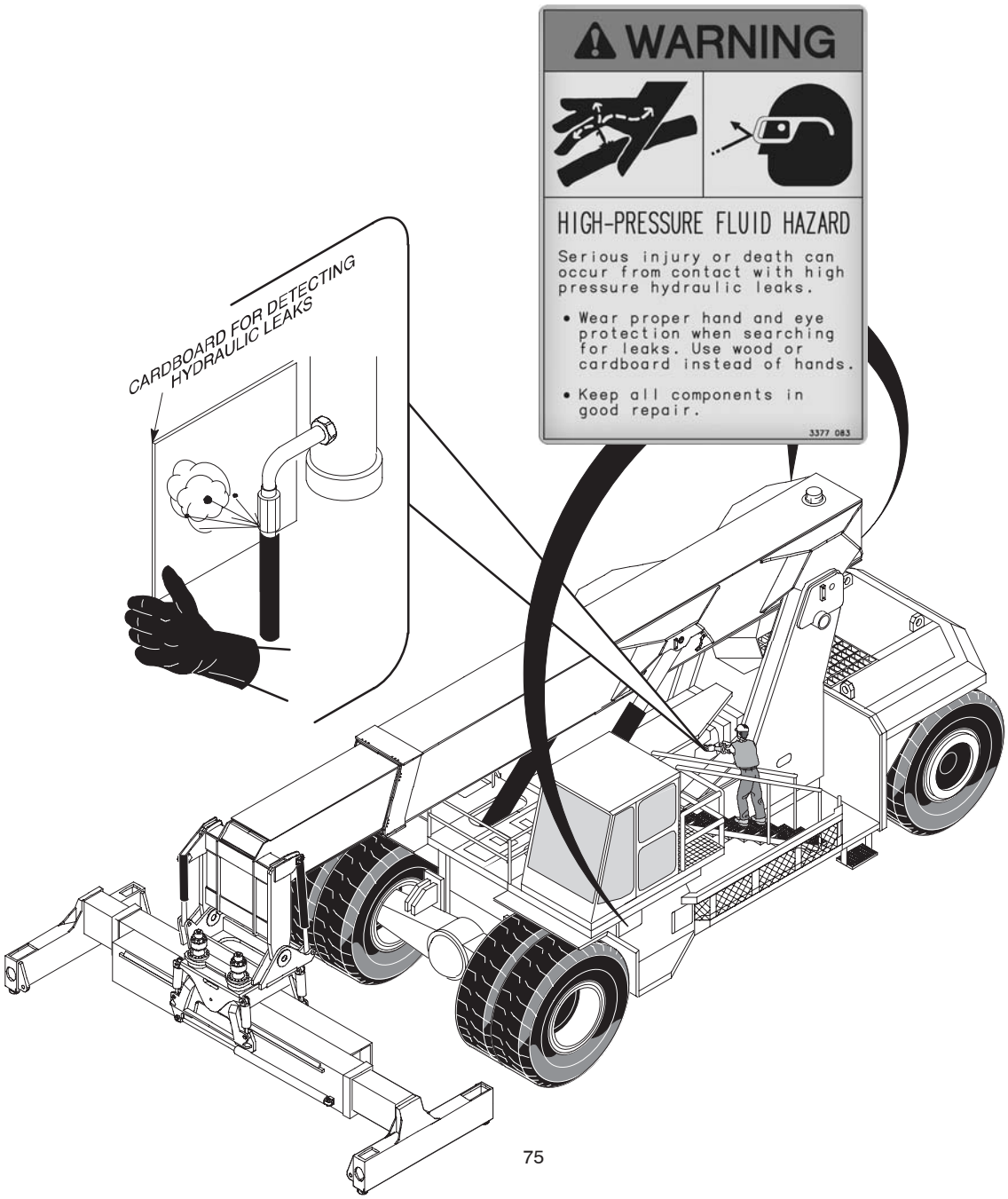

https://truckmanualshub.com/

⚠ WARNING

Dangerous Action
Improperly checking the engine cooling system.

What Can Happen
You could be severely burned or blinded by spewing engine coolant.

How to Avoid the Danger
Wear heavy gloves and safety goggles when checking engine coolant. Liquid cooling systems build up pressure as the engine gets hot. Stop the engine and let the system cool before removing the radiator cap.

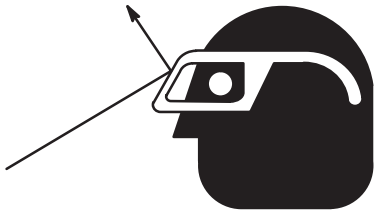

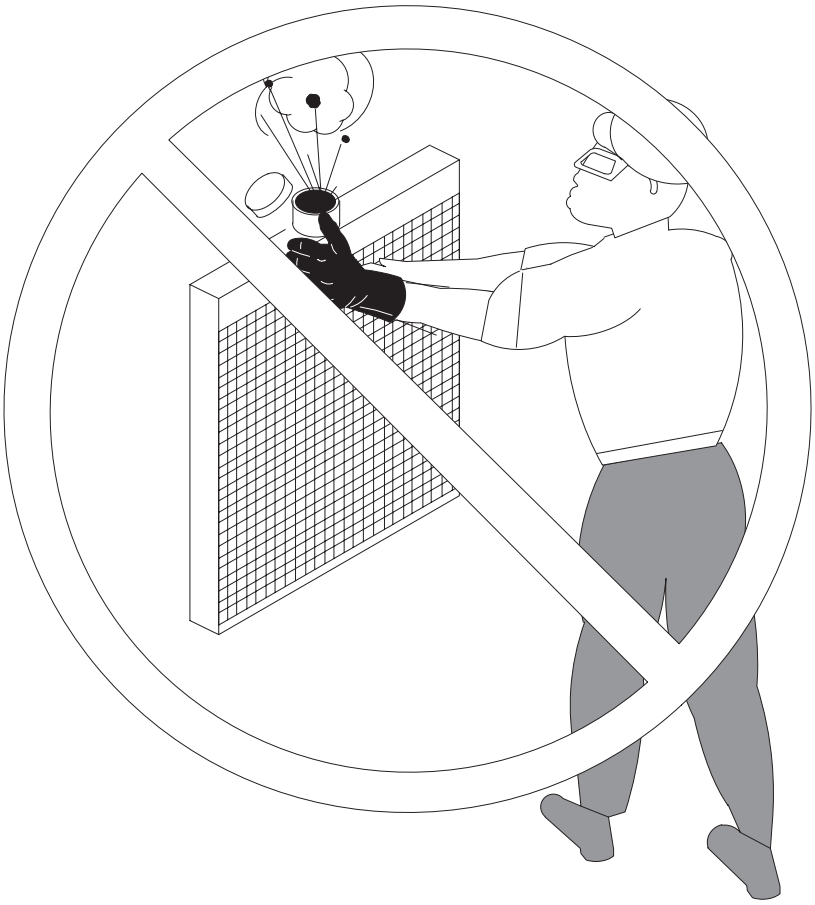

https://truckmanualshub.com/

⚠ WARNING

Dangerous Action
Improperly checking battery fluid levels or “jump starting” engines.

What Can Happen
Lead-acid batteries contain sulfuric acid which will burn and injure eyes or skin on contact. Batteries can explode if not handled properly.

How to Avoid the Danger
Always wear rubber gloves and eye goggles (or a face shield), when you expect to come in contact with a battery. If acid contacts eyes or skin, flush immediately with clean water and seek medical attention.

Never expose batteries to arcs, sparks, flames, or lighted tobacco.

Never check the battery by placing a metal object across the posts.

Always disconnect the battery before working on the electrical system, removing the ground terminal first. Reconnect the ground terminal last when reconnecting the battery.

Follow the **manufacturer’s directions** for “jump starting” of engines. Jump starting is a two person job. The operator must be in his seat.

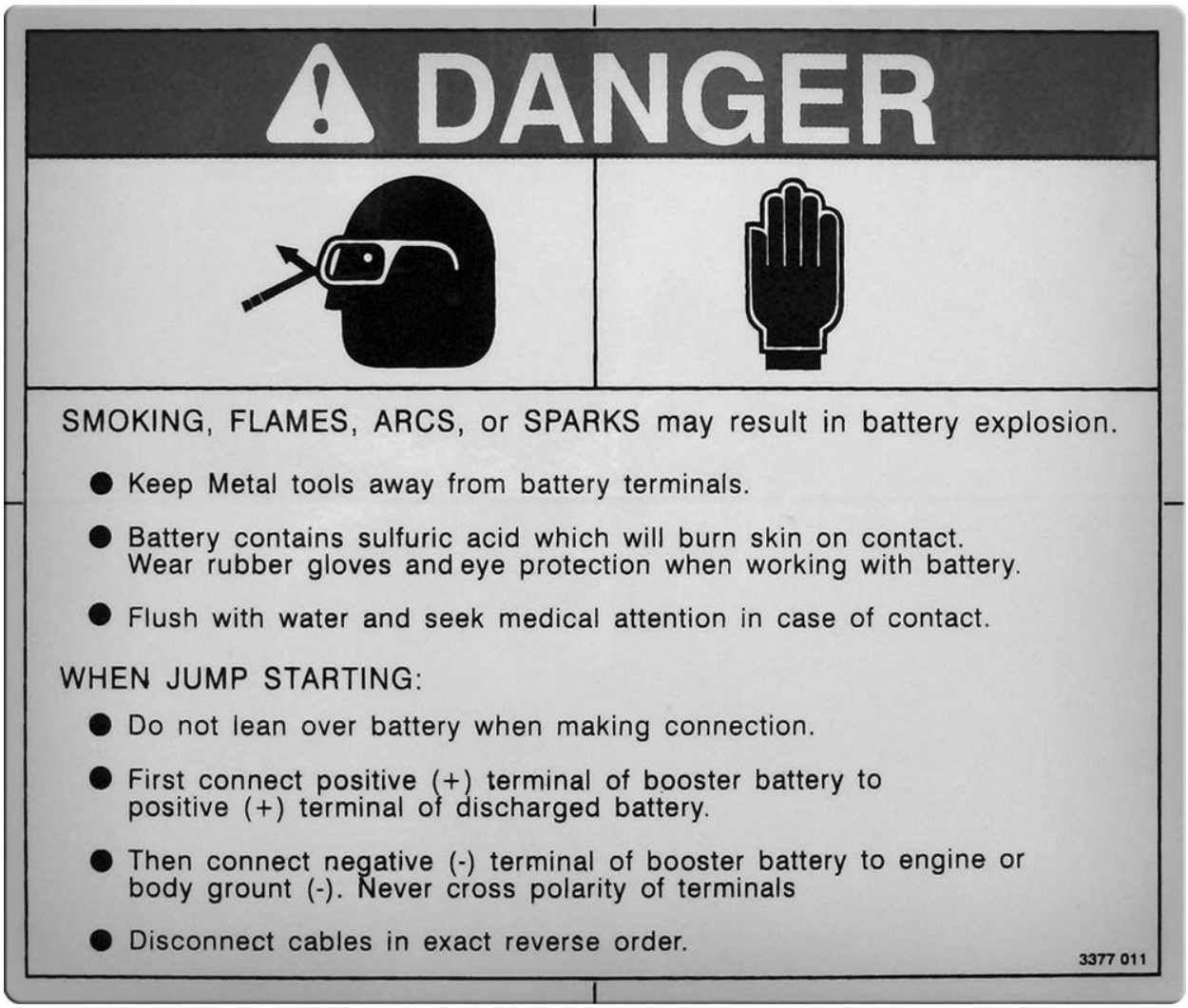

Decal Part Number 3375-245

https://truckmanualshub.com/

⚠ WARNING

Dangerous Action
Putting air in a multi-piece tire and rim assembly without proper tools and training.

What Can Happen
The tire and rim could explosively separate causing serious injury or death to anyone in the trajectory path.

How to Avoid the Danger
Never stand in the trajectory path while putting air in a multi-piece tire and rim assembly which is mounted on a truck.

Always use a clip-on-chuck, an in-line pressure gauge, and enough air hose to allow you to stand well away from the trajectory path.

Never put air in a tire that has been driven under-inflated at 80% or less of its recommended pressure or if there is suspected damage to the tire or wheel components. Remember, most accidents occur **while** the tire and rim assembly are being inflated. Allow only a trained tire specialist to service the tire.

OSHA TIRE AND RIM SAFETY CHARTS

https://truckmanualshub.com/

⚠ WARNING

Dangerous Action
Attempting to service a multi-piece tire and rim assembly without proper tools and training.

What Can Happen
The tire and rim could explosively separate causing serious injury or death to anyone in the trajectory path.

How to Avoid the Danger
Allow only trained tire specialists to service multi-piece tire and rim assemblies.

⚠ ***NEVER** remove a single lug nut or rim clamp without **FIRST DEFLATING THE TIRE** – and without **FIRST DEFLATING BOTH TIRES** on dual–tire assemblies.*

OSHA requires every employer who handles multi-piece tire and rim assemblies to have a **training program, a restraining device,** and **proper tools and equipment,** including a **clip-on-chuck** and an **in-line air gauge** with enough air hose to allow the individual to stand outside the trajectory path.

- Ensure that the tire is **totally deflated** before removing lug nuts or rim clamps.
- **Remove the valve core and run a wire through the stem** to ensure that the stem is not plugged and that **all** the air is exhausted.
- On **dual tire assemblies**, all the air must be removed from **both tires** prior to removing any single lug nut or rim clamp.
- **Never** mis-match tire and rim components – use an **OSHA matching chart** to ensure the components match exactly.
- **Inspect** for rust; inspect for bent or damaged parts. Parts must be **clean, must fit together, and must seat properly.**
- Throw away unserviceable components.
- **Never** force or hammer components especially while they are under pressure; **never** weld or braze components.
- **Always** use a cage or other restraining device when inflating tires.
- **Always** use a clip-on-chuck, an in-line gauge, and enough hose to allow an individual to stand outside the trajectory path.
- Lock rings and other components **can be assembled improperly;** and, they will explode when put under pressure.
- **MD type lockring notch tabs must be out (facing you).**
- Remember that most accidents occur **while** the tire and rim assembly are being inflated – **Never** stand in the trajectory path.

TAYLOR MACHINE WORKS, INC.
LOUISVILLE, MISSISSIPPI

MODEL: _____ SERIAL NO: _____

SAFE CAPACITY WITH LOAD IN TRAVEL POSTION. DO NOT OVERLOAD. CAPACITY IS GREATLY REDUCED WHEN BOOM IS EXTENDED.

TIRE SPECIFICATIONS

AXLE	SIZE	PLY RATING	PRESSURE
DRIVE			
STEER			

WHEEL LUG NUT TORQUE PROCEDURE

WHEELS AND MOUNTS REQUIRE RUN-IN PERIOD ON A NEW VEHICLE AND AFTER EACH TIRE CHANGE. TORQUE BEFORE VEHICLE IS PUT IN SERVICE AND EACH 10 HOURS UNTIL WHEELS ARE SEATED. CARE SHOULD BE TAKEN TO KEEP GREASE AND OTHER FOREIGN MATERIAL FROM RIM SEATING SURFACES.

⚠ CAUTION: DO NOT OVERTORQUE.

AXLE	STUD SIZE	WRENCH SIZE	TORQUE-FT. LBS.
DRIVE			
STEER			

⚠ DANGER: – FIRST STEP IN TIRE DEMOUNTING OPERATIONS

ALWAYS REMOVE THE VALVE CORE AND EXHAUST ALL AIR FROM A SINGLE TIRE AND FROM BOTH TIRES OF A DUAL ASSEMBLY PRIOR TO REMOVING ANY RIM COMPONENTS OR ANY WHEEL COMPONENTS SUCH AS NUTS AND RIM CLAMPS. TO INSURE THAT THE VALVE STEM IS NOT DAMAGED RUN A PIECE OF WIRE THROUGH THE STEM TO MAKE SURE IT IS NOT PLUGGED AND ALL THE AIR IS EXHUASTED.

THIS VEHICLE IS CERTIFIED TO MEET THE APPLICABLE DESIGN AND PERFORMANCE CRITERIA REQUIRED FOR POWERED INDUSTRIAL TRUCKS IN OSHA SAFETY AND HEALTH STANDARDS, TITLE 29 CFR, PART 1910.178, AND THE APPLICABLE DESIGN AND PERFORMANCE REQUIREMENTS IN ANSI B56.1 THAT WERE IN EFFECT AT THE TIME OF MANUFACTURE. THESE STANDARDS ALSO APPLY TO THE USER AND SHOULD BE ADHERED TO WHILE OPERATING THIS VEHICLE.

THIS VEHICLE IS ALSO CERTIFIED TO MEET THE APPLICABLE DESIGN AND PERFORMANCE CRITERIA REQUIRED BY F.E.M. 4.001q STABILITY STANDARD FOR FREIGHT CONTAINER HANDLING VARIABLE REACH INDUSTRIAL TRUCKS.

ALL SPECIFICATIONS ARE SUBJECT TO CHANGE WITHOUT NOTICE. SOME OPERATING DATA MAY BE AFFECTED BY THE CONDITION OF THE OPERATING AREA. IF THESE SPECIFICATIONS ARE CRITICAL, CONTACT THE FACTORY.

PATENTS
THIS VEHICLE AND/OR ATTACHMENTS IS PATENTED UNDER THE FOLLOWING PATENT:
5370435
OTHER PATENTS PENDING

3375 227

https://truckmanualshub.com/

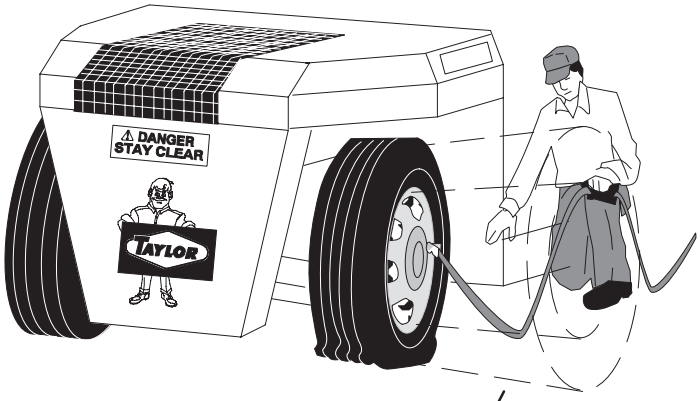

WARNING

STAY OUT OF
THE TRAJECTORY AS
INDICATED BY DASH LINES

Note: Under some circumstances the trajectory may deviate from its expected path.

TRAJECTORY

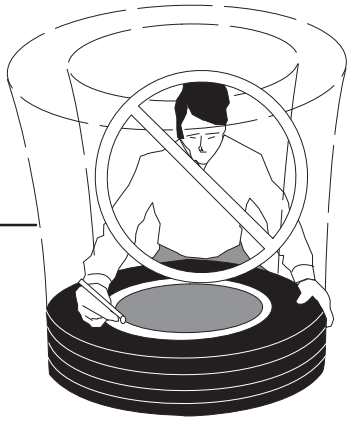

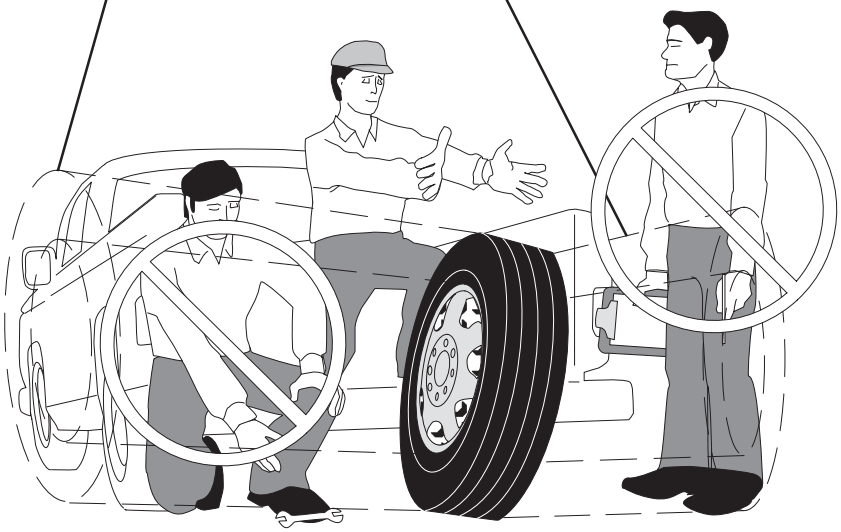

https://truckmanualshub.com/

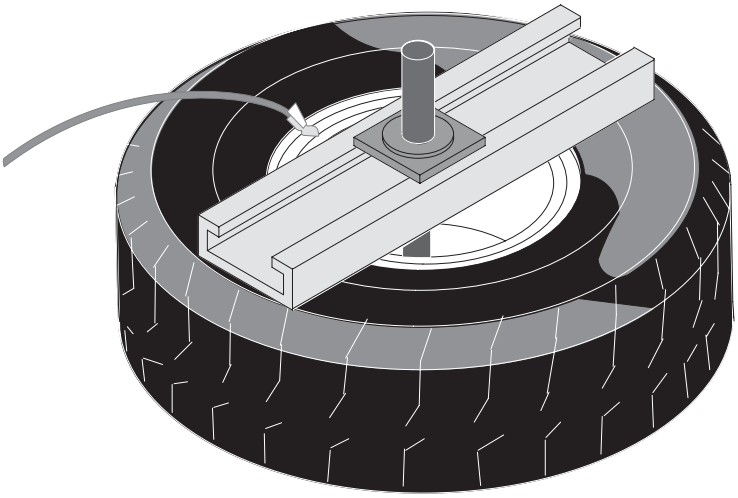

Portable Restraining Device. Used with clip-on chuck and remote in-line valve and gauge.

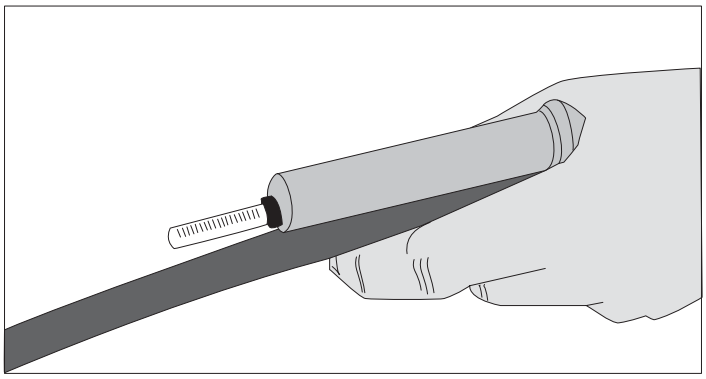

Remote Valve/Gauge. A remote in-line valve and gauge that both inflates and deflates.

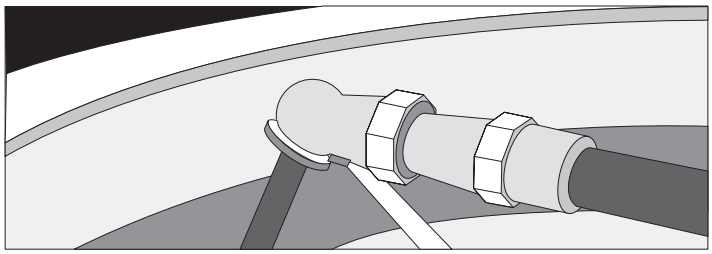

Clip-on Chuck

https://truckmanualshub.com/

⚠ WARNING

Dangerous Action
Entering the area around the steer tires.

What Can Happen
The tire could turn or rotate causing death or serious injury.

How to Avoid the Danger
Always turn the ignition off, remove the key, and tagout the controls before entering this area. Do not allow personnel to enter the area around the steer tires while the engine is running.

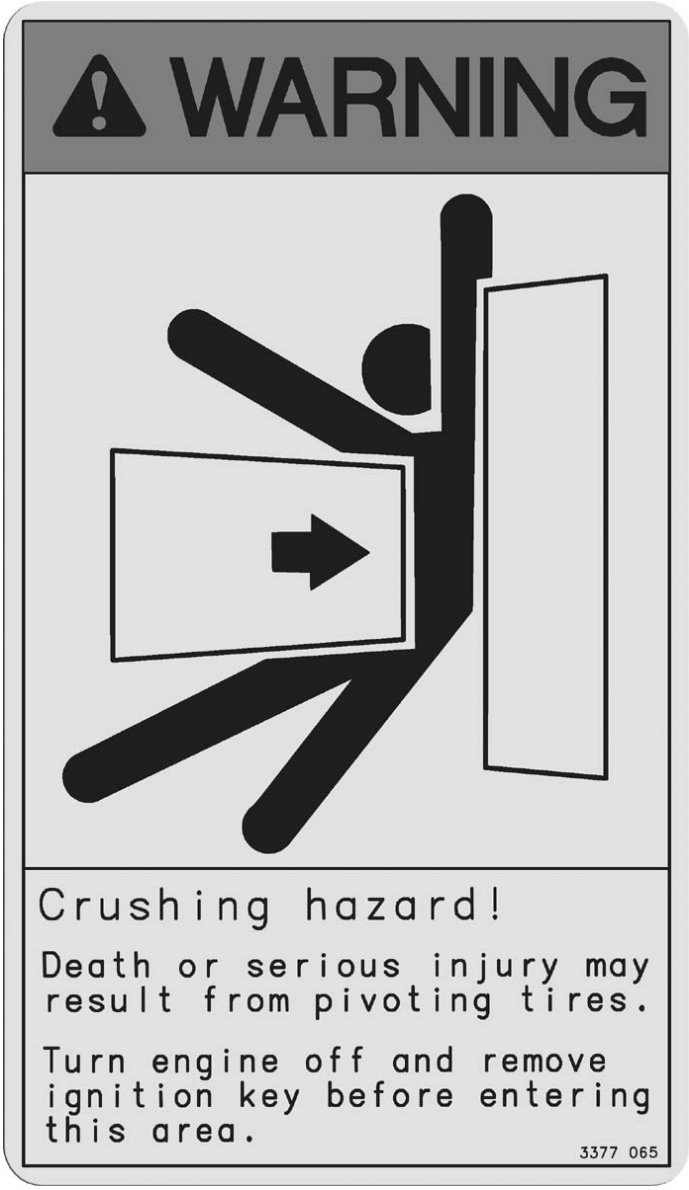

https://truckmanualshub.com/

⚠WARNING

Dangerous Action
Using an improper chain while performing maintenance.

What Can Happen
The chain could break and allow the supported load to fall causing death or serious injury to you or someone else.

How to Avoid the Danger
- Always use a chain with **adequate strength** to support the load
- Chain strength varies depending on:
  - size of the links, i.e., 3/8”, 1/2”, etc.
  - the type of steel used in the chain manufacturing process, i.e., low carbon steel, high carbon steel, or alloy steel,
  - the condition of the chain, i.e., worn or stretched.
- **Remember,** a chain is only as strong as its weakest link. **Never** use a bolt to join chains together.
- **Always** connect chains with a hook end.
- **Always** obtain the chain rating from the chain manufacturer.
- **Know** the weight of any machine component being supported; the weight can be determined by weighing the component or by contacting the machine manufacturer.
- Use a chain with a strength of at least four times the total weight being supported.
- Whenever possible **place cribbing under the supported load** to prevent its fall.
- Use approved chain connecting links or shackles.

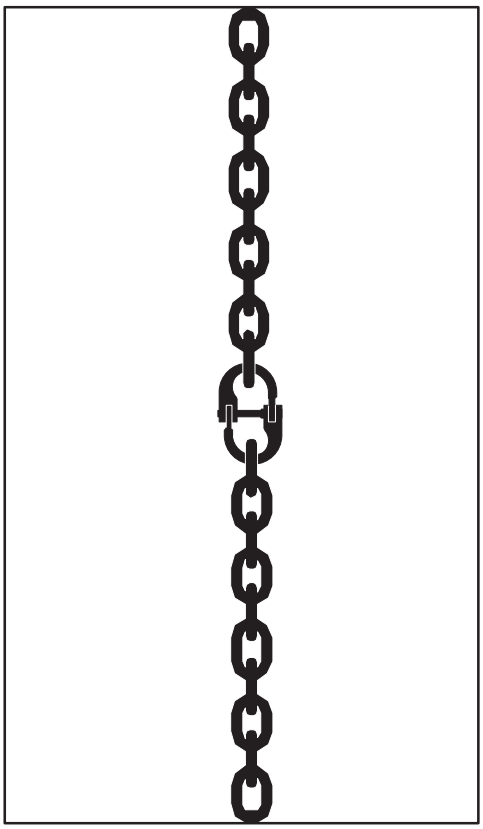

⚠WARNING: Use approved chain connecting links or shackles.

https://truckmanualshub.com/

⚠ WARNING

Dangerous Action
Improperly supporting moving or elevated parts.

What Can Happen
You or someone else could be crushed to death or seriously injured.

How to Avoid the Danger
- **Make sure** jacks or hoists have sufficient capacity to support the load.
- **Never** get under, near, or between heavy objects that are supported only by a jack or hoist.
- **Always** use oak or other hardwood cribbing to support a heavy load.

Jacks and hoists can lose fluid over a period of time and allow the supported object to drift down. Jacks and hoists can also be unstable because of the limited area of contact with the supported object. They can also simply fail. **Never trust your life to them.**

Always place oak or other hardwood cribbing under the load after the jack or hoist has lifted the load. Make sure the cribbing is large enough to have sufficient contact with the supported load to keep the supported load stable.

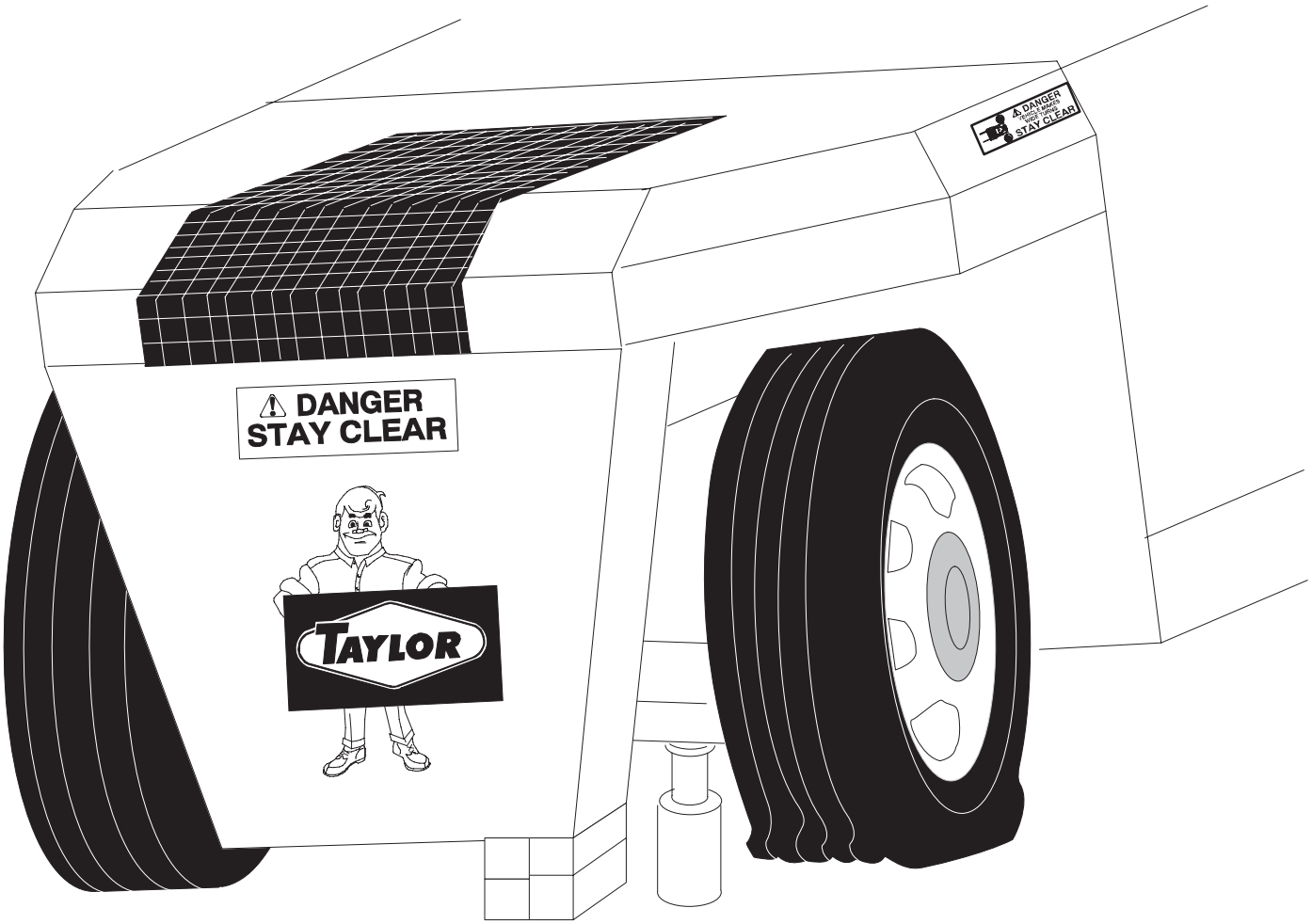

https://truckmanualshub.com/

⚠ WARNING

Dangerous Action
Operating a truck that is damaged or in need of repair.

What Can Happen
A number of serious injuries could occur, depending on the nature of the damage or needed repair.

How to Avoid The Danger
Refuse to operate a truck that is damaged or in need of repair. Very few “extras” exist on a reach stacker. Every item, a cotter pin on an axle spindle, a door latch, or a hood lock, is an important “safety” item. Even the smallest damaged or broken item can result in an injury somewhere down the line. Take the truck out of service. Use a “Lock-out - Tag-out” procedure; take the key. Turn off the battery disconnect switch; take the key. Do not operate the truck until the repairs have been completed. Use only service replacement parts recommended by the manufacturer.

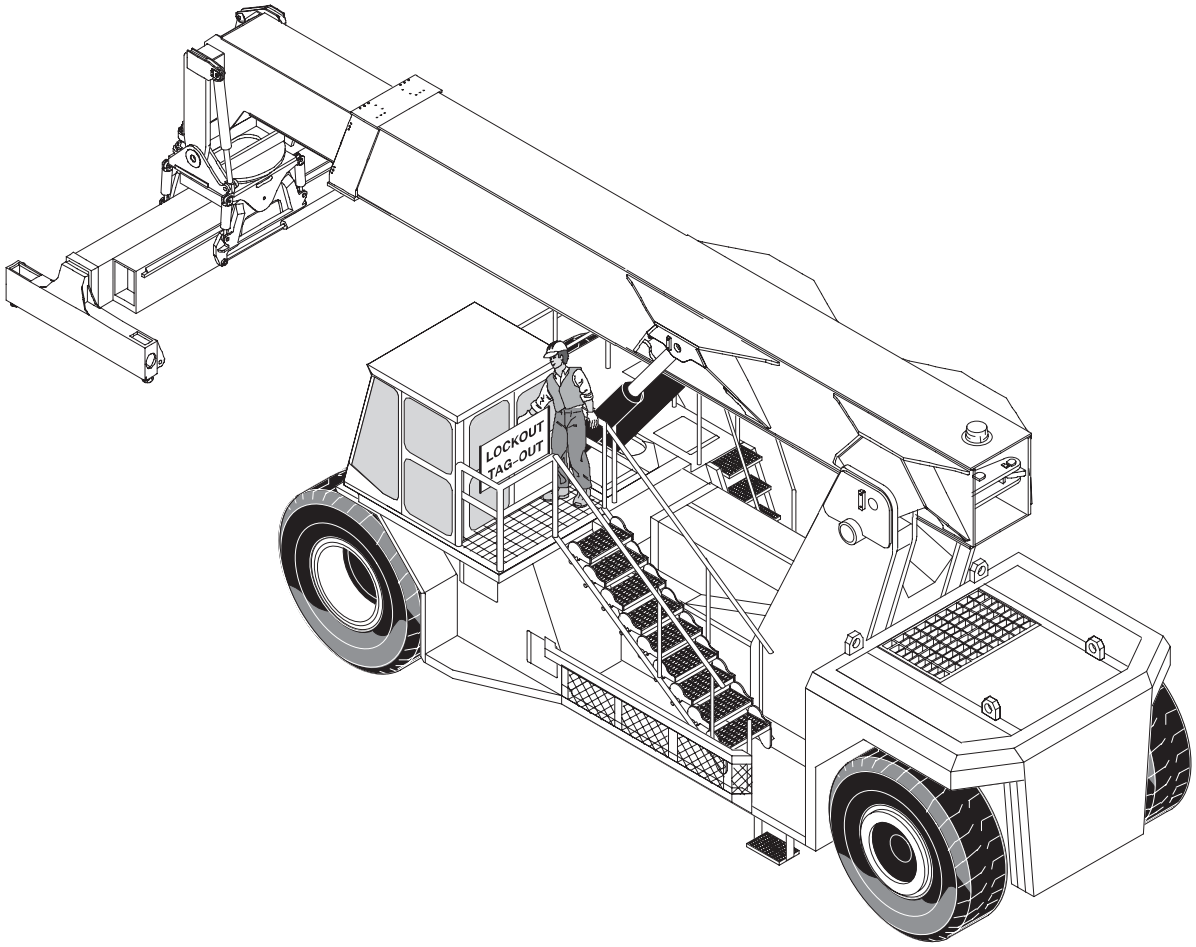

https://truckmanualshub.com/

⚠ WARNING

Dangerous Action
Climbing on the attachment, boom, top of the cab, or other high places on the machine.

What Can Happen
You could fall and be seriously injured or killed.

How to Avoid the Danger
Use OSHA approved ladders, stands, or manlifts to reach high places.

Sometimes maintenance must be performed on high areas or hard to reach places on a reach stacker. (Some examples are performing maintenance on the attachment, changing roto beacons, or other light bulbs). Never climb on the attachment. Never ride the trolley beam or attachment. **Always** use OSHA approved ladders, stands, or manlifts that are specifically designed to elevate personnel.

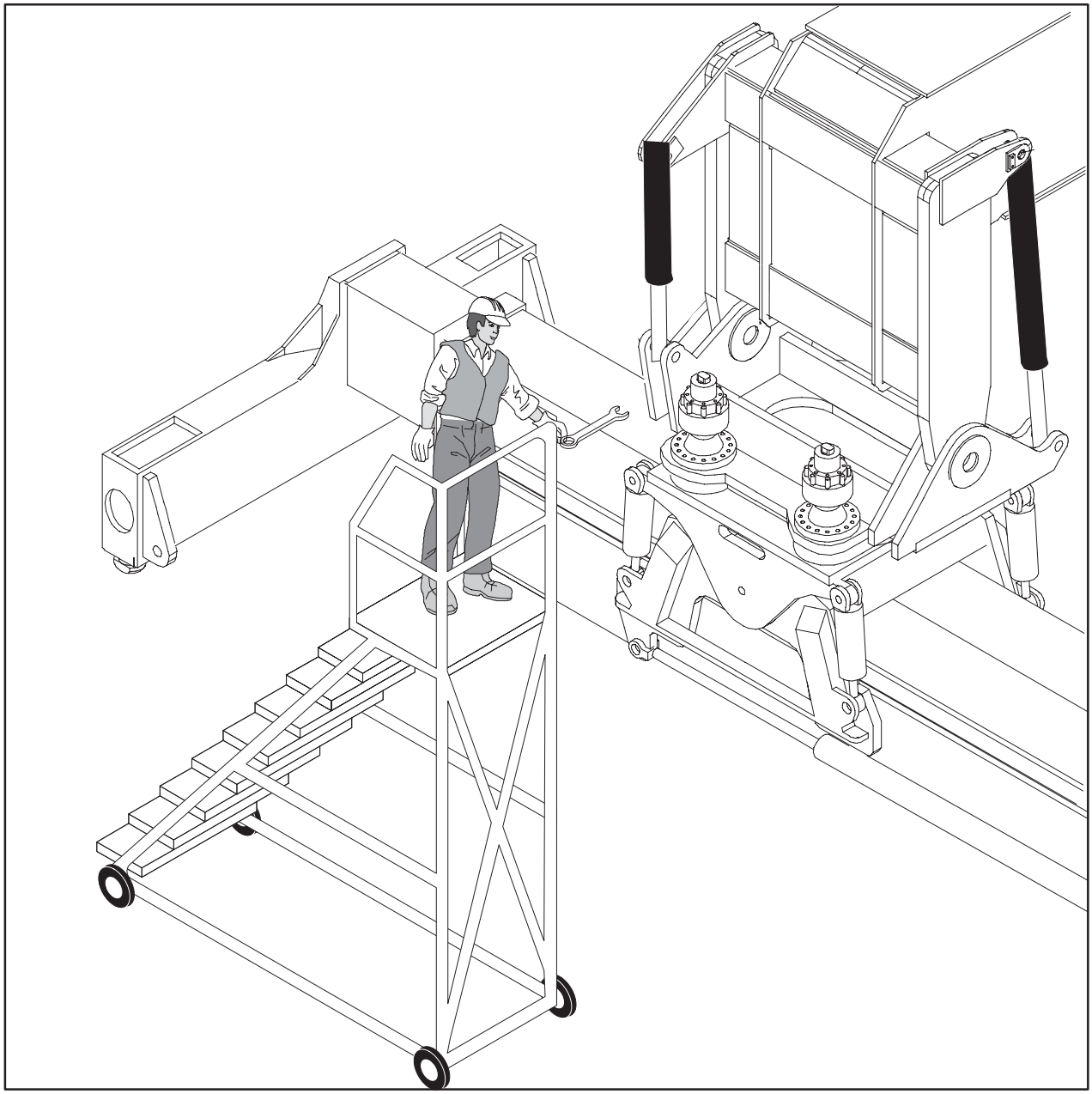

https://truckmanualshub.com/

⚠WARNING

Dangerous Action

Operating a machine which has been modified without the manufacturer's approval. This includes the attachment, the counterweight, the tires, etc.

What Can Happen

Death, serious injury, or property damage can result from these modifications.

How to Avoid the Danger

Refuse to operate a machine which has been modified unless the modification has been approved by the manufacturer, **and** a new serial plate with the correct capacity information has been issued and placed on the machine.

Any modification on the attachment, counterweight, tires, or other components can make a major change in the performance capabilities of the machine. For example, a machine may be shipped from the manufacturer rated to carry an 80,000 pound load; if another attachment is added, the load the machine can safely carry may be significantly reduced. Adding counterweight will not increase the safe working capacity of the machine and may overload other components.

Always know the changes that have been made to a machine **before** you operate it.

Always know the **actual** maximum capacity of a machine that has been modified.

Refuse to operate a modified machine without proper official change in capacity rating.

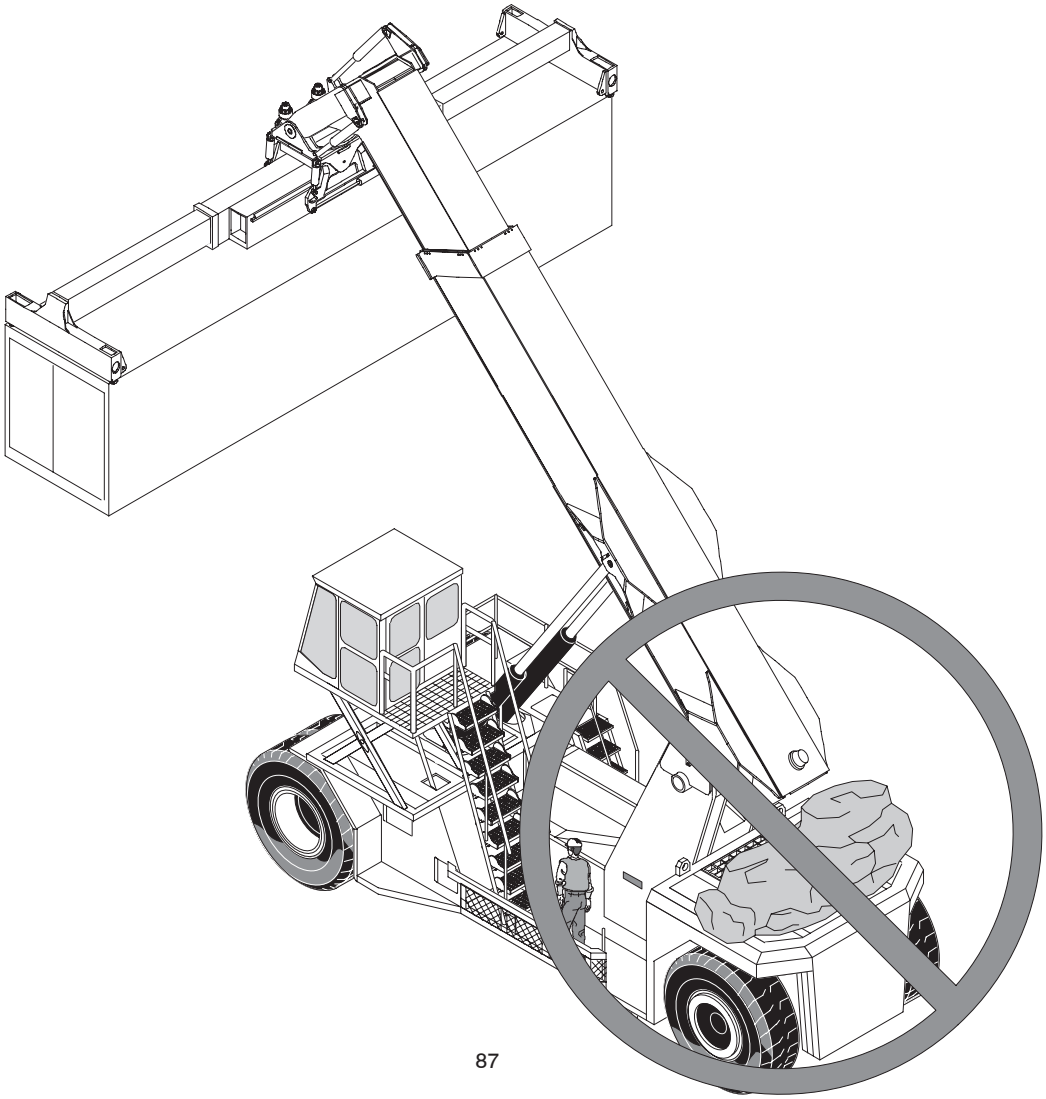

https://truckmanualshub.com/

⚠ WARNING

Dangerous Action
Lifting people with a reach stacker.

What Can Happen
The person(s) could fall and be seriously injured or killed.

How to Avoid the Danger
Do not use a reach stacker as a means of elevating personnel.

Reach stackers used for material handling **are not equipped** for lifting people.

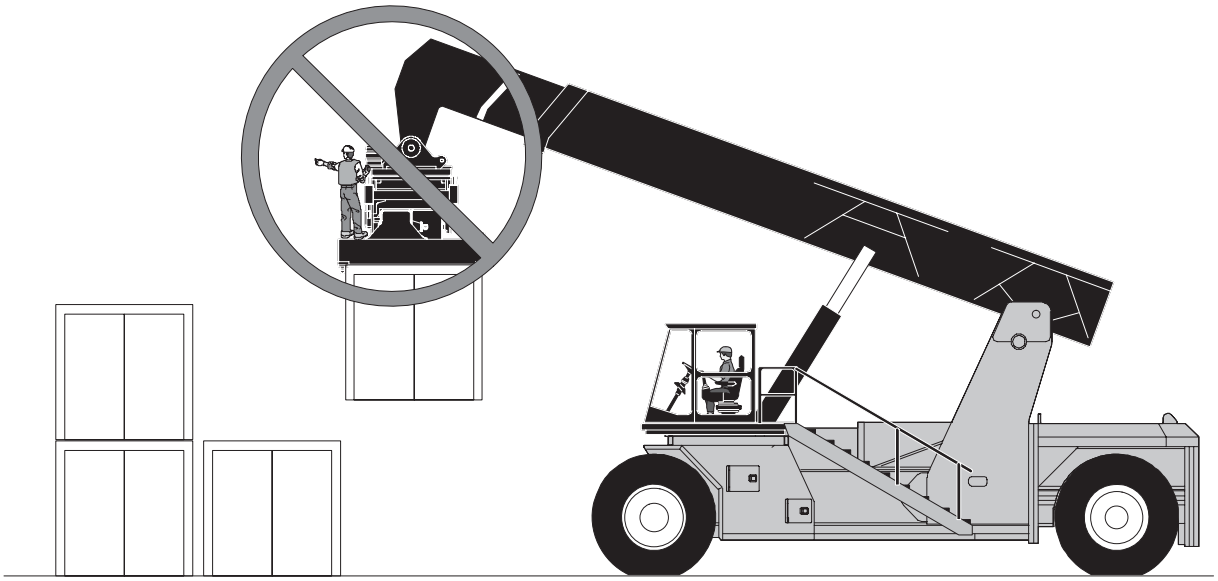

https://truckmanualshub.com/

⚠ WARNING

Dangerous Action
Using replacement parts not approved by the manufacturer.

What Can Happen
An unapproved replacement part may not meet the requirements needed for reach stacker service and result in failure (of the part). This could cause death or serious injury to personnel or cause physical damage to the reach stacker or other yard equipment.

How to Avoid the Danger
Always use replacement parts that meet or exceed the standards of the part being replaced. Consult with the manufacturer if any doubt exists about the adequacy of a part.

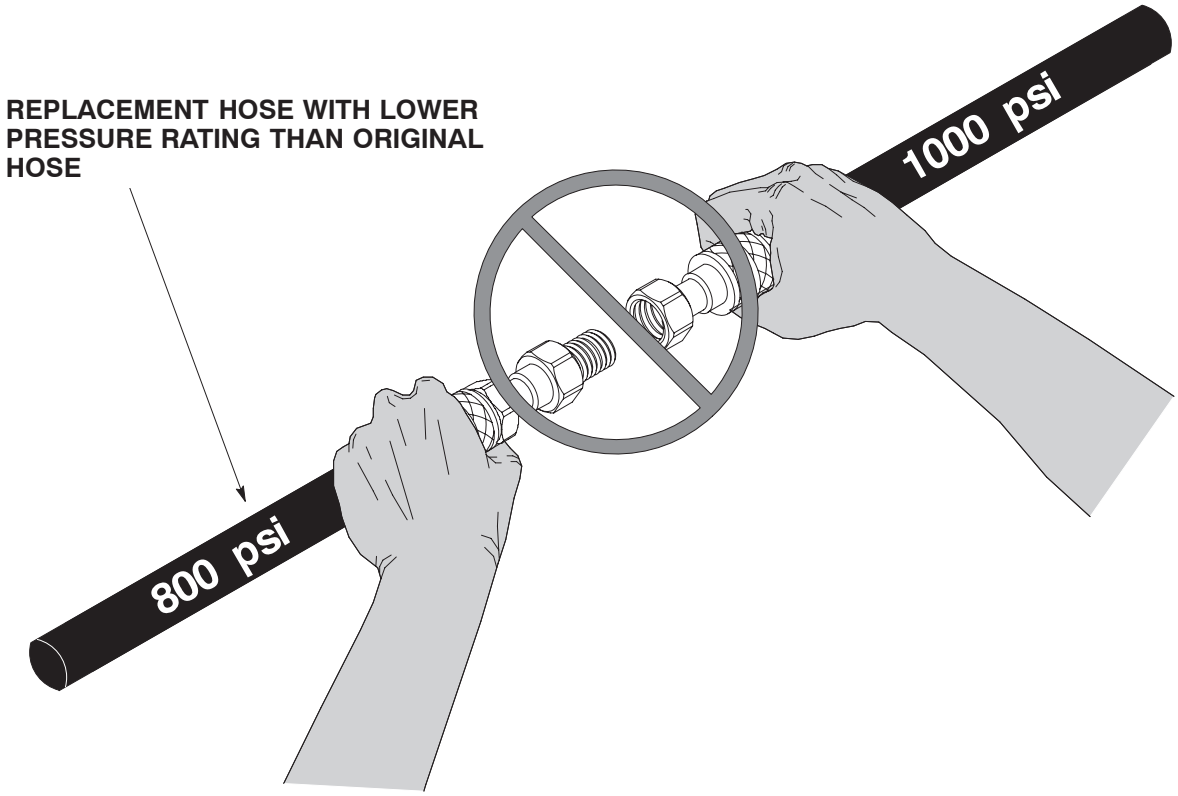

https://truckmanualshub.com/

⚠ WARNING

Dangerous Action
Performing maintenance around or under the elevating cab (if so equipped) without pinning the cab in the raised position and locking out the cab raise/lower circuits.

What Can Happen
The cab could move causing death or serious injury to anyone working around or under the cab.

How to Avoid the Danger
Before performing any maintenance around or under the cab, lock the cab in the raised position with pins; turn off and remove the cab lift/lower disabling switch key. Keep the key in your pocket until all work is complete.

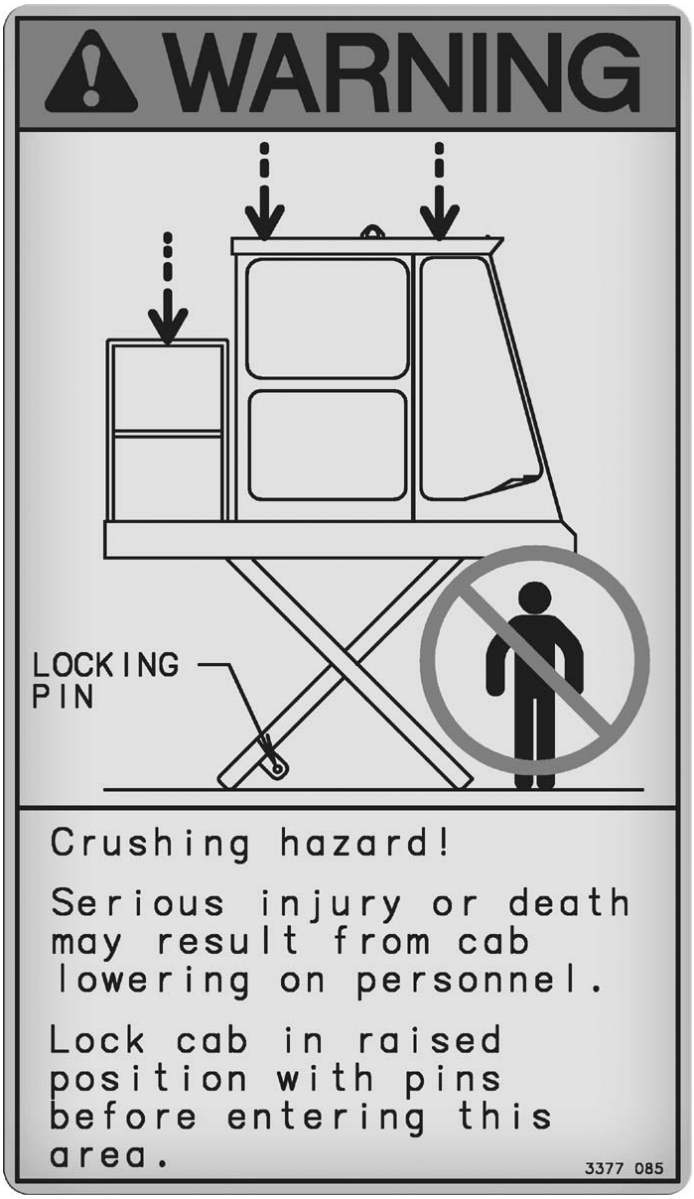

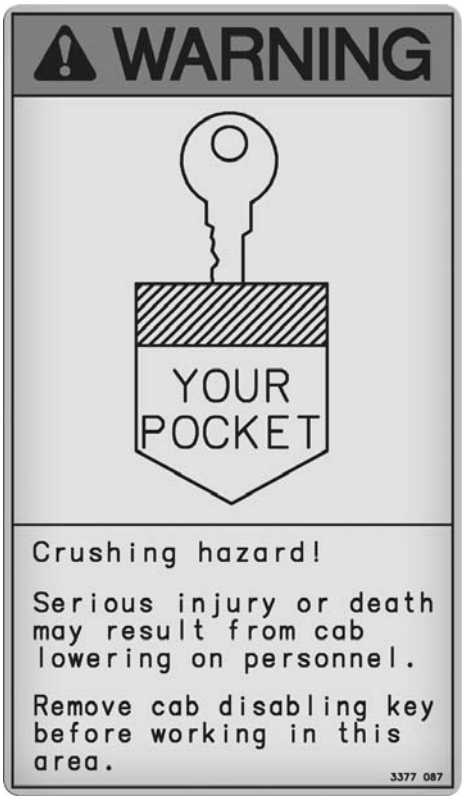

https://truckmanualshub.com/

⚠ WARNING

Dangerous Action
Performing maintenance around the fan or radiator while the engine is running.

What Can Happen
You or someone else could get fingers, hands, or clothing caught in the rotating fan causing death or serious injury.

How to Avoid The Danger
Never work near the fan or radiator while the engine is running. Turn off the engine, remove the ignition key, and tagout the controls before working in this area.

https://truckmanualshub.com/

⚠ WARNING

Dangerous Action
Maintaining or operating the reach stacker equipped with a live drive line without the driveline guard in place.

What Could Happen
You or someone else could get caught or tangled in the driveline causing death or serious injury.

How To Avoid The Danger
Always replace the driveline guard, and any other guards, after completing maintenance. Do not run the machine without all guards firmly mounted on the machine.

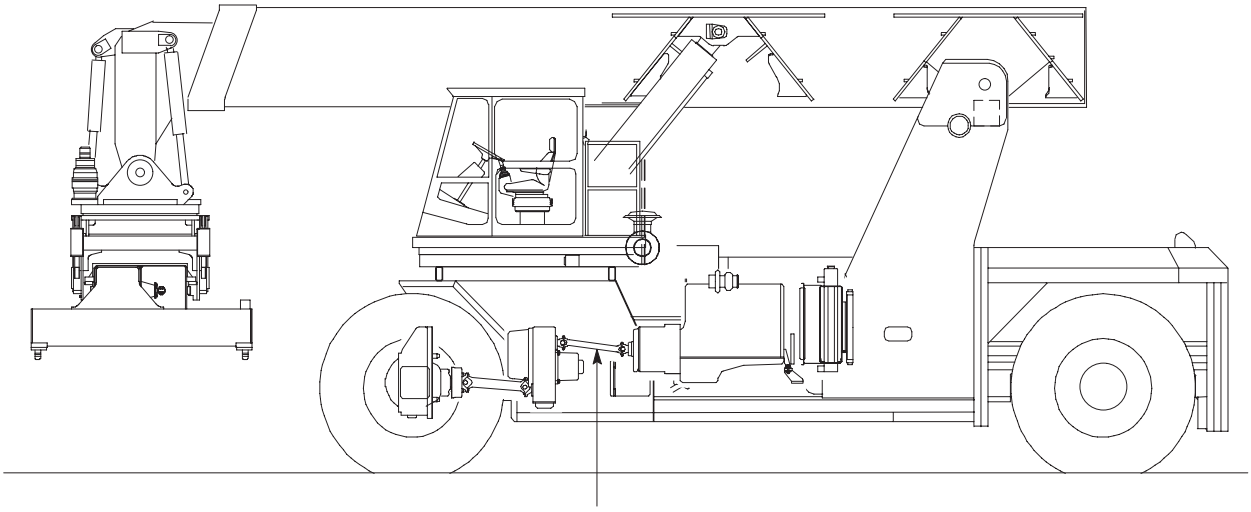

https://truckmanualshub.com/

⚠ WARNING

Dangerous Action
Working in an area not properly vented for toxic exhaust fumes.

What Can Happen
You can cause death or serious injury to yourself or someone else.

How To Avoid Danger
Do not operate the truck in an area not properly vented for toxic exhaust fumes. Make sure carbon monoxide level testing is included in regular maintenance procedures and that ventilation is used as the primary control for exhaust fumes.

All internal combustion engines – even properly running engines – will produce carbon monoxide, which can become concentrated in enclosed areas. Properly ventilate work areas and vent exhaust fumes from confined spaces.

- Avoid breathing toxic exhaust fumes.
- Avoid operating the truck for prolonged periods in confined spaces that are not properly ventilated.
- Do not rely solely on carbon monoxide detection devices to detect carbon monoxide levels – these devices can fail.

Initial symptoms of carbon monoxide poisoning include headaches, dizziness, and nausea. The smell of exhaust fumes means carbon monoxide is present. If you experience initial symptoms, shut off the truck engine, move to fresh air, seek medical attention, and notify your employer.

DANGER!
CARBON MONOXIDE

CALIFORNIA

Proposition 65 Warning

Diesel engine exhaust and some of its constituents are known to the State of California to cause cancer, birth defects, and other reproductive harm.

https://truckmanualshub.com/

Powered industrial trucks are designed and manufactured in accordance with the requirements of the OSHA Safety and Health Standards (29 CFR 1910.178) and the recommendations of the Industrial Truck Standards Development Foundation/American National Standards Institute (ITSDF/ANSI) B56.1. It is fully anticipated that the user will operate and maintain the truck in accordance with these same standards. We have therefore reprinted these standards to assist you in understanding your responsibility for lift truck safety..

SAVE A LIFE . . .your's, a coworker's, or others'.
KNOW THESE RULES AND REGULATIONS!

Appendices

A - OSHA Safety and Health Standards (29 CFR 1910.178) Powered Industrial Trucks

B - ITSDF/ANSI B56.1 Safety Standard for Low Lift and High Lift Trucks Powered Industrial Trucks PART II - FOR THE USER

https://truckmanualshub.com/

https://truckmanualshub.com/

APPENDIX A
OSHA Safety and Health Standards (29 CFR 1910.178)
Powered Industrial Trucks

Operators, please pay special attention to sections m,n,o,p,q!

§1910.178 Powered industrial trucks.

(a) General requirements–(1) This section contains safety requirements relating to fire protection, design, maintenance, and use of fork trucks, tractors, platform lift trucks, motorized hand trucks, and other specialized industrial trucks powered by electric motors or internal combustion engines. This section does not apply to compressed air or nonflammable compressed gas–operated industrial trucks, nor to farm vehicles, nor to vehicles intended primarily for earth moving or over-the-road hauling.

(2) All new powered industrial trucks acquired and used by an employer shall meet the design and construction requirements for powered industrial trucks established in the ”American National Standard for Powered Industrial Trucks, Part II, ANSI B56.1–1969”, which is incorporated by reference as specified in § 1910.6, except for vehicles intended primarily for earth moving or over–the–road hauling.

(3) Approved trucks shall bear a label or some other identifying mark indicating approval by the testing laboratory. See paragraph (a)(7) of this section and paragraph 405 of ”American National Standard for Powered Industrial Trucks, Part II, ANSI B56.1–1969”, which is incorporated by reference in paragraph (a)(2) of this section and which provides that if the powered industrial truck is accepted by a nationally recognized testing laboratory it should be so marked.

(4) Modifications and additions which affect capacity and safe operation shall not be performed by the customer or user without manufacturers prior written approval. Capacity, operation, and maintenance instruction plates, tags, or decals shall be changed accordingly.

(5) If the truck is equipped with front–end attachments other than factory installed attachments, the user shall request that the truck be marked to identify the attachments and show the approximate weight of the truck and attachment combination at maximum elevation with load laterally centered.

(6) The user shall see that all nameplates and markings are in place and are maintained in a legible condition.

(7) As used in this section, the term, ”approved truck” or ”approved industrial truck” means a truck that is listed or approved for fire safety purposes for the intended use by a nationally recognized testing laboratory, using nationally recognized testing standards. Refer to 1910.155(c)(3)(iv)(A) for definition of nationally recognized testing laboratory.

(b) **Designations.** For the purpose of this standard there are eleven different designations of industrial trucks or tractors as follows: D, DS, DY, E, ES, EE, EX, G, GS, LP, and LPS.

(1) The D designated units are units similar to the G units except that they are diesel engine powered instead of gasoline engine powered.

(2) The DS designated units are diesel powered units that are provided with additional safeguards to the exhaust, fuel and electrical systems. They may be used in some locations where a D unit may not be considered suitable.

(3) The DY designated units are diesel powered units that have all the safeguards of the DS units and in addition do not have any electrical equipment including the ignition and are equipped with temperature limitation features.

(4) The E designated units are electrically powered units that have minimum acceptable safeguards against inherent fire hazards.

(5) The ES designated units are electrically powered units that, in addition to all of the requirements for the E units, are provided with additional safeguards to the electrical system to prevent emission of hazardous sparks and to limit surface temperatures. They may be used in some locations where the use of an E unit may not be considered suitable.

(6) The EE designated units are electrically powered units that have, in addition to all of the requirements for the E and ES units, the electric motors and all other electrical equipment completely enclosed. In certain locations the EE unit may be used where the use of an E and ES unit may not be considered suitable.

https://truckmanualshub.com/

(7) The EX designated units are electrically powered units that differ from the E, ES, or EE units in that the electrical fittings and equipment are so designed, constructed and assembled that the units may be used in certain atmospheres containing flammable vapors or dusts.

(8) The G designated units are gasoline powered units having minimum acceptable safeguards against inherent fire hazards.

(9) The GS designated units are gasoline powered units that are provided with additional safeguards to the exhaust, fuel, and electrical systems. They may be used in some locations where the use of a G unit may not be considered suitable.

(10) The LP designated unit is similar to the G unit except that liquefied petroleum gas is used for fuel instead of gasoline.

(11) The LPS designated units are liquefied petroleum gas powered units that are provided with additional safeguards to the exhaust, fuel, and electrical systems. They may be used in some locations where the use of an LP unit may not be considered suitable.

(12) The atmosphere or location shall have been classified as to whether it is hazardous or nonhazardous prior to the consideration of industrial trucks being used therein and the type of industrial truck required shall be as provided in paragraph (d) of this section for such location.

(c) **Designated locations.** (1) The industrial trucks specified under subparagraph (2) of this paragraph are the minimum types required but industrial trucks having greater safeguards may be used if desired.

(2) For specific areas of use see Table N–1 which tabulates the information contained in this section. References are to the corresponding classification as used in subpart S of this part.

(i) Power–operated industrial trucks shall not be used in atmospheres containing hazardous concentration of acetylene, butadiene, ethylene oxide, hydrogen (or gases or vapors equivalent in hazard to hydrogen, such as manufactured gas), propylene oxide, acetaldehyde, cyclopropane, diethyl ether, ethylene, isoprene, or unsymmetrical dimethyl hydrazine (UDMH).

(ii) *(a)* Power–operated industrial trucks shall not be used in atmospheres containing hazardous concentrations of metal dust, including aluminum, magnesium, and their commercial alloys, other metals of similarly hazardous characteristics, or in atmospheres containing carbon black, coal or coke dust except approved power–operated industrial trucks designated as EX may be used in such atmospheres.

(b) In atmospheres where dust of magnesium, aluminum or aluminum bronze may be present, fuses, switches, motor controllers, and circuit breakers of trucks shall have enclosures specifically approved for such locations.

(iii) Only approved power–operated industrial trucks designated as EX may be used in atmospheres containing acetone, acrylonitrile, alcohol, ammonia, benzine, benzol, butane, ethylene dichloride, gasoline, hexane, lacquer solvent vapors, naphtha, natural gas, propane, propylene, styrene, vinyl acetate, vinyl chloride, or xylenes in quantities sufficient to produce explosive or ignitable mixtures and where such concentrations of these gases or vapors exist continuously, intermittently or periodically under normal operating conditions or may exist frequently because of repair, maintenance operations, leakage, breakdown or faulty operation of equipment.

(iv) Power–operated industrial trucks designated as DY, EE, or EX may be used in locations where volatile flammable liquids or flammable gases are handled, processed or used, but in which the hazardous liquids, vapors or gases will normally be confined within closed containers or closed systems from which they can escape only in case of accidental rupture or breakdown of such containers or systems, or in the case of abnormal operation of equipment; also in locations in which hazardous concentrations of gases or vapors are normally prevented by positive mechanical ventilation but which might become hazardous through failure or abnormal operation of the ventilating equipment; or in locations which are adjacent to Class I, Division 1 locations, and to which hazardous concentrations of gases or vapors might occasionally be communicated unless such communication is prevented by adequate positive–pressure ventilation from a source of clear air, and effective safeguards against ventilation failure are provided.

https://truckmanualshub.com/

(v) In locations used for the storage of hazardous liquids in sealed containers or liquified or compressed gases in containers, approved power–operated industrial trucks designated as DS, ES, GS, or LPS may be used. This classification includes locations where volatile flammable liquids or flammable gases or vapors are used, but which, would become hazardous only in case of an accident or of some unusual operating condition. The quantity of hazardous material that might escape in case of accident, the adequacy of ventilating equipment, thetotal area involved, and the record of the industry or business with respect to explosions or fires are all factors that should receive consideration in determining whether or not the DS or DY, ES, EE, GS, LPS designated truck possesses sufficient safeguards for the location. Piping without valves, checks, meters and similar devices would not ordinarily be deemed to introduce a hazardous condition even though used for hazardous liquids or gases. Locations used for the storage of hazardous liquids or of liquified or compressed gases in sealed containers would not normally be considered hazardous unless subject to other hazardous conditions also.

(vi) *(a)* Only approved power operated industrial trucks designated as EX shall be used in atmospheres in which combustible dust is or may be in suspension continuously, intermittently, or periodically under normal operating conditions, in quantities sufficient to produce explosive or ignitable mixtures, or where mechanical failure or abnormal operation of machinery or equipment might cause such mixtures to be produced.

*(b)*The EX classification usually includes the working areas of grain handling and storage plants, room containing grinders or pulverizers, cleaners, graders, scalpers, open conveyors or spouts, open bins or hoppers, mixers, or blenders, automatic or hopper scales, packing machinery, elevator heads and boots, stock distributors, dust and stock collectors (except all–metal collectors vented to the outside), and all similar dust producing machinery and equipment in grain processing plants, starch plants, sugar pulverizing plants, malting plants, hay grinding plants, and other occupancies of similar nature; coal pulverizing plants (except where the pulverizing equipment is essentially dust tight); all working areas where metal dusts and powders are produced, processed, handled, packed, or stored (except in tight containers); and other similar locations where combustible dust may, under normal operating conditions, be present in the air in quantities sufficient to produce explosive or ignitable mixtures.

(vii) Only approved power–operated industrial trucks designated as DY, EE, or EX shall be used in atmospheres in which combustible dust will not normally be in suspension in the air or will not be likely to be thrown into suspension by the normal operation of equipment or apparatus in quantities sufficient to produce explosive or ignitable mixtures but where deposits or accumulations of such dust may be ignited by arcs or sparks originating in the truck.

(viii) Only approved power–operated industrial trucks designated as DY, EE, or EX shall be used in locations which are hazardous because of the presence of easily ignitable fibers or flyings but in which such fibers or flyings are not likely to be in suspension in the air in quantities sufficient to produce ignitable mixtures.

(ix) Only approved power–operated industrial trucks designated as DS, DY, ES, EE, EX, GS, or LPS shall be used in locations where easily ignitable fibers are stored or handled, including outside storage, but are not being processed or manufactured. Industrial trucks designated as E, which have been previously used in these locations may be continued in use.

(x) On piers and wharves handling general cargo, any approved power–operated industrial truck designated as Type D, E, G, or LP may be used, or trucks which conform to the requirements for these types may be used.

(xi) If storage warehouses and outside storage locations are hazardous only the approved power–operated industrial truck specified for such locations in this paragraph (c) (2) shall be used. If not classified as hazardous, any approved power–operated industrial truck designated as Type D, E, G, or LP may be used, or trucks which conform to the requirements for these types may be used.

(xii) If general industrial or commercial properties are hazardous, only approved power–operated industrial trucks specified for such locations in this paragraph (c) (2) shall be used. If not classified as hazardous, any approved power–operated industrial truck designated as Type D, E, G, or LP may be used, or trucks which conform to the requirements of these types may be used.

https://truckmanualshub.com/

TABLE N–1. — SUMMARY TABLE ON USE OF INDUSTRIAL TRUCKS IN VARIOUS LOCATIONS

Classes	Unclassified	Class I locations				Class II locations			Class III locations
Description of classes.	Locations not possessing atmospheres as described in other columns.	Locations in which flamable gases or vapors are, or may be, present in the air in quantities sufficient to produce explosive or ignitable mixtures.				Locations which are hazardous because of the presence of combustible dust.			Locations where easily ignitable fibers or flyings are present but not likely to be in suspension in quantities sufficient to produce ignitable mixtures.
Groups in classes	None	A	B	C	D	E	F	G	None
Examples of locations or atmospheres in classes and groups.	Piers and wharves inside and outside general storage, general industrial or commercial properties.	Acetylene	Hydrogen	Ethyl ether	Gasoline Naphtha Alcohols Acetone Lacquer solvent Benzene	Metal dust	Carbon black coal dust, coke dust	Grain dust, flour dust, starch dust, organic dust.	Baled waste, cacoa fiber, cotton, excelsior, hemp, istle, jute, kapok, oakum, sisal, Spanish moss, synthetic fibers, tow.

TABLE N–1. — SUMMARY TABLE ON USE OF INDUSTRIAL TRUCKS IN VARIOUS LOCATIONS — CONTINUED

		1	2	1	2	1	2
Divisions (nature of hazardous conditions)	None	Above condition exists continuously, intermittently, or periodically under normal operating conditions.	Above condition may occur accidentally as due to a puncture of a storage drum.	Explosive mixture may be present under normal operating conditions, or where failure of equipment may cause the condition to exist simultaneously with arcing or sparking of electrical equipment, or where dusts of an electrically conducting nature may be present.	Explosive mixture not normally present, but where deposits of dust may cause heat rise in electrical equipment, or where such deposits may be ignited by arcs or sparks from electrical equipment.	Locations in which easily ignitable fibers or materials producing combustible flyings are handled, manufactured, or used.	Locations in which easily ignitable fibers are stored or handled (except in the process of manufacture).

Authorized uses of truck by types in groups of classes and divisions

Groups in classes	None	A	B	C	D	A	B	C	D	E	F	G	E	F	G	None	None
Type of truck authorized:																	
Diesel:																	
Type D	D**																
Type DS									DS						DS		DS
Type DY									DY						DY	DY	DY
Electric:																	
Type E	E**																E
Type ES									ES						ES		ES
Type EE									EE						EE	EE	EE
Type EX					EX				EX		EX	EX			EX	EX	EX
Gasoline:																	
Type G	G**																
Type GS									GS						GS		GS
LP–Gas:																	
Type LP	LP**																
Type LPS									LPS						LPS		LPS
Paragraph Ref. in No. 505.	210.211		201 (a)		203 (a)		209 (a)		204 (a), (b)		202 (a)	205 (a)		209 (a)	206 (a), (b)	207 (a)	208 (a)

** Trucks conforming to these types may also be used — see subdivision (c) (2) (x) and (c) (2) (xii) of this section.

https://truckmanualshub.com/

(d) Converted industrial trucks. Power–operated industrial trucks that have been originally approved for the use of gasoline for fuel, when converted to the use of liquefied petroleum gas fuel in accordance with paragraph (q) of this section, may be used in those locations where G, GS or LP, and LPS designated trucks have been specified in the preceding paragraphs.

(e) **Safety guards.** (1) High Lift Rider trucks shall be fitted with an overhead guard manufactured in accordance with paragraph (a) (2) of this section, unless operating conditions do not permit.

(2) If the type of load presents a hazard, the user shall equip fork trucks with a vertical load backrest extension manufactured in accordance with paragraph (a) (2) of this section.

(f) **Fuel handling and storage.** (1) The storage and handling of liquid fuels such as gasoline and diesel fuel shall be in accordance with NFPA Flammable and Combustible Liquids Code (NFPA No. 30–1969), which is incorporated by reference as specified in Sec. 1910.6.

(2) The storage and handling of liquefied petroleum gas fuel shall be in accordance with NFPA Storage and Handling of Liquefied Petroleum Gases (NFPA No. 58–1969), which is incorporated by reference as specified in Sec. 1910.6.

(g) **Changing and charging storage batteries.** (1) Battery charging installations shall be located in areas designated for that purpose.

(2) Facilities shall be provided for flushing and neutralizing spilled electrolyte, for fire protection, for protecting charging apparatus from damage by trucks, and for adequate ventilation for dispersal of fumes from gassing batteries.

(3) [Reserved]

(4) A conveyor, overhead hoist, or equivalent material handling equipment shall be provided for handling batteries.

(5) Reinstalled batteries shall be properly positioned and secured in the truck.

(6) A carboy tilter or siphon shall be provided for handling electrolyte.

(7) When charging batteries, acid shall be poured into water; water shall not be poured into acid.

(8) Trucks shall be properly positioned and brake applied before attempting to change or charge batteries.

(9) Care shall be taken to assure that vent caps are functioning. The battery (or compartment) cover(s) shall be open to dissipate heat.

(10) Smoking shall be prohibited in the charging area.

(11) Precautions shall be taken to prevent open flames, sparks, or electric arcs in battery charging areas.

(12) Tools and other metallic objects shall be kept away from the top of uncovered batteries.

(h) **Lighting for operating areas.** (1) [Reserved]

(2) Where general lighting is less than 2 lumens per square foot, auxiliary directional lighting shall be provided on the truck.

(i) **Control of noxious gases and fumes.** (1) Concentration levels of carbon monoxide gas created by powered industrial truck operations shall not exceed the levels specified in 1910.1000.

(j) **Dockboards** *(bridge plates)*. See 1910.30(a).

(k) **Trucks and railroad cars.** (1) The brakes of highway trucks shall be set and wheel chocks placed under the rear wheels to prevent the trucks from rolling while they are boarded with powered industrial trucks.

(2) Wheel stops or other recognized positive protection shall be provided to prevent railroad cars from moving during loading or unloading operations.

(3) Fixed jacks may be necessary to support a semitrailer and prevent upending during the loading or unloading when the trailer is not coupled to a tractor.

(4) Positive protection shall be provided to prevent railroad cars from being moved while dockboards or bridge plates are in position.

(l) **Operator training.** (1) ***Safe operation.*** (i) The employer shall ensure that each powered industrial truck operator is competent to operate a powered industrial truck safely, as demonstrated by the successful completion of the training and evaluation specified in this paragraph (l).

(ii) Prior to permitting an employee to operate a powered industrial truck (except for training purposes), the employer shall ensure that each operator has successfully completed the training required by this paragraph (l), except as permitted by paragraph (l)(5).

(2) ***Training program implementation.*** (i) Trainees may operate a powered industrial truck only:

(A) Under the direct supervision of persons who have the knowledge, training, and experience to train operators and evaluate their competence; and

(B) Where such operation does not endanger the trainee or other employees.

(ii) Training shall consist of a combination of formal instruction (e.g., lecture, discussion, interactive computer learning, video tape, written material), practical training (demonstrations performed by the trainer and practical exercises performed by the trainee), and evaluation of the operator's performance in the workplace.

(iii) All operator training and evaluation shall be conducted by persons who have the knowledge, training, and experience to train powered industrial truck operators and evaluate their competence.

(3) ***Training program content.*** Powered industrial truck operators shall receive initial training in the following topics, except in topics which the employer can demonstrate are not applicable to safe operation of the truck in the employer's workplace.

(i) **Truck–related topics:** (A) Operating instructions, warnings, and precautions for the types of truck the operator will be authorized to operate;

(B) Differences between the truck and the automobile;

(C) Truck controls and instrumentation: where they are located, what they do, and how they work;

(D) Engine or motor operation;

(E) Steering and maneuvering;

(F) Visibility (including restrictions due to loading);

(G) Fork and attachment adaptation, operation, and use limitations;

(H) Vehicle capacity;

(I) Vehicle stability;

(J) Any vehicle inspection and maintenance that the operator will be required to perform;

(K) Refueling and/or charging and recharging of batteries;

(L) Operating limitations;

(M) Any other operating instructions, warnings, or precautions listed in the operator's manual for the types of vehicle that the employee is being trained to operate.

(ii) **Workplace–related topics:**

(A) Surface conditions where the vehicle will be operated;

(B) Composition of loads to be carried and load stability;

(C) Load manipulation, stacking, and unstacking;

(D) Pedestrian traffic in areas where the vehicle will be operated;

(E) Narrow aisles and other restricted places where the vehicle will be operated;

(F) Hazardous (classified) locations where the vehicle will be operated;

(G) Ramps and other sloped surfaces that could affect the vehicle's stability;

(H) Closed environments and other areas where insufficient ventilation or poor vehicle maintenance could cause a buildup of carbon monoxide or diesel exhaust;

(I) Other unique or potentially hazardous environmental conditions in the workplace that could affect safe operation.

(iii) The requirements of this section.

(4) ***Refresher training and evaluation.*** (i) Refresher training, including an evaluation of the effectiveness of that training, shall be conducted as required by paragraph (l)(4)(ii) to ensure that the operator has the knowledge and skills needed to operate the powered industrial truck safely.

(ii) Refresher training in relevant topics shall be provided to the operator when:

(A) The operator has been observed to operate the vehicle in an unsafe manner;

(B) The operator has been involved in an accident or near–miss incident;

(C) The operator has received an evaluation that reveals that the operator is not operating the truck safely;

(D) The operator is assigned to drive a different type of truck; or

(E) A condition in the workplace changes in a manner that could affect safe operation of the truck.

(iii) An evaluation of each powered industrial truck operator's performance shall be conducted at least once every three years.

(5) ***Avoidance of duplicative training.*** If an operator has previously received training in a topic specified in paragraph (l)(3) of this section, and such training is appropriate to the truck and working conditions encountered, additional training in that topic is not required if the operator has been evaluated and found competent to operate the truck safely.

(6) ***Certification.*** The employer shall certify that each operator has been trained and evaluated as required by this paragraph (l). The certification shall include the name of the operator, the date of the training, the date of the evaluation, and the identity of the person(s) performing the training or evaluation.

(7) ***Dates.*** The employer shall ensure that operators of powered industrial trucks are trained, as appropriate, by the dates shown in the following table.

If the employee was hired:	The intial training and evaluation of that must be completed:
Before December 1, 1999...	By December 1, 1999.
After December 1,1999...	Before the employee is assigned to operate a powered industrial truck.

(8) Appendix A to this section provides non–mandatory guidance to assist employers in implementing this paragraph (l). This appendix does not add to, alter, or reduce the requirements of this section.

(m) **Truck operations.** (1) Trucks shall not be driven up to anyone standing in front of a bench or other fixed object.

(2) No person shall be allowed to stand or pass under the elevated portion of any truck, whether loaded or empty.

(3) Unauthorized personnel shall not be permitted to ride on powered industrial trucks. A safe place to ride shall be provided where riding of trucks is authorized.

(4) The employer shall prohibit arms or legs from being placed between the uprights of the mast or outside the running lines of the truck.

(5) (i) When a powered industrial truck is left unattended, load engaging means shall be fully lowered, controls shall be neutralized, power shall be shut off, and brakes set. Wheels shall be blocked if the truck is parked on an incline.

(ii) A powered industrial truck is unattended when the operator is 25 ft. or more away from the vehicle which remains in his view, or whenever the operator leaves the vehicle and it is not in his view.

(iii) When the operator of an industrial truck is dismounted and within 25 ft. of the truck still in his view, the load engaging means shall be fully lowered, controls neutralized, and the brakes set to prevent movement.

(6) A safe distance shall be maintained from the edge of ramps or platforms while on any elevated dock, or platform or freight car. Trucks shall not be used for opening or closing freight doors.

(7) Brakes shall be set and wheel blocks shall be in place to prevent movement of trucks, trailers, or railroad cars while loading or unloading. Fixed jacks may be necessary to support a semitrailer during loading or unloading when the trailer is not coupled to a tractor. The

flooring of trucks, trailers, and railroad cars shall be checked for breaks and weakness before they are driven onto.

(8) There shall be sufficient headroom under overhead installations, lights, pipes, sprinkler system, etc.

(9) An overhead guard shall be used as protection against falling objects. It should be noted that an overhead guard is intended to offer protection from the impact of small packages, boxes, bagged material, etc., representative of the job application, but not to withstand the impact of a falling capacity load.

(10) A load backrest extension shall be used whenever necessary to minimize the possibility of the load or part of it from falling rearward.

(11) Only approved industrial trucks shall be used in hazardous locations.

(12) [Removed and Reserved]

(13) {Reserved}

(14) Fire aisles, access to stairways, and fire equipment shall be kept clear.

(n) **Traveling. (1) All traffic regulations shall be observed, including authorized plant speed limits. A safe distance shall be maintained approximately three truck lengths from the truck ahead, and the truck shall be kept under control at all times.**

(2) The right of way shall be yielded to ambulances, fire trucks, or other vehicles in emergency situations.

(3) Other trucks traveling in the same direction at intersections, blind spots, or other dangerous locations shall not be passed.

(4) The driver shall be required to slow down and sound the horn at cross aisles and other locations where vision is obstructed. If the load being carried obstructs forward view, the driver shall be required to travel with the load trailing.

(5) Railroad tracks shall be crossed diagonally wherever possible. Parking closer than 8 feet from the center of railroad tracks is prohibited.

(6) The driver shall be required to look in the direction of, and keep a clear view of the path of travel.

(7) Grades shall be ascended or descended slowly.

(i) When ascending or descending grades in excess of 10 percent, loaded trucks shall be driven with the load upgrade.

(ii) [Reserved]

(iii) On all grades the load and load engaging means shall be tilted back if applicable, and raised only as far as necessary to clear the road surface.

(8) Under all travel conditions the truck shall be operated at a speed that will permit it to be brought to a stop in a safe manner.

(9) Stunt driving and horseplay shall not be permitted.

(10) The driver shall be required to slow down for wet and slippery floors.

(11) Dockboard or bridgeplates, shall be properly secured before they are driven over. Dockboard or bridgeplates shall be driven over carefully and slowly and their rated capacity never exceeded.

(12) Elevators shall be approached slowly, and then entered squarely after the elevator car is properly leveled. Once on the elevator, the controls shall be neutralized, power shut off, and the brakes set.

(13) Motorized hand trucks must enter elevator or other confined areas with load end forward.

(14) Running over loose objects on the roadway surface shall be avoided.

(15) While negotiating turns, speed shall be reduced to a safe level by means of turning the hand steering wheel in a smooth, sweeping motion. Except when maneuvering at a very low speed, the hand steering wheel shall be turned at a moderate, even rate.

(o) **Loading. (1) Only stable or safely arranged loads shall be handled. Caution shall be exercised when handling off–center loads which cannot be centered.**

(2) Only loads within the rated capacity of the truck shall be handled.

https://truckmanualshub.com/

(3) The long or high (including multiple–tiered) loads which may affect capacity shall be adjusted.

(4) Trucks equipped with attachments shall be operated as partially loaded trucks when not handling a load.

(5) A load engaging means shall be placed under the load as far as possible; the mast shall be carefully tilted backward to stabilize the load.

(6) Extreme care shall be used when tilting the load forward or backward, particularly when high tiering. Tilting forward with load engaging means elevated shall be prohibited except to pick up a load. An elevated load shall not be tilted forward except when the load is in a deposit position over a rack or stack. When stacking or tiering, only enough backward tilt to stabilize the load shall be used.

(p) **Operation of the truck. (1) If at any time a powered industrial truck is found to be in need of repair, defective, or in any way unsafe, the truck shall be taken out of service until it has been restored to safe operating condition.**

(2) Fuel tanks shall not be filled while the engine is running. Spillage shall be avoided.

(3) Spillage of oil or fuel shall be carefully washed away or completely evaporated and the fuel tank cap replaced before restarting engine.

(4) No truck shall be operated with a leak in the fuel system until the leak has been corrected.

(5) Open flames shall not be used for checking electrolyte level in storage batteries or gasoline level in fuel tanks.

(q) **Maintenance of industrial trucks.** (1) Any power–operated industrial truck not in safe operating condition shall be removed from service. All repairs shall be made by authorized personnel.

(2) No repairs shall be made in Class I, II, and III locations.

(3) Those repairs to the fuel and ignition systems of industrial trucks which involve fire hazards shall be conducted only in locations designated for such repairs.

(4) Trucks in need of repairs to the electrical system shall have the battery disconnected prior to such repairs.

(5) All parts of any such industrial truck requiring replacement shall be replaced only by parts equivalent as to safety with those used in the original design.

(6) Industrial trucks shall not be altered so that the relative positions of the various parts are different from what they were when originally received from the manufacturer, nor shall they be altered either by the addition of extra parts not provided by the manufacturer or by the elimination of any parts, except as provided in paragraph (q)(12) of this section. Additional counterweighting of fork trucks shall not be done unless approved by the truck manufacturer.

(7) Industrial trucks shall be examined before being placed in service, and shall not be placed in service if the examination shows any condition adversely affecting the safety of the vehicle. Such examination shall be made at least daily. Where industrial trucks are used on a round–the–clock basis, they shall be examined after each shift. Defects when found shall be immediately reported and corrected.

(8) Water mufflers shall be filled daily or as frequently as is necessary to prevent depletion of the supply of water below 75 percent of the filled capacity. Vehicles with mufflers having screens or other parts that may become clogged shall not be operated while such screens or parts are clogged. Any vehicle that emits hazardous sparks or flames from the exhaust system shall immediately be removed from service, and not returned to service until the cause for the emission of such sparks and flames has been eliminated.

(9) When the temperature of any part of any truck is found to be in excess of its normal operating temperature, thus creating a hazardous condition, the vehicle shall be removed from service and not returned to service until the cause for such overheating has been eliminated.

(10) Industrial trucks shall be kept in a clean condition, free of lint, excess oil, and grease. Noncombustible agents should be used for cleaning trucks. Low flash point (below 100 deg. F.) solvents shall not be used. High flash point (at or above 100 deg. F.) solvents may be used. Precautions regarding toxicity, ventilation, and fire hazard shall be consonant with the agent or solvent used.

(11) [Reserved]

https://truckmanualshub.com/

(12) Industrial trucks originally approved for the use of gasoline for fuel may be converted to liquefied petroleum gas fuel provided the complete conversion results in a truck which embodies the features specified for LP or LPS designated trucks. Such conversion equipment shall be approved. The description of the component parts of this conversion system and the recommended method of installation on specific trucks are contained in the ”Listed by Report.”

[39 FR 23502, June 27, 1974, as amended at 40 FR 23073, May 28, 1975; 43 FR 49749, Oct. 24, 1978; 49 FR 5322, Feb. 10, 1984; 53 FR 12122, Apr. 12, 1988; 55 FR 32015, Aug. 6, 1990; 61 FR 9227, March 7, 1996; 63 FR 66270, Dec. 1, 1998; 68 FR 32368, June 2, 2003; 71 FR 16672, April 3, 2006]

https://truckmanualshub.com/

"The following excerpts of ITSDF/ANSI B56.1 are printed for your convenience. It is recommended that all users of powered industrial trucks obtain a complete copy of the ITSDF/ANSI B56.1 standards which are available for download at www.itsdf.org. The manufacturer builds forklift trucks in accordance with ITSDF/ANSI B56.1 – For the Manufacturer with full expectation that they will be operated in accordance with the ITSDF/ANSI B56.1 – **FOR THE USER**."

https://truckmanualshub.com/

https://truckmanualshub.com/

APPENDIX B
ITSDF/ANSI B56.1
Safety Standard for Low Lift and High Lift Trucks

PART II - FOR THE USER

PART II
FOR THE USER

4 GENERAL SAFETY PRACTICES

4.1 Introduction

4.1.1 Part II contains requirements for the users of powered industrial trucks. Included are requirements for operator qualifications and training, operating safety rules, and maintenance practices.

4.1.2 Unusual operating conditions may require additional safety precautions and special operating instructions.

4.1.3 Supervision is an essential element in the safe operation of powered industrial trucks.

4.2 Modifications, Nameplates, Markings, and Capacity

4.2.1 Except as provided in para. 4.2.2, no modifications or alterations to a powered industrial truck that may affect the capacity, stability, or safe operation of the truck shall be made without the prior written approval of the original truck manufacturer or its successor thereof. When the truck manufacturer or its successor approves a modification or alteration, appropriate changes shall be made to capacity plates, decals, tags, and operation and maintenance manuals.

4.2.2 If the truck manufacturer is no longer in business and there is no successor to the business, the user may arrange for a modification or alteration to a powered industrial truck, provided however, the user

(a) arranges for modification or alteration to be designed, tested, and implemented by an engineer(s) expert in industrial trucks and their safety

(b) maintains a permanent record of the design, test(s), and implementation of the modification or alteration

(c) makes appropriate changes to the capacity plate(s), decals, tags, and operation and maintenance manuals

(d) affixes a permanent and readily visible label on the truck stating the manner in which the truck has been modified or altered together with the date of the modification or alteration, and the name of the organization that accomplished the tasks

4.2.3 If the truck is equipped with a front–end attachment(s), including fork extensions, the user shall see that the truck is marked to identify the attachment(s), show the weight of the truck and attachment combination, and show the capacity of the truck with attachment(s) at maximum elevation with the load laterally centered.[1]

4.2.4 The user shall see that all nameplates and caution and instruction markings are in place and legible.

4.2.5 The user shall consider that changes in load dimension may affect truck capacity.

4.2.6 Fork extensions shall be designed for the application.

4.2.7 When modifications involve rebuild and repair of the basic unit, they shall be made in accordance with the manufacturer's established criteria and procedures (see para. 6.2).

[1] Weight value to be accurate within ±5%.

https://truckmanualshub.com/

4.2.8 Where steering must be accomplished with one hand using a steering handwheel, a steering knob(s) or equivalent shall be used to promote safe and effective operation. The steering handwheel and knob configuration shall be of a design that will minimize the hazard from a spinning handwheel due to a road reaction feedback, or the steering mechanism shall be of a type that prevents road reactions from causing the steering handwheel to spin. The steering knob(s) shall be within the periphery of the steering handwheel.

4.2.9 Where steering can be accomplished with either hand, and the steering mechanism is of a type that prevents road reactions from causing the handwheel to spin (power steering or equivalent), steering knobs may be used. When used, steering knobs shall be of a type that can be engaged by the operator's hand from the top, and shall be within the periphery of the steering handwheel.

4.2.10 Batteries used in electric trucks shall comply with the minimum/maximum battery weight range shown on the truck nameplate.

4.3 Stopping Distance (Descending Grades)

4.3.1 When descending a grade, stopping distance will be greater than on–level operation. Methods shall be provided to allow for this condition. Some methods are: reduce speed, limit loads, allow adequate clear space at the bottom of the grade, etc. (see para. 5.3.8).

4.3.2 Approximate theoretical stopping distance for a dry clean asphalt, brushed concrete, or equivalent surface may be determined from the following formula:

$$s = \frac{0.394v^2}{D - G}$$

or

$$s_1 = \frac{3.34v_1^2}{D - G}$$

where

D = drawbar drag, as a percent, as determined from Fig. 2 (e.g., 25 for 25%)
G = percent grade (e.g., 5 for 5%)
s = distance to stop, m
s_1 = distance to stop, ft
v = velocity, km/h
v_1 = velocity, mph

4.4 Stability

4.4.1 Experience has shown that high lift trucks that comply with the stability requirements stated in para. 7.6 are stable when properly operated. However, improper operation, faulty maintenance, or poor housekeeping may contribute to a condition of instability and defeat the purpose of the Standard.

4.4.2 Some of the conditions that may affect stability are: ground and floor conditions, grade, speed, loading (trucks equipped with attachments behave as partially loaded trucks even when operated without a load on the attachment), battery weight, dynamic and static forces, and the judgment exercised by the operator.

4.4.3 On electric trucks, use only a battery or batteries having a total service weight within the minimum/maximum range specified on truck nameplate. See para. 7.5.8 for information on battery weight.

4.4.4 Users shall give consideration to special operating conditions. The amount of forward and rearward tilt to be used is governed by the application. The use of maximum rearward tilt is allowable under certain conditions such as traveling with the load lowered. The stability of a truck as determined by the tests outlined in para. 7.6 does not encompass consideration for excessive tilt at high elevations, or the operation of trucks with excessive off–center loads.

4.4.5 Some users may decide to establish, for their own use, stability requirements that will vary from those in para. 7.6. However, the requirements in para. 7.6 should serve as a guide for the user, working with the manufacturer, in establishing his own more stringent requirements.

4.5 Safety Guards

https://truckmanualshub.com/

4.5.1 Overhead Guards

4.5.1.1 High lift rider trucks, including order picker trucks, shall be fitted with an overhead guard manufactured in accordance with para. 7.29.

4.5.1.2 An overhead guard is intended to offer protection to the operator from falling objects but cannot protect against every possible impact. Therefore, it should not be considered a substitute for good judgment and care in loading, handling, storage, etc.

4.5.1.3 Under certain unusual operating conditions, a stronger guard, or one having openings of smaller size, may be specified by the user, working with the truck manufacturer.

4.5.1.4 Exceptions

(a) Where overhead obstructions limit the overall lowered height of the truck, normal overhead guard height and the vertical clearance under the guard may be reduced to permit operation with a guard.

(b) The user may operate the truck without the overhead guard, provided all of the following conditions are met:

(1) vertical movement of the lifting mechanism is restricted to 1,825 mm (72 in.) or less from the ground

(2) the truck will operate only in an area where

(a) the bottom of the top tiered load is not higher than 1,825 mm (72 in.) and the top is not more than 3,050 mm (120 in.) from the ground when tiered

(b) only stable (preferably interlocked, unitized, or containerized) loads are handled

(c) there is protection against falling objects from adjacent high stack areas

4.5.2 Load Backrest Extension. If the type of load presents a hazard, the user shall equip forklift trucks with a vertical load backrest extension manufactured in accordance with para. 7.28.

4.5.3 Operator Compartment Guards. For stand up, end controlled, narrow aisle trucks, more or less guarding than specified by paras. 7.30 and 7.36 may be required to enhance safe operation. Changes shall be determined through cooperation between the user and manufacturer.

4.6 Fuel Handling and Storage

4.6.1 The storage and handling of liquid fuels (such as gasoline and diesel fuel) shall be in accordance with ANSI/NFPA 505 and ANSI/NFPA 30.

4.6.2 The storage and handling of liquefied petroleum gas fuel shall be in accordance with ANSI/NFPA 505 and ANSI/NFPA 58.

4.7.1 Battery changing and charging facilities and procedures shall be in accordance with ANSI/NFPA 505.

4.7.2 The charger connector shall not be plugged into the truck connector under any circumstances.

4.7.3 To avoid damage to equipment or injury to personnel, consult manufacturer's procedures when replacing contacts in any battery connector.

4.7.4 Failure to comply with specified nameplate battery weight range could result in truck instability.

4.8 Hazardous Locations

4.8.1 It shall be the responsibility of the user to determine the hazard classification of any particular atmosphere or location according to ANSI/NFPA 505.

4.8.2 Powered industrial trucks operated in and batteries used in hazardous areas shall be approved and of the type required by ANSI/NFPA 505. Dependent on the proposed type of truck and area, approved trucks shall be built in compliance with one of the following:

(a) UL 558

(b) UL 583

4.8.3 Trucks and areas of use shall be marked in accordance with ANSI/NFPA 505.

4.9 Aisles and Obstructions

https://truckmanualshub.com/

4.9.1 Permanent aisles, roadways or passageways, floors, and ramps shall be defined in some fashion or marked to conform with ANSI Z535.2.

4.9.2 Permanent or temporary protrusions of loads, equipment, material, and construction facilities into the usual operating area shall be guarded, clearly and distinctively marked, or clearly visible.

4.10 Lighting for Operating Areas

4.10.1 Controlled lighting of adequate intensity should be provided in operating areas in conformance with ANSI/IES RP7.

4.10.2 Where operating conditions indicate, the user shall be responsible for having the truck equipped with lights.

4.11 Control of Noxious Gases and Fumes

4.11.1 Carbon monoxide is a colorless, odorless, tasteless, poisonous gas. This gas is the product of incomplete burning of any material containing carbon, such as gasoline, LP and natural gas, and diesel fuel. Internal combustion engines that use these fuels are sources of exposure in the workplace. Control of carbon monoxide levels in the workplace is dependent on ventilation and proper maintenance of carbon monoxide producers including internal combustion–powered equipment.

Properly running internal combustion engines will still produce carbon monoxide emissions and deplete the oxygen supply sufficiently, affecting the ambient air of the work environment if the ambient air exchange is not adequate. Always use ventilation as the primary means of control by providing necessary air exchange capability.

4.11.2 Ventilation shall be provided in enclosed areas where internal combustion–powered equipment is used to maintain an atmosphere that shall not exceed the contamination levels specified by the American Conference of Governmental Industrial Hygienists, “Threshold Limit Values of Airborne Contaminants.” (See 29 CFR 1910.1000 Table Z–1.) This includes the atmosphere within the truck cab when a cab is provided.

4.11.3 Common symptoms of carbon monoxide exposure may include headaches, dizziness, and nausea. If employees exhibit these symptoms, move them into fresh air, seek medical attention as required, and determine the source of carbon monoxide by monitoring “threshold limit values” in areas of exposure.

4.11.4 Questions concerning degree of concentration and methods of sampling to ascertain the conditions present should be referred to a qualified professional. Users must follow applicable local, state, and federal regulations that apply to their workplace.

4.12 Sound

Powered industrial trucks can contribute to the ambient sound in the work area. Consideration should be given to the sound exposure of personnel in the work area.

4.13 Dockboards (Bridge Plates)[2]

4.13.1 Portable and powered dockboards shall be marked conspicuously with their carrying capacity. The carrying capacity indicated shall not be exceeded.

4.13.2 Portable dockboards shall be secured in position, either by being anchored or by being equipped with devices that will prevent their slipping.

4.13.3 Handholds or other effective means shall be provided on portable dockboards to permit safe handling. Where possible, fork loops or lugs shall be provided for handling by fork trucks.

4.13.4 All types of dockboards shall have a high friction surface designed to reduce the possibility of employees or trucks slipping.

4.13.5 All types of dockboards shall be designed and maintained so that one end will have a substantial contact with the dock (or loading platform) and the other end with the transport vehicle to prevent the dockboard from rocking or sliding.

4.14 Trucks and Railroad Cars

4.14.1 When powered industrial trucks are driven on and off highway trucks or trailers, the brakes on the highway trucks or trailers shall be applied, and wheel chocks or other positive mechanical means shall be used to prevent unintentional movement of highway trucks and trailers.

[2] Dockboard recommendations also apply to bridge plates.

https://truckmanualshub.com/

4.14.2 Provision shall be made to prevent railroad cars from being moved during loading and unloading. Wheel stops, hand brakes, or other recognized positive means shall be used to prevent movement during loading and unloading.

4.14.3 Whenever powered industrial trucks are driven on and off semitrailers not coupled to a tractor, supports may be needed to prevent upending or corner dipping.

4.14.4 Maintain a safe distance from the edge of ramps, platforms, or other similar working surfaces.

4.14.5 Do not move railroad cars or trailers with a powered industrial truck unless the truck is properly designed and equipped for that operation.

4.15 Warning Device

4.15.1 Every truck shall be equipped with an operator– controlled horn, whistle, gong, or other sound–producing device(s).

4.15.2 The user shall determine if operating conditions require the truck to be equipped with additional sound–producing or visual (such as lights or blinkers) devices, and be responsible for providing and maintaining such devices.

4.16 Relocating Powered Industrial Trucks
When utilizing lifting equipment such as elevators, cranes, ship hoisting gear, etc., to relocate a powered industrial truck, the user shall ensure that the capacity of the hoisting equipment being used is not exceeded.

4.17 Elevating Personnel

4.17.1 Only operator–up high lift trucks have been designed to lift personnel. If a work platform is used on trucks designed and intended for handling materials, the requirements of paras. 4.17.2 and 4.17.3 shall be met for the protection of personnel.

4.17.2 Whenever a truck is used to elevate personnel, the following precautions for the protection of personnel shall be taken:

(a) Comply with the design requirements in para. 7.36 of this Standard.

(b) Provide protection for personnel in their normal working position on the platform from moving parts of the truck that represent a hazard.

(c) Be certain that required restraining means such as railings, chains, cable, body belt(s) with lanyard(s), or deceleration devices, etc., are in place and properly used.

(d) Be certain that the lifting mechanism is operating smoothly throughout its entire lift height, both empty and loaded, and that all lift limiting devices and latches, if provided, are functional.

(e) Provide overhead protection as indicated to be necessary by the operating conditions.

(f) Replace any body belt, lanyard, or deceleration device that has sustained permanent deformation or is otherwise damaged.

4.17.3 Whenever a truck is equipped with a work platform (does not include operator–up high lift trucks), precautions specified in para. 4.17.2 shall be taken and the following additional precautions shall be taken for the protection of personnel:

(a) Provide a platform that complies with the design requirements in para. 7.37.3.

(b) The platform attachment means are applied and the platform is securely attached to the lifting carriage or forks.

(c) When the lifting carriage and/or forks are supporting the platform used to elevate personnel, the lifting carriage and/or forks are secured to prevent them from pivoting upward.

(d) The mast is vertical – do not operate on a side slope.

(e) The platform is horizontal and centered and not tilted forward or rearward when elevated.

(f) The truck has a firm and level footing.

(g) Place all travel controls in neutral and set parking brake.

(h) Before elevating personnel, mark area with cones or other devices to warn of work by elevated personnel.

(i) Lift and lower personnel smoothly, with caution, and only at their request.

(j) Avoid overhead obstructions and electric wires.

https://truckmanualshub.com/

(k) Keep hands and feet clear of controls other than those in use.

(l) Move truck and/or platform slowly, only for minor adjustments in horizontal positioning when personnel are on the platform, and only at their request.

(m) On trucks equipped with rotators, mechanically secure the rotator to prevent movement.

(n) Have a trained operator in position to control the truck, or available to operate controls. When the operator is not in the operating position, engage the parking brake and block the wheels.

(o) The combined weight of the platform, load, and personnel is not to exceed one–half of the capacity as indicated on the nameplate of the truck on which the platform is used.

(p) Personnel are to remain on the platform floor. Use of railings, planks, ladders, etc., on the platform for purpose of achieving additional reach or height is prohibited.

(q) Personnel and equipment on the platform are not to exceed the available space.

(r) Lower platform to floor level for personnel to enter and exit. Do not climb on any part of the truck in attempting to enter and exit.

4.18 Operator Qualifications
Only trained and authorized persons shall be permitted to operate a powered industrial truck. Operators of powered industrial trucks shall be qualified as to visual, auditory, physical, and mental ability to operate the equipment safely according to para. 4.19 and all other applicable parts of para. 4.

4.19 Operator Training

4.19.1 Personnel who have not been trained to operate powered industrial trucks may operate a truck for the purposes of training only, and only under the direct supervision of the trainer. This training should be conducted in an area away from other trucks, obstacles, and pedestrians.

4.19.2 The operator training program should include the user's policies for the site where the trainee will operate the truck, the operating conditions for that location, and the specific truck the trainee will operate. The training program shall be presented to all new operators regardless of previous experience.

4.19.3 The training program shall inform the trainee of the following:

(a) The primary responsibility of the operator is to use the powered industrial truck safely following the instructions given in the training program.

(b) Unsafe or improper operation of a powered industrial truck can result in

(1) death or serious injury to the operator or others

(2) damage to the powered industrial truck or other property

4.19.4 The training program shall emphasize safe and proper operation to avoid injury to the operator and others and prevent property damage, and shall cover the following areas:

(a) fundamentals of the powered industrial truck(s) the trainee will operate, including

(1) characteristics of the powered industrial truck(s), including variations between trucks in the workplace

(2) similarities to and differences from automobiles

(3) significance of nameplate data, including rated capacity, warnings, and instructions affixed to the truck

(4) operating instructions and warnings in the operating manual for the truck, and instructions for inspection and maintenance to be performed by the operator

(5) type of motive power and its characteristics

(6) method of steering

(7) braking method and characteristics, with and without load

(8) visibility, with and without load, forward and reverse

(9) load handling capacity, weight and load center

(10) stability characteristics with and without load, with and without attachments

(11) controls–location, function, method of operation, identification of symbols

https://truckmanualshub.com/

(12) load handling capabilities, forks, attachments

(13) hazards due to production of carbon monoxide by internal combustion engines and common initial symptoms of exposure

(14) fueling and battery charging

(15) guards and protective devices for the specific type of truck

(16) other characteristics of the specific industrial truck

(b) operating environment and its effect on truck operation, including

(1) floor or ground conditions including temporary conditions

(2) ramps and inclines, with and without load

(3) trailers, railcars, and dockboards (including the use of wheel chocks, jacks, and other securing devices)

(4) fueling and battery charging facilities

(5) the use of "classified" trucks in areas classified as hazardous due to risk of fire or explosion, as defined in ANSI/NFPA 505

(6) narrow aisles, doorways, overhead wires and piping, and other areas of limited clearance

(7) areas where the truck may be operated near other powered industrial trucks, other vehicles, or pedestrians

(8) use and capacity of elevators

(9) operation near edge of dock or edge of improved surface

(10) other special operating conditions and hazards that may be encountered

(c) operation of the powered industrial truck, including:

(1) proper preshift inspection and approved method for removing from service a truck that is in need of repair

(2) load handling techniques: lifting, lowering, picking up, placing, tilting

(3) traveling, with and without loads; turning corners

(4) parking and shutdown procedures

(5) other special operating conditions for the specific application

(d) operating safety rules and practices, including:

(1) provisions of this Standard in paras. 5.1 to 5.4 address operating safety rules and practices

(2) provisions of this Standard in para. 5.5 address care of the truck

(3) other rules, regulations, or practices specified by the employer at the location where the powered industrial truck will be used

(e) Operational training practice, including:

(1) if feasible, practice in the operation of powered industrial trucks shall be conducted in an area separate from other workplace activities and personnel

(2) training practice shall be conducted under the supervision of the trainer

(3) training practice shall include the actual operation or simulated performance of all operating tasks such as load handling, maneuvering, traveling, stopping, starting, and other activities under the conditions that will be encountered in the use of the truck

4.19.5 Testing, Retraining, and Enforcement

(a) During training, performance and oral and/or written tests shall be given by the employer to measure the skill and knowledge of the operator in meeting the requirements of the Standard. Employers shall establish a pass/fail requirement for such tests. Employers may delegate such testing to others but shall remain responsible for the testing. Appropriate records shall be kept.

(b) Operators shall be retrained when new equipment is introduced, existing equipment is modified, operating conditions are changed, or an operator's performance is unsatisfactory.

https://truckmanualshub.com/

(c) The user shall be responsible for enforcing the safe use of the powered industrial truck according to the provisions of this Standard.

NOTE: Information on operator training is available from such sources as powered industrial truck manufacturers, government agencies dealing with employee safety, trade organizations of users of powered industrial trucks, public and private organizations, and safety consultants.

5 OPERATING SAFETY RULES AND PRACTICES

5.1 Operator Responsibility

5.1.1 Safe operation is the responsibility of the operator.

5.1.2 The operator shall develop safe working habits and also be aware of hazardous conditions in order to protect himself, other personnel, the truck, and other material.

5.1.3 The operator shall be familiar with the operation and function of all controls and instruments before undertaking to operate the truck.

5.1.4 Before operating any truck, truck operators shall have read and be familiar with the operator's manual for the particular truck being operated and they shall also abide by the safety rules and practices in paras. 5.2 through 5.5.

5.1.5 Before operating any truck, the operator shall be familiar with unusual operating conditions that may require additional safety precautions or special operating instructions.

5.2 General

5.2.1 Before starting to operate the truck

(a) be in operating position

(b) place directional controls in neutral

(c) disengage clutch on manual transmission-equipped trucks, or apply brake on power shift or automatic transmission–equipped trucks and electric trucks

(d) start engine or turn switch of electric truck to "ON" position

5.2.2 Do not start or operate the truck, any of its functions or attachments, from any place other than from the designated operator's position.

5.2.3 Keep hands and feet inside the operator's compartment.
Do not put any part of the body outside the operator compartment of the truck.

5.2.4 Never put any part of the body into the mast structure or between the mast and the truck.

5.2.5 Never put any part of the body within the reach mechanism of the truck or other attachments.

5.2.6 Understand truck limitations and operate the truck in a safe manner so as not to cause injury to personnel. Safeguard pedestrians at all times.

(a) Do not drive a truck up to anyone standing in front of an object.

(b) Ensure that personnel stand clear of the rear swing area before conducting turning maneuvers.

(c) Exercise particular care at cross aisles, doorways, and other locations where pedestrians may step into the path of travel of the truck.

5.2.7 Do not allow anyone to stand or pass under the elevated portion of any truck, whether empty or loaded.

5.2.8 Do not permit passengers to ride on powered industrial trucks unless a safe place to ride has been provided by the manufacturer.

5.2.9 A powered industrial truck is attended when the operator is less than 8 m (25 ft) from the stationary truck, which remains in his view.

5.2.10 A powered industrial truck is unattended when the operator is more than 8 m (25 ft) from the truck, which remains in his view, or whenever the operator leaves the truck and it is not in his view.

5.2.11

(a) Before leaving the operator's position

https://truckmanualshub.com/

(1) bring truck to a complete stop

(2) place directional controls in neutral

(3) apply the parking brake

(4) lower load–engaging means fully, unless supporting an elevated platform

(b) When leaving the truck unattended

(1) stop the engine or turn off the controls

(2) if the truck must be left on an incline, block the wheels

(3) fully lower the load–engaging means

5.2.12 Maintain a safe distance from the edge of ramps, platforms, and other similar working surfaces. Do not move railroad cars with a powered industrial truck.

5.2.13 Do not use a truck for opening or closing railroad car doors, unless the truck utilizes a device specifically designed for opening and closing railroad car doors and the operator is trained in its use.

The design of the door–opening device shall require the truck to travel parallel to the railroad car, with the force applied in a direction parallel with the door travel. Care should be exercised when engaging the door opening device with the railroad car door, in order to prevent damage to the doors and/or fork truck by heavy impact forces. The entire door opening operation shall be in full view of the operator. The fork truck shall always be positioned to safeguard the dock attendant while removing the door lock pin. Whenever a railroad car door requires an abnormal force to open, the truck operator shall report the condition to his supervisor or as instructed.

5.2.14 When powered industrial trucks are driven on and off highway trucks or trailers, the brakes on the highway trucks or trailers shall be applied and wheel chocks or other positive mechanical means shall be used to prevent unintentional movement of highway trucks and trailers.

Whenever powered industrial trucks are driven on and off semitrailers that are not coupled to a tractor, supports may be needed to prevent upending or corner dipping.

5.2.15 Provision shall be made to prevent railroad cars from being moved during loading and unloading. Wheel stops, hand brakes, or other recognized positive means shall be used to prevent movement of railroad cars during loading and unloading.

5.2.16 Care shall be taken not to contact overhead installations such as lights, wiring, pipes, sprinkler systems, etc.

5.2.17 An overhead guard shall be used on all high lift rider trucks as protection against falling objects, unless all of the following conditions are met:

(a) Vertical movement of the lifting mechanism is restricted to 1,825 mm (72 in.) or less from the ground.

(b) The truck will be operated only in an area where

(1) the bottom of the top tiered load is not higher than 1,825 mm (72 in.) and the top is not more than 3,050 mm (120 in.) from the ground when tiered.

(2) only stable, and preferably interlocked, unitized, or containerized, loads are handled.

(3) there is protection against falling objects from adjacent, high stack areas. An overhead guard is intended to offer protection from falling objects but cannot protect against every possible impact. It should not be considered a substitute for good judgment and care in load handling.

(c) The truck is marked to identify where it can be operated.

5.2.18 A load backrest extension shall be used when necessary to guard against a load, or part of it, from falling toward the operator.

5.2.19 In areas classified as hazardous, use only trucks approved for use in those areas.

5.2.20 Report all accidents involving personnel, building structures, and equipment to the supervisor or as directed.

5.2.21 Do not add to, or modify, the truck.

5.2.22 Do not block access to fire aisles, stairways, or fire equipment.

https://truckmanualshub.com/

5.2.23 Motorized hand trucks shall not be ridden unless they are of the hand/rider design.

5.2.24 Whenever a truck without controls that are elevatable with the lifting carriage or forks is used to elevate personnel

(a) the platform attachment means are applied and the platform is securely attached to the lifting carriage or forks.

(b) be certain that the lifting mechanism is operating smoothly throughout its entire lift height, both empty and loaded, and that all lift limiting devices and latches, if provided, are functional.

(c) the mast is vertical – do not operate on a side slope.

(d) the platform is horizontal and centered and not tilted forward or rearward when elevated.

(e) the truck has a firm and level footing.

(f) place all travel controls in neutral and set parking brake.

(g) before elevating personnel, mark area with cones or other devices to warn of work by elevated personnel.

(h) lift and lower personnel smoothly, with caution, and only at their request;

(i) avoid overhead obstructions and electric wires.

(j) keep hands and feet clear of controls other than those in use.

(k) move truck and/or platform slowly, only for minor adjustments in horizontal positioning when personnel are on the platform, and only at their request.

(l) on trucks equipped with rotators, assure that the rotator is mechanically secured to prevent movement.

(m) when not in the operating position, engage the parking brake and block the wheels.

(n) the combined weight of the platform, load, and personnel is not to exceed one–half of the capacity as indicated on the nameplate of the truck on which the platform is used.

(o) personnel are to remain on the platform floor. Use of railings, planks, ladders, etc., on the platform for the purpose of achieving additional reach or height is prohibited.

(p) personnel and equipment on the platform are not to exceed the available space.

(q) lower platform to floor level for personnel to enter and exit. Do not climb on any part of the truck in attempting to enter and exit.

(r) restraining means such as rails, chains, etc., should be in place, or persons on the work platform shall wear a body belt and lanyard or retractable safety device.

5.2.25 The exhaust from all internal combustion engines contain carbon monoxide, a colorless, odorless, tasteless, poisonous gas. Exposure to carbon monoxide can cause serious injury or health problems, including death.

(a) Carbon monoxide can become concentrated in areas such as trailers, containers, coolers, freezers, and poorly ventilated rooms or buildings. Therefore, limit internal combustion engine usage in those areas.

(b) Common symptoms of carbon monoxide exposure may include headache, dizziness, and nausea. The smell of internal combustion engine exhaust means carbon monoxide could be present.

(c) If an operator experiences these symptoms, move him into fresh air, seek medical attention as required, and contact your employer so he can monitor “threshold limit values.” (Consideration should be given to shutting off the operator’s internal combustion engine.)

5.3 Traveling

5.3.1 Observe all traffic regulations including authorized plant speed limits. Under normal traffic conditions, keep to the right. Maintain a safe distance, based on speed of travel, from the truck ahead; and keep the truck under control at all times.

5.3.2 Yield the right of way to pedestrians and emergency vehicles such as ambulances and fire trucks.

5.3.3 Do not pass another truck traveling in the same direction at intersections, blind spots, or at other dangerous locations.

https://truckmanualshub.com/

5.3.4 Slow down and sound the audible warning device(s) at cross aisles and other locations where vision is obstructed.

5.3.5 Cross railroad tracks at an angle wherever possible. Do not park closer than 2 m (6 ft) to the nearest rail of a railroad track.

5.3.6 Keep a clear view of the path of travel and observe for other traffic, personnel, and safe clearances.

5.3.7 If the load being carried obstructs forward view, travel with the load trailing.

5.3.8 Ascend or descend grades slowly, and with caution.[3]

(a) When ascending or descending grades in excess of 5%, loading rider trucks shall be driven with the load upgrade.

(b) Unloaded trucks should be operated on all grades with the load–engaging means downgrade.[3]

(c) On all grades the load and load–engaging means shall be tilted back, if applicable, and raised only as far as necessary to clear the road surface.

(d) Avoid turning, if possible, and use extreme caution on grades, ramps, or inclines; normally travel straight up and down.

5.3.9 Under all travel conditions, operate the truck at a speed that will permit it to be brought to a stop in a safe manner.

5.3.10 Travel with load–engaging means or load low and, where possible, tilted back. Do not elevate the load except during stacking. This does not apply to trucks that are intended normally to be operated with the load or load–engaging means elevated.

5.3.11 Make starts, stops, turns, or direction reversals in a smooth manner so as not to shift load and/or overturn the truck.

5.3.12 Do not indulge in stunt driving or horseplay.

5.3.13 Slow down for wet and slippery floors.

5.3.14 Before driving over a dockboard or bridge plate, be sure that it is properly secured. Drive carefully and slowly across the dockboard or bridge plate, and never exceed its rated capacity.

5.3.15 Do not drive trucks onto any elevator unless specifically authorized to do so. Do not exceed the capacity of the elevator. Approach elevators slowly, and then enter squarely after the elevator car is properly leveled. Once on the elevator, neutralize the controls, shut off power, and set brakes. It is advisable that all other personnel leave the elevator before truck is allowed to enter or leave.

5.3.16 Avoid running over loose objects on the roadway surface.

5.3.17 When negotiating turns, reduce speed to a safe level consistent with the operating environment. Make the turns smoothly. Except when maneuvering at a very low speed, turn the steering control at a moderate, even rate.

5.3.18 The operation of a counterbalanced, center control, high lift truck with a sit–down, nonelevating operator requires special safety considerations, as follows:

(a) An industrial truck, loaded or unloaded, may tip over if an operator fails to slow down to a safe speed before making turns. Indications that a truck is being driven at an excessive speed during turning maneuvers include

(1) tire skidding

(2) truck side sway

(3) wheel lift

(4) the need to grip the steering wheel tightly to keep from sliding out of the seat

(b) The likelihood of lateral tipover is increased under any of the following conditions, or combinations of them:

(1) overloading

(2) traveling with the load elevated

---

[3] High lift order picker trucks are not normally intended for operation on a grade. Consult manufacturer's operating instructions for recommended operating procedures.

https://truckmanualshub.com/

(3) braking or accelerating sharply while turning

(4) rearward tilt or off–center positioning of the load

(5) traveling on an uneven surface

(6) traveling at excessive speed

(c) Tipping forward can occur and its likelihood is increased under the following conditions, or combination of them:

(1) overloading

(2) traveling with the load tilted forward and/or elevated

(3) hard braking while traveling forward

(4) suddenly accelerating while traveling in reverse

(d) The operator should stay with the truck if lateral or longitudinal tipover occurs. The operator should hold on firmly and lean away from the point of impact.

(e) The operator should stay with the truck if it falls off a loading dock or ramp. The operator should hold on firmly and lean away from the point of impact.

(f) Where the environment presents a severe hazard, or there are other unusual operating conditions, the user may need to establish different and/or additional safety precautions and special operating instructions appropriate for the conditions.

5.3.19 An active operator protection device or system, when provided, shall be used. Operator protection in the event of tipover is intended to reduce the risk of entrapment of the head and torso between the truck and the ground but may not protect the operator against all possible injury (see para. 7.2.2). However, steps indicated in paras. 5.3.18(d) and (e) should still be adhered to.

5.3.20 Motorized hand truck operation requires special safety considerations as follows:

(a) Never operate with greasy hands.

(b) Foot protection is recommended.

(c) Do not ride on the truck.

(d) Keep feet clear of truck frame while operating.

(e) Always keep hands and fingers inside the protected area of the control handle.

(f) Be cautious when traveling in reverse (load end leading) due to steering characteristics.

(g) Be careful of drive end swing when turning while operating with load end leading.

(h) Use caution when turning into an aisle. The load wheels tend to cut the corner.

(i) Never travel at a speed greater than normal walking speed [approximately 5.6 km/h (3.5 mph)].

(j) Always place both hands on the control handle when operating with the load end leading.

(k) Always operate with one hand on controls, and when possible, walk ahead and to the side of the tongue when traveling forward (load end trailing).

(l) Enter elevator or other confined areas with the load end leading.

(m) Operate on grades with the load end down grade. If the load restricts visibility, or requires the load back rest to retain the load, travel down the grade with the load end up grade, with the operator positioned off to one side per para. 5.3.20(k).

5.3.21 When operating a low lift order picker truck with a coasting system feature (see para. 7.23.5) engaged, the operator shall take the following precautions.

(a) The coasting system shall be used only on a level surface free of debris.

(b) The coasting system shall not be used to permit the truck to coast into a cross aisle.

(c) The coasting system shall not be used in pedestrian walkways.

(d) Care shall be taken to walk along the side of the lift truck and not into the path of the coasting truck.

5.3.22 The operation of high lift, rear entry end control, narrow aisle, and reach trucks either loaded or unloaded with a standup, nonelevating operator requires special safety considerations as follows:

https://truckmanualshub.com/

(a) An industrial truck may tip over if an operator fails to slow down to a safe speed before making turns. Indications that a truck is being driven at an excessive speed during maneuvers include

(1) tire skidding

(2) truck side sway

(3) wheel lift

(b) The likelihood of lateral tipover is increased under any of the following conditions, or combinations of them

(1) overloading

(2) traveling with the load or load handling mechanism elevated

(3) braking or accelerating sharply while turning

(4) excessive tilt or off–center positioning of the load

(5) traveling on an uneven surface

(6) traveling at excessive speed

(7) turning on an incline or ramp

(c) Tipping forward can occur and its likelihood is increased under the following conditions, or combination of them

(1) overloading

(2) traveling with the load tilted or reached forward and/or elevated

(3) hard braking while traveling forward

(4) sudden acceleration while traveling in reverse

(5) driving with the load down slope on a steep incline or ramp

(6) hitting overhead obstacles or collisions with other objects

(d) A dock type tipover can occur if a truck is steered over the edge, or driven off a dock or ramp. They can also occur if a highway truck or trailer rolls away from the dock or is driven away during loading or unloading.

(e) These trucks are designed with open operator compartments to permit easy ingress and egress. Although there is no sure way in all circumstances to avoid injury, where possible, in the event of an imminent tipover or off the dock accident, the operator should step off and away from the truck. These actions are intended to reduce the risk of serious injury or death.

(f) For nontipover accidents such as an imminent collision with other objects in the work environment, the operator should utilize the protection provided by the compartment by staying within its confines.

(g) Where the environment presents a severe hazard, or there are unusual operating conditions, the user may find it beneficial to establish different, or additional precautions and special operating instructions appropriate for those conditions.

5.4 Loading

5.4.1 Handle only stable or safely arranged loads.

(a) When handling off–center loads that cannot be centered, operate with extra caution.

(b) Handle only loads within the capacity of the truck.

(c) Handle loads exceeding the dimensions used to establish truck capacity with extra caution. Stability and maneuverability may be adversely affected.

(d) Handle loads only with the load engaging means and do not transport loads or miscellaneous items within the operator¿
secure area has been provided and designated by the user.

5.4.2 When attachments are used, extra care shall be taken in securing, manipulating, positioning, and transporting the load. Operate trucks equipped with attachments as partially loaded trucks when not handling a load.

5.4.3 Completely engage the load with the load-engaging means. Fork length should be at least two-thirds of load length. Where tilt is provided, carefully tilt the load backward to

https://truckmanualshub.com/

stabilize the load. Caution should be used in tilting backward with high or segmented loads (see paras. 5.2.17 and 5.2.18).

5.4.4 Use extreme care when tilting load forward or backward, particularly when high tiering. Do not tilt forward with load–engaging means elevated except to pick up or deposit a load over a rack or stack. When stacking or tiering, use only enough backward tilt to stabilize the load.

5.4.5 The handling of suspended loads by means of a crane arm (boom) or other device can introduce dynamic forces affecting the stability of a truck that are not considered in the stability criteria of para. 7.6. Grades and sudden starts, stops, and turns can cause the load to swing and create a hazard.

When handling suspended loads:

(a) do not exceed the truck manufacturer's capacity of the trucks as equipped for handling suspended loads

(b) only lift the load vertically and never drag it horizontally

(c) transport the load with the bottom of the load and the mast as low as possible

(d) with load elevated, maneuver the truck slowly and cautiously, and only to the extent necessary to permit lowering to the transport position

(e) use guy lines to restrain load swing whenever possible

5.5 Operator Care of the Truck

5.5.1 At the beginning of each shift and before operating the truck, check its condition, giving special attention to the following:

(a) condition of tires

(b) if pneumatic tires, check inflation pressures

(c) warning and safety devices

(d) lights

(e) battery

(f) controls

(g) lift and tilt systems

(h) load–engaging means

(i) chains and cables

(j) limit switches

(k) brakes

(l) steering mechanism

(m) fuel system(s)

(n) additional items or special equipment as specified by the user and/or manufacturer If the truck is found to be in need of repair or in any way unsafe, or contributes to an unsafe condition, the matter shall be reported immediately to the user's designated authority, and the truck shall not be operated until it has been restored to safe operating condition.

5.5.2 If during operation the truck becomes unsafe in any way, the matter shall be reported immediately to the user's designated authority, and the truck shall not be operated until it has been restored to safe operating condition.

5.5.3 Do not make repairs or adjustments unless specifically authorized to do so.

5.5.4 The engine shall be stopped, and the operator shall not be on the truck while refueling.

5.5.5 Spillage of oil or fuel shall be carefully and completely absorbed or evaporated and fuel tank cap replaced before restarting engine.

5.5.6 Do not use open flames when checking electrolyte level in storage batteries, liquid level in fuel tanks, or the condition of LPG fuel lines and connectors.

6 MAINTENANCE AND REBUILD PRACTICES

https://truckmanualshub.com/

6.1 Operation
Operation of powered industrial trucks may be hazardous if maintenance is neglected or repairs, rebuilds, or adjustments are not performed in accordance with the manufacturer's design criteria. Therefore, maintenance facilities (on or off premises), trained personnel, and detailed procedures shall be provided.

6.1.1 Parts manuals and maintenance manuals may be obtained from the truck manufacturer.

6.1.2 In unusual cases not covered by the manuals referred to in para. 6.1.1, consult the truck manufacturer.

6.2 Maintenance and Inspection
Maintenance and inspection of all powered industrial trucks shall be performed in conformance with the following practices.

(a) A scheduled planned maintenance, lubrication, and inspection system shall be followed; consult the manufacturer's recommendations.

(b) Only trained and authorized personnel shall be permitted to maintain, repair, adjust, and inspect industrial trucks, and in accordance with manufacturer's specifications.

6.2.1 When lifting trucks for repair or inspection, trucks shall be lifted in a safe, secure, stable manner. Removal of components such as counterweights or uprights will change the center of gravity and may create an unstable condition.

6.2.2 Before starting inspection and repair of truck

(a) raise drive wheels free of floor or disconnect battery and use chocks or other positive truck–positioning devices.

(b) block load–engaging means, innermast(s), or chassis before working on them.

(c) before disconnecting any part of the engine fuel system of gasoline–powered trucks with gravity feed fuel systems, take precaution to eliminate any possibility of unintentional fuel escape.

(d) before disconnecting any part of the engine fuel system of LP gas–powered trucks, close LP tank valve and run engine until fuel in system is depleted and engine stops. If the engine will not run, close LP tank valve and vent fuel slowly in a nonhazardous area.

(e) disconnect battery before working on the electrical system.

(f) the charger connector shall be plugged only into the battery connector and never into the truck connector.

6.2.3 Operation of the truck to check performance shall be conducted in an authorized area where safe clearance exists.

(a) Before starting to operate the truck

(1) be in operating position

(2) disengage clutch on manual transmission-equipped trucks, or apply brake on power shift or automatic transmission–equipped trucks and electric trucks

(3) place directional controls in neutral

(4) start engine or turn switch of electric trucks to "ON" position

(5) check functioning of lift and tilt systems, load-engaging means, steering, warning devices, and brakes

(b) Before leaving the truck:

(1) stop truck

(2) fully lower the load–engaging means

(3) place directional controls in neutral

(4) apply the parking brake

(5) stop the engine or turn off power

(6) turn off the control or ignition circuit

(7) if the truck must be left on an incline, block the wheels

6.2.4 Avoid fire hazards and have fire protection equipment present in the work area. Do not use an open flame to check the level or to check for leakage of any fluid, especially fuel

https://truckmanualshub.com/

and battery electrolyte. Do not use open pans of fuel or flammable cleaning fluids for cleaning parts.

6.2.5 Properly ventilate work area and vent exhaust fumes.

(a) The exhaust from all internal combustion power lift truck engines contains carbon monoxide, a colorless, odorless, tasteless, poisonous gas. Carbon monoxide can become concentrated in poorly ventilated maintenance areas. Exposure to carbon monoxide can result in serious injuries or health hazards, including death.

(b) Common symptoms of carbon monoxide exposure may include headaches, dizziness, and nausea. The smell of internal combustion engine exhaust means carbon monoxide could be present.

(c) If maintenance personnel experience these symptoms, move them into fresh air, seek medical attention as required, and contact your employer so he can monitor “threshold limit values.” (Consideration should be given to shutting off the internal combustion engine.)

(d) Maintenance levels affect carbon monoxide emissions. Follow manufacturers’ maintenance and adjustment procedures. (See para. 7.2.3.)

6.2.6 Handle LP gas cylinders with care. Physical damage such as dents, scrapes, or gouges may dangerously weaken the tank and make it unsafe for use.

6.2.7 Brakes, steering mechanisms, control mechanisms, warning devices, lights, governors, lift overload devices, guards and safety devices, lift and tilt mechanisms, articulating axle stops, and frame members shall be carefully and regularly inspected and maintained in safe operating condition.

6.2.8 Inspection and Repair of Forks in Service on Fork Lift Trucks

(a) Forks in use shall be inspected at intervals of not more than 12 months (for single shift operations) or whenever any defect or permanent deformation is detected. Severe applications will require more frequent inspection.

(b) Individual Load Rating of Forks. When forks are used in pairs (the normal arrangement), the rated capacity of each fork shall be at least half of the manufacturer’s rated capacity of the truck, and at the rated load center distance shown on the lift truck nameplate.

6.2.8.1 Inspection. Fork inspection shall be carried out carefully by trained personnel with the aim of detecting any damage, failure, deformation, etc., which might impair safe use. Any fork that shows such a defect shall be withdrawn from service, and shall not be returned to service unless it has been satisfactorily repaired in accordance with para. 6.2.8.2.

(a) Surface Cracks. The fork shall be thoroughly examined visually for cracks and if considered necessary, subjected to a nondestructive crack detection process, special attention being paid to the heel and welds attaching all mounting components to the fork blank. This inspection for cracks must also include any special mounting mechanisms of the fork blank to the fork carrier including bolt–type mountings and forged upper mounting arrangements for hook or shaft–type carriages. The forks shall not be returned to service if surface cracks are detected.

(b) Straightness of Blade and Shank. The straightness of the upper face of the blade and the front face of the shank shall be checked. If the deviation from straightness exceeds 0.5% of the length of the blade and/ or the height of the shank, respectively, the fork shall not be returned to service until it has been repaired in accordance with para. 6.2.8.2.

(c) Fork Angle (Upper Face of Blade to Load Face of the Shank). Any fork that has a deviation of greater than 3 deg from the original specification shall not be returned to service. The rejected fork shall be reset and tested in accordance with para. 6.2.8.2.

(d) Difference in Height of Fork Tips. The difference in height of one set of forks when mounted on the fork carrier shall be checked. If the difference in tip heights exceeds 3% of the length of the blade, the set of forks shall not be returned to service until repaired in accordance with para. 6.2.8.2.

(e) Positioning Lock (When Originally Provided). It shall be confirmed that the positioning lock is in good repair and correct working order. If any fault is found, the fork shall be withdrawn from service until satisfactory repairs have been effected.

(f) Wear

(1) Fork Blade and Shank. The fork blade and shank shall be thoroughly checked for wear, special attention being paid to the vicinity of the heel. If the thickness is reduced to 90% of the original thickness, the fork shall not be returned to service.

https://truckmanualshub.com/

(2) Fork Hooks (When Originally Provided). The support face of the top hook and the retaining faces of both hooks shall be checked for wear, crushing, and other local deformations. If these are apparent to such an extent that the clearance between the fork and the fork carrier becomes excessive, the fork shall not be returned to service until repaired in accordance with para. 6.2.8.2.

(g) Legibility of Marking (When Originally Provided). If the fork marking in accordance with para. 7.27.2 is not clearly legible, it shall be renewed. Marking shall be renewed per instructions from original supplier.

6.2.8.2 Repair and Testing

(a) Repair. Only the manufacturer of the fork or an expert of equal competence shall decide if a fork may be repaired for continued use, and the repairs shall only be carried out by such parties.

It is not recommended that surface cracks or wear be repaired by welding. When repairs necessitating resetting are required, the fork shall subsequently be subjected to an appropriate heat treatment, as necessary.

(b) Test Loading. A fork that has undergone repairs other than repair or replacement of the positioning lock and/or the marking, shall only be returned to service after being submitted to, and passing, the tests described in para. 7.27.3, except that the test load shall correspond to 2.5 times the rated capacity marked on the fork.

6.2.9 Special trucks or devices designed and approved for hazardous area operation shall receive special attention to ensure that maintenance preserves the original, approved safe operating features.

6.2.10 Fuel systems shall be checked for leaks and condition of parts. Extra special consideration shall be given in the case of a leak in the fuel system. Action shall be taken to prevent the use of the truck until the leak has been corrected.

6.2.11 All hydraulic systems shall be regularly inspected and maintained in conformance with good practice. Hydraulic cylinders, valves, hoses, fittings, and other hydraulic components shall be checked to ensure that drift or leakage has not developed to the extent that it would create a hazard.

6.2.12 The truck manufacturer's capacity, operation, and maintenance instruction plates, tags, or decals shall be maintained in legible condition.

6.2.13 Batteries, motors, controllers, limit switches, protective devices, electrical conductors, and connections shall be inspected and maintained in conformance with good practice. Special attention shall be paid to the condition of electrical insulation.

6.2.14 To avoid injury to personnel or damage to equipment, follow the connector manufacturer's procedures when replacing the contacts in any battery connector.

6.2.15 Trucks shall be kept in a clean condition to minimize fire hazards and facilitate detection of loose or defective parts.

6.2.16 Modifications and additions that affect capacity and safe truck operation shall not be performed without manufacturer's prior written approval. Capacity, operation, and maintenance instruction plates, tags, or decals shall be changed accordingly.

6.2.17 Care shall be taken to ensure that all replacement parts, including tires, are interchangeable with the original parts and of a quality at least equal to that provided in the original equipment. Parts, including tires, are to be installed per manufacturer's procedures.

6.2.18 When removing tires, follow industry safety practices. Most importantly, deflate pneumatic tires completely prior to removal. Following assembly of tires and rims, use a safety cage or restraining device while inflating.

6.2.19 When changing batteries on battery–electric trucks, replacement batteries shall be of the service weight that falls within the minimum/maximum range specified on the truck nameplate by the truck manufacturer.

https://truckmanualshub.com/

End control, reach, narrow aisle, single side loader, and motorized hand/rider trucks shall be equipped with the platform extending beyond the operator's position, strong enough to withstand a compression load equal to 2.5 times the weight of the loaded truck applied along the longitudinal axis of the truck with the outermost projection of the platform against a flat vertical surface. The operator's area shall be constructed to provide space for the operator's lower extremities, including the operation of foot–operated controls, within the plan view outline of the truck when being operated as recommended by the manufacturer.

(a) End Control Trucks

(1) Operator enclosures may be provided in conjunction with the platform. If provided, they shall permit easy ingress and egress from the platform.

(2) On double end control baggage–type trucks or trucks that may be transported on short elevators, means shall be provided to prevent unintentional folding of the operator platform.

(b) Reach, Narrow Aisle, and Single Side Loader Trucks. Operator enclosures may be provided in conjunction with the platform. If provided, they shall permit easy ingress and egress from the platform.

(c) Motorized Hand/Rider Trucks. Operator enclosures in conjunction with the platform are not recommended because of interference with the steering handle, and with rapid and unobstructed egress for the operator.

(d) Under certain operating conditions, either more or less guarding may be required for safe operation. These operating conditions, as identified by the user, shall be addressed in cooperation with the manufacturer.

https://truckmanualshub.com/

https://truckmanualshub.com/

SUDDEN SERVICE, INC.

649 North Church Avenue
Louisville, Mississippi 39339-2017 USA
Phone: (662) 773-8056
Fax: (662) 773-9157
Web Site: www.suddenserviceinc.com

TAYLOR MACHINE WORKS, INC.

650 North Church Avenue
Louisville, Mississippi 39339-2017 USA
Phone: (662) 773-3421
Fax: (662) 773-9146
Web Site: www.taylorbigred.com.com

TAYLOR MACHINE WORKS INTERNATIONAL, INC.

7 Edge Road, P.O. Box 1002
Alpha, New Jersey 08865 USA
Phone: (908) 454-4770 Fax: (908) 454-4774
Web Site: www.taylormachineworks.com

MADE IN U.S.A.

TMW-077
Rev. 6-14-16