https://trucknanualshub.com/

EUROCOMACH®

COMPACT TRACKED EXCAVATOR

Operation and maintenance manual

ES 350 ZT
ES 400 ZT

KUBOTA ENGINE

This manual must always be kept on-board the machine.

"Translation of the original instruction"

29-12-09 Release
Rev. 02
Code B000201136

https://truckmanualshub.com/

https://truckmanualshub.com/

TESTING REPORT AND CERTIFICATE OF GUARANTEE

Machine .....

Serial No. .....

Motor type .....

Serial No. .....

Date of delivery .....

Dealer .....

The undersigned.....

Company Proprietor / Representative.....

Residing at .....

Via.....No. .....Tel.....

carried out the working tests and checked the proper functioning of the operating machinery in question and related accessories, under his/my/the manufacturer's personal responsibility

CERTIFIES

that the testing was deemed to be satisfactory and that the abovementioned equipment is accepted in its entirety, without reserve. He also confirms that he has taken note of the manufacturer's general GUARANTEE conditions listed overleaf and that he accepts them. In addition, declares himself satisfied with the verbal technical explanations given and, having ascertained that the operating machinery in question complies with what was ordered, hereby signs in acceptance of this TESTING REPORT AND CERTIFICATE OF GUARANTEE.

On, ...Signed.....

GUARANTEE CONDITIONS

This certificate forms an integral part of the "operation and maintenance" manual and, in order to validate GUARANTEE, it must be fully compiled by the Customer and sent by registered mail to the Company, SAMPIERANA S.p.A., Via L. Da Vinci, 40 - 47026 5. Piero in Bagno (FC), within ten days from the date of delivery.

Delivered by Mr. .....

From the Company .....

Technician's signature

CUSTOMER's copy .....

SAMPIERANA S.p.A. - Via L. da Vinci, 40 - I 47026 S. Piero in Bagno (FC)
Tel. (+39) 0543.904211(8 lines r.a.) - Fax (+39) 0543.918520 - 903108 - 902146
info@sampierana.com - http//:www.sampierana.com - www.eurocomach.com
Income Tax and VAT Reg. No. 02712200407- EEC identification code - IT 02712200407
Provincial Register of Companies No. 27534/1999 - Economic Register of Companies No. 285868 -
Punch-card Data Processing Number FO015435

https://truckmanualshub.com/

GUARANTEE

The Manufacturer furnishes this certificate to every Purchaser of this machine. The Manufacturer hereby certifies that all parts of the machine to which this certificate refers are free of defects in terms of materials, workmanship and assembly.

The Manufacturer undertakes to replace, or arrange for replacement by an authorised workshop and to repair, or arrange for repairs by an authorised workshop of any defective parts for a period of 12 (twelve) months from the date of delivery, or the first 1000 (one thousand) working hours, whichever is the shorter.

In terms of this guarantee, the Manufacturer or Vendor will debit the User with any travel costs, travelling expenses and any other costs incurred in the carrying out of any interventions away from the Vendor's Premises, while the cost of any spare parts replaced will not be debited to the User.
This guarantee specifically does not cover tyres, inner tubes, electrical components, starter motor nor any component not produced by the machine Manufacturer himself.

This guarantee shall become null and void in the following cases:
- where the machine has been used for purposes other than those for which it was built;
- where someone other than an authorised workshop has carried out repairs or replacements;
- where the reported defects derive from accidents or negligence, or from improper utilisation of the machine;
- where the machine has been fitted with any parts not produced by the machine Manufacturer and where the utilisation of such parts has led to the reported defects;
- where the machine has been modified, repaired or disassembled by unauthorised workshops.

This guarantee certificate completely replaces any other implicit or explicit guarantee contained in any previous agreement, legal provision or use.

In terms of art. 1341 and 1342 of the Civil Code, the undersigned confirms that he fully understands and unconditionally accepts all the exclusions from the guarantee contained in point 2, as well as the limits of the validity of the guarantee, as listed in point 1 of this certificate.

The Company, SAMPIERANA S.p.A., declines any responsibility for whatever injury to persons or damage to equipment, or issues arising from the utilisation of, or for reasons of, or relating to the products supplied, even during the pre-delivery testing.

SAMPIERANA S.p.A. - Via L. da Vinci, 40 - I 47026 S. Piero in Bagno (FC)
Tel. (+39) 0543.904211(8 lines r.a.) - Fax (+39) 0543.918520 - 903108 - 902146
info@sampierana.com - http//:www.sampierana.com - www.eurocomach.com
Income Tax and VAT Reg. No. 02712200407- EEC identification code - IT 02712200407
Provincial Register of Companies No. 27534/1999 - Economic Register of Companies No. 285868 -
Punch-card Data Processing Number FO015435

https://truckmanualshub.com/

TESTING REPORT AND CERTIFICATE OF GUARANTEE

Machine .....

Serial No. .....

Motor type .....

Serial No. .....

Date of delivery .....

Dealer .....

The undersigned.....

Company Proprietor / Representative.....

Residing at .....

Via.....No. .....Tel.....

carried out the working tests and checked the proper functioning of the operating machinery in question and related accessories, under his/my/the manufacturer's personal responsibility

CERTIFIES

that the testing was deemed to be satisfactory and that the abovementioned equipment is accepted in its entirety, without reserve. He also confirms that he has taken note of the manufacturer's general GUARANTEE conditions listed overleaf and that he accepts them. In addition, declares himself satisfied with the verbal technical explanations given and, having ascertained that the operating machinery in question complies with what was ordered, hereby signs in acceptance of this TESTING REPORT AND CERTIFICATE OF GUARANTEE.

On, ...Signed.....

GUARANTEE CONDITIONS

This certificate forms an integral part of the "operation and maintenance" manual and, in order to validate GUARANTEE, it must be fully compiled by the Customer and sent by registered mail to the Company, SAMPIERANA S.p.A., Via L. Da Vinci, 40 - 47026 5. Piero in Bagno (FC), within ten days from the date of delivery.

Delivered by Mr. .....

From the Company .....

Technician's signature

DEALER's copy .....

SAMPIERANA S.p.A. - Via L. da Vinci, 40 - I 47026 S. Piero in Bagno (FC)
Tel. (+39) 0543.904211(8 lines r.a.) - Fax (+39) 0543.918520 - 903108 - 902146
info@sampierana.com - http//:www.sampierana.com - www.eurocomach.com
Income Tax and VAT Reg. No. 02712200407- EEC identification code - IT 02712200407
Provincial Register of Companies No. 27534/1999 - Economic Register of Companies No. 285868 -
Punch-card Data Processing Number FO015435

https://truckmanualshub.com/

GUARANTEE

The Manufacturer furnishes this certificate to every Purchaser of this machine. The Manufacturer hereby certifies that all parts of the machine to which this certificate refers are free of defects in terms of materials, workmanship and assembly.

The Manufacturer undertakes to replace, or arrange for replacement by an authorised workshop and to repair, or arrange for repairs by an authorised workshop of any defective parts for a period of 12 (twelve) months from the date of delivery, or the first 1000 (one thousand) working hours, whichever is the shorter.

In terms of this guarantee, the Manufacturer or Vendor will debit the User with any travel costs, travelling expenses and any other costs incurred in the carrying out of any interventions away from the Vendor's Premises, while the cost of any spare parts replaced will not be debited to the User.
This guarantee specifically does not cover tyres, inner tubes, electrical components, starter motor nor any component not produced by the machine Manufacturer himself.

This guarantee shall become null and void in the following cases:
- where the machine has been used for purposes other than those for which it was built;
- where someone other than an authorised workshop has carried out repairs or replacements;
- where the reported defects derive from accidents or negligence, or from improper utilisation of the machine;
- where the machine has been fitted with any parts not produced by the machine Manufacturer and where the utilisation of such parts has led to the reported defects;
- where the machine has been modified, repaired or disassembled by unauthorised workshops.

This guarantee certificate completely replaces any other implicit or explicit guarantee contained in any previous agreement, legal provision or use.

In terms of art. 1341 and 1342 of the Civil Code, the undersigned confirms that he fully understands and unconditionally accepts all the exclusions from the guarantee contained in point 2, as well as the limits of the validity of the guarantee, as listed in point 1 of this certificate.

The Company, SAMPIERANA S.p.A., declines any responsibility for whatever injury to persons or damage to equipment, or issues arising from the utilisation of, or for reasons of, or relating to the products supplied, even during the pre-delivery testing.

SAMPIERANA S.p.A. - Via L. da Vinci, 40 - I 47026 S. Piero in Bagno (FC)
Tel. (+39) 0543.904211(8 lines r.a.) - Fax (+39) 0543.918520 - 903108 - 902146
info@sampierana.com - http//:www.sampierana.com - www.eurocomach.com
Income Tax and VAT Reg. No. 02712200407- EEC identification code - IT 02712200407
Provincial Register of Companies No. 27534/1999 - Economic Register of Companies No. 285868 -
Punch-card Data Processing Number FO015435

https://truckmanualshub.com/

TESTING REPORT AND CERTIFICATE OF GUARANTEE

Machine .....

Serial No. .....

Motor type .....

Serial No. .....

Date of delivery .....

Dealer .....

The undersigned.....

Company Proprietor / Representative.....

Residing at .....

Via.....No. .....Tel.....

carried out the working tests and checked the proper functioning of the operating machinery in question and related accessories, under his/my/the manufacturer's personal responsibility

CERTIFIES

that the testing was deemed to be satisfactory and that the abovementioned equipment is accepted in its entirety, without reserve. He also confirms that he has taken note of the manufacturer's general GUARANTEE conditions listed overleaf and that he accepts them. In addition, declares himself satisfied with the verbal technical explanations given and, having ascertained that the operating machinery in question complies with what was ordered, hereby signs in acceptance of this TESTING REPORT AND CERTIFICATE OF GUARANTEE.

On, ...Signed.....

GUARANTEE CONDITIONS

This certificate forms an integral part of the "operation and maintenance" manual and, in order to validate GUARANTEE, it must be fully compiled by the Customer and sent by registered mail to the Company, SAMPIERANA S.p.A., Via L. Da Vinci, 40 - 47026 5. Piero in Bagno (FC), within ten days from the date of delivery.

Delivered by Mr. .....

From the Company .....

Technician's signature

MANUFACTURER's copy .....

GUARANTEE

The Manufacturer furnishes this certificate to every Purchaser of this machine. The Manufacturer hereby certifies that all parts of the machine to which this certificate refers are free of defects in terms of materials, workmanship and assembly.

The Manufacturer undertakes to replace, or arrange for replacement by an authorised workshop and to repair, or arrange for repairs by an authorised workshop of any defective parts for a period of 12 (twelve) months from the date of delivery, or the first 1000 (one thousand) working hours, whichever is the shorter.

In terms of this guarantee, the Manufacturer or Vendor will debit the User with any travel costs, travelling expenses and any other costs incurred in the carrying out of any interventions away from the Vendor's Premises, while the cost of any spare parts replaced will not be debited to the User.
This guarantee specifically does not cover tyres, inner tubes, electrical components, starter motor nor any component not produced by the machine Manufacturer himself.

This guarantee shall become null and void in the following cases:
- where the machine has been used for purposes other than those for which it was built;
- where someone other than an authorised workshop has carried out repairs or replacements;
- where the reported defects derive from accidents or negligence, or from improper utilisation of the machine;
- where the machine has been fitted with any parts not produced by the machine Manufacturer and where the utilisation of such parts has led to the reported defects;
- where the machine has been modified, repaired or disassembled by unauthorised workshops.

This guarantee certificate completely replaces any other implicit or explicit guarantee contained in any previous agreement, legal provision or use.

In terms of art. 1341 and 1342 of the Civil Code, the undersigned confirms that he fully understands and unconditionally accepts all the exclusions from the guarantee contained in point 2, as well as the limits of the validity of the guarantee, as listed in point 1 of this certificate.

The Company, SAMPIERANA S.p.A., declines any responsibility for whatever injury to persons or damage to equipment, or issues arising from the utilisation of, or for reasons of, or relating to the products supplied, even during the pre-delivery testing.

SAMPIERANA S.p.A. - Via L. da Vinci, 40 - I 47026 S. Piero in Bagno (FC)
Tel. (+39) 0543.904211(8 lines r.a.) - Fax (+39) 0543.918520 - 903108 - 902146
info@sampierana.com - http//:www.sampierana.com - www.eurocomach.com
Income Tax and VAT Reg. No. 02712200407- EEC identification code - IT 02712200407
Provincial Register of Companies No. 27534/1999 - Economic Register of Companies No. 285868 -
Punch-card Data Processing Number FO015435

https://truckmanualshub.com/

1.0 Introduction 2
1.1 General precautions 2
1.2 Consulting the manual and the terminology used 4
1.2.1 Consulting the safety signs in the manual 4
1.2.2 Terminology used in the manual 5
1.3 Manufacturer 8
1.4 Machine identification data 9
1.5 EC declaration of conformity 10

2.0 Intended use and contraindications 11
2.1 Intended use 11
2.2 Contraindications 11
2.3 Machine operator 13

3.0 Safety 14
3.1 Before starting work 14
3.2 Working area – danger zone 16
3.3 Safety decals on the machine 17
3.4 List of hazards 25
3.5 Safety procedures 35
3.6 Safety devices 46

4.0 Technical information 47
4.1 Engine 47
4.2 Undercarriage 47
4.3 Dozer blade 47
4.4 Hydraulic system 47
4.5 Machine weight and speed 48
4.6 Performance 49
4.7 Standard equipment 49
4.8 Optional extras 50
4.9 Rotating structure 50
4.10 Fluid capacities 50
4.11 Operation at low temperatures or during the winter 51
4.12 Electrical system 52
4.13 Vehicle dimensions (in mm) 53
4.14 Bucket specifications 56
4.15 Noise characteristics 57
4.16 Machine vibration characteristics 58

5.0 Transportation of the vehicle 59
5.1 Transportation dimensions 59
5.2 Loading-unloading operations 61
5.3 Tying down the compact excavator on the truck 62
5.4 Lifting the vehicle 62
5.5 Use of the compact excavator for towing purposes 64

https://truckmanualshub.com/

6.0 Controls and instrumentation 65
6.1 Description of control levers 65
6.2 Right control panel description 66
6.3 Dashboard 67

7.0 Operations 70
7.1 Start-up 70
7.2 When the engine is on 70
7.3 Getting on and off the vehicle 70
7.4 Servo-control cutout lever 72
7.5 Driving seat 73
7.6 Driving Cab (optional for ES 350 ZT) 75
7.6.1 Cab installation 75
7.6.2 Entering and leaving the driving cab 77
7.6.3 Dome light 78
7.6.4 Auxiliary outlet for roof rotating light (Optional) **78**
7.6.5 Windshield wiper 79
7.6.6 Windshield washer 79
7.6.7 Opening and tilting the windshield 80
7.6.8 Opening of side windows 81
7.6.9 Ventilation and heating 81
7.7 Starting the engine 82
7.7.1 Inspections prior to starting 82
7.7.2 Engine starting procedure 85
7.7.3 Jump starting procedure 89
7.7.4 Inspections prior to starting work 91
7.8 During operation 92
7.8.1 With the engine running 93
7.9 Stopping the engine 94
7.9.1 Manual engine shut-down 94
7.10 Refuelling 95
7.11 Throttle Lever 95
7.12 Machine movement 96
7.13 PARKING THE MACHINE 98
7.13.1 Forward and reverse travel 99
7.13.2 Pivot turns 100
7.13.3 Turning while moving forward 101
7.13.4 Turning while reversing 102
7.14 Fast drive mode 105
7.15 “Automatic Shift Down” device 105
7.16 Straight-line travel mode 105
7.17 Operating the digger boom 106
7.17.1 Left Joystick 107
7.17.2 Right joystick 109
7.18 Boom swing pedal 110
7.19 Dual-action auxiliary hydraulic control 111
7.20 Dozer blade adjustment lever 113
7.20.1 Dozer blade 113

https://truckmanualshub.com/

7.21 Working light 113
7.22 Horn 114
7.23 Stopping for limited periods 114
7.24 Daily storage 114
7.25 Emergency lifting-boom lowering procedure. 115

8.0 Accessories 116
8.1 Bucket 117
8.1.1 Bucket removal and replacement 117
8.2 Demolition hammer 118
8.2.1 Installation and removal of the demolition hammer 118
8.2.2 Precautions when using the hydraulic hammer 118
8.2.3 Operation 120

9.0 Maintenance 121
9.1 Safety 123
9.2 Engine oil 124
9.3 Fuel 124
9.4 Coolant liquid 125
9.5 Hydraulic system 125
9.6 Electrical system 126
9.7 Tracks 126
9.8 Refilling 127
9.9 Regular maintenance 128
9.9.1 Checking the engine oil 129
9.9.2 Checking the coolant level 130
9.9.3 Check the hydraulic fluid level 131
9.9.4 Hydraulic line condition check 131
9.9.5 Drive gear/roller holding bolt check 132
9.9.6 Track service position 132
9.9.7 Track tension check 133
9.9.8 Track tension adjustment 134
9.9.9 Lubrication points 135
9.9.10 Checking the alternator belt 136
9.9.11 Checking the oil level in the travel motors 136
9.9.12 Check the battery fluid level 137
9.9.13 Air filter check 138
9.9.14 Cleaning the radiator/heat exchanger 140
9.9.15 Changing the engine oil 140
9.9.16 Replacement of the engine oil filter 142
9.9.17 Replacement of the fuel filter 143
9.9.18 Replacing the hydraulic system fluid 144
9.9.19 Hydraulic fluid reservoir magnetic plug 145
9.9.20 Cleaning the intake system oil filter 145
9.9.21 Draining the fuel tank 146
9.9.22 Replacing the coolant 146
9.9.23 Changing the hydraulic circuit fluid 147
9.9.24 Changing the oil in the travel motors 148

https://truckmanualshub.com/

9.10 Long periods of inactivity....149
9.11 Long-term storage....149
9.12 Hydraulic and electrical circuit diagrams....150
9.12.1 Fuses....157

10.0 Troubleshooting 158

https://truckmanualshub.com/

If the operation and maintenance manual is mislaid, please contact your local Eurocomach Dealer.
For any communications relating to the machine purchased, as well as any questions or comments on this operation manual, please refer to the following address:

SAMPIERANA S.p.A.
40 Via Leonardo da Vinci
47026 S. Piero in Bagno (FC)
Tel. ++39 0543 904211
Fax ++39 0543 903108/918520/901246
E-Mail: info@sampierana.com
http//www.eurocomach.com

MACHINE

CODE	B000201136
SERIAL NUMBER	CG 00071 → CH 00104 →
PRINTING DATE	29-12-09
YEAR OF MANUFACTURE	20_ _

ENGINE

BRAND	KUBOTA
MODEL	D1503 - M - DIESEL (350) D1803 - M - DIESEL (400)
DISPLACEMENT	1499cc (350) 1826cc (400)
SERIAL NUMBER	

https://truckmanualshub.com/

1.0 Introduction

The safe use of your machine is first and foremost the responsibility of the persons using the same on a daily basis.

It is therefore important for the operators to have access to detailed information on the correct use and maintenance of the machine.

WARNING

IMPORTANT:

- The “driver-operator” is deemed to be a competent operator charged with the task of moving and manoeuvring the machine;
- Use of the machine by a “competent operator” is included as one of the normal operating conditions;
- It is the employer’s duty to provide the necessary training and skills, especially when introducing any new piece of work equipment (Leg. Dec. 626, art. 22, clause C.)
- An integral part of any training and skill-building programme is ensuring that the operator reads, careful studies and proves his understanding of this manual, particularly as regards the safety provisions contained therein.

1.1 General precautions

The operation and maintenance manual forms an essential and integral part of the machine and must be made available to the user.

EC0250

This manual must always be kept on-board the machine or, in any event, somewhere where the operators have access to it, and must accompany the machine in the event of its sale.

It must be kept in the special compartment provided inside the driving cab and consulted carefully since it contains important information regarding operator safety, machine operation and proper maintenance.

The personnel authorised to operate the machine must read this manual before using the machine for the first time.

The machine must only be used for the purpose for which it was specifically intended. All other uses are deemed to be improper and, therefore, dangerous.

This manual contains necessary information for machine operation, maintenance and lubrication.

Constant adherence to the instructions in this manual will result in a longer, trouble-free working life and a reduction in maintenance costs and down time. Furthermore, it will be possible to eliminate the most common causes of accidents that may be encountered during operation and maintenance activities.

https://truckmanualshub.com/

It is in everyone's interest that these rules be followed and that the purchaser understands that this manual is an integral part of the machine and that he accepts full responsibility for ensuring that the operator consults the manual and that the instructions contained herein are followed scrupulously.

The manufacturer shall not be contractually or otherwise liable for any damage resulting from the incorrect utilisation or handling of the vehicle, or from any failure to comply with the manufacturer's instructions.

The maximum expected life span of this machine is deemed to be 10 years or 10000 work hours. The life span is subject to the regular inspections and maintenance operations being carried out as specified in the applicable manual. Once either of the abovementioned deadlines has been reached, the machine must undergo a special inspection, to be performed by the manufacturer or an authorised dealer, in order to ascertain the level of wear and tear and the remaining working life of the machine. If not, the machine must be decommissioned.

IMPORTANT

Eurocomach reserves the right to modify the product and amend the associated technical documentation without such action in any way constituting any form of obligation towards third parties.
This version of the operation and maintenance manual describes the characteristics of the standard machine, at the time of going to print.

https://truckmanualshub.com/

1.2 Consulting the manual and the terminology used

1.2.1 Consulting the safety signs in the manual

For a better understanding of the information in this manual, those instructions deemed to be critical or hazardous are highlighted with the following symbols:

DANGER

DANGER
Information or message that, if not strictly observed, may result in serious injury or even death.

CAUTION

CAUTION
Information that, if not strictly observed, could cause minor injury or serious damage to the machine.

WARNING

WARNING
Information or precautions that should be observed to avoid damaging the machine, or in any case part of the text that should be noted.

NOTES ON SAFETY
It is impossible for Eurocomach to foresee every possible situation that may constitute a potential hazard during machine operation or maintenance; for this reason, the safety messages in the manual and on the machine data plates may not entirely cover all possible precautions to be taken. If you are unsure of the safety requirements for some of the procedures, contact Eurocomach or the local dealer.

https://truckmanualshub.com/

1.2.2 Terminology used in the manual

The manual has been drafted using conventional terminology, as explained below:

- “left" and "right" mean on the left and right hand side of the operator when he is sitting in the driving seat.

- “front" is always the part of the machine where the dozer blade is fitted.

- “rear" is always the part of the machine opposite to the dozer blade position.

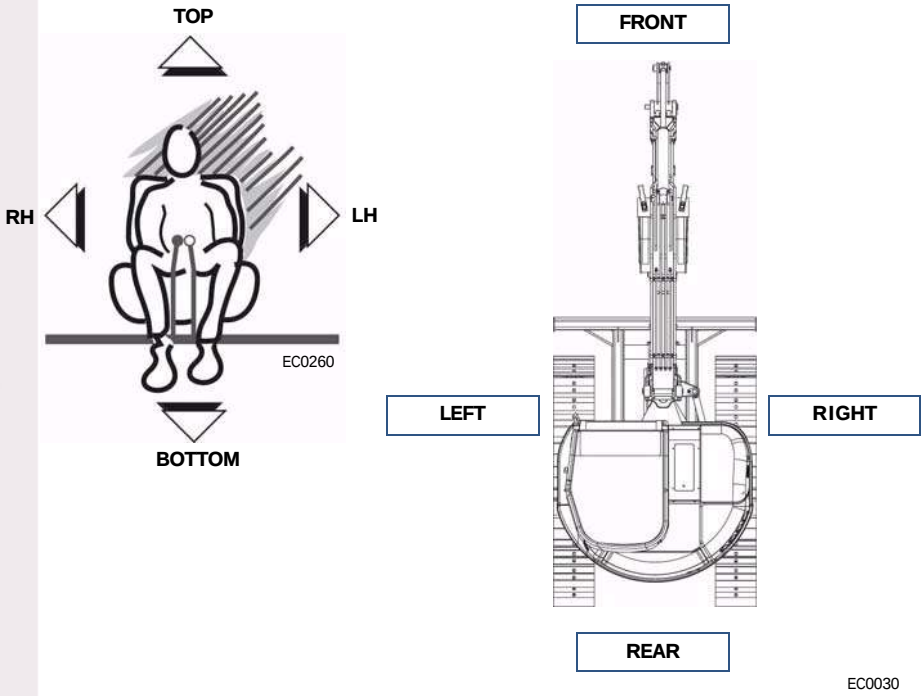

https://truckmanualshub.com/

For ease of use and maintenance, the following are the names of some of the machine parts, which will be referred to in the descriptions provided in the manual:

VERSION WITH CANOPY

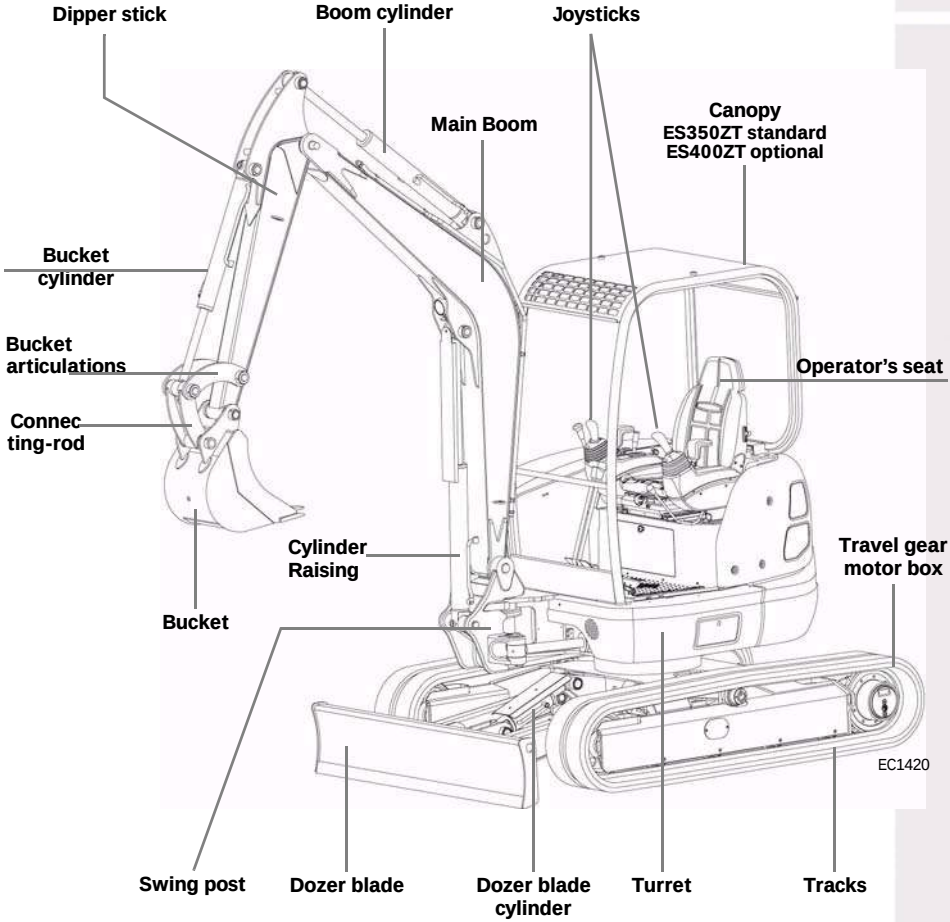

https://truckmanualshub.com/

VERSION WITH CAB

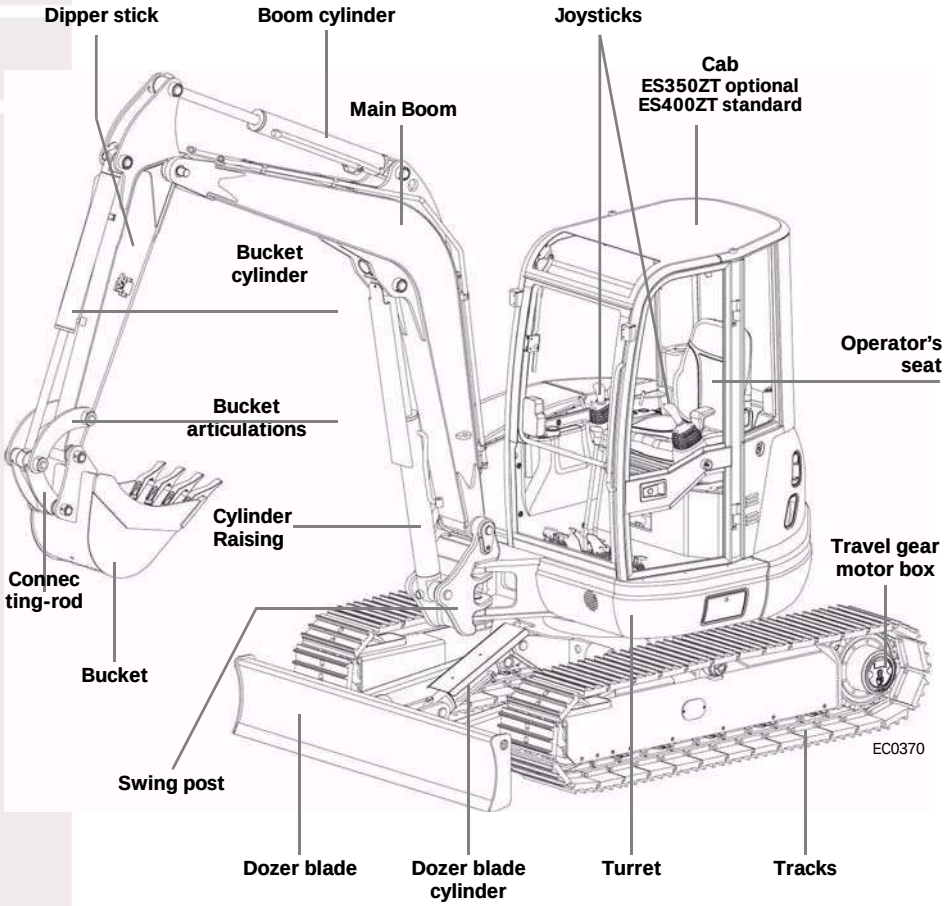

The descriptions and illustrations in this manual may not coincide with the actual machine due to modifications that have been effected. Contact the local Dealer with regard to any parts of the manual that may be unclear.

https://truckmanualshub.com/

1.3 Manufacturer

This operation and maintenance manual refers to the following machine:

SERVO-ASSISTED COMPACT EXCAVATOR	
MODEL:	ES 350 ZT
	ES 400 ZT

The ES 350 ZT - ES 400 ZT compact excavator is manufactured exclusively by:

SAMPIERANA S.p.A.
40 Via Leonardo da Vinci
47026 S. Piero in Bagno (FC)
Tel. ++39 0543 904211
Fax ++39 0543 903108/918520/901246
E-Mail: info@sampierana.com
http//www.eurocomach.com

The Eurocomach **after-sales service centre** is at the customers' disposal to assist with any technical problems and spare parts orders.
For any communications relating to the machine purchased, the following information should always be provided

a - Machine model
b - serial number
c - Year of manufacture
d - Date of purchase
e - engine model and serial number
f - details regarding the problems encountered.

Only original spare parts should be used when replacing machine parts; Eurocomach shall not accept any liability whatsoever for any deterioration of machine performance or damage to the machine due to the utilisation of non-original spare parts.

Maintenance operations that cannot be carried out easily with the means normally available to the private individual should be undertaken by a dealer who has access to trained technicians, appropriate means and original spare parts.

The Eurocomach Technical Service Centre is at the customer's disposal to provide any required explanations and advice, or to intervene with the company's own specialised technicians if there are any doubts regarding machine performance.

https://truckmanualshub.com/

1.4 Machine identification data

The machine nameplate is located at the front right of the turret.
This identifies the machine type and model number; The information on this plate and the engine tag are necessary when requesting spare parts or indicating any malfunction to the Technical Services Centre.

IMPORTANT
The data on the data plate must not be altered under any circumstances.

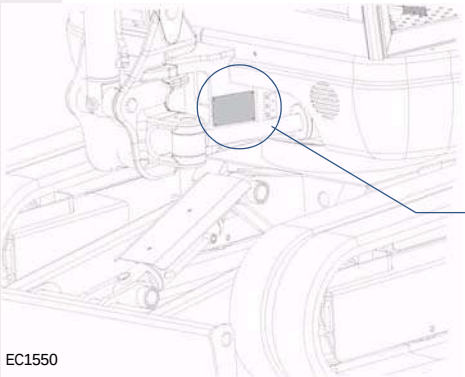

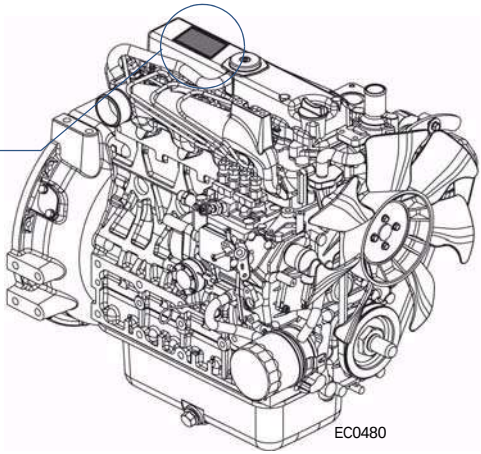

https://truckmanualshub.com/

1.5 EC declaration of conformity

Ce declaration is a document signed by the manufacturer that guarantees and certifies that the machine respects all regulations as regards safety. This document shall always be kept inside the machine and shall follow it until its end.
On the declaration there are all datas concerning the identification of the machine, of the manufacturer and all references about the regulations connected to it.
Here under, you can find a fax-simile of EC Certification:

DICHIARAZIONE CE DI CONFORMITÀ

secondo allegato II A della Direttiva 2006/42/CE
(EC declaration of conformity according annex II A of Directive 2006/42/EC)

CE

Il sottoscritto *(The undersigned)* PARA CESARE, legale rappresentante della ditta *(legal representative of the firm)* **SAMPIERANA S.p.a.** - Via L. da Vinci, 40, 47026 S. Piero in Bagno (FC) **in qualità di costruttore** *(in quality of manufacturer)*

DICHIARA *(DECLARES)*
sotto la propria personale responsabilità che la macchina *(under his own responsibility that the machine)*

MACCHINA	*(MACHINERY)*	HYDRAULIC TRACKED EXCAVATOR
FUNZIONE	*(FUNCTION)*	DIGGING
TIPO-MODELLO	*(TYPE-MODEL)*	EUROCOMACH - ES xxx xx
N° MATRICOLA	*(SERIAL N°)*	Cx xxxx
ANNO FABBRICAZIONE	*(CONSTRUCTION YEAR)*	XXXX
POTENZA NETTA (CFR. 97/68/CE)	*(POWER KW)*	xx

COMPONENTI DI SICUREZZA FORNITI CON LA MACCHINA	*(SAFETY COMPONENTS SUPPLIED WITH THE MACHINE)*	TOPS-FOPS STRUCTURE

ATTREZZATURE INSTALLATE	*(EQUIPMENTS INSTALLED)*	BUCKET MOD. XXX

- **è conforme alle disposizioni della Direttiva 2006/4 2/CE** *(complies with the requirements of Directive 2006/42/EC)*
- **Persona autorizzata a costituire il fascicolo tecni co** *(person authorised to compile the technical file)*:
  - **Nome** *(Name)*: **Fabbri Giuseppe**
  - **Indirizzo** *(Address)*: **Via L. da Vinci, 40, 47026 S. Piero in Bagno (FC)**
- **è conforme alle disposizioni della Direttiva 2000/1 4/CE – "Direttiva emissione acustica ambientale delle macchine ed attrezzature destinate a funzionare all'aperto" – alla Direttiva 2005/88/CE e ai decreti di trasposizione nella legge nazionale** *(complies with the provision of the Directive 2000/14/CE – "Noise emission in the environment by equipment for use outdoors" – the Directive 2005/88/CE and the regulations transposing into national law)*
  - **Tipo di macchina: Escavatore idraulico, in accordo alla definizione n. 20 dell'Allegato I - Direttiva 2000/14/CE** *(Machine type: Hydraulic Excavator, in accordance with definition n. 20 Annex I - Directive 2000/14/CE)*
  - **Procedura applicata per la valutazione della confor mità: Controllo interno della produzione con valutazione della documentazione tecnica e controlli periodici, Allegato VI - 2° procedura Direttiva 2000/14/CE** *(Procedure applied for the conformity assessment: Internal control of production with assessment of technical documentation and periodical checking, annex VI- 2nd procedure directive 2000/14/CE)*
  - **Organismo notificato** *(Notified body)*: **ECO S.p.a Via Mengolina, 33, 48018 FAENZA (RA) ITALY**

LIVELLO DI POTENZA SONORA MISURATA	*(MEASURED POWER ACOUSTIC LEVEL)*	*dB (A):*	xx LwA
LIVELLO DI POTENZA SONORA GARANTITO	*(GUARANTED POWER ACUSTIC LEVEL)*	*dB (A):*	xx LwA

  - **Depositario file tecnico: SAMPIERANA S.p.a – Via L. da Vinci, 40, 47026 S. PIERO in BAGNO (FC) ITALY** *(Technical files kept by: SAMPIERANA S.p.A. – Via L. da Vinci, 40, 47026 S. PIERO in BAGNO (FC) ITALY)*
- **è conforme alla Direttiva 2004/108/CE (** *is in accordance with the Directive 2004/108/CE* **)**
- **è conforme alla Direttiva 97/68/CE e successive modifiche** *(is in accordance with the Directive 97/68/CE and following modifications)*

	SÌ	NO
Variante per la movimentazione dei carichi sec. EN 474-5 punto 5.6.4 *(variation for lifting loads (EN 474-5 point 5.6.4)*		X

S. Piero in Bagno, xx-xx-xxxx

Il legale rappresentante (the legal representative of the firm)

Cesare Para

EC3000

https://truckmanualshub.com/

2.0 Intended use and contraindications

2.1 Intended use

EUROCOMACH has designed and manufactured the ES 350 ZT - ES 400 ZT compact excavator so that it complies with the following EC directives:
- 2006/42/CE (Machine Directive),
- 2004/108/CE (EMC Directive),
- 2000/14/EC and 2005/88/EC (Noise Emission directive)

and to satisfy any requirements that may be encountered on a construction site; It is a powerful, compact, quiet machine, reliable even under the most demanding working conditions.
All machines are designed and built on the basis of the work for which they are intended. Therefore, the technical characteristics of each machine must be understood to be limited to the intended use of the machine.
Maintenance is simple and minimal.
The ES 350 ZT - ES 400 ZT compact excavator is the natural choice for work on construction and road-building sites, on building projects, industrial maintenance operations, digging in cramped areas, building renovations, railway works, laying of pipelines and cables and work in public parks and cemeteries.
The compact, quiet Diesel engine transmits the maximum power to the hydraulic system, which has its own regulation valves.
The control panel was designed to elicit an immediate response from the hydraulic motors and cylinders.
The rubber tracks are suitable for working environments where the ground must be protected against permanent damage.
No modification may be made to the machine without Eurocomach's authorisation, since some modifications may entail certain hazards.
It is nevertheless necessary to adhere strictly to the safety regulations contained in this manual.

2.2 Contraindications

This machine is designed for use solely in the sectors referred to in the previous section. **The use of compact excavators for any task other than those described is strictly forbidden.**
Eurocomach shall accept no liability in the event of unauthorised uses or any failure to comply with the manufacturer's instructions.

Never use the compact excavator as a lifting tool.

Never use the compact excavator in enclosed spaces unless there is an effective system in place for the extraction and discharge of exhaust gasses.

Whenever possible, avoid driving over large obstacles, very uneven ground, boulders, fallen logs, steps, ditches, etc., which may cause the vehicle to tip over.

Never drive along railway sleepers and rails that may damage the rubber tracks.

Do not transport persons on board the compact excavator.

https://truckmanualshub.com/

Do not use the compact excavator to transport loads or to tow other vehicles.

Never use the bucket for lifting or transporting people.

Never use the compact excavator when it is not in peak condition for the job at hand, if it malfunctions, if the controls do not respond perfectly, if the cab is damaged or if visibility through the windows is not good.

The machine is built to operate at temperatures ranging from 0°C to 45°C, therefore, avoid operating in temperatures falling outside this range.

WARNING

Eurocomach shall not accept any responsibility in the event of any accidents involving persons or property, caused by non-compliance with the regulations and instructions listed in this manual and by the non-adherence to safety regulations and accident prevention rules.

CAUTION

If the machine is used in an improper manner, the operator is personally responsible for his own safety and that of any other people possibly involved.

CAUTION

It is strictly prohibited to drive the machine on public roads, since the vehicle is not approved for this purpose. Therefore, the machine may only be operated on private property and/or construction sites that are closed to the public.

https://truckmanualshub.com/

2.3 Machine operator

The machine must only be operated and maintained by persons who:
- Are over 18 years of age.
- Are physically and mentally fit for the task and are able to meet the requirements of machine operations at peak performance.
- Have been trained to operate and maintain the machine and know its technical specifications, its overall dimensions and its performance and limitations.
- Know the rules and regulations relating to safety in the workplace.
- Can prove their ability.

The owner company's legal representative must appoint these persons for the task.

The operator is also responsible for:
- Not allowing anyone to approach the machine when it is working.
- Not allowing unauthorised and untrained persons to operate the machine.
- Following daily the safety procedure learned during the training course.
- Recognising and avoiding potential dangers in the workplace.
- Understanding the warning notices and following their instructions.
- Inspecting the machine and checking that it is working properly before starting work.
- Reporting any operating problems encountered before or while operating the machine.
- Avoiding reckless or careless actions that may endanger themselves or others.
- Always applying common sense and make safety an absolute priority.

If in any doubt about machine utilisation, contact your local Eurocomach Dealer who will provide you with all the necessary information.

WARNING

The purchaser and operator of this vehicle must read the user manual carefully before utilising this machine for the first time.
If this vehicle is supplied with a utilisation contract or is subject to a rental arrangement, the owner must ensure that the new user reads and understands the user manual. Also make sure that the new operator has inspected the vehicle from all sides, is familiar with all the decals and equipment and has tested all of the controls to establish their proper use.

At the time of the initial sale, the vendor shall inform the purchaser regarding the requirements for the safe utilisation and operation of the vehicle. If the vehicle is to be used by any person other than the initial purchaser, e.g. an employee, or is to be hired out, lent or sold to anyone other than the purchaser, ensure that the new operator reads and understands the **User Manual** supplied with the hydraulic compact excavator before using the machine for the first time.

https://truckmanualshub.com/

3.0 Safety

3.1 Before starting work

Only authorised persons may operate the machine.

Read the instruction manual before using the machine.

Wear suitable clothing.

Inspect the machine carefully every day, or at every shift change, checking the exterior of the machine prior to starting it, so as to avoid any damage or injury to persons.

Always fasten your seat belt before starting the machine.

Familiarise yourself with location and function of all pedals, control levers, instruments and luminous indicator lights.

Top up the fuel and oil with the engine turned off and in well-ventilated areas suitable for this purpose.

Wear a safety helmet in order to protect your head.

Test the luminous indicators before starting the engine.

Carry out all the required checks as indicated.

Never drive the machine while under the influence of alcohol, medicines or other drugs.

Before starting the machine, check that there is no one within its range of action.

When getting on or off, always face the machine and use the steps, handholds or the canopy and cab posts. Do not jump off!

Never try to climb on or off the machine while it is moving.

Do not use any of the controls as a handhold.

Prior to climbing on or off the machine, always check whether the footplate, steps or handholds are slippery.

https://truckmanualshub.com/

BASIC SAFETY PRECAUTIONS

CAUTION

It is forbidden to make any modifications to the machine

- The machine may not be modified without the manufacturer's prior approval.
- Making any modifications without such approval will result in a reduced level of safety, thereby increasing the possible hazards. Effecting any modifications will not only negatively affect machine performance, but will also shorten its life.
- We accept no responsibility for any accident or failure resulting from modifications made without our permission.
- When needing to effect any modifications, first make enquiries at our offices or at our sales agent.

CAUTION

Anticipate any precautions with regard to optional parts and accessories

- Do not fit any item or accessory to the machine that has not been approved either by our company or our sales agent.
- The use of parts or accessories not approved by our company will result in a reduced level of safety, thereby increasing any possible hazards.
- We accept no responsibility for any injury, accident, or machine failure resulting from the use of any parts or accessories not approved by us.

https://truckmanualshub.com/

3.2 Working area – danger zone

The WORKING AREA is defined as the area around the machine where only those people responsible for the machine and who understand the operational abilities of the machine may operate.
The working area must be suitably signposted, even if the site area is already demarcated.
When operating on a construction site, be aware of other machines operating in the vicinity and avoid encroaching on their range of action.
Within this area there is a zone where there is potential DANGER for whoever works there and is therefore defined as a DANGER ZONE, as shown in the following figure.
The danger zone is indicated by decals applied on board the machine.
The NO-ENTRY ZONE is off limits to everyone while the machine is in operation.

DANGER

No one may loiter inside the no-entry zone around the machine.

The prohibited area is deemed to be that area around the machine where you could be struck by moving parts during operation, by a load falling accidentally or where you are within range of the moving machine or its working parts or accessories.
Each machine has data plates, marked with long-lasting text, which clearly indicate that it is prohibited to stand within the machine's range of action.

DO NOT STAND WITHIN THE MACHINE'S RANGE OF ACTION

The signs are an essential safety element and should therefore be kept legible and in good condition.
The driver should only operate the machine if there is no one standing within the range of action.
The driver must warn anyone in the vicinity of the machine of the danger they are in.
This warning is usually given by sounding the horn on the dashboard, or by voice.
To avoid any accidental knocks or contacts when working near scaffolding or unstable structures, stay at a safe distance from them so that an accidental manoeuvre won't cause contact with these structures.

https://truckmanualshub.com/

3.3 Safety decals on the machine

There are self-adhesive plates stuck on the machine, bearing warning and safety symbols for the operator and anyone working near the machine; each decal is located close to the part of the machine where there is a potential risk.
Learn these symbols and what they mean before using the machine.

Check the presence and legibility of the SAFETY warnings daily; Repair or replace them immediately whenever they are damaged or missing.

WARNING

The manufacturer shall not accept any responsibility for injury to persons or damage to property caused by any non-compliance with the regulations and instructions on the plates or by these being in poor condition. Therefore, keep the plates in good condition so they are always legible and properly positioned; if necessary, order new plates from our Spare Parts Service.

1 - Wash the labels with soap and water and dry with a soft cloth.
2 - Replace any damaged or missing labels with original stickers obtained from your EUROCOMACH dealer.
3 - Should a part with safety and warning labels be replaced with a new part, make sure that the same labels appear on the new part.
4 - When replacing labels, make sure that the application surface is clean, dry and free of oil or grease.
Squeeze any air bubbles toward the outside edges.

The decals applied to the machine relate to three different types of operations:
- safety decals
- operational decals
- Maintenance decals.

https://truckmanualshub.com/

SAFETY DECALS – CANOPY VERSION
ES 350 ZT STANDARD
ES 400 ZT OPTIONAL

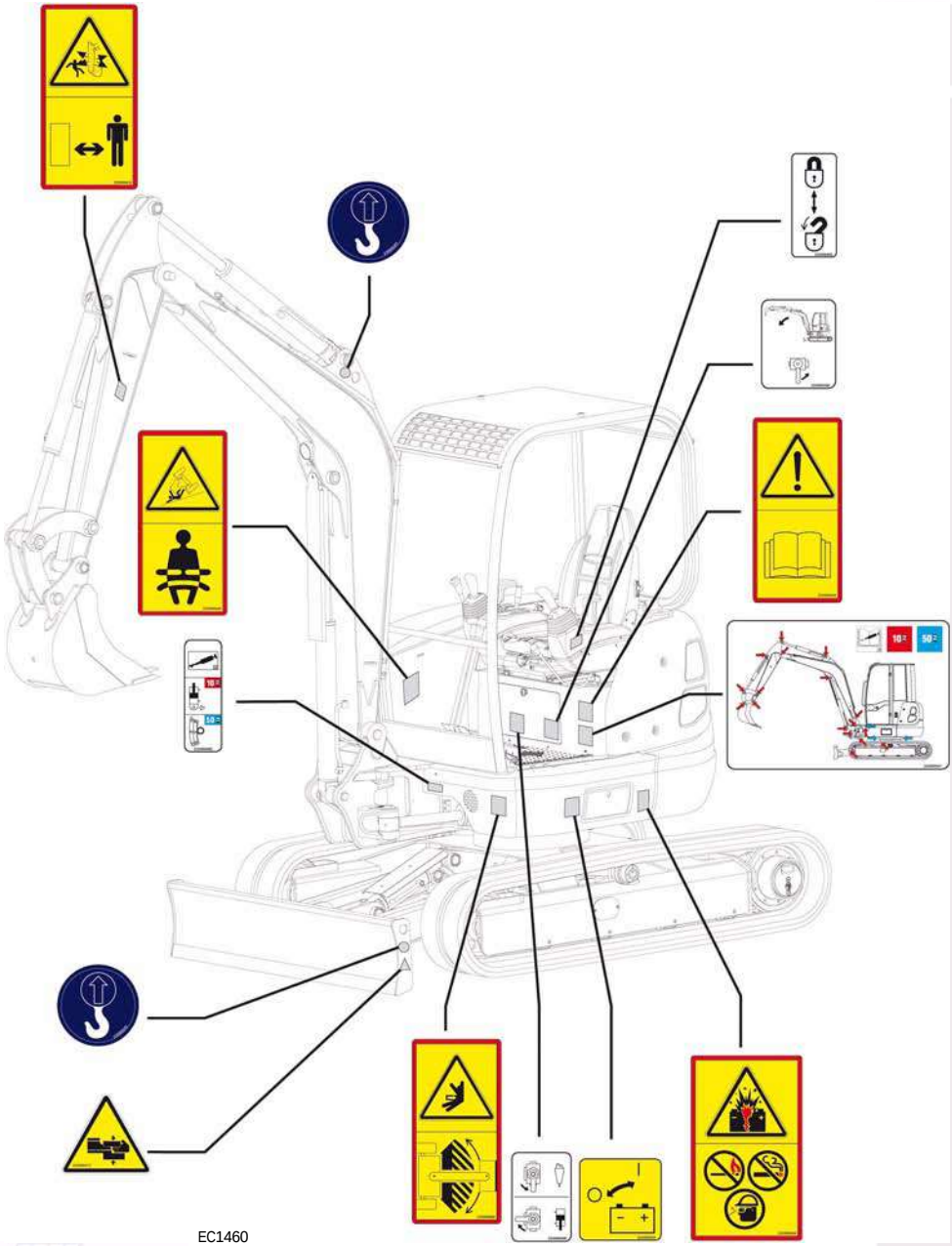

EC1460

https://truckmanualshub.com/

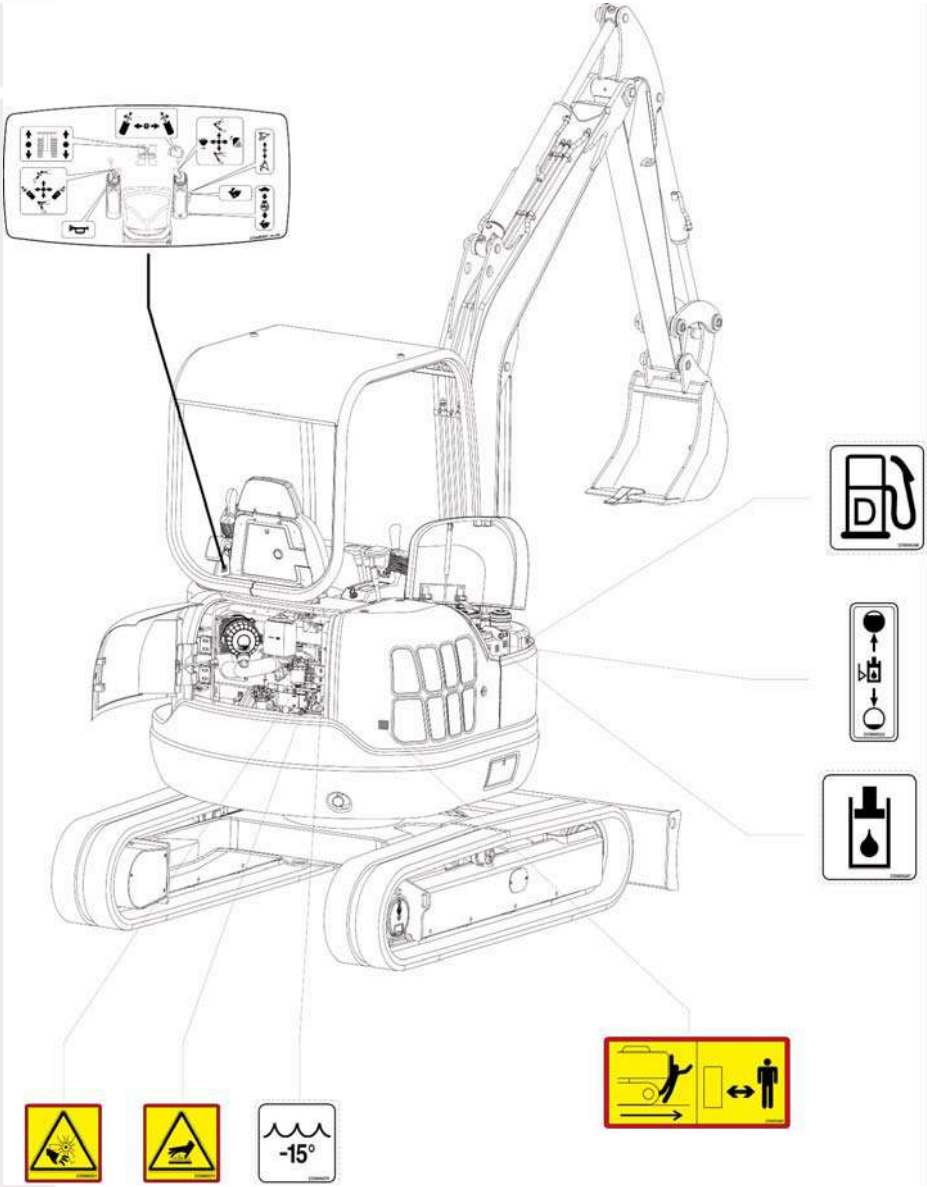

EC2510

https://truckmanualshub.com/

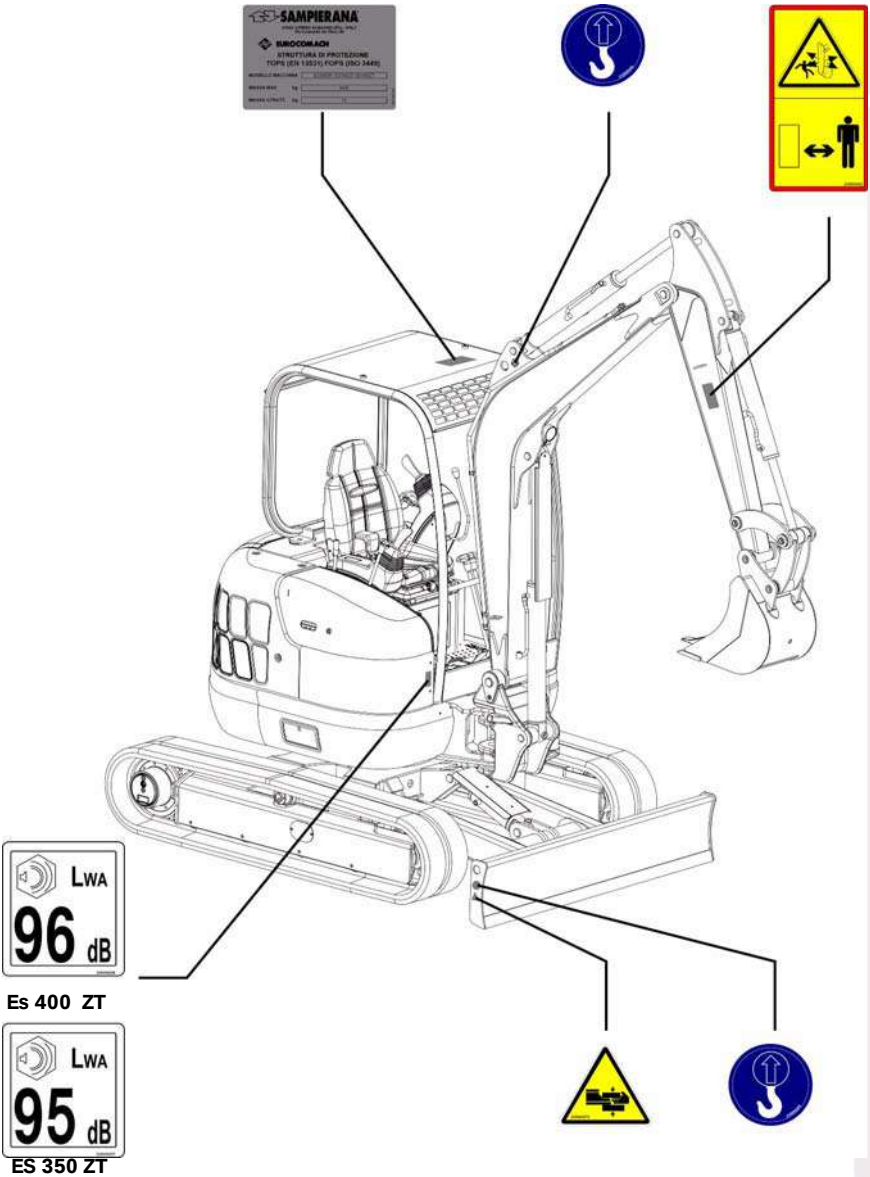

EC1490

https://truckmanualshub.com/

SAFETY DECALS – CAB VERSIONS
ES 350 ZT OPTIONAL
ES 400 ZT STANDARD

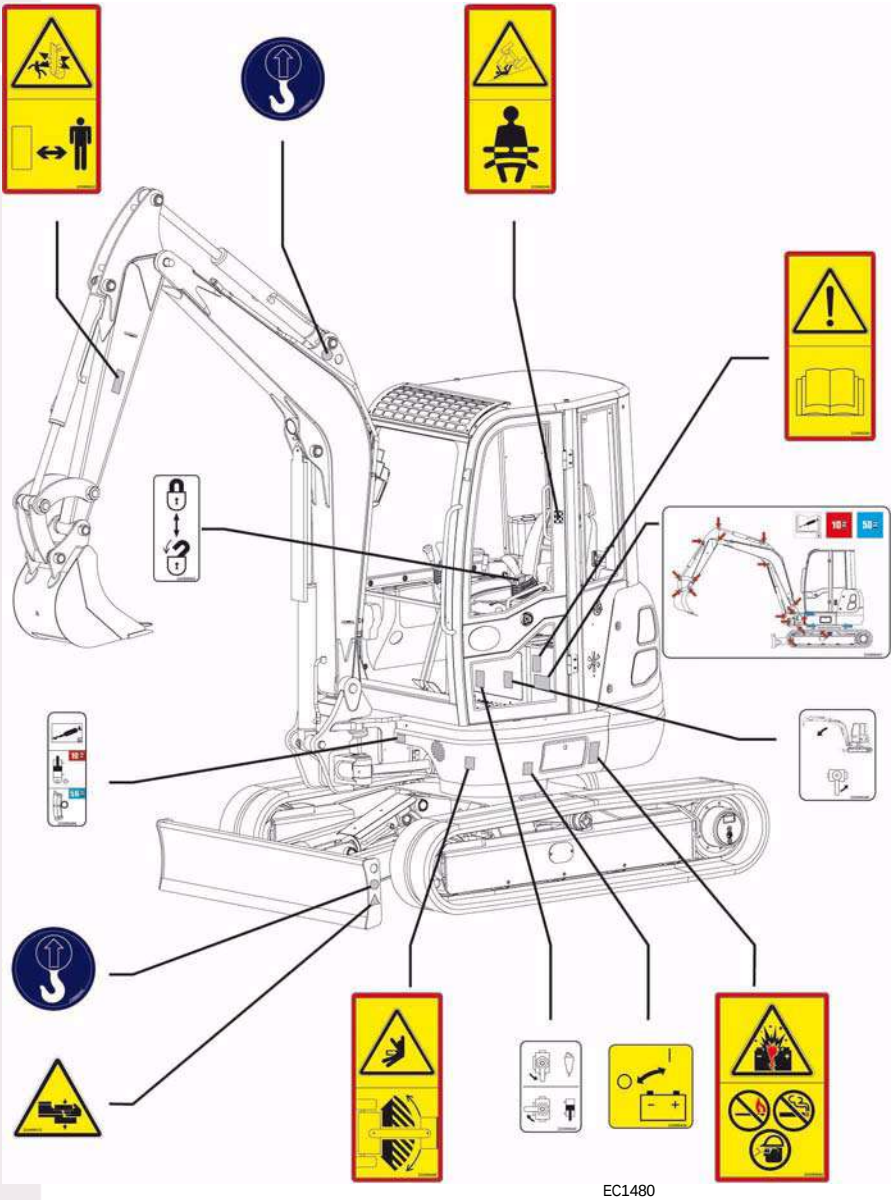

EC1480

https://truckmanualshub.com/

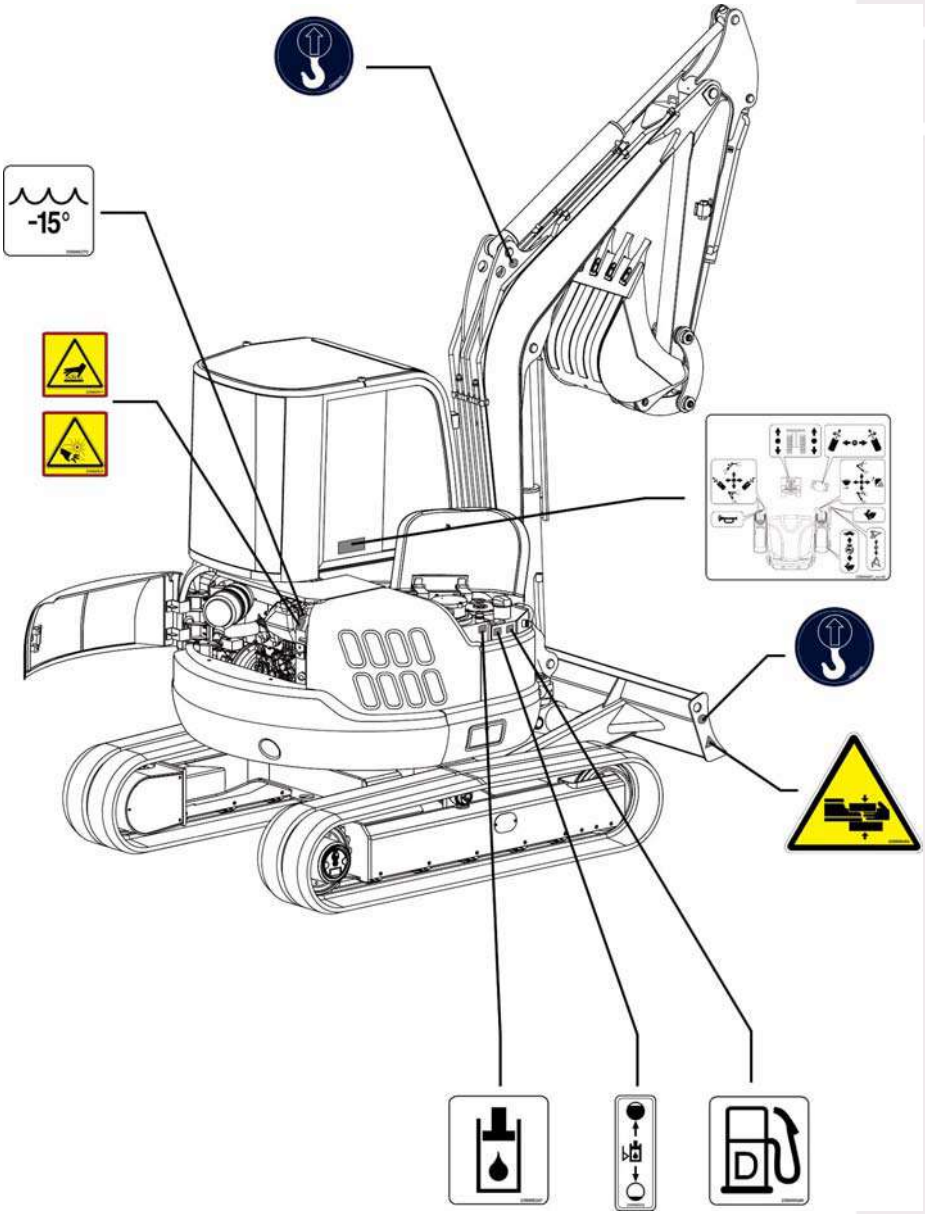

EC2520

https://truckmanualshub.com/

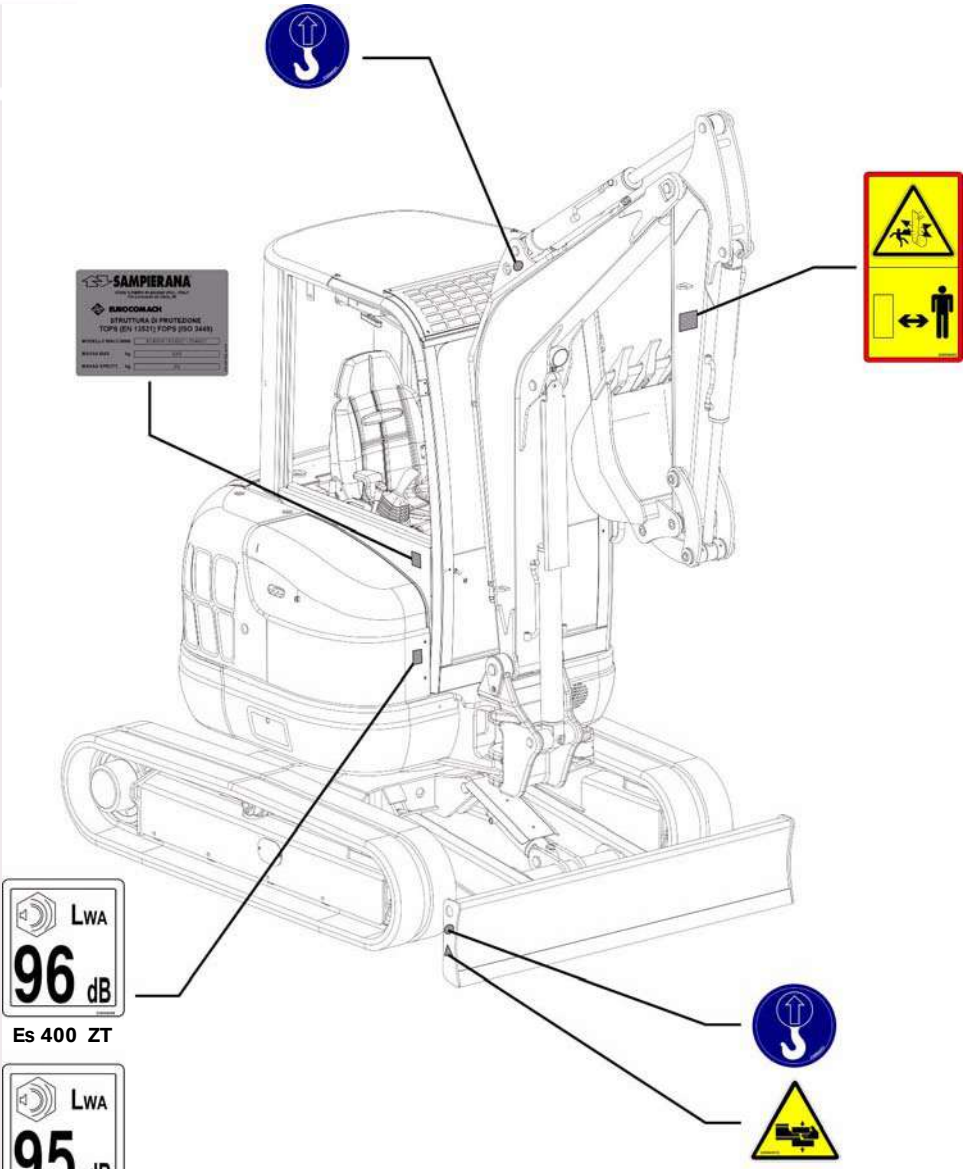

EC1880

https://truckmanualshub.com/

Explanation

Caution:
Read the OPERATION AND MAINTENANCE manual before operating the machine, in order to avoid risk or injury.

EC0500

Caution:
Always wear the seat belt when operating the machine. If the machine overturns, do not abandon the driver's seat but hold on firmly to the safety bars.

EC0560

Caution: Hot surfaces
Keep hands and arms away from hot surfaces.

Danger: Shearing
To avoid any risk of injury, make sure the engine is stopped before working on any part within the engine compartment.

EC0510

Danger: Stay clear of the front of the machine
Do not stand or allow anyone to get within the range of action of the machine, particularly the area of the bucket arm.

EC0530

Danger: Stay clear of working equipment
To avoid any risk of injury, stay well away from the range of action of the boom, dipper stick, bucket and any other lifting equipment.

EC0540

Danger: Fire – Explosion
Do not approach the machine with flammable materials and, above all, do not go anywhere near the tanks and the battery.

EC0550

Danger: Crushing
Stay well away from the machine in order to avoid any possibility of limbs being crushed.

EC0570

https://truckmanualshub.com/

3.4 List of hazards

DANGER

SEAT BELT NOT FASTENED

Choose the most comfortable driving position according to your own build. Adjust the position of the seat and the control levers. Adjust the seat belt tension so that it restrains the operator at hip level, leaving the abdomen completely free. Do not commence with work until the abovementioned safety conditions have been checked.

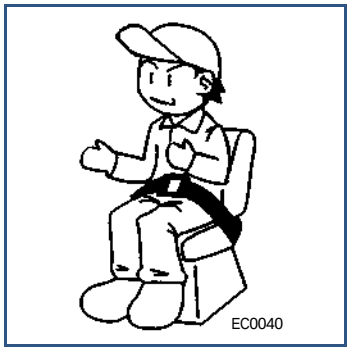

DANGER

TIPPING

The compact excavator's centre of gravity moves depending on the size and position of the load, the slope of the ground and the movement of the machine.
Analyse and memorise the topography and geological features of the site in order to take suitable preventive measures against possible overturning of the machine due to landslips or slides. Level the ground in the machine's operating area.
Reckless operating and driving procedures not suited to the type of machine may cause the compact excavator to tip over.
Never exceed the vehicle's rated operational lifting capacity (see the applicable tables in the "Technical Specifications" section).

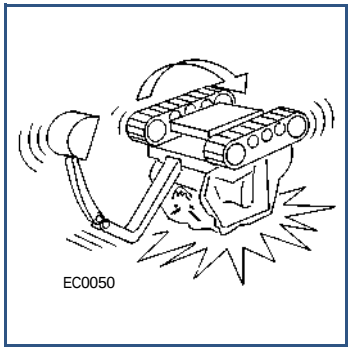

https://truckmanualshub.com/

DANGER

CRUSHING OR SERIOUS INJURY

The compact excavator remains, to all intents and purposes, a machine and, therefore, when operating the machine, pay particular attention to any people, animals or objects appearing in the vicinity of the working area.

Before reversing, rotating and/or lifting the boom, always make sure there is enough space to operate safely.

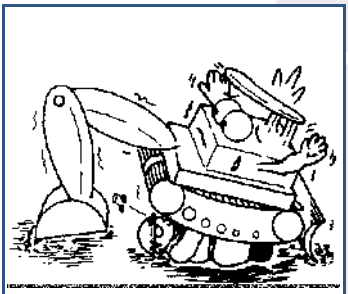
EC0060

Do not stand under the working equipment.

- Nobody may stand under the working equipment.
- When the machine is lifted using the working equipment, do not stand under the machine itself under any circumstances.

Sudden or normal descent of the machine's boom can lead to serious accidents, with the possibility of injury or even death.

DANGER

INTOXICATION

Exhaust gasses produced by the engine of the compact excavator , if inhaled directly and continuously, may be extremely dangerous and/or lethal for the human body. If work must be carried out in enclosed areas, take all possible precautions to ensure the circulation of fresh air and protect the respiratory tract by wearing a suitable mask.

Avoid inhalation or contact with battery acids, which are extremely toxic and may cause serious burns.

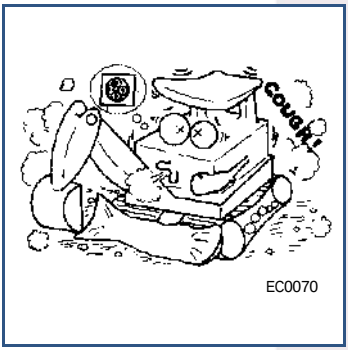

EC0070

Explosive fuel

The fuel used for the engine is flammable and may therefore cause fires and/or explosions. Avoid hazardous situations by keeping sparks, naked flames and materials for smokers well away from the vehicle and from the fuel when filling the tank or when servicing the fuel system. Find out where the work-site fire extinguishers are situated and how to use them.

https://truckmanualshub.com/

DANGER

SHEARING OR TRAPPING OF HANDS

Certain parts of the compact excavator house components that may cause serious injuries to limbs.
It is strictly prohibited to insert any parts of the body into these components when the machine is running.
Wear appropriate clothing that cannot become entangled in any of the machine's moving parts.

CAUTION

DANGER OF SLIPPING

- Be sure to check the steps and handrails. Should any damage, looseness or any other abnormality be encountered, repair it.
- If there is any slippery substance such as oil or grease on the steps, handrails and tracks, remove it completely.

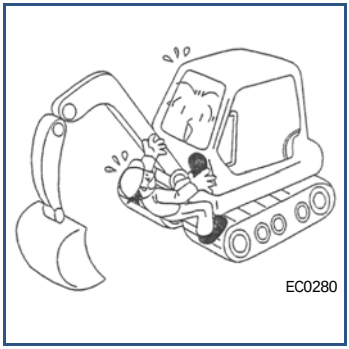

https://truckmanualshub.com/

CAUTION

ELECTRICAL HAZARD

Only a skilled person may carry out any type of work on the machine's electrical system or battery.
Before working on the electrical system, disconnect the battery, starting with the earth terminal.
Ensure that the electrical connection wires and terminals do not show any signs of corrosion, cracking or scorching; if not, contact your local Eurocomach Dealer.
Never approach any overhead electrical cables with the boom.

EC0580

CAUTION

DANGER OF SHORT CIRCUIT

Starting the machine by hot-wiring is prohibited.
- Under no circumstances may the engine be started
- by short-circuiting the starter terminals or battery.
- The machine may move suddenly, creating a hazardous situation and, in addition, the electric system may be damaged.

EC0290

https://truckmanualshub.com/

CAUTION

DAMAGE HAZARD

Before starting work in a new area, check for the presence of any electrical power lines, pipelines and telephone lines.

All these items are a source of danger for the careless operator, and damaging them is a potential economic cost.

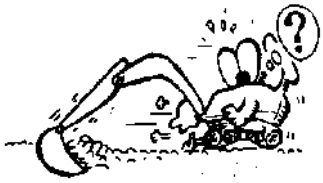

EC0350

CAUTION

TRANSPORT OF PERSONS PROHIBITED

The compact excavator is not approved for the transportation of persons. Only the operator may be in the driving position.

Do not allow any unauthorised persons, particularly children, to approach the compact excavator while it is working.

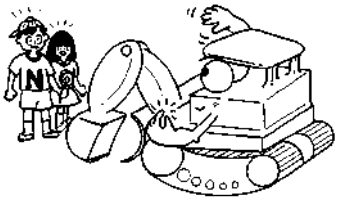

EC0080

https://truckmanualshub.com/

CAUTION

DANGER OF BURNS

Do not remove the cap from a hot radiator. The radiator cap may only be removed after the boiling hot liquid has cooled sufficiently. The latter could cause injury.

Do not touch the exhaust pipe immediately after turning off the engine. A hot exhaust system may cause physical injury.

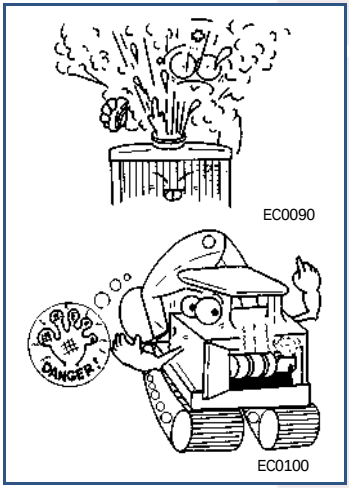

CAUTION

HAZARDOUS WORKING CONDITIONS

Beware of hazards. Always be aware of where you are. Look out for hanging tree branches, cables, recesses and overhangs.
Take care when working alongside reservoirs, tracks, embankments and slopes. Keep well away from cliff-edges.
Take care when working under overhangs. Do not undermine them. Beware of rock falls and landslides.
Landslides can be hazardous.
Take care when backfilling. Do not go too close to edges. The weight of your equipment may cause the edge of the ground to give way.

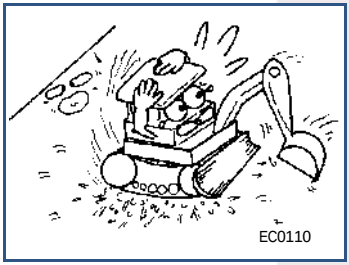

When excavating on a slope or in a tunnel, beware of falling materials, for example, falling rocks.

The equipment may not be used in:
- Areas at risk of fires;
- Corrosive atmospheres;
- Explosive atmospheres;
- Areas containing dust that may constitute a health hazard for the operator;
- Enclosed environments;

https://truckmanualshub.com/

- Densely populated areas (residential areas, etc.) without first having taken the necessary safety measures.

CAUTION

PRESSURISED FLUIDS

The hydraulic system is pressurised whenever the engine is running and may maintain its pressure even after switching off.
Move all hydraulic system control levers and other controls after finishing work.
If fluid penetrates the skin or gets into the eyes, seek medical attention immediately.

EC0300

Hydraulic fluid

Hot hydraulic fluid causes serious burns. Wait for the fluid to cool before disconnecting any hydraulic lines. Pressurised fluid leaks may be invisible. **NEVER** use your hands to check for leaks. Use a piece of cardboard or paper for this purpose. Wear gloves to protect your hands from any oil splashes.
NEVER try to repair or tighten any hydraulic hoses or joints with the machine's pneumatic system under pressure. **STOP** the engine and then release the pressure from all the cylinders and vent the pressure from any accumulators present in the machine's system.
Hydraulic fluid may cause permanent damage to the eyes. Wear suitable goggles when performing any maintenance or servicing the vehicle.

Should any fuel or oil leakages occur, stop machine operations immediately and carry out the necessary repairs.

LUBRICANT under high pressure

- The grease cylinder that adjusts the track tension is pre-packed with grease, which may itself be under high pressure. In this situation, if the plug is loosened carelessly, both the plug and the grease could be forced out, creating a dangerous situation.
- When reducing the pressure by turning the cartridge valve (lubrication valve), do not turn the valve by more than one turn.
  The person performing this operation must not face the front of the cartridge valve, nor put his face close to it.

Do not disassemble the recall spring, as this may lead to a serious accident resulting in injury or death.

IMPORTANT

Should the user or anybody else be injured as a result of contact with hydraulic fluid or if the fluid penetrates their skin, seek medical attention immediately.
Failure to obtain medical attention may lead to other serious medical conditions.

https://truckmanualshub.com/

WARNING

CONTROL NEUTRAL POSITION

Before starting the engine, always ensure that all pedals and operating levers are in the neutral position.

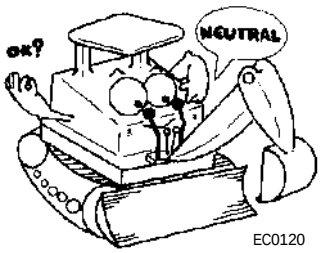

EC0120

WARNING

CORRECT DRIVING PROCEDURES

When moving from one working zone to another, keep the boom and dipper stick in the retracted position.
When reversing, always look in the direction of travel of the compact excavator. Watch out for other people; Should anyone enter the manoeuvring area, stop the compact excavator.

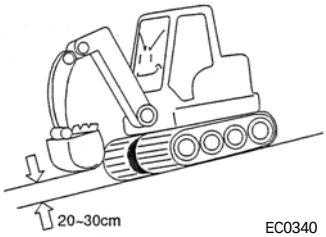

EC0340

https://truckmanualshub.com/

WARNING

CLOTHING AND SAFETY EQUIPMENT

Operators must wear clothing that is appropriate for work on the site: do not wear any chains, laces or other objects that may become entangled in moving parts of the machine. Clothes must not be greased or soaked with oil. Wear protective clothing appropriate for the working conditions, such as:

- a helmet
- safety footwear
- safety goggles
- thick gloves
- ear defenders
- reflective clothing
- waterproofs for bad weather
- respirator or filter mask.

Wear whatever is necessary and do not take any unnecessary risks.

EC0310

WARNING

BEWARE OF HEIGHTS

Check the size of doorways and the available space in the vicinity of any projections and obstructions. Be aware of the machine's overall dimensions, paying particular attention to the height of the boom.

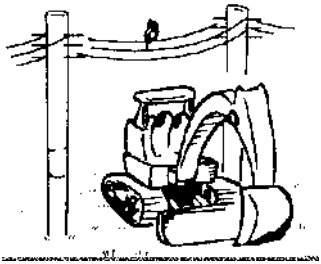

EC0130

https://truckmanualshub.com/

WARNING

DISPOSING OF FLUIDS

Improper disposal of waste fluids may cause serious damage to the environment. Before disposing of waste fluids, contact the competent local bodies for information regarding the correct procedures.
Use suitable containers. Never use empty containers to store food.
NEVER pour oils out onto the ground, down drains, or into streams, lakes or ponds. Adhere to the environmental protection regulations in force when disposing of oils, fuels, brake fluids, batteries and other waste materials.

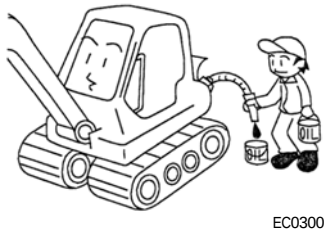

EC0300

- When discharging the following toxic substances, observe the specified rules.
  Oil and grease, filters, battery
  Refrigerant and coolant liquids
  Other toxic substances

WARNING

PROPER MAINTENANCE

Use the correct tools, make sure that spanners and tools are in the correct position. Treat machined and polished surfaces with care.
Engine parts that turn at high speed must be inspected for cracks and other damage during repairs and replacement.
Faulty parts may break and emit splinters causing injuries or death.
Never re-use broken, damaged or badly worn parts.
Tighten all bolts, unions and accessories to the torques specified in the specific sections.
Replace all guards and covers.

EC0330

https://truckmanualshub.com/

3.5 Safety procedures

1 - Unauthorised modifications

- No modification may be made to the machine without Eurocomach's approval, since modifications may involve certain hazards.
- Consult your Eurocomach Dealer prior to effecting any modifications. Eurocomach shall not accept any responsibility for injury or damage resulting from unauthorised modifications.

2 - Seat Belt

Always adjust the seat and fasten the seat belt securely before starting the engine.
Adhere to the appropriate instructions contained in the applicable section (point "7.5" page 73).

3 - Check for adequate visibility before starting to operate

Ensure that the work area is fully visible.

- Wipe all floor surfaces, levers, handrails, windows, and lights in order to ensure visibility.
- In the event that the windscreen is dislodged or broken, do not operate the machine until repairs have been carried out.

Inspection of safety devices.

- Check all safety devices including the locking lever and guards to make sure they are properly installed, function properly and are undamaged. If any problem is encountered, carry out the necessary repairs.

Improper use of the safety devices will lead to serious accidents that may result in injury or death. Be sure to use all safety devices correctly.

4 - Pre-start inspections

Carry out all the required pre-start inspections. Should any problem be encountered, carry out the required repairs to the machine immediately. Using a faulty machine may cause an accident.
Always warm up the machine before starting work.

5 - Check the surrounding area prior to starting up.

Look around you to ensure that the surrounding are is safe prior to starting up. Fasten the seat belt securely prior to starting the engine,. Do not carry out any maintenance work whilst the machine is held off the ground by means of the dozer blade or dipper stick.

6 - Signal before starting up

Before starting the engine, travelling or swivelling, always signal your intentions to other workers by means of the horn, etc.

https://truckmanualshub.com/

7 - Entry / exit from the machine

DO NOT get off the digger until you have done the following:

- Close the bucket, retract the dipper stick and completely lower the digger boom.
- Stop the engine and remove the ignition key,
- Raise the servo-control cutout lever;
- Unbuckle the seat belt.
- Exit the digger, climbing out backwards and using the handholds provided

Do not get on and off the operator's seat by holding on to the work equipment control lever.

Do not jump on or off the machine.

Do not get on or off the machine while it is in operation as this could pose a danger; the machine may overturn or the tracks may break, posing the risk of a serious accident and a consequent risk of injury or death.

8 - Chemical Hazards

- Exhaust Fumes

Fumes from the engine exhaust may lead to injury or death.
DO NOT operate the vehicle in an enclosed area without a ventilation system capable of extracting the hazardous fumes.

- Battery

The following WARNING is intended to supplement rather than replace the warnings and information provided on the battery by the battery manufacturer.
When jump-starting the vehicle, adhere strictly to the instructions provided in the point on "Jump Starting" contained in this manual.
This vehicle is equipped with a lead-acid battery. Batteries of this type contain an acid electrolyte and generate explosive gases. Never create sparks or flames, or smoke near the battery. Incorrect procedures may lead to contact with the battery electrolyte and result in serious chemical burns to the eyes and skin, or damage to clothing.
Always wear safety glasses and proper protective gear when performing any maintenance work or servicing the battery.

Battery Electrolyte First Aid

External contact - Flush with water
-Eyes - Flush with water for at least 15 minutes and seek medical attention immediately!
Swallowing- Drink large quantities of water, followed by milk of magnesia, beaten egg or vegetable oil. Seek medical attention immediately!

IMPORTANT
In case of swallowing, DO NOT administer any fluids that induce vomiting!

https://truckmanualshub.com/

9 - Moving Parts Hazard

DO NOT place limbs or other parts of the body close to moving or rotating parts of the vehicle during operation. Failure to comply with this warning may lead to serious injury or death due to crushing or amputation.
STOP the engine and wait for all moving and rotating parts to come to a standstill before carrying out maintenance work or other service activities on the vehicle.

10 - Machine inspections and maintenance

Stop the engine before commencing with any inspection and maintenance work on the machine.

- It is extremely hazardous to carry out inspections or maintenance work while the engine is running. Ensure that the engine has been stopped beforehand.

Only commence with the task after every device in the engine compartment has cooled down.

Inspection and maintenance operations with the engine running

- In the event that maintenance tasks need to be performed with the engine running, set the locking lever to the "Locked" position and be sure to perform the work with two or more workers, including one assistant.
- The assistant should sit in the operator's seat so that he can immediately turn off the engine in an emergency. In this case, do not touch any lever except the necessary one.

11 - Track Adjuster: Pressure Relief System Hazard

ALWAYS adhere to the instructions contained in this manual when adjusting the vehicle's track tension. The track adjuster assembly contains grease under extreme pressure, which may escape and penetrate the skin unless the proper procedures are followed and suitable protective shields and clothing are worn.

12 - Preparation and Prevention

Know the location and function of all vehicle controls.
Before starting the engine, make sure that all persons have been cleared from the work area and that you are not activating any of the control levers or pedals.
Holes, obstructions, debris and other work area related hazards may cause injury or death. Always inspect the work area, taking care to identify the hazards before operating the vehicle.
Prevent accidents when you move the vehicle around the worksite. Know the rules for movement of people and vehicles on the worksite. Comply with all signals and signs.

DO NOT operate the vehicle unless:

- all equipment is in working order,
- all covers are in place;
- all warning decals are in place and legible.

Replace all missing, illegible, or damaged warning decals.
When you operate the vehicle on a road or highway, use accessory lights and devices to warn other vehicle drivers. Comply with all applicable local laws and regulations.

https://truckmanualshub.com/

13 - Overturning: risks

The centre of gravity of the compact excavator shifts when the vehicle is operated on rough ground or slopes, and when loads are lifted and lowered.
Keep the vehicle under control at all times. When travelling, plan the direction in which the vehicle is to move. Avoid making any jerky turns, starts, or stops. Travel with extreme caution and at the slowest possible speed.
DO NOT exceed the machine's rated operating lifting capacity (see tables in the "Specifications" section), as this will result in unstable and dangerous vehicle conditions.

IMPORTANT
Travelling with an extended load is dangerous and could cause the vehicle tip-over. If it is necessary to travel with a load, keep the load as close to the vehicle as possible and maintain a maximum clearance of 30 cm between the bottom of the load and the travelling surface.
The protective structure makes the driver's position the only safe place to be if the machine should overturn.
During overturning:

- - KEEP THE SEAT BELT FASTENED.
- NEVER LEAVE THE DRIVER'S SEAT.
- REMAIN SEATED, HOLDING FIRMLY ONTO THE SEAT WITH YOUR HANDS BETWEEN YOUR LEGS.
- - LEAN AWAY FROM THE POINT OF IMPACT.

Once the machine has stopped tipping:
- Ensure that the machine is stable and will not tip any further;
- Undo your seat belt;
- Quickly exit from the driving position via the side of the machine that is facing upwards.

Do not try to leave the machine by sliding out under the protection structure. If the main exit route is obstructed, use the emergency exit.

Emergency exit (for the cab version).
The emergency exit consists of the front window, which can be opened completely. If this is blocked, push against the glass with both feet, pressing your back against the seat for leverage. Quickly exit from the machine.

Emergency exit (for canopy version).
The emergency exit is via the front opening of the canopy. Since this area is shielded by the boom, it will remain clear at all times, thus allowing the operator to exit from the machine.

https://truckmanualshub.com/

14 - Vehicle Stability

When the turret and/or digger boom assembly is at a 90° angle to the front or rear of the undercarriage, vehicle stability is at its lowest point.
Vehicle tip-over caused by improper loading or operation is more likely to occur with the vehicle in this position.
To provide maximum vehicle stability while working:

- Whenever possible, position the vehicle so that the tracks are parallel with the turret and boom assembly.
- Keep the dozer blade lowered and in contact with the ground.
- if fitted, keep the swivelling dozer blade in the FIXED position.

15 - Operation on Slopes

Travelling or working on any slope can be hazardous. Ascend or descend slopes slowly and cautiously. Unexpected obstacles or changes in gradient can cause loss of vehicle control that may result in tip-over.
When travelling on a slope with an angle less than 15°, always reduce vehicle speed and maintain a slow, steady motion. Apply braking by smoothly returning both travel control levers to the NEUTRAL position.
If travel on a slope with an angle greater than 15° is required, take the following additional precautions:

- Only travel straight up or down and NEVER across steep slopes.
- The front of the vehicle must always face the DOWNHILL side of the slope.
- Position the dozer blade in front of the operator, to the front of the vehicle and swing the boom assembly straight ahead.
- if fitted, keep the swivelling dozer blade in the FIXED position
- Once travel has begun, maintain a maximum clearance of 30 cm between the bucket bottom and ground at all times.

If working on a slope with an angle of less than 15°, position the dozer blade to face the DOWNHILL direction before lowering it down to the ground.
DO NOT work on a slope with an angle greater than 15° without first levelling the work area.
DO NOT park the vehicle or leave it unattended on a slope at any time.

16 - Use of the machine on decks or raised surfaces

Always check the space available for movement, as well as the size and load-bearing limitations of the work area. Should it be necessary to work on any form of deck or raised surface, always check the load-bearing capacity beforehand. Pay particular attention to the machine rotation radius.

17 - Carrying Passenger Hazard

DO NOT allow anyone to ride on the vehicle with the operator.
DO NOT use the vehicle as a man hoist or working platform.

18 - Clearances

Always check overhead and side clearances carefully before driving around or under any fixed structures, such as buildings, bridges, towers, etc.

https://truckmanualshub.com/

19 - Underground Hazards

Know the location of all underground hazards before operating the vehicle in a new work area. Contact with electrical cables, telephone lines, gas or water pipes, sewers, or other underground utilities may lead to injury or death. Before starting work, contact your local telephone service supplier and request them to locate and mark these utilities.

20 - Electrocution Hazards

NEVER operate this vehicle in an area where there are overhead or underground power lines, cables, or other power sources, without first requesting that the appropriate power or utility companies isolate the lines or taking other adequate precautions.
Electrical components have a very low water tolerance.
Infiltration of water into the various sensors, connectors or electrical system components may result in malfunctions. Do not clean the machine using steam and water.

21 - Visual Obstructions

Dust, smoke, fog, etc. can decrease vision and cause an accident. Always stop or slow the vehicle down until the obstruction clears and the work area is once again clearly visible.

22 - Movement over frozen or snow-covered surfaces

If work must be performed on surfaces coated with ice or frozen snow, reduce speed and avoid making any jerky movements. Sideways sliding may easily occur and machine functions become more sensitive.
When a large amount of snow has fallen, the road edges and any equipment provided are difficult to see. Exercise extreme caution in such situations.
Frozen ground will often get softer as the temperature rises. Exercise extreme caution in such situations.

23 - Work Site Conditions

Before commencing work, carefully analyse and take into account the topography and geological features of the work site in order to take proper precautions to prevent the machine from overturning and the earth/soil from collapsing.
Certain other conditions may also affect the work site. People may enter the area, or equipment and material may be moved away or brought in. Always be aware of the existing conditions on the work site and always look in the intended direction before starting any movement.
Do not commence with any task before confirming the safety conditions.

24 - Ventilation

Good ventilation is very important when operating this vehicle. Sparks from the electrical system and engine exhaust may cause an explosion. Carbon monoxide fumes from the engine exhaust can cause suffocation in an enclosed area. DO NOT operate this vehicle in an area containing flammable dust or fumes. Provide good ventilation and wait until the hazard has been eliminated.

https://truckmanualshub.com/

25 - Unusual noises emanating from the machine

During operation, be aware of any unusual noises emanating from the engine, hydraulic devices, transmission components, working equipment, etc.
The following may be deemed to be unusual noises.
- Is there any creaking sound as a result of insufficient lubricating oil?
- Is there any scraping sound?
- Is there any unusual vibration or rattling sound?
- Is there any spluttering sound?
- Is there an unusual sound coming from the hydraulic devices?
- Is there any regular knocking sound?
- Is there any rumbling sound?

If any of these sounds are detected, stop the machine at once and carry out an inspection.

26 - Driving Cab – Canopy

- **DO NOT** modify, repair or remove the operator protection structure.
  The protection offered by the protective structure will be compromised, creating a hazard that may result in death or serious injury if the structure suffers any structural damage or modification such as welding or drilling.

- The protective structure, driver's seat, seat belt and all mounting hardware must be carefully inspected after any type of accident. Any components showing signs of damage must be replaced. The replacement parts utilised must be original equipment, as listed in the Vehicle Parts Catalogue. Said parts are available from any authorized Eurocomach Dealer.

WARNING

Protective structure:
Our machines are always supplied with an approved protective structure that is either open sided (canopy) or enclosed (cab).
The removal or modification of the protective structure is prohibited. It is prohibited to operate the machine with no protective structure in place.

Keep the area around the operator's seat clean.
- Always keep the cab and access ways clean. Do not climb into the machine with soiled or greasy boots. Do not jump on or off the machine: Ensure that both hands and one foot, or both feet and one hand are resting on the machine at all times. If this is not possible, report the problem to your employer immediately.
- Do not place anything at the foot of the operator's seat or around the pedals, and refrain from hanging anything from the control levers.
  The control lever may be engaged accidentally, causing the machine to run away or the work equipment to be activated, which constitutes a danger.
- Stow away any items not required for the current operations in their proper places.

https://truckmanualshub.com/

- This vehicle has been designed primarily for digging and backfill operations.

IMPORTANT

- All the capacity ratings are based on the assumption that the machine is resting on firm, level ground. Should the machine be operating in conditions that differ from those above (for example, loose soil or uneven ground, on an incline, with lateral loads), the operator must take this factor into account and reduce the load accordingly.

- **ALWAYS** lower the dozer blade before beginning any work operation. Operator safety, maximum load ratings for the digger, and vehicle stability are dependent upon lowering of the dozer blade whenever the vehicle is active in any work situation.

- The vehicle's hydraulic system is equipped with an accumulator that allows limited operational control in the event of any loss of normal hydraulic system pressure. Before maintenance or service of any type is performed on any component of the hydraulic system, it may be necessary to first discharge the accumulator. Contact your authorised Eurocomach Dealer for assistance.

- In the event that any fault or malfunction is encountered with any of the vehicle controls or features, STOP the vehicle immediately and contact the authorized Eurocomach Dealer for assistance.

27 - Precautions for welding repairs

- Have a fire extinguisher at hand in the area where the welding repairs are being carried out.
- Only qualified persons may be permitted to weld.
- Welding operations may only be carried out in an area equipped with a good ventilation system.
- Before beginning to weld, remove any paint from the surface of the part to be welded.
- Do not weld or gas-cut any pipe containing a combustible solution: this may cause a fire or an explosion.
- Only begin with welding or gas cutting after having cleaned the area with a non-flammable solution.
- When any welding repair work is being carried out, the heat generated may scorch the paint and hazardous gases may be released.

https://truckmanualshub.com/

28 - Prevention of fuel and oil fires

Fuel, oil and some types of anti-freeze are highly inflammable if they come into contact with a naked flame; fuel is particularly inflammable and therefore highly dangerous.

- Keep naked flames well away from inflammable liquids.
- Shut down the engine and do not smoke while filling up with fuel.
- Only fill up with fuel and oil with the engine shut down, and in well-ventilated areas.
- Dedicate a clearly marked area for filling up with fuel and do not allow access to any unauthorised persons.
- When filling up with fuel, keep a firm grip on the spout and always keep it in contact with the intake until filling is complete, so as to prevent any sparks due to static electricity.
- After filling, carefully tighten the safety caps on the fuel and oil tanks.
- Never fill the tank completely; leave room for the fuel to expand.
- Dry up any fuel spills immediately.
- Do not heat up fuel tanks or hydraulic devices or bring any naked flames near them: this constitutes a fire hazard.
- Keep fuel and oil in appropriate containers and store them in a safe place, with access restricted solely to persons authorised to handle these materials.

29 - Storing the vehicle

Ensure that you remove the key.

Before leaving the machine, lower the bucket and the dozer blade to the ground. Stop the engine and remove the key. Cover the swing and PTO pedals.

Park the machine on a level surface.

Select a safe and level surface when parking the machine. If it is necessary to park on a slope, block the tracks with chocks at right angles to the slope. Drive the bucket teeth and the dozer blade into the ground.

After operation, inspect the entire machine and lubricate.

https://truckmanualshub.com/

OPERATIONAL PRECAUTIONS

CAUTION
Do not try to crush concrete or boulders using the sideways motion of the bucket.

CAUTION
Do not allow the bucket free-fall when digging

CAUTION
Do not extend the cylinders completely. Always leave a safety margin.

CAUTION
When travelling down a steep slope, reduce speed to within a safety range using the travelling lever.

CAUTION
Do not dig or use the bucket to hammer a pile into the ground.

CAUTION
Do not attempt to start moving or to dig with the bucket dug into the ground.

CAUTION
When scraping the ground, do not dig the bucket in too deeply. Instead, dig with the bucket at a fairly shallow level and far away from the body of the machine: this puts less strain on the bucket.

CAUTION
This machine can be used in water as long as the swing post is above the water level.

DANGER
When operating near any overhead power lines, either barricade them off or apply insulating guards around them. In addition, it is extremely hazardous to operate in the vicinity of any high-voltage power lines: one may even be electrocuted when the machine makes contact with this line.

CAUTION
When travelling or transporting the machine with the boom folded, do not allow the bucket come in contact with the dozer blade.

CAUTION
After having operated in water or mud, always clean and inspect the machine and grease the pins on the bucket, the swing post, and any other parts that have been submerged, until such time as all the old grease has been expelled.

CAUTION
Digging with the machine facing the rear will prevent the boom cylinder from fouling against the dozer blade.

https://truckmanualshub.com/

WARNING
Do not use this machine to lift or move materials under any circumstances.

CAUTION
Do not move the boom rapidly, particularly downwards: the track frame may suffer damage.

CAUTION
Do not lift the machine while it is swinging, or the machine may tip over.

CAUTION
Do not operate the machine with heavy loads while it is swinging, as this may damage the boom.

CAUTION
When working in areas of uneven ground, level the surface before starting work.

CAUTION
Ensure that the rear of the machine does not hit anything while turning.

CAUTION
Before starting work, always ensure that any new attachment fitted does not foul the booms.

CAUTION
When digging deep, ensure that the cylinder of either boom does not accidentally hit the ground.

CAUTION
Do not attempt to move any rocks or similar items using the blade: this may damage both the dozer blade and the blade cylinder.

CAUTION
When lifting up the machine by means of the dozer blade, the machine supports must be on either side of the blade and not on one side only.

CAUTION
The dozer blade must not be used to increase stability/support, as there is no electrical cutout or mechanical locking device present.

CAUTION
Do not undermine sheer cliff faces, as the edges may break away or the soil may give way, resulting in serious injury or death.

CAUTION
Do not lift, move or rotate the bucket above any person or above the vehicle cab.
Loads dropping from the bucket or bumps against the bucket may cause serious injury or damage the machine.

https://truckmanualshub.com/

3.6 Safety devices

- Seat belts

Seat belts are essential in the event of the machine overturning, as they will restrain the operator firmly in his seat. The condition, cleanliness and mechanical mountings of the seat belt must be checked regularly.

IMPORTANT:
Operations prior to starting
Before starting the engine or using the machine, the operator must fasten his seat belt, having checked that it is in good working order.

IMPORTANT:
Operations prior to leaving the machine
The operator may undo his seat belt only once the engine has been switched off.

- Cab and canopy

The cab and the canopy have been approved in accordance with the regulations currently in force and have passed the TOPS and FOPS level 1 tests 1. In the event of damage, contact Eurocomach so that they may check the strength level.

- Servo-control cutout lever

When raised, the servo-control cutout lever bypasses the control circuit.
The servo-control cutout lever must be raised whenever the operator leaves the machine.

https://truckmanualshub.com/

4.0 Technical information

4.1 Engine

MODEL	ES 350 ZT	ES 400 ZT
Brand	Kubota	
Model	D1503-M-DIESEL	D1803-M-DIESEL
Power output (according to 97/68/EC)	24.9 kW (33.4 hp) at 2800 rpm	28.4 kW (38.1 hp) at 2600 rpm
Displacement	1499cc	1826 cc
Bore	83 mm	87 mm
Stroke	92.4 mm	102.4 mm
Number of cylinders	3	
Cooling	Liquid	
Fuel	Diesel	
Idle speed	1000 rpm	
Maximum (under load)	2400 rpm	
Air filter	Dry filter with safety cartridge	

As regards the description and the specific operation of the internal combustion engine, (injector pump, alternator, starter system), please refer to the engine operation and maintenance manual supplied with the machine.

4.2 Undercarriage

- chassis ..... "X" section box structure
- Oil bath rollers (6+6) and idler wheels .....
- Rubber tracks..... 400 x 72 x 72.5
- Track tensioner ..... with grease-type hydraulic adjustment system

4.3 Dozer blade

Width ..... 1870 mm
Height ..... 360 mm
Upward reach ..... 350 mm
Downward reach..... 360 mm

4.4 Hydraulic system

Type of pump .....-dual piston pump + 2 gear pumps
Pump capacity ..... 60 L + _ L + 45 L + 15 L
Operating Pressures:
- boom, bucket, drive motors, dipperstick ..... 250 bar
- Dozer blade ..... 210 bar
- Chassis rotation motor ..... 190 bar

https://truckmanualshub.com/

- Servo-controls .....35 bar
Total Hydraulic Flow Rate .....180 l
Auxiliary Hydraulic Flow Rate .....100 l
Hydraulic servo-controls for work functions ..... of 2 joysticks
Control of speed of traverse ..... axial piston hydraulic motors with "AUTO TWO SPEED" automatic speed change device and Negative Braking
Turret rotation ..... axial piston hydraulic motor and Negative parking brake

4.5 Machine weight and speed

MODEL	ES 350 ZT	ES 400 ZT
Operating weight including cab and rubber tracks [kg]	3440	4000
Operating weight including canopy (rubber tracks) kg]	3300	3860
Travel speed [Km/H] (with Automatic Shift Down device)	2,5 - 4,6	2,5 - 4,6
Turret rotation speed [rpm]	9 cc	9 cc
Specific pressure at the tracks, with cab, rubber tracks and standard bucket fitted, KPa [kgf/cm²]	37,78 (0,377)	39,84 (0,398)
Specific pressure at the tracks, with canopy, rubber tracks and standard bucket fitted, KPa [kgf/cm²]	36,27 (0,362)	38,47 (0,384)

The total net weight of the machine is deemed to be the sum of the operating weight and that of the various accessories or buckets fitted. The total net weight is equal to the weight under transport conditions.
To establish the load on the tracks when moving, please refer to the specific pressure at the tracks.
Always take the weight of the accessory or bucket fitted to the arm into account.

https://truckmanualshub.com/

4.6 Performance

MODEL	ES 350 ZT	ES 400 ZT
Jerk strain limit at the bucket (standard boom) ISO 6015 [Kgf]	2400	3200
Breaking strain limit at the boom (standard boom) ISO 6015 [Kgf]	1950	1950
Traction strain limit [Kgf]	3400	3400

4.7 Standard equipment

- ES 400 ZT: Cab TOPS (EN 13531) / FOTPS (ISO 3449), equipped with ventilation and heating, front window washer and wiper, predisposed for stereo sound system, RH and LH rear-view mirrors, flashing light unipolar electrical outlet on the cab roof.
- ES 350 ZT: Canopy TOPS (EN 13531) / FOPS (ISO 3449)
- Rubber tracks
- Dozer blade width 1550 mm for ES 350 ZT
- Dozer blade width 1700 mm for ES 400 ZT
- Automatic parking brake on swing and traverse
- Cab equipped with ventilation and heating, front window washer and wiper
- Cab predisposed for stereo sound system
- Double traverse speed with “Automatic Shift Down” (Automatic change from 2nd to 1st gear as the traction load increases)
- 1200 mm digger boom for ES 350 ZT
- 1200 mm digger boom for ES 400 ZT
- Unique ignition key operates all locks on the machine
- Sprung seat
- Seat belts
- Dry air filter with safety cartridge and electric blockage indicator
- Maintenance tool storage compartment (under driver’s seat)
- Parts catalogue, operation and maintenance manual and set of tools
- Unipolar electrical outlet on the dashboard for flashing light
- Working light on the boom
- Protection for lifting and dozer blade cylinders
- Two-way hydraulic circuit on the hammer boom, clamshell/swivelling bucket and auger
- Braking: Travel - hydraulic service brake, piloted activation and manual control;
  - hydraulic parking brake, electrical activation and manual control.

  Swivelling - hydraulic service brake, piloted activation and manually controlled;
  - negative, mechanical parking brake applied automatically.

https://truckmanualshub.com/

4.8 Optional extras

- ES 350 ZT : TOPS (EN 13531) / FOPS (ISO 3449) cab, equipped with ventilation and heating, front window washer and wiper, predisposed for stereo sound system, RH and LH rear-view mirrors, flashing light unipolar electrical outlet on the cab roof.
- ES 400 ZT: TOPS (EN 13531) / (ISO 3449) canopy
- Steel tracks: ES 350 ZT (41 link, width 300 mm)
  ES 400 ZT (44 link, width 300 mm)
- Lengthened digger boom
- Air conditioning
- Stereo car radio system
- Additional hydraulic “high capacity HF” offtake for bush cutter
- Working lights and rotating light on the cab
- Approved lifting hook complete with locking valves on main boom and dipper stick
- Mechanical or hydraulic quick-release attachment
- Full range of work buckets
- Ditch clearing buckets (fixed and pivoting hydraulic)
- Trapezoidal ditch-clearing buckets
- Demolition hammer
- Bush cutter
- Bough shears and grab
- Auger
- Electric pump for filling diesel fuel tank
- Catalytic exhaust system

4.9 Rotating structure

The excavator’s superstructure (turret, booms) is able to rotate independently from the bottom section (undercarriage). This movement is permitted by the fifth wheel, which ensures the movement of parts with the minimum amount of friction. The fifth wheel consists of two free-wheeling rings, one of which is firmly fixed to the undercarriage and the other to the turret.

4.10 Fluid capacities

Engine sump oil with filter change .....7 L
Engine oil filter .....0.5 L
Fuel tank.....40 L
Cooling system .....8 L
Hydraulic oil reservoir..... 42 L + 60 L (system)
Track tensioners .....1.5 L

https://truckmanualshub.com/

4.11 Operation at low temperatures or during the winter

PRE-START PREPARATIONS

The engine may be difficult to start in cold weather and the radiator water and battery fluid may freeze. Therefore, pay attention to the following.

1 - Lubricant

Engine oil	SAE10W-30

2 - Fuel

Use diesel fuel with a flowing point that is five degrees lower than the lowest outdoor temperature.

3 - Coolant

Add anti-freeze to the cooling water to prevent the cooling system from freezing. The following table shows freezing temperatures against the amount of anti-freeze added.

The total coolant capacity is 12 L, including the overflow tank.

Before leaving the factory, the machine is filled with sufficient anti-freeze to cope with temperatures of –15°C.

When upgrading the cooling liquid for operating at temperatures below -15°C, refer to this manual and to the one provided by the engine manufacturer.

IMPORTANT

Allow the engine and hydraulic fluid to warm up properly because, if they are not sufficiently warm before the control levers are activated, the machine will operate sluggishly, which may lead to accidents.

WARNING

Take care when using open flames as anti-freeze is flammable.

CAUTION

When the coolant level needs to be topped up, add the new coolant just before starting up the machine and not at the end of the shift, so as to prevent freezing.

4 - Battery

Battery capacity is reduced at low temperatures. If the charge voltage is inadequate, the battery fluid may freeze. In this case, cover the battery with a cloth or store it in a warm place. Reinstall it in the morning.

https://truckmanualshub.com/

CAUTION

If the battery is recharged using a booster cable, make sure that the earth cable is attached and the engine is switched off. Remove the filler cap and connect the cable to the battery.

WARNING

Since dilute sulphuric acid is used as electrolyte, take care not to let any of the liquid come into contact with hands or eyes.

CAUTION

- When disconnecting the terminals, start with the (-) terminal.
When connecting them, connect the (-) terminal last.
- When using any instrument near the battery, be sure not to touch the + terminal because the machine's body is (-).

4.12 Electrical system

Electrical system ..... 12 VDC negative earth
Lead-acid battery with liquid electrolyte..... 12V 80Ah/750 A
Alternator 12V 40Amp
Starter motor on the ES 350 ZT ..... 12V 1.4 KW
Starter motor on the ES 400 ZT ..... 12V 2.0 KW

https://truckmanualshub.com/

4.13 Vehicle dimensions (in mm)

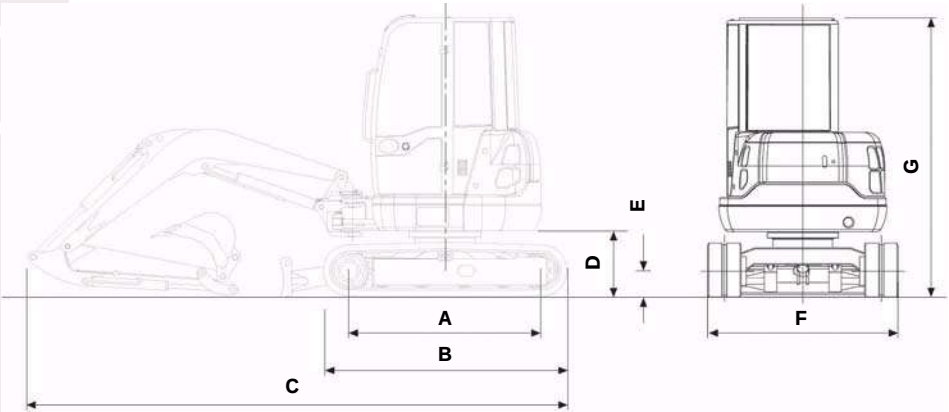

EC1510

MODEL		ES 350 ZT	ES 400 ZT
A	Track length – from centre gear to drive gear	1544 mm	1703 mm
B	Chassis length	1997 mm	2155 mm
C	Machine-side length	4698.5 mm	4897.5 mm
D	Height above ground (upper structure.)	572 mm	576 mm
E	Height above ground (chassis)	264 mm	290 mm
F	Machine width	1550 mm	1700 mm
G	Height – top of protective structure	2467 mm	2470 mm

https://truckmanualshub.com/

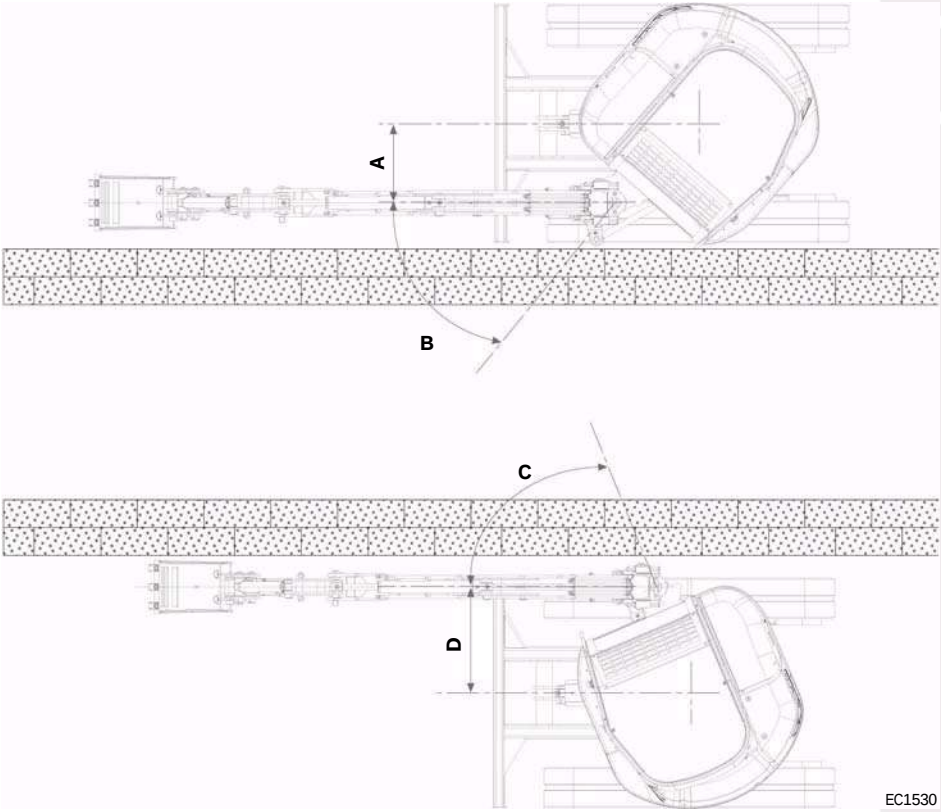

MODEL		ES 350 ZT	ES 400 ZT
A	Excavation distance with boom to the right	710 mm	566 mm
B	Excavation angle to the right	60 °	55 °
C	Excavation angle to the left	75 °	80 °
D	Excavation distance with boom to the left	828 mm	786 mm

https://truckmanualshub.com/

DIAGRAM WITH STANDARD BUCKET ES 350 (400 mm) ES 400 (500 mm)

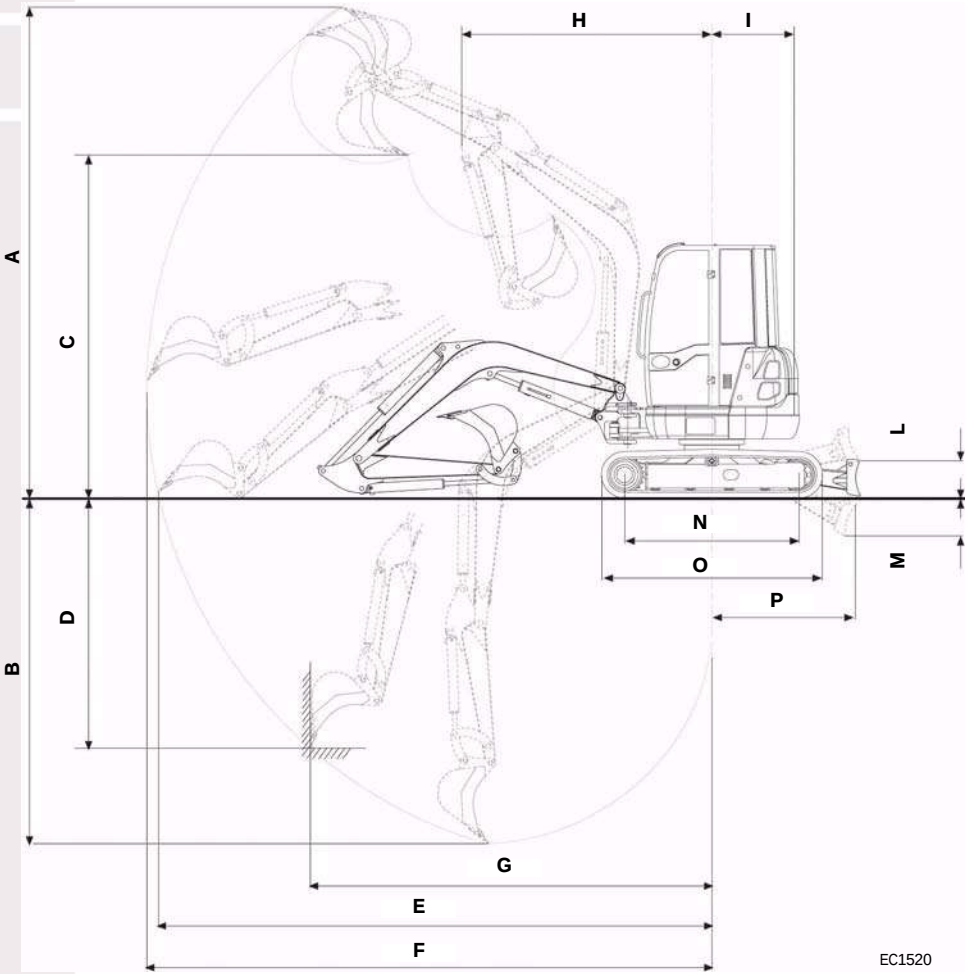

MODEL		ES 350 ZT	ES 400 ZT
A	Max. height of compact excavator.	4450 mm	4900 mm
B	Max. excavation depth	3000 mm	3400 mm
C	Max. load height	3100 mm	3530 mm
D	Max vertical wall depth for compact excavator	2020 mm	2480 mm
E	Max reach at ground level	4886 mm	5275 mm

https://truckmanualshub.com/

MODEL		ES 350 ZT	ES 400 ZT
F	Maximum reach	5039 mm	5386 mm
G	Max. vertical wall excavation distance	3700 mm	3820 mm
H	Minimum forward swivel range	2261 mm	2250 mm
I	Rear swivel range	755 mm	855 mm
L	Dozer blade lift	339 mm	326 mm
M	Dozer blade depth	441 mm	480 mm
N	Wheelbase	1544 mm	1703 mm
O	Track length	1997 mm	2155 mm
P	Blade dimensions	1372 mm	1451 mm

4.14 Bucket specifications

This vehicle can be fitted with the following bucket types:

BUCKET TYPE	WIDTH mm	EMPTY WEIGHT kg	CAPACITY L.
Backhoe	300	52	41
Backhoe (standard ES 350)	400	60	61
Backhoe (standard ES 400)	500	71	82
Backhoe	600	78	105
Backhoe	700	87	127
Backhoe	800	97	152
Backhoe	900	104	175
Trench clearing bucket	1000	83	125
Trench clearing bucket	1200	96	154
Trench clearing bucket	1400	110	182
Swivelling trench-clearing bucket	1000	142	125
Swivelling trench-clearing bucket	1200	154	154
Swivelling trench-clearing bucket	1400	168	182
Trapezoidal bucket	45°	86	173
Mechanical quick-release attachment	AR 40	25	-

https://truckmanualshub.com/

4.15 Noise characteristics

The machine complies with specifications 2000/14/EC, 2005/88/EC and subsequent amendments relating to noise levels.
The noise characteristics indicate the guaranteed noise level in dB (**A**). Viene indicato con LWA 95 db per ES 350 ZT e LWA 96 db per ES 400 ZT, segnalato con una decalcomania situata sul lato destro della cabina,sulla parte esterna.
The acoustic noise pressure level (LpA), as recorded at the driving position in accordance with ISO 6396:1992, is equivalent to 79 dB (**A**) and, therefore, in accordance with the standards, no special hearing protection equipment is required.

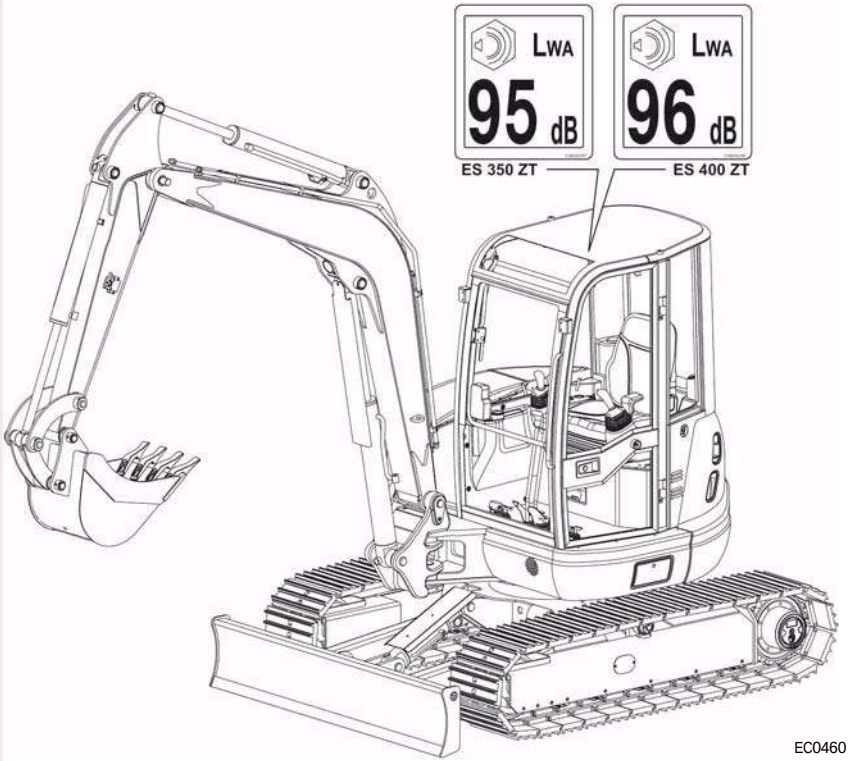

https://truckmanualshub.com/

4.16 Machine vibration characteristics

The level of vibration transmitted through to the operator depends mainly on the ground conditions in which the machine is operating, the work methods being applied and the accessories fitted to the machine. Exposure to vibration can be reduced substantially by complying with the following suggestions:

- Make use of accessories that are suitable for the type of machine and the type of task to be performed;
- Adjust and lock the seat in the appropriate position; In addition, regularly inspect the seat suspension, making any necessary adjustments and performing any necessary maintenance;
- Regularly perform any necessary maintenance in the area around the driving position;
- Operate the accessories smoothly, as far as possible avoiding any sudden movements or excessive jolts;
- Adjust your speed and route and, as far as possible, avoid particularly bad routes and hitting possible obstacles, so as to minimise the level of vibration.

The average quadratic frequency value on acceleration to which the operator's upper limbs is exposed, does not exceed 2.5m/s².
The average quadratic frequency value on acceleration to which the operator's body (feet or seat) is exposed, does not exceed 0.5m/s².

NOTE: This machine is equipped with a driver's seat that complies with the requirements of standard ISO 7096:2000.
This ensures that the level of exposure of the operator's body to vibration complies with the requirements, in terms of protection against vibration, when the machine is utilised as envisaged by the intended use, and in accordance with the provisions of this manual.

https://truckmanualshub.com/

5.0 Transportation of the vehicle

CAUTION

Ensure that the vehicle used to transport the machine has an adequate loading capacity.
Before loading the machine, check that there is no grease, oil, soil, ice or other slippery material on the loading platform and ramp.
Do not turn on the ramps. Align the machine tracks with the ramps before proceeding and move in a straight line. If the machine is off line when going up the ramps, stop, go back down and try again
Use the appropriate fixing points when tying the machine down on the vehicle.

5.1 Transportation dimensions

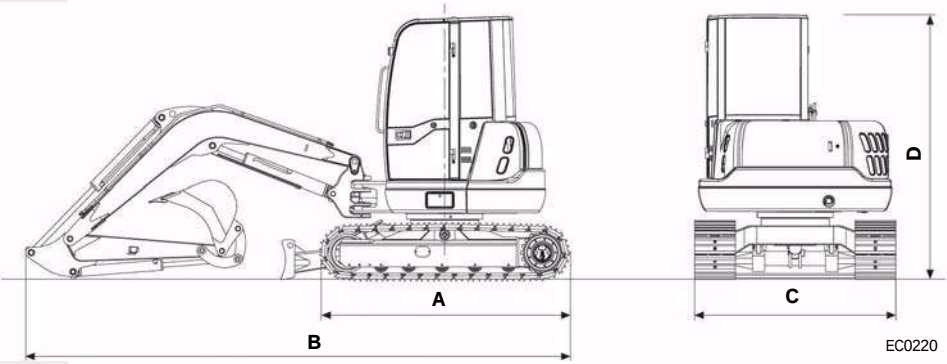

MODEL		ES 350 ZT	ES 400 ZT
A	Chassis length	1997 mm	2155 mm
B	Machine-side length	4698.5 mm	4897.5 mm
C	Track width	1550 mm	1700 mm
D	Height – top of protective structure	2467 mm	2470 mm

Before using ramps to load or unload this vehicle:

- the loading and unloading of the compact excavator must be carried out with the ramps resting on level ground.

- Make certain that the ramp load rating is adequate for the gross vehicle weight of the compact excavator.
If a pair of ramps is required, make certain that each ramp has the proper load rating, and is at least 405 mm (12") wide.

https://truckmanualshub.com/

- The angle of the loading ramp(s) must NOT exceed 15°
-

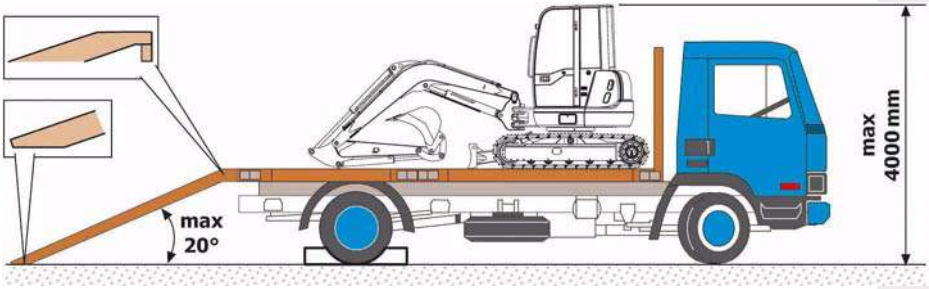

EC1540

- Install the two ramps so that the axis of the machine is aligned with that of the truck.
- The ramps must be rigidly connected to the truck deck in order to avoid possible disconnection while the machine is being loaded.
- Make sure that the truck parking brake is engaged and then fit non-slip chocks in front of and behind the tyres.

NOTE: during the cold season, allow the engine and hydraulic system of the compact excavator to warm up before commencing with any loading/unloading operations.

https://truckmanualshub.com/

5.2 Loading-unloading operations

When loading or unloading the machine onto or off a transport vehicle, a special platform must be used. If ramps are used, load the vehicle in the following manner.

1 - Align the vehicle in a straight line with the truck. Load the compact excavator onto the truck in reverse and unload by driving the compact excavator off forwards.
Before driving on or off, check to ensure that the alignment is correct; if not, repeat the alignment operation.

CAUTION

To reduce the risk of personal injury caused by the machine tipping, DO NOT attempt to turn the vehicle or swing the turret or boom while the vehicle is in motion on a loading ramp or on a truck or trailer deck. The vehicle must be properly positioned before commencing with the loading.

2 - Begin to load the vehicle. Have an observer watch the loading or unloading operation from a safe distance, to warn the operator of any otherwise unseen situation that may develop.

3 - As the vehicle passes over the top of the ramps during loading, the vehicle will pivot on the centre of its tracks towards the level of the truck or trailer deck. Maintain slow, steady progress until the vehicle completes this pivot movement and both tracks are in full contact with the deck of the truck or trailer.

4 - Position the vehicle on the trailer and lower the dozer blade onto the deck.

5 - Close the bucket, retract the dipper stick and lower the digger boom onto the deck.

6 - Secure the vehicle to the deck of the truck or trailer.

To unload the vehicle, follow the above procedure in reverse order.

NOTE: during unloading, the vehicle will pivot again as it crosses over the top of the ramps. Maintain slow, steady progress until the vehicle completes this pivot movement and both tracks are fully in contact the ramp(s).

https://truckmanualshub.com/

5.3 Tying down the compact excavator on the truck

After loading the compact excavator properly onto the truck, tie it down securely as follows:

- Place wooden wedges at right angles behind and in front of each track
- secure the machine using a suitable chain or cable to prevent the vehicle from moving in transit.

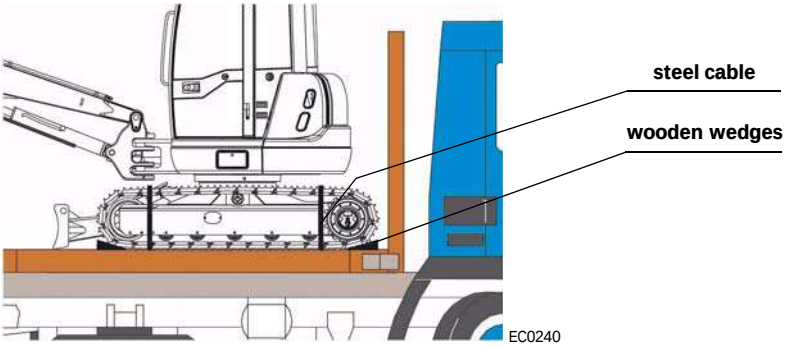

- make the compact excavator safe by following the instructions provided in the applicable section (point “7.24” page 114).
- The securing procedure is the same for both the cab and canopy versions of the machine.

5.4 Lifting the vehicle

DANGER

When lifting the machine, comply with the regulations in force in the machine’s country of utilisation.
Before lifting the machine ensure that the crane to be used has a suitable load-bearing capacity to lift the weight of the machine.
Use cables or chains of a suitable size.
Do not use worn or frayed cables
Only hook the cables at the special anchoring points.
Do not lift the machine with the operator on board.
Clear any persons in the vicinity of the machine.

In the event that the machine needs be lifted, either for the purposes of transportation or relocation to isolated construction sites, both the cab and canopy versions may be lifted with the aid of a crane. The machine is equipped with shackle anchor points that enable a stable, balanced hoisting, provided the following conditions are strictly adhered to:

1 - Swing the turret so as to position the dozer blade behind the operator.

2 - Raise the dozer blade completely.

https://truckmanualshub.com/

3 - If necessary, swing the digger boom to the central position (0° swing angle).

4 - Raise the boom fully, close the bucket and retract the dipper stick.

5 - Lift the joystick servo-control cutout lever.

6 - Shut down the engine, remove the ignition key, and exit from the vehicle.

CAUTION

To minimize the possibility of accidents and serious bodily injury, all crane operation and rigging personnel must be properly qualified and experienced. It is their responsibility to ensure that the proper equipment is used to lift this vehicle. The lifting equipment must be correctly rated and properly connected to the designated lifting points on the vehicle.

7 - Slings must be attached to the vehicle at the points provided:
- One each on the left (**1**) and right (**2**) side of the dozer blade, as well as
- one on the rear dipper stick cylinder-mounting frame (**3**).

8 - Attach the slings to a suitable lifting bar (**4**), with attachment point width of between 1000-1500mm. The sling angle must not exceed 50°.

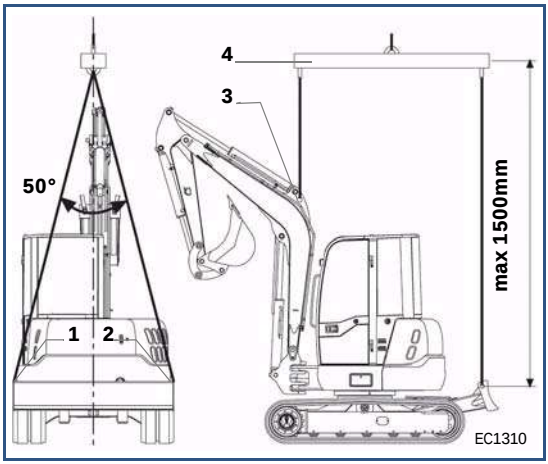

CAUTION

NEVER allow anyone to stand on or under the vehicle while it is being lifted. Failure of the lifting equipment may cause the compact excavator to fall, potentially leading to serious injury or death.

9 - Proceed with the lift, ensuring that the vehicle is properly balanced as the lifting operation begins.

https://truckmanualshub.com/

5.5 Use of the compact excavator for towing purposes

CAUTION

TOWING OF THE ES 350 ZT - ES 400 ZT COMPACT EXCAVATOR WITH OTHER MECHANICAL EQUIPMENT IS FORBIDDEN.

This vehicle may only be used to tow other vehicles over short distances, since the compact excavator is not equipped to control the steering and braking functions of the towed vehicle and, therefore, towing must only be carried out when absolutely necessary and completely subject to the following conditions:

1 - The gross vehicle weight of the towed vehicle must not exceed the unladen weight of the compact excavator.

2 - NEVER use the speed control system while towing another vehicle; the broken down vehicle must be towed at a speed not exceeding 2km/h..

3 - NEVER secure the towing cable or chain to any component of the upper part of the vehicle structure, including the boom, the dipper stick, the bucket or any fitted accessory. The towing cable or chain may only be fixed to the rear tow hitch mounted on the chassis (**1**).

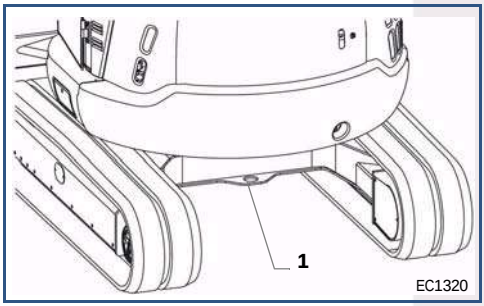

4 - NEVER continue towing unless both tracks are fully in contact with the ground.

5 - Tow for short distances only. Stop towing immediately if the vehicle starts to overheat.

6 - When towing, keep the towing chain or cable taut throughout the operation.

https://truckmanualshub.com/

6.0 Controls and instrumentation

6.1 Description of control levers

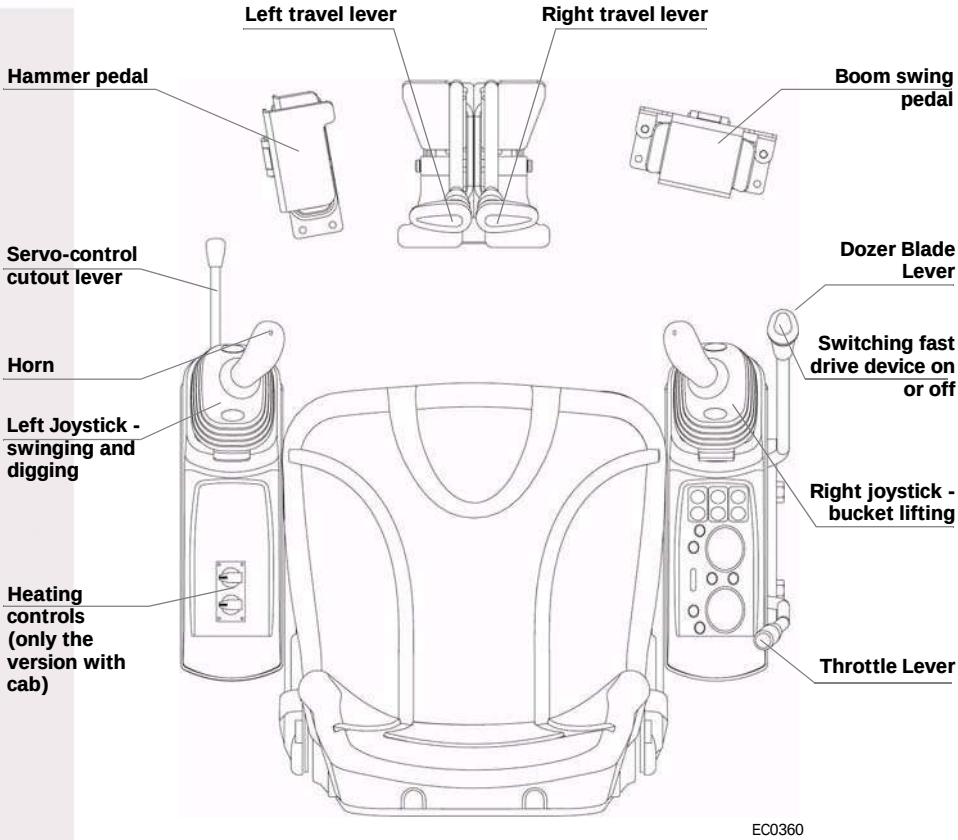

https://truckmanualshub.com/

6.2 Right control panel description

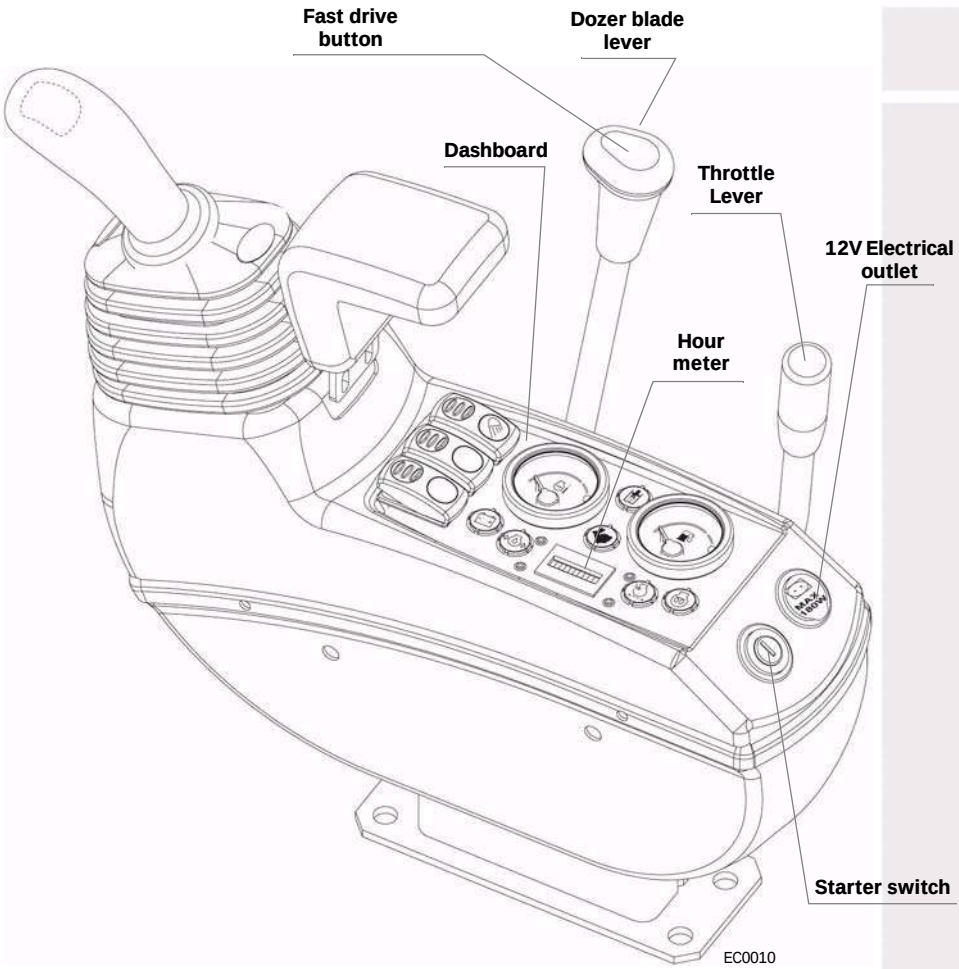

https://truckmanualshub.com/

6.3 Dashboard

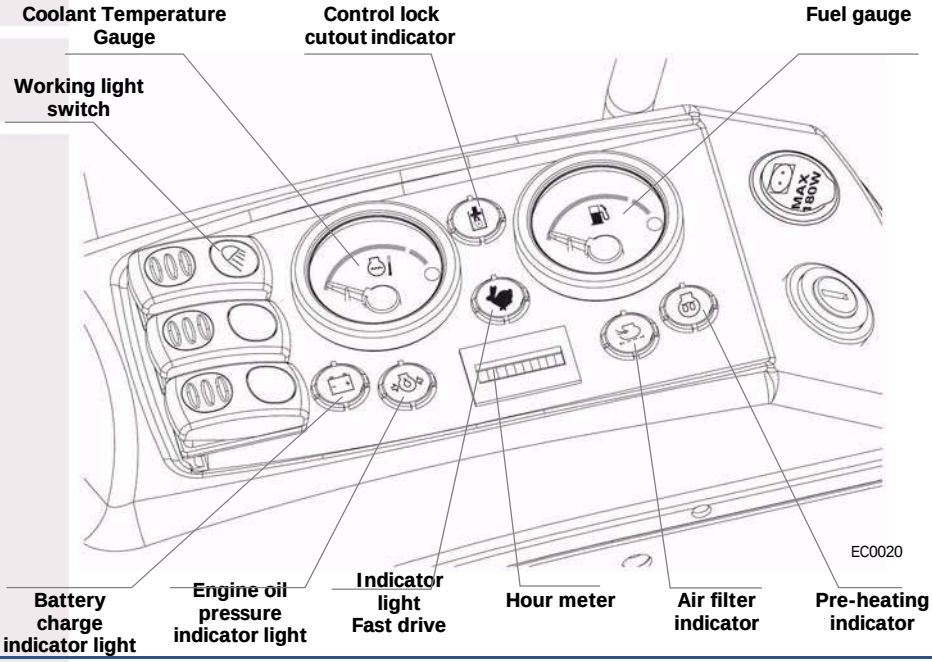

1 - Coolant Temperature Gauge

Indicates the engine coolant temperature. After starting and warming up, the engine temperature gauge should be in the green zone. If, instead, it is in the red zone, open the cover to allow the engine to cool down. When the pointer goes down, shut down the engine, wait for it to cool, then check that the coolant level in the radiator reservoir is correct, check for leakages, check that the radiator core is clean and that the fan belt has not worked itself loose.

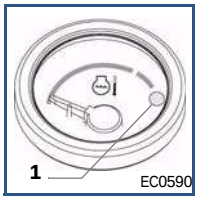

2 - Coolant temperature warning light (1)

If the light comes on, it means that the coolant temperature is too high. Open the cover to allow the engine to cool down. When the pointer goes down, shut down the engine, wait for it to cool, then check that the coolant level in the radiator reservoir is correct, check for leakages, check that the radiator core is clean and that the fan belt has not worked itself loose.

https://truckmanualshub.com/

3 - Fuel gauge

Indicates the fuel level in the tank: Refill the tank when the pointer is close to "E".

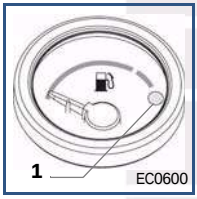

IMPORTANT
The indicator lights are only operational once the starter switch has been set to the ON position. Check the fuel level prior to starting work.

4 - Fuel level indicator light (1)

Lights up when the fuel level is very low.
A fuel refill is required.

5 - Hour meter

Indicates the progressive operating time in 0.1 hours (six minutes), which is used as a reference for carrying out inspections.

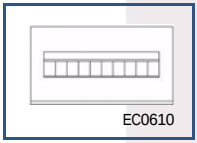

IMPORTANT
This meter keeps running whenever the engine is running.
Take a reading on a daily basis

6 - Battery charge indicator light

Lights up when faults occur in the battery charging system. If this happens, check the charging system and the fan belt tension.

EC0400

7 - Engine oil pressure indicator light

Lights up when the engine oil pressure drops unexpectedly and when the engine shuts down of its own accord. After the engine has shut down, check the lubrication system.

EC0420

8 - Air filter indicator light

Lights up when the air filter element is clogged.

EC0410

IMPORTANT
If the air filter is clogged, engine performance is reduced.

https://truckmanualshub.com/

9 - Pre-heating indicator light

When the key is turned to the On position, this indicator lights up for six seconds. Instead, if the engine is already warm, it does not light up at all.

EC0430

10 - Controls locked indicator light

Lights up when the servo-control cutout lever is raised.

EC1330

11 - Fast drive indicator light

Lights up when fast drive is engaged.

EC0910

https://truckmanualshub.com/

7.0 Operations

7.1 Start-up

CAUTION

For the most part, increased safety is dependent on the operator's actions and attitude.
Incorrect use of the machine can be dangerous.
Before starting work, concentrate all your attention on what you are about to do, and take all the necessary precautions.
After ensuring that the machine is safe and in good working order, remember that everyone using the compact excavator must be suitably trained in its use, must be well informed about the hazards deriving from the use of the vehicle and must be aware of all the procedures to be followed in order to ensure its proper use.

7.2 When the engine is on

Observe the indicator lights. The red ones call for immediate action. See the instructions in the section on instrumentation.

Do not leave the machine unless the bucket has been fully lowered to the ground and the engine has been shut down.

The operator is responsible for any outside persons operating the machine controls.

Do not allow anyone to climb onto the machine while it is working. No one should be within the machine's external range of action.

While using the machine, avoid any sudden swerves, abrupt acceleration or braking and making sharp turns. If you get confused, turn the engine off.

Never leave the machine unsupervised with the engine running.

Lower all of the accessories to the ground before leaving the operator platform.

After having shut down the engine, release the pressure in the hydraulic system by moving the control lever backwards and forwards repeatedly.

7.3 Getting on and off the vehicle

When getting on and off the vehicle, the operator must be facing the machine and use the handholds provided on the turret frame, if the machine is equipped with cab, or the canopy uprights.
always enter and leave the vehicle from the left, after raising the servo-control cutout lever, which is on the LH joystick panel.

NOTE: never use the control cutout lever as a handhold when getting on and off the vehicle, as it could suffer serious damage.

https://truckmanualshub.com/

WARNING

Carefully read through the information below and always comply with the requirements. Should any malfunctions occur with the compact excavator's functions, contact the local Eurocomach Service Centre:

- Before setting the compact excavator in motion, adjust the position of the driving seat so that all the controls are within easy reach, and fasten the seat belt.
- Before moving the vehicle or operating the accessory, ensure that no persons are present in the surrounding working area.
- Acquaint yourself with the rules relating to the use of vehicles in the working area.
- Never check or fill up the fuel tank, batteries, hydraulic fluid tank etc. in the vicinity of any naked flames or sparks.
- The boom drive cylinders are fitted with end of stroke dampers. Therefore, it is normal for the extension or retraction movement to slow down, and this does not indicate poor performance or malfunction of the cylinders themselves.
- While working, always keep the dozer blade down in contact with the ground. This will provide the machine with optimum stability and ground adherence.
- Always maintain a safe distance from other machines and obstacles in order to ensure ideal conditions of visibility.
- When reversing, always look in the direction of travel of the compact excavator. Watch out for other people; Should anyone enter the manoeuvring area, stop the compact excavator.
- Only use one of the types of bucket indicated in the relative table in the "Technical Specifications" section".
- Comply with the provisions of the compact excavator load capacity tables and ascertain whether there are any load restrictions imposed by the ground, paving or ramps on which you are to work.

IMPORTANT
DO NOT utilise the vehicle at 100% of load capacity until the hydraulic fluid has reached normal operating temperature (about 50°C).

https://truckmanualshub.com/

7.4 Servo-control cutout lever

The control cutout lever is on the left joystick panel.
Pulling the lever **1** up raises the entire panel, breaking the control circuit .
When the lever **1** is pushed down again, the joystick unit returns to operating mode and the control circuit is restored.
This operation must be carried out whenever the driver leaves the vehicle and while the compact excavator is being transported.
Once the left control panel has been raised, the “control locked” warning light (**2**) on the dashboard illuminates.

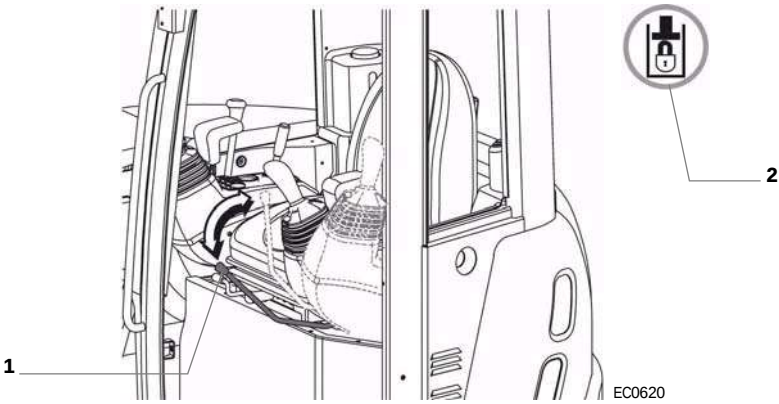

https://truckmanualshub.com/

7.5 Driving seat

The driving seat is of the approved type and complies with workplace safety legal requirements. It is fitted with a damping system and permits adjustment to the optimum setting for the operator's weight:

1 - Operator Weight Adjustment
This adjustment knob (**1**) at the top of the seat springs, facing the front of the machine.
Turn the lever to change the firmness of the suspension to obtain the ideal setting for the operator's weight.

2 - Forward / backward Adjustment
A pair of guides allows the seat to be moved forwards or backwards.
The lever is positioned under the seat, facing the front of the vehicle:

- the lever on the right next to the seat (2) controls the movement of the seat only, and allows adjustment to obtain the most comfortable operator position in relation to the joysticks.

SEAT BELT

CAUTION

Serious bodily injury or death may result from any failure to use the seat belt fitted to this vehicle. The seat belt is a critical component of the operator protection system and is provided for the operators' safety in the event of the vehicle overturning. The seat belt MUST be used whenever this vehicle is being operated.

IMPORTANT! Inspect the seat belt on each occasion prior to use, in order to identify any cuts or worn webbing, or any defect in the latch assembly. If any wear or damage is noted, DO NOT operate the vehicle until the seat belt has been replaced.

https://truckmanualshub.com/

Before starting the engine, first adjust the seat as required for optimum reach and comfort. Then adjust the seat belt as follows:

1 - Grasp both free ends of the belt and make certain that the belt webbing is not twisted or entangled in any portion of the seat assembly.

2 - With your back upright in the seat, fasten the ends of the belt.

3 - With the belt buckle as low on your body as possible, pull the free end of the belt to shorten it until it is tight across the lap.
4 - To undo the belt fastener, press the red button (**3**) and pull, extracting the free end from the buckle.

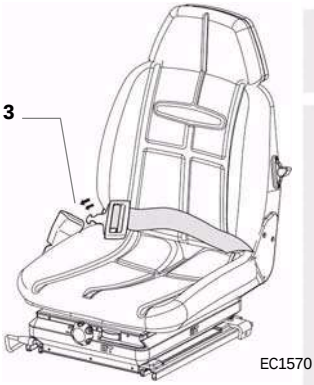

WARNING

The seat position should always be adjusted to suit the operator's physique. A seat adjustment that is unsuited to the operator or to the type of work to be performed may lead to premature operator tiredness and result in the improper operation of the machine.
- The seat position should be individually adjusted for each machine operator.
- The operator must be in a position to press the pedals down fully and to operate the control levers properly, with his back resting comfortably against the backrest of the seat.
- If not, move the seat forwards or backwards and then try again.

https://truckmanualshub.com/

7.6 Driving Cab (optional for ES 350 ZT)

the compact excavator can be fitted with a heated and ventilated enclosed cab for use both in winter and in summer.
The cab is composed of an enblock, secured to the structure by flexible supports to damp vibrations for increased operator comfort.

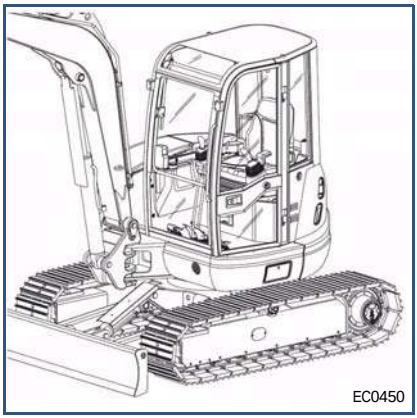

CAUTION

If the cab is bumped or the machine tips over for any reason, contact the local Eurocomach dealer immediately to check the cab's rigidity and the active protection that it must provide to the operator.

7.6.1 Cab installation

The installation of the cab requires the use of a crane and suitable gauge cables, as is the use of the eyebolts provided (**1**).
Skilled staff must carry out this operation.

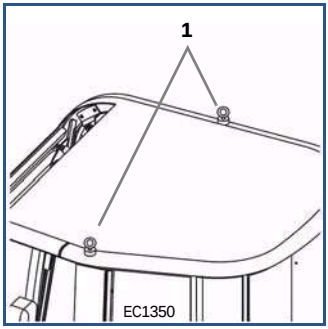

CAUTION

It is forbidden to lift the compact excavator by means of the eyebolts on the cab.

https://truckmanualshub.com/

The cab is held in place by four holding screws. Two screws (**2-3**) at the front and two screws (**4-5**) at the back, with the latter positioned under the rear ABS unit.

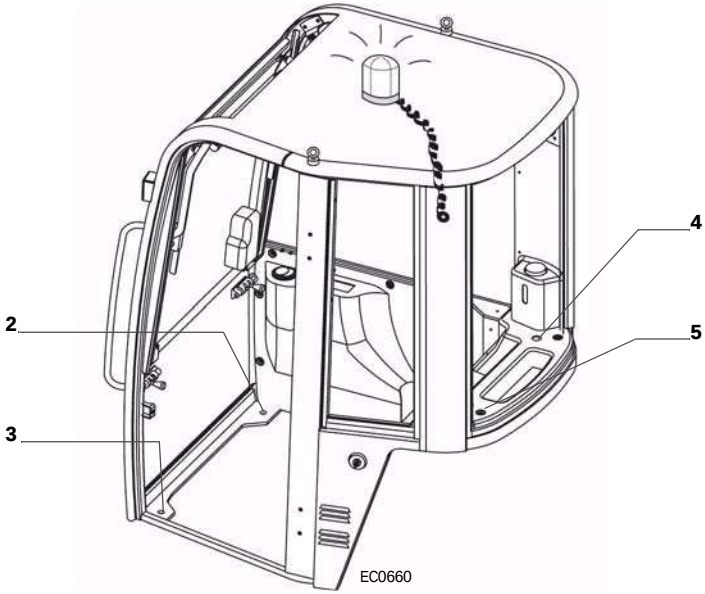

https://truckmanualshub.com/

7.6.2 Entering and leaving the driving cab

When getting in and out of the cab, raise your left arm; this deactivates the servo-assisted controls.

ENTRY TO THE DRIVING CAB

Access to the enclosed cab is by means of the left hand side door. In the event of any emergency that prevents the use of this door, the front or right side windows of the enclosed cab can be opened as described below and used to exit the vehicle.
To enter the enclosed cab, unlock the door with the key provided, depress the knob (**1**) to release the latch, and pull the handle to open. After entry, grasp the interior handhold and pull to close and latch the door.
The door can be locked from the outside using the key provided.
It is advisable to note the number of the key so that a spare can be ordered if necessary.

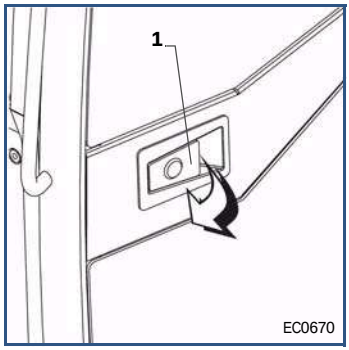

CAUTION

The driving cab door should be kept locked when operating the compact excavator, in order to prevent it from opening accidentally.

EXIT FROM THE DRIVING CAB

To exit the enclosed cab, grasp the latch release lever (**2**) and pull upwards, then push the door to open. After exiting, close and lock the door.

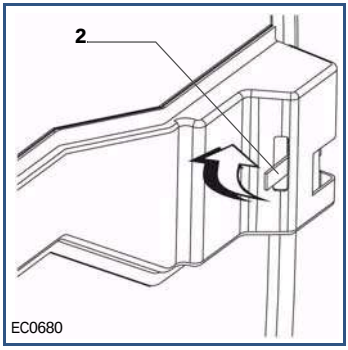

https://truckmanualshub.com/

OPEN DOOR RESTRAINT RELEASE

The left cab door will be secured in the open position when it is opened and swung 180°.
To release the door and allow it to close, lower the latch control handle (**3**) located on the LH upright.

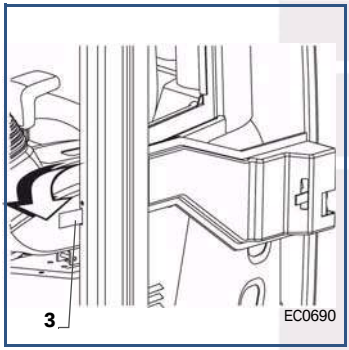

NOTE: for easier connection, grease the connecting parts periodically

7.6.3 Dome light

The dome light is positioned on the left upright of the cab. To turn the dome light ON, depress the left side of the rocker switch (**1**) located on the light housing.

To replace the dome lamp bulb, insert a screwdriver between the lens and light housing (**2**) in order to release the retainer tabs on the lens, then remove.

The power rating of the replacement lamp must not exceed 5W. Reinstall the lens by pushing it into the housing until the retainer tabs lock into place.

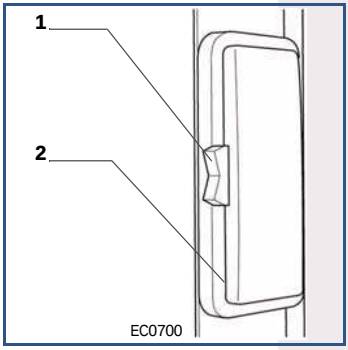

7.6.4 Auxiliary outlet for roof rotating light (Optional)

An auxiliary outlet (**1**), used to power the roof rotating light is located on the rear left upright. This outlet is fed from the battery and is permanently live (it is not necessary to use the starter key to provide power to it).

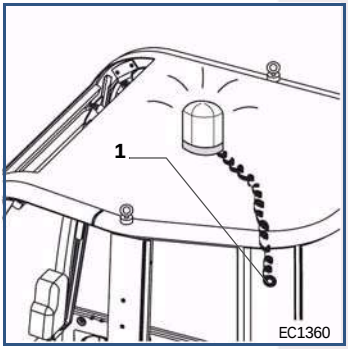

https://truckmanualshub.com/

7.6.5 Windshield wiper

To turn the windshield wiper ON, depress the rocker switch bearing the appropriate symbol, located on the housing of the windshield wiper itself. The starter key switch must be in the "ON" position for the windshield wiper to operate.

EC0710

Clean the wiper blades periodically with suitable detergents or alcohol. Make sure that they are not damaged or the cleaning will be streaky. Replace the wiper blades if the rubber is permanently deformed or shows any signs of wear.

In case of especially cold conditions (below 0°C) check that the wipers have not frozen to the windshield: if necessary, free them with a de-icing product.

If the windshield washer (**1**) fails to operate, check that the supply circuits are not blocked; if necessary clear the spray nozzles using a pin.

Failure to follow the above procedures will cause premature wear of the wiper blade rubber.

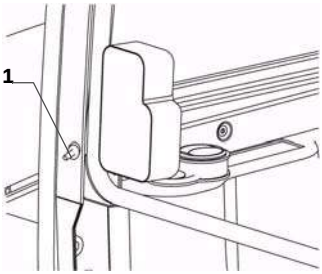

EC0720

7.6.6 Windshield washer

In order to activate the windshield washer, press the button (**1**) located near the window on the RH side of the cab. When sufficient cleaning fluid has been dispensed, release the switch.
The windshield washer reservoir (**2**) is located behind the driver in the cab, thus allowing quick and easy access for topping up the liquid. Remove the cap and fill as required.
If ambient air temperatures are expected to drop below 0°C, use a special washer fluid formulated for temperatures below zero.

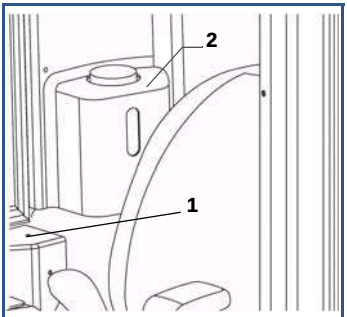

EC0730

https://truckmanualshub.com/

7.6.7 Opening and tilting the windshield

The front windshield can be easily opened and left open for ventilation purposes.

- Grasp both the locking handles (**1**) and press both the applicable buttons (**2**) with the thumbs. Then pull both the handles backward simultaneously, tilting the glass inwards.
- With the aid of the gas cylinder the handles can then be pulled upward, raising the window into its rest position.
- Push the glass upward until a locking “click” is heard.

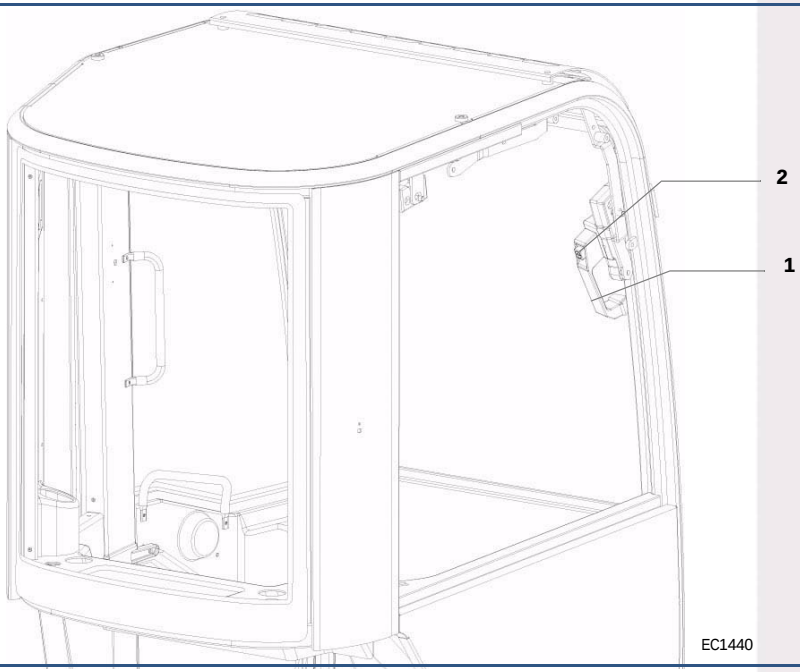

- The windshield can be lowered by following the same procedure in reverse order until the locking “click” is heard. At this point the windshield will be completely closed.

CAUTION

When closing the windshield, take care not to injure your fingers or your head.

https://truckmanualshub.com/

7.6.8 Opening of side windows

The right side of the cab is equipped with two sliding windows, each provided with a closing system (**1**) that allows the window to be closed in a locked position.

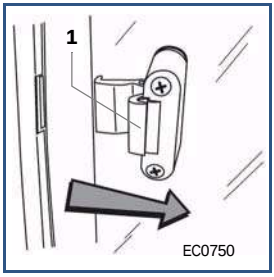

To operate either window:

- Squeeze the front and back part of the latch assembly together and slide the glass to the desired position.
- Release the latch. Allow the hook to engage with the special lock, securing the window in the desired position.

7.6.9 Ventilation and heating

The unit is located under the operator's seat.
The ventilation and heating systems make driving the compact excavator a comfortable job in summer or winter.
A three-speed fan installed inside the unit provides ventilation and fresh air.

Ventilation and heating of the cab are provided by a three-speed forced air fan, which is activated by a switch located on the left control panel.

- Turn the LH switch and raise to the desired speed.
- Turn the RH switch to adjust the temperature (left for cold air and right for warm air).

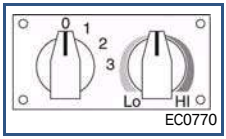

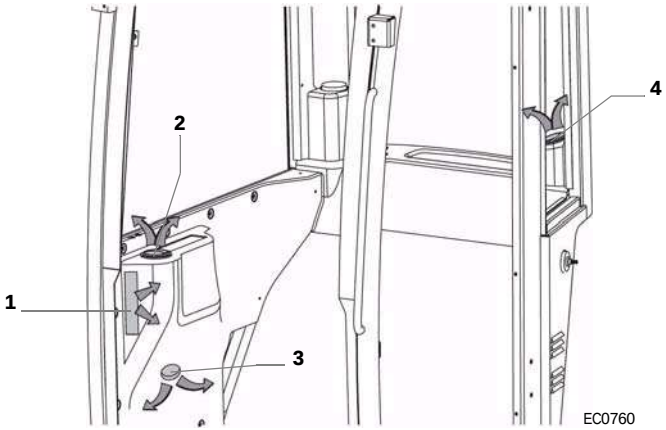

Two adjustable air vents (**1-2**) are provided to direct the airflow to the front windshield, as required, in order to keep the glass clear. A third adjustable vent (**3**) is provided to direct air to the bottom section of the cab. A fourth adjustable outlet (**4**) directs air to the back of the machine.

https://truckmanualshub.com/

7.7 Starting the engine

7.7.1 Inspections prior to starting

Carry out the inspections listed below: Neglecting any of the inspections may result in problems being experienced with the machine, including the hydraulic equipment.

Check the following items daily before beginning to work.

WARNING

- In order to perform the inspections, always park the machine on a level surface.
- Keep unauthorised persons away from the machine while inspecting it.
- Ensure that the engine has been shut down prior to performing any inspection or maintenance operations.
- Take a reading of the hour meter in order to ascertain whether it is time to perform any of the normal maintenance tasks indicated in the table on point 9.9.

1 - Checking the oil level in the engine oil sump.

Pull out the dipstick, wipe the oil off using a cloth and reinsert it.
If the level is low, add engine oil through the oil filler spout.

IMPORTANT
Use high-quality engine oil.
It is advisable to utilise the engine oil indicated in the applicable section.

CAUTION

Do not check the engine oil level immediately after stopping the engine: The engine oil is extremely hot and dangerous and it takes 30 minutes for all the oil to return to the oil sump. Inspect it either before commencing with work, or 30 minutes after the engine has been shut down.
Take care not to add too much engine oil.
Check the engine oil level 30 minutes after topping up.

IMPORTANT

Also check the oil on the dipstick to check for any deposits and the degree of viscosity.

WARNING

When topping up with oil, take care not to spill. If you spill any oil, wipe it up properly, as any traces of oil may start a fire or pose a risk of personal injury and equipment damage.

https://truckmanualshub.com/

2 - Checking the amount of coolant in the radiator.

Check to ensure that the water level in top-up reservoir 1 is enough to top up the radiator as required and that the level in the overflow tank 2 is at the specified level or better.
If the level is low, top up the tank with soft water (tap water).
In the event of total cooling system drainage, contact a specialised service technician.

EC1580

WARNING

In order to prevent any clogging of the radiator fins, do not use dirty water.
The radiator cap must not be removed while the coolant temperature is high. The coolant will be very hot and could cause injury if released before it cools.

3 - Checking the oil level in the hydraulic fluid tank

Ensure that the hydraulic fluid level registered is higher than the centre of the level gauge. If the level is low, add oil and pressurize the hydraulic fluid tank.
For topping up operations, see the appropriate section.

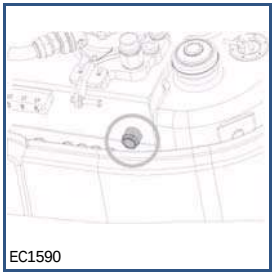
EC1590

WARNING

It is dangerous to inspect the oil level in the hydraulic fluid tank immediately after shutting down the engine. The hydraulic fluid is very hot.

https://truckmanualshub.com/

4 - Checking the fuel level in the fuel tank

Check the fuel level reading on the fuel gauge located on the dashboard. If the level is low, add diesel fuel.

WARNING

Do not expose the fuel to flames or sparks, as diesel fuel is an inflammable substance. This may cause a fire, with the risk of personal injury and machine damage.

IMPORTANT
The fuel gauge on the fuel tank does not move until the fuel level is almost full. This is for confirmation purposes only.

WARNING

In the case of any fuel spills, wipe it up properly: The presence of any fuel may constitute a fire hazard, with a consequent risk of personal injury and damage to equipment.

5 - Checking the fan belt

Pressing with the thumb midway between the alternator and crankshaft pulleys, check that the belt has 13mm of slack, and also check for any signs of cracking.

6 - Check to ensure that the tracks show no signs of cracks, breaks or excessive wear, and that the track tension is correct (see the chapter on maintenance for adjustment procedures).

7 - Check the equipment fitted to the digger boom pin in order to ensure that it has been properly installed and fixed in place, as indicated in the respective manufacturer's manuals. Also check the level of wear and inspect for any signs of oil leaks or accumulation of debris on the equipment, in which case immediate action must be taken to repair the leaks and remove the debris in order to avoid any machine breakdowns.

8 - Inspect the entire machine for any signs of leaks, even minor ones, since these may lead to machine malfunctions and breakdowns. All the fitted parts must be inspected, including: pipes and hoses, hydraulic jacks, pumps and motors and the engine cooling system.

https://truckmanualshub.com/

9 - Check the machine for any signs of worn or even missing parts. If so, replace or refurbish them prior to starting up the machine.

10 - Check the cleanliness of the machine so as to avoid any operating problems or even faults occurring while the machine is working. Remove any debris that may have accumulated while the machine was working (e.g.: soil, dust, stones, grass), especially in the drive-articulation areas. Inspect both the exterior and the interior of the driving position in order to avoid experiencing any manoeuvring problems while working.

11 - Checking the water separator

- The water is collected in the water separator, where the red float will indicate the presence of water.
- Remove the water separator element (**1**) by unscrewing it, empty it out and reassemble.

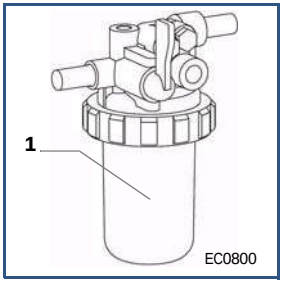

IMPORTANT
After cleaning or replacement, any air inside must be bled.

7.7.2 Engine starting procedure

Before starting the engine for the first time, familiarise yourself with the following 10 steps. Each control, gauge and indicator light involved in starting the engine and monitoring its status once it is running are listed in the order that they will be encountered.

1 - Fuel gauge

The fuel gauge indicates the approximate level of fuel remaining in the tank.

Prior to engine start-up, briefly turn the ignition key to the "RUN/ PREHEAT" position to check the fuel level displayed on the gauge.

With the key in this position, a warning light on the dashboard will come on if the fuel level is low.

NOTE: The vehicle should be refuelled at the end of each workday in order to reduce the condensation of moisture inside the fuel tank, which is harmful to the fuel injection system.

https://truckmanualshub.com/

2 - Low Fuel Warning Light

This warning light (**1**) will switch on to alert the operator that the fuel tank requires refilling. If this warning light turns ON during operation, refill the fuel tank immediately. Refilling the fuel tank will turn the warning light OFF when the engine is restarted.

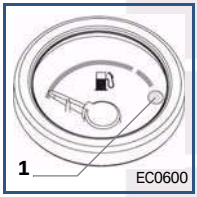

3 - Throttle Lever

The throttle control lever controls the engine speed and is located on the right hand side of the operator's seat.

- Moving the lever forwards (**2**) reduces engine speed to low idle.
- for engine starting and initial warm-up, move the throttle lever to its mid-range position (**3**).
- Move the lever backwards for maximum engine speed (**4**).

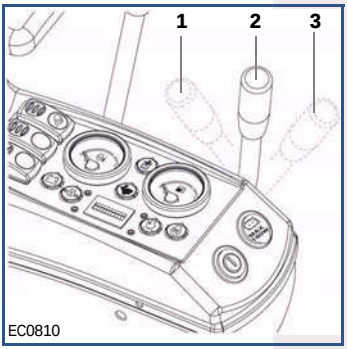

4 - Ignition key Switch

The ignition key switch and other locks used on this vehicle are NOT keyed alike. Three separate keys are required for each vehicle.

- One key will fit the ignition key switch.
- A second key will unlock or lock the fuel tank filler cap.
- The third key will unlock or lock the engine compartment cover and all the other doors on the machine.

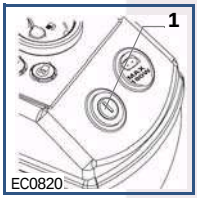

https://truckmanualshub.com/

The ignition key switch has three positions - **"OFF"**, **"RUN / PREHEAT"** and **"START"**.

- "OFF" position:
In this position, power to all electrical equipment is disconnected and the key can be inserted or removed.

- "RUN / PREHEAT" position:
When the key is inserted and turned to this position, the following electrical circuits are energized:
- dashboard lights and gauges,
- joystick servo relays,
- glow plugs,
- horn,
- front working light
- Closed cab and cab equipment (optional on the ES 350 ZT).

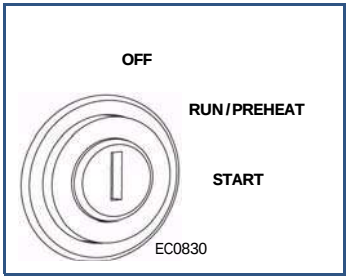

- "START" position:
When the key is turned to this spring-loaded position, the engine starter motor will engage. When the engine starts, release the key and it will return to the "RUN/PREHEAT" position.

IMPORTANT
The engine is fitted with an automatic device that disengages the starter after 8-10 seconds of activity to prevent overheating of the starter motor. Turn the key to the OFF position, wait 10-15 seconds and then repeat the start operation.

5 - Pre-heater

WARNING

The compact excavator's engine may only be run on the type of fuel indicated in the "Technical Specifications" section.

The glow plugs are electronically controlled, and are energized whenever the ignition key is turned to the "RUN/PREHEAT" position. An indicator light on the dashboard will come on whenever power is applied to the glow plug circuit.

EC0430

After a period of 5 to 10 seconds, the glow plugs will be heated and power to the circuit will be cut automatically.

- If the ambient air temperature is 10°C or lower, it is necessary to wait for the glow plug indicator lamp to go out before engaging the starter to start the engine.

https://truckmanualshub.com/

- If the temperature is above 10°C, or the engine is warm following recent use, the starter can be engaged immediately.

After a cold engine start, run the engine at the mid-range throttle position to allow the engine and hydraulic system to warm up (without load) to normal operating temperature. As the various systems warm up, check all dashboard lights and gauges for any indication of a condition requiring any maintenance or service tasks to be performed.

6 - Engine Oil Pressure Warning Light

When starting up the engine, this warning light will come on when the ignition key switch is turned to the "RUN/PREHEAT" position". The light will go OFF within seconds after engine start-up.

EC0420

IMPORTANT
in the case where the indicator light DOES NOT light up when the ignition key switch is set to the "RUN/PREHEAT" position, DO NOT continue attempting to start the engine. If the indicator light DOES NOT go off after start-up, immediately shut down the engine. The cause of the indicator light malfunction must be identified and eliminated before the vehicle can be used once again.

7 - Alternator Charging Light

When starting the engine, this warning light will come on when the ignition key switch is turned to the "RUN/PREHEAT" position". The light will go OFF within a few seconds after engine start-up.

EC0400

IMPORTANT
in the case where the indicator light DOES NOT light up when the ignition key switch is set to the "RUN/PREHEAT" position, DO NOT continue attempting to start the engine. If the indicator light DOES NOT go off after start-up, immediately shut down the engine. The cause of the indicator light malfunction must be identified and eliminated before the vehicle can be used once again.

8 - Air filter warning light

This warning light comes on to indicate that the air filter requires maintenance. Refer to the "Maintenance" section of this manual for the proper service procedure.

EC0410

https://truckmanualshub.com/

9 - Coolant Temperature Gauge

This gauge (**6**) indicates the temperature of the engine coolant. Normal engine operating temperature is between 80°C and 95°C.

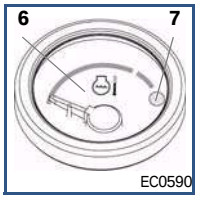

10 - Coolant Temperature Warning Light

This warning light (**7**) will come on and the engine will shut down if the operating temperature exceeds 115°C.

IMPORTANT

in the case where the high engine temperature does not trigger automatic shutdown of the engine, the cause of the overheating must be identified and eliminated before using the vehicle.

7.7.3 Jump starting procedure

If the engine does not start when following the "Engine Starting" procedure, check that the battery is properly charged. Replace the battery if necessary.
If the battery charge is low, use the following procedure to start the engine.

CAUTION

If the vehicle has to be jump started directly on the starter motor or its solenoid, protect your face and hands with a mask and gloves. There is a risk of electric arcing because of the high starting current, with the risk of emission (ejection) of red-hot splinters from the contact point.

CAUTION

To avoid personal injury or death when jump-starting the vehicle, ensure that the two vehicles are not touching each other.
Keep sparks, flames, and all smoking materials away from the battery.
Lead acid batteries generate explosive gases when charging and when the engine is running. Wear safety glasses when you work near a battery.

The vehicle used to jump-start must be equipped with a 12V negative earth system and a battery of at least 500 CCA (cold start amperes).

IMPORTANT

Before jump-starting, be sure the battery is not frozen. If the liquid inside the battery is frozen, remove the battery from the vehicle and wait until the liquid thaws before jump-starting or charging the battery.

https://truckmanualshub.com/

In order to access the battery compartment, raise the rubber footplate (located in front of the driving seat), raise the metal trap door and carry out the jump-start procedure described below.
The following procedure should be followed to jump start the engine:

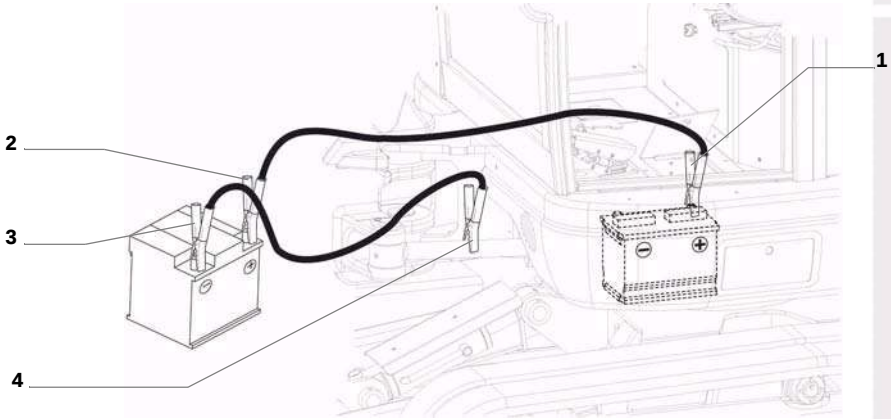

EC1430

1 - Connect one end of the positive (+) jumper cable to the positive (+) terminal of the flat battery (**1**) in the vehicle.

2 - Connect the other end of the positive (+) jumper cable to the positive (+) terminal of the booster battery (**2**).

3 - Connect one end of the negative (-) jumper cable to the negative (-) terminal of the booster battery (**3**).

4 - Connect the other end of the negative (-) jumper cable to an earthed point (**4**) on the vehicle.

5 - Start the engine.

6 - Once the engine is running, remove the jumper cables in the opposite sequence to the above, following steps 4, 3, 2, and 1.

https://truckmanualshub.com/

7.7.4 Inspections prior to starting work

- In order to carry out the inspections, move the machine to a large area that is free of any obstacles and operate slowly. Do not allow anyone to stand in the vicinity of the machine.
- Always fasten the seat belt.
- Check the functioning of the drive system, steering and brakes, as well as the working equipment control system.
- Check for any faults, such as noises coming from the machine, vibrations, heat, odours and instruments. Also check to ensure that there are no oil or fuel leaks.
- If any faults are encountered, arrange for immediate repairs.
- Before driving the vehicle or commencing with any operations, check to ensure that the control cutout lever has been lowered correctly.

DANGER

The control devices must only be activated from the driving seat with the safety bars lowered.
ALWAYS FASTEN THE SEAT BELT AND LOWER THE SAFETY BARS.

Precautions when moving forwards or in reverse

- Before commencing any movement, check that there are no people or obstacles in the surrounding area.
- Before commencing any movement, sound the horn to warn everyone in the immediate vicinity.
- Only ever operate the machine from the driving seat.
- Do not allow anyone other than the operator to climb onto the machine.
- Always lock the door and the windows of the cab in either the open or the closed position (if fitted).
- In areas where there is a danger that any items thrown up may invade the cab, check that the door and windows are locked in the closed position (if fitted).
- If there are any blind spots behind the machine, place a person there to signal the operator. Take particular care not to bump into other machines or people when turning or rotating the machine.
- Always be sure to take the above precautions, even when the machine is fitted with rear view mirrors.

https://truckmanualshub.com/

7.8 During operation

DANGER

The control devices must only be operated from the driving position.
ALWAYS FASTEN THE SEAT BELT.

Check for the proper operation of all controls (travel levers and control levers) for the machine and any accessories fitted.

Never use the bucket to lift persons or as a work platform.

Never transport other persons.

Avoid making sudden, sharp movements.

When working on uneven ground, always proceed slowly and operate with the bucket as low as possible.

Carefully check the conditions of the area in which you will be working, in order to ascertain whether there are any anomalies in the terrain that could make the work hazardous.

If possible, level the ground where the machine will be used, prior to starting work.

Note the position of any overhead or buried pipes or electrical cables, as well as any open or filled trenches.

When traversing, move carefully near the edge of excavations or trenches, and exercise extreme caution in cramped working spaces, or when working on uneven or steeply sloping ground.

If you have to work indoors or in cramped spaces, ensure that the area is well ventilated.

The exhaust gases of the engine can be fatal.

Never try to start or use the machine unless you are sitting in the driver's seat.

Only use the controls when you are sure of the movement the machine will make and do not take any chances if you're unsure, especially in obligatory work conditions or in the presence of dangers for your safety or the safety of others.

Do not rest your feet on the control pedals (LH and RH travel control, swinging, PTO pedals) when not in use, but rather rest your feet on the floor, or alternatively disable the control, swinging and PTO pedals by means of their respective guards.

Always fasten your seat belt before starting the machine. Familiarise yourself with location and function of all pedals, control levers, instruments and luminous indicator lights.

Drive slowly and keep the bucket as low as possible when moving over uneven ground.

Exercise extreme caution when negotiating any depressions, conduits or railway lines.

https://truckmanualshub.com/

Do not use the bucket as a ram.

When working on slopes, always keep the bucket lowered.

Never stand under a raised bucket.

IMPORTANT
On early morning start-up with a cold engine, do not accelerate sharply or rev the engine to the maximum . Before revving up to maximum, wait for the coolant temperature gauge to rise up to about 1/3 of the acceptable range (green section).

7.8.1 With the engine running

Precautions for use

Starting the engine

Carry out the following checks before starting the engine in order to commence with daily operations.

- Remove any dirt from the windshield in order to ensure good visibility.
- Remove all dirt from the working lights and check to ensure that they switch on properly.
- Check the levels of coolant, fuel and oil in the engine sump, check whether the air filter is blocked and check for any damage to the electrical system.
- Check that no mud or dirt has accumulated around any of the moving parts and ensure that the controls are functioning properly.
- Adjust the driver's seat to a comfortable position that facilitates machine operation, and check for any signs of damage or wear on the seat belt and its locking mechanism.
- Check that the warning lights are working properly and check the angle of the headlights and working lights.
- Prior to starting up the engine, fasten the seat belt and lower the control cutout lever.
- Check that there are no people or obstacles on, under or anywhere in the vicinity of the machine.

Precautions for starting the engine

- Start the engine and operate the machine only from the driving seat. Never attempt to start the engine by short-circuiting the starter motor. This could cause a fire, as well as resulting in serious or fatal injury.
- When starting the engine, sound the horn to warn everyone.
- Do not allow anyone other than the operator to climb onto the machine.

https://truckmanualshub.com/

7.9 Stopping the engine

To stop the engine, proceed as follows:

- Park the vehicle on a level surface.
- Lower the dozer blade and boom assembly, as well as any accessories that may be fitted to it, to the ground.
- Move the throttle lever fully forward, reducing engine rpm to low idle.
- Allow the engine to idle for 4-5 minutes in order to permit the temperature to stabilise.
- Turn the ignition key switch to the OFF position and remove the key.
- Raise the servo-control cutout lever to activate the control lock, unfasten the seat belt and exit the vehicle using the handholds provided.

In the event that the machine needs to be stopped on an incline: block the tracks by placing wedges perpendicular to the direction of slope, dig the teeth of the bucket and the dozer blade into the ground and then proceed as described previously.
If you need to park on a public road, signal the obstacle in accordance with the provisions of the local Highway Code (lighting signal fires, road works signs, etc.).

DANGER

Do not get off the machine with the booms and the bucket raised.
NEVER leave the machine unattended with the ENGINE RUNNING.
NEVER leave the lifting booms IN THE RAISED POSITION .

IMPORTANT
If the engine fails to shut down when the start key is set to the OFF position, it must be Shut down manually by following the procedure shown below.

7.9.1 Manual engine shut-down

To shut down the engine manually, proceed as follows:

- Open the engine compartment cover fully.
- There is a manual engine shut down lever (**1**), situated on the fuel injection pump. Push the lever to the LEFT and holdit down until the engine comes to a complete standstill.
- Close the engine compartment cover.

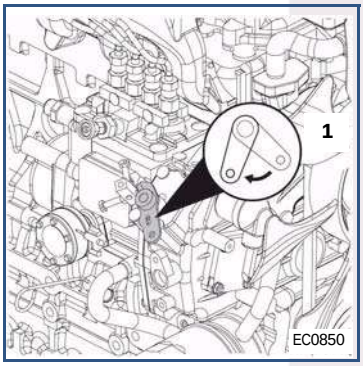

IMPORTANT
Do not use the machine again until the key-operated engine shutdown system has been properly repaired. Contact the local Eurocomach dealer in case of need.

https://truckmanualshub.com/

7.10 Refuelling

Fill the fuel tank at the end of each working day. This will assist in preventing the formation of condensation in the tank.

To prevent dirt, water and other contaminants from entering the fuel system, proceed as follows:

- clean the area around the filler spout before unscrewing and removing the tank filler cap
- add diesel fuel from clean containers through a filtering funnel.
- the use of diesel fuel additives is not recommended. Follow the instructions on the product label when using any fuel additive.

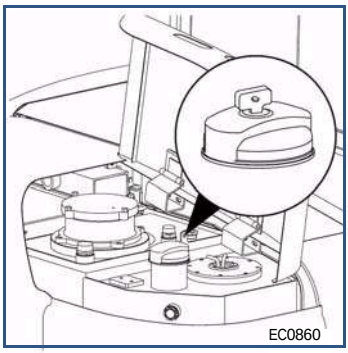

7.11 Throttle Lever

This lever controls machine acceleration (**1**).
The lever is connected by cable to the engine injection pump and it controls the working speed. When in the rest position (throttle lever fully forward), the engine is running at idle speed.

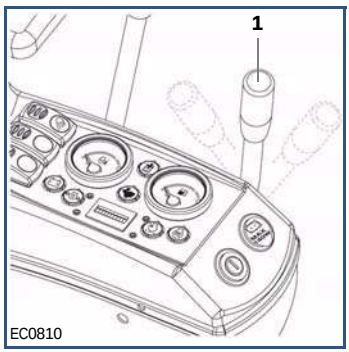

https://truckmanualshub.com/

7.12 Machine movement

Two levers control the vehicle's FORWARD and REVERSE motion, as well as LEFT and RIGHT steering and braking. The lever on the left controls the left track drive and the lever on the controls the right track drive.

IMPORTANT
To maintain proper control of the compact excavator, always move slowly and smoothly. Operators unfamiliar with tracked vehicles should initially operate the vehicle at 50% of its maximum travel speed until they master the control function and feel confident on the vehicle.

- With both levers in the NEUTRAL position, both tracks are motionless, and hydraulic braking is applied.
- Whenever either lever is moved from its NEUTRAL (N) position, the brake for the respective track drive is released and movement commences.
- Whenever either lever is returned to its NEUTRAL position, movement of the respective track drive ceases and braking is reapplied.

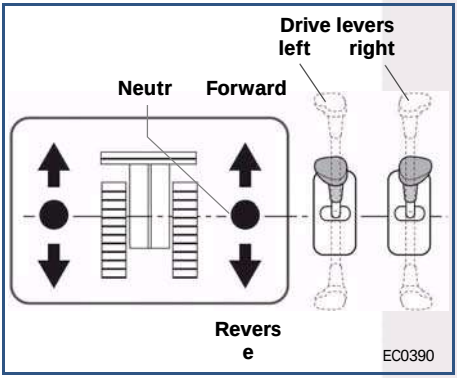

IMPORTANT
Unless specifically noted, all reference to direction in this manual, including travel and turn instructions, are deemed to be from the operator's point of view and with the dozer blade located in front of the operator.

IMPORTANT
The travel control levers operate the track drive motors mounted on the undercarriage.
When the operator's position is swung through 180° in relation to the dozer blade, the travel control lever functions will also be the opposite to those described.

IMPORTANT
Both the hand travel control levers have projecting pedals near the bottom of each lever.
These pedals allow the driver to operate the tracks without taking his hands off the joysticks; It is not advisable to use the pedals to control vehicle travel during loading and unloading operations using ramps, or in any dangerous situations where the sensitivity of the hands is required to control the vehicle.

IMPORTANT
The parking brake always acts like a hydraulic service brake, except that it is engaged manually whenever the control cutout lever is raised. In fact, when the latter is raised, the machine is not able to carry out any movement whatsoever.

https://truckmanualshub.com/

When moving the machine, keep it configured as follows:
1 - Fold the boom arms. Raise them 40 to 50cm off the ground.
2 - Raise the dozer blade to its upper limit.
3 - Check the direction in which you want to go. Move the left and right track drive levers forwards to move forwards, or backward to move in reverse.

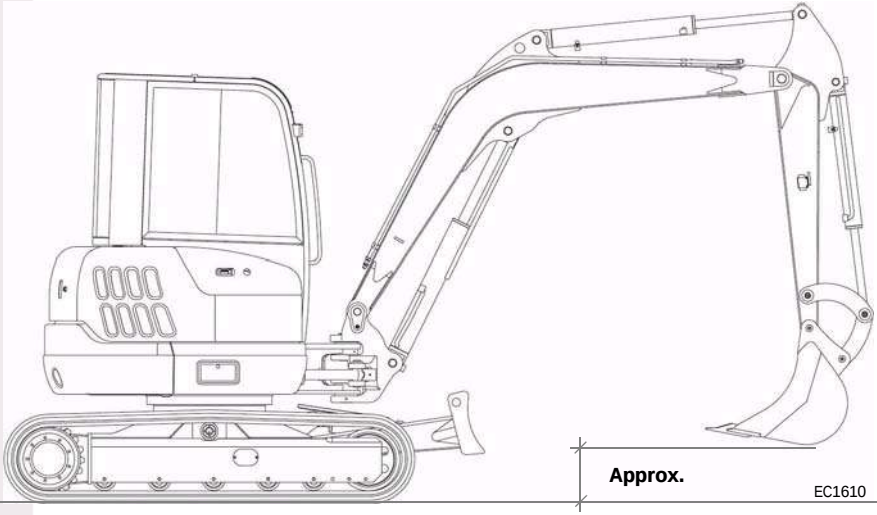

https://truckmanualshub.com/

7.13 PARKING THE MACHINE

Drive the machine to an area with a firm surface and level the area if necessary.
Lower the bucket to the ground.
Proceed with shutting down the engine in accordance with the procedures specified in the point on “Stopping the engine” in section 7.9.
Then turn the ignition to the OFF position and remove the key.
Pull the control cutout lever (upwards), ensuring that it comes up all the way.
Close all the windows (if fitted).
Close and lock the cab access door (if fitted), as well as all of the following covers:

- RH side cover;
- LH side cover;
- engine compartment cover.

IMPORTANT
The swivel motor is equipped with a negative braking system, so that when the thermal motor is shut down, the turret cannot be rotated.

WARNING

Wherever possible, avoid parking the machine on an incline.

Should it be unavoidable to park the machine on an incline, in addition to the above,

- ensure that the bucket teeth are dug into the ground;
- block both tracks appropriately (using wedges), as shown in the figure.

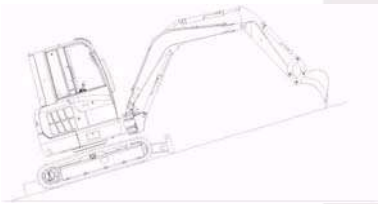
EC1830

IMPORTANT
Always ensure that electrical components in the cab are protected against bad weather by ensuring that all windows, the sunroof and the access door are properly closed.

https://truckmanualshub.com/

7.13.1 Forward and reverse travel

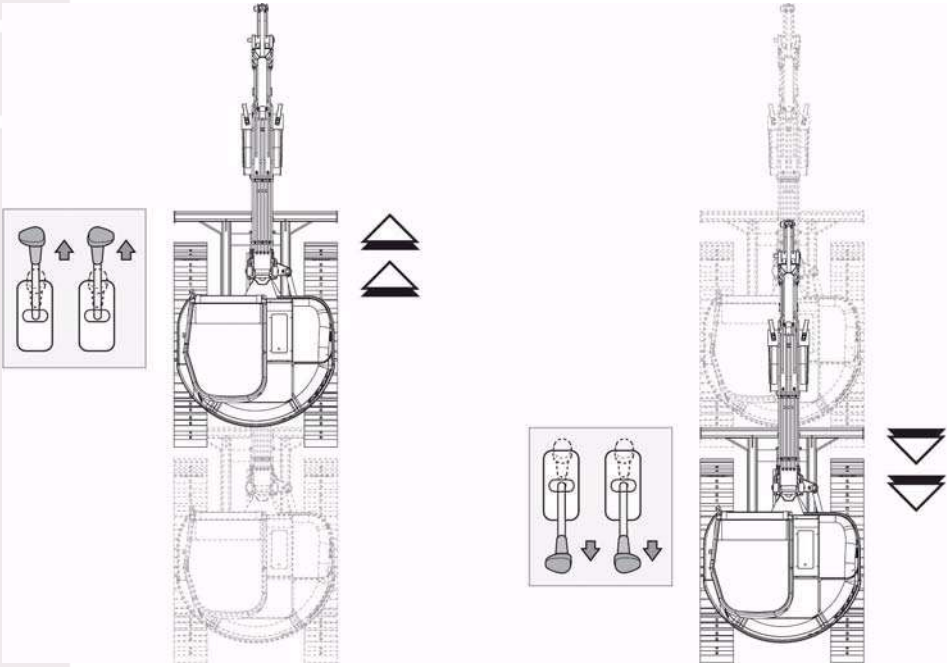

EC0140

To begin FORWARD travel, move both control levers forward equally. As additional pressure is applied on the control levers, the machine's speed will increase. To STOP forward travel, slowly return both controls to their NEUTRAL (N) position.

NOTE: Any forced, quick return of either travel control lever to its NEUTRAL position will cause an immediate braking response from the respective track drive.

To travel in REVERSE, slowly pull back on both control levers. The further the controls are moved, the more the speed of movement will increase. To STOP reverse travel, slowly return both controls to their NEUTRAL (N) position.

https://truckmanualshub.com/

7.13.2 Pivot turns

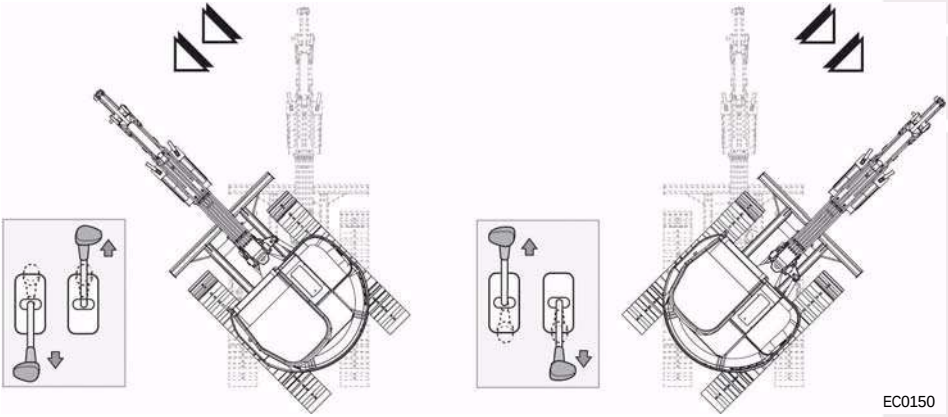

- To pivot the vehicle to the LEFT on its axis, push the right control lever forward while pulling the left lever to the rear.
- To pivot the vehicle to the RIGHT on its axis, push the left control lever forward while pulling the right lever to the rear.

Spin turning

Pushing the left track drive lever forward and right track drive lever backwards rotates the machine to the right. In order to spin to the right, push the control levers in the opposite direction to the above.

Pivot or spin turns cannot be carried out at high speed.
Executing spin turns on a concrete surface may damage the rubber tread.

https://truckmanualshub.com/

7.13.3 Turning while moving forward

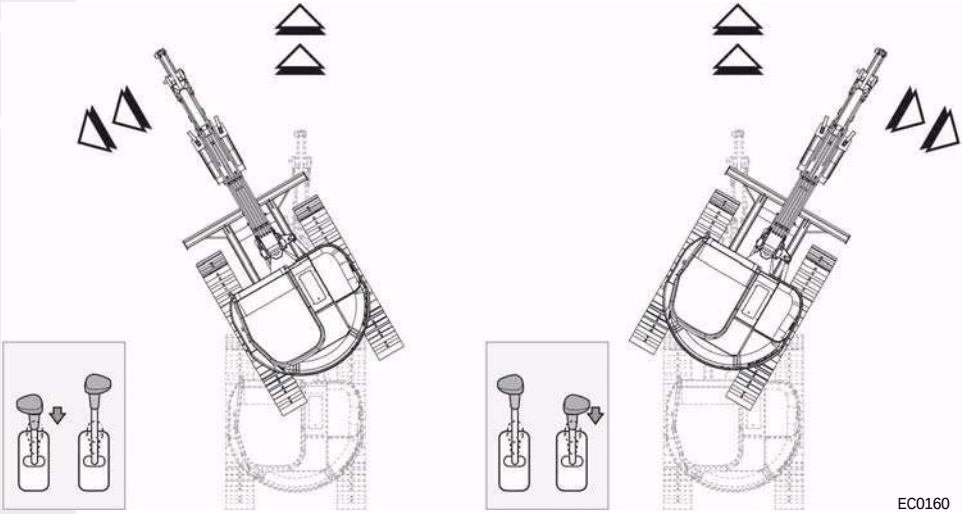

With the vehicle travelling straight AHEAD, both control levers will be pushed forward equally.

- To turn LEFT while travelling FORWARD, reduce forward pressure slightly on the left hand lever, thus slowing down the left track. The vehicle will turn toward the LEFT.
- To turn RIGHT while travelling FORWARD, reduce forward pressure slightly on the right hand lever so that the vehicle will turn toward the RIGHT.

https://truckmanualshub.com/

7.13.4 Turning while reversing

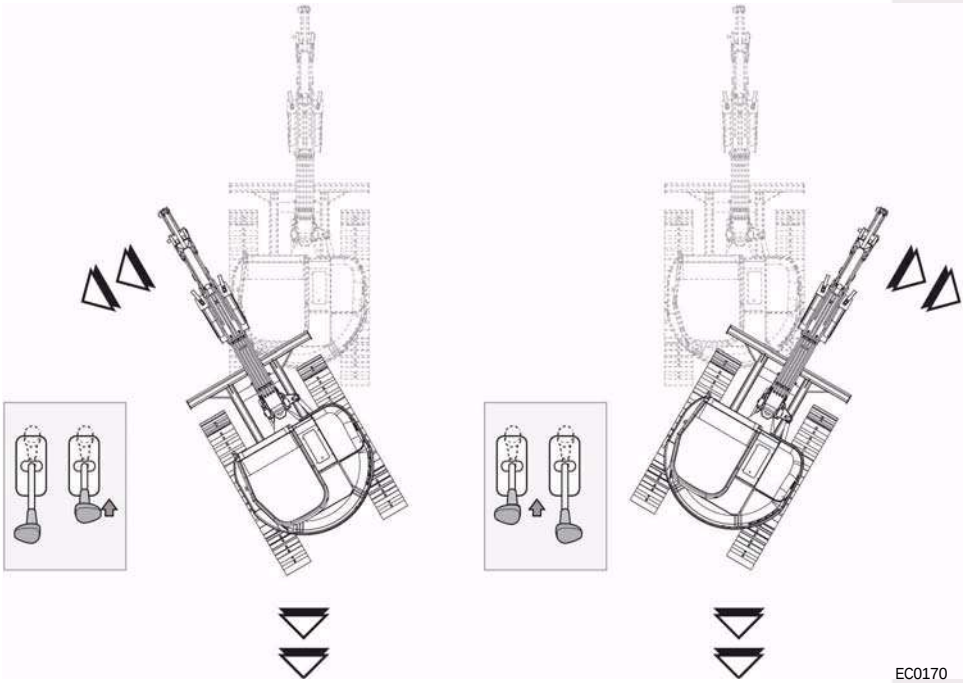

With the vehicle moving straight in REVERSE, both control levers will be pulled to the rear equally.

- To turn LEFT while REVERSING, reduce rearward pressure slightly on the right hand lever, thus reducing the speed of the right track. The vehicle will turn toward the LEFT.
- To turn RIGHT while REVERSING, reduce rearward pressure slightly on the left hand lever so that the vehicle will turn toward the RIGHT.

https://truckmanualshub.com/

PRECAUTIONS WHEN WORKING WITH RUBBER TRACKS

When moving, do not ride over or turn on any sharp edges or steps.

If you drive over or turn on a projecting edge or on steps, the machine will place additional strain on the rubber track, splitting or cutting the treads of the rubber track and the inner steel cord.

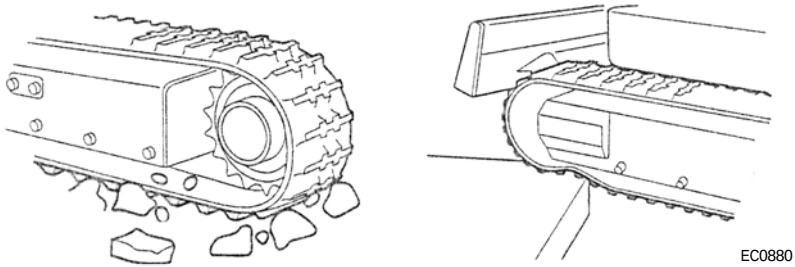

- **Prevent any foreign bodies from getting into the rubber track**as they may cause twisting or cuts.

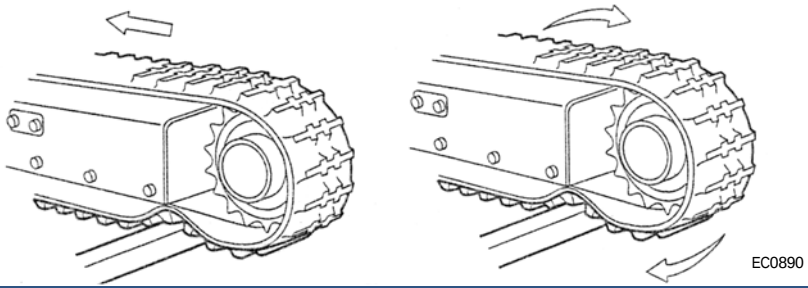

- Do not turn sharply on high-friction road surfaces such as concrete roads.
- If any fuel or hydraulic fluid is spilt onto the rubber track, it must be cleaned off.
- Do not operate on the beach. (Internal metal parts will rust due to salt corrosion.)
- All of the above precautions are applicable to both rubber tracks and the optional steel tracks.

https://truckmanualshub.com/

WARNING

Exercise extreme caution when operating a machine with rubber tracks. Rubber treads are no more stable than steel ones due to their flexibility.

CAUTION

Rubber tracks can also easily slip on iced or snow-covered surfaces. Exercise extreme caution when travelling and working in these conditions.

WARNING

Driving or slewing over projecting or other similar edges causes the rubber track to slacken, which will probably cause it to come off the guides or cut the inner steel cord.
Driving and slewing with the track roller banked against the rubber tread may cause the rubber track to come off the guides.

https://truckmanualshub.com/

7.14 Fast drive mode

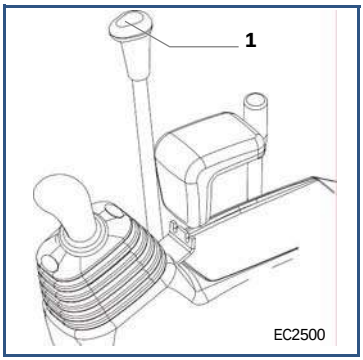

This vehicle is equipped with a system that, if engaged, allows an increase in the speed of travel, both forwards and in reverse.

The upper pushbutton-switch (**1**) on the dozer blade lever the operation of the travel speed regulation system.

The system is engaged by pressing the bottom pushbutton-switch on the dozer blade lever.

An indicator light on the dashboard will light up when the system is engaged. The system can be engaged either at standstill or while in motion. Pressing the activation button again will disengage the system, and the driving speed returns to normal.
There is retention in the circuit.

EC0910

7.15 “Automatic Shift Down” device

The automatic travel-speed changing device automatically sets the hydraulic motor to suit the working conditions; when the machine is running at the second speed, it automatically shifts down to first as the need for power increases, avoiding the machine stopping. This device is always engaged (the operator can however lock the machine in first speed).

7.16 Straight-line travel mode

The vehicle is equipped with a device that allows it to continue travelling in a straight line regardless of which other functions are activated. The vehicle is normally able to travel in a straight line either forwards or in reverse, even if another of its hydraulic functions is activated simultaneously.
The straight-line driving device is integrated with the machine’s hydraulic system. It is permanently engaged and does not have to be switched on or off.

https://truckmanualshub.com/

7.17 Operating the digger boom

CAUTION

The joystick controls operate the vehicle's boom, dipper stick, bucket and turret swing.

NOTE: Certain boom and dipper stick movements are equipped with a shock-damping feature that slows down the hydraulic cylinder travel when nearing the end of its run. This minimises the shock load to the vehicle during operations.

The functions of both controls are locked out when the servo-control cutout lever is raised to allow entry or exit from the vehicle.

To enable both joysticks, the control cutout lever must be fully lowered (**1**), and the interlock control lever pushed to the end of its run, in the UNLOCK position (**2**).

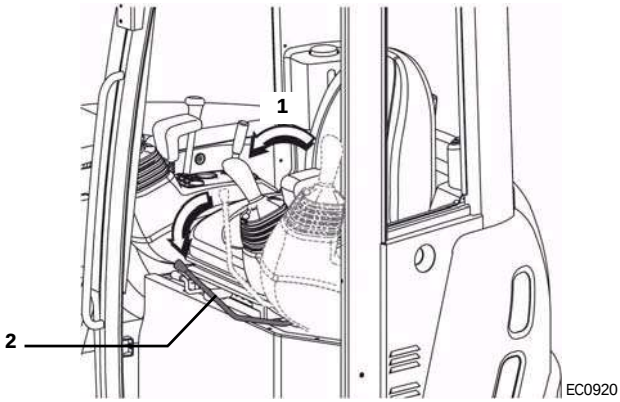

IMPORTANT
DO NOT leave any of the hydraulic controls engaged after the cylinder reaches its limit stop in any direction. This practice forces the hydraulic fluid to pass through the main relief valve, causing a rapid build-up of heat in the system, resulting in overheating and loss of power, in addition to reducing component life.

https://truckmanualshub.com/

7.17.1 Left Joystick

The left joystick controls the extension and retraction of the dipper stick, as well as the RH and LH rotation of the digger boom and turret.

- moving the left joystick to the LEFT will swing the turret to the left (**1**)
- moving the left joystick to the RIGHT will swing the turret to the right (**2**)
- pulling the left joystick BACKWARDS will lower the dipper stick (**3**)
- pushing the left joystick FORWARDS will raise the dipper stick (**4**).

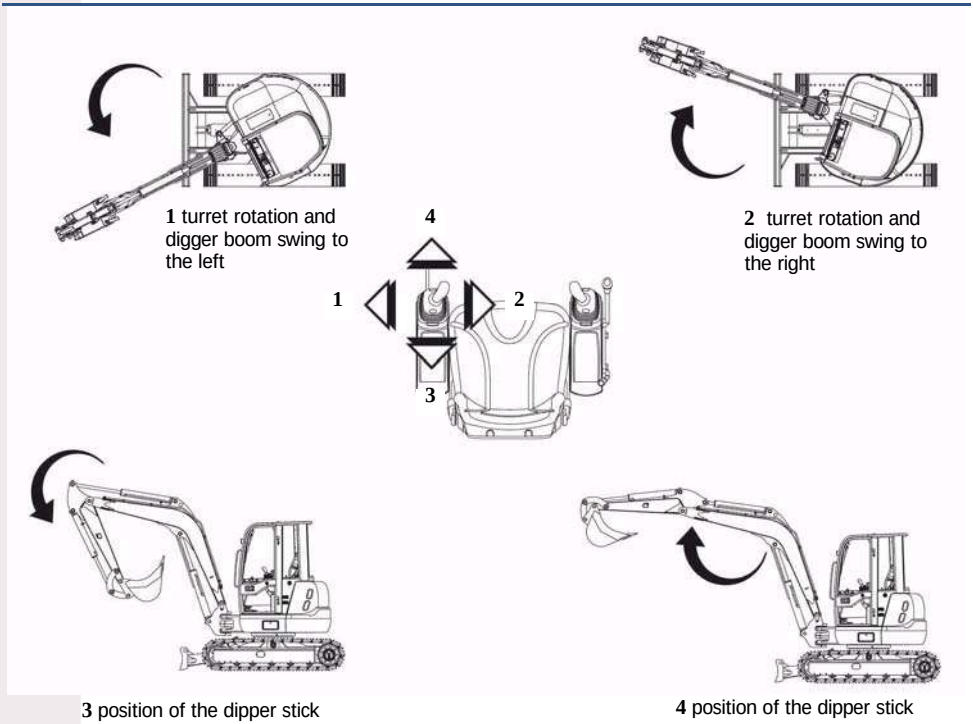

NOTE: the button for engaging Fast-drive Travel mode is located at the top of the left joystick.

https://truckmanualshub.com/

IMPORTANT (For ES 350 ZT only)
When the joystick is in the neutral position (centre), the turret rotation brake is engaged. This is an hydraulic brake that is permanently engaged during normal machine operation. The parking brake, instead, is a negative mechanical type of brake and is engaged manually when the control cutout lever is raised, or when the engine is being shut down.

IMPORTANT (For ES 400 ZT only)
The swivel service and parking brakes are of the negative mechanical type and are engaged automatically when the left hand joystick is in the rest position (central). As soon as the joystick is moved the brake is disengaged and the turret is then free to rotate.

https://truckmanualshub.com/

7.17.2 Right joystick

The right joystick controls the raising and lowering of the digger boom and controls the movement of the bucket.

- moving the right joystick to the LEFT will tilt the bucket to the closed position (**1**)
- moving the right joystick to the RIGHT will tilt the bucket to the open position (**2**)
- pushing the right joystick FORWARD will extend the digger boom (**3**)
- pulling the right joystick BACKWARD will retract the digger boom (**4**).

.

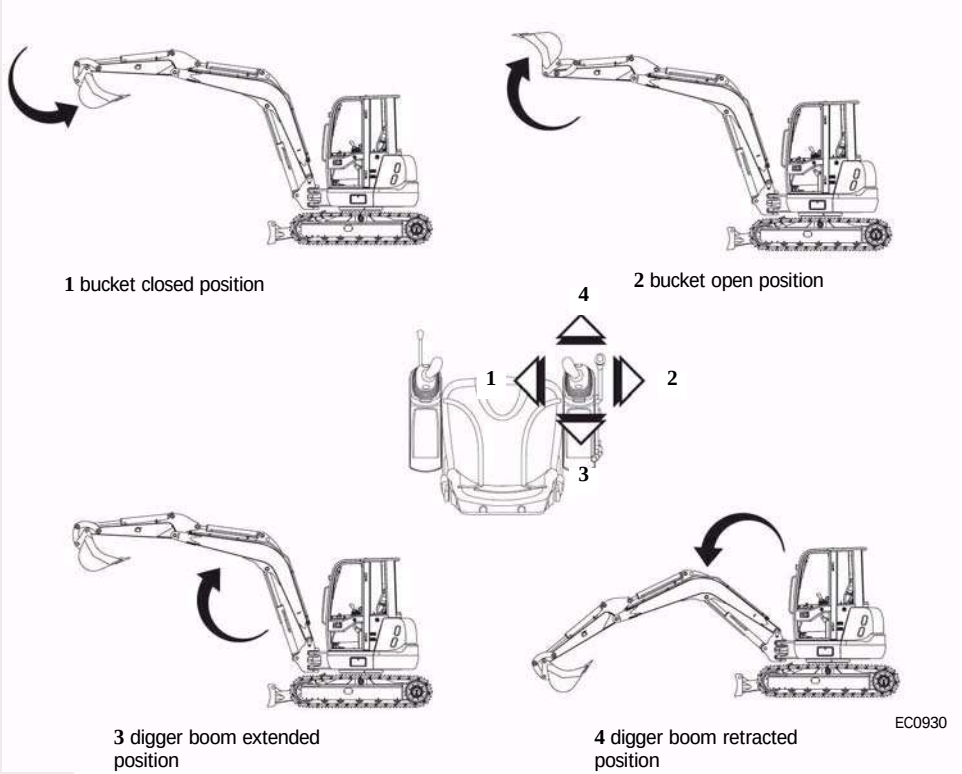

1 bucket closed position

2 bucket open position

3 digger boom extended position

4 digger boom retracted position

NOTE: the horn button is located at the top of the left joystick handgrip.

https://truckmanualshub.com/

7.18 Boom swing pedal

The right control pedal is used to swing the boom either left or right. To operate the pedal control:

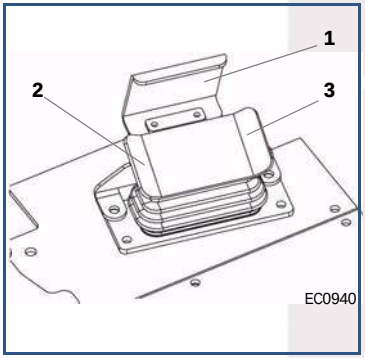

- Lift the right pedal safety guard (**1**).
- Press on the left side of the pedal (**2**) to swing the digger boom to the left.
- Release the pedal when the boom reaches the desired position, which may be up to 50° to the left of its centreline position.
- Press the right side of the pedal (**3**) to swing the digger boom to the right.
- Release the pedal when the boom reaches the desired position, which is up to 85° to the right of its centreline position.

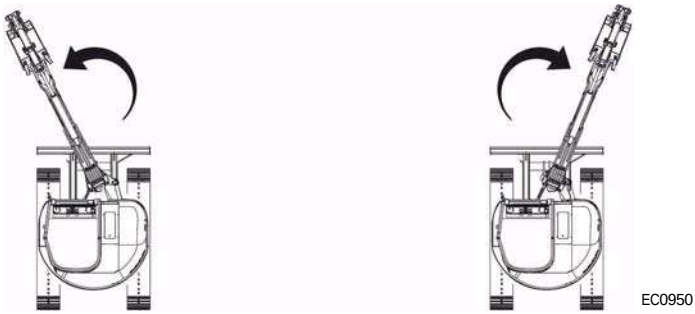

2 pressing the pedal to the LH side swings the digger boom to the LH side.

3 - pressing the pedal to the RH side swings the digger boom to the RH side.

IMPORTANT
When either the shift or the task has been completed, lower the pedal guard (**1**) to prevent unintentional or accidental swinging of the digger boom.

NOTE: The hydraulic system is equipped with a shock absorber that reduces the speed of the boom's travel when the cylinders approach their limit stops.

https://truckmanualshub.com/

7.19 Dual-action auxiliary hydraulic control

The auxiliary hydraulic system may be equipped with two operating modes: standard mode (single-action) and dual-action mode.

The standard auxiliary hydraulic system provides a continuous flow of hydraulic fluid to the accessories (e.g. demolition hammer) through a single action circuit.

The dual-action auxiliary hydraulic system provides pressure alternately to one of two inlets.

The hydraulic accessories are connected to two mounting blocks (**1**) fitted on the two sides of the digger boom.

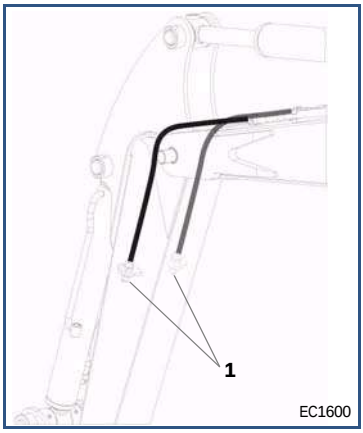

EC1600

Standard mode - Single Action Circuit

Standard operating mode: Flow occurs in one direction only.

The auxiliary hydraulic circuit is able to provide a hydraulic accessory with a fluid flow rate from a minimum of 50 l/min to a maximum of 100 l/min. Set the fluid flow-rate using the throttle lever; if the demolition hammer is being used, the manufacturer's recommended flow rate should not be exceeded, since the reciprocating motion and pulses caused in the hydraulic system by the hammer are detrimental to the system.

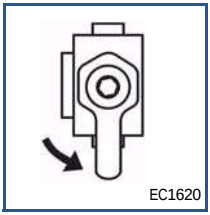
EC1620

To operate the attachment:

1 - Raise the LEFT pedal guard (**2**).

2 - Press and hold down the REAR section of the pedal (**3**) to provide a hydraulic fluid flow to the accessory line connected to the left side coupler on the dipper stick.

3 - Release the pedal to stop the flow.

4 - No function is associated with the front (**4**) of the auxiliary hydraulic control pedal when operating in Standard Mode.

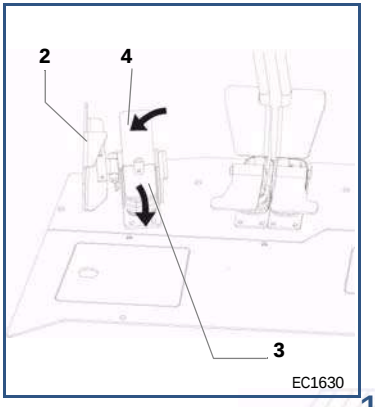

EC1630

https://truckmanualshub.com/

NOTE: DO NOT keep the RIGHT side of the pedal (**4**) depressed for extended periods. The hydraulic system will run needlessly and the system may overheat.

IMPORTANT
When the shift or job is finished, lower the cover of the Pedal lock (**2**) to prevent unintentional or accidental activation of the accessory.

Dual-action Circuit

Pushing the auxiliary hydraulics selector valve lever to position **5** engages dual-action mode with reversible flow control.

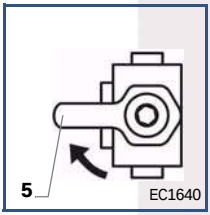

The accessories' lines are connected to the mounting blocks located on either side of the digger boom.

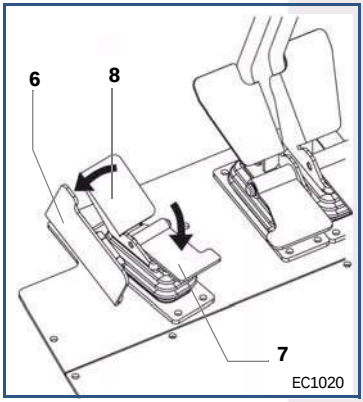

To operate the attachment:

1 - Raise the LEFT pedal guard (**6**).

2 - Press and hold down the REAR section of the pedal (**7**) to provide a hydraulic fluid flow to the accessory line connected to the left side coupler.

3 - Press and hold down the FRONT section of the pedal (**8**) to provide hydraulic fluid flow to the accessory line connected to the right side coupler.

4 - Release the pedal to stop hydraulic flow to either line.

IMPORTANT
When the shift or the task has been completed, return the cover of the pedal to the starting position to avoid unintentional or accidental activation of the accessory.

https://truckmanualshub.com/

7.20 Dozer blade adjustment lever

This lever controls the raising/lowering of the dozer blade.

7.20.1 Dozer blade

When the vehicle is to be moved in any direction, raise the dozer blade by pulling back on the lever (**1**). When parking the vehicle, lower the blade by pushing the lever forwards (**2**).
For backfilling operations, the dozer blade must be lowered to ground level by moving the control lever forwards (**2**).

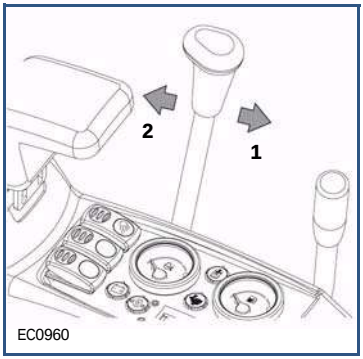

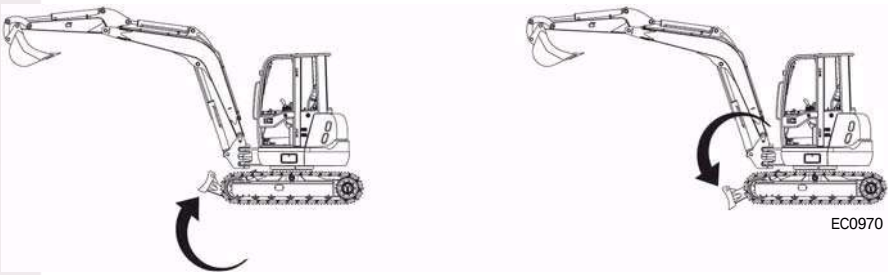

1 dozer blade raised position

2 dozer blade lowered position

IMPORTANT
Before starting any digging operation, LOWER the dozer blade until it is completely touching the ground.

7.21 Working light

A working light is mounted on the left side of the digger boom. To turn on the light (ON position), press the rocker switch bearing the working light symbol. To turn off the light (OFF position), press the other side of the switch.

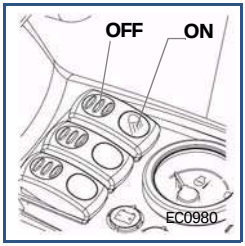

https://truckmanualshub.com/

7.22 Horn

The horn button is located at the top of the left joystick (front side) and is activated when the ignition key switch is set to the “RUN” position

7.23 Stopping for limited periods

Drive the machine to an area of firm and level ground, while making sure that the area is not at risk of any landslides or other natural phenomena.
Proceed with shutting down the engine in accordance with the procedures specified in the point on “Stopping the engine” in section” (point “7.9” page 94).
Then turn the ignition to the OFF position and remove the key.
Pull the control cutout lever (upwards), ensuring that it comes up all the way.

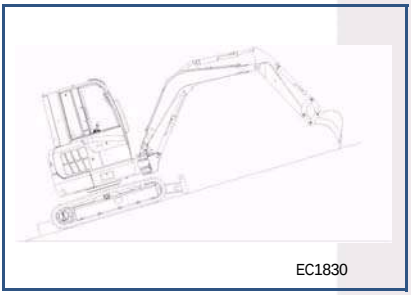

WARNING

Wherever possible, avoid parking the machine on an incline.

Should it be unavoidable to park the machine on an incline, in addition to the above,

- ensure that the bucket teeth are dug into the ground;
- block both tracks appropriately (using wedges), as shown in the figure.

7.24 Daily storage

Park the compact excavator on a firm, horizontal surface, in an area where it will not hinder other operators, in accordance with the procedures specified in the chapter entitled “PARKING THE MACHINE”. Minimise obstruction by lowering the digger boom and resting the dozer blade on the ground.
Move all the controls to their respective rest position and remove the ignition key.

https://truckmanualshub.com/

7.25 Emergency lifting-boom lowering procedure.

CAUTION

Ensure that nobody is standing under or near the front accessory prior to commencing with the lifting-boom lowering operation.

Should the engine cut out and be impossible to re-start, lower the lifting boom in the following manner until the bucket is resting on the ground:

MACHINES WITHOUT ANTI-FALL VALVES

- Lift the rubber footplate located on the floor in front of the driving seat.
- Remove the cover fitted to the floor in front of the driving seat (Left hand side).
- You now have access to the tap (**1**). Turning the tap will cause the raising arm to begin descending. The speed of descent is determined by the extent to which the tap is opened.
- Proceed in reverse order to reset the machine.

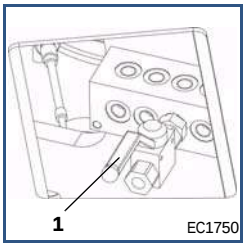

IMPORTANT
Once the boom has been lowered, always remember to close tap properly in order to avoid possible malfunctions while working.

MACHINE WITH ANTI-FALL VALVES

The anti-fall valve is mounted on the lifting cylinder.

- Release the locknut (**2**).
- Screw the thread in fully (**3**).
- Follow all the procedures as described in the point entitled "MACHINE WITHOUT ANTI-FALL VALVES".
- Proceed in reverse order to reset the anti-fall valve: Unscrew the thread fully (**3**) and tighten the locknut (**2**).

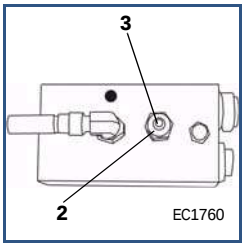

CAUTION

Arrange for an authorised dealer to check the efficacy of the anti-fall valve.

https://truckmanualshub.com/

8.0 Accessories

The use of accessories may impair the vehicle's stability. The stability of the centre of gravity depends on the dimensions and weight of the vehicle with the accessory, as well as on the weight and position of any resulting loads applied to the vehicle (load capacity).

The load capacities for this vehicle are listed in the relative tables in the "Technical Specifications" section.

Third party accessory suppliers may or may not supply accessory load capacity tables. The rated load capacity values for this type of accessory must be requested from these suppliers.

Eurocomach does not issue any declarations nor grant any implicit or explicit warranties with regard to the design, manufacture or suitability of accessories supplied by third parties for use on the vehicle. This vehicle does not envisage the use of, and must not be used with, any accessories that affect the stability of the centre of gravity and exceed the maximum permitted load capacity for the vehicle.

CAUTION

ALWAYS follow the specific operating instructions supplied by the manufacturer of the accessories installed and used on the vehicle.

DANGER

Mount the accessories in a secure manner. Accessories such as buckets, hydraulic hammers and drills that are not in use may fall, resulting in personal injury or fatal accidents. Remove the accessories and equipment in a safe manner so as to prevent them from falling. Keep unauthorised people out of the storage area.

https://truckmanualshub.com/

8.1 Bucket

Several types of bucket are available from the local Eurocomach dealer. Specifications for these buckets can be found in the "Technical Specifications" section of this manual.

8.1.1 Bucket removal and replacement

WARNING

To avoid personal injury from loose material or flying debris, always wear safety glasses and proper protective clothing when removing or reinstalling pivot pins.

To remove the bucket, proceed as follows:

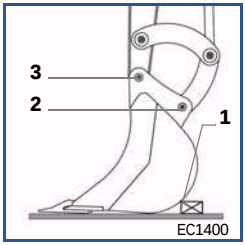

1 - Where necessary, move the vehicle to level ground.

2 - Lower the digger boom, positioning the dipper stick and bucket so that the latter is resting on the ground, as illustrated.

3 - Block the bucket (**1**) so that it remains in this position while both the bucket pivot pins are being removed.

4 - Remove both pins (**2-3**) and raise the dipper stick in order to free the bucket, thereby completing the operation.

to fit the bucket, proceed as follows :

1 - The bucket must be securely blocked (**1**) and resting on the ground, as illustrated.

2 - Clean both pivot pins and their mounting holes (**2-3**).

3 - Align the dipper stick with the bucket pivot pin mounting holes (**2**). Install the pin and secure.

4 - Align the bucket linkage with the mounting holes for the second pivot pin (**3**). Install the pin and secure.

5 - Grease both pivot pins. Start the engine, and move the bucket back and forth to ensure that it operates smoothly.

If there is no abnormal friction or jamming when moving the bucket, this means that the operation has been carried out correctly; if not, repeat the entire operation from the first point.

https://truckmanualshub.com/

8.2 Demolition hammer

The compact excavator is equipped to accept the installation of a hydraulic demolition hammer. A suitable hammer must be chosen, bearing in mind its intended use.
The compact excavator is subject to increased strain when operating with this accessory and, since the hammer is heavier than the bucket, the machine's balance will be affected.

The local Eurocomach dealer is able to supply a variety of demolition hammers suitable for the requirements of the job, as well as being able to regulate the flow rate and operating pressure to the levels required for the selected accessory.

8.2.1 Installation and removal of the demolition hammer

- Ensure that the demolition hammer is in a stable position.
- Clean the pivot pins and the respective mounting holes (**1-2**).
- Align the dipper stick with the pivot pin mounting holes (**2**) of the demolition hammer. Install the pin and secure.
- Align the demolition hammer linkage with the mounting holes for the second pivot pin (**1**). Install the pin and secure.
- Grease both pivot pins. Start up the engine and move the hammer back and forth to check that it operates smoothly. If not, repeat the operations from the beginning.
- Connect the hammer feed hose to the auxiliary single-action feeder circuit on the left hand side of the dipper stick.
- Connect the hammer discharge hose to the single-action feeder circuit on the right hand side of the dipper stick (single-action mode).

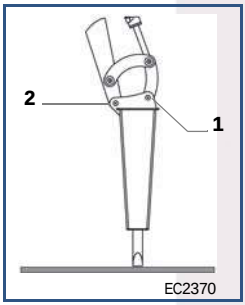

8.2.2 Precautions when using the hydraulic hammer

WARNING

Since the hydraulic hammer is much heavier than the bucket, it reduces machine stability and increases the risk of the machine overturning. Whilst working, splinters or flying debris may hit the cab or other parts of the excavator. Take the following precautions and exercise extreme caution so as to prevent the occurrence of accidents that may damage the excavator and result in injury to the Operator.

https://truckmanualshub.com/

Avoid operating with the excavator's cylinders near their limit stop (maximum extension or retraction), so as not to damage the accessory or the cylinders themselves.

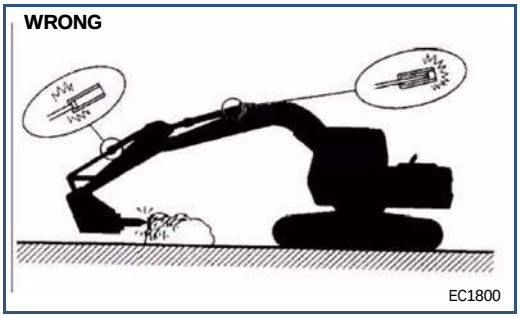

Stop work immediately if the hydraulic hoses bend in the wrong way. Then contact the dealer.

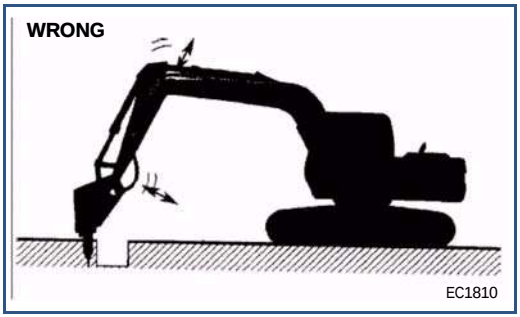

Do not operate with the hydraulic hammer in a sideways position; the machine will become unstable and the undercarriage components will be subjected to increased wear and tear.

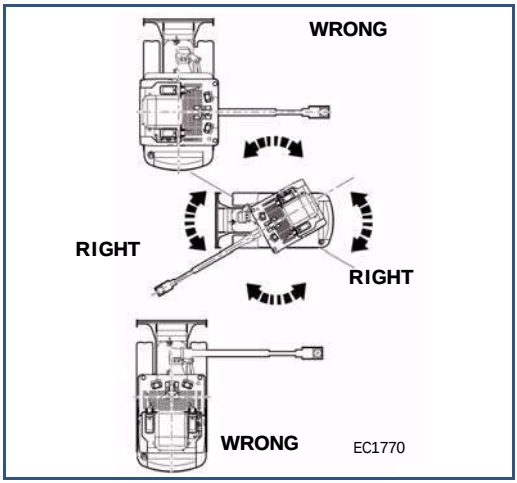

https://truckmanualshub.com/

When operating the excavator, do not bump against the lifting boom with the hydraulic hammer.

Do not engage the hydraulic hammer with the driving boom in a vertical position; excessive vibration on the driving cylinder may cause oil leaks.

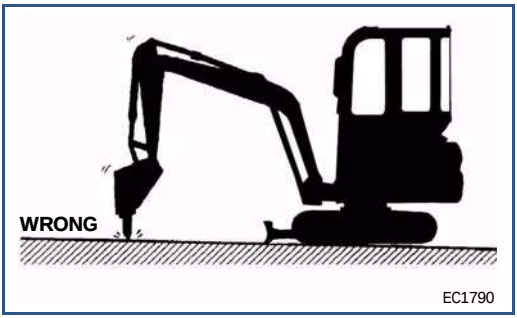

Do not run the hydraulic hammer for more than one minute at a time, since this may result in wear to the cutting edge or the hydraulics.
If the object fails to break within one minute, move the cutting edge to a new position, without remaining in one position for longer than one minute.

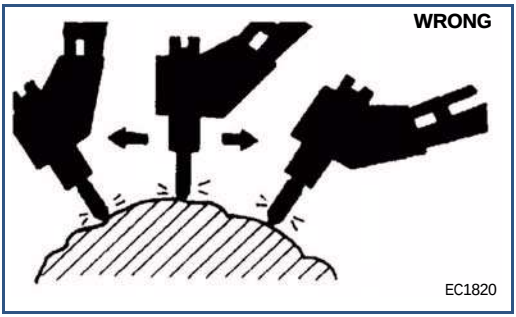

8.2.3 Operation

To find out how to engage the demolition hammer, refer to the chapter entitled “Hydraulic control of dual-acting accessory”. Having purchased this accessory, always consult the handbook provided.

https://truckmanualshub.com/

9.0 Maintenance

This section contains a complete list of requirements and procedures relating to the maintenance of this vehicle. This user manual must always accompany the vehicle. Proper maintenance involves routine procedures, with checks and inspections performed directly by the operator and/or by staff trained to carry out normal in-company maintenance, and regular services, which include cleaning, adjustment and replacement operations, carried out by staff trained for this purpose.
If you do not understand any of the information or procedures in this section, contact your local Eurocomach Dealer for explanations before proceeding.

YOU ARE URGED:
Not to carry out any procedure, modification or repair of any kind, except for those indicated in this handbook. Only technical staff trained or authorised by the manufacturer have the necessary knowledge of the machine and the experience to carry out all the procedures correctly.

WARNING

NEVER carry out any maintenance or servicing work on this vehicle with the engine running. Contact with moving or hot parts, or with any leaks of high-pressure fluids, may cause serious injury or death.

IMPORTANT
Eurocomach recommends the adoption of waste storage and disposal practices that are environmentally friendly. Do not discharge liquids into the ground or drains, or into dams. Use suitable containers for the collection of these liquids, then store and/or dispose of them in accordance with approved, safe procedures. Check and observe all government and/or municipal regulations relating to the storage, disposal and recycling of waste products.

IMPORTANT
This vehicle has been assembled using instruments based on the metric decimal system. - Use metric tools of suitable type and size for the performance of maintenance and service procedures.

It is recommended that only original spare parts be used.

Any additional instruments or tools required for maintenance and adjustment purposes, and not included in the tool kit, are included in the following table.

https://truckmanualshub.com/

	Item to be served	Manual 1	Hexagonal set Spanners 2	Hexagonal socket spanners 2	Allen keys for grub screws	Screw driver	Pliers	Oil filter spanner	Hammer	Feeler gauge	Grease gun	Dynamo-metric spanner	Battery terminal brush
Engine	1) Engine oil	○		○									
	2) Pump (Fuel and water)	○	○	○							○		
	3) Filter	○	○	○				○				○	
	4) Screw and nut (intake and exhaust manifold and air cleaner		○	○									
	5) Valve play		○			○				○			
Instrumentation	1) Amp meter		○										
	2) Temperature gauge		○										
	3) Pressure gauge		○										
Air intake, cooling, fuel supply system	1) Injection system	○	○										
	2) Radiator	○	○	○									
	3) Cylinders			○								○	
	4) Air filter	○					○						
	5) Fuel filter		○	○								○	
	6) Injectors		○	○									
	7) Fan belt		○	○							○		
Electrical system	1) Battery		○			○	○						○
	2) Lights	○	○			○	○						
	3) Ignition system		○	○							○		
	4) Alternator		○	○									
Power transmission	1) Manifold	○	○	○					○			○	
	2) Swivel motor	○	○	○								○	
	3) Travel motors			○	○				○			○	
	4) Components	○	○	○			○					○	
Controls	1) Engine		○								○		
	2) Steering		○								○		
Undercarriage	1) Rollers			○					○		○	○	
	2) Drive gear			○					○		○	○	
	3) Idler wheel			○					○			○	
	4) Ground contact components			○					○			○	
	5) Tensioner spring			○					○			○	
	6) Track tension adjustment		○	○					○		○		
	7) Tracks			○							○	○	

1) "Manually" means that the maintenance or adjustment operation can be done by hand, without using any tools.

2) Various tools may be used to tighten the screws and nuts found on the machine.

https://truckmanualshub.com/

9.1 Safety

Carry out maintenance operations on a hard, level surface.
Before doing any work on the machine, read the instructions in the manual carefully.
During maintenance operations, observe the precautions printed on the warning plates on the machine.
Don't try to carry out any maintenance unless you have the necessary skills, the right information, the safety gear and the instruments and equipment necessary to do the job properly.
Check that the equipment used to lift and support the machine is in good working order and is able to take the weight of the machine.
Maintenance operations must be carried out with the bucket or accessory resting on the ground.

DANGER

Do not carry out any maintenance, servicing or adjustment operations with the bucket, accessory or blade raised.

Any operations requiring that the boom, bucket or blade be raised must be carried out having ensured adequate support and restraint of the raised part in order to prevent it from falling accidentally.
Non compliance with the safety regulations and proper maintenance procedures could cause damage or faults on the machine and result in injury or even death of the operator or other persons in the vicinity.
Before commencing with any maintenance, it is recommended that warning signs be attached to the ignition switch and/or control levers to prevent anyone inadvertently starting the engine.
Don't start the engine of the machine in inadequately ventilated, enclosed areas, so as to avoid a build-up of exhaust gases.
Before starting the machine, evacuate everyone in the area from the machine's range of action.
Never leave the machine unattended with the engine running.
Wash the machine regularly and remove all traces of accumulated grease, oil and debris, so as to prevent any form of personal injury and machine damage.
Do not spray water or steam inside the cab or anywhere near the driving position.
Clean the machine, avoiding pointing high-pressure water jets directly at the radiator.
When washing, protect the connectors of the electrical system and don't wet the ignition switch.
When working in dusty areas:
- check frequently for air filter blockage;
- clean the radiator frequently to prevent the fins from becoming blocked;
- change the diesel filter more often;
- Clean electrical components; in particular, remove any dust from the alternator and starter motor.

Do not use inflammable liquids to clean any parts; avoid naked flames and don't smoke.
Keep the machine scrupulously clean; this will help to locate any faulty parts.

https://truckmanualshub.com/

Keep all lubricators, breather pipes and areas around the dipsticks particularly clean to prevent any dirt getting in.
Keeping the machine clean makes it easier to spot any oil leaks or other problems, and makes them easy to fix as soon as they occur.

9.2 Engine oil

DANGER

The engine oil temperature is very high immediately after using the machine. Wait for the oil to cool down before carrying out any maintenance.

Choose the engine oil carefully and follow the applicable maintenance schedule:
- daily check;
- regular oil-change according to specifications.

Use the oils and greases recommended by EUROCOMACH and select oils that are appropriate for the ambient temperature.
Use clean oils and greases, ensure that the containers are clean and that no foreign bodies get into the oil and grease.
Don't mix different brands of oil.
If you have any oils that are different from those currently being used, don't top the oil up but rather drain all the oil and replace it with whatever oil you have available.
Check and change the oil in a clean area to avoid getting dirt in the sump.
When the gaskets and O-rings are removed, clean the sealing surfaces well and fit new gaskets and O-rings. When you reassemble the unit, make sure you fit the seals in the right manner.

9.3 Fuel

Always use the appropriate fuel for the engine. Other fuels with different specifications may damage the engine or reduce power.
Always fill up at the end of the day.
When filling up, check that there is no water in the cap of the fuel drum and that the fuel pump doesn't pump up any condensate from the bottom of the drum.

https://truckmanualshub.com/

9.4 Coolant liquid

DANGER

The coolant is hot immediately after using the machine; so wait for the temperature to drop before doing any maintenance.

The machine is delivered with a water and antifreeze mixture that is suitable for use in outdoor temperatures as low as -15°C. If you need to use the machine at lower temperatures, change the mix to suit.
The coolant contains antifreeze and is inflammable; do not use naked flames near antifreeze and don't smoke when filling with coolant.
Use only drinking water or tap water.

9.5 Hydraulic system

DANGER

Maintenance of the hydraulic system must be carried out with the machine parked on level ground, with the bucket resting on the ground and with the engine turned off.

Exercise extreme caution when servicing the hydraulic system because the oil is very hot just after the machine has been working.

Release air from the tank in order to lower the internal pressure prior to carrying out any maintenance on the hydraulic system; move the control levers backwards and forwards a few times.

Don't start the engine if there is no oil in the tank.

When you uncouple a hydraulic connection, label the parts so you don't make mistakes when reconnecting the fittings.

If pressurised oil squirts out through small holes, one may be struck by a high-pressure jet of oil, so always wear safety gloves and goggles. Use a piece of cardboard and not your hands to check for leaks.

Repair any broken or damaged pipes immediately, as they may burst while the machine is in use.

If you are struck by a high-pressure jet of oil, seek medical attention immediately.

https://truckmanualshub.com/

The following maintenance is required on the hydraulic system:
- daily check of the oil level in the sump;
- periodic replacement of the oil filters.
- periodic oil change.

When a circuit component is dismantled, check the gaskets and the O-rings; if damaged, replace them.
When a cylinder or hydraulic circuit component is removed, bleed out the air as follows after refitting:
- start the engine and let it idle for a while.
- let all the cylinders complete several movements without letting them reach the end of their travel.
- Slowly move each cylinder to its limit stops a few times.

When replacing the hydraulic filters, carry out the following operations:
- start the engine and let it idle for a while
- loosen the pipes connecting the pump to the engine, in order to bleed the air in the system
- tighten the pipes carefully.

9.6 Electrical system

DANGER

Before doing any work on the electrical system, carefully read the battery maintenance instructions and observe the applicable instructions.
If you need to work near the radiator fan, be careful not to get too close and ensure that nothing gets caught in the fan belt or the fan itself.

If the cables are damp or their insulation is damaged, current will be dispersed within the electrical system, which may cause the machine to malfunction.
The following maintenance is required on the electrical system:
- check the tension of the alternator belt;
- check whether the alternator belt is damaged or broken;
- check the battery electrolyte level.

Avoid getting the electrical system wet when washing the machine or if it rains.
When you have to work near rivers, lakes or the sea for any length of time, protect the connectors with anticorrosive products.
If you must do any welding on the machine, first disconnect the battery and the alternator.

9.7 Tracks

Inspect the condition of the tracks periodically and check their tension.
If the track is too tight, the rolling friction on the drive gear increases, resulting in a reduction of mobility.
If the track is too loose, it may slip off the drive gear and resistance increases when reversing, while the mobility decreases.
Make sure the tracks are tensioned equally: a difference in tension may cause the machine to deviate from its path.

https://truckmanualshub.com/

9.8 Refilling

REFILLING	TYPE		QUANTITY (litres)
Engine	Rimula R4 L 15W40 - SHELL	Sigma Truck PLUS 15W40 - AGIP	7
Hydraulic fluid reservoir	Tellus T46 - SHELL	Arnica 46 - AGIP	42
Hydraulic circuit	Tellus T46 - SHELL	Arnica 46 - AGIP	60
Hydraulic travel motors	Spirax 80W90 - SHELL	Agip Rotra MP 80W90 - AGIP	1,3
Radiator (40% -15°C)	GlycoShell - SHELL	Antifreeze Spezial - AGIP	8
Fuel tank	DIESEL		40
Lubricators	Multiservice EP2 Grease - SHELL	Grease MU EP 2 - AGIP	-
Track tensioners	Multiservice EP2 Grease - SHELL	Grease MU EP 2 - AGIP	-

WARNING

Don’t mix different types of oils.
Oils, filters, coolant liquids and battery fluids are pollutants that should not be released into the environment but disposed of in accordance with the environmental protection regulations in force.

NOTE:
Engine maintenance instructions are purely intended as an indication. For greater precision and accuracy, follow the instructions in the engine’s USER MANUAL provided with every machine.

https://truckmanualshub.com/

9.9 Regular maintenance

The hour meter records total engine operating hours, and should be used to schedule all maintenance procedures listed below.
Perform all services at the hourly intervals indicated. Service more often if the vehicle is operated under adverse conditions.

EC0610

REFERENCE	DESCRIPTION OF OPERATIONS	DAILY	EVERY 50 HOURS	EVERY 100 HOURS	EVERY 250 HOURS	EVERY 500 HOURS	EVERY 1000 HOURS
1	Check the engine oil level	X					
2	Check the coolant liquid level	X					
3	Check the hydraulic fluid level	X					
4	Check drive gear/roller holding bolt tension		X				
5	Track tension check		X				
6	Pin lubrication points	X					
7	Check the alternator/fan belt		X				
8	Check the level of the drive motors		X				
9	Check the battery fluid level		X				
10	Check whether the air filter is blocked		X				
11	Cleaning the radiator/heat exchanger			X			
12	Changing the engine oil		X ▲		X		
13	Replacement of the engine oil filter		X ▲		X		
14	Replacement of the fuel filter		X ▲		X		
15	Replacement of the air filter			X			
16	Changing the hydraulic circuit intake and discharge filters				X ▲	X	
17	Draining the fuel tank					X	
18	Replacing the coolant					X	
19	Changing the fluid in the hydraulic circuit				X ▲		X
20	Changing the oil in the gear motors				X ▲		X
21	Cleaning the fuel tank					X	

Only the first time ▲

Replacement of filters:
In order to identify the filters correctly, refer to the parts catalogue and/or engine operation and maintenance catalogue supplied with the machine.

https://truckmanualshub.com/

9.9.1 Checking the engine oil

The level is checked by means of the marked dipstick (**1**) and should be between the MIN and MAX marks.
The oil level should be checked with the engine cold and the machine level. If necessary, top up with oil through the filler spout (**2**)

DANGER

The recently-run engine is very hot and can cause burns; allow the engine to cool down before checking.

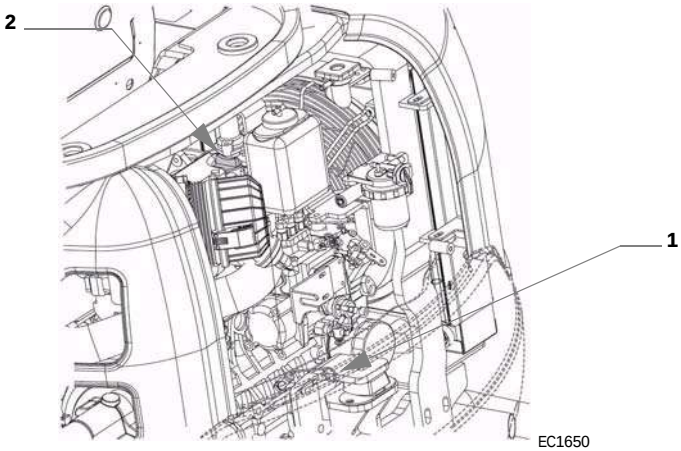

https://truckmanualshub.com/

9.9.2 Checking the coolant level

Check the coolant level via the filler spout (**1**), where the liquid should come up to the brim, and also check the level in the associated overflow tank (**2**).

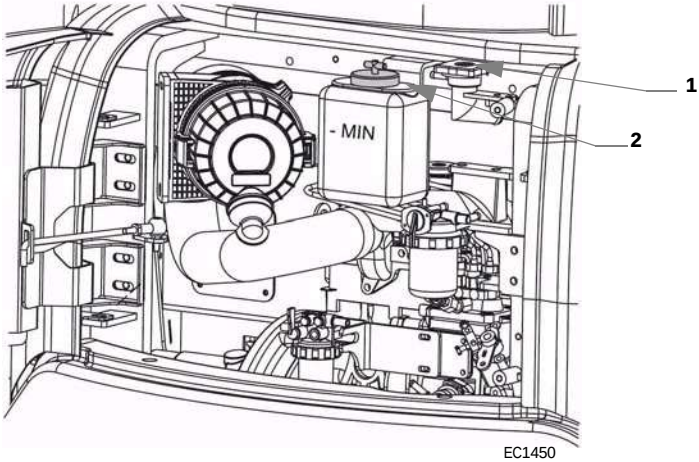

EC1450

DANGER

When the coolant is hot, the system is under pressure. Ensure that the engine has cooled before checking the level.

WARNING

To avoid oxidation of the radiator, do not dilute the concentration of antifreeze (see manufacturer's instructions).
If the coolant level drops constantly and significantly, check the hoses between the engine and radiator, or the radiator itself, for leaks.

https://truckmanualshub.com/

9.9.3 Check the hydraulic fluid level

The level of the hydraulic fluid in the hydraulic circuit should be checked with the engine cold and the machine level; the bucket and boom cylinders should be positioned as shown in the figure. The level is visible on the spyglass positioned on the right hand side of the machine.

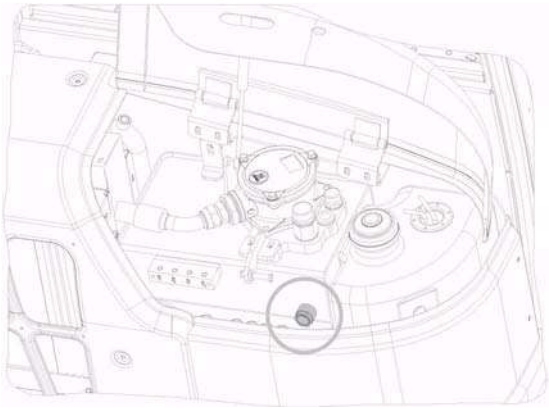

EC1660

9.9.4 Hydraulic line condition check

WARNING

DO NOT run or otherwise operate the vehicle if any hydraulic hose or fitting is found to be leaking or visibly damaged. Serious injury could result from contact with hydraulic fluid expelled under extreme pressure from hoses or fittings.

Prior to operation, walk around the vehicle and visually inspect all hydraulic pipes, hoses and fittings for signs of damage or leakage.
Wearing suitable hand, face and body protection, hold a piece of cardboard to the suspect area to determine whether there are any leaks.
If the leak is confirmed or there is other damage, do not utilise the machine until appropriate repairs have been made.

https://truckmanualshub.com/

9.9.5 Drive gear / roller holding bolt check

Periodically check for loose bolts on the drive gear, track tensioner and track rollers.

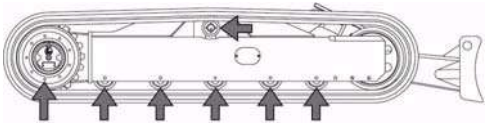

9.9.6 Track service position

To carry out a number of maintenance procedures on the undercarriage, the tracks first have to be raised off the ground, allowing access and making some space available. To raise the vehicle into the track servicing position, proceed as follows:

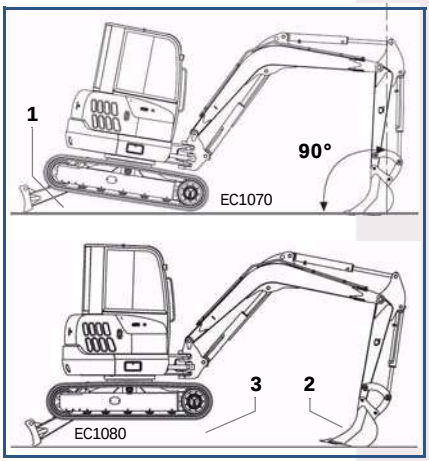

1 - With the vehicle on a hard, flat surface, turn the upper part of the structure through 180° so that the dozer blade is behind the operator.

2 - Bring the boom to the central position in front of the operator.

3 - Lower the dozer blade to the ground and keep pressing the control until the end of the vehicle is lifted off the ground (**1**).

4 - Position the dipper stick so that the boom cylinder is at right angles (90°) to the ground.

5 - Lower the digger boom to bring the bucket to the ground (**2**).

6 - Apply downward pressure on the digger boom, and simultaneously extend the dipper stick as required, so that the front of the vehicle rises off the ground (**3**).

7 - Shut down the engine. Raise the servo-control cutout lever to disengage the servo-control cutout and exit the vehicle.

8 - Before starting maintenance or servicing procedures with the vehicle in this position, it must be blocked in a safe condition. Place suitable jacks capable of supporting the entire weight of the vehicle on the ground under the machine, one under each corner of the undercarriage.

9 - Once all track maintenance operations are complete, repeat the steps of the described procedure in reverse order to lower the vehicle from the track maintenance position.

https://truckmanualshub.com/

9.9.7 Track tension check

If one or both of the tracks is not properly tensioned the following problems may occur:

- Uneven tension will make it difficult for the vehicle to travel in a straight direction, either forwards or in reverse.
- High tension will result in increased pressure on the idler and drive gear bearings, causing vibration and leading to premature failure of the tracks.
- Low tension may cause the track to slip off the front idler.
- Tension may be affected by a build-up of mud, sand or other debris in the track treads. Ensure that the treads are free of any foreign bodies before checking track tension.

Track tension is measured as follows:

1 - Park the vehicle on a hard, level surface.

2 - Determine a reference point near the centre of each track frame (**1**), then measure the distance between each reference point and the top of the corresponding track tread (**2**).

3 - Raise the vehicle into the track service position as described in the “Track Service Position” point in this manual.

4 - Re-measure the distance from the same track frame reference points to the corresponding track treads (**3**).

5 - Subtract the smaller measurement from the larger (**2-3**) for each side.

The resulting number is used to gauge the actual track tension.

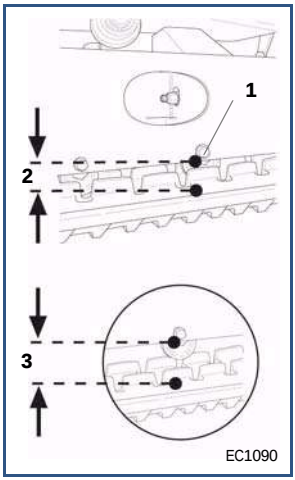

6 - If the result is between 20 and 25 mm for each side, then the tensions are correct.

The vehicle can be lowered from the Track Service Position and the remaining daily maintenance and services can be completed. If the tension for one or both sides is not correct, proceed to the next point in this manual entitled "Track Tension Adjustment"

https://truckmanualshub.com/

9.9.8 Track tension adjustment

IMPORTANT:
DO NOT attempt to make any track tension adjustments until the following procedures have been read and clearly understood.
If any doubts remain after having read the material, contact your Eurocomach Dealer immediately for additional information.

Each track can be accurately tensioned by adjusting the grease loading of a hydraulic cylinder that applies tension on the track idler assembly.

Adjustments to either the left or the right cylinders are made on the individual valve assemblies (**1**) that are accessed through a central hole in the respective track frame.

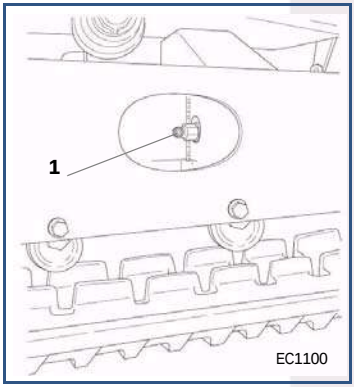

WARNING

DO NOT remove the grease fitting (3) on the end of the valve, or attempt to turn the valve body (2) by hand. Grease may be expelled under extreme pressure and may penetrate the skin, causing serious injury. Wear suitable protective clothing and proper face protection before servicing either track adjuster.

To increase track tension

1 - Add a small amount of grease to the fitting on the end of the valve (**2**).

2 - Rotate the track assembly and check the tension.

3 - If the tension is between 10 and 15 mm, the adjustment is completed.

4 - Repeat this procedure as required until the correct tension is achieved.

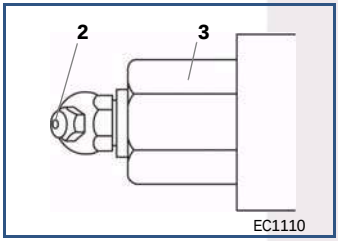

https://truckmanualshub.com/

To release tension from a track assembly:

1 - Using a 22 mm spanner, turn the body of the valve (**3**) slowly counter clockwise 1 to 1.5 turns, gradually exposing the pilot hole.
Release a small amount of grease, and then close the valve.

2 - Rotate the track assembly and check the tension.

3 - If the tension is between 10 and 15 mm, the adjustment is completed.

4 - Repeat this procedure as required until the correct tension is achieved.

5 - Tighten the valve (**2**) and torque to 88 Nm to complete the adjustment.

6 - All the instructions for adjusting track tension are the same for both the rubber tracks and the optional steel tracks.

9.9.9 Lubrication points

Using an appropriate grease gun, inject grease into every lubricator on the booms and the bucket, as shown in the figure.
Clean the lubricators before attaching the grease gun.
Clean off any excess grease after lubrication.
If you use the machine under critical operating conditions, carry out this maintenance task more frequently.

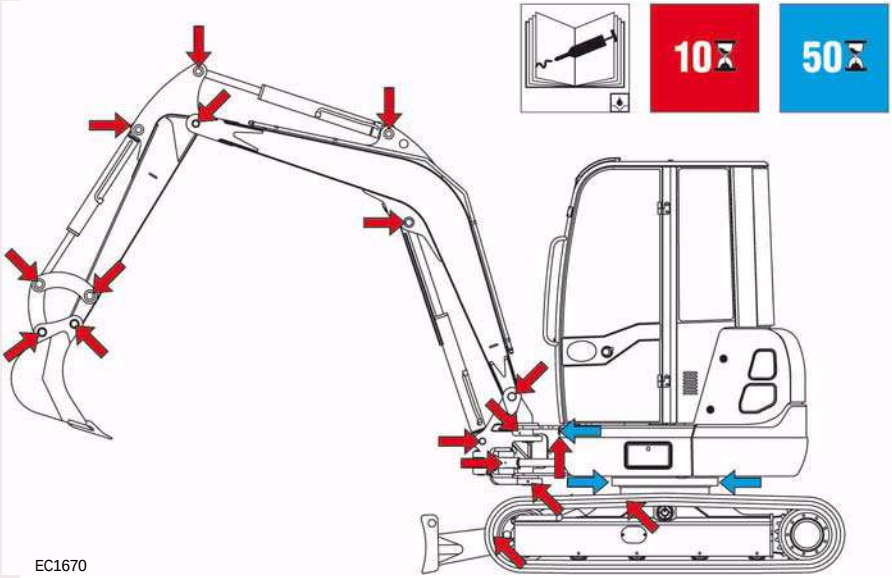

https://truckmanualshub.com/

9.9.10 Checking the alternator belt

To check the tension of the belt, press the lower section of the belt with your thumb (between the engine flange and the alternator).
If the belt flexes more than 1 cm, tension it:
- loosen the upper (**1**) and lower (**2**) alternator holding bolts,
- push the alternator outwards until the belt is correctly tensioned, then tighten the fixing bolts,
- re-check the tension of the belt (**3**).

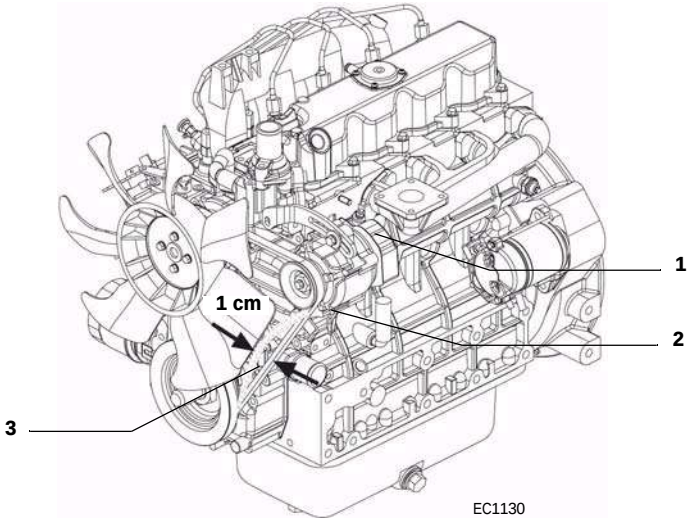

9.9.11 Checking the oil level in the travel motors

Turn the wheels so the level check and top-up plug (**1**) is horizontal, unscrew the plug and check that the oil reaches the opening.
If it doesn't, add oil through the plug (**2**) up to the level. Replace the plugs.

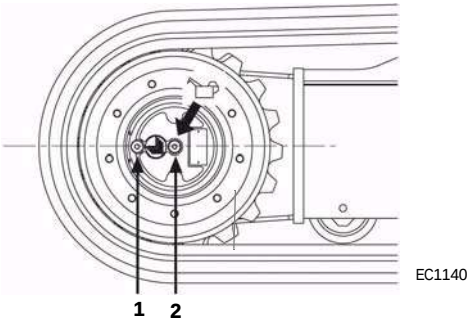

https://truckmanualshub.com/

9.9.12 Check the battery fluid level

DANGER

Check the level of the battery with the engine shut down. The electrolyte liquid is dangerous, if it gets into your eyes or on your skin, wash immediately under running water. If possible, wear waterproof gloves and goggles.

WARNING

Keep the battery well charged; if the machine has been out of commission for a long time, charge the battery before use.
Never allow the battery to go completely flat.
Take the ignition key out before disconnecting the battery.

The battery is housed under the footplate; to gain access, lift the rubber footplate and open the special trap door (**1**)
- The level of each element must be roughly 5mm above the edge of the plates.
- top up the level using distilled water only.

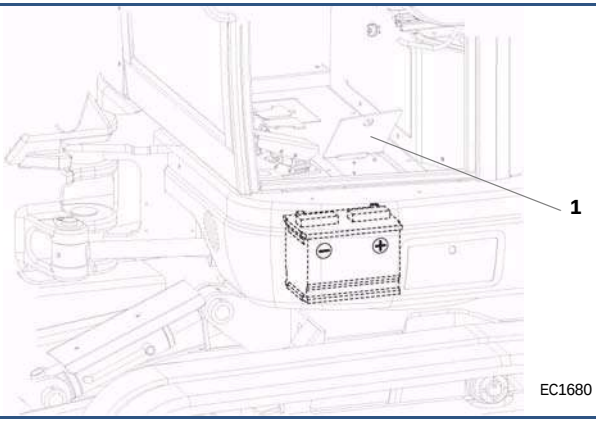

https://truckmanualshub.com/

9.9.13 Air filter check

IMPORTANT
only open the air filter housing for scheduled maintenance or when required because the air filter indicator light is lit. Excessive opening to check or clean an element increases the possibility of premature element failure, allowing dirt to enter and damage the engine.

WARNING

To avoid the possibility of severe burns, allow sufficient time for the engine to cool before any inspection, maintenance or service is performed on the exhaust or intake system.

Inspect the intake hoses, air filter housing, muffler, exhaust and spark arrester (if fitted) for any signs of cracked hoses or pipes, loose or missing clamps, corrosion or holes. Tighten or replace parts as necessary to prevent intake and exhaust system leakage.

To check the air filter element, proceed as follows:

1 - Remove dust from the evacuator valve (**1**) by squeezing both sides, opening the valve and allowing loose particles to fall out.

2 - Turn the ignition key switch to the “RUN” position and check the air filter indicator light on the dashboard. If the light is ON, the filter must be replaced or cleaned.

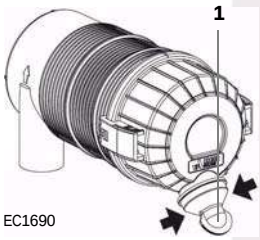

EC1690

IMPORTANT
all air cleaner manufacturers agree that attempting to clean or wash an element increases the chances of element damage. It is highly recommended that you consider the advantages of cleaning an element as against the risks of the operation, which may result in engine damage. Adopt the policy that all elements should be replaced with new ones rather than clean them.

NOTE
careful cleaning or washing, if done correctly, can extend the life of an element. However, you must realize that each time an element is cleaned the dirt holding capacity is reduced and the risk of dirt reaching the clean side of the filter is increased. Filters should never be washed more than six times, or kept in service for more than one year, whichever comes first.

https://truckmanualshub.com/

To clean the air filter element, proceed as follows:

1 - Open the engine compartment.

2 - Open the lid retaining clips (**1**) and remove it from the air filter housing (**4**).

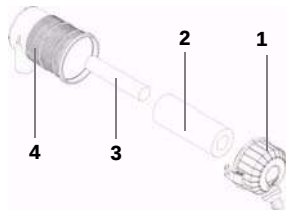

EC1700

3 - Gently release the gasket on the primary element (**2**), which is firmly fixed to the outlet pipe and creates the crucial seal on the inside edge of the element end cap. Initially some resistance will be felt, rather like the seal giving way when a can is opened. Move the end of the element gently up and down and from side to side, or turn it to break the seal.

4 - Do not remove the dust from the element. Pull out the element gently from the outlet pipe and then from its housing. Do not allow the element to knock against the housing. Check the element for damage. Do not clean or reuse damaged elements.

5 - Clean the inside of the air filter and the evacuator valve thoroughly.

6 - Always clean the sealing surface of the outlet pipe. Dust on the outside edge of the outlet pipe may prevent an effective seal and result in leaks. The old element may be useful for identifying any foreign bodies on the sealing surface. A streak of dust on the clean side of the element tells a story. Make sure that all contaminants are removed before fitting the new or cleaned element.

7 - If the safety element is replaced (**3**) at this stage, follow the same removal procedure as used for the primary element and carefully slide out the safety element. **ALWAYS** dispose of this element and replace it with a new one.

8 - Always clean the inside of the outlet pipe carefully. Any dirt transferred into the outlet pipe will reach the engine, causing wear. This is the sealing surface of the safety element. Take care not to damage the sealing areas on the inside or outside of the outlet pipe.

9 - Check the new element for damage in transit. Pay special attention to the interior of the open end of the primary element and the exterior of the open end of the safety element (sealing areas).
NEVER install damaged elements.

10 - Fit the new element. To obtain an airtight seal, apply pressure on the outside edge of the closed end of the element, not on the flexible central part.

11 - Put the filter lid in place and fix with the clips.

https://truckmanualshub.com/

9.9.14 Cleaning the radiator / heat exchanger

DANGER

Complete this task with the engine shut down.
If any part of your body or a tool touches the blades of the fan, these could cut and / or snag, causing serious injuries.

Check the fins of the radiator; if they are blocked, clean them with a brush soaked in diesel fuel.
Dry with a jet of compressed air.

WARNING

Carry out this operation every time the radiator is accidentally dirtied with oil, diesel or other oily or greasy substances.

9.9.15 Changing the engine oil

DANGER

When the machine has just been shut off, the engine oil is very hot and can cause burns; allow the engine to cool down before draining the oil. The oil change operation should be performed when the oil is luke warm (25÷40°), as this improves the drainage of the old oil. (When it is cold, the oil drainage may be compromised or prove to be difficult. This would result in the mixing of the old with the new oil).

- Remove the drain plug from the engine oil sump.
- Remove the oil filler cap (**2**) to help the oil to drain out.
- Carefully clean all the plugs and the dipstick.
- Having replaced the oil or the filters, check for the presence of any metal particles or foreign bodies in the used oil and filters.
- Replace the sump plug.
- Pour in the specified amount of the type of oil recommended in the liquid levels table.
- Use the dipstick (**1**) to check that the level reaches the MAX mark.
- Replace the oil filler cap.
- Start the engine and let it run for a few minutes, then shut it down and check the level again.

https://truckmanualshub.com/

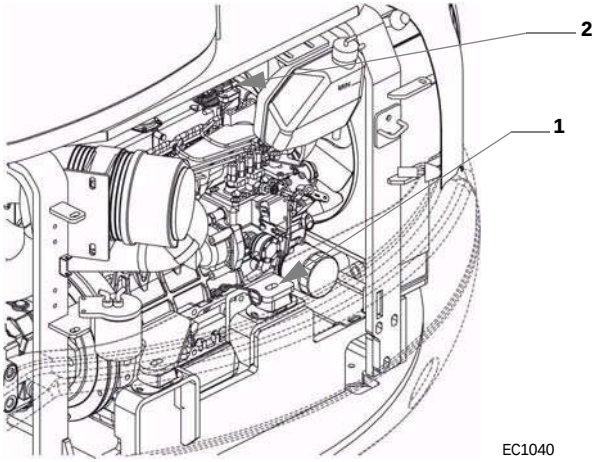

WARNING

The engine oil and the associated filter are highly pollutant items; do not discard them into the environment.

https://truckmanualshub.com/

9.9.16 Replacement of the engine oil filter

DANGER

When the machine has just been shut off, the engine oil is very hot and can cause burns; allow the engine to cool down before draining the oil.

- Using the appropriate spanner, unscrew the used filter (**1**) and discard it.
- Clean the surrounding area and fit a new filter, screwing it on by hand.
- Start the engine, check that there are no leaks and that the low oil pressure indicator light on the control panel switches off.

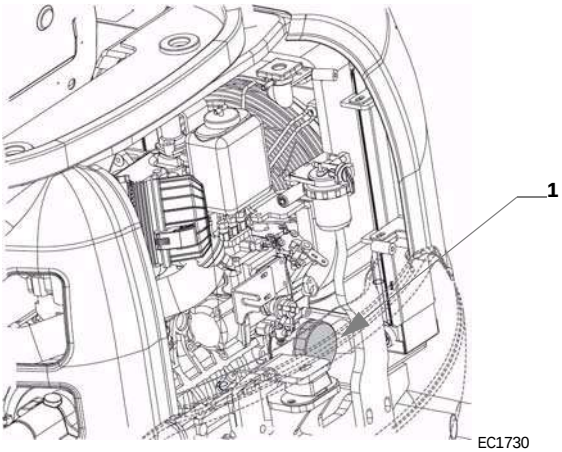

WARNING

Change the oil filter every time you change the engine oil.

CAUTION

The engine oil and the associated filter are highly pollutant items; do not discard them into the environment.

https://truckmanualshub.com/

9.9.17 Replacement of the fuel filter

DANGER

Change the fuel filter with the engine cold.
If you spill fuel during this operation, clean the spill to avoid any risk of fire.

The fuel filter is housed inside the rear cover next to the radiator (**1**).
- Using the appropriate spanner, unscrew the filter and discard it.
- Clean the surrounding area before fitting the new filter.
- Before fitting the new filter moisten the seal with machine oil.
- Screw the filter on by hand so that the seal comes into contact with the sealing surface, and then tighten by a further half-turn.
- After starting the engine, check to ensure that there are no leaks.

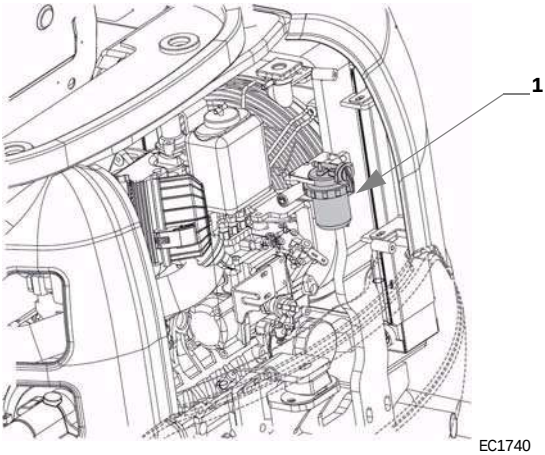

EC1740

https://truckmanualshub.com/

9.9.18 Replacing the hydraulic system fluid

DANGER

When the machine has just stopped, the hydraulic fluid is very hot; allow the engine cool down before changing the fluid.
Old filters and hydraulic fluid are highly pollutant items; do not discard them into the environment, but put them in sealed containers and deliver them to the specialised waste disposal centres.

WARNING

The filter should be changed for the first time after 100 working hours and every 500 hours thereafter.

Open the side cover to reach the filter.
Change the filter at the intervals indicated in the applicable table (paragrafo “10.9” pag. 130).
Using the appropriate spanner, undo the lid (**1**), extract the cartridge (**2**) and discard it.

CAUTION

Hydraulic fluid and associated filters are highly pollutant items; do not discard them into the environment.

Insert a new cartridge (**2**), check the condition of the seal and fit the cover back in place (**1**).
The filter housing is pressurised, so when the cover is opened only a small amount of oil will be spilt.

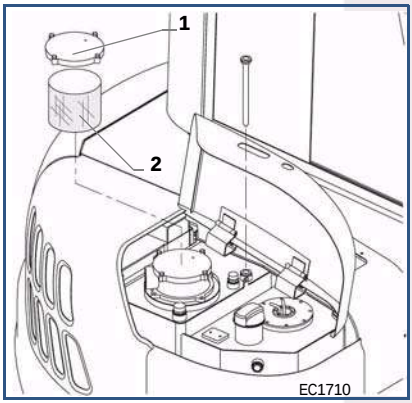

https://truckmanualshub.com/

9.9.19 Hydraulic fluid reservoir magnetic plug

The hydraulic fluid reservoir is equipped with a magnetic plug (**1**) to capture any metallic particles that may be suspended in the fluid. When the hydraulic fluid filter is changed, the magnetic plug must be cleaned.

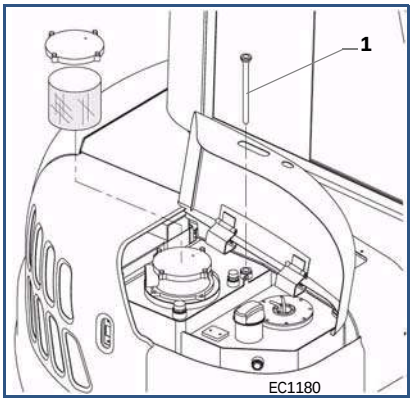

9.9.20 Cleaning the intake system oil filter

The filter (**1**) is housed inside the hydraulic oil reservoir, access to which is gained through the side cover.
To remove the intake filter, the oil must first be drained out through the drain plug located under the reservoir (**2**), then the return hydraulic fluid filter is removed (**3**). The intake filter is accessed through the opening (**4**). Clean the filter with diesel and compressed air and replace it if necessary. Reassemble the element using the reverse procedure.

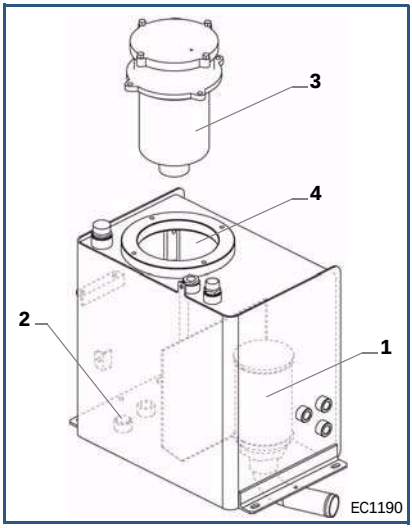

WARNING

Every 1000 hours and / or at every oil change, clean the filter element by washing it. When working in very dusty environments, clean the filter more often.
If the movements of the boom or the bucket are jerky instead of smooth, check the cleanliness of the filter.

https://truckmanualshub.com/

9.9.21 Draining the fuel tank

To empty the tank of any accumulated dirt or condensation:

- unscrew the drain plug (**1**) under the tank, after having removed the filler cap (**2**)
- drain the fuel into a suitable container;
- clean the cap with a cloth and screw it back in;
- fill up with fuel.

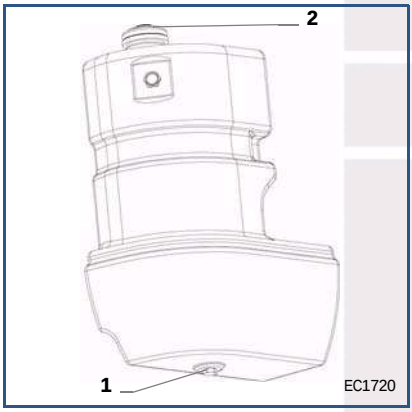

9.9.22 Replacing the coolant

DANGER

Immediately after the machine is stopped, the coolant is very hot and under pressure, and can cause severe burns; allow the engine cool before replacing the liquid.

- Unscrew the cap (**1**) of the filler spout.
- Drain the coolant from the radiator by unscrewing the two drain plugs (**2**).
- Drain the coolant from the engine.
- Drain the coolant into a suitable container.
- Close the filler cap and drain plugs on the radiator and engine and fill the radiator with new coolant (point “9.8” page 127).
- Fill the radiator up to the brim of the filler spout.

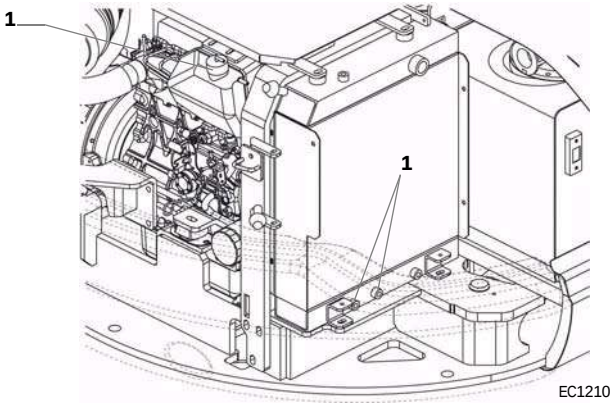

https://truckmanualshub.com/

9.9.23 Changing the hydraulic circuit fluid

DANGER

When the machine has just stopped, the hydraulic fluid is very hot; allow the engine cool down before changing the fluid.
Old filters and hydraulic fluid are highly pollutant items; do not discard them into the environment, but put them in sealed containers and deliver them to the specialised waste disposal centres.

1 - Run the engine until the oil has cooled (approximately 5 minutes)

2 - Park the vehicle on a level surface, lower the dozer blade, close the bucket, retract the dipper stick and lower the digger boom to the ground.

3 - Shut down the engine, raise the servo-control cutout lever, then undo the seat belt and exit from the vehicle.

4 - Place a suitable container under the cover's drain plug. Remove the plug and drain the fluid into the container.

5 - Unscrew the reservoir filler cap (**1**).

6 - Unscrew the drain plug (**2**) and allow the fluid to drain out into a suitable container.

7 - Replace the Hydraulic fluid filter(**3**) (point "9.9.18" page 144).

8 - Remove and clean the intake filter (**4**)(point "9.9.20" page 145).

9 - Clean the magnetic cap (**5**) (point "9.9.19" page 145)

10 - Clean the drain plug (**2** as there may be metallic deposits from various parts on it.

11 - Re-fit the Hydraulic fluid filter (**3**).

12 - Fill with the recommended hydraulic fluid up to the required level.

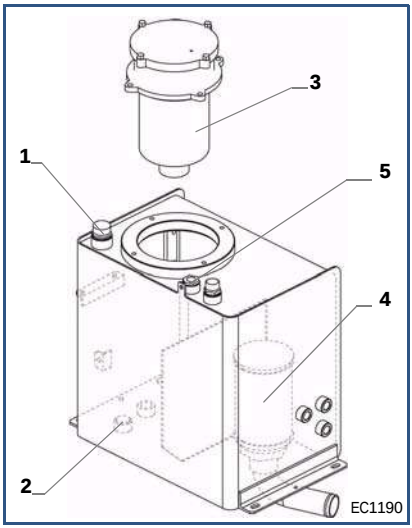

13 - Start the engine and let it idle, then extend the cylinders completely; move each cylinder several times to bleed all the air out of the system.

14 - Check the level again and top up if necessary.

https://truckmanualshub.com/

WARNING

Allow the oil to cool before carrying out any maintenance.
Never start the engine with the reservoir empty as this will definitely damage the pump.
The filler cap can only be opened with the applicable spanner supplied as standard equipment.
Always close the cap tightly to avoid pressure leaks inside the reservoir.
Only use lubricating oils recommended and specified by the manufacturer in the applicable table.(point “9.8” page 127)

9.9.24 Changing the oil in the travel motors

To change the oil in the travel motor:

- turn the wheels so that the plug (**1**) is at the lowest point, unscrew it completely and let all fluid drain out. Also unscrew the cap (**2**) to help the fluid to drain out.
- replace the horizontal plugs (**1-2**).
- fill with oil through the filler cap (**2**) up to the level of the cap (**1**).
- screw in the plugs.

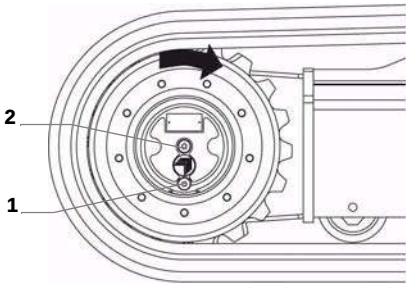

EC1140

https://truckmanualshub.com/

9.10 Long periods of inactivity

If you envisage long periods of inactivity, the machine should be parked under cover in order to keep the machine and its machine parts in good condition, taking the following precautions:
- Carry out a complete and thorough cleaning.
- Drain and change the fluid in the hydraulic circuit and the oil in the engine, following the maintenance instructions and being sure to change the filters.
- Check and clean the air filter; if you have any doubts regarding its efficiency, replace it.
- Remove the battery, check the electrolyte level and make sure the battery is charged.
- Store the battery in a warm place and charge it periodically.
- Drain the coolant from the radiator
- Put a warning sign on the controls stating that there are no liquids.
- Grease the hydraulic cylinder rods and all the equipment joints.
- Cover the open end of the exhaust pipe.

After a long period of inactivity prepare the machine for use as follows:
- Fill the radiator with coolant.
- Check all the levels (lubricants and hydraulic systems).
- Install the battery and make sure it is charged.
- Change the fuel filter and bleed any air out of the fuel lines.
- Take the cover off the end of the exhaust pipe, start the engine and let it idle for about 20 minutes.
- While the engine heats up, clean the hydraulic cylinder rods.
- Before moving the machine, check that the instruments, indicator lights and working lights are functioning properly.

9.11 Long-term storage

Should you decide no longer to use this machine, it is recommended that it be disabled by removing the battery, emptying the fuel tank and removing the ignition key.
If the machine is to be scrapped, dismantle it into its component parts, remembering not to discard pollutant products into the environment (battery, engine oil, hydraulic fluid and related filters), but delivering them to specialised waste disposal centres for disposal in accordance with the laws in force.

https://truckmanualshub.com/

9.12 Hydraulic and electrical circuit diagrams

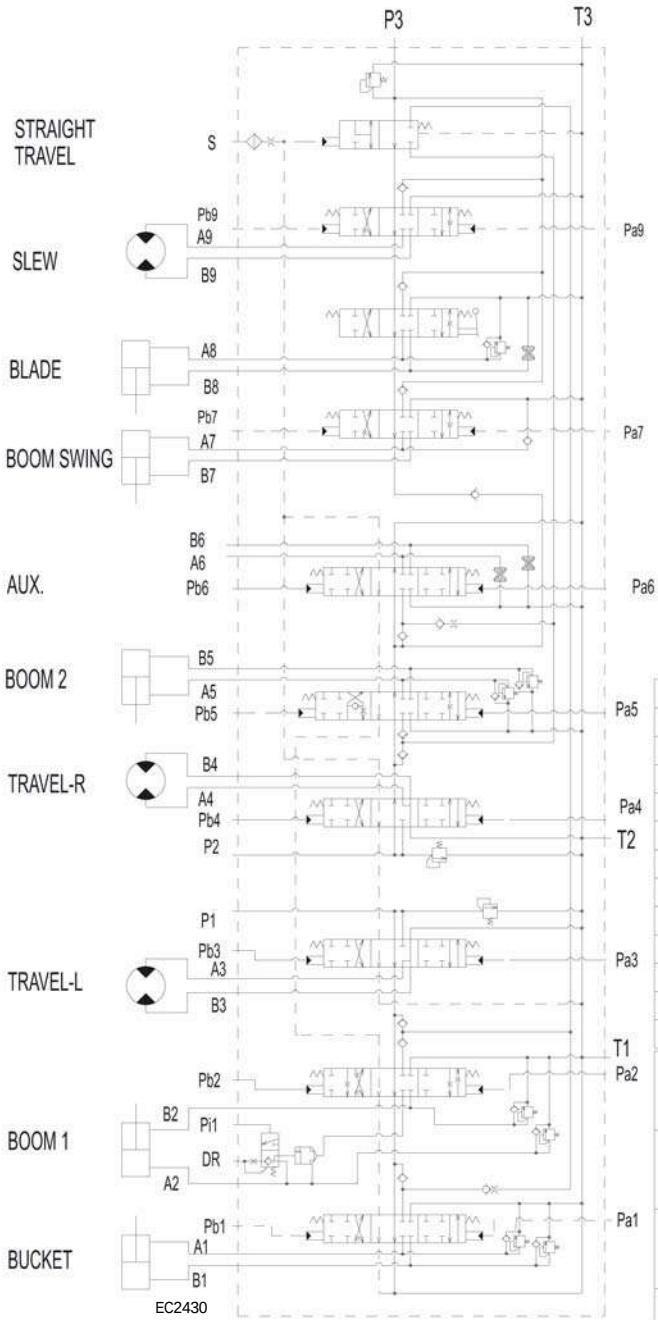

ES 350 ZT - ES 400 ZT - SPECIFICATIONS			
1.PUMP OUTPUT FLOW; P1,P2:40L/min,P3:28L/min			
2.ORDINARY PRESSUR ; P1,P2: 23.0MPa			
P3: 21.0MPa			
3.OIL TYPE ; ISO 46			
4.OIL TEMP. RANGE ; -15 ; +80 °C			
MAX PEAK OIL TEMP;			
5.MAIN RELIEF VALVE SETTING PRESSURE;			
P1,P2: 23.0±0.5MPa a 40L/min			
P3: 21.0±0.5MPa a 28L/min			
6.OVER LOAD RELIEF VALVE SETTING PRESSURE;			
A1,B1,A2,B2,A5,B5,A8:			
27.0	MPa a 20L/min		
PISTON PUMP	MAX. DISPLACEMENT	cm^3/rev	16.8+16.8
	MAX. PRESSURE	MPa	23.0
TROCHOID PUMP	MAX. DISPLACEMENT	cm^3/rev	3.5
	MAX. PRESSURE	MPa	3.0
GEAR PUMP	MAX. DISPLACEMENT	cm^3/rev	11.9
	MAX. PRESSURE	MPa	21.0
MAX. SHAFT SPEED		r.p.m.	2500

https://truckmanualshub.com/

MODEL:
ES 350 ZT

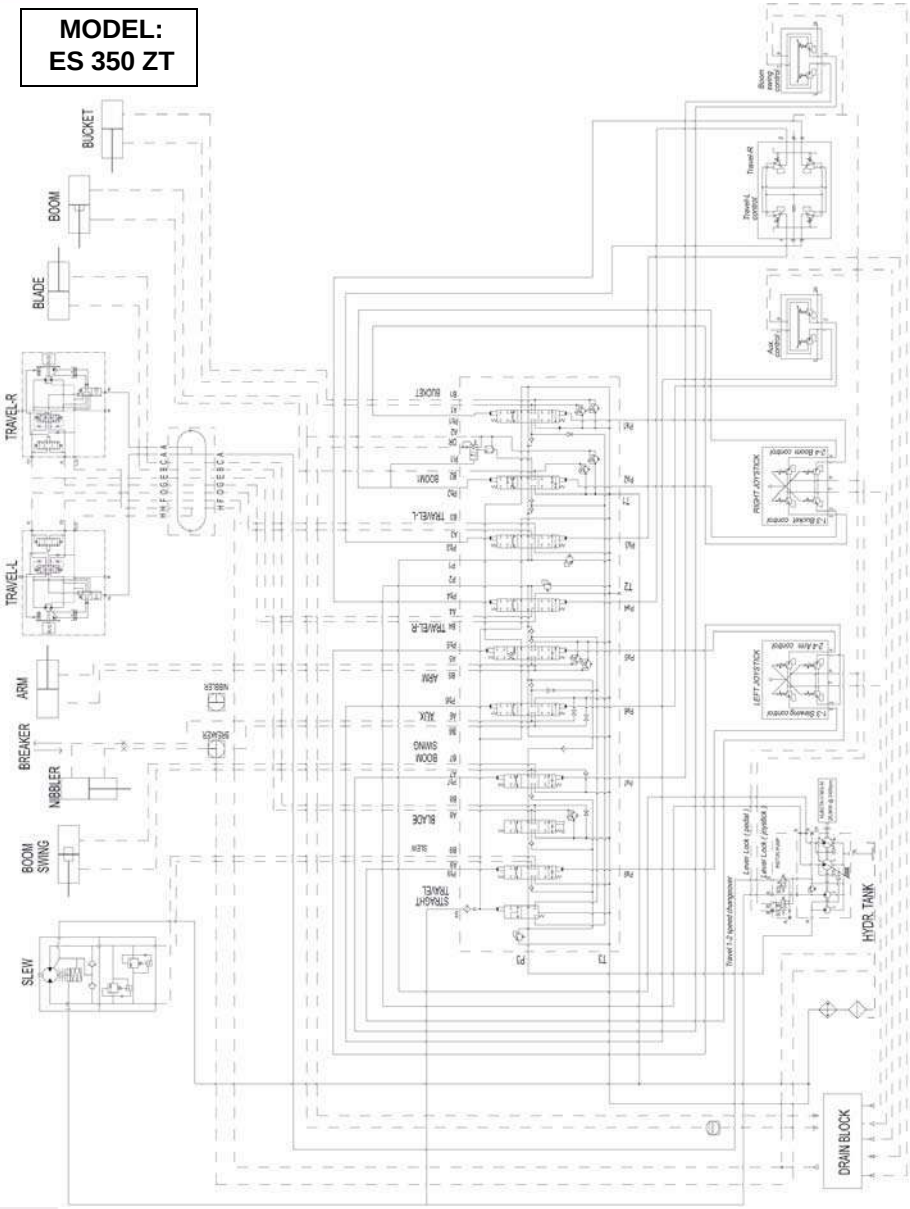

EC2440

https://truckmanualshub.com/

MODEL:
ES 400 ZT

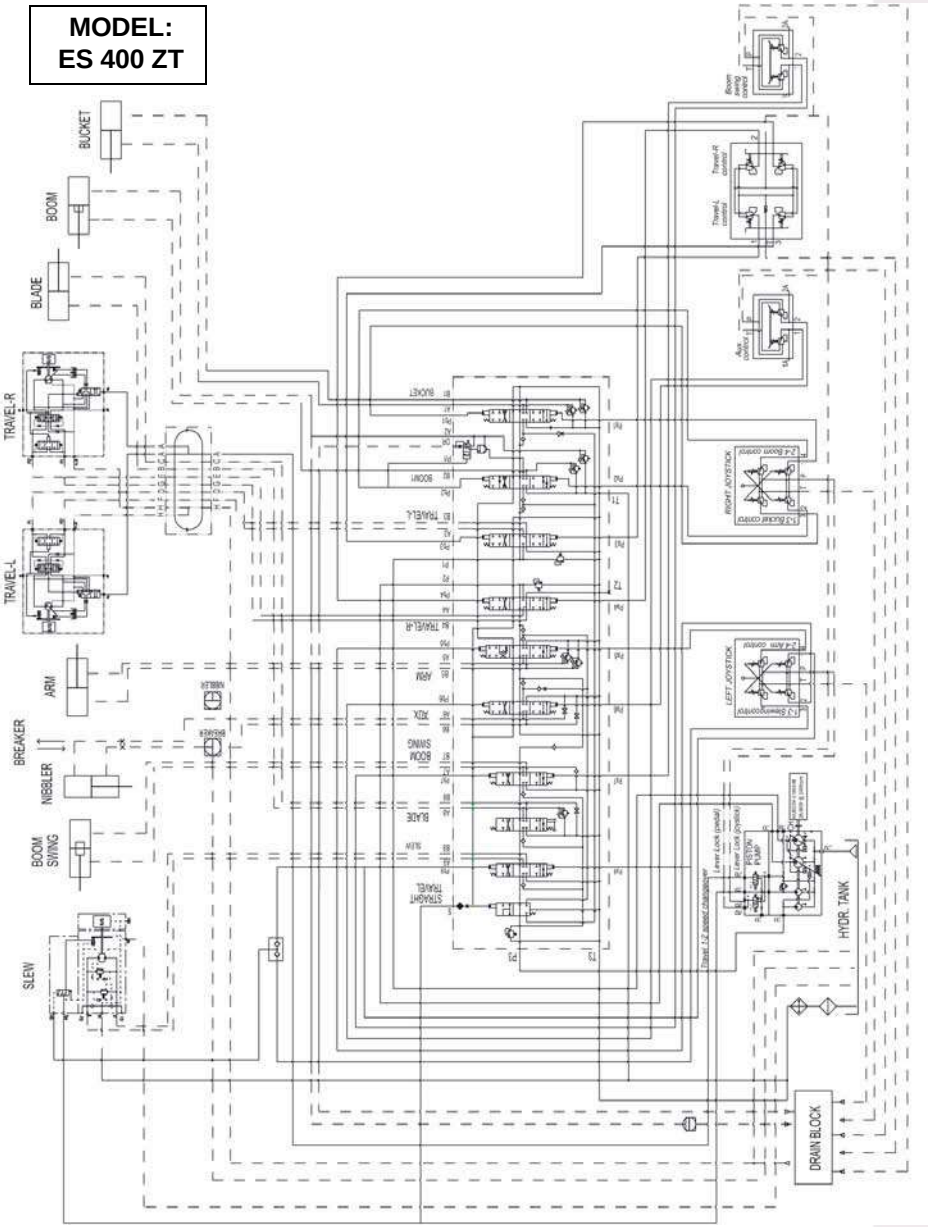

EC2450

https://truckmanualshub.com/

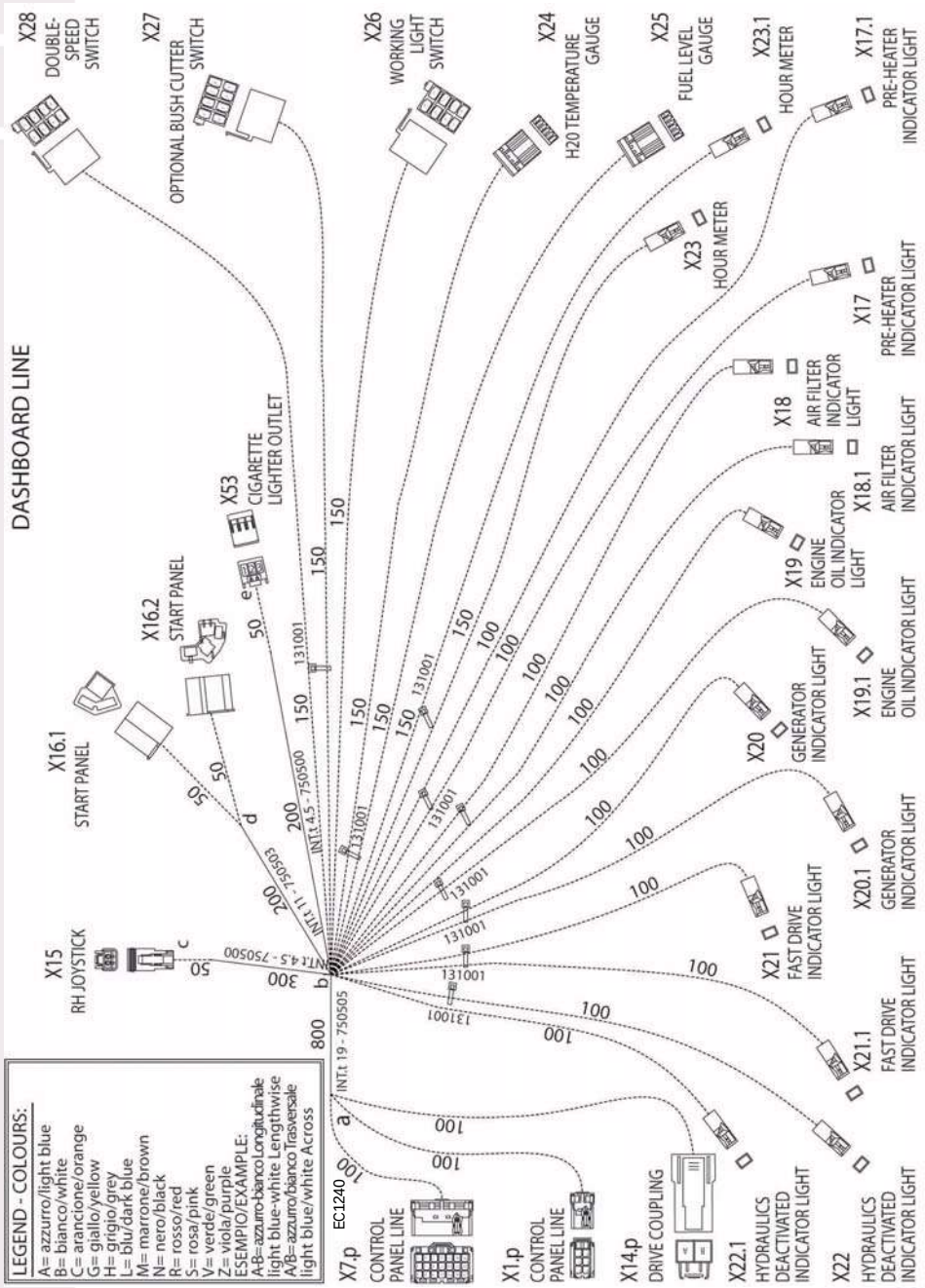

https://truckmanualshub.com/

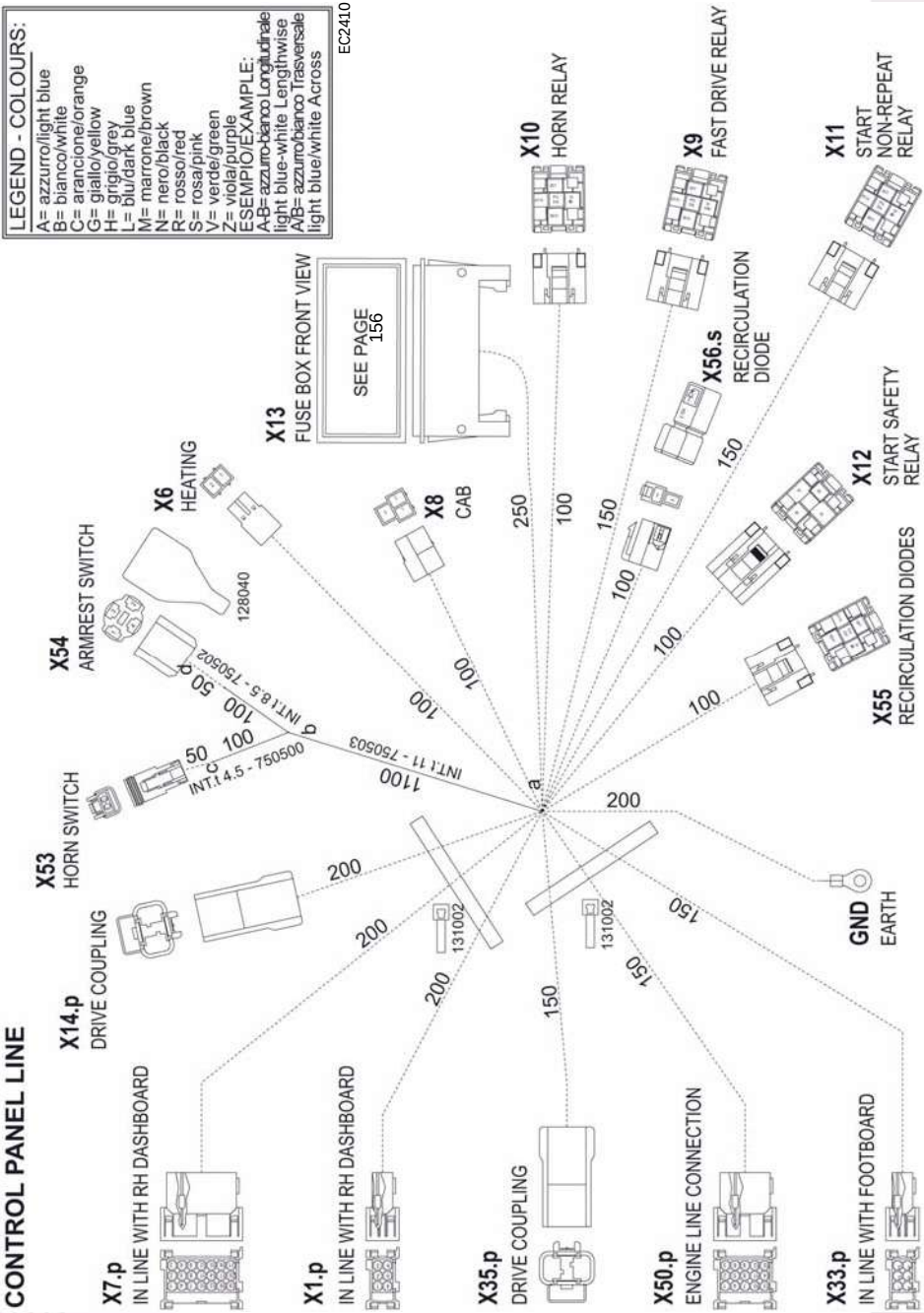

https://truckmanualshub.com/

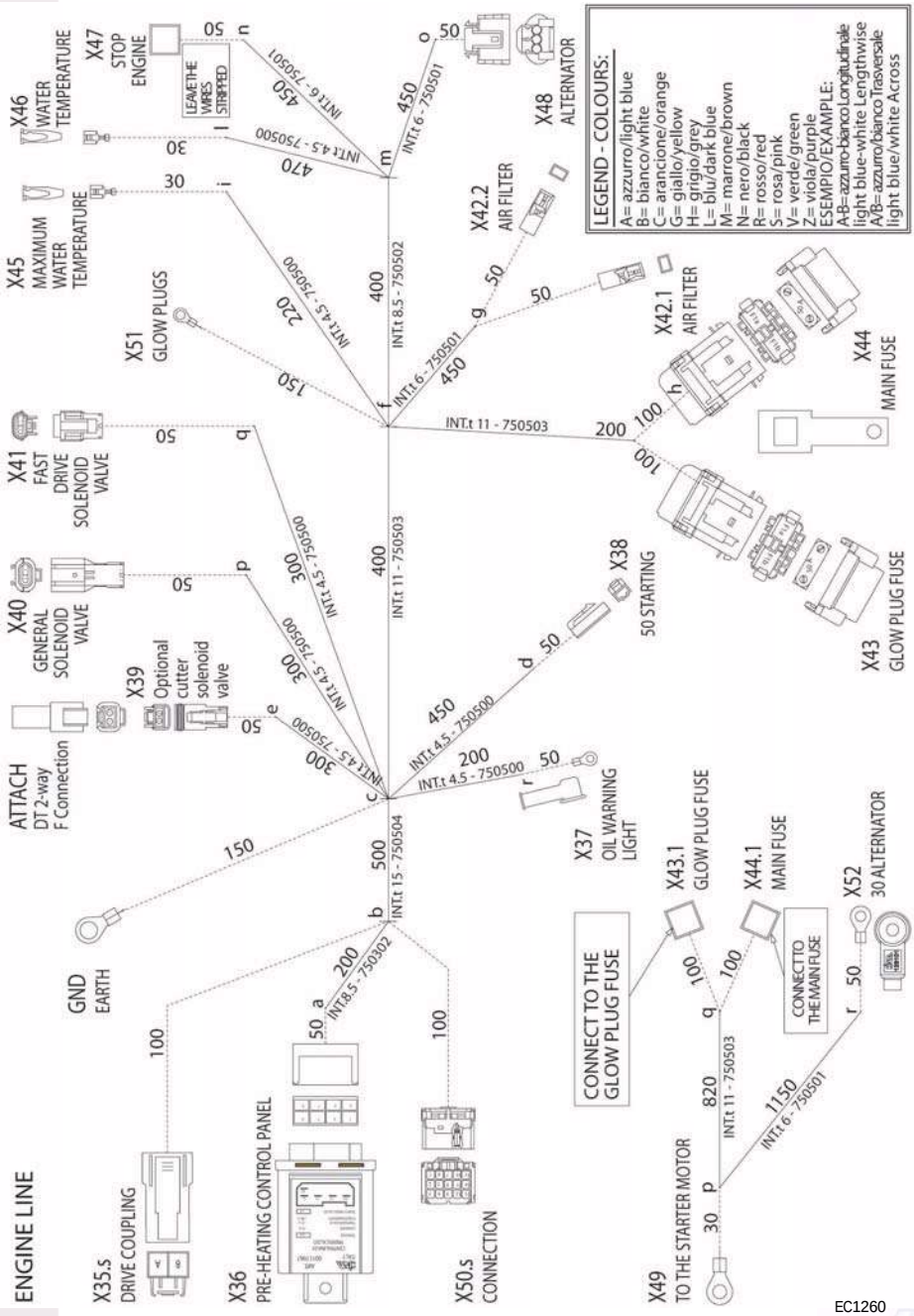

https://truckmanualshub.com/

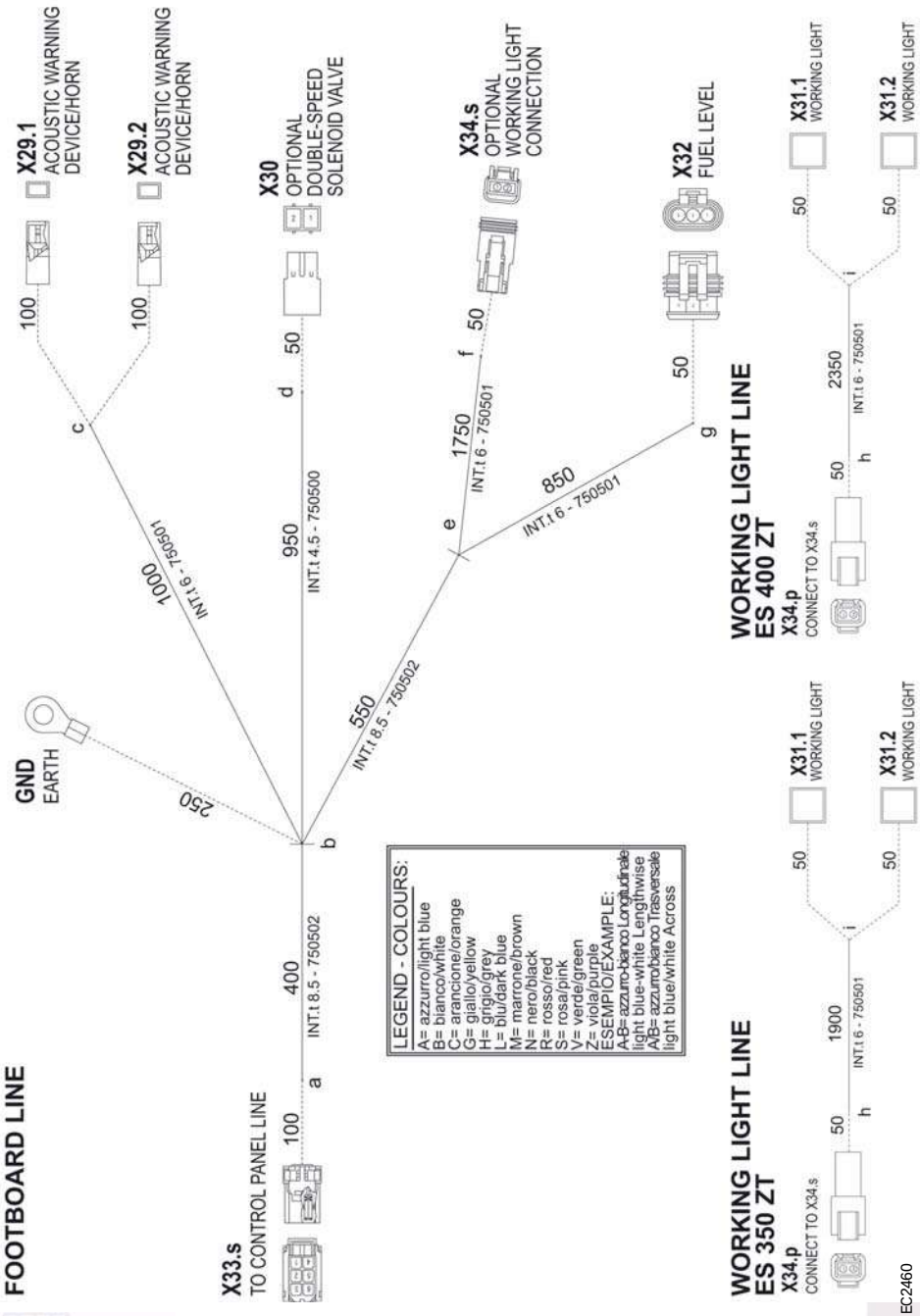

https://truckmanualshub.com/

9.12.1 Fuses

F1	5 A	Instruments and indicator lights
F2	10 A	Working light
F3	10 A	Fast drive speed
F4	10 A	Optional bush cutter unit
F5	10 A	Horn
F6	10 A	- Engine stop (ELECTROSTOP) - Glow-plug pre-heating panel
F7	15 A	Cab heater
F8	10 A	Cab power supply
F9		Optional
F10	5 A	- Cigarette lighter - Electrical outlet direct from the battery
F11	30 A	Starter motor

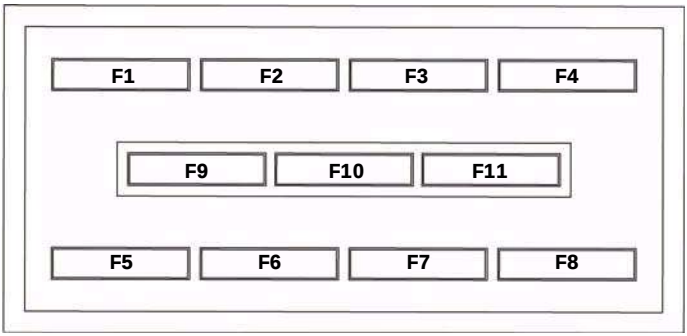

EC1280

https://truckmanualshub.com/

10.0 Troubleshooting

This section was drawn up in order to assist maintenance staff and help them to identify the most common faults. The list is limited to only those problems that can be solved with ordinary equipment.

DISTRIBUTOR

PROBLEMS	POSSIBLE CAUSES	REMEDIES
Inability to hold the load	Oil leaks from inside the plunger	Replace valve housing assembly
	Oil leaks from the relief valve	Disassemble and clean or replace relief valve.
Load falls when plunger is shifted from neutral to "raise" position"	Debris has got into the load check valve	Disassemble and clean load check valve
	Poppet or seat of load check valve is damaged	Replace poppet or lap valve seat
Spool jams	Abnormal increase in oil temperature	Remove obstacles to allow oil to flow freely through the pipes
	Hydraulic fluid is dirty	Change fluid and clean the hydraulic circuit
	Pipe port joints are too tight, so the valve housing is sitting in the wrong position.	Check tightening torque. Loosen mounting bolts, check and adjust.
Spool jams	Debris has got into the grooves of the spool	Remove debris or replace valve housing assembly
	Pressure is too high	Check with pressure gauge and adjust
	Lever or link is bent	Remove link and check
	Spool is bent	Replace valve housing assembly
	Return spring is damaged	Replace the spring
	Return spring or end cap is not properly seated	Loosen end cap, align it and retighten it
	Internal valve temperature distribution is not uniform	Warm up entire circuit

https://truckmanualshub.com/

PROBLEMS	POSSIBLE CAUSES	REMEDIES
Oil leakage from oil seal	Back pressure on valve return circuit is too high	Use a larger return circuit.
	Debris on the seal	Remove seal and clean it
	Seal plate is loose	Clean seal plate and re-tighten it with bolts
	Spool is damaged	Replace valve housing assembly
	Seal is pinched or damaged	Replace oil seal
Spool does not move	Valve is clogged up with debris	Remove debris and clean circuit
	Spool end cap is full of oil	Replace end cap seal
	Drive link is seized and does not move	Make link move freely.

HYDRAULIC MOTOR

PROBLEMS	POSSIBLE CAUSES	REMEDIES
Hydraulic motor does not run at all	Hydraulic fluid is low.	Add oil.
	Hydraulic pump is faulty.	Replace hydraulic pump.
	Oil leak inside the hydraulic motor.	Replace hydraulic motor.
	Hydraulic motor internal parts are worn.	Replace the entire hydraulic motor or its worn parts.
	Drive shaft is overloaded	Check load adjustment device and remove cause of overload.
	Oil viscosity is too low	Replace with hydraulic fluid of the correct viscosity.

https://truckmanualshub.com/

PROBLEMS	POSSIBLE CAUSES	REMEDIES
Hydraulic motor runs in one direction only	Relief valve for operating valve is faulty.	Disassemble and clean relief valve for operating valve or replace it.
	Counterbalance spool jams.	Replace counterbalance valve. Replace hydraulic pump. Replace main relief valve.
Hydraulic motor does not run fast enough	Insufficient incoming oil flow.	Lower the oil temperature
	Oil flow is too high: oil leaks.	Add oil and re-tighten intake joint
	Air is sucked into the motor.	Re-tighten joints.
	Oil leak inside the hydraulic motor.	Replace hydraulic motor.
Hydraulic motor makes abnormal noise	Hydraulic fluid is low.	Add oil.
	Air is sucked into the motor.	Re-tighten joint on the intake side.
	Oil temperature is too high.	Lower oil temperature.
	Hydraulic motor is internally worn or damaged.	Replace hydraulic motor.
	Shaft is incorrectly mounted.	Re-align shaft. Remove cause of cavitation.
Oil leaks from shaft seal	Oil seal is damaged.	Replace oil seal.
	Shaft is damaged or worn.	Replace shaft.
	Hydraulic motor case internal pressure is too high.	Replace oil seal and clean drain pipe.

https://truckmanualshub.com/

HYDRAULIC CYLINDER

PROBLEMS	POSSIBLE CAUSES	REMEDIES
Hydraulic cylinder has inadequate power.	Relief valve pressure setting is too low.	Adjust pressure setting.
	Oil leak inside hydraulic cylinder.	Replace cylinder gaskets.
	Hydraulic cylinder piston or rod is damaged.	Replace hydraulic cylinder piston or rod.
	Oil leak inside drive valve.	Replace valve-housing assembly.
Hydraulic cylinder external oil leak.	Hydraulic cylinder gaskets are defective.	Replace hydraulic cylinder gaskets.
	Hydraulic cylinder rod is damaged.	Replace hydraulic cylinder rod.
Piston does not move smoothly.	Oil temperature is too high.	Lower oil temperature.
	Air is sucked into the motor.	Add oil and re-tighten intake joint.

LIMIT VALVES

PROBLEMS	POSSIBLE CAUSES	REMEDIES
Pressure does not rise at all	Poppet is stuck and remains open.	Disassemble, check for debris and make sure the poppet moves freely.
	Debris has got into the valve seat.	Clean all parts.
Limit valve is not stable	Pilot poppet seat is damaged.	Replace damaged parts.
	Pilot piston is jammed against the main poppet.	Disassemble, clean and eliminate surface flaws.
Limit valve does not work properly	Valve is worn because of debris.	Replace worn parts.
	Lock nut and adjusting screw are loose.	Adjust pressure setting.
Oil leaks	Valve seats are damaged and O-rings are worn.	Replace damaged and worn parts.
	Parts are jammed because of debris.	Disassemble, check that parts are free of flaws, clean and reassemble them.

https://truckmanualshub.com/

ACCESSORIES

PROBLEMS	POSSIBLE CAUSES	REMEDIES
Overall operating power decreases	Engine power is low.	Refer to engine manual.
	Hydraulic pump is worn.	Replace hydraulic pump.
	Main relief valve is defective.	Adjust pressure or replace valve.
	Hydraulic fluid is low.	Add oil.
	Hydraulic fluid viscosity is wrong.	Replace with hydraulic fluid of the correct viscosity.
	Intake filter is clogged.	Replace intake filter.
All functions are faulty	Hydraulic pump is faulty.	Replace hydraulic pump.
	Hydraulic fluid level is low	Add oil.
Accessory's power is down	Main or port relief valve pressure is set too low or incorrectly.	Adjust pressure setting or replace relief valve.
	Hydraulic cylinder gaskets are damaged.	Replace hydraulic cylinder gaskets.
	Hydraulic cylinder piston and cylinder are damaged.	Replace hydraulic cylinder piston and cylinder or modify assembly.
Attachment falls under its own weight	Hydraulic cylinder gaskets are damaged.	Replace hydraulic cylinder gaskets.
	Hydraulic cylinder piston and cylinder are damaged.	Replace hydraulic cylinder piston and cylinder or modify assembly.
	Oil leak inside drive valve.	Replace valve-housing assembly.
Accessory connections are noisy	Oil or grease level is low.	Add oil or grease.
	Connecting pin vibrates.	Replace bush or pin.

https://truckmanualshub.com/

TRAVELLING

PROBLEMS	POSSIBLE CAUSES	REMEDIES
Travelling power is low	Main relief valve pressure setting is too low.	Adjust pressure setting.
	Counterbalance valve is defective.	Replace counterbalance valve.
	Hydraulic motor performance has dropped.	Replace hydraulic motor.
	Swivel joint gaskets are damaged.	Replace swivel joint gaskets.
	Hydraulic pump performance has dropped.	Replace hydraulic pump.
	Oil leak inside drive valve.	Replace valve-housing assembly.
Machine moves erratically	Track tension is too high.	Adjust the track tension.
	Stones or foreign objects are present.	Remove any stones or foreign objects.
	Counterbalance valve is defective.	Replace counterbalance valve.
	Hydraulic motor performance has dropped.	Replace hydraulic motor.
	Hydraulic motor sucks air.	Add oil.
Machine does not run in a straight line	Right and left track tension is different.	Adjust them to equal and proper tension.
	Hydraulic pump performance has dropped.	Replace hydraulic pump.
	Hydraulic motor performance has dropped.	Replace hydraulic motor.
	Oil leak inside drive valve.	Replace valve-housing assembly.
	Swivel joint gaskets are damaged.	Replace swivel joint gasket.
	Lever links are loose.	Adjust.

https://truckmanualshub.com/

OPERATION LEVERS

PROBLEMS	POSSIBLE CAUSES	REMEDIES
Levers hard to operate	Debris in the drive valve spool.	Clean the drive valve.
	Valve plunger jams.	Replace valve-housing assembly.
	Lever links lack lubrication.	Apply oil or grease.
	Lever links are too tight	Apply oil or grease.

HYDRAULIC PUMP

PROBLEMS	POSSIBLE CAUSES	REMEDIES
No oil flows from hydraulic pump	Hydraulic fluid is low.	Add oil.
	Intake filter is clogged.	Replace filter. If oil is dirty, replace it with fresh oil.
Hydraulic pump pressure does not rise	Hydraulic pump internal oil leak.	Replace hydraulic pump.
	Hydraulic pump sucks air.	Add oil and check intake hose.
	Main relief valve pressure is set too low.	Adjust pressure setting.
Abnormal noise from hydraulic pump	Cavitation due to bent intake pipe or clogged intake filter.	Replace filter. If oil is dirty, replace it with fresh oil.
	Air is sucked in due to loose intake joint or shortage of hydraulic fluid.	Re-tighten intake joint or add oil.
	Cavitation due to hydraulic fluid viscosity.	Replace with hydraulic fluid of the correct viscosity.
	Pump and engine are not aligned.	Re-align them.
	Hydraulic fluid contains bubbles.	Check cause of bubbles and remove it. (Replace oil with fresh oil)
Oil leaks out from hydraulic pump	Hydraulic pump seal is defective.	Replace seal or replace hydraulic pump.

SWIVEL JOINT

PROBLEMS	POSSIBLE CAUSES	REMEDIES
Operating power is low	Swivel joint gasket is defective.	Replace swivel joint gasket.
	Swivel joint rotor is damaged.	Replace swivel joint.
Oil leaking out of Swivel joint.	Swivel joint gasket is defective.	Replace swivel joint gasket.

https://truckmanualshub.com/

SWIVELLING

PROBLEMS	POSSIBLE CAUSES	REMEDIES
Swivel power is low	Hydraulic motor performance has dropped.	Replace hydraulic motor.
	Swivel ring is jammed.	Oil/grease or replace swivel ring.
Swivel retarder keeps turning	Retarder valve pressure is set too low.	Adjust pressure
	Port relief valve or retarder valve is clogged.	Clean port relief valve or retarder valve.
	Hydraulic motor performance has dropped.	Replace hydraulic motor.
	Oil leak inside drive valve.	Replace valve-housing assembly.
Swivelling continues with retarder activated.	Port relief valve or retarder valve pressure is set too low.	Adjust pressure setting.
	Port relief valve or retarder valve is clogged.	Clean port relief valve or retarder valve.
	Hydraulic motor performance has dropped.	Replace hydraulic motor.
	Oil leak inside drive valve.	Replace valve-housing assembly.
Abnormal noise when swivelling	Hydraulic motor sucks air.	Add oil.
	Swivel bearing is not well lubricated.	Add oil/grease.

https://truckmanualshub.com/

ENGINE AND RELATED PARTS

PROBLEMS	POSSIBLE CAUSES	REMEDIES
Engine does not start	Defective starter switch	Repair the defective connection and contact positions.
	Defective starter motor revolution.	Possible flat battery, starter motor failure or bad or loose connections on power distribution.
	Incorrect viscosity of engine oil.	Check and remedy. Pre-heat with an air heater.
	Engine extremely cold.	Warm the coolant (add hot water).
	Crankshaft, camshaft, piston or bearing seized.	Repair.
	Air in the fuel system.	Drain the fuel system completely.
	No fuel in tank.	Add fuel.
	Poor fuel quality.	Inspect and replace.
	Fuel filter clogged.	Clean or replace.
	Compression level low	Repair.
	Defective fuel injection pump.	Repair.
Engine stops suddenly when running.	No fuel in tank.	Add fuel.
	Fuel filter clogged.	Clean or replace.
	Air in the fuel system.	Tighten the joints on fuel system pipes

https://truckmanualshub.com/

PROBLEMS	POSSIBLE CAUSES	REMEDIES
Oil pressure is defective.	Oil shortage.	Add oil.
	Oil leakage from joint.	Repair it.
	Defective oil pressure switch.	Replace it.
	Oil filter clogged.	Replace filter element.
	Oil viscosity low.	Replace with oil suitable for the operating temperature.
	Oil pump not working properly.	If the problem persists after re-adjusting and cleaning, replace it.
Engine overheating	Coolant level low	Top up.
	Water leak.	Check hoses and radiator.
	Fan belt tension incorrect.	Adjust or replace.
	Radiator failure.	Repair or replace.
	Fan broken.	Replace it.
	Anti-freeze concentration too high.	Dilute mixture.
	Thermostat failure.	Replace it.
	Water pump failure.	Replace it.
Defective charging of battery.	Fan belt tension incorrect.	Adjust tension.
	Cables defective.	Repair them.
	Faulty indicator light.	Replace it.
	Battery failure.	Check connections, recharge, replace.
	Regulator failure.	Replace it.
	Alternator failure.	Repair or replace.

https://truckmanualshub.com/

ENGINE AND RELATED PARTS

PROBLEMS	POSSIBLE CAUSES	REMEDIES
White or blue smoke coming from the exhaust	Too much oil.	Reduce to the specified level.
	Viscosity of oil is too low.	Replace it with oil of suitable, viscosity.
	Over-cooling of radiator.	Put a cover on the radiator or replace it.
	Incorrect injection timing.	* Re-adjust.
	Compression low.	* Strip-down, inspect, or replace the part.
Black or dark grey smoke coming from the exhaust	Poor fuel quality.	Replace with better quality fuel.
	Incorrect valve clearance.	Adjust it.
	Injection pump operating incorrectly.	* Adjust and replace if necessary.
	Compression low.	* Strip-down, inspect, or replace the part.
	Air intake blocked (clogged air filter).	Clean or replace the element.
Fuel consumption too high	Injection pump operating incorrectly.	* Adjust and replace if necessary.
	Injection nozzle failure.	* Adjust and replace if necessary.
	Incorrect injection timing.	* Adjust and repair it or replace it with a better one.
	Poor fuel quality.	Replace with better quality fuel.
	Compression inadequate.	* Strip-down, inspect and replace the parts if necessary.
	Air intake blocked.	Clean or replace the element.

https://truckmanualshub.com/

PROBLEMS	POSSIBLE CAUSES	REMEDIES
Oil consumption is too high	Too much oil.	Reduce to the specified level.
	Oil viscosity low.	Replace with oil of suitable viscosity for the operating temperature.
	Oil leaks.	Locate leak and tighten it or replace part if necessary.
	Cylinder piston ring worn.	* Strip-down, inspect and replace the parts if necessary.
FOR OTHER CAUSES NOT SPECIFIED IN THIS MANUAL CONTACT THE SERVICE DEPARTMENT		

For remedies marked*, kindly contact the service department.

https://truckmanualshub.com/

https://truckmanualshub.com/

https://truckmanualshub.com/

AZIENDA CON SISTEMA DI
GESTIONE PER LA QUALITÀ
CERTIFICATO DA DNV
=UNI EN ISO 9001:2008=

SAMPIERANA S.p.A.
I - 47026 S.PIERO IN BAGNO (FC) - ITALY
Via Leonardo da Vinci, 40
Tel. (+39) 0543.904211
Fax (+39) 0543.918520
www.sampierana.com - info@sampierana.com

Jobber: