https://truckmanualshub.com/

BODY BUILDER INSTRUCTIONS

Mack Trucks

Body Builder; Engine, MP7, MP8, and MP10
CHU, CXU, GU, TD, MRU, LR
Section 2

Introduction

This information provides details for the MP7, MP8, and MP10 engines for MACK vehicles.

Note: We have attempted to cover as much information as possible. However, this information does not cover all the unique variations that a vehicle chassis may present. Note that illustrations are typical but may not reflect all the variations of assembly.

All data provided is based on information that was current at time of release. However, **this information is subject to change without notice** .

Please note that no part of this information may be reproduced, stored, or transmitted by any means without the express written permission of MACK Trucks, Inc.

Contents:

- “Fuel and Oil”, page 2
- “Engine Overview”, page 3
- “Exhaust Aftertreatment System”, page 10
- “Heated Dump Bodies ”, page 25
- “Exhaust Back Pressure for US2010 and GHG2017 Engines”, page 26
- “MR/LR Exhaust Aftertreatment System Regeneration”, page 27
- “Dash Overview”, page 29
- “In-Transit Heat Cooling System ”, page 37
- “Fittings, Fuel Line, Replacement”, page 41

All Rights Reserved

Downloaded from www.Manualslib.com manuals search engine

https://truckmanualshub.com/

Fuel and Oil

CAUTION

Diesel engines for 2006 and later model year vehicles are designed to operate only with ultra low sulfur diesel (ULSD) fuel. Use of fuel other than ULSD will reduce the efficiency and durability of the engine, permanently damage the advanced emission control systems, reduce fuel economy and possibly prevent the engine from running at all. Manufacturer's warranties are likely to be rendered void by usage of improper or incorrect fuel, and usage of fuels other than ULSD fuel in diesel-powered vehicles is illegal and punishable with civil penalties. Use of fuel additives to compensate for the lower sulfur content is NOT recommended by MACK Trucks, Inc.

Fuel sold for use in diesel-powered engines for 2006 and later model year vehicles may only contain a maximum sulfur content of 0.0015% by weight. This was done to reduce particle emissions in the exhaust.

Bio Diesel

The only biodiesel fuel approved by MACK Trucks, Inc. for use in MACK Engines is soy methyl ester (SME or SOME) in blends up to B20 concentration (20% blend).

Note: Although higher concentrations are available, concentration up to B20 (maximum) are the only blends currently approved by MACK Trucks, Inc.

Greenhouse Gas 2017

Maximum limit will be B10 concentration (10% blend).

Engine Oil

EO-O Premium Plus (or VDS-4) diesel engine oil is mandatory for use in all 2017 emission compliant MACK engines. Chassis equipped with a 2017 emission compliant engine, which can be identified by the presence of an aftertreatment selective catalytic reduction (SCR) system, also require the use of Ultra Low Sulfur Diesel (ULSD) fuel. EO-O Premium Plus oils exceed the new American Petroleum Institute (API) service category CJ-4.

Notes

All Rights Reserved
Downloaded from www.Manualslib.com manuals search engine

https://truckmanualshub.com/

Engine Overview

DANGER

Do not use ether or other combustible starting aids in any MACK engine. Introduction of ether or similar starting aids could cause a fire or explosion resulting in severe property damage, serious personal injury or death.

CAUTION

DO NOT crank the engine for more than 30 seconds at a time; wait 15 minutes after each try to allow the starter to cool. Failure to follow these instructions could cause starter damage.

Note: Some starters are equipped with starter protection. If the engine is running, the starter temperature is too high, the transmission is not in neutral or the clutch pedal is not depressed, starter engagement is inhibited.

Allow the engine to slow down and idle for 3 to 5 minutes before shutting it off. This allows the turbocharger to cool down and the cooling system to dissipate the engine heat. Switch the engine off by turning the ignition key to the OFF position.

CAUTION

Shutting off an engine immediately after high speed or full load operation can damage the turbocharger and cause heat stress in the engine. Always let the engine idle for 3 to 5 minutes before shutting it off.

MACK Trucks, Inc. does not recommend the use of winterfronts, shutters or any other shield in front of the grille or radiator package under normal circumstances. Today's electronically controlled engines are designed to operate in cold temperatures without a winterfront. These devices, if not used properly, can cause higher exhaust gas temperatures, power loss, excessive fan usage, failure of the charge-air-cooler (CAC) and a reduction in fuel economy. Winterfronts can be used in the wintertime during very cold weather if used properly. In these cases, engine coolant and intake air temperatures must also be carefully monitored and controlled. Please see your authorized MACK Truck dealer for recommended winterfronts.

CAUTION

MACK is now using the ambient air temperature (AAT) sensor for on board diagnostic (OBD) monitoring. If a customer installs a winterfront or blocks the radiator opening and blocks airflow to the sensor, they will likely set an OBD diagnostic trouble code (DTC) for inaccurate sensor data due to restricted airflow across the sensor.

All Rights Reserved

Downloaded from www.Manualslib.com manuals search engine

https://truckmanualshub.com/

DANGER

Failure to take the necessary precautions when the STOP telltale is on can result in automatic engine shutdown and the loss of power steering. Vehicle crash can occur.

The engine shutdown system will automatically derate or stop the engine when one or more of the conditions listed below reaches a critical stage:

- High Engine Coolant Temperature (ECT)
- Low Engine Oil Pressure (EOP)
- Low Engine Coolant Level (ECL)
- High Crankcase Pressure (CCP)

When the shutdown is activated, the telltales come on along with display symbols and the buzzer is also activated. After a brief time, the engine shuts down. Find a safe place to pull off the road as soon as possible.

After the engine has been shut down by the system, turn the ignition key to the OFF position. If necessary, the engine can be restarted for a brief time so that the vehicle may be pulled off the road.

The alarm will remain activated until repairs have been made to correct the problem that caused the shutdown.

CAUTION

Continuously restarting the engine once the shutdown system is active may result in severe engine damage.

Refer to the driver information display (DID) manual for information about the display symbols.

W2116208

All Rights Reserved

Downloaded from www.Manualslib.com manuals search engine

https://truckmanualshub.com/

Engine Overview, MP7 and MP8 Left Side View

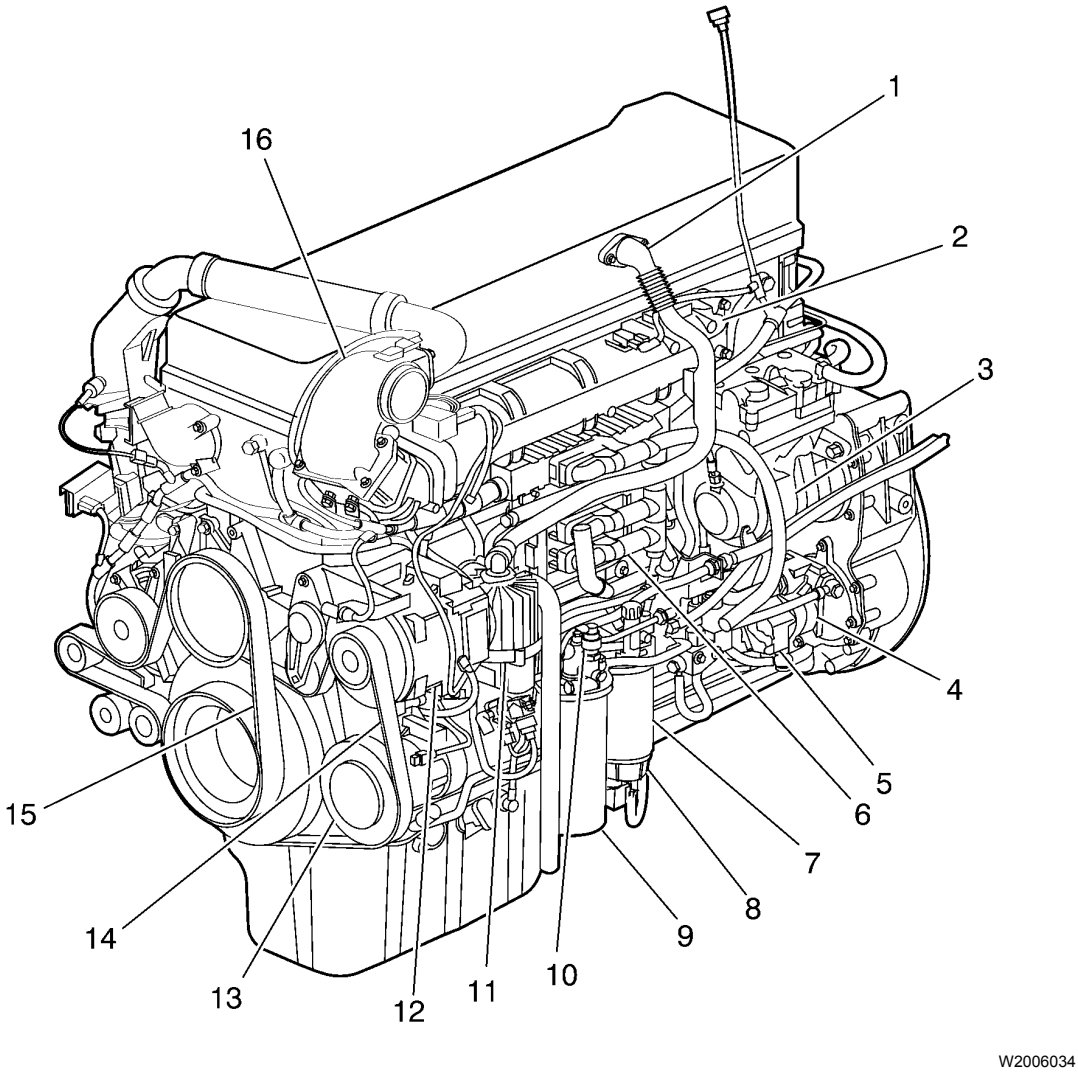

MP8 Engine Shown, MP7 Engine Similar

1. Breather Tube	9. Fuel Filter
2. Intake Manifold	10. Hand-Priming Pump
3. Air Compressor	11. Crankcase Ventilator
4. Power Steering Pump	12. Alternator
5. Fuel Pump	13. AC Compressor
6. Engine Control Module (ECM)	14. Alternator/AC Compressor Belt
7. Fuel Filter	15. Fan/Coolant Pump Belt
8. Fuel/Water Separator	16. Exhaust Gas Recirculation (EGR) Mixing Chamber

All Rights Reserved
Downloaded from www.Manualslib.com manuals search engine

https://truckmanualshub.com/

Engine Overview, MP7 and MP8 Right Side View

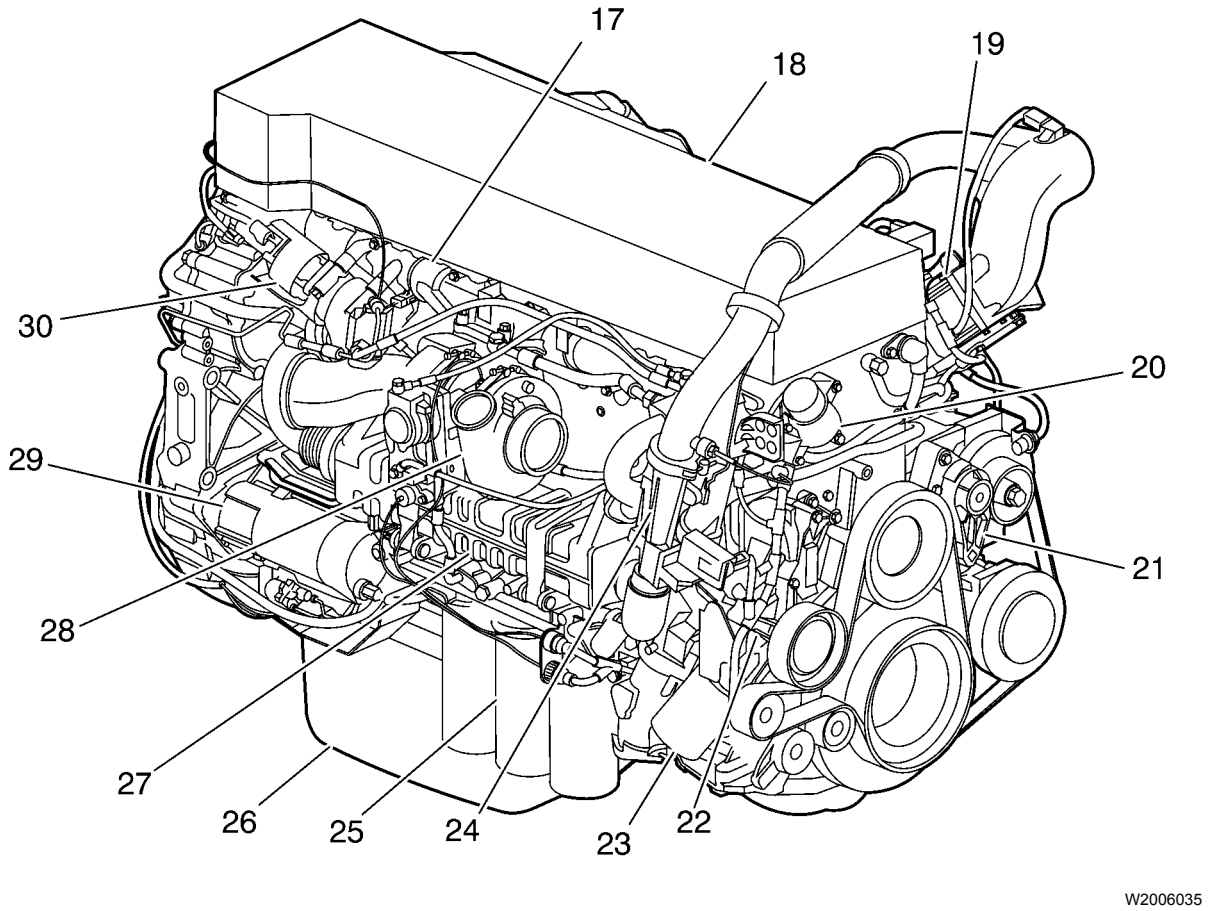

MP8 Engine Shown, MP7 Engine Similar

17. Exhaust Manifold	24. Venturi Pipe
18. Valve Cover	25. Oil Filters
19. Intake Air Heater (IAH) optional	26. Oil Pan
20. Thermostat	27. Exhaust Gas Recirculation (EGR) Cooler
21. Belt Tensioner	28. Turbocharger
22. Coolant Pump	29. Starter Motor
23. Coolant Filter	30. Exhaust Gas Recirculation (EGR) Valve

All Rights Reserved
Downloaded from www.Manualslib.com manuals search engine

https://truckmanualshub.com/

Engine Overview, MP10 Left Side View

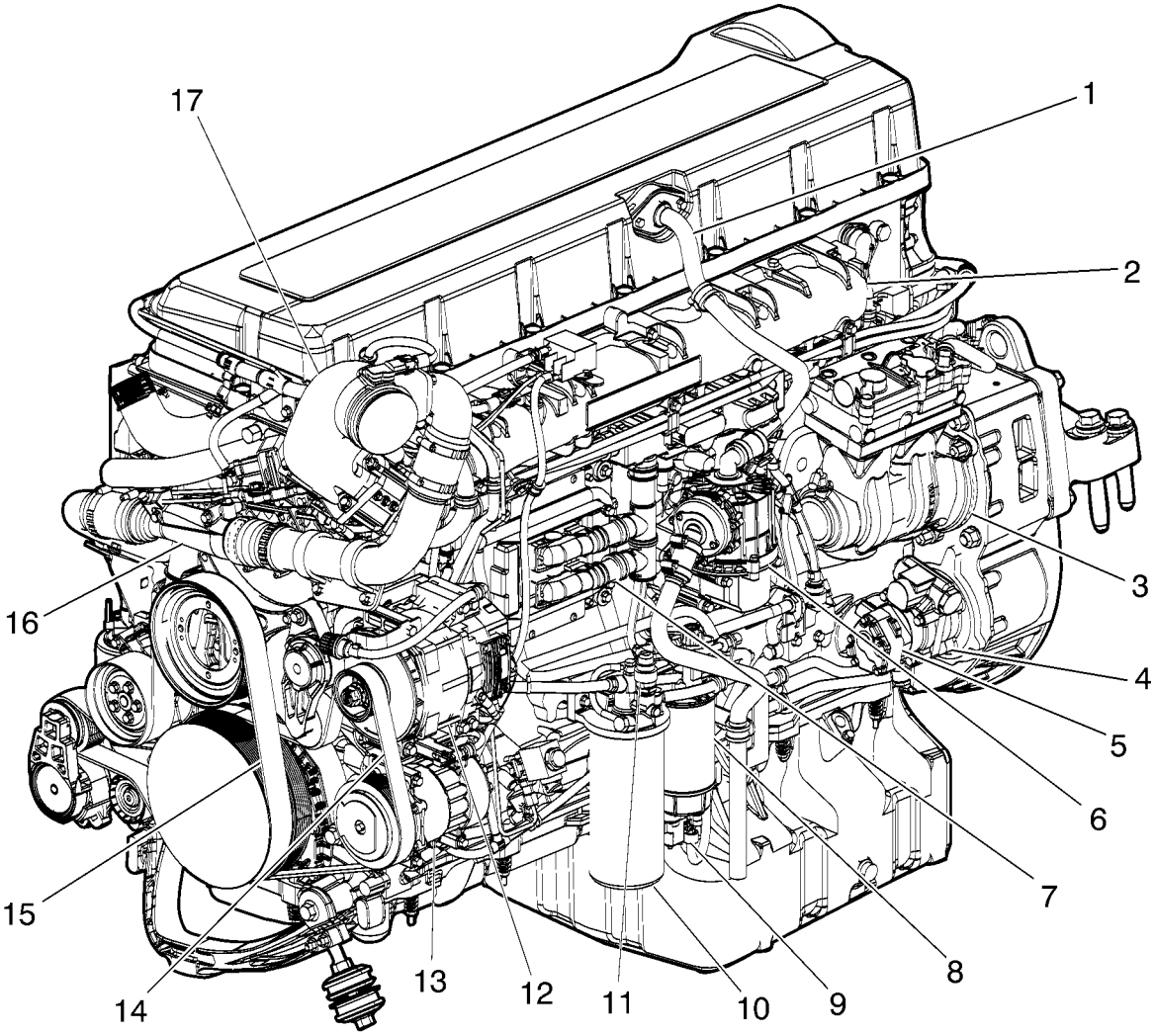

W2006037

1. Breather Tube	10. Fuel Filter
2. Intake Manifold	11. Hand-Priming Pump
3. Air Compressor	12. Alternator
4. Power Steering Pump	13. AC Compressor
5. Fuel Pump	14. Alternator/AC Compressor Belt
6. Crankcase Ventilator	15. Fan/Coolant Pump Belt
7. Engine Control Module (ECM)	16. Venturi Pipe
8. Fuel Filter	17. Exhaust Gas Recirculation (EGR) Mixing Chamber
9. Fuel/Water Separator	

All Rights Reserved

Downloaded from www.Manualslib.com manuals search engine

https://truckmanualshub.com/

Engine Overview, MP10 Right Side View

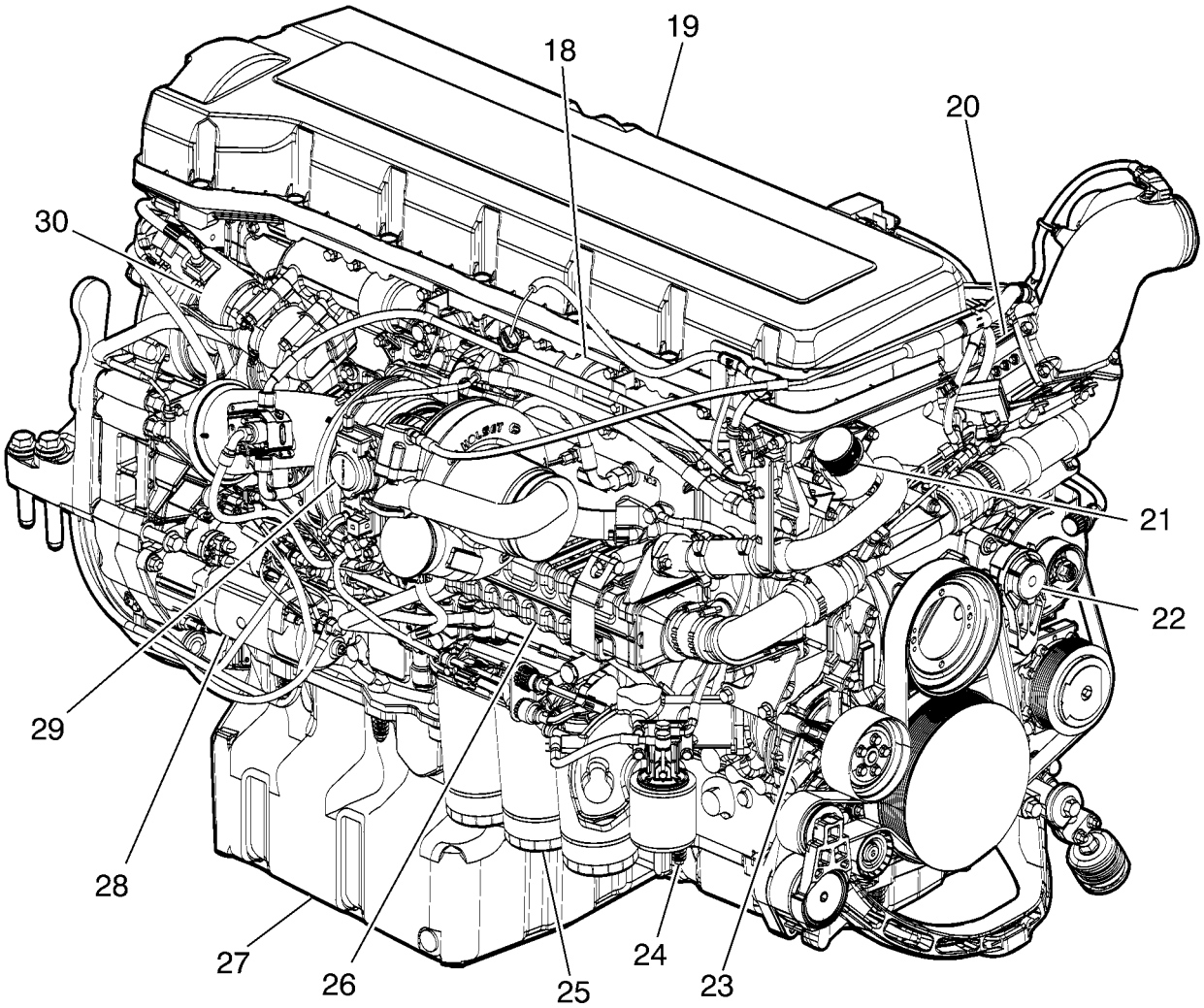

W2006036

18. Exhaust Manifold	25. Oil Filters
19. Valve Cover	26. Exhaust Gas Recirculation (EGR) Cooler
20. Intake Air Heater (IAH)	27. Oil Pan
21. Thermostat	28. Starter Motor
22. Belt Tensioner	29. Turbocharger
23. Coolant Pump	30. Exhaust Gas Recirculation (EGR) Valve
24. Coolant Filter	

All Rights Reserved

Downloaded from www.Manualslib.com manuals search engine

https://truckmanualshub.com/

Engine Clearance

A minimum of 40.64 mm (1.6 in) of clearance should be maintained around the engine. Additionally, no equipment should be installed that would restrict air flow through the radiator or to the engine air intake.

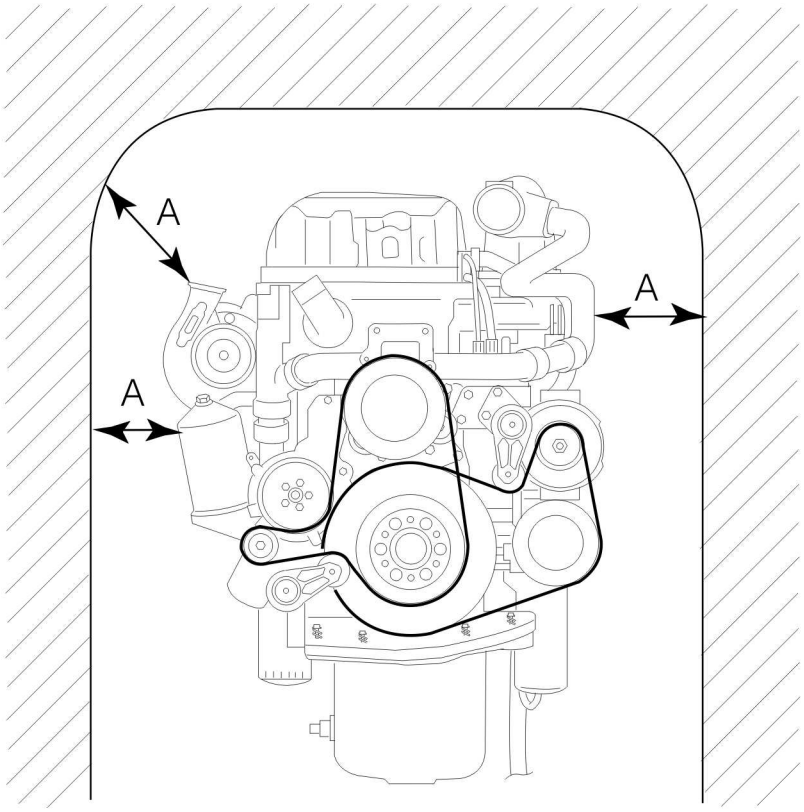

W2031928

Fig. 1 Allow Sufficient Clearance Around Engine

A. 40.64 MM (1.6 in) Minimum

All Rights Reserved
Downloaded from www.Manualslib.com manuals search engine

https://truckmanualshub.com/

Exhaust Aftertreatment System

Your new MACK chassis is equipped with emission compliant engine, with an engine exhaust aftertreatment system (DPF) and selective catalytic reduction (SCR) system. Vehicles equipped with a DPF require the use of EO-O Premium Plus (or VDS-4) specification high performance diesel engine oil and ultra low sulfur diesel (ULSD) fuel.

CAUTION

Use of diesel fuel other than ULSD and engine oils other than EO-O Premium Plus (or VDS-4), will adversely affect performance, efficiency and durability of the DPF system and the engine, to the point where the engine may not run at all. Manufacturer's warranties will also be rendered void due to usage of improper fuel. Unapproved fuel additives (including engine oil) are NOT permitted.

MACK Trucks, Inc. offers two different types of DPF systems:

• Conventional DPF (passive regeneration and parked regeneration)

• Spark Assisted DPF (moving regeneration and parked regeneration)

as well as two different mounting styles:

1. MACK vertical back-of-cab DPF (both conventional DPF and spark assisted DPF)

2. MACK-Cap DPF, which is a space saving unit that is mounted inside the frame (conventional only)

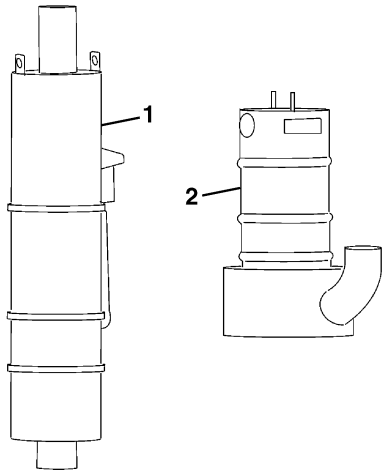

C0029353

A DPF takes the place of the standard muffler. The DPF is used to meet EPA requirements to help reduce soot and particulate emissions into the atmosphere. The particulates are removed by collecting in the DPF unit, where they are eventually oxidized during passive or active regeneration. The electrical system and exhaust aftertreatment system of the vehicle will determine when regeneration is required. MACK Trucks, Inc., uses two exhaust aftertreatment systems: conventional and spark assisted.

Conventional exhaust aftertreatment systems use aftertreatment DPF passive-active regeneration. The passive regeneration process oxidizes the particulates captured in the DPF while the vehicle is in operation. A diesel oxidation catalyst (DOC) raises the exhaust gas temperature (EGT) to approximately 260°C (500°F), the temperature at which a chemical reaction takes place to oxidize the soot (passive regeneration).

All Rights Reserved
Downloaded from www.Manualslib.com manuals search engine

https://truckmanualshub.com/

Aftertreatment DPF spark assisted systems use active regeneration. Regeneration takes place after a certain number of engine operating hours and begins when an air/fuel mixture is injected into the thermal regenerator and raises the temperature inside the unit to the point where the soot oxidation takes place.

Conventional exhaust aftertreatment systems are used in highway and certain vocational applications. Spark assisted exhaust aftertreatment systems are used mainly in refuse collection applications.

Depending on how the vehicle is set up, aftertreatment DPF regeneration can occur while the vehicle is being driven (referred to as a "moving" regeneration) or when the vehicle is parked and idling (referred to as a "parked" regeneration).

CAUTION

When aftertreatment DPF active regeneration occurs (with either system), the temperature of the exhaust will be elevated. DO NOT park the vehicle with the exhaust outlet under low hanging overhead flammable objects such as trees, awnings, etc., that could be damaged by elevated exhaust gas temperatures (EGTs). DO NOT remove the diffuser.

CAUTION

If the vehicle is in a location that may be hazardous when an aftertreatment DPF active regeneration begins (i.e., in close proximity to flammable materials or gases), the regeneration should be stopped by pushing the DPF switch to the "Stop Regeneration" position.
If an active regeneration is stopped by the vehicle operator, it should be initiated at a later time when the vehicle is in a safe location. However, if an active regeneration is stopped repeatedly, the vehicle may need to be taken to a MACK service facility. The service facility will use a service tool to manually initiate the regeneration.

WARNING

For chassis equipped with a heated dump body, be aware that temperature around the area where the exhaust enters the body, as well as the product contained in the body, may be elevated, particularly during aftertreatment DPF regeneration.

Extended Idling and Aftertreatment System Conditioning

Extended idling performed on this vehicle equipped with an exhaust aftertreatment system should be carried out at a low engine idle speed. There is no benefit to using a raised engine idle speed for extended idling. The only exception is for active power takeoff (PTO) . Utilizing an engine speed above 1,300 rpm is recommended for vehicles which perform extended idling with an active PTO.

During periods of extended idling, normally greater than 8 hours, the conventional aftertreatment diesel particulate filter (DPF) system needs to perform a routine conditioning cycle. The conditioning cycle is controlled by the engine control module (ECM) and will start and stop automatically as needed. The DPF conditioning is required to maintain normal exhaust aftertreatment system function and should not be stopped. DPF conditioning will not occur on aftertreatment DPF spark assisted systems.

During these events the engine speed (RPM) will increase to approximately 1,050 - 1,400 rpm, for non-PTO , in order to complete the exhaust aftertreatment conditioning cycle. Exhaust gas temperatures (EGT) will also elevate slightly but remain much lower than that reached during aftertreatment DPF regeneration and present no danger.

If a compatible driver display is available a message will be displayed when the conditioning cycle is in progress. The message indicated in the driver's display will be "ATS Conditioning in Progress, No Action Required." If no driver display is available there will be no indication of an DPF conditioning event except for the automatic increase in RPM.

All Rights Reserved

Downloaded from www.Manualslib.com manuals search engine

https://truckmanualshub.com/

Exhaust Aftertreatment System (EAS)

CHU/CXU/GU/Titan Standard System View

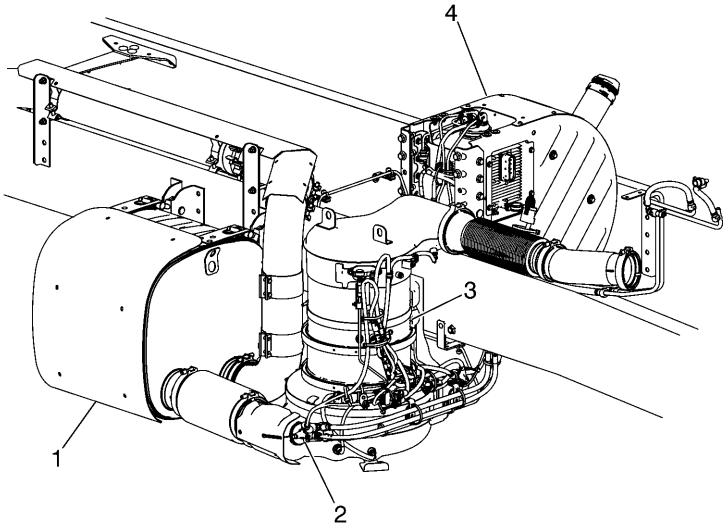

W2029933

1. Selective Catalytic Reduction (SCR) Catalyst
2. Aftertreatment Diesel Exhaust Fluid (DEF) Dosing Valve
3. Aftertreatment Diesel Particulate Filter (DPF)
4. Aftertreatment DEF Tank

DEF is a reactant that's key to the SCR process. It's a nontoxic, ultra-pure solution of urea and ultra-pure water. Urea is a compound of nitrogen that turns to ammonia when heated. It is used in a variety of industries, perhaps most commonly as a fertilizer in agriculture. The fluid is non flammable, and is not dangerous when handled as recommended. However, it is highly corrosive to certain metals, especially copper and brass. Read the separate section concerning the handling of DEF solution.

GHG17 ClearTech One

One box EATS.

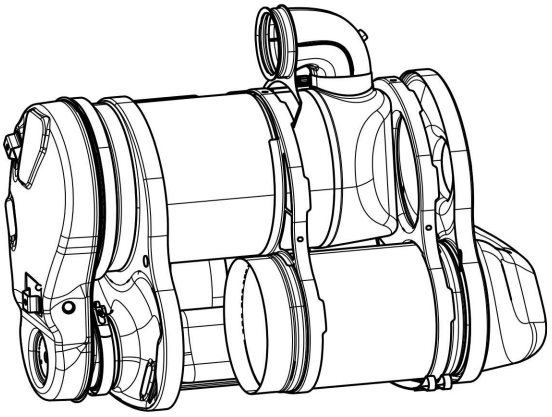

W2116209

All Rights Reserved
Downloaded from www.Manualslib.com manuals search engine

https://truckmanualshub.com/

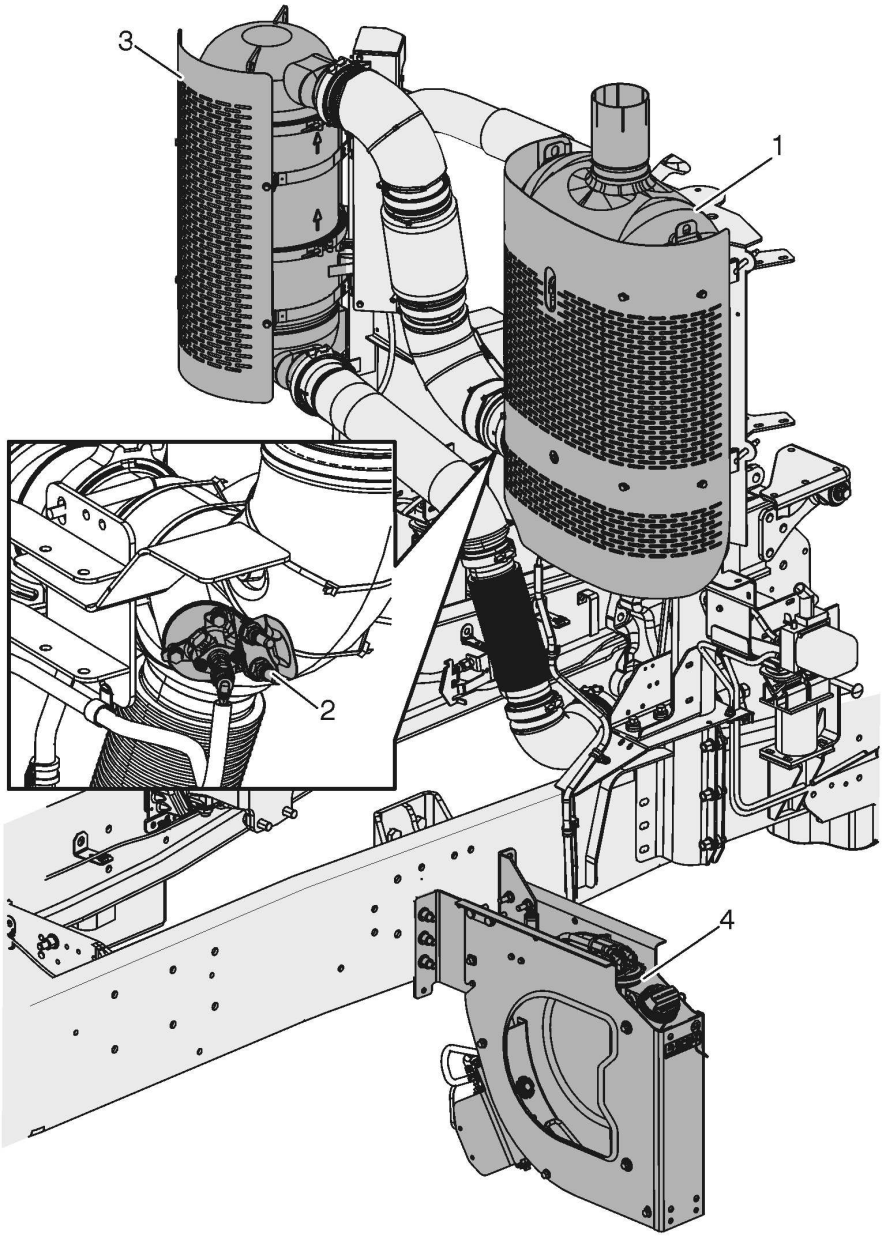

W2031562

1. Selective Catalytic Reduction (SCR) Catalyst
2. Aftertreatment Diesel Exhaust Fluid (DEF) Dosing Valve
3. Aftertreatment Diesel Particulate Filter (DPF)
4. Aftertreatment DEF Tank

DEF is a reactant that's key to the SCR process. It's a nontoxic, ultra-pure solution of urea and ultra-pure water. Urea is a compound of nitrogen that turns to ammonia when heated. It is used in a variety of industries, perhaps most commonly as a fertilizer in agriculture. The fluid is non flammable, and is not dangerous when handled as recommended. However, it is highly corrosive to certain metals, especially copper and brass. Read the separate section concerning the handling of DEF solution.

All Rights Reserved

Downloaded from www.Manualslib.com manuals search engine

https://truckmanualshub.com/

Note: The DEF Tank filler area must be protected or shielded from solid or liquid debris falling from normal refuse pick up operations or body clean out operations.

Safety Information

MACK utilizes a diesel particulate filter (DPF) and selective catalytic reduction (SCR) to meet US2017 emissions. The system is designed to require very little driver interface to maintain correct operation. The technology utilizes a aftertreatment DPF passive regeneration; requiring no fuel to be injected to clean the DPF. In US 2007 an active regeneration (fuel was injected) was required to clean out the DPF producing very high exhaust outlet temperatures. Certain vocational duty cycles will require the use of fuel and/or a DPF parked regeneration to clean out built-up soot in the particulate filter. Exhaust gas temperatures (EGT) will increase during a parked regeneration. When parking the vehicle to perform a parked regeneration keep away from any flammable materials, vapors or structures.

DANGER

Exhaust gases and components can be at extremely high temperatures during aftertreatment DPF regeneration. When parking the vehicle, keep away from any flammable materials, vapors, or structures.

DANGER

The temperature of the exhaust system components during the aftertreatment DPF regeneration process can exceed 350 ° C (660 ° F). The exhaust gas leaving the system can reach 505 ° C (930° F). Various factors (including ambient air temperature (AAT) and duration of the regeneration process) determine when these components will return to normal operating temperature after regeneration has completed. Be extremely careful around these hot components. Contact with these components can result in serious personal injury.

Notes

All Rights Reserved

Downloaded from www.Manualslib.com manuals search engine

https://truckmanualshub.com/

Exhaust Aftertreatment System Components and

Selective Catalytic Reduction (SCR)

SCR is an emissions-reduction technology with the ability to deliver near-zero emissions of nitrogen oxides (NOx), a smog-causing pollutant and greenhouse gas. SCR's performance has been proved in millions of miles of real-world trucks in other countries, as well as in long-term field tests in the U.S. SCR reduces NOx emissions to very low levels, while at the same time delivering excellent fuel economy and reliability. The system doesn't change the design or of the basic engine. Rather, SCR is an aftertreatment system which converts NOx in the exhaust stream into harmless gases. Modern diesels already use exhaust aftertreatment systems, called diesel particulate filters (DPFs), to control emissions of another pollutant, soot (also known as particulate matter). SCR works by injecting diesel exhaust fluid (DEF) into the exhaust. DEF is a solution of ultra-pure water and urea. DEF works with the heat of the exhaust and a SCR catalyst to convert NOx into nitrogen and water vapor - two harmless and natural components of the air we breathe. The end result is cleaner air, excellent fuel efficiency and a reliable emissions control system for today's modern diesel engine.

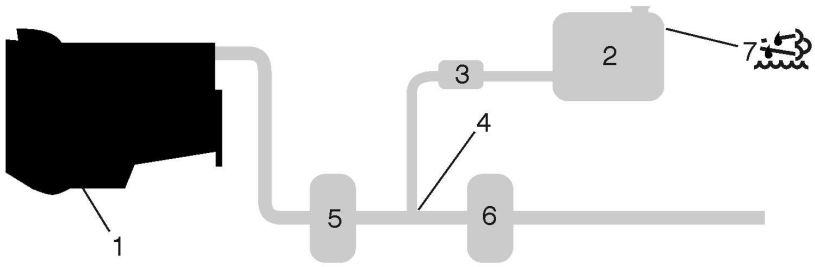

W2031651

System Operation

1. Diesel engine optimized for high performance, low particle emissions and low fuel consumption.
2. Aftertreatment DEF tank.
3. The aftertreatment control module (ACM) continuously monitors and adjusts the DEF dosing rate.
4. DEF is injected into the exhaust gases in between the aftertreatment DPF (5) and the SCR catalyst (6).
5. Aftertreatment diesel particulate filter (DPF).
6. In the SCR catalyst, nitrogen oxides are transformed into harmless nitrogen gas and water.

Notes

All Rights Reserved
Downloaded from www.Manualslib.com manuals search engine

https://truckmanualshub.com/

SCR Surface Temperatures

Position	Thickness of Heat Insulation	at exhaust temperature of 350 °C (662 °F) at the SCR-muffler inlet	at exhaust temperature 450 °C (842 °F) at the SCR-muffler inlet
Casing – all round	Muffler filled with insulation	75 °C (167 °F)	125 °C (257 °F)
End wall – in/outlet side	20 mm (0.78 in)	100 °C (212 °F)	150 °C (302 °F)
End wall – other side	20 mm (0.78 in)	125 °C (257 °F)	200 °C (392 °F)
Mounting strap area	No insulation	225 °C (437 °F)	300 °C (572 °F)

The MACK SCR system is simple and effective, with few components. It consists of a aftertreatment DEF tank positioned near the standard diesel tank, plus a aftertreatment DEF pump, aftertreatment DEF Dosing valve and a SCR catalyst. The advantage of using DEF is that it enables the engine to use less exhaust gas recirculation (EGR) gases – and higher oxygen levels – for better combustion, while meeting the EPA near-zero NOx emissions requirement of 0.2 g/hp-hr NOx. By using DEF, we avoid the disadvantages of increasing EGR to massive levels. This results in better fuel economy from your MACK engine.

W2055490

Vertical SCR, side inlet

W2055491

Vertical SCR, bottom inlet

W2116335

Vertical SCR, side inlet and outlet

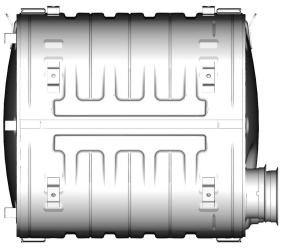

W2055492

Horizontal SCR, full size

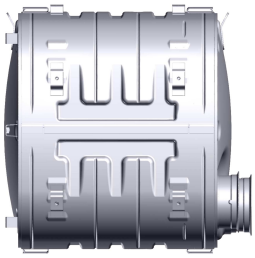

W2055493

Horizontal SCR, compact size

All Rights Reserved
Downloaded from www.Manualslib.com manuals search engine

These 2017 GHG ClearTech One DPF/SCR surface temperatures were measured from a test vehicle in a controlled environment and are meant to be used as guidelines for mounting additional Customer equipment. These temperatures could vary based on the application and operating environment of your specific vehicle.

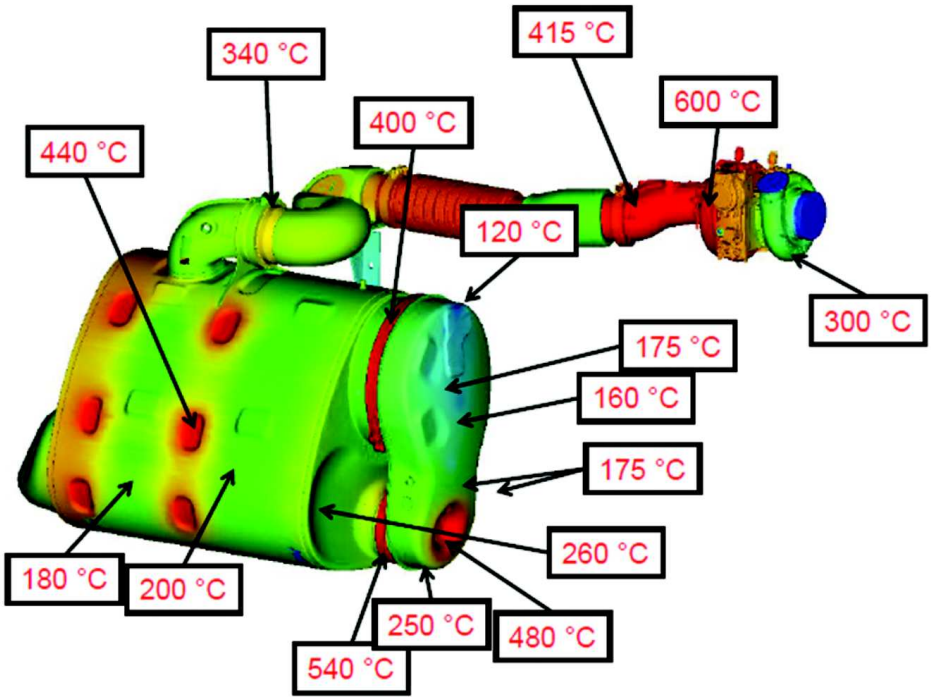

W2117782

GHG ClearTech One DPF/SCR Surface Temperatures Conversion

Degrees Celsius	Degrees Fahrenheit
120	248
160	320
175	347
180	356
200	392
250	482
260	500
300	572
340	644
400	752
415	779
440	824
480	896
540	1004
600	1112

All Rights Reserved

Downloaded from www.Manualslib.com manuals search engine

https://truckmanualshub.com/

WARNING

Do not put diesel fuel in the aftertreatment DEF tank. Diesel fuel, if sprayed into the hot exhaust along with the DEF, could ignite explosively causing a fire resulting in personal injury or damage to the exhaust system.

W3036787

Diesel Exhaust Fluid (DEF)

DEF is a reactant that's key to the SCR process. It's a nontoxic, ultra-pure solution of urea and ultra-pure water. Urea is a compound of nitrogen that turns to ammonia when heated. The fluid is non flammable, and is not dangerous when handled as recommended. However, it is highly corrosive to certain metals, especially copper and brass. Read the separate section concerning the handling of DEF solution. Use only **DEF** that is **clearly labeled as meeting ISO-22241** standards, and **certified by the American Petroleum Institute (API).** The container **must display the API certification seal. Never use agricultural or industrial grade urea.** Use of fluids other than API certified DEF will compromise aftertreatment system performance, increase emissions, and may impact your product warranties. **Never dilute DEF with water or any other fluid.** It is recommended that DEF not be stored in extreme hot or cold conditions, or for prolonged periods. Follow the instructions for proper storage and handling as indicated on the container or provided with the purchase.

Note: Agriculture mixtures are not pure enough for use in the SCR system and impurities in the solution will comprise the SCR system.

Notes

All Rights Reserved

Downloaded from www.Manualslib.com manuals search engine

https://truckmanualshub.com/

Diesel Exhaust Fluid (DEF) Handling

When handling DEF solution, it is important to prevent contact with electrical connections. There is a risk that the DEF will cause oxidation that cannot be removed. Water or compressed air do not help, since DEF quickly oxidizes certain metal. If a disconnected connector comes into contact with the DEF solution it must be replaced immediately to prevent the DEF solution from creeping further into the copper wiring.

CAUTION
When detaching hoses and components, do not spill DEF on disconnected or unsealed connectors. If DEF is spilled on a disconnected or unsealed connector, the connector must be replaced immediately.

Things to know about spilled DEF

If DEF solution comes into contact with the skin: rinse with plenty of water and remove contaminated clothing.
If DEF solution comes into contact with the eyes: rinse for several minutes and call for medical help if necessary.
If inhaled: breathe fresh air and call for medical help if necessary.
Do not allow the DEF solution to come into contact with other chemicals.
The DEF solution is not flammable. If the DEF solution is exposed to high temperatures, it breaks down into ammonia and carbon dioxide.
The DEF solution is highly corrosive to certain metals, including copper and brass.
If the DEF solution is spilled onto the vehicle, wipe off the excess and rinse with water. Spilled DEF solution can form concentrated white crystals on the vehicle. Rinse off these crystals with water.

Note: Do not flush DEF spillage into the normal drain system.

Notes

All Rights Reserved

Downloaded from www.Manualslib.com manuals search engine

https://truckmanualshub.com/

Aftertreatment Diesel Particulate Filter (DPF)

CAUTION

Use of diesel fuel other than ultra low sulfur diesel (ULSD) and engine oils other than EO-O Premium Plus (or VDS-4), will adversely affect performance, efficiency and durability of the aftertreatment DPF system and the engine, to the point where the engine may not run at all. Manufacturer's warranties can also be rendered void due to usage of improper fuel. Unapproved fuel additives (including engine oil) are NOT permitted. Blends of No. 1D and No. 2D grades of ULSD are recommended and allowable for cold weather.

The exhaust aftertreatment system virtually eliminates exhaust smoke. Exhaust vapor (water condensation) may be visible during a cold start. If exhaust smoke is visible during engine start up , this indicates a problem with the exhaust aftertreatment system. Take the vehicle to an authorized MACK Truck dealer immediately.

Vehicles equipped with a US2010 emission compliant engine have an exhaust aftertreatment system which includes a selective catalytic reduction (SCR) system and a catalyzed aftertreatment diesel particulate filter (DPF). The aftertreatment DPF takes the place of the standard muffler, and it reduces soot and particulate emissions into the atmosphere. Soot and other particulate matter are collected by a filter where it is eventually oxidized using a aftertreatment DPF regeneration process. Vehicles equipped with a aftertreatment DPF require the use of EO-O Premium Plus (or VDS-4) specification high performance diesel engine oil and ULSD fuel.

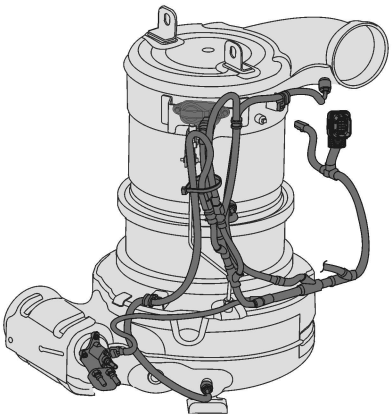

W2030326

Notes

All Rights Reserved

Downloaded from www.Manualslib.com manuals search engine

https://truckmanualshub.com/

For emission compliance, all MACK chassis are equipped with a DPF unit which is designed to reduce soot-related emissions, particularly on vehicles used in metropolitan areas. The DPF unit replaces the standard muffler.

The outer skin of the DPF unit reaches a temperature of approximately 300 °C (572 °F), and exhaust outlet temperatures can reach approximately 700 °C (1,290 °F), during regeneration cycles. Outlet temperatures may be lowered as much as 250 °C (480 °F), measured 152.4 mm (6 in) from the outlet, by the installation of an exhaust gas diffuser. Vehicle upfitters must evaluate the effect these elevated temperatures can have on the equipment being installed, as well as the impact of any exhaust system modifications that may be performed.

Sufficient clearance (approximately 152.4 mm [6 in] minimum) away from the DPF unit must be maintained for any temperature-sensitive components such as hydraulic lines, air lines, wire harnesses, electronic control units (ECUs), etc. If sufficient clearance cannot be maintained, shields must be installed to prevent heat-related damage to any temperature-sensitive components. On the DPF unit, the areas around the clamps are the hottest. Shields should be installed around the clamps to provide protection for any heat-sensitive components that may be located in close proximity to the DPF clamps.

Exhaust system modifications, including modification or removal of an exhaust gas diffuser, can result in heat-related damage to vehicle equipment or other property. Vehicle upfitters are responsible for any damage due to exhaust system modification or removal.

In addition to maintaining proper clearances for any heat-sensitive components, the exhaust stack outlet must be positioned in such a way to prevent rain ingestion.

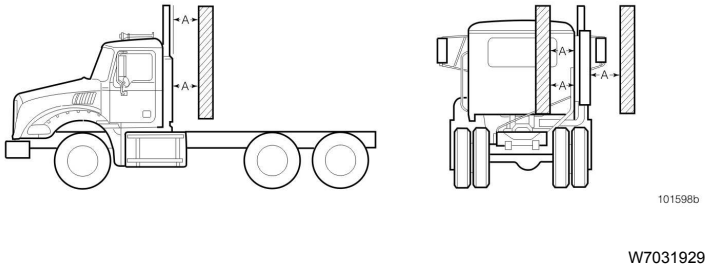

Fig. 2 Allow Sufficient Clearance (A) Between Body Installation and DPF

A. 152.4 mm (6 in) Minimum

DPF Surface Temperatures

The DPF unit is equipped with heat insulation that covers most areas of the DPF. Uninsulated areas of the DPF are at the clamp areas, body connections, inlet pipe and outlet pipe. The following surface temperatures have been measured with the DPF freely positioned in a room temperature environment with no forced cooling or wind; only self convection.

Note: The temperatures provided are not maximum temperatures. The surface temperature in certain vehicle applications is dependent on the degree of encapsulation and the airflow around the DPF unit.

During aftertreatment DPF regeneration, exhaust gases exiting the DPF outlet can reach temperatures as high as 700°C (1,290°F). In cases where a heated dump body is being installed on a platform truck, or modifications are being made to the vehicle exhaust system to accommodate a heated dump trailer, vehicle upfitters must evaluate the effect these elevated temperatures can have on the body, as well as the impact that modifications to the exhaust system can have on the vehicle.

All Rights Reserved
Downloaded from www.Manualslib.com manuals search engine

https://truckmanualshub.com/

Vertical Back of Cab DPF Surface Temperatures

Position	Thickness of Heat Insulation	Heat During Active Regeneration
Inlet Section Bottom	12.7 mm (0.5 in)	280 °C (536 °F)
Inlet Section Side	6.35 mm (0.25 in)	290 °C (554 °F)
Diesel Oxidation Catalyst (DOC) Section	6.35 mm (0.25 in)	280 °C (536 °F)
DPF Section	6.35 mm (0.25 in)	280 °C (536 °F)
Outlet Section Side	6.35 mm (0.25 in)	350 °C (662 °F)
Outlet Section Top	25.4 mm (1.00 in)	220 °C 428 °F)
Clamping Area Side	No Insulation	350 °C (662 °F)

Compact DPF Surface Temperatures

Position	Thickness of Heat Insulation	Heat During Active Regeneration
Inlet Section Bottom	12.7 mm (0.5 in)	280 °C (536 °F)
Inlet Section Side	6.35 mm (0.25 in)	290 °C (554 °F)
DOC Section	6.35 mm (0.25 in)	280 °C (536 °F)
DPF Section	6.35 mm (0.25 in)	280 °C (536 °F)
Outlet Section Side	6.35 mm (0.25 in)	290 °C (554 °F)
Outlet Section Bottom	25.4 mm (1.00 in)	300 °C (572 °F)
Clamping Area Side	No Insulation	350 °C (662 °F)

Notes

All Rights Reserved

Downloaded from www.Manualslib.com manuals search engine

https://truckmanualshub.com/

Aftertreatment Control Module (ACM)

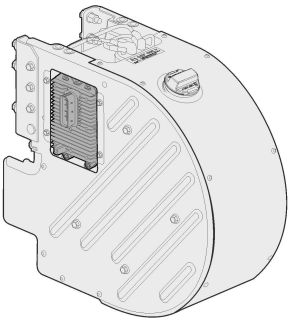

W2029917

The ACM controls the following components in the exhaust aftertreatment system:

- Aftertreatment Diesel Exhaust Fluid (DEF) Dosing Valve
- Aftertreatment DEF Tank Heater Valve
- Aftertreatment DEF Line Heaters
- Aftertreatment DEF Pump
- Aftertreatment DEF Return Valve

The ACM also monitors the following values in the exhaust aftertreatment system:

- Aftertreatment DEF Dosing Pressure
- Aftertreatment DEF Tank Temperature
- Aftertreatment DEF Tank Level
- Aftertreatment DPF Intake/Outlet Temperature
- Aftertreatment DPF Differential Pressure
- NOx Sensors

The ACM is a stand alone module. Depending on your configuration it may be mounted as part of the DEF tank (as shown above) or on a bracket near the DEF tank.

Notes

All Rights Reserved

Downloaded from www.Manualslib.com manuals search engine

https://truckmanualshub.com/

Exhaust Diffusers (Optional)

Due to higher exhaust temperatures created during regeneration and for a short period after regeneration, devices have been designed to help dissipate the exhaust gases more effectively which reduces the impact of the heat. These exhaust diffusers reduce the temperature of the exhaust gas by diffusing the heat outlets. Diffusers also reduce the risk of extremely high temperature areas at the point of exhaust. Three different diffusers are available to cover different exhaust applications.

Note: Exhaust diffusers must not be modified in any way. If an exhaust diffuser must be removed for truck body installation purposes, the diffuser must be installed exactly as the OEM installation.

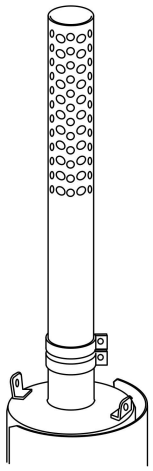

W2116210

Fig. 3 Straight Exhaust Stack out of Vertical Back of Cab Diesel Particulate Filter (DPF) with Diffuser End Vertical and Top Five inches Perforated

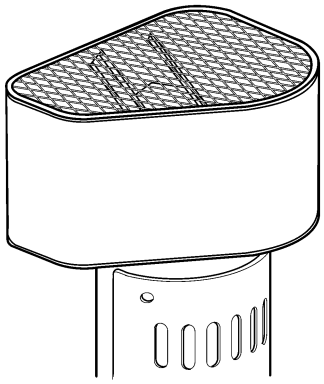

W2006301

Fig. 4 Straight Exhaust Stack Vertical Pipe with Top Outlet Diffuser Box for Compact DPF

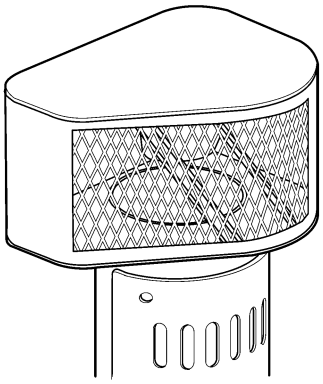

W2006300

Fig. 5 Straight Exhaust Stack Vertical Pipe with Side Outlet Diffuser Box for Compact DPF

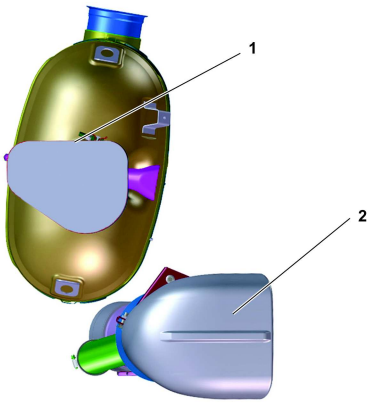

W2111351

Fig. 6 The inside edge of the exhaust diffuser (item 1) should be parallel to the centerline of the truck within 5 degrees. Miss-alignment of this diffuser could allow exhaust gas to enter the air inlet hood (item 2) during engine operation.

All Rights Reserved
Downloaded from www.Manualslib.com manuals search engine

https://truckmanualshub.com/

Heated Dump Bodies

CAUTION

Due to the higher exhaust temperatures created during the regeneration process of Diesel Particulate Filter equipped vehicles, it is strongly recommended to consult your heated dump body supplier to verify that these temperatures will not adversely affect their product. Failure to do so may result in component damage.

The exhaust aftertreatment system virtually eliminates exhaust smoke. Exhaust vapor (water condensation) may be visible during a cold start. If exhaust smoke is visible during engine operation, this indicates a problem with the exhaust aftertreatment system. Take the vehicle to an authorized MACK Truck dealer immediately.

Vehicles equipped with a US2010/GHG2017 emission compliant engine have an exhaust aftertreatment system which includes a Selective Catalytic Reduction (SCR) system and a Catalyzed Aftertreatment Diesel Particulate Filter (DPF). The Aftertreatment DPF takes the place of the standard muffler, and it reduces soot and particulate emissions into the atmosphere. Soot and other particulate matter are collected by a filter where it is eventually oxidized using a regeneration process. Vehicles equipped with a Aftertreatment DPF require the use of EO-O Premium Plus (or VDS-4) specification high performance diesel engine oil and ultra low sulfur diesel (ULSD) fuel.

The following are important items to consider when installing a heated dump body:

- Due to the presence of the aftertreatment system, exhaust gas temperatures can reach up to 650 °C (1202 °F) on GHG2017 and newer vehicles, and US2010 vehicles can reach 500 °C (932 °F) at the DPF outlet during a normal regeneration cycle. These temperatures should be taken into consideration while installing equipment, in the vicinity of the exhaust system. It may be necessary or prudent to affix warning labels on the equipment to warn people about these temperatures.
- In the case of a heated dump installation; only use materials that can withstand the high temperatures as mentioned above, for body and other related parts.
- The use of a diverter valve to divert the exhaust to the atmosphere and away from the body during a regeneration.
- The lack of soot coating may mean increased corrosion for the body, diverter valve, pipes and other related parts. Always use suitable corrosion resistant materials for these parts.
- Heater lines to Urea pump.

Notes

All Rights Reserved

Downloaded from www.Manualslib.com manuals search engine

https://truckmanualshub.com/

Exhaust Back Pressure for US2010 and GHG2017 Engines

If modifications are made to the exhaust system after the SCR muffler, the back pressure must be measured to ensure the changes do not exceed the back pressure limits.

Note: If the pressure in the exhaust is too high, engine damage can result.

Requirement: Allowed pressure in the exhaust piping after the SCR muffler; on MP7, MP8 and MP10 engines 3 - 5 kPa (0.43 - 0.73 psi).

Note: To view back pressure accurately use VCADS procedure 2545-08-03-02, Exhaust Aftertreatment Diagnostics.

Note: The maximum allowed added back pressure from exhaust piping is 4 kPa (0.6 PSI).

Measuring Back pressure:

1 Remove the post NOx sensor and add a pressure gauge (Thread size - M20 x 1.5).

   Note: The test should be conducted with the vehicle between 60 - 70 °F (16 - 21 °C).

2 With the gauge attached to the exhaust pipe, run the engine at High Idle (2000 rpm with no engine load) for 3-5 minutes.

3 Record the exhaust pressure at the end of the 3-5 minute period.

Notes

All Rights Reserved

Downloaded from www.Manualslib.com manuals search engine

https://truckmanualshub.com/

MR/LR Exhaust Aftertreatment System Regeneration

Aftertreatment Diesel Particulate Filter (DPF) Regeneration

DPF Smart Switch– This is a three-position switch where the middle position is neutral.

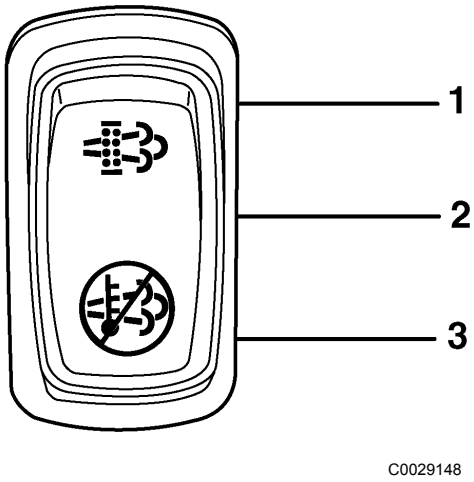

DPF Smart Switch

1. Upper Position - Regeneration Position 2. Middle Position - Neutral Position	3. Down Position - Inhibit Position (if equipped)

CAUTION

During the aftertreatment DPF regeneration, the exhaust gas temperature (EGT) will be elevated. DO NOT park the vehicle with the exhaust outlet near flammable objects such as trees, awnings, etc. that could be damaged by elevated EGT.

Notes

All Rights Reserved

Downloaded from www.Manualslib.com manuals search engine

https://truckmanualshub.com/

CAUTION

If the vehicle is in a location that may be hazardous when aftertreatment DPF regeneration begins (i.e., in close proximity to flammable materials or gases, inside tunnels, parked under flammable objects, etc.), the DPF regeneration should be stopped (if equipped). If DPF regeneration is stopped by the vehicle operator, it must be initiated at a later time when the vehicle is in a safer location. DPF regenerations that are stopped and never restarted at a later time, however, will require that the vehicle be taken to an authorized MACK Truck dealer to have the aftertreatment DPF regeneration manually started with special service tools.

Note: During vehicle operation, idle speed may increase when the vehicle is stopped at a traffic light to maintain heat in the DPF for passive regeneration and diesel exhaust fluid (DEF) dosing.

There are two types of aftertreatment DPF regeneration: passive regeneration and parked regeneration.
Passive regeneration occurs when the exhaust gas within the aftertreatment system is hot enough to remove soot without injecting additional fuel into the DPF system. On chassis equipped with a US07 aftertreatment system, DPFs needed an active regeneration, that included injection of fuel. With the addition of the selective catalytic reduction (SCR) system active regenerations are no longer needed for US2017.

Refer to the Exhaust Aftertreatment System Information sun visor label or the Operators Manual for additional aftertreatment DPF information.

ENGINE EXHAUST AFTERTREATMENT SYSTEMS (EATS)

DEF Indicators:	(solid)	(flashing)	(flashing)+ Message
Diesel Exhaust Fluid (DEF) Condition:	The DEF tank is low.	The DEF tank is empty. Engine is in derate mode.	The DEF tank is empty. The vehicle is limited to 5 mph.
DEF Action:	Refill the DEF tank.	Refill the DEF tank now (before adding diesel).	Refill the DEF tank now (before operating vehicle).
DEF Indicators:	(flashing)	(flashing)	(flashing)
Diesel Particulate Filter (DPF) Condition:	The DPF filter is full.	The DPF filter is overfull. Engine is in derate mode.	The DPF filter may be clogged with soot. Engine is in shutdown mode.
DPF Action:	Initiate a parked manual regeneration at next available stop.	IMMEDIATELY stop and initiate a parked regeneration.	Service EATS system immediately.
See Operator's Manual for Further Detail			

W8056653

Driver Warnings and On Board Diagnostics (OBD)

On Board Diagnostics (OBD)

Beginning with your US2013 compliant vehicle, OBD is introduced. This is very similar to the OBD system that has been required on passenger cars for many years. OBD is a system that monitors the functions of emissions related components and alerts the vehicle operator to any detected need for an emission related repair. When the systems detects a malfunction with an emissions related component it activates the malfunction indicator lamp (MIL).

All Rights Reserved
Downloaded from www.Manualslib.com manuals search engine

https://truckmanualshub.com/

Dash Overview

Conventional Dash Overview

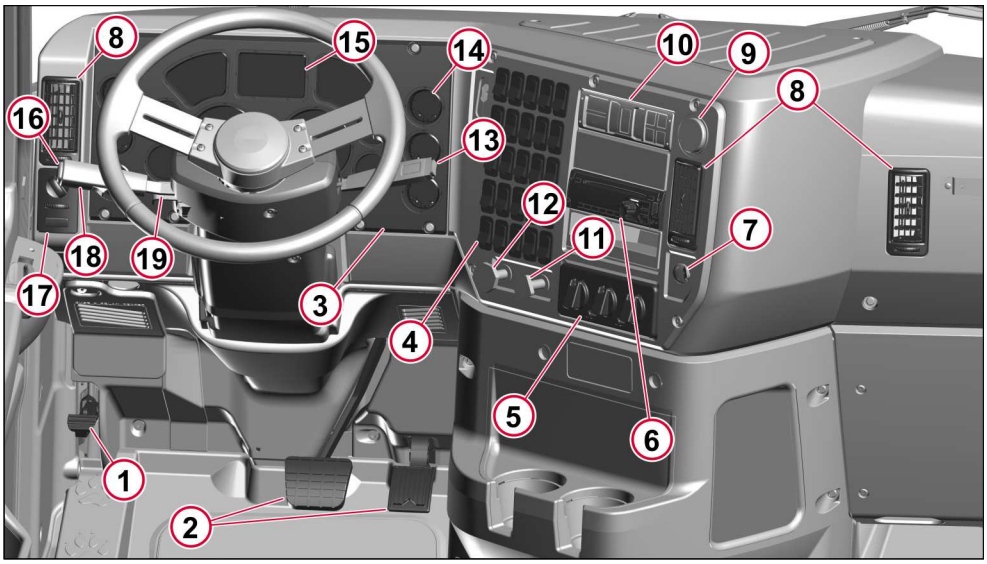

W2122038

1. Tilt Control Panel	11. Parking Brake Valve
2. Foot Pedals	12. Trailer Air Supply
3. Instrument Cluster	13. Cluster Display Control
4. Dash Switches	14. Gauges
5. Climate Control Unit	15. Driver Information Display (DID) Screen
6. Radio	16. Turn Signal, HI/LO Beam, Flash
7. Accessory Power Outlet	17. Light Control Panel
8. Air Vent	18. Headlamp Flash
9. Air Filter Restriction Indicator	19. Hazard Switch
10. *m*Drive Gear Selector	

All Rights Reserved
Downloaded from www.Manualslib.com manuals search engine

https://truckmanualshub.com/

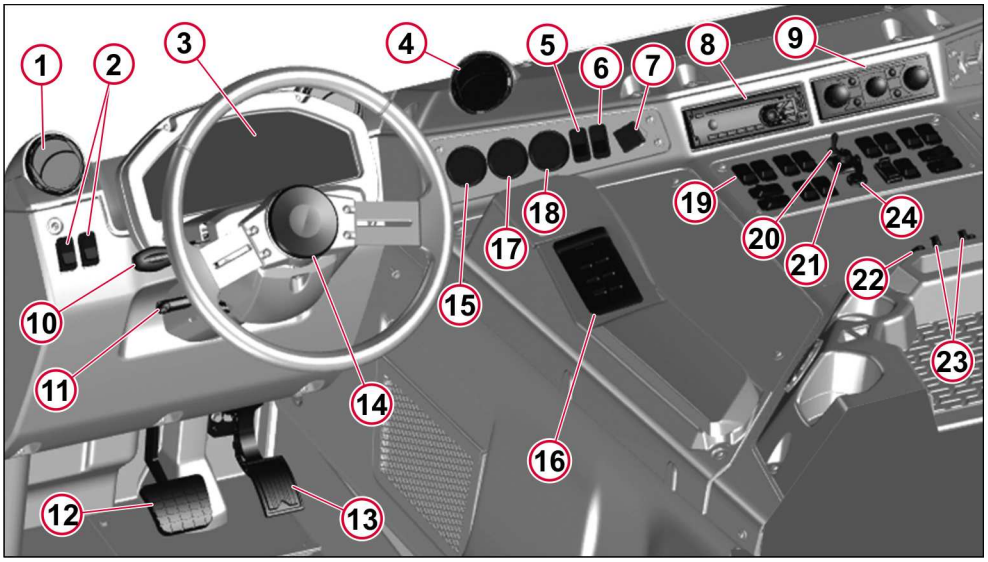

W2122036

1. Air Vent	13. Accelerator Pedal
2. Enter/Escape for Driver Information Display (DID)	14. Electric Horn
3. Cluster	15. Manifold Pressure or Rear Axle Gauge
4. Air Vent	16. Gear Selector
5. Cruise Control	17. Transmission Oil Temperature
6. Speed Control	18. Fuel Gauge/Diesel Exhaust Fluid (DEF) Gauge
7. Parking Brake	19. Switch Location
8. Audio	20. Operating Position Selector
9. Climate Control Panel	21. Mirror Adjustment Knob
10. Turn Signal	22. Auxiliary Lighter
11. Telescopic Steering Adjust Lever	23. CB Radio Connector (Positive and Negative)
12. Brake Pedal	24. Ignition

All Rights Reserved

Downloaded from www.Manualslib.com manuals search engine

https://truckmanualshub.com/

MRU Dash Overview

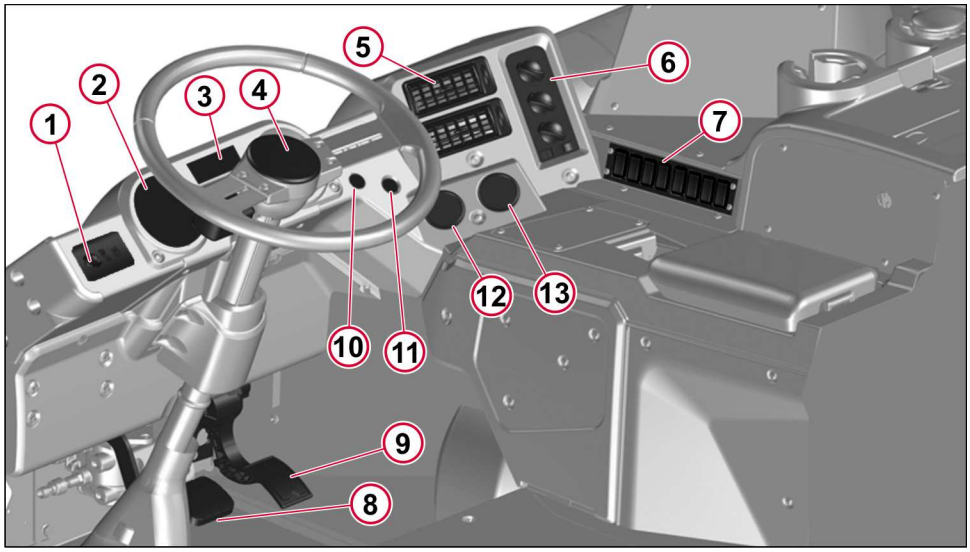

W2122037

1 Light Control Panel	8. Brake Pedal
2. Tachometer	9. Accelerator Pedal
3. Tell-Tale Display	10. Ignition
4. Electric Horn	11. Parking Brake
5. Vent	12. Air Pressure Gauge
6. Climate Control Panel	13. Fuel Gauge
7. Switch Locations	

Notes

All Rights Reserved
Downloaded from www.Manualslib.com manuals search engine

https://truckmanualshub.com/

Instrument Cluster Icons

Aftertreatment icons are displayed on the instrument cluster. There are 3 aftertreatment icons:

- Aftertreatment DPF Regeneration Required
- High Exhaust System Temperature (HEST)
- Aftertreatment DEF Tank Low Level Indicator

The Aftertreatment DPF Regeneration Required icon flashes when the Diesel Particulate Filter (DPF) is full/overfull and regeneration is needed.

W3007445

Aftertreatment DPF Regeneration Required Icon

The HEST icon illuminates when a parked Aftertreatment DPF Regeneration Required is initiated. It also indicates high exhaust gas temperature during a passive regeneration. When the HEST icon is illuminated, do not park or operate the vehicle near people, or any flammable materials, vapors, or structures.

W3007444

HEST Icon

The aftertreatment DEF tank low level indicator icon illuminates when the fluid level is low. It also flashes when the level becomes critically low.

W2029416

Aftertreatment DEF Tank Low Level Indicator

All Rights Reserved

Downloaded from www.Manualslib.com manuals search engine

https://truckmanualshub.com/

Malfunction Indicator Lamp (MIL)

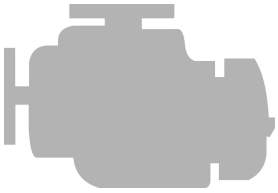

W3031200

MIL Lamp

- MIL indicates government regulation on board diagnostics (OBD) faults
- **Lamp may remain active after repair until system confirms repair**

Aftertreatment Diesel Exhaust Fluid (DEF) Tank Level - Driver Warning & Inducement

Aftertreatment DEF tanks are sized to have no less than 2 times the diesel fuel tank mileage or hour range.

The vehicle instrument cluster has a Aftertreatment DEF Tank Level Gage.

Triggers	Aftertreatment DEF Tank Low Level Indicator	Amber Warning Lamp	Inducement
>12% Aftertreatment DEF Tank Level Gauge	None	None	None
<=12% Aftertreatment DEF Tank Level Gauge	W2029-416	None	None
0% Aftertreatment DEF Tank Level Gauge (~4% DEF Remaining)	W2029415	None	25% torque reduction
0% Aftertreatment DEF Tank Gauge Insufficient DEF Pump Pressure Diesel Fuel Refueling >15%	W2029415	None	8 km/h (5 mph) Road Speed Limit (RSL)

Note: Vehicle has to be stationary before 5 mph road speed limit (RLS) becomes active.

All Rights Reserved

Downloaded from www.Manualslib.com manuals search engine

https://truckmanualshub.com/

Aftertreatment Diesel Exhaust Fluid (DEF) Quality - Driver Warning & Inducement

Triggers	Aftertreatment DEF Tank Low Level Indicator	Amber Warning Lamp	Inducement
Good DEF Quality	None	None	None
Poor DEF Quality DTC Initial Detected	None	W303-1623	None
Poor DEF Quality DTC Initial Detected + 10 hours	None	W303-1623	25% torque reduction
Poor DEF Quality DTC Initial Detected + 20 hours Diesel Fuel Refueling >15%	None	W303-1623	8 km/h (5 mph) Road Speed Limit (RSL)
Temporary Exit from 8 km/h (5 mph) Inducement	None	W303-1623	25% torque reduction

Note: Vehicle has to be stationary before 8 km/h (5 mph) RSL becomes active.

Exit conditions for DEF Quality "5 mph road speed limit (RSL)" Inducement:

First Restart: Return to 25% torque reduction until proper DEF quality evaluation. If poor DEF quality is detected during the next monitoring cycle then the 5 mph limit is resumed after vehicle is stationary for 20 minutes. After the second restart a scan tool is required to exit the 8 km/h (5 mph) RSL.

All Rights Reserved

Downloaded from www.Manualslib.com manuals search engine

https://truckmanualshub.com/

Misfilling Diesel or Aftertreatment Diesel Exhaust Fluid (DEF) Tanks

Although diesel fuel and aftertreatment DEF caps are clearly labeled and filler necks and nozzles are different accidents can happen.

Contamination of fluids by misfilling of diesel or DEF in the wrong tank may result in vehicle malfunction.

Results of misfilling DEF in diesel tank

- Engine may run poorly or not at all
- Injectors may be damaged
- On board diagnostic (OBD) diagnostic trouble codes (DTCs)
- Exhaust system corrosion may occur between turbocharger and aftertreatment DPF
- Costly repairs

Results of misfilling diesel in aftertreatment DEF tank

- Aftertreatment selective catalytic reduction (SCR) system may be damaged by Diesel
- SCR catalyst may be damaged by diesel (chemical damage)
- Emissions may be non-compliant
- OBD DTCs
- Costly repairs

Note: DEF tank has a magnetic interlock and fuel station DEF fluid dispensing nozzle with a magnetic valve, have to meet to prevent from dispensing into anything other than the DEF tanks.

Notes

All Rights Reserved

Downloaded from www.Manualslib.com manuals search engine

https://truckmanualshub.com/

Selective Catalytic Reduction (SCR) Tampering - Driver Warning & Inducement

1. Disconnected aftertreatment DEF tank level sensor	4. Disconnected aftertreatment DEF pump
2. Blocked aftertreatment DEF line or dosing valve	5. Disconnected SCR wiring harness
3. Disconnected aftertreatment DEF dosing valve	6. Disconnected NOx sensor

Triggers	Aftertreatment DEF Tank Low Level Indicator	Warning Lamp	Inducement
No Tampering	None	None	None
Tampering Diagnostic Trouble Code (DTC) Pending	None	W303-1623	None
Tampering DTC Confirmed	None	W303-1623	None
Tampering DTC Initial Detected + 10 hour	None	W303-1623	25% torque reduction
Tampering DTC Initial Detected + 40 hours Diesel Fuel Refueling >15%	None	W303-1623	8 km/h (5 mph) road speed limit

Note: Operator can not override the 8 km/h (5 mph) road speed limit (RSL).

Note: Vehicle has to be stationary before 8 km/h (5 mph) RSL becomes active.

All Rights Reserved

Downloaded from www.Manualslib.com manuals search engine

https://truckmanualshub.com/

In-Transit Heat Cooling System

For chassis used in operations where the cargo must be kept warm by heat from the engine coolant, connections are available at the back of the engine to connect 5/8" heater hose and provide the necessary coolant flow to the truck body or trailer. The following illustrations and part number charts show the locations of the coolant supply and return connections, along with the part numbers for the stub pipes, sealing rings and necessary hardware.

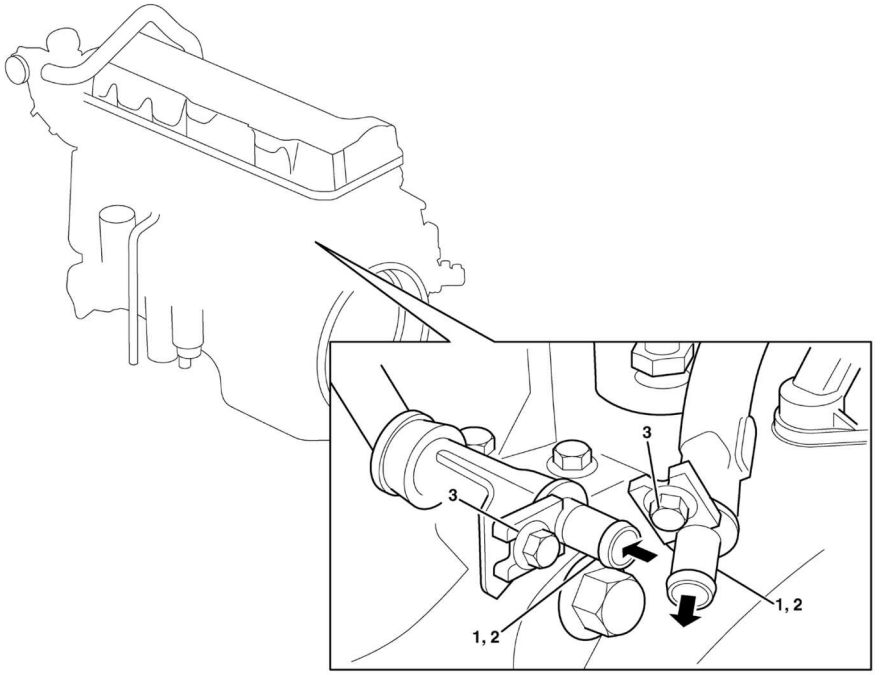

Figure 1 — Cooling System Supply and Return Connections — MP8 Engines

Key	Qty.	Part No.	Description
1	2	21087921	Pipe, stub assembly, coolant supply and return (arrows in illustration above indicate direction of coolant flow)
2	2	20566808	Ring, sealing
3	2	946173	Flange screw, M8 x 1.25 - 20 mm long

All Rights Reserved
Downloaded from www.Manualslib.com manuals search engine

https://truckmanualshub.com/

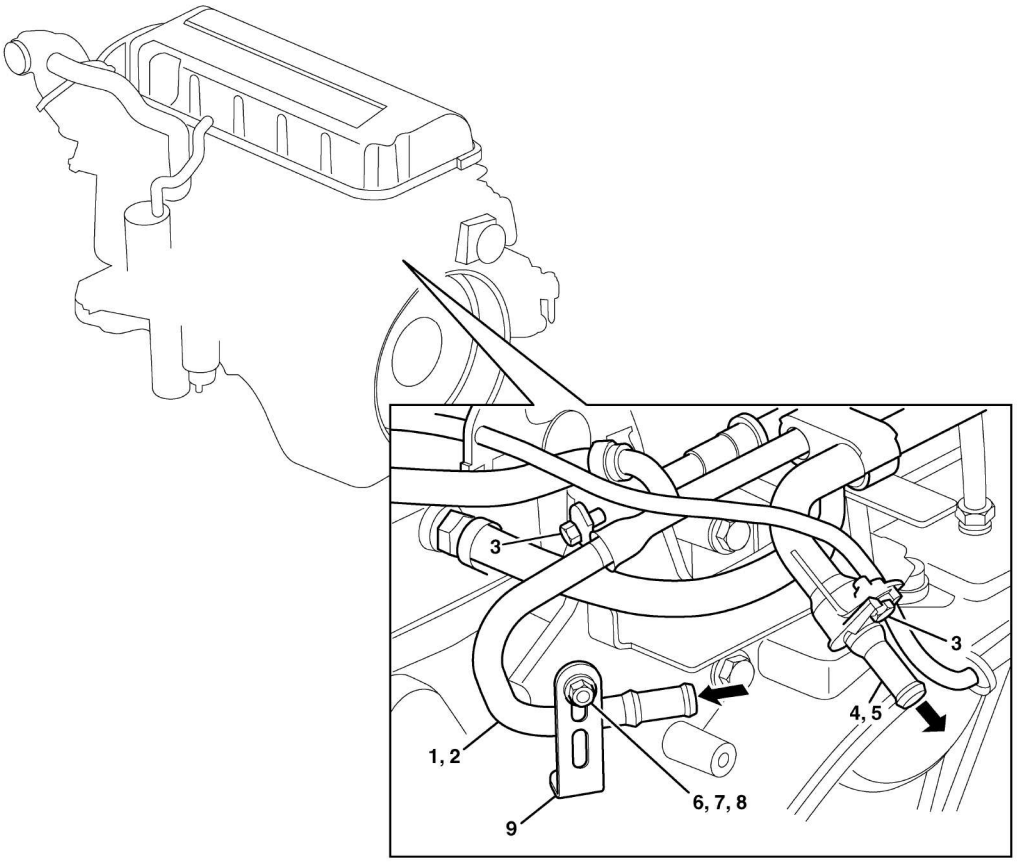

W0113176

Figure 2 — Cooling System Supply and Return Connection — MP7 Engines

Key	Qty.	Part No.	Description
1	1	21038748	Pipe, stub assembly, coolant return
2	1	20566808	Ring, sealing
3	2	946173	Flange screw, M8 x 1.25 - 20 mm long
4	1	21092290	Pipe, stub assembly, coolant supply
5	1	1547252	Ring, sealing
6	2	946440	Flange screw, M8 x 1.25 - 16 mm long
7	1	948645	Flange locknut, M8 x 1.25 mm long
8	1	977976	Clamp
9	1	965558	Bracket, coolant return support

Note: On GU models equipped with a fuel heater and engine coolant is used to heat the fuel, these connections provide the flow of coolant to the fuel heater and cannot be used for in-transit heat.

All Rights Reserved

Downloaded from www.Manualslib.com manuals search engine

https://truckmanualshub.com/

The total available cooling capacity of the system is 11.1 gallons per minute (GPM). Please refer to the chart below for the available coolant flow dependent on your vehicle configuration. In-transit coolant draw and vehicle component draw MUST NOT EXCEED 11.1 GPM.

Exceeding the cooling system capacity will result in engine component failures.

*m*Drive Cooler	Artic Fox Heater	In Transit Heater	OK/ NOK	Available Flow for Extra Components (GPM)
X	X	X	Not OK	N/A
X	X		OK	None
X		X	OK	Depends on how much the transit heater demands. The transit heater may demand no more than 5 GPM.
X			OK	5 GPM
	X	X	OK	Depends on how much the transit heater demands. The transit heater may demand no more than 6.1 GPM.
	X		OK	6.1 GPM
		X	OK	Depends on how much the transit heater demands. The transit heater may demand no more than 11.1 GPM.
			OK	11.1 GPM

Available Fittings for Specific Applications

Note: Contact your local Mack dealer to order these fittings.

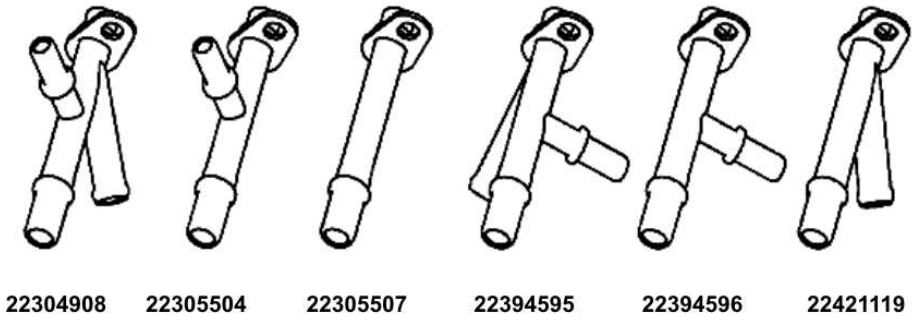

W2123680

All Rights Reserved
Downloaded from www.Manualslib.com manuals search engine

https://truckmanualshub.com/

DEF Components and Piping

DEF Precautions

If the DEF tank needs to be repositioned, refer to the following illustrations for coolant flow. Due to its corrosive nature, diesel exhaust fluid requires special considerations around electrical systems.

CAUTION

Urea solution is hazardous for open electrical connectors and spreads rapidly in cables. If urea is spilled on a connector, the part of the cable that has been exposed to urea solution must be exchanged immediately.

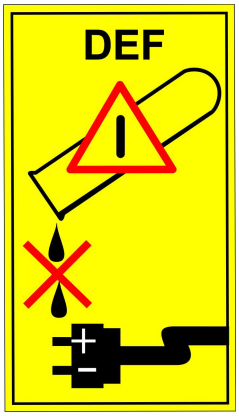

W2105885

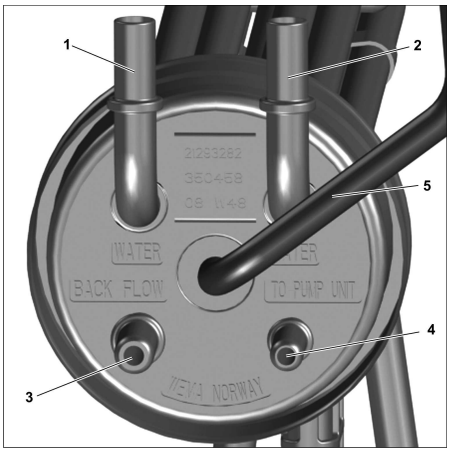

W2105581

1. Coolant From Engine
2. Coolant to the DEF Return
3. Excess DEF Return (from DEF pump during normal pressure cycles and key off cycles)
4. DEF to DEF Pump (then from the DEF pump to the DEF Injector)
5. Power

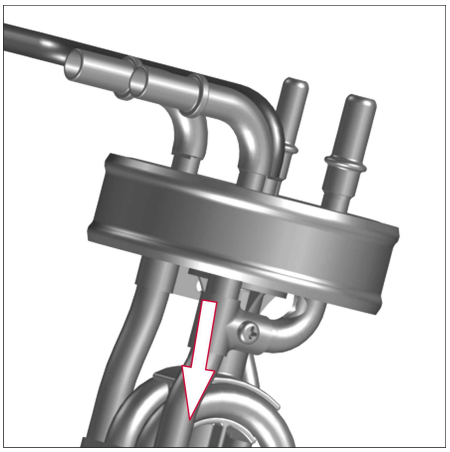

W2105865

The DEF pump unit sits inside the DEF tank

All Rights Reserved
Downloaded from www.Manualslib.com manuals search engine

https://truckmanualshub.com/

Fittings, Fuel Line, Replacement

This information covers the proper procedure for replacing the Voss fuel line fittings.

Note: Information is subject to change without notice. Illustrations are used for reference only, and may differ slightly from the actual engine version. However, key components addressed in this information are represented as accurately as possible.

Special Tools

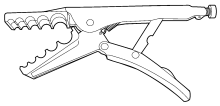

W2006113

85111500
Voss Pliers

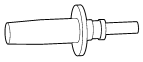

W2006115

85111501
Voss Straight Drift

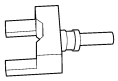

W2006116

85111502
Voss Elbow Drift

W2006114

85111503
Voss Handle

Fittings

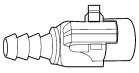

W2006109

20395030
Straight 16 mm Fitting

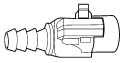

W2006110

20395028
Straight 12.5 mm Fitting

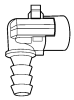

W2006111

20395034
90 degree 12.5 mm Fitting

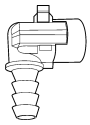

W2006112

20395036
90 degree 16 mm Fitting

Notes

All Rights Reserved

Downloaded from www.Manualslib.com manuals search engine

https://truckmanualshub.com/

Replacement

1. After determining which molded Nylon end needs to be replaced, cut the nylon tubing off just behind the barb.

   Note: Make a nice clean, square cut.

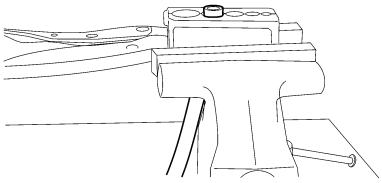

W2006149

2. Clamp the tubing in the jaws, special tool number 85111500, and carefully insert the Nylon end in by using a soft tipped hammer or a small arbor or drill press.

   Note: To press in the new end, the Nylon tubing must be held in the special serrated jaws.

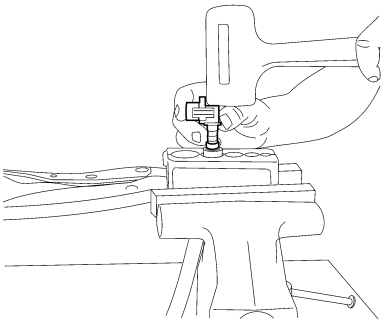

W2006150

3. The Nylon end can be pressed in with a small arbor press or a small hammer if used carefully. The Nylon tubing should stick out of the pliers about 1/4 inch.

   Note: For ease of assembly, small hand tools as shown are available.

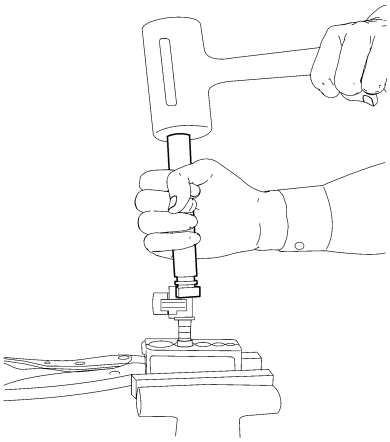

W2006151

4. The Nylon should be pressed down into the Nylon tubing so that all barbs are fully inserted. Care should be taken to keep all parts clean.
5. The Nylon tube need not be heated for assembly.

All Rights Reserved

Downloaded from www.Manualslib.com manuals search engine

https://truckmanualshub.com/

6. The tube end should be free of grease or lubricants.

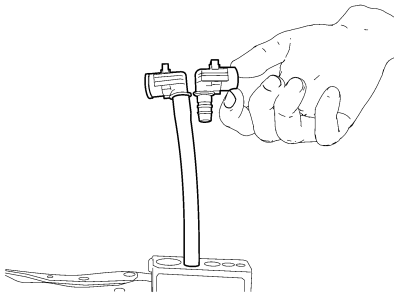

W2006152

7. Care should be taken to not damage the tubing by excessive clamp force.
8. Make sure the proper sized end is used for the selected Nylon tubing.

Notes

All Rights Reserved

Downloaded from www.Manualslib.com manuals search engine