https://truckmanualshub.com/

U.S.A. : **KUBOTA TRACTOR CORPORATION**
1000 Kubota Drive, Grapevine, TX 76051
Telephone : 888-4KUBOTA

Canada : **KUBOTA CANADA LTD.**
5900 14th Avenue, Markham, Ontario, L3S 4K4, Canada
Telephone : (905)294-7477

France : **KUBOTA EUROPE S.A.S**
19-25, Rue Jules Vercruysse, Z.I. BP88, 95101 Argenteuil Cedex, France
Telephone : (33)1-3426-3434

Italy : **KUBOTA EUROPE S.A.S Italy Branch**
Via Grandi, 29 20068 Peschiera Borrome (MI) Italy
Telephone : (39)02-51650377

Germany : **KUBOTA BAUMASCHINEN GmbH**
Steinhauser str, 100, 66482 Zweibrucken Rheinlandpfalz Germany
Telephone : (49)6332-4870100

U.K. : **KUBOTA (U.K.) LTD.**
Dormer Road, Thame, Oxfordshire, OX9 3UN, U.K.
Telephone : (44)1844-214500

Australia : **KUBOTA AUSTRALIA PTY LTD.**
25-29 Permas Way, Truganina, VIC 3029, Australia
Telephone : (61)-3-9394-4400

Malaysia : **KUBOTA MALAYSIA SDN. BHD.**
No.3 Jalan Sepadu 25/123 Taman Perindustrian Axis,
Seksyen 25, 40400 Shah Alam, Selangor Darul Ehsan Malaysia
Telephone : (60)3-736-1388

Philippines : **KUBOTA PHILIPPINES, INC.**
232 Quirino Highway, Baesa, Quezon City 1106, Philippines
Telephone : (63)2-422-3500

Taiwan : **SHIN TAIWAN AGRICULTURAL MACHINERY CO., LTD.**
16, Fengping 2nd Rd, Taliao Shiang Kaohsiung 83107, Taiwan R.O.C.
Telephone : (886)7-702-2333

Thailand : **SIAM KUBOTA CORPORATION CO., LTD.**
101/19-24 Moo 20, Navanakorn Industrial Estate, Tambon Khlongnueng, Amphur Khlongluang,
Pathumthani 12120, THAILAND
Telephone : (66)2-909-0300

Japan : **KUBOTA Corporation**
Farm & Industrial Machinery International Operations Headquarters
2-47, Shikitsuhigashi 1-chome, Naniwa-ku, Osaka, Japan 556-8601

English(U.S.A.)
Code No. RD848-8121-1

KX080-4S2

OPERATOR'S MANUAL

KUBOTA EXCAVATOR

MODEL KX080-4S2

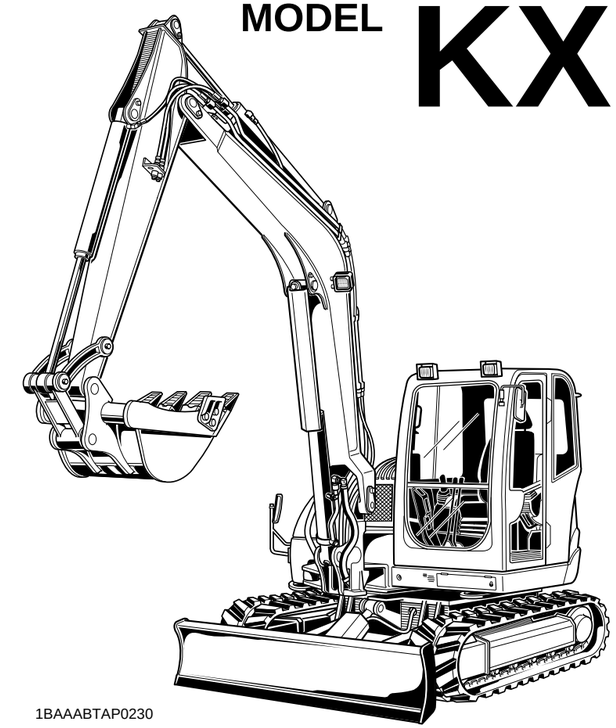

1BAAABTAP0230

READ AND SAVE THIS MANUAL

PRINTED IN JAPAN

© KUBOTA Corporation 2019

https://truckmanualshub.com/

ABBREVIATION LIST

Abbreviations	Definitions
AFS	Air Flow Sensor
AI	Auto Idle
API	American Petroleum Institute
ASTM	American Society for Testing and Materials, USA
CECE	Committee for European Construction Equipment
CRS	Common Rail System
DIN	Deutsches Institut für Normung, GERMANY (German Institute for Standardization)
DOC	Diesel Oxidation Catalyst
DPF	Diesel Particulate Filter
EGR	Exhaust Gas Re-circulation
EN	European Standard
FRONT	"Front" means the direction towards the boom and dozer
Hi	High speed
ISO	International Organization for Standardization
JIS	Japanese Industry Standard
L	Volume (Liter)
L/min	Liter per minute
Lo	Low speed
MAF	Mass Air Flow
MIL	Military Standard
OPG	Operator Protective Guards
OSHA	Occupational Safety and Health Administration
P/L	Pressure Limiter
PCV	Positive Crankcase Ventilation
ROPS	Roll-Over Protective Structure
rpm	Revolutions Per Minute
SAE	Society of Automotive Engineers, USA
TPSS	Two Pattern Selection System

California Proposition 65

⚠ WARNING ⚠

Engine exhaust, some of its constituents, certain vehicle components and fluids, contain or emit chemicals known to the State of California to cause cancer and birth defects or other reproductive harm.

Canadian Electromagnetic Compatibility (EMC):
This machine complies with Industry Canada ICES-002.

https://truckmanualshub.com/

GENERAL SYMBOLS

The instruments and operation elements have been marked with a series of symbols in order to simplify the operation of your excavator. These symbols are listed below with the respective descriptions.

- Safety alert Symbol
- Warning lamp "Fuel level too low"
- System lamp
- Warning lamp "Battery charge"
- Indicator lamp "Glow"
- Working light switch
- Horn
- Wiper/Washer switch
- Diesel
- Hydraulic fluid
- Gear oil
- Grease
- Fast
- Slow
- Excavator - Overhead movement toward the front
- Excavator - Overhead movement toward the rear
- Boom up
- Boom down
- Arm up
- Arm crowd
- Bucket crowd
- Bucket dump
- Boom swing (Left)
- Boom swing (Right)
- Dozer raise
- Dozer lower
- Operation direction of control lever
- Operation direction of control lever
- Read operator’s manual
- Lock
- Unlock
- Engine stop control lamp
- DPF Standby / Regeneration
- Engine Idle up
- Inhibit DPF Regeneration

https://truckmanualshub.com/

FOREWORD

You are now the proud owner of a KUBOTA Excavator. This excavator is a product of KUBOTA quality engineering and manufacturing. It is made of fine materials and under a rigid quality control system. It will give you long, satisfactory service. To obtain the best use of your excavator, please read this manual carefully. It will help you become familiar with the operation of the excavator and contains many helpful hints about excavator maintenance. It is KUBOTA's policy to utilize as quickly as possible every advance in our research. The immediate use of new techniques in the manufacture of products may cause some small parts of this manual to be outdated. KUBOTA distributors and dealers will have the most up-to-date information. Please do not hesitate to consult with them.

SAFETY FIRST

This symbol, the industry's "Safety Alert Symbol", is used throughout this manual and on labels on the machine itself to warn of the possibility of personal injury. Read these instructions carefully. It is essential that you read the instructions and safety regulations before you attempt to assemble or use this unit.

DANGER : Indicates an imminently hazardous situation which, if not avoided, will result in death or serious injury.

WARNING : Indicates a potentially hazardous situation which, if not avoided, could result in death or serious injury.

CAUTION : Indicates a potentially hazardous situation which, if not avoided, could result in minor or moderate injury.

IMPORTANT : Indicates that equipment or property damage could result if instructions are not followed.

NOTE : Gives helpful information.

https://truckmanualshub.com/

CONTENTS

⚠SAFE OPERATION ..... ⚠-1
DEALER SERVICE 1
TECHNICAL DATA 3
DESCRIPTION OF MACHINE PARTS 4
INSTRUMENT PANEL AND CONTROL ELEMENTS 5
CHECKS BEFORE START 7
DAILY CHECKS 7
CHECKING THE DEVICES 7
Starter Switch 7
Display Selector Switch 8
LCD Display for Normal Operation 8
Warning Lamp 10
LCD Display for Warning 11
Setting the Clock 12
Reordering the year/month/day and Changing the AM/PM System to the 24-hour One 14
Log Record 14
Periodic Check 15
If All the Check Points are not Displayed at a Glance on a Single Screen 16
When the Check-up is Completed 18
Horn Switch 18
Light Switch 18
AUX Port Flow Rate Limit Switch 18
Auto Idle Control Switch 19
Throttle Potentiometer 19
Travel Speed Switch 19
Inhibit Diesel Particulate Filter (DPF) Regeneration Switch 20
Beacon Light Switch 20
CAB TYPE MACHINES 21
Wiper/Washer Switch 21
Interior Lamp 21
Heater Switch 21
Opening/Closing of CAB Door 22
Opening/Closing of Front CAB Window 22
Opening/Closing of Side CAB Window 23
Emergency Hammer 23
AIR CONDITIONER 23
Air Flow 23
Air Control Vent 24
Control Panel 24
Operation 24
HANDLING THE SAFETY DEVICES 25
Pilot Control Lock Lever 25
OPERATION OF THE ENGINE 26
STARTING THE ENGINE 26

https://truckmanualshub.com/

STARTING THE ENGINE UNDER COLD CONDITIONS 28
STARTING WITH AN AUXILIARY BATTERY 28
Observe Following Guidelines when Starting with an Auxiliary Battery 28
CHECK POINTS AFTER STARTING THE ENGINE 29
STOPPING THE ENGINE 30
Engine Stop Button 30
Precautions in case of Overheat 30
DPF Regeneration 30

EXCAVATOR OPERATION 31
RUNNING-IN OF THE NEW EXCAVATOR 31
Do not Work with Full Engine Rpm's or Full Loads during the First 50 Working Hours 31
Oil Change in the Run-in Stage 31
Adjusting the Operator's Seat 31
Seat Belt 32
STARTING 32
Pilot Control Lock Lever 32
DRIVING 33
Drive Levers (Right,Left) 34
TURNS 34
Pivot Turn 34
Spin Turn 35
UP AND DOWNHILL DRIVING 36
PARKING ON A SLOPE 36
OPERATION OF THE DOZER 36
TWO PATTERN SELECTION SYSTEM (TPSS) 37
Pattern Change 37
OPERATION OF THE BOOM 38
OPERATION OF THE ARM 38
OPERATION OF THE BUCKET 39
UNIT SWING AND BOOM SWING OPERATION 39
Unit Swing Operation 39
Boom Swing Operation 39
AUXILIARY PORT OPERATION 40
Selecting the Action Modes 40
AUX Port Handling Procedure 41
Setting the Maximum Flow Volume 43
How to Resume the AUX Setting While Processing the DPF Regeneration 48
HOW TO RELEASE PRESSURE TRAPPED IN THE HYDRAULIC SYSTEM 48
ANGLE BLADE OPERATION 49
1-way or 2-way CIRCUIT SELECTION VALVE OPERATION 50
BOOM LOWERING VALVE 51
AUTO IDLE (AI) OPERATION 51
ANTI-THEFT DEVICE (for Canada only, if equipped) 52
Anti-Theft Device 52
IMPORTANT INFORMATION ON EXCAVATOR OPERATION 55

TRANSPORTING THE EXCAVATOR ON A VEHICLE 56

LIFTING OF THE EXCAVATOR 58

MAINTENANCE 60

MAINTENANCE INTERVALS 60
OPENING AND CLOSING OF COVERS 65
Opening/Closing of the Fuel Tank Cover 65
Opening/Closing of the Engine Hood 65
Opening/Closing of the Side Cover 65
Where to store the Tool 66
Cup Holder 66
Where to store the Grease Gun 66
Where to keep Operator's Manual 66
Utility Box 67
Where to Store the Fire Extinguisher 67
DAILY CHECKS 67
Checking Coolant Level 67
Checking Fuel Level 68
Checking Engine Oil Level 68
Checking Hydraulic Oil Level 69
Checking V-belt 69
Checking Radiator and Oil Cooler 70
Checking Washer Liquid 70
Checking and Cleaning Engine and Electrical Wiring 70
Washing Whole Machine 70
Greasing Bucket Pin and Bucket Link Pin/ Angle Pin and Angle Cylinder Boss 71
Cleaning Evacuator Valve 71
Checking Diesel Particulate Filter (DPF) Muffler 71

REGULAR CHECKS AND MAINTENANCE WORK 72
EVERY 50 SERVICE HOURS 72
Draining the Water from the Fuel Tank 72
Draining Water Separator 72
Battery 73
Battery Charging 74
Greasing Swing Bearing Teeth 74
EVERY 100 SERVICE HOURS 74
Greasing Boom Swing Fulcrum 74
EVERY 200 SERVICE HOURS 75
Adjusting V-belt Tension 75
Checking Radiator Hoses and Clamps 76
Grease Swing Ball Bearing 76
Inspection and Cleaning Air Filter Element 77
Air Filter Maintenance 77
Checking Fuel Line and Intake Air Line 78
AIR CONDITIONER 78
Cleaning Air Filter 78
Checking Air-Conditioner Condenser 79
EVERY 250 SERVICE HOURS 79
Greasing Front Attachments (without Bucket Pin and Boom Swing Fulcrum) 79
EVERY 500 SERVICE HOURS 80
Changing Engine Oil (Change the engine oil every 500 hours, or every 1 year in the case that service hour is less than 500 hours) 80
Replacing Engine Oil Filter Cartridge (Replace the engine oil filter cartridge every 500 hours,or every 1 year in the case that service hour is less than 500 hours) 81
Drive unit Oil Change(First Oil Change of the 50 hours) 81

https://truckmanualshub.com/

Replacing Fuel Filter Cartridge 82
Replacing Hydraulic Return Filter Cartridge(first replacement after 250 service hours). 82
Replacing Water Separator Filter Element 83
EVERY 1000 SERVICE HOURS 84
Replacing the Hydraulic Pilot Filter Element 84
Hydraulic Oil Change (Including Replacing of the Suction Filter in the Hydraulic Tank) 84
Hydraulic Oil Check with Hydraulic Hammers 85
Checking Engine Valve Clearance 86
EVERY 1000 SERVICE HOURS OR ONCE A YEAR 86
Replacing Air Filter Element 86
EVERY 1500 SERVICE HOURS 86
Checking Injector Tip 86
Replacing Oil Separator Element 86
Checking EGR Cooler 87
EVERY 2000 SERVICE HOURS 87
Changing Front Idler and Track Roller Oil 87
Checking the Alternator and Starter Motor 87
EVERY 3000 SERVICE HOURS 87
Checking EGR System 87
Checking Turbocharger 87
ANNUAL SERVICING 87
Electrical Wiring and Fuses 87
Checking the Electrical Circuit 87
Checking Air-Conditioner Pipes and Hoses 87
Checking Boost Sensor and AFS (Air Flow Sensor) 87
Checking Condition of Diesel Particulate Filter (DPF) Muffler 87
Checking Diesel Particulate Filter (DPF) Differential Pressure Sensor and Piping for Gas Leak 87
Checking Diesel Particulate Filter (DPF) Exhaust Gas Temperature Sensor 87
Checking EGR Piping for Gas Leak 87
BIENNIAL SERVICING 88
Replacing Air-Conditioner Pipes and Hoses 88
Replacement of Radiator Hoses and Hose Clamps 88
Changing Radiator Coolant 88
Replacing Fuel Hoses and Hose Clamps 89
Replacing Intake Air line 90
Replacement of Oil Separator Rubber Hose 90
Replacement of Diesel Particulate Filter (DPF) Differential Pressure Sensor Rubber Piping (Front and Back) 90
Replacement of Suction pipe downstream the AFS (Air Flow Sensor) 90
Replacement of Boost Sensor Pressure Rubber Piping 90
Replacement of EGR Cooler Hose 90
SERVICING AS REQUIRED 90
Checking Amount of Refrigerant (gas) 90
Cleaning Diesel Particulate Filter (DPF) 91
Draining the fuel filter 91

OTHER ADJUSTMENTS AND REPLACEMENTS 92
PURGING OF THE FUEL SYSTEM 92
ADJUSTMENT OF TRACKS 92
Special Information when Using Rubber Tracks 93
CHANGING THE BUCKET 94

https://truckmanualshub.com/

FUSES 94
Replacing Fuses 94
Fuse Capacities and Circuits 94
Auxiliary Electric 95
Slow Blow Fuse 95
Electric Fuse 95

TROUBLESHOOTING 96

OPERATION UNDER COLD WEATHER CONDITIONS 98
PREPARATION FOR OPERATION IN COLD WEATHER 98
PROCEDURE AFTER COMPLETING WORK 98

LONG STORAGE 99

RECOMMENDED OILS 101
BIODIESEL FUEL (BDF) 103

APPENDICES 105
MAIN DIMENSIONS 105

LIFTING CAPACITY 106

LIST OF SCREENS 108
LIST OF NORMAL SCREENS 108
NAVIGATION LIST OF SCREENS 109
AUTOMATIC DIESEL PARTICULATE FILTER (DPF) REGENERATION 117
LOCKING AND RELEASING THE DIESEL PARTICULATE FILTER (DPF) REGENERATION 119

https://truckmanualshub.com/

https://truckmanualshub.com/

SAFE OPERATION

Careful operation is your best insurance against an accident.

Read and understand this manual carefully, before operating the excavator.

Every user, however experienced, should carefully read and understand this manual and those of the attachments and accessories before operating the excavator. The owner is obliged to inform all operators of these instructions in detail.

Keep this manual in the storage location. (See "Where to keep Operator's Manual" in "MAINTENANCE" section.)

1. BEFORE OPERATION

1. Know your equipment and its limitations. Read and understand this entire manual before attempting to start and operate the excavator.
2. Pay special attention to and obey the danger, warning and caution labels on the machine.
3. For your safety, a ROPS/OPG (Top Guard Level I) with a seat belt is installed by KUBOTA.
   - ROPS: Roll-Over Protective Structure
   - OPG (Top Guard Level I): Operator Protective Guards of Top Guard Level I

   Always use the seat belt when the machine is equipped with a ROPS/OPG (Top Guard Level I) as this combination will reduce the risk of serious injury or death, should the excavator be upset or falling objects occur.

   Do not modify any structural members of the ROPS/OPG (Top Guard Level I) by welding, drilling, bending, grinding or cutting, as this may weaken the structure. If any component is damaged, replace it. Do not attempt repairs. If the ROPS/OPG (Top Guard Level I) is loosened or removed for any reason, make sure all parts are reinstalled correctly. Tighten mounting bolts to proper torque.
4. ROPS meets requirements of ISO 12117-2.
   OPG (Top Guard Level I) meets requirements of OSHA 1926-1003/ISO 10262.
5. The seat belt must be inspected regularly and replaced if frayed or damaged.

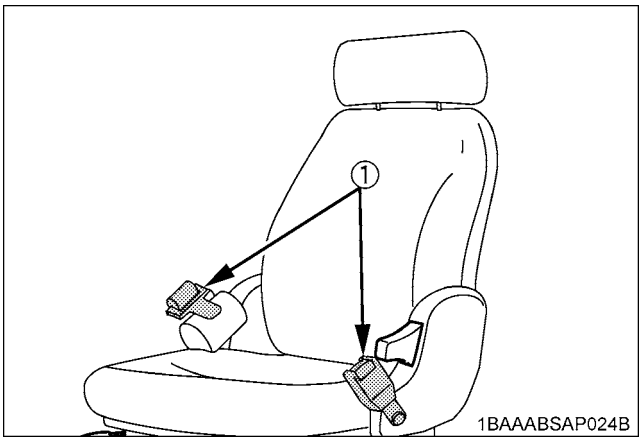

(1) Seat belt

6. Always sit in the operator's seat when starting engine or operating levers or controls.
7. Study control lever pattern A and pattern B. Then choose the one which is most familiar.
   Familiarize yourself with the pattern selected by operating the unit slowly and at low engine speed.

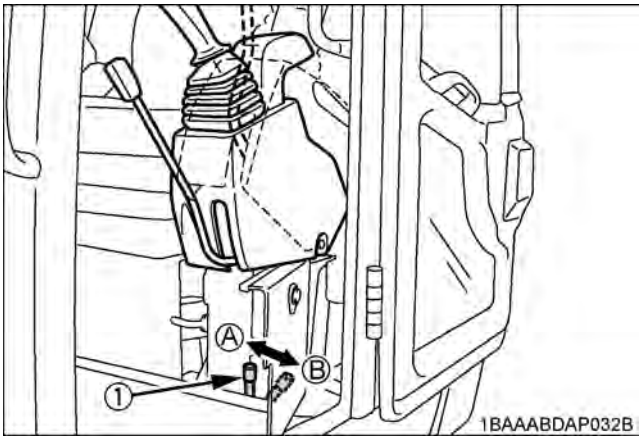

(1) Pattern selector lever (Two Pattern Selection System:TPSS)
(A) "Pattern A"
(B) "Pattern B"

8. Do not operate the excavator while under the influence of alcohol, medication, controlled substances or while fatigued.

https://truckmanualshub.com/

9. Check the surroundings carefully before using the excavator or when attachments are being attached.
- Pay attention to the overhead clearance with electric wires.

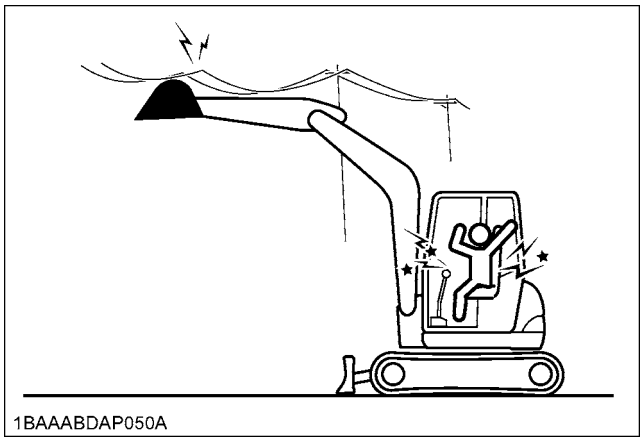
1BAAABDAP050A

- Check for pipes and buried cables before digging. Use your local utility service to check for such items (if available).
- Check for hidden holes, obstacles, soft underground, and overhangs.

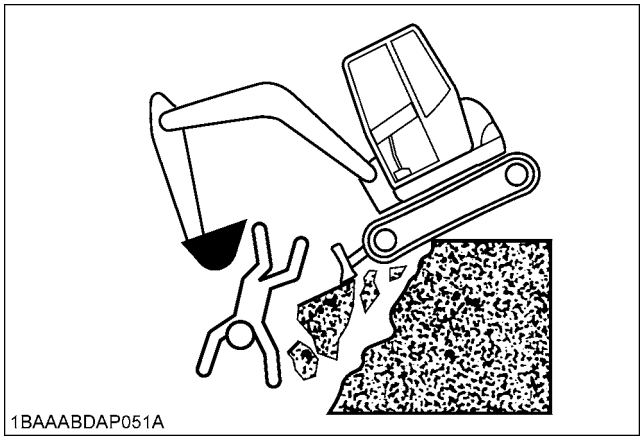
1BAAABDAP051A

- Do not allow any persons within the working range of the excavator during operation.

10. Do not allow anyone to use the excavator until they have been advised of the work to be performed and they have indicated that they have read and understood the operator's manual.
11. Do not wear baggy, torn or oversized clothing when working with the excavator as such clothing can get caught in rotating parts or control elements which can cause accidents or injuries. Wear adequate safety clothing, e.g. safety helmet, safety shoes, eye protection, ear protection, working gloves, etc., as necessary and as prescribed by law or statutes.

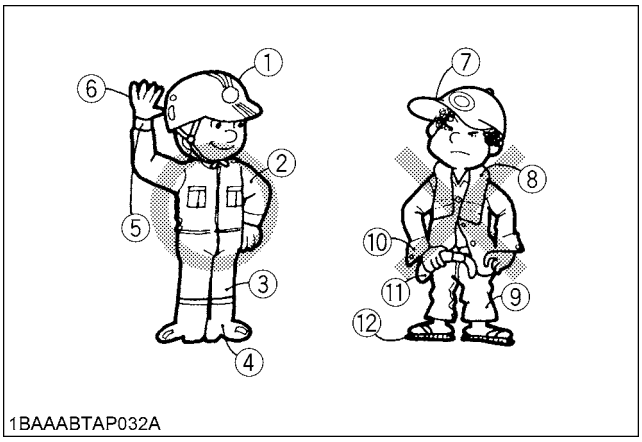

1BAAABTAP032A

(1) Helmet	(7) Soft hat
(2) Clothing fit for work	(8) Towel
(3) Tight seams	(9) Baggy trousers
(4) Good grip footwear	(10) Loose cuffs of the shirt
(5) Well fitting cuffs	(11) Baggy shirt
(6) Working gloves	(12) Sandals or open-toed shoes

12. Do not allow passengers to ride on any part of the excavator at any time. The operator must remain in the excavator seat during operation.
13. Check levers, pedals and all mechanical parts for correct adjustment and wear. Replace worn or damaged parts immediately. Check nuts and bolts regularly for correct torque.
14. Keep your excavator clean. Heavy soiling, grease, dust and grass can cause fires, accidents or injuries.
15. Use only KUBOTA authorized attachments.
16. Before starting the excavator, be absolutely sure that the excavator has been filled with fuel, lubricated, greased and undergone all necessary maintenance.
17. Do not modify the excavator, as such could lead to unforeseen safety problems.
18. Do not operate a hydraulic hammer on anything that is above the operator's seat level as objects may fall into the operator station.
19. Make sure attachments, particularly those utilizing quick attach systems, are securely mounted.
20. Install protective guards on the excavator when working in areas where objects may fall or be thrown. The top guard and front guard are available for this machine. Consult your KUBOTA dealer for details.

https://truckmanualshub.com/

2. OPERATING THE EXCAVATOR

Operator safety is a priority. Safe operation, specifically with respect to overturning hazards, entails understanding the equipment and environmental conditions at the time of use. Some prohibited uses which can affect overturning hazards include traveling and turning with implements and loads carried too high etc. This manual sets forth some of the obvious risks, but the list is not, and cannot be, exhaustive. It is the operator's responsibility to be alert for any equipment or environmental condition that could compromise safe operation.

◆ Starting

1. Mount and dismount the machine safely. Always face the machine. Always use handrails and available steps and keep yourself well balanced. Do not grab or hold any of the control levers and switches. Do not jump on or off the machine, whether stationary or in motion.
2. Start and control the excavator only from the operator's seat. The driver should not lean out of his seat when the engine is running.
3. Before starting the engine, make sure that the lock levers are in the "LOCKED" position and all control levers and pedals are in their neutral positions and the seat belt is fastened correctly.
   Before starting the engine, make sure that the control levers, travel lever, pedals and other control elements are not stuck and can be moved smoothly.
   If stuck, for example, a lever may fail to return, possibly putting you in danger.
   If anything wrong is found, immediately pinpoint the cause and correct it.
4. Before operating the excavator, make sure that the dozer blade is in front of you. If the levers are activated with the dozer blade at the rear, the tracks will move in the opposite direction of the drive levers.

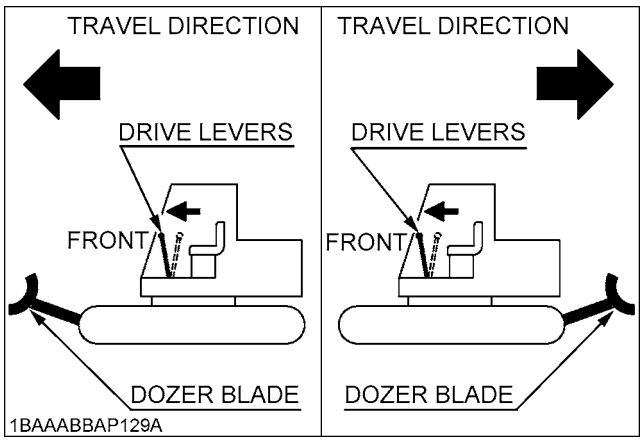

◆ Working

1. Do not operate or idle engine in a non-ventilated area. Carbon monoxide gas is colorless, odorless, and deadly. If you experience the initial symptoms of low to moderate co poisoning, which include the following, stop operation, seek medical attention and contact your local dealer. These symptoms are: headache, fatigue, shortness of breath, nausea, or dizziness.

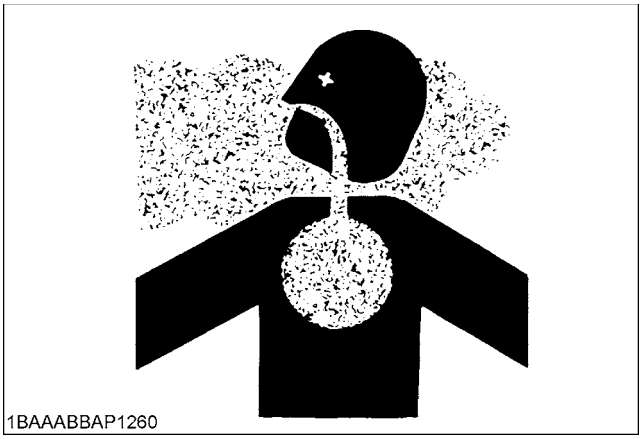

2. Keep all safety equipment and covers in place. Replace damaged or missing safety devices.
3. When operating, keep hands and body inside of the ROPS / OPG (Top Guard Level I) protective envelope.
   Do not touch or depress the control levers or the pedals from outside the cab while the engine is running.
4. Take precautions against tipping over. Stay away from steep slopes and embankments. Do not swing the bucket downhill. Lower the dozer blade when digging. Keep the bucket as low as possible while driving uphill. Turn slowly on slopes (at reduced speed). Do not place the excavator near the edges of trenches and banks, as the earth can give way due to the weight of the excavator.
   Never cross an incline horizontally or at an angle, which can cause the machine to rollover. Approach inclines vertically to avoid loss of control.
   Avoid performing any work with the machine when it is on an incline, which could cause it to become unbalanced and rollover. Always take care when moving the machine on an incline.
5. Watch where you are going at all times.
   Watch for and avoid obstacles. Remain alert for trees, wires and other obstructions.
6. Do not change direction on steep slopes, or the excavator could tip over.
   Before changing direction, beware of people in the work area.
7. When the working light and CAB light alone do not provide sufficient visibility, prepare additional stationary artificial lighting and observe safety rules for night work.

https://truckmanualshub.com/

8. When towing the excavator or pulling a load, the load must be less than the strength of the towing line attached to excavator.

Max. drawbar pull at coupling hook	116.9 kN (26280 lbf, 11920 kgf)
Max. vertical load at coupling hook	12.1 kN (2720 lbf, 1234 kgf)

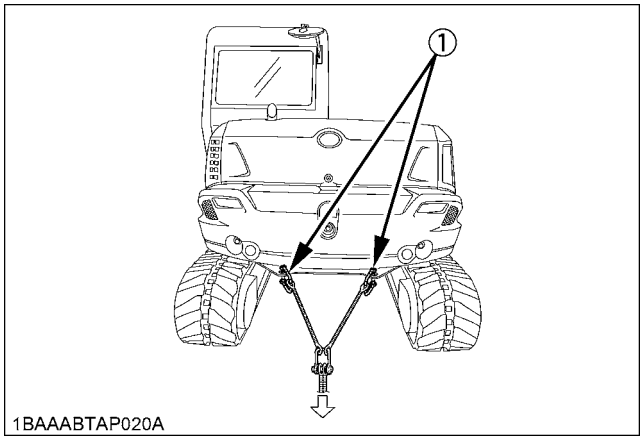

(1) Hook

9. The towing eye should not be used for tie down or lifting of the machine.
10. When the excavator is parked or left unattended on a slope, be sure to put the bucket on the ground and place all control levers in neutral position, then brace the tracks with chocks.
    - When working in groups, always let the others know what you are going to do before you do it. Keep others away from the machine working area. Be sure to lock the boom swing pedal when the boom swing function is not used.
11. For details of operating the excavator, see the "EXCAVATOR OPERATION" section.

◆ Safety for children

Tragedy can occur if the operator is not alert to the presence of children. Children generally are attracted to machines and the work they do.

1. Never assume that children will remain where you last saw them.
2. Keep children out of the work area and under the watchful eye of another responsible adult.
3. Be alert and shut your machine down if children enter the work area.
4. Never carry children on your machine. There is not a safe place for them to ride. They may fall off and be run over or interfere with your control of the machine.
5. Never allow children to operate the machine even under adult supervision.
6. Never allow children to play on the machine or on the attachments.
7. Use extra caution when backing up. Look behind and down to make sure the area clear before moving.

◆ Avoiding crystalline silica (quartz) dust

To avoid serious injury or death from silica dust:
Avoid exposure to dust containing crystalline silica particles.
This dust can cause serious injury to the lungs (silicosis).
Because crystalline silica is a basic component of sand and granite, many activities at construction sites produce dust containing crystalline silica.
Trenching, sawing and boring of material containing crystalline silica can produce dust containing crystalline silica.

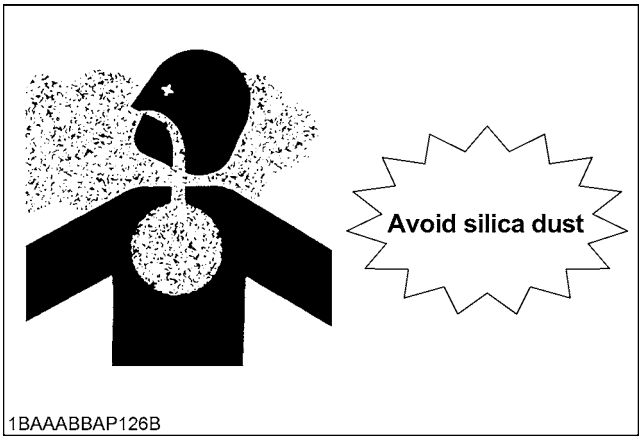

If dust which contains crystalline silica is present, there are guidelines which should be followed:

1. Be aware of the potential health effects of crystalline silica and that smoking may add to the damage.
2. Be aware of and follow OSHA (or other local, State or Federal) guidelines for exposure to airborne crystalline silica.
3. Know the work operations where exposure to crystalline silica may occur.
4. Participate in air monitoring or training programs offered by the employer.
5. Be aware of and use optional equipment controls such as water sprays, local exhaust ventilation, and enclosed cabs with positive pressure air conditioning if the machine has such equipment. Otherwise respirators shall be worn.
6. Where respirators are required, wear a respirator approved for protection against crystalline silica containing dust. Do not alter the respirator in any way. Workers who use tight-fitting respirators cannot have beards/mustaches which interfere with the respirator seal to the face.
7. If possible, change into disposable or washable work clothes at the work site; shower and change into clean clothing before leaving the work site.
8. Do not eat, drink, use tobacco products, or apply cosmetics in areas where there is dust containing crystalline silica.

https://truckmanualshub.com/

9. Store food, drink and personal belongings away from the work area.
10. Wash hands and face before eating, drinking, smoking, or applying cosmetics after leaving the exposure area.

3. AFTER OPERATION

Before leaving the machine,

- Park the excavator on a firm, flat and level surface. If this is not possible, park across the slope.
- Lower the attachments and the dozer blade to the ground.
- Stop the engine.
- Release pressure in the hydraulic system.
- Lock all control levers.
- Remove the key.
- Lock the cab door (if equipped).

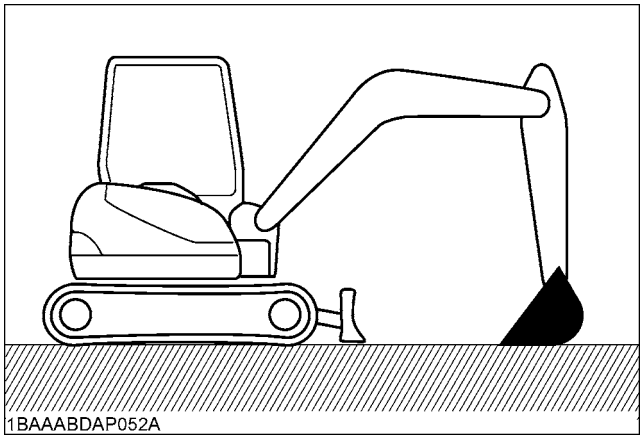

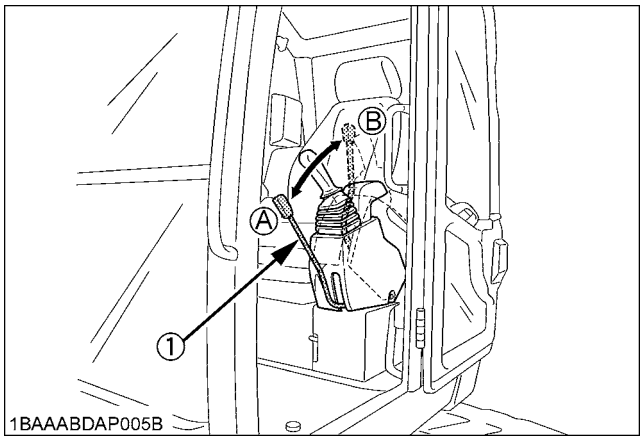

(1) Pilot control lock lever (A) "UNLOCK"
(B) "LOCKED"

4. SAFE LOADING AND TRANSPORT OF THE EXCAVATOR

1. Observe all regulations concerning the transport of excavators on public roads.
2. Use adequately long and robust ramps when loading on the machine. (for details see "TRANSPORTING THE EXCAVATOR ON A VEHICLE")
3. Do not change the running direction and to avoid tipping over, do not try to swing the attachment crosswise to the loading ramps.
4. Lower the attachment on the loading bed and release the pressure from the hydraulic system. Stop the engine and remove the key.
   After loading the excavator on the truck, block the tracks with blocks and tie down the excavator at the appropriate locations.

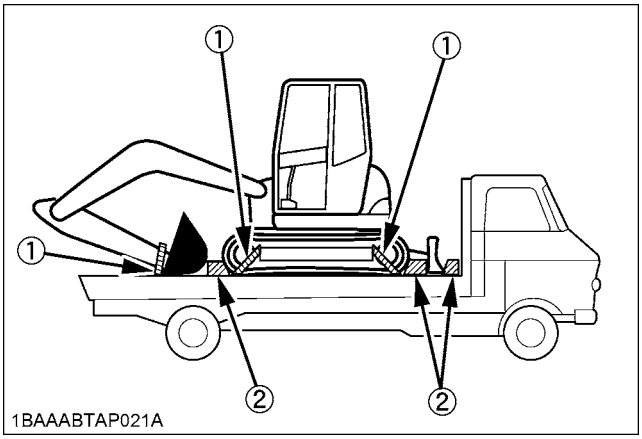

(1) Chain
(2) Block

5. Avoid abrupt braking of the vehicle with the excavator loaded. Sudden braking causes the excavator to move and may cause a serious accident.
6. Do not use the hooks on the roof of CAB for lifting the excavator.

https://truckmanualshub.com/

5. MAINTENANCE

Before doing maintenance work on the excavator, place the machine on a firm, flat and level surface, lower the attachments to the ground, stop the engine, release pressure trapped in the hydraulic system, lock all control levers and remove the key. When dismantling hydraulic parts, make sure that the hydraulic oil has cooled down sufficiently to avoid burns.

Start maintenance work carefully, e.g. loosen plug slowly so that oil will not squirt out.

1. Before doing work on the engine, the exhaust system, the radiator and the hydraulics, let the excavator cool down sufficiently.
2. Always turn off the engine when filling the fuel tank. Avoid spilling and over-filling of fuel.
3. Smoking is prohibited while refueling or handling the battery. Keep sparks and fire away from the fuel tank and battery. Flammable gases escape from the battery, especially during charging.
4. Do not use or charge a refillable type battery if the fluid level is below the LOWER (lower limit level) mark. Otherwise, the battery component parts may prematurely deteriorate, which may shorten the battery's service life or cause an explosion. Check the fluid level regularly and add distilled water as required so that the fluid level is between the UPPER and LOWER levels.
5. Read and follow the directions "STARTING WITH AN AUXILIARY BATTERY" in "OPERATION OF THE ENGINE", when starting with an auxiliary battery.
6. Keep a first-aid box and a fire extinguisher at hand at all times.
7. Do not open the radiator cap before the radiator has cooled down sufficiently.
   First loosen the cap to the first stop and allow the system enough time to release the remaining pressure. Then loosen the cap completely.

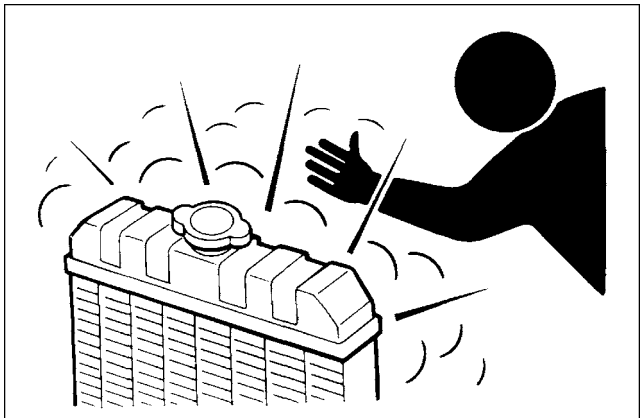
1AAAAABAP023A

8. To avoid short-circuiting the battery, always remove the ground cable first and attach the positive cable first.
9. Oil under high pressure can penetrate the skin and may be harmful to your health if not treated immediately.
10. Leaking hydraulic fluid has enough pressure to penetrate the skin and cause serious injuries. Leakages from pin holes can be totally invisible. Do not use hands for checking for leaks. Always use a piece of wood or cardboard. It is strongly recommended that you use a face mask or eye protection.
    Should injuries occur with leaking hydraulic fluid, contact a doctor immediately. This fluid can cause gangrene or serious allergic reactions.

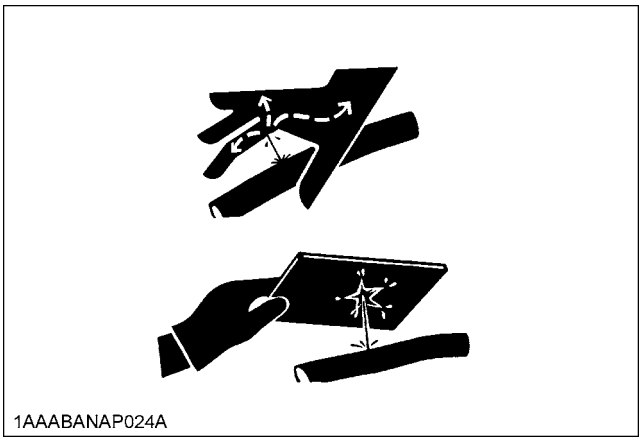
1AAABANAP024A

11. To avoid environmental damage from acid and heavy metals, dispose of the battery appropriately.
12. Observe all laws and regulations concerning the disposal of used oil, coolants, solvents, hydraulic fluids, battery acids and batteries.
13. To avoid fire, do not heat the hydraulic components (tanks, pipes, hoses, cylinders) before they have been drained and washed.
14. Use eye protection or a face mask to protect the eyes and respiratory system against dust and other foreign particles.

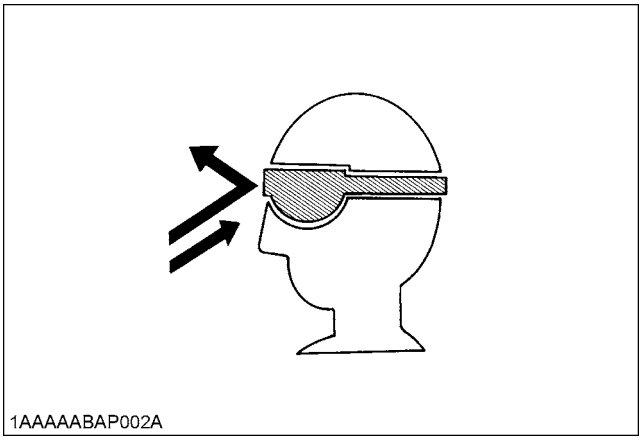
1AAAAABAP002A

https://truckmanualshub.com/

15. Securely support excavator with stands or suitable blocking before working underneath. For your safety, do not work under any hydraulically supported devices. They can settle, suddenly leak down, or be accidentally lowered.

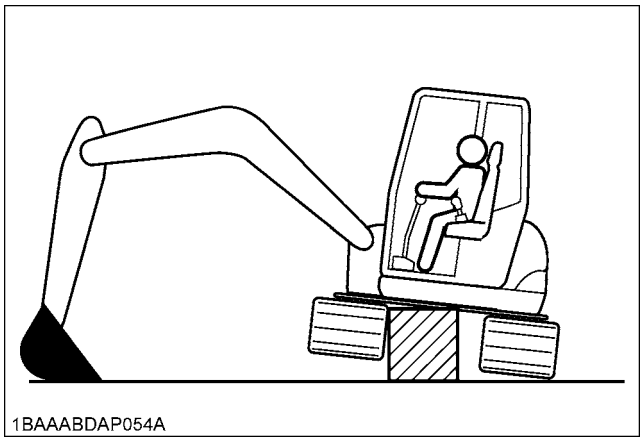
1BAAABDAP054A

16. Do not dismantle the spring of the track tensioner. If dismantling is necessary, contact your KUBOTA dealer where the machine was purchased, or competent service shop. The assembly must be done according to the KUBOTA work shop manual (W.S.M.) for the product involved.
17. When lifting the machine itself with an attachment, place a safety block or safety post to prevent the machine from rolling over. Keep the pilot control lock lever in the "LOCKED" position.
18. Inspect ROPS / OPG (Top Guard Level I) for damage and if damage is found contact your KUBOTA dealer for repair.
19. KUBOTA does not use asbestos containing components and recommends against the use of such components. Components containing asbestos should be handled in accordance with applicable regulations and industry practice.
20. Do not open a high-pressure fuel system. High-pressure fluid remaining in fuel lines can cause serious injury. Do not disconnect nor attempt to repair fuel lines, sensors, or any other components between the high- pressure fuel pump and injectors on engines with high-pressure common rail fuel system.
21. To avoid hazardous high voltage, turn the key switch to the "STOP" position and disconnect the battery ground cable if it is necessary to check to repair the computer, harness or connectors.
22. Fire prevention
    Excavator and some attachments have components that are at high temperatures under normal operating conditions. The primary source of high temperatures is the engine and exhaust system. The electrical system, if damaged or incorrectly maintained, can be a source of arcing or sparks.
    The following fire prevention guidelines will help to keep your equipment up and running efficiently and keep the risk of fire to a minimum.

- Before proceeding to regenerate the DPF, a warning indicator appears on the LCD display to tell you to increase the engine rpm to its specified level. Follow that instruction.
- When the Diesel Particulate Filter (DPF) is in the regenerating cycle, the exhaust gas and the DPF muffler become hot. During regeneration, take into account that the exhaust gas and muffler will be very hot and keep the machine away from other people, animals, plants, and flammable material. Also keep the area near the DPF muffler clean and away from flammable material.
- The DPF-regeneration-caused exhaust gas may reach temperature that adversely affect people, animals and plants. Before this action, look around the machine for added safety.
- During DPF regeneration keep the surrounding environment in mind. Do not allow the ambient temperature to rise excessively due to heat from the regeneration. If such occurs activate the inhibit switch.
- Blow off all accumulated debris near hot engine exhaust components such as turbocharger and exhaust manifold as well as exhaust pipes and muffler more frequently when working in severe conditions.
- Clean out all accumulated flammable debris such as leaves, straw, pine needles, branches, bark, small wood chips and any other combustible materials from inside the machine belly pans or lower unit structures as well as from area in proximity to the engine.
- Inspect all fuel lines and hydraulic hoses for wear or for deterioration. Replace them immediately if they begin to leak.
- Examine electrical wiring and connectors frequently for damage. Repair any wires that are loose or frayed before operating the machine. Clean all electrical connections and tighten all electrical connections as necessary.
- Inspect the exhaust system daily for any signs of leakage. Check for broken pipes and muffler and also for loose or missing bolts, nuts and clamps. If any exhaust leaks or fractured parts are found, repairs must be completed prior to operation.
- Always keep a multipurpose fire extinguisher on or near the machine. Be familiar with the operation of the fire extinguisher.

https://truckmanualshub.com/

6. DANGER, WARNING AND CAUTION LABELS

(1) Part No. RD838-5728-1

⚠ WARNING

TO AVOID PERSONAL INJURY OR DEATH:

1. Read and understand operator's manual before attempting to start or operate the excavator. Read the manual of the attachment to do a correct operation safely when other attachments are installed instead of Kubota specified bucket.
2. Before starting engine, make sure all control levers are in neutral and the operating area is clear of all bystanders.
3. Never allow passengers on any part of the excavator while operating.
4. Know your work area before starting operation.
   - Check underground lines and cables.
   - Stay off slopes too steep for safe operation.
   - Check for hidden holes, obstacles or drop-offs and overhangs.
5. Make sure all shields are in place and securely fastened.
6. Before dismounting from the machine, lower all attachment to the ground, stop the engine and remove the key.
7. Damaged ROPS must be replaced, not repaired or revised.

IMPORTANT

Never use boom, dipper, or bucket to hammer or beat sideways.

Excavator is not intended for these usages.

1BAAABTAP033A

(2) Part No. RD809-5736-1

⚠ DANGER

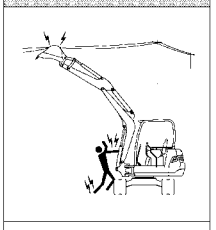

TO AVOID SERIOUS INJURY OR DEATH:

Check overhead clearance with electric wires.

1BAAACDAP243A

(3) Part No. RD809-5738-2

⚠ WARNING

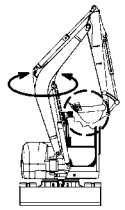

ATTACHMENT IMPACT HAZARD
KEEP ATTACHMENT AWAY FROM CAB AND MACHINE.
FAILURE TO DO SO MAY RESULT IN SEVERE INJURIES OR DEATH OR DAMAGE TO THE BOOM CYLINDER, HYDRAULIC HOSES OR THE CAB.

1BAAAARAP1000

(4) Part No. RD838-5732-1

Pattern A ⟷ Pattern B

⚠ WARNING

TO AVOID PERSONAL INJURY OR DEATH:

1. Study control lever pattern A and pattern B. Then choose the one which is most familiar.
2. Position the pattern selector lever in either the left position (pattern A) or the right position (patter B).
3. Engage lever lock to prevent accidential pattern change.
4. Familiarize yourself with the pattern selected by operating slowly.

1BAAABTAP034A

(5) Part No. TC650-6597-1

California Proposition 65

⚠ WARNING ⚠

Engine exhaust, some of its constituents, certain vehicle components and fluids, contain or emit chemicals known to the State of California to cause cancer and birth defects or other reproductive harm.

1BCAAAAAP4560

(6) Part No. 3B791-9870-1

⚠ WARNING

TO AVOID EXPOSURE TO DUST CONTAINING SILICA PARTICLES:

- This dust can cause serious injury to the lungs under some exposure levels.
- Be aware of and follow the OSHA (or other regulatory body) guidelines for exposure to airborne crystalline silica.
- To meet OSHA silica guidelines, use appropriate Personal Protective Equipment and dust abatement systems, such as waterspray systems.

1AGAIJHAP174A

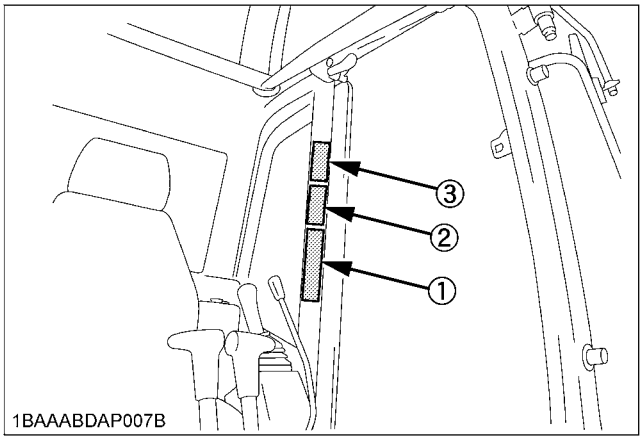

1BAAABDAP007B

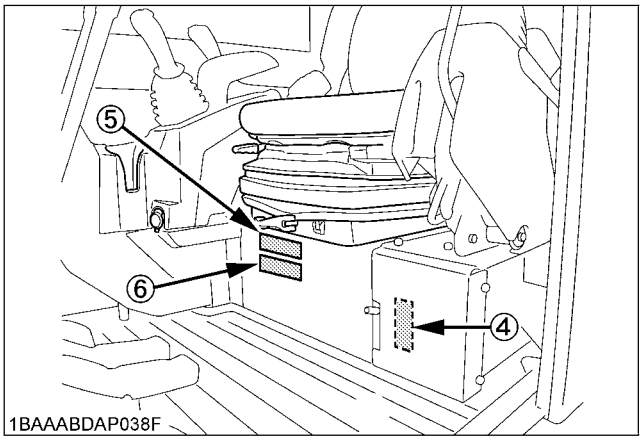

1BAAABDAP038F

https://truckmanualshub.com/

(1) Part No. RD838-5763-1

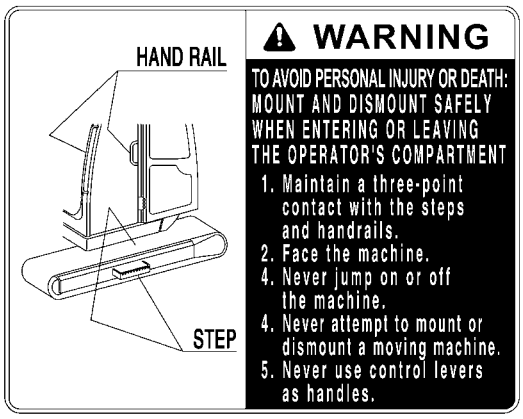

1BAAABTAP035A

(2) Part No. RC488-5753-1

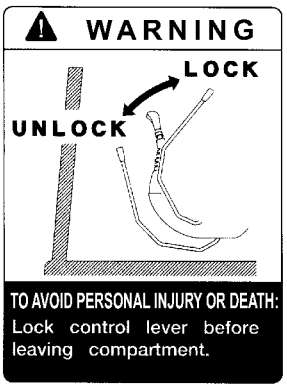

1BAAABTAP036A

(3) Part No. RD848-5749-1

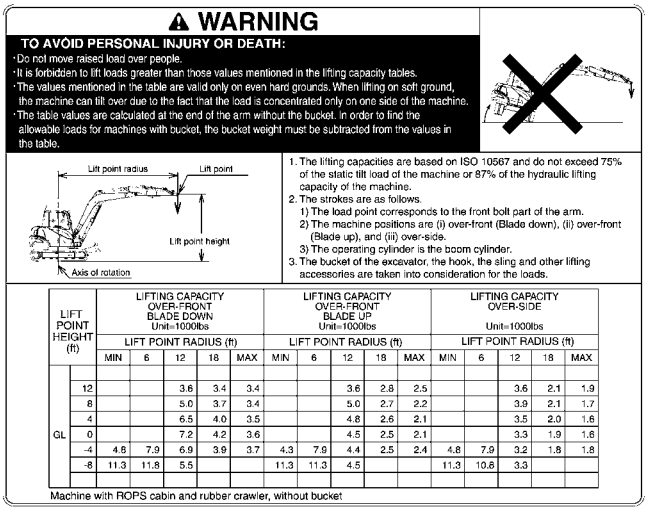

WARNING

TO AVOID PERSONAL INJURY OR DEATH:

- Do not move raised load over people.
- It is forbidden to lift loads greater than those values mentioned in the lifting capacity tables.
- The values mentioned in the table are valid only on even hard grounds. When lifting on soft ground, the machine can tilt over due to the fact that the load is concentrated only on one side of the machine.
- The table values are calculated at the end of the arm without the bucket. In order to find the allowable loads for machines with bucket, the bucket weight must be subtracted from the values in the table.

1. The lifting capacities are based on ISO 10567 and do not exceed 75% of the static tilt load of the machine or 87% of the hydraulic lifting capacity of the machine.
2. The strokes are as follows.
   1) The load point corresponds to the front bolt part of the arm.
   2) The machine positions are (i) over-front (Blade down), (ii) over-front (Blade up), and (iii) over-side.
   3) The operating cylinder is the boom cylinder.
3. The bucket of the excavator, the hook, the sling and other lifting accessories are taken into consideration for the loads.

LIFT POINT HEIGHT (ft)	LIFTING CAPACITY OVER-FRONT BLADE DOWN Unit=1000lbs					LIFTING CAPACITY OVER-FRONT BLADE UP Unit=1000lbs					LIFTING CAPACITY OVER-SIDE Unit=1000lbs				
	LIFT POINT RADIUS (ft)					LIFT POINT RADIUS (ft)					LIFT POINT RADIUS (ft)				
	MIN	6	12	18	MAX	MIN	6	12	18	MAX	MIN	6	12	18	MAX
12			3.6	3.4	3.4			3.6	2.8	2.5			3.6	2.1	1.9
8			5.0	3.7	3.4			5.0	2.7	2.2			3.9	2.1	1.7
4			6.5	4.0	3.5			4.8	2.6	2.1			3.5	2.0	1.6
GL 0			7.2	4.2	3.6			4.5	2.5	2.1			3.3	1.9	1.6
-4	4.6	7.9	6.9	3.9	3.7	4.3	7.9	4.4	2.5	2.4	4.8	7.9	3.2	1.8	1.8
-8	11.3	11.8	5.5			11.3	11.3	4.5			11.3	10.8	3.3		

Machine with ROPS cabin and rubber crawler, without bucket

4NABEAAAP044B

(4) Part No. RD809-5727-1

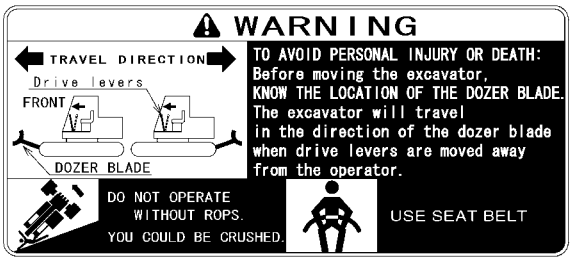

1BAAABBAP119E

(5) Part No. RC488-5737-1

1BAAABTAP037A

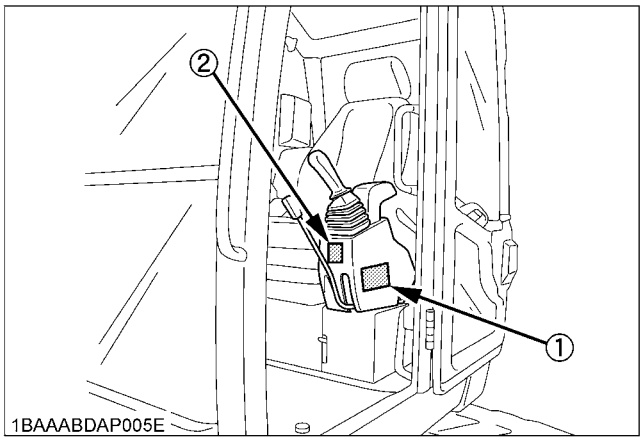

1BAAABDAP005E

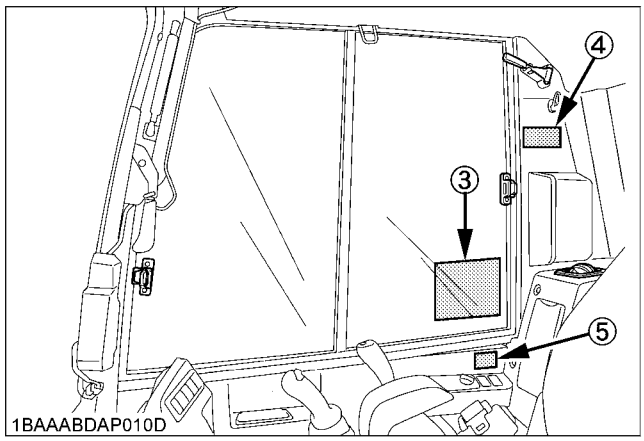

1BAAABDAP010D

https://truckmanualshub.com/

(1) Part No. RC788-5727-2
Do not allow any persons within the working range.

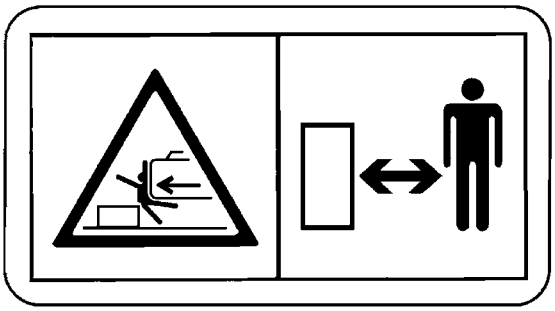

1BAAEAJAP069A

(2) Part No. RD809-5745-1
Do not touch hot parts such as exhaust etc.

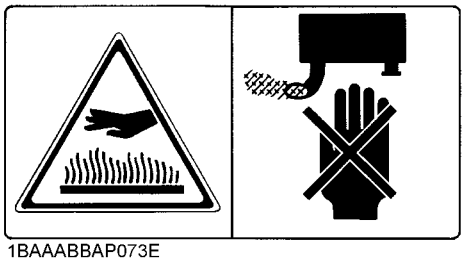

1BAAABBAP073E

(3) Part No. RC488-5714-1

⚠ WARNING

TO AVOID PERSONAL INJURY OR DEATH
NEVER OPEN BEFORE STOPPING ENGINE

1BAAABTAP038A

(4) Part No. TC660-9861-1

⚠ WARNING

TO AVOID PERSONAL INJURY OR DEATH:
When the Diesel Particulate Filter (DPF) is in the regenerating mode, the exhaust gas and the DPF muffler become hot. During regeneration, take into account that the muffler will be very hot and keep the machine away from other people, animals, plants, and flammable material. Also keep the area near the DPF muffler clean and away from flammable material.

1AGAHAKAP051A

(5) Part No. RB419-5796-2

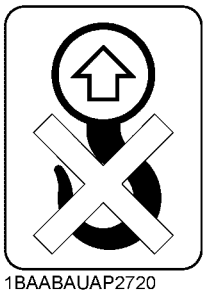

1BAABAUAP2720

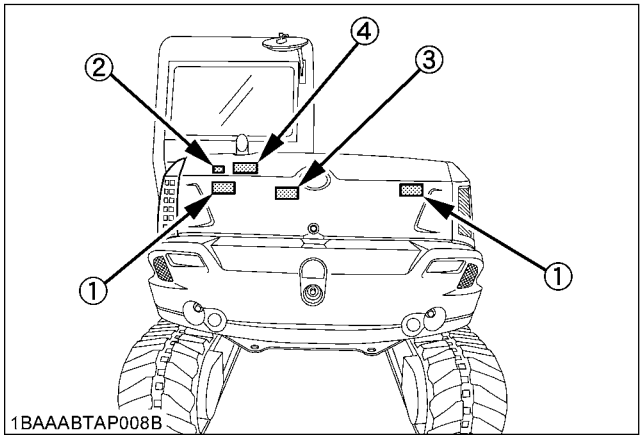

1BAAABTAP008B

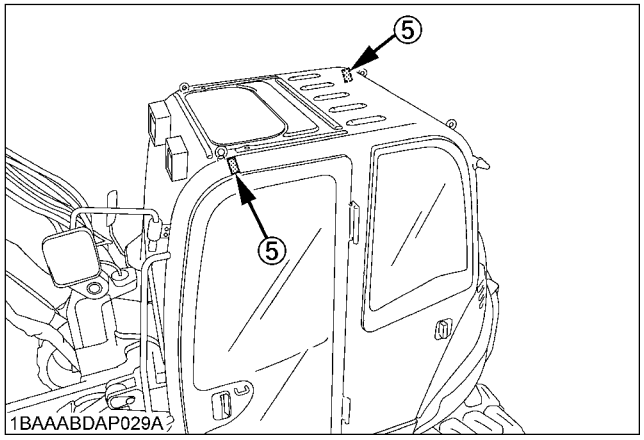

1BAAABDAP029A

https://truckmanualshub.com/

(1) Part No. 68328-5735-1 [Both sides]

1BAAAAQAP0930

(2) Part No. RC108-5796-1 [Both sides]

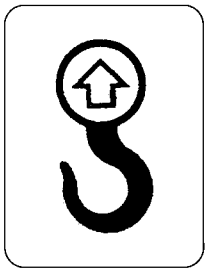

1BAAAAQAP0940

(3) Part No. RD358-5736-1

Diesel fuel only No fire

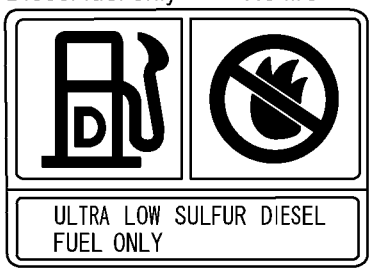

1BAAGAAAP1810

(4) Part No. RB456-5795-1

Do not loosen the grease nipple completely or too quickly.

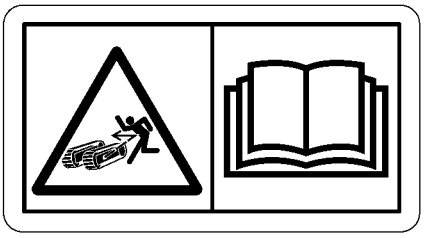

1BAAACDAP2740

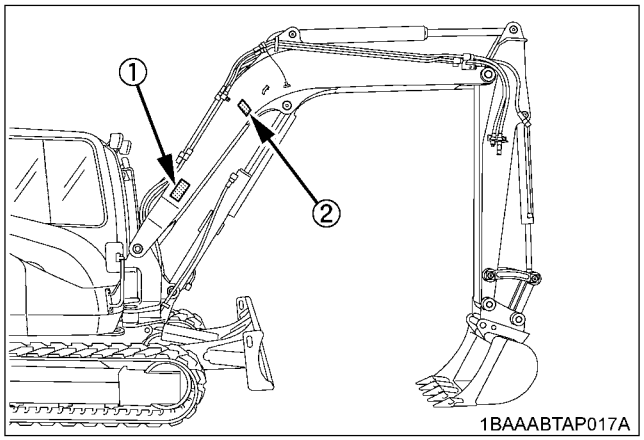

1BAAABTAP017A

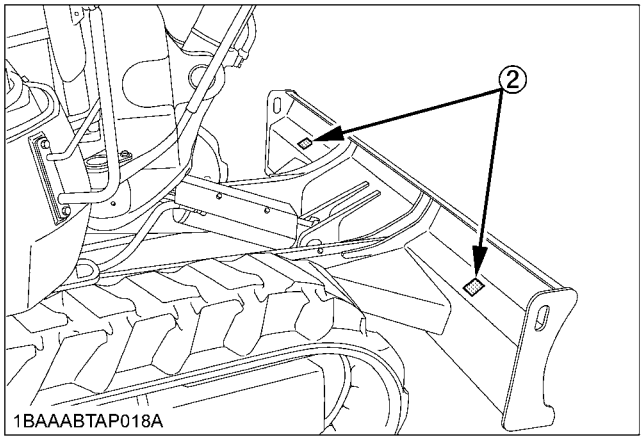

1BAAABTAP018A

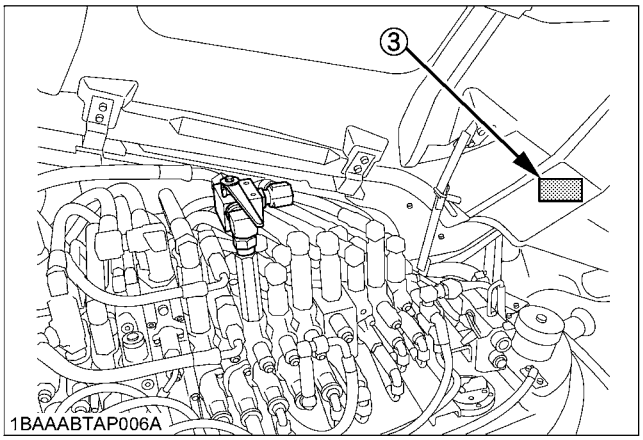

1BAAABTAP006A

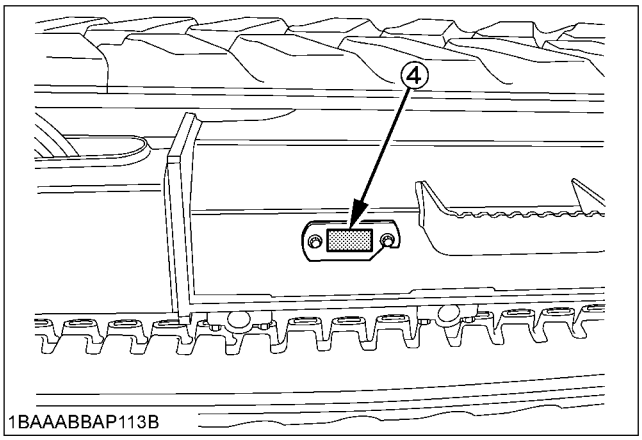

1BAAABBAP113B

https://truckmanualshub.com/

(1) Part No. RD809-5745-1
Do not touch hot parts such as exhaust etc.

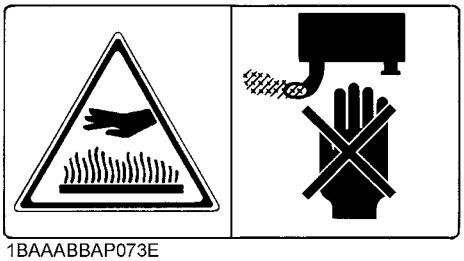

1BAAABBAP073E

(2) Part No. V0511-5739-1
Keep away from fan and fan belt.

1BCAAAAAP073E

(3) Part No. RD158-5745-1
Do not touch hot parts such as exhaust etc.

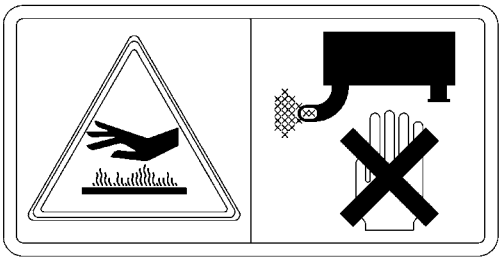

1BAAAADAP1160

(4) Part No. RD838-5729-1

1BAAABTAP039A

(5) Part No. RD819-5724-1
Stop engine and allow hydraulic tank to cool before opening cap.

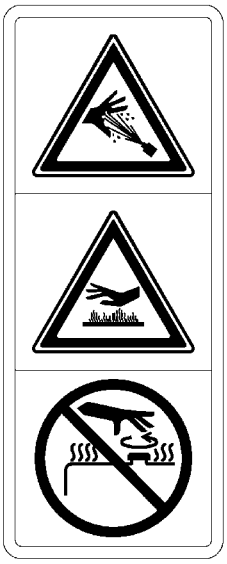

1BAAABVAP1040

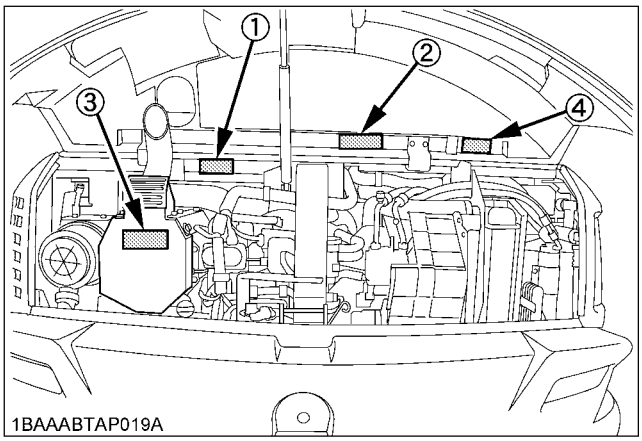

1BAAABTAP019A

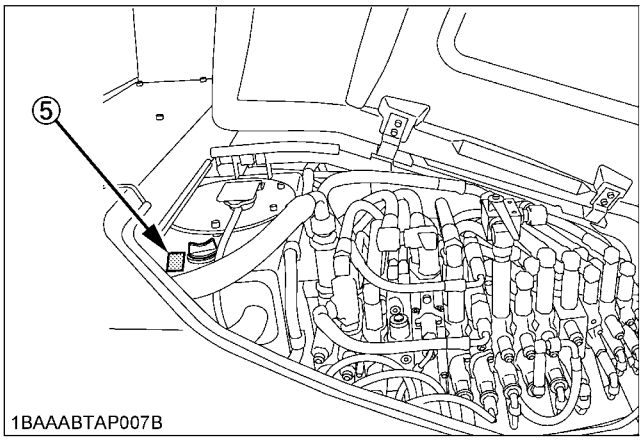

1BAAABTAP007B

https://truckmanualshub.com/

(1) Part No. 6C040-5559-1

DANGER EXPLOSIVE GASES
Cigarettes, flames or sparks could cause battery to explode. Always shield eyes and face from battery. Do not charge or use booster cables or adjust post connections without proper instruction and training.
KEEP VENT CAPS TIGHT AND LEVEL
POISON CAUSES SEVERE BURNS
Contains sulfuric acid. Avoid contact with skin, eyes or clothing. In event of accident flush with water and call a physician immediately.
KEEP OUT OF REACH OF CHILDREN

1BAAAAQAP0960

(2) Part No. RD838-5765-1

⚠WARNING
NO STEP

1BAAABTAP041A

(3) Part No. RD158-7596-1 [Angle blade type only]

⚠WARNING
TO AVOID PERSONAL INJURY OR DEATH:
Do not push the dozer control lever into the float position while the machine is supported by the dozer blade.

1BAAAADAP1150

(4) Part No. RA028-5835-1

⚠WARNING :
Cancer and Reproductive Harm - www.P65Warnings.ca.gov.

1BAAAABYAP2730

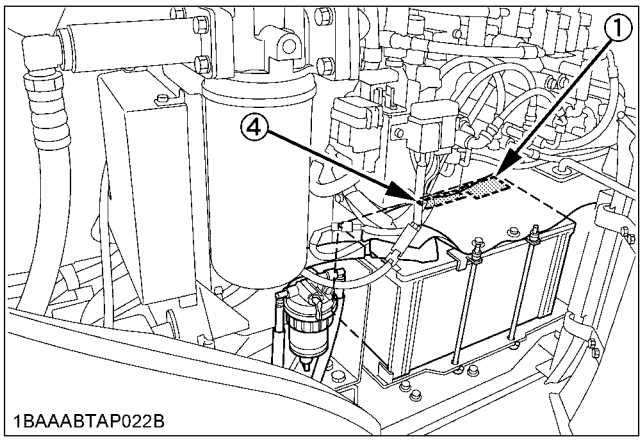

1BAAABTAP022B

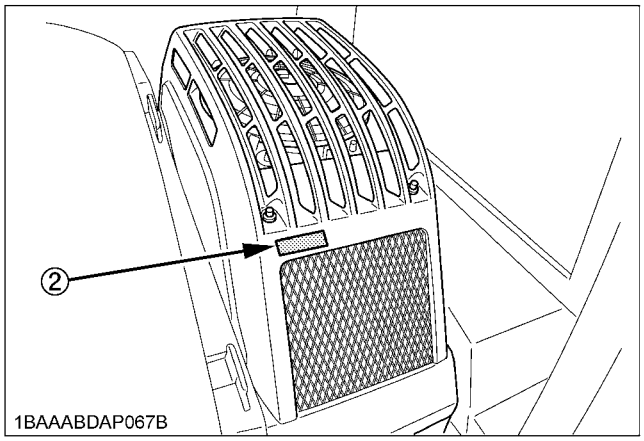

1BAAABDAP067B

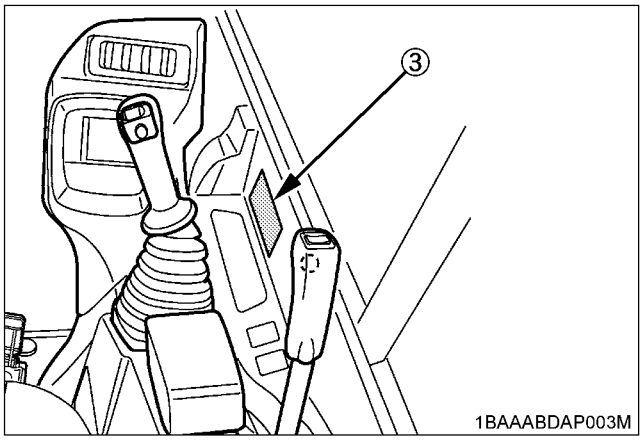

1BAAABDAP003M

https://truckmanualshub.com/

7. CARE OF DANGER, WARNING AND CAUTION LABELS

1. Keep danger, warning and caution labels clean and free from obstructing material.
2. Clean danger, warning and caution labels with soap and water, and dry with a soft cloth.
3. Replace damaged or missing danger, warning and caution labels with new labels from your KUBOTA dealer.
4. If a component with danger, warning and caution label(s) affixed is replaced with new part, make sure new label(s) is (are) attached in the same location(s) as the replaced component.
5. Mount new danger, warning and caution labels by applying on a clean dry surface and pressing any bubbles to outside edge.

https://truckmanualshub.com/

DEALER SERVICE

Your KUBOTA dealer is always ready to help so that your excavator offers the best performance. After having carefully read these instructions, you will realize that much of the routine maintenance can be done by yourself. Your KUBOTA dealer is responsible for servicing and the delivery of spare parts. When ordering spare parts from your KUBOTA dealer, always mention the product identification number of the excavator and the serial number of the engine.
Note these numbers right away in the supplied lines.

Excavator Product identification number	
Dealer's name (To be filled in through the owner)	
Date of purchase	

	Model	Serial No.
Engine		

◆ **Warranty policy**

This product is warranted under the KUBOTA Limited Express Warranty, a copy of which may be obtained from your selling dealer. No warranty shall, however, apply if the product has not been handled according to the instruction given in the Operator's Manual even it is within the warranty period.
The Product(s) described in this Operator's Manual are designed and manufactured only for the country in which they are initially wholesaled by KUBOTA or one of its affiliated companies. Neither KUBOTA Corporation nor its affiliated companies provide warranty for any Product which is re-sold or retailed in any country other than the country for which the Product(s) were designed or manufactured.

◆ **Scrapping the product and its procedure**

To put the product out of service, correctly follow the local rules and regulations of the country or territory where you reside. If you have questions, consult your local KUBOTA Dealer.

[For Canada only, if equipped]

This product is equipped with an electronic key (see "ANTI-THEFT DEVICE" section) as a theft-prevention measure. This device restrains a theft, but does not guarantee that the machine will not be stolen.

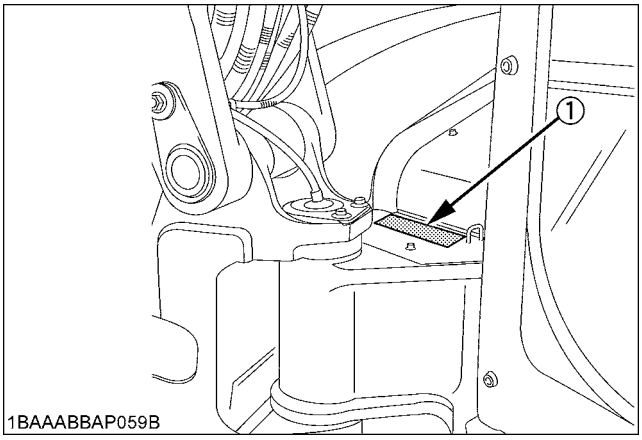

(1) Product identification number

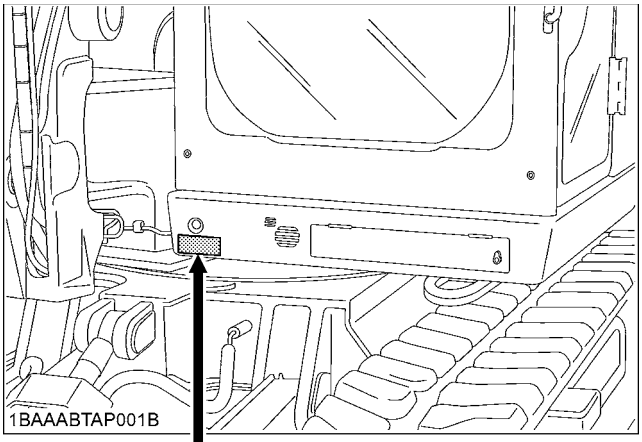

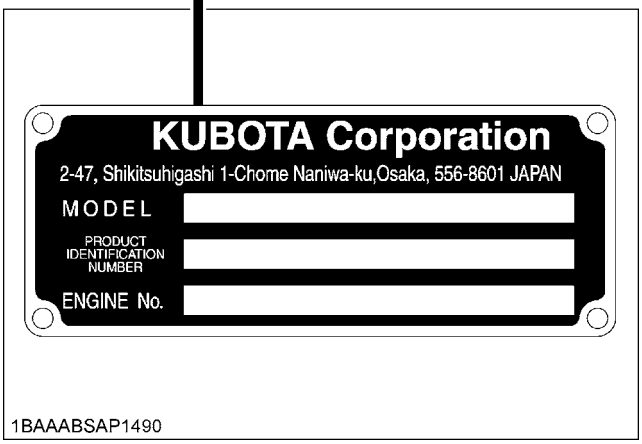

https://truckmanualshub.com/

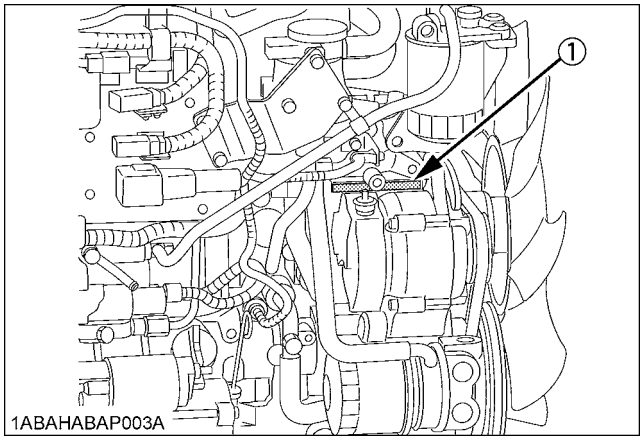

(1) Engine serial No.

https://truckmanualshub.com/

TECHNICAL DATA

			KUBOTA EXCAVATOR				
Model name			KX080-4S2				
Type			Cabin			Angle Blade Type Cabin	
Operating weight (including operator's weight) kg (lbs.)			Rubber tracks	Steel tracks (450 width)	Steel tracks (600 width)	Rubber tracks	Steel tracks (450 width)
			8435 (18595)	8485 (18706)	8615 (18992)	8825 (19455)	8875 (19565)
Engine	Type		Water cooled 4 cycle diesel engine with 4 cylinder				
	Model name		KUBOTA V3307-CR-TE5				
	Total displacement cc (cu. in.)		3331 (203.3)				
	Engine power	SAE gross kW (Hp)	49.7 (66.6)				
		SAE net kW (Hp)	46.5 (62.3)				
	Rated speed rpm		2000				
	Low idling speed rpm		1100				
Performance	Unit swing speed rpm		10.2				
	Travel speed	Fast km/h (mph)	4.8 (3.0)				
		Slow km/h (mph)	2.7 (1.7)				
	Ground pressure (With operator 75 kg) kPa (kgf/cm²) [psi]		36.6 (0.374) [5.31]	37.5 (0.383) [5.44]	28.6 (0.292) [4.15]	38.3 (0.391) [5.55]	39.2 (0.400) [5.68]
	Climbing angle % (deg)		*36 (20)				
Dozer	Width x Height mm (in.)		2200 x 500 (86.6 x 19.7)			2200 x 510 (86.6 x 20.1)	
	Max swing	Left rad (deg)	-			0.44 (25)	
		Right rad (deg)	-			0.44 (25)	
Boom swing angle		Left rad (deg)	1.22 (70)				
		Right rad (deg)	1.05 (60)				
Pressure connection for attachments	Max.displacement (Theoretical) L (US gal) / min		100 (26.4)				
	Max. pressure Mpa (kgf/cm²) [psi]		20.6 (210) [2987]				
Fuel tank capacity L (US gal)			115 (30.4)				

NOTE :

- Above dimensions are based on the machine with KUBOTA original bucket and 2100 arm.
- Specifications subject to change without notice.

∗ With unloaded digging bucket.
∗ Firm compacted soil.
∗ Operators must exercise extra caution and follow instructions in the operator's manual.
∗ Worse condition or heavier attachment to the above will decrease climbing angle.

https://truckmanualshub.com/

DESCRIPTION OF MACHINE PARTS

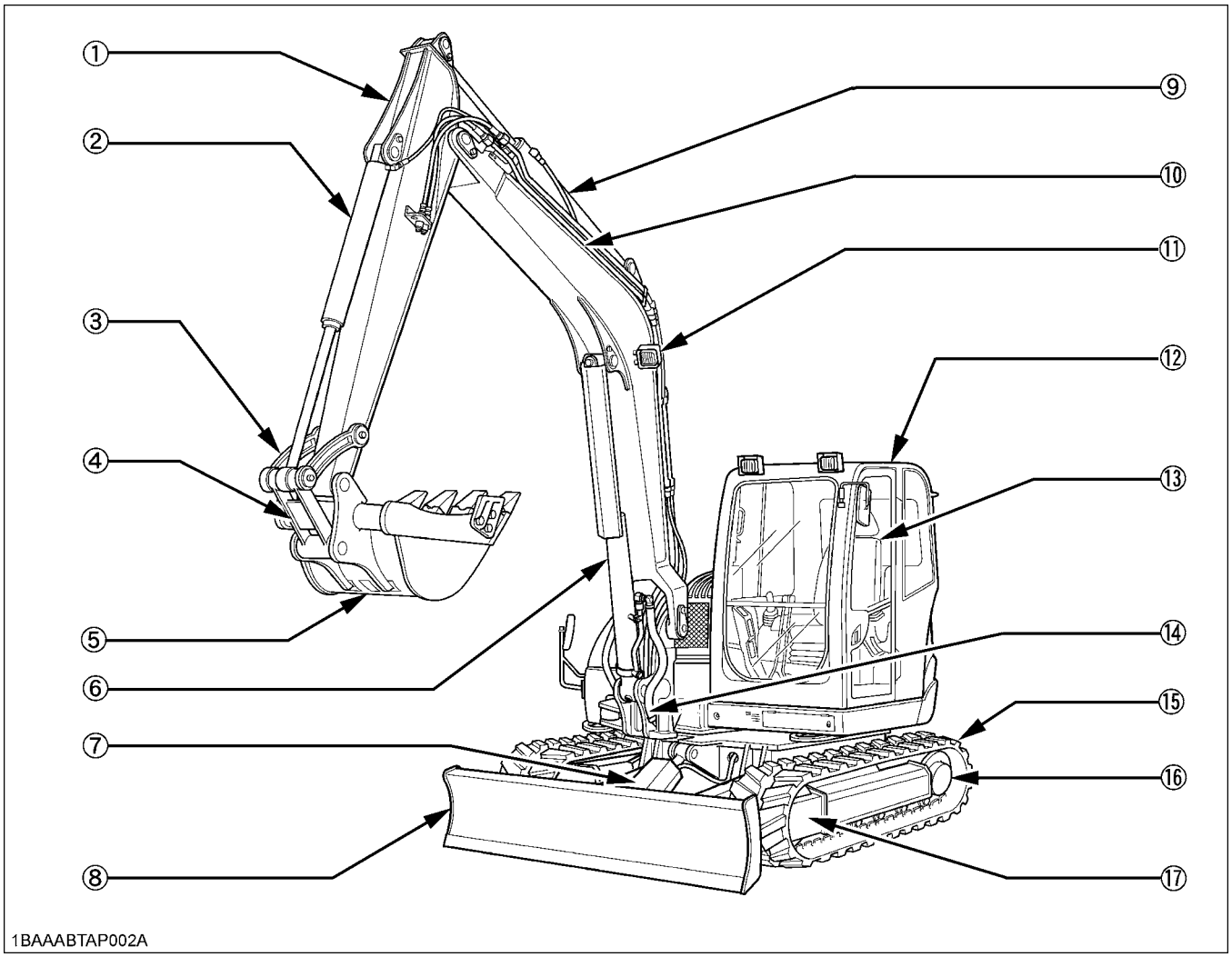

DEPICTED CONTENTS
(1) Arm
(2) Bucket cylinder
(3) Bucket link 2 and 3
(4) Bucket link 1
(5) Bucket
(6) Boom cylinder
(7) Dozer cylinder
(8) Dozer blade
(9) Arm cylinder
(10) Boom
(11) Working light
(12) Cabin
(13) Operator's seat
(14) Swing bracket
(15) Track
(16) Drive sprocket
(17) Front idler
(18) Angle blade

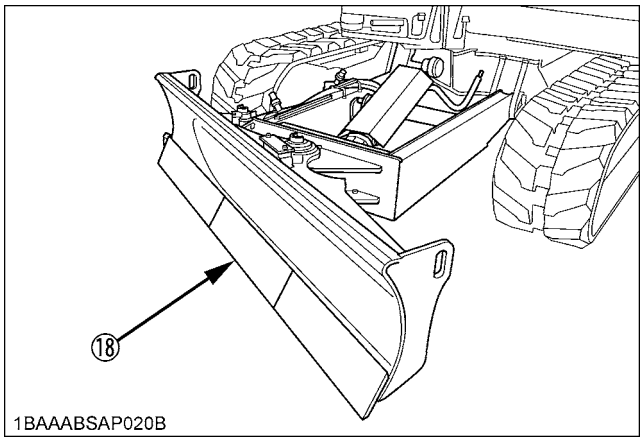

https://truckmanualshub.com/

INSTRUMENT PANEL AND CONTROL ELEMENTS

■ Instrument Panel, Switch

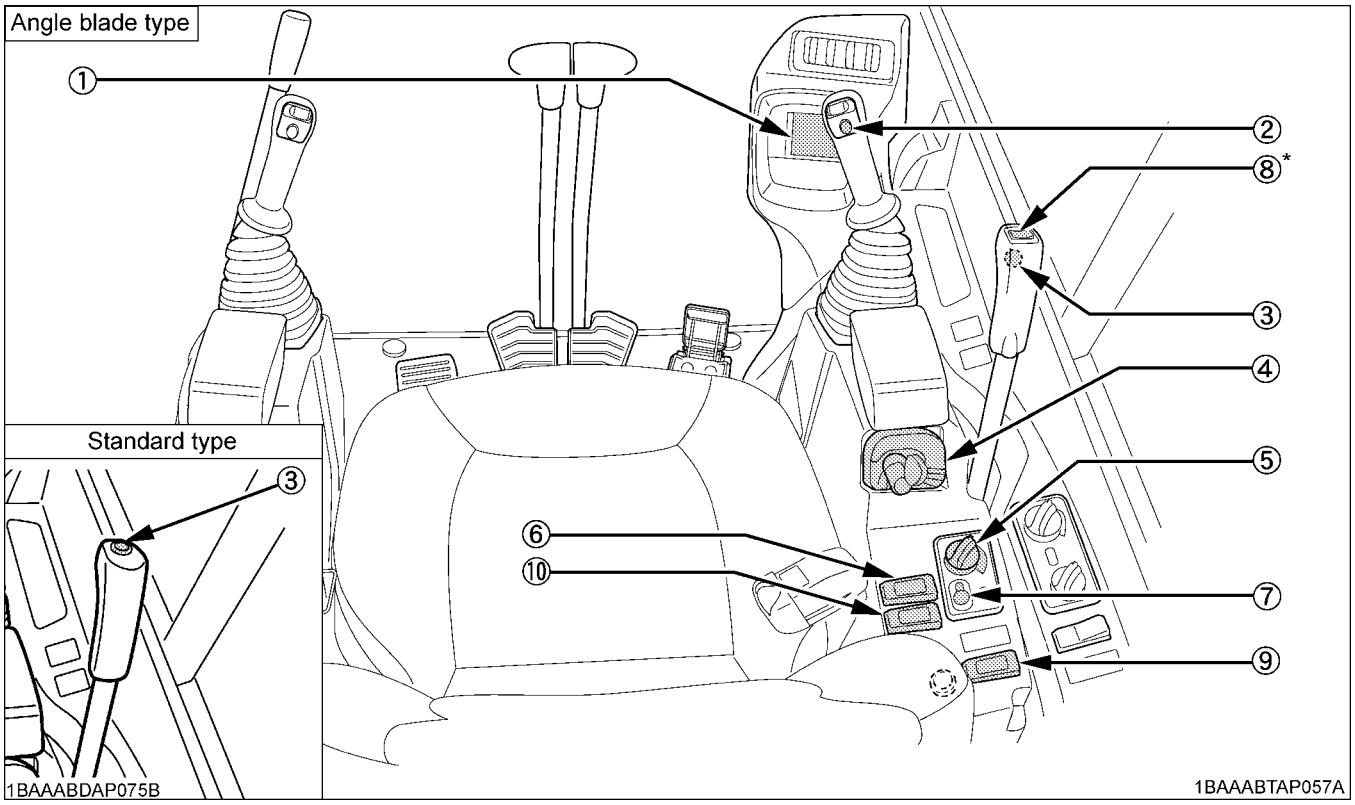

(1) LCD display
(2) Horn switch
(3) Travel speed switch
(4) Starter switch
(5) Throttle potentiometer
(6) Light switch
(7) Auto idle control switch
(8) Angle blade control switch
*Angle blade type only
(9) DPF inhibit switch
(10) Beacon light switch

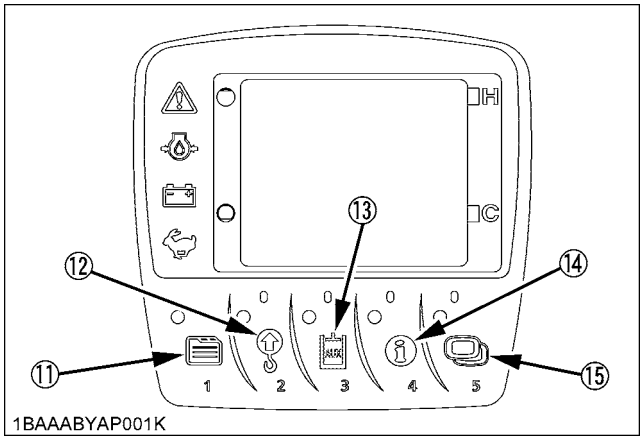

(11) User setting switch (Switch 1)
(12) - (Switch 2)
(13) AUX port enable switch (Switch 3)
(14) Information switch (Switch 4)
(15) Display selector switch (Switch 5)

	Ref. page
Starter switch	7
LCD display	8
Fuel gauge	
Water temperature gauge	
Hour meter	
Engine tachometer	
Glow lamp	
User setting switch	
AUX port enable switch	
Information switch	
Display selector switch	8
Warning lamp	11
Horn switch	18
Light switch	18
Auto idle control switch	19
Throttle potentiometer	19
Travel speed switch	19

https://truckmanualshub.com/

■ Control Pedals and Levers

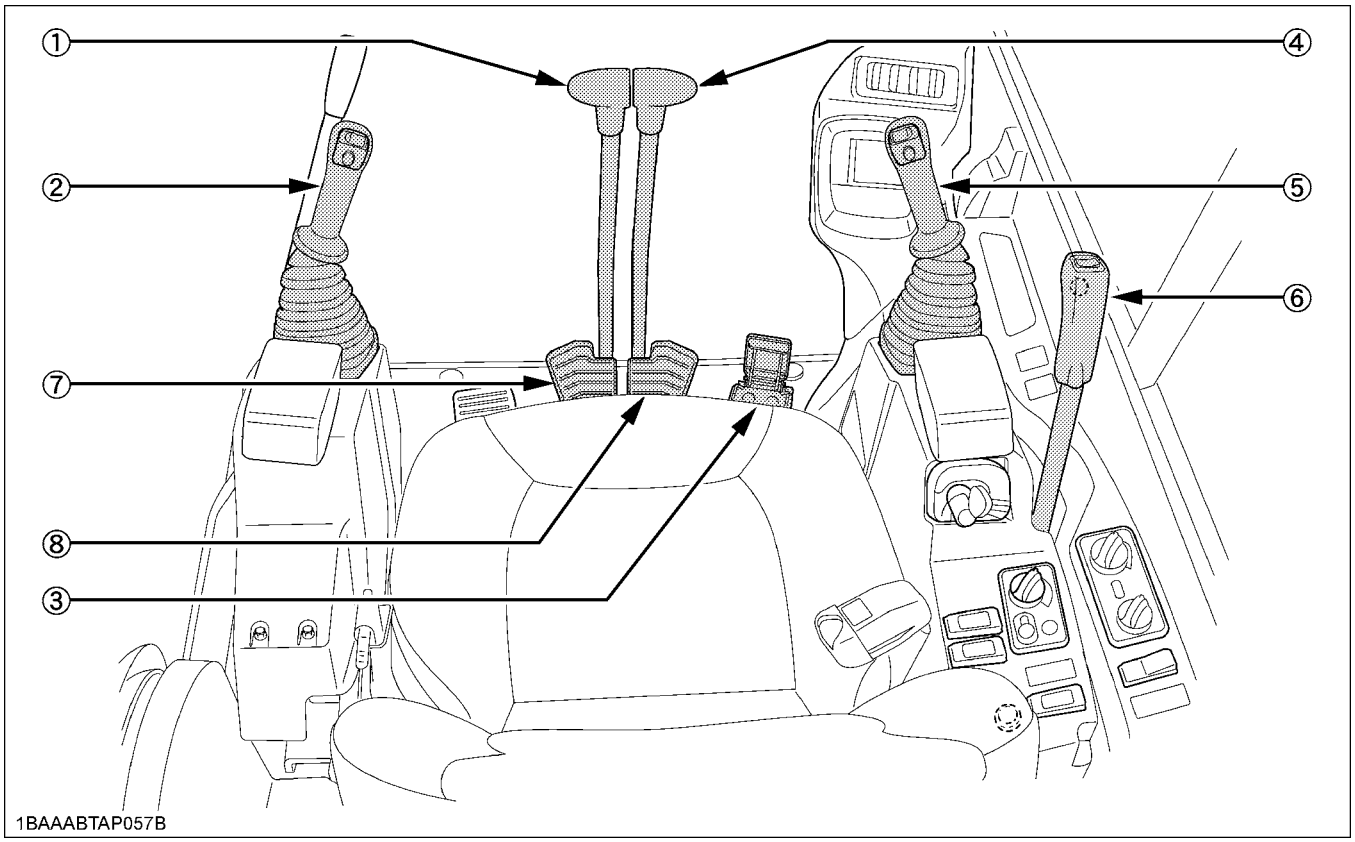

(1) Drive lever (left)
(2) Attachment control lever (left)
(3) Boom swing pedal
(4) Drive lever (right)
(5) Attachment control lever (right)
(6) Dozer control lever
(7) Drive pedal (left)
(8) Drive pedal (right)

	Ref. page
Drive lever (left)	34
Attachment control lever (left)	38, 39
Boom swing pedal	39
Drive lever (right)	34
Attachment control lever (right)	38, 39
Dozer control lever	36

https://truckmanualshub.com/

CHECKS BEFORE START

DAILY CHECKS

In order to avoid damage, it is important to check the condition of the excavator before starting.

WARNING

To avoid personal injury or death:

- **Do maintenance work on the excavator only on level ground with the engine off and the pilot control lock lever in the "LOCKED" position.**

Checks

Go around the excavator and check for visual damage and wear.
Check coolant level. (See "DAILY CHECKS" in "MAINTENANCE" section.)
Check fuel level.
Check engine oil level.
Check hydraulic fluid level.
Check air filter for clogging.
Check all grease points.
Check all control lamps, indicators, tachometer and hour meter.
Confirm all controls move freely and do not stick.
Check the light system.
Check the seat belt and the ROPS / OPG (Top Guard Level I) safety device.
Check the condition of the safety and warning labels.
(See "DANGER, WARNING AND CAUTION LABELS" in "SAFE OPERATION" section.)
Inspect ROPS / OPG (Top Guard Level I) for damage and if damage is found, contact your KUBOTA dealer for repair.

CHECKING THE DEVICES

■Starter Switch

- **[STOP]**
  The key can be inserted at the "STOP" position.
- **[RUN]**
  Turn the key one click from the "STOP" position to the "RUN" position. All the circuitry gets energized to start preheating. The glow indicator is displayed.
  To check for any lamp breakage, however, the lamp lights up and stays on for about 1 second.
- **[START]**
  Move the pilot control lock lever to the "LOCKED" position. Turn the key from the "RUN" position another click to the "START" position. The starter motor is then activated to get the engine started.
  Release your hand from the key, and the key returns itself to the "RUN" position. In other words, once the engine has started, be sure to free the key.

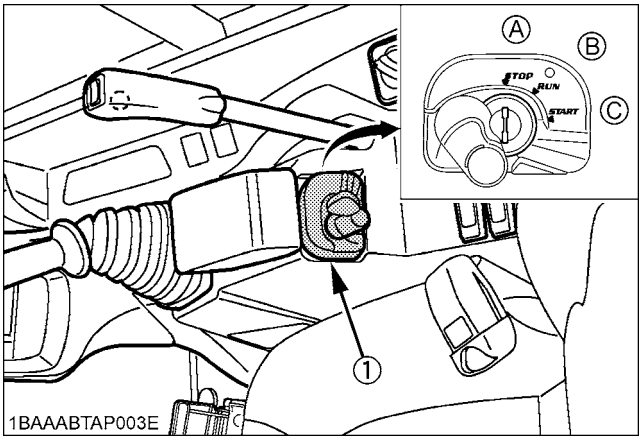

(1) Starter switch
(A) STOP
(B) RUN
(C) START

NOTE :

- If the key is repositioned from "RUN" to "STOP" but not pulled out, the message **"pull out key"** appears onscreen.
- With the key off and pulled out, nothing appears onscreen.

[Status with the key off but not pulled out]

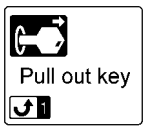

1BAABBLAP259B

https://truckmanualshub.com/

■Display Selector Switch

Press the display selector switch while the engine is running. The LCD meter display will change from one indication mode to the other.
Change the **two-mode** display according to your jobs.

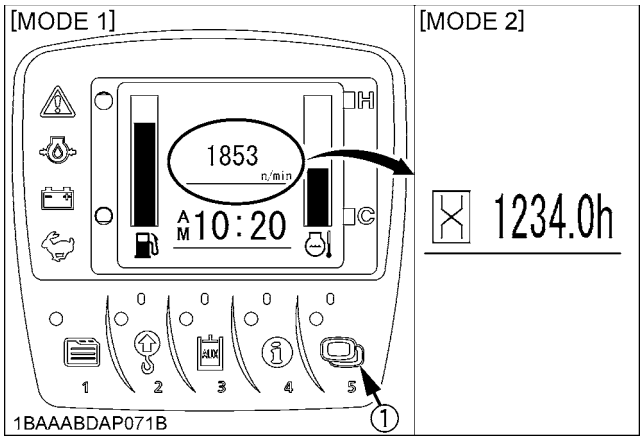

(1) Display selector switch

◆ **AUX port in use**

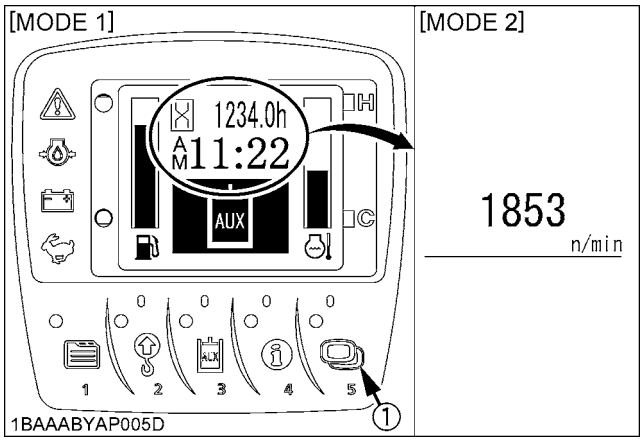

(1) Display selector switch

NOTE :
- Even with the starter key not yet inserted, press the electronic meter's user setting switch or the display selector switch, and the LCD shows the hour meter, fuel gauge, water temperature gauge and clock for 10 seconds.

■LCD Display for Normal Operation

◆ **Fuel gauge**

WARNING

To avoid personal injury or death:
- **Before adding fuel, be sure to stop the engine.**
- **Be sure to keep open flame away from the machine. Otherwise a fire may result.**

With the starter key at the "**RUN**" position, the fuel remaining in the fuel tank is indicated in the block.

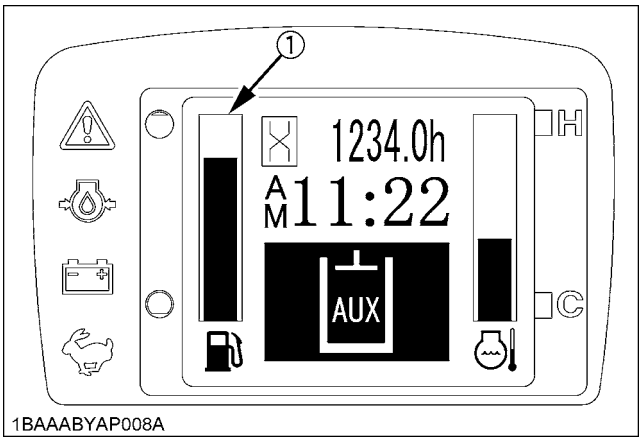

(1) Fuel gauge

If the fuel runs short, open the cap and refuel the tank.

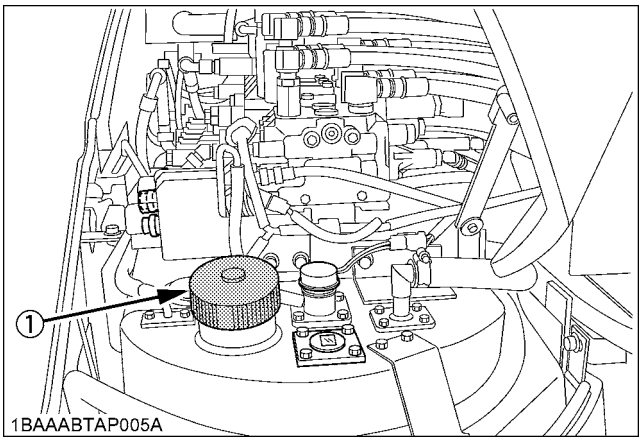

(1) Fuel cap

IMPORTANT :
- If the fuel gauge indicator is near the **"E"** or the **"FUEL"** message appears, add fuel as soon as possible. If the indicator is near **"E"** and the machine is operated on a slope, the engine may run out of fuel.

https://truckmanualshub.com/

◆ **Coolant Temperature Gauge**

WARNING

To avoid personal injury or death:

- **Do not open the radiator cap during or just after operation. Hot coolant may gush out and scald you. Wait for the coolant to cool down before opening the cap.**

With the starter key at the "**RUN**" position, the coolant temperature is indicated.

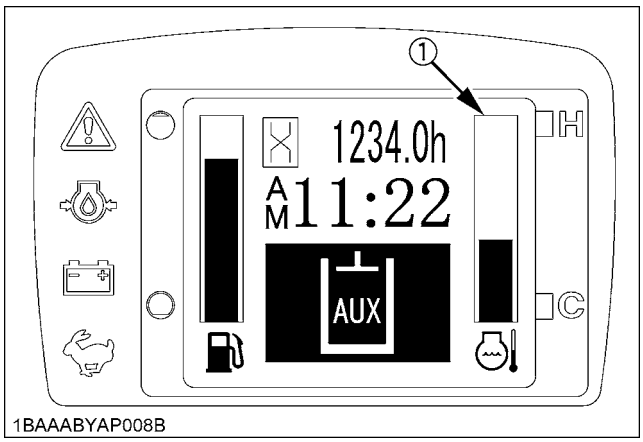

(1) Coolant temperature gauge

If the coolant temperature indicator is near "**H**", take the steps below.

Depending on the coolant temperature, the warning message **"Water temp. is rising"** or **"Overheat Engine to idle for cooling"** appears. In either case too, follow the same procedure below.

1. Discontinue the job.
2. Reduce engine rpm's to idle and keep it at idle for 5 minutes.
3. Stop the engine and check the following points (1)-(4).
   (1) Low coolant level or leak
   (2) Fan belt tension
   (3) Mud or dust deposits on radiator
   (4) Hydraulic oil leak

◆ **Overheat warning**

1. If the coolant temperature becomes too high, the message **"Water temp. is Rising"** appears onscreen for a certain period of time. The LCD then gets back to normal, but the coolant temperature sensor marker "" starts blinking at 1-second intervals.

1BAABBLAP140B

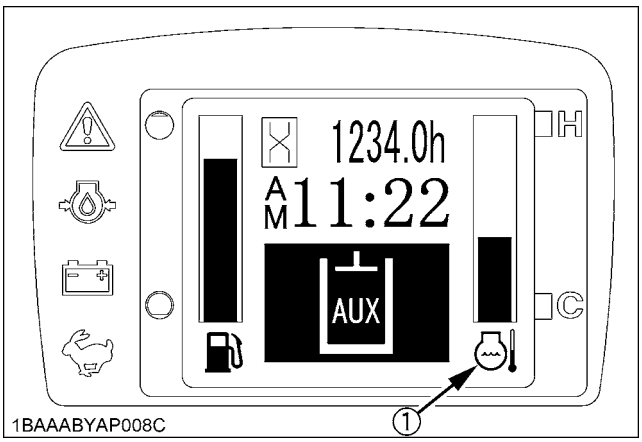

(1) Coolant temperature sensor marker

IMPORTANT :

- If this message is displayed, the EGR valve will begin to close and EGR system will not function. Interrupt the work and lower the engine rpm, which will reduce the coolant temperature.

2. The overheat warning appears onscreen. Also the following message shows up on the LCD, and the engine automatically starts idling. (Acceleration is not operative.)

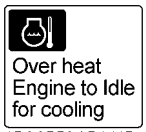

1BAABBLAP141B

If the above message appears, take corrective measures, referring to the **"Precautions in case of Overheat"** section.

NOTE :

- When the coolant temperature has dropped, acceleration can be automatically enabled.

https://truckmanualshub.com/

◆ **Hour-meter**

Indicates the total operating hours of the machine.

How the indicator works
- The meter advances one hour after an hour of operation regardless of the engine rpm.

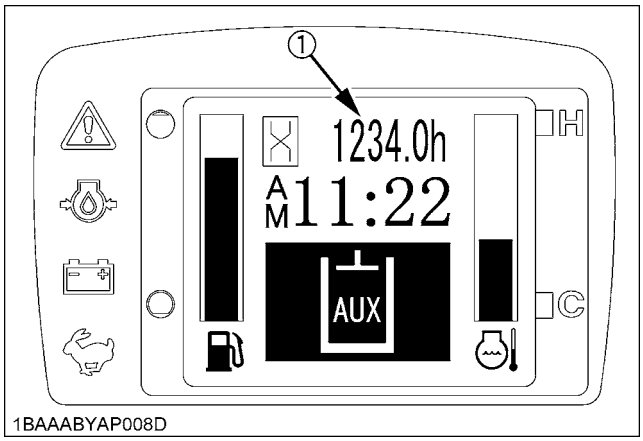

(1) Hour-meter

◆ **Engine tachometer**

Indicates the current rpm of the engine.

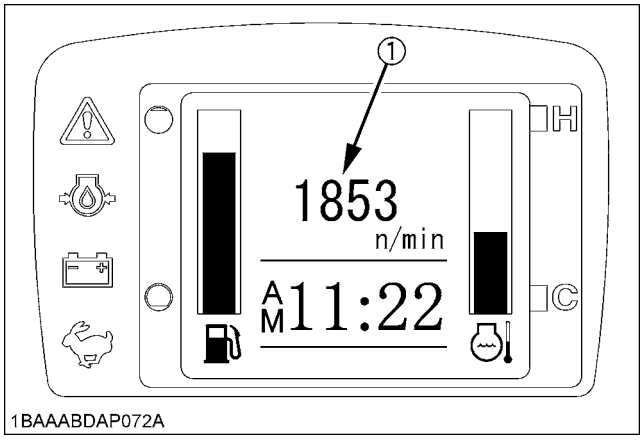

(1) Engine tachometer

◆ **Glow indicator**

The indicator is displayed when the starter key is turned to the **"RUN"** position but the engine requires preheating. Wait until the indicator goes out, and then start the engine.

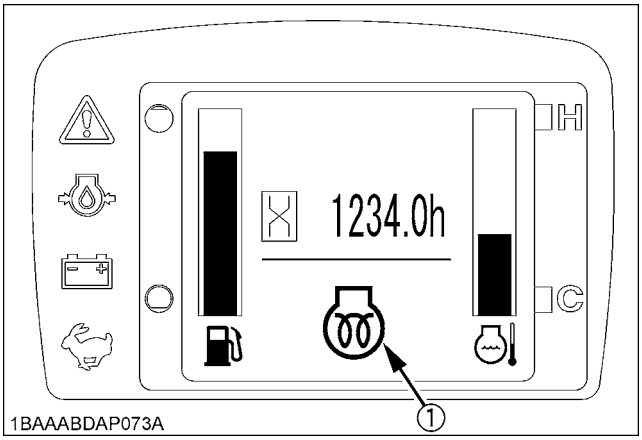

(1) Glow indicator

■Warning Lamp

The warning lamp is used to indicate broken wire, short-circuit, fuel shortage and other problems.
The warning lamp starts flashing in red if any problem occurs. If the system senses a in warning signal, the warning lamp starts flashing in yellow.

IMPORTANT :
- If the warning illuminates, do not just look at the meter; carry out the appropriate inspection and correction accordingly.
  (See **"REGULAR CHECKS AND MAINTENANCE WORK"** section)

NOTE :
- If any warnings and problems are displayed, an alarm buzzer will beep. (See **"LIST OF SCREENS"** section for detail.)
- See your KUBOTA dealer from details concerning care and maintenance.

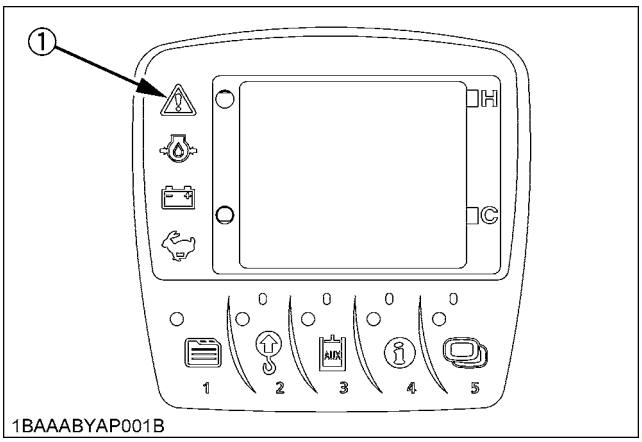

(1) Warning lamp (red, yellow)

https://truckmanualshub.com/

■LCD Display for Warning

◆ Remaining fuel warning

When the fuel level is very low, the ⚠ lamp (yellow) starts flashing and the following message appears in the display.

1BAABBLAP215B

NOTE :
- After a short period of time, the display comes back to normal.
- After a short period of time, the message shows up again.
- Even while in the normal display mode, the warning lamp keeps on blinking.
- To see what warning is being given out, press the display selector switch. The current warning can then be identified.

◆ Battery charge warning

If the starter key is turned to the "RUN" position without starting the engine, and the charging lamp stays off, the charging system has failed. If such occurs, immediately contact your local dealer for repair.

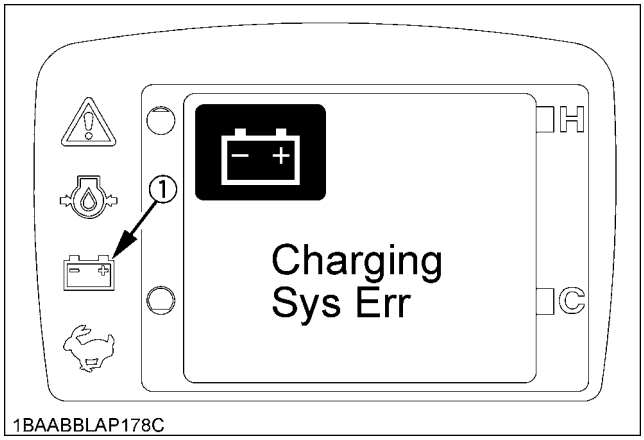

1BAABBLAP178C

(1) Charging lamp

◆ Engine oil pressure low warning

When the engine oil pressure drops too low, the ⚠ lamp (red) starts flashing and the following message appears in the display.
Immediately stop the engine and check the engine oil level.

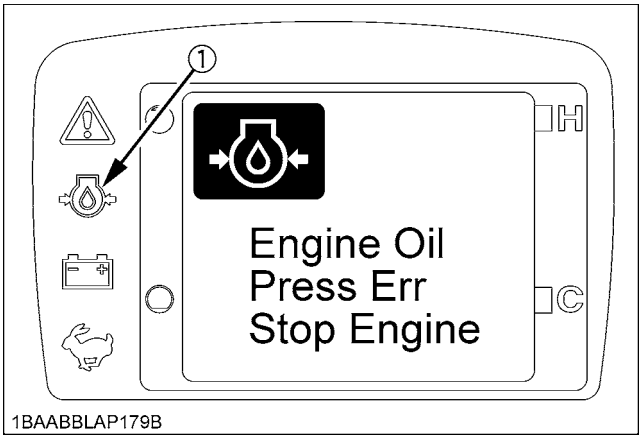

1BAABBLAP179B

(1) Oil lamp

NOTE :
- If the starter key is turned to the **"RUN"** position without running the engine and the oil lamp stays off, then the hydraulic system may have failed.
  If such occurs, immediately contact your local dealer for repair.

◆ Various error warnings

If any components are detected to be in trouble, the following message appears onscreen.
(See **"LIST OF SCREENS"** section)

1BAABBLAP139B

https://truckmanualshub.com/

Information

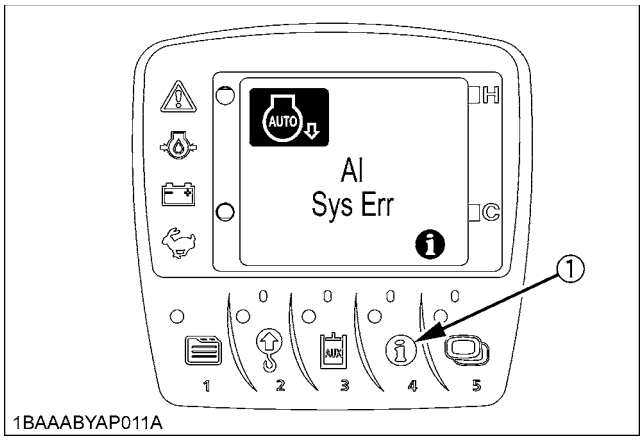

(1) Information switch

A "ℹ mark" may appear together with a warning message.
If such occurs, the details can be checked by pressing the information switch.
When contacting your local dealer for repair, notify them of the information provided.

For Example;
Press the information switch, and a detail such as shown below appears.

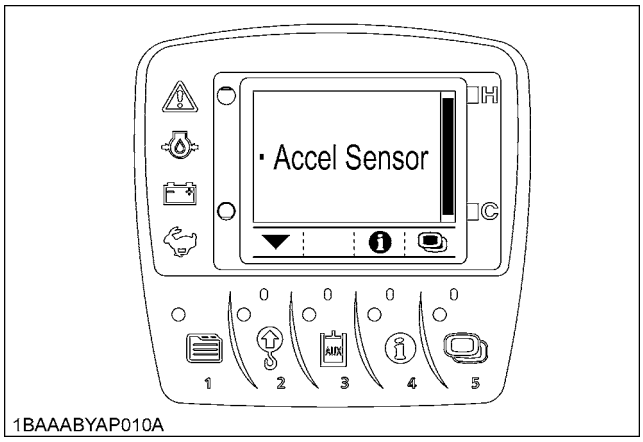

NOTE :
- Press the information switch again, and the display goes back to the previous screen.

User settings

NOTE :
- If you have any question, consult your KUBOTA Dealer.

■Setting the Clock

1. Turn the starter key to the **"RUN"** position.

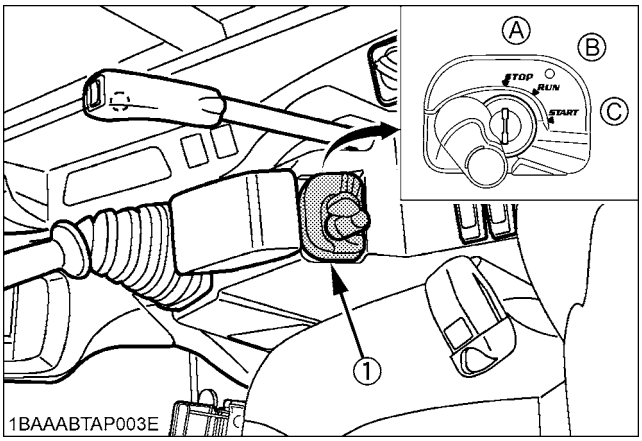

(1) Starter switch

(A) STOP
(B) RUN
(C) START

2. Press the switch 1 to make the log record/periodic check/clock set screen appear.

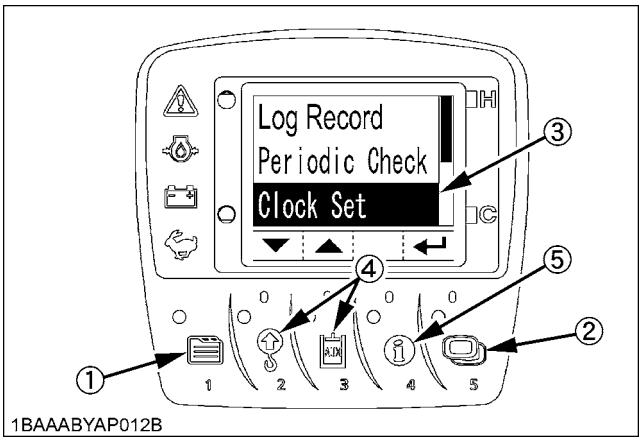

(1) Switch 1
(2) Switch 5
(3) Cursor
(4) Switch 2 and 3
(5) Switch 4

https://truckmanualshub.com/

3. Press the switch 2 twice to move the cursor into position. Then press the save switch 5 to make the following screen appear. By pressing the switch 4, the year, month, day, hour and minute will be selected in this order. Select an item to readjust.

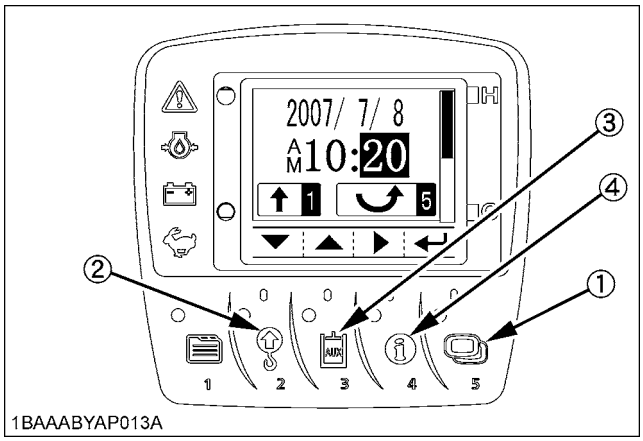

(1) Switch 5
(2) Switch 2
(3) Switch 3
(4) Switch 4

Press the ▼ switch (Switch 2) and the numeric setting will be smaller.
Press the ▲ switch (Switch 3) and the numeric setting will be larger.

Hold down the ▼ or ▲ switch, and the numeric setting will change quickly.
Press the ▶ switch (Switch 4), and the year, month, day, hour and minute will be selected in this order.

4. Save the new setting with the ↵ switch (Switch 5). Press this switch 5 again to set the clock.

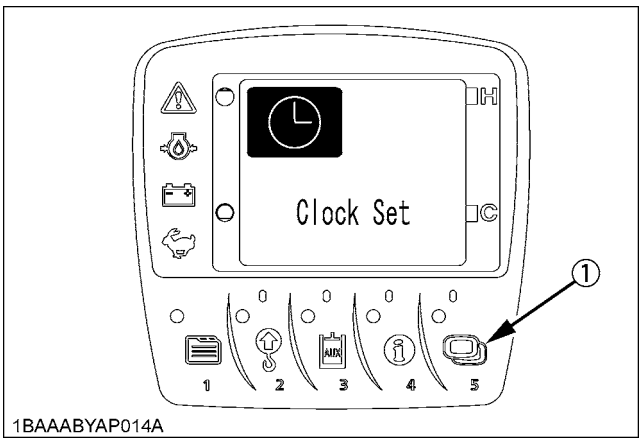

(1) Switch 5

[Status after setting the clock]

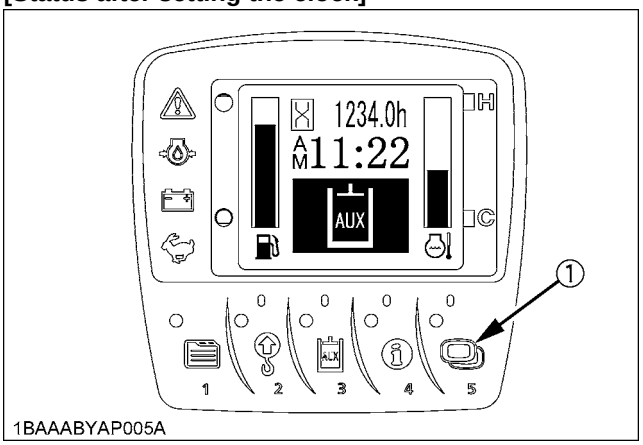

(1) Switch 5

IMPORTANT :
- **Be careful not to accidentally press the switch 5 on the clock setting screen. Otherwise the seconds will be set to "00" and the clock will show the wrong time.**

NOTE :
- When the user setting switch (Switch 1) is pressed on the clock setting screen, the clock is not readjusted and returns to the previous menu screen.

IMPORTANT :
- If the clock is interrupted, for example when the battery is disconnected, the following message appears onscreen. Press the switch 5 to set the clock again.

https://truckmanualshub.com/

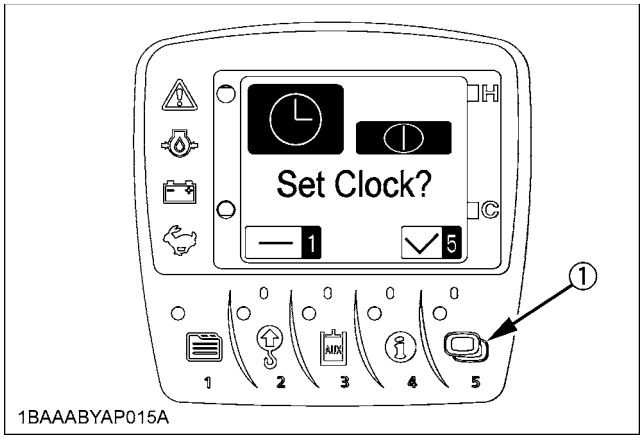

(1) Switch 5

■Reordering the year/month/day and Changing the AM/PM System to the 24-hour One

1. On the user setting screen, select **"Various Settings"**.

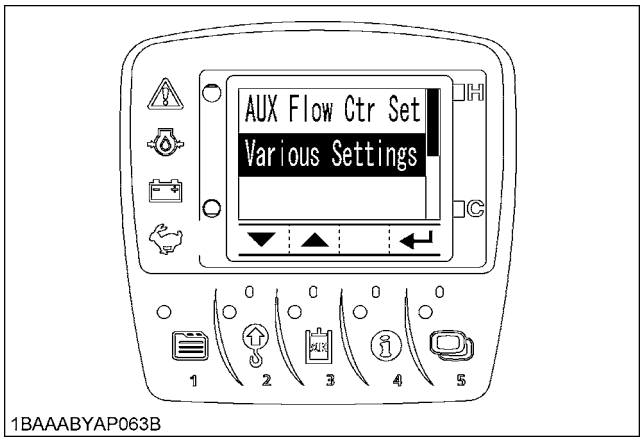

2. Select **"Calendar/Clock Set"** menu screen.

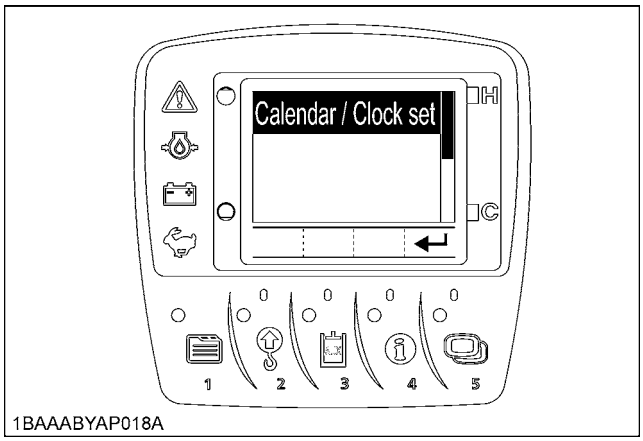

3. Press the switch 5 and the following detailed screen shows up.

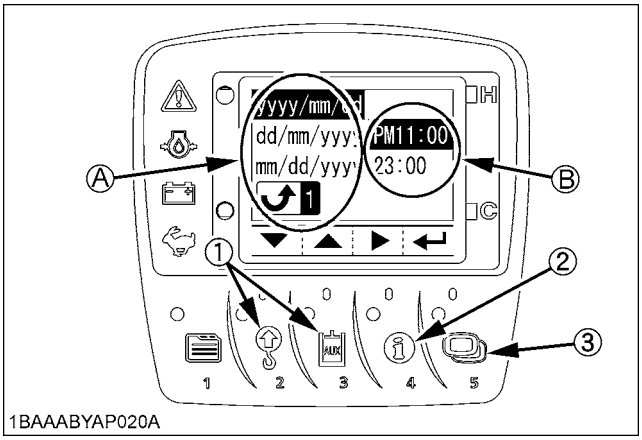

(1) Switch 2 and 3
(2) Switch 4
(3) Switch 5
(A) Year/month/day display
(B) Clock display

(1) Using the switch 2 and 3, move up and down the items. The year/month/day on Side (A) will be reordered.
(2) Using the switch 4, move the cursor to Side (B). Select the "AM/PM" system or the "24-hour" system.
(3) Press the switch 5, and the new settings will be made.
If the switch 1 is pressed, the previous settings will remain.

■Log Record

The log record helps you check the last 3-month operating record of the machine. Take the following steps.

1. Set the starter key to the **"RUN"** position.

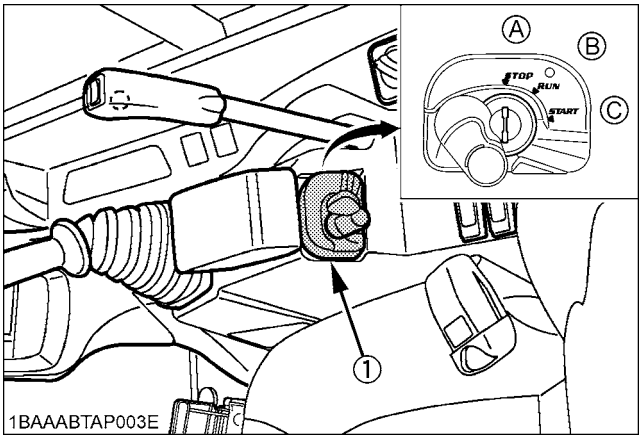

(1) Starter switch
(A) "STOP"
(B) "RUN"
(C) "START"

2. Press the switch 1 to make the menu appear onscreen.

https://truckmanualshub.com/

3. Press the switch 2 and 3 to select the log record. Fix this choice with the ⟵ switch (Switch 5).

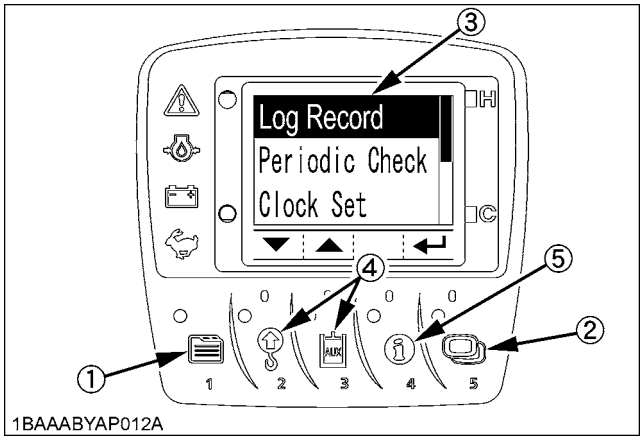

(1) Switch 1
(2) Switch 5
(3) Cursor
(4) Switch 2 and 3
(5) Switch 4

4. Press the switch 5 to make the calendar appear onscreen.
   Press the switch 2, 3 and 4, and the log records (machine's operating days and operating hours) for the last month and the month before last (90 days ago) can be reviewed.
   The highlighted days indicate when the machine was operated.

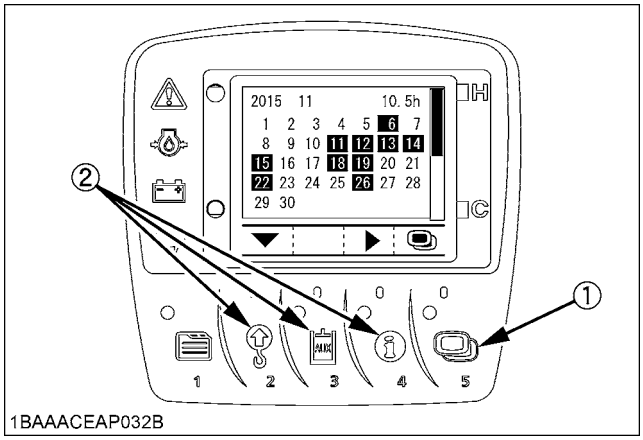

(1) Switch 5
(2) Switch 2, 3 and 4

IMPORTANT :
- Some days may appear marked with [-] when the log record is unknown because of a new setting of the clock, a disconnection of the battery or other factors.

■Periodic Check

The following message appears on the LCD 10 hours before a periodic check.

1BAABBLAP265B

Press the switch 4 to see the check results.

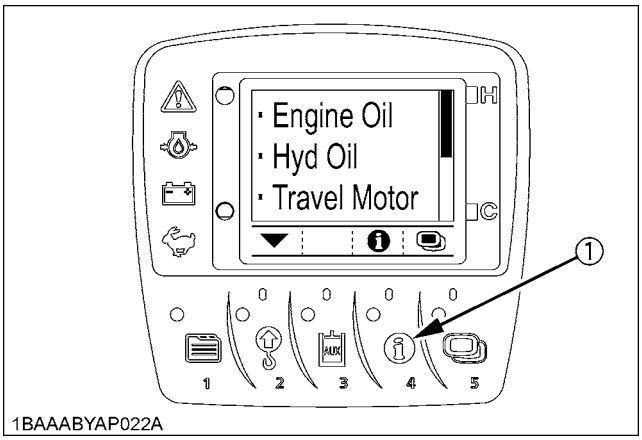

(1) Switch 4

Do the following servicing listed below.

IMPORTANT :
- When the servicing has been completed, turn the key switch ON and OFF 10 times or more and the check screen automatically disappears.
- When the periodic check interval has passed, the message **"Periodic Check Passed"** shows up. Immediately perform the specified servicing.
- The periodic check screen can also be preset to be made to disappear manually only. To do this, it is necessary to select **"Periodic Check"** on the user setting menu.
  For make this setting, contact your local dealer.

https://truckmanualshub.com/

■If All the Check Points are not Displayed at a Glance on a Single Screen

1. Press the switch 4.
2. Each time the switch 2 or 3 is pressed, the check points scrolled up or down.

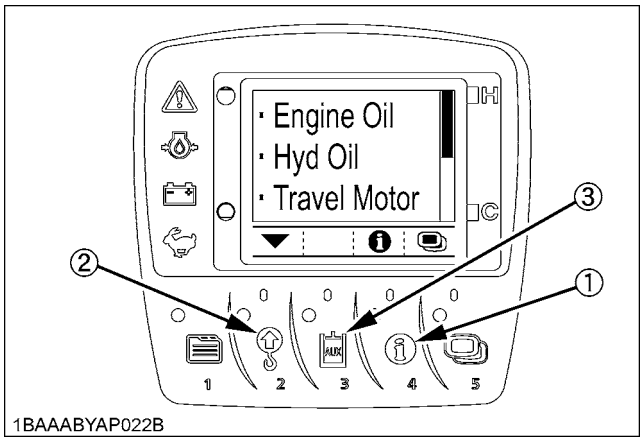

(1) Switch 4
(2) Switch 2
(3) Switch 3

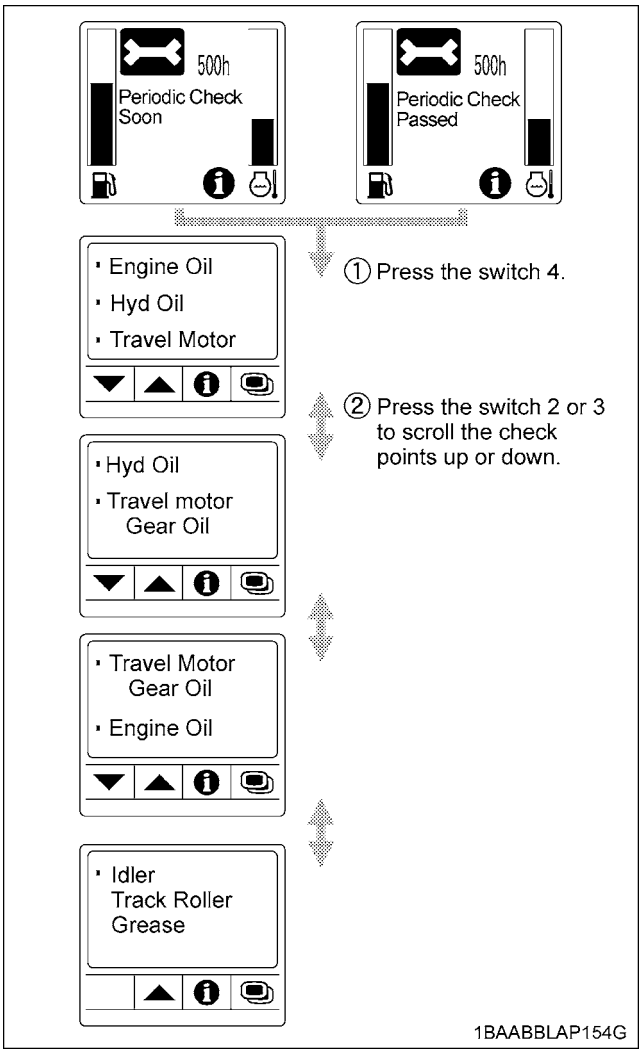

https://truckmanualshub.com/

◆ **Service hour meter**

When the hour meter reaches the hours circled in the maintenance list below, a message appears. The message shows up as follows.

No.	Check points		Measures	Hour meter indicator									Intervals
				50	100	250	500	600	750	1000	2000	Non sched-uled or 6000	
1	Engine oil		change				○			○	○		every 500 hrs
2	Hydraulic oil									○	○		every 1000 hrs
3	Air filter element	Outer element	replace							○	○		every 1000 hrs
		Inner element								○	○		every 1000 hrs
4	Fuel filter						○			○	○		every 500 hrs
5	Engine oil filter						○			○	○		every 500 hrs
6	Drive unit oil		change	◉			○			○	○		every 500 hrs
7	Hydraulic return filter cartridge		replace							○	○		every 1000 hrs
8	Hydraulic suction filter element									○	○		every 1000 hrs
9	Pilot filter		replace							○	○		every 1000 hrs
10	Idler, Track roller, grease		-								○		every 2000 hrs
11	DPF		clean									○	*1

◉ First operation

*1 The DPF should be cleaned in every less than 6000 hours.

https://truckmanualshub.com/

■When the Check-up is Completed

When the check-up is completed, perform the following procedure to make the Periodic Check disappear from the screen.

1. The message below appears onscreen to prompt the completion of the check-up.
2. To take a look at the check points, press the information switch. The check points appear onscreen.
3. When the check-up has been completed, press the switch 5. If not, press the switch 1 to go back to the previous screen.

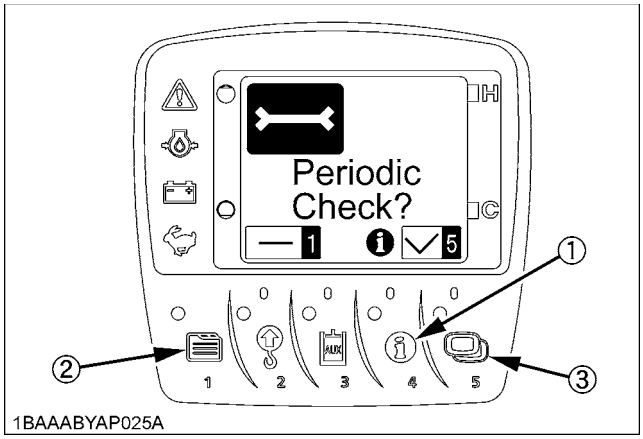

(1) Switch 4
(2) Switch 1
(3) Switch 5

■Horn Switch

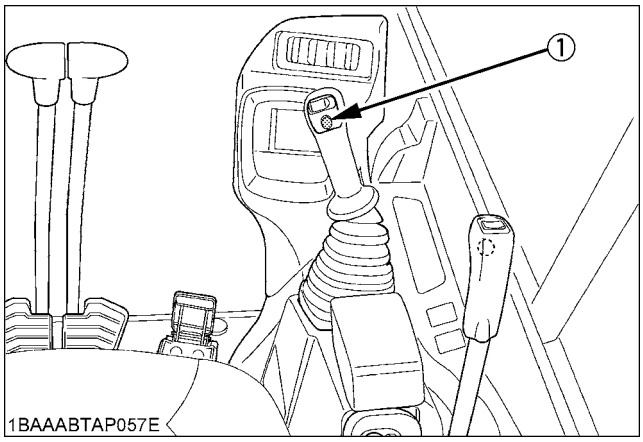

(1) Horn switch

■Light Switch

When the starter switch is in position "RUN", the working light(s) and CAB light(s) will be switched on by pressing the switch.

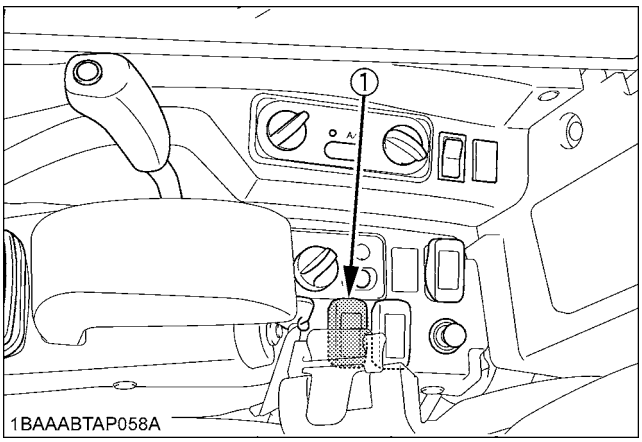

(1) Light switch

◆ **Night operation**

WARNING

To avoid personal injury or death:

- **When the working light and CAB light alone do not provide sufficient visibility, prepare additional stationary artificial lighting and observe safety rules for night work.**

■AUX Port Flow Rate Limit Switch

It is possible to freely readjust the actuator's maximum flow rate in the AUX operating mode.
(See **"AUX PORT OPERATION"** section for detail.)

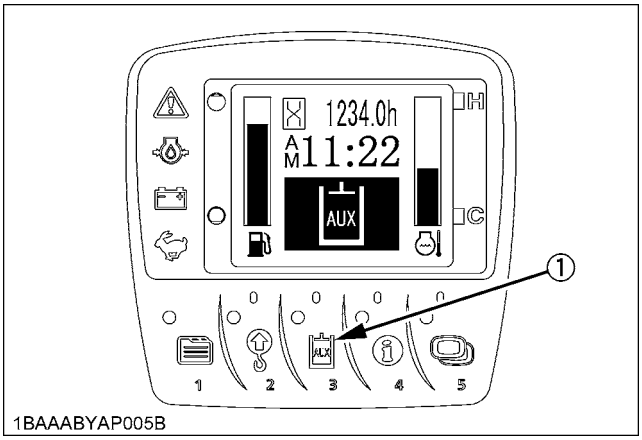

(1) AUX port flow rate limit switch

https://truckmanualshub.com/

■Auto Idle Control Switch

The switch is used to enable and disable the auto idle control.

- Enable: Press the auto idle control switch. When the auto idle control is on, the auto idle lamp stays on.
- Disable: Press the auto idle control switch once again. Now the auto idle control is deactivated
  (The auto idle lamp goes out.)

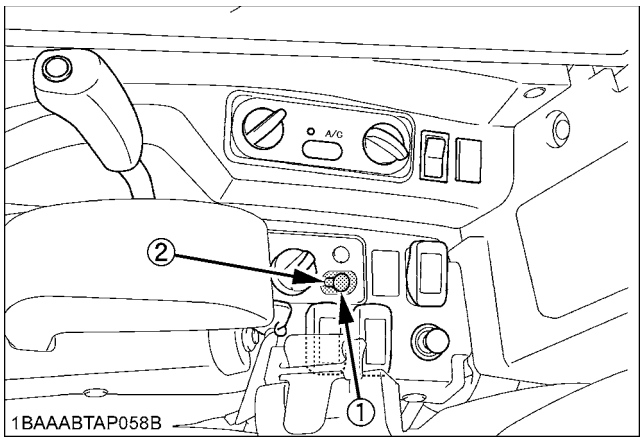

(1) Auto idle control switch
(2) Auto idle lamp

■Throttle Potentiometer

1. Sit down on the operator's seat and turn the throttle potentiometer clockwise (toward the high speed), and the engine revs up.
2. To stop the engine, turn the throttle potentiometer fully toward the low speed and keep the engine at the idling speed. Then set the starter key to the **"STOP"** position.

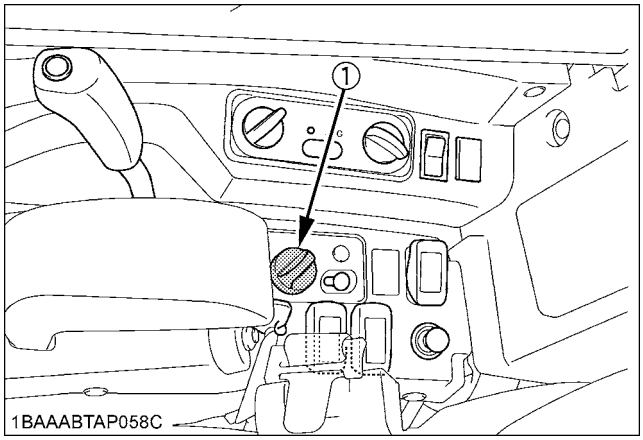

(1) Throttle potentiometer

■Travel Speed Switch

Travel speed will increase when this switch is pushed down.

Switching the dual travel speed:

1. Press the travel speed switch. The buzzer beeps twice and the travel speed changes from low to high. The symbol lights up.
2. Press the travel speed switch again, and the buzzer beeps once and the travel speed changes from high speed to low. The symbol goes out.

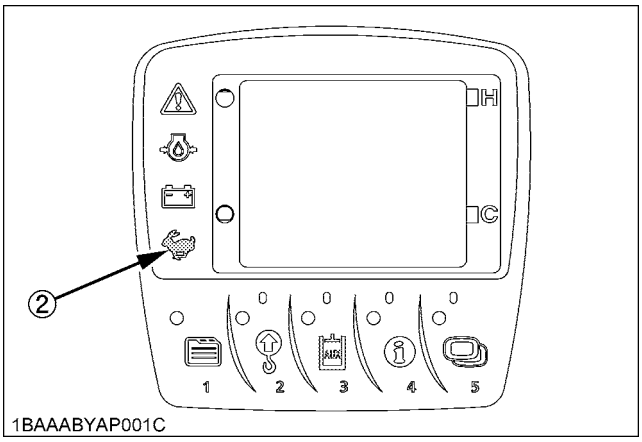

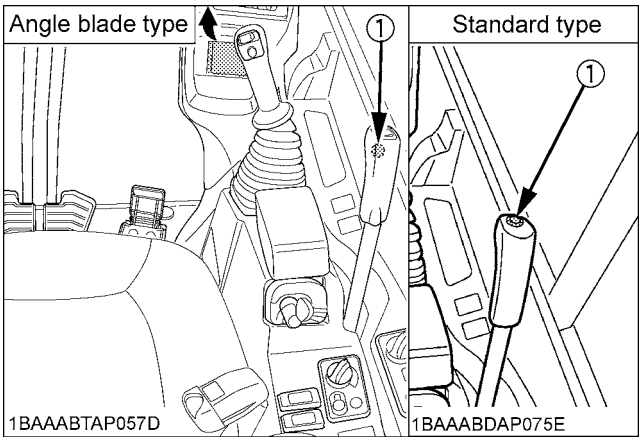

(1) Travel speed switch
(2) Speed indicator light

NOTE :

- When activating the travel speed switch, it must be pushed down completely.
- Each time the travel speed switch is pressed, the travel speed is switched between low and high.

https://truckmanualshub.com/

IMPORTANT :
- The travel speed automatically changes into first speed (low speed) when the drive resistance increases while traveling second speed (high speed). Thereafter, when the resistance decreases, it returns to second speed.
- If the tracks are clogged with sand or gravel while working on soft ground, lift up the track with the help of the boom, arm and bucket and dozer blade, and let the track rotate to remove the sand and gravel.

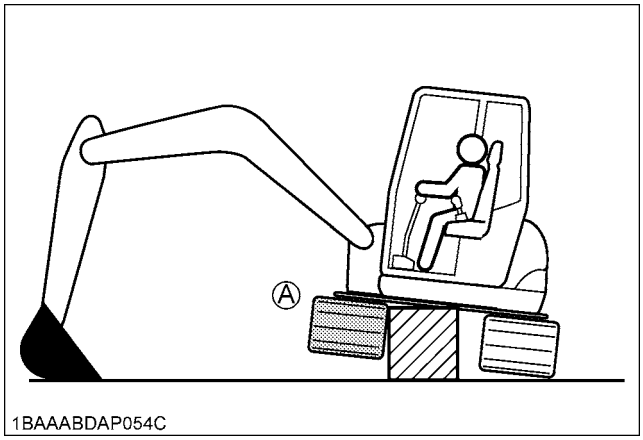

(A) "Rotate to remove sand and gravel"

WARNING
- **Do not push the dozer control lever into the float position as this will cause the machine to suddenly drop.**

DANGER
To avoid serious injury or death:
- **Do not work under the machine in this condition.**

■Inhibit Diesel Particulate Filter (DPF) Regeneration Switch

Inhibit Diesel Particulate Filter (DPF) regeneration switch (hereinafter called inhibit switch) disables the Auto DPF regeneration cycle. Activate this switch to turn "off" Auto DPF Regeneration when working around people, animals, plants, and flammable materials. Certain work conditions may require the Auto DPF regeneration cycle to be disabled. Depress the switch once to turn off Automatic mode. Depress the switch once again to return from disable to Automatic mode.

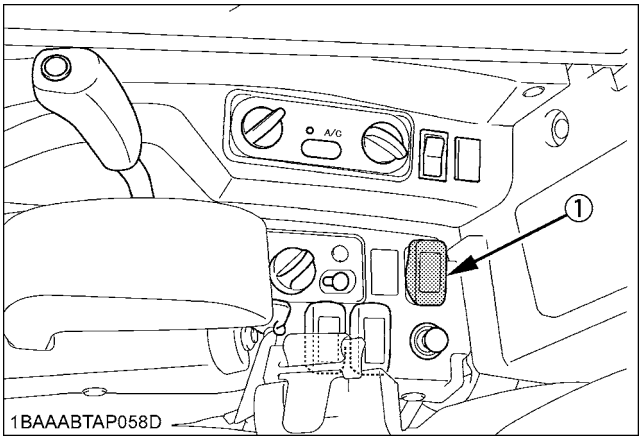

(1) Inhibit Switch

■Beacon Light Switch

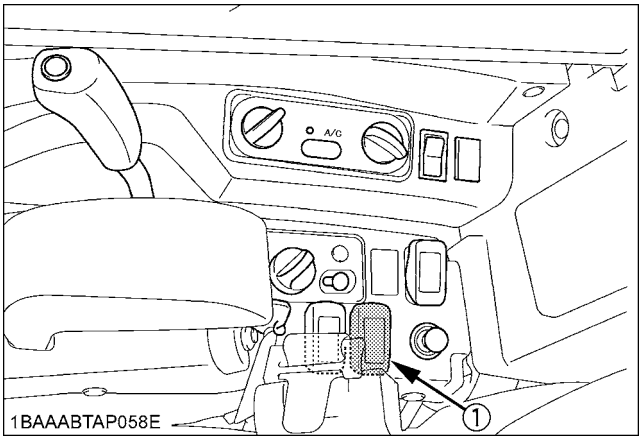

(1) Beacon light switch

It is equipped only with the switch (including the coupler for connecting in a rear left speaker).
Since it isn't equipped with the beacon main part, please install when required.

https://truckmanualshub.com/

CAB TYPE MACHINES

■Wiper/Washer Switch

To engage the wiper, turn on the switch for the wiper when the starter key is in the "RUN" position. A further push on the switch will activate the washer system. Even when the wiper switch is in the "OFF" position, the washer switch functions if it is pressed.

- Do not activate the washer switch if the tank for the cleaning fluid is empty; the pump can be damaged.
- Do not activate the wiper switch if the window is dry. In this case, make sure that cleaning fluid is applied to the pane before activating the wiper.
- In frosty conditions, make sure that the wiper blade is not frozen to the glass before switching-on. The motor can be damaged if the wiper system is used under such conditions.

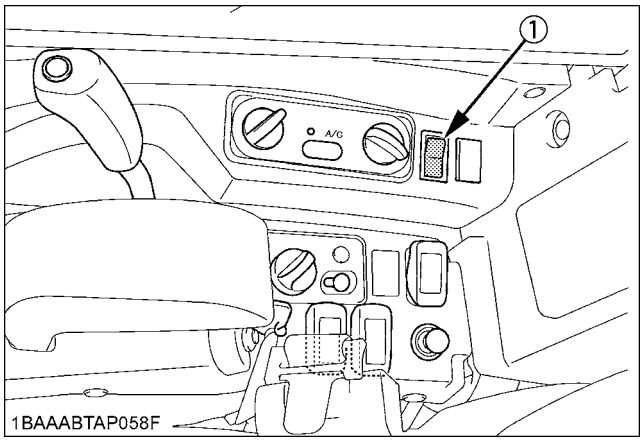

(1) Wiper switch

■Interior Lamp

To turn on the interior lamp, set the interior lamp switch to the "ON" positions.

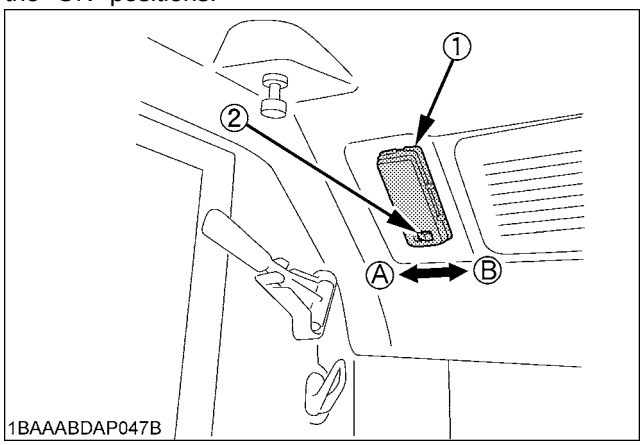

(1) Interior lamp
(2) Interior lamp switch
(A) "ON"
(B) "OFF"

■Heater Switch

Turn the starter switch to the "RUN" position and turn the heater switch clockwise, the heater fan will be activated and the cabin will start to warm up. The heater has three position.

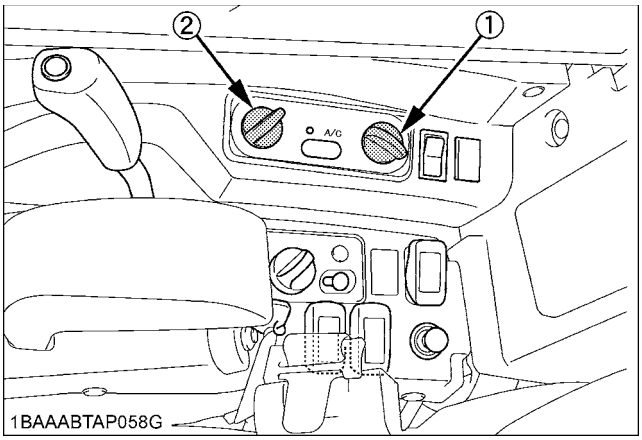

(1) Heater switch
(2) Temperature control dial

IMPORTANT :

- During summer, turn the heater valve clockwise to close the valve.

https://truckmanualshub.com/

■Opening/Closing of CAB Door

1. Unlock the CAB door and pull the knob. Open the CAB door fully until fixed into place.
2. To close the CAB door, push the release lever down and close the door.

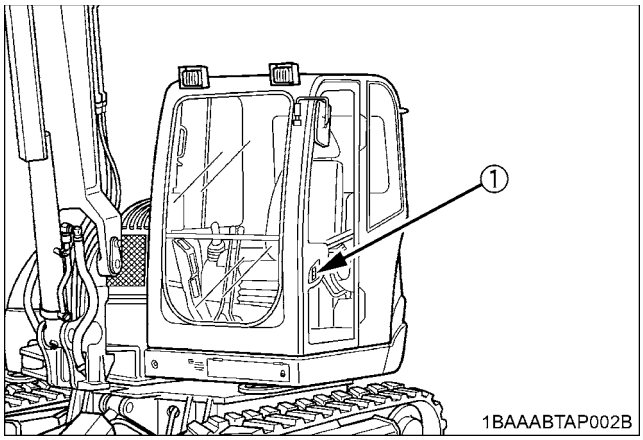

(1) Door knob (outside)

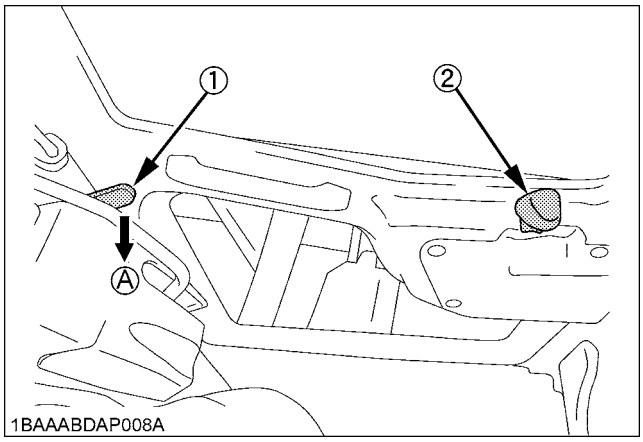

(1) Release lever
(2) Door knob (inside)
(A) Push down

3. When leaving the excavator, always lock the door.

■Opening/Closing of Front CAB Window

WARNING

To avoid personal injury or death:

- **Keep hands and feet away from the area between front window and CAB frame. Otherwise the operator risks serious pinching or crushing injuries.**
- **Other persons should stay away when opening the window.**

To open and close the front window, take the steps below.

1. Push the lock levers beside grip.

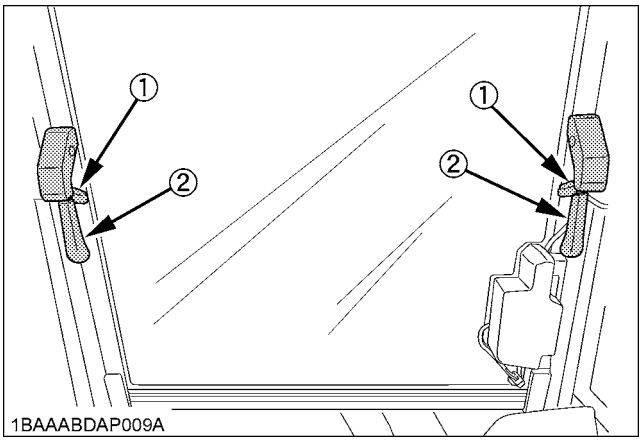

(1) Lock lever
(2) Grip

2. Hold the grips tightly with both hands. Pull the grip slightly upward and toward yourself to let the windshield slide inward.
3. Pull the windshield all the way to the lock at the back of CAB.
4. To close the window, take the reverse steps 3, 2 and 1.

https://truckmanualshub.com/

■Opening/Closing of Side CAB Window

1. Pull the grip to release the lock and pull side window open to the rear or to the front.
2. To close the side window, slide it forward or backward until the lock snaps in at the window frame.

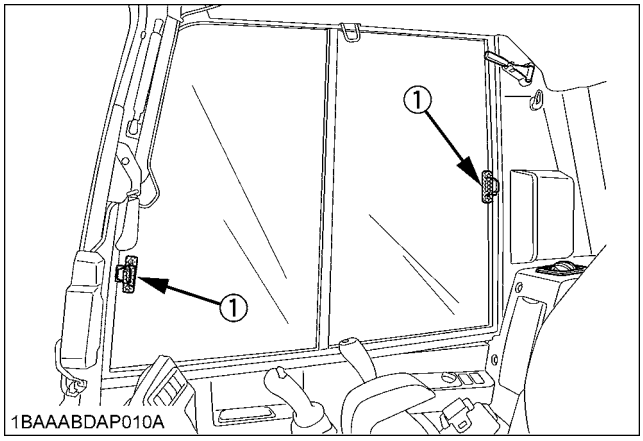

(1) Grip

■Emergency Hammer

WARNING

To avoid personal injury or death:

- **When breaking the window pane, close your eyes and cover them with an arm.**

The emergency hammer is for breaking window pane in order to quick escape from the cab, if the window is not open.

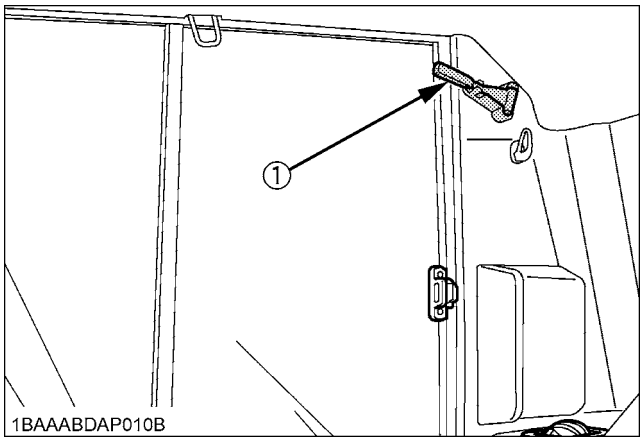

(1) Emergency hammer

AIR CONDITIONER

■Air Flow

Air in the CAB and fresh air introduced into the CAB flow as shown in the figure. Adjust the five air outlet ports to obtain the desired condition.

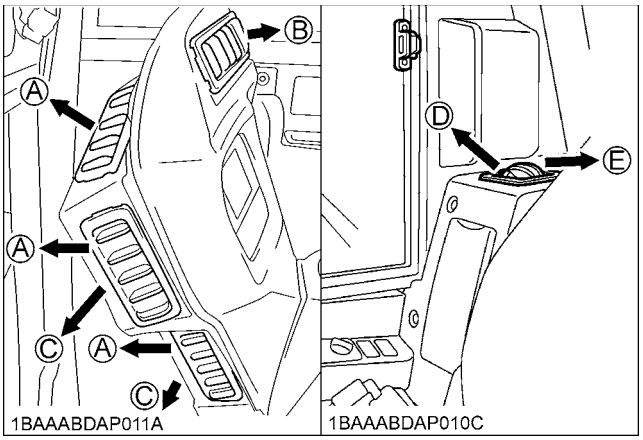

(A) "FRONT WINDOW"
(B) "CHEST AREA"
(C) "FOOT AREA"
(D) "SIDE WINDOW"
(E) "BACKWARD"

Position the inlet selector lever to the desired position.

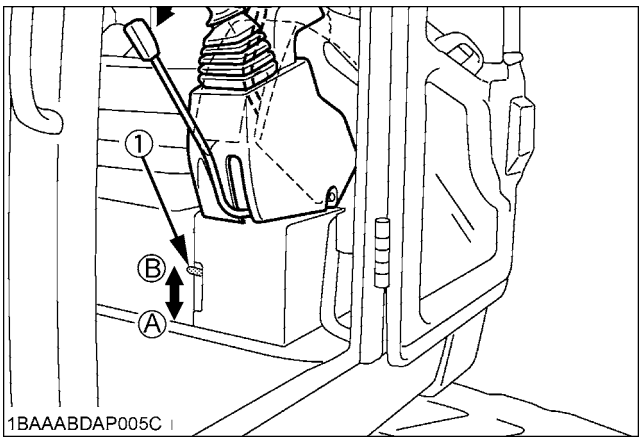

(1) Inlet selector lever (A) "FRESH AIR INLET" position
(B) "INNER AIR RECIRCULATION" position

https://truckmanualshub.com/

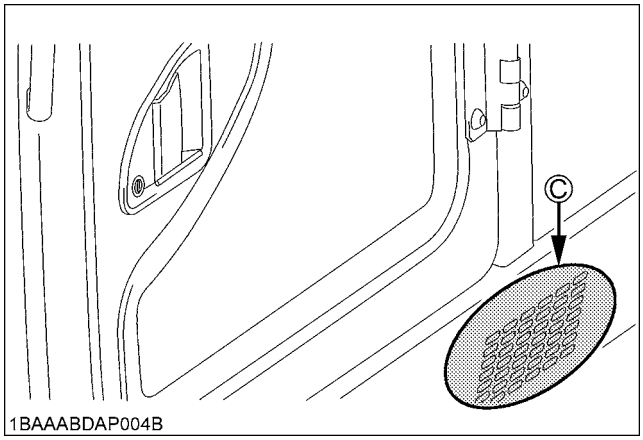

(C) "FRESH AIR INLET"

IMPORTANT :
- Do not allow water to enter the fresh air port while washing the excavator.

■Air Control Vent

◆ **Front air outlet**

The front air outlets can be independently adjusted as required. To defrost the windshield, rotate the outlets toward the windshield.

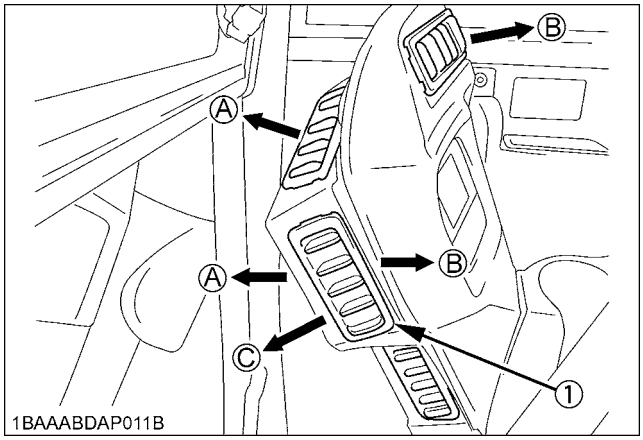

(1) Front air outlet

(A) "FRONT WINDOW"
(B) "CLOSED"
(C) "FOOT AREA"

■Control Panel

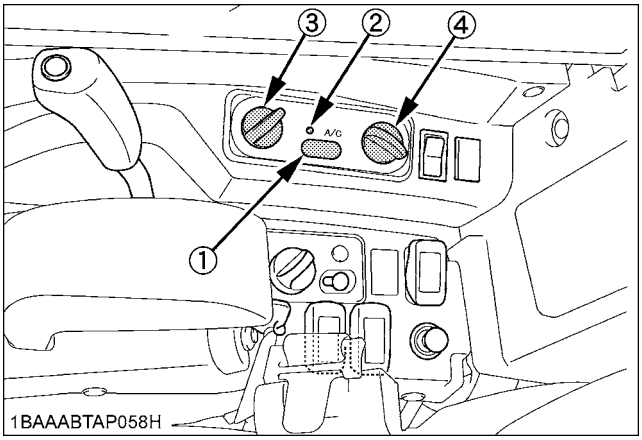

(1) Air conditioner switch
(2) Indicator light
(3) Temperature control dial
(4) Blower switch

◆ **Air Conditioner Switch and Indicator Light**

Push this switch to activate the air conditioner. An indicator light will light up when the switch is set to "ON". Push switch again to turn air conditioner off, the indicator light will go off.

◆ **Temperature Control Dial**

Set this dial at the desired position to obtain the desired air temperature. Turn the dial to the right to obtain cooler air. Turn it to the left to obtain warmer air.

◆ **Blower Switch**

Air volume can be changed in three steps. At the "3" position, the largest air volume is obtained.

■Operation

◆ **Heating**

1. Adjust the blower (1/2/3) switch and the temperature control dial to achieve the desired temperature level.

◆ **Dehumidifying-heating**

1. Press and turn on the air-conditioner switch.
2. Turn on the blower (1/2/3) switch.
3. Adjust the temperature control dial to the "COOL" or an intermediate position to achieve the desired temperature level.

NOTE :
- Be sure to close the door while the air conditioner is ON otherwise, you may overload the compressor.

◆ **Cooling**

1. Press and turn on the air-conditioner switch.
2. Turn on the blower (1/2/3) switch.
3. Adjust the temperature control dial to the "COOL" or an intermediate position to achieve the desired temperature level.

https://truckmanualshub.com/

◆ **Defrosting or demisting**

To defrost or demist the windshield, take the following steps.

1. Open the front air outlet and direct it to the windshield.
2. Set the blower switch and the temperature control dial to the "3" and "WARM" (leftmost) positions, respectively.

HANDLING THE SAFETY DEVICES

■Pilot Control Lock Lever

WARNING

To avoid personal injury or death:

- **When the excavator is not used or left unattended, be sure to place the pilot control lock lever in position "LOCKED".**

The pilot control lock lever is located on the left side.

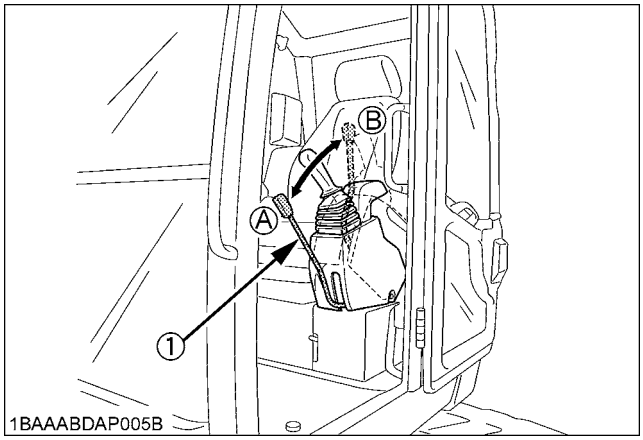

(1) Pilot control lock lever

(A) "UNLOCK"
(B) "LOCKED"

https://truckmanualshub.com/

OPERATION OF THE ENGINE

WARNING

To avoid personal injury or death:

- **Read "SAFE OPERATION" at the beginning of this operator's manual.**
- **Obey the danger, warning and caution labels on the excavator.**
- **To avoid the danger of exhaust fume (carbon monoxide) poisoning, do not operate the machine in a closed building without proper ventilation.**
- **Always start the engine from the operator's seat. Do not start the engine while standing next to the excavator. Before starting the engine, sound the horn to get the attention of persons standing nearby.**

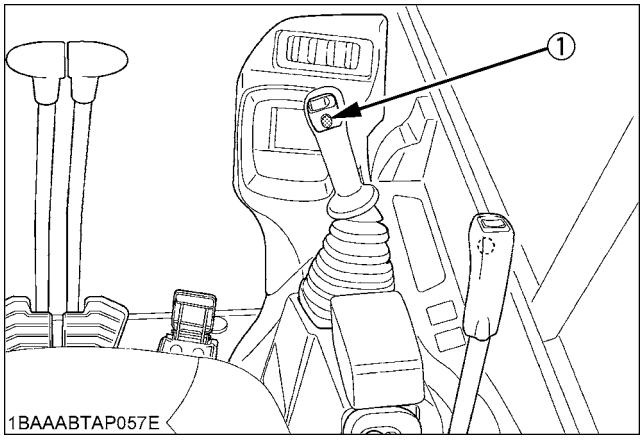

(1) Horn switch

IMPORTANT :

- Do not use starting fluid or ether.
- In order not to overload the battery and starter, avoid engaging the starter for more than 10 sec.
- If the engine does not start in 10 sec., please wait 20 sec. or more, before attempting to restart.

STARTING THE ENGINE

WARNING

To avoid personal injury or death:

- **The operator should not depend solely on the warning lamps, but should always conduct the routine checks (see "MAINTENANCE").**

Start the engine in the following manner:

1. Before starting the engine, make sure that all control levers are in the neutral positions.

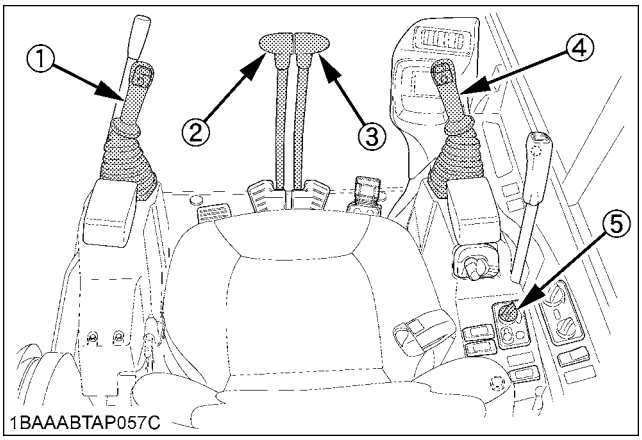

(1) Attachment control lever (left)
(2) Drive lever (left)
(3) Drive lever (right)
(4) Attachment control lever (right)
(5) Throttle potentiometer

2. Pull the pilot control lock lever all the way back. (**"LOCKED"** position)
3. Put the throttle potentiometer in the middle between "🐇" and "🐢" symbols. The auto idle control switch is in the OFF position.
   (See "AUTO IDLE (AI) OPERATION" in the Excavator operation.)

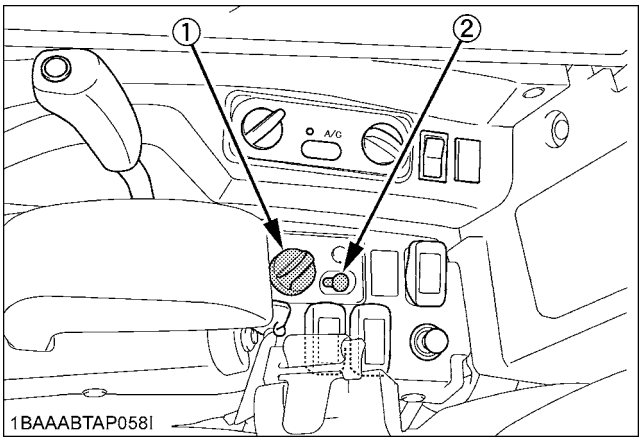

(1) Throttle potentiometer
(2) Auto idle control switch

https://truckmanualshub.com/

4. Set the starter key to the **"RUN"** position. Hold the key at this position until the "" mark on the display panel disappears.

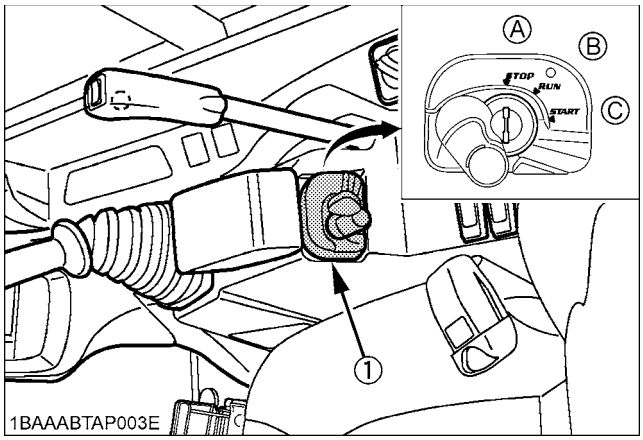

(1) Starter switch

(A) "STOP"
(B) "RUN"
(C) "START"

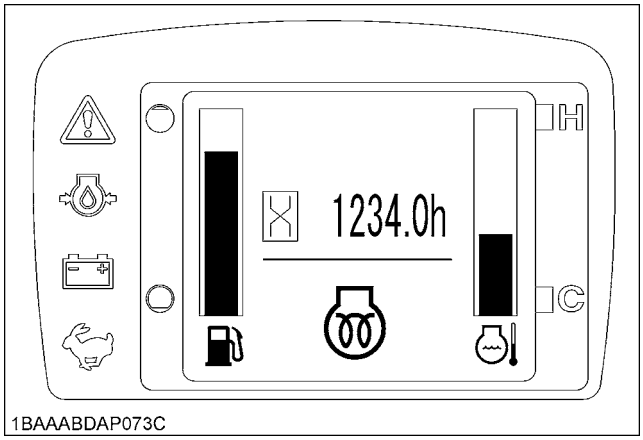

5. Now make sure the "" and "" marks appear onscreen. If not, the system has malfunctioned. Contact your local dealer for repairs.
6. Turn the key to the position **"START"** and release after the engine has started.
7. Check if all warning lamps have gone out. Should a warning lamp still be lit up, stop the engine then remove the key and check for the cause.

IMPORTANT :

- The starter motor draws a large current. Avoid running it longer than 10 seconds continuously.
  If the engine fails to start within 10 seconds, set the key to the **"STOP"** position, wait for 20 seconds or longer, and repeat the above steps 5 thru 7.
- If the battery is dead and must be connected to another battery with jumper cable, be sure to use a 12V battery. Never use 24V batteries.

NOTE :

- If you keep the pilot control lock lever at **"UNLOCK"** and try to start the engine, **"Up Lever Lock"** appears on the meter panel and the engine cannot be started. Before staring the engine, make sure the pilot control lock lever is set at the **"LOCKED"** position.

1BAABBLAP142B

- When the engine starts, the meter may momentarily turn off and a beep may sound. This is not a problem.

[For Canada only, if equipped]

- This machine is equipped with an anti-theft device. If you try to get the engine started with the wrong key, **"Wrong key""Unable to start"** appears on the meter panel and the engine cannot be started. Use the specified key.
- Even the correct key, if attached to something metallic (key ring, for example), may fail to start the engine. In such case, remove the metallic attachment and insert the key in the key switch.

1BAABBLAP143B

https://truckmanualshub.com/

STARTING THE ENGINE UNDER COLD CONDITIONS

WARNING

To avoid personal injury or death:

- **Make sure that the pilot control lock lever is in the "LOCKED" position during warm up.**

Start the engine in the following manner;

1. Make sure the auto idle control switch is at the **"OFF"** position (lamp off).
2. Pull the pilot control lock lever all the way back. ("LOCKED" position)
3. Insert the starter key into the starter switch.
4. Turn the throttle potentiometer toward " " (high speed) position.
5. Set the starter key to the **"RUN"** position. Hold the key at this position until the " " mark on the display panel disappears.
6. Turn the starter key to the **"START"** position.
7. Once the engine starts, release your hand from the key. The key will return back to the **"RUN"** position.
8. If the engine fails to start, set the starter key to the **"STOP"** position, and repeat the above steps 5 thru 7.

IMPORTANT :

- Let the engine warm up after start-up for approx. 10 minutes under no load conditions. If the hydraulic fluid temperature is too low, the operation will be affected. Do not operate the excavator under full load until the engine has sufficiently warmed up.

STARTING WITH AN AUXILIARY BATTERY

WARNING

To avoid personal injury or death:

- **Battery gases can explode.**
  Do not smoke and keep sparks and flames away.
- **Do not start the engine with an auxiliary battery if excavator battery is frozen.**
- **Do not connect the black jumper cable to the negative (-) terminal of the excavator battery.**

■Observe Following Guidelines when Starting with an Auxiliary Battery

1. Bring the helping machine with the same battery voltage as near as possible to the excavator.
   THE MACHINES MUST NOT COME IN CONTACT WITH EACH OTHER.
2. Bring the levers and pedal of both vehicles in the neutral position and put the pilot control lock lever in the "LOCKED" position.
3. Wear eye protection and rubber gloves.
4. Open the side cover. (See "Opening/Closing of the Side Cover" in "MAINTENANCE" section.)
5. Ensure the vent caps are securely in place (if equipped).
6. Connect the terminal of the red jumper cable with the plus (+) terminal of the low battery and connect the other end of the cable to the plus (+) terminal of the auxiliary battery.
7. Connect the black negative cable to the minus (-) terminal of the auxiliary battery.
8. Connect the other end of the black cable (coming from the auxiliary battery) to the excavator frame as far away as possible from the low battery.
9. Start the engine of the helping machine and let it run for a while. Start the excavator with the low battery.
10. Disconnect the jumper cables in the reverse sequence (Steps 8, 7, 6).

https://truckmanualshub.com/

11. Replace the vent caps.

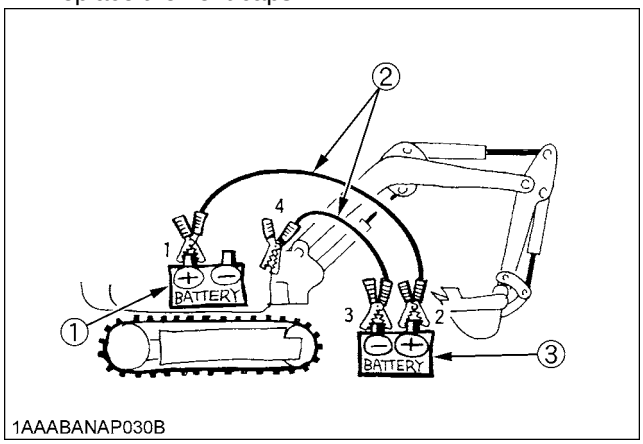

(1) Low battery
(2) Jumper cables
(3) Auxiliary battery

IMPORTANT :
- This excavator has a negative (-) ground 12 Volt starting system.
- Use only the same voltage when using an auxiliary battery.
- Using a higher voltage will cause serious damage to the electrical system. When using an auxiliary battery, only the compatible (same) voltage is permissible.

CHECK POINTS AFTER STARTING THE ENGINE

After starting the engine, but before starting operation, check the following points:

1. Put the throttle potentiometer in the middle between "" and "" symbols and let the engine idle for approx. five minutes. This allows the engine lubricant to warm up and penetrate every part of the engine.
2. Once the engine has warmed up, check:
   - the warning lamp "Engine oil pressure" has gone out.
   - the warning lamp "Battery charge" goes out when engine speed is increased.
   - the color of the exhaust is normal and no abnormal noises or vibrations are heard or felt.
   - no fluid is leaking from pipes or hoses.

◆ **Should any following conditions occur, stop the engine immediately.**
- The engine rpm's increases or decreases suddenly.
- Sudden abnormal noises are heard.
- Exhaust is black.
- Warning lamp for engine oil lights up during operation.

IMPORTANT :
- In these cases, the excavator must be checked and serviced by your local the KUBOTA dealer.

https://truckmanualshub.com/

STOPPING THE ENGINE

WARNING

To avoid personal injury or death:

- **Do not keep the bucket or dozer in an elevated position, as a person could accidentally touch the levers and cause serious accidents.**

1. **Place the bucket and dozer on the ground.**
2. **After slowing the engine to idle, turn the key to "STOP".**
3. **Remove the key.**
4. **Pull the pilot control lock lever to "LOCKED" position.**

IMPORTANT :

- Do not stop the engine by shutting down the battery power directly with a battery switch or by other means. Doing so may cause failure or malfunction.

■Engine Stop Button

WARNING

To avoid personal injury or death:

- **Keep hands away from rotating parts.**

IMPORTANT :

- Be sure to return the stop button to former position after the engine stops.

The engine stops when the starter key is turned off. If the engine does not stop, pull the stop button to stop the engine.

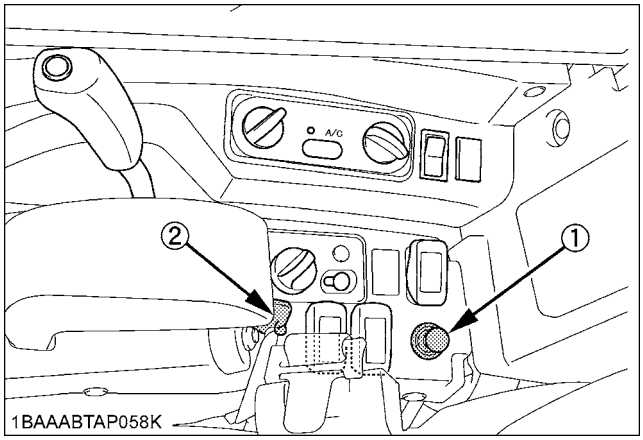

(1) Stop button
(2) Starter key

■Precautions in case of Overheat

WARNING

To avoid personal injury or death:

- **Do not open the radiator cap during operation or just after shut-down. Otherwise, steam or very hot coolant may gush out, getting you scalded. Make sure the radiator has cooled down enough before opening its cap.**

If by any chance the coolant temperature rises close to or above the boiling point (**"H"** on the water temperature gauge) (overheat condition), take the following steps.

1. Stop operating the machine.
   (Relieve the engine of any load.)
2. Do not shut off the engine suddenly. Before shutting off the engine, keep it idling under no load for about 5 minutes.
3. Stay away from the engine or overflow for 10 minutes or until the steam overflow stops.
4. Be sure that there is no danger of getting scalded. Pinpoint and remove the cause of overheat, referring to the **"TROUBLESHOOTING"** section. Once the issue is resolved, the engine may be restarted.

■DPF Regeneration

This machine is equipped with a DPF (Diesel Particulate Filter) muffler.

DIESEL PARTICULATE FILTER serves to trap particulate matters (PM) that are contained in exhaust gases and to automatically burn (DPF-regenerate) these matters. In the regeneration, buzzer sounds and warning light blink and display shows messages.

Follow that instruction.

(Refer to page 117)

WARNING

To avoid personal injury or death:

- **During Diesel Particulate Filter (DPF) regenerating operations, exhaust gases and exhaust filter components reach temperatures hot enough to burn people, or ignite or melt common materials.**
- **Keep excavator away from people, animals or structures which may be susceptible to harm or damage from hot exhaust gases.**
- **During regeneration, white exhaust gases may be visible. Do not allow regeneration in a non ventilated garage or confined area.**
- **During regeneration, do not leave the excavator.**

https://truckmanualshub.com/

EXCAVATOR OPERATION

RUNNING-IN OF THE NEW EXCAVATOR

The operation and care of the new excavator influences its life span. Your new excavator has been carefully checked and tested before leaving the factory. In spite of this, all movable components must run-in during the first 50 work hours. Do not work with full rpm's and full loads during this period. It is very important to run-in your excavator properly in order to achieve its full performance and longevity. During the running-in, the following points should be adhered to in all cases.

■Do not Work with Full Engine Rpm's or Full Loads during the First 50 Working Hours

- Let the engine warm up sufficiently in the cold season.
- Do not let the engine rev-up more than necessary except the DPF regeneration.

■Oil Change in the Run-in Stage

The lubrication oil plays a specific and important role during the run-in phase of the excavator. The numerous movable parts are not yet run-in, so many fine metal particles are generated, which can cause damage and shorten the life of many components. Pay attention to the oil-change intervals and complete them sooner than later. See "REGULAR CHECKS AND MAINTENANCE WORK" section for more details on the oil-change intervals.

■Adjusting the Operator's Seat

WARNING

To avoid personal injury or death:

- **Make sure that the seat is completely secured after each adjustment.**

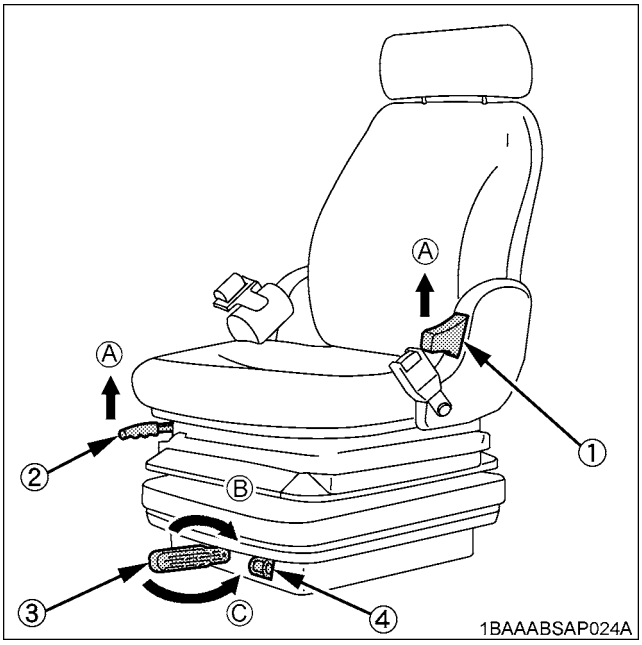

(1) Backrest tilt adjust lever
(2) Travel adjust lever
(3) Weight adjust lever
(4) Weight indicator

(A) "UNLOCK"
(B) "TO INCREASE TENSION"
(C) "TO DECREASE TENSION"

◆ **Travel adjustment**
Pull the travel adjust lever in the direction of [A] and slide the seat backward or forward, as required. The seat will lock in position when the lever is released.

◆ **Weight adjustment**
Turn the weight adjust lever to achieve the optimum suspension setting.

◆ **Tilt adjustment**
Pull the backrest tilt adjust lever in the direction of [A] and move the backrest to the desired angle.

◆ **Height adjustment**
Lift the seat to the desired height of the three available positions. Adjust the seat to the desired position after lifting the seat to the highest position in the case of lowering the seat.

https://truckmanualshub.com/

■Seat Belt

WARNING

To avoid personal injury or death:

- **Always use the seat belt with a ROPS/OPG (Top Guard Level I) protection structure. Adjust the seat to the optimal position and buckle up.**

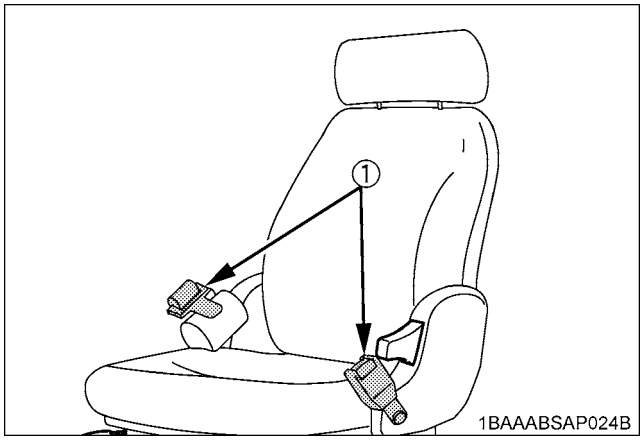

(1) Seat belt

STARTING

WARNING

To avoid personal injury or death:

- **No persons, other than those who have read and understand this manual and who are familiar with the excavator, should be allowed to use the excavator.**
- **Do not allow any person other than the operator to ride on the excavator.**
- **When operating, keep hands and body inside of the ROPS/OPG (Top Guard Level I) protective.**
- **Do not touch the control levers and the pedals from outside the cab while the engine running.**

■Pilot Control Lock Lever

WARNING

To avoid personal injury or death:

- **To avoid injuries, check safety aspects all around the excavator.**

NOTE :

- If the pilot control lock lever is pulled down, the engine will fail to start.

Don't attempt to start the machine with the pilot control lock lever in the down position (A), if attempt is made the following message appears on the LCD.

1BAABBLAP142B

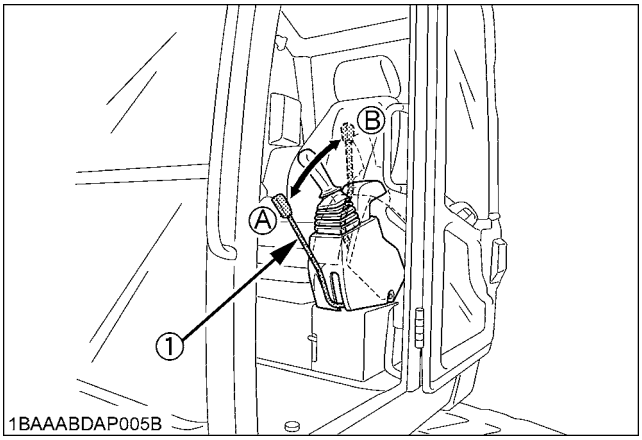

(1) Pilot control lock lever

(A) "UNLOCK"
(B) "LOCKED"

IMPORTANT :

- Always pull pilot control lock lever up to "LOCKED" position (B) when you stop the engine or leave the operating structure.

https://truckmanualshub.com/

DRIVING

WARNING

To avoid personal injury or death:

- **Before starting the engine, make sure that no one is near the excavator.**
- **Before operating the excavator, check the track direction. (Front idler and dozer blade to the front of the excavator).**

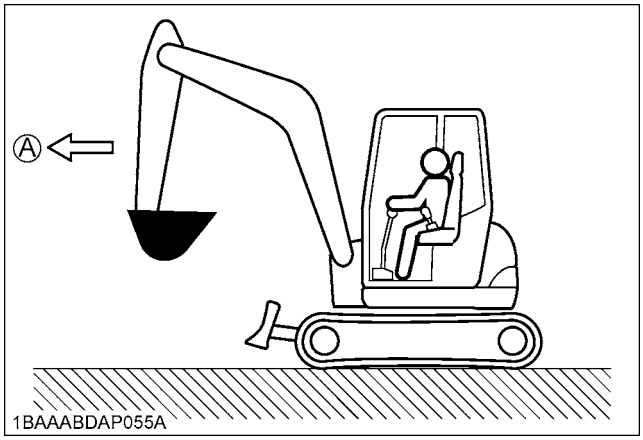

(A) "Front of the excavator"

- **Use extra caution when traveling across a slope or working sideways on a slope.**

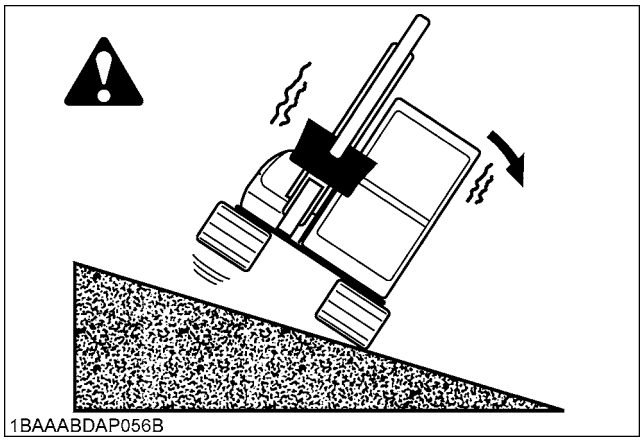

- **Recommended technique for working on a slope.**

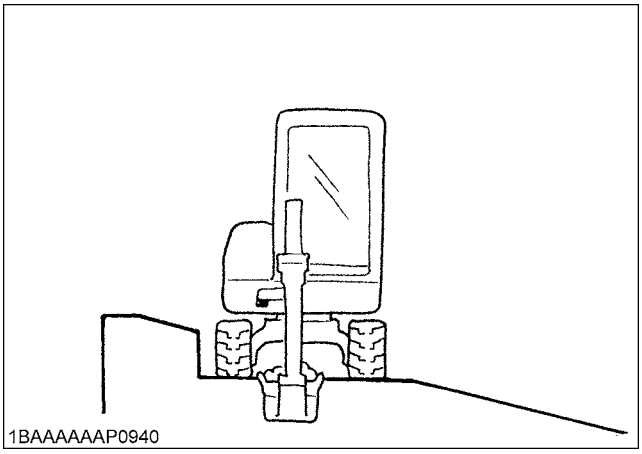

1. Adjust the engine speed from idling to an intermediate speed.
2. Unlock the pilot control lock lever and pull in the bucket and hold the bucket about 20 to 40 cm (8 to 16 in.) above the ground.

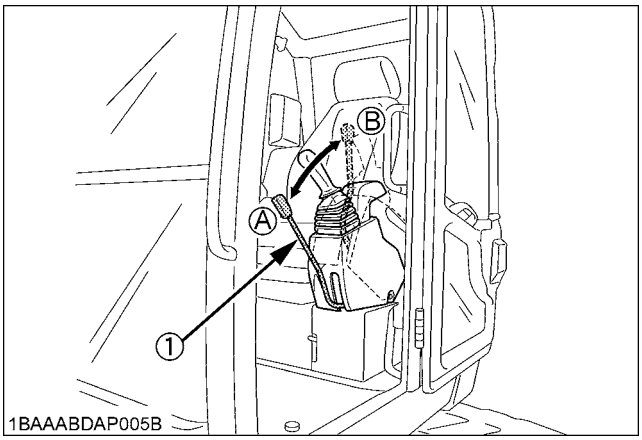

(1) Pilot control lock lever (A) "UNLOCK"
(B) "LOCKED"

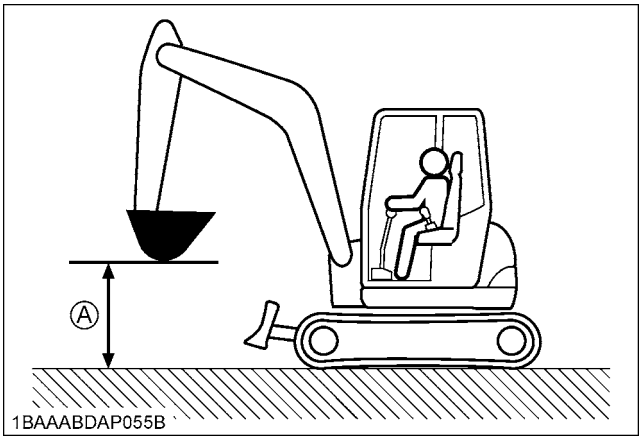

(A) 20 to 40 cm (8 to 16 in.)

https://truckmanualshub.com/

3. Activate the dozer control lever to raise the dozer.

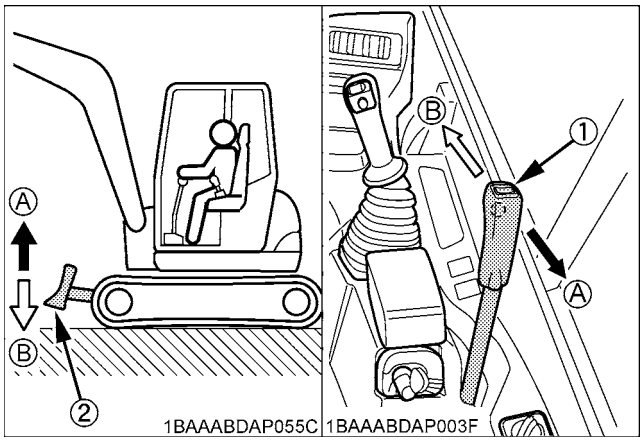

(1) Dozer control lever
(2) Dozer
(A) "Raise"
(B) "Lower"

■Drive Levers (Right,Left)

WARNING

To avoid personal injury or death:

- **When driving the excavator keep the dozer blade in front. To move the excavator forward, move the drive levers to (A) and to move in reverse, move the drive levers to (B) with dozer blade in front. If the dozer blade is behind operator station, then the controls are reversed, moving the excavator forward will require (B) and moving the excavator backwards will require (A), but this is not recommended.**

Pushing the drive levers forward, moves the excavator forwards, and vice-versa. The front of the excavator is the side where the dozer is located; the drive sprocket is in the rear of the excavator.

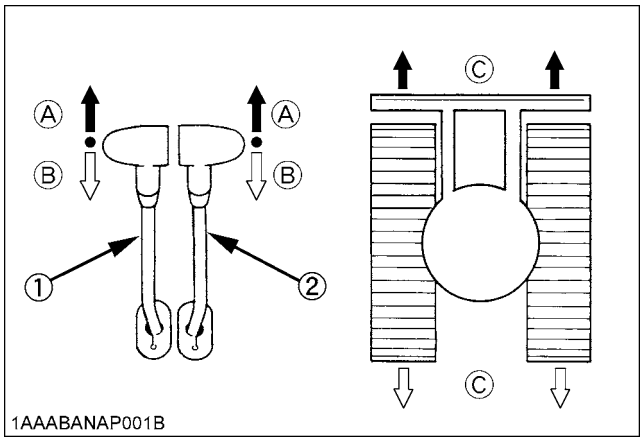

(1) Drive lever (left)
(2) Drive lever (right)
(A) "Forward"
(B) "Backward"
(C) "Straight"

TURNS

WARNING

To avoid personal injury or death:

- **Do not change direction on steep slopes, or the excavator could tip over.**
- **Before changing direction, beware of people in the work area.**

■Pivot Turn

NOTE :

- Movement as illustrated is done with the dozer blade in front of the operator.

◆ Change of Direction while Travelling

1. While travelling forward, bring the left drive lever into the neutral position;
   the excavator will turn in the direction of the arrow of the illustration below.

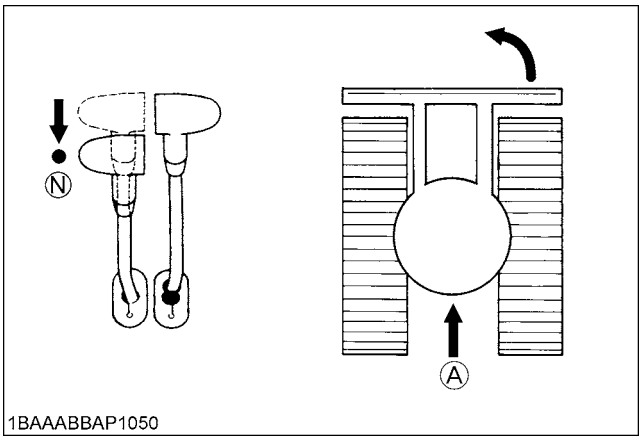

(A) "Travelling forward"
(N) "Neutral position"

https://truckmanualshub.com/

2. While travelling backward, bring the left drive lever into the neutral position;
   the excavator will turn in the direction of the arrow of the illustration below.

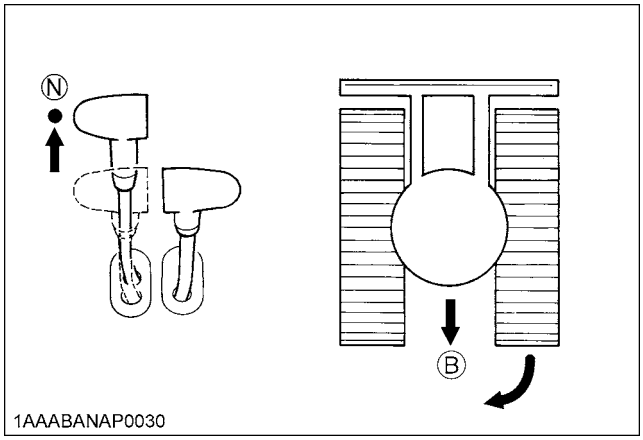

(B) "Travelling backward" (N) "Neutral position"

◆ **Change of Direction while Stationary**

1. Push the left drive lever forward;
   the excavator will turn in the direction of the arrow of the illustration below.

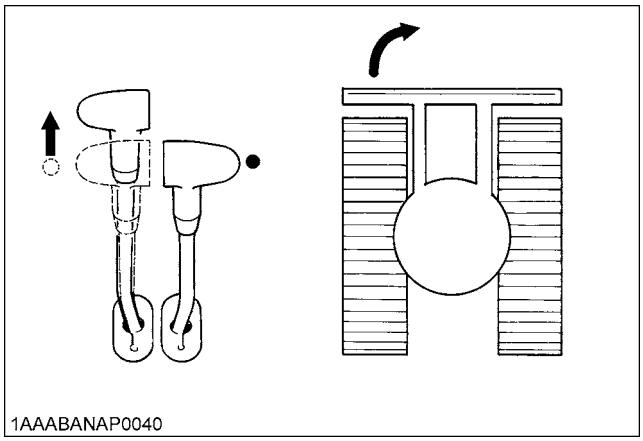

2. Pull the left drive lever backward;
   the excavator will turn in the direction of the arrow of the illustration below.

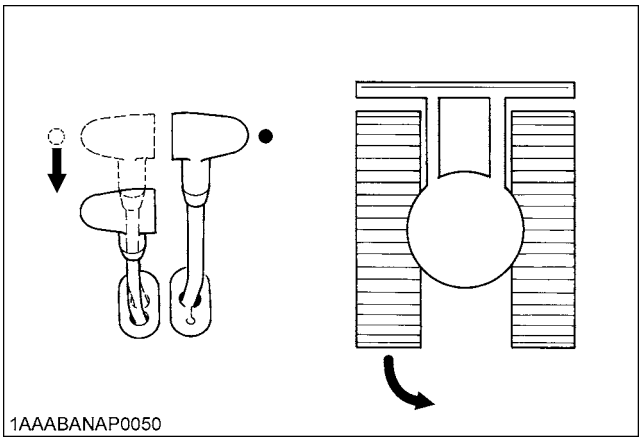

■Spin Turn

When both drive levers are activated in the opposite directions, both tracks will rotate with the same speed but in opposite directions. The center of rotation is the center of the excavator.

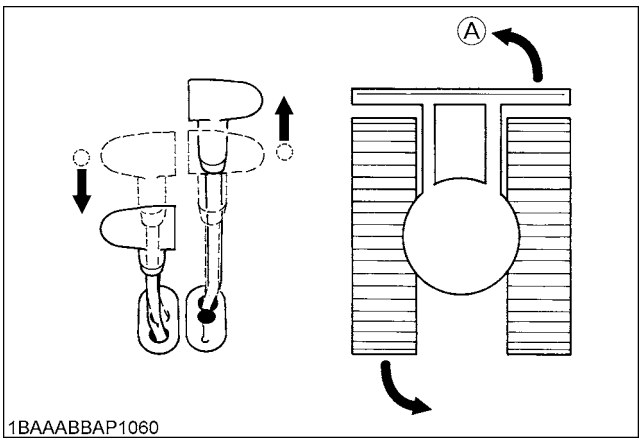

(A) "Left spin turn"

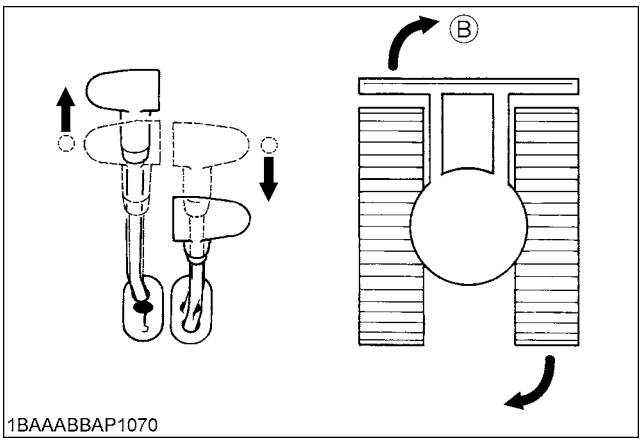

(B) "Right spin turn"

https://truckmanualshub.com/

UP AND DOWNHILL DRIVING

WARNING

To avoid personal injury or death:

- **When travelling up or down a slope, use extra caution and follow the instructions below.**

While traveling uphill, keep the lower edge of the bucket approx. 20 to 40 cm (8 to 16 in.) above the ground. Although the KUBOTA excavator will not slip easily because of the tracks, it is safer to let the bucket slide over the ground while traveling downhill. Always choose slow speed for uphill and downhill traveling.

[UPHILL TRAVELING]

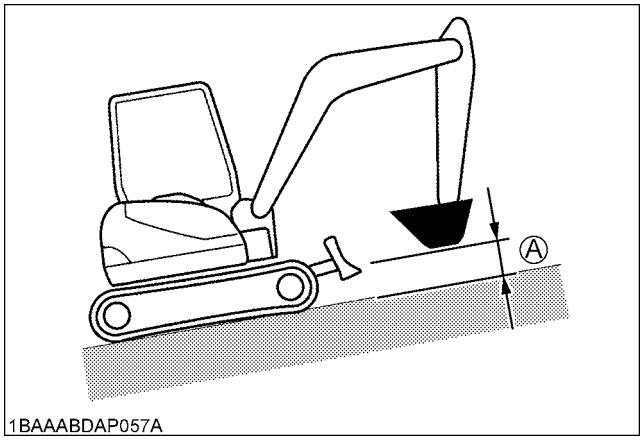

(A) 20 to 40 cm (8 to 16 in.)

[DOWNHILL TRAVELING]

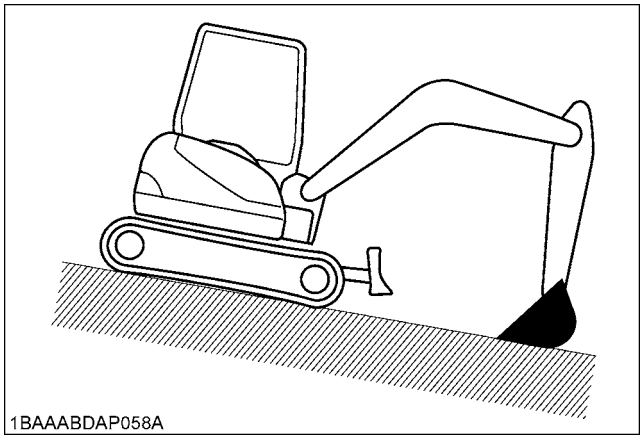

PARKING ON A SLOPE

WARNING

To avoid personal injury or death:

- **When the excavator is parked or left unattended on a slope, be sure to put the tip of bucket into ground and place all control levers in neutral position, then brace the tracks with chocks.**

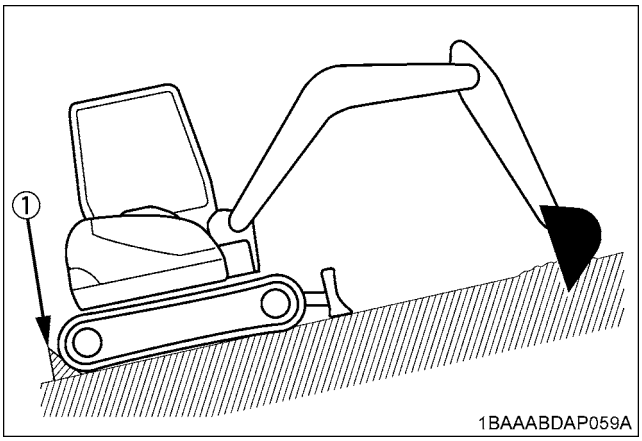

(1) Chock

OPERATION OF THE DOZER

1. To raise the dozer, pull back the control lever. To lower the dozer, push the control lever forward.

   To float the dozer, push the control lever more forward to the locked position.

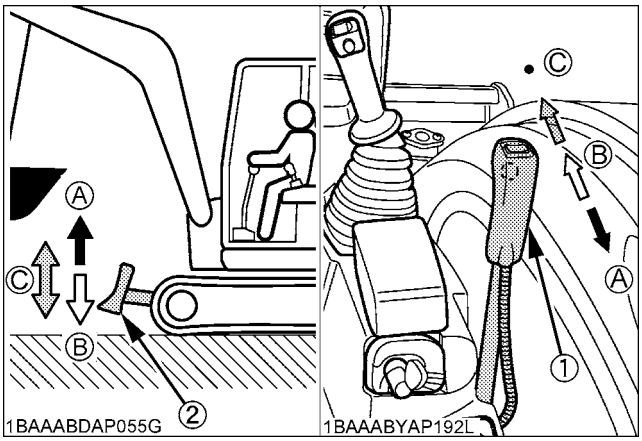

(1) Dozer control lever
(2) Dozer

(A) "Raise"
(B) "Lower"
(C) "Float" (Locked position)

2. While undertaking earth moving work, control both drive levers with the left hand and the dozer control lever with the right hand.

https://truckmanualshub.com/

TWO PATTERN SELECTION SYSTEM (TPSS)

WARNING

To avoid personal injury or death:

- **Study control lever pattern A and pattern B. Then choose the one which is most familiar.**
- **Familiarize yourself with the pattern selected by operating slowly.**

■Pattern Change

1. Open the cover and position the pattern selector lever to the desired position.
2. Close the cover.

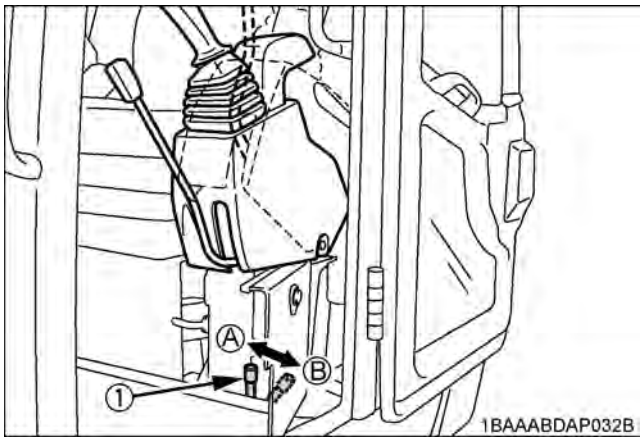

(1) Pattern selector lever (Two Pattern Selection System:TPSS)
(A) "Pattern A"
(B) "Pattern B"

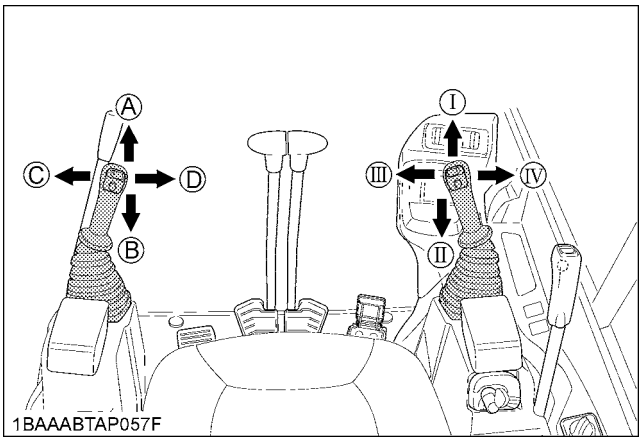

Lever Position	Attachment Control Lever (Left)		Attachment Control Lever (Right)	
Pattern A	A	Boom down	Ⅰ	Arm out (up)
	B	Boom up	Ⅱ	Arm in (crowd)
	C	Swing left	Ⅲ	Bucket crowd
	D	Swing right	Ⅳ	Bucket dump
Pattern B	A	Arm out (up)	Ⅰ	Boom down
	B	Arm in (crowd)	Ⅱ	Boom up
	C	Swing left	Ⅲ	Bucket crowd
	D	Swing right	Ⅳ	Bucket dump

https://truckmanualshub.com/

OPERATION OF THE BOOM

To raise the boom, pull the attachment control lever back. The boom is equipped with a cushion cylinder which helps prevent excavated material in the bucket from falling out. At low hydraulic oil temperature, (e.g. after starting the engine in cold weather) the cushioning function will be effected for a short period of time (approx. 3 to 5 seconds). This condition results from the viscosity of the hydraulic oil and is not a sign of malfunction.

The cushion cylinder will operate normally as the oil warms up.

To lower the boom, push the attachment control lever forward.

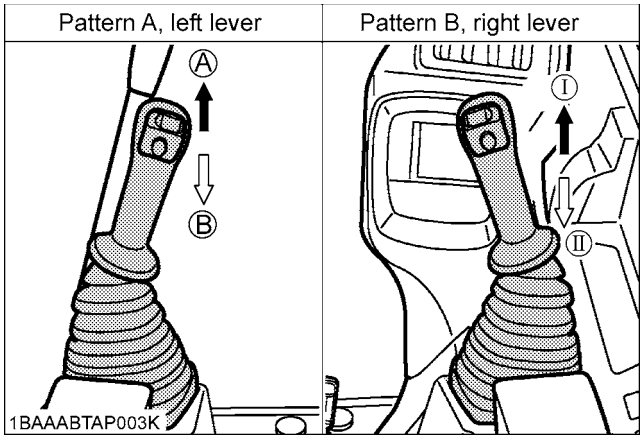

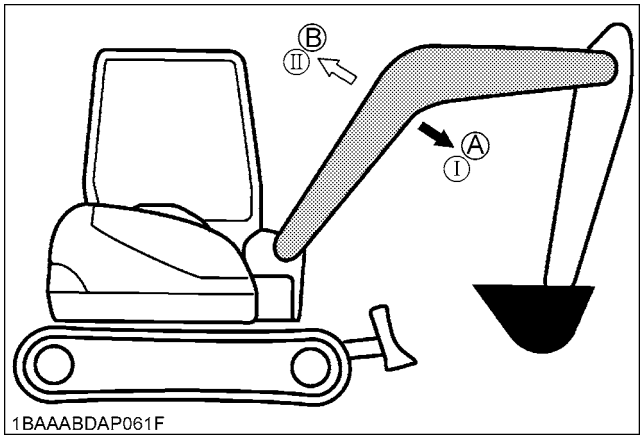

IMPORTANT :

- When lowering the boom, make sure that it does not hit the dozer and that the bucket teeth do not touch the dozer.

OPERATION OF THE ARM

Pull back the attachment control lever and the arm will be pulled in. To move the arm out, push the control lever towards the front.

NOTE :

- When pulling in the arm, the movement may stop for a short moment when the arm is in its vertical position. This is caused by the combined load of the arm and bucket moving the cylinder piston away from the hydraulic flow causing a delay in the cylinder action, until the flow catches up with cylinder piston. This is a characteristic of the hydraulic system and is not a sign of malfunction.

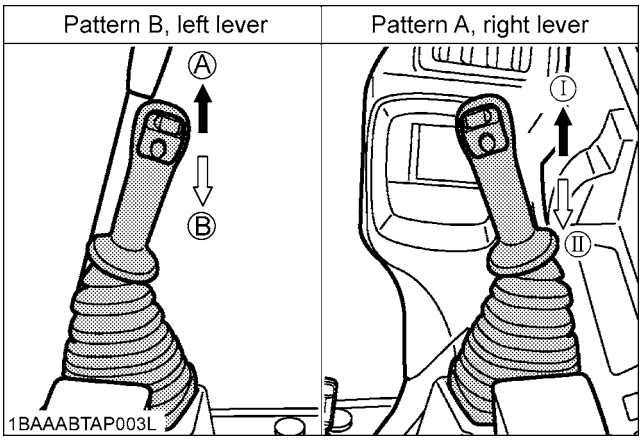

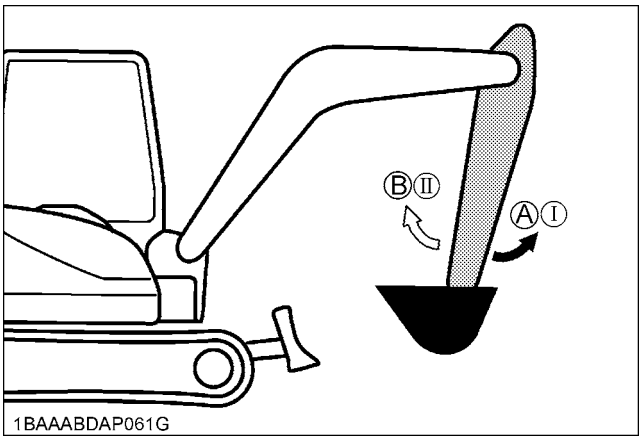

https://truckmanualshub.com/

OPERATION OF THE BUCKET

To dig using the bucket, move the right attachment control lever from the neutral position, left. Moving the control lever right, moves the bucket outwards and empties its contents.

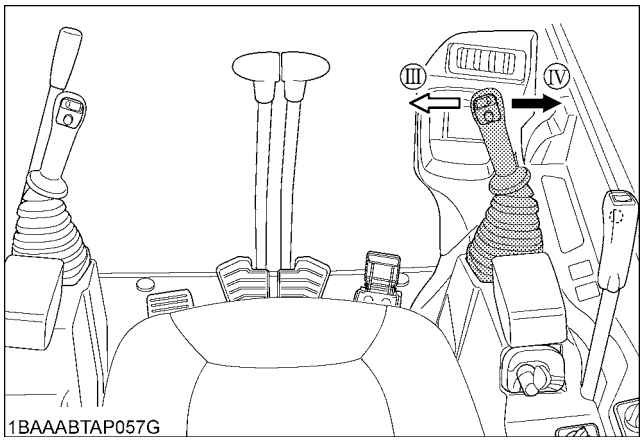

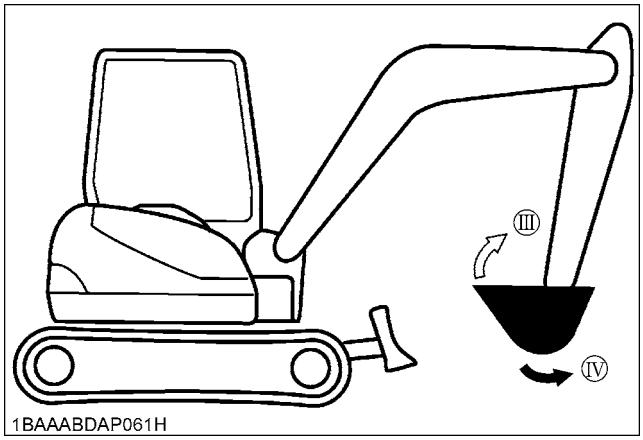

UNIT SWING AND BOOM SWING OPERATION

WARNING

To avoid personal injury or death:

- **When working in groups, always let the others know what you are going to do before you do it.**
- **Keep others away from the machine working area.**
- **Be sure to lock the boom swing pedal when the boom swing function is not used.**

■Unit Swing Operation

1. Move the control lever to the left and the upper structure will turn to the left.
2. Move the control lever to the right and the upper structure will turn to the right.

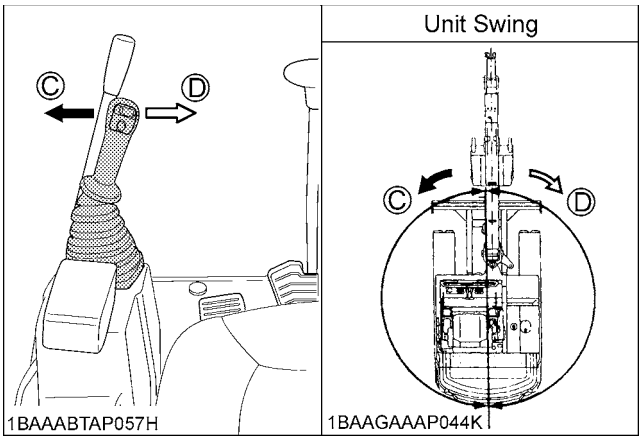

■Boom Swing Operation

1. Flip the pedal lock up to unlock the pedal.
2. Step on the left side of the pedal to swing the boom to the left.
3. Step on the right side of the pedal to swing the boom to the right.

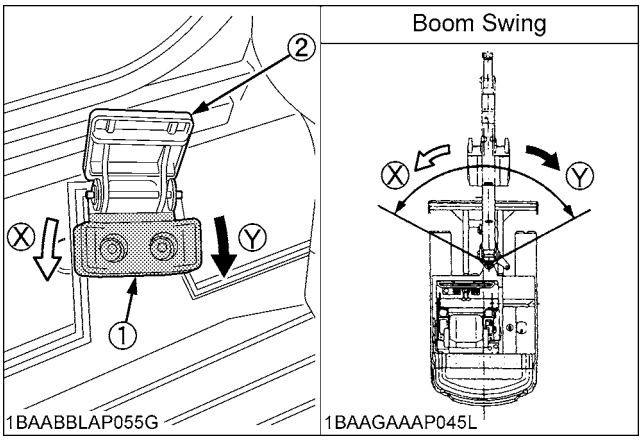

(1) Boom swing pedal
(2) Pedal lock

IMPORTANT :

- Do not operate the left attachment control lever abruptly from right to left (or vice versa), because the inertia may cause high impact loads on the swing gear and the swing motor, shortening the life of the excavator.

https://truckmanualshub.com/

AUXILIARY PORT OPERATION

The auxiliary port enable switch is used to operate hydraulic attachment such as hammers.

■Selecting the Action Modes

The AUX port has been factory-set to three action modes. You can select one of them. Up to five action modes can be preset. Each time the AUX port enable switch (switch 3) is pressed, the action modes change over one after another. And the icon and action mode number on the screen change accordingly.

[Aux 1 mode only]

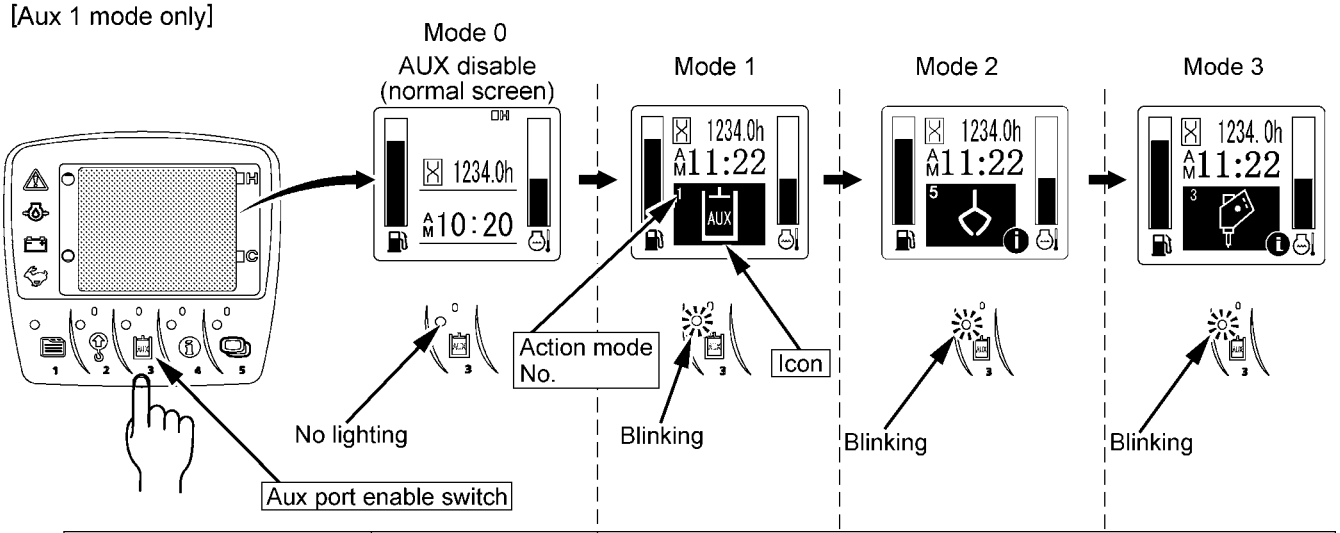

AUX 1 port	No activation	MAX. flow volume	Limited flow volume	One way flow (Send oil to the port 2 only)

[Aux 1 and 2 modes]

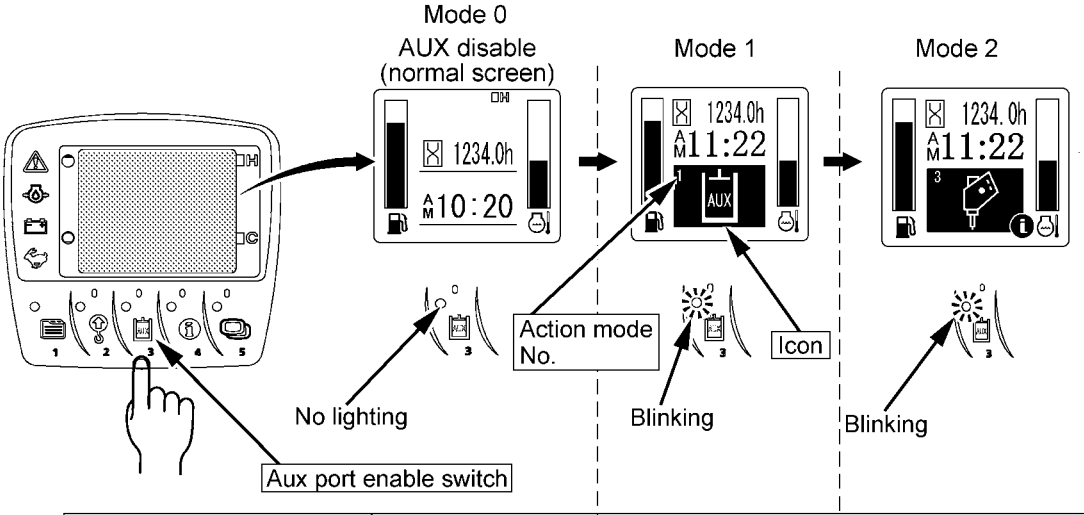

AUX 1 port	No activation	MAX. flow volume	One way flow (Send oil to the port 2 only)
Thumb port	No activation	MAX. flow volume	MAX. flow volume

1BAAABDBP0250

NOTE :

- When turning the starter key to the "RUN" position, the action mode will return to the last action mode used.
- AUX1 or AUX2 functions are workable while automatic regeneration. Refer to page 48.

https://truckmanualshub.com/

◆ **Checking the settings of each action mode**

When an action mode is selected and the "ℹ" mark appears at the lower right of the icon, the flow volume setting gets displayed by pressing the switch 4.

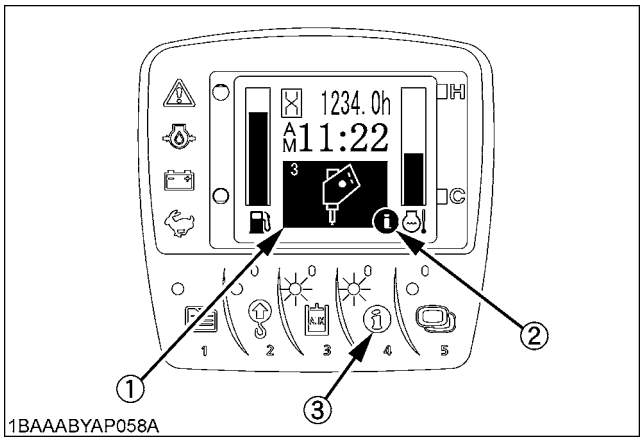

(1) Icon
(2) Information mark
(3) Information switch (Switch 4)

[Display in AUX 1 and 2 modes]

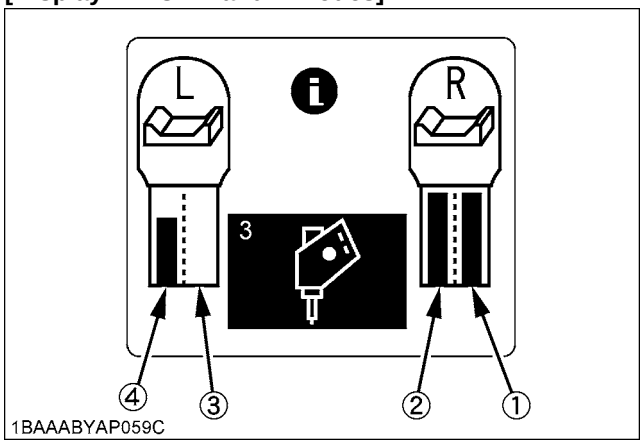

(1) AUX Port 1
(2) AUX Port 2
(3) AUX Port 3
(4) AUX Port 4

■AUX Port Handling Procedure

1. Turn the starter key to the "RUN" position.
   Let the engine warm up after start-up for approx. 10 minutes under no load conditions.

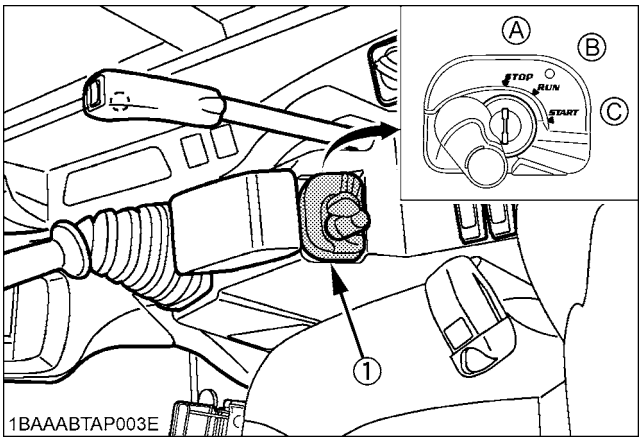

(1) Starter switch
(A) "STOP"
(B) "RUN"
(C) "START"

2. Lower the pilot control lock lever (UNLOCK).

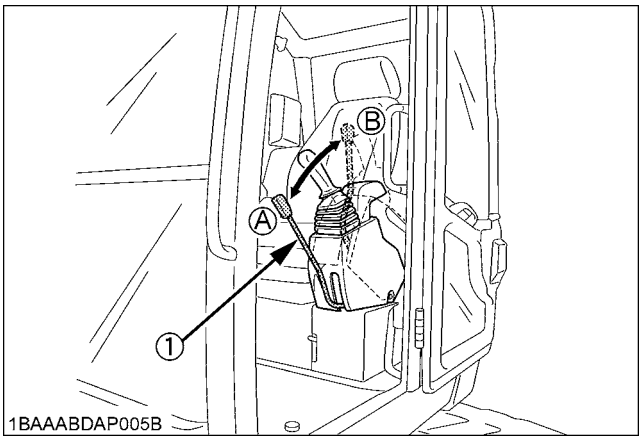

(1) Pilot control lock lever
(A) "UNLOCK"
(B) "LOCKED"

https://truckmanualshub.com/

3. Push the AUX port enable switch (switch 3).

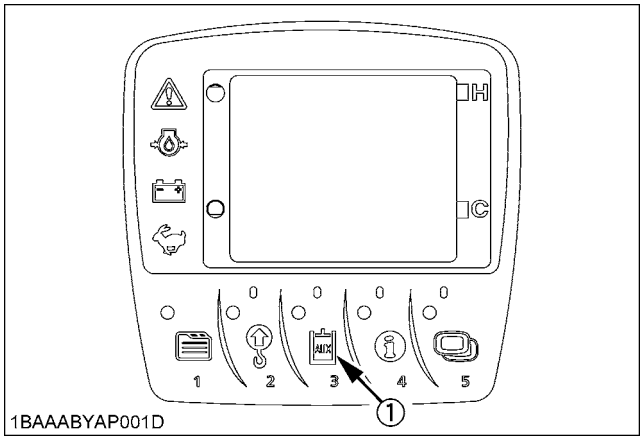

(1) AUX port enable switch (Switch 3)

NOTE :

- If the pilot control lock lever is at the "LOCKED" position, the following message appears onscreen. Down this lever to the "UNLOCK" position and then press the AUX port enable switch (switch 3).

1BAABBLAP257B

- AUX is cancelled when the pilot control lock lever raised up "LOCKED" position. Push the AUX port enable switch to set the AUX mode when necessary.

4. **[AUX 1 and 2 modes]**
   If the machine is equipped with the AUX 1 port, move the AUX port knob of the left attachment control lever to the right to send oil to the AUX port 1.
   Move the AUX port knob of the left attachment control lever to the left to send oil to the AUX port 2.
   If the machine is equipped with the AUX 2 port, move the AUX port knob of the right attachment control lever to the right to send oil to the AUX port 3.
   Move the AUX port knob of the right attachment control lever to the left to send oil to the AUX port 4.

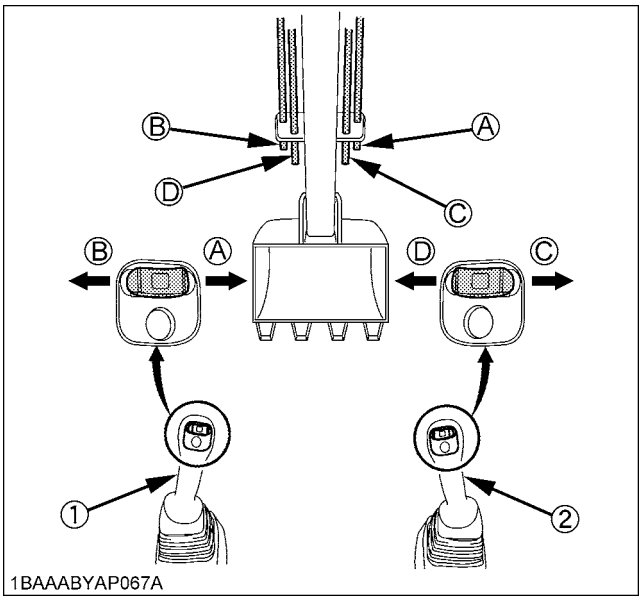

(1) Attachment control lever (left)
(2) Attachment control lever (right)

(A) "AUX port 1"
(B) "AUX port 2"
(C) "AUX port 3"
(D) "AUX port 4"

IMPORTANT :

- Proportional control of the AUX port knob allows for slow-to-fast movement of attachment.
  Example; If you move the AUX port knob halfway, the attachment will move at approximately one-half speed.

https://truckmanualshub.com/

◆ **One way hold**
[AUX 1 and 2 modes]
Press the one way hold switch of the left attachment control lever, and the oil continues to flow through the AUX port 2. Press this switch again or move the AUX port knob, and the oil flow is interrupted.

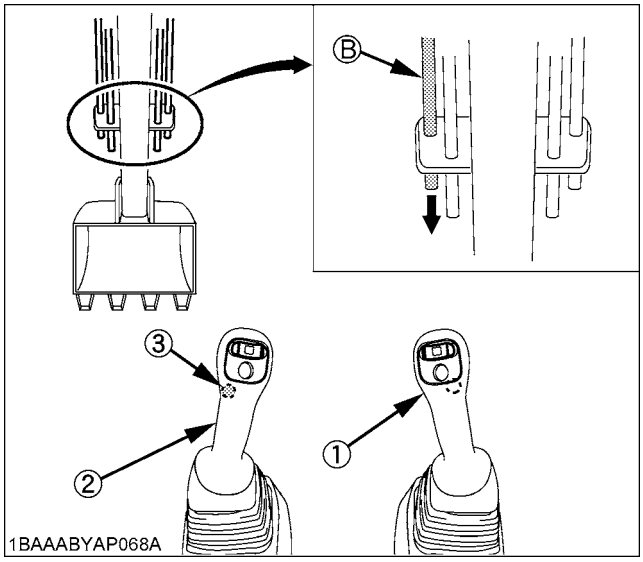

(1) Attachment control lever (right)
(2) Attachment control lever (left)
(3) One way hold switch (left)
(B) "AUX port 2"

NOTE :
- Even if the one way hold switch of the right attachment control lever is pressed, no function is assigned. In this case, the following message appears onscreen.

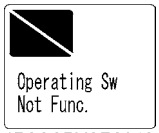

1BAAABYAP064A

■Setting the Maximum Flow Volume

The AUX port has been factory-set to three action modes 1, 2 and 3. The action modes 4 and 5 can also be preset.

◆ **How to make the settings**
1. With the starter key at the "RUN" position, press the user setting switch (switch 1), and the following display appears onscreen.

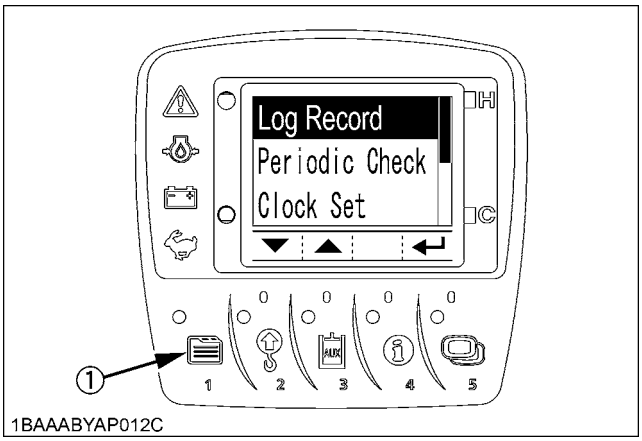

(1) User setting switch (switch 1)

2. Press the switch 2 or 3 to select "AUX Flow Ctrl Set", and then press the switch 5.

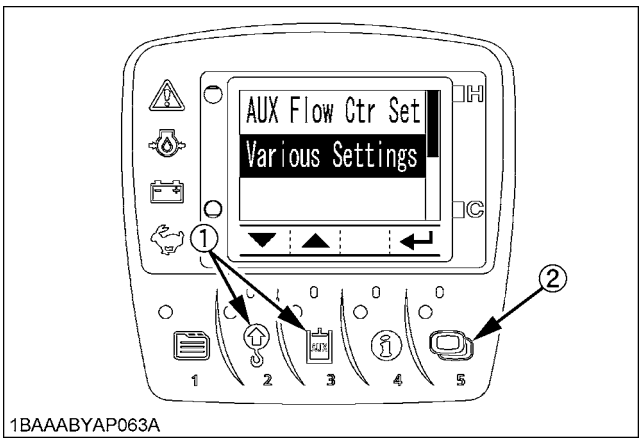

(1) Switch 2 and 3
(2) Switch 5

https://truckmanualshub.com/

3. Each time the switch 5 is pressed, the mode number changes. Select your desired setting mode number.

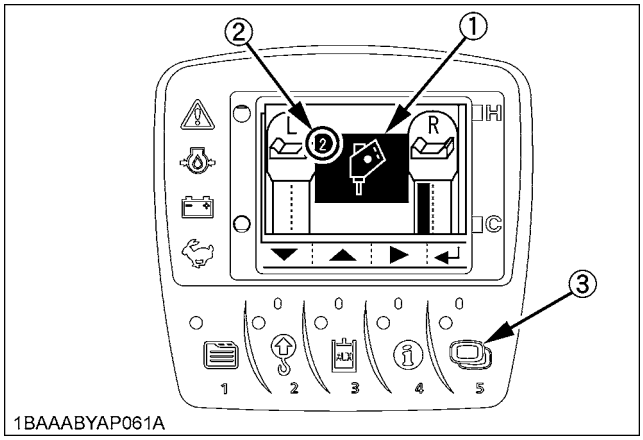

(1) Icon
(2) Mode No.
(3) Switch 5

4. Take the following steps to set the icons.
   Each time the switch 4 is pressed, the setting cursor (arrow mark) shifts position. Move the cursor above the icon.

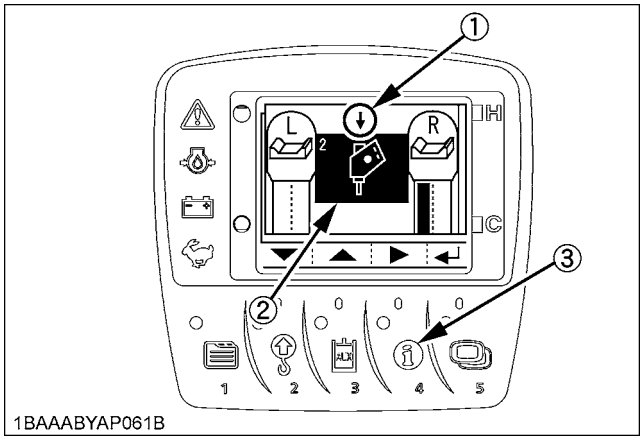

(1) Setting cursor (arrow mark)
(2) Icon
(3) Switch 4

5. Each time the switch 2 or 3 is pressed, the icon changes. Select your desired icons.

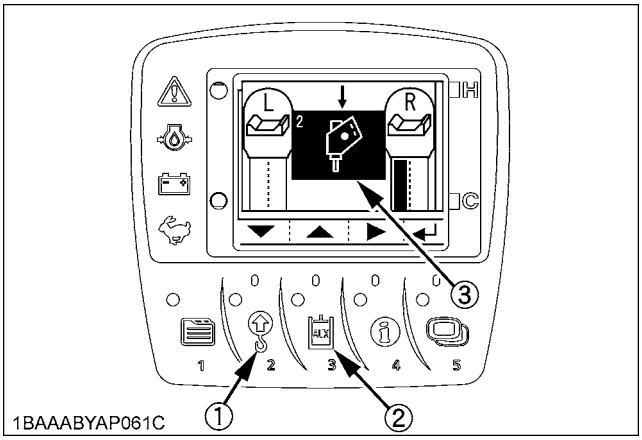

(1) Switch 2
(2) Switch 3
(3) Icon

◆ **Types of AUX icons**

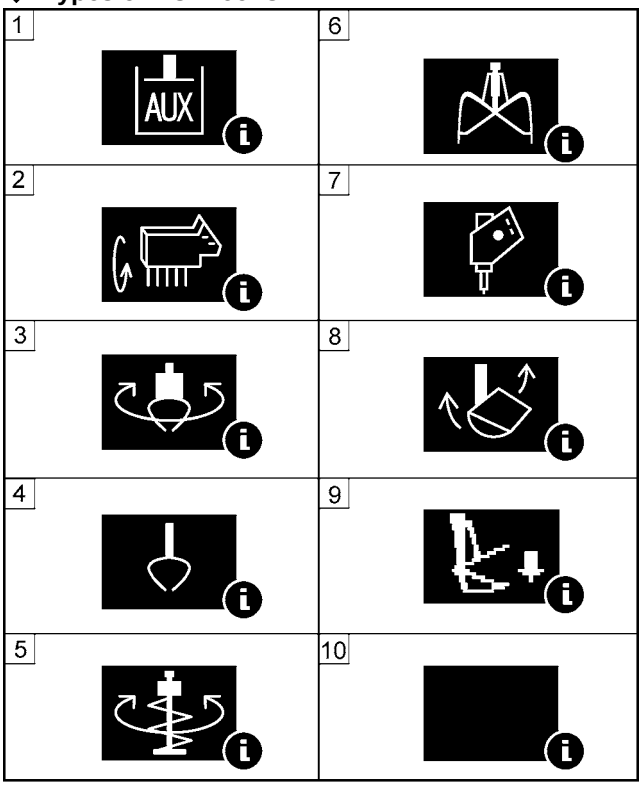

1BAAABYAP209A

(1) AUX (Standard)
(2) Brush cutter
(3) Rotary grapple
(4) Grapple
(5) Auger
(6) Clamshell
(7) Breaker
(8) Tilt bucket
(9) Thumb
(10) Blank (disable)

https://truckmanualshub.com/

NOTE :
- There is no relationship between the icons and the flow control settings. Select icons to suit the images of attachments to be connected.
- In an action mode with the disable icon preset, such action mode is skipped even if selected.

  Take an example of the following settings:
  AUX (standard) icon for action mode 1,
  Breaker icon for action mode 2,
  Disable icon for actions modes 3, 4 and 5.

  Each time the AUX port enable switch (switch 3) is pressed, the display changes from action mode 1, action mode 2 to normal mode in this order.

[Setting example]

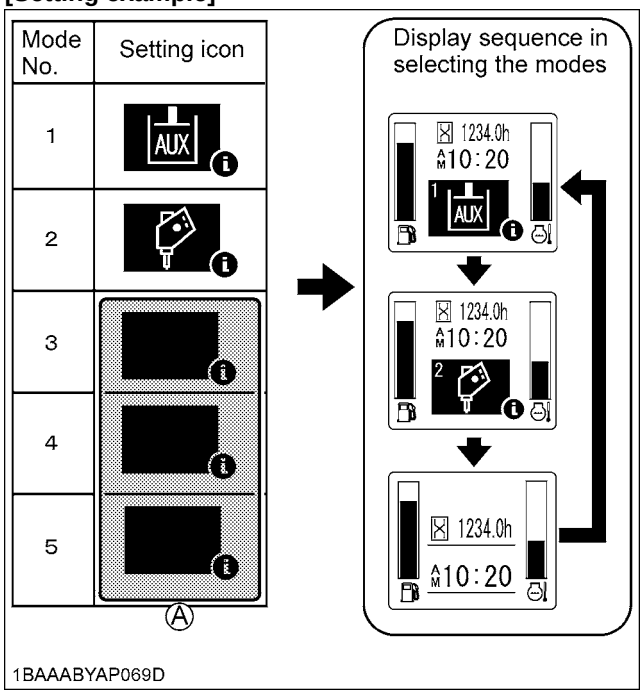

(A) Blank (disable) icon

6. Set the maximum flow volume for each AUX port.
   Press the switch 4 to move the setting cursor (arrow mark) to the port 2 position of Thumb port at the right.

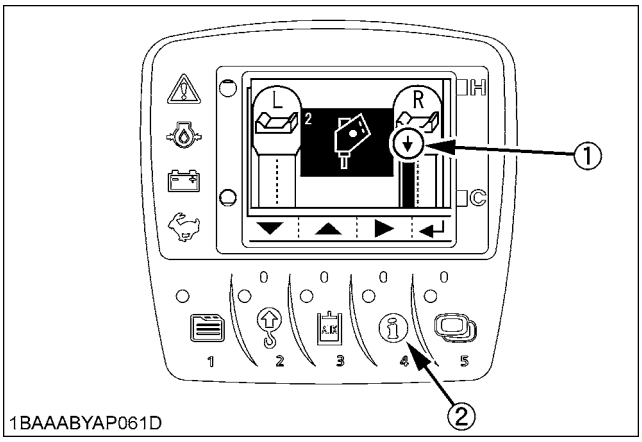

(1) Setting cursor (arrow)
(2) Switch 4

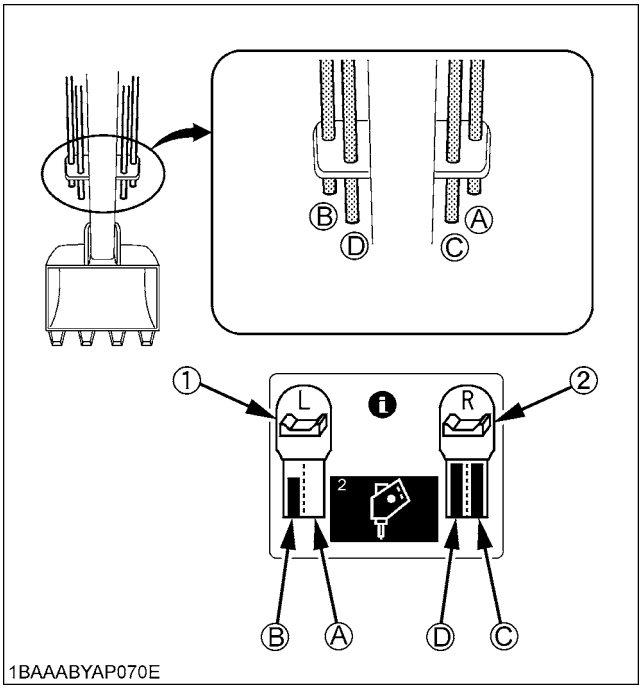

(1) AUX 1
(2) AUX 2

(A) "AUX port 1"
(B) "AUX port 2"
(C) "AUX port 3"
(D) "AUX port 4"

https://truckmanualshub.com/

7. Press the switch 2 or 3 to preset the maximum flow volume.
   Set the bar to the highest level, and the flow volume will be maximized.
   Set the bar to the lowest level (no bar displayed), and there will be no oil flow.
   Then press the switch 4 to go to the next port, and make the settings for all the other ports.

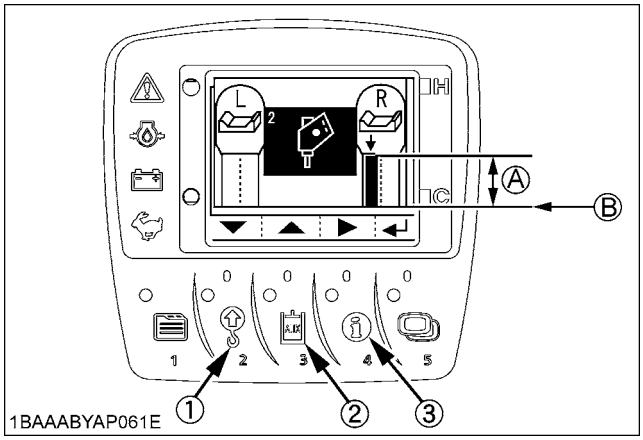

(1) Switch 2 (Higher flow volume) (A) "MAX. flow volume"
(2) Switch 3 (Lower flow volume) (B) "Output interrupted"
(3) Switch 4

NOTE :
- Some attachments might not be activated even when the bar level is still somewhat above the lowest position. Or even when the bars of ports 1 and 2 (or of ports 3 and 4) are at the same level, the same speed might not be achieved. This does not indicate a machine problem, however. Readjust the bar to the optimum level according to your attachment manual.
- Suppose that the same attachment is mounted on another machine. Even if the same flow control setting is made, the same speed cannot be achieved. Make an optimum setting on each machine.

8. Go back to Step 3 to make settings for the next action mode. When all the settings of all the action modes have been made, press the switch 1 to return to the normal screen.

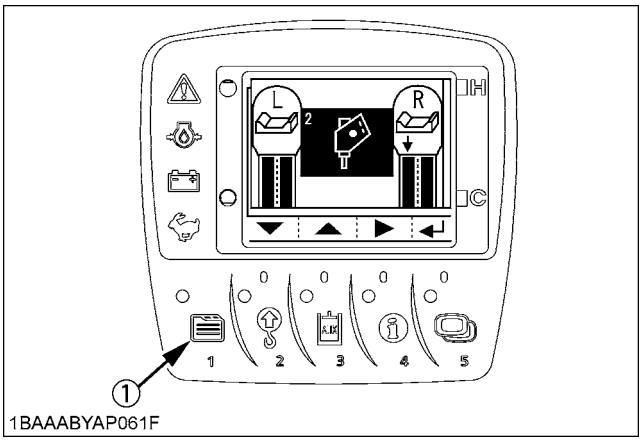

(1) Switch 1

◆ **AUX port MAX. Flow volume**

	Thumb port 1	AUX 1 port
MAX. flow volume (Theoretical L(US gal) / min)	67 (17.7)	100 (26.4)
MAX. pressure MPa (kgf/cm²) [psi]	20.6 (210) [2987]	

IMPORTANT :
- When the AUX port is not used for a long period, dirt particles can settle in the lower part of the AUX port lines. When the plugs on the AUX port lines are removed to connect attachments, drain approx. 100 cc (3.4 oz) of oil before making connections.

https://truckmanualshub.com/

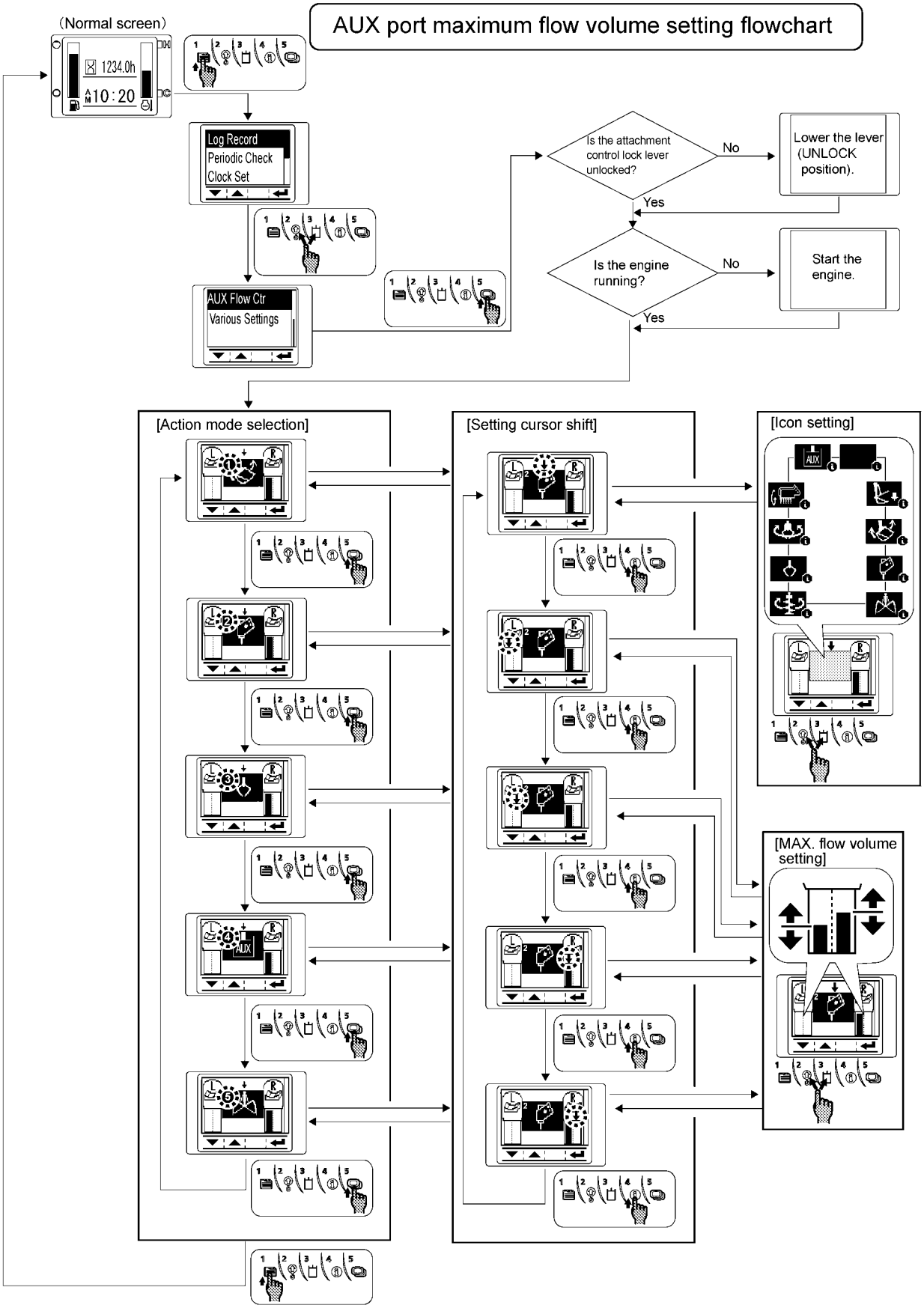

https://truckmanualshub.com/

■How to Resume the AUX Setting While Processing the DPF Regeneration

When the automatic regeneration process of DPF gets started with the AUX port in use, the warning (A) is displayed on the LCD. The indicator (B) turns off, however, the operator can continue to use the AUX port function. To resume the AUX port settings while the warning is displayed, follow the procedure.

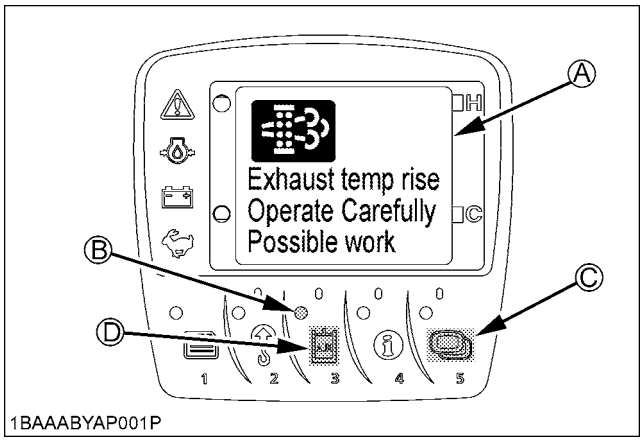

(A) Warning
(B) Indicator
(C) Switch 5
(D) Switch 3

1. The indicator turns off, and the warning appears on the LCD.
2. Press the switch 5.
3. The warning disappears temporarily and the normal display shows up again.
4. Press the switch 3 to continue to set the AUX settings as usual.

Even when the warning temporarily disappears according to the above procedure, however, the warning reappears in a certain period of time during the automatic regeneration.

NOTE :
- While a warning message like as “Raise up engine speed.” is on the LCD, operator is requested to take directive procedure and take above procedure if operator require to continue to set AUX setting.

HOW TO RELEASE PRESSURE TRAPPED IN THE HYDRAULIC SYSTEM

WARNING

To avoid personal injury or death:
- **Relieve residual hydraulic pressure immediately after the engine has stopped.**

1. Lower the attachments and the blade down to the ground.
2. Turn the key to "STOP" position and shut off the engine.
3. After stopping the engine, turn the key to "RUN" position.
4. Set the pilot control lock lever to "UNLOCK" position.

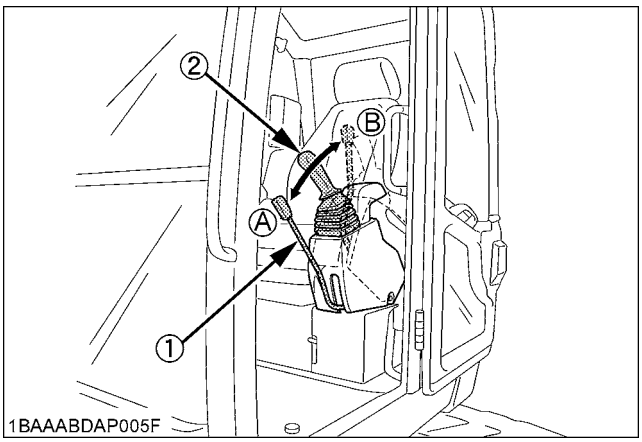

(1) Pilot control lock lever
(2) Attachment control lever (left)
(A) "UNLOCK"
(B) "LOCKED"

5. Move the operating lever to release pressure in the hydraulic system.

[How to release pressure trapped in the AUX port]
1. Perform the above operations of 1 to 4.
2. Turn "ON" the AUX port enable switch.

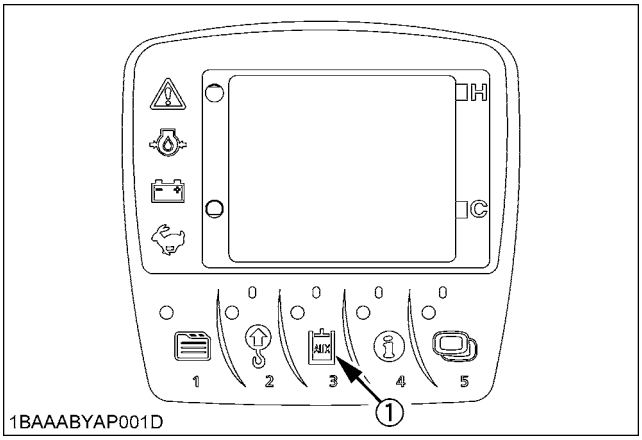

(1) AUX port enable switch (Switch 3)

https://truckmanualshub.com/

3. Press the switch 4 to make sure that the flow volume in all the AUX ports is not minimized.
   If the pressure is removed after minimizing the flow volume in the AUX port, release pressure is not removed completely and the hose coupler may be unable to connect and disconnect.

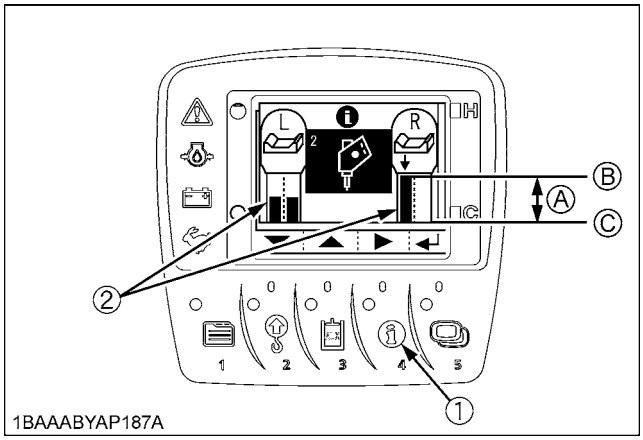

(1) Switch 4
(2) Flow volume in AUX port display
(A) Flow volume in AUX port
(B) Maximum
(C) Minimum

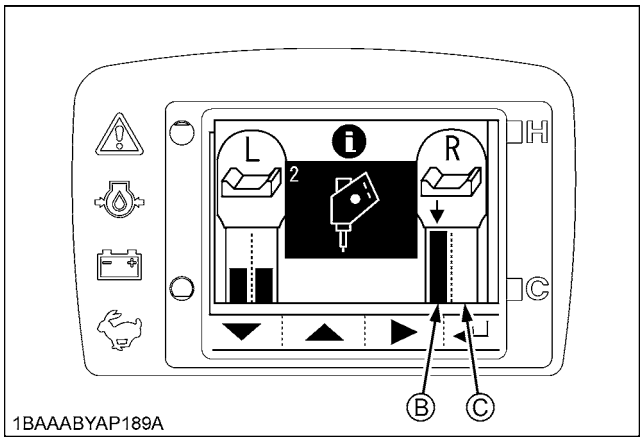

(B) Maximum status of flow volume in AUX port
(C) Minimum status of flow volume in AUX port

4. Move the AUX port knob mounted to the operating lever to the right and left to release pressure in the AUX port.

NOTE :
- There are two types of machine, one has the AUX port knobs mounted to the right and left operating levers, the other has the AUX port knob mounted to one operating lever.
  Make choice according to the type of machine.

ANGLE BLADE OPERATION

WARNING

To avoid personal injury or death:
- **Never jack up or lift the machine with the angle blade placed at an angle.**
  Stability of the machine is affected with the blade at an angle, keep at the neutral position.
  Before starting the job, position and keep the angle blade at the standard 0° marking (Refer to Figure (1)).
- **Do not work under the machine.**

1. Push the angle blade control switch to the right or left, and the angle dozer is placed at an angle.

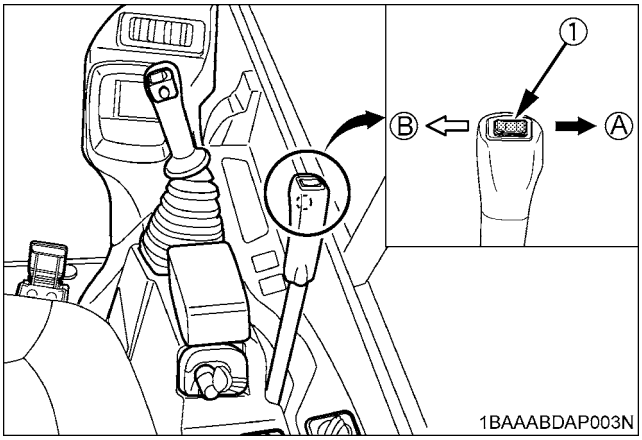

(1) Angle blade control switch
(A) Turn the right
(B) Turn the left

2. For the right-hand angle setting, push the angle blade control switch in direction (A). The angle blade will be placed at an angle toward (A).
3. For the left-hand angle setting, push the angle blade control switch in direction (B). The angle blade will be placed at an angle toward (B).

Figure (1)

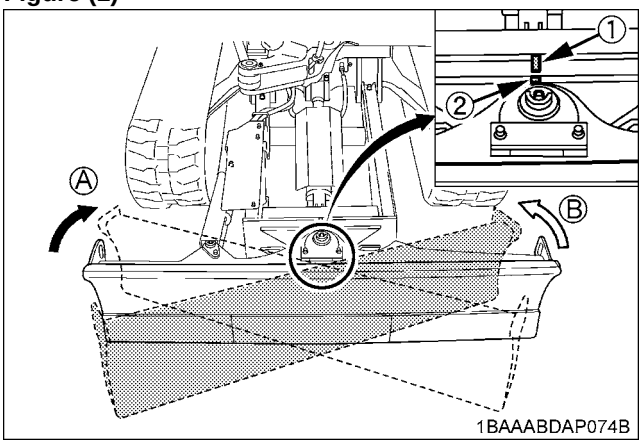

(1) Mark (red)
(2) Mark (red)
(A) Turn the right
(B) Turn the left

https://truckmanualshub.com/

1-way or 2-way CIRCUIT SELECTION VALVE OPERATION

A selection valve which selects 1-way or 2-way circuit of service port has been installed on the hydraulic tank.

1. When equipment which needs a 1-way circuit will be used, position the arrow, by using the supplied lever, on the axis of the selection valve to the 1-way circuit position, to reduce the back pressure.
2. When equipment which needs a 2-way circuit will be used, position the arrow on the axis of the selection valve to the 2-way circuit position.

NOTE :
- 1-way circuit..... HAMMER etc.
- 2-way circuit..... THUMB, TILT BUCKET, AUGER, GRAPPLE etc.

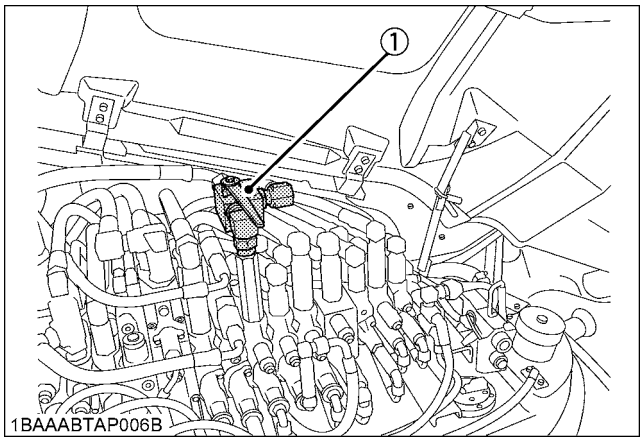

(1) Selection valve

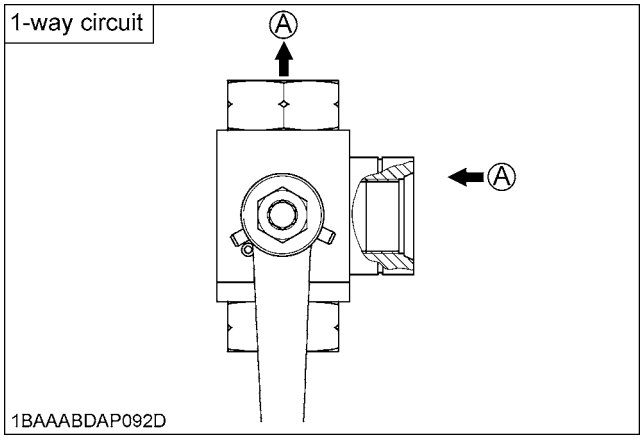

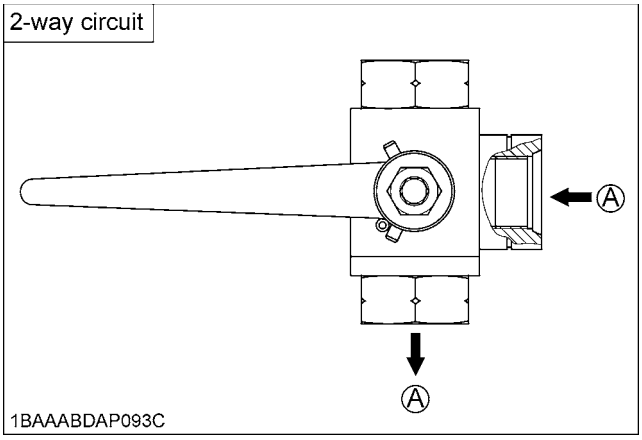

(A) Hydraulic flow

WARNING

To avoid personal injury or death:
- **Stop the engine before removing/changing the equipment.**
- **Release pressure in the hydraulic system before removing/changing the equipment. (See "HOW TO RELEASE PRESSURE TRAPPED IN THE HYDRAULIC SYSTEM".)**
- **Position the selection valve to the correct position (either 1-way or 2-way circuit selection) before mounting the equipment.**
- **Always select the correct valve position before mounting the equipment (1-way or 2-way circuit selection) to avoid sudden movement of the equipment.**

NOTE :
- Leaving the selection valve to 1-way circuit selection and attaching 2-way circuit equipment may cause the equipment to move (drop) suddenly due to its own weight, as the tank line remains open, even with the engine off.

https://truckmanualshub.com/

BOOM LOWERING VALVE

Use this valve if the engine fails to get started and the accumulator fails to operate and there is an urgent need to lower the boom.

WARNING

To avoid personal injury or death:

- **When the engine functions, move the control lever to lower the boom. Never use the boom lowering valve.**
- **Before starting this job, make sure there is nobody below the boom.**
- **Loosen the boom lowering valve plug slowly 360-degree turn at a time. Be careful not to loosen it a full turn or more at once because otherwise oil may squirt out accidentally.**

1. Make sure that the engine has stopped.
2. Open the fuel tank cover.
3. Loosen the boom lowering valve plug.

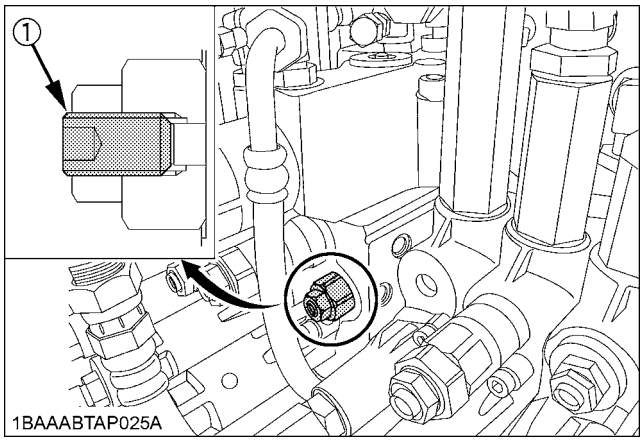

(1) Boom lowering valve plug

AUTO IDLE (AI) OPERATION

1. **Throttle potentiometer**
   With this potentiometer the operator can adjust the engine speed when the auto idle control is activated.
2. **Auto idle (AI) control switch**
   With this switch the auto idle control is turned on or off. The auto idle control allows the engine speed to drop to idle speed when the control levers are left in neutral for longer than four seconds. If the control is activated, the engine speed rises immediately to the preset rpm. If the auto idle is not activated the throttle potentiometer can be utilized to control engine speed in a similar way to a conventional throttle control lever.

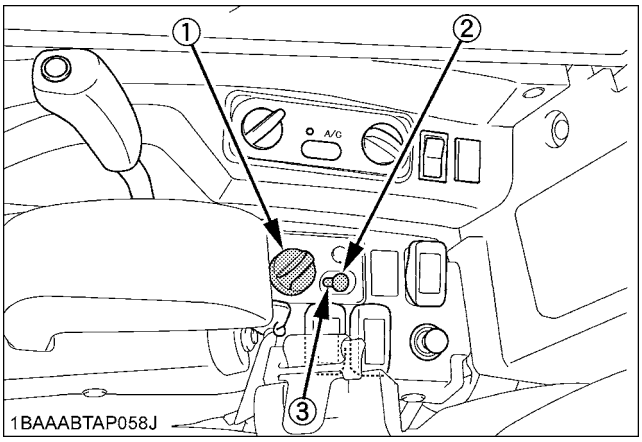

(1) Throttle potentiometer
(2) Auto idle control switch
(3) Auto idle lamp

IMPORTANT :

- It is possible that the auto idle may not function until hydraulic oil warms up in the cold weather. Therefore it is not recommended that the auto idle be activated until the machine is completely warmed up.

NOTE :

- Before operating the control lever, check the auto idle lamp.
- When operating in confined spaces or when loading onto a vehicle, turn the auto idle control switch off (lamp off). This is to prevent unwanted engine speed increases when control levers are activated.
- The auto idle control, when selected by a switch, provides the operator with a way to control engine speed without moving the throttle potentiometer, simply by not activating any control levers for about four seconds after stopping work, and then to simply restore a preset (by potentiometer) engine speed by activating any control lever to return to work.
- The purpose of the system is to reduce fuel consumption, noise and operator fatigue.
- When the dozer control lever is locked at the "Float" position on the angle blade type, the auto idle function is not activated even if any other control lever is set in the neutral position.

https://truckmanualshub.com/

ANTI-THEFT DEVICE (for Canada only, if equipped)

■Anti-Theft Device

If the machine is equipped with an anti-theft device, it allows you to start the engine with the registered key alone.
If a registered key is stolen, the stolen key can be unregistered. It prevents this key from starting the engine to protect the machine against theft.

With the key at "STOP", the "anti-theft indicator" stays on to tell that the anti-theft function is enabled. Be sure that this indicator is on before leaving the machine.

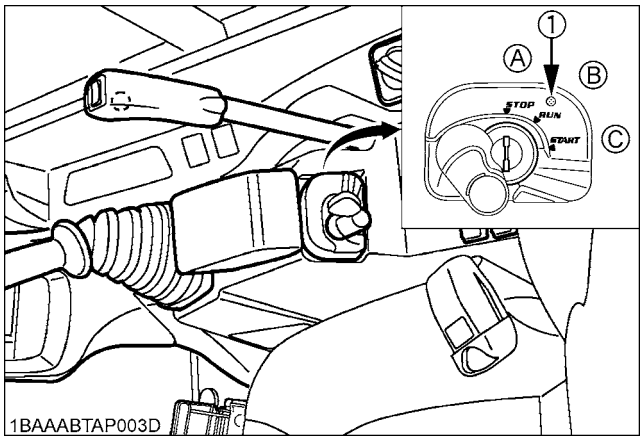

(1) Anti-theft indicator

(A) "STOP"
(B) "RUN"
(C) "START"

◆ **The machine comes with two different types of keys.**

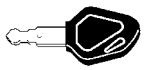 1BAABAUAP230D	Black key (individual key)	This key is used to start the engine. It is possible to start the engine as before by inserting the key and turning it to the **[START]** position. Registering a black key with the machine by using the red key will allow the black key to start the engine. A key not registered with the machine cannot be used to start the engine. ✻ Initially two keys including a spare key are supplied. The two accompanying keys have been already registered. Up to four keys can be registered.
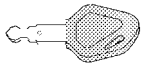 1BAABAUAP229E	Red key (registration key)	If a black key for starting the engine should be lost, the red key is used to register another black key with the machine. The engine cannot be started with this key. For the method of using the red key, refer to "How to register a black key with the machine".

◆ **How to register a black key (individual key) with the machine (When a black key is lost)**

WARNING

To avoid personal injury or death:

- **Before programming an anti-theft key, be sure to sit on the operator's seat and make sure all the control levers are in the "Neutral" position. If this is neglected, the machine may start moving as soon as the engine is started, which could lead to a dangerous situation.**
- **The exhaust gas from the engine includes harmful substances such as carbon monoxide. Be careful not to make this setting in a room where the exhaust gases easily build up or in an ill-ventilated place.**

https://truckmanualshub.com/

1. Insert the red key into the key switch.
   (*Do not turn the inserted key. If the key is turned to the **"RUN"** position, return it to the **"STOP"** position.)

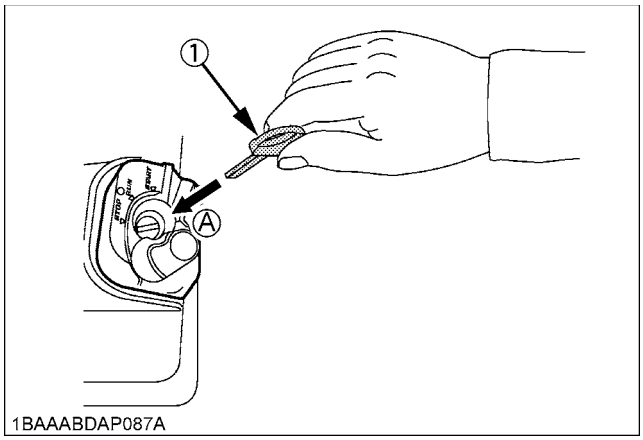

(1) Red key (A) Insert

2. Press the display selector switch once and the message **"Pull out key"** appears on the LCD.

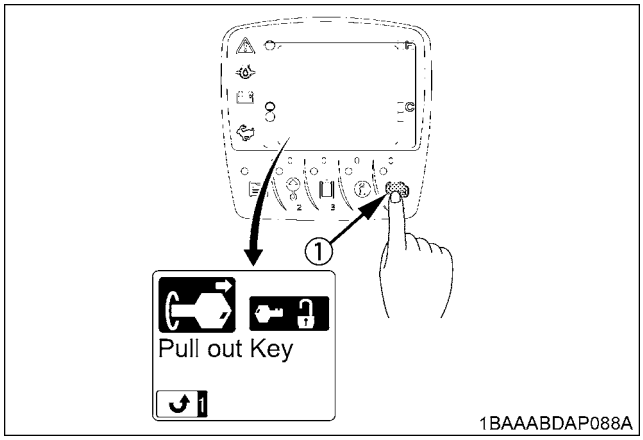

(1) Display selector switch

3. Pull out the red key from the key switch, and then the message **"Insert the key"** appears on the LCD display.

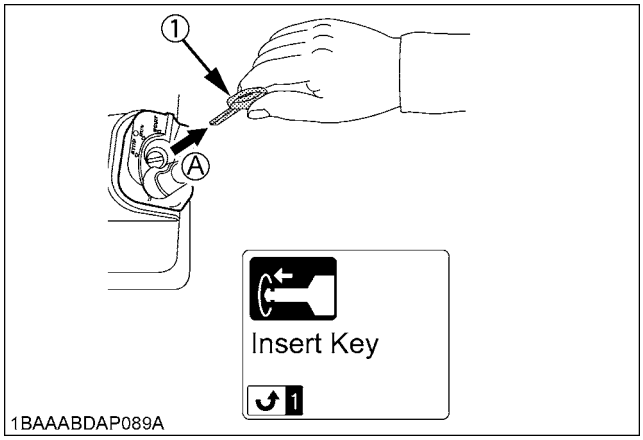

(1) Red key (A) Pull out

4. Insert the black key into the key switch.
   (* Do not turn the inserted key. If the key is turned to the **"RUN"** position, return it to the **"STOP"** position and return to the step 1.) Then the message **"Pull out black key"** appears on the meter panel after a while. With this message displayed, the black key has been registered with the machine.

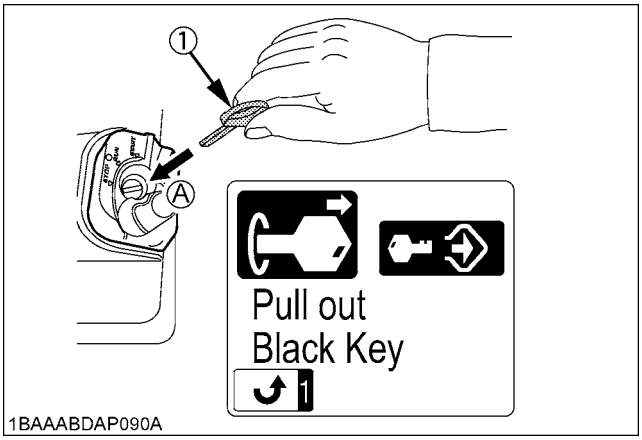

(1) Black key (A) Insert

5. When all registration operation has been finished, push the user setting switch.

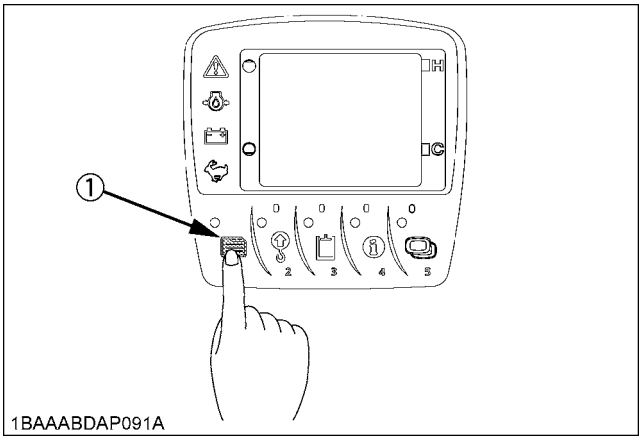

(1) User setting switch

https://truckmanualshub.com/

NOTE :
- If a registered black key is stolen or lost, re-register the remaining black key. When re-registering is performed, the stolen or lost black key is unregistered and it becomes impossible to start the engine with that key.
- If the red key is stolen or lost, it becomes impossible to register or re-register a black key (for starting the engine) and the peripheral devices should be replaced. Therefore store the red key with great care. If by any chance it gets lost, promptly contact your dealer or a Kubota-designated service factory.
- Use the Kubota-specified key ring to hold the black key or the red key. Any unspecified key rings may interfere with the signal transfer between the key and the key switch, possibly failing to start the engine or to register a key properly.
- Do not bundle two or more keys when using them. Doing so may cause electric wave interference, possibly failing to start the engine.
- Cut and remove the ring that is used to bundle the keys at the time of delivery. (If the keys remain bundled, the engine may start with the red key or re-registering could not be performed properly.)
- If an unregistered key is inserted and turned more than six times for one minute, the alarm sounds for 30 seconds. (The alarm keeps sounding even if the key is drawn out.)

∗ Insert and turn on the registered key, and the alarm stops itself.

- If something is wrong with the machine, immediately contact your dealer and have the machine inspected and repaired.

For Canada (FCC / IC)

FCC WARNING
- Changes or modifications not expressly approved by the party responsible for compliance could void the user's authority to operate the equipment.
- This device complies with Part 15 of the FCC Rules and RSS- Gen of the IC rules.
  Operation is subject to the following two conditions : (1) this device may not cause harmful interference, and (2) this device must accept any interference received, including interference that may cause undesired operation.

NOTE :
- If a black key is inserted that was previously registered, **"Registered"** is displayed on the LCD screen and registering will not be performed.

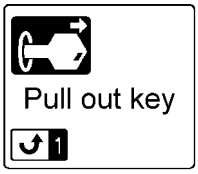

1BAABBLAP259C

- If you try to register the fifth black key, **"STOP Register"** is displayed on the LCD screen and registering cannot be performed.

1BAABBLAP264C

- In some cases, the engine may fail to get started. The following messages appear according to the situations.
  (1) Key is being authenticated

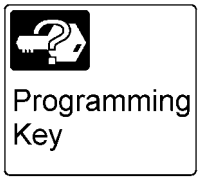

1BAABBLAP231H

(2) Starting with the red key

1BAABBLAP233G

(3) Starting with the non registered key (of other model)

1BAABBLAP233D

https://truckmanualshub.com/

IMPORTANT INFORMATION ON EXCAVATOR OPERATION

- Do not try to crush concrete or boulders using side swings with the bucket. Also avoid using side sweeps of the bucket to move earth piles.
- Under all circumstances avoid the following operations:
  - Excavation using the gravitational impact of the machine.
  - Compacting of gravel or soil using the dropping action of the bucket.
  - Excavation using the traveling power of the machine.
- Do not try to drop or shake off soil adhering to the bucket in the manner given in the points below. This can cause damage to the machine. Adhering soil can be shaken off when the bucket is being emptied by moving the bucket out to the maximum stroke of the cylinder. Should this not suffice, swing out the arm as far as possible and operate the bucket back and forth.
- Do not hit the dozer with the boom cylinder!
  Make sure that the boom cylinder does not hit the dozer when doing deep excavation. If necessary swing around so that the dozer is in the back of the machine.
- Pay attention when pulling in the bucket!
  When pulling in the bucket (for driving or transportation) avoid hitting the dozer.
- Avoid collisions!
  When moving the excavator, pay attention that the dozer does not collide with obstructions such as boulders etc... Such collisions shorten the life of the dozer and the cylinder substantially.
- Support the machine correctly!
  When stabilizing the machine with the dozer, lower the dozer to engage the full width on the ground.
- If the water or mud level reaches higher than the top of the tracks, the swivel bearing, swivel motor gear and ring gear may be exposed to mud, water and other foreign objects. The excavator must be properly pressure washed after each use.
  - Thoroughly clean the area around the swivel bearing, swivel motor gear and ring gear to remove foreign objects.
  - Inspect the swivel motor oil sump (if equipped) for water contamination. If water is present, refer to operator's manual for lubricant replacement procedure.
  - Refer to operator's manual for proper swivel bearing, swivel motor gear and ring gear lubrication procedures.
  - Reinstall any protective covering if removed earlier.
- Avoid applying excessive load with cylinders fully extended, or the machine easily gets damaged.
- When relieving the residual pressure, do it immediately after the engine has stopped.

https://truckmanualshub.com/

TRANSPORTING THE EXCAVATOR ON A VEHICLE

DANGER

To avoid serious injury or death:

- **No directional changes should be made when the excavator is on the ramp. Should a change of direction be necessary, drive off the ramp completely and make the turn.**
- **When driving forwards or backwards onto the vehicle, or when swinging the upper body, make sure that neither the CAB or the gates of the vehicle will be damaged.**

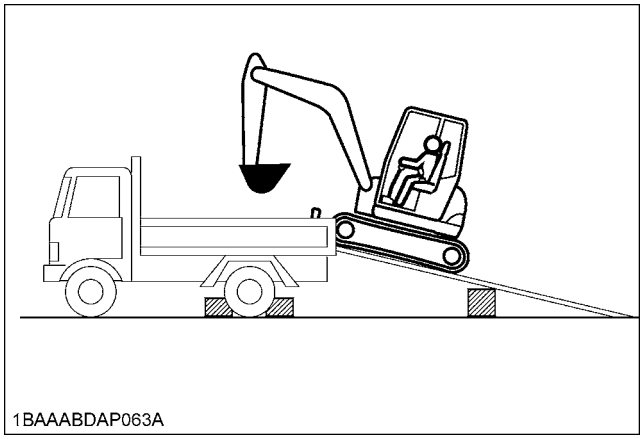

1BAAABDAP063A

- **When the excavator reaches the point between the ramps and the bed, halt and then move very slowly until the excavator reaches the horizontal position.**
- **Move the excavator onto the vehicle only with the arm completely pulled in.**
- **Do not jack up the machine using its boom to load or unload the excavator from the vehicle. Doing this is dangerous. Otherwise the CAB of the vehicle could be damaged when swinging around the upper body.**
- **Make sure the ramps are of sufficient capacity and securely connected to the vehicle to support the machine safety throughout the loading / unloading operation.**

■ Transporting on a Truck

WARNING

To avoid personal injury or death:

- **After loading the machine on the truck, lower the bucket and dozer onto the truck bed.**

Prepare a platform to load or unload the excavator. Take following steps when using ramps.

1. Apply the parking brakes of the vehicle, and block the drive wheels from both sides.

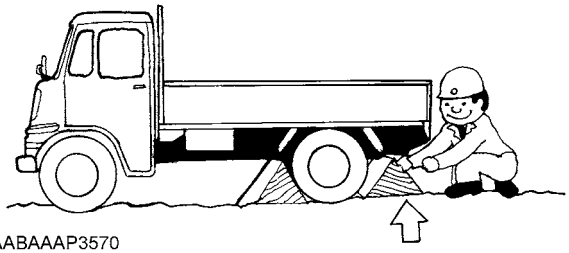

1BAABAAAP3570

2. Use mounting brackets to secure the ramp properly. Connect the ramps directly with the bed.

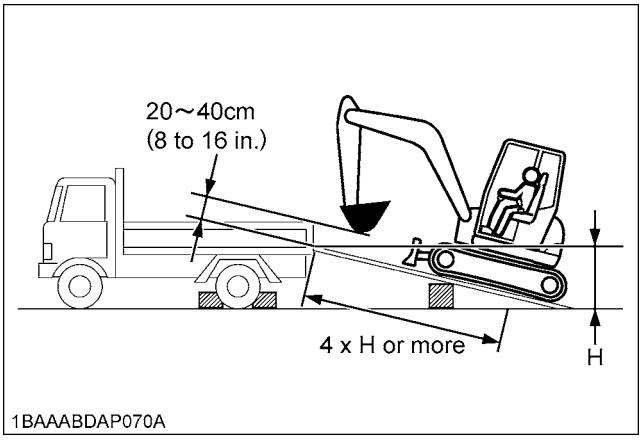

1BAAABDAP070A

https://truckmanualshub.com/

3. For additional safety, use blocks or supports under the ramps and the bed.

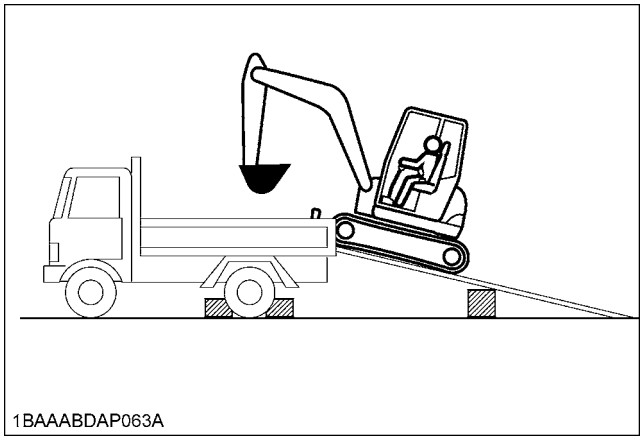

4. Completely align the ramps and the tracks and then drive the excavator slowly up the ramps. After ensuring that the tracks are completely on the bed, swing the upper body around to the back of the vehicle.
5. Lower the dozer onto the bed.
6. Pull in the bucket and arm completely. Then lower the boom.
7. Stop the engine, release pressure trapped in the hydraulic system and remove the key.
8. Raise the pilot control lock lever.
9. Block the tracks with blocks and tie down the excavator.

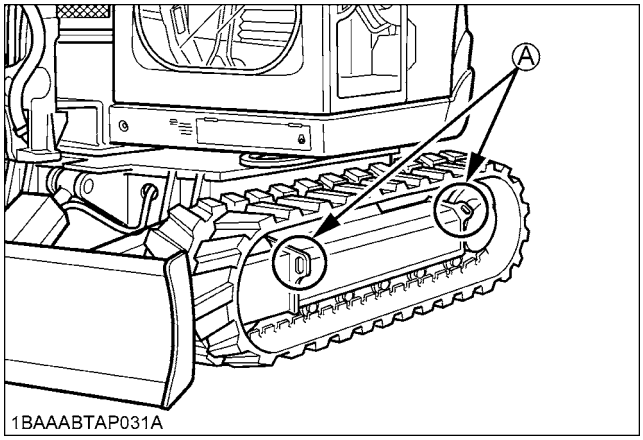

(A) Tie down point

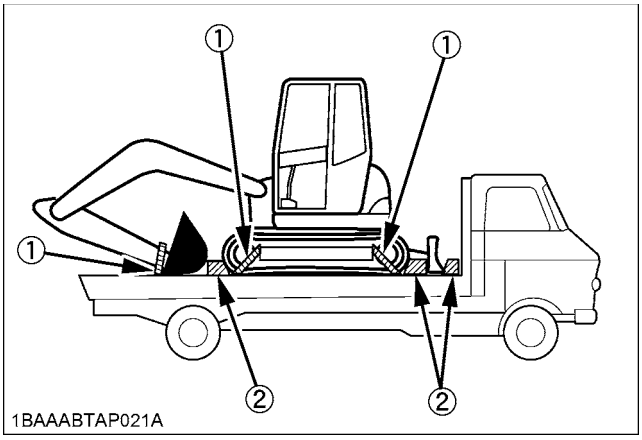

(1) Chain
(2) Block

■ Towing the machine

WARNING

To avoid personal injury or death:

- **When towing the excavator or pulling a load must be less than the strength of the towing line attached to excavator. Not to be used for tie-down or lifting the machine.**
- **Towing is only allowed over a short distance and at walking speed.**

1. Attach the tow bar or towing rope to the hook on the excavator and to the pulling vehicle. The tow bar should be mounted at a right angle to the vehicles.
2. The operator must be seated during the recovery procedure.
3. Drive slowly with the tractive vehicle to avoid abrupt loads.

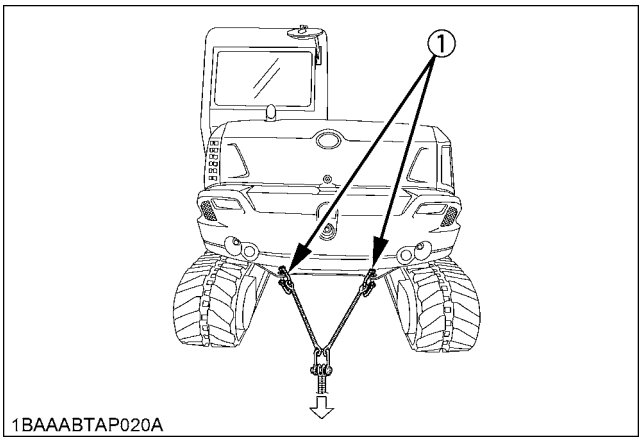

(1) Hook

https://truckmanualshub.com/

LIFTING OF THE EXCAVATOR

DANGER

To avoid serious injury or death:

- **The correct instructions for safe handling are described here. Read these instructions carefully before moving the machine. Make sure that the operating personnel read the operator's manual carefully.**

■ Basics when Lifting with Cables or Straps

1. The lifting and crane operation is to be undertaken according to the safe operation guidelines described.
2. The equipment used for lifting mentioned in these instructions are only given as reference, the standards concerning strength, control and other details are based on the respective applicable guidelines.

■ Safety Aspects when Lifting with Cables or Straps

Abide by following steps when lifting:

1. Do not lift loads that exceed the maximum load capacity of the crane.
2. Choose correct equipment suitable to the weight, size and form of the load.
3. First assess the center of gravity of the load, position the hook directly over the load and lift the load so that the center of gravity of the load is as low as possible.
4. The steel cables or straps must be fixed in the middle of the hook.
5. The load must be lifted vertically from the ground.
6. Do not enter the working area under suspended loads and do not move the load over people. The load must only be moved in an area where the balance can be easily maintained.

■ Lifting Procedure for the Excavator

WARNING

To avoid personal injury or death:

- **Do not use the hooks on the roof of canopy and CAB for lifting the excavator.**
- **Never lift the machine with the angle blade placed at an angle.**
- **The excavator may only be lifted at the points provided. Do not attach the lifting gear to any other eyes or areas as this can lead to substantial damage.**

◆ General guidelines for lifting

1. Lifting position. (see illustration below)
   (1) Pull in the boom completely towards rear.
   (2) Pull in the arm completely.
   (3) Pull in the bucket completely.
   (4) Adjust the swing angle to the center. (to bring the boom in a position parallel to the machine frame)
   (5) Swing frame so that dozer blade is to the rear and frame is parallel with tracks.
   (6) Raise the dozer blade fully.

2. Attaching the steel cables or straps.
   (1) Always hook the excavator at three points. (one on the boom and left and right of the dozer)
   (2) Always use a shackle on each lifting hole when attaching the cables or straps.
   (3) Using protective material at all places where the cables or straps contact the machine.
   (4) Keep the angle between the front and rear cables or straps within 55° (0.96 rad.).

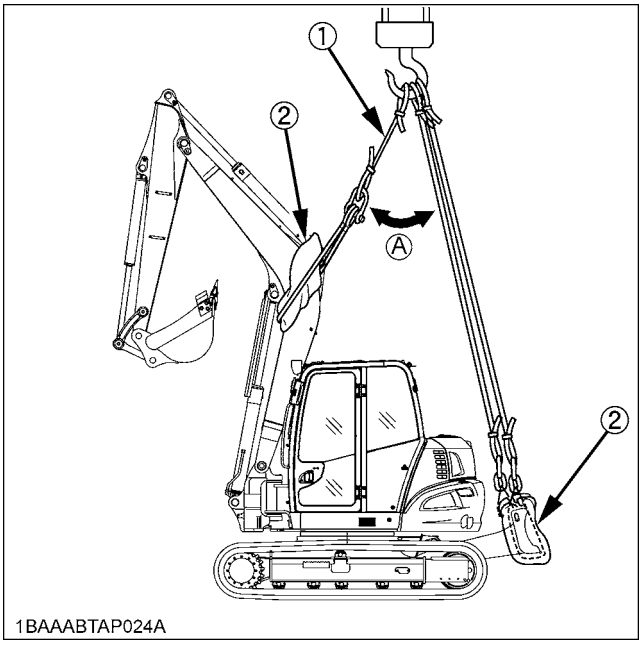

(1) Cable or strap
(2) Protective material
(A) 55° or less

NOTE :

- While lifting, carefully keep the machine well balanced with its center of gravity in mind.
- Do not lift the machine with the boom swinging or the upper structure swiveling.

https://truckmanualshub.com/

3. Tackle
   The weights of the excavators and the recommended tackle for lifting these loads are mentioned in the following table. Choose components having enough strength.

Excavator Weight*	8875 kg (19566 lbs)
Load / Cable	32.7 kN (7351 lbf)
Minimum Wire Diameter (Safety factor=6)	22.4 mm (0.88 in.) or more

*Excavator Weight: With CAB, steel tracks.
Steel wire: 6X24

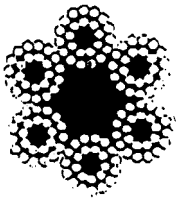

1AAABANAP034A

4. Lifting
   (1) Lift slowly and safely
   (2) Do not enter the excavator area when lifting.
   (3) Lift the excavator horizontally. (Modify cable or strap connections according to needs)

Maximum strength
for example: (JIS G 35 25) - "6X24"

Diameter	zinc-plated	not zinc-plated
14 mm (9/16)	89.7 kN (20165 lbf)	96.6 kN (21717 lbf)
16 mm (5/8)	117 kN (26303 lbf)	126 kN (28326 lbf)
18 mm (45/64)	148 kN (33272 lbf)	160 kN (35969 lbf)
20 mm (3/4)	183 kN (41140 lbf)	197 kN (44287 lbf)
22.4 mm (-)	230 kN (51706 lbf)	247 kN (55528 lbf)

https://truckmanualshub.com/

MAINTENANCE

MAINTENANCE INTERVALS

No.	Check points		Measures	Hour meter indicator									Intervals	Ref. page		
				50	100	150	200	250	300	350	400	450				
1	Coolant		check	Daily check										67		
			change										every 2 years	88		
2	Fuel		check	Daily check										68		
3	Engine oil		check	Daily check										68		
			change										every 500 hrs	80		
4	Hydraulic oil		check	Daily check										69		
			change										every 1000 hrs	84		
5	Grease front attachments	Bucket and bucket link pin / Dozer angle pin and angle cylinder boss	-	Daily check										71		
		Boom swing fulcrum	-		○		○		○		○		every 100 hrs	74		
		Others	-					○					every 250 hrs	79		
6	Radiator and oil cooler		check	Daily check										70		
7	Washer liquid		check	Daily check										70		
8	Engine and electrical wiring		check	Daily check										70		
9	Water separator		drain	○	○	○	○	○	○	○	○	○	every 50 hrs	72		
10	Fuel tank		drain	○	○	○	○	○	○	○	○	○	every 50 hrs	72		
11	Battery condition		check	○	○	○	○	○	○	○	○	○	every 50 hrs	73		
12	Greasing swing bearing teeth		-	○	○	○	○	○	○	○	○	○	every 50 hrs	74		
13	V-belt tension		check	Daily check										69		
			adjust				○				○		every 200 hrs	75		
14	Radiator hoses and clamps		check				○				○		every 200 hrs	76		
			replace										every 2 years	88		
15	Air filter element	Outer element	clean				○				○		every 200 hrs	77	*2	@
			replace										every 1000 hrs	86	*2	
		Inner element	replace										every 1000 hrs	86	*2	
16	Greasing swing ball bearing		-				○				○		every 200 hrs	76		
17	Fuel filter cartridge		replace										every 500 hrs	82		@
18	Engine oil filter		replace										every 500 hrs	81		
19	Drive unit oil		change	◉									every 500 hrs	81		
20	Hydraulic return filter cartridge		replace					◉					every 500 hrs	82		
21	Water separator filter element		replace										every 500 hrs	83		
22	Hydraulic suction filter element		replace										every 1000 hrs	84	*4	
23	Filter in the pilot hydraulic system		replace										every 1000 hrs	84	*4	
24	Engine valve clearance		check										every 1000 hrs	86	*4	
25	Injector tip		check										every 1500 hrs	87	*4	
26	Oil separator element		replace										every 1500 hrs	87	*4	
27	EGR cooler		check										every 1500 hrs	87	*4	

∗ 500 thru 1000 continued to the following table.

https://truckmanualshub.com/

No.	Check points		Measures	Hour meter indicator								Intervals	Ref. page		
				500	550	600	650	700	750	800	1000				
1	Coolant		check	Daily check									67		
			change									every 2 years	88		
2	Fuel		check	Daily check									68		
3	Engine oil		check	Daily check									68		
			change	○							○	every 500 hrs	80		
4	Hydraulic oil		check	Daily check									69		
			change								○	every 1000 hrs	84		
5	Grease front attachments	Bucket and bucket link pin / Dozer angle pin and angle cylinder boss	-	Daily check									71		
		Boom swing fulcrum	-	○		○		○		○	○	every 100 hrs	74		
		Others	-	○					○		○	every 250 hrs	79		
6	Radiator and oil cooler		check	Daily check									70		
7	Washer liquid		check	Daily check									70		
8	Engine and electrical wiring		check	Daily check									70		
9	Water separator		drain	○	○	○	○	○	○	○	○	every 50 hrs	72		
10	Fuel tank		drain	○	○	○	○	○	○	○	○	every 50 hrs	72		
11	Battery condition		check	○	○	○	○	○	○	○	○	every 50 hrs	73		
12	Greasing swing bearing teeth		-	○	○	○	○	○	○	○	○	every 50 hrs	74		
13	V-belt tension		check	Daily check									69		
			adjust			○				○	○	every 200 hrs	75		
14	Radiator hoses and clamps		check			○				○	○	every 200 hrs	76		
			replace									every 2 years	88		
15	Air filter element	Outer element	clean			○				○	○	every 200 hrs	77	*2	@
			replace								○	every 1000 hrs	86	*2	
		Inner element	replace								○	every 1000 hrs	86	*2	
16	Greasing swing ball bearing		-			○				○	○	every 200 hrs	76		
17	Fuel filter cartridge		replace	○							○	every 500 hrs	82		@
18	Engine oil filter		replace	○							○	every 500 hrs	81		
19	Drive unit oil		change		○							every 500 hrs	81		
21	Water separator filter element		replace	○							○	every 500 hrs	83		
20	Hydraulic return filter cartridge		replace						○			every 500 hrs	82		
22	Hydraulic suction filter element		replace								○	every 1000 hrs	84	*4	
23	Filter in the pilot hydraulic system		replace								○	every 1000 hrs	84	*4	
24	Engine valve clearance		check								○	every 1000 hrs	86	*4	
25	Injector tip		check									every 1500 hrs	87	*4	
26	Oil separator element		replace									every 1500 hrs	87	*4	
27	EGR cooler		check									every 1500 hrs	87	*4	

https://truckmanualshub.com/

No.	Check points	Measures	Hour meter indicator									Intervals	Ref. page		
			50	100	150	200	250	300	350	400	450				
28	Front idler and track roller oil	change										every 2000 hrs	87	*4	
29	Alternator and starter motor	check										every 2000 hrs	87	*4	
30	EGR system	check										every 3000 hrs	87	*4	
31	Turbo charger	check										every 3000 hrs	87	*4	
32	Boost sensor and AFS (Air Flow Sensor)	check										every 1 year	87	*4	
33	Condition of DPF muffler	check										every 1 year	87	*4	
34	DPF differential pressure sensor and piping for gas leak	check										every 1 year	87	*4	
35	DPF exhaust gas temperature sensor	check										every 1 year	87	*4	
36	EGR and piping for gas leak	check										every 1 year	87	*4	
37	Radiator system	rinse										every 2 years	88	*4	
38	Fuel line and Intake air line	check				○				○		every 200 hrs	78		@
		replace										every 2 years	90	*3	
39	Oil separator rubber hose	replace										every 2 years	90	*4	
40	DPF differential pressure sensor rubber piping (front and back)	replace										every 2 years	90	*4	
41	Suction pipe downstream the AFS	replace										every 2 years	90	*4	
42	Boost sensor pressure rubber piping	replace										every 2 years	90	*4	
43	EGR cooler hose	replace										every 2 years	90	*4	
44	DPF	clean										service as required	91	*4	

∗ 500 thru 1000 continued to the following table.

https://truckmanualshub.com/

No.	Check points	Measures	Hour meter indicator								Intervals	Ref. page		
			500	550	600	650	700	750	800	1000				
28	Front idler and track roller oil	change									every 2000 hrs	87	*4	
29	Alternator and starter motor	check									every 2000 hrs	87	*4	
30	EGR system	check									every 3000 hrs	87	*4	
31	Turbo charger	check									every 3000 hrs	87	*4	
32	Boost sensor and AFS (Air Flow Sensor)	check									every 1 year	87	*4	
33	Condition of DPF muffler	check									every 1 year	87	*4	
34	DPF differential pressure sensor and piping for gas leak	check									every 1 year	87	*4	
35	DPF exhaust gas temperature sensor	check									every 1 year	87	*4	
36	EGR and piping for gas leak	check									every 1 year	87	*4	
37	Radiator system	rinse									every 2 years	88	*4	
38	Fuel line and Intake air line	check									every 200 hrs	78		@
		replace			○				○	○	every 2 years	90	*3	
39	Oil separator rubber hose	replace									every 2 years	90	*4	
40	DPF differential pressure sensor rubber piping (front and back)	replace									every 2 years	90	*4	
41	Suction pipe downstream the AFS	replace									every 2 years	90	*4	
42	Boost sensor pressure rubber piping	replace									every 2 years	90	*4	
43	EGR cooler hose	replace									every 2 years	90	*4	
44	DPF	clean									service as required	91	*4	

https://truckmanualshub.com/

◆ Air-conditioner

No.	Check points	Measures	Hour meter indicator									Intervals	Ref. page		
			50	100	150	200	250	300	350	400	450				
1	Air filter	clean				○				○		every 200 hrs	78	*2	
		replace										every 1000 hrs	-	*2	
2	Air conditioner condenser	clean				○				○		every 200 hrs	79		
3	Air conditioner pipes and hoses	check										every 1 year	87		
		replace										every 2 years	88		
4	Refrigerant (gas)	check										service as required	90	*4	

No.	Check points	Measures	Hour meter indicator								Intervals	Ref. page		
			500	550	600	650	700	750	800	1000				
1	Air filter	clean			○				○	○	every 200 hrs	78	*2	
		replace								○	every 1000 hrs	-	*2	
2	Air conditioner condenser	clean			○				○	○	every 200 hrs	79		
3	Air conditioner pipes and hoses	check									every 1 year	87		
		replace									every 2 years	88		
4	Refrigerant (gas)	check									service as required	90	*4	

IMPORTANT :

◉ First operation

*1 When using a hydraulic hammer, change hydraulic oil and return filter according to the table on "Hydraulic Oil Change (Including Exchange of the Suction Filter in the Hydraulic Tank) under "EVERY 1000 SERVICE HOURS" in the chapter "REGULAR CHECKS AND MAINTENANCE WORK".

*2 Clean and replace the air filter more frequently if used under dusty conditions. When the filter is very dirty from dusty conditions, replace the filter.

*3 Replace only if necessary.

*4 Consult your local KUBOTA Dealer for this service.

- The items listed above (@ marked) are registered as emission related critical parts by KUBOTA in the U.S.EPA non-road emission regulation. As the engine owner, you are responsible for the performance of the required maintenance on the engine according to the above instruction. Please see the Warranty Statement in detail.
- When using biodiesel, be sure to check the maintenance requirements of biodiesel fuel as the intervals will change in some of the items.

https://truckmanualshub.com/

OPENING AND CLOSING OF COVERS

■Opening/Closing of the Fuel Tank Cover

Insert the key into the key slot and turn it clockwise to unlock it. Then press the button to open the tank cover.
To close it, lower the tank cover and push it tightly.
Turn the key counterclockwise to lock the tank cover.

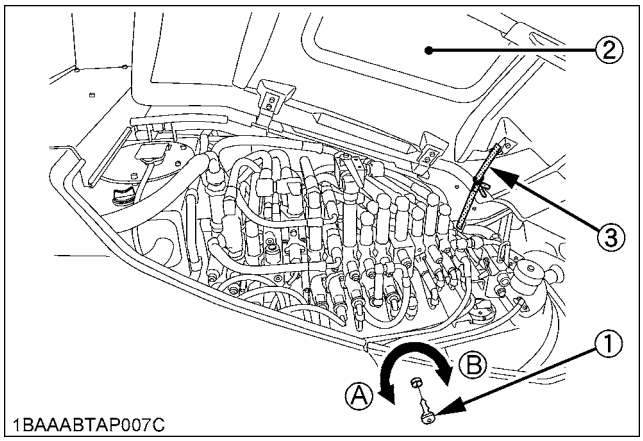

(1) Key
(2) Tank cover
(3) Stay
(A) "LOCK"
(B) "UNLOCK"

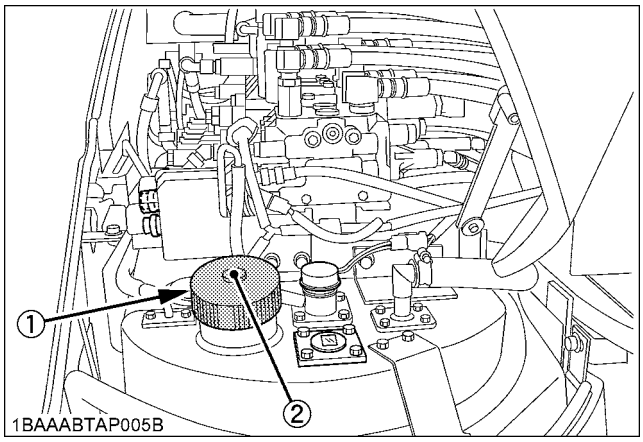

(1) Fuel tank cap
(2) Air vent

■Opening/Closing of the Engine Hood

WARNING

To avoid personal injury or death:

- **Do not open the engine hood with the engine running unless in an emergency.**
- **Do not touch the exhaust muffler or the exhaust pipe; serious burns can occur.**

Insert the key into the key slot and turn it clockwise to unlock it. And pull the catch to open the hood.
To close the hood, push down it until it locks automatically.
Turn the key counterclockwise to lock the hood.

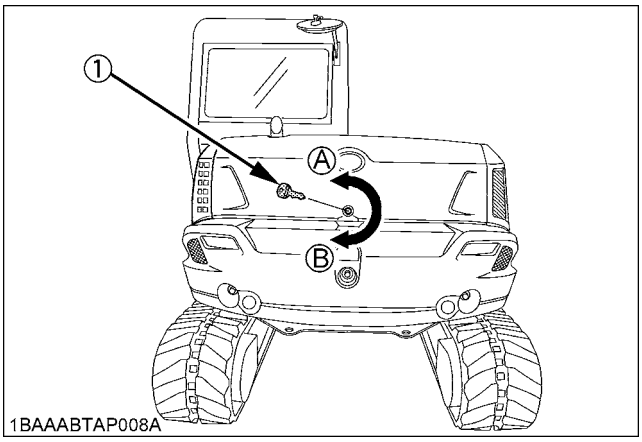

(1) Key holed
(A) "LOCK"
(B) "UNLOCK"

■Opening/Closing of the Side Cover

1. Open the engine hood.
2. Raise the catch lever to unlock the side cover.
3. Push the side cover all the way forward, and it will be held by a link.
4. To close it, pull the side cover all the way back, and pull down the catch lever to lock the side cover.

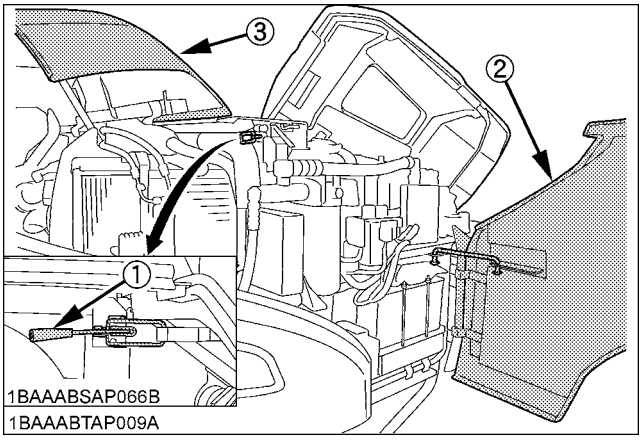

(1) Catch lever
(2) Side cover
(3) Engine hood

https://truckmanualshub.com/

■Where to store the Tool

1. Open the front cover.
2. Store the tools in the storage box.

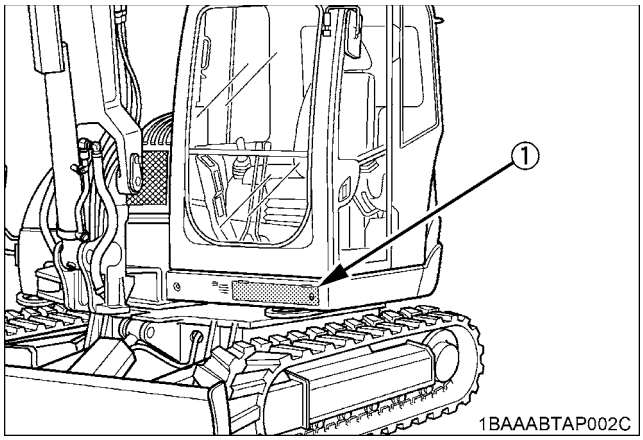

(1) Box for storage

■Cup Holder

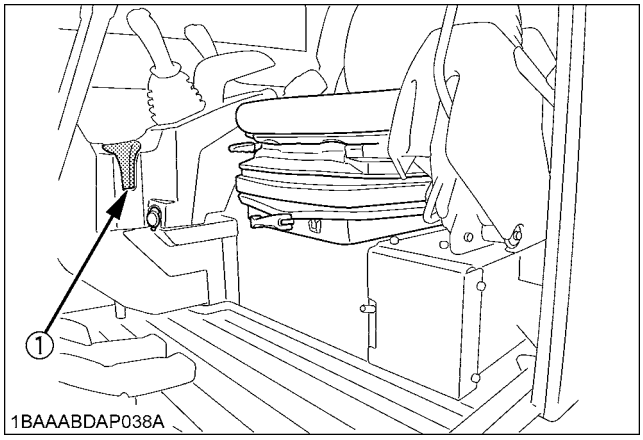

(1) Cup holder

■Where to store the Grease Gun

1. Open the side cover.
2. Store grease gun.

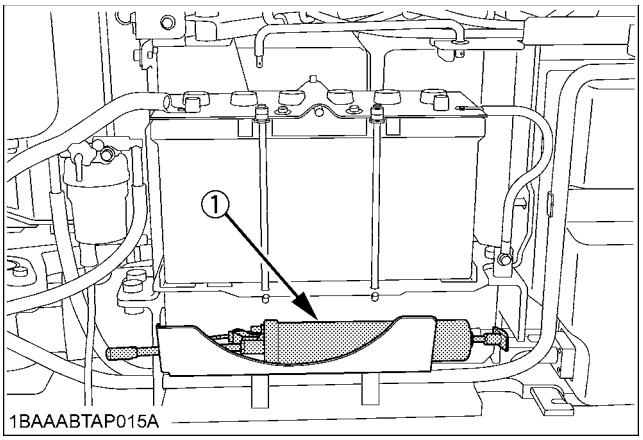

(1) Grease gun storage

Take note storage direction of greased gun in above illustration.

■Where to keep Operator's Manual

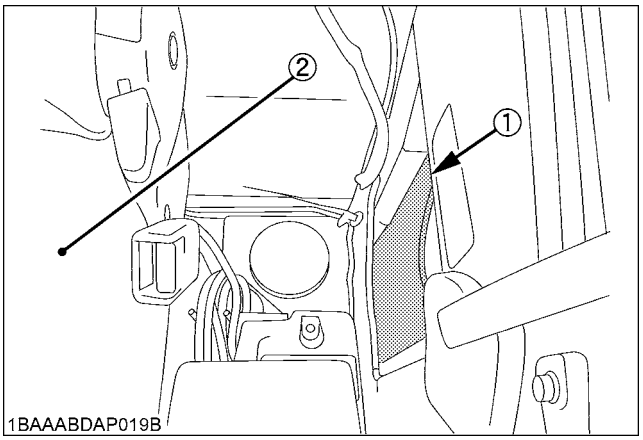

(1) Operator's manual storage
(2) Seat

https://truckmanualshub.com/

■Utility Box

1. Open the rear cover.

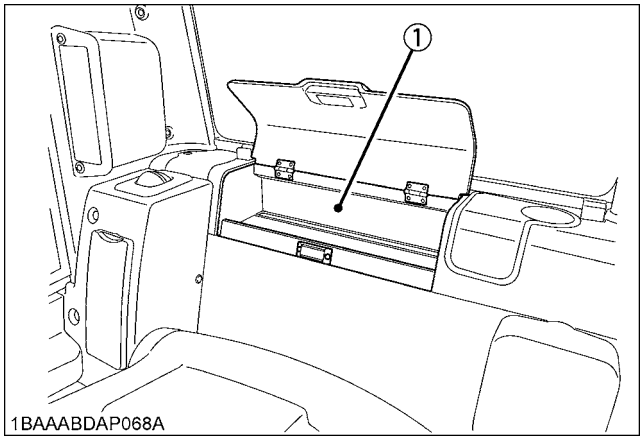

(1) Utility box

■Where to Store the Fire Extinguisher

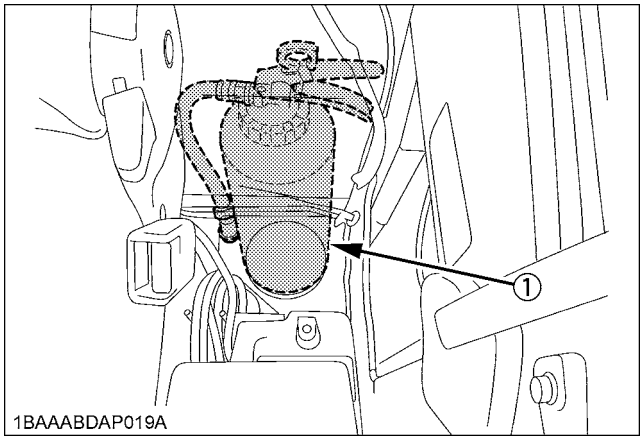

(1) Fire extinguisher

DAILY CHECKS

WARNING

To avoid personal injury or death:

- **When operating, keep hands and body inside of the ROPS / OPG (Top Guard Level I) protective envelope.**
- **Do not touch the control levers and the pedals from outside the cab while the engine is running.**

For your own safety and to assure the long life of your machine, a careful check should be made before each operation.

■Checking Coolant Level

WARNING

To avoid personal injury or death:

- **Move the excavator to even ground.**
- **Make sure that the engine is turned off.**
- **Do not open the radiator cap right after the engine has been stopped; Serious burns can occur from contact with escaping hot coolant fluid.**
- **Check the coolant level in the recovery tank only after the engine has cooled down.**
- **Remove the radiator cap only if absolutely necessary.**

The radiator has a recovery tank. Should the coolant level in the radiator sink, the water will be automatically be forwarded to the radiator.

Open the side cover. (See "Opening / Closing of the Side Cover" in "OPENING AND CLOSING OF COVERS" section.)

Check the coolant level in the recovery tank and fill up if necessary. The coolant level should be between the marks "FULL" and "LOW".

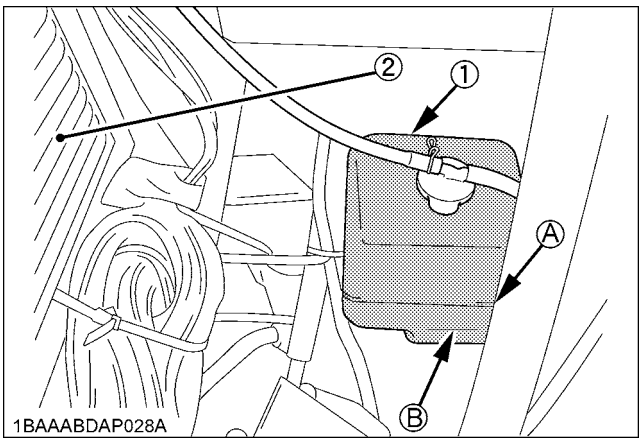

(1) Recovery tank
(2) Radiator
(A) "FULL"
(B) "LOW"

https://truckmanualshub.com/

IMPORTANT :
- Do not fill the recovery tank over the "FULL" marking.
- Do not fill with dirty or salty water.

■Checking Fuel Level

WARNING

To avoid personal injury or death:
- **Stop the engine and remove the key before fuelling.**
- **Do not smoke while fuelling.**

IMPORTANT :
- By temperatures over -5℃ (23℉), use No.2-D diesel fuel, when temperatures are under -5℃ (23℉), use No.1-D diesel fuel.
- Make sure that the fuel tank is not run empty. Air will enter the fuel system, and must be purged before restarting.
- See "PURGING OF THE FUEL SYSTEM" in "OTHER ADJUSTMENTS AND REPLACEMENTS"
- To prevent condensation (water) accumulations in the fuel tank, fill the fuel into the tank before parking overnight.
- Be very attentive to the remaining fuel for the engine not to stall. If the engine stalls, it may fail to get restarted for a while to protect the emission purifying device.

1. Turn the starter key to the position "RUN".

NOTE :
- Even with the starter key not yet inserted, press the electronic meter's user setting switch or the display selector switch, and the LCD shows the hour meter, fuel gauge, water temperature gauge and clock for 10 seconds.

2. Check the fuel level by the fuel level indicator.

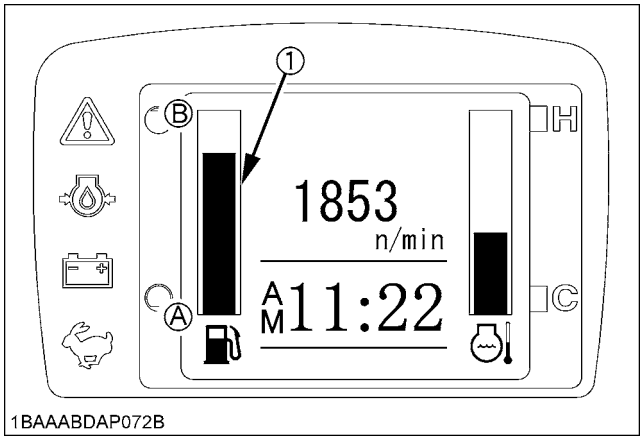

(1) Fuel gauge
(A) "EMPTY"
(B) "FULL"

3. If necessary, open the cap and fill in fuel. (See "LCD for Normal Operation" in "CHECK BEFORE START" section.)

Fuel tank capacity	115 L (30.4 US gal.)

■Checking Engine Oil Level

WARNING

To avoid personal injury or death:
- **Stop the engine and remove the key before checking the oil level.**

IMPORTANT :
- Use engine oil with the correct viscosity. (according to the outside temperature)
- After stopping the engine and remove the key, wait 5 minutes, then check oil level. (Excavator must be on level ground.)
- On DPF-equipped engines, part of the fuel may get mixed with engine oil during the regenerating process. This may dilute the oil and increase its quantity. If the oil rises above the oil level gauge upper limit, it means the oil has been diluted too much, resulting in a trouble. In such case, immediately change the oil.

Insert the engine oil dipstick fully into the prepared opening, remove again and check the oil level; if necessary fill with oil. The machine must be on level ground when checking the oil level.

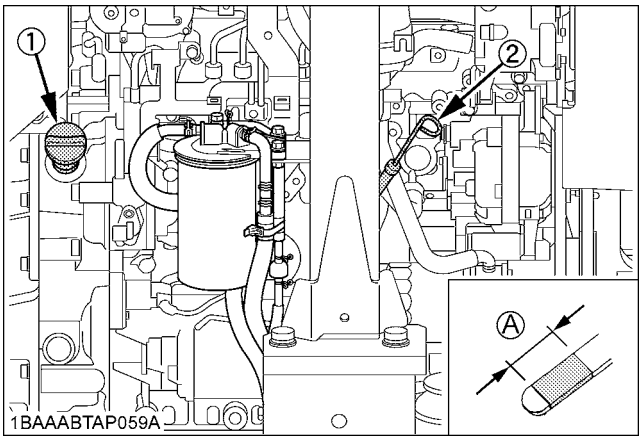

(1) Oil filling port
(2) Engine oil dipstick
(A) Oil level is acceptable within this range.

https://truckmanualshub.com/

■Checking Hydraulic Oil Level

WARNING

To avoid personal injury or death:

- **Stop the engine and remove the key before checking the oil level.**

IMPORTANT :

- Before filling oil, wipe away all sand and dust from around the oil port. Make sure to use an identical type of hydraulic fluid.
- The excavator has been filled with hydraulic fluid before delivery. See "RECOMMENDED OILS" section.
  (Do not mix different oils.)

1. Park the excavator on a firm, flat and level surface. Lower the attachments and dozer blade to the ground and stop the engine.

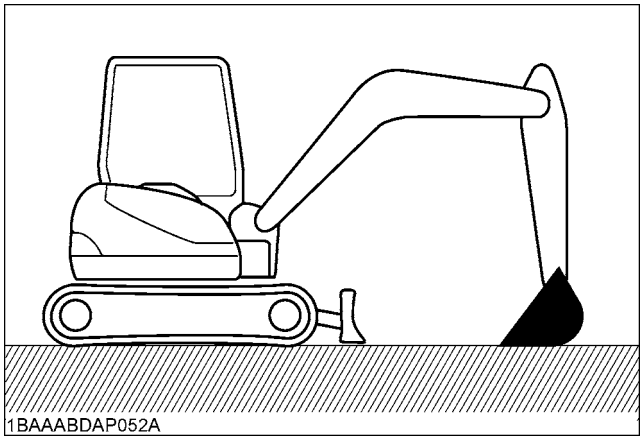

2. Check the oil level as to whether it lies on the center of the gauge at normal temperature (10 to 30 ℃ (50 to 80 ℉)).
3. Enough oil is present when oil is at center mark.
4. Should the oil level be too low, loosen the oil filling plug gradually to release pressure in the tank, then fill up with oil at oil fill port.

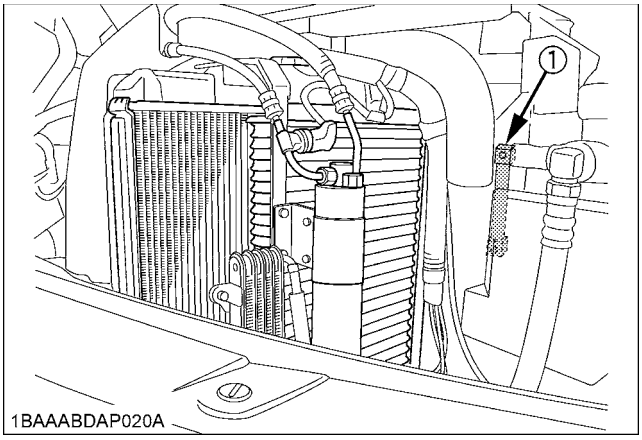

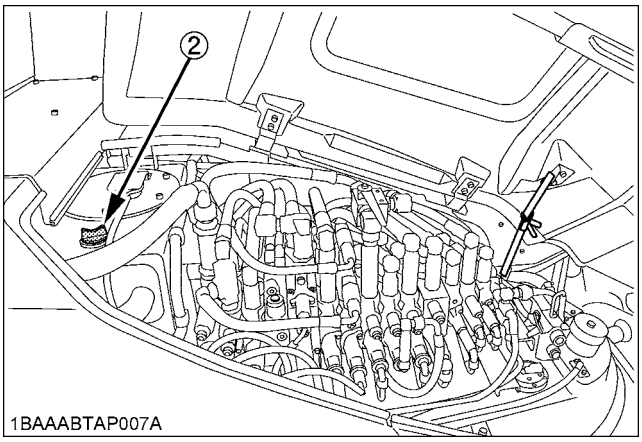

(1) Gauge
(2) Oil filling plug

■Checking V-belt

WARNING

To avoid personal injury or death:

- **Stop the engine and remove the key before checking the V-belt.**
- **Check the V-belt for cracks and proper tension. (See "Adjusting V-belt Tension" in "REGULAR CHECKS AND MAINTENANCE WORK" section.)**

https://truckmanualshub.com/

■Checking Radiator and Oil Cooler

WARNING

To avoid personal injury or death:

- **Always stop the engine and remove the key before checking the radiator.**
- **Wear eye protection when cleaning with compressed air.**

1. Check if the fins and ribs are clogged.
   If so clean with compressed air or steam.
2. Check the rubber hoses for damage and replace if cracked or old. Check if the hose clamps are tight enough.

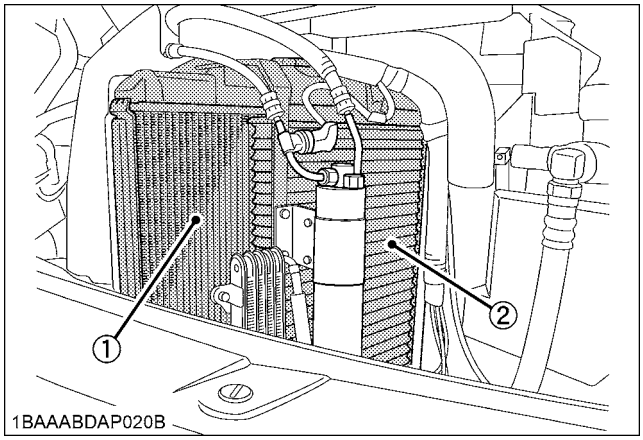

(1) Radiator
(2) Oil cooler

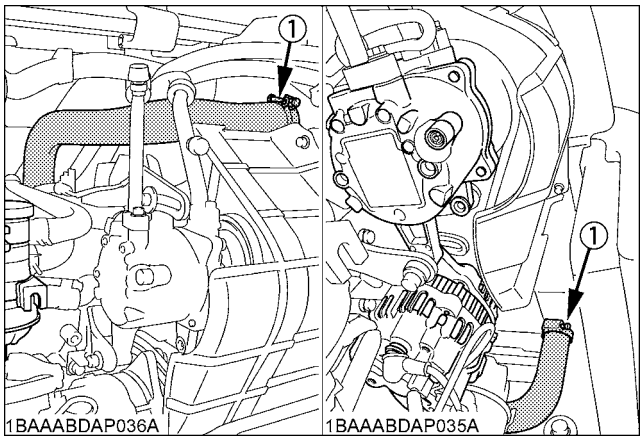

(1) Rubber hoses and clamps

IMPORTANT :

- Radiator and oil cooler fins and ribs must be clean in order to avoid overheating the engine and to allow free flow of air through the cooling elements.
- Pressure of compressed air must be under 205 kPa (2.1 kgf.cm^2, 30 psi)

■Checking Washer Liquid

If the windows washer is switched on with the washer liquid tank empty, the motor may be damaged. Always keep the tank filled.

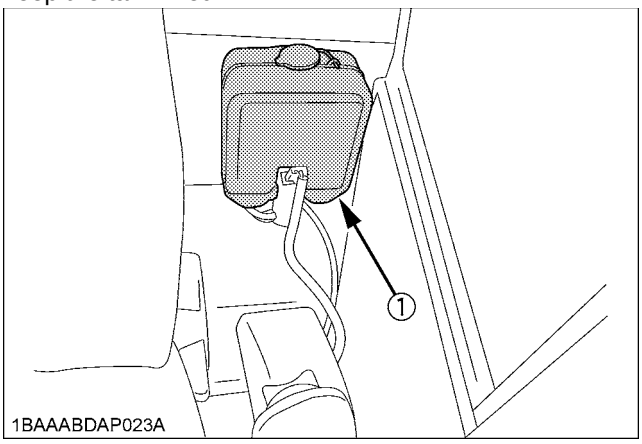

(1) Washer liquid tank

■Checking and Cleaning Engine and Electrical Wiring

WARNING

To avoid personal injury or death:

- **Always stop the engine and remove the key before cleaning the wiring, cables and engine.**

Before starting, check whether flammable substances have gathered on the battery, the cables and wiring, the muffler or on the engine. Remove thoroughly.
Check the electrical circuitry for disconnections, shorts or loose terminals.

■Washing Whole Machine

IMPORTANT :

- Do not wash the excavator with the engine running. Water could enter the air filter and damage the engine. Make sure that the air filter is kept dry.
- Remove the mud before washing the machine.

https://truckmanualshub.com/

■Greasing Bucket Pin and Bucket Link Pin/ Angle Pin and Angle Cylinder Boss

WARNING

To avoid personal injury or death:

- **First lower all attachments on the ground then stop the engine and remove the key.**
- **While greasing, take care not to step on the bucket teeth.**

IMPORTANT :

- When doing excavation work in water, generously grease the following points. After ending work, grease again.

Grease the marked grease fittings shown by arrows in the illustration below.

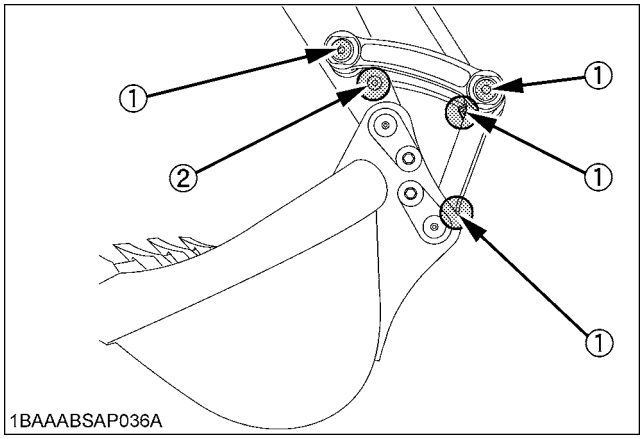

(1) Bucket link pin
(2) Fixing pin between arm and bucket

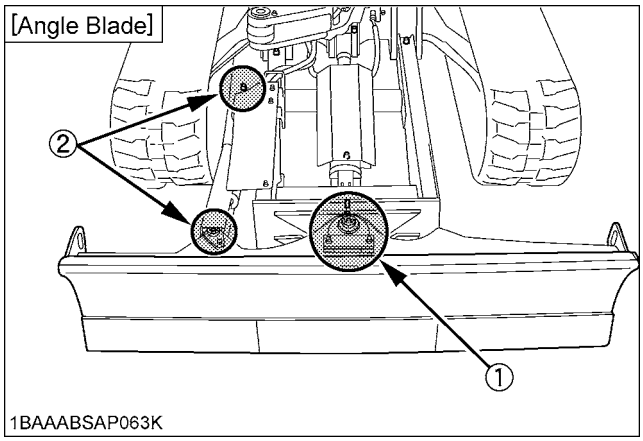

(1) Angle pin
(2) Angle cylinder boss

■Cleaning Evacuator Valve

Open the evacuator valve to get rid of large particles of dust and dirt.

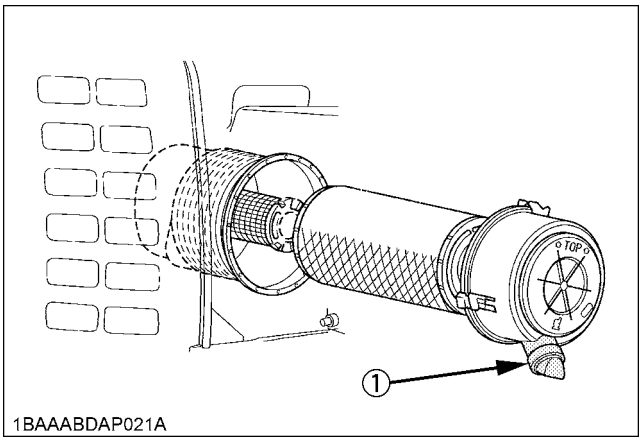

(1) Evacuator valve

■Checking Diesel Particulate Filter (DPF) Muffler

WARNING

To avoid personal injury or death:

- **Before checking or cleaning the DPF muffler, stop the engine and wait long enough until it is cooled down.**

Check to see if nothing flammable is deposited around the DPF muffler. Otherwise a fire may result.

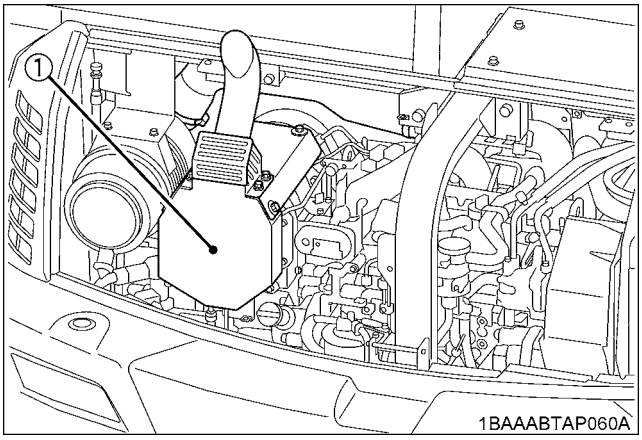

(1) DPF muffler

https://truckmanualshub.com/

REGULAR CHECKS AND MAINTENANCE WORK

WARNING

To avoid personal injury or death:

- **When operating, keep hands and body inside of the ROPS/OPG (Top Guard Level I) protective envelope.**
- **Do not touch the control levers and the pedals from outside the cab during the engine running.**

EVERY 50 SERVICE HOURS

■Draining the Water from the Fuel Tank

WARNING

To avoid personal injury or death:

- **Before draining the water from the fuel tank, be sure to stop the engine and remove the key.**
- **Do not smoke during inspection.**

1. Open the side cover.
2. Open the drain shutoff-valve.

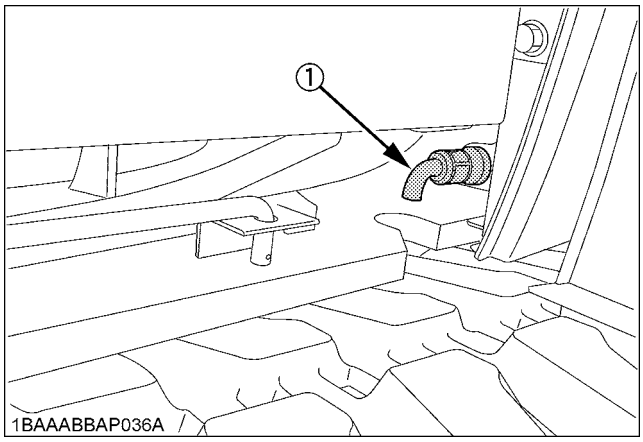

(1) Drain shutoff-valve

■Draining Water Separator

[Checking and Draining]

Water and dirt contained in fuel will settle down in the water separator. When such foreign substances are deposited, set the water separator handle to the **"CLOSE"** position. Loosen the top screw first and then the bottom shutoff-valve to let the foreign substances out of the separator.

Finally be sure to air-bleed the fuel system.

[Cleaning]

1. Set the water separator handle to the **"CLOSE"** position.
2. Loosen and remove the cup proper, and clean its inside with light oil.
3. Tighten up the cup proper.

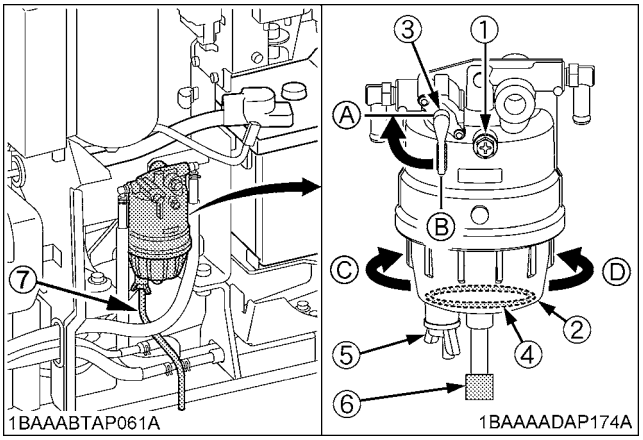

(1) Screw
(2) Cup
(3) Water separator handle
(4) Float
(5) Shutoff-valve
(6) Connector of water level sensor
(7) Hose

(A) "CLOSE"
(B) "OPEN"
(C) Loosen
(D) Tighten

IMPORTANT :

- If the water separator is full with water, it means that there may be water in the fuel filter. In such case, drain the fuel filter.
  (See "Draining Water Separator" in "REGULAR CHECKS AND MAINTENANCE WORK" section.)

https://truckmanualshub.com/

■Battery

DANGER

To avoid the possibility of a battery explosion:
For refillable type battery, follow the instructions below.

- **Do not use or charge the refillable type battery if the fluid level is below the LOWER (lower limit level) mark. Otherwise, the battery component parts may prematurely deteriorate, which may shorten the battery's service life or cause an explosion. Check the fluid level regularly and add distilled water as required so that the fluid level is between the UPPER and LOWER levels.**

WARNING

To avoid personal injury or death:

- **Never remove the vent caps while the engine is running.**
- **Keep electrolyte away from eyes, hands and clothes. If you are spattered with it, wash it away completely with water immediately and get medical attention.**
- **Wear eye protection and rubber gloves when working around the battery.**
- **Before inspection or dismounting the battery, be sure to turn off the engine and turn the starter switch to the "STOP" position.**
- **When removing the battery, always disconnect the negative ground cable first. When installing a battery, always connect the ground cable last. This prevents a possible explosion caused by sparks.**
- **Always wear eye protection when working with the battery.**

1. Open the side cover. (See "Opening / Closing of the Side Cover in "MAINTENANCE" section.)
2. Check the battery fluid level and add distilled water if necessary.
3. Should battery fluid be spilled, fill with sulphuric acid solution of the same concentration.
4. Clean the battery caps (ventilation holes).

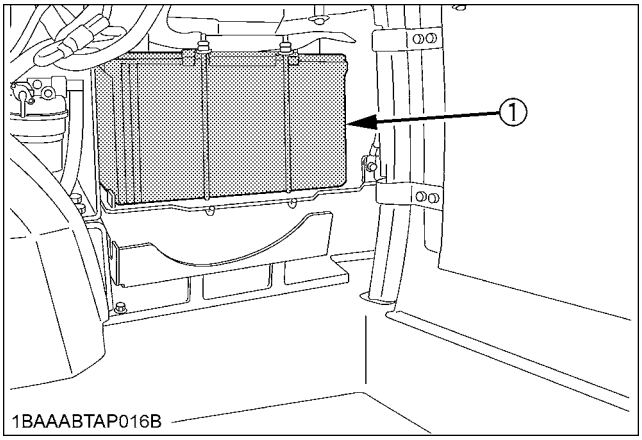

(1) Battery

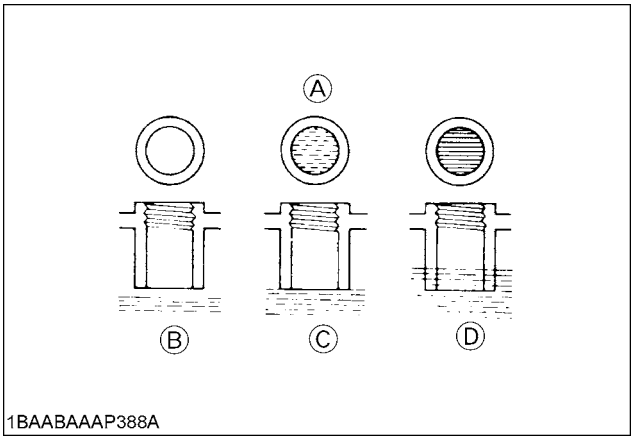

(A) Battery fluid level
(B) "Too low"
(C) "Correct"
(D) "Too high"

https://truckmanualshub.com/

■Battery Charging

WARNING

To avoid personal injury or death :

- **When the battery is being activated, hydrogen and oxygen gases in the battery are extremely explosive. Keep open sparks and flames away from the battery at all times, especially when charging the battery.**
- **When charging battery, remove battery vent plugs.**
- **When disconnecting the cable from the battery, start with the negative terminal first.**
  When connecting the cable to the battery, start with the positive terminal first.
- **Do not check battery charge by placing a metal object across the terminals.**
  Use a voltmeter or hydrometer.

1. Make sure each electrolyte level is to the bottom of vent wells. If necessary add distilled water in a well-ventilated area.
2. The water in the electrolyte evaporates during recharging. Liquid shortage damages the battery. Excessive liquid spill damages the excavator body.
3. To slowly charge the battery, connect the battery positive terminal to the charger's positive terminal and the negative to the negative one. Then, recharge in the standard fashion.
4. A boost charge is only for emergencies. It will partially charge the battery at a high rate and in a short time.
   When using a boost-charged battery, it is necessary to recharge the battery as early as possible.
   Failure to do this will shorten the battery's service life.
5. When the specific gravity of electrolyte falls between 1.27 and 1.29, charge has completed.
6. When exchanging old battery for a new one, use battery of equal specification.

■Greasing Swing Bearing Teeth

1. Pump grease with the grease gun through the grease fitting.
2. Grease at each 90°(1.58 rad.) position of the swing frame.
3. Fill with approx. 70g of grease (approx. 20 to 30 pumps with the grease gun at each position). Distribute the grease over the teeth.

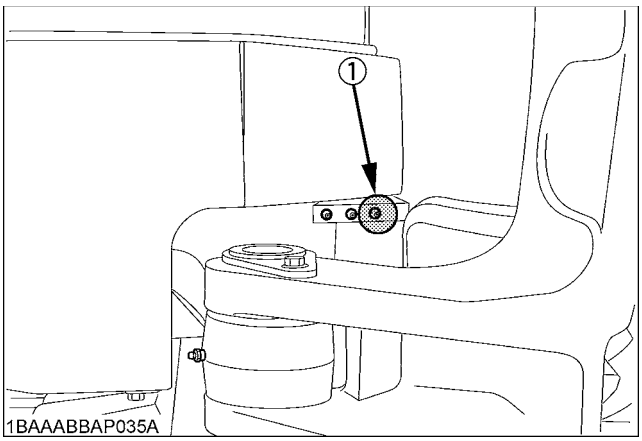

(1) Grease fitting (for swing bearing teeth)

EVERY 100 SERVICE HOURS

Do all 50 hour servicing at the same time.

■Greasing Boom Swing Fulcrum

Grease the marked grease fittings shown by arrows in the illustration below.

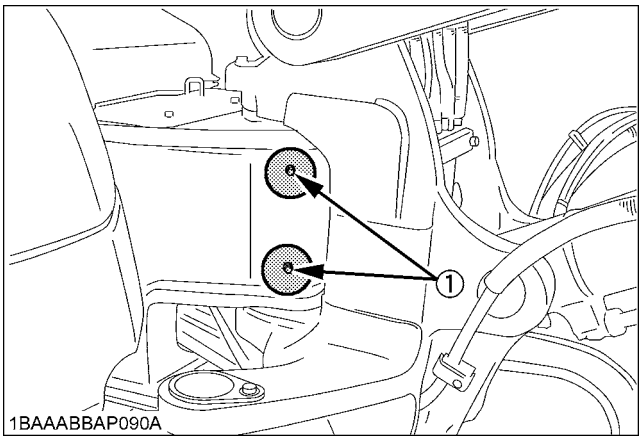

(1) Boom swing fulcrum

https://truckmanualshub.com/

EVERY 200 SERVICE HOURS

Do all 50 and 100 hour servicing at the same time.

■Adjusting V-belt Tension

WARNING

To avoid personal injury or death:

- **First stop the engine and remove the key.**
- **After servicing, make sure to replace the belt cover in its original position.**

1. Before adjusting the V-belt, remove the three bolts and detach the V-belt cover

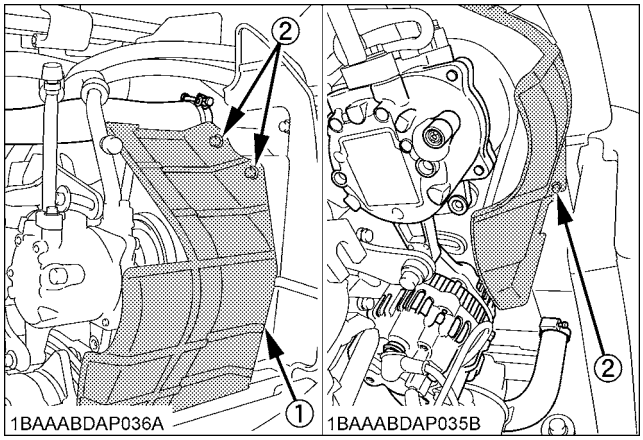

(1) V-belt cover
(2) Bolt

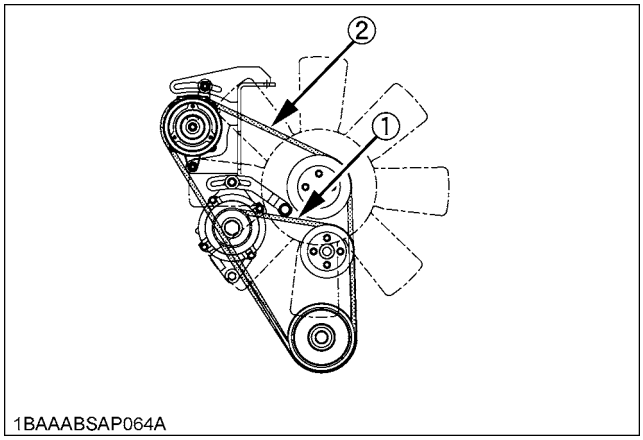

[V-belt]
(1) Alternator belt
(2) Fan belt

2. To adjust the V-belt, take the following steps.

◆ **Checking and adjustment of the alternator belt tension**

1. Press the alternator belt down in the middle, with a force of approx. 10 kg (22 lbs). The belt tension is correct if it deflects about 10 mm (0.39 in.). If otherwise, loosen bolt (1) and (2) and shift the alternator (3) in the direction shown by the arrow.
2. Replace the alternator belt if worn out, cracked or torn.

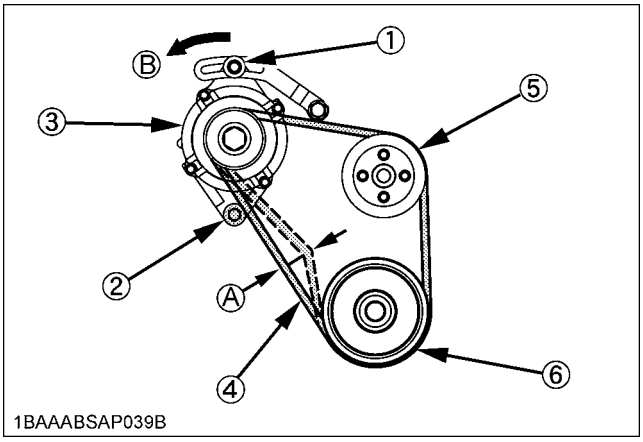

(1) Bolt
(2) Bolt
(3) Alternator
(4) Alternator belt
(5) Water pump
(6) Pulley

(A) about 10 mm (0.39 in.)
(B) Tighten

IMPORTANT :

- If the engine is run with a loose alternator belt, the belt could slip and cause insufficient battery charging. Check alternator belt tension regularly.
- Should the alternator belt break or jump off, the indicator light for battery charge will light up. Stop the engine and remove the key immediately.

https://truckmanualshub.com/

◆ **Checking and adjustment of the fan belt tension**

1. Press the fan belt down in the middle, with a force of approx. 7 kgf (15.4 lbs). The belt tension is correct if it deflects about 12 to 15 mm (0.47 to 0.59 in.). If otherwise, loosen bolt and shift the AC compressor in the direction shown by the arrow.
2. Replace the fan belt if worn out, cracked or torn.

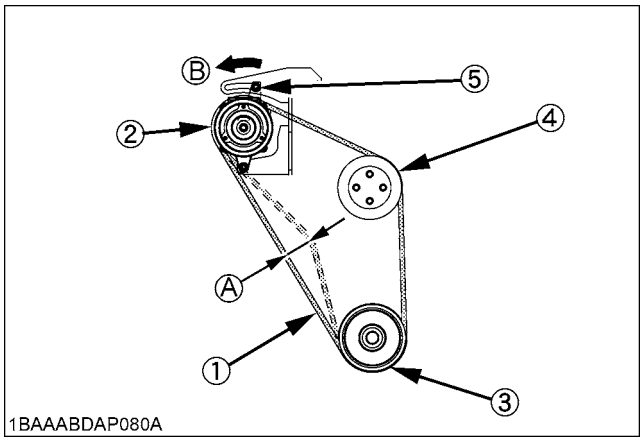

(1) Fan belt
(2) AC compressor
(3) Pulley
(4) Fan pulley
(5) Bolt and nut
(A) 12 to 15 mm (0.47 to 0.59 in.)
(B) Tighten

IMPORTANT :

- If the engine is run with a loose fan belt, the belt could slip and cause insufficient room temperature control. Check fan belt tension regularly.

3. After adjusting the V-belt, attach the V-belt cover with the three bolts.
   Tightening torque must be between 3 to 5 N-m (2.2 to 3.7 ft-lbs).

■Checking Radiator Hoses and Clamps

WARNING

To avoid personal injury or death:

- **Wait long enough for the radiator coolant to cool down.**

Check the coolant hoses for proper connection. This check should be carried out every 200 hours or every 6 months, whichever comes first.

1. Should the hose clamps become loose or coolant leaks, tighten the hose clamps properly.
2. Should the radiator hoses become swollen, aged or cracked, they must be replaced and the hose clamps tightened again properly.

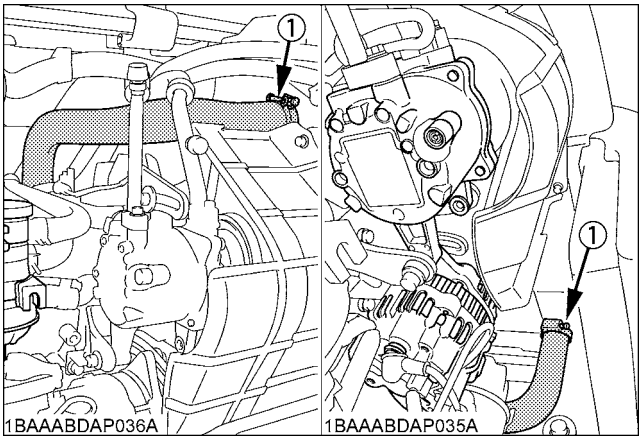

(1) Radiator hoses and clamps (Both sides)

■Grease Swing Ball Bearing

1. Grease through the respective grease fitting. (at the central fitting)
2. Grease at each 90° (1.58 rad.) position of the swing frame.
   Using the grease gun,apply 5 shots at every position.

https://truckmanualshub.com/

3. Grease at each 90° (1.58 rad.) position of the pitch bearing. Using the grease gun , apply 5 shots at every position. Refer to the "RECOMMENDED OILS" section.

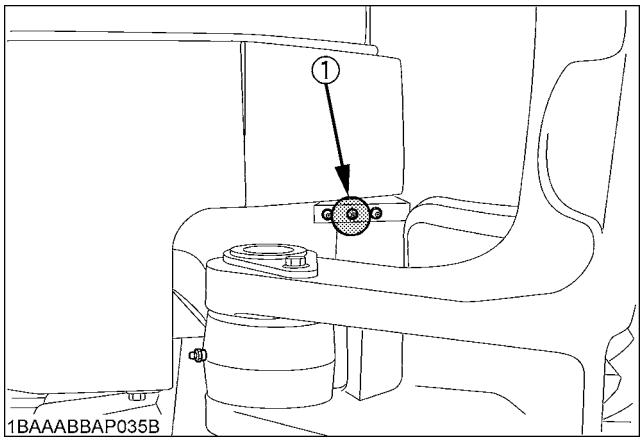

(1) Grease fitting

■Inspection and Cleaning Air Filter Element

Open the engine hood and remove the dust-cover. Take out only outer element, clean the element, case interior and reassemble. During reassembly, take care to install the dust-cover so that its TOP mark (arrow) faces upwards. Do not remove the inner element.

IMPORTANT :
- Should the machine be used in extremely dusty areas, the air filter element must be inspected and cleaned more frequently than in the specified maintenance periods.
- The air filter has a dry element, keep free from oil.
- Do not run the engine without the air filter.

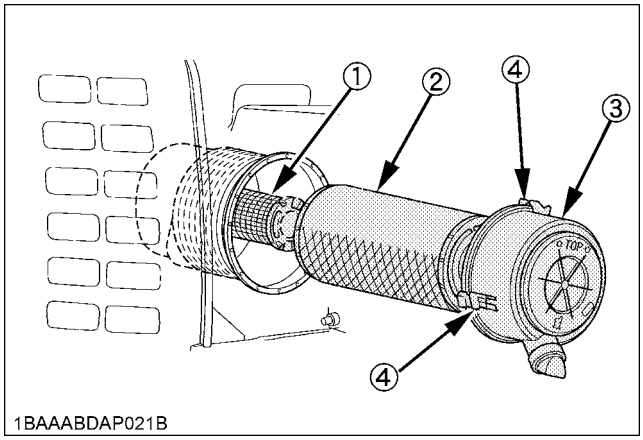

(1) Inner element
(2) Outer element
(3) Dust-cover
(4) Clamps

■Air Filter Maintenance

WARNING

To avoid personal injury or death:
- **Wear eye protection.**

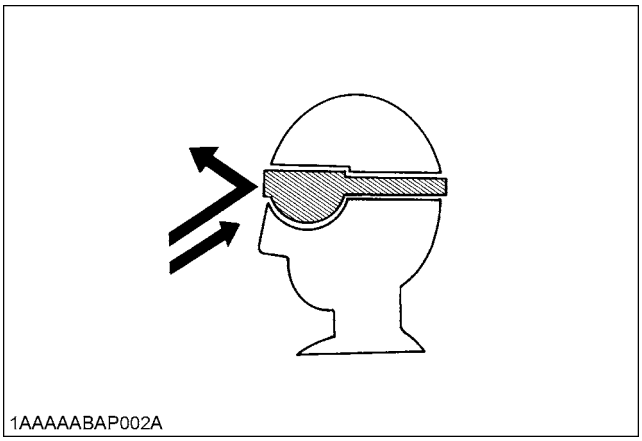

The quickest and safest method of maintenance is the exchange of the paper cartridge. Furthermore there are different methods of cleaning the cartridge.

◆ Cleaning with compressed air

Pressure of compressed air must be under 205 kPa (2.1 kgf/cm^2, 30 psi), and the cartridge should be blown clean from the inside to the outside until the dust deposits are noticeably reduced.

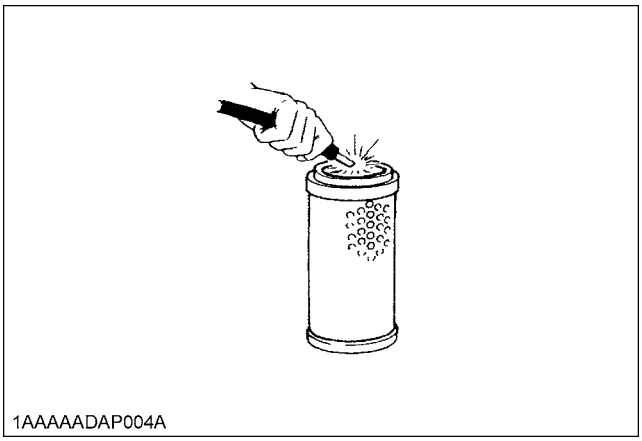

IMPORTANT :
- If the air suction is still inadequate, or the color of the exhaust gases is abnormal even after the cleaning, the air filter cartridge must be replaced.

https://truckmanualshub.com/

■Checking Fuel Line and Intake Air Line

1. Check to see that all lines and hose clamps are tightened and not damaged.
2. If hoses and clamps are found worn or damaged, replace or repair them at once.

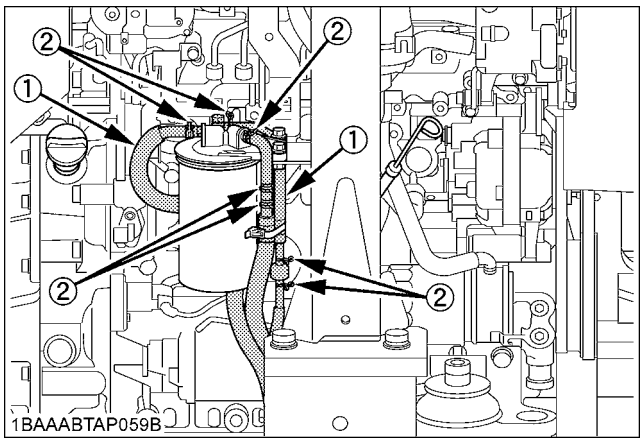

(1) Fuel lines
(2) Clamp bands

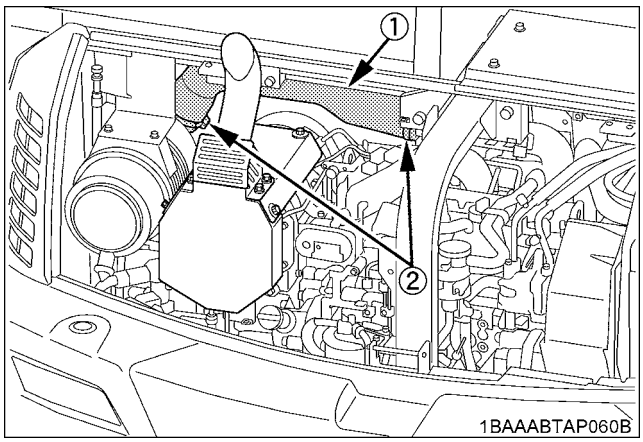

(1) Hoses
(2) Hose clamps

AIR CONDITIONER

■Cleaning Air Filter

Open the cover under the operator's seat and remove the filter cover, remove the air filter.

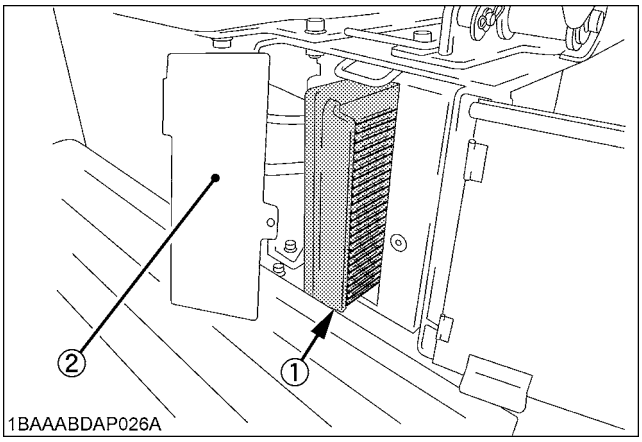

(1) Air filter
(2) Filter cover

WARNING

To avoid personal injury or death:

- **Wear eye protection.**

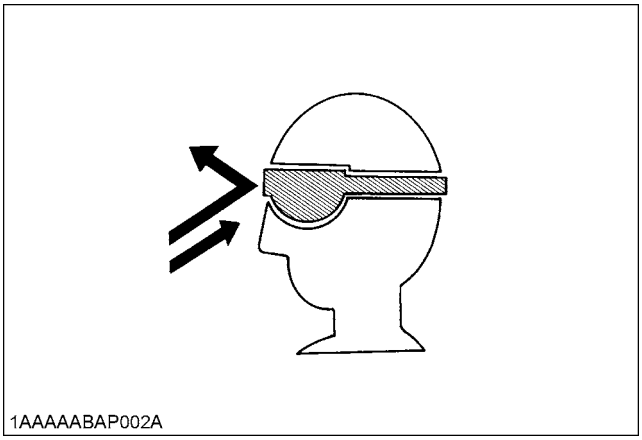

◆ **Cleaning the air filter**

- Normal use
  Blow air from the opposite direction to the filter's normal air flow.

IMPORTANT :

- Do not hit the filter. If the filter becomes deformed, dust may enter into the air-conditioner, which may cause damage and malfunction.

https://truckmanualshub.com/

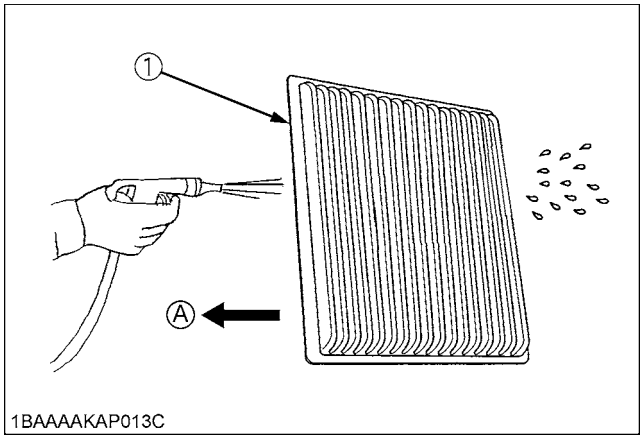

(1) Filter (A) "AIR-CONDITIONER AIRFLOW"

NOTE :
- Pressure of compressed air must be under 205 kPa (2.1 kgf/cm^2, 30 psi).
- If the filter is very dirty, replace the air filter.

■Checking Air-Conditioner Condenser

Check air conditioner condenser to be sure it is clean from debris.

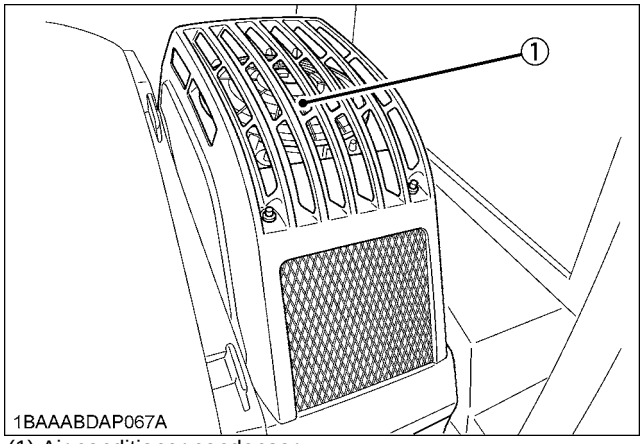

(1) Air conditioner condenser

EVERY 250 SERVICE HOURS

Do all 50 hour servicing at the same time.

■Greasing Front Attachments (without Bucket Pin and Boom Swing Fulcrum)

WARNING

To avoid personal injury or death:
- **First lower all attachments on the ground then stop the engine and remove the key.**
- **While greasing, take care not to step on the bucket teeth.**

IMPORTANT :
- When doing excavation work in water, generously grease the following points. After ending work, grease again.

Grease the marked grease fittings shown by arrows in the illustration below.

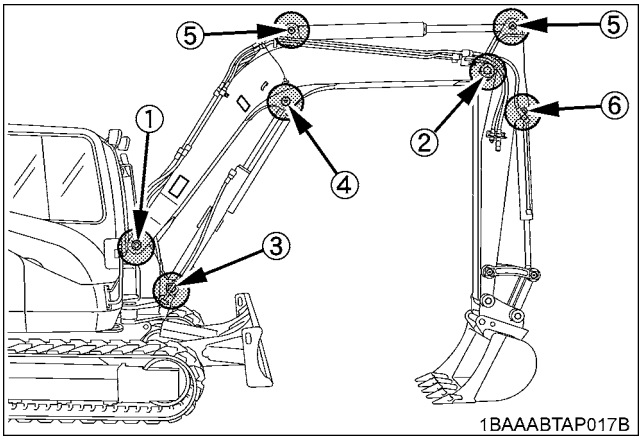

(1) Boom bottom linkage
(2) Arm bottom linkage
(3) Boom cylinder boss
(4) Boom cylinder pin
(5) Arm cylinder pin
(6) Bucket cylinder pin

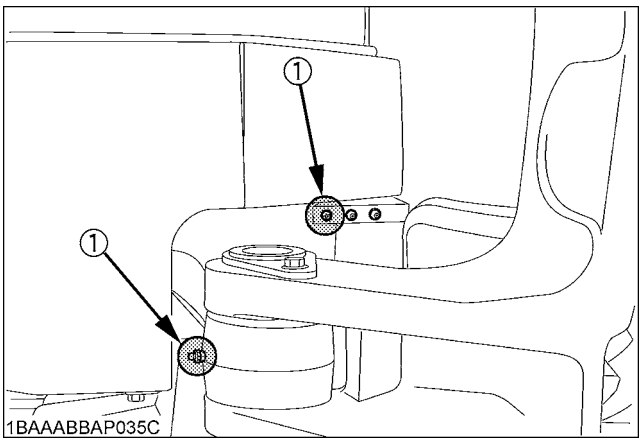

(1) Swing cylinder boss

https://truckmanualshub.com/

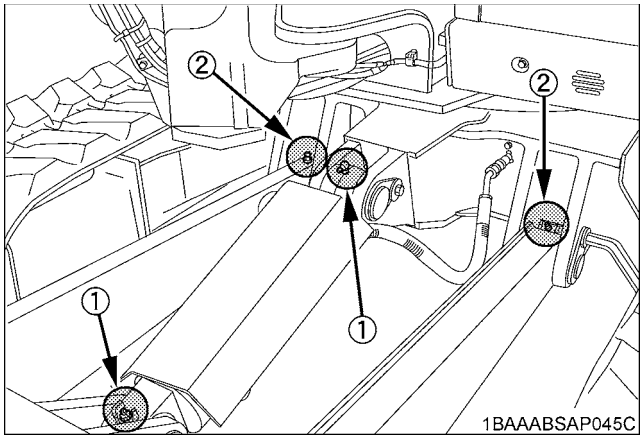

(1) Dozer cylinder boss
(2) Dozer linkage boss

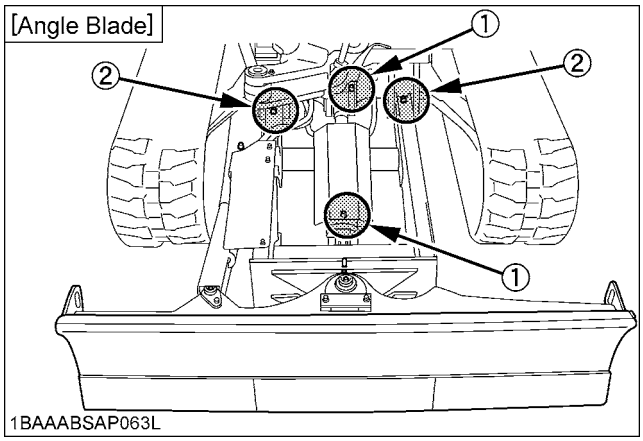

(1) Dozer cylinder boss
(2) Dozer linkage boss

EVERY 500 SERVICE HOURS

Do all 50, 100 and 250 hour servicing at the same time.

■Changing Engine Oil (Change the engine oil every 500 hours, or every 1 year in the case that service hour is less than 500 hours)

WARNING

To avoid personal injury or death:

- **First stop the engine then remove the key and wait long enough for the oil to cool down.**

1. Remove the drain plug on the underside of the engine and drain all oil.
2. Re-tighten the drain plug.

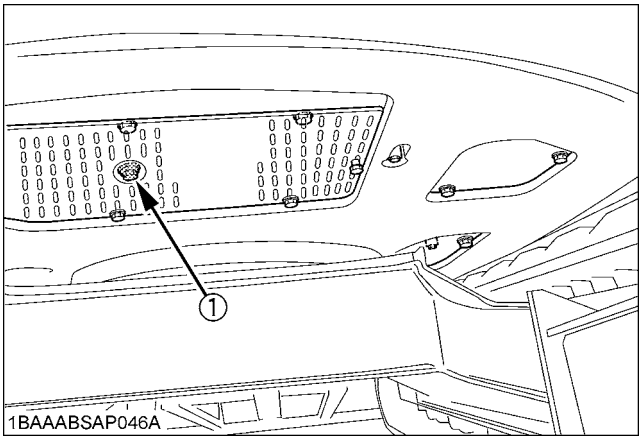

(1) Drain plug

3. Fill up with new oil through the filling port to the specified level.

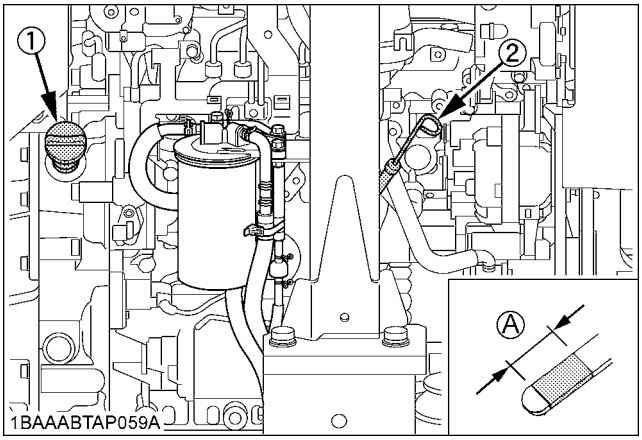

(1) Oil filling port
(2) Engine oil dipstick
(A) Required oil level range

4. Let the engine idle for approx. 5 min. Check the engine oil level. To check the engine oil level, insert the engine oil dipstick completely into the respective port opening and pull out again. If the oil level lies between both markings, no oil must be added.

IMPORTANT :

- Regardless of the service hours, an engine oil change is due every 1 year.

Engine oil volumes (with engine oil filter)	9.7 L (2.56 US gal)

- Use engine oil API service classification CJ-4 or CK-4.

https://truckmanualshub.com/

■Replacing Engine Oil Filter Cartridge (Replace the engine oil filter cartridge every 500 hours,or every 1 year in the case that service hour is less than 500 hours)

1. Replace the oil filter cartridge at the same time as doing the engine oil change.
2. Remove the cartridge with the wrench.

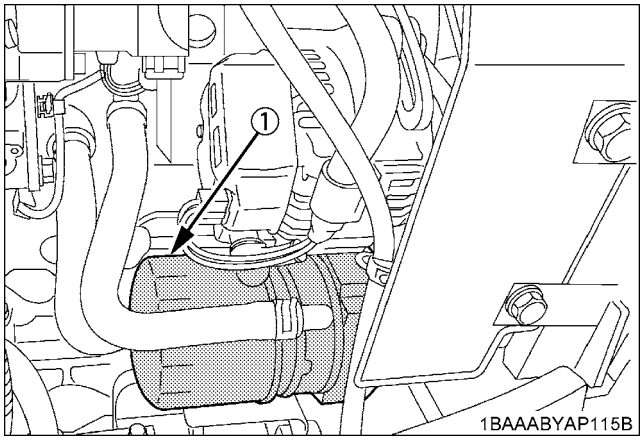

(1) Oil filter

3. Oil the O-ring of the new oil filter cartridge lightly. Then tighten the oil filter cartridge by hand.
4. Fill engine oil to the specified level.
5. Let the engine run for approx. 5 min. and make sure that the engine oil indicator lamp does not light up. Then stop the engine and remove the key.
6. The engine oil level is reduced by the amount of the filter capacity after the engine is started. It is necessary to add oil.

IMPORTANT :
- Always check the oil level after having exchanged the filter.

■Drive unit Oil Change(First Oil Change of the 50 hours)

WARNING

To avoid personal injury or death:
- **Lower all attachments to the ground, stop the engine and remove the key before undertaking the oil change.**

1. Rotate the track so that the drain plug of the drive unit is in the bottom position.
2. Remove the drain plug to let the oil run out. Screw in and tighten the drain plug again and fill with gear oil through the oil check port.
3. Fill oil until it overflows out of the oil check port.

   Oil change
   - first oil change after 50 hrs
   - then every 500 hrs
   - or at least once a year

4. Use prescribed gear oil SAE 90.

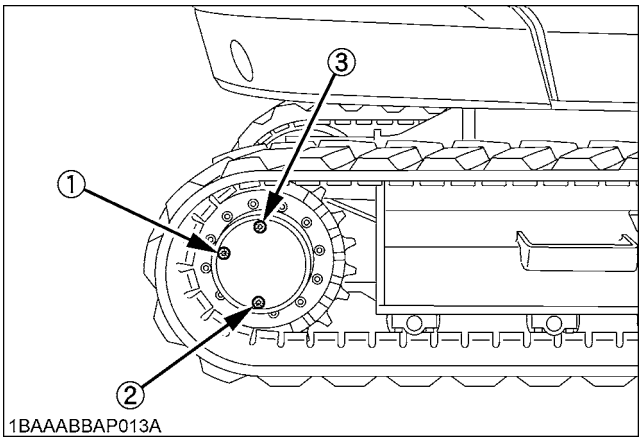

(1) Oil check port
(2) Drain plug
(3) Oil filling port

Gear oil volume	approx. 1.35 L (0.36 US gal)

https://truckmanualshub.com/

■Replacing Fuel Filter Cartridge

WARNING

To avoid personal injury or death:

- **Keep fire away.**

1. Remove the filter cartridge with the filter wrench.
2. Apply a light film of fuel to the seal of the new filter cartridge and turn in tightly by hand.

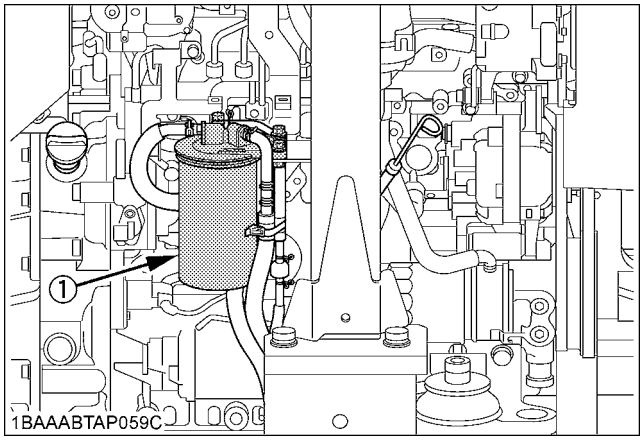

(1) Fuel filter cartridge

IMPORTANT :

- After exchange of the filter, the fuel system must be purged of air.
- If you don't replace the fuel filter cartridge regularly, the cleaning efficiency of the DPF will be reduced and the DPF longevity will be shorter than expected.

■Replacing Hydraulic Return Filter Cartridge(first replacement after 250 service hours)

WARNING

To avoid personal injury or death:

- **Remove the oil filter cartridge only after the oil in the hydraulic tank has cooled down.**
- **The oil may spurt out if plugs or filters are removed before releasing the pressure in the hydraulic system.**
  Gradually loosen the oil filling plug on the tank to release the pressure in the tank.

1. Gradually loosen the oil filling plug on the tank to release pressure in the tank.
2. First loosen the air plug, then remove the drain plug to let the oil in cartridge run out.
3. Remove the cartridge with wrench.
4. Apply a light film of oil to the seal of the new cartridge and turn in tightly by hand.
5. Re-tighten the air plug.

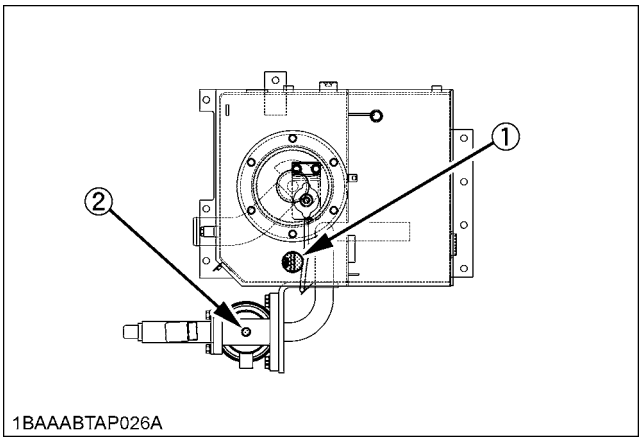

(1) Oil filling plug
(2) Air plug

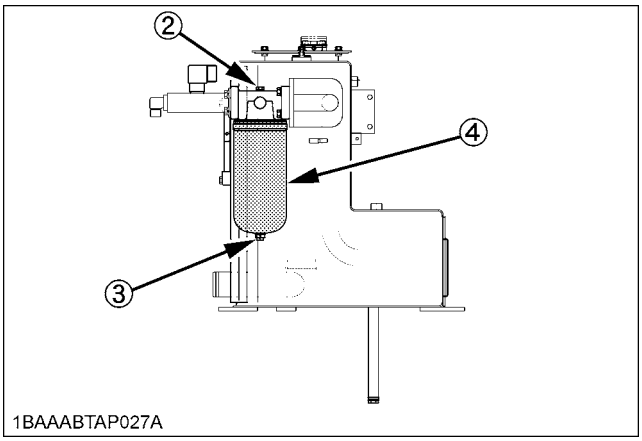

(2) Air plug
(3) Drain plug
(4) Filter cartridge

IMPORTANT :

- Always check the oil level when replacing the filter cartridge.

https://truckmanualshub.com/

■Replacing Water Separator Filter Element

1. Remove the connector of water level sensor.
2. Set the water separator handle to the **"CLOSE"** position.
3. Loosen and remove the cup properly and replace the filter element.
4. Check the condition of the O-ring and replace if necessary.
5. Tighten up the cup properly.
6. Set the water separator handle to the **"OPEN"** position.
7. Install the connector of water level sensor.

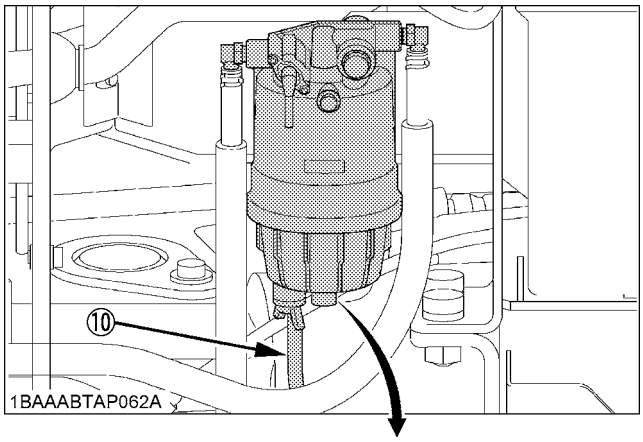

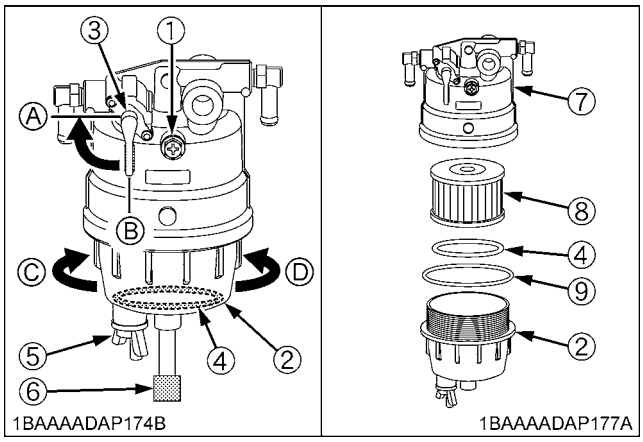

(1) Screw
(2) Cup
(3) Water separator handle
(4) Float
(5) Shutoff-valve
(6) Connector of water level sensor
(7) Head cover
(8) Filter element
(9) O-ring
(10) Hose

(A) "CLOSE"
(B) "OPEN"
(C) Loosen
(D) Tighten

IMPORTANT :

- In reattaching the water separator, be careful to keep off dust and dirt.
- Be sure to purge the fuel system before getting the machine restarted.
  (See **"PURGING OF THE FUEL SYSTEM"** in **"OTHER CHECKS AND REPLACEMENTS"** section.)

https://truckmanualshub.com/

EVERY 1000 SERVICE HOURS

Do all 50, 100, 200, 250 and 500 hour servicing at the same time.

■Replacing the Hydraulic Pilot Filter Element

WARNING

To avoid personal injury or death:

- **Before replacing the element, wait long enough for the hydraulic fluid to cool down.**
- **Use the oil tray to prevent oil from scattering to the muffler.**

1. Remove the rear left cover.
2. Gradually loosen the oil filling plug on the tank to release the pressure in the hydraulic system.
3. Remove the pilot filter case from the head cover.
4. Wrench and pull out the element downward.
5. Replace the O-ring with a new one.
6. Apply a light coating of clean hydraulic oil to the O-ring and fit it to the case firmly. Be careful not to scratch the O-ring.
7. Attach the case to the head cover firmly.
8. Let the engine run for approx. 3 minutes.
9. Check the oil level of hydraulic oil tank, then tighten the oil filling plug.

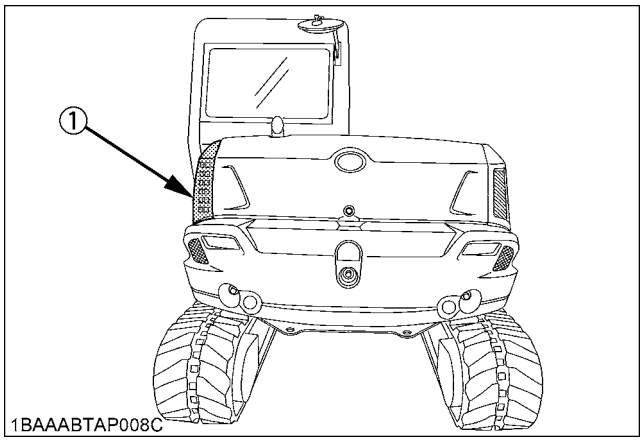

(1) Rear left cover

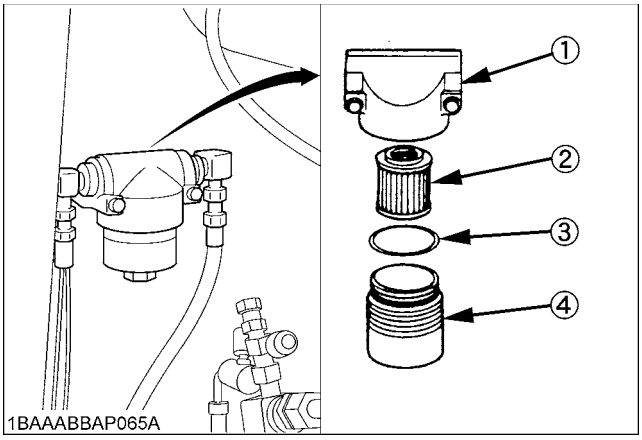

(1) Head cover
(2) Element
(3) O-ring
(4) Case

■Hydraulic Oil Change (Including Replacing of the Suction Filter in the Hydraulic Tank)

WARNING

To avoid personal injury or death:

- **Wait long enough for the hydraulic fluid to cool down. Then begin with the change of the hydraulic fluid.**
- **Use stepladder to work safely when the suction filter is extracted from the oil tank.**

1. Move the excavator to a level ground and stop the engine. Extend the piston rods of the cylinders halfway out and lower the bucket on the ground.

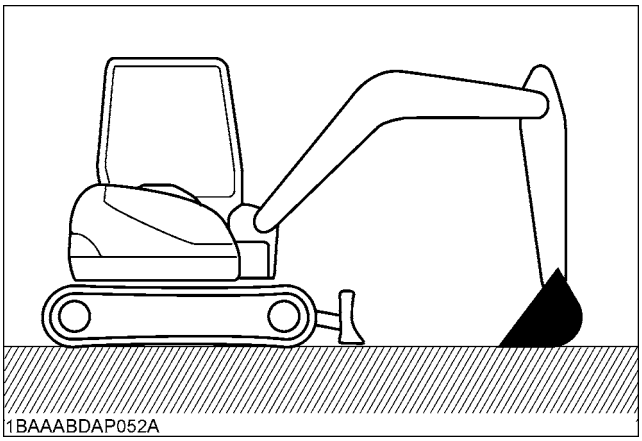

2. Gradually loosen oil filling plug on the tank to release pressure in the tank.
3. Remove the drain plug on the underside of the hydraulic tank and drain the oil.
4. Remove the hydraulic tank cover.

https://truckmanualshub.com/

5. Remove and exchange the suction filter.
6. Retighten the drain plug.

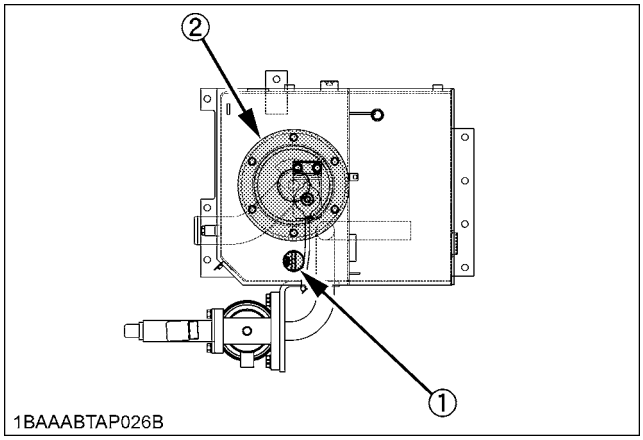

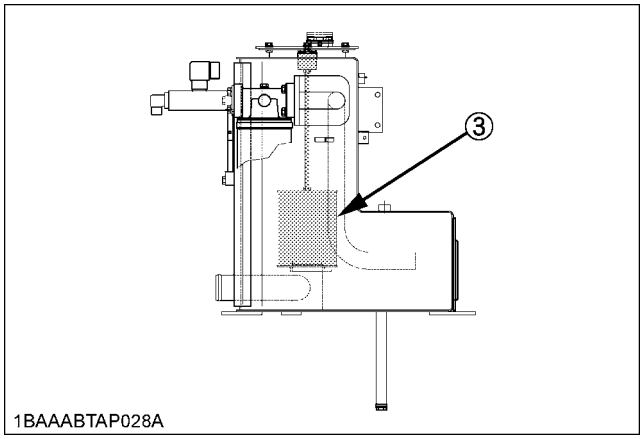

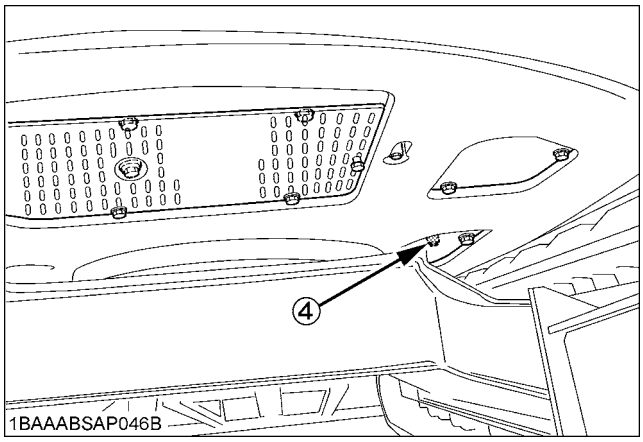

(1) Oil filling plug
(2) Hydraulic tank cover
(3) Suction filter
(4) Drain plug

7. Fill oil through the oil filling opening on the top side of the tank.
8. Let the engine run and operate the boom, arm, bucket and boom swing device. Then bring the boom to the highest position, pull the arm, bucket inward and boom swing left end.

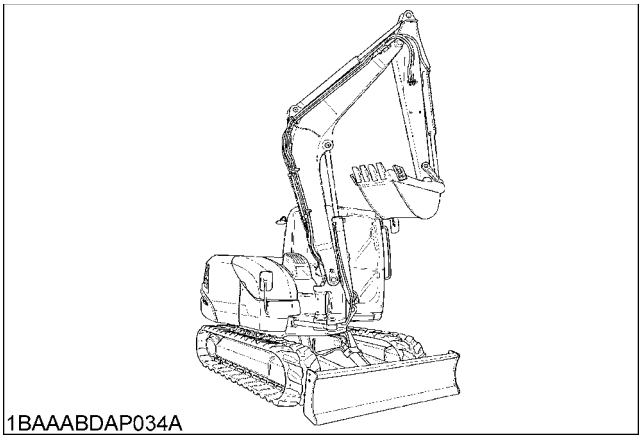

9. Fill oil again up to the center of the gauge.

Hydraulic oil volumes	Hydraulic tank	75 L (19.8 US gal.)
	Whole oil volumes	146 L (38.6 US gal.)

10. Install the hydraulic tank cover and tighten the oil filling plug.

■Hydraulic Oil Check with Hydraulic Hammers

The hydraulic oil change after 1000 operating hours in the operator's manual is based on normal excavator work. Following inspection measures are valid when hydraulic hammers are used:

1. Changing and filling up of hydraulic oil
   (1) The hydraulic oil must be changed more often when hammers are used because the machine is subject to harder conditions than normal excavating work.
   (2) Use only the recommended oils mentioned in the operator's manual when changing or filling with oil.
   (3) When filling up oil, do not mix oils of different makes.
2. Changing the return filter cartridge and oil
   (1) The filter cartridge must be changed more often because of contamination resulting from the frequent assembly and disassembly of the hoses.
   (2) Use the correct replacement filter cartridge.

https://truckmanualshub.com/

(3) Oil change according to operating hours.

		Hydraulic oil	Return filter cartridge
Normal excavator work		every 1000 Hrs.	every 500 Hrs. (250 Hrs. after first operation)
Hammer work portion	20%	every 800 Hrs.	every 200 Hrs.
	40%	every 400 Hrs.	
	60%	every 300 Hrs.	every 100 Hrs.
	more	every 200 Hrs.	

■Checking Engine Valve Clearance

Consult your local KUBOTA dealer for this service.

EVERY 1000 SERVICE HOURS OR ONCE A YEAR

■Replacing Air Filter Element

Open the engine hood and remove the dust-cover. Remove and replace the outer element and inner element with new elements.
When reassembling, install the dust-cover so that its TOP mark (arrow) faces up-wards.

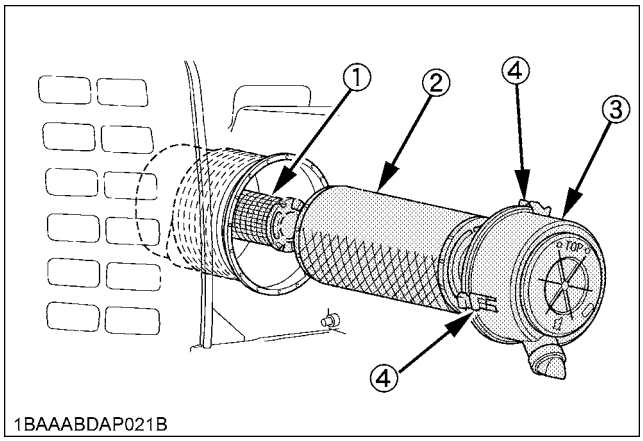

(1) Inner element
(2) Outer element
(3) Dust-cover
(4) Clamps

IMPORTANT :

- Shorten the replacement period if the machine is used in dusty or sandy areas.

EVERY 1500 SERVICE HOURS

Do all 50, 100, 250 and 500 hour servicing at the same time.

■Checking Injector Tip

Consult your local KUBOTA dealer for this service.

■Replacing Oil Separator Element

WARNING

To avoid personal injury or death:

- **Be sure to stop the engine before replacing the oil separator element.**

1. Remove the cover and take out the element. Wipe off oil and the carbon in the case with a clean rag.
2. Fit a new oil separator element and O ring.
3. Tighten the cover until a cover comes in contact with body.

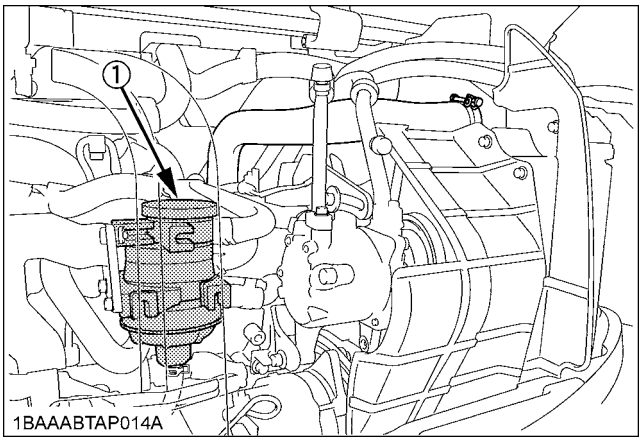

(1) Oil separator

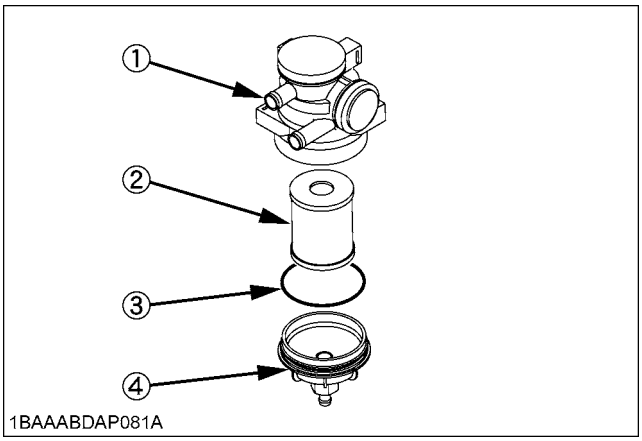

(1) Body
(2) Oil separator element
(3) O ring
(4) Cover

https://truckmanualshub.com/

■Checking EGR Cooler

Consult your local KUBOTA Dealer for this service.

EVERY 2000 SERVICE HOURS

Do all 50, 100, 200, 250, 500 and 1000 hour servicing at the same time.

■Changing Front Idler and Track Roller Oil

NOTE :

- Contact your KUBOTA dealer for details.

■Checking the Alternator and Starter Motor

NOTE :

- Contact your KUBOTA dealer for details.

EVERY 3000 SERVICE HOURS

Do all 50, 100, 200, 250, 500, 1000 and 1500 hour servicing at the same time.

■Checking EGR System

Consult your local KUBOTA dealer for this service.

■Checking Turbocharger

Consult your local KUBOTA dealer for this service.

ANNUAL SERVICING

■Electrical Wiring and Fuses

Check the terminals periodically for proper connections. Loose wiring or damaged cables can cause improper functioning or short circuiting of the electrical system. Check wiring and replace damaged components immediately. If a fuse blows out soon after having been replaced, contact your nearest KUBOTA dealer. Never use a fuse other than specified.

■Checking the Electrical Circuit

Check the electrical circuitry for disconnections, shorts or loose terminals.

■Checking Air-Conditioner Pipes and Hoses

WARNING

To avoid personal injury or death:

- **Do not touch the coolant hoses or the heater with your hand. You may get burned.**

1. Check to see that all lines and hose clamps are tight and not damaged.
2. If hoses and clamps are found worn or damaged, replace or repair them at once. (Consult your local KUBOTA dealer for this service.)

■Checking Boost Sensor and AFS (Air Flow Sensor)

Consult your local KUBOTA Dealer for this service.

■Checking Condition of Diesel Particulate Filter (DPF) Muffler

Consult your local KUBOTA Dealer for this service.

■Checking Diesel Particulate Filter (DPF) Differential Pressure Sensor and Piping for Gas Leak

Consult your local KUBOTA Dealer for this service.

■Checking Diesel Particulate Filter (DPF) Exhaust Gas Temperature Sensor

Consult your local KUBOTA Dealer for this service.

■Checking EGR Piping for Gas Leak

Consult your local KUBOTA Dealer for this service.

https://truckmanualshub.com/

BIENNIAL SERVICING

WARNING

To avoid personal injury or death:

- **Do not loosen the radiator cap before the radiator has cooled down sufficiently. Only loosen the cap after allowing enough time for the pressure in the system to be reduced. Thereafter, one can remove the cap completely.**

■Replacing Air-Conditioner Pipes and Hoses

WARNING

To avoid personal injury or death:

- **Do not touch the coolant hoses or the heater with your hand. You may get burned.**

1. Check to see that all lines and hose clamps are tight and not damaged.
2. If hoses and clamps are found worn or damaged, replace or repair them at once. (Consult your local KUBOTA dealer for this service.)

■Replacement of Radiator Hoses and Hose Clamps

Replace radiator hoses and hose clamps every two years. If the hoses are swollen, hard or cracked, they must be replaced earlier.

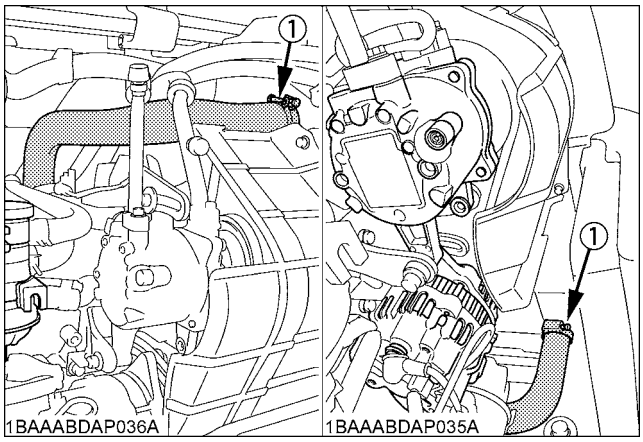

(1) Radiator hoses and clamps (Both sides)

■Changing Radiator Coolant

WARNING

To avoid personal injury or death:

- **When using anti-freeze, use protective clothing such as rubber gloves (Anti-freeze is poisonous.).**
- **If you accidentally swallowed anti-freeze, seek medical attention at once.**
- **When anti-freeze comes in contact with the skin or clothing, wash it off immediately.**
- **Do not mix different types of Anti-freeze. The mixture can produce a chemical reaction causing harmful substances.**
- **Anti-freeze is extremely flammable and explosive under certain conditions. Keep fire and children away from anti-freeze.**
- **When draining fluids from the engine, use a container underneath the engine body to catch the fluids.**
- **Do not pour waste onto the grounds, down a drain, or into any water source.**
- **Also, observe the relevant environmental protection regulations when disposing of anti-freeze.**
- **If swallowed, anti-freeze is poisonous to people, animals and birds.**

Stop the engine, then remove the key and wait until it has cooled down completely.

1. Open the drain plug on the bottom of the radiator and drain coolant completely. Should a recovery tank be equipped, disconnect the line from the tank floor and then open the drain shutoff-valve.
2. To clean, rinse the radiator with water.
3. Close the drain plug, and fill the radiator and the recovery tank with coolant fluid. Let the engine idle for about 5 min. Stop the engine and remove the key.
4. Check the coolant level of recovery tank and add the coolant if necessary.
5. The shipped machine has been filled with 50% anti-freeze solution.

https://truckmanualshub.com/

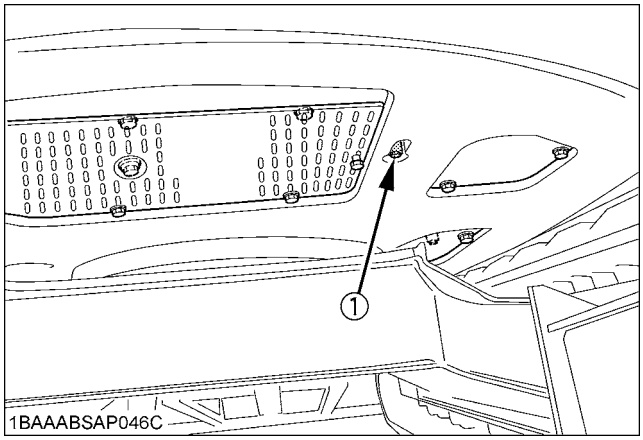

(1) Drain plug

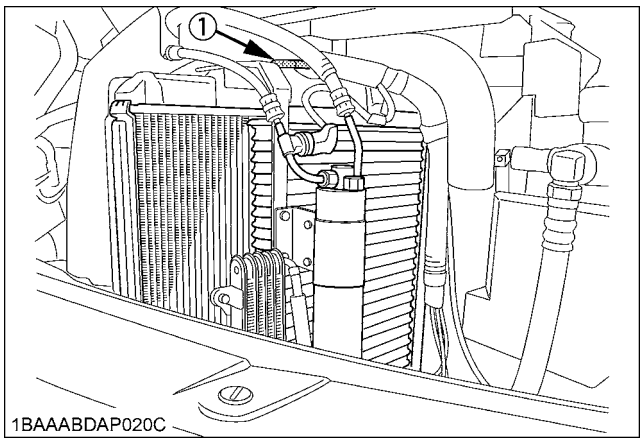

(1) Radiator cap

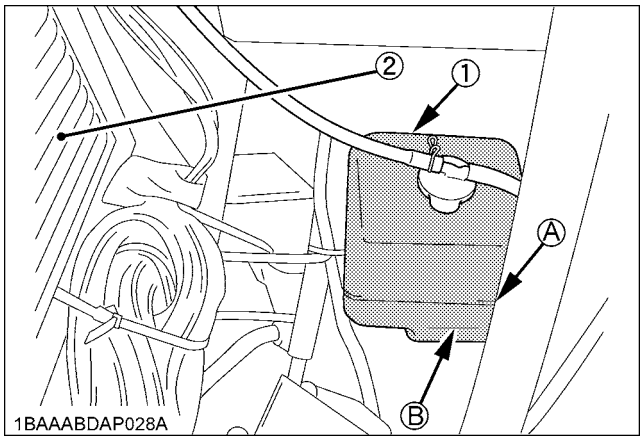

(1) Recovery tank
(2) Radiator
(A) "FULL"
(B) "LOW"

Radiator	10.5 L (2.77 US gal.)
Recovery tank	1.3 L (0.34 US gal.)

IMPORTANT :
- Do not operate the engine without coolant.
- To fill the radiator system and the recovery tank, use fresh water and anti-freeze fluid.
- When the anti-freeze is mixed with water, the anti-freeze mixing ratio must be less than 50%.
- Tighten the radiator cap properly. If the cap is loosely or not properly fitted, overheating of the engine can result due to coolant fluid loss.

■Replacing Fuel Hoses and Hose Clamps

Replace the hoses and clamps.
(See "Checking Fuel Line and Intake Air Line" in "EVERY 200 SERVICE HOURS")

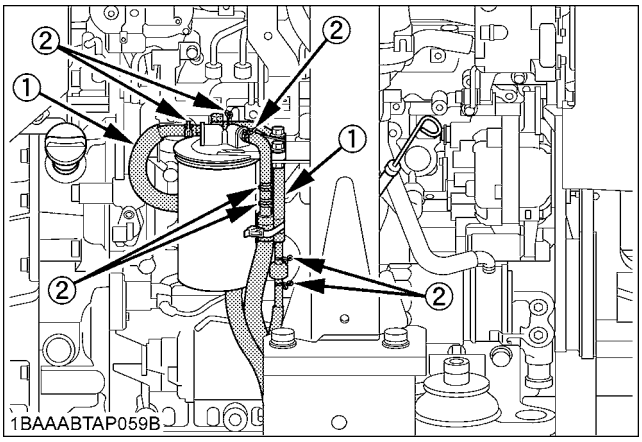

(1) Fuel lines
(2) Clamp bands

https://truckmanualshub.com/

■Replacing Intake Air line

Replace the hoses and clamps, if necessary.
(See "Checking Fuel Line and Intake Air Line" in "EVERY 200 SERVICE HOURS")

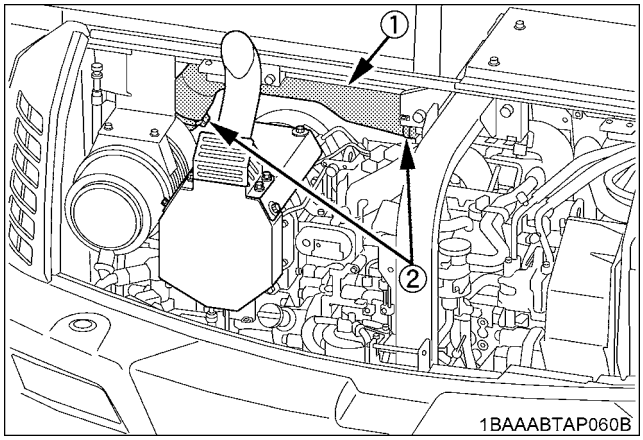

(1) Hoses
(2) Hose clamps

■Replacement of Oil Separator Rubber Hose

Consult your local KUBOTA Dealer for this service.

■Replacement of Diesel Particulate Filter (DPF) Differential Pressure Sensor Rubber Piping (Front and Back)

Consult your local KUBOTA Dealer for this service.

■Replacement of Suction pipe downstream the AFS (Air Flow Sensor)

Consult your local KUBOTA Dealer for this service.

■Replacement of Boost Sensor Pressure Rubber Piping

Consult your local KUBOTA Dealer for this service.

■Replacement of EGR Cooler Hose

Consult your local KUBOTA Dealer for this service.

SERVICING AS REQUIRED

■Checking Amount of Refrigerant (gas)

WARNING

To avoid personal injury or death:

- **Liquid contact with eyes or skin may cause frostbite.**
- **In the event of a leakage, wear safety goggles. Escaping refrigerant can cause severe injuries to eyes.**
- **In contact with a flame, R134a refrigerant gives a toxic gas.**
- **Do not disconnect any part of the refrigeration circuit of the air conditioning system. Consult your local KUBOTA dealer for assistance and service.**

A shortage of refrigerant impairs the air-conditioner performance. Check the following points. If it is indicated that the amount of refrigerant is extremely low, ask your dealer to inspect and charge.

◆ **Checking procedure**

1. Run the air-conditioner in the following conditions.

● Engine speed:	About 1500 rpm
● Temperature control lever:	Maximum cooling position (rightmost)
● Fan switch:	Highest blow (3)
● Air-conditioner switch:	ON

2. Look into the sight glass to see if the refrigerant is flowing through its circuit.

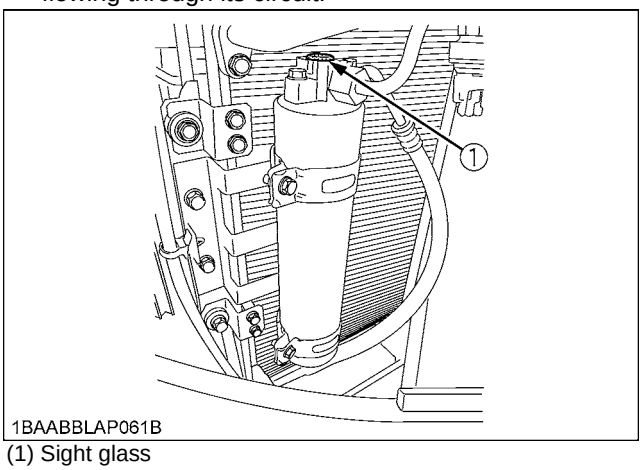

(1) Sight glass

https://truckmanualshub.com/

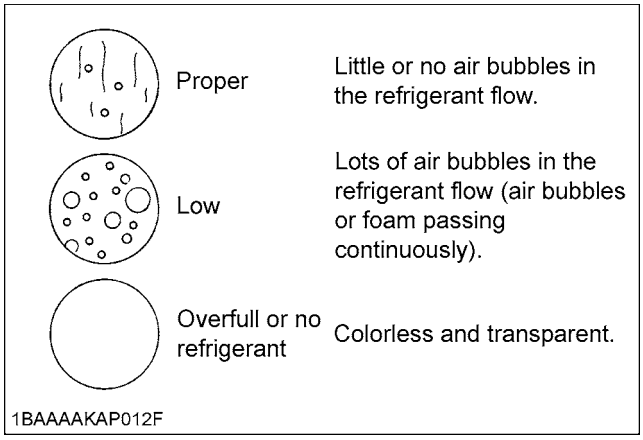

IMPORTANT :
- Charge only with R134a not R12 refrigerant (gas).

■Cleaning Diesel Particulate Filter (DPF)

◆ Removal of ash

The longer the DPF runs, the more ash (burnt residue) is collected in the filter. Too much ash build-up adversely affects the DPF performance.
Machine is equipped with the DPF cleaning alarm system, clean the DPF in case of an alarm or every 6000 operating hours.
The above cleanup intervals depend on the machine's operating conditions and other factors.
Ask your local KUBOTA Dealer to clean up the filter every 6000 operating hours.

IMPORTANT :
- To clean up the DPF, a specific machine is required. Do not attempt to clean it in any other way, such as disassembling, shaking and heating as toxic chemicals may be present inside of the DPF.

■Draining the fuel filter

If the warning message of the water separator appears as follows on the LCD, immediately drain the water separator. (For detail procedure, refer to **"Draining Water Separator"** in **"EVERY 50 SERVICE HOURS"**.)

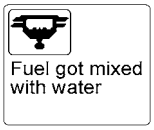

1BAACBCAP051C

IMPORTANT :
- If you don't drain the water separator immediately after the alarm, the engine may be seriously damaged.
- Without the water separator drained, the cleaning efficiency of the DPF will be reduced and the DPF longevity will be shorter than expected.

https://truckmanualshub.com/

OTHER ADJUSTMENTS AND REPLACEMENTS

PURGING OF THE FUEL SYSTEM

1. Fill up the fuel tank with fuel.
2. Turn the starter key to the position "RUN".
3. The air in the fuel system will automatically be purged within one minute.

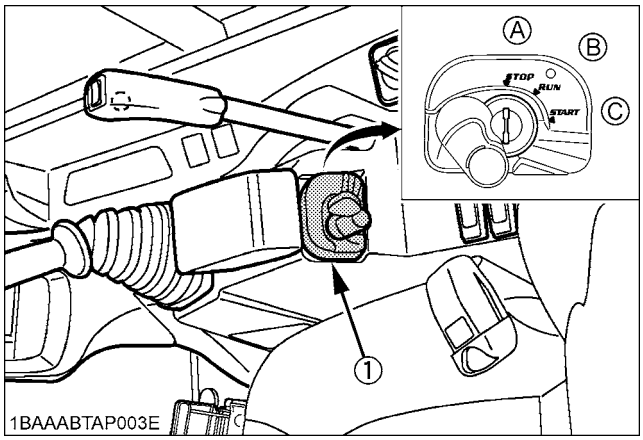

(1) Starter switch

(A) "STOP"
(B) "RUN"
(C) "START"

IMPORTANT :

- If the purging was insufficient, the engine stops right after starting. In this case repeat steps 2 to 3 again.

ADJUSTMENT OF TRACKS

◆ **To loosen the tracks, follow the following procedure:**

WARNING

To avoid personal injury or death:

- **Do not loosen the grease fitting completely or too quickly. Otherwise grease under high pressure in the tension cylinder could squirt out.**
- **Do not crawl under the excavator.**

1. Loosen the bolts and remove the cover.
2. Using a socket wrench, loosen the grease fitting a few turns.
3. When grease oozes out from the thread, rotate the track and loosen the track in the lifted position (see illustration).

After adjustment is completed:

Using the socket wrench, tighten the grease fitting. Tightening torque must be between 98 to 108 N-m (72.3 to 79.7 ft-lbs).

IMPORTANT :

- If the tracks are too tight, wear is increased.
- If the tracks are too loose, the track pads may collide with the sprocket and wear is increased.
  The track may dislocate or come off.
- Clean the track after every use.
- Should the track tension be high due to sticking mud, lift the track with the help of the boom, arm and bucket, idle the engine and remove mud from the track by rotating it.

◆ **Tense the tracks as specified:**

1. Loosen the bolt and remove the cover.
2. Apply grease to the grease fitting.

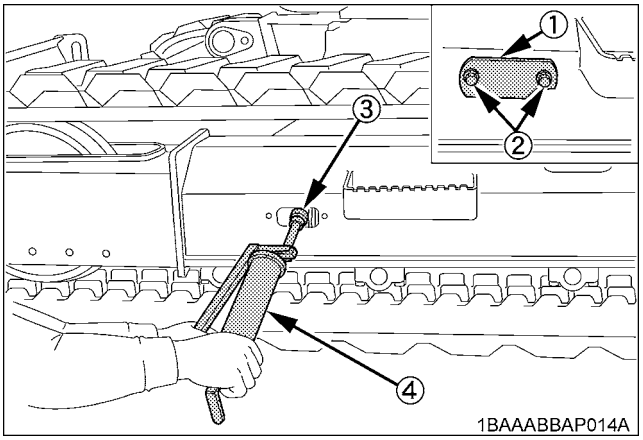

(1) Cover
(2) Bolt
(3) Grease fitting
(4) Grease gun

3. **Rubber Tracks**
   Tense the track in the lifted position, so that the distance "A" (clearance between the track roller and the inside surface of the track) see illustration, in this case, if there is a seam mark "∞" on the inside surface of the track, the seam mark "∞" is positioned on the top center between the idler and the sprocket.

   Steel Tracks
   To check the track tension, the track must be lifted from the ground as shown. The track tension is correct if the clearance between the outer end of the track roller and the track interior surface corresponds to the dimension specified in the table below.

https://truckmanualshub.com/

DANGER

To avoid serious injury or death:

- **Do not work under the machine in this condition.**
- **For your safety do not rely on hydraulically supported devices, they may leak down and suddenly drop or be accidentally lowered.**

WARNING

To avoid personal injury or death:

- **When lifting the machine itself with an attachment, place a safety block or safety post to prevent the machine from turning over. Keep the lock lever for attachment control in the "LOCKED" position.**

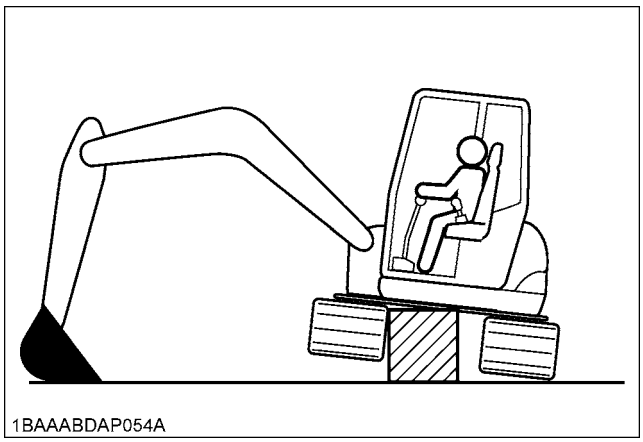

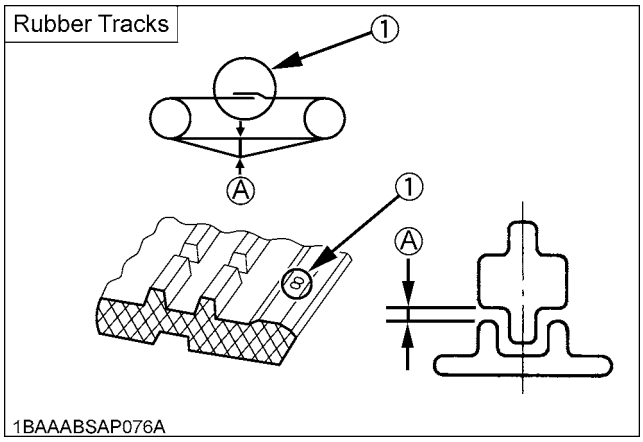

(1) Seam (Mark "∞")

(A)	25 to 40 mm (1.0 to 1.6 in.)

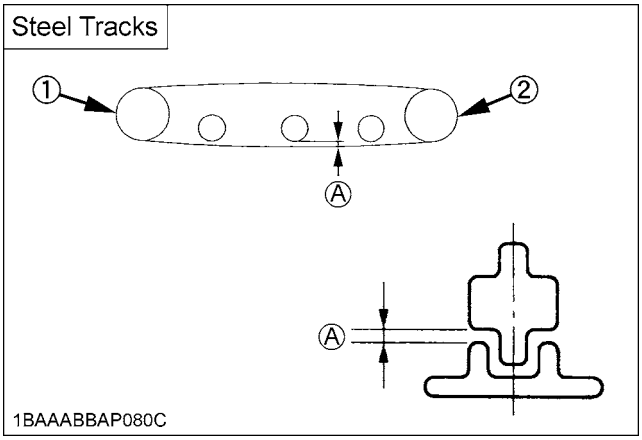

(1) Drive sprocket
(2) Idler

(A)	40 to 55 mm (1.6 to 2.2 in.)

IMPORTANT :

- Make sure that no obstacles, such as stones are caught in the track. Remove such obstacles before adjusting the track tension.
- Track seam
  The ends of the rubber track are joined with a seam. When adjusting the tracks, the seam must be positioned on the top midway between the idler and the sprocket.

  If the seam is positioned incorrectly, the tracks will be tensioned too loosely, and a further readjustment will be necessary.

- Rotate the track after adjustment one to two times to check the tension.
- Additionally following points are to be observed when adjusting rubber tracks.
  (1) If the track loosen more than 50 mm (2.0 in.), readjust them.
  (2) Check track tension 50 hours after initial use and readjust if necessary. Check and adjust thereafter every 50 service hours.
- If there is a SP mark, the adjustment is possible at all positions.

■Special Information when Using Rubber Tracks

1. When turning, make a slow swing turn. Avoid spin turns to reduce lug wear and entry of dirt.
2. The relief valve may be activated if too much dirt and sand clog the tracks. In this case move the machine for a short distance straight backwards to let the earth and sand fall off, then a turn can be made.

https://truckmanualshub.com/

3. Avoid using rubber track on riverbeds, stony underground, ferro-concrete and on iron plates. The rubber can damage as well as increase wear on the tracks.

CHANGING THE BUCKET

WARNING

To avoid personal injury or death:

- **There are two people required to replace the bucket. One person operates the excavator, and the other one mounts the bucket.**
  The person who mounts the bucket must command-guide the movements of the front end attachments. The operator should move the front end attachments only according to the commands of the person who mounts the bucket. Continuous visibility between both persons is indispensable. If there is no visibility, stop working immediately.
- **When replacing the bucket, make sure to wear eye protection, a helmet and protective gloves.**
- **During attaching and detaching, chippings and burns may occur at the bolts or bushings. These may cause severe injuries.**
- **Never use your fingers for the alignment of the components (linkage, bucket, arm). The components may sever your fingers by uncontrolled movements.**
- **Read the manual of the attachment to do a correct operation safely when other attachments are installed instead of KUBOTA specified bucket.**

FUSES

WARNING

To avoid personal injury or death:

- **When changing fuse, stop the engine and turn the key in position "STOP". Keep the pilot control lock lever in the "LOCKED" position.**

■Replacing Fuses

1. Remove the cover of the fuse box.
2. Replace the burnt out fuse with a fuse having the same capacity.

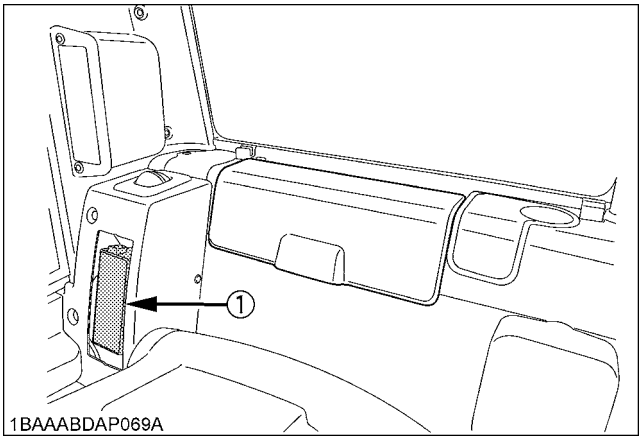

(1) Fuse box

■Fuse Capacities and Circuits

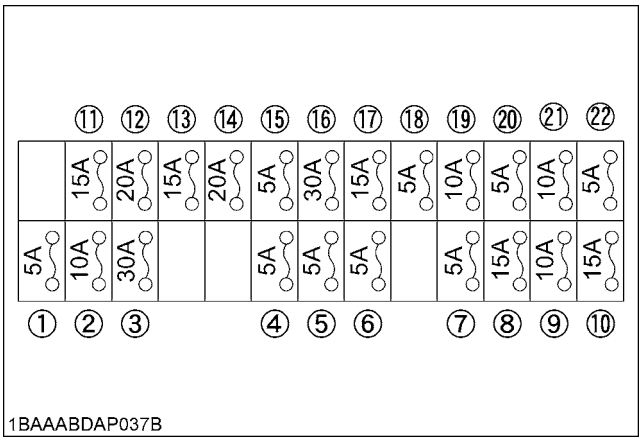

1	A/C Controller (+B)	12	Cab Work Light
2	Meter (+B)	13	Radio (AC)
3	Blower Motor	14	Fuel Filter Heater
4	Relay	15	ECU (+B)
5	ECU (AC)	16	ECU (POWER)
6	Room Light	17	Beacon
7	Starter	18	Horn Switch
8	Wiper / Washer	19	Horn
9	Compressor	20	Lever Lock
10	Electrical Outlet	21	Alternator
11	Front Work Light	22	Fuel Pump

https://truckmanualshub.com/

■Auxiliary Electric

Max power is less than 110 W including the equipped light 55W.

If you need another auxiliary electric, contact your KUBOTA dealer for details.

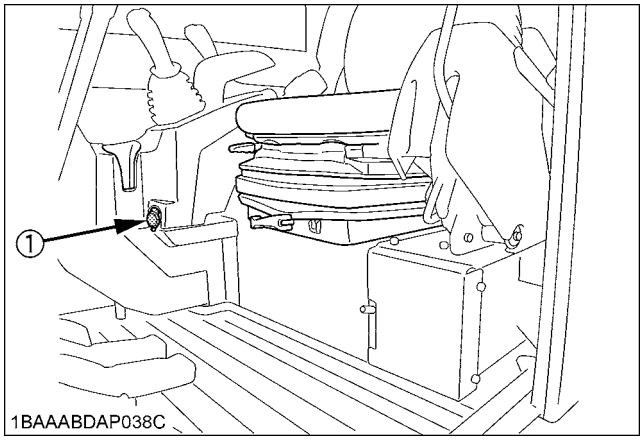

(1) Auxiliary Electric

■Slow Blow Fuse

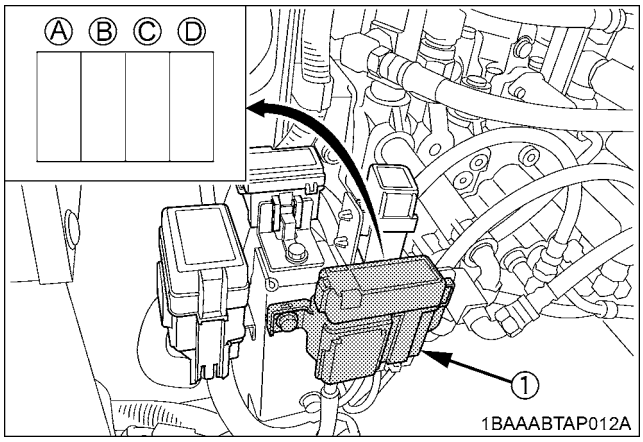

(1) Slow blow fuse

(A)	100A Alternator
(B)	30A Engine ECU
(C)	60A Main Power
(D)	50A Engine Power

IMPORTANT :

- The main fuse protects the entire electrical system. If the main fuse or another fuse has blown, determine why it blew and make any necessary repairs.
  Never bridge fuses, always replace them with a new fuse of the same rating.

◆ **Replacement procedure**

1. Disconnect the negative cord of the battery.
2. Remove the slow blow fuse case.
3. Open the slow blow fuse case cap and cover then remove the bolts and draw out the slow blow fuse (A) and (B).

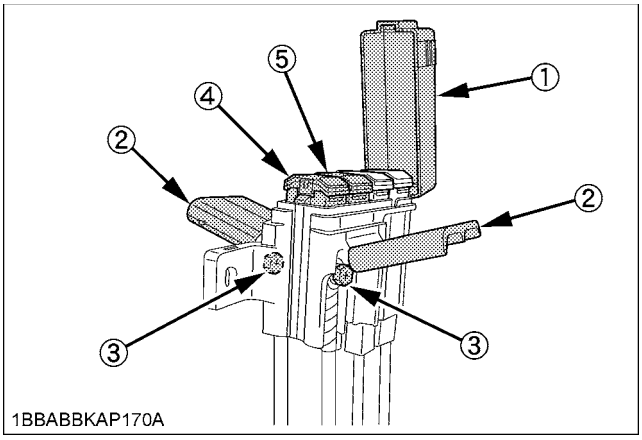

(1) Slow blow fuse case cap
(2) Cover
(3) Bolt
(4) Slow blow fuse (A)
(5) Slow blow fuse (B)

■Electric Fuse

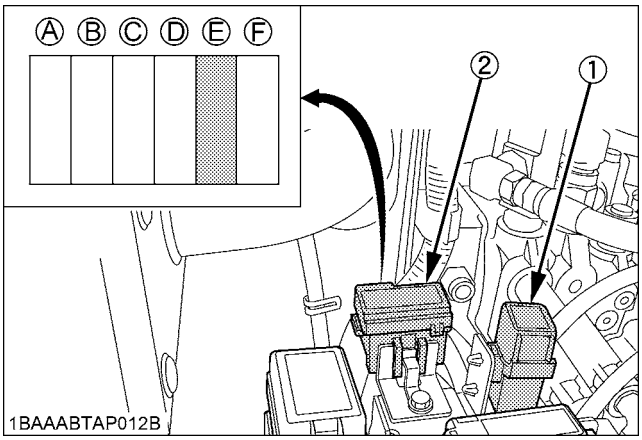

(1) Electric fan fuse (20A slow blow fuse)
(2) Air flow sensor (5A slow blow fuse) (E)

https://truckmanualshub.com/

TROUBLESHOOTING

If the excavator does not show the desired performance, or when trouble arises, refer to the table below and undertake appropriate measures.

Trouble		Cause	Countermeasure
Engine	Starting difficulties	Pilot control lock lever in "UNLOCK" position	* Bring pilot control lock lever into "LOCKED" position.
		Fuel is too viscous.	* Check fuel tank and filter. * Remove impurities and water. * If necessary, replace filter.
		Air or water in the fuel system	* Remove water from the fuel tank. * Check fuel pipe joint bolts and nuts for looseness. * Purging of the fuel system (for fuel filter and injection pump, see "PURGING OF THE FUEL SYSTEM" in the chapter "OTHER ADJUSTMENTS AND REPLACEMENTS".)
		Oil viscosity is too high the engine runs sluggishly in winter.	* Pour hot water over the radiator.
		Battery is almost dead; insufficient compression.	* Recharge battery.
	Insufficient engine power	Low fuel level	* Check fuel and add if necessary.
		Clogged air cleaner	* Clean the air filter element.
	Engine suddenly stops.	Low fuel level	* Check fuel and add if necessary. * Purge the fuel system.
	Abnormal exhaust gas color	Poor fuel	* Use high quality fuel.
		Too much engine oil	* Drain engine oil to prescribed oil level.
	Water temperature in red zone (Overheating)	Defective seal of the water pump	* Replace.
		Worn or torn V-belt	* Adjust or replace.
		Thermostat is defect.	* Replace.
		Coolant level too low	* Fill to prescribed level.
		Radiator grill or fins are clogged.	* Clean.
		Coolant is contaminated with rust from the cylinder head or crank case.	* Replace coolant fluid and add anti-rust.
		Defective radiator cap (Evaporation)	* Replace.
		Corroded coolant pipes	* Clean.
		Continuous operation under full load	* Reduce load.

https://truckmanualshub.com/

Trouble		Cause	Countermeasure
Engine	Water temperature in red zone (Overheating)	Cylinder head gasket is damaged (Coolant loss).	* Replace.
		Engine oil level too low	* Fill to prescribed level.
		Maladjustment of fuel injection	* Readjust ignition timing.
		Use of poor fuel	* Use prescribed fuel.
Hydraulic System	Boom, arm, bucket, drive, swing and dozer power is too low.	Hydraulic oil level too low	* Add oil.
		Leakages of hoses and / or joints	* Replace hose or joint.
	Swing motor and front attachment does not work.	Pilot control lock lever in "LOCKED" position	* Bring pilot control lock lever into "UNLOCK" position.
Drive System	Deviation of drive direction	Blocked through stones	* Remove.
		Track too loose or too tight	* Adjust accordingly.
AI	System indicator light flashes.	Fuse in fuse box defective	* Replace the fuse.

https://truckmanualshub.com/

OPERATION UNDER COLD WEATHER CONDITIONS

PREPARATION FOR OPERATION IN COLD WEATHER

1. Replace engine oil and hydraulic oil with those of viscosities suitable for cold weather.
2. In cold weather, battery power drops, and the battery fluid may freeze if the battery is not sufficiently charged. To prevent the battery fluid from freezing, be sure to keep the battery charged at least 75% or more of its capacity after operation. To ease next starting, it is recommended to keep the battery stored in closed or heated rooms. If the battery fluid level is too low, do not add after operation, but add with the engine running before the next operation.
3. Add anti-freeze to coolant in the radiator and recovery tank, if the ambient temperature is expected to drop below 0℃ (32℉). Mixing ratio of water and anti-freeze depends on the expected ambient temperature.
   When mixing, stir it up well, and then fill into the radiator.

- Mixing ratio between water and anti-freeze

Ambient Temperature ℃ (℉)	-5 (+23)	-10 (+14)	-15 (+5)	-20 (-4)	-25 (-13)	-30 (-22)	-35 (-31)
Antifreeze %	30	30	30	35	40	45	50
Water %	70	70	70	65	60	55	50

IMPORTANT :

- Use permanent anti-freeze or long-life coolant.
- Drain the coolant completely and clean the inside of the radiator, then fill with the water and anti-freeze mixture.
- The anti-freeze acts as an anti-corrosive, it is not necessary to add an additive to the water and anti-freeze mixture.
- See "Coolant check" under "DAILY CHECKS" in "MAINTENANCE" for radiator fill volumes.

PROCEDURE AFTER COMPLETING WORK

Clean the excavator thoroughly after work and wipe dry. Otherwise mud and earth on the tracks could freeze if the temperature drops below the 0℃ (32℉) mark. Operation of the excavator is then not possible. Store the excavator in a dry place; if not possible, store on wooden planks or on mats. If the excavator is kept on damp or muddy ground, the tracks could freeze overnight. Operation of the excavator is then not possible. Furthermore the drive unit may be damaged.

Additionally, the piston rods of the hydraulic cylinders must be rubbed dry. Otherwise severe damage could occur if dirty water seeps through the seals.

https://truckmanualshub.com/

LONG STORAGE

WARNING

To avoid personal injury or death:

- **Do not clean the excavator with the engine running.**
- **To avoid the danger of exhaust fume poisoning, do not operate the engine in a closed building without proper ventilation.**
- **When storing, remove the key from the starter switch to avoid unauthorized persons from operating the excavator and getting injured.**
- **Bring the excavator on a firm, flat, and level surface. Lower the attachments and dozer blade on the ground.**

■ **Should the Excavator be Stored for a Longer Period of Time, Observe Following Procedures:**

1. The whole excavator should be cleaned thoroughly and in all cases stored indoors. If the excavator has to be kept outdoors, lay out wooden planks on even ground, place the excavator on the planks and cover completely.
2. Do an oil change and grease the excavator.
3. Heavily grease the visible section of the cylinder rods.
4. Remove the battery and store indoors.
5. If it is expected that the temperature will sink below the 0℃ (32℉) mark, add anti-freeze or drain coolant completely.

IMPORTANT :

- Wash the excavator after stopping the engine.
  If you wash the excavator while running the engine, splashing water gets into the air cleaner through its intake and cause engine damage.
  Carefully wash and do not splash water over the air cleaner while the engine is running.

■ **Observe Following Procedures when the Machine is to be Operated after Long Storage.**

1. Wipe off the grease from the hydraulic cylinder rods.
2. Turn on the engine and operate the attachments and the drive mechanisms under no load in order to circulate the hydraulic oil.
   (If the machine is stored for longer than one month, do steps 1 and 2 once every month.)

https://truckmanualshub.com/

Periodic replacement of important component parts

To ensure safety in operation, you are strongly requested to inspect and service the machine at regular intervals. For added safety, ask your KUBOTA dealer to replace the following important component parts.

These parts are prone to degradation in material or subject to wear and tear with time. It is difficult to judge how much they have been affected at regular inspection. It is therefore necessary to replace them with new ones, whether wear is visible or not after a specified time of use.

If any of them is found worn even before the specified use, it must be repaired or replaced the same way as other parts.

If any of the hose clamps is found deformed or cracked, the hose clamp must also be replaced.

For the hydraulic hoses other than the ones to be replaced periodically, inspect them for the following points. If found unusual condition, tighten them up, replace them.

When replacing the hydraulic hoses, change their O rings and sealings with new ones.

For replacement of the important parts, contact your KUBOTA dealer.

- At the following periodic inspections, check the fuel hoses and hydraulic hoses as well.

Inspection Interval	Check points
Daily Checks	Oil leak at fuel and hydraulic hose connections and points
Every month	Oil leak at fuel and hydraulic hose connections and points Damages at fuel and hydraulic hose (cracks, chafing)
Every year	Oil leak at fuel and hydraulic hose connections and points Interference, deformation, degradation, twist and other damages (cracks, chafing) of fuel and hydraulic hoses

List of important component parts

No.	Component parts	Period
1	Fuel hose	Every 2 years or 4000 hours
2	Hydraulic hose (suction)	
3	Hydraulic hose (delivery)	
4	Hydraulic hose (Boom cylinder)	
5	Hydraulic hose (Arm cylinder)	
6	Hydraulic hose (Bucket cylinder)	
7	Hydraulic hose (Swing cylinder)	
8	Hydraulic hose (Dozer cylinder)	
9	Hydraulic hose (Service port)	
10	Hydraulic hose (Swivel motor)	
11	Hydraulic hose (Travel motor)	
12	Hydraulic hose (Angle cylinder)	
13	DPF differential pressure sensor rubber piping (Front and Back)	
14	Suction pipe downstream the AFS (Air Flow Sensor)	
15	Boost sensor pressure rubber piping	

To prevent serious damage to the hydraulic system, use only a KUBOTA genuine hydraulic hose.

https://truckmanualshub.com/

RECOMMENDED OILS

IMPORTANT :
1. Before delivery the hydraulic oil used was Shell Tellus S2M46.
2. Use engine oil API service classification CJ-4 or CK-4.
3. Use SAE 90 (API, GL-4, GL-5) as drive unit oil for all seasons.
4. Other than the oil mentioned below, JCMAS HK certified oil and GK certified grease can also be used. Check the Japan Lubricating Oil Society (JALOS) website for more details.

	Application	Viscosity	KTC recommends	Shell	ExxonMobil
Gear oil	All-weather gear oil	SAE 90	Excavator Gear Oil 90 Part Number 70000-68700 (1 Quart)	Shell Spirax HD80W-90	Mobilube HD Plus 80W-90
Hydraulic oil	In winter or by low temperatures	ISO 32	Excavator Hydraulic Fluid 32 Part Number 70000-68720 (5 Gal Pail) Part Number 70000-68740 (55 Gal Drum)	Shell Tellus S2M32 or Shell Tellus S2MX32	
	In summer or by high ambient temperatures	ISO 46	Excavator Hydraulic Fluid 46 Part Number 70000-68760 (5 Gal Pail) Part Number 70000-68780 (55 Gal Drum)	Shell Tellus S2M46 or Shell Tellus S2MX46	
Grease				Shell Alvania EP2	Mobilux EP2
Fuel				Diesel Fuel No. 2-D S15	
Fuel under -5 ℃ (23 ℉)				Diesel Fuel No. 1-D S15	

	Application	Viscosity	KCL recommends	Shell	Esso
Gear oil	All-weather gear oil	SAE 90		Shell Spirax HD75W-90	Mobilube HD 80W-90
Hydraulic oil	In winter or by low temperatures	ISO 32	KUBOTA ALL SEASON HYDRAULIC EXCAVATOR OIL Part Number 70000-10200 (20 Litres)	Shell Tellus S2M32 or Shell Tellus S2MX32	Mobil DTE 13M
	In summer or by high ambient temperatures	ISO 46		Shell Tellus S2M46 or Shell Tellus S2MX46	Mobil DTE 15M
Grease				Shell Alvania EP2	Mobilux EP2
Fuel				Diesel Fuel No. 2-D S15	
Fuel under -5 ℃ (23 ℉)				Diesel Fuel No. 1-D S15	

https://truckmanualshub.com/

NOTE :

◆ **Engine Oil:**

- Oil used in the engine should have an American Petroleum Institute (API) service classification and Proper SAE Engine Oil according to the ambient temperatures.

Above 25℃ (77℉)	SAE 30 or SAE 10W-30, SAE 15W-40
0℃ to 25℃ (32℉ to 77℉)	SAE 20 or SAE 10W-30, SAE 15W-40
Below 0℃ (32℉)	SAE 10W or SAE 10W-30, SAE 15W-40

- Refer to the following table for the suitable API classification engine oil and the fuel.

Fuel used	Engine oil classification (API classification)
	Oil class of engines except external DPF
Ultra Low Sulfur Fuel [<0.0015% (15 ppm)]	**CJ-4** or **CK-4**

◆ **Fuel:**

- Use the ultra low sulfur diesel fuel only [below 0.0015 % (15 ppm)] for these engines.
- Cetane number of 45 minimum. Cetane number greater than 50 is preferred, especially for temperatures below -20℃ (-4℉) or elevations above 1500 m (5000 ft).
- Diesel fuels specified to EN 590 or ASTM D975 are recommended.
- No. 2-D is a distillate fuel of lower volatility for engines in industrial and heavy mobile service. (SAE J313 JUN87)

- Indicated capacities of water and oil are manufacture's estimate.

IMPORTANT :

- If you use different fuel or engine oil, the cleaning efficiency of the DPF will be reduced and the DPF longevity will be shorter than expected.
- Filters must trap fuel and lubricant sulfate additives (Zn, Pb, Na, K, Ca, Mg, Cu, Ba, P, etc.) as ash during combustion. Fuel must be controlled carefully to prevent the additives being mixed into fuel such as fuel tank anti-oxidants, water remover, anti-freeze and so on.

https://truckmanualshub.com/

BIODIESEL FUEL (BDF)

B0-B20 Biodiesel fuels (BDF): mixed diesel fuels containing 20% or less biodiesel can be utilized under the following conditions.

IMPORTANT :

- Refueling and handling fuel should be done with caution in order to avoid contact with the fuel and spillage that could create a potential environmental or fire hazard. Wear appropriate protective equipment when refueling.

◆ Applicable BDF:

1. Blended diesel fuels containing 6% through 20% BDF (B6 - B20) which comply with American Society for Testing and Materials (ASTM) D7467 Standard, as revised, can be used without adversely affecting the performance and durability of the engine and fuel system components.
2. Any mineral oil diesel fuel, if used, must conform to ASTM D975 (or the European EN590) Standard, as revised.
   B100 fuel used to make Biodiesel blended fuels must meet ASTM D6751 (or EN14214) Standard, as revised.
   The final blended fuel B20 must conform to ASTM D7467 Standard, as revised.
   Straight vegetable oil is NOT allowed in any blended fuel.
3. Allowable blended fuel is mineral oil diesel fuel blended with B100 (i.e. 100% BDF).
   The blended fuel ratio shall be less than 20% B100 and 80% or more diesel fuel.
   The B100 source used for Biodiesel blends must be purchased from an accredited BQ-9000 marketer or producer.
   More information about qualified marketer(s) and producer(s) can be found at http://www.bq-9000.org .

◆ Preparation:

1. Before using BDF concentrations greater than B5, you are advised to replace the engine oil, engine oil filter and fuel filter with new oil and filters. For replacement procedures, refer to the "REGULAR CHECKS AND MAINTENANCE WORK" section.

◆ Product Warranty, Emission and Other Precautions:

1. The engine emission control system was certified according to current regulations based on the use of non-BDF. When using BDF, the owner is advised to check applicable local and federal emission regulations and comply with all of them.
2. BDF may cause restricted or clogged fuel filters during cold weather conditions, resulting in the engine not operating properly.
3. BDF encourages the growth of microorganisms which may cause degradation of the fuel.
   This in turn may cause fuel line corrosion or reduce fuel filter flow earlier than expected.
4. BDF inherently absorbs moisture which may cause degradation of the fuel earlier than expected.
   To avoid this, drain the water separator and fuel filter port often.
5. Do not use Biodiesel concentrations higher than 20% (i.e. greater than B20).
   Engine performance and fuel consumption will be affected, and degradation of the fuel system components may occur.
6. Do not readjust the engine fuel control system as this will violate emission control levels for which the equipment was approved.
7. Compared with soybean-based and rapeseed-based feedstock, palm oil-based feedstock has a thicker consistency (i.e. higher viscosity) at lower temperatures.
   Consequently, fuel filter performance may be reduced, particularly during cold weather conditions.
8. The KUBOTA Warranty, as specified in the Owner's Warranty Information Guide, only covers defects in product materials and workmanship. Accordingly, any problems that may arise due to the use of poor quality fuels that fail to meet the above requirements, whether biodiesel or mineral oil based, are not covered by the KUBOTA Warranty.

◆ Routine handling:

1. Avoid spilling BDF onto painted surfaces as this may damage the finish.
   If fuel is spilled immediately wipe clean and flush with soapy water to avoid permanent damage.
2. When using BDF, you are advised to maintain a full tank of fuel, especially overnight and during short term storage, to reduce condensation within the tank. Be sure to tighten the fuel cap after refueling to prevent moisture build up within the tank. Water in the Biodiesel mixture will damage fuel filters and may damage engine components.

https://truckmanualshub.com/

◆ Maintenance Requirements when using BDF B0 through B5:
Follow the oil change intervals recommended by referring to the "MAINTENANCE" section. Extended oil change intervals may result in premature wear or engine damage.

◆ Maintenance Requirements when using BDF B6 through B20:
The maintenance interval for fuel related parts changes.
See the table below for the new maintenance interval.

Items		Interval	Remarks
Water separator filter element	Replace	every 250 hrs	
Fuel filter cartridge	Replace	every 250 hrs	
Fuel line	Check	every 100 hrs	
	Replace	every 1 year	Consult your local KUBOTA Dealer for this service.

◆ Long Term Storage:
1. BDF easily deteriorates due to oxygen, water, heat and foreign substances.
   Do not store B6 through B20 longer than 1 month and B5 longer than 3 months.
2. When using B6 through B20 and storing the machine longer than 1 month, drain the fuel from the tanks and replace with light mineral oil diesel fuel.
   Subsequently, run the engine at least 30 minutes to remove all of the Biodiesel from the fuel lines.
3. When using B5 fuel and storing machine longer than 3 months, drain the fuel from the tanks and replace with light mineral oil diesel fuel.
   Subsequently, run the engine at least 30 minutes to remove all of the Biodiesel from the fuel lines.

https://truckmanualshub.com/

APPENDICES

MAIN DIMENSIONS

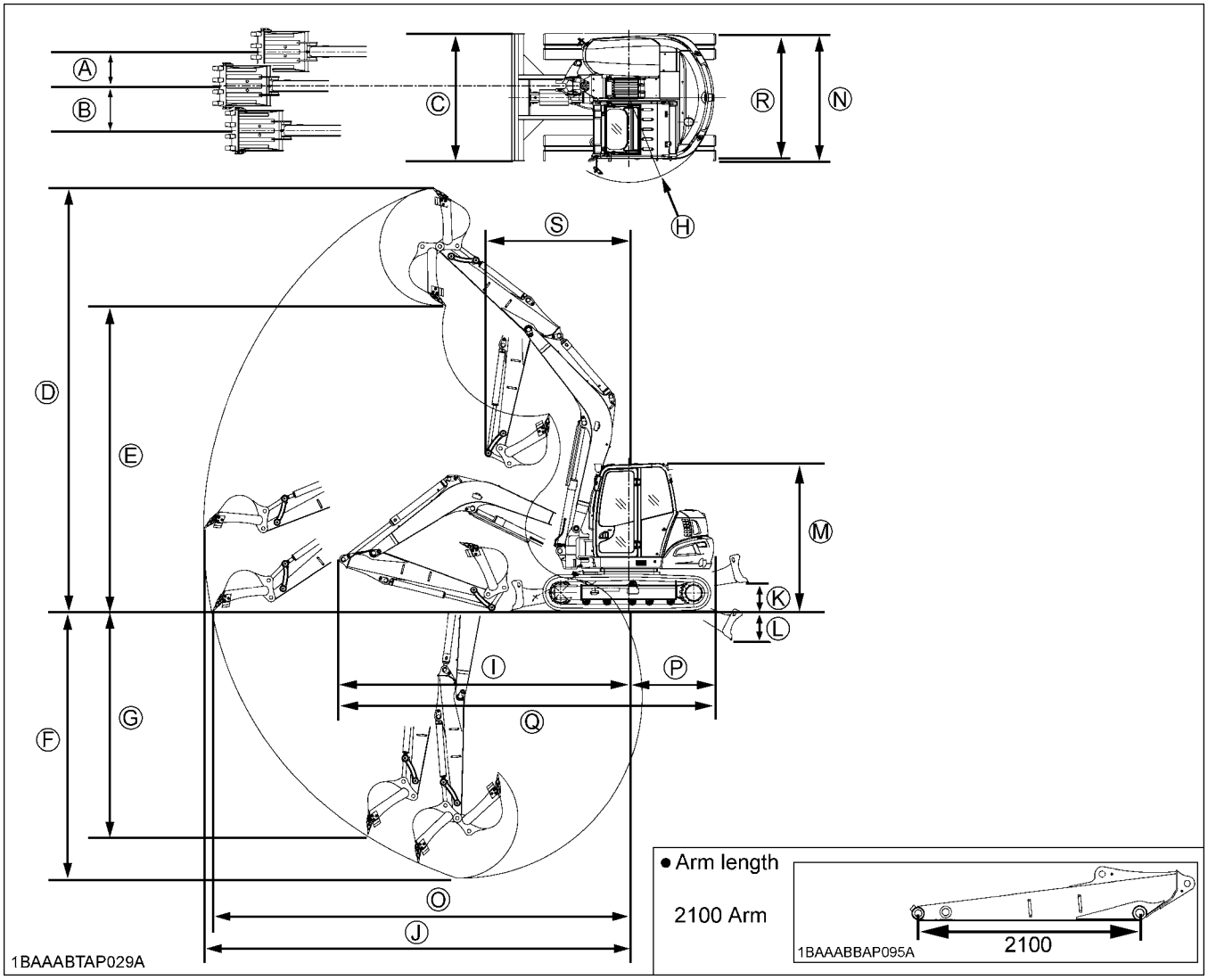

mm (in.)

	(A)	(B)	(C)	(D)	(E)	(F)	(G)	(H)	(I)	(J)
KX080-4S2	590 (23.2)	770 (30.3)	2200 (86.6)	7300 (287.4)	5250 (206.7)	4600 (181.1)	3850 (151.6)	1460 (57.5)	4990 (196.5)	7330 (288.6)

	(K)	(L)	(M)	(N)	(O)	(P)	(Q)	(R)	(S)	
KX080-4S2	500 (19.7)	500 (19.7)	2540 (100.0)	2200 (86.6)	7170 (282.3)	1460 (57.5)	6450 (253.9)	2150 (84.6)	2490 (98.0)	

NOTE :
- Above dimensions are based on the machine with KUBOTA original bucket.
- Above dimensions are based on the machine with rubber track.
- Specifications subject to change without notice.

https://truckmanualshub.com/

LIFTING CAPACITY

1. The lifting capacities are based on ISO 10567 and do not exceed 75% of the static tilt load of the machine or 87% of the hydraulic lifting capacity of the machine.
2. The strokes are as follows.
   (1) The load point corresponds to the front bolt part of the arm.
   (2) The machine positions are (i) over - front (Blade down), (ii) over - front (Blade up), and (iii) over - side.
   (3) The operating cylinder is the boom cylinder.
3. The bucket of the excavator, the hook, the sling and other lifting accessories are taken into consideration for the loads.

Machine conditions:

No bucket, all others according to the standard regulations.

WARNING

To avoid personal injury or death:

- **No loads greater than those values mentioned in the lifting capacity tables are to be lifted.**
- **The values mentioned in the table are valid only on even, hard grounds. When lifting on soft ground, the machine can tip over due to the load being concentrated only on one side of the machine.**
- **The table values are calculated at the end of the arm without the bucket. In order to find the allowable loads for machines with bucket, the bucket weight must be subtracted from the values in the table.**
- **Never lift the machine with the angle blade placed at an angle.**

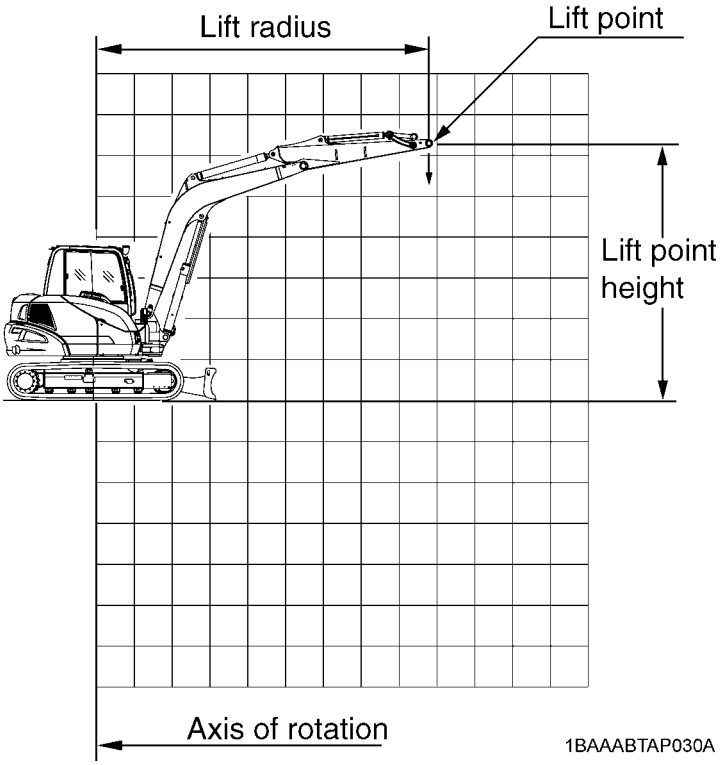

https://truckmanualshub.com/

KX080-4S2 2100 ARM RUBBER TRACKS STEEL TRACKS (450width)

LIFT POINT RADIUS (ft) — 1000lb

LIFT POINT HEIGHT (ft)	MIN.	6	12	18	MAX.
20					
16					
12			3.6	3.4	3.4
8			5.0	3.7	3.4
4			6.5	4.0	3.5
0			7.2	4.2	3.6
-4	4.8	7.9	6.9	3.9	3.7
-8	11.3	11.8	5.5		
-12					

OVER-FRONT (BLADE DOWN)

LIFT POINT RADIUS (ft) — 1000lb

LIFT POINT HEIGHT (ft)	MIN.	6	12	18	MAX.
20					
16					
12			3.6	2.8	2.5
8			5.0	2.7	2.2
4			4.8	2.6	2.1
0			4.8	2.5	2.1
-4	4.8	7.9	4.4	2.5	2.4
-8	11.3	11.8	4.5		
-12					

OVER-FRONT (BLADE UP)

LIFT POINT RADIUS (ft) — 1000lb

LIFT POINT HEIGHT (ft)	MIN.	6	12	18	MAX.
20					
16					
12			3.6	2.1	1.9
8			3.9	2.1	1.7
4			3.5	2.0	1.6
0			3.3	1.9	1.6
-4	4.8	7.9	3.2	1.8	1.8
-8	11.3	10.8	3.3		
-12					

OVER-SIDE

KX080-4S2 2100 ARM STEEL TRACKS (600width)

LIFT POINT RADIUS (ft) — 1000lb

LIFT POINT HEIGHT (ft)	MIN.	6	12	18	MAX.
20					
16					
12			3.6	3.4	3.4
8			5.0	3.7	3.4
4			6.5	4.0	3.5
0			7.2	4.2	3.6
-4	4.8	7.9	6.9	3.9	3.7
-8	11.3	11.8	5.5		
-12					

OVER-FRONT (BLADE DOWN)

LIFT POINT RADIUS (ft) — 1000lb

LIFT POINT HEIGHT (ft)	MIN.	6	12	18	MAX.
20					
16					
12			3.6	2.8	2.5
8			5.0	2.8	2.2
4			4.9	2.6	2.1
0			4.6	2.6	2.2
-4	4.8	7.9	4.6	2.5	2.4
-8	11.3	11.8	4.6		
-12					

OVER-FRONT (BLADE UP)

LIFT POINT RADIUS (ft) — 1000lb

LIFT POINT HEIGHT (ft)	MIN.	6	12	18	MAX.
20					
16					
12			3.6	2.2	2.0
8			4.0	2.1	1.7
4			3.6	2.0	1.6
0			3.4	1.9	1.7
-4	4.8	7.9	3.3	1.9	1.8
-8	11.3	11.1	3.4		
-12					

OVER-SIDE

1BAAABTBP0170

https://truckmanualshub.com/

LIST OF SCREENS

LIST OF NORMAL SCREENS

No.	Message	Problem or failure (What happened)	Machine behavior (Provisional measure)	Correction
1	Glow screen 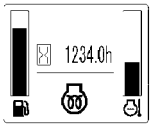 1BAAABDAP073B	This screen indicates that the glow lamp is on.	Wait until the glow mark disappears. Then get the engine started.	-
2	Default screen (normal) 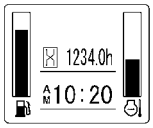 1BAAABDAP017A	This screen shows the normal status. (Hour meter)	-	-
3	Default screen (normal) Tachometer (numeric) 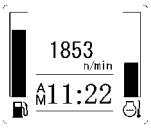 1BAAABDAP072C	This screen shows the normal status. (Numerical display of tachometer readings)	-	-
4	AUX port enable switch activated (hour meter) 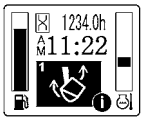 1BAAACEAP019A	AUX port enable screen	-	-
5	AUX port enable switch activated Tachometer (numeric) 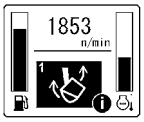 1BAAACEAP035A	AUX port enable screen	-	-

https://truckmanualshub.com/

NAVIGATION LIST OF SCREENS

If an error occurs with the machine, one of the following messages appears in the LCD.
In case of trouble, immediately contact your local dealer for inspection and repair.
While the (ℹ) (information mark) appears onscreen, press the information switch, and detailed information will be displayed.
Notify your local dealer of this and other information.

No.	Message	Problem or failure (What happened)	Machine behavior (Provisional measure)	Correction
1	Clock setting request 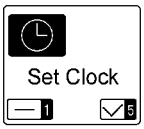 1BAABBLAP255D	The battery is disconnected, thereby requiring to set the clock.	Press Switch 5 to set the clock.	-
2	Tilt up the lock lever. 1BAABBLAP142B	This message indicates a procedural step.	Tilt up the pilot control lock lever. This message disappears by tilting up the pilot control lock lever.	-
3	Tilt down the lock lever. 1BAABBLAP257B	This message indicates a procedural step.	Tilt down the pilot control lock lever. This message disappears by tilting down the pilot control lock lever.	-
4	Start the engine. 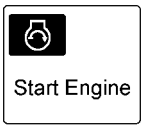 1BAABBLAP258B	This message indicates a procedural step.	Start the engine. This message then disappears.	-
5	Failure to pull out the key 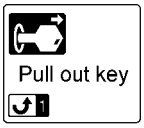 1BAABBLAP259B	This message appears if the key switch is set at "STOP" and left at this position for a while.	Draw out the key.	-
6	Authentication complete: Draw out the key. 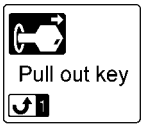 1BAABBLAP259B	This message appears when the anti-theft setting key is authenticated.	Draw out the key. This message then disappears.	-

https://truckmanualshub.com/

No.	Message	Problem or failure (What happened)	Machine behavior (Provisional measure)	Correction
7	Insert the register keys sequentially. 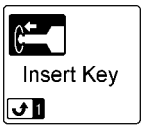 1BAABBLAP262B	This message appears when the anti-theft setting keys are ready to register.	Insert the register keys sequentially.To interrupt the registering procedure, press Switch 1.	-
8	Registering complete. Draw out the black key. 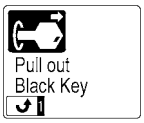 1BAAABYAP029C	This message appears when the black key has been successfully registered.	Draw out the black key.	-
9	Already registered 1BAABBLAP263B	This message appears if a registered key is tried to get registered again.	Draw out the key and insert an unregistered key.	-
10	No more keys can be registered. 1BAABBLAP264H	This message appears if the number of registered keys has exceeded their limit.	No more keys can be registered.	-
11	Press Switch 3. 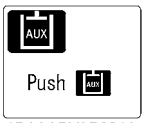 1BAAABYAP031A	This message appears if the AUX function is tried without pressing the AUX port enable switch.	Press the AUX port enable switch.	-
12	Not equipped with AUX2/Thumb function 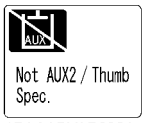 1BAAABYAP032A	The AUX2 port is tried on machines not equipped with AUX2 function.	-	-
13	Not equipped with overload warning function 1BAAABYAP036C	This message appears if the overload warning switch is pressed on machines not equipped with overload warning system.	-	-

https://truckmanualshub.com/

No.	Message	Problem or failure (What happened)	Machine behavior (Provisional measure)	Correction
14	Out of fuel Feed fuel 1BAABBLAP215B	Fuel is running out.	-	Add fuel.
15	Fuel sensor error Fuel Sensor Err 1BAABBLAP139B	The fuel sensor system is in trouble.	The fuel level indicator does not appear on the meter.Press the display selector switch, and the normal display is switched back.The machine's other functions are still operative.	Immediately contact your local dealer.
16	Charging system error Charging Sys Err 1BAABBLAP136B	Charging system is in trouble. The battery is not charging.	The machine works until the battery goes dead.	Immediately contact your local dealer.
17	Engine oil pressure error Engine Oil Press Err Stop Engine 1BAABBLAP137B	The engine lubricating system oil pressure is too low. Stop the engine.	The engine may get burnt out. Immediately stop the engine.	Immediately contact your local dealer.
18	Overvoltage Over voltage Sys Err 1BAABBLAP138B	This message appears if a jumper cable is connected to a 24V battery or improper device to get the engine started or if the alternator is in trouble.	Immediately interrupt the engine if with a 24V battery. When the engine gets restarted and is running with no message appearing, it means there is no problem.	If this message still appears, immediately ask for repair.
19	Overheat advance warning Water temperature rising Water temp. Rising 1BAABBLAP140E	Water temperature is rising somewhat higher than specified.	Operate with the load a little lessened. Check the radiator and other components for clog. Immediately clean them up.	-

https://truckmanualshub.com/

No.	Message	Problem or failure (What happened)	Machine behavior (Provisional measure)	Correction
20	Cool-down during overheat idling Over heat Engine to Idle for cooling 1BAABBLAP141B	The engine automatically reduces rpm's to avoid an overheat.	Leave the engine idling until this warning disappears. Do not stop the engine because the coolant temperature will increase sharply and may boil and gush out. Be sure to cool down the engine without stopping it.	Refill the radiator with coolant by the amount that overflowed amount. Unclog the radiator and other components before use again. Check also the hydraulic system for oil leak and other troubles. If an oil leak is found, immediately contact your local dealer for repair.
21	Water temperature sensor error Water temp. Sensor Err 1BAABBLAP237B	Water temperature sensor system is in trouble.	The meter does not show water temperature. Press the display selector switch, and the normal display is switched back. The machine's other functions are operative, but an overheat and other problems cannot be detected.	Immediately contact your local dealer.
22	Lock lever system error Lever Lock Sys Err 1BAABBLAP244D	The lock lever system is in trouble.	The engine can run, but the machine fails to move.	Immediately contact your local dealer.
23	Travel 2-speed system (switching) Travel 2 Speed Sys Err 1BAABBLAP147B	The 2-speed switching system is in trouble.	The machine still runs at low speed without switching to high speed. The machine's other functions are still operative.	Immediately contact your local dealer.
24	AI system error AI Sys Err 1BAABBLAP273B	The auto idle system is in trouble. The accelerator fails too.	The accelerator fails, but the machine's other functions are still operative. Move the machine to a place suited for repair.	Immediately contact your local dealer.
25	5V short-circuit External 5V Sys Err 1BAABBLAP152B	The sensor's 5V power supply is short-circuited.	The majority of systems fail. * The engine may get started and the machine may move. But do not try any jobs. (Just move the machine to a safe place.)	Immediately contact your local dealer.

https://truckmanualshub.com/

No.	Message	Problem or failure (What happened)	Machine behavior (Provisional measure)	Correction
26	CAN system error 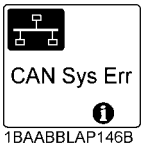 1BAABBLAP146B	The communication (CAN) system is in trouble. Some meter readings may be erroneous or some switches may malfunction.	The engine may get started and the machine may move. But do not try any jobs. (Just move the machine to a safe place.)	Immediately contact your local dealer.
27	General switching system error 1BAAABYAP035B	The general switching system is in trouble. (This message appears only when the general switching function is preset effective.)	The engine can get restarted and the machine can move, but the general switching system fails. When the other systems than the general switching system function, the job can be continued.	Immediately contact your local dealer.
28	AUX1 port system error 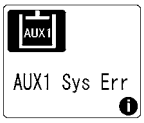 1BAAABYAP035A	The AUX1 port system is in trouble.	The engine can get restarted and the machine can move, but the AUX1 port system fails. When the other systems than the AUX1 port system function, the job can be continued.	Immediately contact your local dealer.
29	AUX2 Thumb system error 1BAAABYAP035K	The Thumb system is in trouble.	The engine can get restarted and the machine can move, but the Thumb 2 system fails. When the other systems than the Thumb and AUX port system function, the job can be continued.	Immediately contact your local dealer.
30	Periodic check (advance notice) 1BAABBLAP265B	This message appears 10 hours before the periodic check interval. Press the information switch, and the list of related components can be reviewed.	Get the engine started as usual.	Ask your local dealer for relevant part and replace the existing part with it. After replacement, turn on and off the key 10 times, and this message disappears.
31	Periodic check (warning) 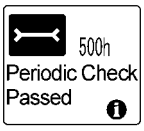 1BAABBLAP266B	The periodic check interval has passed. Press the information switch, and the list of related components can be reviewed.	The engine can still get started, but immediately ask your local dealer for replacement.	Ask your local dealer for relevant part and replace the existing part with it. After replacement, turn on and off the key 10 times, and this message disappears.
32	Anti-theft system error 1BAABBLAP150B	The anti-theft system is in trouble. The engine cannot get started.	-	Immediately contact your local dealer.

https://truckmanualshub.com/

No.	Message	Problem or failure (What happened)	Machine behavior (Provisional measure)	Correction
33	Key being authenticated 1BAABBLAP231G	The key's ID code is being authenticated.	The engine fails to start. * Wait for a while to do a retry. * If the key is attached with anything else metallic or inserted on a key ring, detach them. * If two or more keys are bundled, have the correct only at hand. * If this message never disappears, the key itself may be damaged. Try with a spare key.	Detach anything metallic from the key and have this key only at hand. If this message still appears, immediately contact your local dealer for repair.
34	Wrong Key 1BAABBLAP143B	The engine has been started with the incorrect black key of other model.	The engine fails to start.	Start the engine with the correct key.
35	Registration key; unable to start the engine 1BAABBLAP151D	The engine has been started with the red key (registration key)	The engine fails to start.	Start the engine with the correct key.
36	Now HP is limited 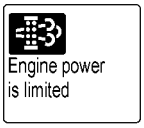 1BAAABDAP043J	DPF is regenerated.	Engine output is limited.	-
37	Exhaust temp rise Operate Carefully Possible to work 1BAAABDAP043B	The exhaust gas temperature rises. It is possible to work with careful operation.	-	-
38	Raise engine speed Now HP is limited 1BAAABDAP045A	Requirement for DPF regeneration.	DPF must be regenerated, but low engine rpm is unable to start DPF regeneration. If you leave the machine with the hydraulic locked, the engine can stop automatically.	Rev up the engine rpm and start DPF regeneration. If this error code number still appears, immediately contact your local dealer.

https://truckmanualshub.com/

No.	Message	Problem or failure (What happened)	Machine behavior (Provisional measure)	Correction
39	Regen.inhibition. Release it. 1BAAABDAP044C	Requirement for DPF regeneration.	DPF must be regenerated, but unable to start regeneration because the inhibited switch is activated.	Move the machine to a safe place and release the inhibit switch to start DPF regeneration.If this error code number still appears, immediately contact your local dealer.
40	Regen.inhibition. Release it. Now HP limited 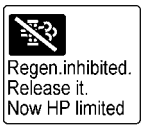 1BAAABDAP044D	Requirement for DPF regeneration.	DPF must be regenerated, but unable to start regeneration because the inhibited switch is activated. If you leave the machine with the hydraulic locked, the engine can stop automatically.	Move the machine to a safe place and release the inhibit switch to start DPF regeneration.If this error code number still appears, immediately contact your local dealer.
41	DPF is clogged up. Need repairing 1BAAABDAP048B	Requirement for DPF regeneration.	DPF must be regenerated, but unable to start regeneration.	Immediately contact your local dealer.
42	Exchange the DPF. 1BAAABDAP048A	Requirement for DPF replacement.	DPF must be replaced.	Immediately contact your local dealer.
43	Warning-stop engine. Rev up and restart. 1BAAABDAP045D	Stop the engine automatically.	-	Turn off the key.
44	Overheat advance warning Hydraulic oil temperature rising 1BAAABDAP109A	Hydraulic oil temperature is rising somewhat higher than specified.	Operate with the load a little lessened.	-

https://truckmanualshub.com/

No.	Message	Problem or failure (What happened)	Machine behavior (Provisional measure)	Correction
45	Overheat advance warning Auto idling for hydraulic oil temperature rising 1BAAABDAP109B	The engine was forced to get idling because the hydraulic oil temperature had risen too high.	Leave the engine idling until this warning disappears. Do not stop the engine because the hydraulic oil temperature will increase sharply. Be sure to cool down the engine without stopping it.	Unclog the oil cooler and other components before using again. Check also the hydraulic system for oil leak and other troubles. If an oil leak is found, immediately contact your local dealer for repair.
46	Fuel got mixed with water 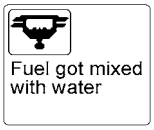 1BAACBCAP051C	Water is in the fuel filter and the water separator may be full with water.	If you don't drain the fuel filter immediately after the alarm, the engine may be seriously damaged.	Immediately drain the fuel filter after stopping the engine and drain the water separator as soon as possible.
47	Engine system error 1BAAABTAP063A	Engine system is in trouble.	Engine system does not function normally.	Immediately contact your local dealer.
	Press the switch4. 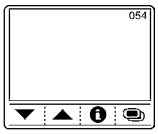 1BAAABTAP064A	PCD*1 system is failured.	PCD system must be repaired.	Immediately contact your local dealer.
	Press the switch4. 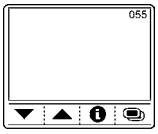 1BAAABTAP065A	NCD*2 system is failured.	NCD system must be repaired.	Immediately contact your local dealer.

*1 PM control diagnosis
*2 NOx control diagnosis

https://truckmanualshub.com/

AUTOMATIC DIESEL PARTICULATE FILTER (DPF) REGENERATION

Automatic regeneration is not trouble. It is the normal maintenance activity that a machine performs automatically.
DIESEL PARTICULATE FILTER serves to trap particulate matters (PM) that are contained in exhaust gases and to automatically burn (DPF-regenerate) these matters. In the regeneration, buzzer sounds and warning light blink and display shows messages. All operation including AUX1 or AUX2 are workable while automatic regeneration.
The following is meaning and required operator action.

Warning lamp	Display	Meaning	Required operator action
Blinking (yellow)	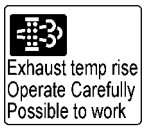 1BAAABDAP043B 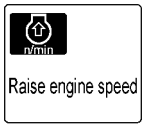 1BAAABDAP045B	Auto regeneration process starts. When the message "Raise the engine speed." appears on the display, the operator needs preparation of DPF regeneration.	Increase the engine speed over 1650 rpm. Auto regeneration starts. Make sure that no people, animals, plants and flammable materials are within the immediate working area. (Refer to No. 36 in "NAVIGATION LIST OF SCREENS" section.)
Blinking (red)	1BAAABDAP045A	When the message "Raise engine speed" appears on the display, the operator needs preparation of DPF regeneration. When the message "Now HP is limited." appears on the display, the DPF is clogged. To protect the DPF, the engine output is limited. When the pilot control lock lever is pulled up, the engine will stop after 60 seconds in order to protect DPF. When the pilot control lock lever is down, the engine will not stop while the engine output is limited.	Increase the engine speed over 1650 rpm. Auto regeneration starts. Make sure that no people, animals, plants and flammable materials are within the immediate working area. (Refer to No. 37 in "NAVIGATION LIST OF SCREENS" section.)
Blinking (red)	1BAAABDAP045D	When the pilot control lock lever is pulled up, the engine will stop after 60 seconds in order to protect DPF. When the pilot control lock lever is down, the engine will not stop while the engine output is limited.	Restart the Engine and set its speed over 1650 rpm. Unless the auto regeneration starts, consult your KUBOTA local dealer.

https://truckmanualshub.com/

Warning lamp	Display	Meaning	Required operator action
Blinking (yellow)	Engine power is limited 1BAAABDAP043J	When the message "Now HP is limited." appears on the display, the DPF is clogged. To protect the DPF, the engine output is limited.	Consult your KUBOTA local dealer.
Blinking (red)	DPF is clogged up. Need repairing 1BAAABDAP048B	DPF must be repaired. To protect the DPF, the engine output is limited. When the pilot control lock lever is pulled up, the engine will stop after 60 seconds in order to protect DPF. When the pilot control lock lever is down, the engine will not stop while the engine output is limited.	Immediately contact your local dealer. (Refer to No. 41 in "NAVIGATION LIST OF SCREENS" section.)
Blinking (red)	Exchange the DPF 1BAAABDAP048A	Exchange the DPF. To protect the DPF, the engine output is limited.	Immediately contact your local dealer. (Refer to No. 42 in "NAVIGATION LIST OF SCREENS" section.)

NOTE :

- Stopping the engine or pressing the inhibit switch while automatic regeneration, automatic regeneration will be stopped. After restarting the engine, automatic regeneration starts.
- Regeneration time is approximately 20 to 30 minutes, and the interval is approximately 20 to 30 hours. But actual regeneration time and interval depend on usage environment like ambient temperature, exhaust temperature and engine speed.
- When the interval of DPF regeneration has become 5hours or shorter routinely, change the oil for new one, if this condition continues even after an oil change, consult your local KUBOTA dealer.

https://truckmanualshub.com/

LOCKING AND RELEASING THE DIESEL PARTICULATE FILTER (DPF) REGENERATION

Press the inhibit switch (1).
The automatic DPF regeneration is locked and the indicator (2) in the switch lights up.

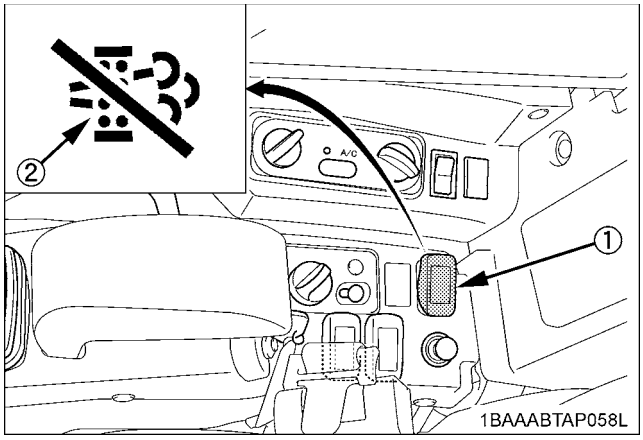

(1) Inhibit switch
(2) Inhibit switch indicator

The following is meaning and required operator action.

Inhibit switch	Warning lamp	Display	Meaning	Required operator action
Lights up (yellow)	No lighting	---	● Auto regeneration process is locked. ● The state is before requirement of regeneration. ● When inhibit switch turns into blinking, it requires regeneration.	---
Blinking (yellow)	Blinking (yellow)	Regen.inhibited. Release it. 1BAAABDAP044C	● Auto regeneration process is locked. ● Operator needs preparation of DPF regeneration.	● Move the machine to a safe place and release the inhibit switch. ● Increase the engine speed over 1650 rpm. Auto regeneration starts. ● Make sure that no people, animals, plants and flammable materials are within the immediate working area. (Refer to No. 39 in "NAVIGATION LIST OF SCREENS" section.)

https://truckmanualshub.com/

Inhibit switch	Warning lamp	Display	Meaning	Required operator action
Blinking (yellow)	Blinking (red)	Regen.inhibited. Release it. Now HP limited 1BAAABDAP044D r/min Warning! stop engine. Restart and rpm up. 1BAAABDAP045D	● Auto regeneration process is locked. ● Operator needs preparation of DPF regeneration. ● When the message "Now HP limited" appears on the display, the DPF must be clogged. To protect the DPF, engine output is limited. ● When the pilot control lock lever is raised up, the engine will stop after 60 seconds in order to protect DPF. ● When the Pilot control lock lever is down, the engine will not stop while the engine output is limited.	● Move the machine to a safe place and release the inhibit switch. ● Increase the engine speed over 1650 rpm. Auto regeneration starts. ● Make sure that no people, animals, plants and flammable materials are within the immediate working area. (Refer to No. 40 in "NAVIGATION LIST OF SCREENS" section.)
Blinking (yellow)	Blinking (red)	DPF is clogged up. Need repairing 1BAAABDAP048B	● DPF must be repaired. ● To protect the DPF, engine output is limited. ● When the pilot control lock lever is raised up, the engine will stop after 60 seconds in order to protect DPF. ● When the Pilot control lock lever is down, the engine will not stop while the engine output is limited.	Immediately contact your local dealer. (Refer to No. 41 in "NAVIGATION LIST OF SCREENS" section.)
Blinking (yellow)	Blinking (red)	Exchange the DPF 1BAAABDAP048A	● DPF must be exchanged. ● To protect the DPF, engine output is limited.	Immediately contact your local dealer. (Refer to No. 42 in "NAVIGATION LIST OF SCREENS" section.)