https://truckmanualshub.com/

TECHNICAL DATA

MATERIAL HANDLER | F-SERIES

MHL350
MHL355

160 kW

33.0 – 40.9 t

up to **16.0** m

FUCHS
A TEREX BRAND

https://truckmanualshub.com/

MORE THAN ONE MATERIAL HANDLER.

Fuchs F-Series Material Handlers – benchmark for power and efficiency.

Sensitive hydraulic and application-oriented kinematics for efficient power management.

Power is important. What is even more important, is using that power efficiently and purposefully. This is where the interplay between the MHL350 F material handler's engine and hydraulics impresses with striking performance data, as well as speed, precision, and fuel efficiency. The hydraulic system holds the reserves necessary for achieving quick work cycles, even under heavy loads. The work movements can be performed jolt-free with the clever kinematics, just as extremely gentle yet highly precise maneuvers can be executed.

https://truckmanualshub.com/

Featuring a three-stage power operation, that provides substantial fuel savings, conveniently located on the machine's new multifunction button control panel, the F-Series material handler can be set to Power Mode, providing the operator with enhanced power and speed for heavy-duty applications such as feeding the shredder, loading / unloading trailers and rail cars, or magnet operation. However, tasks like cleaning the yard and sorting material do not require 100 % power demand from the engine, and when facing less-demanding, medium-duty tasks, the operator can simply press the Eco Mode. This delivers up to 27 % fuel savings over full power, while still offering high lifting and slewing rates.

When the material handler is performing low-demand tasks such as sorting, the operator can choose to switch the machine to Eco+ Mode to reduce engine RPM by up to 19 %, using 80 % of full engine horsepower. Eco+ Mode is designed to decrease fuel consumption, offering up to 36 % fuel savings.

https://truckmanualshub.com/

EXPERIENCE THE IMPACT OF UNIQUE PRODUCTIVITY.

Top performance and fuel efficiency go together perfectly.

Handling all kinds of material can be so easy and fast – if you rely on innovations made by Fuchs.
These properties distinguish the Fuchs MHL350 F material handler. When developing the new generation, we placed special attention on driving and driver enjoyment. In particular, the overhauled hydraulics offer more speed and efficiency in everyday operations. The driver controls this powerhouse securely and precisely in the cab, which provides a pleasant and ergonomic working environment.

https://truckmanualshub.com/

The MHL350 F material handler sets the standard in modern technology with more sophisticated hydraulics and an exceptionally comfortable driver's cabin. Through a combination of power and low fuel consumption, as well as the powerful yet sensitive hydraulics, demanding loading tasks can be completed efficiently. The MHL350 F material handler represents the new generation of Fuchs loading machines. The new design with classic Fuchs-style elements combined with the latest technologies embodies the perfect blend of tradition, quality, and innovative spirit. More than ever the MHL350 F material handler is the symbol for economy and robustness for deployment in scrap yards.

Driver's cab

- Hydraulically adjustable
- Viewing height: max. 5.6 m
- Soundproof and heat-insulated large windows provide excellent visibility

Air conditioning

- Climate control condenser separated from the main cooling system
- Dust-protected
- Independent of engine speed
- Highly efficient

High Performance Cooling System

- Physically separated
- Huge coolers and direct airflow for outstanding cooling capacity

Fuchs Service Platform

- Unique in its business
- Safe and comfortable access to engine, filters, etc.

Engine

- 160 kW for more agility
- One of the most efficient consumption in its class
- 99 % less diesel particles
- Three new work modes: Eco Plus / Eco / Power

https://truckmanualshub.com/

STANDS STRONG. WORKS HARD. ACHIEVES MORE.

MHL355 F: excellence is best based on a solid foundation.

MHL355 F material handler with the extended undercarriage allows even more stability.

https://truckmanualshub.com/

THE NEW FUCHS CABIN.

Handling of rough materials made easy and comfortable.

The design motif of the Fox Cab is the mammal from which it takes its name. The silhouette of the fox's head is reflected subtly in the stylistic idioms. This design produces an unmistakable branding effect. The aim is not only brand recognition, but also to make a connection with the machine operator: repeating, familiar elements elevate the emotional bond to the product. The Fox Cab has been specially designed for loading machines and did not have to be subjected to any compromises as a result. This provides the user with great benefits in terms of ergonomics.

NEW CABIN
FUNCTIONALITY RE-DEFINED

Skylight
- Shape and size provide best-possible visibility in terms of usage conditions of a handling machine
- Allows as little sunlight as possible into the cab

Multi-function Touch Monitor
- Central operating terminal for all functions
- Large, easily legible display
- Ergonomically positioned at ideal height and distance

Downward-facing Windshield
- Improved visibility for use as a handling machine
- Additional shading from solar radiation
- Shielding effect also provides excellent visibility in the rain

Spacious Refrigeration Compartment
- In characteristic fox-head shape
- Provides space for drinks, snacks, and medicines

Perfect Space Utilization
- Spacious storage options and deep stowage compartments
- Thoughtful smartphone holder with charger
- Simple cleaning due to avoidance of brackets and tight corners

Unique Sliding Door
- Highly convenient access through above average-sized entry hatch.

https://truckmanualshub.com/

EQUIPMENT AND OPTIONS.

Bespoke Technology, Tailored For You.

Joystick Steering
- Improved visibility
- More legroom and comfort

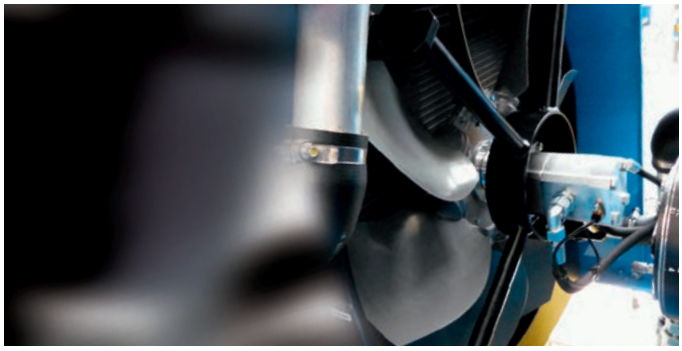

Reversing Fan*
- Reduced dust in intercooler-water and oilcooler
- Enhanced cooling performance

7" Multi-Function Touch Display
- Easy and intuitive operation
- Full monitoring of the machine data

Float Switch*
- Lifts the boom automatically if too much pressure is applied
- Protects sensitive surfaces like the floor of barges

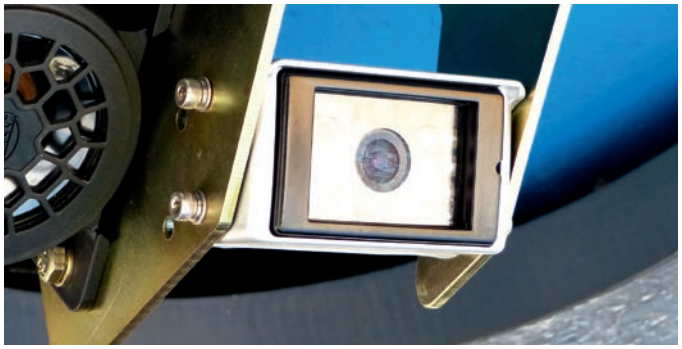

Rear and Side View Cameras
- Nightvision as an extra safety feature
- 360° surround view system on demand

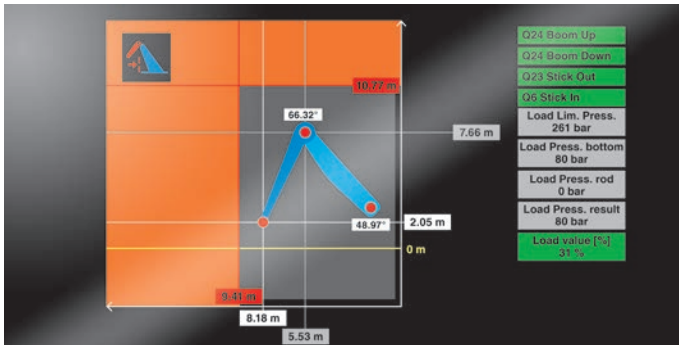

Overload Warning with Height and Reach Limiter*
- Easy set-up via the touch display
- Enhanced control for heavy loads

https://truckmanualshub.com/

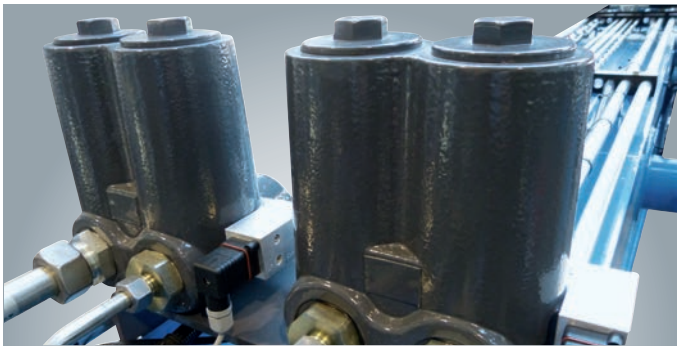

Attachment Filter*

- High pressure filter with monitoring
- Effective protection against hydraulic oil contamination

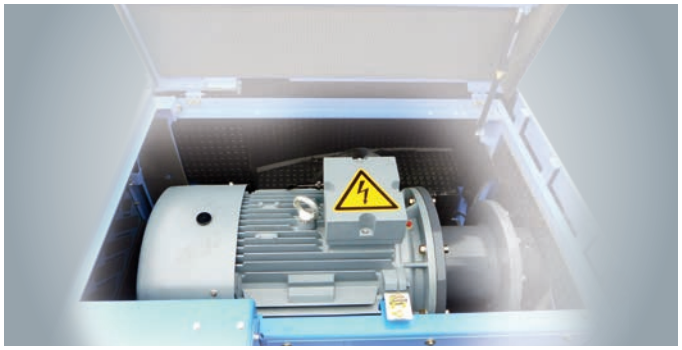

Electric Drive*

- Maximum efficiency
- Reduced service costs

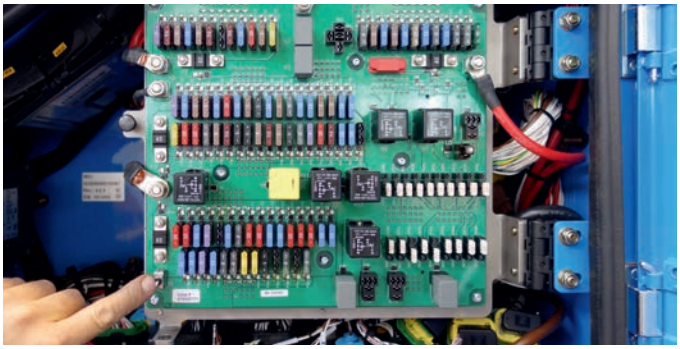

CAN BUS and Rapid Fuse Tester

- State of the art technology
- Clever fuse tester as a little helper – just in case

Active Cyclone Prefilter*

- Less dust in your air filter, no loss of airflow and engine power
- Longer uptime of your air filter

Built-in Fuchs Quality

- Massive distribution block prevents hoses from extreme bending
- Quality in detail

Tracked Undercarriage*

- Even more stability
- Less ground pressure
- Flat shoes or triple grousers

* special equipment on demand

https://truckmanualshub.com/

TECHNICAL DATA

OPERATING WEIGHT

MHL350 F	33.0–35.5 t
MHL355 F	36.0–40.9 t

ENGINE

	Stage IV / EPA Tier 4 final	COM III / EPA Tier III
Manufacturer & model	Deutz TCD 6.1 L6	Deutz TCD 2013 L06 2V
Type	6-cylinder inline	6-cylinder inline
Engine control	EMR IV	EMR III
Engine operation	4-stroke diesel, common rail direct injection, turbocharger, controlled exhaust gas recirculation, diesel particulate filter with automatic regeneration and SCR-cat automatic regenerationcat	4-stroke diesel, common rail direct injection, turbo-charger with charge air cooling
Power	160 kW	148 kW
Nominal speed	2,000 rpm	2,000 rpm
Displacement	6,057 cm^3	7,200 cm^3
Cooling system	Combi-cooler (coolant/ charge air) with fan speed control system; optional reversing function	Combi-cooler (coolant/ charge air) with fan speed control system; optional reversing function
Exhaust emission standard	Stage IV/EPA Tier final	COM III and EPA Tier III
Air filtration	Two-stage filter with safety cartridge and pre-separator with discharge valve	Two-stage filter with safety valve
Fuel tank	315 l Diesel	315 l
DEF tank	32 l Ad Blue	—

ELECTRICAL SYSTEM

Alternator	28 V / 100 A
Voltage	24 V
Batteries	2 × 12 V / 110 Ah / 750 A (in accoordance with EN)
Lights	2 × H3 headlamps, turn indicators and tail lights
Optional	13 kW or 20 kW DC generator with controls and insulation monitoring, driven by V-belt direct from diesel engine

TRANSMISSION

Hydrostatic travel drive via infinitely variable axial piston motor with directly mounted travel brake valve, two-speed manual gearshift, 4-wheel drive

Travel speed 1st gear	max. 5 km/h
Travel speed 2nd gear	max. 20 km/h
Gradeability	max. 39 %
Turning radius	8.0 m

SWING DRIVE

Slewing ring	Internally toothed double-row ball ring gear
Drive	3-stage planetary gear with integrated multi-disc brake
Swing speed	Infinitely variable from 0–7 rpm
Swing brake	Electrically operated
Swing torque	80 kNm

UNDERCARRIAGES

	MHL350 F	MHL355 F
Front axle	Planetary drive axle with integrated drum brake, rigidly mounted, max. steering angle 27°	Planetary drive axle with integrated drum brake, rigidly mounted, max. steering angle 27°
Rear axle	Oscillating axle with integral drum brake and selectable oscillating axle lock	Oscillating planetary drive rear axle with integrated drum brake and selectable oscillating axle lock
Stabilization	4-point stabilizer system	4-point stabilizer system
Tires	Solid rubber, 8-ply 12.00-20	Solid rubber, 8-ply 12.00-20

BRAKING SYSTEM

Service brake	Hydraulic single-circuit braking system, acting on all wheels
Parking brake	Electrically operated disc brake on transmission acting on both front and rear axles

HYDRAULIC SYSTEM

LINDE mobile hydraulic system with load limit control and fuelsaving power demand control. Separate hydraulic oil cooler, temperature-controlled fan speed

Cooling system	Separated cooler with fan speed control system; optional reversing function
Hydraulic oil filter	Integral return filter in oil tank for work hydraulics, with 3,000 operating hours service interval
Max. pump flow	2 × 330 l/min
Max. pressure	320 / 360 bar
Hydraulic tank	454 l usable tank capacity

OPERATOR'S CAB

Cab	Infinitely variable hydraulic height-adjustment with eye level up to 5.60 m above ground. Flexibly mounted. Sound-insulated; heat-insulating glass panoramic windows for optimum all-around view; windshield with pull-down sunblind that slides under the cab roof; viewing window on cab roof; sliding window in cab door, sliding door.
Air-conditioning	Automatic air-conditioning. Infinitely variable heating with 8-speed fan, 10 adjustable air nozzles, 3 defroster nozzles (hot water system).
Operator's seat	Air-cushioned high-comfort seat with integrated headrest, safety belt and lumbar support, seat heating with integrated a/c function optional. Seat position, seat inclination, seat cushion multi-adjustable relative to position of armrests and pilot control units, allowing comfortable operation.
Monitoring	Ergonomic layout; glare-free instrumentation. Multifunction display, automatic monitoring and recording of abnormal operating conditions (including all hydraulic oil filters, hydraulic oil temperature (cold / hot) – coolant temperature and charge air temperature – condition of cooling system, diesel particulate filter load), visual and audible warning indication with shutdown of pilot control/ engine power reduction. Diagnosis of individual sensors available via the multi-function display. Rear view camera and side view camera.
Sound levels	LW(A) = 101 dB(A) (guaranteed) in accordance with directive 2000/14 EC; max allowable under 2000/14 EC = 104 dB(A)

OFFICIAL HOMOLOGATION

Certified in accordance with CE regulations

https://truckmanualshub.com/

EQUIPMENT

ENGINE

	Standard	Option
Charge air cooling	●	
Direct electronic fuel injection/common rail	●	
Automatic idle	●	
Engine preheating		●
Engine diagnostics interface	●	
System-controlled fan drive with fan speed monitoring	●	

UNDERCARRIAGE

All-wheel drive with differential	●	
Drum brakes	●	
Rear axle oscillating lock	●	
2-speed powershift transmission		●
4-point stabilizers	●	
Stabilizer cylinders with integrated two-way check valves	●	
Piston rod protection on stabilizer cylinders	●	
Stabilizer plates 20.1 × 26.2 in	●	
4-point stabilizers, individually controllable		●
Tool box	●	
Special paint (customer paint work)		●

UPPERCARRIAGE

Separate cooling systems (combi-cooler for engine and hydraulic oil cooler)	●	
Cooling system fan speeds controlled by operating parameters	●	
Fan drive reversing function		●
Lockable maintenance hatches, with gas struts	●	
Automatic central lubrication system	●	
Rear view camera	●	
Side view camera	●	
Travel alarm		●
Electric refuelling pump		●
Lighting protection		●
Special paint (customer paint work)		●
Cyclone prefilter		●

CAB

	Standard	Option
Hydraulically adjustable cab	●	
Cab system horizontally and vertically adjustable		●
3-layer glass with protection film	●	
Sliding window in cab door	●	
Glazed roof panel	●	
Reinforced glass (windscreen and roof panel)		●
Windshield washer system	●	
Roof washer system		●
Air-cushioned operator seat with headrest, seatbelt, and lumbar support	●	
Seat heating with integrated A/C function		●
Joystick steering	●	
Steering column, height and tilt adjustable		●
Automatic air conditioning system	●	
Independent heating system		●
Multi-function display	●	
Document clip	●	
Protective grilles to front and roof		●
12 V transformer		●
Radio USB & Bluetooth		●
12 V socket	●	
Fire extinguisher, dry powder		●

EQUIPMENT

13 kW DC generator with controls		●
20 kW DC generator with controls		●
Close proximity range limiter for dipperstick	●	
Coolant and hydraulic oil level monitoring system	●	
Filter system for attachments		●
Hose rupture valve for boom cylinder		●
Hose rupture valve for stick cylinder		●
Overload and work area control		●
Overload warning device		●
Quick coupling on dipperstick	●	
Dipperstick impact protection		●
Active cyclone prefilter (TOP AIR)		●
Hydraulic oil preheating 230 V		●
Float switch for barge unloading		●
Lubrication of the grab suspension by central lubrication system	●	
Light packages LED		●
LED front headlights	●	
Fuchs Telematics System		●

Further optional equipment available on request!

https://truckmanualshub.com/

DIMENSIONS MHL350 F

All dimensions in mm

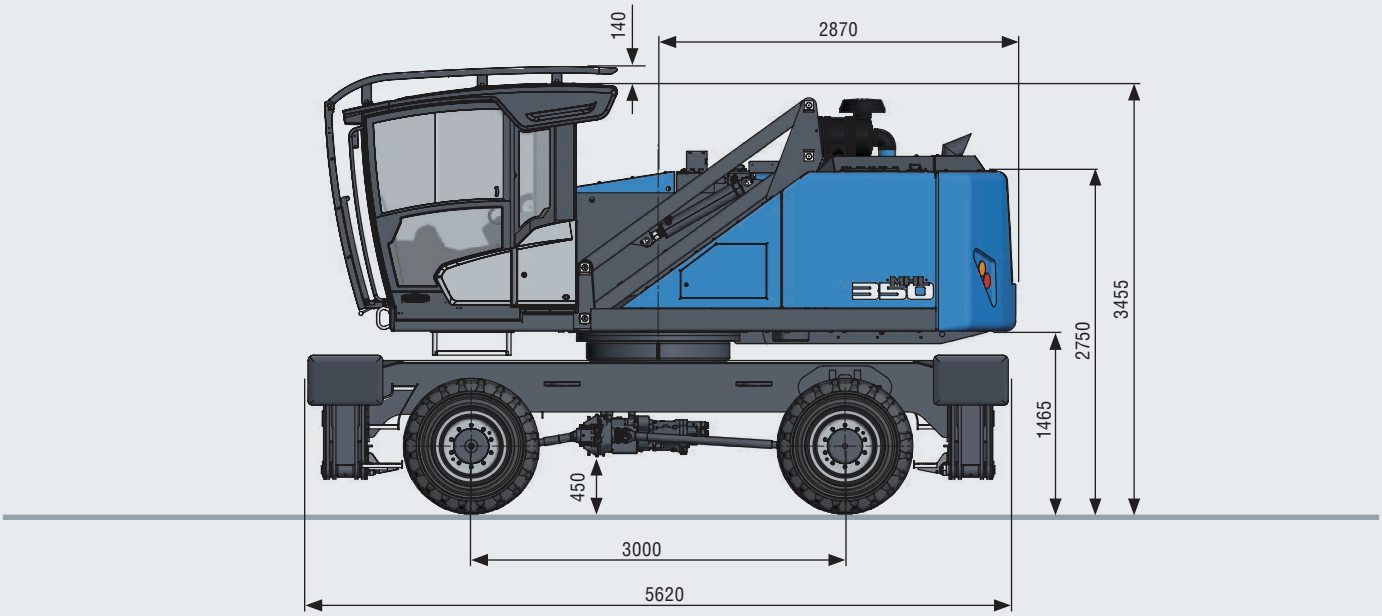

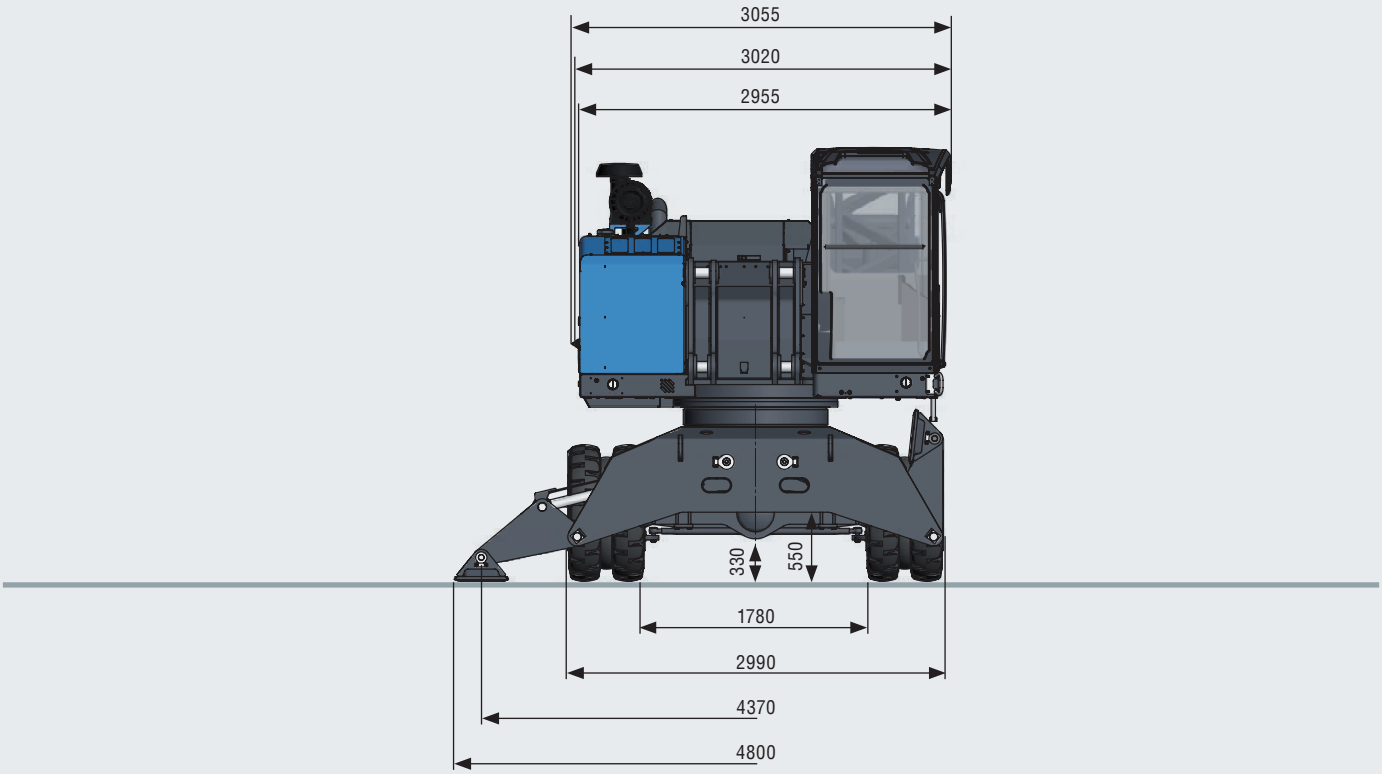

https://truckmanualshub.com/

TRANSPORT DIMENSIONS MHL350 F

All dimensions in mm

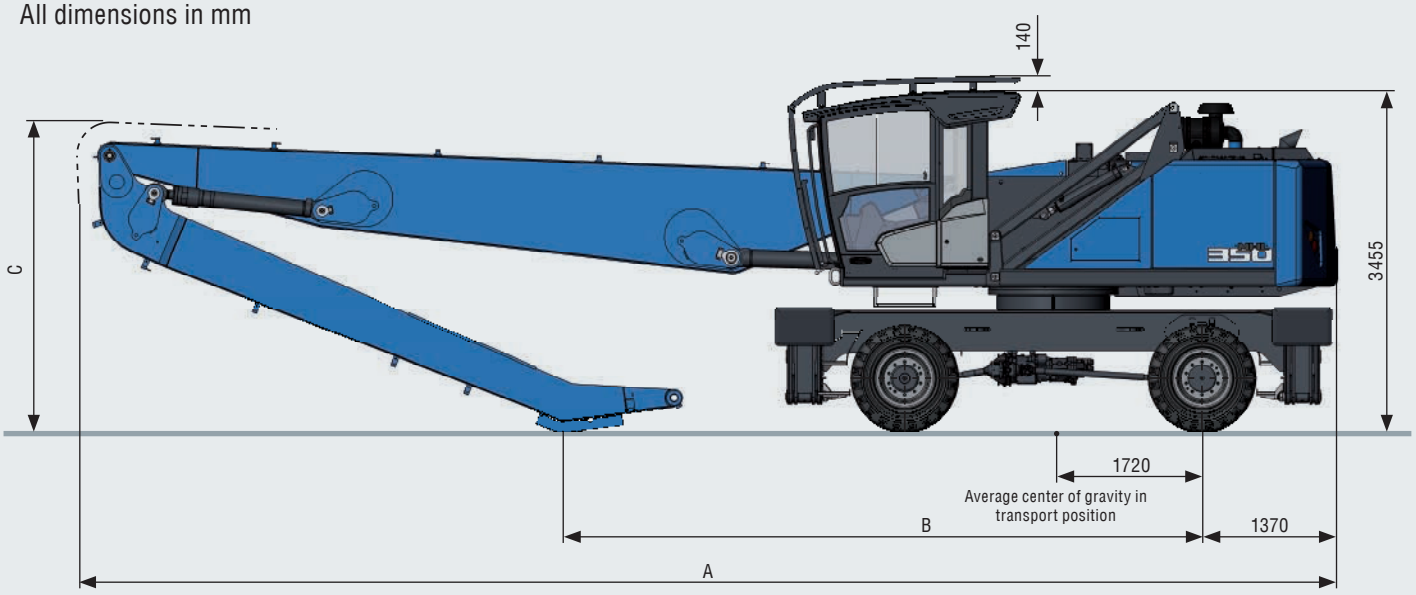

Dimensions	Reach 16.0 m	Reach 15.0 m
A	12,695	12,730
B	5,960	6,455
C	3,620	3,125

Reach 14.7 m | With multi-purpose stick | All dimensions in mm

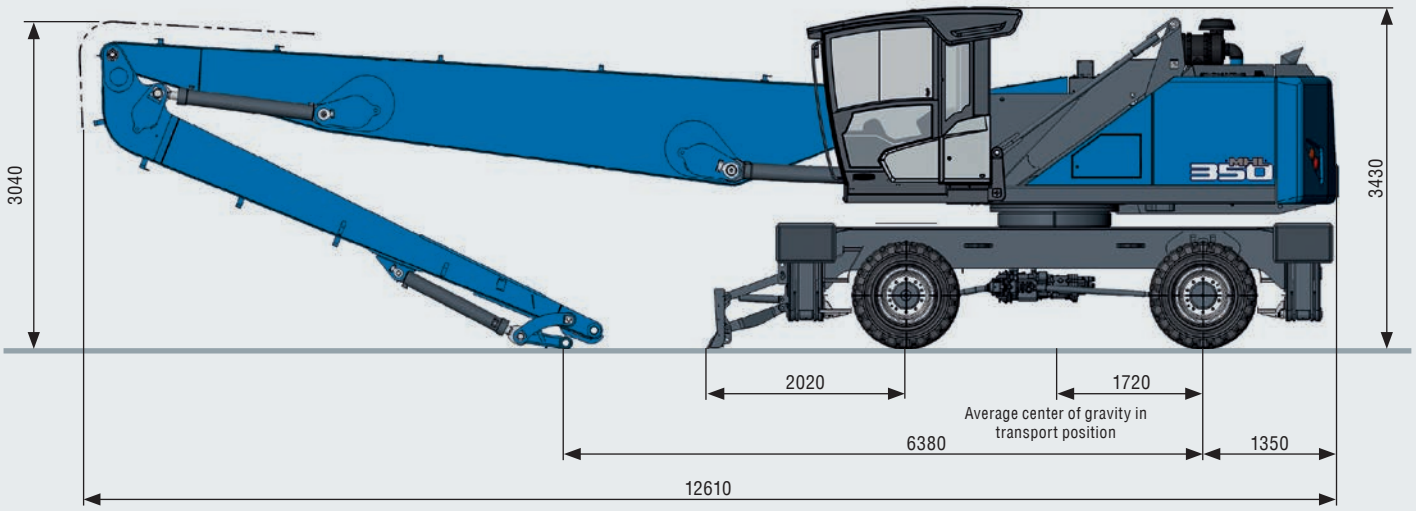

LOADING SYSTEMS WITH DIPPERSTICK OR MULTI-PURPOSE STICK

	MHL350			MHL355
Component	**Reach 16.0 m**	**Reach 15.0 m**	**14.7 m with MPS**	**Reach 16.0 m**
Straight boom 8.5 m	●	●	●	●
Dipperstick 6.2 m		●		
Dipperstick 7.2 m	●			●
Multi-purpose stick 5.6 m			●	

https://truckmanualshub.com/

WORKING RANGE

REACH 16.0 M WITH DIPPER STICK

Loading equipment	Boom 8.5 m Dipper stick 7.2 m Multi-tine grapple

RECOMMENDED ATTACHMENTS

Fuchs multi-tine grapple 0.6 m³	Open or half-closed
Fuchs magnetic plate MP 1150	dia = 1150 mm with 13 kW magnet system
Clamshell grab 1.0 m³	Density of materials handled up to 800 kg/m³

The lift capacity values are stated in metric tons (t). The pump pressure is 360 bar. In accordance with ISO 10567 the lift capacity values represents 75% of the static tipping loads or 87% of the hydraulic lifting force (marked °). On solid and level ground the values apply to a swing range of 360°. The (…) values apply in the longitudinal direction of the undercarriage. The values for "not supported" only apply via the steering axle or the locked oscillating axle. The weights of the attached load hoisting equipment (grab, load hock, etc.) must be deducted from the lift capacity values. The working load of the lifting devise must be observed. In accordance with the EN 474-5 for object handling application hose rupture valves on the boom and stick cylinders, an overload warning device and the lift capacity table in the cab are required. For object handling application the machine has to be supported on a level ground.

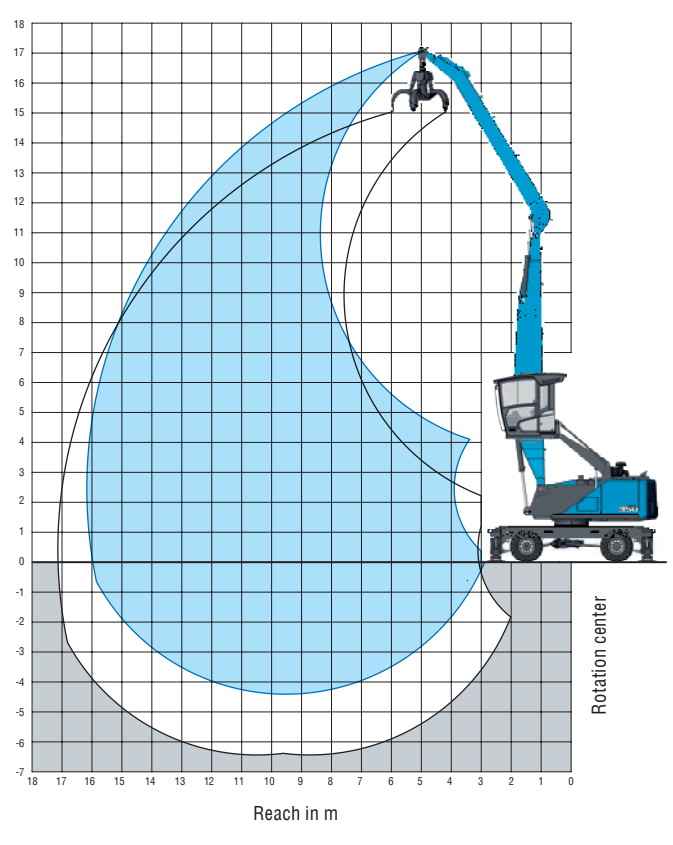

LIFTING CAPACITY

Height [m]	Undercarriage outrigger	Reach [m] 4.5	6	7.5	9	10.5	12	13.5	15
16.5	not supported		(4.2°)						
	4-point supported		4.2° (4.2°)						
15	not supported			(4.6°)	(3.3°)				
	4-point supported			4.6° (4.6°)	3.3° (3.3°)				
13.5	not supported				(4.7°)	(3.5°)			
	4-point supported				4.7°(4.7°	3.5° (3.5°)			
12	not supported				(5.4°)	(4.3)	(3.2°)		
	4-point supported				5.4° (5.4°)	4.6° (4.6°)	3.2° (3.2°)		
10.5	not supported				(5.7)	(4.3)	(3.4)	(2.6°)	
	4-point supported				5.9° (5.9°)	5.3° (5.3°)	4.3° (4.3°)	2.6° (2.6°)	
9	not supported				(5.6)	(4.3)	(3.3)	(2.6)	
	4-point supported				6.2° (6.2°)	5.6° (5.6°)	5.1° (5.1°)	3.7° (3.7°)	
7.5	not supported			(7.2°)	(5.5)	(4.2)	(3.3)	(2.6)	(2.1)
	4-point supported			7.2° (7.2°)	6.4° (6.4°)	5.7° (5.7°)	5.1° (5.1°)	4.3 (4.5°)	2.8° (2.8°)
6	not supported			(7.1)	(5.2)	(4.0)	(3.2)	(2.5)	(2.0)
	4-point supported			7.8° (7.8°)	6.7° (6.7°)	5.9° (5.9°)	5.1 (5.2°)	4.2 (4.6°)	3.5 (3.7°)
4.5	not supported	(10.1°)	(9.4)	(6.6)	(4.9)	(3.8)	(3.0)	(2.4)	(2.0)
	4-point supported	10.1° (10.1°)	10.6° (10.6°)	8.4° (8.4°)	7.1° (7.1°)	6.1° (6.1°)	5.0 (5.3°)	4.1 (4.7°)	3.4 (4.1)
3	not supported	(13.0)	(8.4)	(6.0)	(4.6)	(3.6)	(2.9)	(2.4)	(1.9)
	4-point supported	16.9° (16.9°)	11.7° (11.7°)	9.0° (9.0°)	7.4° (7.4°)	5.9 (6.2°)	4.8 (5.4°)	4.0 (4.7°)	3.4 (4.0°)
1.5	not supported	(5.3°)	(7.5)	(5.5)	(4.2)	(3.4)	(2.7)	(2.3)	(1.9)
	4-point supported	5.3° (5.3°)	12.5° (12.5*)	9.4° (9.4°)	7.2 (7.6°)	5.7 (6.3°)	4.7 (5.4°)	3.9° (4.6°)	3.3 (3.9°)
0	not supported	(3.8°)	(6.9)	(5.1)	(4.0)	(3.2)	(2.6)	(2.2)	(1.8)
	4-point supported	3.8° (3.8°)	9.2° (9.2°)	8.9 (9.5°)	6.9 (7.6°)	5.5 (6.3°)	4.5 (5.3°)	3.8 (4.5°)	3.3 (3.7°)
–1.5	not supported	(3.9°)	(6.5)	(4.8)	(3.8)	(3.1)	(2.5)	(2.1)	(1.8)
	4-point supported	3.9° (3.9°)	7.1° (7.1°)	8.7 (9.1°)	6.7 (7.3°)	5.4 (6.0°)	4.4 (5.0°)	3.8 (4.1°)	3.2° (3.2°)
–3	not supported		(6.4)	(4.7)	(3.7)	(3.0)	(2.5)	(2.1)	
	4-point supported		6.8° (6.8°)	8.3° (8.3°)	6.5 (6.7°)	5.3 (5.5°)	4.4 (4.5°)	3.6° (3.6°)	
									Max. reach 16.1 m
2.5	not supported								(1.7)
	4-point supported								1.9° (1.9°)

https://truckmanualshub.com/

WORKING RANGE

REACH 15.0 M WITH DIPPER STICK

Loading equipment	Boom 8.5 m Dipper stick 6.2 m Multi-tine grapple

RECOMMENDED ATTACHMENTS

Fuchs multi-tine grapple 0.6 m³	Open or half-closed
Fuchs multi-tine grapple 0.8 m³	Open or half-closed
Fuchs magnetic plate MP 1250	dia = 1250 mm with 20 kW magnet system
Clamshell grab 1.4 m3	Density of materials handled up to 1600 kg/m³
Clamshell grab 1.6 m3	Density of materials handled up to 800 kg/m³
Lift hook	10 t

The lift capacity values are stated in metric tons (t). The pump pressure is 360 bar. In accordance with ISO 10567 the lift capacity values represents 75% of the static tipping loads or 87% of the hydraulic lifting force (marked °). On solid and level ground the values apply to a swing range of 360°. The (…) values apply in the longitudinal direction of the undercarriage. The values for "not supported" only apply via the steering axle or the locked oscillating axle. The weights of the attached load hoisting equipment (grab, load hock, etc.) must be deducted from the lift capacity values. The working load of the lifting devise must be observed. In accordance with the EN 474-5 for object handling application hose rupture valves on the boom and stick cylinders, an overload warning device and the lift capacity table in the cab are required. For object handling application the machine has to be supported on a level ground.

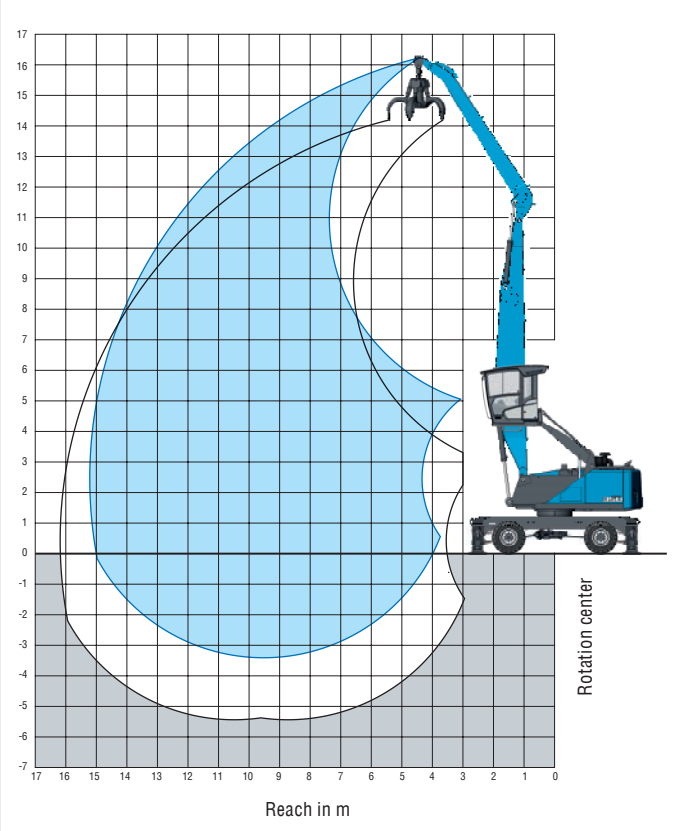

LIFTING CAPACITY

Height [m]	Undercarriage outrigger	Reach [m] 4.5	6	7.5	9	10.5	12	13.5	15
15	not supported		(5.5°)	(3.7°)					
	4-point supported		5.5° (5.5°)	3.7° (3.7°)					
13.5	not supported			(5.7°)	(4.3°)				
	4-point supported			5.7° (5.7°)	4.3° (4.3°)				
12	not supported			(6.5°)	(5.5)	(4.1)			
	4-point supported			6.5° (6.5°)	5.7° (5.7°)	4.3° (4.3°)			
10.5	not supported			(7.2°)	(5.5)	(4.2)	(3.2)		
	4-point supported			7.2° (7.2°)	6.6° (6.6°)	5.6° (5.6°)	3.8° (3.8°)		
9	not supported			(7.4)	(5.4)	(4.1)	(3.2)	(2.5)	
	4-point supported			7.6° (7.6°)	6.7° (6.7°)	5.9° (5.9°)	5.1° (5.1°)	2.6° (2.6°)	
7.5	not supported			(7.1)	(5.3)	(4.0)	(3.2)	(2.5)	
	4-point supported			8.0° (8.0°)	6.9° (6.9°)	6.0° (6.0°)	5.1 (5.3°)	4.1° (4.1°)	
6	not supported		(9.7)	(6.7)	(5.0)	(3.9)	(3.1)	(2.5)	
	4-point supported		10.5° (10.5°)	8.5° (8.5°)	7.1° (7.1°)	6.2° (6.2°)	5.0 (5.4°)	4.1 (4.8°)	
4.5	not supported	(13.9)	(8.8)	(6.3)	(4.7)	(3.7)	(3.0)	(2.4)	(2.0)
	4-point supported	16.3° (16.3°)	11.6° (11.6°)	9.0° (9.0°)	7.4° (7.4°)	6.1 (6.3°)	5.0 (5.5°)	4.1 (4.8°)	2.9° (2.9°)
3	not supported	(6.4°)	(7.9)	(5.8)	(4.4)	(3.5)	(2.8)	(2.3)	(1.9)
	4-point supported	6.4° (6.4°)	12.5° (12.5°)	9.5° (9.5°)	7.4 (7.7°)	5.8 (6.4°)	4.8 (5.5°)	4.0 (4.7°)	3.4° (3.4°)
1.5	not supported		(7.1)	(5.3)	(4.1)	(3.3)	(2.7)	(2.3)	(1.9)
	4-point supported		10.3° (10.3°)	9.2 (9.7°)	7.1 (7.8°)	5.6 (6.4°)	4.7 (5.4°)	3.9 (4.6°)	3.3° (3.3°)
0	not supported		(6.7)	(5.0)	(3.9)	(3.2)	(2.6)	(2.2)	(1.9)
	4-point supported		7.0° (7.0°)	8.9 (9.5°)	6.8 (7.6°)	5.5 (6.3°)	4.5 (5.2°)	3.9 (4.3°)	3.0° (3.0°)
–1.5	not supported		(6.5°)	(4.9)	(3.8)	(3.1)	(2.6)	(2.2)	
	4-point supported		6.5° (6.5°)	8.7° (8.7°)	6.7 (7.1°)	5.4 (5.9°)	4.5 (4.8°)	3.8° (3.8°)	
–3	not supported			(4.8)	(3.8)	(3.1)			
	4-point supported			7.6° (7.6°)	6.3° (6.3°)	5.2° (5.2°)			
									Max. reach 15.2 m
2.5	not supported								(1.9)
	4-point supported								2.4° (2.4°)

https://truckmanualshub.com/

WORKING RANGE

REACH 14.7 M WITH MULTI-PURPOSE STICK

Loading equipment	Boom 8.5 m Multi-purpose stick 5.6 m Sorting grab

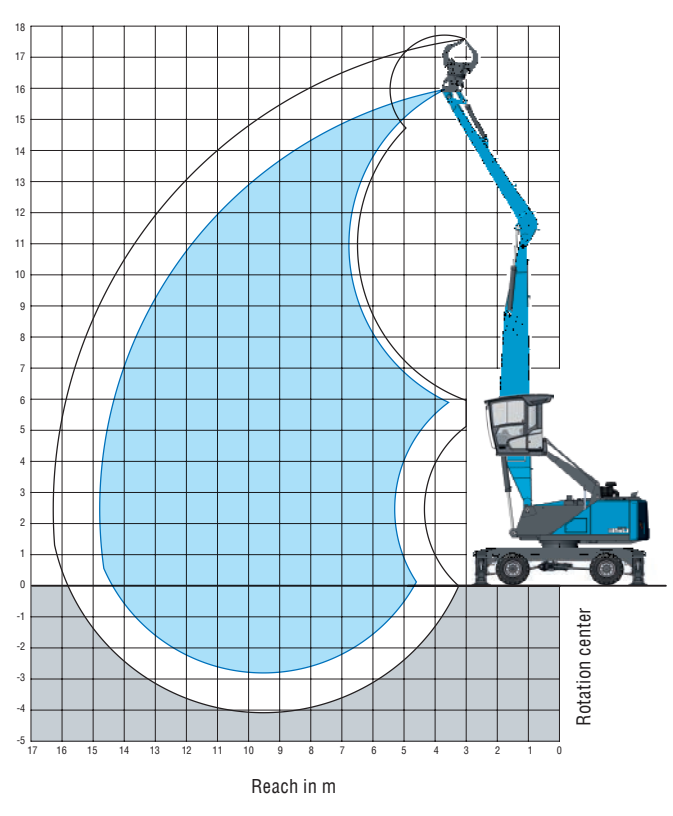

The lift capacity values are stated in metric tons (t). The pump pressure is 360 bar. In accordance with ISO 10567 the lift capacity values represents 75% of the static tipping loads or 87% of the hydraulic lifting force (marked °). On solid and level ground the values apply to a swing range of 360°. The (…) values apply in the longitudinal direction of the undercarriage. The values for "not supported" only apply via the steering axle or the locked oscillating axle. The weights of the attached load hoisting equipment (grab, load hock, etc.) must be deducted from the lift capacity values. The working load of the lifting devise must be observed. In accordance with the EN 474-5 for object handling application hose rupture valves on the boom and stick cylinders, an overload warning device and the lift capacity table in the cab are required. For object handling application the machine has to be supported on a level ground.

LIFTING CAPACITY

Height [m]	Undercarriage outrigger	Reach [m] 4.5	6	7.5	9	10.5	12	13.5
15	not supported		(4.6°)					
	4-point supported		4.6° (4.6°)					
13.5	not supported			(5.4°)				
	4-point supported			5.4° (5.4°)				
12	not supported			(6.7°)	(5.1)	(3.4°)		
	4-point supported			6.7° (6.7°)	5.5° (5.5°)	3.4° (3.4°)		
10.5	not supported			(7.1)	(5.2)	(3.9)	(2.6°)	
	4-point supported			7.6° (7.6°)	6.6° (6.6°)	5.4° (5.4°)	2.6° (2.6°)	
9	not supported			(7.0)	(5.1)	(3.9)	(3.0)	
	4-point supported			7.8° (7.8°)	6.7° (6.7°)	5.9° (5.9°)	4.7° (4.7°)	
7.5	not supported		(9.8°)	(6.8)	(5.0)	(3.8)	(2.9)	(2.3)
	4-point supported		9.9° (9.9°)	8.1° (8.1°)	6.9° (6.9°)	5.9° (5.9°)	4.9° (5.2°)	3.0° (3.0°)
6	not supported	(13.7°)	(9.2)	(6.4)	(4.7)	(3.6)	(2.9)	(2.3)
	4-point supported	13.7° (13.7°)	10.8° (10.8°)	8.5° (8.5°)	7.1° (7.1°)	6.0 (6.1°)	4.8 (5.3°)	3.9 (4.4°)
4.5	not supported	(12.8)	(8.3)	(5.9)	(4.4)	(3.5)	(2.8)	(2.2)
	4-point supported	17.1° (17.1°)	11.8° (11.8°)	9.0° (9.0°)	7.4° (7.4°)	5.8 (6.2°)	4.7 (5.3°)	3.9 (4.5°)
3	not supported		(7.4)	(5.4)	(4.2)	(3.3)	(2.6)	(2.2)
	4-point supported		12.5° (12.5°)	9.3 (9.4°)	7.1 (7.5°)	5.6 (6.2°)	4.6 (5.3°)	3.8 (4.4°)
1.5	not supported		(6.8)	(5.0)	(3.9)	(3.1)	(2.5)	(2.1)
	4-point supported		7.6° (7.6°)	8.9 (9.4°)	6.8 (7.5°)	5.4 (6.2°)	4.5 (5.1°)	3.7 (4.2°)
0	not supported		(6.1°)	(4.8)	(3.7)	(3.0)	(2.5)	(2.1)
	4-point supported		6.1° (6.1°)	8.6 (9.0°)	6.6 (7.2°)	5.3 (5.9°)	4.4 (4.9°)	3.7 (3.9°)
–1.5	not supported		(6.2°)	(4.7)	(3.6)	(2.9)	(2.4)	
	4-point supported		6.2° (6.2°)	8.1° (8.1°)	6.5 (6.6°)	5.2 (5.4°)	4.3° (4.4°)	
								Max. reach 14.7 m
2.5	not supported							(1.8)
	4-point supported							2.6° (2.6°)

https://truckmanualshub.com/

DIMENSIONS MHL355 F

All dimensions in mm

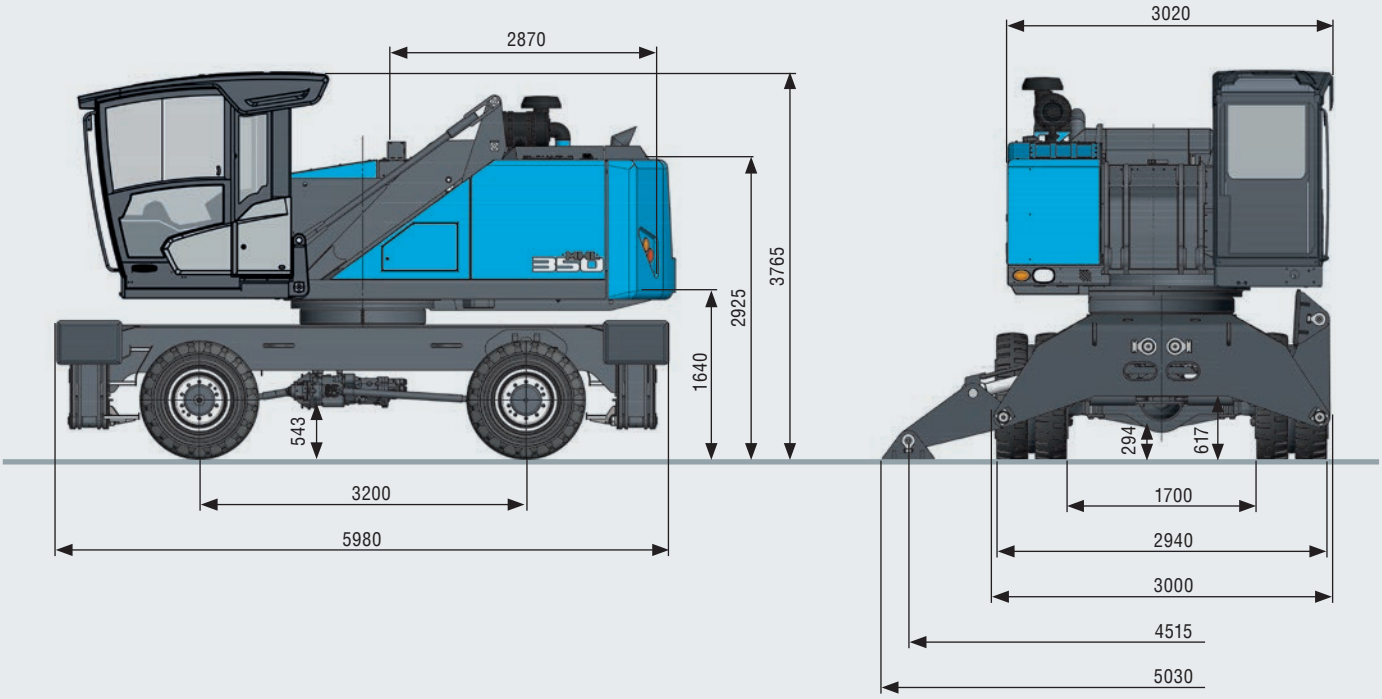

TRANSPORT DIMENSIONS MHL355 F

All dimensions in mm

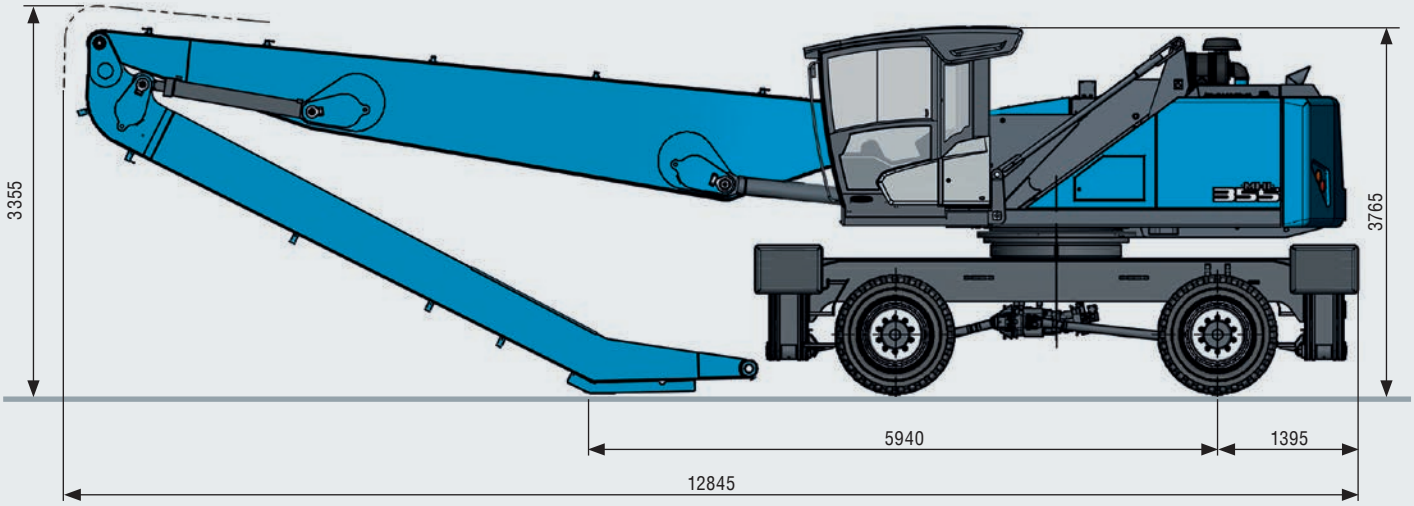

https://truckmanualshub.com/

WORKING RANGE

REACH 16 M WITH DIPPER STICK

Loading equipment	Boom 8.5 m Dipperstick 7.2 m Multi-tine grapple

RECOMMENDED ATTACHMENTS

Fuchs multi-tine grapple 0.6 m³	Open or half-closed
Fuchs magnetic plate MP 1150	dia = 1150 mm with 13 kW magnet system
Clamshell grab 1.0 m³	Density of materials handled up to 800 kg/m³

The lift capacity values are stated in metric tons (t). The pump pressure is 360 bar. In accordance with ISO 10567 the lift capacity values represents 75% of the static tipping loads or 87% of the hydraulic lifting force (marked °). On solid and level ground the values apply to a swing range of 360°. The (…) values apply in the longitudinal direction of the undercarriage. The values for "not supported" only apply via the steering axle or the locked oscillating axle. The weights of the attached load hoisting equipment (grab, load hock, etc.) must be deducted from the lift capacity values. The working load of the lifting devise must be observed. In accordance with the EN 474-5 for object handling application hose rupture valves on the boom and stick cylinders, an overload warning device and the lift capacity table in the cab are required. For object handling application the machine has to be supported on a level ground.

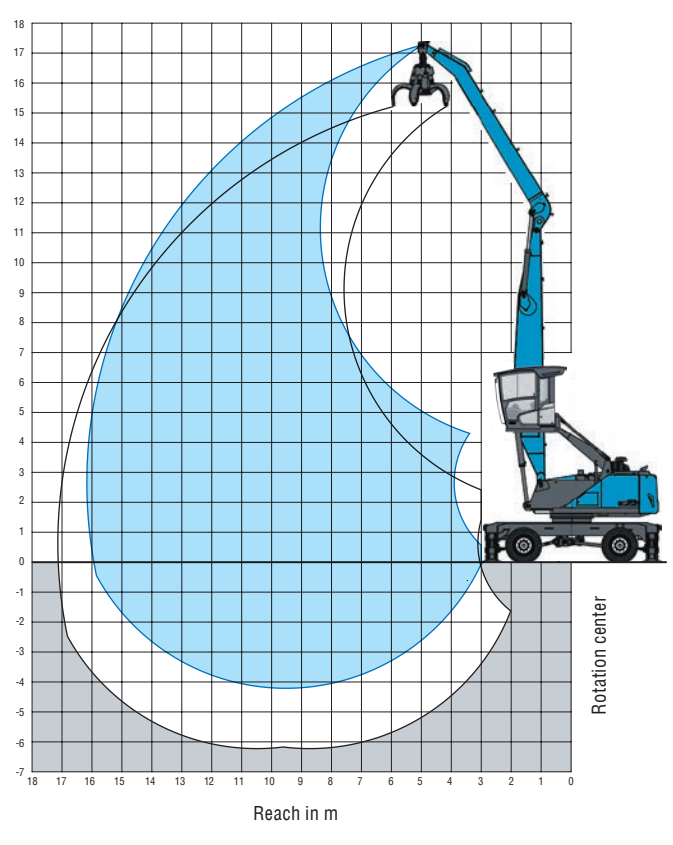

LIFTING CAPACITY

Height [m]	Undercarriage outrigger	Reach [m] 3.0	4.5	6	7.5	9	10.5	12	13.5	15
16.5	not supported			(4.5)°						
	4-point supported			4.5° (4.5)°						
15	not supported				(4.8)°	(3.6)°				
	4-point supported				4.8° (4.8)°	3.6° (3.6)°				
13.5	not supported					(4.8)°	(3.7)°			
	4-point supported					4.8° (4.8)°	3.7° (3.7)°			
12	not supported					(5.5)°	(4.7)°	(3.4)°		
	4-point supported					5.5° (5.5)°	4.7° (4.7)°	3.4° (3.4)°		
10.5	not supported					(6.0)°	(5.3)	(4.2)	(2.8)°	
	4-point supported					6.0° (6.0)°	5.4° (5.4)°	4.5° (4.5)°	2.8° (2.8)°	
9	not supported					(6.3)°	(5.3)	(4.2)	(3.4)	
	4-point supported					6.3° (6.3)°	5.6° (5.6)°	5.1° (5.1)°	3.9° (3.9)°	
7.5	not supported				(7.4)°	(6.5)°	(5.2)	(4.1)	(3.4)	(2.7)°
	4-point supported				7.4° (7.4)°	6.5° (6.5)°	5.8° (5.8)°	5.2° (5.2)°	4.7° (4.7)°	2.7° (2.7)°
6	not supported				(8.0)°	(6.4)	(5.0)	(4.0)	(3.3)	(2.7)
	4-point supported				8.0° (8.0)°	6.8° (6.8)°	5.9° (5.9)°	5.3° (5.3)°	4.7° (4.7)°	3.4° (3.4)°
4.5	not supported		(11.3)°	(10.8)°	(8.1)	(6.1)	(4.8)	(3.9)	(3.2)	(2.7)
	4-point supported		11.3° (11.3)°	10.8° (10.8)°	8.6° (8.6)°	7.1° (7.1)°	6.1° (6.1)°	5.4° (5.4)°	4.7° (4.7)°	4.0° (4.0)°
3	not supported		(16.0)	(10.4)	(7.5)	(5.7)	(4.6)	(3.7)	(3.1)	(2.6)
	4-point supported		17.3° (17.3)°	11.9° (11.9)°	9.2° (9.2)°	7.5° (7.5)°	6.3° (6.3)°	5.4° (5.4)°	4.7° (4.7)°	4.1° (4.1)°
1.5	not supported		(4.9)°	(9.5)	(7.0)	(5.4)	(4.4)	(3.6)	(3.0)	(2.6)
	4-point supported		4.9° (4.9)°	12.6° (12.6)°	9.5° (9.5)°	7.7° (7.7)°	6.4° (6.4)°	5.4° (5.4)°	4.6° (4.6)°	3.9° (3.9)°
0	not supported	(1.9)°	(3.8)°	(8.8)°	(6.6)	(5.1)	(4.2)	(3.5)	(2.9)	(2.5)
	4-point supported	1.9° (1.9)°	3.8° (3.8)°	8.8° (8.8)°	9.5° (9.5)°	7.6° (7.6)°	6.3° (6.3)°	5.3° (5.3)°	4.5° (4.5)°	3.7° (3.7)°
–1.5	not supported		(3.9)°	(7.1)°	(6.3)	(5.0)	(4.0)	(3.4)	(2.9)	(2.5)
	4-point supported		3.9° (3.9)°	7.1° (7.1)°	9.1° (9.1)°	7.3° (7.3)°	6.0° (6.0)°	5.0° (5.0)°	4.1° (4.1)°	3.2° (3.2)°
–3	not supported			(6.8)°	(6.2)	(4.9)	(4.0)	(3.3)	(2.9)	
	4-point supported			6.8° (6.8)°	8.2° (8.2)°	6.7° (6.7)°	5.5° (5.5)°	4.5° (4.5)°	3.6° (3.6)°	

Max. reach 16.1 m

https://truckmanualshub.com/

MODULAR SYSTEM

Attachments

Furthermore:
Timber grapple
Scrap shears
Magnet plate
Load hook

Multi-tine grapple

Sorting grapple

Clamshell grab

Work equipment

Work equipment straight

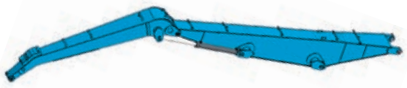

Work equipment with multipurpose stick

Work equipment with banana boom

Uppercarriage MHL350

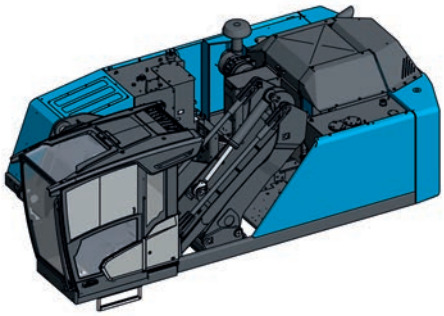

Cab system hydraulically adjustable

Viewing height:
max. 5.6 m

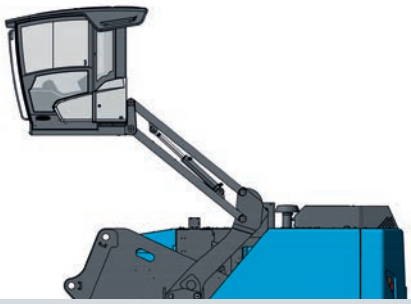

Engine

Diesel engine

Electric motor

Options

Cable reel

Cable drum

Power Pack

Undercarriage

Pylon
up to
max. 0.8 m

Pylon
up to
max. 1.4 m

Pylon
up to
max. 0.8 m

Pylon
up to
max. 3.7 m

Pylon
up to
max. 3.7 m

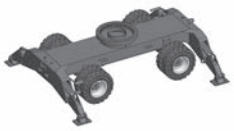

Mobile: Standard-undercarriage

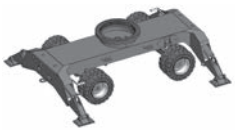

Mobile special: For extended undercarriage

Crawler: Standard-undercarriage

Crawler: XL-undercarriage

Pedestal undercarriage

https://truckmanualshub.com/

FUCHS
A TEREX BRAND

GET A HANDLE ON FLEET MANAGEMENT.

Fuchs Telematics System: Recognize and Optimize Potential.

The Fuchs Telematics system: know exactly how and where everything is running.
The system offers a modern solution to help you analyze and optimize the efficiency of your machines. It records and communicates valuable information on the operating status of each individual machine. Where are the machines? How are they working? Is a service check pending? Take advantage of this advanced software and get a handle on your fleet management with the tool that connects for you.

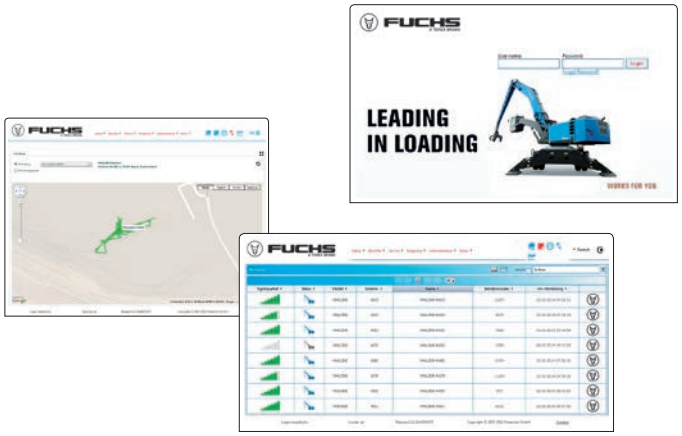

ALL-IN-ONE MACHINE MANAGEMENT. EVERYTHING AT A GLANCE: OPERATING DATA, MACHINE STATUS, GPS DATA

Record, display, and analyse data: high efficiency through precise information

- Available online anywhere and at any time*: comprehensive information on the GPS location, start and stop times, fuel consumption, operating hours, maintenance status, and much more.
- User-friendly interface: displays information clearly for at a glance metrics and diagnostics. Take action before damage occurs: predetermined maintenance intervals are signaled and error messages are displayed in plain text messages.
- The Fuchs Telematics system is optionally available or can be retrofitted into existing machines to help control your operating costs and keep your machines in top shape.

* Internet connection required

www.terex-fuchs.com

November 2016. Product specifications and prices are subject to change without notice or obligation. The photographs and/or drawings in this document are for illustrative purposes only. Refer to the appropriate Operator's Manual for instructions on the proper use of this equipment. Failure to follow the appropriate Operator's Manual when using our equipment or to otherwise act irresponsibly may result in serious injury or death. The only warranty applicable to our equipment is the standard written warranty applicable to the particular product and sale and Terex makes no other warranty, express or implied. © Terex Corporation 2016 · Terex, the Terex Crown design, Fuchs and Works For You are trademarks of Terex Corporation or its subsidiaries.