https://truckmanualshub.com/

ELECTRIC FORKLIFT TRUCK
SERIES F 60-65-70-80-90 H

CAPACITY 6.000-6.500-7.000-8.000-9.000 KG
CENTER OF GRAVITY 600 MM
VOLTAGE 96V
PERFECT BALANCE
BETWEEN EXCELLENT
PERFORMANCES
AND LONG AUTONOMY
OF THE BATTERY

carer
Electric Forklift Trucks

https://truckmanualshub.com/

ELECTRIC FORKLIFT TRUCK CARER F 60-65-70-80-90H

MAIN FEATURES

LOAD CAPACITY 6.000-6.500-7.000-8.000-9.000 Kg
CENTER OF GRAVITY 600mm
VOLTAGE 96V
AC MOTORS
ADVANCED MULTIFUNCTION DIGITAL DISPLAY (AMD)
REAR VIEW CAMERA
HIGH TILT CYLINDER
TYRES CHS-SE-DUAL SE
OIL IMMERSED BRAKES
TRAVEL SPEED 15 Km/h
LIFTING SPEED 0,39 m/s
BATTERY 96V – Maximum capacity 1240Ah

AVAILABLE CONTAINER VERSION

KF 60-65-70-80-90H

TOTAL HEIGHT = 2.235mm

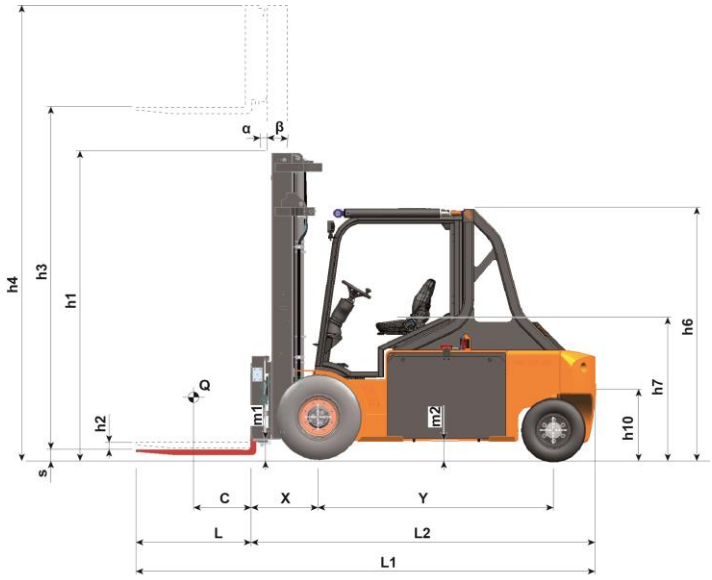

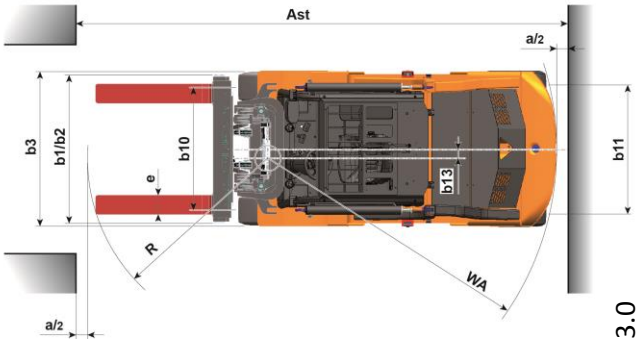

rev 3.0

The benefits of choosing CARER

Developed from the project version of the Heavy Duty model (HD), electric lift trucks F-Series 60-90 H are the ideal solution for the handling of heavy goods in all areas of application.
The attention to every detail, creativity and technical expertise used in the design and development of the F60-90H are evident in features and design of the truck that combines the ability to lift heavy loads with a very compact and sturdy frame with the ease of driving, the extreme adaptability of performance and maximum operator comfort.

Adjusting the parameters
The electronic control allows you to adjust the settings of the truck depending on the applications and wishes of the operators to increase

the benefits in terms of high performances, comfort and long autonomies.

Maximum operator comfort
The ergonomic design of the drivers space, mounted on silent blocks and anti-vibration system allows to minimize vibration and to guarantee maximum comfort and ease of driving by reducing the fatigue of the operator during

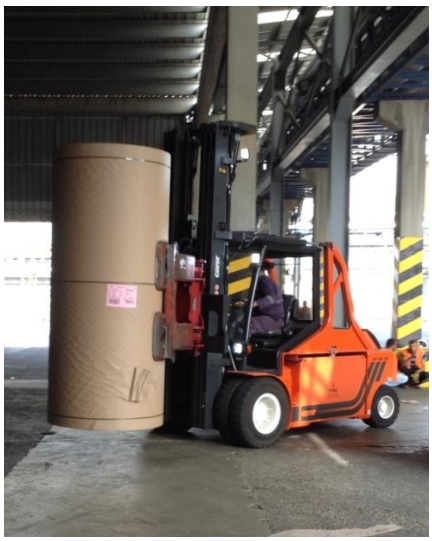

long shifts.
Battery replacement is easy and rapid extraction side by side with minimum of time and effort to change. The specific design gives an extreme compact, sharp-axle steering for extreme manoeuvrability.

https://truckmanualshub.com/

carer Electric Forklift Trucks

IDENTIFICATION	1.1	Manufacturer			C.A.R.E.R. Srl				
	1.2	Manufacturer's type designation			**F60H**	**F65H**	**F70H**	**F80H**	**F90H**
	1.3	Drive			electric	electric	electric	electric	electric
	1.4	Operator type			seat	seat	seat	seat	seat
	1.5	Load capacity/rated load	**Q**	(t)	6	6,5	7	8	9
	1.6	Load centre distance	**C**	(mm)	600	600	600	600	600
	1.8	Load distance	**X**	(mm)	625 (1) (2)	625 (1) (2)	625 (1) (2)	650 (1) (2)	690 (1) (2)
	1.9	Wheelbase	**Y**	(mm)	2250	2250	2250	2550	2550
WEIGHTS	2.1	Weight		(kg)	9717	9887	10385	11799	12700
	2.2	Axle loading, laden front / rear		(kg)	14200 / 1517	14988 / 1399	15787 / 1598	17911 / 1888	20000 / 1700
	2.3	Axle loading, unladen front / rear		(kg)	4930 / 4787	4950 / 4937	4980 / 5405	5990 / 5809	6450 / 6250
WHEELS	3.1	Tyres type			C-SE-SEG	C-SE-SEG	C-SE-SEG	C-SE-SEG	SEG
	3.2	Tyre size, front			840x356 355/65-15 8.25-15	840x356 355/65-15 8.25-15	840x356 355/50-20 8.25-15	840x356 355/50-20 8.25-15	8.25-15
	3.3	Tyre size, rear			22x9-16 250/60-12	22x9-16 250/60-12	22x9-16 250/60-12	22x9-16 250/60-12	250/60-12
	3.5	Wheels, number front rear (x = driven wheels)			2X/2 (SEG:4X/2)	2X/2 (SEG:4X/2)	2X/2 (SEG:4X/2)	2X/2 (SEG:4X/2)	4X/2
	3.6	Track width, front	**b10**	(mm)	1312 1361 1393	1312 1361 1393	1312 1355 1393	1312 1355 1393	1393
	3.7	Track width, rear	**b11**	(mm)	1220 1225	1220 1225	1220 1225	1220 1225	1225
DIMENSIONS	4.1	Tilt of mast / fork carriage forward / backward	**α/β**	(°)	5.5/6(2)	5.5/6(2)	5.5/6(2)	5.5/6(2)	5.5/6(2)
	4.2	Closed mast height	**h1**	(mm)	2680	2680	2680	2792	2900
	4.3	Free lift	**h2**	(mm)	100	100	100	0	0
	4.4	Lift (standard mast)	**h3**	(mm)	3400	3400	3400	3400	3400
	4.5	Height, mast extended	**h4**	(mm)	4370	4370	4370	4530	4800
	4.7	Height of overhead guard	**h6**	(mm)	2420	2420	2420	2420	2420
	4.8	Seat height	**h7**	(mm)	1330	1330	1330	1330	1330
	4.12	Coupling height	**h10**	(mm)	465	465	465	465	465
	4.19	Overall length	**L1**	(mm)	4500	4500	4500	4830	4870
	4.20	Length to face of forks	**L2**	(mm)	3300	3300	3300	3630	3670
	4.21	Overall width	**b1/b2**	(mm)	1669 1661 1838	1669 1661 1838	1669 1670 1838	1669 1670 1838	1838
	4.22	Fork dimensions	**exsxL**	(mm)	150x60x1200	150x60x1200	150x60x1200	200x60x1200	200x60x1200
	4.23	Fork carriage iso 2328/30, FEM/A,B			4A	4A	4A	4A	5A
	4.24	Fork-carriage width	**b3**	(mm)	1500	1500	1500	1500	1500
	4.31	Ground clearance, laden, below mast	**m1**	(mm)	180	180	180	180	180
	4.32	Ground clearance, centre of wheelbase	**m2**	(mm)	165	165	165	165	165
	4.33	Aisle width for pallets 1000x1200 crossways	**Ast**	(mm)	4810	4810	4810	5150	5200
	4.34	Aisle width for pallets 800x1200 lengthways	**Ast**	(mm)	5010	5010	5010	5350	5400
	4.35	Turning radius	**Wa**	(mm)	2985	2985	2985	3300	3300
	4.36	Internal turning radius	**b13**	(mm)	950	950	950	1050	1050
PERFORMANCE	5.1	Travel speed, laden / unladen		(km/h)	15/15	15/15	14,5/15	14/15	14/15
	5.2	Lift speed, laden / unladen		(m/s)	0,24/0,39	0,24/0,39	0,22/0,39	0,2/0,34	0,28/0,4
	5.3	Lowering speed, laden / unladen		(m/s)	0,5/0,4	0,5/0,4	0,5/0,4	0,45/0,35	0,47/0,39
	5.5	Drawbar pull, laden / unladen (S2 60')		(N)	6900 / 7500	6900 / 7500	6600 / 7300	6400 / 7200	6100 / 6850
	5.6	Max. drawbar pull, laden / unladen (S2 5')		(N)	16400 / 17000	16400 / 17000	16100 / 16800	15900 / 16700	15150 / 15900
	5.7	Gradeability, laden / unladen (S2 30')		(%)	6,5 / 11	6,5 / 11	5,5 / 10	5 / 9,5	4,7 / 9
	5.8	Max. gradeability, laden / unladen (S2 5')		(%)	10 / 16	10 / 16	8,5 / 14	8 / 13,5	7,7 / 12,7
	5.9	Acceleration time, laden / unladen (10 m)		(s)	5,8 / 5,4	5,8 / 5,4	6,1 / 5,7	6,2 / 5,8	5,8 / 5,4
	5.10	Service brake: mech./hydr./electr.			hydraulic/electric	hydraulic/electric	hydraulic/electric	hydraulic/electric	hydraulic/electric
MOTOR / BATT.	6.1	Drive motor rating (S2 60')		(kW)	22	22	22	22	27
	6.2	Lift motor rating (S3 20%)		(kW)	30	30	30	30	45
	6.4	Battery voltage	**U**	(V)	96	96	96	96	96
	6.4.1	Rated capacity	**K5**	(Ah)	840 / 930	840 / 930	840 / 930	1120 / 1240	1240
	6.5	Battery weight minimum/maximum		(kg)	2650 / 2830	2650 / 2830	2650 / 2830	3470 / 3650	3470 / 3650
OTHERS	8.1	Type of drive control			inverter	inverter	inverter	inverter	inverter
	8.2	Operating pressure for attachments		(bar)	160	160	160	160	160
	8.4	Sound level at the driver's ear		(dBA)	-	-	-	-	-

VDI 2198

Rev7 30/11/15

(1)With side-shifter integrated in the mast

(2)Depending on kind of mast

Wheels tyre legend: SE super elastic - SEGEM super elastic twins - C cushion - L pneumatic - VLK vulkolan

The performance data refer to a forklift truck in perfect working condition, with battery weight corresponding to the values given in 6.5

In accordance with VDI Guideline 2198 this specification sheet provides details of the standard truck only. Non-standard tyres, different masts, optional equipment, etc. may result in different values.

The C.A.R.E.R. products and specifications are subject to change without notice

C.A.R.E.R. Srl
Via Copernico 13
48033 Cotignola (RA) Italia
Tel. +39 0545 1938010
Fax +39 0545 908070
info@carerforklift.com
www.carerforklift.com