https://truckmanualshub.com/

SR2010 PLOT COMBINE

SAMPO ROSENLEW

https://truckmanualshub.com/

The Sampo Rosenlew 2010 is specially designed for experimental fields and seed breeding. With this in mind Sampo Rosenlew's engineers have perfected every detail in the SR 2010 combine. The single most important factor in plot harvesting is to ensure that all the grains come from the intended plot. To guarantee this, the SR2010 has an extremely effective and reliable self-cleaning system. The SR 2010 can be equipped with special headers for different types of crops such as sunflower or maize. The Sampo Rosenlew combines have a reputation for being easy, fast and ergonomic to clean, and the SR 2010 is no exception.

https://truckmanualshub.com/

MANY FEATURES ON THE CUTTING HEADERS

CUTTING HEADER

The header cuts cleanly and evenly. The SR 2010 uses the CHAC System (Constant High Volume Air Stream Cleaning) to provide high cleanliness on the table to ensure clean samples. The electrical and hydraulic adjustments conveniently operated from the cab make threshing versatile and accurate. The special made brushes on the pick-up reel combined with an effective airflow system results in supreme cleanliness throughout the whole threshing mechanism. Every detail has been taken into consideration in the design to provide uniform and reliable grain samples.

Header sizes are available, 1,5 m, 2,0 m or 2,3 m.

https://truckmanualshub.com/

THRESHING MECHANSIM

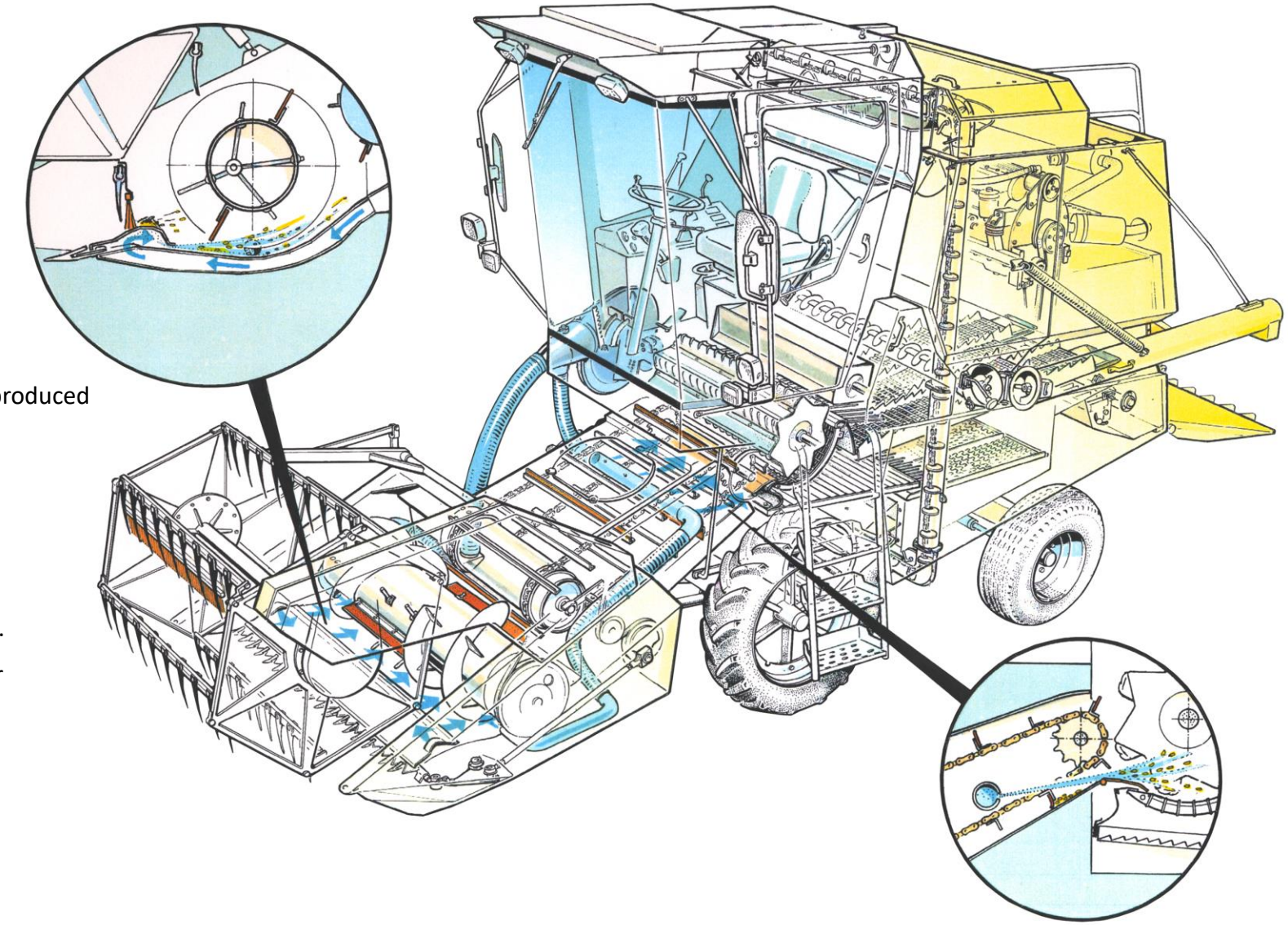

AIRFLOW SYSTEM ON THE HEADER

The blower is the core of the airflow cleaning system. The airflow is produced by a belt driven blower and positioned precisely at the cleaning points by means of a distribution system.

The header is equipped with a continuous airflow blower to ensure clean and uniform crop samples.

The crop is evenly fed by the feeder elevator into the threshing drum. Two feeder chains support and stabilize the slats. The feeder elevator is thoroughly cleaned after every plot by the CHAC System.

https://truckmanualshub.com/

THRESHING MECHANSIM

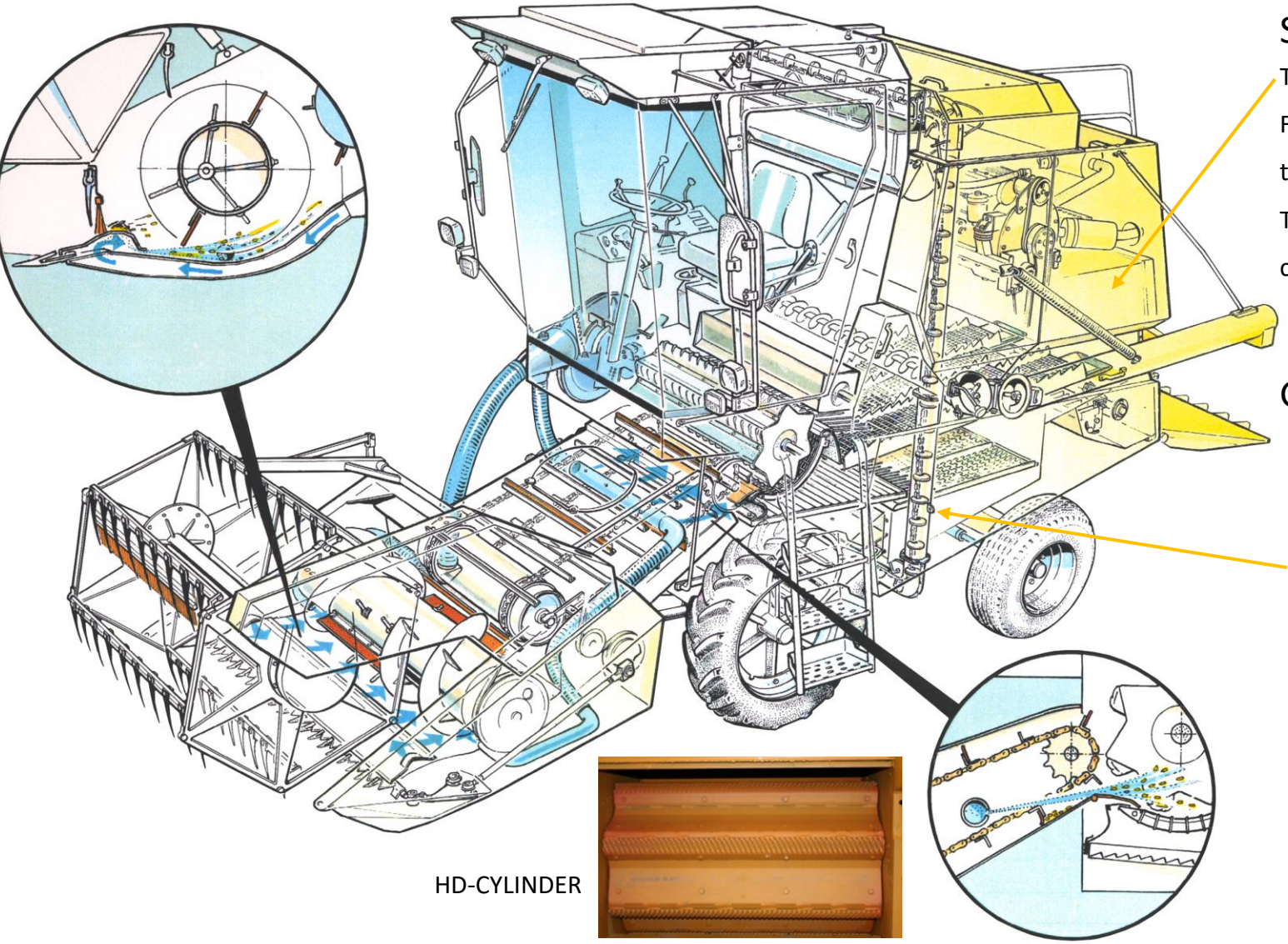

HD-CYLINDER

STRAW WALKERS AND CHOPPER

The SR 2010 has three turn over walkers and a single sieve system.

For additional efficiency an optional double sieve system can be fitted on the combine.

The straw chopper is an option. The chopper also functions as a good counter-weight in balancing the combine.

GRAIN ELEVATOR AND A HD-CYLINDER

The special made good grain elevator has a sealed construction throughout the whole elevator area. This prevents grain overflow and ensures clean, uniform samples. The elevator chain has round plastic, paddles which fits perfectly to the “pipeline”.

The heavy duty closed threshing drum and large wrapping angle has been proven it’s value in more than 4500 plot combines. The electrically adjustable threshing drum is designed to outperform itself even in the hardest threshing conditions. This cylinder manage in the thoughts crops and conditions.

https://truckmanualshub.com/

WEIGHING SYSTEMS

COLEMAN WEIGHING SYSTEM

The first Coleman Weighing System was developed in 1986 comprising of a basic balance and crane. It has now evolved to the system used today driven by increased combine output and accurate up to the minute information demanded by today's customer. The system is pneumatically operated and is calibrated to within 50 grams. Grain is transported via a conveyor and chute under the elevator to the weight hopper on the right hand side of the cab. The conveyor is quick release so that the combine can do bulk harvesting of multiplication blocks.

HARVESTMASTER GRAIN CAGE

The Grain Cage weighing system is the more popular system today. The basic idea works like the Coleman system with the grain transport. The main difference is different data which can be collected from the sample. The sensors sense the weight, moisture and the software Mirus™. For more information of the Harvestmaster Grain Cage, please visit their web page, Harvestmaster.com

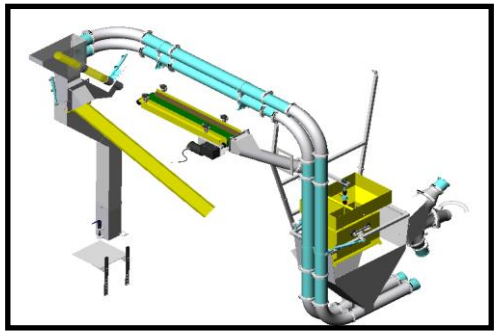

COLEMAN WEIGHING SYSTEM

https://truckmanualshub.com/

SPECIFICATIONS

CUTTING HEADER			
	Widths available	m	1,5 2,0 and 2,3
	Cutting height	m	-0,20...+ 1,20
	Knife speed	strokes/min	1020
	Header reverse	type	electrical (option)
REEL			
	Diameter	m	1,05
	Speed range	rpm	15…49
	Speed adjusment		electrical
	For/aft adjustment		electrical
FEEDER HOUSE			
	Grain conveyor		chain
THRESHING CYLINDER			
	Diameter	mm	500
	Width	mm	780
	Speed range	rpm	400-1150
	Speed adjusment		electrical
	Number of rasp bars	pcs	7
	Sealed drum		standard
CONCAVE			
	Number of rasp bars	pcs	12
	Length	mm	490
	Angle of wrap	degrees	108
	Adjustment		manual

STRAW WALKERS			
	Numbers of walkers	pcs	3
	Separation area	m2	1,4
SIEVE AREA			
	Top sieve	m2	0,7
	2 sieve system with returns	option	
	Area for lower sieve	option	0,47
	Good grain elevator	tubular grain conveyor	
GRAIN TANK			
	Capacity	l	1700
TRANSMISSION			
	Engine	kW/hp	54/73
	Fuel tank capacity	l	140
	Drive		hydrostatic
	Tires	front	12.4R24
		rear	11.5-15
WEIGHT AND DIMENSIONS			
	Weight	kg	3400
	Length with header	m	6,4
	Width	m	2,5
	Height	m	3,3
	Turning radius	m	3,5

The manufacturer reserves the right to make changes to the machines without notice and without obligation to make such changes to machines manufactured before. Specifications may vary from country to country. Contact your retailer for current specifications.

https://truckmanualshub.com/

SAMPO ROSENLEW

Sampo Rosenlew Ltd

Konepajanranta 2A
P.O. Box 50
FI-28101 Pori, Finland
Tel. +358 207 550 555
Fax. +358 2 632 6546

www.sampo-rosenlew.fi

The product development of the Sampo Rosenlew combines continues. Therefore the Company reserves the right to modify the products without prior notice and without obligation to make the same modifications to combines previously manufactured. The pictures in this brochure are selected from globally used material, as a result some details may vary from country to country. Check the information with your dealer.