https://truckmanualshub.com/

# CX EXCAVATOR

https://truckmanualshub.com/

# CX EXCAVATOR

## Service Training Manual

#5087 REV. 2001

https://truckmanualshub.com/

# CX SERIES EXCAVATORS
## Service Training Manual

## Table of Contents

**Section 1** ..... General Introduction

**Section 2** ..... Component Locations - Hydraulics / Electrical

**Section 3** ..... Controller

**Section 4** ..... Electrical – “How it Works”

**Section 5** ..... Hydraulic – CX130/CX160 “How it Works”

**Section 6** ..... Hydraulic – CX210/CX240 “How it Works”

**Section 7** ..... Pressure Data

**Section 8** ..... Engine Electronic Fuel System

**Section 9** ..... Schematics

(2001)

https://truckmanualshub.com/

CASE

## Construction Equipment Service Training

# CX SERIES EXCAVATOR

## Section 1 -- GENERAL INTRODUCTION

(2001)

Training Pays

https://truckmanualshub.com/

**CASE CORPORATION**
**700 STATE STREET**
**RACINE, WI 53404 U.S.A.**

**CASE CANADA CORPORATION**
**3350 SOUTH SERVICE ROAD**
**BURLINGTON, ON L7N 3M6 CANADA**

**© 2001 Case Corporation**
**All Rights Reserved**

Printed in U.S.A.

https://truckmanualshub.com/



# TABLE OF CONTENTS

## Section 1 - General Introduction

PAGE NO.

Engines ..... 2
Reservoir ..... 3
Filters ..... 3
Pumps ..... 4
Pilot System ..... 6
Hydraulic Systems ..... 6-7
Cushion Control ..... 7
Swing ..... 7
Travel ..... 8
Cylinders ..... 9
Electrical System ..... 10-11

https://truckmanualshub.com/



# EXPLANATION OF CX SERIES

| Engines | | | | |
|---|---|---|---|---|
| **MODEL** | **CX130** | **CX160** | **CX210** | **CX240** |
| **Make**<br>**Model** | CASE<br>4TA390 | CASE<br>4TA390 | CASE<br>6TAA590 | CASE<br>6TAA590 |
| **HP (net)** | 106 | 106 | 138 | 163 |
| **Cold Start** | Ether | Ether | Electric | Electric |
| **Rated rpm** | 2200 | 2200 | 1950 | 2150 |

When programming the machines, the manufacture model number must be used. Detailed procedures are in section 7 of your service manual.

| Manufacture model number | Case model number |
|---|---|
| SHO120 | CX130 |
| SHO150 | CX160 |
| SHO200 | CX210 |
| SHO220 | CX240 |

When programming the machines, the following codes will be used to change the language if necessary. Detailed procedures are in section 7 of your service manual.

| LANGUAGE | MODE NO. | LANGUAGE | MODE NO. | LANGUAGE | MODE NO. |
|---|---|---|---|---|---|
| Japanese | 0 | Italian | 6 | Swedish | 12 |
| English | 1 | Spanish | 7 | Finnish | 13 |
| Thai | 2 | Portuguese | 8 | Picture writing | 14 |
| Chinese | 3 | Dutch | 9 | | |
| German | 4 | Danish | 10 | | |
| French | 5 | Norwegian | 11 | | |

https://truckmanualshub.com/



# EXPLANATION OF CX SERIES

## Reservoir

The reservoir is pressurized on all models. The air charge is provided by thermal expansion and the differential area of the cylinders as they are stroked the first time. There is a breather/pressure regulator/fill cap installed in the top cover of the units. A rubber-covered button on top of the breather is provided to release the air pressure in the reservoir. A sight gauge mounted to the side of the reservoir indicates the oil level. There is a 150-mesh screen at the outlet of the reservoir to the hydraulic pump.

| Reservoir | | | | |
|---|---|---|---|---|
| **MODEL** | **CX130** | **CX160** | **CX210** | **CX240** |
| **Capacity Tank gal.** | 19 | 32 | 32 | 32 |
| **Capacity System gal.** | 32 | 38 | 54 | 59 |

## Filters

The oil returning from the main control valve flows through the oil cooler. There is a cooler bypass valve in the circuit to protect the system during cold start conditions. As the oil returns from the oil cooler, it passes through a full flow 10-micron filter. Some of the return oil is routed through a 1-micron ultra-fine filter. Drain oil from the pilot control circuits and the case drain oil from the swing and travel motors is returned through the main return filter.

A cartridge type filter is installed in the outlet of the pilot pump to protect all pilot valves from contamination. All of these filters have filter bypass valves for cold start up protection.

| Filters | | | | |
|---|---|---|---|---|
| **MODEL** | **CX130** | **CX160** | **CX210** | **CX240** |
| **Suction** | 150 mesh | 150 mesh | 150 mesh | 150 mesh |
| **Return** | 10 µ | 10 µ | 10 µ | 10 µ |
| **Ultra-fine** | 1 µ | 1 µ | 1 µ | 1 µ |
| **Pilot** | 10 µ | 10 µ | 10 µ | 10 µ |

https://truckmanualshub.com/



# EXPLANATION OF CX SERIES

## Variable Pumps

All of the CX Series Excavators use an open center hydraulic system, in that there is always an output flow from the hydraulic pump flowing through the system. The CX Series Excavators use a variable volume piston pump system to be able to fully use the engine horsepower available. As the system operating pressure increases, the flow gradually reduces, to maintain a constant horsepower load on the engine. The theory is that when very high pressures are required, speed isn't so important. The CX Series Excavators use a two-section variable displacement piston pump, to provide the flow required to operate the functions. Variable pumps are used to allow the delivery of a higher flow rate at lower working pressures, and then allow the pump to reduce flow at higher pressures to keep from stalling the engine. The increased flow at lower pressures makes the machine cycle faster, to increase the overall efficiency of the machine.

The engine horsepower required to drive a hydraulic pump depends on the flow delivered by the pump, as well as the pressure at which system is operating. There is a mathematical formula to calculate the pump drive horsepower, but a rule of thumb to visualize this, is that it requires approximately 1 engine horsepower to deliver 1 gallon per minute of oil at 1500 psi. Therefore, it would require 25 HP to deliver 25 GPM at 1500 psi. If the pressure increases to 3000 psi, the requirement would be 50 HP.

The CX Series Excavators have an automatic pump de-stroke feature that reduces pump flow to a minimum delivery when all control levers are in the neutral position. This is accomplished with a hydraulic pilot signal from the control valve. This system saves fuel and eliminates wasted engine and hydraulic power. The minimum flow delivery of the pumps increases with machine size and engine horsepower. Although the pump configuration and manufacturer varies, in principal, all of the pump control systems operate the same.

| Pumps | | | | |
|---|---|---|---|---|
| **MODEL** | **CX130** | **CX160** | **CX210** | **CX240** |
| **Max. pump flow X 2** | 32.4 gpm | 36.2 gpm | 53.1gpm | 56 gpm |
| **Pilot pump flow** | 6 gpm | 5.8 gpm | 5.3 gpm | 5.3 gpm |
| **Manufacture** | Uchida | Uchida | Kawasaki | Kawasaki |
| **Configuration** | Tandem | Tandem | Tandem | Tandem |

https://truckmanualshub.com/



# EXPLANATION OF CX SERIES

## Pilot Controls

The attachment controls are pilot operated by hand actuated controllers on all models. The pilot hand controls are mounted to tilting armrests that can be positioned to provide for maximum operator comfort. The standard control pattern is the SAE pattern. The controls can be changed to other configurations by changing the pilot hose connections at the pilot manifold, located behind the cab (see Section 3 of this manual for instructions). There is a pattern change kit available as an option. This allows pattern changes without moving hoses.

When the left arm is tilted up or the gate is up, all pilot operated control functions are inactive.

On all models, the travel system is actuated by foot pedals that also have hand control levers attached. The travel controls are pilot pressure operated on all models. The CX240 has the single pedal feature, by actuating a single control pedal, both travel systems will travel at the same speed and direction. This feature gives the operator straight-line travel in either forward or reverse.

| Pilot Controls | | | | |
|---|---|---|---|---|
| **MODEL** | **CX130** | **CX160** | **CX210** | **CX240** |
| **Pilot operated hand and foot controls** | yes | yes | yes | yes |
| **Single pedal travel** | no | no | no | yes |

https://truckmanualshub.com/



# EXPLANATION OF CX SERIES

## Hydraulic System Overview

All models use a triple hydraulic pump assembly that is located on the same side of the unit as the reservoir. All of the units use two variable displacement piston pumps for the machine functions. A fixed displacement gear pump used to supply pilot control oil for the system. The CX130 and CX160 units use a tandem mounted pump supplied by Uchida. The CX210 and CX240 units use a tandem mounted pump supplied by Kawasaki. All of the pumps have a system to limit the horsepower load on the engine. This system allows the unit to fully utilize the power available without overloading the engine. The CX Series Excavators have an electrically controlled feature that allows the hydraulic system to operate at less than full load to increase fuel economy or fine touch controllability.

This feature allows for four digging modes:

“Auto” -Variable- 90-85% engine speed- 93-90% hydraulic pump torque

"H" -Heavy Duty - 100% of engine speed - 100% hydraulic pump torque

"S" -Standard Duty - 95% of engine speed - 90% hydraulic pump torque

"L" -Light - 85% of engine speed - 70% hydraulic pump torque

The machine will be in the ”**Auto”** mode each time it is started.

All models have Power Boost

CX130/CX160 machines have One-Touch Power Boost

CX210/CX240 machines have automatic Power Boost.

https://truckmanualshub.com/



# EXPLANATION OF CX SERIES

## CX130/CX160/CX210/CX240 Hydraulic System

There is a single main relief with a second (power boost) setting. Boom and arm anti-drift valves are built into the main control valve. An auxiliary control valve is standard and a factory installed or field installed kit with plumbing to the end of the arm is available. Other features that are built into the main control valve are:

Dual flow boom up

Boom down regeneration

Boom down anti-drift

Dual flow arm

Arm in regeneration

Arm in anti-drift

Travel priority

Swing priority

Neutral pump de-stroke

Two electrical pressure switches are installed on the main control valve, and one in the swing pilot shuttle valve. These switches are used to tell the controller what hydraulic functions are being operated.

## Cushion Control System

The CX Series units have an attachment control cushion system to allow the boom and arm cylinder control spools to gradually return to neutral, for shock-free operation. This feature allows a lesser skilled operator to work more smoothly. With the control cushion system active, the pilot oil from the hand control flows to the arm or boom control spool unrestricted. When the hand control is returned to neutral, the pilot oil is restricted as it leaves the control spool. This slow return of the spool accounts for the smooth operation. The system can be overridden with an electrical control switch on the monitor/switch panel.

## Swing

The CX Series Excavators do not have a mechanical house lock. The house lock is accomplished with the swing brake. Swing lock or (100%) brake is applied when the switch on the left console is activated or the engine is shut off. The swing brake is applied 5 seconds after the control is returned to neutral.

https://truckmanualshub.com/



# EXPLANATION OF CX SERIES

## Travel CX130/CX160/CX200/CX220

The travel motors are located at the rear of each track assembly. The travel system is controlled by control spools in the main control valve located in the machine upper section. The travel drive system has independent, compact, axial piston, two speed hydraulic motors. Each track is independently driven by a sprocket driven by a planetary reduction unit. There is a spring applied hydraulically released disc brake built into each motor. The travel brake is released by the travel pressure applied to the motor. Each travel motor is equipped with a counterbalance valve and a dual stage relief valves for smooth starts and stops. The counterbalance valve prevents over speeding of the motor while driving down an incline. The shockless relief valve allows for additional cushioning in the circuit by allowing a slight transfer of oil between travel directions as the unit is started and stopped. The travel motors and reducers are mounted within the width of the side frame. Two-speed travel is controlled by the contr9oller, which controls a solenoid valve. The travel speed solenoid supplies pilot circuit pressure to actuate the two-speed spool in each drive motor. Travel drive pressure is then ported through the two-speed control spool to the motor swash plates. The machines are in **“LOW SPEED”** travel when the key is turned on. When the travel switch is depressed the machine will be in **“HIGH SPEED”** and if the drive load is to high the motor will automatically shift to **“LOW SPEED”** and back to **“HIGH SPEED”** when the load is reduced.

The travel systems have a travel priority function to insure straight travel capability if the swing function or any attachment function is activated, while traveling. When traveling without other functions activated, one pump supplies right travel with the other pump supplying left travel. When the travel priority spool shifts, because of multiple function application, one pump is used to supply both right and left travel while the other pump is used for the attachment functions. With one pump supplying, both travel functions, the travel speed will naturally be reduced significantly.

| Travel | | | | |
|---|---|---|---|---|
| **MODEL** | **CX130** | **CX160** | **CX210** | **CX240** |
| **L Speed** | 2.1 | | | |
| **H Speed** | 3.4 | | | |

https://truckmanualshub.com/



# EXPLANATION OF CX SERIES

## Cylinders

The attachment cylinders have a cushion feature to hydraulically reduce the speed of the cylinder rod at the extreme ends of travel to limit the shock on the machine. Bucket open and boom down cylinder positions do not have cushions.

https://truckmanualshub.com/



# EXPLANATION OF CX SERIES

## Electrical System

All models have a 24-volt starting and charging system. The CX Series Excavators have two 12-volt batteries, wired in series to obtain the 24-volt capacity. These batteries are located in the compartment behind the cab.

There is a battery relay connected between the positive battery cable and the machine electrical system. The battery relay acts as the master disconnect for the system. The battery relay closes as the key switch is turned to the **"on"** position.

https://truckmanualshub.com/



# EXPLANATION OF CX SERIES

## Electrical System

To improve starting at cold temperatures the CX130 and CX160 are equipped with an ether injection system as standard equipment. The ether injection system can only be activated when the key-switch is in the crank position. There is a rocker switch located in the left-hand control console for easy access to the operator. There is also a temperature switch located on the engine intake manifold to prevent engagement of the ether system when the engine is above approximately 40°F . On the CX210 and CX240, an intake manifold heater is used for cold starting assist.

The Alternator is rated at 24 volts. The electronic controller for the CX130/CX160 machine requires an engine speed signal from a magnetic sensor on the flywheel. This engine speed signal is extremely critical to machine functions. The CX210/CX240 machines have electronic control engines. The machine controller requires input from the engine controller.

The engine, the hydraulic, and the electrical systems are all monitored by a controller. The controller for the CX130/CX160 is different than for the CX210/CX240. The controller receives signals from sending units. Very simply, the controller takes the information that it has received, and then sends the required outputs to cause the machine to perform as selected. These outputs may be sent to the display panel to indicate a malfunction or to give a visual display of which performance features have been selected. The outputs may also be sent to the solenoid valves, which control the machine functions. The controller has an automatic “limp home” feature to allow the machine to be operated to complete the job in case of controller failure.

https://truckmanualshub.com/

CASE

## Construction Equipment Service Training

# CX SERIES EXCAVATOR

## Section 2 -- Component Locations

(2001)

Training Pays

https://truckmanualshub.com/

**CASE CORPORATION**
**700 STATE STREET**
**RACINE, WI 53404 U.S.A.**

**CASE CANADA CORPORATION**
**3350 SOUTH SERVICE ROAD**
**BURLINGTON, ON L7N 3M6 CANADA**

**© 2001 Case Corporation**
**All Rights Reserved**

Printed in U.S.A.

https://truckmanualshub.com/



# Table of Contents

## Section 2 - Component Locations

PAGE NO.

MAIN COMPONENTS
CX130/CX160 ..... 2
CX210/CX240 ..... 3

ELECTRICAL COMPONENTS
CX130/CX160 ..... 4-6
CX210/CX240 ..... 7-9
All Models ..... 10-12

CONTROL VALVE PORTS
CX130/CX160 ..... 13-15

PUMP PORTS
CX130/CX160 ..... 16

CONTROL VALVE PORTS
CX210/CX240 ..... 17-18

PUMP PORTS
CX210/CX240 ..... 19

SIX SOLENOID VALVE
All Models ..... 20

https://truckmanualshub.com/



# MAIN COMPONENTS

## CX130/CX160

The CX130/CX160 could be considered sister machines because they are so similar. Electrically they are identical. Hydraulically the components are the same except for greater flow rates required by larger machines.

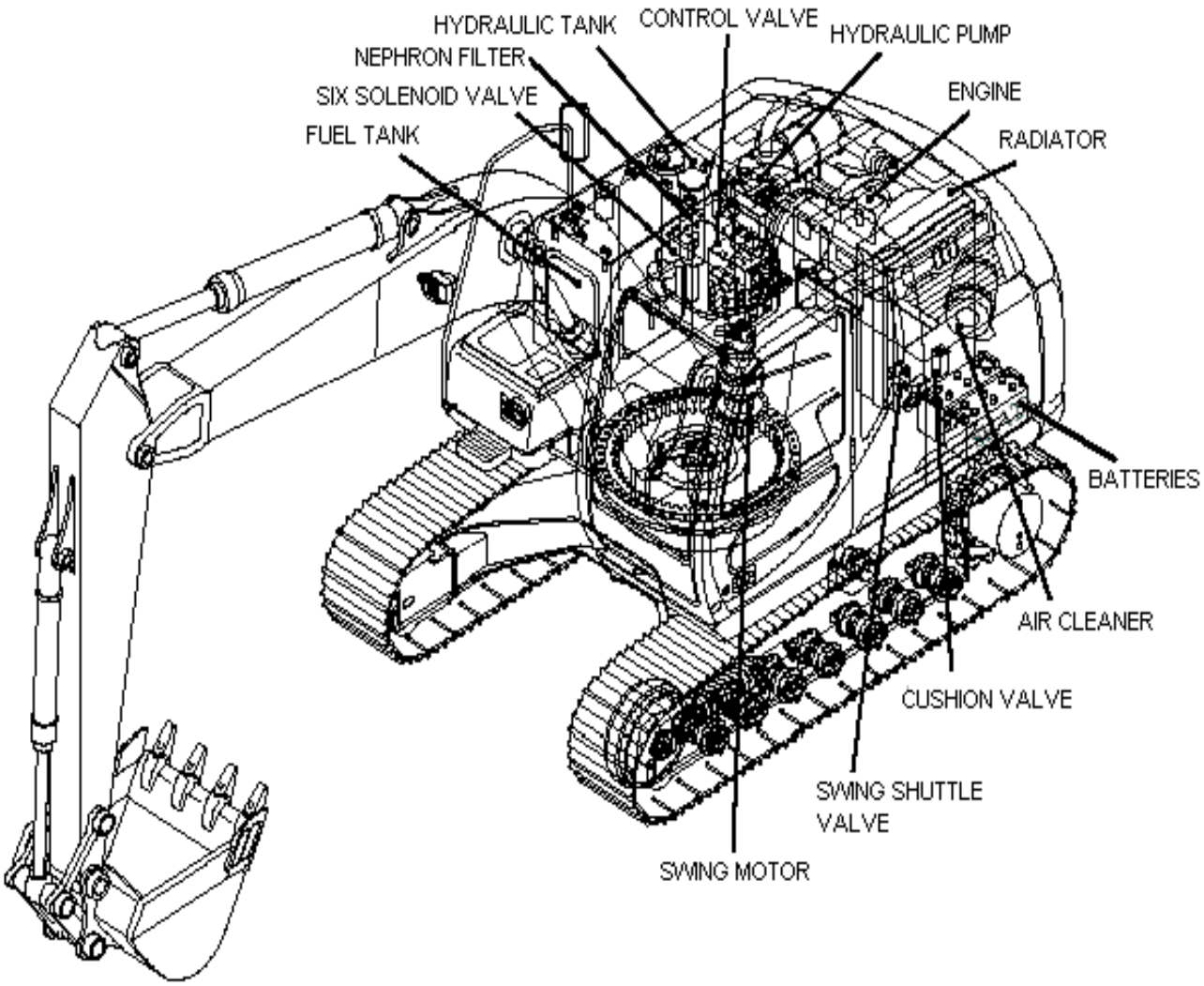

https://truckmanualshub.com/



# MAIN COMPONENTS

## CX210 / CX240

The CX210 / CX240 could be considered sister machines because they are so similar. Electrically they are identical. Hydraulically the components are the same except for greater flow rates required by larger machines.

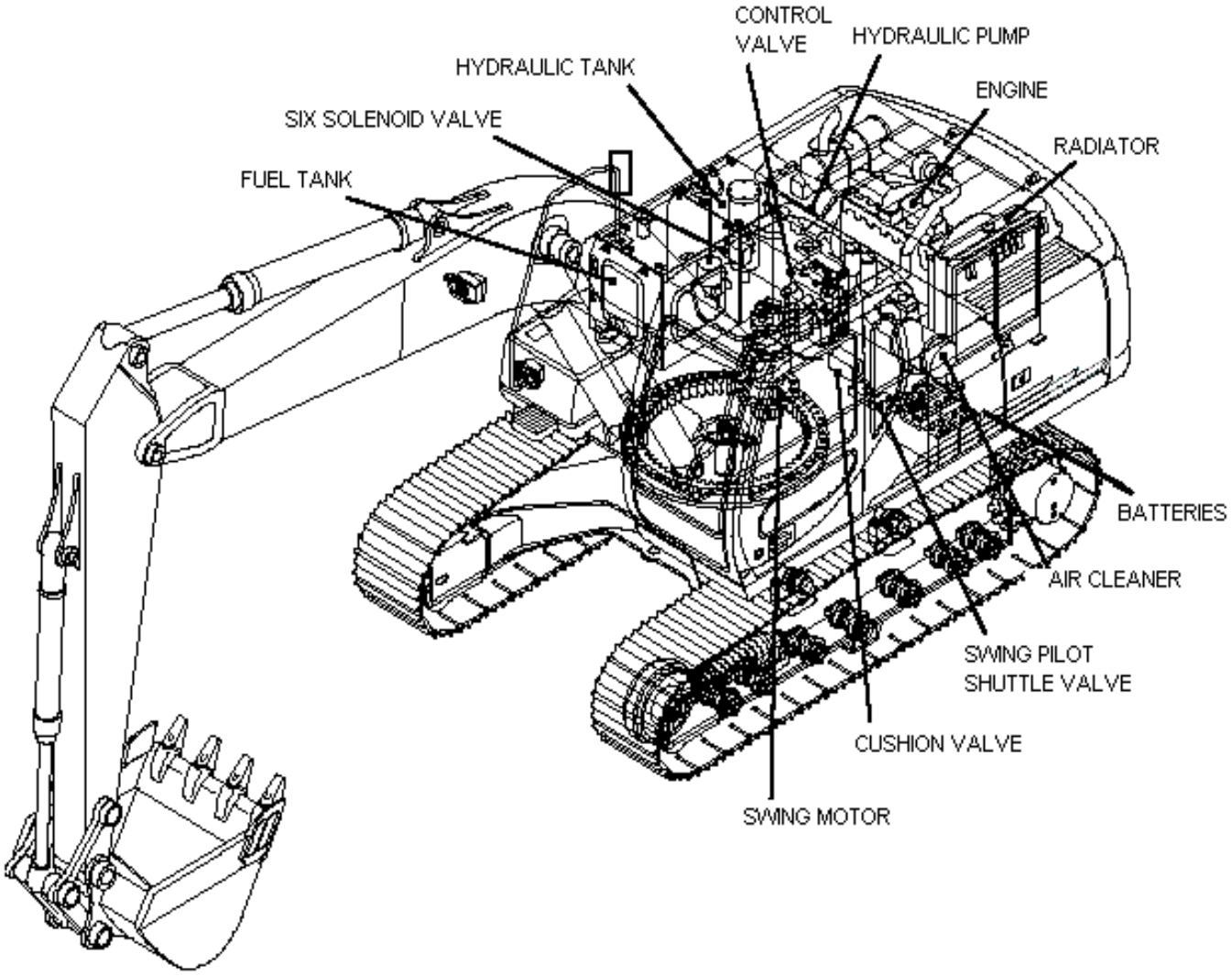

https://truckmanualshub.com/



# ELECTRICAL COMPONENTS

## CX130 / CX160

Because of the similarity, the component locations are the same between CX130/CX160 .

### Next Page: Out side of cab

1. Free swing solenoid valve
2. Travel alarm
3. Boom light
4. Swing pilot pressure switch
5. Horn (low note)
6. Horn (high note)
7. Upper pressure switch
8. Work light (upper-structure)
9. Windshield washer motor
10. Not available on north american models
11. Fuel level sender
12. Travel pressure switch
13. Pump proportional solenoid valve
14. Six solenoid valve bank
15. Negative (de-stroke) pressure transducer (pump2)
16. Pump2 pressure transducer
17. Pump1 pressure transducer
18. Hydraulic oil temperature sender
19. Battery disconnect relay
20. 20 amp fuse
21. 20 amp fuse
22. 65 amp fuse
23. Batteries
24. Coolant level sender
25. A/C compressor clutch switch

### Page 6: Inside of cab

1. Horn switch
2. Gate lever
3. Auxiliary hydraulic select switch
4. Door limit switch (A/C)
5. Air conditioner
6. Fuse box
7. Machine electronic controller
8. Throttle motor driver
9. Engine emergency stop relay
10. Work lights relay
11. Horn relay
12. Ether start relay
13. DC-DC converter (24v-12v)
14. Solar radiation detector
15. Radio
16. Cigarette lighter
17. Air condition control
18. Key switch
19. Throttle control
20. Instrument/switch panel
21. One touch/auto idle control
22. Windshield limit switch (A/C)
23. Windshield wiper motor control box
24. Windshield wiper motor
25. Cab interior light
26. Option switch
27. Power boost switch
28. Option relay

https://truckmanualshub.com/



# ELECTRICAL COMPONENTS

## OUTSIDE OF THE CAB

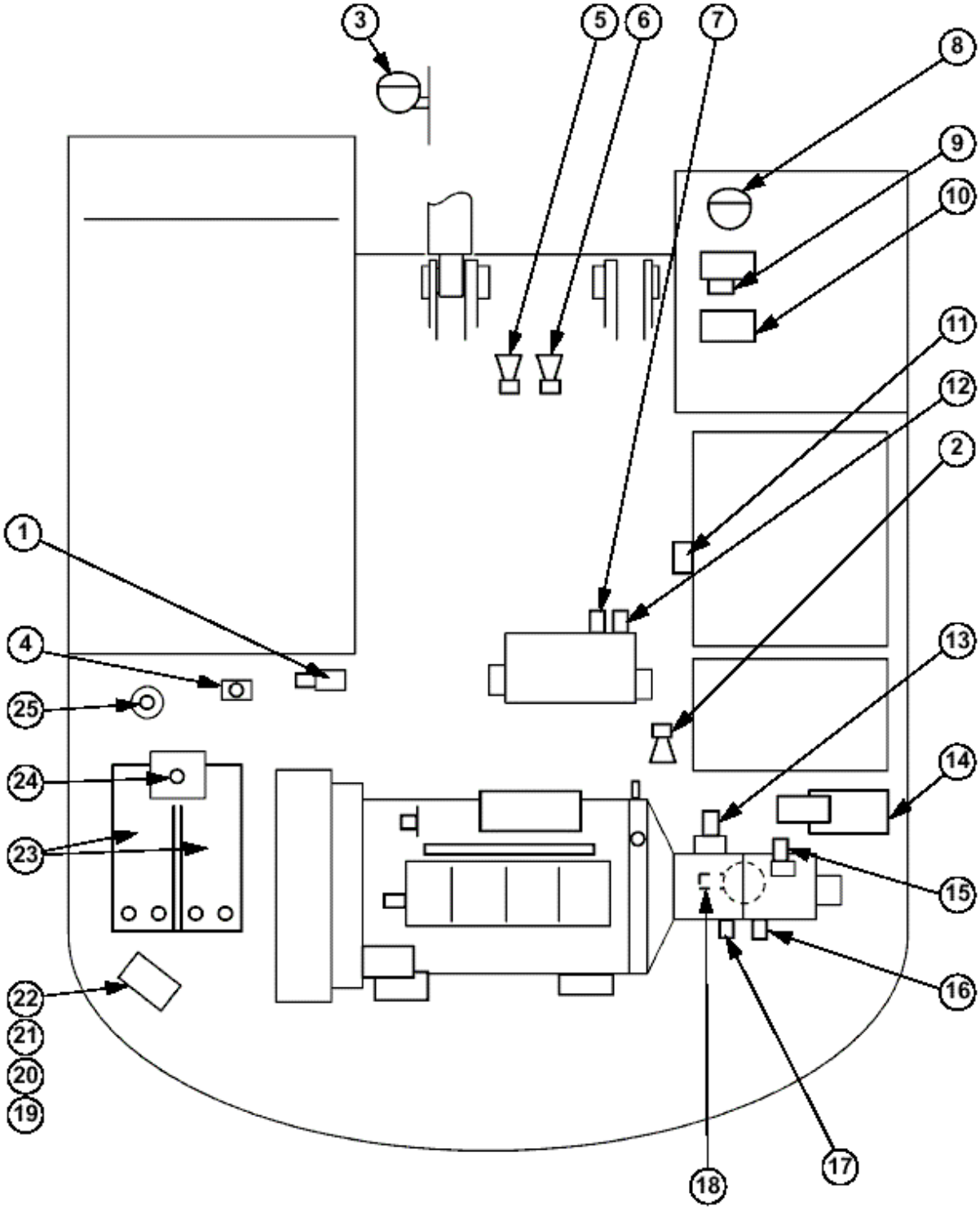

https://truckmanualshub.com/



# ELECTRICAL COMPONENTS

## INSIDE THE CAB

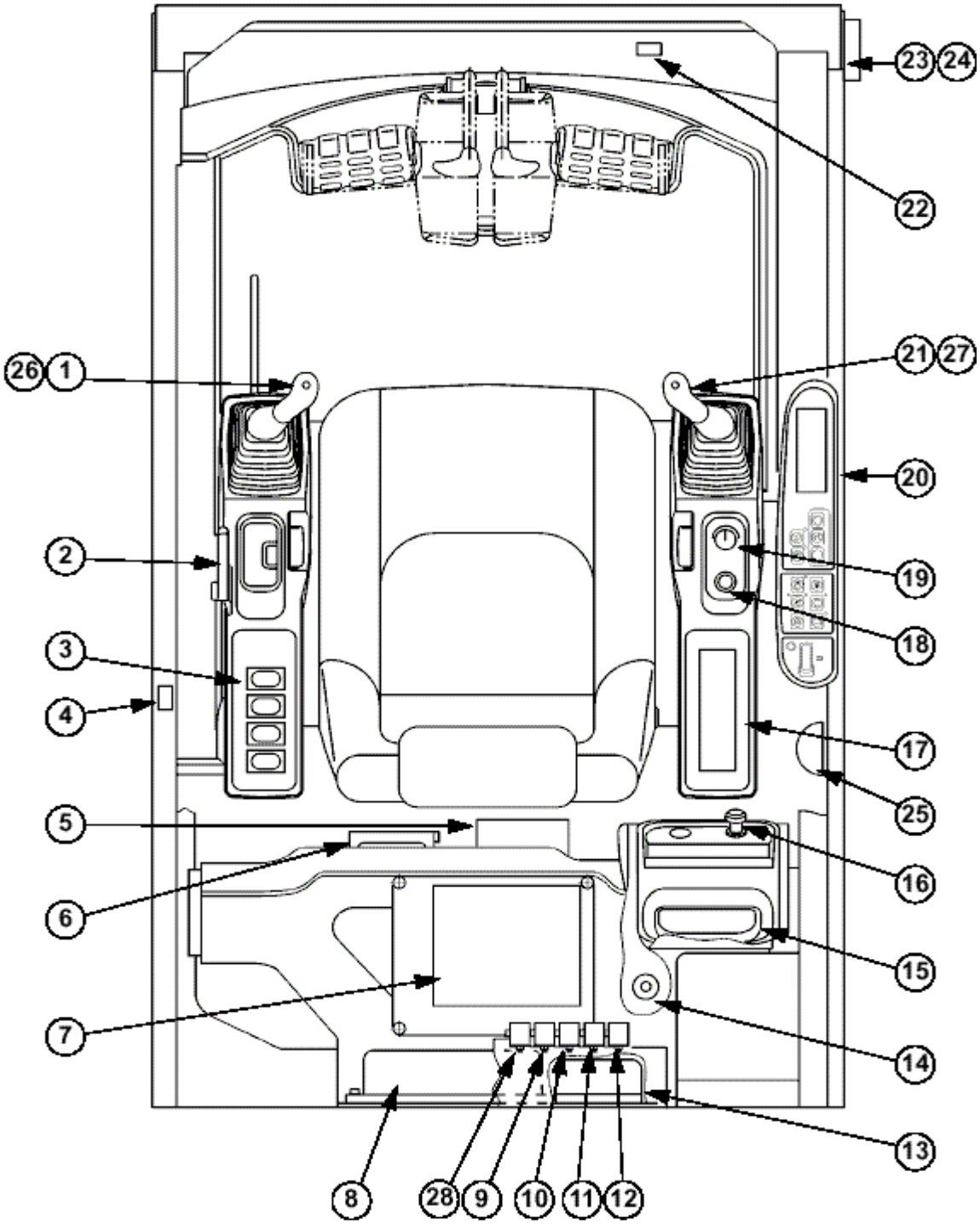

https://truckmanualshub.com/



# ELECTRICAL COMPONENTS

## CX210 / CX240

Because of the similarity, the component locations are the same between CX210 / CX240.

### Next Page: Outside the Cab

1. Free swing solenoid valve
2. Travel alarm
3. Boom work light
4. Swing pilot pressure switch
5. Horn (low note)
6. Horn (high note)
7. Upper pilot pressure switch
8. Work light
9. Windshield washer motor
10. Not available on North American models
11. Fuel level sender
12. Travel pilot pressure switch
13. Pump proportional solenoid
14. Six solenoid valve
15. Negative (de-stroke) pressure transducer
16. Pump2 pressure transducer
17. Pump1 pressure transducer
18. Hydraulic temperature sender
19. Battery disconnect relay
20. 20 amp fuse
21. 20 amp fuse
22. 65 amp fuse
23. Batteries
24. A/C compressor clutch switch

### Page 9: Inside the Cab

1. Horn switch
2. Gate lock lever
3. Auxiliary select switch
4. Door limit switch (A/C)
5. Air conditioner
6. Fuse box
7. Machine controller
8. Option switch (left)
9. Engine emergency stop relay
10. Work lights relay
11. Horn relay
12. Option switch (right)
13. DC-DC converter (24v-12v)
14. Solar radiation sensor
15. Radio
16. Cigarette lighter
17. Air condition control
18. Key switch
19. Throttle control
20. Instrument/switch panel
21. Engine control
22. Windshield limit switch (A/C)
23. Windshield wiper motor controller
24. Windshield wiper motor
25. Cab interior light

https://truckmanualshub.com/



# ELECTRICAL COMPONENTS

## Outside the Cab

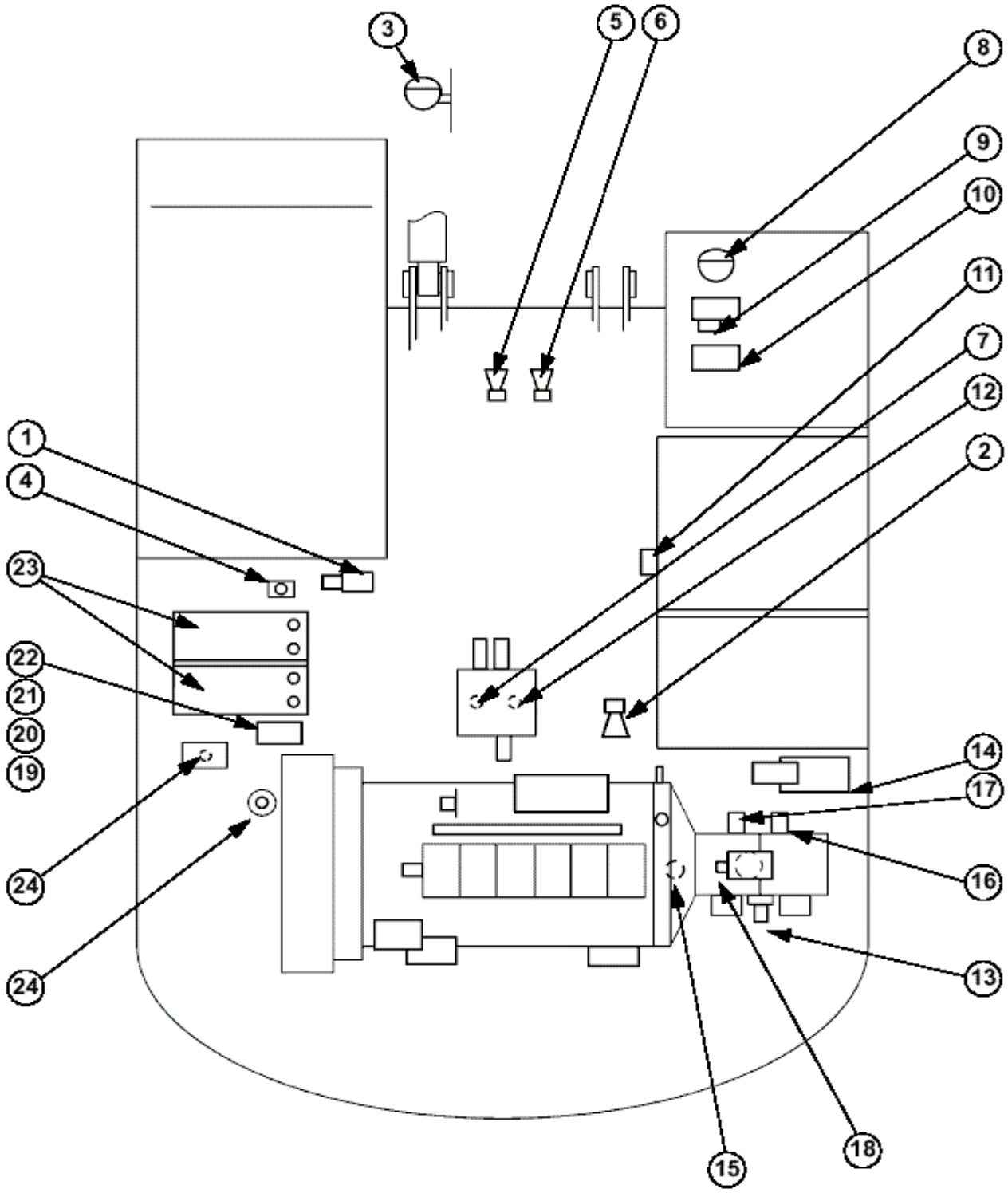

https://truckmanualshub.com/



# ELECTRICAL COMPONENTS

## Inside the Cab

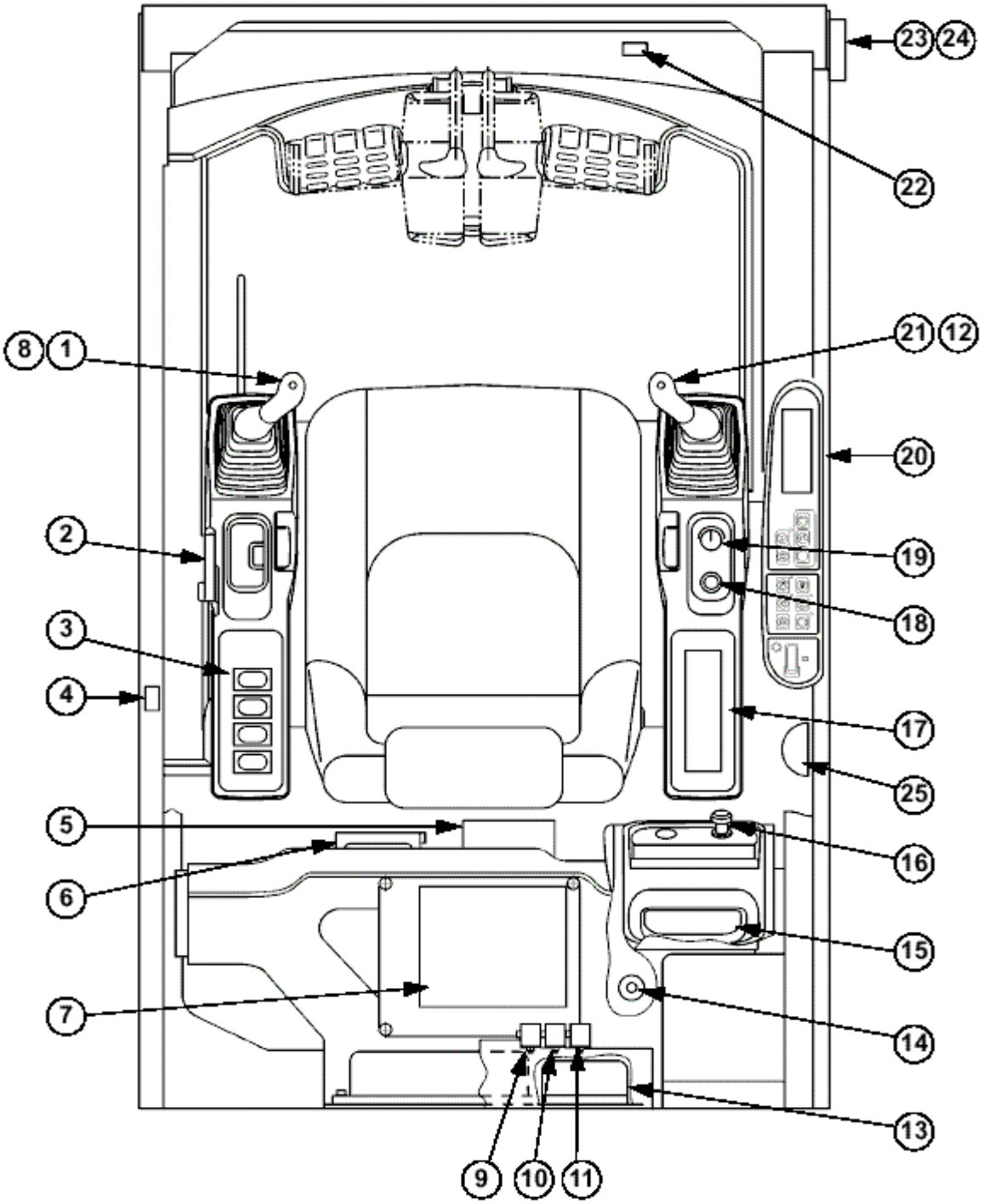

https://truckmanualshub.com/



# ELECTRICAL COMPONENTS

## Fuse Box All Models (in cab)

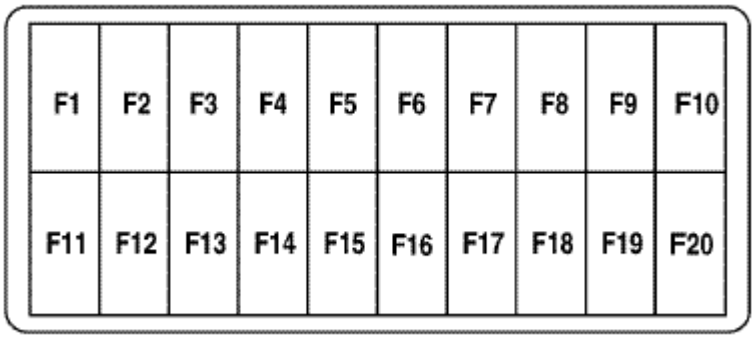


| | | |
|---|---|---|
| **F1** | 10A: | Data test link |
| **F2** | 20A: | Controller/Instrument/Switch Panel |
| **F3** | 20A: | Controller power |
| **F4** | 10A: | Pilot solenoid (gate lever) |
| **F5** | 15A: | Option |
| **F6** | 20A: | Option |
| **F7** | 20A: | Fuel feed pump |
| **F8** | 10A: | Air suspension seat |
| **F9** | 10A: | Condenser fan |
| **F10** | 10A: | Auxiliary hydraulic solenoid valve |
| **F11** | 10A: | Instrument panel/Radio/DC-DC converter |
| **F12** | 10A: | Key switch |
| **F13** | 20A: | Air conditioner/heater |
| **F14** | 5A: | Air conditioner compressor |
| **F15** | 15A: | Work light |
| **F16** | 15A: | Option |
| **F17** | 10A: | DC-DC converter |
| **F18** | 15A: | Wiper and washer |
| **F19** | 10A: | Horn |
| **F20** | 10A: | Cigarette lighter |

https://truckmanualshub.com/



# ELECTRICAL COMPONENTS

## Main Fuses and Battery Relay All Models (battery compartment)

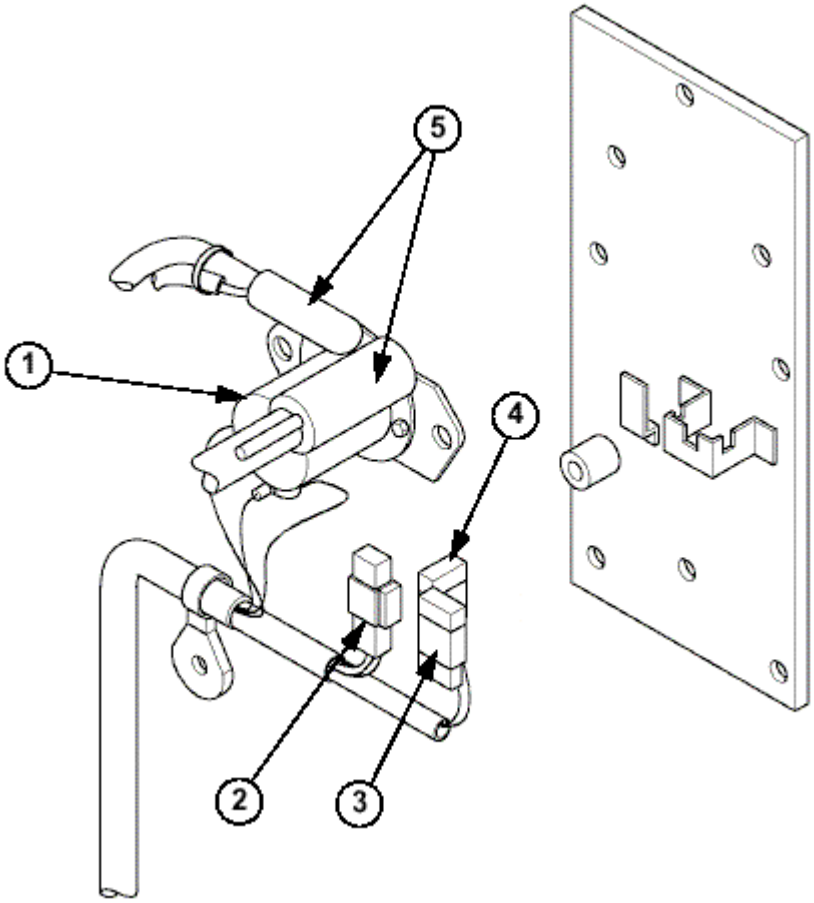


1. Battery disconnect relay
2. Fuse 65A: fuse circuits F3 to F10 and F13 to F20
3. Fuse 20A: fuse circuits F1, F11 and F12
4. Fuse 20A: fuse circuits F2
5. Battery cables

https://truckmanualshub.com/



# ELECTRICAL COMPONENTS

## Instrument Panel All models

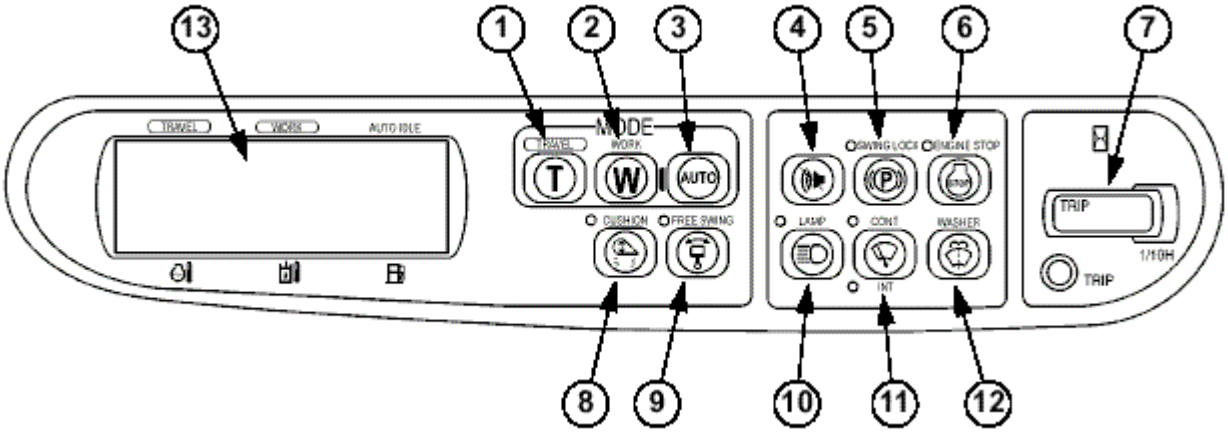


1. Travel mode switch
2. Work mode switch
3. Auto work mode switch
4. Buzzer stop switch
5. Swing lock switch
6. Engine emergency stop switch
7. Hourmeter
8. Cushion switch (off)
9. Free swing switch
10. Work light switch
11. Windshield wiper switch
12. Windshield washer switch
13. Display screen

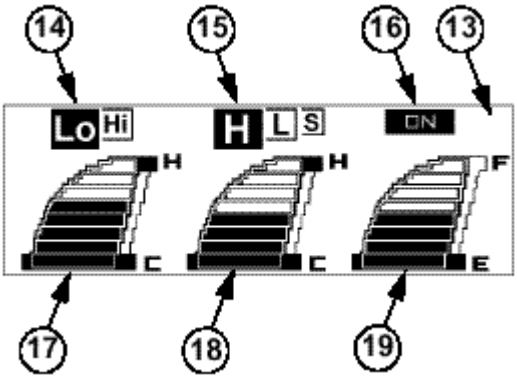


14. Travel speed indicator
15. Work mode indicator
16. Idle mode indicator
17. Coolant temperature
18. Hydraulic oil temperature
19. Fuel level

https://truckmanualshub.com/



# CONTROL VALVE PORTS

## CX130 / CX160

| Port | Description |
|---|---|
| 4A3 | Bucket close |
| 4B3 | Bucket open |
| 4A2 | Boom lower |
| 4B2 | Boom raise |
| 4A1 | LH forward travel |
| 4B1 | LH reverse travel |
| 5A5 | Arm (dipper) retract (close) |
| 5B5 | Arm (dipper) extend (open) |
| 5B2 | RH swing |
| 5A2 | LH swing |
| 5A4 | Option circuit |
| 5B4 | Option circuit |
| 5A1 | RH forward travel |
| 5B1 | RH reverse travel |
| PR – PL | Pump inlet, P1-P2 |
| P0 – OPT | Supply to option spool |
| R1 – R3 | Plugged |
| R2 | |
| FL – FR | Neutral de-stroke signal |
| PX1 | Upper pressure switch |
| PX2 | Travel pressure switch |
| PS1 | |
| DR1 – DR2 | Leak-off return |
| PS2 | Boom/Arm (dipper) anti-drift pilot pressure |
| R5 | By-pass return |
| R4 | To cushion valve heat circuit |
| Pi1 | Swing priority |
| Pi2 | Cut valve |
| Pi3 | Arm (dipper) parallel circuit |

https://truckmanualshub.com/



# CONTROL VALVE PORTS

## CX130 / CX160

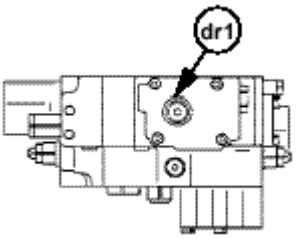


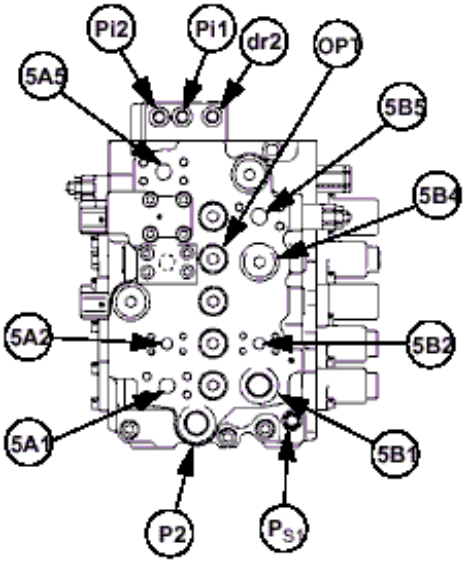


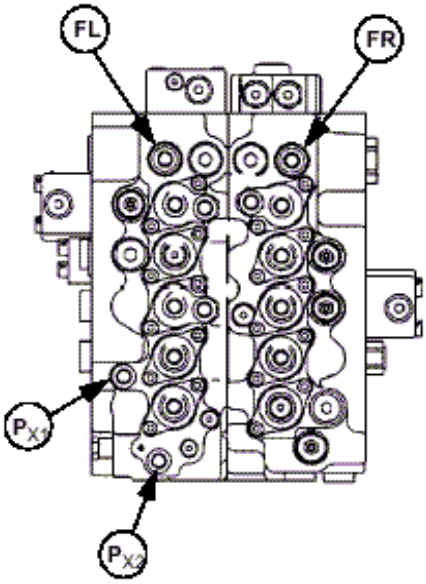


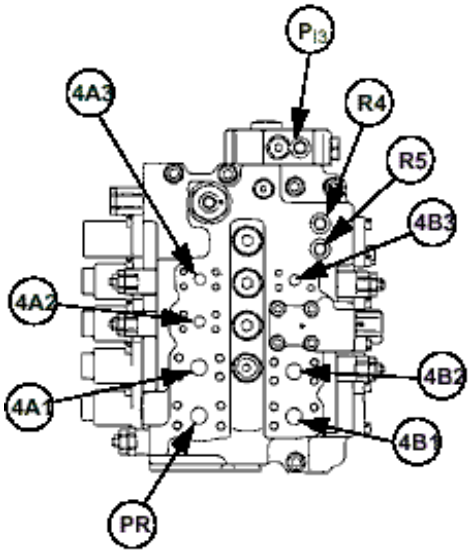


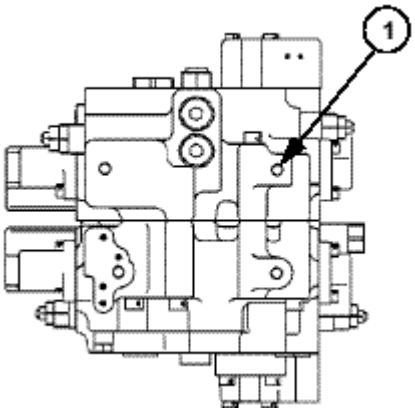

https://truckmanualshub.com/



# CONTROL VALVE RELIEF VALVES

## CX130 / CX160

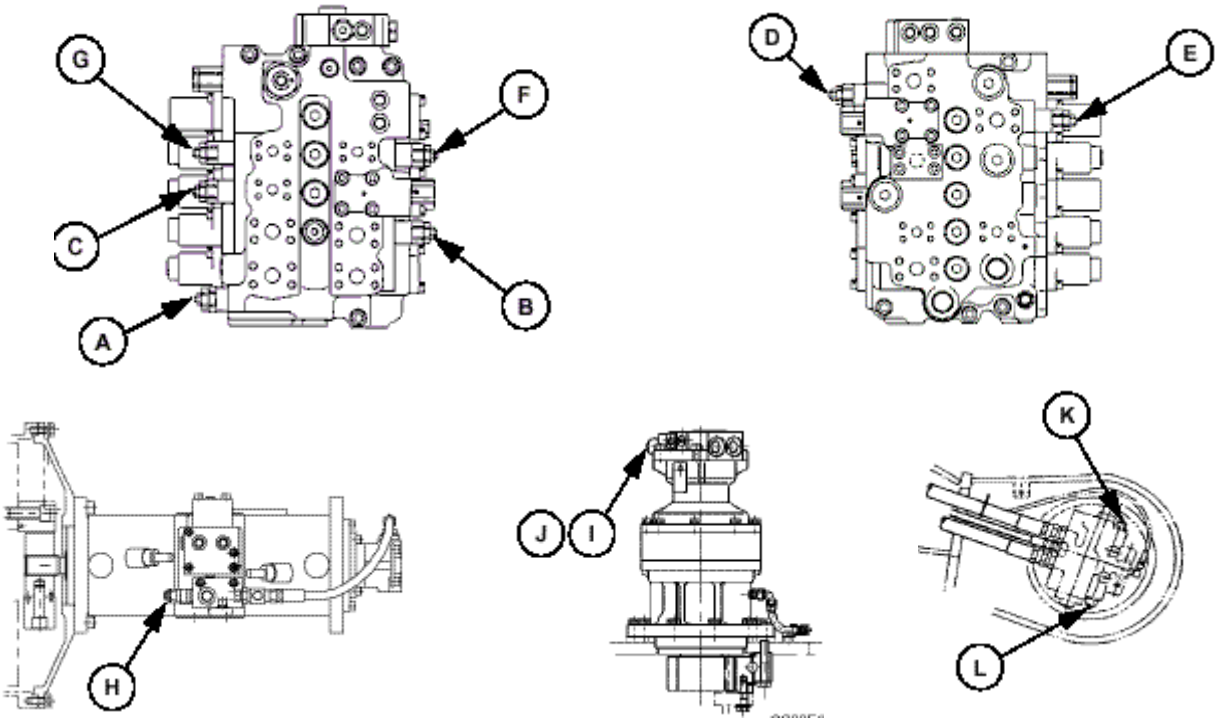


| Item | Description | Pressure change with one turn or one shim |
|---|---|---|
| A | Main relief (standard pressure) | |
| | Main relief (boost pressure) | |
| B | Boom raise secondary relief | 2840 psi |
| C | Boom lower secondary relief | 2840 psi |
| D | Arm (dipper) extend secondary relief | 2840 psi |
| E | Arm retract secondary relief | 2840 psi |
| F | Bucket open secondary relief | 2840 psi |
| G | Bucket close secondary relief | 2850 psi |
| H | Pilot circuit relief | 225 psi |
| I | RH swing secondary relief | 70 psi |
| J | LH swing secondary relief | 70 psi |
| K | Reverse travel secondary relief | 145 psi |
| L | Forward travel secondary relief | 145 psi |

https://truckmanualshub.com/



# PUMP PORTS

## CX130 / CX160

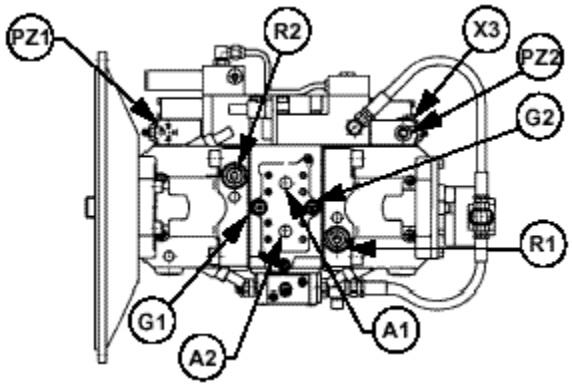


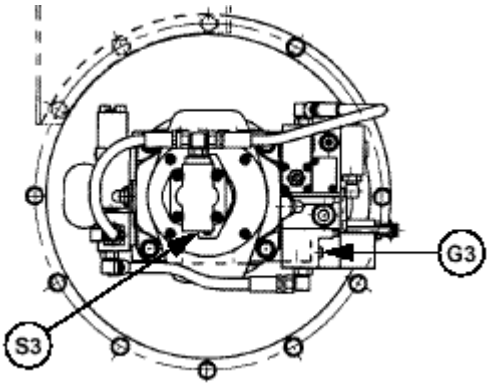


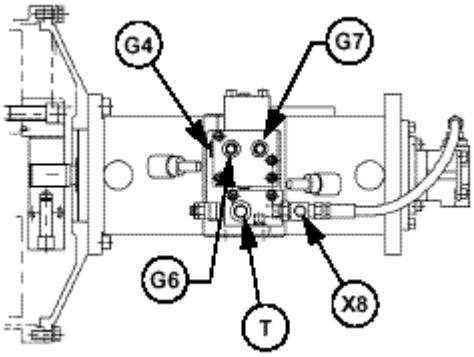


| Port | Description |
|---|---|
| A1 - A2 | Pump output (P1-P2) |
| X8 | Pilot pump output |
| S | Main pump intake |
| S3 | Pilot pump intake |
| T | Return from pilot circuit relief valve |
| PZ1 - PZ2 | Neutral de-stoke signal (P1-P2) |
| X3 | Neutral de-stroke signal pressure transducer (arm pump) |
| G1 - G2 | Pressure P1-P2 (plugged) |
| G3 | Proportional valve pressure (plugged) |
| G4 - G5 | Pump pressure P1-P2 (plugged) |
| G6 - G7 | Pressure transducers P1-P2 |
| R1 - R2 | Filling and bleeding |

https://truckmanualshub.com/



# CONTROL VALVE PORTS

## CX210 / CX240

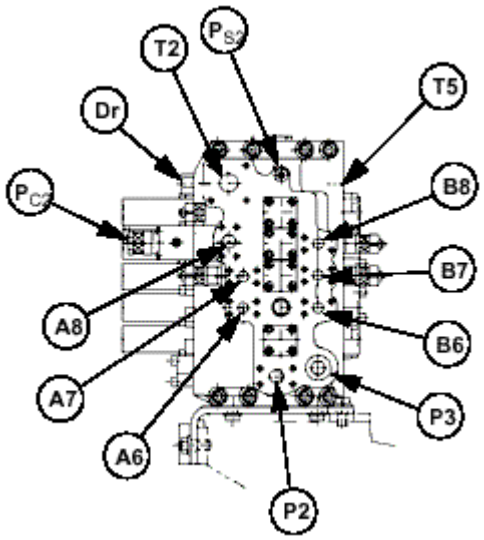


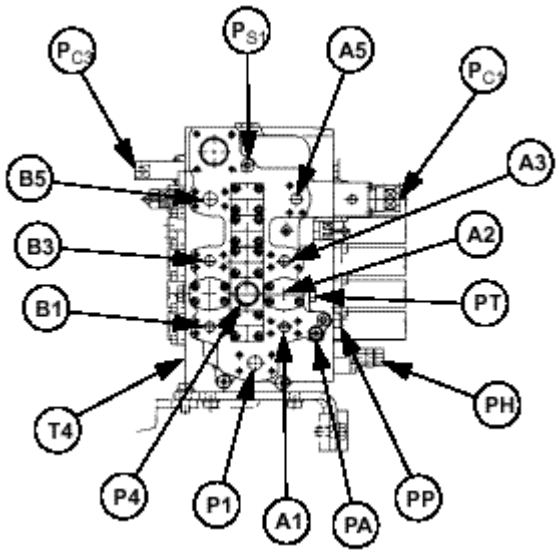


| Port | Description | Port | Description |
|---|---|---|---|
| B7 | Bucket open | P3-P4 | Option circuit |
| A7 | Bucket close | T1-T2 | Return |
| B8 | Boom lower | Ps1-Ps2 | Neutral de-stroke |
| A8 | Boom raise | PT | Travel pressure switch |
| A6 | LH forward travel | pH | Power boost pilot signal |
| B6 | LH reverse travel | PA | Upper pressure switch |
| A5 | Arm (dipper) extend | Dr | Leak-off return |
| B5 | Arm (dipper) retract | Pc1 | Arm anti-drift |
| B3 | RH swing | Pc2 | Boom anti-drift |
| A3 | LH swing | T4 | By-pass return |
| A2 | Option circuit | T5 | To cushion heat circuit |
| B2 | Option circuit | T3 | Swing return |
| A1 | LH forward travel | Pc3 | Swing priority |
| B1 | LH reverse travel | Pbu | Swing priority cancel |
| P1-P2 | Pump pressure P1-P2 | | |

https://truckmanualshub.com/



# CONTROL VALVE RELIEF VALVES

## CX210 / CX240

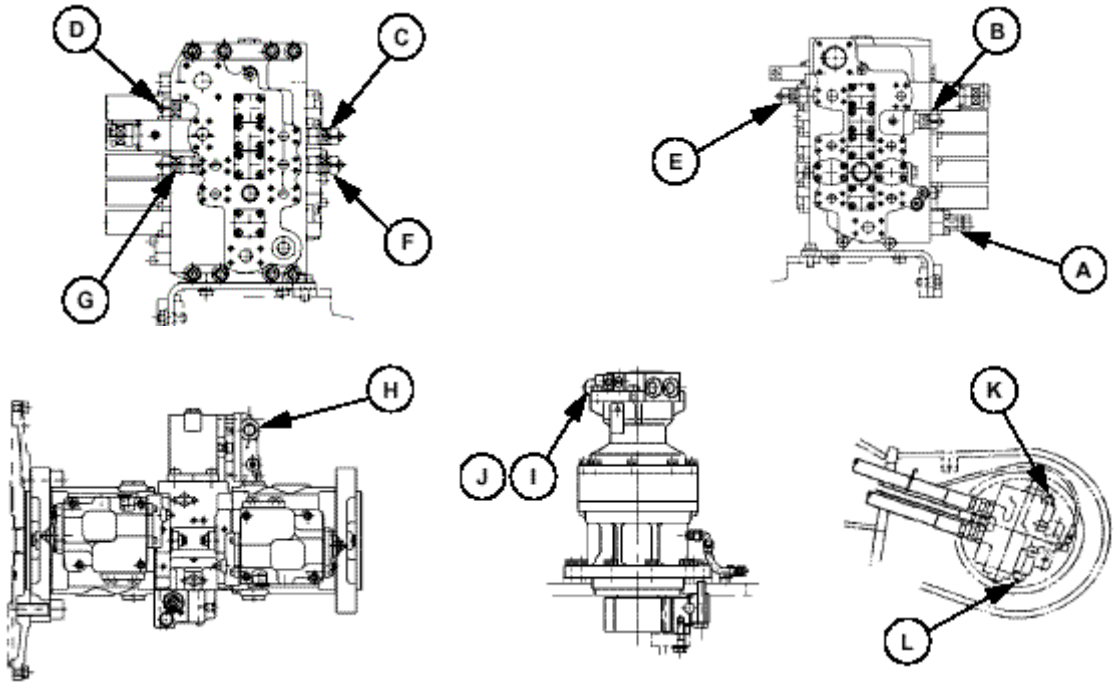


| | | Pressure change with one turn or one shim | |
|---|---|---|---|
| **Item** | **Description** | **CX210** | **CX240** |
| A | Main relief (standard pressure) | 3090 psi | |
| | Main relief (boost pressure) | 4120 psi | |
| B | Boom raise secondary relief | 3075 psi | |
| C | Boom lower secondary relief | 3075 psi | |
| D | Arm (dipper) extend secondary relief | 3075 psi | |
| E | Arm retract secondary relief | 3075 psi | |
| F | Bucket open secondary relief | 3075 psi | |
| G | Bucket close secondary relief | 3075 psi | |
| H | Pilot circuit relief | 290 psi | |
| I | RH swing secondary | 70 psi | 1680 psi |
| J | LH swing secondary | 70 psi | 1680 psi |
| K | Reverse travel secondary relief | 870 psi | |
| L | Forward travel secondary relief | 870 psi | |

https://truckmanualshub.com/



# PUMP PORTS

## CX210 / CX240

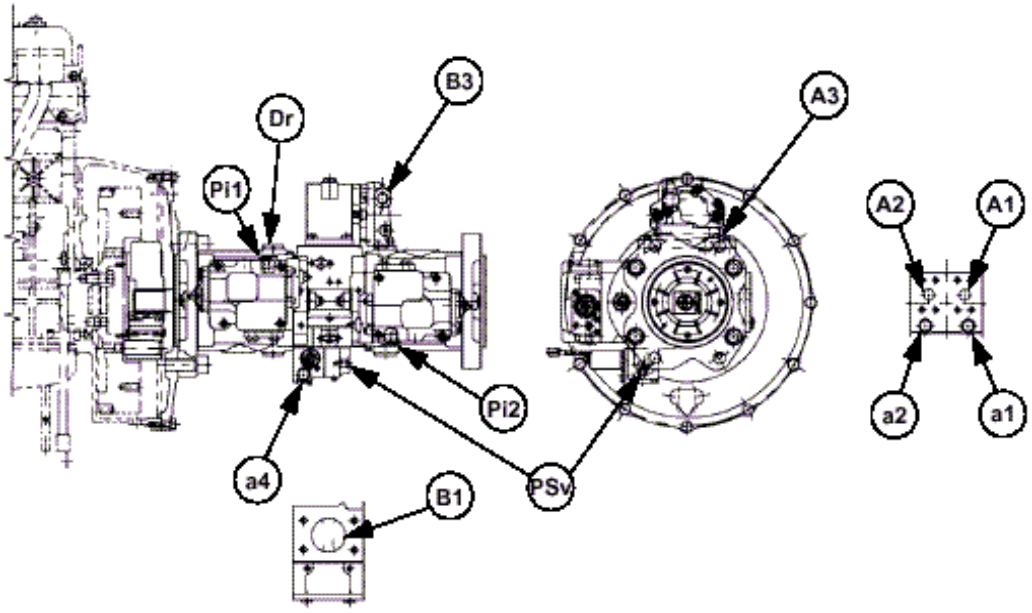


| Port | Description |
|---|---|
| A1-A2 | Pump output (P1-P2) |
| B1 | Main pump intake |
| Dr | Fill and bleed port |
| PSv | Accumulator pressure |
| Pi1-Pi2 | Neutral de-stroke signal |
| a1-a2 | Pump pressure transducers (P1-P2) |
| a3-a4 | Proportional valve pressure port |
| A3 | Pilot pump outlet |
| B3 | Pilot pump intake |

https://truckmanualshub.com/



# SIX SOLENOID VALVE

## All Models

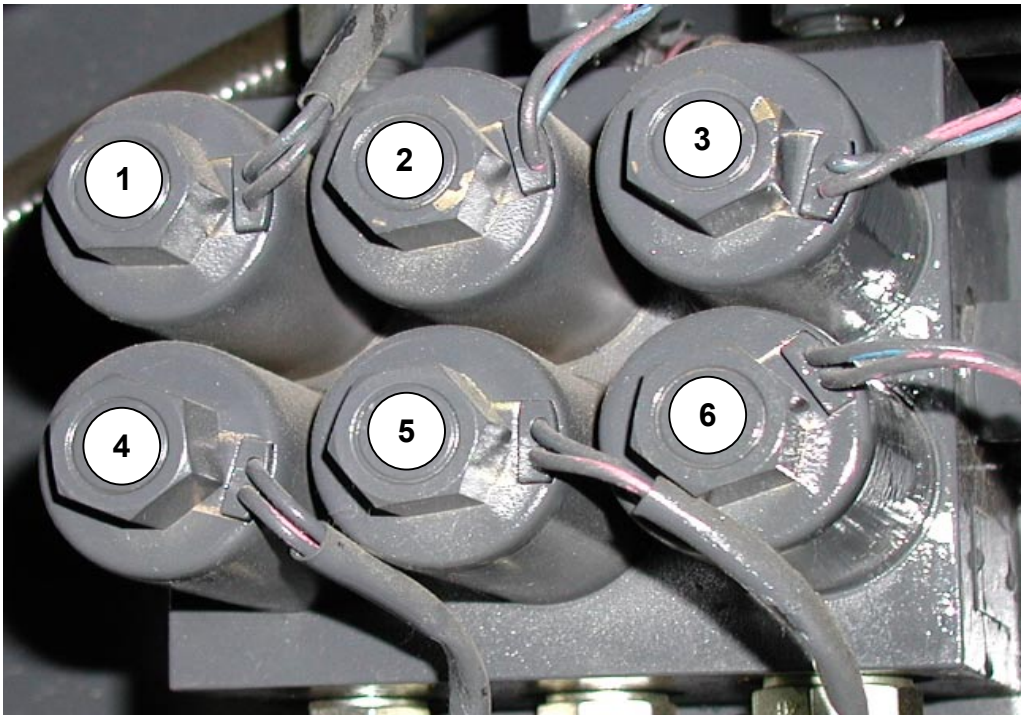


1. Swing shutoff solenoid, green wire band
2. Power boost solenoid, yellow wire band
3. Travel speed solenoid, red wire band
4. Cushion (off) solenoid, light green wire band
5. Swing brake solenoid, pink wire band
6. Pilot pressure solenoid, blue wire band

https://truckmanualshub.com/

CASE

## Construction Equipment Service Training

# CX SERIES EXCAVATOR

## Section 3 -- Controller

(2001)

Training Pays

https://truckmanualshub.com/

**CASE CORPORATION**
**700 STATE STREET**
**RACINE, WI 53404 U.S.A.**

**CASE CANADA CORPORATION**
**3350 SOUTH SERVICE ROAD**
**BURLINGTON, ON L7N 3M6 CANADA**

**© 2001 Case Corporation**
**All Rights Reserved**

Printed in U.S.A.

https://truckmanualshub.com/



# Table of Contents

## Section 3 - CX Series Controller

CONTROLLER CALIBRATION.....3

CURRENT CONDITION DISPLAY .....11

DIAGNOSTIC CONDITION DISPLAY.....30

MACHINE HISTORY DISPLAY .....36

OPTIONAL RESET DISPLAY.....48

https://truckmanualshub.com/



# CONTROLLER CALIBRATION and DIAGNOSTIC SYSTEM

## SWITCHES

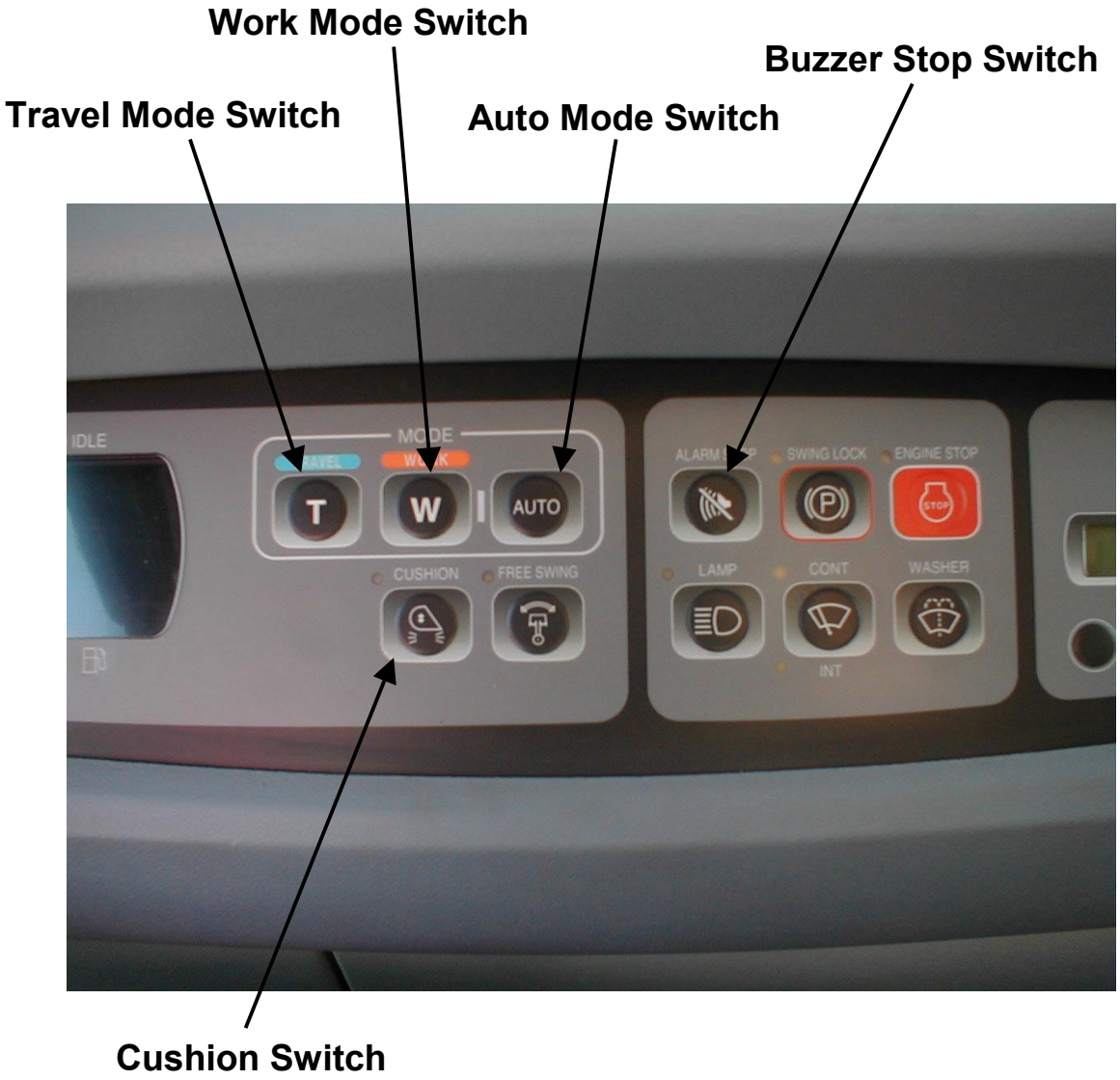

https://truckmanualshub.com/



# CONTROLLER CALIBRATION PROCEDURE

## CONTROLLER RESET

**MACHINE: SH0200 –3**
**TERRITORY: 2  LANGUAGE: 1**

| | |
|---|---|
| **CONT.  P/N** | **KHR XXXX** |

Machine confirmation

In the normal display mode, if the Auto mode switch is pressed for 10 seconds the machine selection screen will be displayed.

Display will return to normal mode if the Auto mode switch is pushed again.

Confirmation of the machine model, territory, language and computer part number can also be done at this screen.

https://truckmanualshub.com/



# CONTROLLER CALIBRATION PROCEDURE

## CONTROLLER RESET

Resetting/clearing computer data.

Pressing the Auto mode switch for 10 seconds will clear all data in this screen. All data will change to “?” and the buzzer will sound.

**MACHINE: SH ? –3**
**TERRITORY: ?  LANGUAGE: ?**

| | |
|---|---|
| **CONT. P/N** | **KHR XXXX** |

Turn off the key switch to finish clearing data.

https://truckmanualshub.com/



# CONTROLLER CALIBRATION PROCEDURE

**1.** Turn key switch “ON”

“?” is shown at MACHINE, TERRITORY and LANGUAGE areas.

“?” shown with dark background means that item is selected and ready to select.

**–3 means CX series**

**MACHINE: SH ? –3**
**TERRITORY: ? LANGUAGE: ?**

| | |
|---|---|
| **CONT. P/N** | **KHR XXXX** |

**2.** The machine model code will change in the dark background area every time the Travel mode switch is pressed.

**MACHINE: SH0200 –3**
**TERRITORY: ? LANGUAGE: ?**

| | |
|---|---|
| **CONT. P/N** | **KHR XXXX** |

Select the correct model code that corresponds with the machine.

| Machine Code | Case NA |
|---|---|
| SH0120 | CX130 |
| SH0150 | CX160 |
| SH0200 | CX210 |
| SH0220 | CX240 |
| SH0250 | Not Used |
| SH0300 | CX330 |
| SH0400 | CX450 |

https://truckmanualshub.com/



# CONTROLLER CALIBRATION PROCEDURE

**3.** After selecting the model code, press the Work mode switch to select the Territory field.

**MACHINE: SH0200 –3**
**TERRITORY: ? LANGUAGE: ?**

| | |
|---|---|
| **CONT. P/N** | **KHR XXXX** |

"?" shown with a dark background means that item is selected.

**4.** The Territory will change everytime the Travel mode switch is pressed.

Press the Travel mode switch until the number 2 appears in the Territory field for Case North America.

**MACHINE: SH0200 –3**
**TERRITORY: 2 LANGUAGE: ?**

| | |
|---|---|
| **CONT. P/N** | **KHR XXXX** |

https://truckmanualshub.com/



# CONTROLLER CALIBRATION PROCEDURE

**5.** Press the Work mode switch to select the language field.

**MACHINE: SH0200 –3**
**TERRITORY: 2 LANGUAGE: ?**

| | |
|---|---|
| **CONT. P/N** | **KHR XXXX** |

"?" shown with dark background.

**6.** Press the Travel mode switch to change the language. See language selection chart.

| Language Code | Language | Language Code | Language |
|---|---|---|---|
| 0 | Japanese | 8 | Portuguese |
| **1** | **English** | 9 | Dutch |
| 2 | Thai | 10 | Danish |
| 3 | Chinese | 11 | Norwegian |
| 4 | German | 12 | Swedish |
| 5 | French | 13 | Finnish |
| 6 | Italian | 14 | Icons |
| 7 | Spanish | 15 | |

https://truckmanualshub.com/



# CONTROLLER CALIBRATION PROCEDURE

**MACHINE: SH0200 –3**
**TERRITORY: 2 LANGUAGE: 1**

| | |
|---|---|
| **CONT. P/N** | **KHR XXXX** |

**CX130 / CX160**

**7.** After inputting all machine information, start the engine and push the Cushion switch. The engine will go to full RPM then slowly lower to idle.

**Note:** Coolant temperature must be above 122°F.

The process is finished when the engine RPM can be controlled by the throttle control again.

**8.** Press the Auto mode switch to finish and return to normal display.

https://truckmanualshub.com/



# CONTROLLER CALIBRATION PROCEDURE

**CASE**

**CX210 / CX240**

**9.** After inputting all machine information push the Auto mode switch. The CASE logo will be displayed then automatically scroll to the normal display.

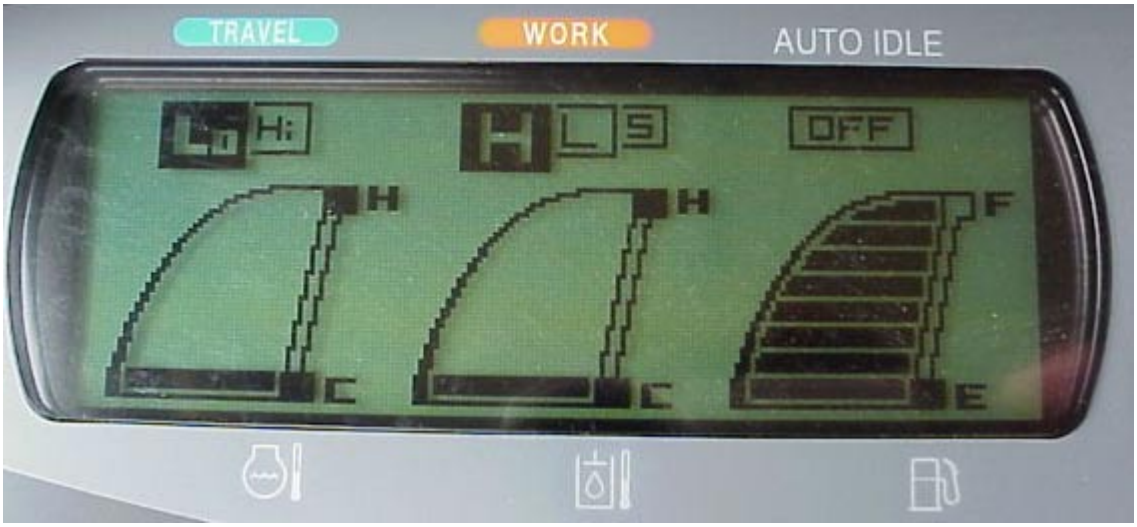

https://truckmanualshub.com/



# CONTROLLER CALIBRATION PROCEDURE

**MACHINE: SH0200 –3**
**TERRITORY: 2 LANGUAGE: 1**

| | |
|---|---|
| **CONT. P/N** | **KHR XXXX** |

To change the language only, display the machine selection screen by pressing the Auto mode switch for 10 seconds.

The language is changed by pressing the Travel mode switch.

Press the Work mode switch to set the language the buzzer will sound at this time. Turn the key switch off to complete the process.

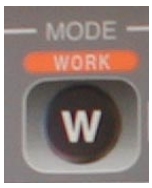

https://truckmanualshub.com/



# DIAGNOSTIC MODE FLOW CHART

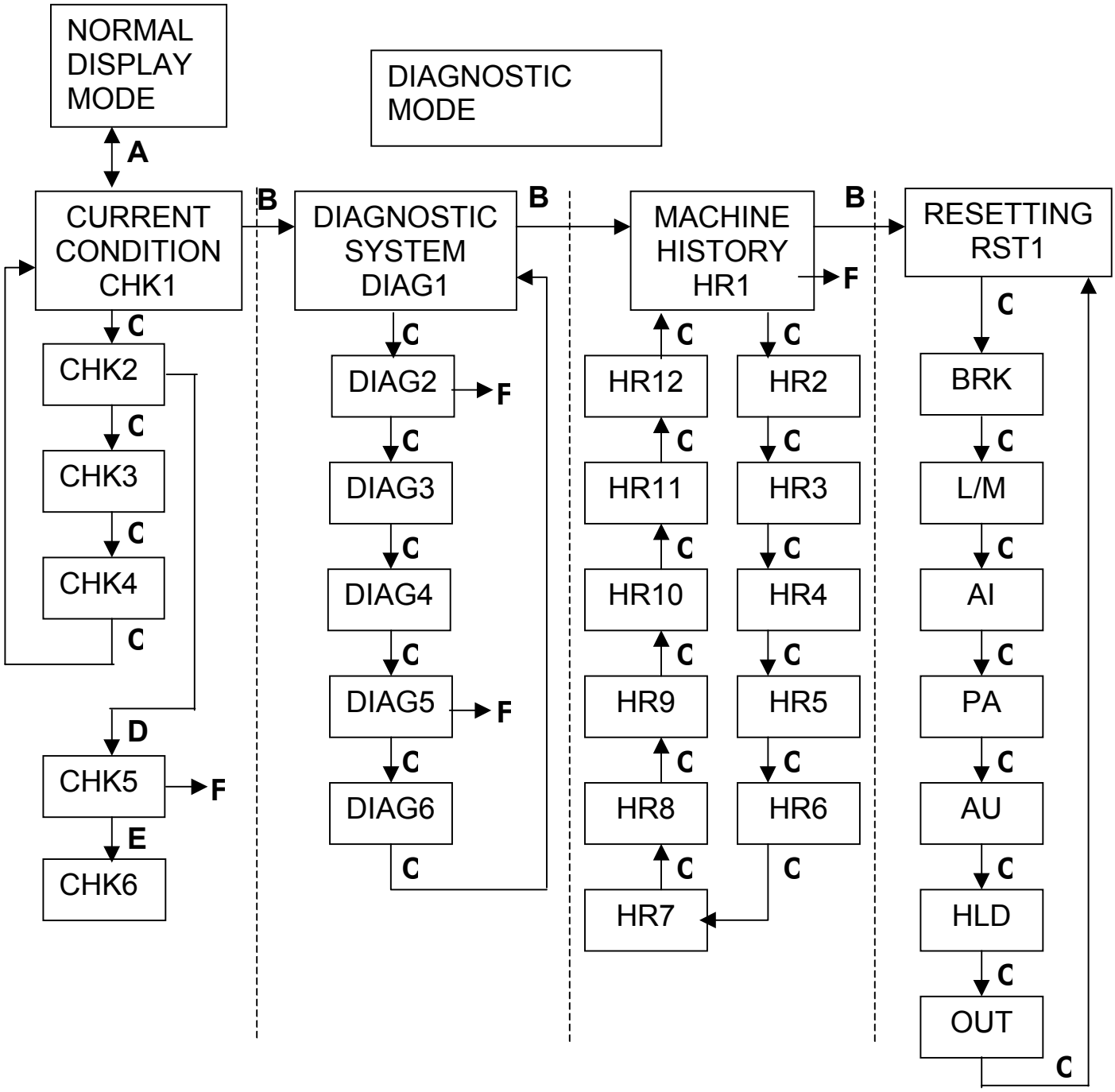

https://truckmanualshub.com/



# DIAGNOSTIC MODE

### Current Condition

Displays the machine's current condition.

### Diagnostic System (CHK1-CHK6) (DIAG1-DIAG6)

Displays recorded fault codes of current and past conditions for the engine and machine. Records computer hours of detection of fault.

### Machine History (H1-HR12)

Displays recorded computer hours of each machine operation.

### Resetting (RST1)

Displays the machine's current settings and allows for the changing of machine setup.

**A** To scroll between the Normal display and Diagnostic display screens press the Travel and Work mode switch simultaneously for 3 seconds.

**B** To scroll between the CHK, DIAG, HR and RST1 press the Auto mode switch.

**C** To scroll through the CHK, DIAG, HR and RST1 screens press the Buzzer stop switch.

**D** While in the CHK2 screen push and hold the Travel mode switch you will scroll to the CHK5 screen. Past TR1, TR2 and TR3 faults will be displayed. When fault codes in the diagnostic mode (DIAG) is cleared this information will also be cleared. Do not hold the travel switch longer than 10 seconds.

**E** Self-Check of the protected transistor circuits can be checked automatically. While holding the One-Touch idle button turn the key switch on then release the idle button. The controller will energize each of the TR circuits automatically. If a over-current is detected the display will indicate a "**ELECTRICAL PROBLEM**" and sound the alarm. If no over-current is detected only the alarm will sound. Return to CHK2 to see which circuits have been recorded. CHK6 will not appear on the display.

**F** To erase data in DIAG2 scroll to DIAG2. To erase data in DIAG5 scroll to DIAG5. To erase data in HR1-HR12 scroll to HR1. At each of these fields, press the Work mode switch for 10 seconds (buzzer will sound) turn OFF key.

https://truckmanualshub.com/



# CURRENT CONDITION CHK1

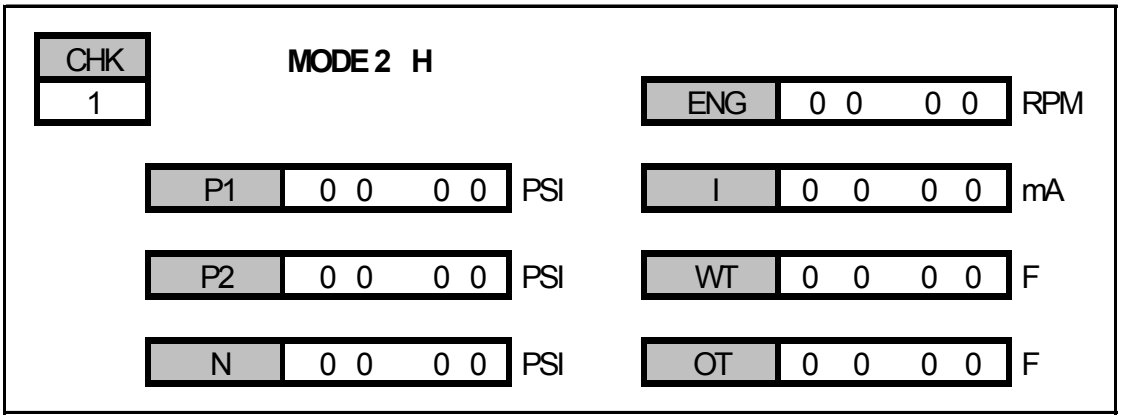


- **Mode:** Selected Travel and Work mode.
- **P1:** Main Pump Pressure (P1)
- **P2:** Main Pump Pressure (P2)
- **N:** Negative Control Pressure
- **ENG:** Engine RPM
- **I:** Current for Pump Proportional Solenoid
- **WT:** Water Temperature
- **OT:** Hydraulic Oil Temperature

Use this screen to check main relief and power boost settings. Verify negative control pressure from arm/swing pump, engine RPM, controller signal to the proportional solenoid on the pump and hydraulic oil and coolant temperature.

Use the Buzzer stop switch to scroll through CHK1 – CHK4.

https://truckmanualshub.com/



# CURRENT CONDITION CHK2

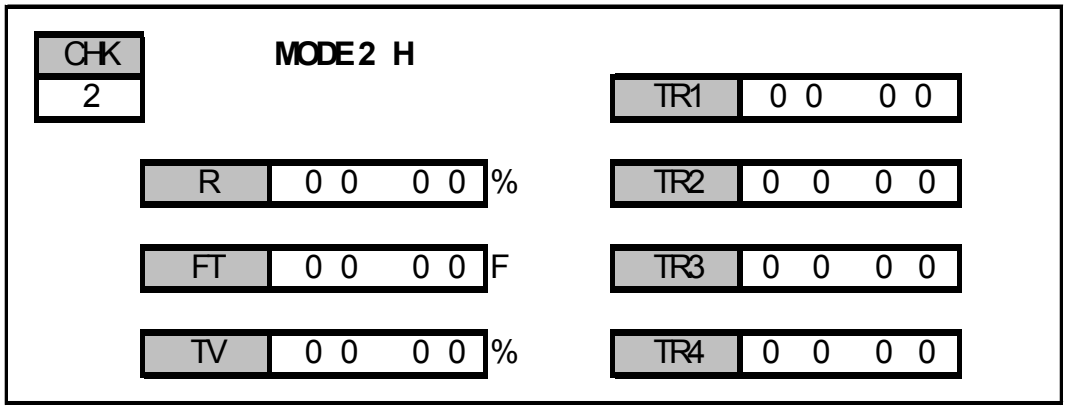


- **R:** Engine Load Ratio **(CX210/CX240)**
- **FT:** Fuel Temperature **(CX210/CX240)**
- **TV:** Throttle Volume
- **TR1:** Transistor Output
- **TR2:** Transistor Output
- **TR3:** Transistor Output
- **TR4:** Not Used

**Engine Load Ratio**

**((Q-Qn) / (Qf-Qn))**

**Fuel Flow:**

**Q – Current**

**Qn – No Load**

**Qf – Maximum Flow**

**R: CX210/CX240** Information sent from the engine controller to the main controller. The main controller uses this information for recording purposes. The controller also uses this information plus pump pressure to determine when to activate Auto Power Boost.

**FT: CX210/CX240** Information sent from the engine controller to the main controller. The main controller uses this information for recording monitoring purposes.

**TV:** Use this field to verify that the controller is receiving the signal from the throttle control knob.

**TR1, TR2, TR3:** These fields can be used to verify that the controller is sending the signal to turn these various circuits on and off as they are selected by the operator.

https://truckmanualshub.com/



# CURRENT CONDITION CHK2

**Continued**

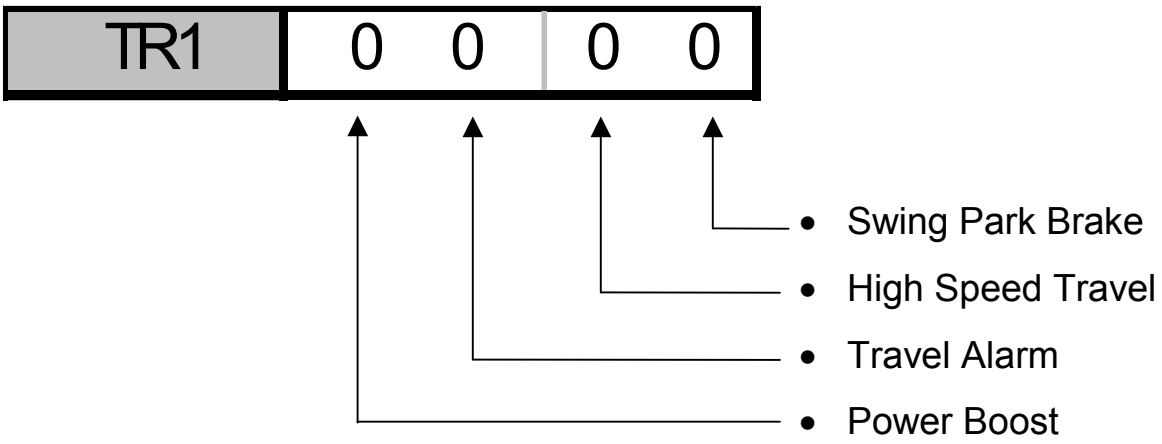


This screen can be used to verify that the controller is sending a signal to the circuits listed.

**TRANSISTOR OUTPUT (0=OFF, 1=ON)**

**Start the engine and engage lever lock (pilot pressure).**

- **Swing Park Brake** - Move the swing hand control just enough to close the swing pressure switch. Should see the 1 change to 0. Return the hand control to neutral. The 0 should change to 1 after 5 seconds. Slowly raise the boom until screen indicates swing brake is turned off. Return boom control to neutral. Swing brake should be turned on 5 seconds later.

- **High Speed Travel & Travel Alarm** – Press the travel switch to select high-speed travel. The high speed travel field should change to a 1 and to 0 when the switch is pressed again. Move a travel foot control just enough to close the travel pressure switch. Should see the alarm field change to a 1 and change back to 0 when the foot control is released.

- **Power Boost** – **CX210/CX240** -Move one of the attachments to end of stroke. As the pressure increases the power boost field should change to a 1 as the Auto Power Boost is engaged. Power boost should be on for 8 seconds. Select L mode with the Work mode switch. Power boost should be turned on until another work mode is selected.

- **Power Boost** – **CX130/CX160** – Press the one-touch switch on the front of the right hand control. The power boost field should change to a 1 for 8 seconds. Select L mode with the Work mode switch. Power boost should be turned on until another work mode is selected.

https://truckmanualshub.com/



# CURRENT CONDITION CHK2

**Continued**

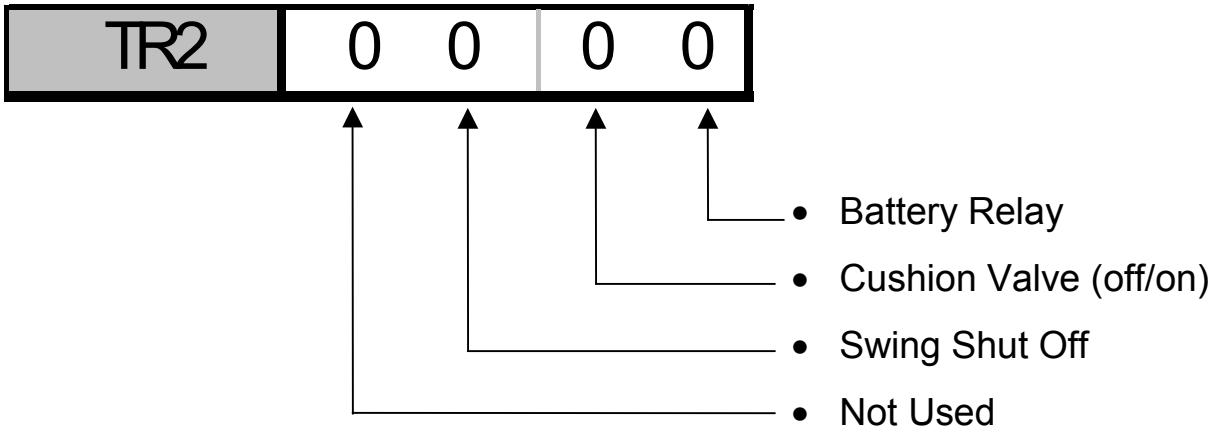


**TRANSISTOR OUTPUT (0=OFF, 1=ON)**

- **Battery Relay** – Should be a 1 here anytime the key switch is turned on. Can not observe off signal.
- **Cushion Valve (off/on)** – While the engine is running push the cushion switch. A 1 should appear in the cushion valve field. When the cushion switch is pressed again the 1 should be changed to a 0.
- **Swing shut off** – With the key switch on push the swing lock switch the swing shut off field should change to a 1. When the swing lock is pushed again the field should change to a 0.

https://truckmanualshub.com/



# CURRENT CONDITION CHK2

**Continued**

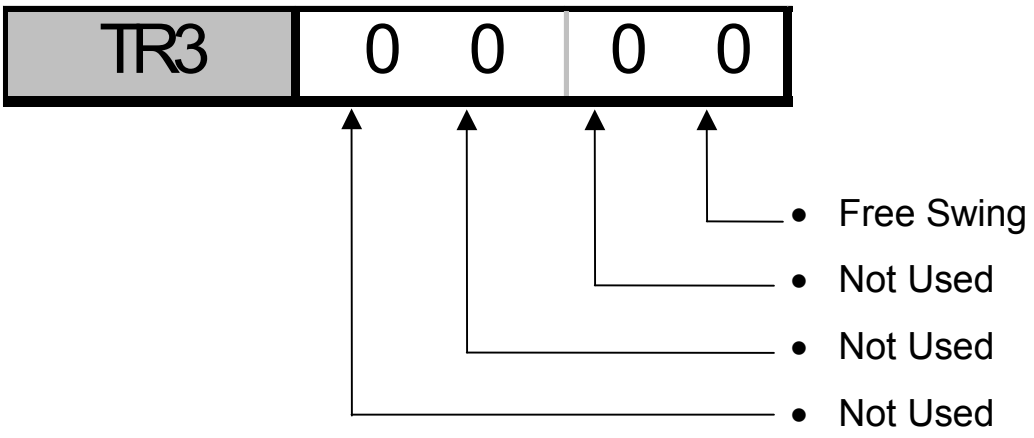


**TRANSISTOR OUTPUT (0=OFF, 1=ON)**

- **Free Swing** – With the engine running press the free swing switch the free swing field should change to a 1. When the switch is pressed again the 1 should be changed back to 0.

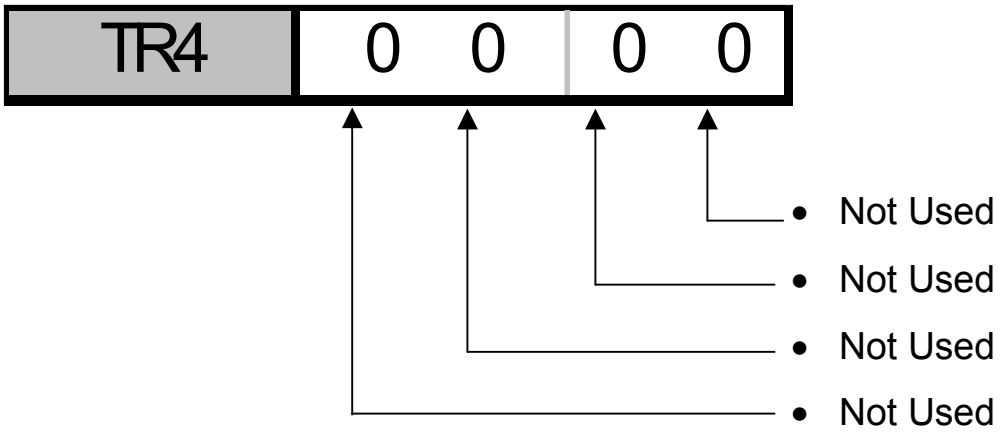

https://truckmanualshub.com/



# CURRENT CONDITION CHK3

| | | | | | | | | |
|---|---|---|---|---|---|---|---|---|
| CHK | | MODE 2 | H | | | | | |
| 3 | | | | | SW4 | 0 0 | 0 0 | |
| | SW1 | 0 0 | 0 0 | | SW5 | 0 0 | 0 0 | |
| | SW2 | 0 0 | 0 0 | | SW6 | 0 0 | 0 0 | |
| | SW3 | 0 0 | 0 0 | | SW7 | 0 0 | 0 0 | |

This screen is used to verify that the controller is receiving the input from the listed switches and signals.

- **SW1:** Upper pressure switch, travel pressure switch, swing pressure switch and hammer pressure switch.
- **SW2:** Engine oil pressure switch and coolant level switch.
- **SW3:** Battery charge.
- **SW4:** Cushion switch (off/on), free swing switch and one touch idle switch.
- **SW5:** Swing lock switch, emergency stop switch, work light and wiper switch.
- **SW6:** Window washer switch, travel alarm and hammer mode switch.
- **SW7:** Key switch.

https://truckmanualshub.com/



# CURRENT CONDITION CHK3

## Continued

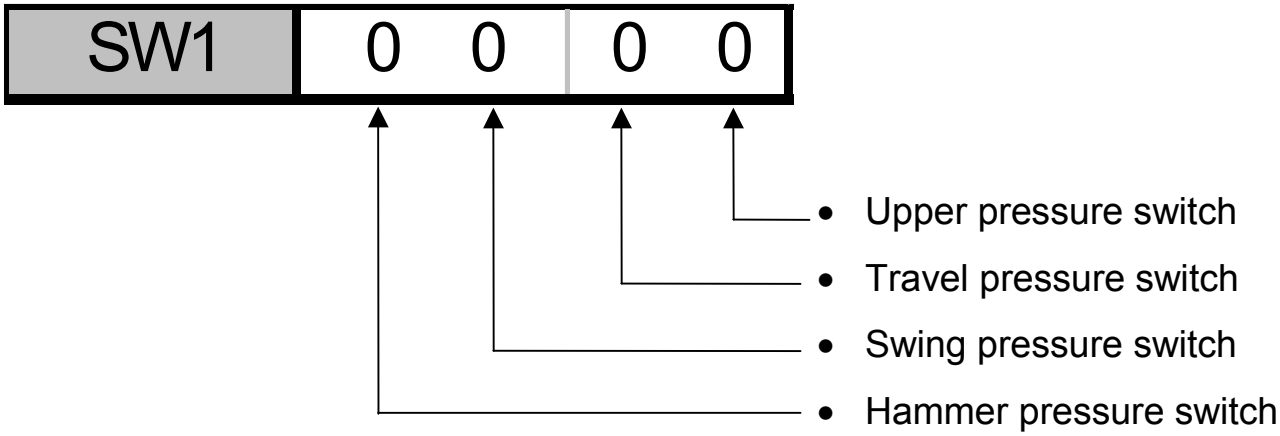


**SWITCH INPUT (0=OFF, 1=ON)**

**Start the engine and engage the lever lock (pilot pressure).**

- Engage any upper function for the upper pressure switch.
- Engage the swing for the swing and upper pressure switch.
- Engage the travel function for the travel pressure switch.
- Engage the hammer circuit, if equipped, for the hammer pressure switch.

**NOTE:** The pressure switches should come on before the hydraulic circuit is active.

https://truckmanualshub.com/



# CURRENT CONDITION CHK3

## Continued

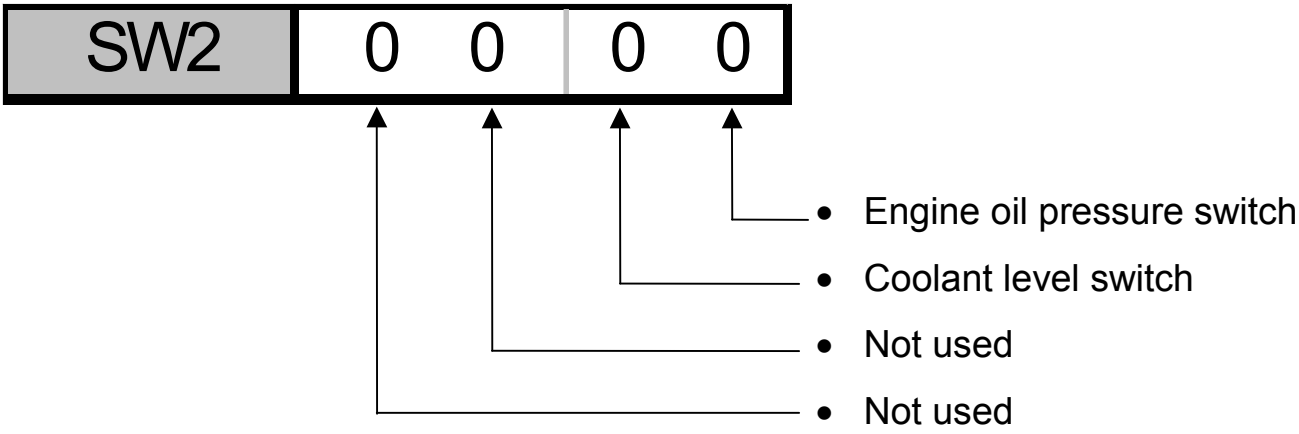


**SWITCH INPUT (0=OFF, 1=ON)**

- Engine oil pressure switch is “ON” with low pressure or when engine is off. **CX130/CX160 ONLY.**
- Coolant level switch is “ON” when coolant level is low. **CX130/CX160 ONLY.**

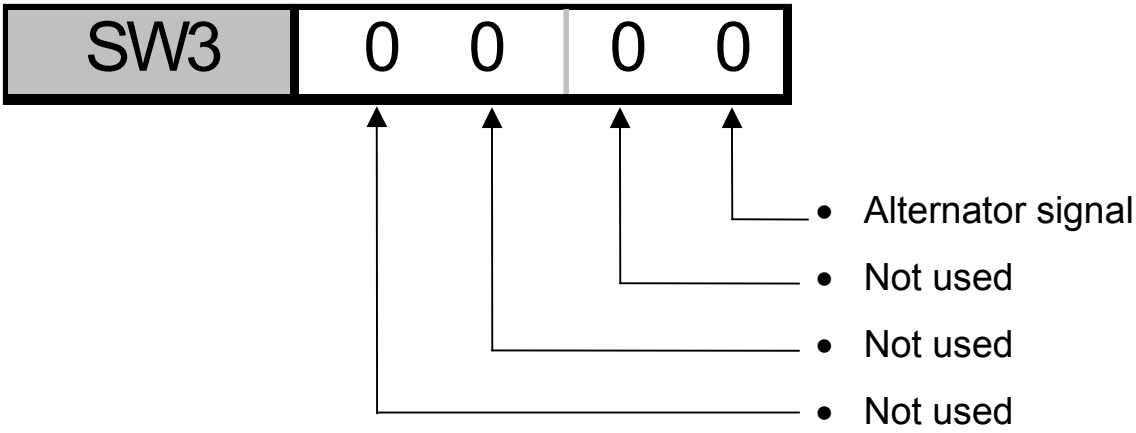


- Observe with engine running. Should be “ON”.

https://truckmanualshub.com/



# CURRENT CONDITION CHK3

## Continued

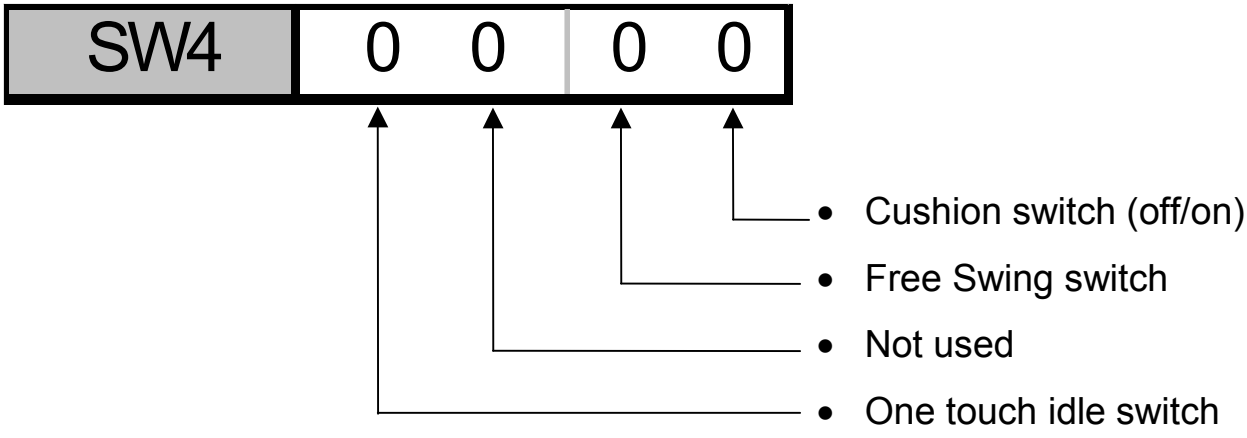


**SWITCH INPUT (0=OFF, 1=ON)**

**Key Switch "ON"**

- These are momentary switches. They are "ON" only while they are being pressed.

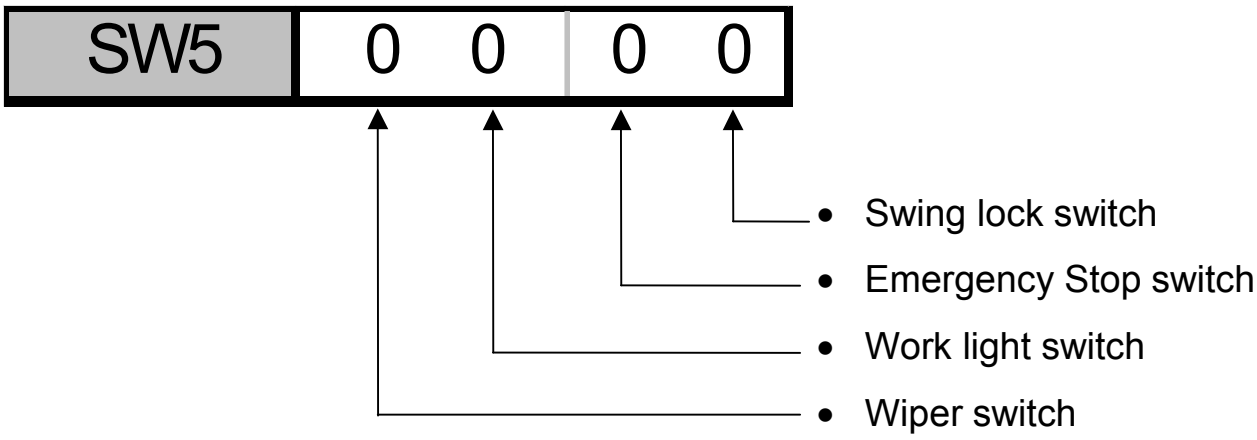


- These are momentary switches. They are "ON" only while they are being pressed.

https://truckmanualshub.com/



# CURRENT CONDITION CHK3

## Continued

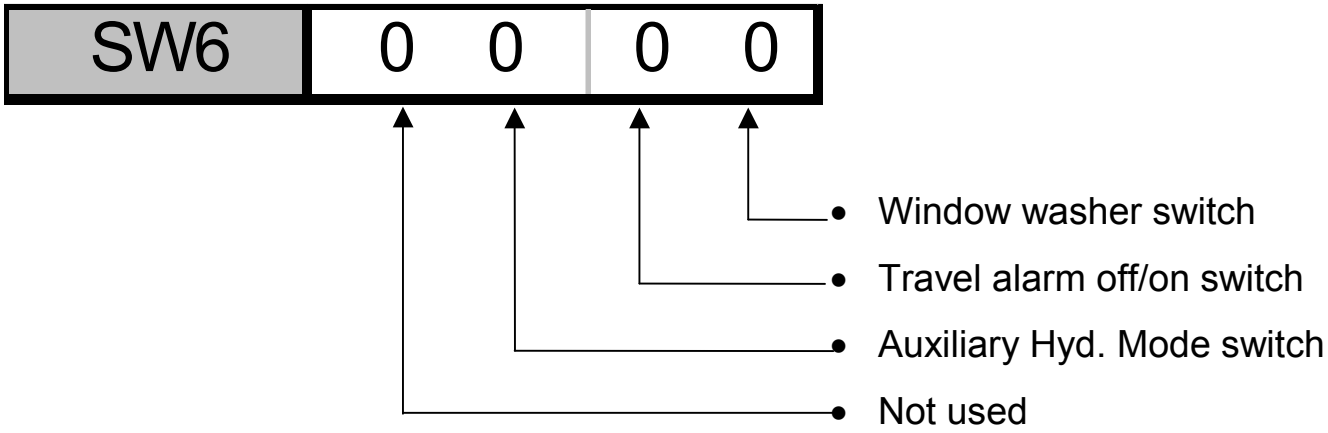


**SWITCH INPUT (0=OFF, 1=ON)**

**Key Switch "ON"**

- Washer switch is a momentary switch. It is "ON" only while the switch is being pressed.
- The travel alarm switch is a 2-position rocker switch and is "ON" in one position and "OFF" in the other.
- The auxiliary hydraulic mode switch is a 3-position rocker switch.

https://truckmanualshub.com/



# CURRENT CONDITION CHK3

## Continued

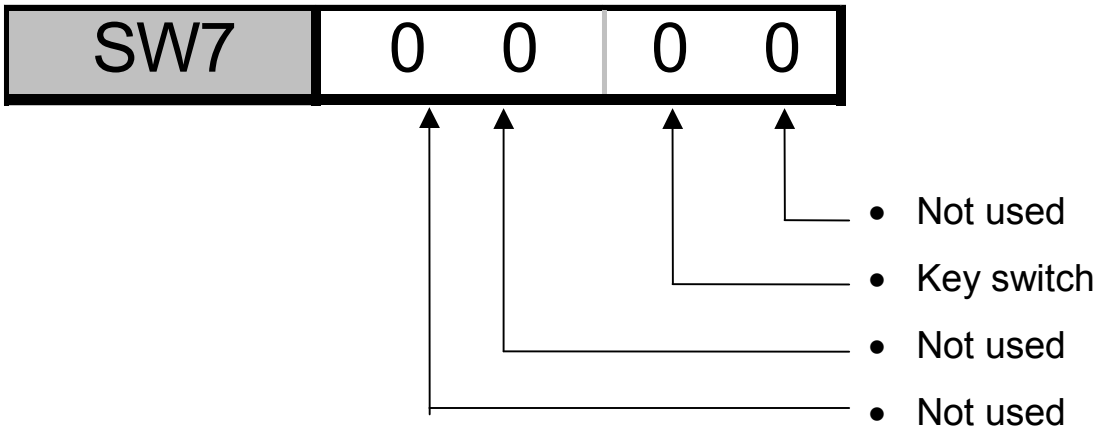


**SWITCH INPUT (0=OFF, 1=ON)**

**Key Switch “ON”**

- “ON” when the key switch is.

https://truckmanualshub.com/



# CURRENT CONDITION CHK4

| | | | | | | | | | |
|---|---|---|---|---|---|---|---|---|---|
| CHK | | MODE 2 | H | | | | | | |
| 4 | | | | | | TG | 0 0 | 0 0 | RPM |
| | FS | 0 0 | 0 0 | OHMS | | BP | 0 0 | 0 0 | MPa |
| | AC | 0 0 | 0 0 | | | SP1 | 0 0 | 0 0 | |
| | TR5 | 0 0 | 0 0 | | | SP2 | 0 0 | 0 0 | |

- **FS:** Fuel Sensor Resistance
- **AC:** Coolant Temperature for A/C Control
- **TR5:** Not Used
- **TG:** Target Engine RPM
- **BP:** Not Used
- **SP1:** Not Used
- **SP2:** Not Used

https://truckmanualshub.com/



# CURRENT CONDITION CHK4

## Continued

| AC | 0 0 | 0 0 |
|---|---|---|

- 1: Water temperature: <86°F
- 2: Water temperature is between: 86°F & 113°F
- 3: Water temperature is between: 113°F & 149°F
- 4: Water temperature is between: 149°F & 176°F

Press the Buzzer stop switch to return to CHK1.

https://truckmanualshub.com/



# PAST OVER LOAD CONDITION CHK5

| | | | | | | | | |
|---|---|---|---|---|---|---|---|---|
| CHK | | MODE 2 | H | | | | | |
| 5 | | | | | TR1 | 0 0 | 0 0 | |
| | R | 0 0 | 0 0 | % | TR2 | 0 0 | 0 0 | |
| | FT | 0 0 | 0 0 | F | TR3 | 0 0 | 0 0 | |
| | TV | 0 0 | 0 0 | % | TR4 | 0 0 | 0 0 | |

- **R:** Engine Load Ratio (CX210/CX240)
- **FT:** Fuel Temperature (CX210/CX240)
- **TV:** Throttle Volume
- **TR1:** Transistor output has detected an over current
- **TR2:** Transistor output has detected an over current
- **TR3:** Transistor output has detected an over current
- **TR4:** Not Used

While in the CHK2 screen, press and hold the Travel mode switch this will allow you to view CHK5. CHK5 screen allows you to view PAST output conditions if an over current was detected. DO NOT HOLD SWITCH LONGER THAN 10 SECONDS. TRAVEL ALRM WILL SOUND. KEY WILL HAVE TO BE TURNED OFF TO TURN OFF ALARM.

**Note:** To erase fault codes in CHK5 switch to DIAG5 and press the Work mode switch for 10 seconds. The warning buzzer will sound. Turn **OFF** the key switch to complete the process.

https://truckmanualshub.com/



# PAST OVER LOAD CONDITION CHK5

## Continued

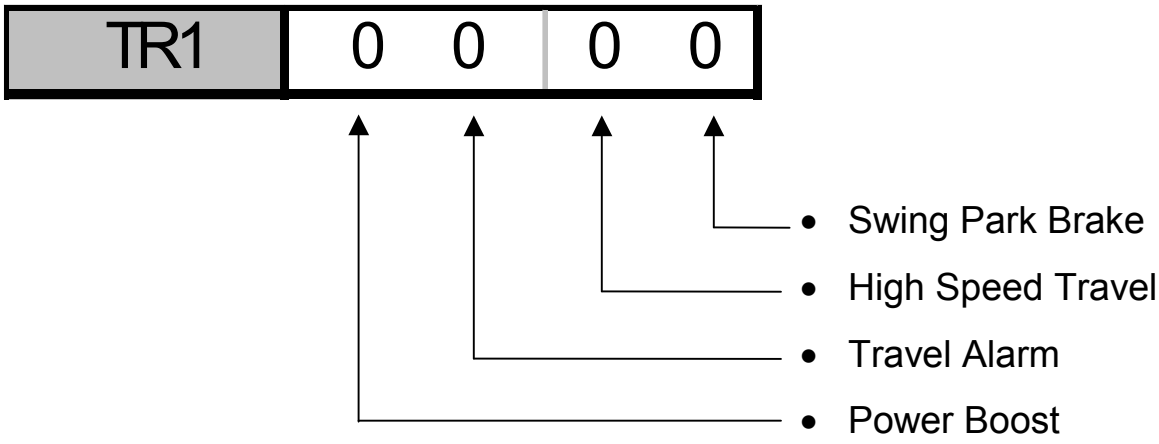


**TRANSISTOR OUTPUT (0 = No Overload, 1 = Overload)**

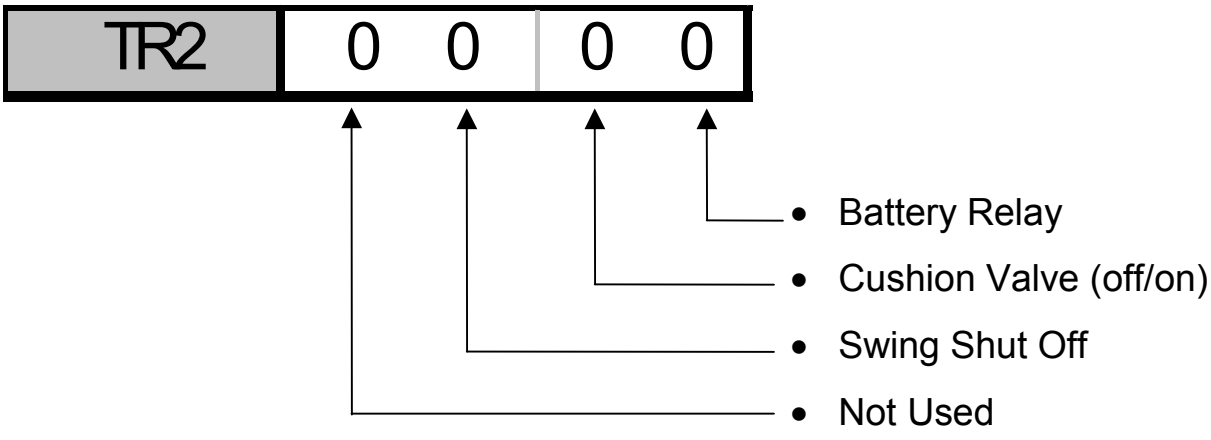

https://truckmanualshub.com/



# PAST OVER LOAD CONDITION CHK5

## Continued

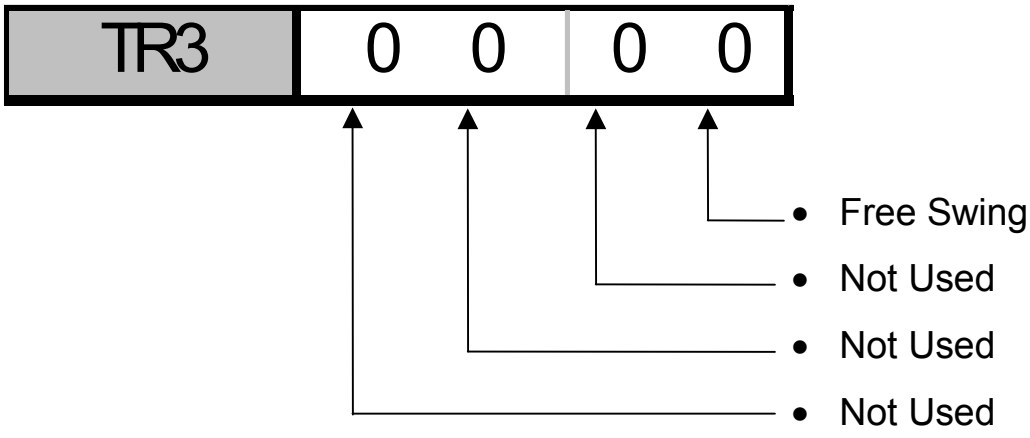


**TRANSISTOR OUTPUT (0 = No Overload, 1 = Overload)**

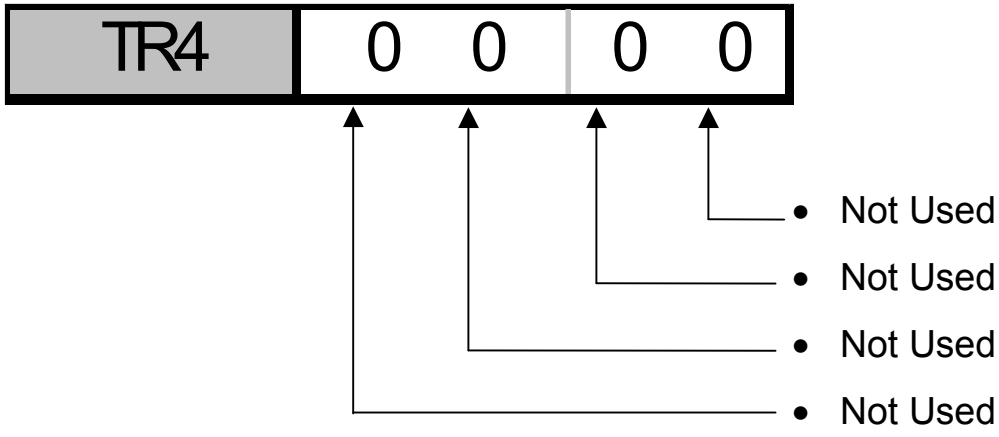

https://truckmanualshub.com/



# SELF - CHECK CHK6

| | | | | | | | | |
|---|---|---|---|---|---|---|---|---|
| CHK | | MODE 2 | H | | | | | |
| 6 | | | | | TR1 | 0 0 | 0 0 | |
| | R | 0 0 | 0 0 | % | TR2 | 0 0 | 0 0 | |
| | FT | 0 0 | 0 0 | F | TR3 | 0 0 | 0 0 | |
| | TV | 0 0 | 0 0 | % | TR4 | 0 0 | 0 0 | |

- **R:** Engine Load Ratio **(CX210/CX240)**
- **FT:** Fuel Temperature **(CX210/CX240)**
- **TV:** Throttle Volume
- **TR1:** Transistor output has detected an over current
- **TR2:** Transistor output has detected an over current
- **TR3:** Transistor output has detected an over current
- **TR4:** Not Used

**NOTE:** CHK6 does not appear on the screen. Transistor output can be checked for over current (short to ground) automatically. To do this hold down the one-touch idle switch while you turn on the key, then release the one-touch switch. You will hear the system check itself. If there is no over current is detected the travel alarm will sound.

https://truckmanualshub.com/



# DIAGNOSTIC SYSTEM CX210/CX240

## DIAG1 – Current Failure Condition on Engine

| | | | | | | | | |
|---|---|---|---|---|---|---|---|---|
| DIAG | | MODE 2 | H | | | | | |
| 1 | | | | | E | 0 0 | 0 0 | |
| | E | 0 0 | 0 0 | | E | 0 0 | 0 0 | |
| | E | 0 0 | 0 0 | | E | 0 0 | 0 0 | |
| | E | 0 0 | 0 0 | | E | 0 0 | 0 0 | |

**E 0000 No Failures**
E 0111 EECM
E 0115 ESS, crankshaft position sensor
E 0122 Boost pressure sensor high
E 0123 Boost pressure sensor low
E 0131 Throttle position sensor
E 0132 Throttle position sensor
E 0135 Oil pressure high
E 0141 Oil pressure sensor low
E 0143 Oil pressure sensor / EPF
E 0144 Coolant temp sensor high
E 0145 Coolant temp sensor low
E 0146 Coolant temp sensor / EPF
E 0151 Coolant temp sensor / EPF
E 0153 Intake air temp sensor high
E 0154 Intake air temp sensor low
E 0155 Intake air temp sensor / EPF
E 0234 ESS, crankshaft position sensor
E 0235 Coolant level sensor / EPF
E 0261 Fuel temp sensor pump over-heat
E 0264 VP44 fuel temp sensor
E 0278 Lift pump relay
E 0283 ESS/Crankshaft position sensor high
E 0284 ESS/Crankshaft position sensor low
E 0319 EECM
E 0352 Sensor voltage supply
E 0361 VP44 fuel system high current
E 0362 VP44 fuel system value open
E 0363 VP44 fuel system feed back error
E 0364 VP44 fuel system com error
E 0365 VP44 fuel system low
E 0366 VP44 fuel system measurement error
E 0367 VP44 fuel system IAT error
E 0368 VP44 fuel system timing error
E 0369 VP44 fuel system sync error
E 0372 VP44 fuel system idle validation error
E 0373 VP44 fuel system FSO high
E 0374 VP44 fuel system shutoff error
E 0376 VP44 fuel system mismatch error
E 0377 Fuel pump power shutoff relay
E 0381 Intake air heater control error, relay2
E 0386 Engine sensor voltage supply high
E 0391 Fuel pump power shutoff relay
E 0415 Oil pressure sensor / EPF
E 0418 Water in fuel sensor
E 0422 Coolant level sensor
E 0429 Water in fuel sensor
E 0431 Throttle position sensor low
E 0433 Boost pressure high
E 0434 ECM
E 0441 Battery voltage low
E 0442 Battery voltage high
E 0443 Throttle position sensor
E 0488 Intake air temp sensor / EPF
E 0517 Fuel pump has a stuck control valve
E 0524 High speed governor droop switch
E 0611 Hot shutdown error

https://truckmanualshub.com/



# DIAGNOSTIC SYSTEM CX210/CX240

## DIAG2 – Past Failure Condition on Engine

| DIAG | MODE 2 H |
|---|---|
| 2 | |

| | | | |
|---|---|---|---|
| E | 0 0 | 0 0 | |
| E | 0 0 | 0 0 | |
| E | 0 0 | 0 0 | |
| E | 0 0 | 0 0 | |
| E | 0 0 | 0 0 | |
| E | 0 0 | 0 0 | |
| E | 0 0 | 0 0 | |
| E | 0 0 | 0 0 | |

**E 0000 No Failures**
E 0111 EECM
E 0115 ESS, crankshaft position sensor
E 0122 Boost pressure sensor high
E 0123 Boost pressure sensor low
E 0131 Throttle position sensor
E 0132 Throttle position sensor
E 0135 Oil pressure high
E 0141 Oil pressure sensor low
E 0143 Oil pressure sensor / EPF
E 0144 Coolant temp sensor high
E 0145 Coolant temp sensor low
E 0146 Coolant temp sensor / EPF
E 0151 Coolant temp sensor / EPF
E 0153 Intake air temp sensor high
E 0154 Intake air temp sensor low
E 0155 Intake air temp sensor / EPF
E 0234 ESS, crankshaft position sensor
E 0235 Coolant level sensor / EPF
E 0261 Fuel temp sensor pump over-heat
E 0264 VP44 fuel temp sensor
E 0278 Lift pump relay
E 0283 ESS/Crankshaft position sensor high
E 0284 ESS/Crankshaft position sensor low
E 0319 EECM
E 0352 Sensor voltage supply
E 0361 VP44 fuel system high current
E 0362 VP44 fuel system value open
E 0363 VP44 fuel system feed back error
E 0364 VP44 fuel system com error
E 0365 VP44 fuel system low
E 0366 VP44 fuel system measurement error
E 0367 VP44 fuel system IAT error
E 0368 VP44 fuel system timing error
E 0369 VP44 fuel system sync error
E 0372 VP44 fuel system idle validation error
E 0373 VP44 fuel system FSO high
E 0374 VP44 fuel system shutoff error
E 0376 VP44 fuel system mismatch error
E 0377 Fuel pump power shutoff relay
E 0381 Intake air heater control error, relay2
E 0386 Engine sensor voltage supply high
E 0391 Fuel pump power shutoff relay
E 0415 Oil pressure sensor / EPF
E 0418 Water in fuel sensor
E 0422 Coolant level sensor
E 0429 Water in fuel sensor
E 0431 Throttle position sensor low
E 0433 Boost pressure high
E 0434 ECM
E 0441 Battery voltage low
E 0442 Battery voltage high
E 0443 Throttle position sensor
E 0488 Intake air temp sensor / EPF
E 0517 Fuel pump has a stuck control valve
E 0524 High speed governor droop switch
E 0611 Hot shutdown error

https://truckmanualshub.com/



# DIAGNOSTIC SYSTEM CX210/CX240

## DIAG3 – Past Failure Condition on Engine (Hour)

| DIAG | MODE Hi, H | | |
|---|---|---|---|
| 3 | | E 0 0 0 0 | |
| | E 0 0 0 0 | E 0 0 0 0 | |
| | E 0 0 0 0 | E 0 0 0 0 | |
| | E 0 0 0 0 | E 0 0 0 0 | |

- The hours that fault occurred will be displayed in the same window as the fault code that was detected in DIAG2.
- Past fault codes and hours will be cleared if the Work mode switch is pressed for 10 seconds.
- Hours shown in DIAG3 is computer “ON” hours since the last time the data was cleared. **Not machine hour-meter hours**.

**Note:** To erase engine fault codes switch to DIAG2 and press the Work mode switch for 10 seconds. The warning buzzer will sound. Turn **OFF** the key switch to complete the process.

https://truckmanualshub.com/



# DIAGNOSTIC SYSTEM

## DIAG4 – Current Failure Condition on Machine

| DIAG | MODE Hi, H | | |
|---|---|---|---|
| 4 | | M | 0 0 0 0 |
| | M | 0 0 0 0 | M 0 0 0 0 |
| | M | 0 0 0 0 | M 0 0 0 0 |
| | M | 0 0 0 0 | M 0 0 0 0 |

**M 0000: No Failure**

M 0010: Transistor output short circuit

M 0020 Hydraulic oil temperature sensor

M 0030 Fuel sensor

M 0040 Pressure sensor (P1)

M 0050 Pressure sensor (P2)

M 0060 Pressure sensor (N2, negative control)

M 0070 Key switch

M 0080 Pressure switch (upper or travel)

M 0090 CAN communication error **(CX210/CX240)**

M 00A0 Computer reset

M 00D0 Throttle motor related problem **(CX130/CX160)**

M 00E0 Coolant level sensor **(CX130/CX160)**

M 00F0 RPM sensor **(CX130/CX160)**

https://truckmanualshub.com/



# DIAGNOSTIC SYSTEM

## DIAG5 – Past Failure Condition on Machine

| DIAG | MODE Hi, H | | |
|---|---|---|---|
| 5 | | M 0 0 0 0 | |
| | M 0 0 0 0 | M 0 0 0 0 | |
| | M 0 0 0 0 | M 0 0 0 0 | |
| | M 0 0 0 0 | M 0 0 0 0 | |

**M 0000: No Failure**

M 0010: Transistor output short circuit

M 0020 Hydraulic oil temperature sensor

M 0030 Fuel sensor

M 0040 Pressure sensor (P1)

M 0050 Pressure sensor (P2)

M 0060 Pressure sensor (N2, negative control)

M 0070 Key switch

M 0080 Pressure switch (upper or travel)

M 0090 CAN communication error **(CX210/CX240)**

M 00A0 Computer reset

M 00D0 Throttle motor related problem **(CX130/CX160)**

M 00E0 Coolant level sensor **(CX130/CX160)**

M 00F0 RPM sensor **(CX130/CX160)**

https://truckmanualshub.com/



# DIAGNOSTIC SYSTEM

## DIAG6 – Past Failure Condition on Machine (Hours)

| DIAG | MODE Hi, H | | |
|---|---|---|---|
| 6 | | M | 0 0 0 0 |
| | M | 0 0 0 0 | M 0 0 0 0 |
| | M | 0 0 0 0 | M 0 0 0 0 |
| | M | 0 0 0 0 | M 0 0 0 0 |

- The hours that fault occurred will be displayed in the same window as the fault code that was detected in DIAG5.
- Past fault codes and hours will be cleared if the Work mode switch is pressed for 10 seconds.
- Hours shown in DIAG6 is computer “ON” hours since the last time the data was cleared. **Not machine hour-meter hours**.

**Note:** To erase machine  fault codes switch to DIAG5 and press the Work mode switch for 10 seconds. The warning buzzer will sound. Turn **OFF** the key switch to complete the process.

https://truckmanualshub.com/



# MACHINE HISTORY

## HR1

| HR | MODE Hi, H | | | | | | | | | | | |
|---|---|---|---|---|---|---|---|---|---|---|---|---|
| 1 | | | | | | | T | 0 | 0 | 0 | 0 | HR |
| | ENG | 0 | 0 | 0 | 0 | HR | S | 0 | 0 | 0 | 0 | HR |
| | WRK | 0 | 0 | 0 | 0 | HR | PU | 0 | 0 | 0 | 0 | HR |
| | U | 0 | 0 | 0 | 0 | HR | BRK | 0 | 0 | 0 | 0 | HR |

**ENG:** Hour Meter, hours (engine running) since last cleared

**WRK:** Operating hours (pressure switch “ON”)

**U:** Upper operating hours

**T:** Travel operating hours

**S:** Swing operating hours

**PU:** Power Boost operating hours

**BRK:** Hammer operating hour

Use the Buzzer stop switch to scroll through the HR screens.

**Note:** To erase work history data from the HR1 screen press and hold the Work mode switch for 10 seconds (buzzer will sound). Turn OFF key.

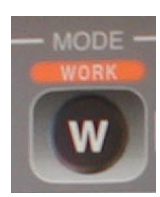

https://truckmanualshub.com/



# MACHINE HISTORY

## HR2

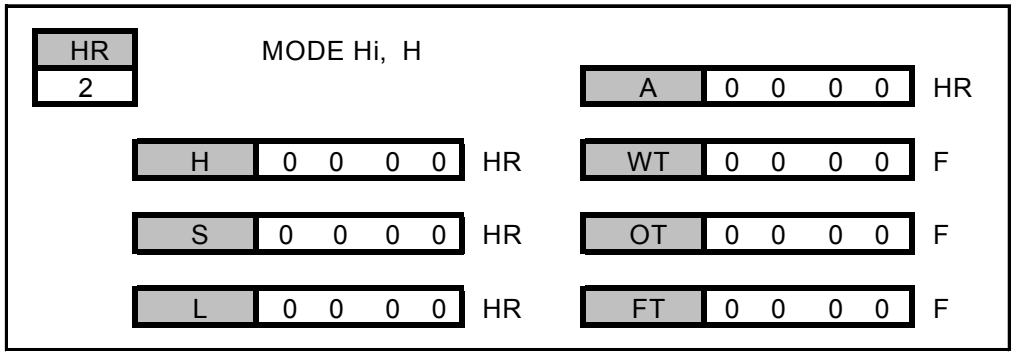


**H:** H work mode operating hours

**S:** S work mode operating hours

**L:** L work mode operating hours

**A:** Auto work mode operating hours

**WT:** Maximum coolant temperature recorded since the last time the data was cleared

**OT:** Maximum hydraulic oil temperature recorded since the last time the data was cleared

**FT:** Maximum fuel temperature recorded since the last time the data was cleared **(CX210/CX240)**

https://truckmanualshub.com/



# MACHINE HISTORY

## HR3

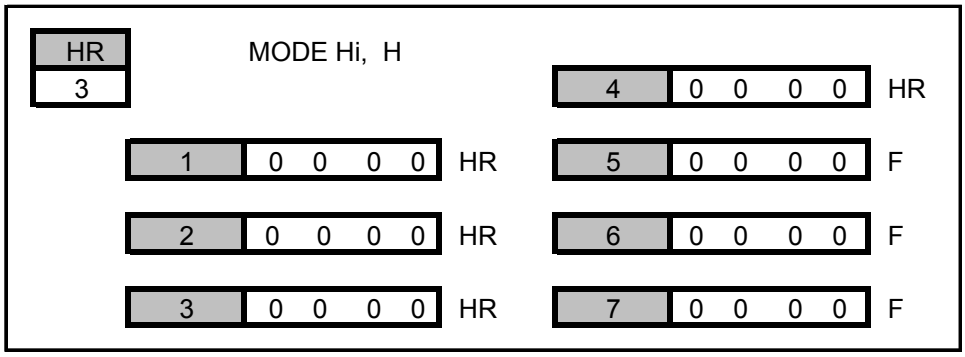


**1:** Computer power “ON” hours

**2:** Low speed operating hours

**3:** High speed operating hours

**4:** Independent travel operating hours

**5:** Maintenance timer

https://truckmanualshub.com/



# MACHINE HISTORY

## HR4

| HR | MODE Hi, H |
|---|---|
| 4 | |

| | | | | | | | | | |
|---|---|---|---|---|---|---|---|---|---|
| 1 | 0 0 0 0 | HR | | 4 | 0 0 0 0 | HR |
| 2 | 0 0 0 0 | HR | | 5 | 0 0 0 0 | HR |
| 3 | 0 0 0 0 | HR | | 6 | 0 0 0 0 | HR |
| | | | | 7 | 0 0 0 0 | HR |

### P1 Pressure Distribution (pump 1)

**1:** P1 operating hours, under 1450 PSI

**2:** P1 operating hours, 1450 to 2176 PSI

**3:** P1 operating hours, 2176 to 2901 PSI

**4:** P1 operating hours, 2901 to 3626 PSI

**5:** P1 operating hours, 3626 to 4351 PSI

**6:** P1 operating hours, 4351 to 5076 PSI

**7:** P1 operating hours, over 5076 PSI

https://truckmanualshub.com/



# MACHINE HISTORY

## HR5

| HR | MODE Hi, H |
|---|---|
| 5 | |

| | | | | | | | | | |
|---|---|---|---|---|---|---|---|---|---|
| 1 | 0 0 0 0 | HR | | 4 | 0 0 0 0 | HR |
| 2 | 0 0 0 0 | HR | | 5 | 0 0 0 0 | HR |
| 3 | 0 0 0 0 | HR | | 6 | 0 0 0 0 | HR |
| | | | | 7 | 0 0 0 0 | HR |

### P2 Pressure Distribution (pump 2)

**1:** P2 operating hours, under 1450 PSI

**2:** P2 operating hours, 1450 to 2176 PSI

**3:** P2 operating hours, 2176 to 2901 PSI

**4:** P2 operating hours, 2901 to 3626 PSI

**5:** P2 operating hours, 3626 to 4351 PSI

**6:** P2 operating hours, 4351 to 5076 PSI

**7:** P2 operating hours, over 5076 PSI

https://truckmanualshub.com/



# MACHINE HISTORY

## HR6

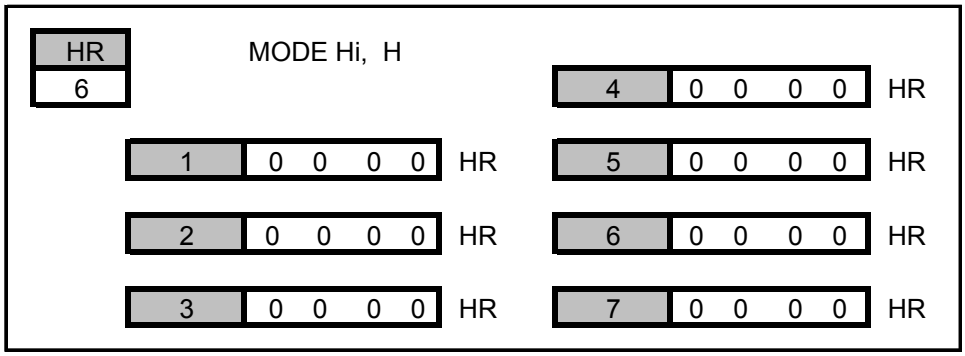


### Engine Speed (RPM) Distribution

**1:** Hours, under 1175 RPM

**2:** Hours, 1175 to 1375 RPM

**3:** Hours, 1375 to 1575 RPM

**4:** Hours, 1575 to 1775 RPM

**5:** Hours, 1775 to 1975 RPM

**6:** Hours, 1975 to 2175 RPM

**7:** Hours, over 2175 RPM

https://truckmanualshub.com/



# MACHINE HISTORY

## HR7

| HR | MODE Hi, H |
|---|---|
| 7 | |

| | | | | | | | | | |
|---|---|---|---|---|---|---|---|---|---|
| 1 | 0 0 0 0 | HR | | 5 | 0 0 0 0 | HR |
| 2 | 0 0 0 0 | HR | | 6 | 0 0 0 0 | HR |
| 3 | 0 0 0 0 | HR | | 7 | 0 0 0 0 | HR |
| | | | | 4 | 0 0 0 0 | HR |

### Coolant Temperature Distribution

**1:** Hours, under 171°F (1st and 2nd Bars)

**2:** Hours, 171°F to 180°F (3rd Bar)

**3:** Hours, 180°F to 207°F (4th Bar)

**4:** Hours, 207°F to 212°F (5th Bar)

**5:** Hours, 212°F to 217°F (6th Bar)

**6:** Hours, 217°F to 221°F (7th Bar)

**7:** Hours, over 221°F

https://truckmanualshub.com/



# MACHINE HISTORY

## HR8

| HR | MODE Hi, H | | | | | | | | | | | | | | |
|---|---|---|---|---|---|---|---|---|---|---|---|---|---|---|---|
| 8 | | | | | | | | | 4 | 0 | 0 | 0 | 0 | HR |
| | 1 | 0 | 0 | 0 | 0 | HR | | | 5 | 0 | 0 | 0 | 0 | HR |
| | 2 | 0 | 0 | 0 | 0 | HR | | | 6 | 0 | 0 | 0 | 0 | HR |
| | 3 | 0 | 0 | 0 | 0 | HR | | | 7 | 0 | 0 | 0 | 0 | HR |

### Hydraulic Oil Temperature Distribution

**1:** Hours, under 113°F (1st and 2nd Bars)

**2:** Hours, 113°F to 140°F (3rd Bar)

**3:** Hours, 140°F to 176°F (4th Bar)

**4:** Hours, 176°F to 190°F (5th Bar)

**5:** Hours, 190°F to 203°F (6th Bar)

**6:** Hours, 203°F to 208°F (7th Bar)

**7:** Hours, over 208°F

https://truckmanualshub.com/



# MACHINE HISTORY
# CX210/CX240

## HR9

| HR | MODE Hi, H | | | | | | | | | | |
|---|---|---|---|---|---|---|---|---|---|---|---|
| 9 | | | | | | | | 4 | 0 0 0 0 | HR |
| | | 1 | 0 0 0 0 | HR | | | | 5 | 0 0 0 0 | HR |
| | | 2 | 0 0 0 0 | HR | | | | 6 | 0 0 0 0 | HR |
| | | 3 | 0 0 0 0 | HR | | | | 7 | 0 0 0 0 | HR |

### Fuel Temperature Distribution

**1:** Hours, under 86°F

**2:** Hours, 86°F to 104°F

**3:** Hours, 104°F to 122°F

**4:** Hours, 122°F to 140°F

**5:** Hours, 140°F to 158°F

**6:** Hours, 158°F to 176°F

**7:** Hours, over 176°F

https://truckmanualshub.com/



# MACHINE HISTORY
# CX210/CX240

## HR10

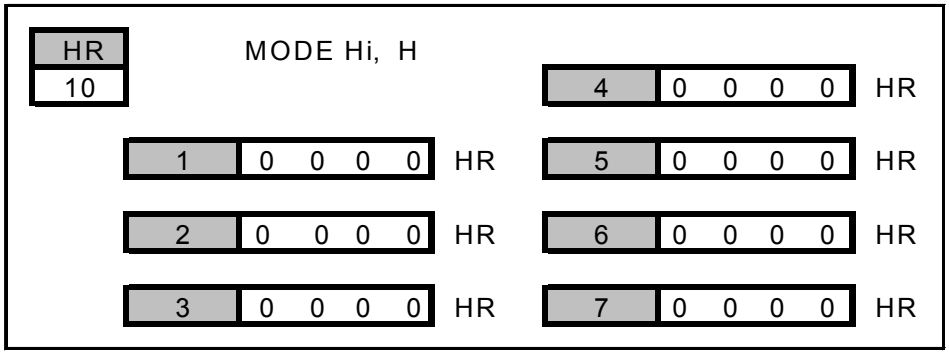


### Load Ratio Distribution

**1:** Hours, under 30%

**2:** Hours, 30% to 40%

**3:** Hours, 40% to 50%

**4:** Hours, 50% to 60%

**5:** Hours, 60% to 70%

**6:** Hours, 70% to 80%

**7:** Hours, over 80%

https://truckmanualshub.com/



# MACHINE HISTORY
# CX210/CX240

## HR11

| HR | MODE Hi, H | | | | | | | | | | |
|---|---|---|---|---|---|---|---|---|---|---|---|
| 11 | | | | | | | | | 4 | 0 0 0 0 | HR |
| | | 1 | 0 0 0 0 | HR | | | | | 5 | 0 0 0 0 | HR |
| | | 2 | 0 0 0 0 | HR | | | | | 6 | 0 0 0 0 | HR |
| | | 3 | 0 0 0 0 | HR | | | | | 7 | 0 0 0 0 | HR |

**Load Ratio Distribution in H Mode, High Idle**

**1:** Hours, under 30%

**2:** Hours, 30% to 40%

**3:** Hours, 40% to 50%

**4:** Hours, 50% to 60%

**5:** Hours, 60% to 70%

**6:** Hours, 70% to 80%

**7:** Hours, over 80%

https://truckmanualshub.com/



# MACHINE HISTORY
# CX210/CX240

## HR12

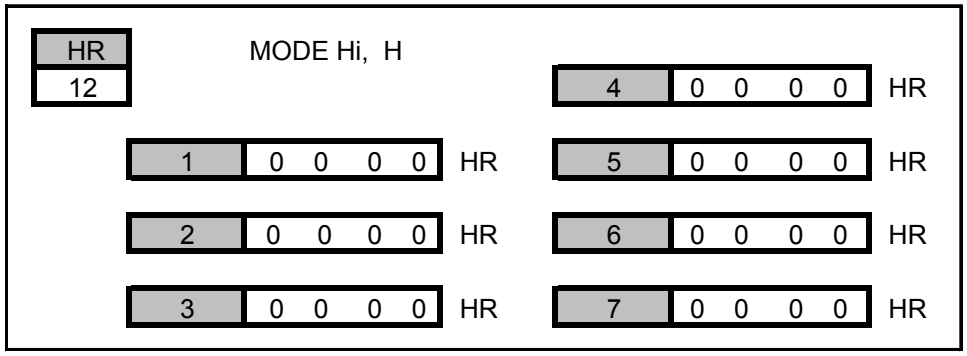


**Load Ratio Distribution in S Mode, High Idle**

**1:** Hours, under 30%

**2:** Hours, 30% to 40%

**3:** Hours, 40% to 50%

**4:** Hours, 50% to 60%

**5:** Hours, 60% to 70%

**6:** Hours, 70% to 80%

**7:** Hours, over 80%

https://truckmanualshub.com/



# RESETTING

## RST1

| | | | | | |
|---|---|---|---|---|---|
| RST 1 | MODE Hi, H | | | | |
| | | | | PA | 0 0 0 0 |
| BRK | 0 0 0 0 | RPM | | AU | 0 0 0 0 |
| L/M | Not Used | RPM | | HLD | 0 0 0 0 |
| AI | 0 0 0 0 | SEC | | OUT | Not Used |

**BRK:** Programmed RPM for Hammer mode

**L/M:** Not Used

**AI:** Auto-Idle setting time (1 to 30 seconds)

**PA:** Altitude compensation (0=off, 1=on)

**AU:** Auto Power Boost Cancellation (0=off, 1=on)

**HLD:** Hold previous (default) data (0=with, 1=without)

**OUT:** Not Used

Use the Buzzer stop switch to scroll through Resetting.

https://truckmanualshub.com/



# RESETTING

## Engine Speed for Hammer Mode

| | | | | | |
|---|---|---|---|---|---|
| RST | MODE Hi, H | | | | |
| 1 | | | | PA | 0 0 0 0 |
| | BRK | 0 0 0 0 | RPM | AU | 0 0 0 0 |
| | L/M | Not Used | RPM | HLD | 0 0 0 0 |
| | AI | 0 0 0 0 | SEC | OUT | Not Used |

Push the Buzzer stop switch to select BRK (item selected will have a light background).

**CX130/CX160**

To set engine speed for hammer mode, start the engine and adjust RPM with the throttle control. Monitor will show actual RPM. Press the Work mode switch for 10 seconds to select the displayed RPM. The buzzer will sound to notify that 10 seconds have elapsed.

**CX210/CX240**

Start the engine and adjust engine speed to desired RPM using the Free Swing switch to increase RPM and the Cushion switch to decrease RPM. **The switches must be held for 5 seconds for a RPM change to occur.** Press and hold the work mode switch for 10 seconds. The alarm buzzer will sound.

**Turn the key switch off while running at desired RPM to complete the procedure.** To confirm, start the engine, turn up the RPM, access CHK1 and observe the RPM when the hammer circuit is activated.

https://truckmanualshub.com/



# RESETTING

| | | | | | |
|---|---|---|---|---|---|
| RST | MODE Hi, H | | | | |
| 1 | | | | PA | 0 0 0 0 |
| | BRK | 0 0 0 0 | RPM | AU | 0 0 0 0 |
| | L/M | Not Used | RPM | HLD | 0 0 0 0 |
| | AI | 0 0 0 0 | SEC | OUT | Not Used |

**L/M:** Not used

**OUT:** Not used

https://truckmanualshub.com/



# RESETTING

## Auto Idle Time Set

| | | | | | |
|---|---|---|---|---|---|
| RST | MODE Hi, H | | | | |
| 1 | | | | PA | 0 0 0 0 |
| | BRK | 0 0 0 0 | RPM | AU | 0 0 0 0 |
| | L/M | Not Used | RPM | HLD | 0 0 0 0 |
| | AI | 0 0 0 0 | SEC | OUT | Not Used |

Push the Buzzer stop switch to select AI (item selected will have a light background).

To set the Auto-Idle time from 0 through 30 seconds, press the Travel mode switch until the number changes to your selection. The number increases by 1 every time the switch is pushed.

To save this data press and hold the Work mode switch for 10 seconds. The buzzer will sound to notify when 10 seconds have elapsed.

Turn the key switch off to complete the procedure.

https://truckmanualshub.com/



# RESETTING

## Altitude Compensation (pump power set)

| | | | | | |
|---|---|---|---|---|---|
| RST | MODE Hi, H | | | | |
| 1 | | | | PA | 0 0 0 0 |
| | BRK | 0 0 0 0 | RPM | AU | 0 0 0 0 |
| | L/M | Not Used | RPM | HLD | 0 0 0 0 |
| | AI | 0 0 0 0 | SEC | OUT | Not Used |

Push the Buzzer stop switch to select PA (item selected will have a light background)

**PA:** 0 = Normal Mode

**PA:** 1,2,3 = Low Power Mode settings

To set the low pump power mode (altitude compensation), push the Travel mode switch to change the to 1 for low power mode or 0 for normal power mode.

To save the data press the Work mode switch for 10 seconds. The buzzer will to notify when 10 seconds have elapsed.

Turn the key switch off to complete the procedure.

https://truckmanualshub.com/



# RESETTING

## Auto Power Boost Set (CX210/CX240)

| | | | | | |
|---|---|---|---|---|---|
| RST | MODE Hi, H | | | | |
| 1 | | | PA | 0 0 0 0 | |
| BRK | 0 0 0 0 | RPM | AU | 0 0 0 0 | |
| L/M | Not Used | RPM | HLD | 0 0 0 0 | |
| AI | 0 0 0 0 | SEC | OUT | Not Used | |

Push the Buzzer stop switch to select AU (item selected will have a light background)

**AU:** 0 = With Automatic Power Boost

**AU:** 1 = Without Automatic Power Boost (No Power Boost H & S mode)

To set press the Travel mode switch to select 1 or 0.

To save the data push the Work mode switch for 10 seconds. The buzzer will sound to indicate that 10 seconds have elapsed.

Turn the key switch off to complete the procedure.

**Note:** This will not eliminate L mode full time power boost.

https://truckmanualshub.com/



# RESETTING

## Previous Data Holding

| | | | | | |
|---|---|---|---|---|---|
| RST 1 | MODE Hi, H | | | | |
| | | | | PA | 0 0 0 0 |
| BRK | 0 0 0 0 | RPM | | AU | 0 0 0 0 |
| L/M | Not Used | RPM | | HLD | 0 0 0 0 |
| AI | 0 0 0 0 | SEC | | OUT | Not Used |

Push the Buzzer stop switch to select HLD (item selected will have a light background).

**0 =** Will hold default data

**1 =** Will turn off default data, will return to setting when key is turned off

To set previous data holding feature, push the Travel mode switch until the numbers change to the predetermined value in each column.

To set this data, press the Work mode switch for 10 seconds. The buzzer will sound to indicate when 10 seconds have elapsed.

Turn the key switch off to complete the procedure.

https://truckmanualshub.com/



# RESETTING

## Previous Data Holding

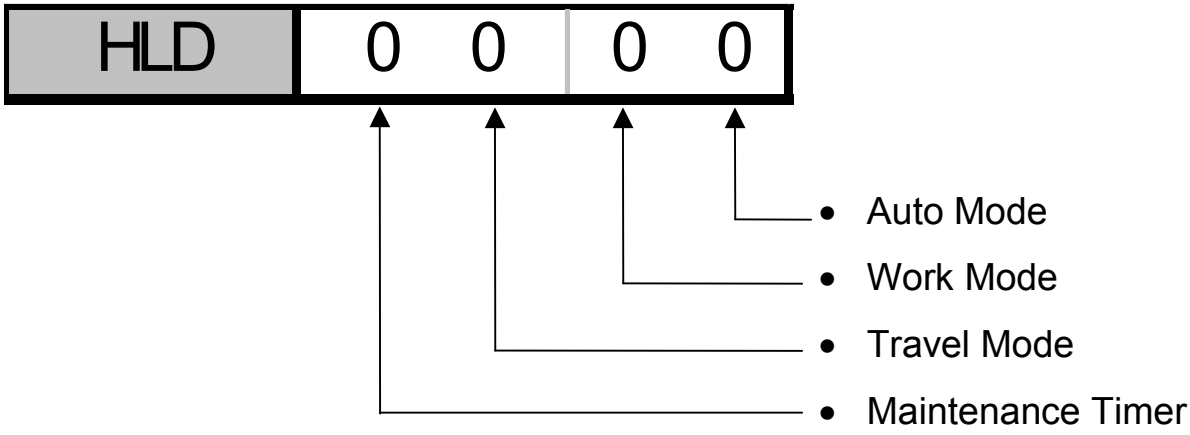


**0 =** Will hold default data

**1 =** Will return to setting when key was turned off.

Maintenance Timer Cancellation
**0 =** Off (maintenance timer ON)

**1 =** ON

https://truckmanualshub.com/

CASE

## Construction Equipment Service Training

# CX SERIES EXCAVATOR

## Section 4 -- Electrical "How it Works"

(2001)

Training Pays

https://truckmanualshub.com/

**CASE CORPORATION**
**700 STATE STREET**
**RACINE, WI 53404 U.S.A.**

**CASE CANADA CORPORATION**
**3350 SOUTH SERVICE ROAD**
**BURLINGTON, ON L7N 3M6 CANADA**

**© 2001 Case Corporation**
**All Rights Reserved**

Printed in U.S.A.

https://truckmanualshub.com/



# Table of Contents

## Section 4 - Electrical

PAGE NO.

OPERATION / FUNCTION SUMMARY ..... 2-3

RPM CONTROL

THROTTLE MOTOR ..... 4-5
ENGINE RPM CONTROL ..... 6-7
IDLING CONTROL ..... 8-9
RPM CONTROL FOR EACH MODE (H, S, L AND "AUTO") ..... 10-19
ENGINE AUTO WARM-UP ..... 20-21
BREAKER REVOLUTION CONTROL ..... 22-23

ELECTRIC OVER HYDRAULIC CONTROLS

PUMP CONTROL ..... 24-25
POWER BOOST ..... 26-29
2-SPEED TRAVEL ..... 30-31
CUSHION (ON/OFF) ..... 32-33
SWING BRAKE/SWING LOCK AND FREE SWING ..... 34-39
LEVER LOCK ..... 40-41

https://truckmanualshub.com/



## RPM CONTROL

| Operation | Function | Explanation |
|---|---|---|
| Throttle Motor (CX130/CX160) | 1) Engine speed on the CX130/CX160 excavators is adjusted with a stepper motor.<br>2) The stepper motor is controlled by the controller through the throttle driver.<br>3) The throttle motor requires calibration. | See pages 2-3 |
| Engine RPM Control | 1) Engine speed on the CX210/CX240 excavators is controlled by the engine controller. | See pages 6-7 |
| Idling Control | 1) The operator can select one touch idle, or he can select auto idle.<br>2) Auto idle time can be programmed from 1 to 30 seconds. | See pages 8-9 |
| RPM Control for Each Mode (H,S,L, and Auto) | 1) Maximum rpm is obtained by selecting H mode.<br>2) S mode speed is 200 rpm less than H mode.<br>3) L mode speed is 300 rpm less than H mode.<br>4) Auto mode speed varies between S mode speed and L mode speed<br>5) Idle speeds are stored permanently in the controller memory | See pages 10-19 |
| Engine Auto Warm-up | Increases engine rpm by steps over a 15 minute period if:<br>1) Water temperature is below 50°C<br>2) Hydraulic functions or throttle are not operated for 12 seconds.<br>3) One touch idle is off.<br>4) If the throttle is moved or any hydraulic function is operated, auto warm-up is canceled. | See pages 20-21 |
| Breaker Revolution Control | 1) When the breaker pressure switch is hydraulically closed, the engine rpm will decrease to a preset speed.<br>2) The throttle control knob speed setting must be set higher than the preset speed. | See pages 22-23 |

https://truckmanualshub.com/



## ELECTRIC / HYDRAULIC CONTROL

| Operation | Function | Explanation |
|---|---|---|
| Pump Control | 1) In S, H and Auto work modes current supplied to the Electro-magnetic proportional valve built into the pump, will control the HP requirement of hydraulic pumps P1 and P2. | See pages 24-25 |
| Power Boost | 1) Increases hydraulic power when more force is required for digging operations.<br>2) When activated in H, S and Auto work modes main relief pressure is increased for 8 seconds.<br>3) Operates full in the L mode. | See pages 26-29 |
| 2-Speed Travel | 4) High and Low speed travel operation is obtained by switching drive motor swash plate angle. | See pages 30-31 |
| Cushion (**on/off**) | 1) Controls the pilot oil of the boom and arm spools.<br>2) The operator can turn off this feature.<br>3) Each time the machine is started, it will be in Cushion on. | See pages 32-33 |
| Swing Brake/ Swing Lock and Free Swing | 1) The mechanical swing brake will apply 5 seconds after the swing hand control is returned to neutral.<br>2) When swing lock is selected the brake will apply and the swing control spool will be hydraulically locked in neutral.<br>3) When free swing is selected the brake will be released and an orifice in the motor circuit will allow the upper structure to drift. | See pages 34-39 |
| Lever Lock | 1) Pilot pressure can be disabled by raising the gate lever handle or raising the left console. | See pages 40-41 |

https://truckmanualshub.com/



# RPM CONTROL

## Throttle Motor, CX130/CX160

1) The engine speed on the CX130/CX160 excavators is adjusted with a stepper motor.

## Stepping Motor

A stepping motor is a motor that rotates when synchronization is turned into a pulse signal from a pulse oscillator.

When using a stepping motor, the pulse oscillator is what determines rotational speed and rotation degree. The driver circuit is what switches to change the current in the stepping motor. It is necessary to amplify the signal in order to drive the stepping motor.

## Pulse Oscillator

This circuit develops the pulse signal that determines rotation degree and rotational speed of the stepping motor. A stepping motor rotates synchronizing with the pulse signal, which is turned into an oscillation from this circuit. There are 1023 pulses in 52° of motor shaft rotation.

## Driver Circuit (throttle driver)

Driver circuit of a stepping motor consists of the logical section which forms and distributes a pulse signal from an oscillator, and an amp section which amplifies and supplies a signal to the motor. In other words, it is a circuit sending current by the decided sequence to the motor coil at the pulse output from an oscillator. This “excitation method” excites the coil by the decided order.

The output shaft of the throttle motor can turn 52°.

There are 1023 pulses in 52° of shaft rotation.

One pulse equals 0.05°.

There are limit switches inside the motor on both ends of motor rotation.

One motor pulse = 1.8° and the gear reduction of the motor to output shaft is 1/35.37, so throttle output shaft rotation = .05 / pulse.

https://truckmanualshub.com/



# RPM CONTROL

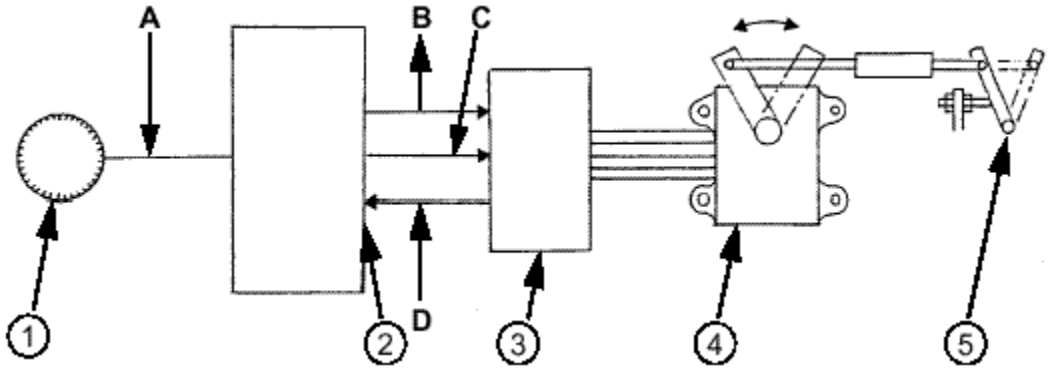


**A.** Voltage (Max 4.5 V)
**B.** Clockwise
**C.** Counterclockwise
**D.** Pulse oscillation

**1.** Throttle volume
**2.** Controller
**3.** Motor driver
**4.** Throttle motor
**5.** Engine throttle lever

**1.** Limit switch
**2.** Drain hose
**3.** Power shaft
**4.** Reduction gears
**5.** Stepping motor

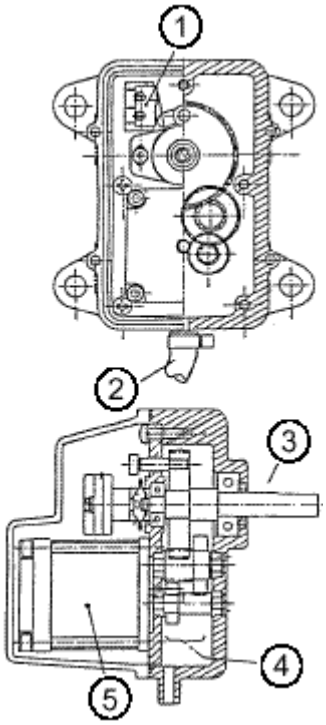

https://truckmanualshub.com/



# RPM CONTROL

## Engine rpm Control, CX130/CX160

1) Engine idle rpm for both models is permanently stored in the controller memory.
2) Programming the controller to the proper machine model number and allowing the controller to calibrate the throttle motor will determine the idling speed.
3) The throttle will return to set rpm's with high precision.

## Automatic Adjustment

The procedure of programming the controller and calibrating the throttle motor is called Automatic Adjustment.

Automatic Adjustment must be performed:

a) When replacing a new controller

b) When replacing a new throttle motor

c) When adjusting or replacing the control linkage between the engine and throttle motor

Automatic Adjustment Explanation

1) Engine RPM at the time of full throttle: FULL is read.

   (H) Mode MAX)

2) While monitoring engine RPM, RPM is decreased automatically.

   RS=FULL-D1

   RL=FULL-D2

   RI=Idling revolutions

   When each RPM is reached, position of a throttle motor, PS, PL and PI are read.

3) PS, PL and PI positions are stored in the controller.

Refer to the **Controller Calibration** procedure in Section 7 of this manual.

https://truckmanualshub.com/



# RPM CONTROL

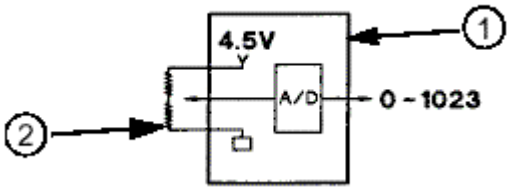


**1.** Computer

**2.** Throttle control

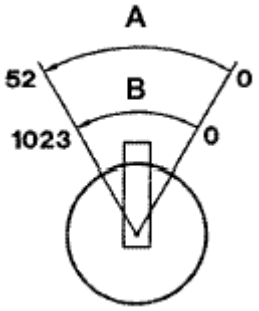


**A.** Degree

**B.** Pulse

FULL: H MODE MAX Revolutions

RS : S MODE MAX Revolutions

RL : L MODE MAX Revolutions

RI : IDLE Revolutions

| | CX130/CX160 |
|---|---|
| D1 | - 200 |
| D2 | - 300 |
| R1 | 1050 |

**F1** Spring deflection range
**F2** Spring deflection range
**M** Full
**N** Engine revolution (rpm)
**T1** Throttle motor (angle)
**T2** Throttle motor (pulse)

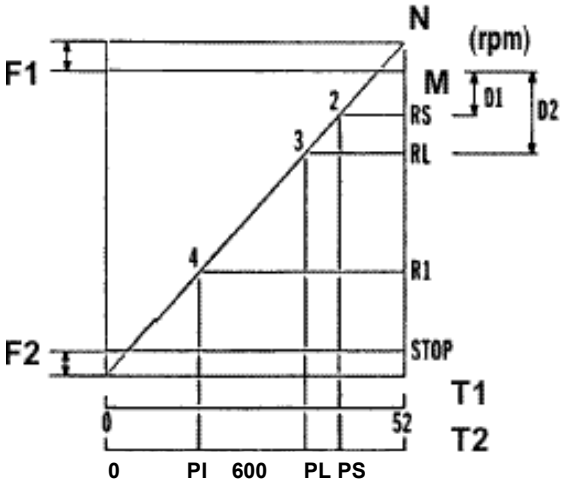

https://truckmanualshub.com/



# RPM CONTROL

## Idling Control, All Models

1) The operator can select one touch idle, or he can select auto idle.
2) Auto idle time can be programmed from 1 to 30 seconds.

**One Touch Idle**

To select one touch idle push and hold the button on top of the right control handle for three seconds. The LCD display in the upper right corner of the monitor will indicate **"OFF"** for one touch idle.

Pushing the button on the right hand control will signal the controller to reduce engine speed to idle.

**"ENGINE IDLING"** will appear on the monitor screen.

Pushing the button again will return to the original rpm.

**Auto Idle**

Auto idle is selected by pressing the one touch idle button on the right hand control handle for three seconds. The LCD display in the upper right corner of the monitor will indicate **"ON"** for auto idle.

If no hydraulic functions are operated for 5 seconds, the controller will reduce engine speed to idle.

**"ENGINE IDLING"** will appear on the message screen.

Engine speed will not return from idle until the one touch idle button on the right hand control handle is pushed or a hydraulic function is operated.

There are two pressure switches that tell the controller hydraulic functions are operating:

1) Upper pilot pressure switch
2) Travel pilot pressure switch

Auto idle time can be programmed from 1 to 30 seconds, (factory set at 5 seconds).

Refer to the **Optional Reset Procedure** in Section 7 of this manual, to change this setting.

**NOTE:** When the key is turned on the machine will return to the last idle setting when key switch was turned off.

https://truckmanualshub.com/



# RETURN TO IDLE

## CIRCUIT CONFIGURATION
## CX130/CX160

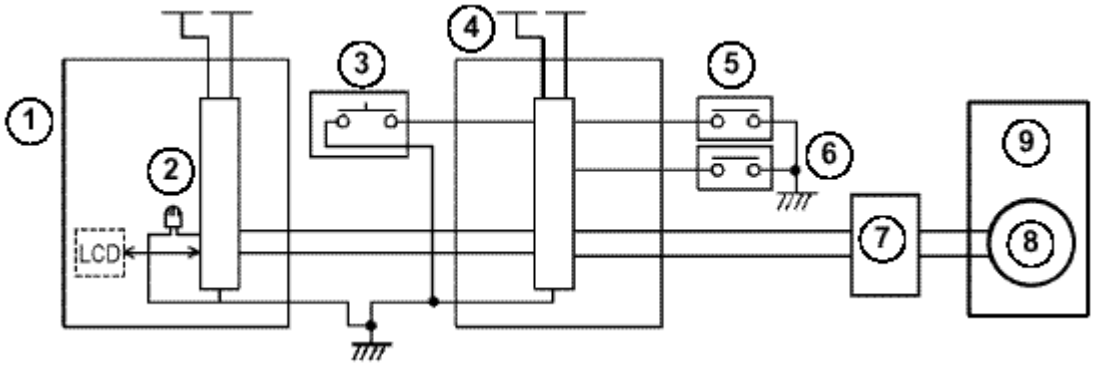


1. Instrument panel
2. Audible warning device
3. Return to idle control
4. Main Controller
5. Upper pilot pressure switch
6. Travel pilot pressure switch
7. Throttle motor driver
8. Throttle motor
9. Engine

## CX210/CX240

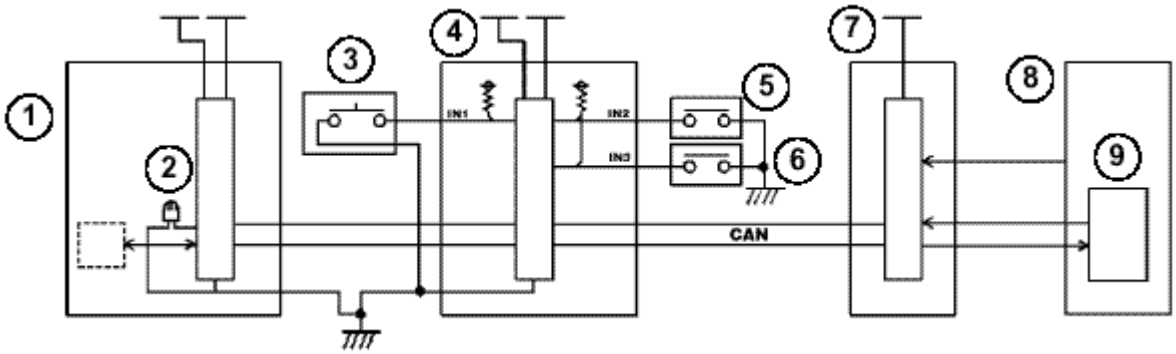


1. Instrument panel
2. Audible warning device
3. Return to idle control
4. Main Controller
5. Upper pilot pressure switch
6. Travel pilot pressure switch
7. Engine Controller
8. Engine
9. Electronic Injection Pump

https://truckmanualshub.com/



# RPM CONTROL

## Work Mode Selection, All Models

1) When the ignition is switched on, "Auto" is selected by default.
2) When “Auto” mode is running, if the work mode switch is pressed, the mode does not change.

## Work Mode Change

Work mode changes can not be done while in the “Auto” mode. Press the auto mode switch to exit “Auto” mode. It will switch to “H” mode. Each time the work mode switch is pressed the mode will change to H-L-S-H-L-S etc.

https://truckmanualshub.com/



# WORK MODE SELECTION

## CIRCUIT CONFIGURATION
## CX130/CX160

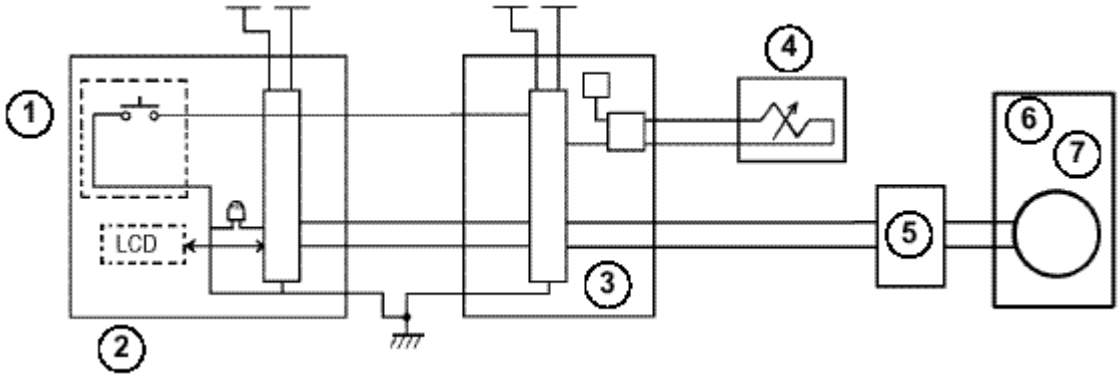


1. Working mode switch
2. Instrument panel
3. Main Controller
4. Proportional Solenoid
5. Throttle motor driver
6. Throttle motor
7. Engine

## CX210/CX240

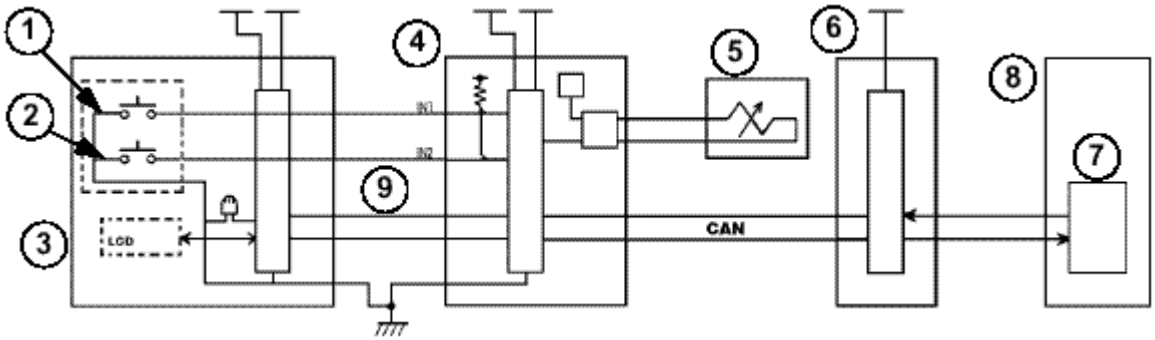


1. Working mode switch
2. Automatic mode switch
3. Instrument panel
4. Main Controller
5. Proportional Solenoid
6. Engine Controller
7. Electronic Injection Pump
8. Engine
9. SERIES communication

https://truckmanualshub.com/



# RPM CONTROL

## Rpm Control for Each Mode (H, S and L), CX130/CX160

1) Maximum rpm is obtained by selecting H mode.
2) S mode speed is 200 rpm less than H mode.
3) L mode speed is 300 rpm less than H mode.
4) Auto mode speed varies, 150 rpm less than H mode to 250 rpm less than H mode.
5) Idle speeds are permanently stored in the controller memory.

The machine is in the Auto mode when the key switch is **ON**.

Although the position of throttle volume is the same, engine rpm varies with each mode.

If the throttle knob is set at a lower rpm, speed changes will be different because of the spring deflection of the throttle linkage.

https://truckmanualshub.com/



# RPM CONTROL

## Circuit Configuration

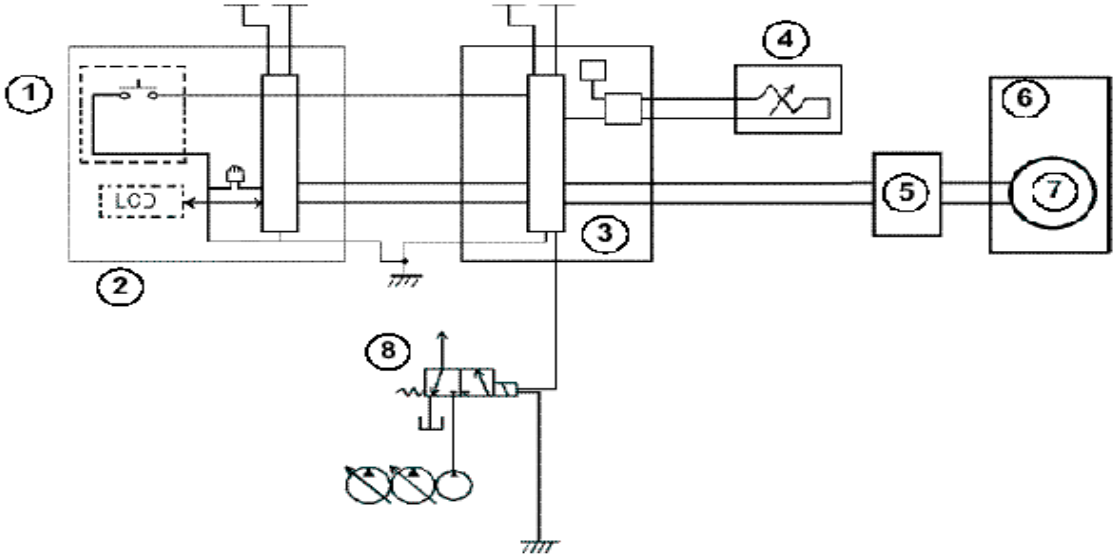


1. Work mode switch
2. Instrument panel
3. Main controller
4. Proportional solenoid
5. Throttle driver
6. Engine
7. Throttle motor
8. Power Boost solenoid

### Values set for each mode

| Mode | Item | CX130 | CX160 | Power Boost |
|---|---|---|---|---|
| H MODE | Engine rpm (max) | 2470 ± 10 | 2470 ± 10 | One-Touch Power Boost |
| | mA Current (max) | 600 | 600 | |
| | mA Current (min) | 550 | 510 | |
| S MODE | Engine rpm (max- 200) | 2270 ± 10 | 2270 ± 10 | One-Touch Power Boost |
| | mA Current (90% of torque) | 550 | 510 | |
| L MODE | Engine rpm (max- 300) | 2170 ± 10 | 2170 ± 10 | Constant |
| | mA Current (70% of torque) | < 340 | < 300 | |
| LOW IDLE | Engine rpm (max) | 950 ± 10 | 950 ± 10 | |

**Note:** Shown above are for normal conditions; except the following exceptions:

1. In “L” mode if travel only is actuated, the pump is controlled by the value of “S” mode current.
2. In “L” mode if a hydraulic hammer is used, the pump is controlled by the value of “S” mode current.

https://truckmanualshub.com/



# RPM CONTROL

## Rpm Control for Each Mode (H, S and L), CX210/CX240

1) Maximum rpm is obtained by selecting H mode.
2) S mode speed is 200 rpm less than H mode.
3) L mode speed is 300 rpm less than H mode.
4) Auto mode speed varies, 150 rpm less than H mode to 250 rpm less than H mode.
5) Idle speeds are permanently stored in the controller memory.

The machine is in the Auto mode when the key switch is **ON**.

If the throttle knob is set at a lower rpm, speed changes will be different because of the spring deflection of the throttle linkage.

https://truckmanualshub.com/



# RPM CONTROL

## Circuit Configuration

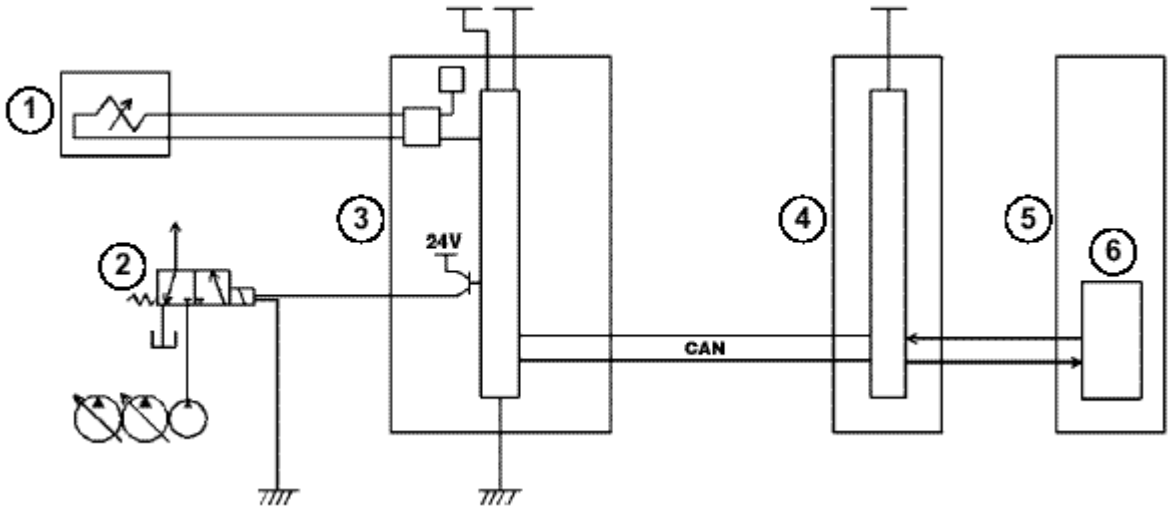


1. Proportional solenoid
2. Power boost solenoid
3. Main controller
4. Engine controller
5. Engine
6. Electronic injection pump

### Values set for each mode

| Mode | Item | CX210 | CX240 | Power Boost |
|---|---|---|---|---|
| H MODE | Engine rpm (max) | 2000 ± 10 | 2200 ± 10 | Automatic Power Boost |
| | mA Current (max) | 407 | 424 | |
| | mA Current (min) | 292 | 307 | |
| S MODE | Engine rpm (max- 200) | 1800 ± 10 | 2000 ± 10 | Automatic Power Boost |
| | mA Current (90% of torque) | 292 | 307 | |
| L MODE | Engine rpm (max- 300) | 1700 ± 10 | 1900 ± 10 | Constant |
| | mA Current (70% of torque) | < 50 | < 50 | |
| LOW IDLE | Engine rpm (max) | 900 ± 10 | 900 ± 10 | |

### Values set for each model

**Note**: Shown above are for normal conditions; except the following exceptions:

1. In “L” mode if travel only is actuated, the pump is controlled by the value of “S” mode current.
2. In “L” mode if a hydraulic hammer is used, the pump is controlled by the value of “S” mode current.

https://truckmanualshub.com/



# RPM CONTROL

## RPM Control for Automatic Work Mode, CX130/CX160

1) When the key switch is turned “ON” the machine will be in Auto mode.
2) With “Auto” mode selected the machine operates in 2 modes, $S_A$ and $L_A$ depending on conditions.
3) Switching to other work modes can not be done with “Auto” mode on.

Auto mode speed varies, 150 rpm less than “H” mode to 250 rpm less than “H” mode. The current value for the proportional solenoid also varies as the mode changes. The range for each model is “S” mode value and “S” mode value +40. The controller uses information from the pump pressure transducers to determine when to switch modes. The controller monitors both main pump pressures and the de-stroke (negative control) signal coming from the arm side of the main control valve to the pump for that side of the valve (pump2 for the CX130/CX160 and pump1 for the CX210/CX240). When either pump pressures rises above 3625 psi and the de-stroke signal for the pump for the arm is less than 87 psi the controller switches to $S_A$ mode. When the pump pressures fall below 3625 psi or the de-stroke signal rises to above 87 psi the controller will switch to $L_A$ mode. If the engine coolant solution temperature is below 122°F or the oil temperature below 77°F, auto mode control does not operate and $L_A$ mode is selected. When the water temperature is above 122°F and the oil temperature above 77°F, auto mode starts and continues operating even if the water and oil temperatures fall. When auto mode control is operating, if the travel pressure switch is operated, the mode change does not take place. If the travel pressure switch is operated in $S_A$ mode, the system stays in $S_A$ mode and if the pressure switch is operated in $L_A$ mode, the system stays in $L_A$ mode.

https://truckmanualshub.com/



# RPM CONTROL

## Circuit Configuration

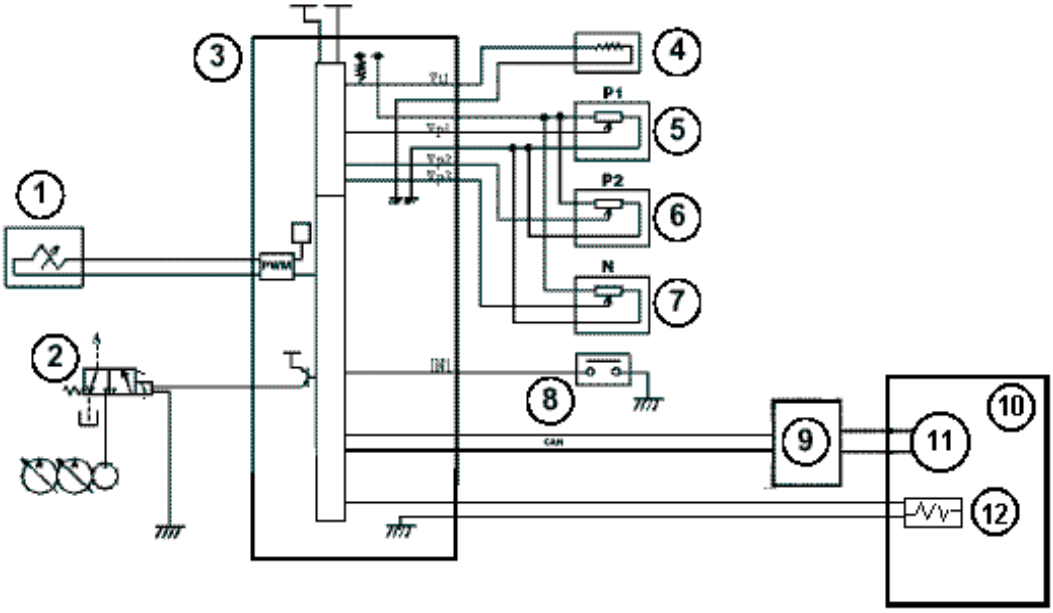


1. Proportional solenoid
2. Power Boost solenoid
3. Main controller
4. Hydraulic oil temperature sender
5. Pump1 pressure transducer
6. Pump2 pressure transducer
7. De-stroke signal transducer
8. Travel pressure switch
9. Throttle driver
10. Engine
11. Throttle motor
12. Coolant temperature sender

| | | CX130 | CX160 |
|---|---|---|---|
| SA MODE | Engine rpm (max) | 2270 ± 10 | 2270 ± 10 |
| | mA Current (equal to S mode + 40mA) | 590mA | 550mA |
| | Power Boost | One-Touch | |
| LA MODE | Engine rpm (max) | 2170 ± 10 | 2170 ± 10 |
| | mA Current (equal to S mode) | 550mA | 510mA |
| | Power Boost | One-Touch | |

https://truckmanualshub.com/



# RPM CONTROL

## RPM Control for Automatic Work Mode, CX210/CX240

1) When the key switch is turned “ON” the machine will be in Auto mode.
2) With “Auto” mode selected the machine operates in 2 modes, $S_A$ and $L_A$ depending on conditions.
3) Switching to other work modes can not be done with “Auto” mode on.

Auto mode speed varies, 150 rpm less than “H” mode to 250 rpm less than “H” mode. The current value for the proportional solenoid also varies as the mode changes. The range for each model is “S” mode value and “S” mode value+40. The controller uses information from the pump pressure transducers to determine when to switch modes. The controller monitors both main pump pressures and the de-stroke (negative control) signal coming from the arm side of the main control valve to the pump for that side of the valve (pump2 for the CX130/CX160 and pump1 for the CX210/CX240). When either pump pressures rises above 3625 psi and the de-stroke signal for the pump for the arm is less than 87 psi the controller switches to $S_A$ mode. When the pump pressures fall below 3625 psi or the de-stroke signal rises to above 87 psi the controller will switch to $L_A$ mode. If the engine coolant solution temperature is below 122°F or the oil temperature below 77°F, auto mode control does not operate and $L_A$ mode is selected. When the water temperature is above 122°F and the oil temperature above 77°F, auto mode starts and continues operating even if the water and oil temperatures fall. When auto mode control is operating, if the travel pressure switch is operated, the mode change does not take place. If the travel pressure switch is operated in $S_A$ mode, the system stays in $S_A$ mode and if the pressure switch is operated in $L_A$ mode, the system stays in $L_A$ mode.

https://truckmanualshub.com/



# RPM CONTROL

## Circuit Configuration

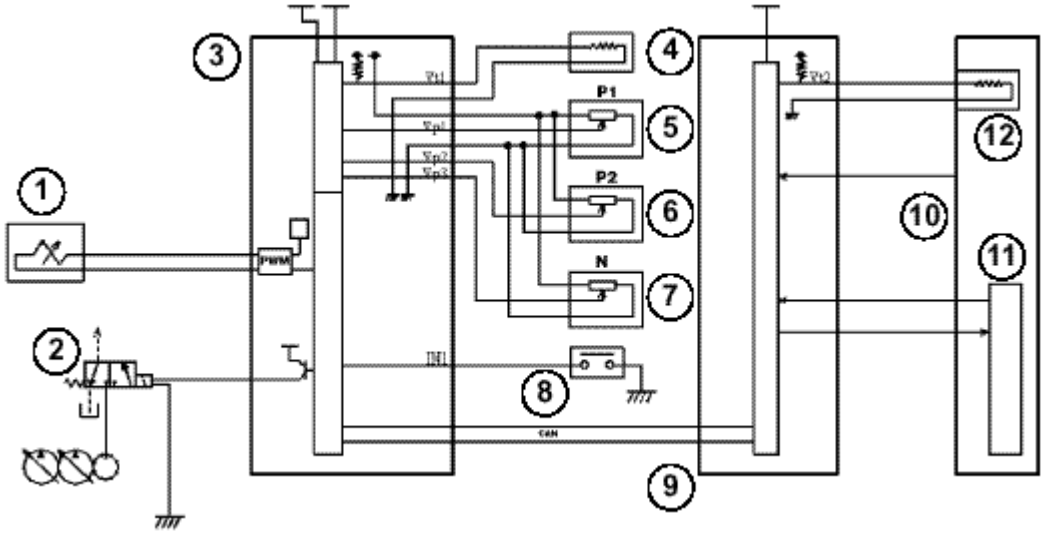


1. Proportional solenoid
2. Power Boost solenoid
3. Main controller
4. Hydraulic oil temperature sender
5. Pump1 pressure transducer
6. Pump2 pressure transducer
7. De-stroke signal transducer (N)
8. Travel pilot pressure switch
9. Engine controller
10. Engine
11. Electronic injection pump
12. Water temperature sender

| | | CX210 | CX240 |
|---|---|---|---|
| SA MODE | Engine rpm (max) | 1800 ± 10 | 2000 ± 10 |
| | mA Current (equal to S mode + 40mA) | 332mA | 347mA |
| | Power Boost | Automatic | |
| LA MODE | Engine rpm (max) | 1700 ± 10 | 1900 ± 10 |
| | mA Current (equal to S mode) | 292mA | 307mA |
| | Power Boost | Automatic | |

https://truckmanualshub.com/



# RPM CONTROL

## Auto Warm-Up, All Models

Increases engine rpm by steps over a 15-minute period or until operating temperature is reached if:

1) Water temperature is below 122°F
2) Hydraulic functions are not operated for 12 seconds. (pressure switches off)
3) One touch or Auto idle is off.
4) If any functions is operated or throttle movement, auto warm-up is canceled.

When all the above conditions are satisfied, automatic warm up is performed.

https://truckmanualshub.com/



# RPM CONTROL

### Circuit Configuration
### CX130/CX160

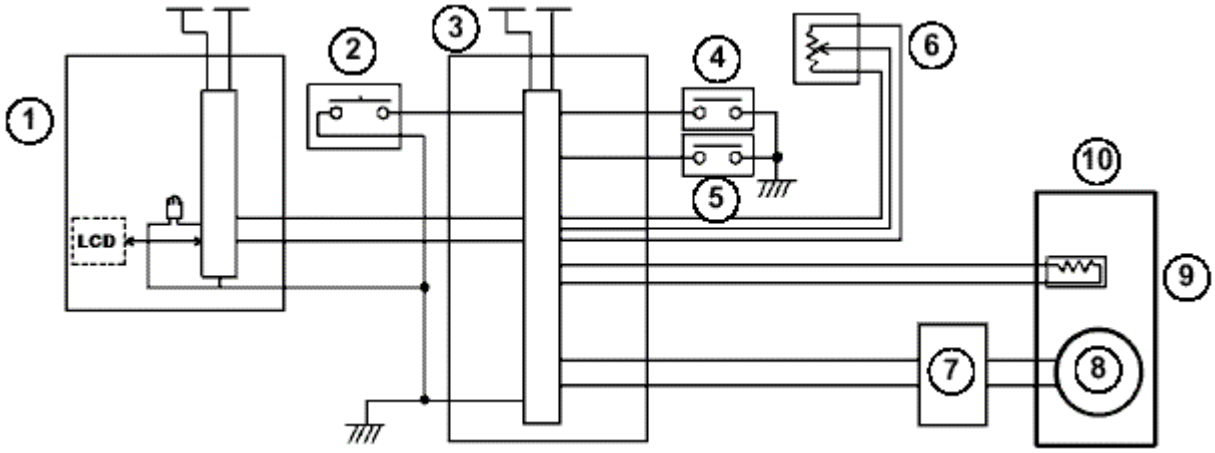


1. Instrument panel
2. One-Touch idle switch
3. Main controller
4. Upper pilot pressure switch
5. Travel pilot pressure switch
6. Throttle control
7. Throttle motor driver
8. Throttle motor
9. Engine coolant temperature sender
10. Engine

### CX210/CX240

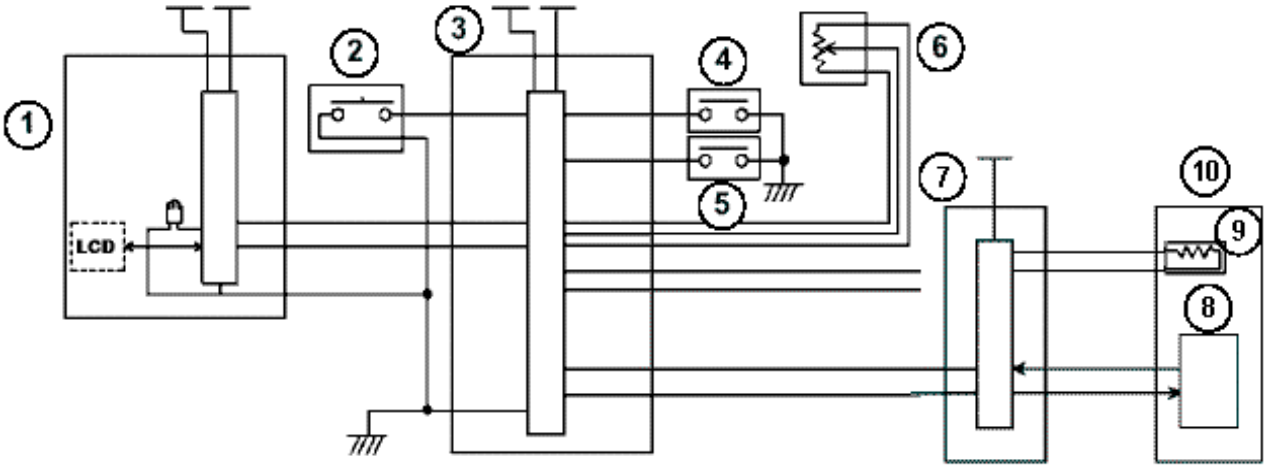


1. Instrument panel
2. One-Touch idle switch
3. Main controller
4. Upper pilot pressure switch
5. Travel pilot pressure switch
6. Throttle control
7. Engine controller
8. Electronic injection pump
9. Engine coolant temperature sender
10. Engine

https://truckmanualshub.com/



# RPM CONTROL – ALL MODELS

## Breaker Revolution Control, All Models

1) When the breaker pressure switch is hydraulically closed, the engine rpm will decrease to a preset speed.
2) The throttle control knob speed setting must be set higher than the preset speed.

## Breaker / Aux. pilot pressure

The rpm for the breaker must be preset when using the breaker mode.

The setting instructions are in the **Optional Reset Procedure** in Section 7 of this manual.

When stepping on the breaker pedal, the pressure switch under the cab closes and a signal is sent to the controller. Engine rpm will decrease to the preset speed as long as the switch is closed. When the pedal is returned to neutral, the engine rpm will return to the throttle knob setting. The throttle knob setting must be above the preset speed for breaker revolution control to function.

https://truckmanualshub.com/



# RPM CONTROL

## Circuit Configuration

### CX130/CX160

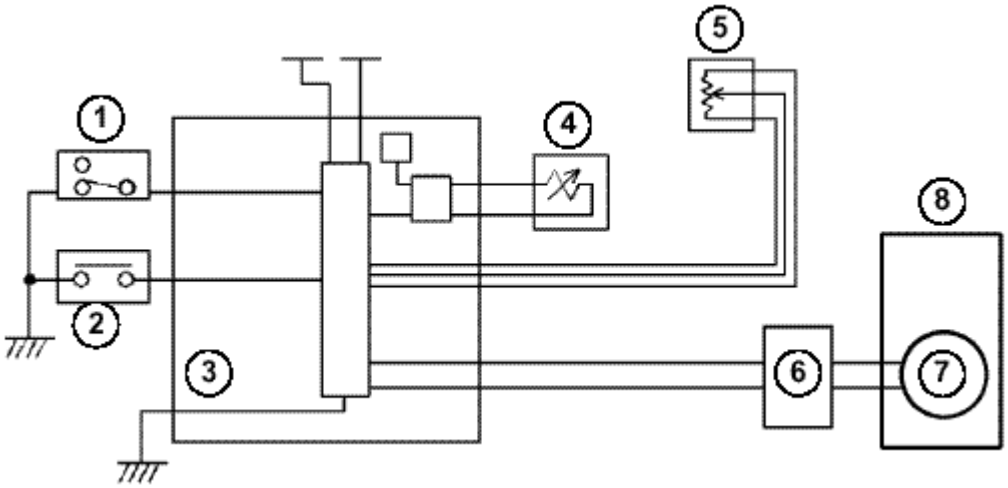


1. Auxiliary hydraulic switch
2. Hammer pilot switch
3. Main controller
4. Proportional solenoid
5. Throttle control
6. Throttle motor driver
7. Throttle motor
8. Engine

### CX210/CX240

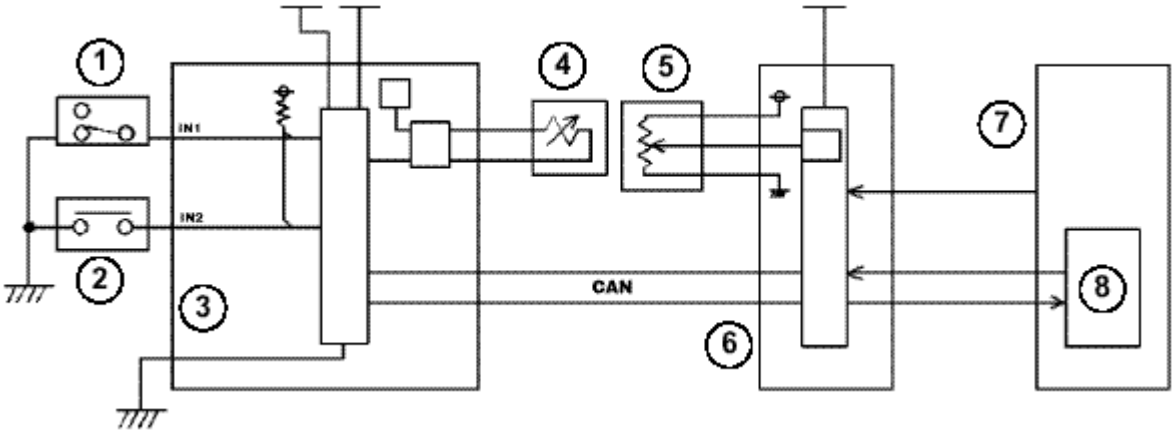


1. Auxiliary hydraulic switch
2. Hammer pilot switch
3. Main controller
4. Proportional solenoid
5. Throttle volume
6. Engine controller
7. Engine
8. Electronic injection pump

https://truckmanualshub.com/



# ELECTRIC/HYDRAULIC

## Pump Control, All Models

1) In S,H and Auto modes supply current to Electro-magnetic proportional solenoid valve on the side of the pump, will control the HP requirement of hydraulic pumps P1 and P2.

**Note:** The controller needs a RPM signal for proportional solenoid pump control.

H -MODE: when pump torque amounts to 100% of engine target torque a variable electrical signal is sent to the proportional solenoid. It varies with engine RPM.

S -MODE: when pump torque amounts to 95% of engine target torque a constant electrical signal is sent to the proportional solenoid.

L -MODE: when pump torque amounts to 70% of engine target torque no electrical signal is sent to the proportional solenoid.

AUTO -MODE: when pump torque varies between 90% to 93% of engine target torque. An electrical signal is sent to the proportional solenoid based on the mode. The mode switches between $S_A$ mode to $L_A$ mode depending on conditions. The current will equal S mode + 40mA for $S_A$ to S mode for $L_A$ mode.

When operating in auto-mode and $S_A$ mode is active and the travel pressure switch is activated (closed) the machine will stay in $S_A$ mode until the travel switch opens. If the machine is in $L_A$ mode when the travel pressure switch closes the machine will stay in $L_A$ mode until the travel pressure switch opens.

When operating in L mode and the travel pressure switch closes the machine will operate with the mA current of S mode. If the hammer pressure switch closes the machine will operate with the mA current of S mode.

Engine revolutions must exceed approximately 1500 rpm’s before the controller sends current to the pump proportional solenoid.

https://truckmanualshub.com/



# ELECTRIC/HYDRAULIC

| MODE | H MODE | | S MODE | L MODE | AUTO MODE | |
|---|---|---|---|---|---|---|
| MODEL | MAX | MIN | | | $S_A$ | $L_A$ |
| CX130 | 600mA | 450mA | 450mA | 0 | 490mA | 450mA |
| CX160 | 600 | 510 | 510 | 0 | 550 | 510 |
| CX210 | 407 | 292 | 292 | 0 | 332 | 292 |
| CX240 | 424 | 307 | 307 | 0 | 347 | 307 |

https://truckmanualshub.com/



# ELECTRIC/HYDRAULIC

## Power Boost, CX130/CX160

1) Increases power when more force is required for digging operations.
2) By pushing a button, the main relief pressure is increased for 8 seconds, in H and S mode.
3) Power Boost works at all times in L mode.

**Note:** The controller needs a RPM signal for Power Boost.

When the one-touch power boost switch is pressed ON (H and S mode), the signal enters in the main controller. 24v is sent to a solenoid valve from the controller and the solenoid valve switches. Pilot pressure enters the main relief valve and the pressure setting increases. “POWER UP” is displayed on the monitor. The increase in pressure is activated for 8 seconds. The instrument panel will display “Power Up”. Even if the power boost switch is pressed for a long time, the pressure setting increases only for 8 seconds. Power boost can not be reactivated until the 8 second time frame has passed and the switch pressed again.

In L mode power boost is active full time.

When the travel or the hydraulic option pressure switch closes.(ON) the controller will turn off the power boost solenoid.

The power boost solenoid is in the six solenoid valve located in the pump compartment.

https://truckmanualshub.com/



# POWER BOOST

## Circuit Configuration

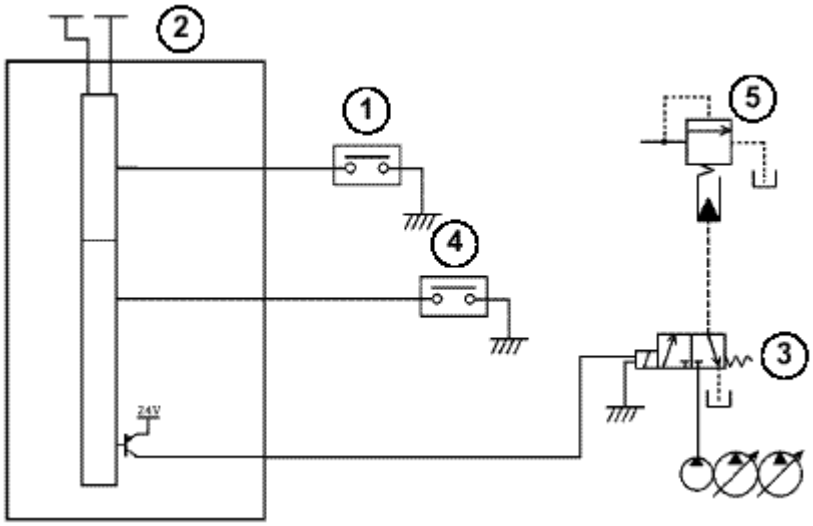


1. Power boost switch
2. Main Controller
3. Power boost solenoid valve
4. Travel pilot pressure switch
5. Main relief valve

**Pressure increase in each work mode**

| | CX130/CX160 |
|---|---|
| H MODE | 4970 → 5260 psi (8 seconds) |
| S MODE | |
| L MODE | 4970 → 5260 (constant) |
| AUTO MODE | 4970 → 5260 (8 seconds) |

https://truckmanualshub.com/



# ELECTRIC/HYDRAULIC

## Automatic Power Boost, CX210/CX240

1) In H and S work mode the controller will activate the power boost solenoid to increase main relief pressure.
2) This increase is automatic with out action by the operator.
3) The increase will activate for 8 seconds.
4) Power boost is on full time in L mode.

**Note:** The controller needs a rpm signal from the engine controller for power boost.

When operating in mode H or S, the main controller monitors the ratio between:

- The load on the engine transmitted by the engine controller.
- The load on the hydraulic system transmitted by the pressure transducers on pump1 and pump2.

If the pressure of P1 or P2 is higher than 4351 psi and the load ratio remains within a range of ± 5% for 2 seconds, the controller sends 24v to activate the power boost solenoid for 8 seconds which increases the main pressure. The instrument panel will display “Power Up”. To reactivate automatic power boost the load must be released and applied again.

When the travel or the hydraulic option pressure switch is activated, the controller deactivates the power boost solenoid valve.

The power boost solenoid is located in the six solenoid valve located in the pump compartment.

https://truckmanualshub.com/



# AUTOMATIC POWER BOOST

## Circuit Configuration

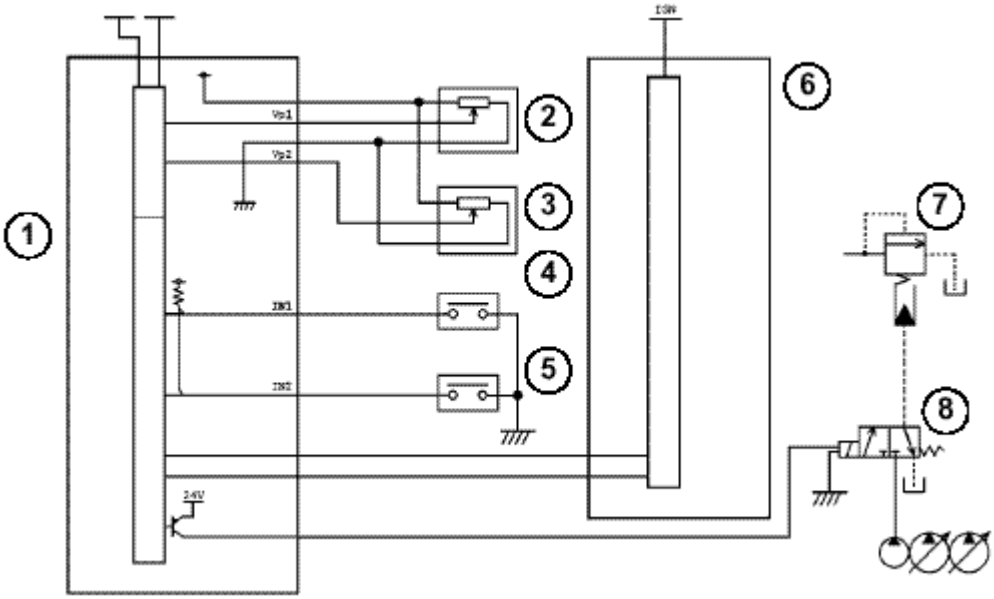


1. Main Controller
2. Pressure detector P1
3. Pressure detector P2
4. Travel pilot pressure switch
5. Option pilot pressure switch
6. Engine Controller
7. Main relief valve
8. Power boost solenoid valve

**Pressure increase in each work mode**

| | CX210/CX240 |
|---|---|
| H MODE | 4970 → 5410 psi (8 seconds) |
| S MODE | |
| L MODE | 4970 → 5410 (constant) |
| AUTO MODE | 4970 → 5410 (8 seconds) |

https://truckmanualshub.com/



# ELECTRIC/HYDRAULIC

## 2–Speed Travel, All Models

1) The machine will default to low speed when the key switch is turned ON.
2) When high speed is selected the swash plates in the travel motors is shifted to minimum angle. (see section 4)
3) Travel speed will shift into low speed automatically when the pump pressure reaches approximately 4200 psi (see section 4). The instrument panel display does not change.

**Note:** The controller needs a rpm signal and the travel pressure switch for high speed travel.

When the key switch is positioned in the “ON” position, low-speed is selected by default. Each time the speed switch is pressed, the controller registers a signal (0 volt). The controller changes travel speed in the following sequence Lo_Hi_Lo and transmits the changes to the instrument panel screen (LCD).

### Travel speed Lo selected

The output from the controller to the travel speed solenoid is OFF.

### Travel speed Hi selected

The output from the controller to the travel speed solenoid is ON (24v). Pilot pressure is sent to the 2-speed spool in the travel motors and high speed is achieved. When pressure P1 or P2 is lower than 580 psi the controller will deactivate the travel speed solenoid ($1^{st}$ speed). When pressure P1 or P2 rises above 580 psi the controller will reactivate the travel speed solenoid valve ($2^{nd}$ speed). High speed travel can be forced (for cleaning tracks) by holding the travel speed switch pressed for over 2 seconds.

When the travel pressure is higher than 4200 psi, travel motor 2-speede spool is shifted and the swash plate shifts back to the low speed position (1st speed).

When the attachment controls are operated, travel speeds can not be changed.

https://truckmanualshub.com/



# TRAVEL SPEED

## Circuit Configuration

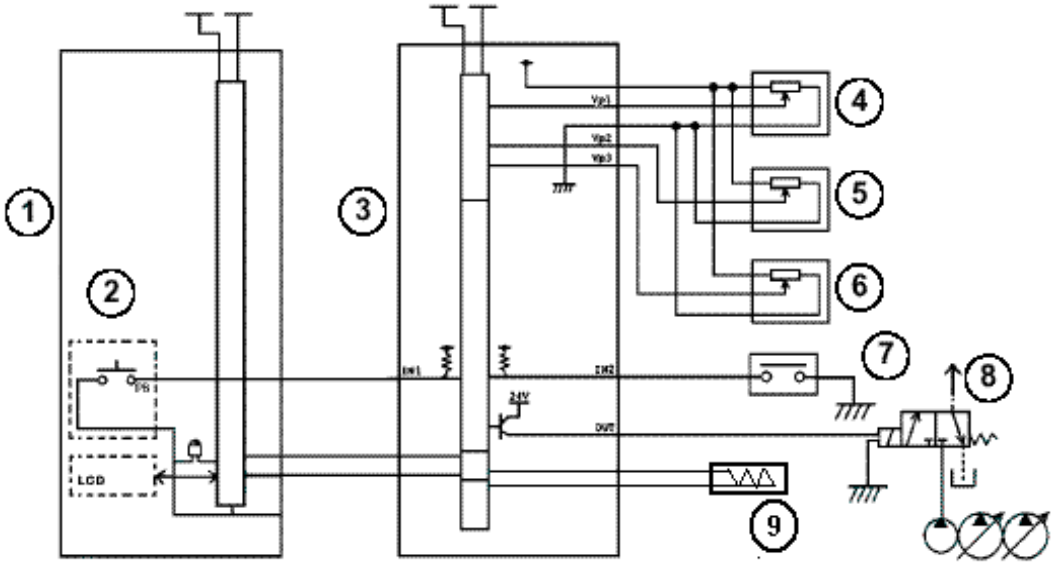


1. Instrument panel
2. Travel speed switch
3. Main controller
4. Pressure transducer pump1
5. Pressure transducer pump2
6. De-stroke pressure transducer
7. Travel pilot pressure switch
8. Travel speed solenoid valve
9. RPM sensor

https://truckmanualshub.com/



# ELECTRIC/HYDRAULIC

## Cushion (on/off), All Models

1) Controls the pilot oil of the boom and arm spools.
2) This feature can be turned off by the operator.
3) Each time the machine is started, it will be in Cushion ON.

**Note:** The controller needs a RPM signal for cushion Off.

Output to the cushion solenoid valve is OFF when the key switch is ON. This is cushioned status.

To turn the cushion feature OFF the cushion switch is pressed. The controller will send 24v to the cushion solenoid. The solenoid valve shifts and sends pilot pressure to the cushion valve and shifts the valve to the non-cushion position. The cushion solenoid valve is in the six solenoid valve located in the pump compartment.

https://truckmanualshub.com/



# CUSHION OFF

## Circuit Configuration

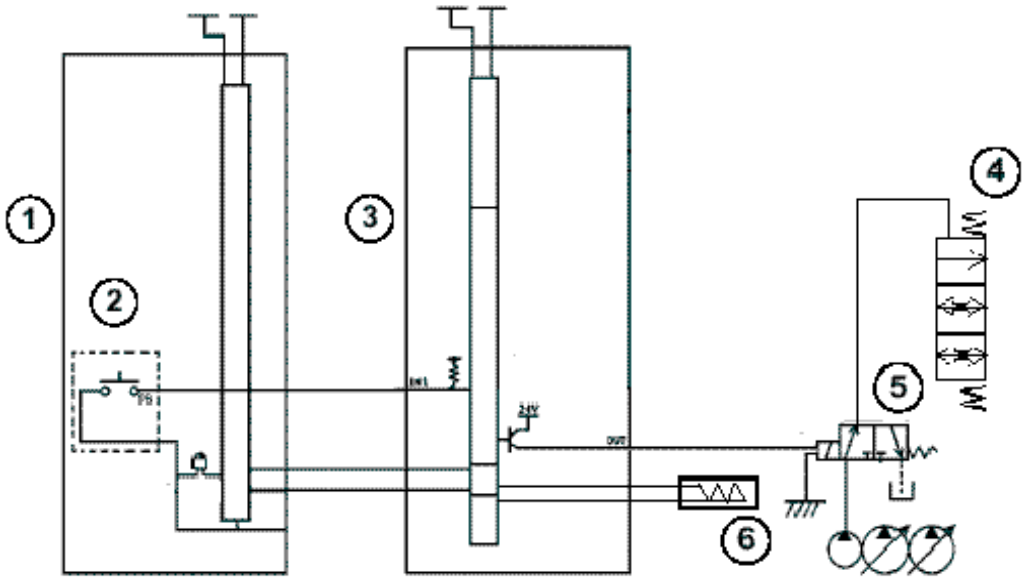


1. Instrument Panel
2. Cushion switch
3. Main controller
4. Cushion valve
5. Cushion solenoid
6. RPM sensor

https://truckmanualshub.com/



# ELECTRIC/HYDRAULIC

## Swing Brake, All Models

1) The mechanical swing brake will apply 5 seconds after the swing hand control is returned to neutral.

2) The brake solenoid valve is turned on when the key switch is turned on.

When the swing and an attachment function are operated simultaneously, the mechanical swing brake is automatically released. When the operation stops, the mechanical swing brake is automatically activated by the main controller. The swing brake is automatically deactivated when:

- The swing pilot pressure switch is activated.
- When the pressure at the pressure detectors P1 or P2 is higher than 2075 psi.

The swing brake is automatically activated when:

- The pilot pressure switch (6) is deactivated for more than 5 seconds.
- The starter switch (3) is in the OFF position.

https://truckmanualshub.com/



# SWING BRAKE

## Circuit Configuration

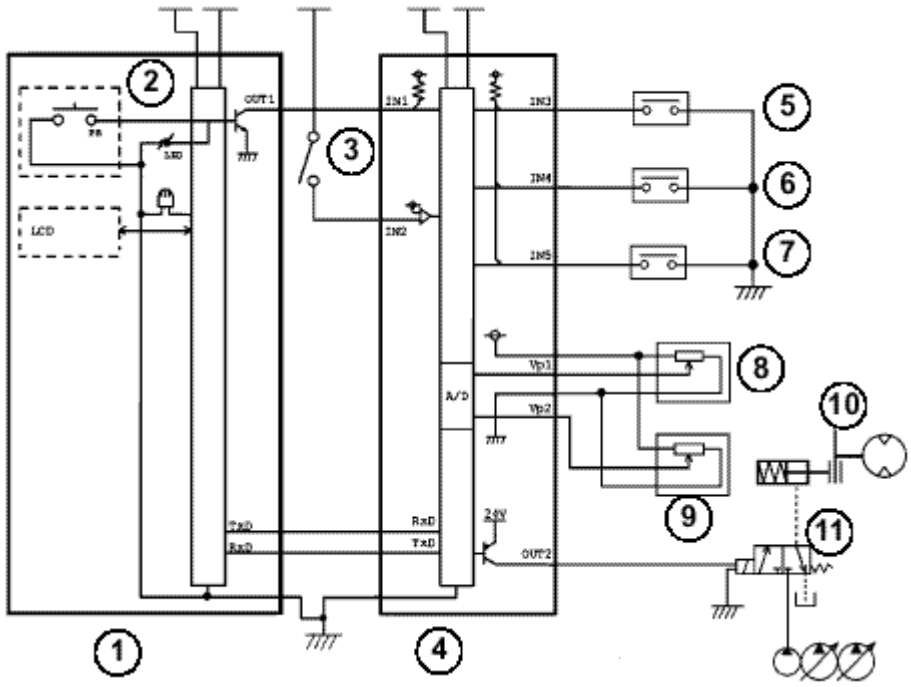


1. Instrument panel
2. Swing brake switch
3. Starter motor switch
4. Main controller
5. Swing pilot pressure switch
6. Pilot pressure switch
7. Travel pressure switch
8. Pressure transducer P1
9. Pressure transducer P2
10. Swing brake
11. Swing brake solenoid valve

https://truckmanualshub.com/



# ELECTRIC/HYDRAULIC

## Swing Lock, All Models

1) When the swing brake switch is pressed the swing brake will apply.

2) The swing control will be locked in neutral.

When the swing brake switch is pressed the controller sends 24v to the swing brake solenoid, which shifts and allows the swing brake to apply. The controller also sends 24v to the swing shutoff solenoid. This sends pilot pressure through the swing shuttle valve to both ends of the swing control spool in the control valve. This hydraulically locks the control spool in neutral.

https://truckmanualshub.com/



# SWING LOCK

## Circuit Configuration

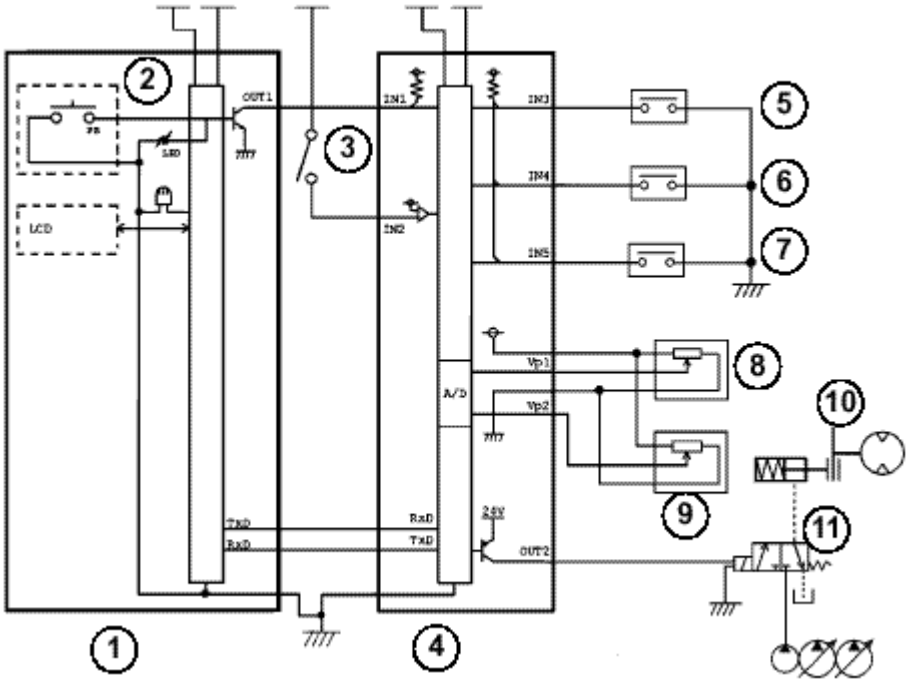


1. Instrument panel
2. Swing brake switch
3. Starter motor switch
4. Main controller
5. Swing pilot pressure switch
6. Pilot pressure switch
7. Travel pressure switch
8. Pressure transducer P1
9. Pressure transducer P2
10. Swing brake
11. Swing brake solenoid valve

https://truckmanualshub.com/



# ELECTRIC/HYDRAULIC

## Free Swing, All Model

1) Free swing allows the upperstructure to “coast” to a stop.
2) The swing brake does not apply while free swing is on.

**Note:** The controller needs a RPM signal for free swing.

When the free swing switch is pressed the controller sends 24v to energize the free swing solenoid. The valve shift and connects both sides of the swing motor together through an orifice. This allow for “smooth” starts and stops. The upperstructure “coasts” to a stop.

https://truckmanualshub.com/



# FREE SWING

## Circuit Configuration

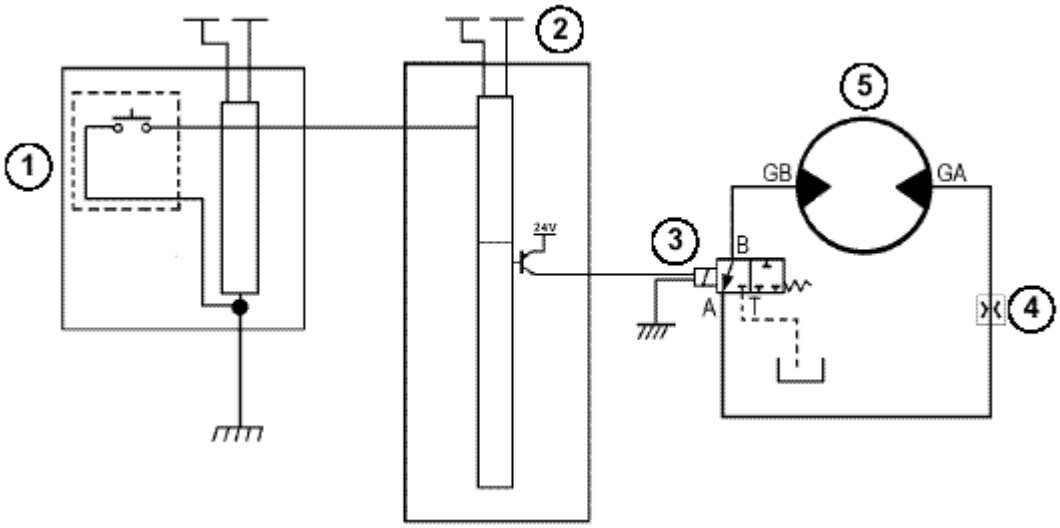


1. Free swing switch
2. Main controller
3. Free swing solenoid valve
4. Orifice Ø 2.5
5. Swing motor

https://truckmanualshub.com/



# ELECTRIC/HYDRAULIC

## Lever Lock (pilot lockout), All Models

1) When the gate lever or the left console is raised the pilot controls will be disabled.

The pilot pressure solenoid receives 24v from the pilot pressure fuse through a limit switch in the left console. When the gate lever is lowered the switch closes and sends 24v to the pilot pressure solenoid in the six solenoid valve.

https://truckmanualshub.com/



# LEVER LOCK (PILOT LOCKOUT)

## Circuit configuration

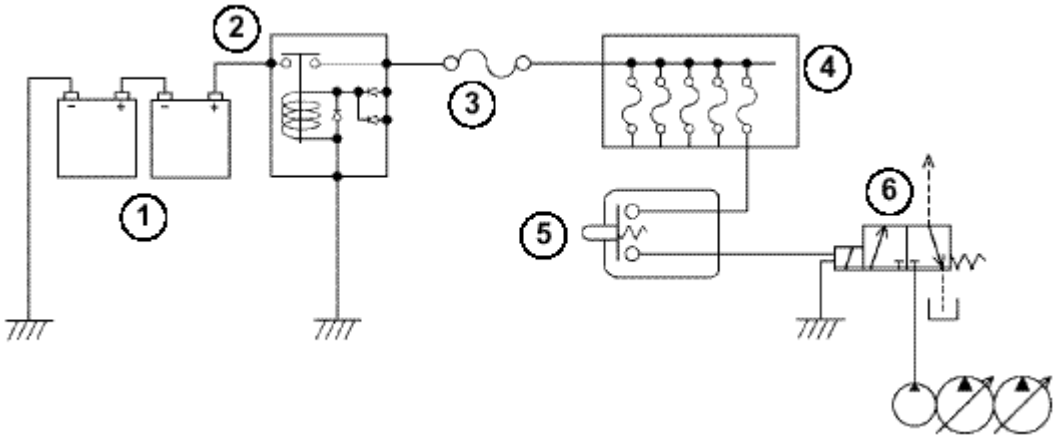


1. Battery
2. Battery relay
3. Main protective fuse
4. Fuse box
5. Control cancellation lever switch
6. Pilot pressure control solenoid valve

https://truckmanualshub.com/

CASE

## Construction Equipment Service Training

# CX SERIES EXCAVATOR

## Section 5 --
## Hydraulic - CX130/CX160
## "How it Works"

(2001)

Training Pays

https://truckmanualshub.com/

**CASE CORPORATION**
**700 STATE STREET**
**RACINE, WI 53404 U.S.A.**

**CASE CANADA CORPORATION**
**3350 SOUTH SERVICE ROAD**
**BURLINGTON, ON L7N 3M6 CANADA**

**© 2001 Case Corporation**
**All Rights Reserved**

Printed in U.S.A.

https://truckmanualshub.com/



# Table of Contents

## Section 5 - Hydraulic

**PAGE NO.**

Operation / Function Summary....2-4

TRAVEL

Low Speed Travel....6-7
High Speed Travel....8-11
Straight Travel....12-15

SWING

Swing Operation....16-19
Swing Lock....20-21
Swing Priority....22-23

ATTACHMENT

Boom Raise....24-25
Boom Lower....26-27
Arm Open (Out)....28-29
Arm Close (In)....30-31
Cushion Operation (**ON**)....32-35
Cushion Off Operation (**OFF**)....36-37

FEATURES

One-Touch Power Boost....38-39
Main Relief Valve....40-41
Neutral Pump De-stroke (negative flow control)....42-43
Free Swing Operation....44-45

OPTIONS

Auxiliary Attachment Operation....46-47

https://truckmanualshub.com/



## TRAVEL

| Operation | Function | Explanation |
|---|---|---|
| Low Speed Travel | 1) The swash plate angle of a travel motor is shifted to maximum angle. Low-speed is the default mode. | See pages 6-7 |
| High Speed Travel | 1) The Travel Speed solenoid is energized and the swash plate angle of the travel motors is shifted to minimum angle, high-speed travel occurs.<br>2) The travel motors will switch to low-speed automatically when the travel pressure reaches approximately 4200 psi and switch back to high-speed when the travel pressure is reduced. | See pages 8-11 |
| Straight Travel | 1) When performing travel operation + attachment operation or travel operations + swing operation, one pump is dedicated to the travel motors. The other pump will supply oil to the other functions. | See pages 12-15 |

## SWING

| Operation | Function | Explanation |
|---|---|---|
| Swing Operation with Brake | 1) During swing operation only one pump is used.<br>2) The upper structure is braked hydraulically when the supply and return ports are blocked at the control spool. A crossover relief built-in to the swing motor protects the swing motor from pressure spikes.<br>3) Swing mechanical brake is applied 5 seconds after swing lever is returned to neutral position. | See pages 16-19 |
| Swing Lock | 1) When the Swing Brake switch is pressed the Swing Brake solenoid is energized and the brake is applied.<br>2) The Swing Shutoff solenoid is energized and the swing control spool is locked in neutral. | See pages 20-21 |
| Swing Priority | 1) When swing and arm is used at the same time swing supply will have priority over arm. | See pages 22-23 |

https://truckmanualshub.com/



## ATTACHMENT

| Operation | Function | Explanation |
|---|---|---|
| Boom Raise | 1) With boom up only operation two pump flows inside the control valve are combined, when the boom1 and boom2 spools are shifted. | See pages 24-25 |
| Boom Lower | 1) When a built-in anti-drift valve in the control valve is opened and boom1 spool is shifted, the boom can be lowered.<br>2) Only one pump flow is used.<br>3) A regeneration circuit inside the control valve provides additional speed and prevents cavitation. | See pages 26-27 |
| Arm Open (Out) | 1) With arm only operation two pump flows inside the control valve are combined, when the arm1 and arm2 spools are shifted. | See pages 28-29 |
| Arm Close (In) | 1) With arm only operation two pump flows inside the control valve are combined, when the arm1 and arm2 spools are shifted.<br>2) When a built-in anti-drift valve in the control valve is opened and arm1 spool is shifted, the arm can be closed.<br>3) A regeneration circuit inside the control valve provides additional speed and prevents cavitation. | See pages 30-31 |
| Cushion **"ON"** Operation (Boom & Arm) | 1) As a control spool returns to neutral (center) position, the pilot oil must return through an orifice in the cushion valve.<br>2) The slow movement of the spool provides the cushion feature.<br>3) The Cushion only occurs in the boom and arm circuits. | See pages 32-35 |
| Cushion **"OFF"** Operation | 1) When the cushion solenoid is energized pilot pressure is sent to the cushion valve, the orifices are shifted out of the circuit and the cushion feature will not function. | See pages 36-37 |

https://truckmanualshub.com/



## FEATURES

| Operation | Function | Explanation |
|---|---|---|
| One Touch Power boost | 1) When the Power boost button is pressed, the power boost solenoid is energized and the main relief pressure will be raised approximately 8%.<br>2) This power boost increase will occur for 8-second intervals.<br>3) Power boost in on full time in L mode | See pages 38-39 |
| Main Relief Valve | The Main Relief has two adjustments:<br>1) Standard Main Relief pressure<br>2) Power Boost Pressure | See pages 40-41 |
| Neutral pump Destroke (negative flow control) | 1) If the flow output of P1 or P2 hydraulic pump is not needed the output is kept at a minimum flow rate (negative control flow rate), and energy consumption is reduced. | See pages 42-43 |
| Free Swing Operation | 1) An orifice leak is opened between the A and B ports of the swing motor. This will provide smoother starts and stops of the swing during hoisting operations. | See pages 44-45 |

## OPTIONS

| Operation | Function | Explanation |
|---|---|---|
| Auxiliary hydraulic kits | There are three auxiliary hydraulic options.<br>1) Hammer kit (one direction, one pump flow)<br>2) Multi-kit (two direction or one direction flow, one pump or two pump flow)<br>3) Thumb Kit (two direction, one pump flow) | See pages 46-47 |

https://truckmanualshub.com/



This page left blank intentionally.

https://truckmanualshub.com/



# TRAVEL

## Low Speed Travel

1) The swash plate angle of the travel motors is set to maximum angle, low-speed travel occurs. The monitor display will indicate low-speed (LO).
2) The machine will default to Low-Speed when the machine is started.

Low-speed is the normal travel speed. When the key switch is set to **OFF** and then to **ON** again, travel mode is always returned to low speed regardless of the last setting. The drive motor swash plates are at maximum angle for maximum torque.

When the travel pilot valves are operated pilot pressure is sent to the right and left travel control spools in the main control valve. Oil flow from pump1 (front pump) enters the PR port of the control valve and oil flow from pump2 (rear pump) enters the PL port of the control valve. When the right and left travel spools are shifted, pump flow is directed to the travel motors for forward or reverse operation. If travel only is engaged P1 (front pump) will supply flow to a travel motor and P2 (rear pump) will supply flow to the other travel motor.

The travel motors have spring applied and hydraulically released brakes. The brakes are released internally by supply pressure.

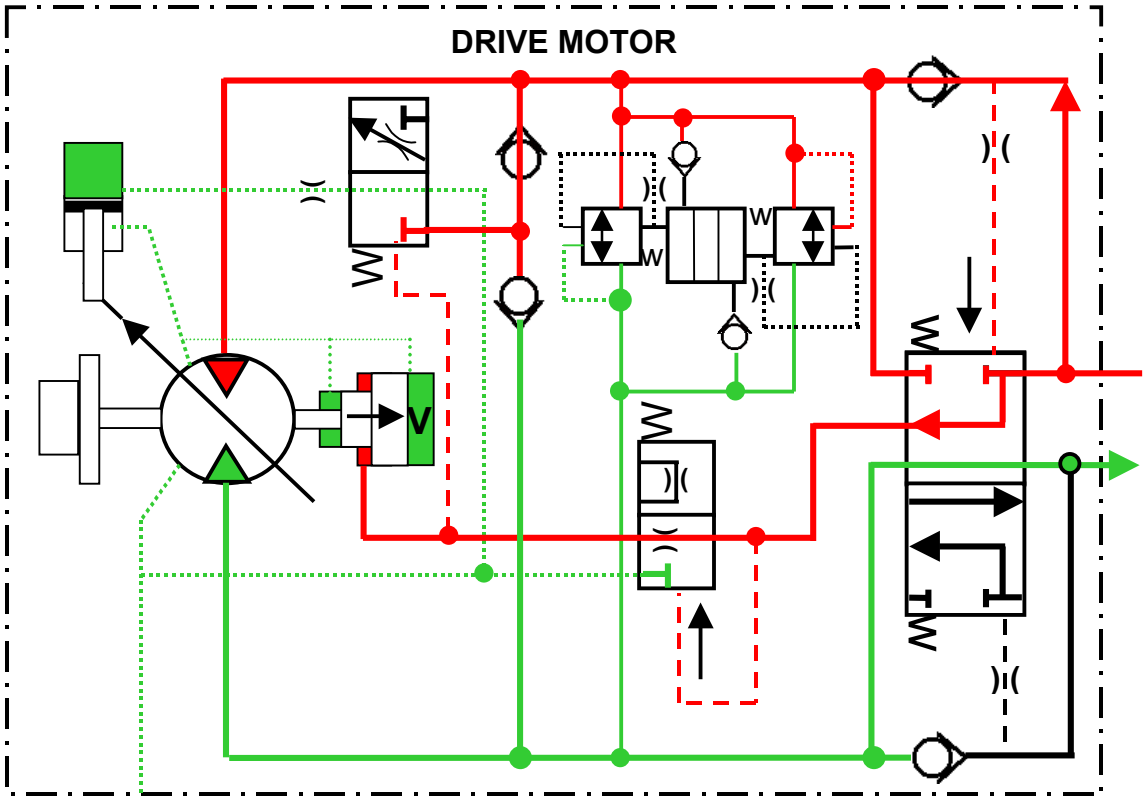

https://truckmanualshub.com/



# LOW SPEED TRAVEL

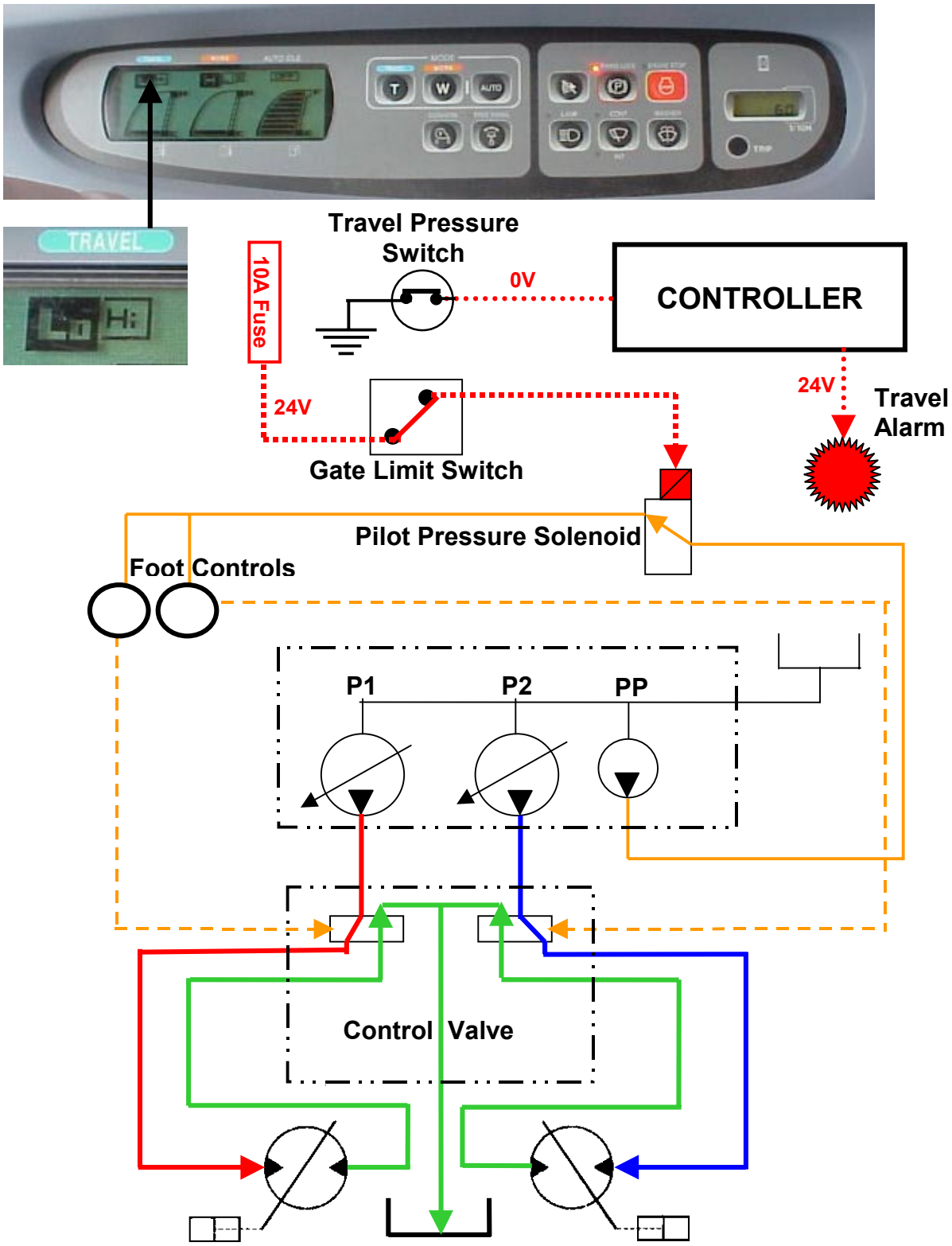

https://truckmanualshub.com/



# TRAVEL

## High Speed Travel

1) The travel-speed solenoid is energized and the swash plate angle of a travel motor is shifted to minimum angle, high-speed travel occurs. The monitor display will indicate high-speed (Hi).
2) The travel motors will switch to low-speed automatically at approximately 4200 psi and switch back to high-speed when the travel pressure is reduced. The monitor display does not change.

**Note:** The controller needs a RPM signal and the Travel pressure switch for High-Speed travel.

High-speed travel occurs when the operator selects high-speed with the travel switch on the control panel. The travel switch sends an electrical signal to the controller. The controller will send a 24v signal to energize the travel-speed solenoid. When the valve is shifted, pilot pressure (550/600 psi) is directed from the solenoid valve to the travel motors. The pilot pressure shifts the 2-speed spool, which directs supply oil to shift the swash plate to minimum angle. The travel motors will shift to low-speed when the supply pressure reaches approximately 4200 psi. A pilot signal from the supply pressure inside the drive motors is routed to the 2-speed spool to shift it to the low-speed position. When the supply pressure is reduced the drive motors will shift back to high-speed. The controller will turn off the high speed solenoid if the travel pressure drops below 580 psi to slow down travel going down a steep grade. The travel speed solenoid valve is located in the six-solenoid valve bank. The six-solenoid valve is located in the pump compartment.

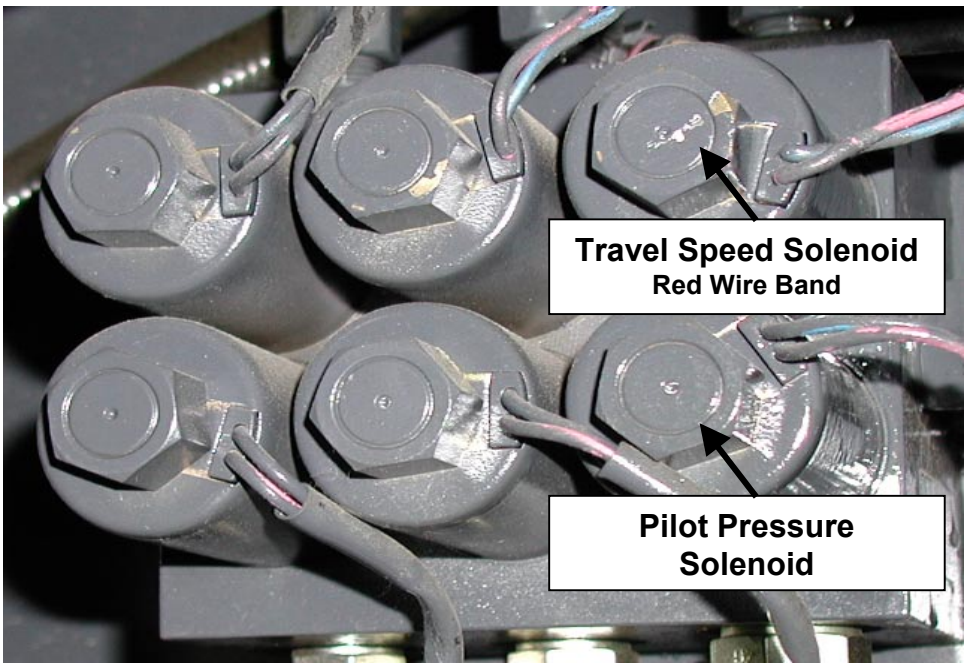

https://truckmanualshub.com/



# HIGH SPEED TRAVEL

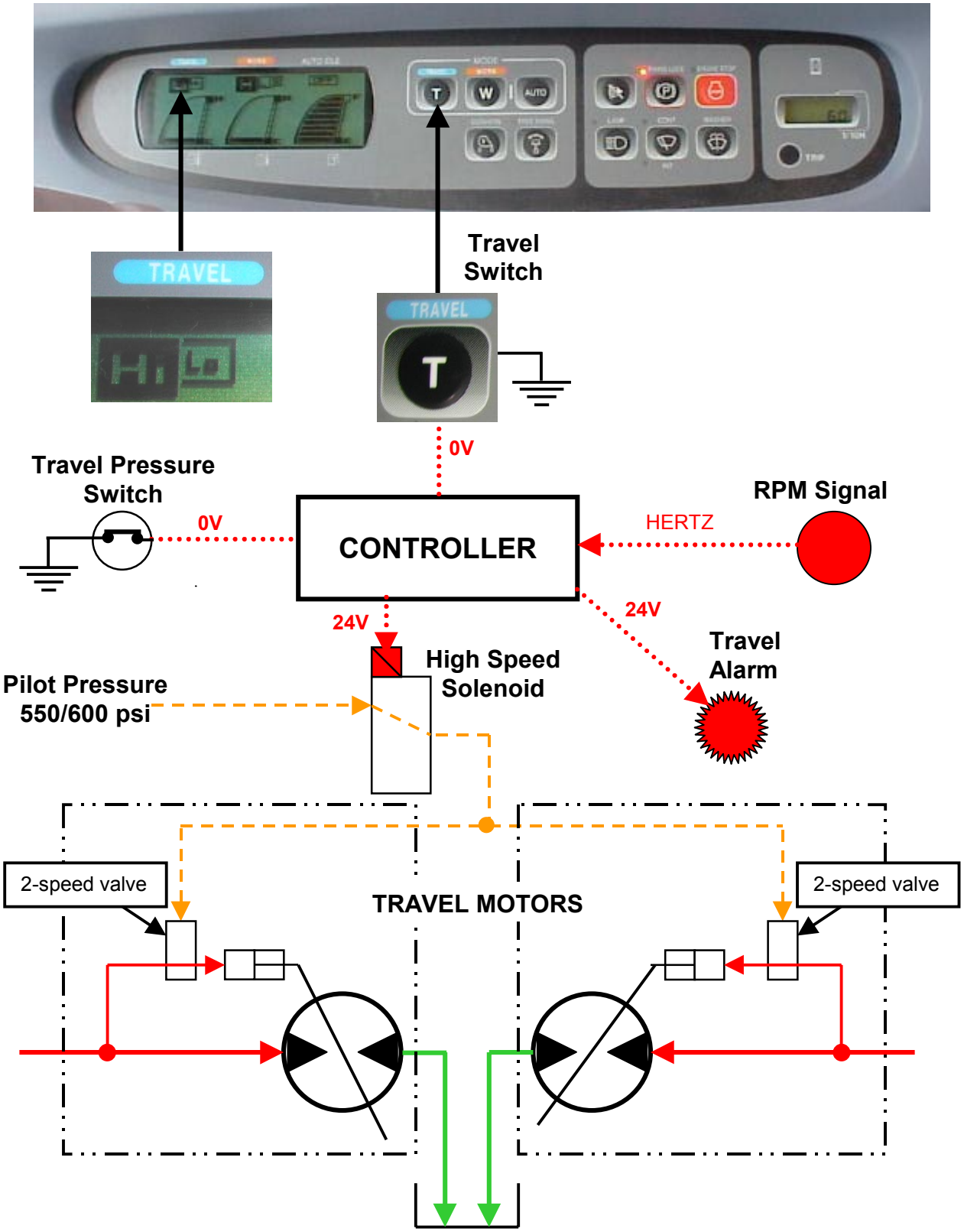

https://truckmanualshub.com/



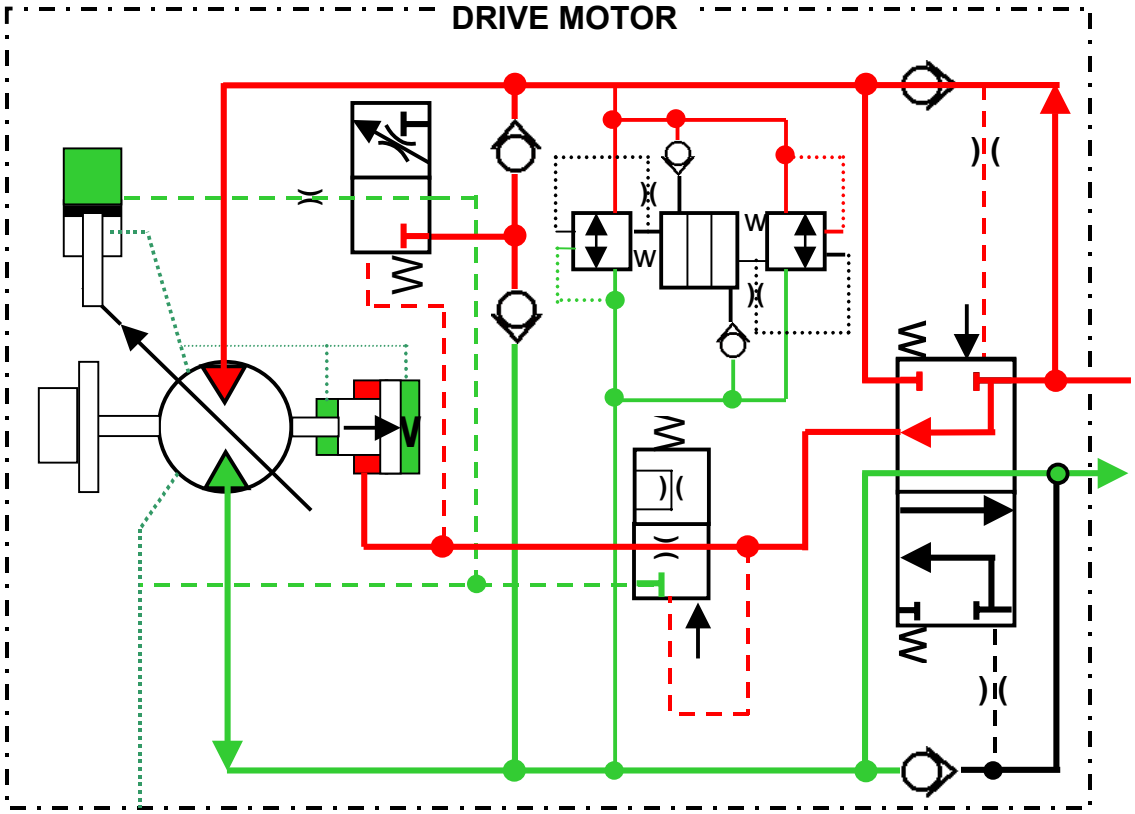


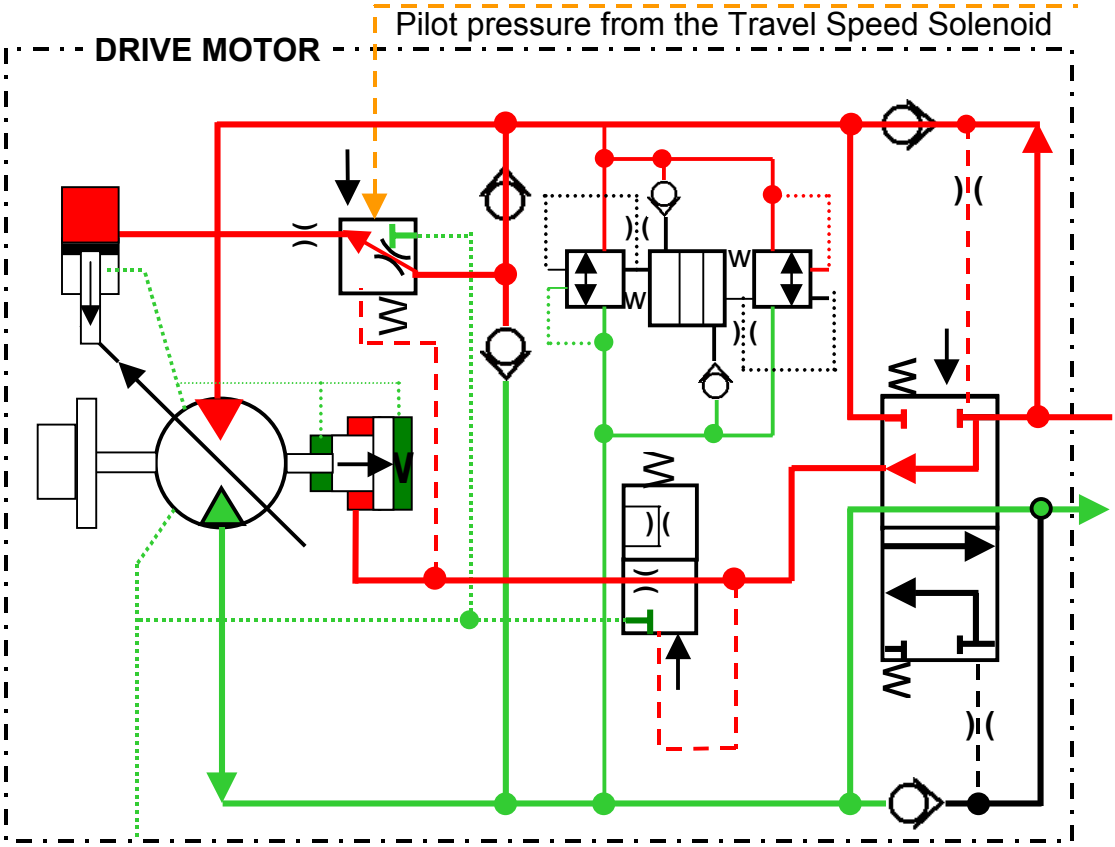

https://truckmanualshub.com/



This page left blank intentionally.

https://truckmanualshub.com/



# TRAVEL

## Straight Travel

1) When performing travel operation + attachment operation or travel operations + swing operation, one pump is dedicated to the travel motors. The other pump will supply oil to the other functions.

An example of straight travel is explained using the example of travel + boom raise operation. During travel operation, oil flow from pump1 (front pump) enters the PR port of the control valve and oil flow from pump2 (rear pump) enters the PL port of the control valve. When the right and left travel spools are shifted, oil flow is directed to the travel motors for forward or reverse operation. At this time each pump is dedicated to a travel motor. When the boom raise operation is executed, the return circuit for the upper pilot pressure circuit is blocked. The resulting pressure rise in the upper pilot pressure circuit shifts the straight travel pilot valve. This in turn shifts the straight travel valve. Which directs flow from pump1 for boom operation and flow from pump2 is directed to both travel motors. This way boom raise operation is performed and straight travel is maintained. Oil from pump1 not needed by the upper attachment is routed to the pump2 travel circuit through an orifice and check valve to assist in travel speed during straight travel.

https://truckmanualshub.com/



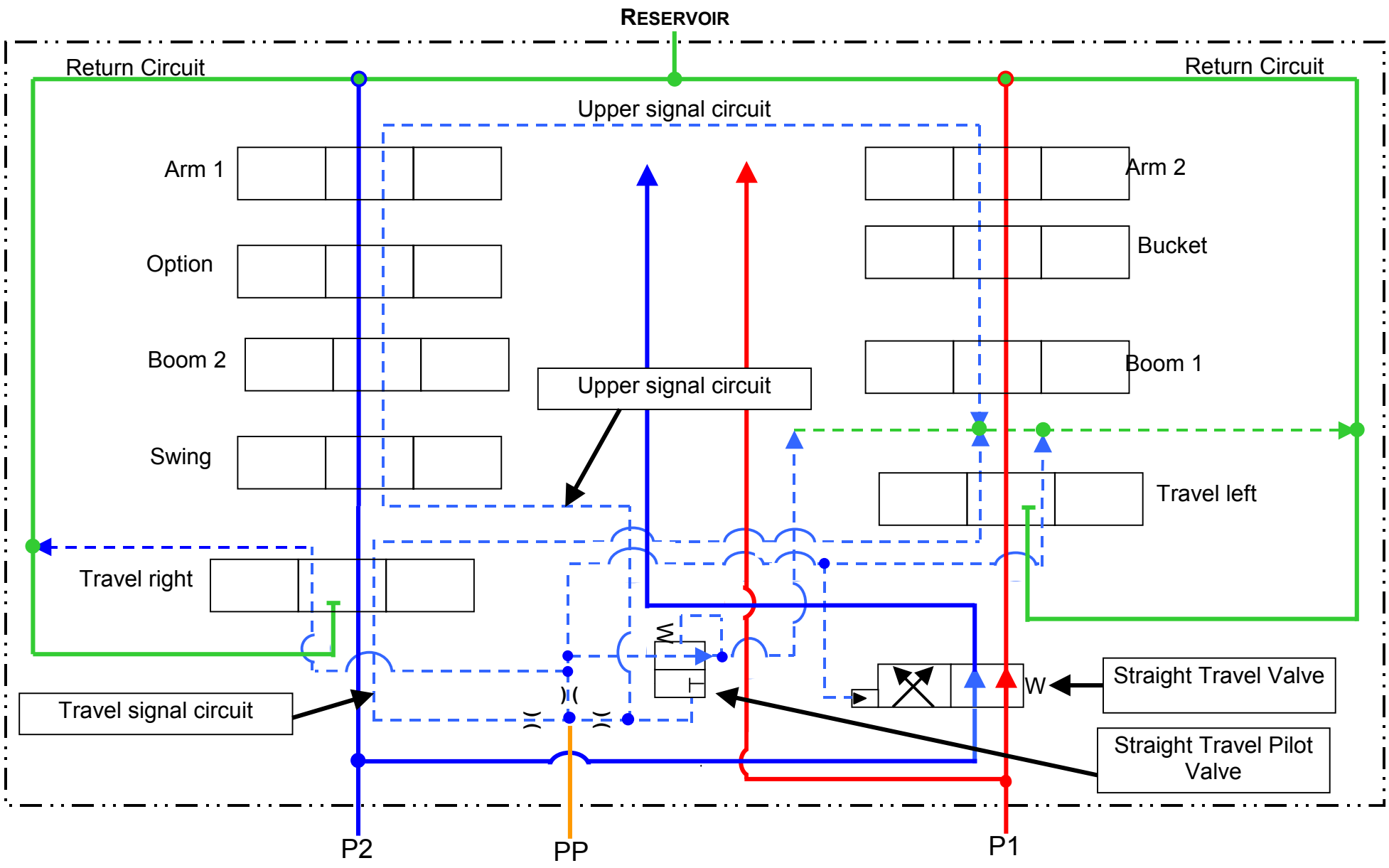

https://truckmanualshub.com/



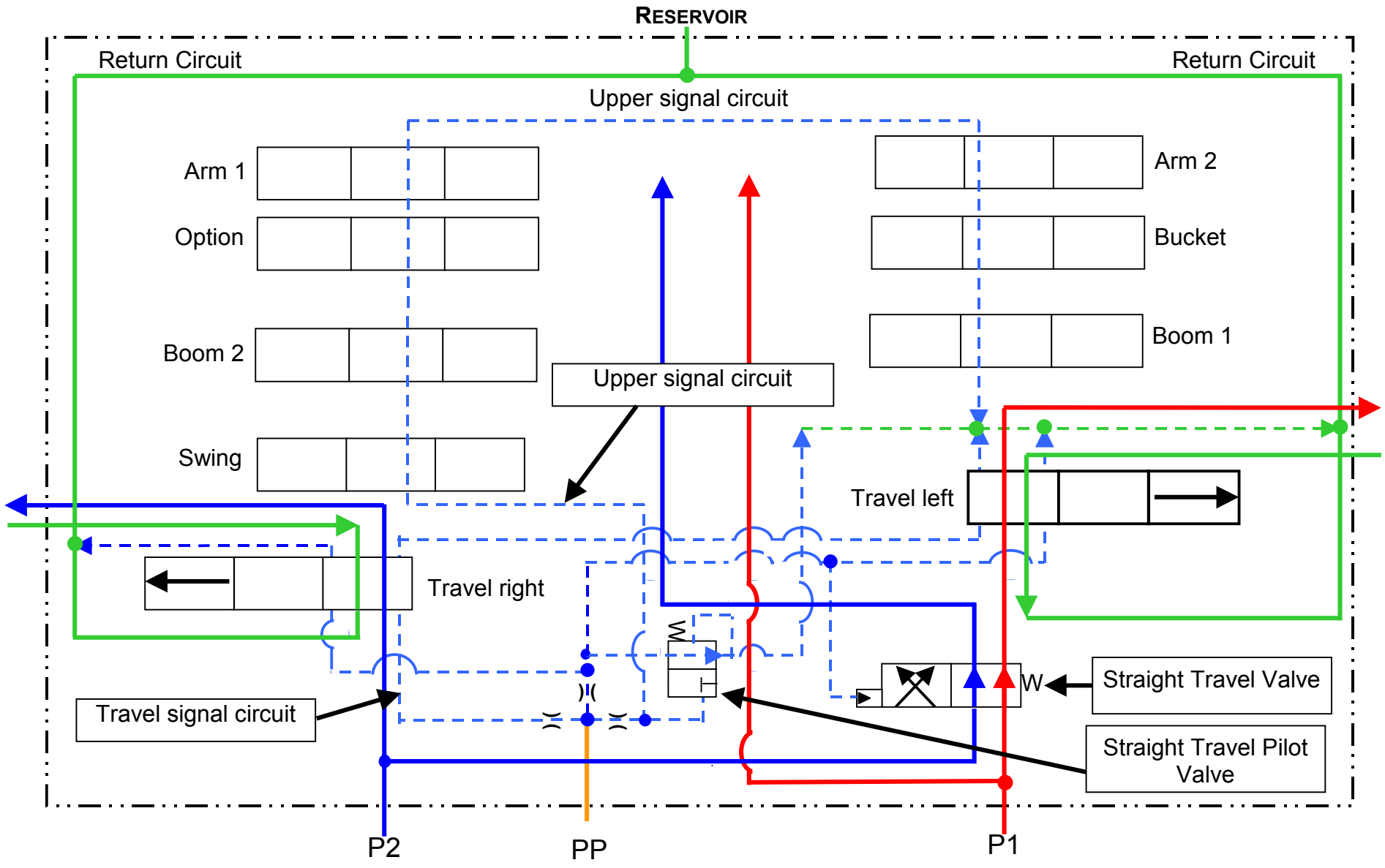

https://truckmanualshub.com/



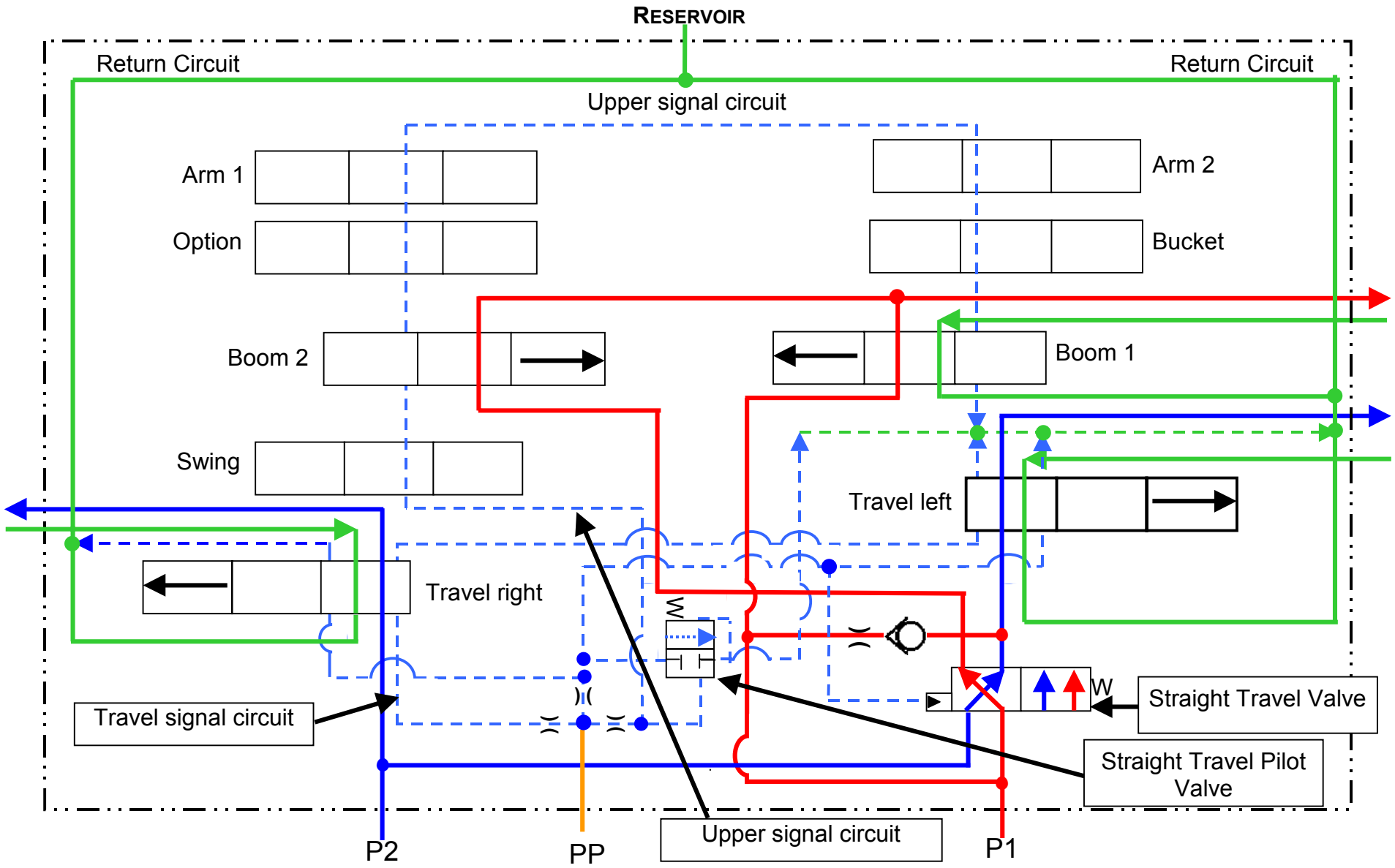

https://truckmanualshub.com/



# SWING

## Swing Operation

1) The swing holding brake prevents the upper structure from drifting on a hillside until the swing hand control is moved or either main pump pressure is raised to +2050 psi.
2) Pilot oil from the swing brake solenoid valve releases the swing brake.
3) The machine uses flow from one pump during swing operation.
4) The upper structure is braked hydraulically before the swing holding brake is applied.

## Swing, Brake off Operation

When the swing hand control is operated, pilot pressure is directed to the swing control spool in the main control valve. The control spool shifts and sends pump2 oil to the swing motor for left or right swing. At the same time a pressure switch in the swing pilot circuit is closed. The pressure switch sends a signal to the controller which turns **OFF** the swing-brake solenoid valve, the valve shifts and sends full pilot pressure (550/600 psi) to the swing brake to release the brake. The swing pressure switch is located in the swing shuttle valve mounted behind the cab. The swing brake solenoid is part of the six-solenoid valve located in the pump compartment.

When ever either main pump pressure reaches approximately 2050 psi the controller will release the swing brake by turning **OFF** the swing-brake solenoid. This is done to protect the upper structure from side loading that occurs while digging. The controller monitors pump pressure by way of pressure transducers located at each main pump.

## Swing Braking Operation

When the swing control is returned to neutral, the centering springs of the swing control spool shift the spool to neutral. The oil flow from pump2 (rear pump) to the swing motor is diverted and the supply and return ports of the swing motor are blocked. The inertia from the swing movement will cause a pressure spike in the blocked return side of the motor. To prevent spike pressure damage, a built-in crossover relief valve is opened and oil flows through a make-up check valve to the supply side of the motor or to the reservoir. When the pressure is equalized between the return and supply ports the motor acts as a brake and swing motion is stopped. Between the time the supply and return ports are blocked by the control spool and the crossover relief opens, oil from the main return circuit is available at port Mu of the swing motor to pass through the make-up check valve to the supply side of the motor.

Five seconds after the swing lever is returned to neutral (swing pressure switch opens), the swing brake is applied when the controller sends an (24v) signal to energize the swing brake solenoid. The valve shifts and dumps the brake release pressure back to tank. The brake is spring applied and hydraulically released.

https://truckmanualshub.com/



# SWING BRAKE ON

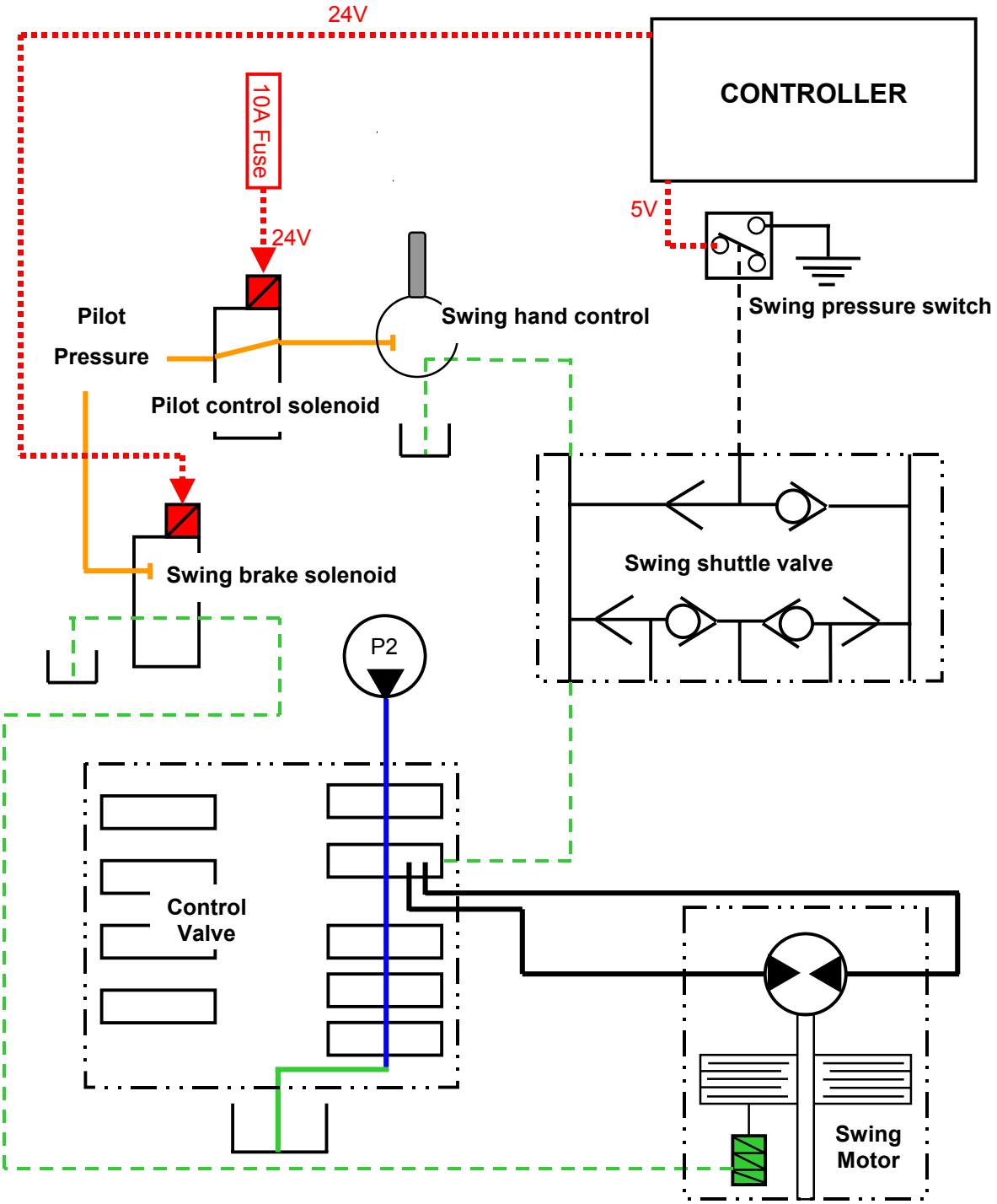

https://truckmanualshub.com/



# SWING BRAKE OFF

## With Swing Operation

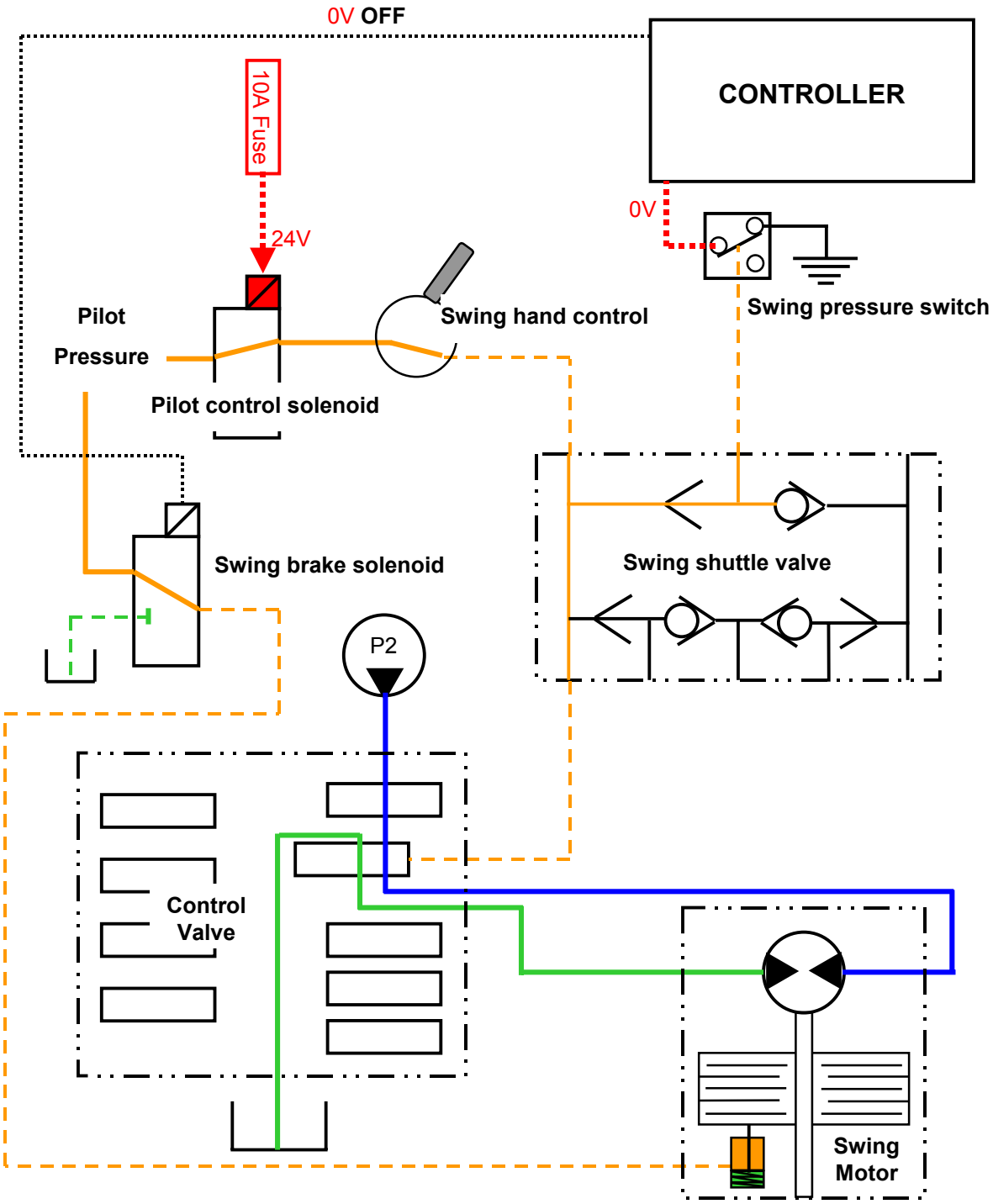

https://truckmanualshub.com/



# SWING BRAKE OFF

## With Pump Pressure

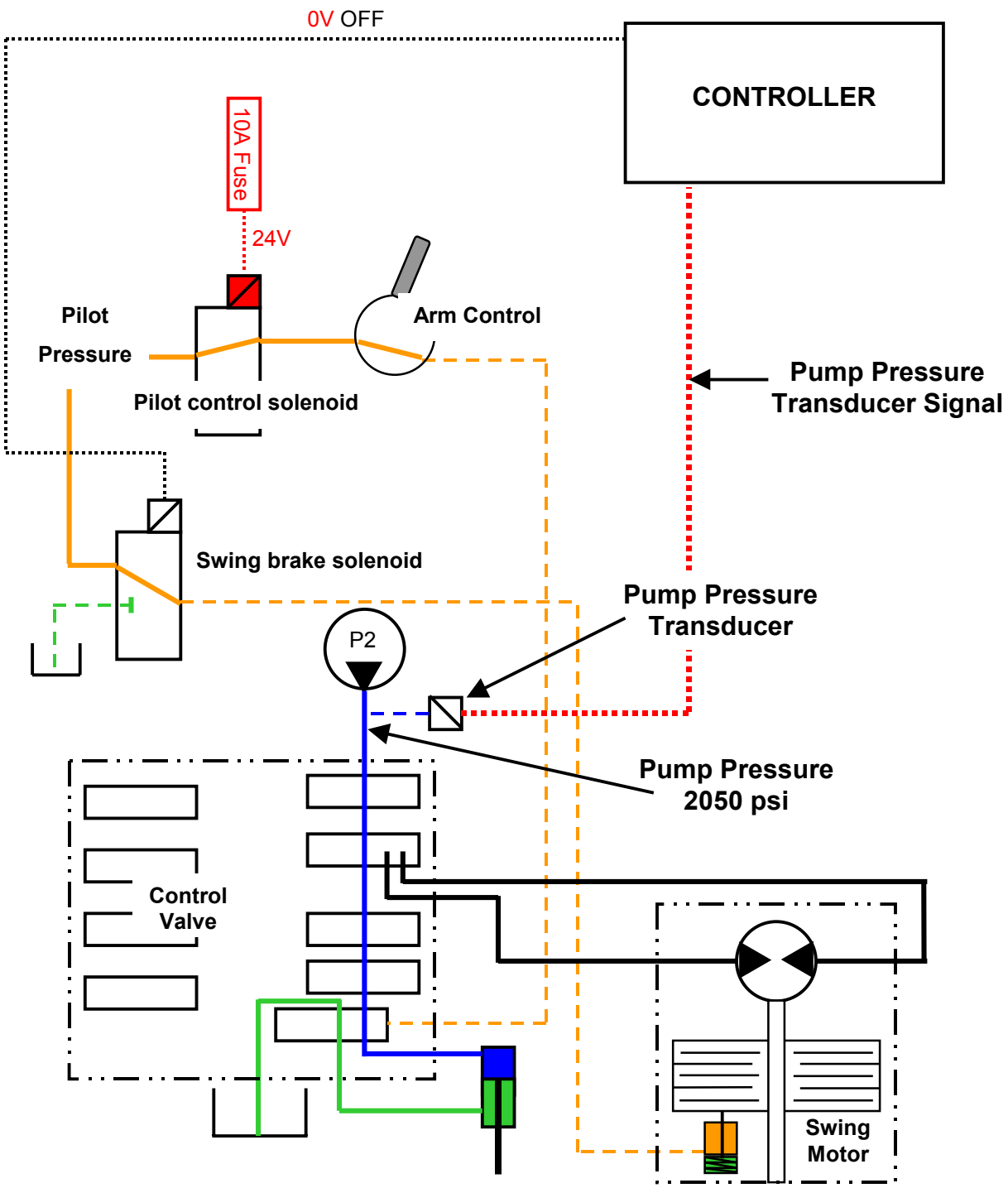

https://truckmanualshub.com/



# SWING

## Swing Lock

1) The swing-brake solenoid is activated allowing the spring-applied brake to fully apply.
2) The swing-shutoff solenoid is activated, hydraulically locking the swing spool.
3) This swing lock condition is maintained, even if the key switch is turned "**OFF**" and "**ON**" again.

With the swing-brake switch **ON**, the swing brake is maintained and the swing control valve is locked into the neutral position.

When the swing-brake switch on the control panel is switched **ON**, a signal is sent to the controller. The controller sends 24v to energize the swing-brake solenoid valve. The valve shifts and connects the swing-brake release circuit to tank and allows the brake to apply. The controller also sends 24v to energize the swing shut-off solenoid valve. The valve shifts and sends pilot pressure (550/600 psi) through a shuttle valve to both sides of the swing control spool in the main control valve and hydraulically locks it in neutral. The swing-brake and swing-shutoff solenoids are located in the six-solenoid valve bank, located in the pump compartment. The swing shuttle valve is located behind the cab.

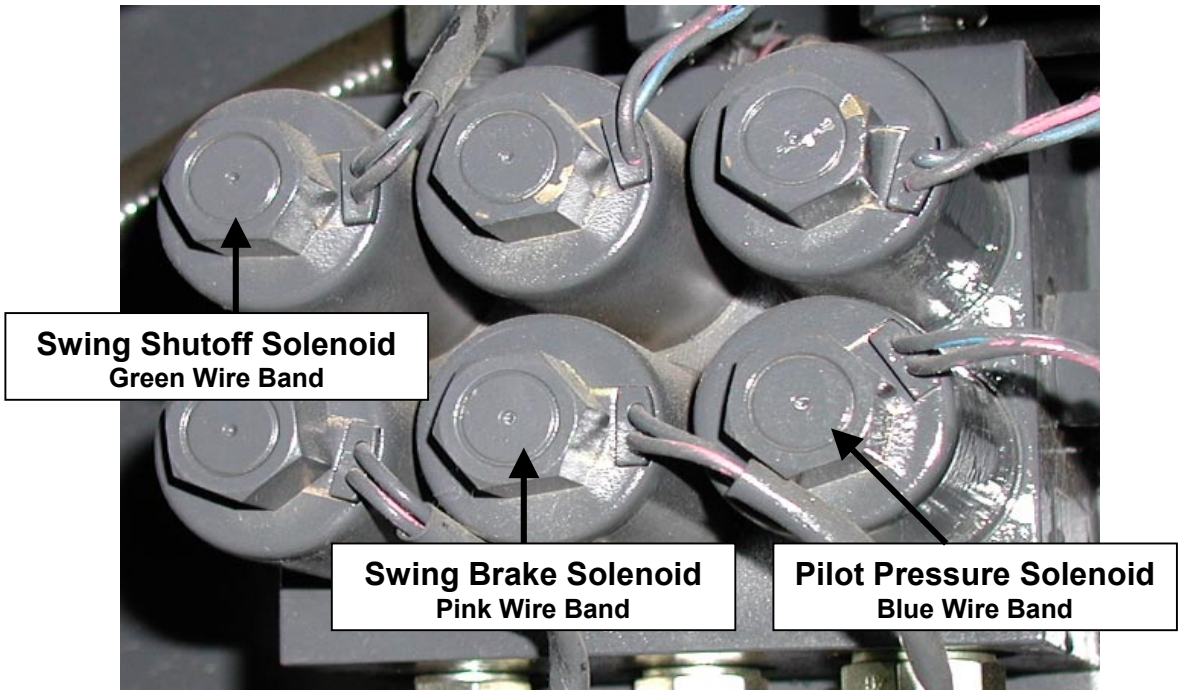

https://truckmanualshub.com/



# SWING LOCK

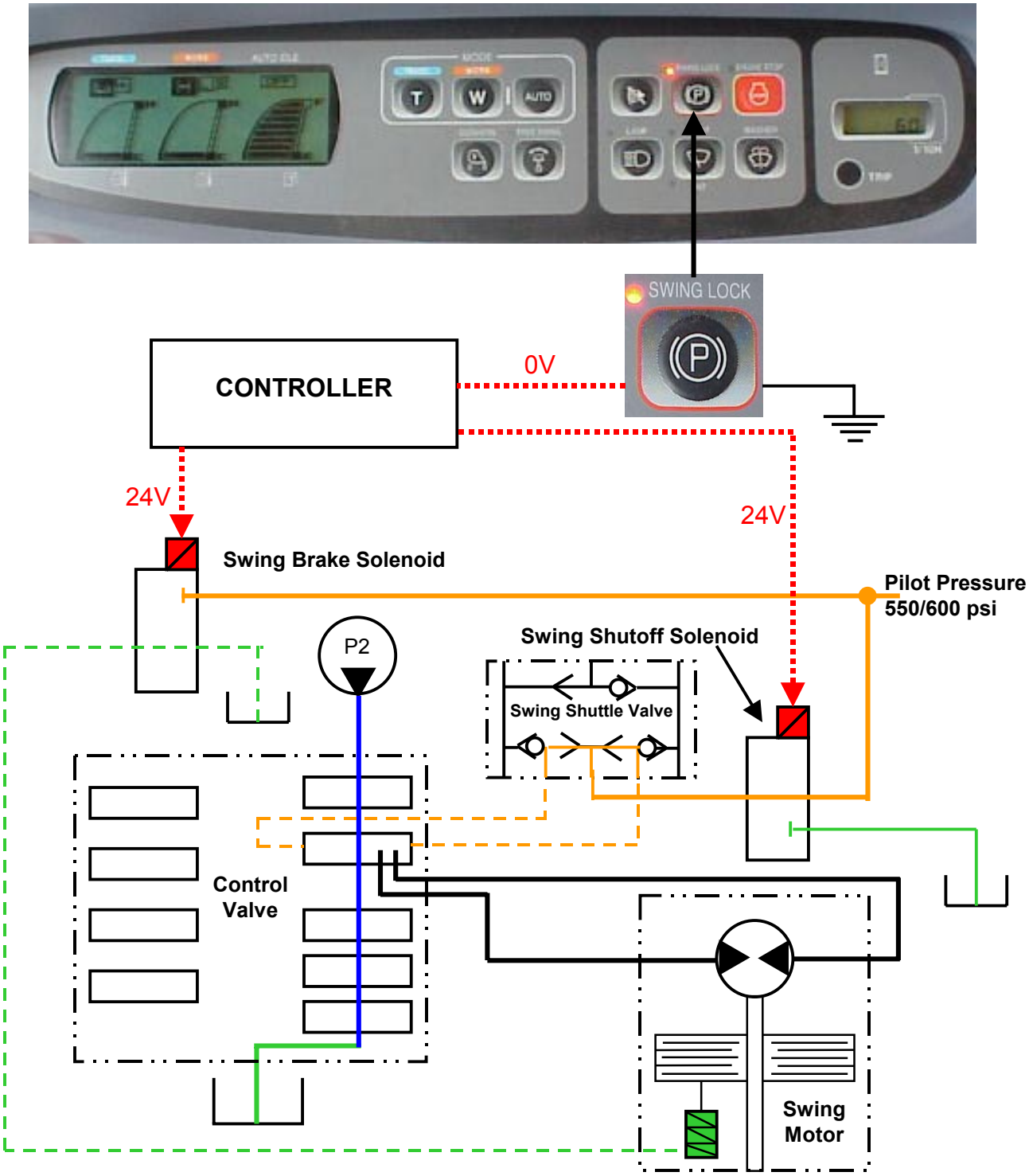

https://truckmanualshub.com/



# SWING

## Swing Priority

1) A priority circuit assures swing operation when swing and arm is operated at the same time.

When operating the swing and arm simultaneously as in bank shaving or bank cutting operation, a priority circuit in the control valve achieves swing priority.

Oil flow from pump2 (rear pump) enters the PL port of the control valve and flow from pump1 (front pump) enters the PR port. When swing right or left is activated pilot pressure is sent from the swing shuttle valve to the cut valve at port pi2 of the main control valve. This allows the swing priority valve to remain in the restricted (orifice) position. Which prioritizes pump2 oil for swing over the arm circuit.

During boom up operation pilot pressure is sent to the boom2 spool, which shuts off the open center passage to the arm1 spool. Pilot pressure is routed from the boom up pilot control circuit through the cut valve at port pi1 of the main control valve. This shifts the swing priority valve to the unrestricted position, which assures pump2 oil flow for arm circuit operation.

When swing and arm or boom up is operated at the same time, the swing priority valve remains in the restricted (orifice) position.

https://truckmanualshub.com/



# SWING PRIORITY

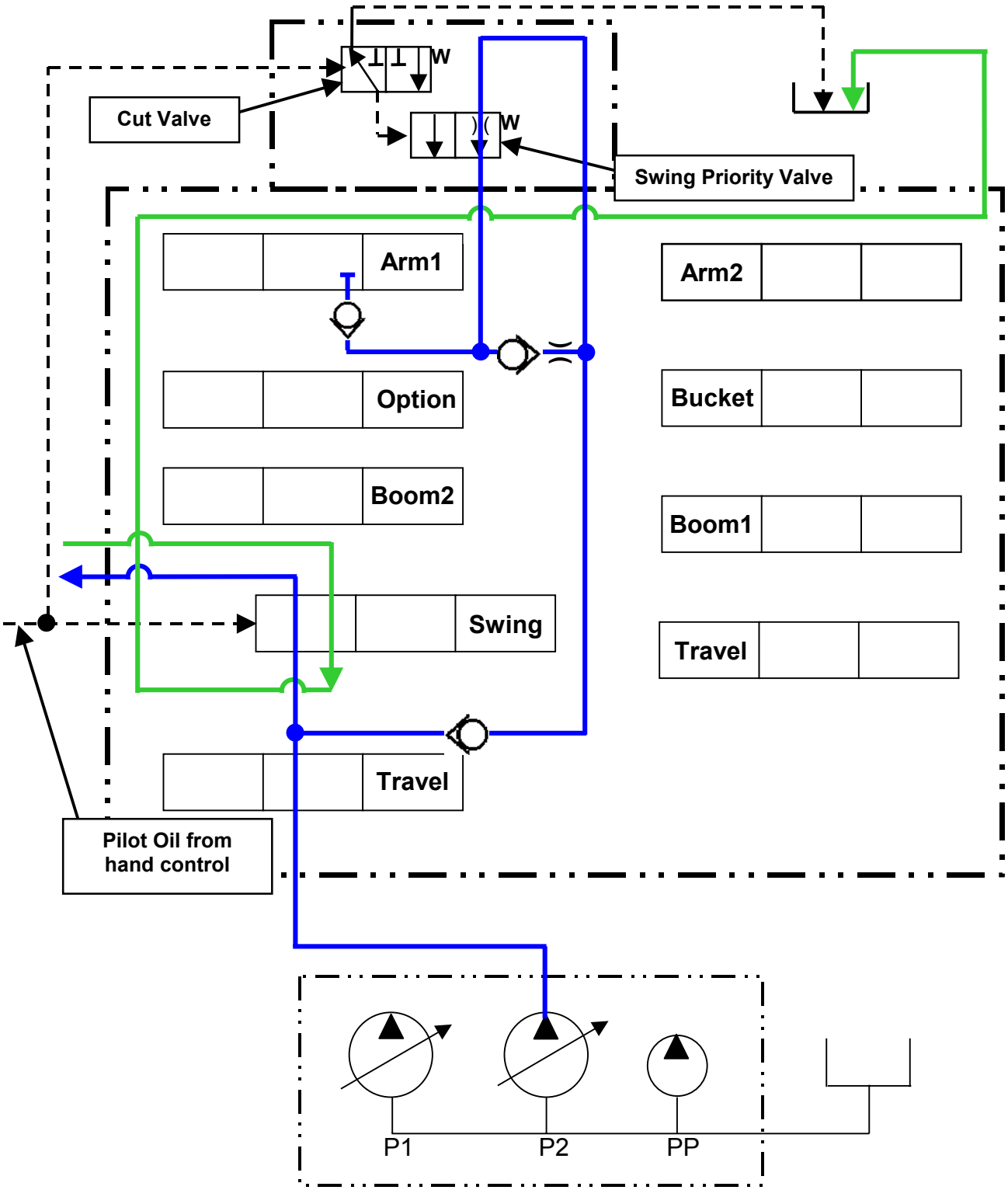

https://truckmanualshub.com/



# ATTACHMENT

## Boom Raise

1) Two pump flows inside the control valve are combined, when the boom1 and boom2 spools are shifted.

Oil flow from pump1 (front pump) enters the PR port of the control valve and oil from pump2 (rear pump) enters the PL port. When the boom hand control is operated for boom up pilot pressure is directed through the cushion valve to the boom1 control spool in the main control valve. The control spool shifts and sends pump1 oil for boom up. Boom up pilot control pressure is also sent to the boom2 control spool on the pump2 side of the main control valve. The control spool shifts which directs pump2 oil internally to the boom up circuit at the boom1 spool. This way boom 2-speed is achieved.

When boom up is activated pilot pressure from the boom up control circuit is sent to the swing priority valve to shift it to unrestricted position to assure pump1 oil for arm circuit operation.

https://truckmanualshub.com/



# BOOM RAISE

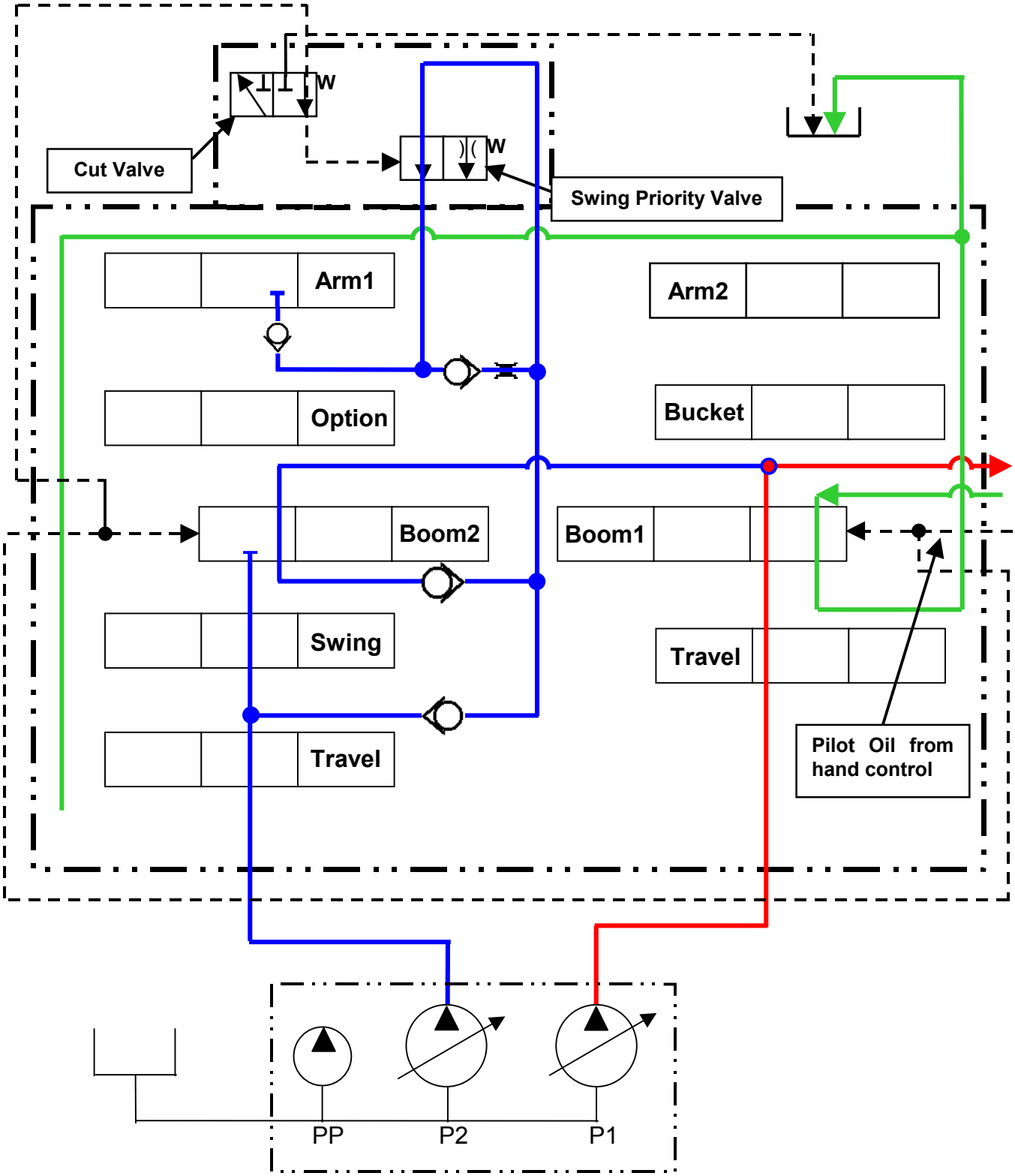

https://truckmanualshub.com/



# ATTACHMENT

## Boom Lower

1) When a built-in anti-drift valve in the control valve is opened and boom1 spool is shifted, the boom can be lowered.
2) A regeneration circuit inside the control spool and valve provides additional speed.
3) Only one pump flow is used.

Oil flow from pump1 (front pump) enters the PR port of the control valve. When the boom hand control is operated for boom down pilot pressure is directed through the cushion valve to the boom1 control spool of the main control valve. Pilot pressure is also sent to the boom down anti-drift valve. When the anti-drift valve and boom1 control spool is shifted boom down is achieved.

Cylinder return oil must over come a spring applied check valve to get to the return circuit. This creates backpressure in the cylinder circuit. When the supply pressure drops this return pressure oil is routed through a check valve to the cylinder supply circuit to prevent cavitation and maintain boom down speed. When the boom is raised the spring chamber of the anti-drift valve is ”charged” with boom up pressure. This is done through an orifice in the anti-drift valve. With equal pressure on both sides of the valve the spring is able to hold the valve closed. This keeps boom drift through the control spool at a minimum. When the boom control spool is shifted for lowering pilot pressure is sent through the control spool to the anti-drift check valve. This opens the check valve an allows the “charged” oil in the spring chamber to exit to the return circuit, which allow the anti-drift valve to open and boom lowering is activated.

Whenever the boom is lowered part of the pump supply is allowed to bleed off through the open center circuit through an orifice. This is to turn the pump “on” more slowly. This is to prevent the pressure spike that occurs when the boom starts to lower. A part of the cylinder return oil can enter the center bypass by way of an orifice and check valve inside the control spool. This makes up for the shortage of pressure without the pumps full operation in order to maintain neutral de-stroke pressure at a certain level.

https://truckmanualshub.com/



# BOOM OPERATION

## WITH ANTI-DRIFT AND REGENERATION

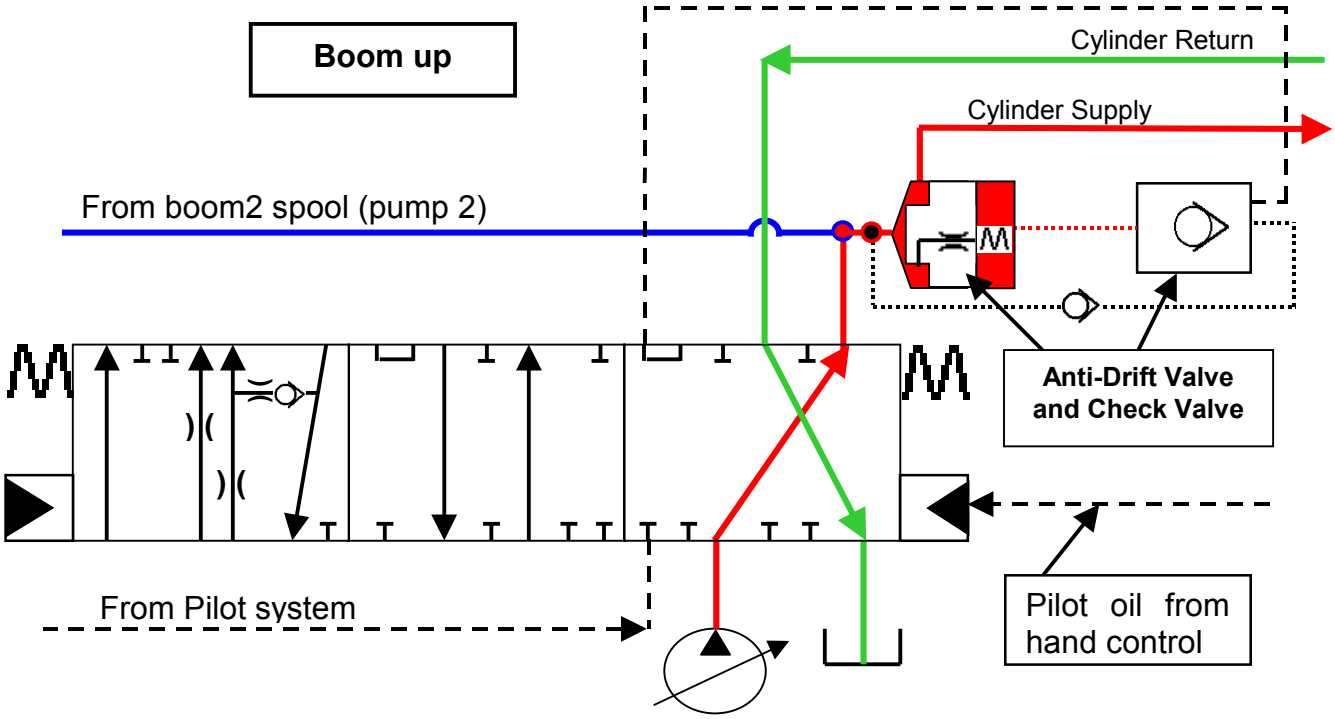


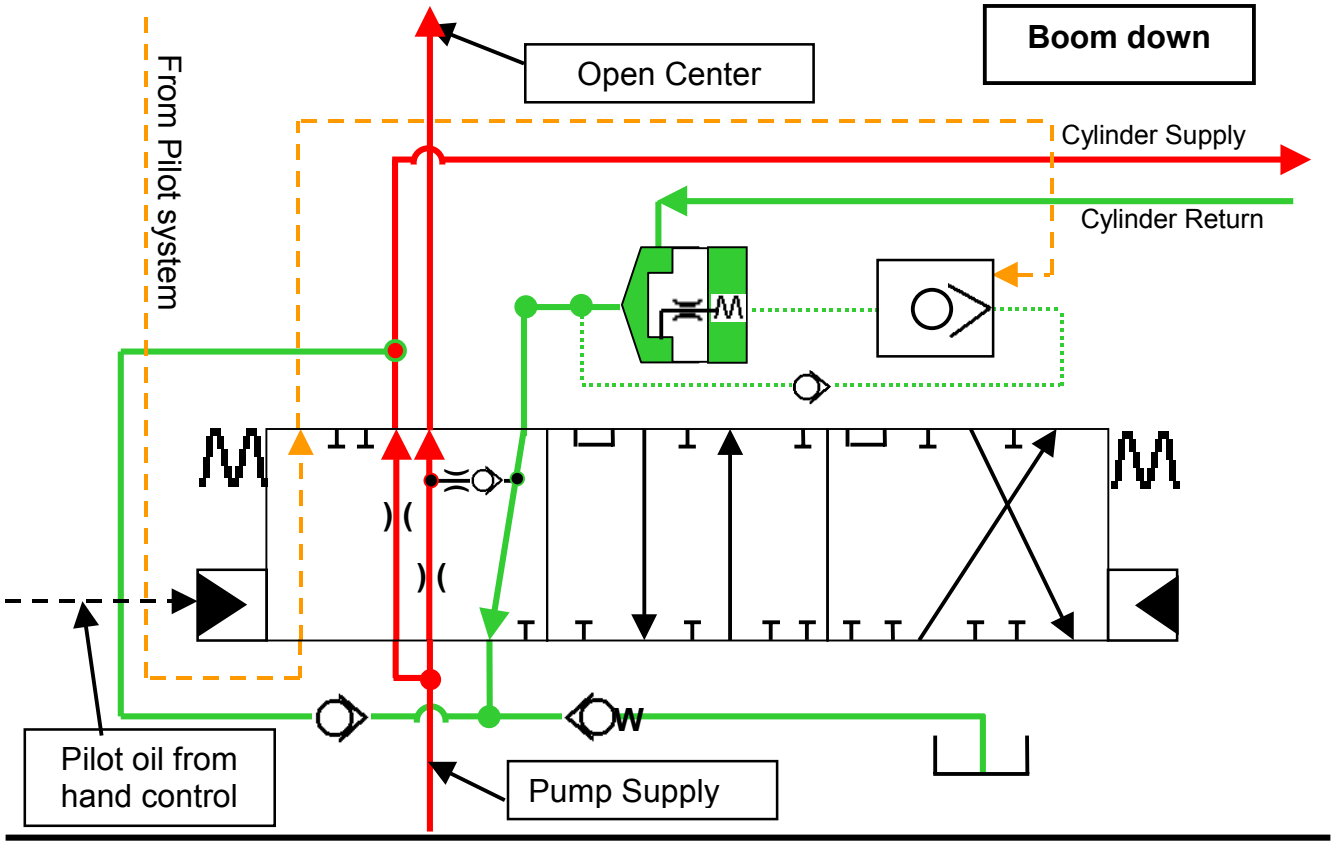

https://truckmanualshub.com/



# ATTACHMENT

## Arm Open (Out)

1) Two pump flows inside the control valve are combined, when the arm1 and arm2 spools are shifted.

The oil flow from pump1 (front pump) enters the PR port of the control valve and the oil flow from pump2 (rear pump) enters the PL port. When the hand control is operated for arm out pilot pressure is directed to the cushion valve. It is then routed to the arm control spool in the main control valve. The arm1 control spool is shifted arm-out movement is executed. Pump2 is used for arm-out. If arm only is operated flow from pump1 is routed to the arm circuit for dual-pump operation. (2-speed)

The pilot pressure to the arm1 control spool is sent to the arm2 control spool on the other side of the main control valve. The control spool is shifted and sends pump1 oil flow to the arm opening cylinder circuit at the arm1 control spool. Return oil from the cylinder is routed through the arm1 and arm2 control spools for improved performance during arm out.

https://truckmanualshub.com/



# ARM OPEN (OUT)

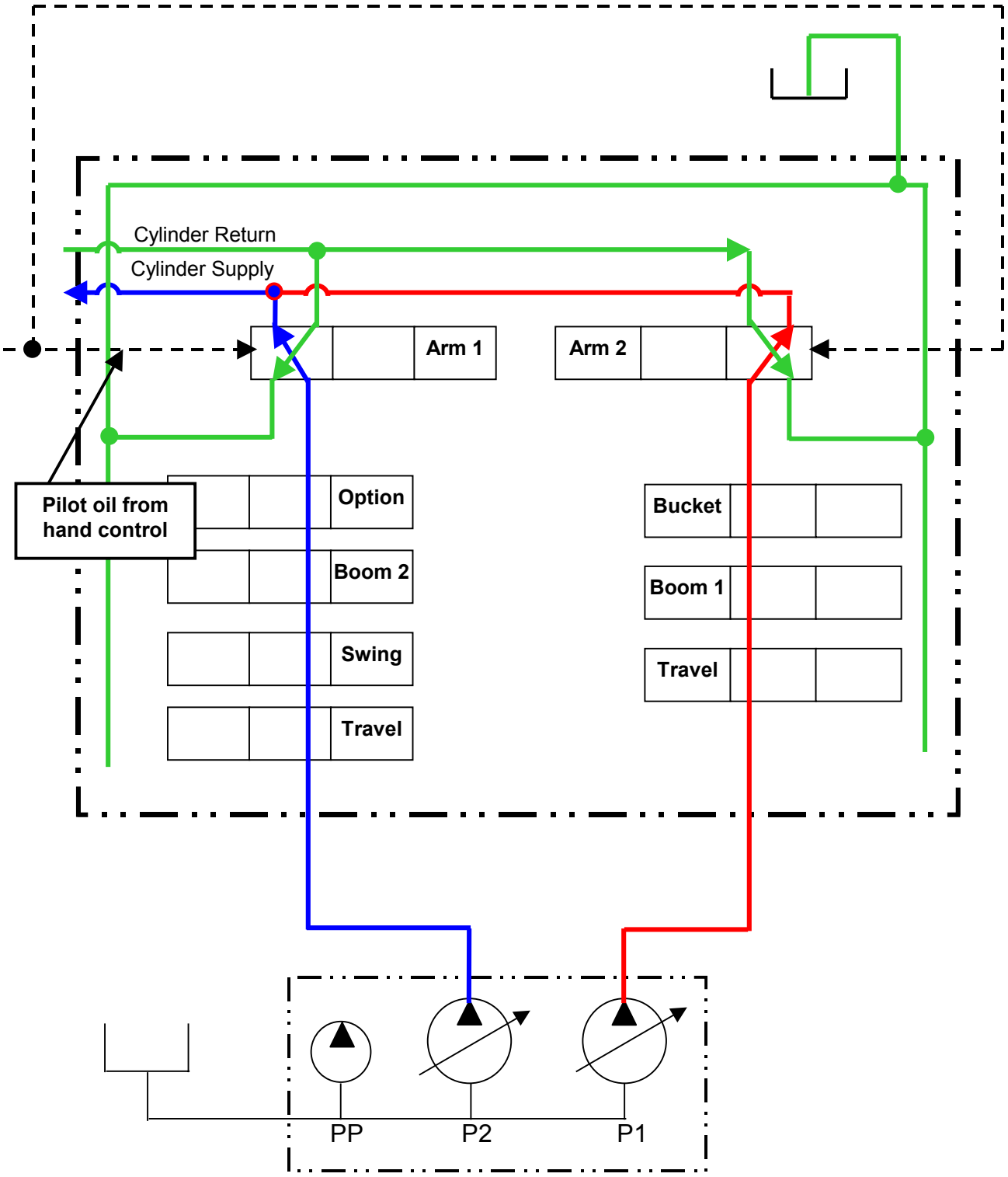

https://truckmanualshub.com/



# ATTACHMENT

## Arm Close (In)

1) Two pump flows inside the control valve are combined, when the arm1 and arm2 control spools are shifted.
2) A regeneration valve inside the main control valve provides additional speed.
3) When an anti-drift valve in the arm close circuit is opened, arm-closing movement is achieved.

The oil flow from pump1 (front pump) enters the PR port of the control valve and the oil flow from pump2 (rear pump) enters the PL port. When the hand control is operated for arm in pilot pressure is directed to the cushion valve. It is then routed to the arm control spool in the main control valve. The arm1 control spool is shifted arm-in movement is executed. Pump2 is used for arm-in. If arm only is operated flow from pump1 is routed to the arm circuit for dual-pump operation. (2-speed)

The pilot pressure to the arm1 control spool is sent to the arm2 control spool on the other side of the main control valve. The control spool is shifted and sends pump1 oil flow to the arm closing cylinder circuit at the arm1 control spool.

When the arm is opened (out) the spring chamber of the anti-drift valve is ”charged” with arm out pressure. This is done through an orifice in the anti-drift valve. With equal pressure on both sides of the valve the spring is able to hold the valve closed. This keeps arm drift through the control spool at a minimum. When the arm control spool is shifted for arm in (close) pilot pressure is sent through the arm control spool to the anti-drift check valve. This opens the check valve an allows the “charged” oil in the spring chamber to exit to the return circuit, which allow the anti-drift valve to open and arm in is activated.

Cylinder return oil must pass through a regeneration valve to the return circuit. The valve is spring biased to the restricted position (orifice) with pilot assist from the return circuit. Pump supply pressure is piloted to the non-spring side of the regeneration valve. As long as pump pressure is a high enough the regeneration valve will stay shifted to the unrestricted position. However, if the pump pressure lowers due to cavitation the valve will shift to the restricted position, which creates backpressure in the cylinder return circuit. This oil is then available to the supply side by way of a check valve between the two circuits.

https://truckmanualshub.com/



# ARM OPERATION

## With Anti-Drift and Regeneration

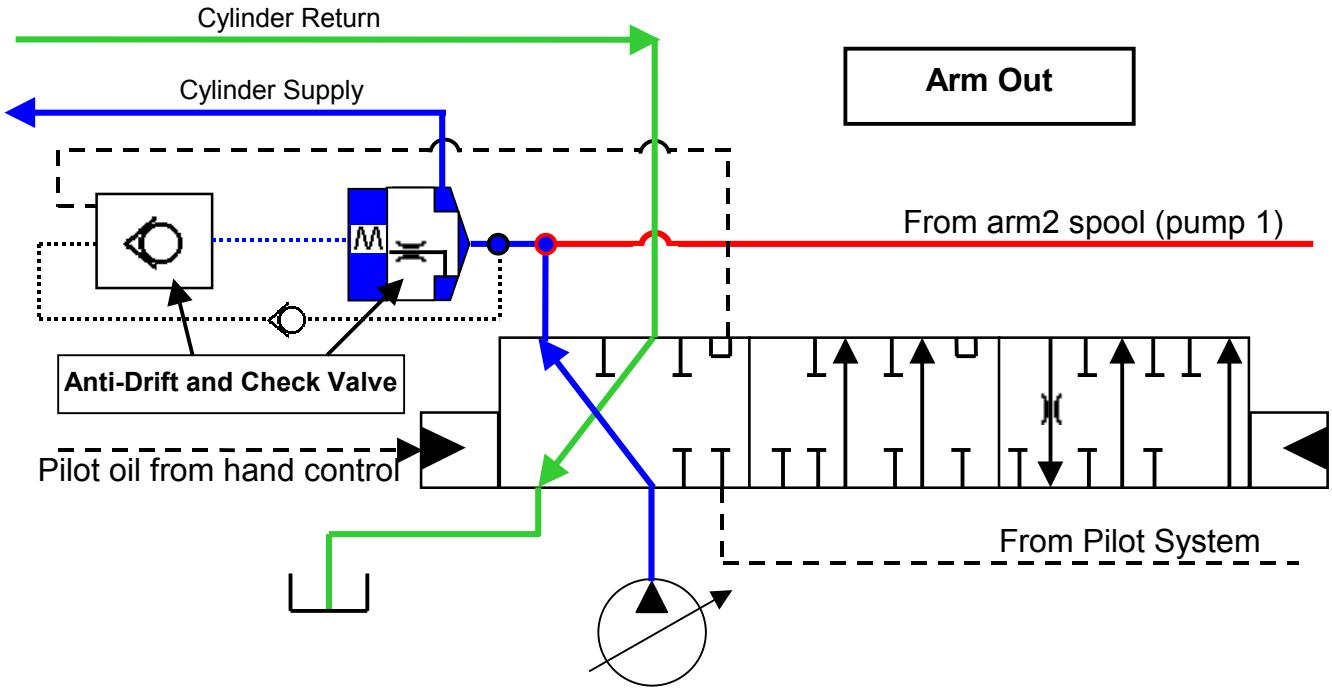


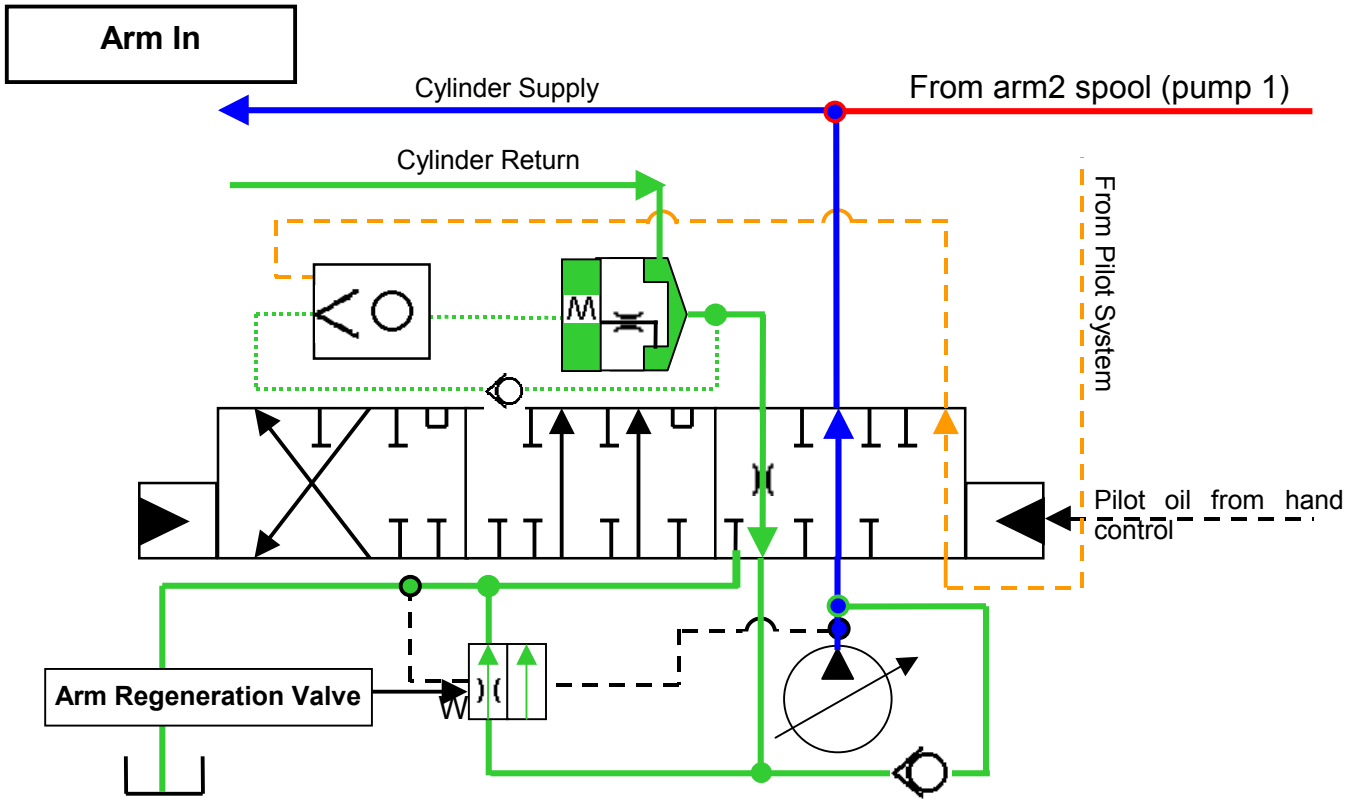

https://truckmanualshub.com/



# FEATURES

## Cushion Operation (ON) (Boom and Arm)

1) As a control spool returns to neutral (center) position, the pilot oil must return through an orifice in the cushion valve.
2) The slow movement of the spool provides the cushion feature.
3) The Cushion only occurs in the boom and arm circuits.
4) Cushion **"ON"** is the default setting.

During arm or boom operation, when the control lever is returned to neutral, a cushion valve reduces the shock to the machine by preventing sudden stopping of the arm or boom movement. The heat circuit of the cushion valve serves to improve operation during cold weather operation.

Cushion valve operation is explained using the boom raise operation as an example. When the boom raise control lever is returned to neutral, a restriction in the cushion valve creates an imbalance between the pressure that shifted the boom1 control spool, (connected to the H port of the cushion valve) and the neutral signal (tank) pressure at the E port. The cushion valve shifts to a more restrictive passage and the pressure change is slowed as it is lowered to neutral signal (tank) pressure. As the pressure lowers, the boom1 control spool returns too neutral. By slowing the shifting of the control spool, shock to the machine is reduced.

The heat circuit of the cushion valve is part of the hydraulic return oil that flows through a 0.12-inch orifice and in line filter before it enters the R port of the valve. The orifice raises the oil temperature, and as the heated oil passes through the cushion valve, the temperature of the cushion valve is raised. The increased temperature improves the operation of the cushion valve.

Cushion operation is illustrated using the boom function.

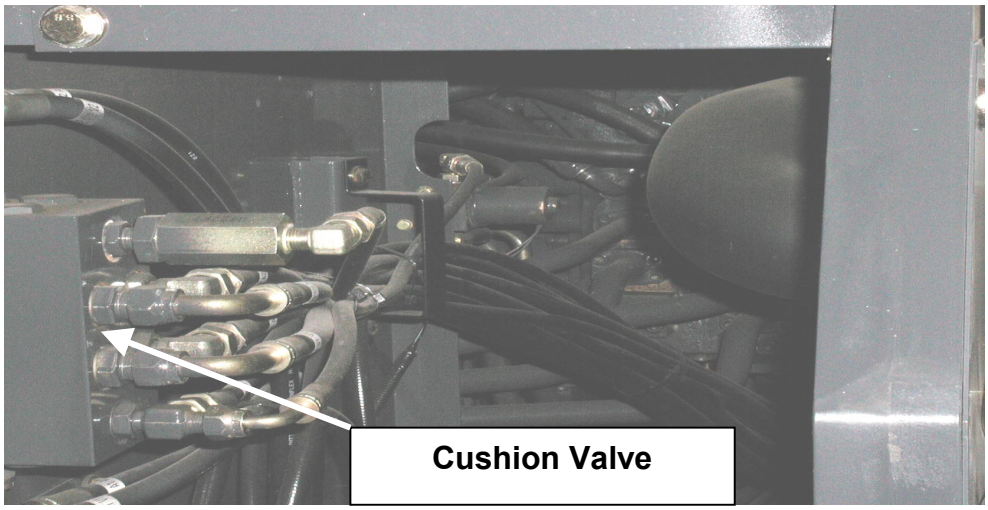

https://truckmanualshub.com/



# CUSHION VALVE (NEUTRAL)

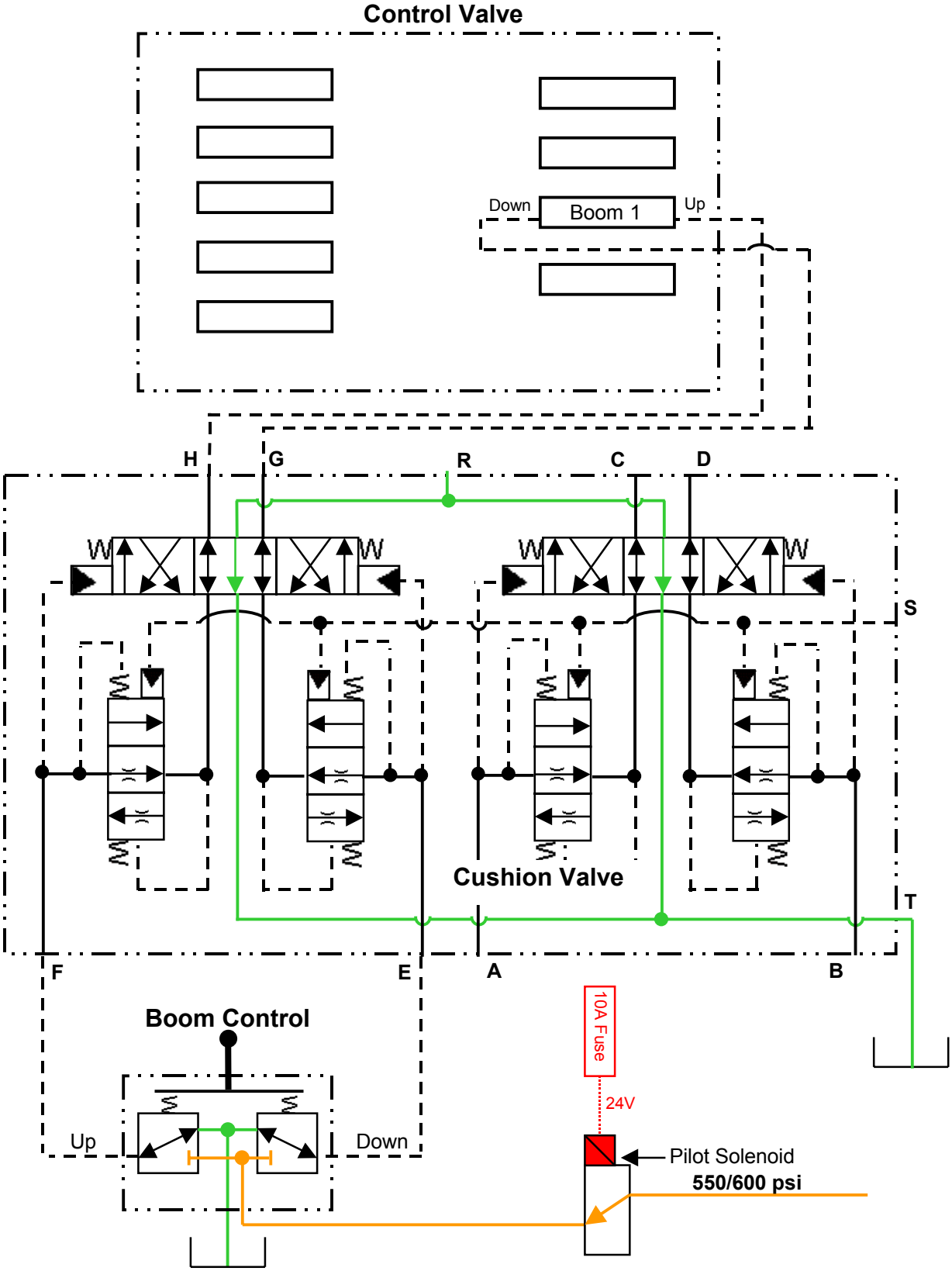

https://truckmanualshub.com/



# CUSHION OPERATION (BOOM UP)

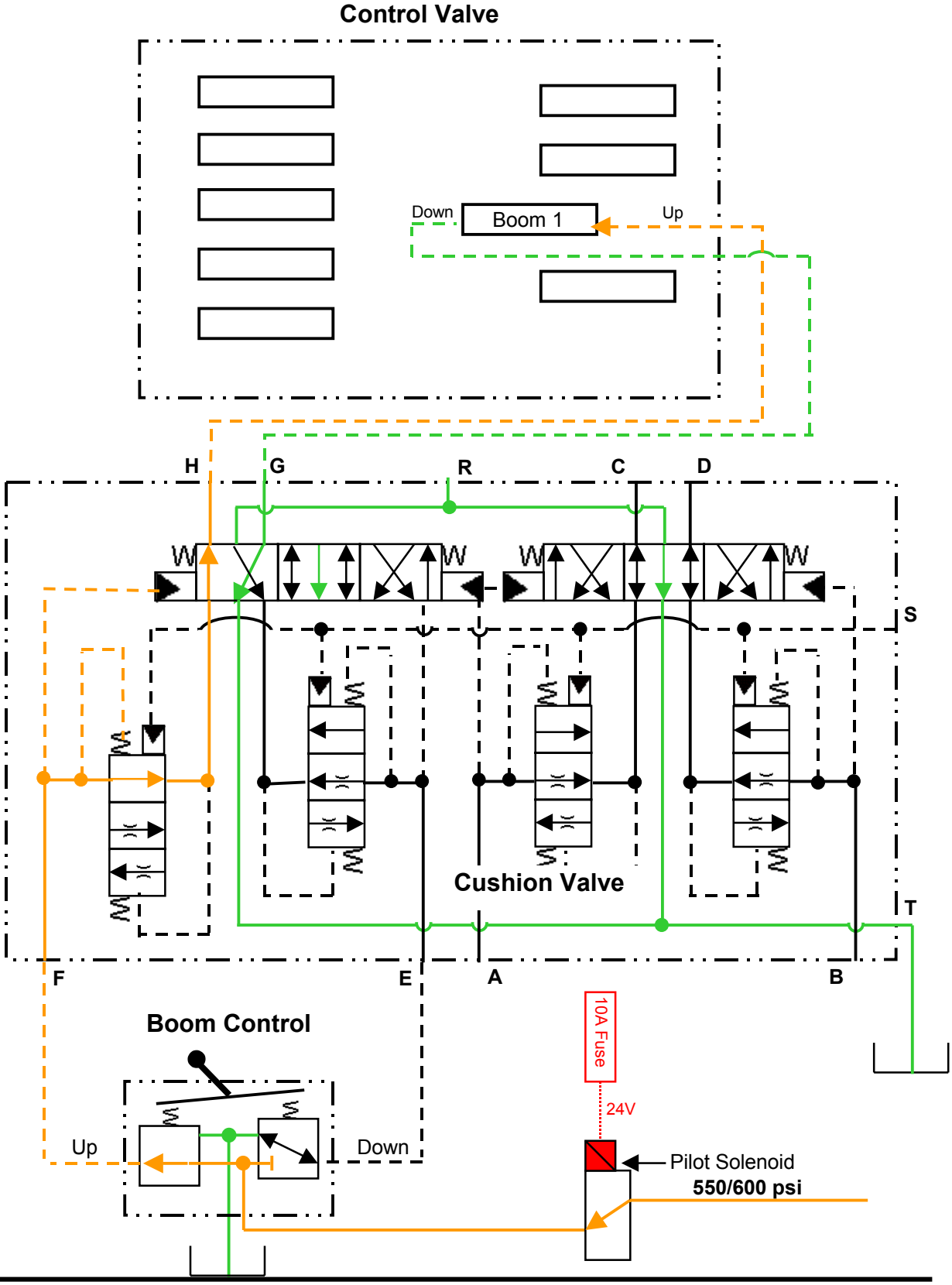

https://truckmanualshub.com/



# CUSHION OPERATION (BOOM UP RELEASED)

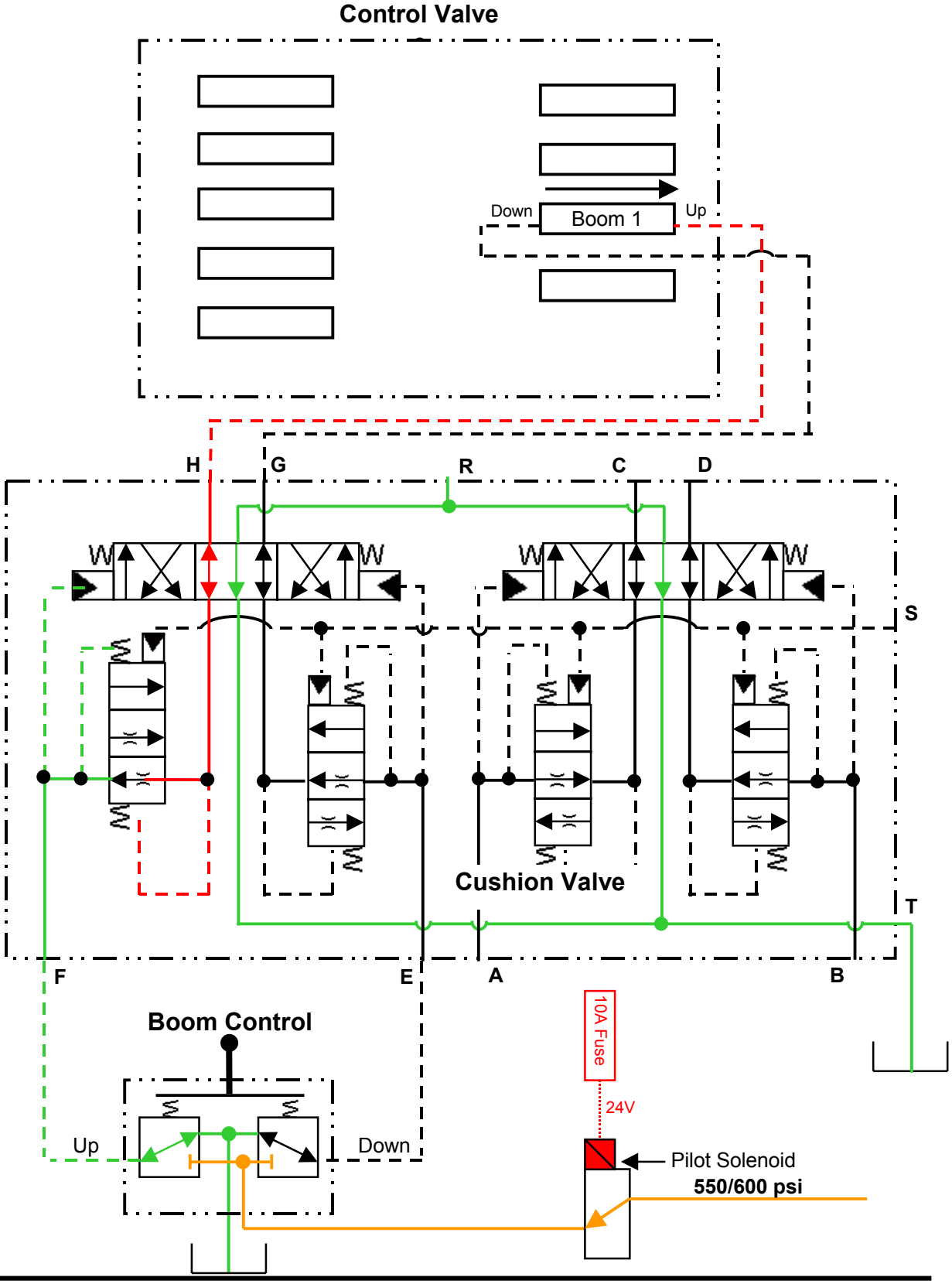

https://truckmanualshub.com/



# FEATURES

## Cushion Operation (OFF) (Boom and Arm)

1) When pilot oil from the cushion solenoid is sent to the cushion valve, the orifices are shifted out of the circuit and the cushion feature will not function.

**Note:** The Controller needs a RPM signal for Cushion Off.

During cushion off operation, the dirt release from the attachments is improved by the sudden stopping (shock) of the arm and boom operations.

When the cushion off button is pressed, a signal is sent to the controller. The controller sends a 24v signal to the cushion solenoid valve, the valve is shifted and pilot pressure is directed to the S port of the cushion valve. The pressure that enters the S port shifts the four-metered valve spools in the cushion valve to allow free flow of the arm and boom control signals through the valve. This allows the arm and boom control valves to return to neutral immediately when the control levers are returned too neutral. The cushion off solenoid is located in the six-solenoid valve bank.

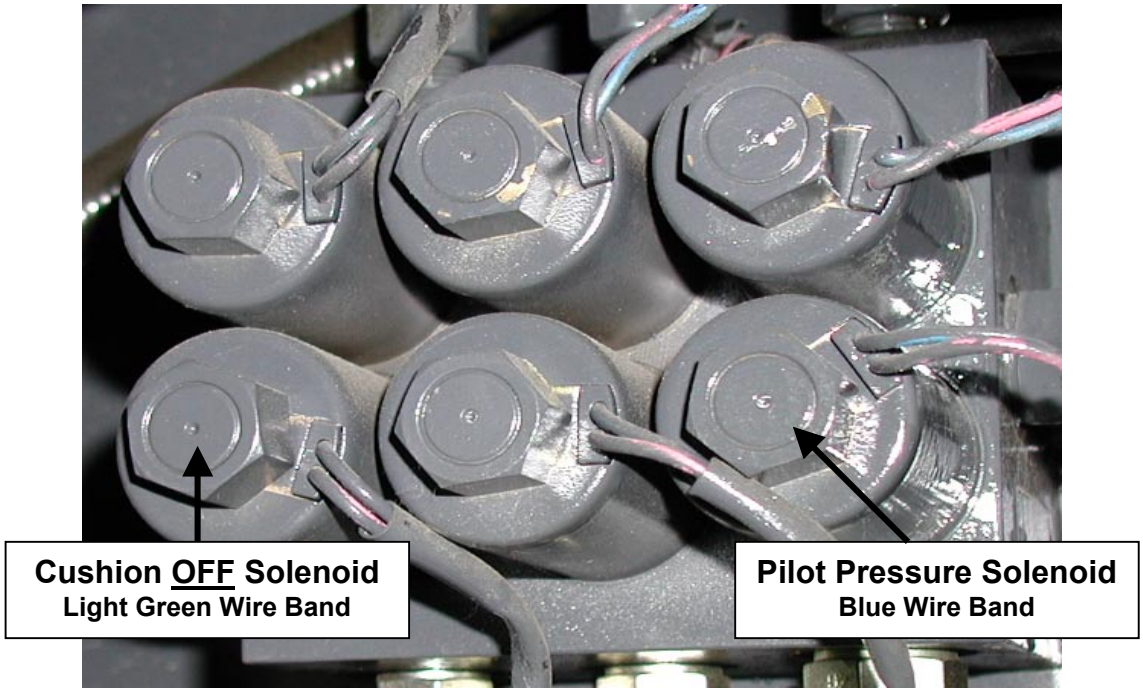

https://truckmanualshub.com/



# CUSHION OFF

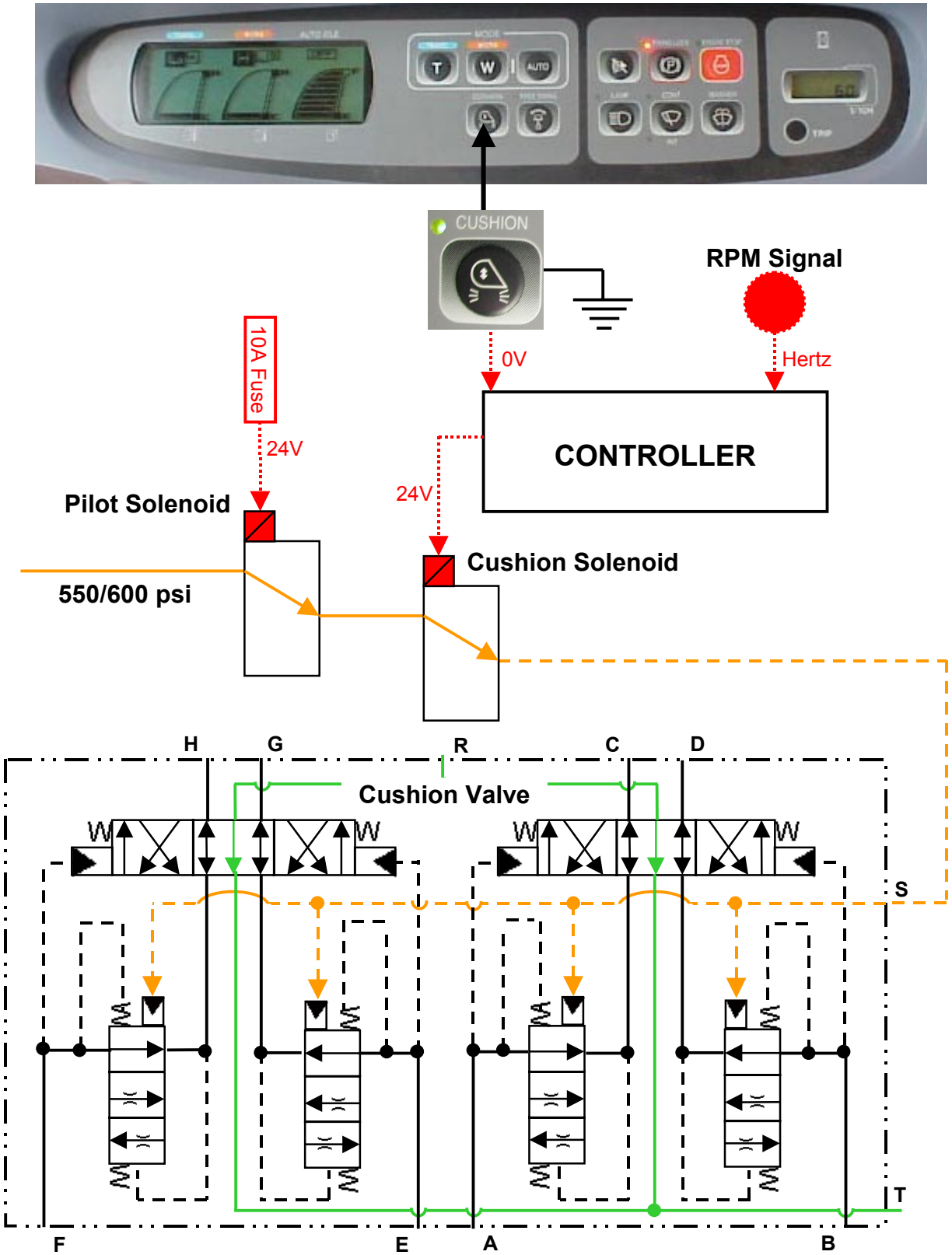

https://truckmanualshub.com/



# FEATURES

## One Touch Power Boost

1) When the Power boost button is pressed in H and S mode, the pressure setting of main relief increases from approximately 4900 psi to approximately 5300 psi and digging force is increased.
2) This power boost increase will occur for 8-second intervals.
3) Power Boost is on full time in L mode.

**Note:** The controller needs a RPM signal for Power Boost.

During attachment operation when the one touch power boost is pressed, the setting of the main relief pressure increases from 4970 psi to 5260 psi and is released after 8 seconds.

When the power boost button is pressed, a signal is sent to the controller and the controller sends 24v to the power boost solenoid valve. The valve is shifted and directs pilot pressure to the PY port of the control valve and enters the spring chamber of the relief valve. The pilot pressure adds to the spring pressure and power boost is achieved. After 8 seconds, the signal to the power boost solenoid valve is stopped. The power boost solenoid is located in the six-solenoid valve bank located in the pump compartment.

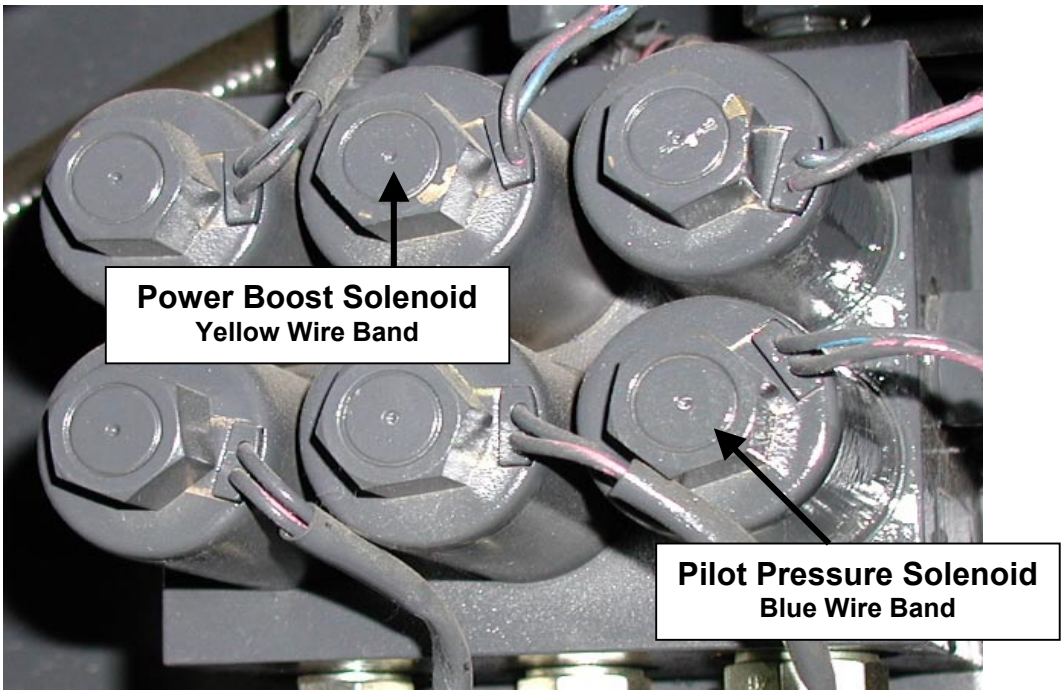

https://truckmanualshub.com/



# POWER BOOST

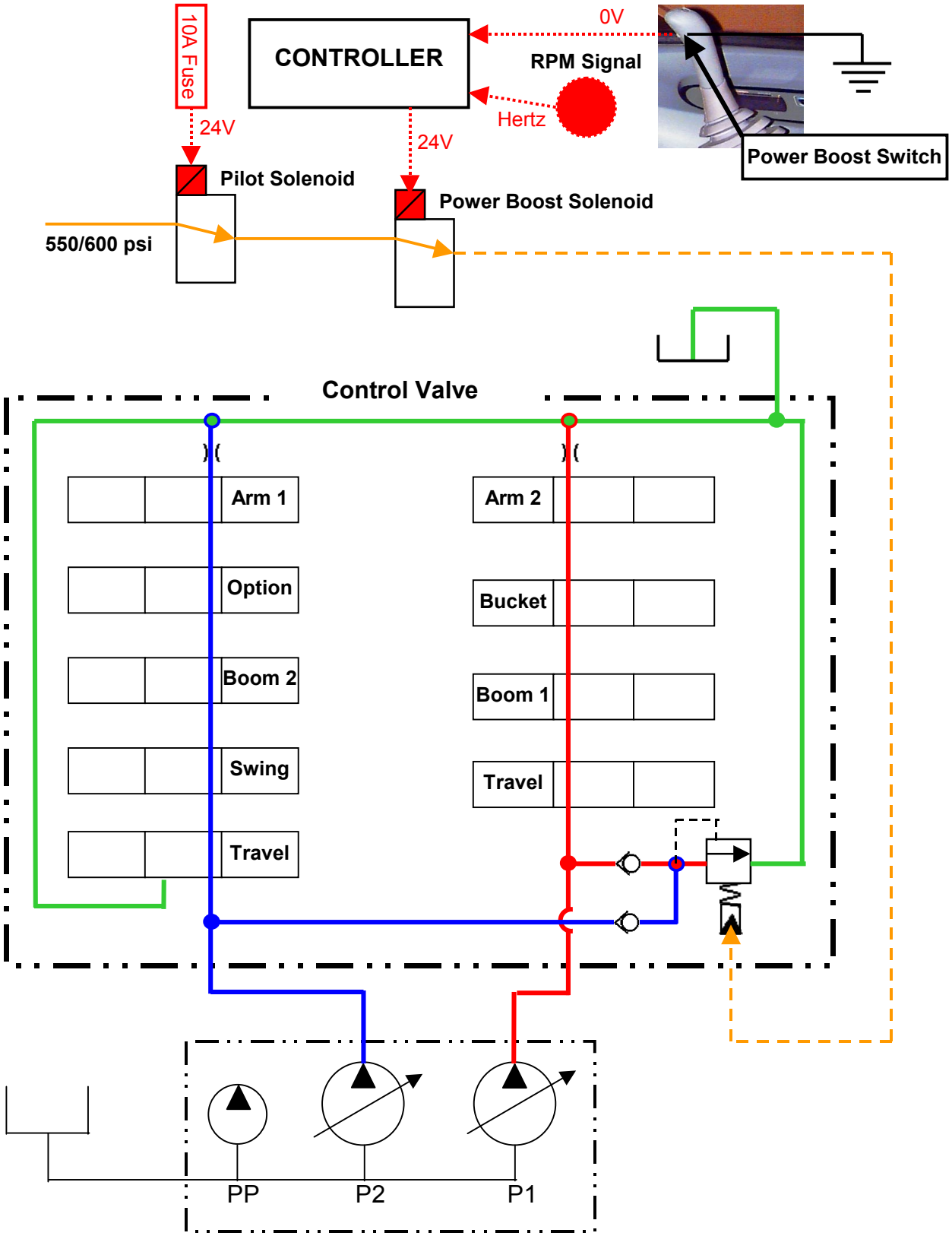

https://truckmanualshub.com/



# FEATURES

## Main Relief Valve

The Main Relief has two adjustments:

Standard Main Relief pressure

Power Boost Pressure

When pilot signal port is pressurized, power boost piston shifts to the position shown. Thus the pilot spring force rises, and pressure increases (POWER BOOST).

1. In H or S mode, when the one-touch power boost switch is pressed, power boost operation is executed for 8 seconds.
2. In L mode power boost is on full time.

https://truckmanualshub.com/



# MAIN RELIEF

## STANDARD RELIEF POSITION

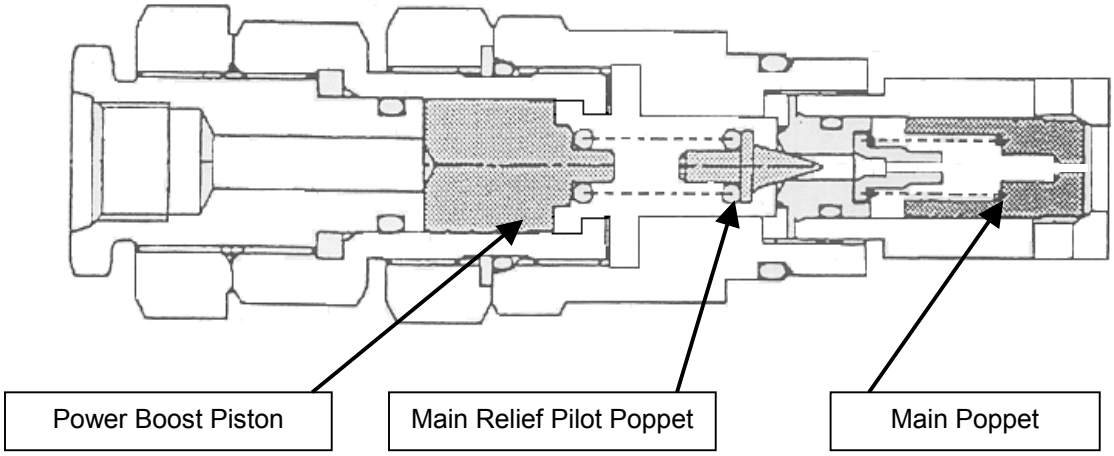


## POWER BOOST RELIEF POSITION

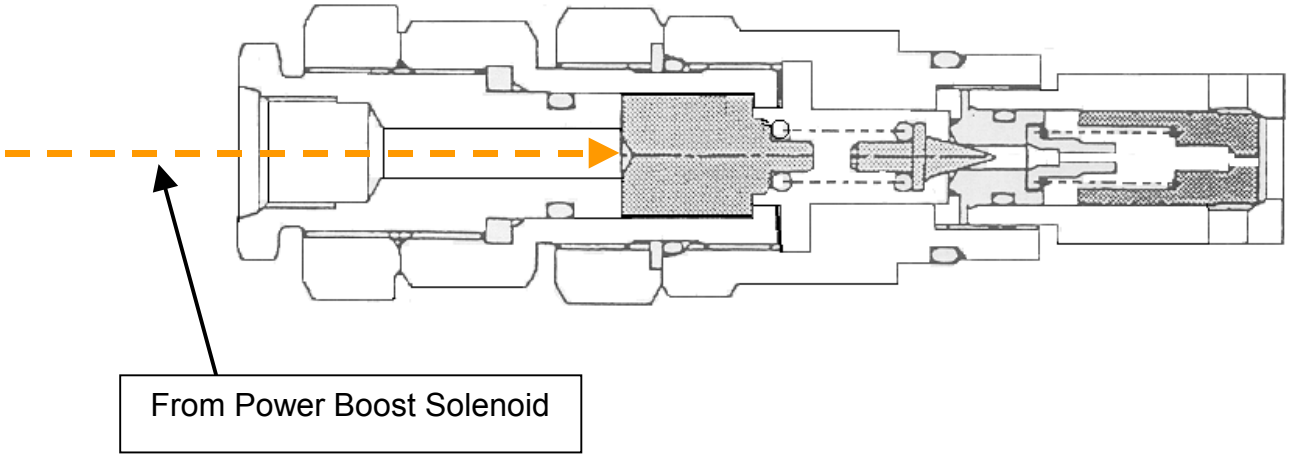

https://truckmanualshub.com/



# FEATURES

## Neutral Pump De-Stroke

1) If the flow output of P1 or P2 hydraulic pump is not needed the output is kept at a minimum flow rate (negative control flow rate), and energy consumption is reduced.

The negative flow control sets the hydraulic pump at minimum flow rate and reduces energy consumption in neutral no-load mode.

Oil in the neutral passage of the control valve is directed from the FL and FR ports of the control valve to the PZ1 port of pump1 (front pump) and the PZ2 port of pump2 (rear pump) as a de-stroke control signal. The de-stroke control signal pressure which enters port PZ1 and PZ2, through servo valves, sets the swash plate angles of the pumps at minimum and results in minimum flow rate (negative flow control).

https://truckmanualshub.com/



# PUMP DE-STROKE (NEUTRAL)

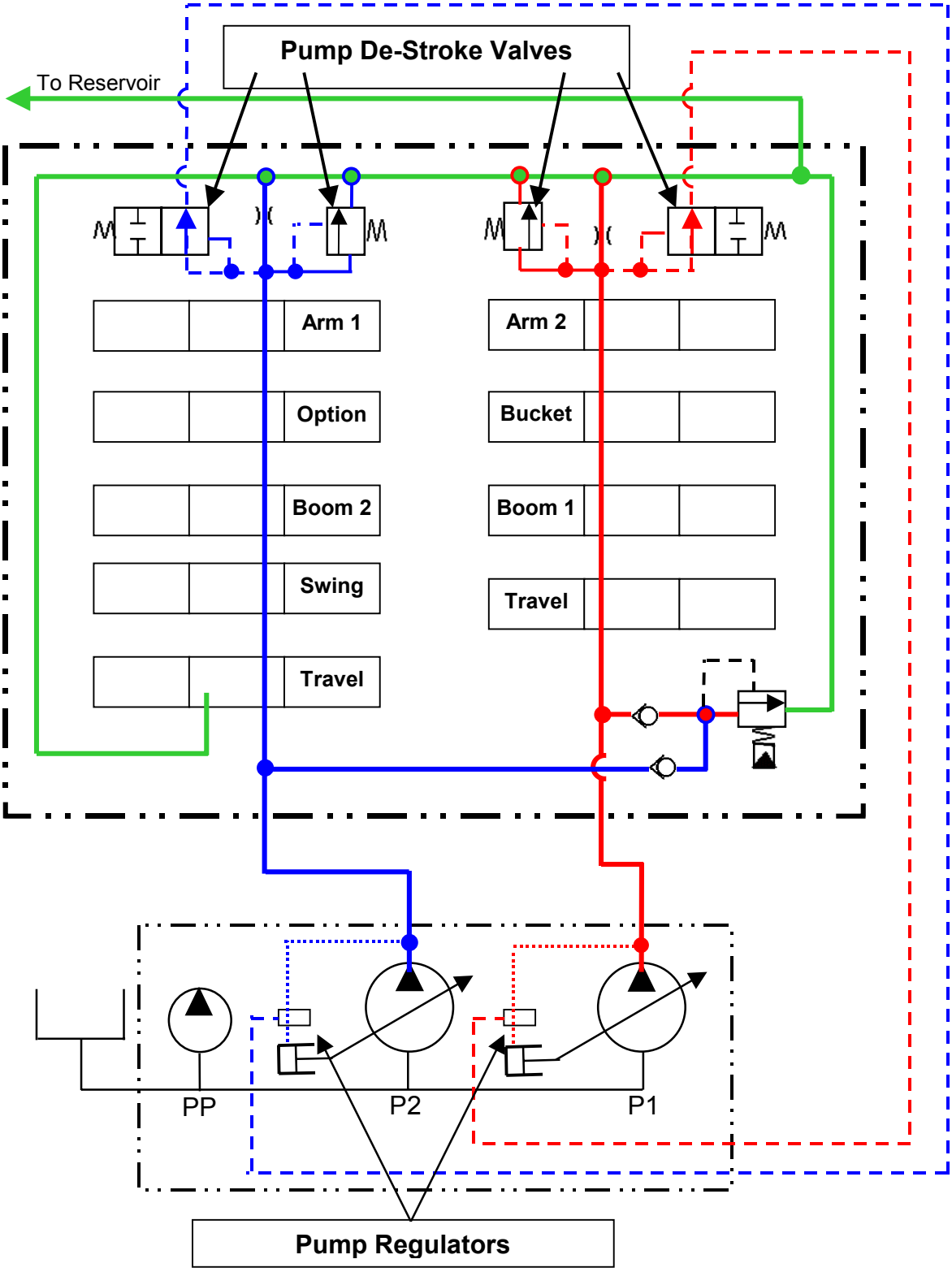

https://truckmanualshub.com/



# FEATURES

## Free Swing Operation

1) An orifice leak is opened between the A and B ports of the swing motor. This will provide smoother starts and stops of the swing during hoisting operations.

**Note:** The controller needs a RPM signal for Free Swing.

The free swing operation dampens the oil pressure and flow surges to the swing motor during starting and stopping. This provides for smoother starts and stops during swing operations.

When the free swing switch is **ON**, the controller sends a 24v signal to the free swing solenoid valve. The valve is shifted and allows oil to free flow, through an orifice, between both main ports of the swing motor. The valve creates a restricted by-pass of the swing motor when starting swing operations and a by-pass of the swing motor when stopping. When free swing is **ON**, the swing brake is released and does not come on. The free swing solenoid valve is located behind the cab.

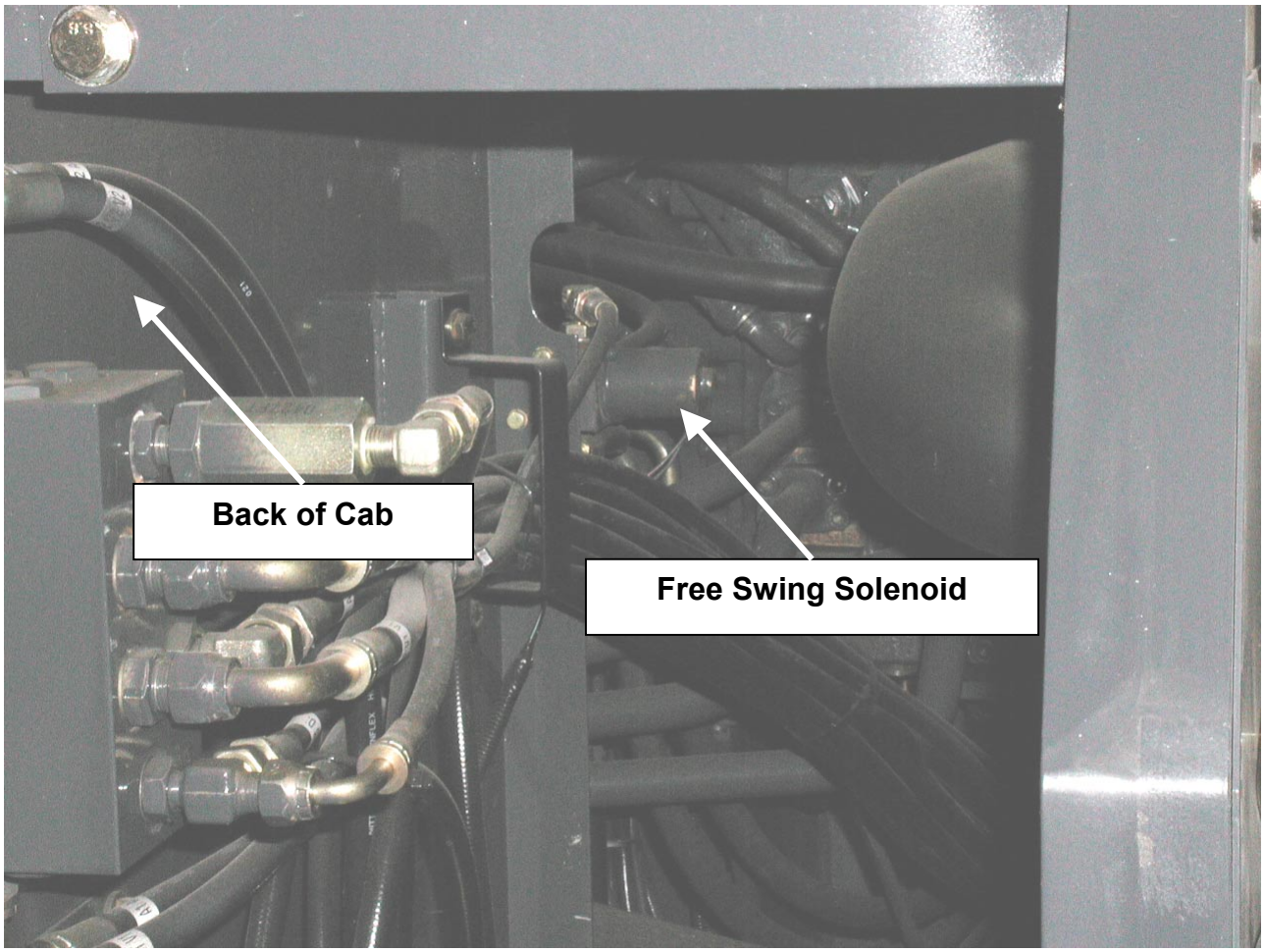

https://truckmanualshub.com/



# FREE SWING

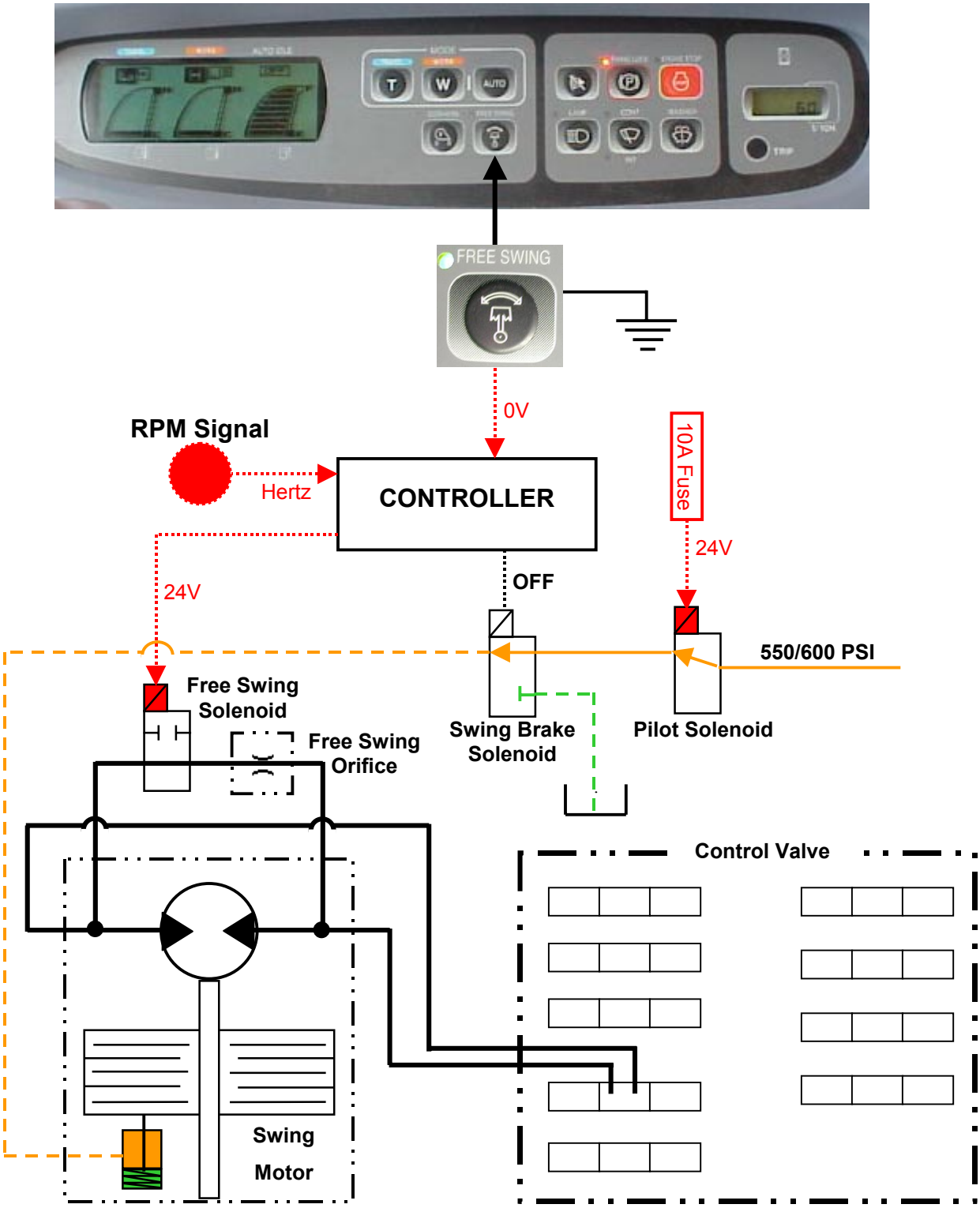

https://truckmanualshub.com/



# OPTIONS

## Auxiliary Attachments

There are three auxiliary hydraulic options:

1) Hammer kit (one direction, one pump flow)
2) Multi-kit (two direction or one direction. One or two pump flows)
3) Thumb kit (two direction, one pump flow)

https://truckmanualshub.com/

https://truckmanualshub.com/

CASE

## Construction Equipment Service Training

# CX SERIES EXCAVATOR

## Section 6 --
## Hydraulic – CX210/CX240
## "How it Works"

(2001)

Training Pays

https://truckmanualshub.com/

**CASE CORPORATION**
**700 STATE STREET**
**RACINE, WI 53404 U.S.A.**

**CASE CANADA CORPORATION**
**3350 SOUTH SERVICE ROAD**
**BURLINGTON, ON L7N 3M6 CANADA**

**© 2001 Case Corporation**
**All Rights Reserved**

Printed in U.S.A.

https://truckmanualshub.com/



# Table of Contents

## Section 6 - Hydraulic

**PAGE NO.**

OPERATION / FUNCTION SUMMARY ..... 2-4

TRAVEL

LOW SPEED TRAVEL ..... 6-7
High Speed Travel ..... 8-10
Straight Travel ..... 12-15

SWING

Swing Operation ..... 16-19
Swing Lock ..... 20-21
Swing Priority ..... 22-23

ATTACHMENT

Boom Raise ..... 24-25
Boom Lower ..... 26-27
Arm Open (Out) ..... 28-29
Arm Close (In) ..... 30-31
CUSHION OPERATION (**ON**) ..... 32-35
Cushion Operation (**OFF**) ..... 36-37

FEATURES

Auto Power Boost ..... 38-39
Main Relief Valve ..... 40-41
Neutral Pump De-stroke (negative flow control) ..... 42-43
Free Swing Operation ..... 44-45

OPTIONS

Auxiliary Attachment Operation ..... 46-47

https://truckmanualshub.com/



## TRAVEL

| Operation | Function | Explanation |
|---|---|---|
| Low Speed Travel | 1) The swash plate angle of the travel motors is shifted to maximum angle. | See pages 6-7 |
| High Speed Travel | 1) The Travel Speed solenoid is energized and the swash plate angle of the travel motors is shifted to minimum angle, high-speed travel occurs.<br>2) The travel motors will switch to low-speed automatically when the travel pressure reaches approximately 4200 psi and switches back to high-speed when the travel pressure is reduced. | See pages 8-11 |
| Straight Travel | 1) When performing travel operation + attachment operation or travel operations + swing operation, one pump is dedicated to the travel motors. The other pump will supply oil to the other functions. | See pages 12-15 |

## SWING

| Operation | Function | Explanation |
|---|---|---|
| Swing Operation with Brake | 1) Only one pump is used for swing operation.<br>2) The upper structure is braked hydraulically when the supply and return ports are blocked at the control spool. A crossover relief built-in to the swing motor protects the swing motor from pressure spikes.<br>3) Swing mechanical brake is applied 5 seconds after swing lever is returned to neutral position. | See pages 16-19 |
| Swing Lock | 1) When the Swing Brake switch is pressed the Swing Brake solenoid is energized and the brake is applied.<br>2) The Swing Shutoff solenoid is energized and the swing control spool is locked in neutral. | See pages 20-21 |
| Swing Priority | 1) When swing and arm is used at the same time swing supply will have priority over arm. | See pages 22-23 |

https://truckmanualshub.com/



## ATTACHMENT

| Operation | Function | Explanation |
|---|---|---|
| Boom Raise | 1) Two pump flows inside the control valve are combined, when the boom1 and boom2 control spools are shifted. | See pages 24-25 |
| Boom Lower | 1) When a built-in anti-drift valve in the control valve is opened and boom1 spool is shifted, the boom can be lowered.<br>2) A regeneration valve inside the boom1 control spool provides additional speed.<br>3) Only one pump flow is used. | See pages 26-27 |
| Arm Open (Out) | 1) Two pump flows inside the control valve are combined, when the arm1 and arm2 control spools are shifted. | See pages 28-29 |
| Arm Close (In) | 1) When a built-in anti-drift valve in the control valve is opened and arm1 spool is shifted, the arm can be closed.<br>2) Two pump flows inside the control valve are combined, when the arm1 and arm2 control spools are shifted.<br>3) A regeneration valve provides additional speed. | See pages 30-31 |
| Cushion **"ON"** Operation (Boom & Arm) | 1) As a control spool returns to neutral (center) position, the pilot oil must return through an orifice in the cushion valve.<br>2) The slow movement of the spool provides the cushion feature.<br>3) The Cushion only occurs in the boom and arm circuits. | See pages 32-35 |
| Cushion **"OFF"** Operation | 1) When the cushion solenoid is energized pilot pressure is sent to the cushion valve, the orifices are shifted out of the circuit and the cushion feature will not function. | See pages 36-37 |

https://truckmanualshub.com/



## FEATURES

| Operation | Function | Explanation |
|---|---|---|
| Automatic Power Boost | 1) When main pump pressure reaches approximately 4350 psi and the load ratio fluctuation of the engine is ±5% for two seconds. The controller will energize the power boost solenoid and increase main relief approximately 8%.<br>2) This power boost increase will occur for 8-second intervals.<br>3) Power boost is on full time in L mode. | See pages 38-39 |
| Main Relief Valve | The Main Relief has two adjustments:<br>1) Standard Main Relief pressure<br>2) Power Boost Pressure | See pages 40-41 |
| Neutral Pump Destroke (negative flow control) | 1) If the flow output of pump1 or pump2 is not needed the output is kept at a minimum flow rate (negative control flow rate), and energy consumption is reduced. | See pages 42-43 |
| Free Swing Operation | 1) An orifice leak is opened between the A and B ports of the swing motor. This will provide smoother starts and stops of the swing during hoisting operations. | See pages 44-45 |

## OPTIONS

| Operation | Function | Explanation |
|---|---|---|
| Auxiliary hydraulic kits | There are three auxiliary hydraulic options.<br>1) Hammer kit (one direction, one pump flow)<br>2) Multi-kit (two direction or one direction flow, one pump or two pump flows)<br>3) Thumb kit (two direction one pump flow) | See pages 46-47 |

https://truckmanualshub.com/



This page left blank intentionally.

https://truckmanualshub.com/



# TRAVEL

## Low Speed Travel

1) The swash plate angle of the travel motors is set to maximum angle, low-speed travel occurs. The monitor display will indicate Low-speed (LO).
2) The machine will default to Low-Speed when the machine is started.

Low-Speed is the normal travel speed. When the key switch is set to **OFF** and then to **ON** again, travel mode is always returned to low speed regardless of the last setting. The drive motor swash plates are at maximum angle for maximum torque.

When the travel pilot valves are operated pilot pressure is sent to the right and left travel control spools in the main control valve. Oil flow from pump1 (front pump) enters the P1 port of the control valve and oil flow from pump2 (rear pump) enters the P2 port of the control valve. When the right and left travel spools are shifted, pump flow is directed to the travel motors for forward or reverse operation. If travel only is engaged P1 (front pump) will supply flow to a travel motor and P2 (rear pump) will supply flow to the other travel motor.

The travel motors have spring applied and hydraulically released brakes. The brakes are released internally by supply pressure.

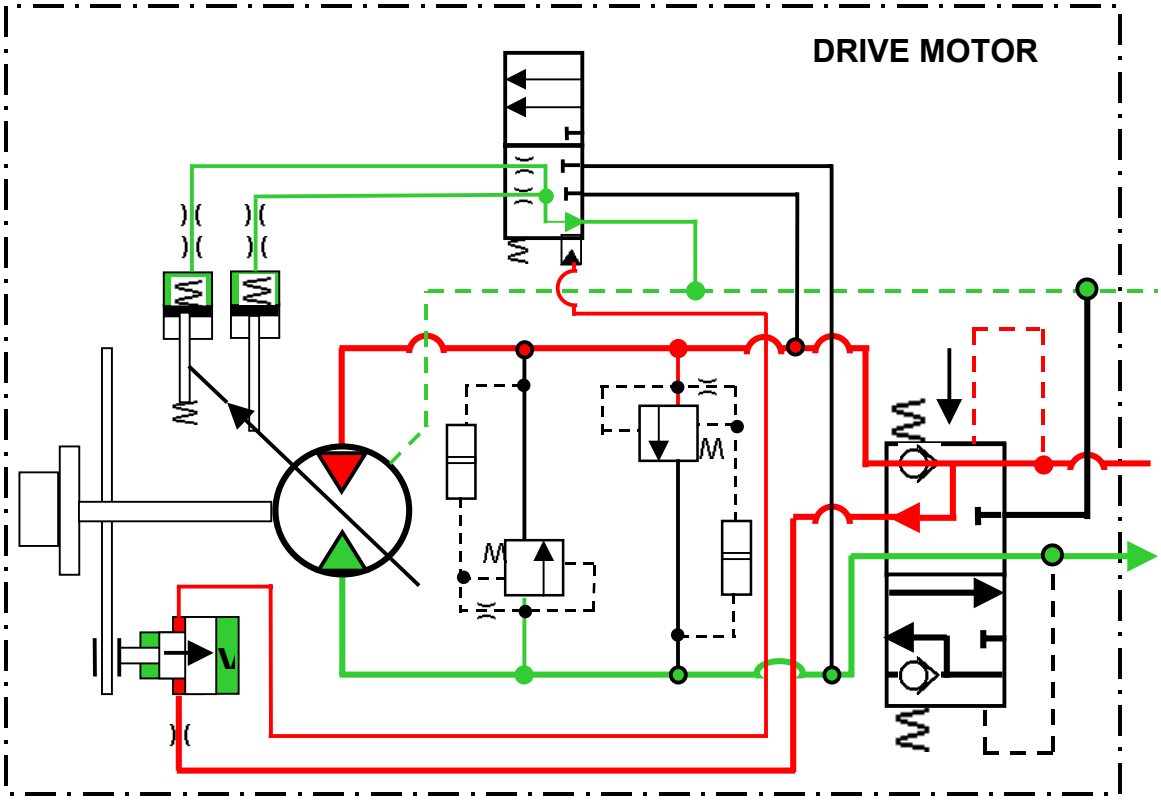

https://truckmanualshub.com/



# LOW SPEED TRAVEL

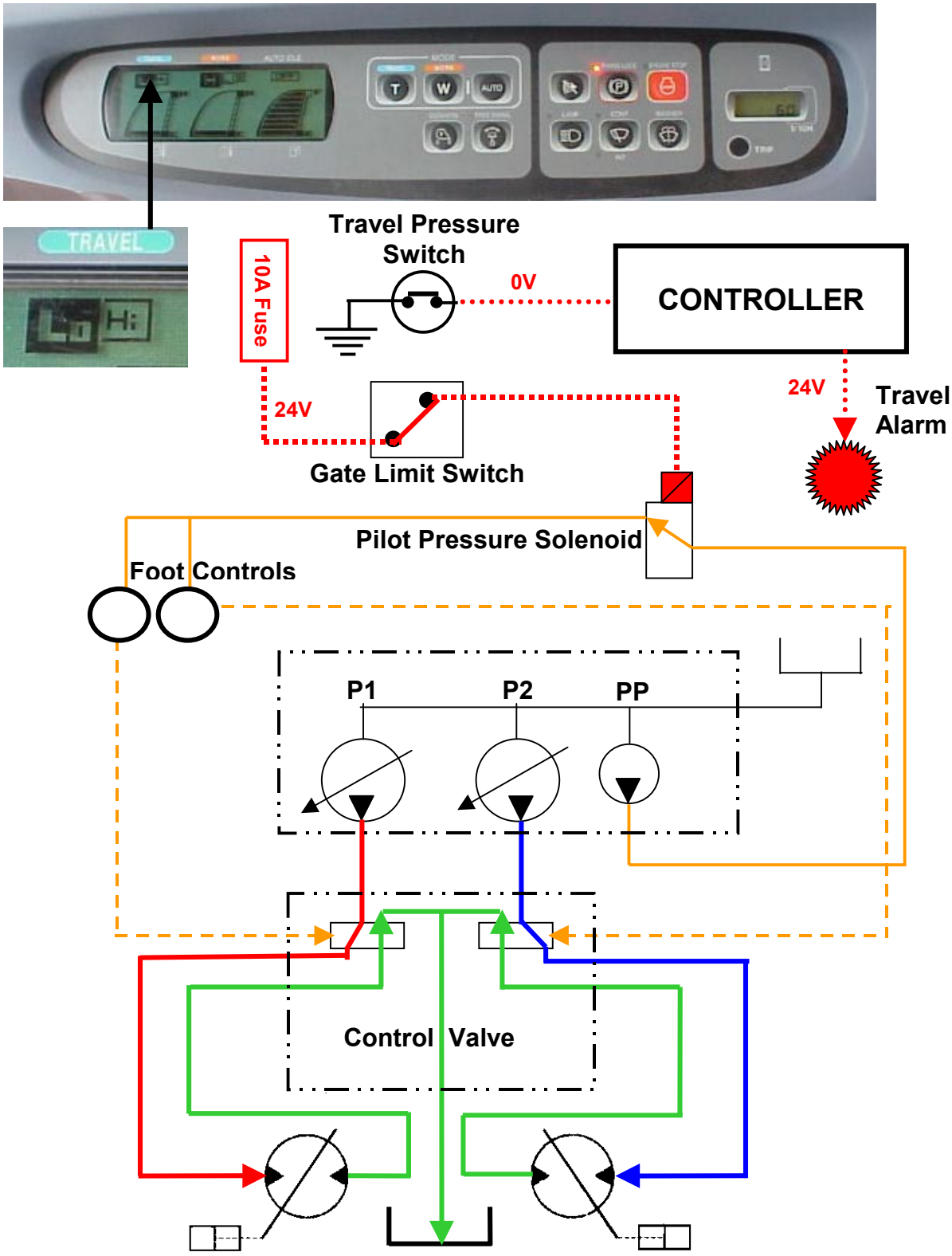

https://truckmanualshub.com/



# TRAVEL

## High Speed Travel

1) The Travel Speed solenoid is energized and the swash plate angle of the travel motors is shifted to minimum angle, high-speed travel occurs. The monitor display will indicate high speed (HI).
2) The travel motors will switch to low-speed automatically when the travel pressure reaches approximately 4200 psi and switches back to high-speed when the travel pressure is reduced. The monitor display does not change.

**Note:** The controller needs the travel pressure switch and an input signal from the engine controller for high-speed travel.

High-speed travel occurs when the operator selects high-speed with the travel switch on the control panel. The travel switch sends an electrical signal to the controller. A 24v signal is sent by the controller to the travel-speed solenoid valve. When the valve is shifted, pilot pressure (550/600 psi) is sent to the travel motors. The pilot pressure shifts the 2-speed spool, which directs supply oil to shift the swash plate to minimum angle. The travel motors will shift automatically to low-speed when the supply pressure reaches approximately 4200 psi. A pilot signal from the supply pressure inside the drive motors is routed to the 2-speed spool to shift it to the low-speed position. When the supply pressure is reduced the drive motors will shift back to high-speed. The controller will turn off the high speed solenoid if the travel pressure drops below 580 psi to slow down travel going down a steep grade. The travel speed solenoid valve is located in the six-solenoid valve bank. The six-solenoid valve is located in the pump compartment.

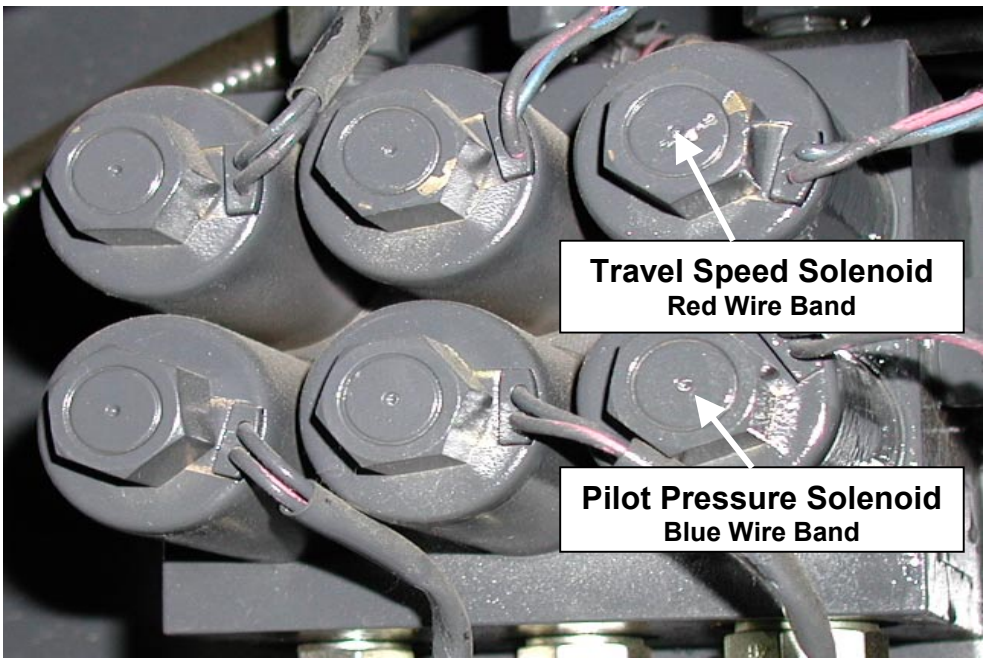

https://truckmanualshub.com/



# HIGH SPEED TRAVEL

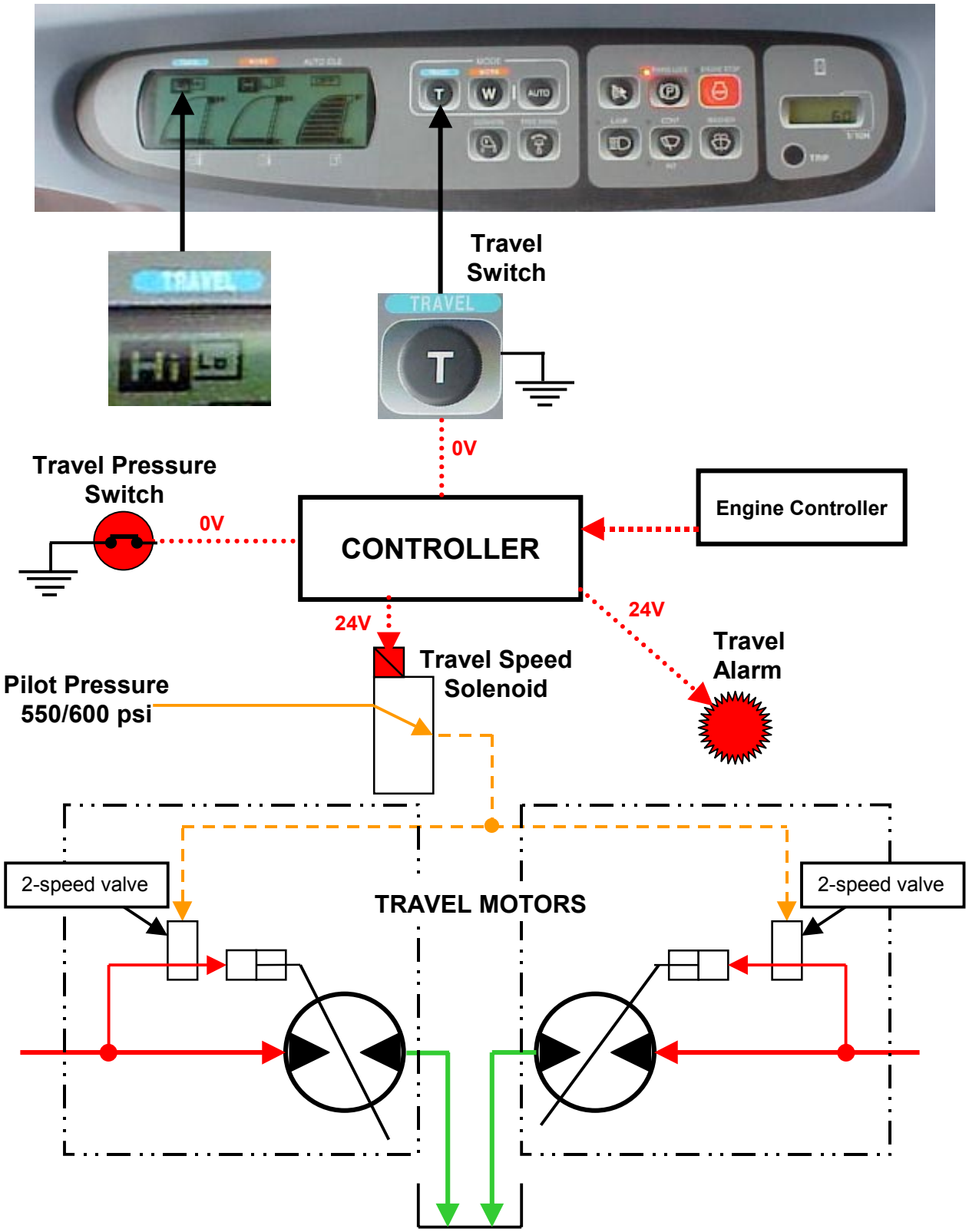

https://truckmanualshub.com/



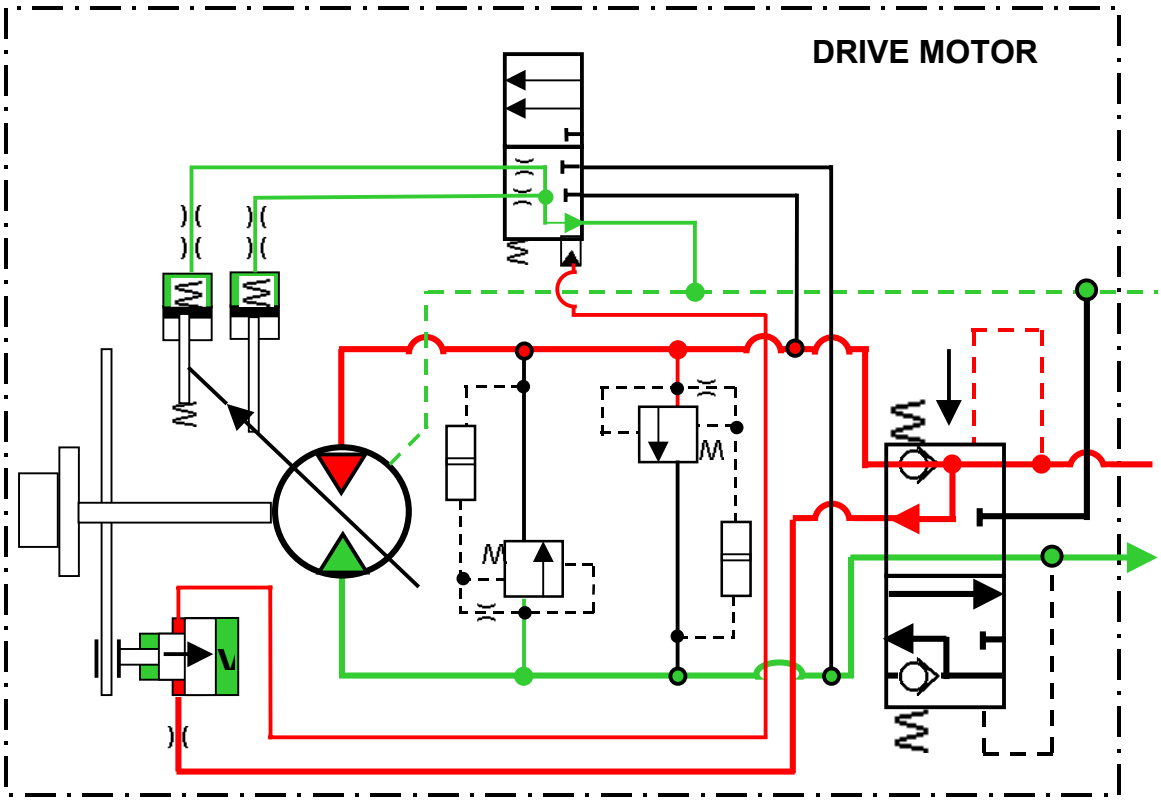


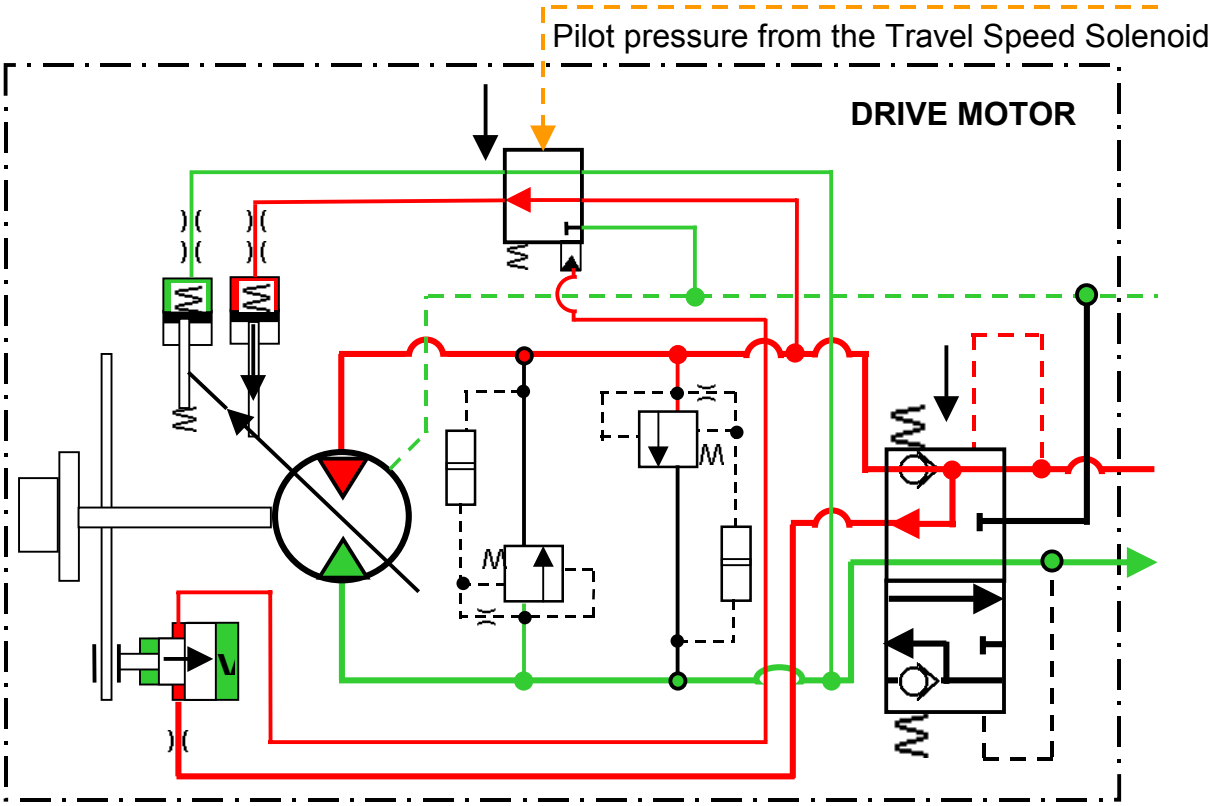

https://truckmanualshub.com/



This page left blank intentionally.

https://truckmanualshub.com/



# TRAVEL

## Straight Travel

1) When performing travel operation + attachment operation or travel operations + swing operation, one pump is dedicated to the travel motors. The other pump will supply oil to the other functions.

The operating method that follows uses travel + boom raise as an example. During travel operation, pressurized oil from P1 (front pump) enters the P1 port of the control valve. Pressurized oil from P2 (rear pump) enters the P2 port of the control valve. Each of these pressurized oils flows to a right or left travel motor and travel operation is performed. At this time, when the boom raise operation is executed, a pilot signal passage in the control valve is intercepted and the straight travel spool is shifted. The pressurized oil that was delivered from P1 (front pump) through the P1 port of the control valve flows to the right and left travel motors. The pressurized oil that was delivered from P2 (rear pump) through the P2 port of the control valve flows to the boom cylinder by way of the boom1 and boom2 spool. In this way, boom raise movement is performed and straight travel is maintained. Oil from pump2 not needed by the upper attachment is routed to the pump1 travel circuit through an orifice and check valve to assist in travel speed during straight travel.

https://truckmanualshub.com/



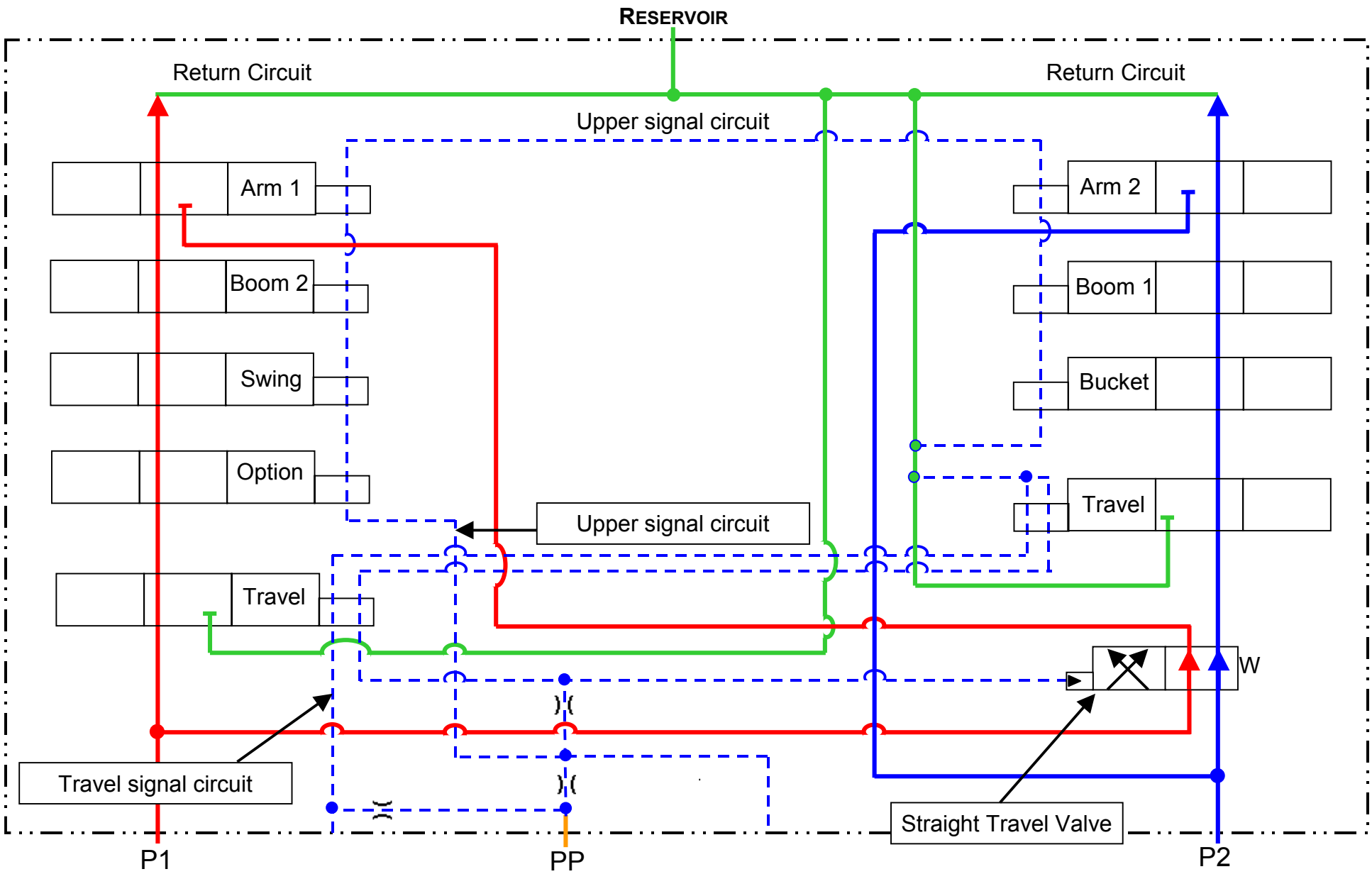

https://truckmanualshub.com/



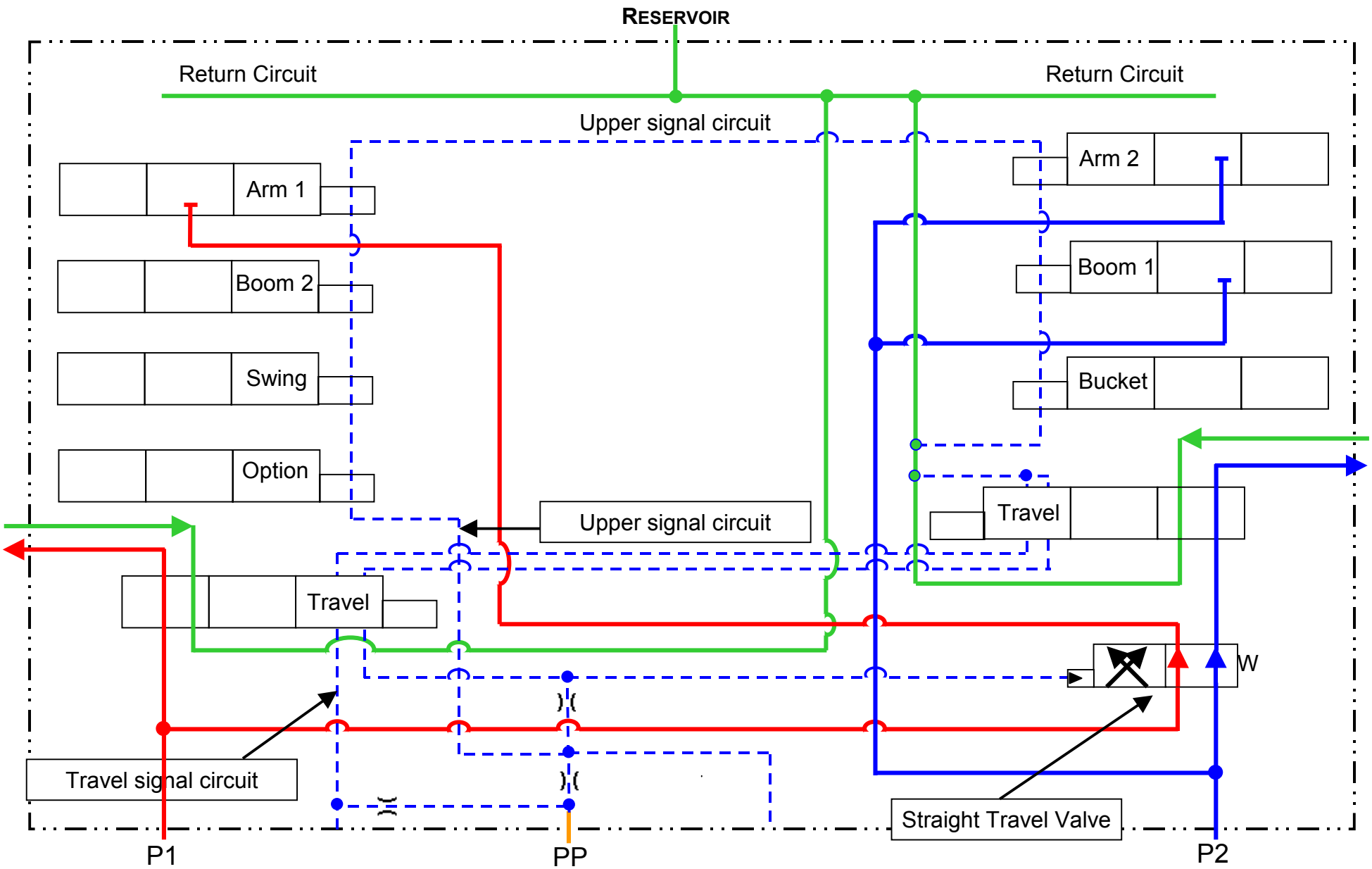

https://truckmanualshub.com/



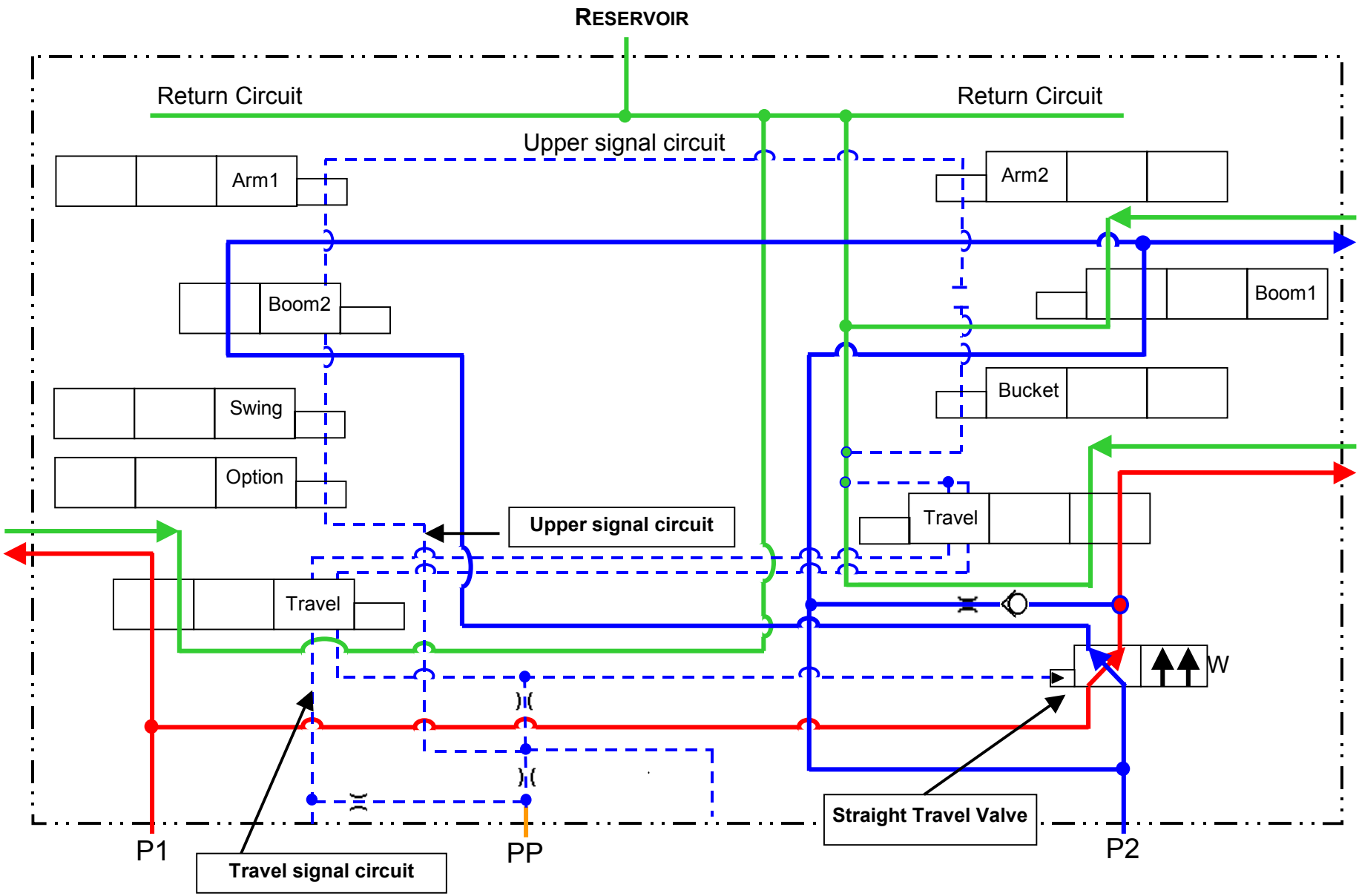

https://truckmanualshub.com/



# SWING

## Swing Operation

1) The swing holding brake prevents the upper structure from drifting on a hillside until the swing hand control is moved or either main pump pressure is raised to +2050 psi.
2) Pilot oil from the swing brake solenoid valve releases the swing brake.
3) The machine uses flow from one pump during swing operations.
4) The upper structure is braked hydraulically before the swing holding brake is applied.

## Swing, Brake off Operation

When the swing hand control is operated, pilot pressure is directed to the swing control spool in the main control valve. The control spool shifts and sends pump1 (front pump) oil to the swing motor for left or right swing. At the same time a pressure switch in the swing pilot circuit is closed. The pressure switch sends a signal to the controller, which turns **OFF** the swing-brake solenoid valve, the valve shifts and sends full pilot pressure (550/600 psi) to the swing brake to release the brake. The swing pressure switch is located in the swing shuttle valve mounted behind the cab.

When ever either main pump pressure reaches approximately +2050 psi the controller will release the swing brake by turning **OFF** the swing-brake solenoid. This is done to protect the upper structure from side loading that occurs while digging. The controller monitors pump pressure by way of pressure transducers located at each main pump.

## Swing Braking Operation

When the swing control is returned to neutral, the centering springs of the swing control spool shift the spool to neutral. The oil flow from pump1 (front pump) to the swing motor is diverted and the supply and return ports of the swing motor are blocked at the control spool. The inertia from the swing movement will cause a pressure spike in the blocked return side of the motor. To prevent spike pressure damage, a built-in crossover relief valve is opened and oil flows through a make-up check valve to the supply side of the motor or to the reservoir. When the pressure is equalized between the return and supply ports the motor acts as a brake and swing motion is stopped. Between the time the supply and return ports are blocked by the control spool and the crossover relief opens, oil from the main return circuit is available at port M of the swing motor to pass through the make-up check valve to the supply side of the motor.

Five seconds after the swing lever is returned too neutral (swing pressure switch opens), the swing brake is applied when the controller sends a 24v signal to energize the swing-brake solenoid valve in the six-solenoid valve bank. The valve shifts and dumps the brake release pressure back to tank. The brake is spring applied and hydraulically released. The six-solenoid valve is located in the pump compartment

https://truckmanualshub.com/



# SWING BRAKE ON

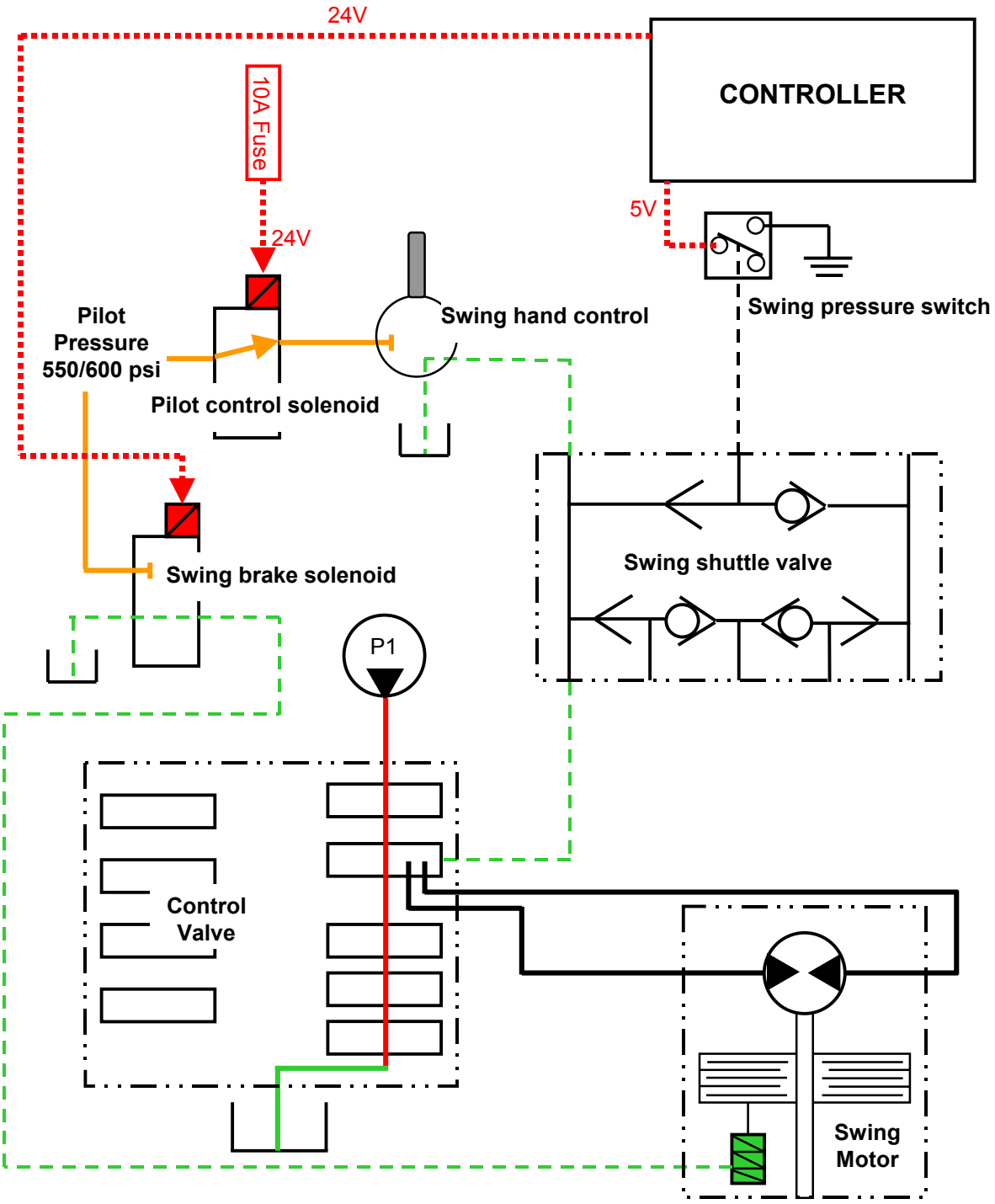

https://truckmanualshub.com/



# SWING BRAKE OFF

## With Swing Operation

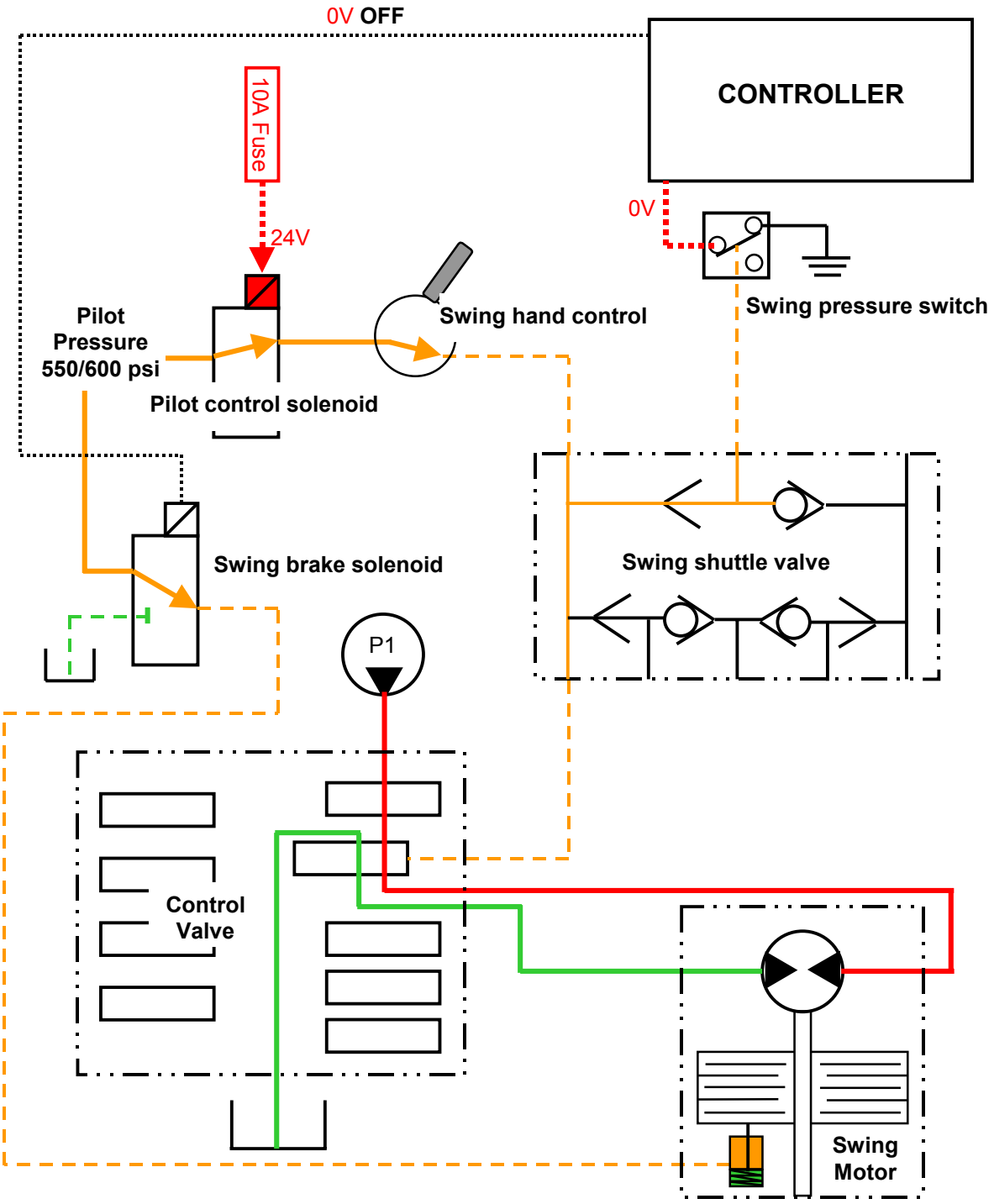

https://truckmanualshub.com/



# SWING BRAKE OFF

## With Pump Pressure

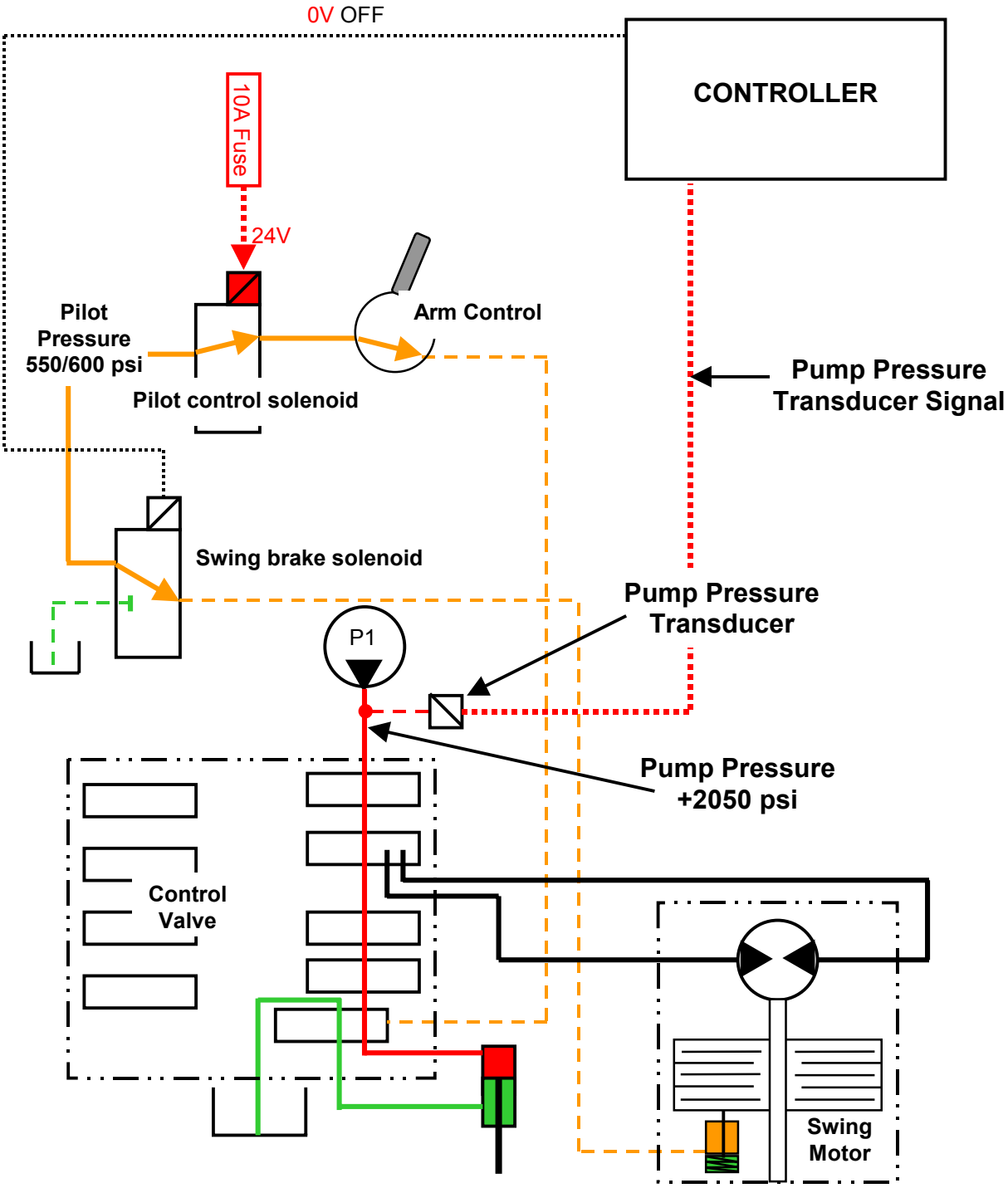

https://truckmanualshub.com/



# SWING

## Swing Lock

1) The swing-brake solenoid is energized allowing the spring-applied brake to fully apply.
2) The swing shut off solenoid is energized hydraulically locking the swing spool.
3) This swing lock condition is maintained, even if the key switch is turned **"OFF"** and **"ON"** again.

With the swing-brake switch **ON**, the swing brake is maintained and the swing control valve is locked into the neutral position.

When the swing-brake switch on the control panel is switched **ON**, a signal is sent to the controller. The controller sends a 24v signal to energize the swing-brake solenoid valve. The valve shifts and connects the swing brake release circuit to tank and allows the brake to apply. The controller also sends 24v to energize the swing shut-off solenoid valve. The valve shifts and sends pilot pressure (550/600 psi) through a shuttle valve to both sides of the swing control spool in the main control valve and hydraulically locks it in neutral. The swing-brake and swing-shutoff solenoids are located in the six-solenoid valve. The six-solenoid valve is located in the pump compartment. The swing shuttle valve is located behind the cab.

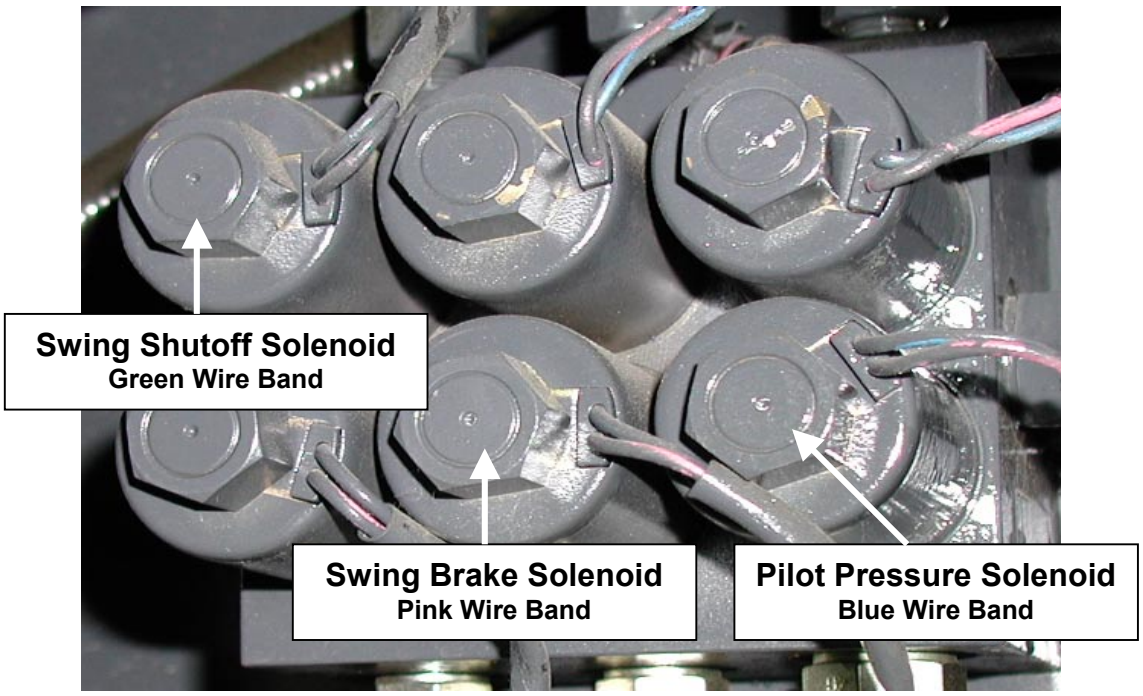

https://truckmanualshub.com/



# SWING LOCK

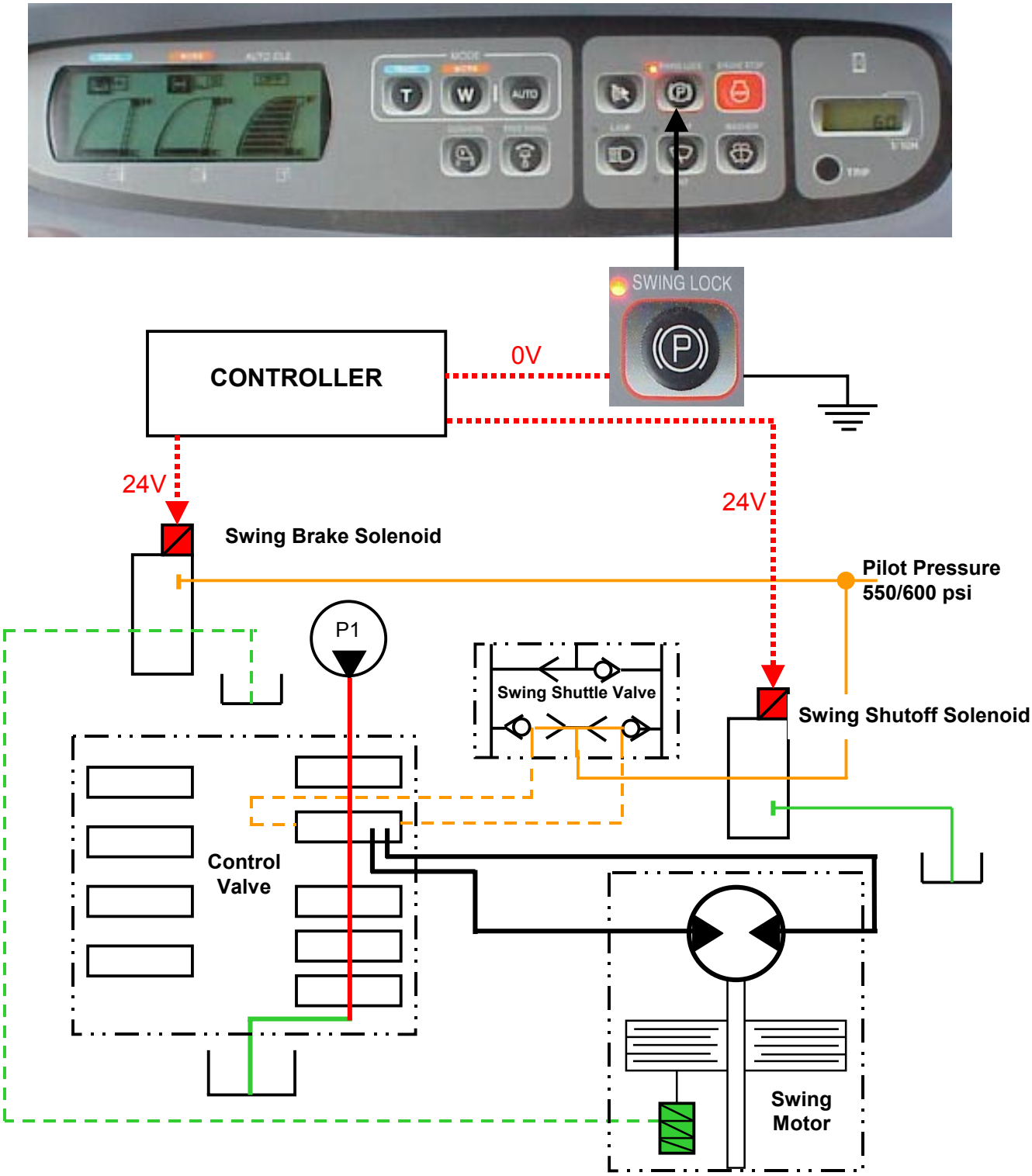

https://truckmanualshub.com/



# SWING

## Swing Priority

1) A priority circuit assures swing operation when swing and arm is operated at the same time.

When operating the swing and arm simultaneously as in bank shaving or bank cutting operation, a priority circuit in the control valve achieves swing priority.

Oil flow from pump1 (front pump) enters the P1 port of the control valve and flow from pump2 (rear pump) enters the P2 port. When swing right or left is activated pilot pressure is sent from the swing shuttle valve to the swing priority valve in the main control valve. This allows the priority valve to remain in the restricted (orifice) position. Which prioritizes pump1 oil for swing over the arm circuit.

During boom up operation pilot pressure is sent to the boom2 spool, which shuts off the open center passage to the arm1 spool. Pilot pressure is routed from the boom up pilot control circuit to the other side of the swing priority valve. This shifts the priority valve to the unrestricted position, which assures pump1 oil flow for arm circuit operation.

When swing and arm or boom up is operated at the same time, the swing priority valve remains in the restricted (orifice) position. This is due to the valve being spring biased to the restricted position.

https://truckmanualshub.com/



# SWING PRIORITY

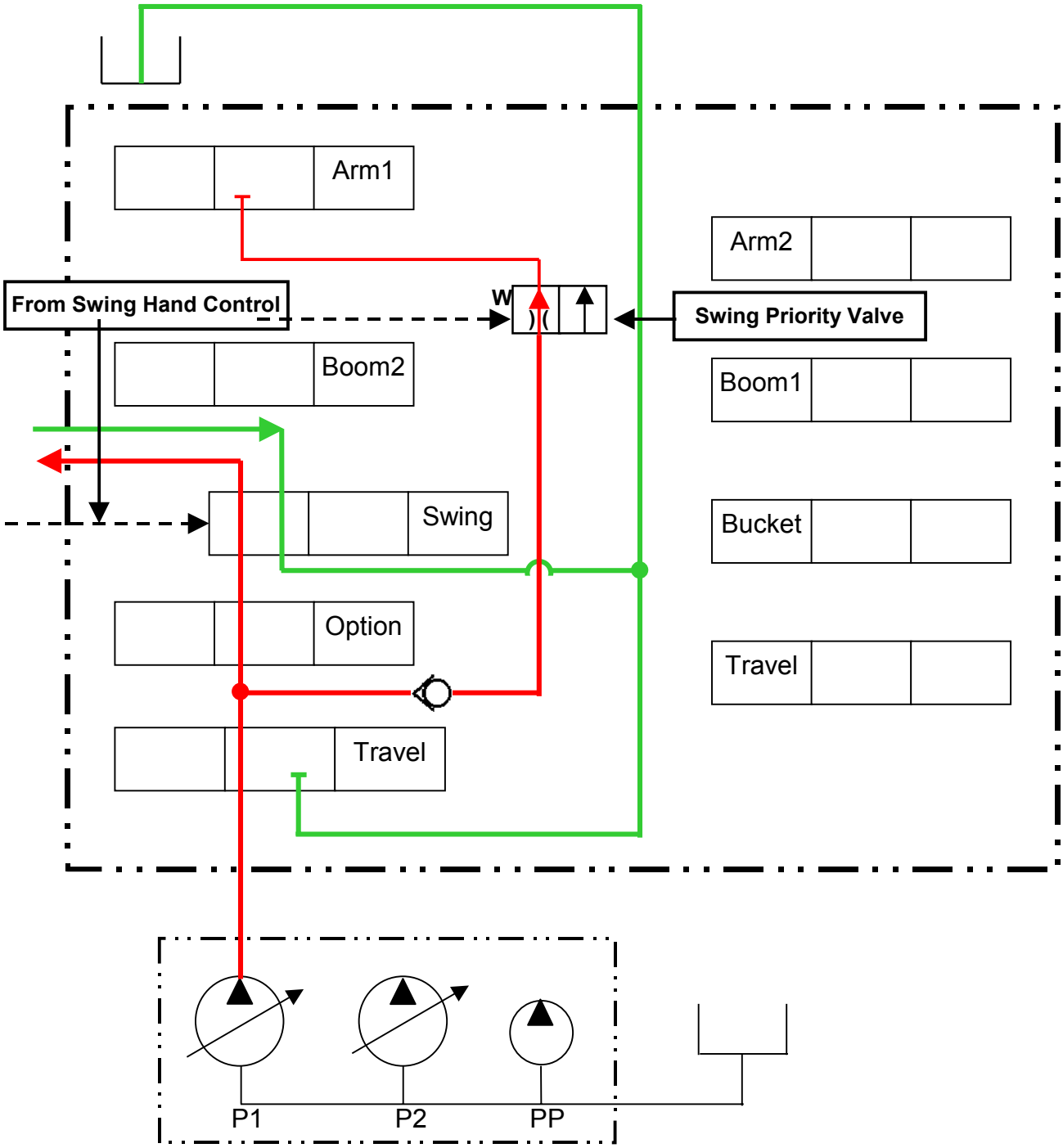

https://truckmanualshub.com/



# ATTACHMENT

## Boom Raise

1) Two pump flows are combined inside the control valve, when the boom1 and boom2 control spools are shifted.

Oil flow from pump1 (front pump) enters the P1 port of the control valve and oil from pump2 (rear pump) enters the P2 port. When the boom hand control is operated for boom up pilot pressure is directed through the cushion valve to the boom1 control spool in the main control valve. The control spool shifts and sends pump2 oil for boom up. Boom up pilot control pressure is also sent to the boom2 control spool on the pump1 side of the main control valve. The control spool shifts which directs pump1 oil internally to the boom up circuit at the boom1 spool. This way boom 2-speed is achieved.

Whenever boom up is activated pilot pressure from the boom up pilot control circuit is sent to the swing priority valve to shift it to unrestricted position to assure pump1 oil for arm circuit operation.

https://truckmanualshub.com/



# BOOM RAISE

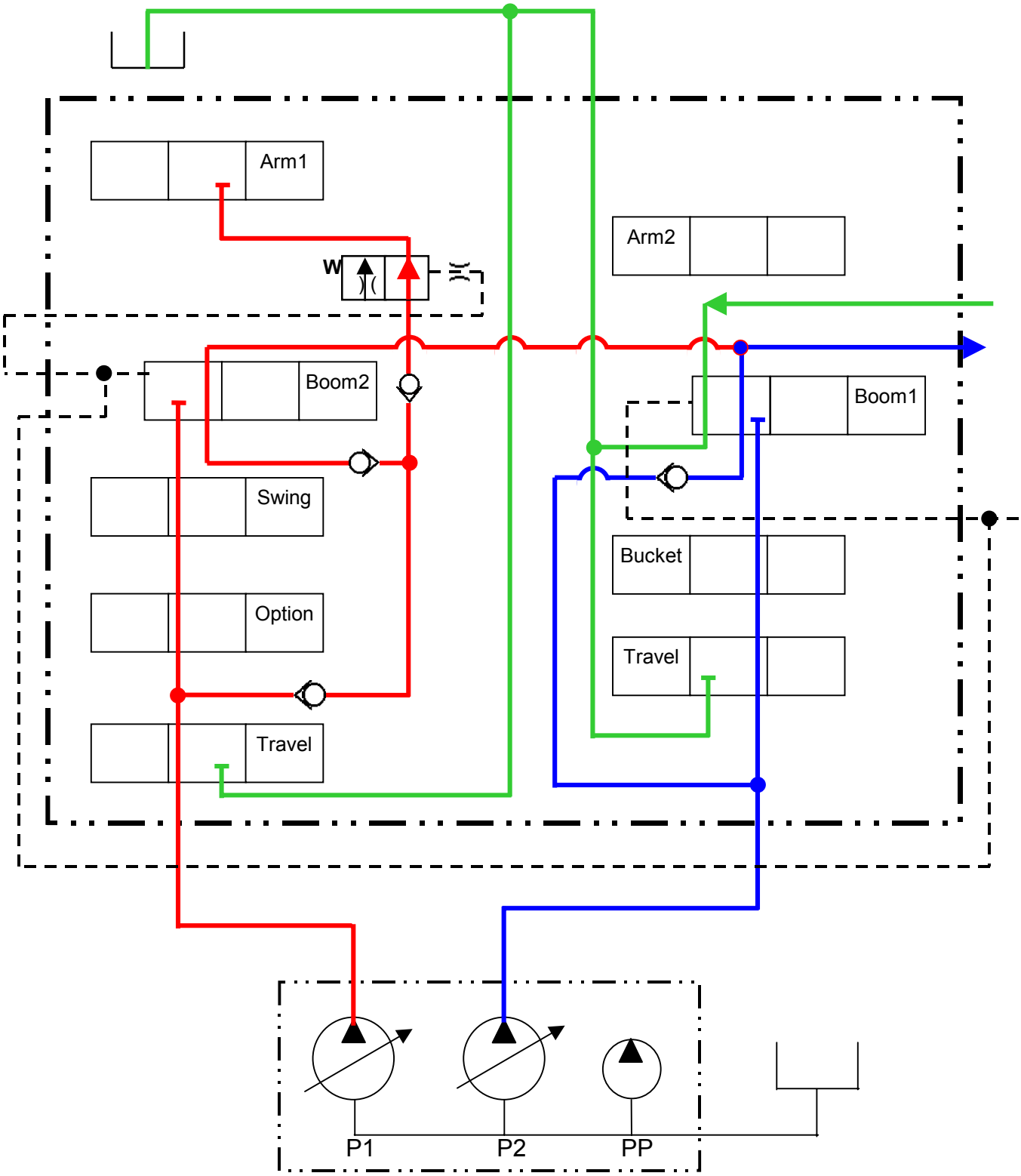

https://truckmanualshub.com/



# ATTACHMENT

## Boom Lower

1) When a built-in anti-drift valve in the control valve is released and boom1 control spool is shifted, the boom can be lowered.
2) A regeneration valve inside the boom1 control spool provides additional speed.
3) Only one pump flow is used.

Oil flow from pump2 (rear pump) enters the P2 port of the control valve. When the boom hand control is operated for boom down pilot pressure is directed through the cushion valve to the boom1 control spool of the main control valve. Pilot pressure is also sent to the boom down anti-drift valve. When the anti-drift valve and boom1 control spool is shifted boom down is achieved.

When the boom is raised the spring chamber of the anti-drift valve is “charged” with boom up pressure. This is done through a pilot signal from the cylinder circuit, which passes through the anti-drift pilot valve to the spring chamber of the anti-drift valve. With equal pressure on each side of the valve the spring is able to hold the valve closed. This keeps boom drift through the control spool at a minimum. When lowering the boom a pilot signal from the boom control pilot circuit is also routed to the anti-drift pilot valve. The valve is shifted and allows the “charged” oil in the spring chamber to exit to the return circuit. Now the anti-drift valve will open and boom lowering is activated.

The cylinder return passes through an orifice in the main control spool. This creates backpressure in the circuit. There is a check valve in the spool between the return and supply circuit. If the supply pressure fall below the backpressure in the cylinder return circuit oil can flow to the supply side through the check valve. This protects from cavitation and helps with boom lowering speed.

Whenever the boom is lowered part of the pump supply is allowed to bleed off through the open center circuit through an orifice. This is to turn the pump “0N” more slowly and maintain some negative control pressure to the pump to limit its output. This is to prevent the pressure spike that occurs when the boom starts to lower.

https://truckmanualshub.com/



# BOOM OPERATION

## WITH ANTI-DRIFT AND REGENERATION

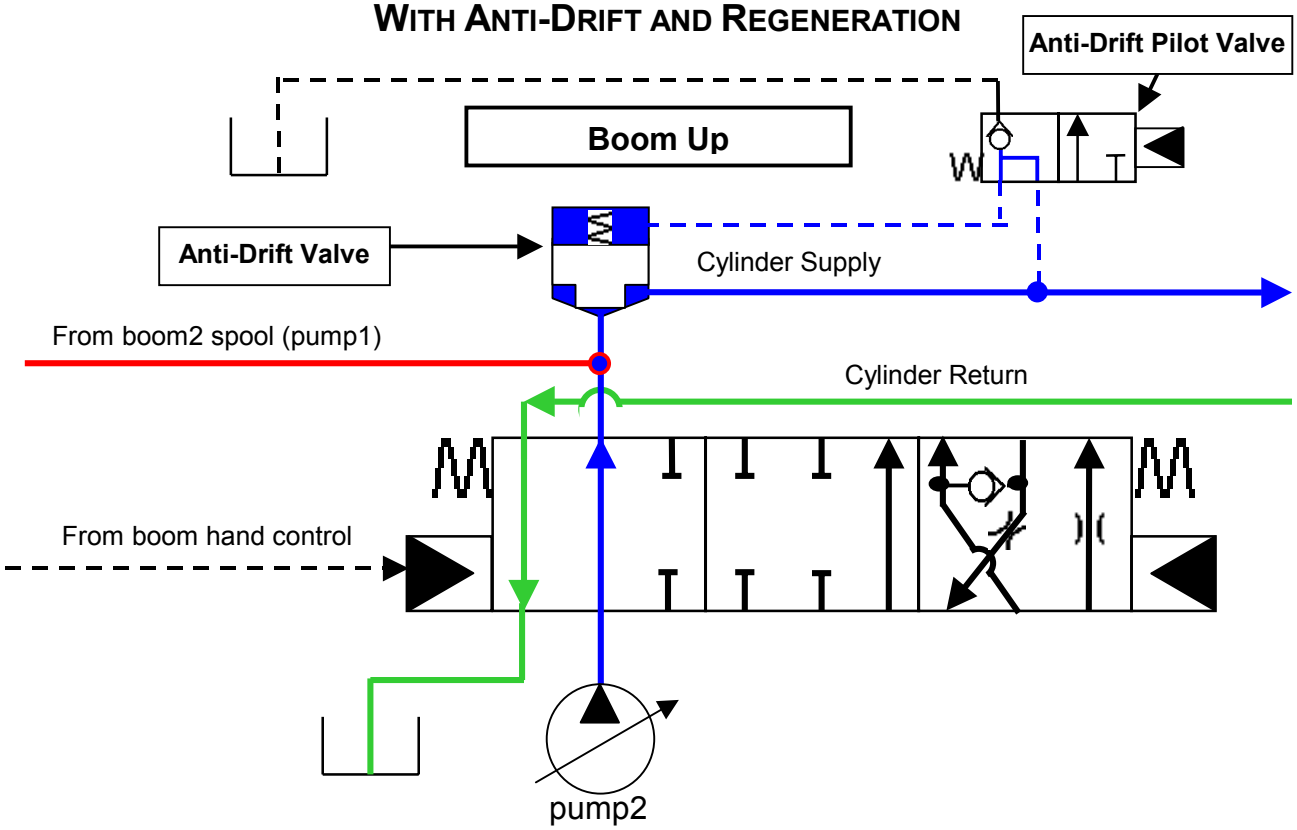


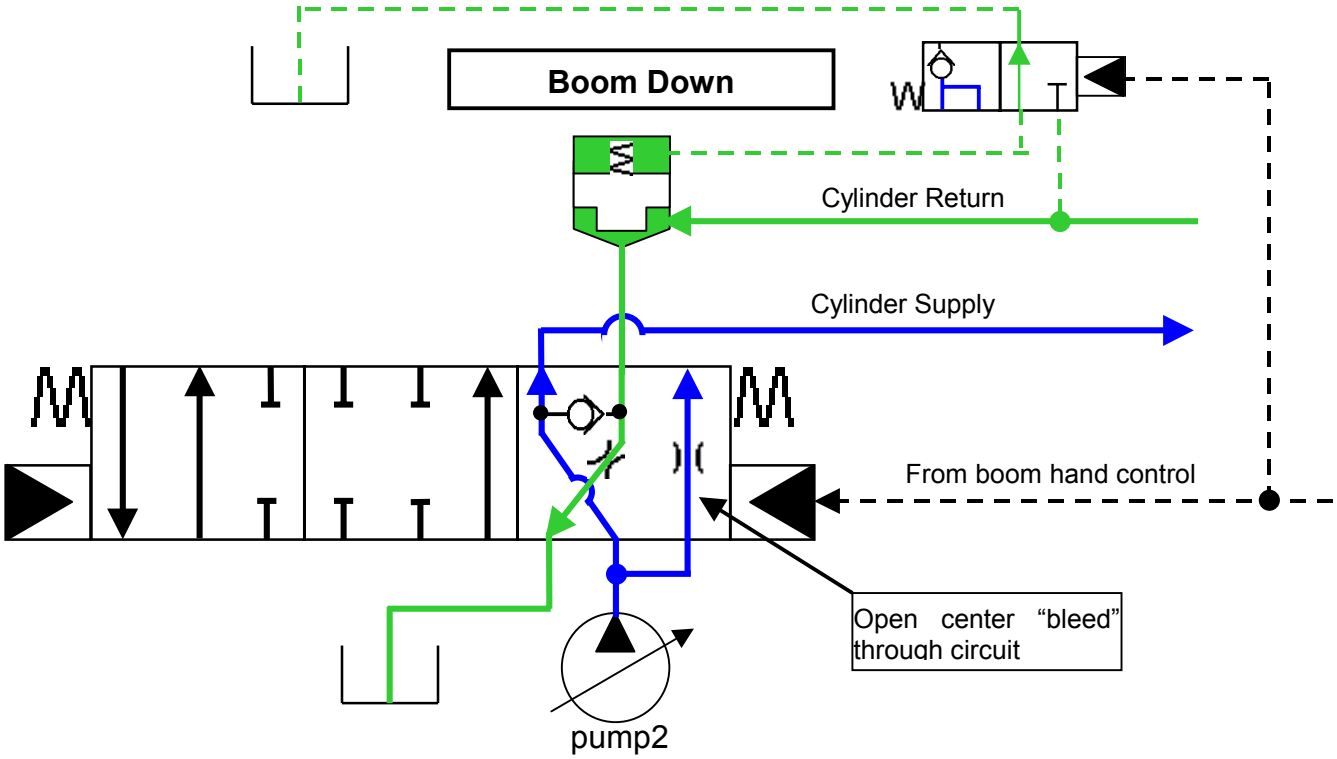

https://truckmanualshub.com/



# ATTACHMENT

## Arm Open (Out)

1) Two pump flows inside the control valve are combined, when the arm1 and arm2 control spools are shifted.

The oil from pump1 (front pump) enters the P1 port of the control valve and the oil from pump2 (rear pump) enters the P2 port. When the hand control for arm out is operated pilot pressure is directed through the cushion valve to the arm1 control spool in the main control valve. The arm1 control spool is shifted and arm-out is executed. Pump1 is used for the arm circuit. If arm only is operated flow from pump2 is routed to the arm circuit for dual-pump operation (2-speed).

The pilot pressure sent from the arm-out pilot control is also sent to the arm2 spool on the pump2 side of the main control valve. The spool is shifted and diverts pump2 oil to the arm-out cylinder circuit at the arm1 control spool. Return oil from the cylinder is routed through the arm1 and arm2 control spools for improved performance.

https://truckmanualshub.com/



# ARM OPEN (OUT)

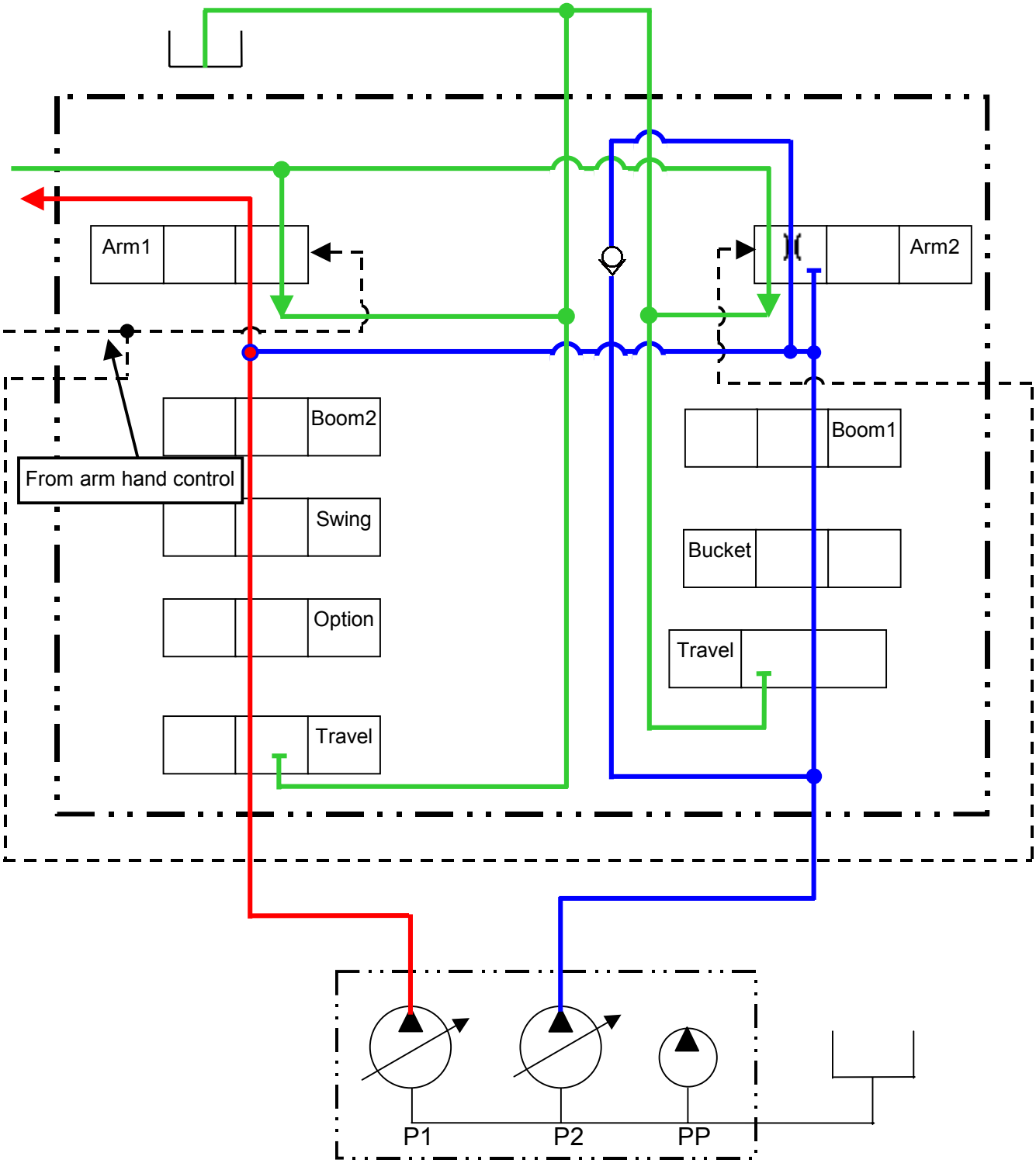

https://truckmanualshub.com/



# ATTACHMENT

## Arm Close (In)

1) Two pump flows inside the control valve are combined, when the arm1 and arm2 control spools are shifted.
2) When a built-in anti-drift valve in the control valve is opened and the arm1 spool is shifted, arm closing is achieved.
3) A regeneration valve provides additional speed.

The oil from pump1 (front pump) enters the P1 port of the control valve and the oil from pump2 (rear pump) enters the P2 port. When the hand control for arm in is operated, pilot pressure is directed through the cushion valve to the arm1 control spool in the main control valve. The arm1 control spool is shifted and arm-in is executed. When the arm1 control spool is shifted pilot pressure is routed to the anti-drift pilot valve and shifts the valve. This allows the trapped oil in the spring chamber of the anti-drift valve to escape to tank. Which allows the valve to open for arm-in operation. Pump1 is used for the arm circuit. If arm only is operated flow from pump2 is routed to the arm circuit for dual-pump operation (2-speed).

The pilot pressure sent from the arm-in control is also sent to the arm2 spool on the pump2 side of the main control valve. The spool is shifted and diverts pump2 oil to the arm-in cylinder circuit at the arm1 control spool.

When the arm is opened (out) the spring chamber of the anti-drift valve is “charged” with arm out pressure. This is done through a pilot signal from the cylinder circuit, which passes through the anti-drift pilot valve to the spring chamber of the anti-drift valve. With equal pressure on each side of the valve the spring is able to hold the valve closed. This keeps arm drift through the control spool at a minimum. When the arm is closed (in) a pilot signal from the arm control pilot circuit is also routed to the anti-drift pilot valve. The valve is shifted and allows the “charged” oil in the spring chamber to exit to the return circuit. Now the anti-drift valve will open and arm close (in) is activated.

The cylinder return oil is routed through a regeneration valve. This is a two-stage restricted valve, which creates backpressure in the return circuit. Pump pressure will normally keep the regeneration valve in the least restrictive position. The valve is spring biased to the most restricted position plus a pilot signal from the return circuit. If the pump pressure should be reduced, because supply cannot keep up with demand the regeneration valve will shift to the most restricted position. This will force return oil to the supply circuit across a check valve inside the arm1 control spool.

https://truckmanualshub.com/



# ARM OPERATION
## With Anti-Drift and Regeneration

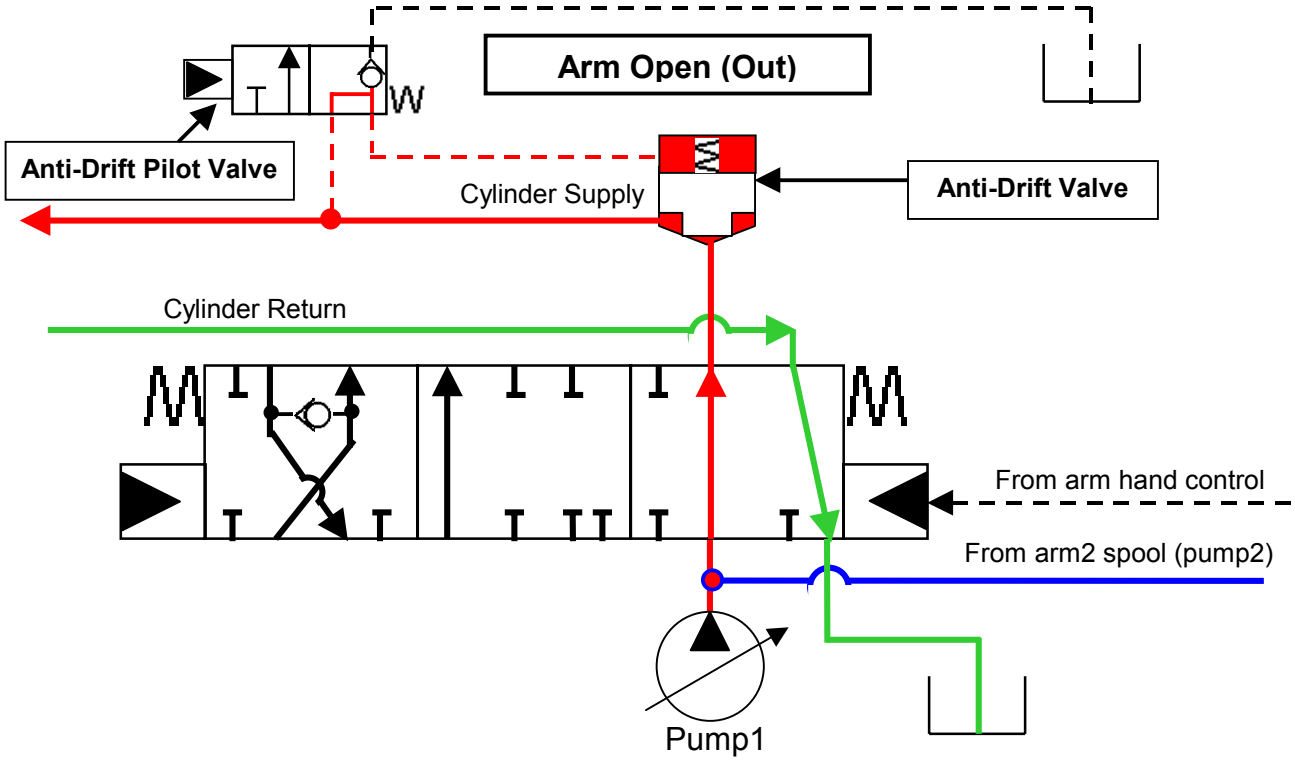


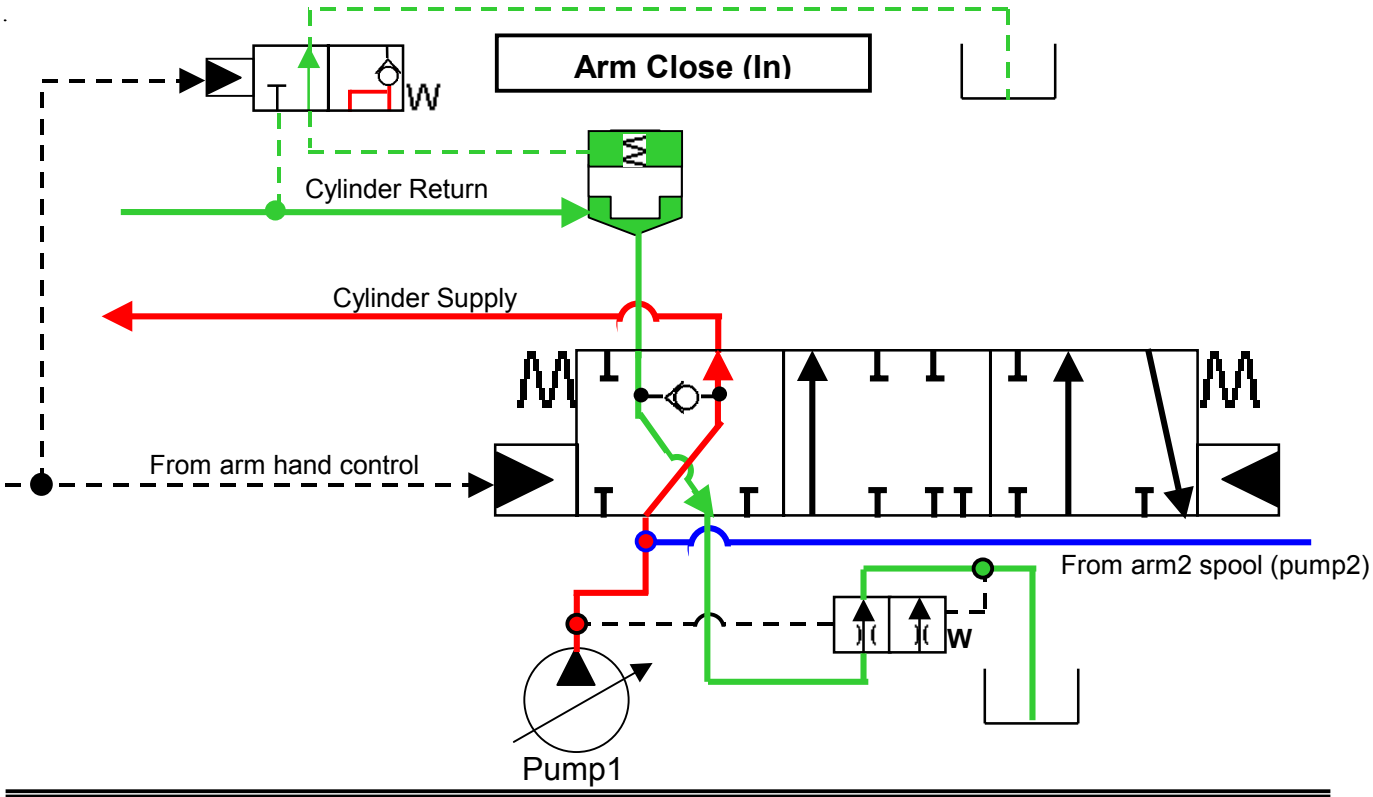

https://truckmanualshub.com/



# FEATURES

## Cushion Operation (ON) (Boom and Arm)

1) As a control spool returns to neutral (center) position, the pilot oil must return through an orifice in the cushion valve.
2) The slow movement of the spool provides the cushion feature.
3) Cushion control only occurs in the boom and arm circuits.

During arm or boom operation, when the control lever is returned to neutral, a cushion valve reduces the shock to the machine by preventing sudden stopping of the arm or boom movement. The heat circuit of the cushion valve serves to improve operation during cold weather operation.

Cushion valve operation is explained using the boom up operation as an example. When the boom up control lever is returned to neutral, a restriction in the cushion valve creates an imbalance between the pressure that shifted the boom1 control spool, (connected to the H port of the cushion valve) and the neutral signal (tank) pressure at the E port. The cushion valve shifts to a more restrictive passage and the pressure change is slowed as it is lowered to neutral signal (tank) pressure. As the pressure lowers, the boom1 control spool returns too neutral. By slowing the shifting of the control spool, shock to the machine is reduced.

The heat circuit of the cushion valve is part of the hydraulic return oil that flows through a 0.12-inch orifice and an in line filter before it enters the R port of the valve. The orifice raises the oil temperature, and as the heated oil passes through the cushion valve, the temperature of the cushion valve is raised. The increased temperature improves the operation of the cushion valve in cold weather.

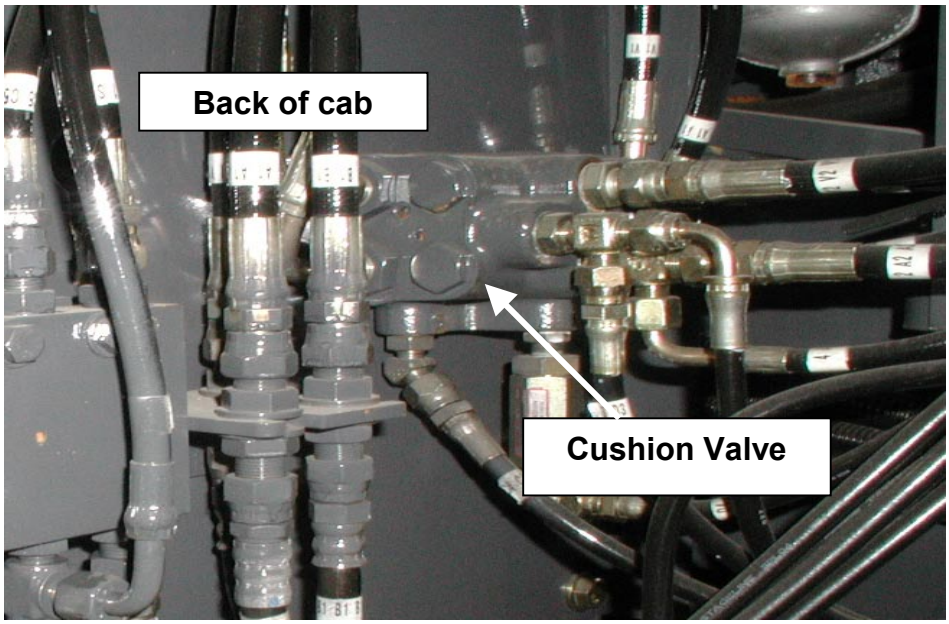

https://truckmanualshub.com/



# CUSHION VALVE (NEUTRAL)

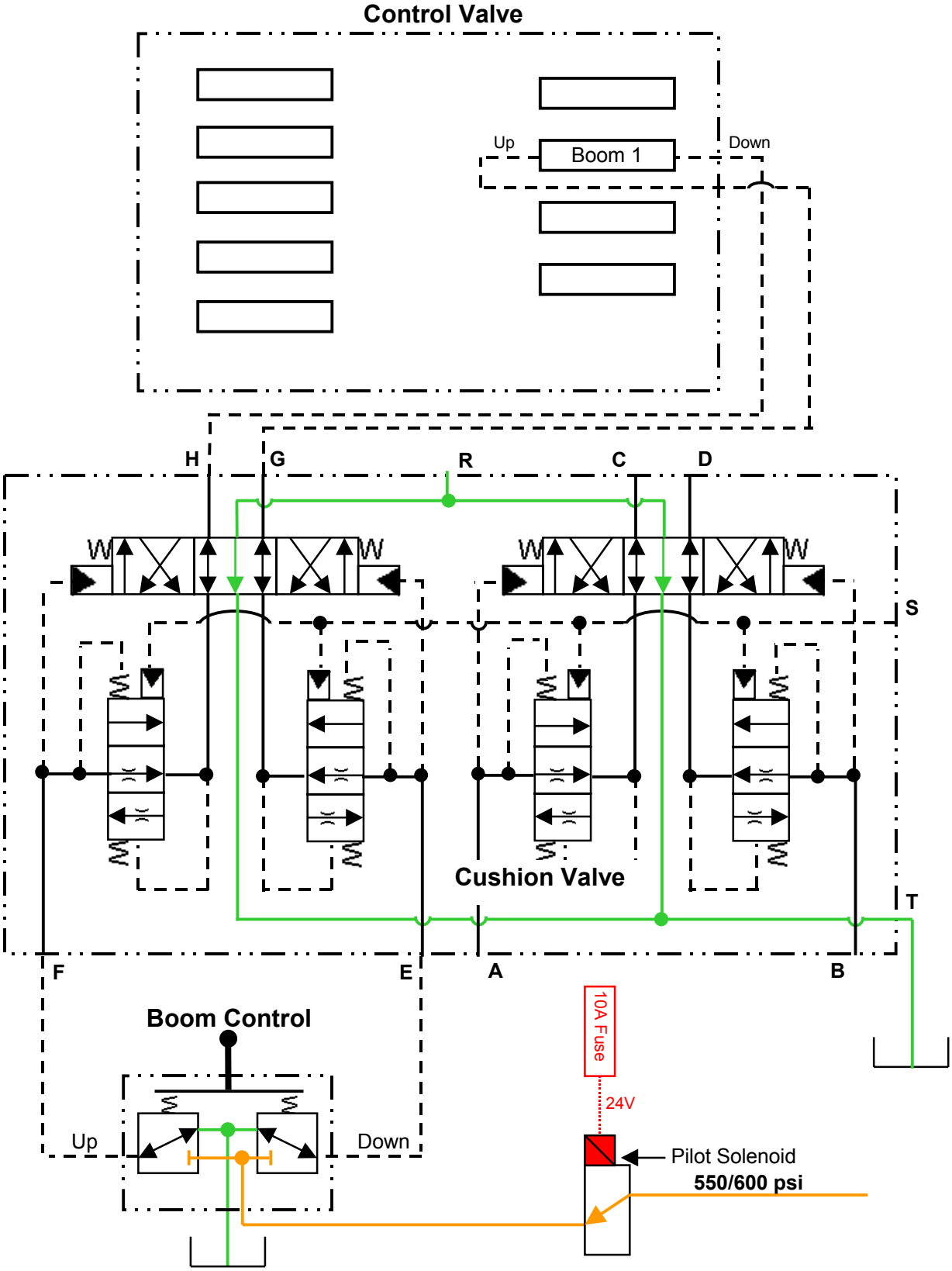

https://truckmanualshub.com/



# CUSHION OPERATION (BOOM UP)

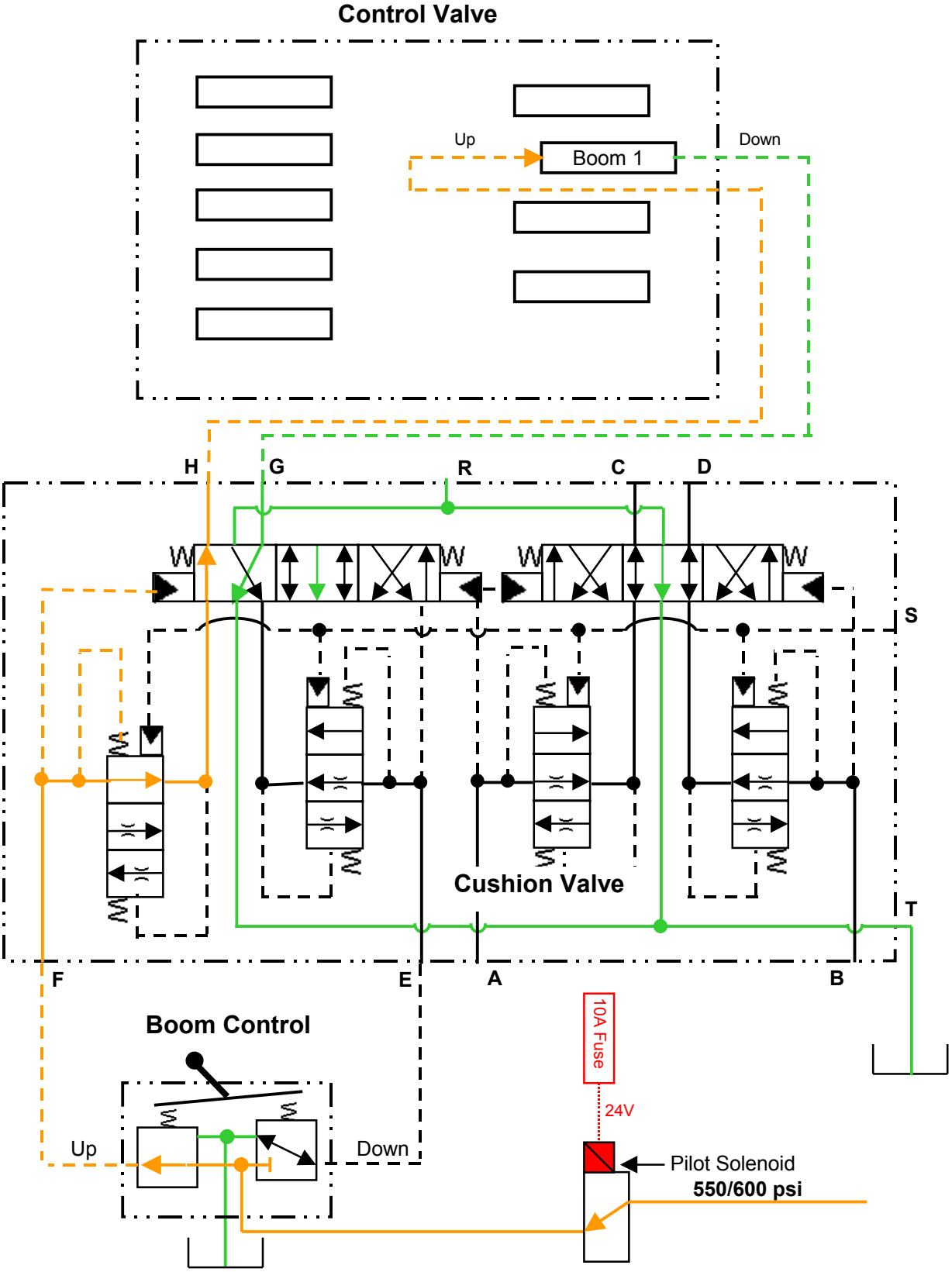

https://truckmanualshub.com/



# CUSHION OPERATION (BOOM UP RELEASED)

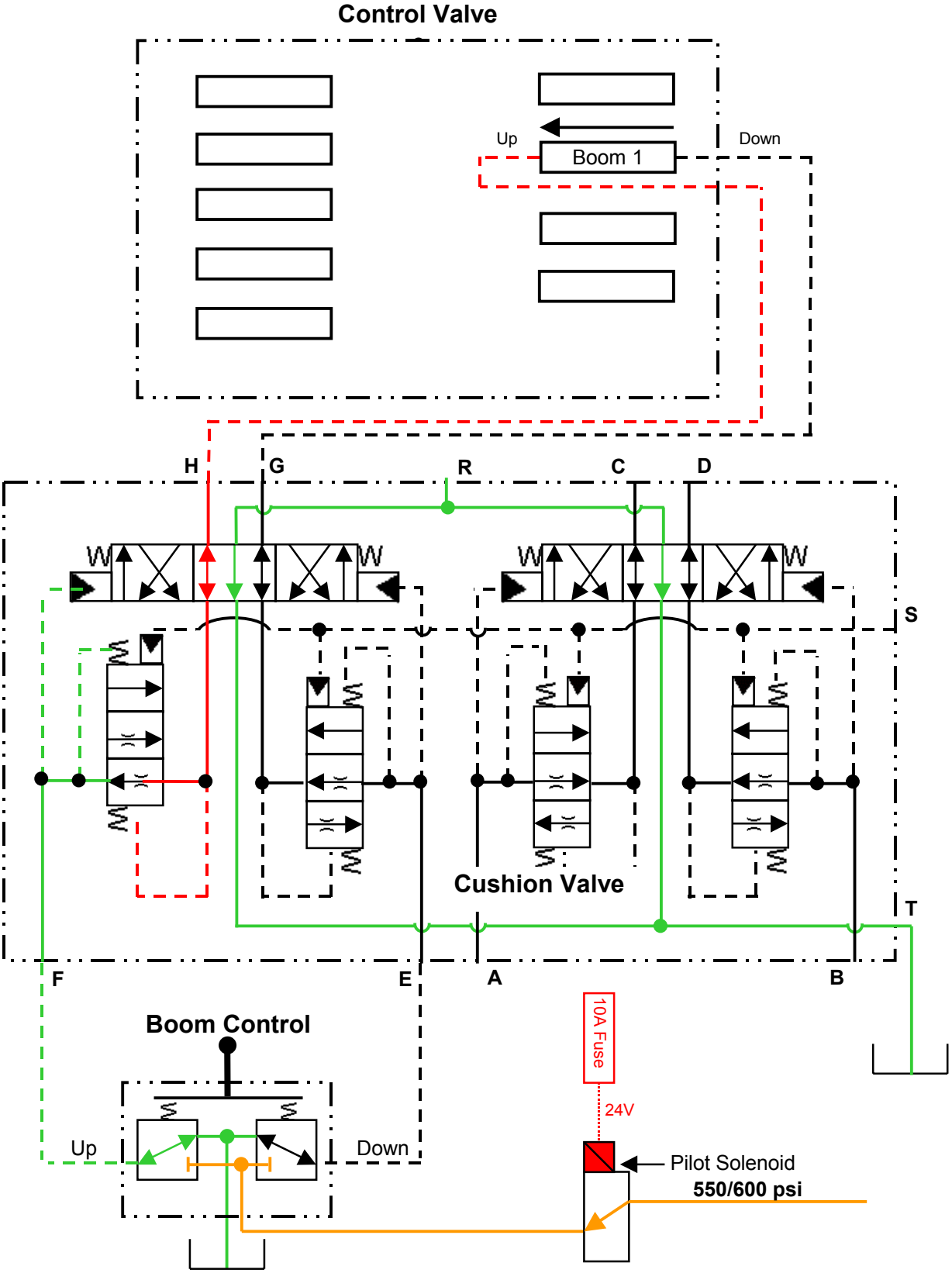

https://truckmanualshub.com/



# FEATURES

## Cushion Operation (OFF) (Boom and Arm)

1) When pilot oil from the cushion solenoid is sent to the cushion valve, the orifices are shifted out of the circuit and the cushion feature will not function.

**Note:** The Controller needs an input signal from the engine controller for cushion off.

During cushion off operation, the dirt release from the attachments is improved by the sudden stopping (shock) of the arm and boom operations.

When the cushion off button is pressed, a signal is sent to the controller. The controller sends a 24v signal to the cushion solenoid valve, the valve is shifted and pilot pressure is directed to the S port of the cushion valve. The pressure that enters the S port shifts the four-metered valve spools in the cushion valve to the unrestricted position. This allows free flow of the arm and boom control signals through the valve. This allows the arm and boom control valves to return to neutral immediately when the control levers are returned too neutral. The cushion off solenoid is in the six-solenoid valve bank located in the pump compartment.

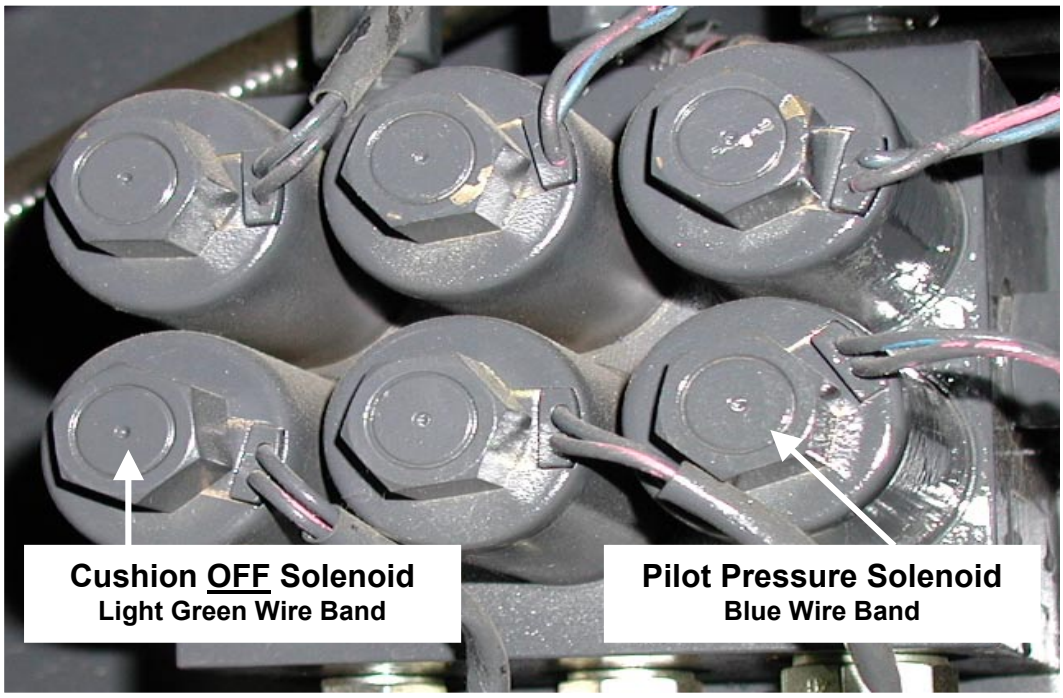

https://truckmanualshub.com/



# CUSHION OFF

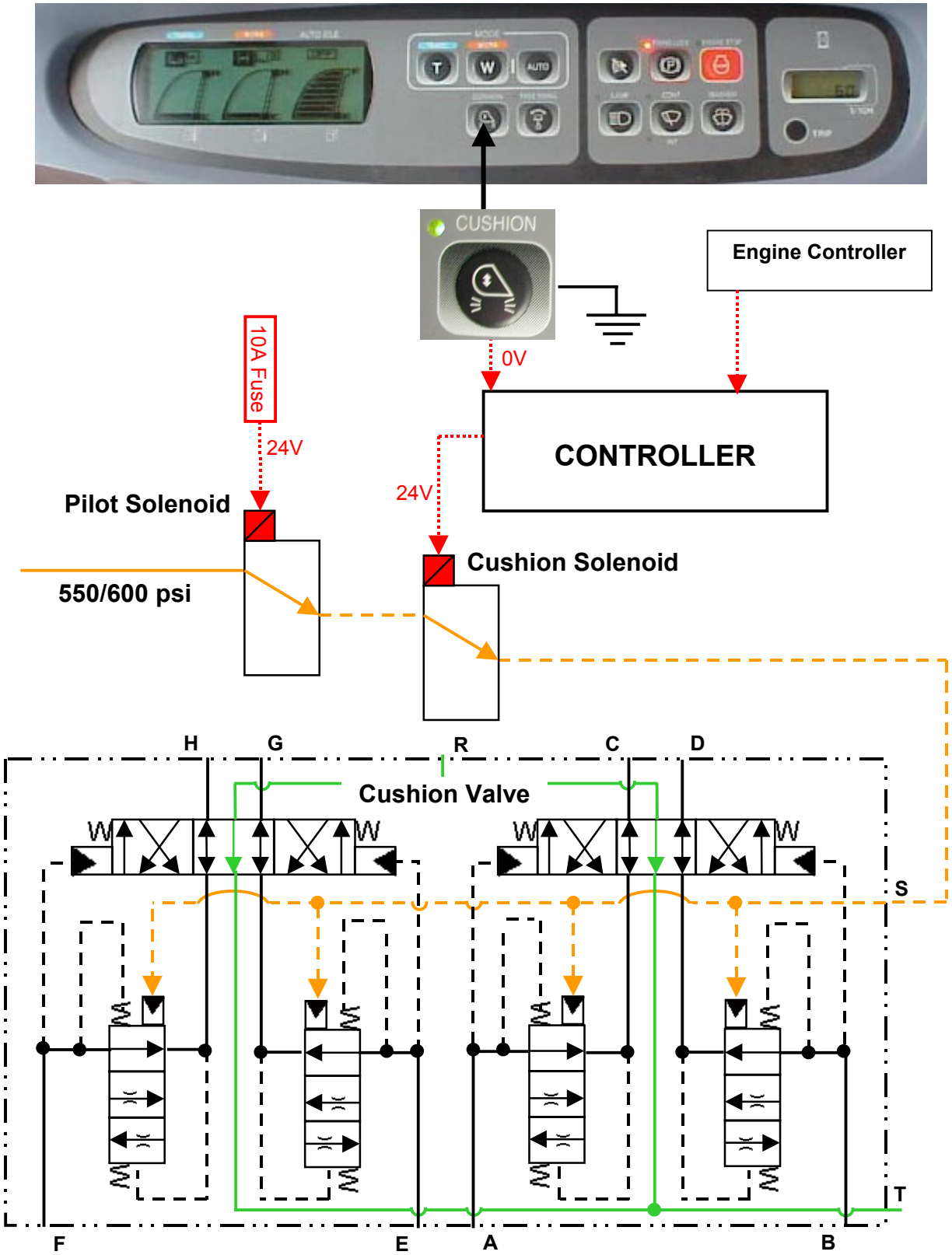

https://truckmanualshub.com/



# FEATURES

## Automatic Power Boost

1) When auto power boost is activated in H or S mode, the pressure setting of the main relief increases from approximately 4900 psi to approximately 5400 psi and digging force is increased.
2) This power boost increase will occur for 8-second intervals.
3) Power boost is on full time in L mode.

**Note:** The controller needs a load ratio signal from the engine controller and pump pressure transducer input for auto bower boost.

During attachment operation the controller monitors the main pump pressures with transducers at the pumps. It also monitors the engine load from the engine controller. If either pump pressure rises above 4350 psi for 1 second and the load ratio of the engine does not fluctuate more than ± 5% for 2 seconds the controller will activate power boost for 8 seconds. The load must be reduced before power boost will activate again.

The controller sends 24v to the power boost solenoid valve. The valve is shifted and directs pilot pressure to the Ph port of the control valve and enters the spring chamber of the relief valve. The pilot pressure adds to the spring pressure and power boost is achieved. After 8 seconds, the signal to the power boost solenoid valve is stopped. The power boost solenoid is located in the six-solenoid valve bank, which is in the pump compartment.

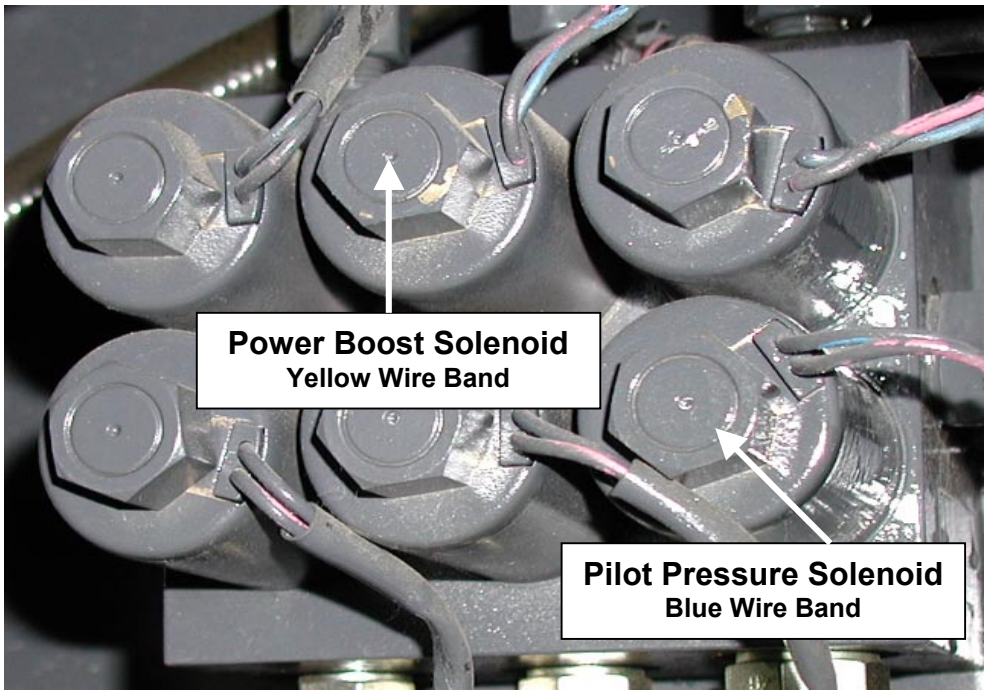

https://truckmanualshub.com/



# POWER BOOST

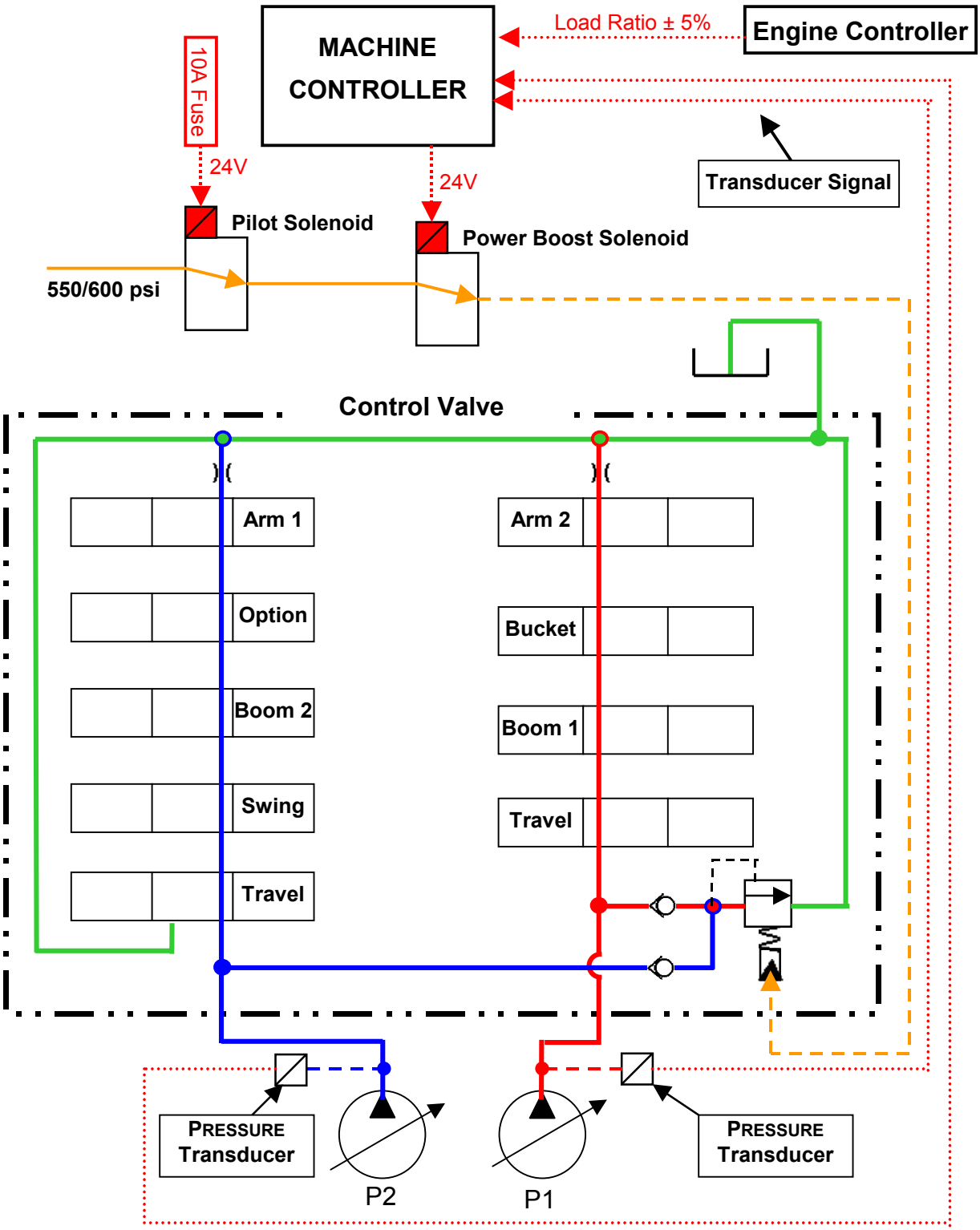

https://truckmanualshub.com/



# FEATURES

## Main Relief Valve

The Main Relief has two adjustments:

1) Standard Main Relief pressure
2) Power Boost Pressure

   When pilot signal port is pressurized the power boost piston shifts to the position shown (POWER BOOST). Thus the pilot spring force rises, and the pressure setting increases.

   a) In H or S mode, when the controller activates auto power boost, power boost operation is executed for 8 seconds.

   b) In L mode power boost is on full time.

https://truckmanualshub.com/



# MAIN RELIEF

## STANDARD RELIEF POSITION

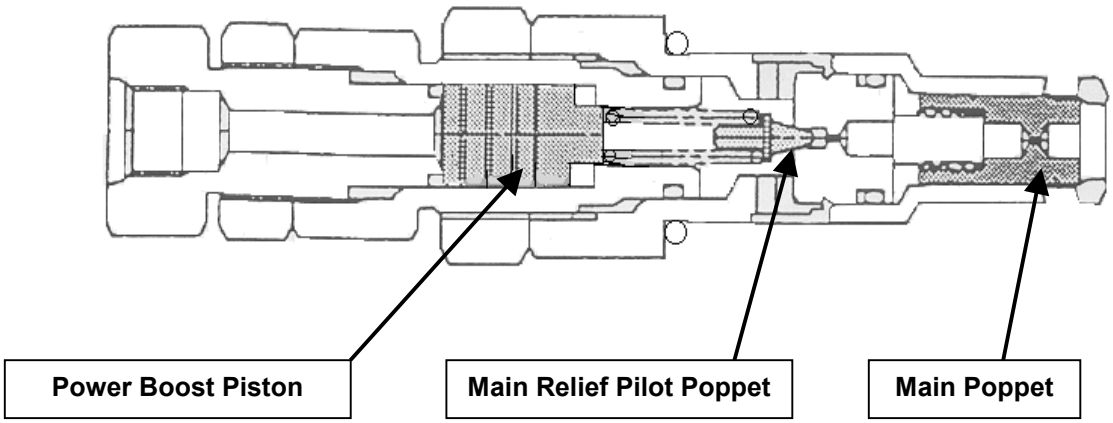


## POWER BOOST RELIEF POSITION

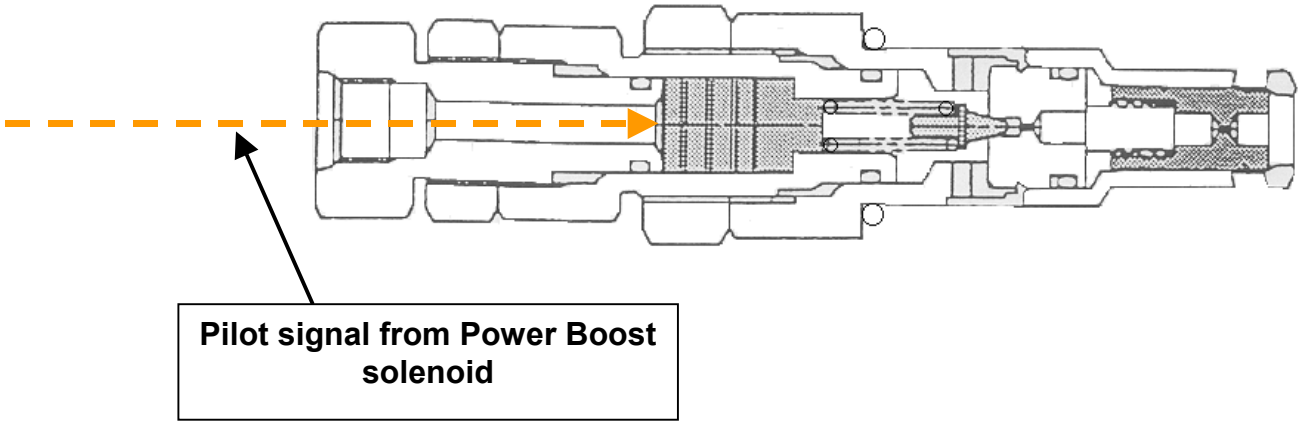

https://truckmanualshub.com/



# FEATURES

## Neutral Pump De-Stroke

1) If the flow output of P1 or P2 hydraulic pump is not needed the output is kept at a minimum flow rate (negative control flow rate), and energy consumption is reduced.

The negative flow control sets the hydraulic pump at minimum flow rate and reduces energy consumption in neutral no-load mode.

Pump flow through the open center passage of the main control valve is routed through a de-stroke valve before exiting to the reservoir. The destroke valves creates backpressure in the neutral circuit. This backpressure is directed from the ps1 and ps2 ports of the control valve to the pi1 port of pump1 (front pump) and the pi2 port of pump2 (rear pump) as a de-stroke control signal. The de-stroke control signal pressure which enters port pi1 and pi2, through servo valves, sets the swash plate angles of the pumps at minimum and results in minimum flow rate (negative flow).

https://truckmanualshub.com/



# PUMP DE-STROKE (NEUTRAL)

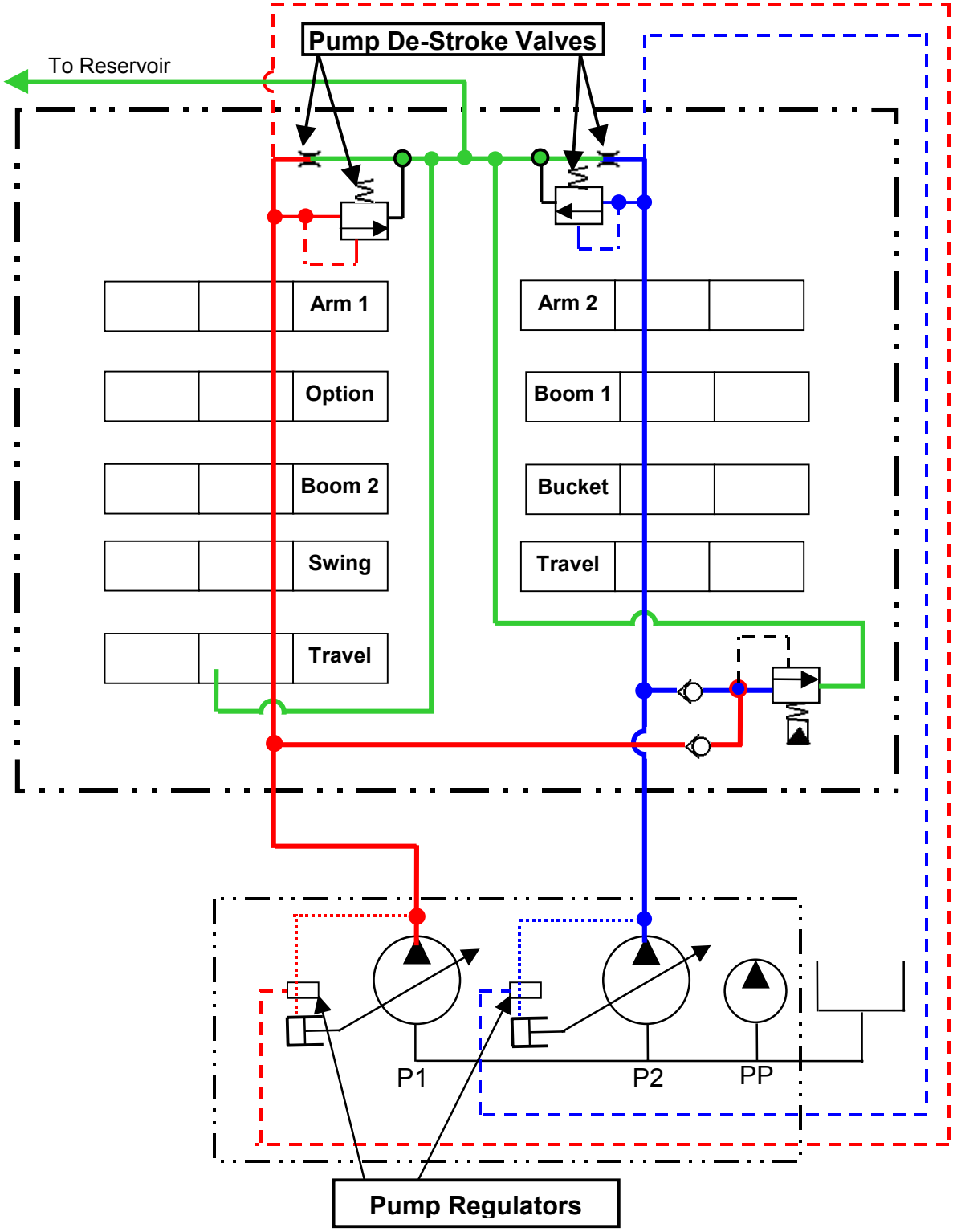

https://truckmanualshub.com/



# FEATURES

## Free Swing Operation

1) An orifice leak is opened between the A and B ports of the swing motor. This will provide smoother starts and stops of the swing during hoisting operations.

**Note:** The controller needs an input signal from the engine controller for free swing.

The free swing operation dampens the oil pressure and flow surges to the swing motor during starting and stopping. This provides for smoother starts and stops during swing operations.

When the free swing switch is **ON**, the controller sends a 24v signal to the free swing solenoid valve. The valve is shifted and allows oil to free flow, through an orifice, between both main ports of the swing motor. The valve creates a restricted by-pass of the swing motor when starting swing operations and a by-pass of the swing motor when stopping. When free swing is **ON**, the swing brake is released and does not come on. The free swing solenoid valve is located behind the cab.

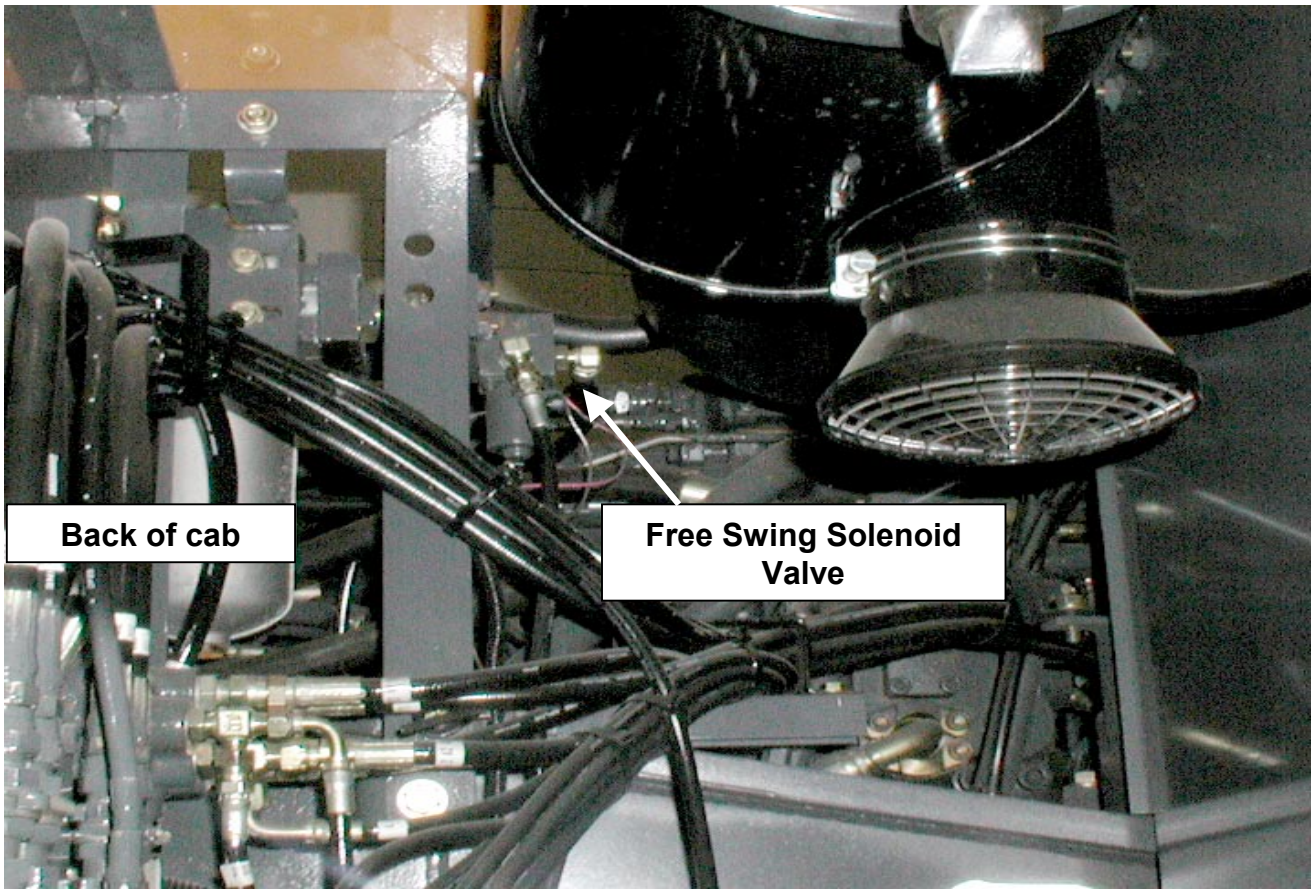

https://truckmanualshub.com/



# FREE SWING

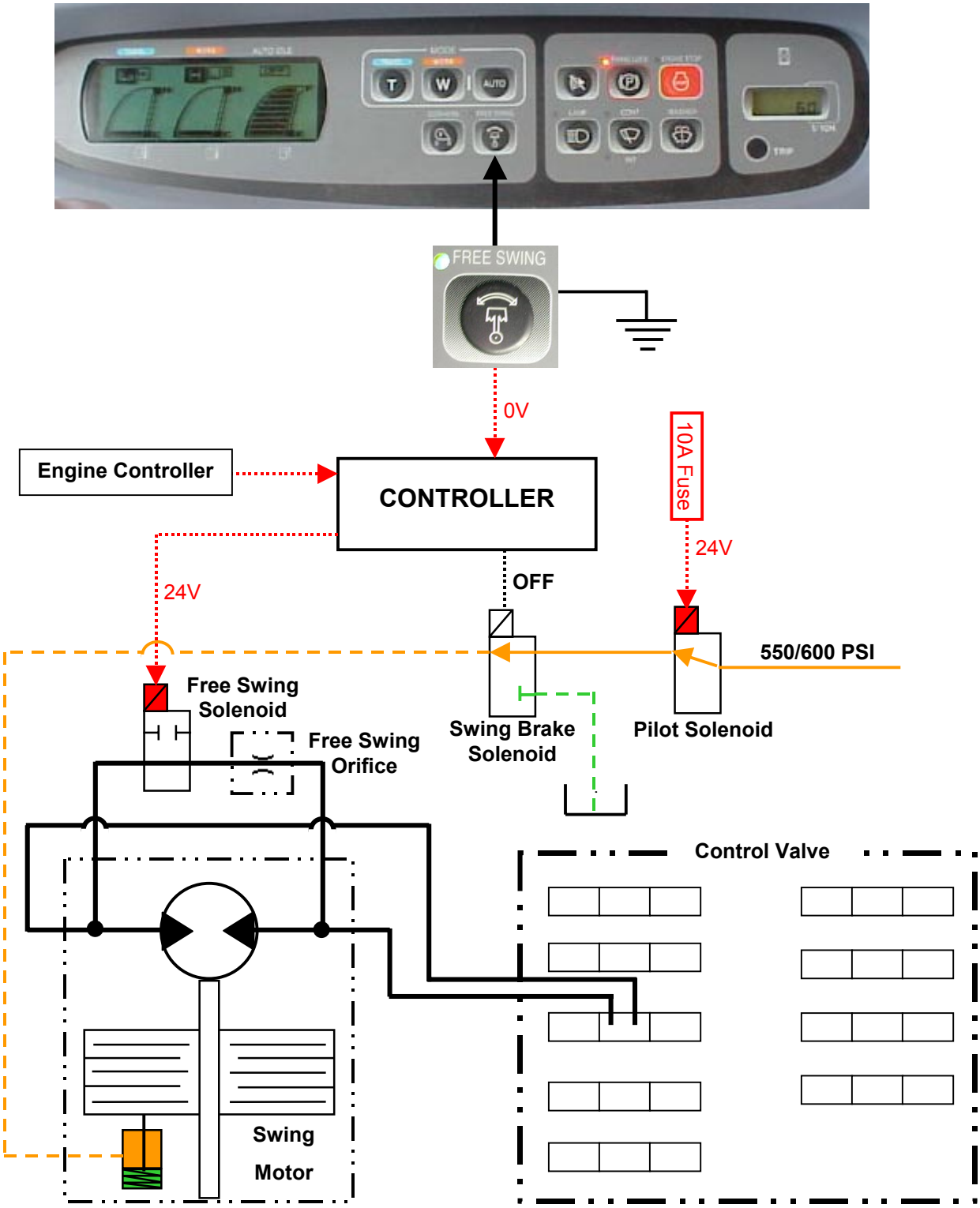

https://truckmanualshub.com/



# OPTIONS

## Auxiliary Attachment Operation

There are three auxiliary hydraulic options

1) Hammer kit (one direction, one pump flow)
2) Multi-kit (one or two direction, one or two pump flows)
3) Thumb kit (two direction, one pump flow)

https://truckmanualshub.com/

https://truckmanualshub.com/

CASE

## Construction Equipment Service Training

# CX SERIES EXCAVATOR

## Section 7 -- Pressure Data Sheets

(2001)

Training Pays

https://truckmanualshub.com/

**CASE CORPORATION**
**700 STATE STREET**
**RACINE, WI 53404 U.S.A.**

**CASE CANADA CORPORATION**
**3350 SOUTH SERVICE ROAD**
**BURLINGTON, ON L7N 3M6 CANADA**

**© 2001 Case Corporation**
**All Rights Reserved**

Printed in U.S.A.

https://truckmanualshub.com/



# Table of Contents

## Section 7 - Pressure Specifications

PRESSURE SPECIFICATION **DATA SHEET CX130**

PRESSURE SPECIFICATION **DATA SHEET CX160**

PRESSURE SPECIFICATION **DATA SHEET CX210**

PRESSURE SPECIFICATION **DATA SHEET CX240**

https://truckmanualshub.com/



# CX130

## PRESSURE TESTING

PRESSURE SPECIFICATIONS

***Name:*** _____

***PIN #*** _____

| Condition | **CX130** |
|---|---|
| Work mode | S : Standard Mode |
| Hydraulic oil temperature | 45 ~ 55 ° C<br>113 ~ 131 °F |
| Full Throttle No-load engine revolutions in: **H Mode** | 2150 r.p.m.<br>(H Mode) |

| Part Name | | Set Pressure | Measuring Method | Reading | |
|---|---|---|---|---|---|
| Main Relief | STANDARD | **4970**± 45 psi | Arm Circuit<br>* P1 or P2 | | |
| | POWER BOOST | **5260**± 45 psi | Arm Circuit and Power Boost button<br>* P1 or P2 | | |
| Boom Circuit Relief | UP | ✷ 5555 ± 70 psi | Boom Up Circuit<br>* P1 | | |
| | DOWN | ✷ 4265 ± 70 psi | Boom Down Circuit<br>* P1 | | |
| Bucket Circuit Relief | OUT<br>IN | ✷ 5555 ± 70 psi | Bucket Circuit<br>* P1 | | |
| Arm Circuit Relief | OPEN<br>CLOSE | ✷ 5555 ± 70 psi | Arm Circuit<br>* P2 | | |
| Swing Motor Crossover Relief | LEFT<br>RIGHT | 4050 ± 70 psi | Swing Motor Crossover<br>* P2 | | |
| Travel Crossover Relief | LEFT<br>RIGHT | ✷ 6235 ± 70 PSI | Travel Crossover<br>P1 & P2 | | |
| Pilot Circuit | | **570** ± 45 psi | Pilot Test Port<br>* P3 | | |

✷**NOTE:** Circuit pressures are listed for reference only. Listed values are low flow settings and are not accurate when high flows are applied. However if adjusting secondary relief becomes necessary for service. Over set the main relief and run the engine at very low rpm's. less than half throttle.

https://truckmanualshub.com/



# CX160
## PRESSURE TESTING
PRESSURE SPECIFICATIONS

***Name:*** _____

***PIN #*** _____

| Condition | **CX160** |
|---|---|
| Work mode | S : Standard Mode |
| Hydraulic oil temperature | 45 ~ 55 ° C<br>113 ~ 131 °F |
| Full Throttle No-load engine revolutions in: **H Mode** | 2150 r.p.m.<br>(H Mode) |

| Part Name | | Set Pressure | Measuring Method | Reading | |
|---|---|---|---|---|---|
| Main Relief | STANDARD | **4970** ± 45 psi | Arm Circuit<br>* P1 or P2 | | |
| | POWER BOOST | **5260** ± 45psi | Arm Circuit and Power Boost button<br>* P1 or P2 | | |
| Boom Circuit Relief | UP | ✷ 5555 ± 70 psi | Boom Up Circuit<br>* P1 | | |
| | DOWN | ✷ 4265 ± 70 psi | Boom Down Circuit<br>* P1 | | |
| Bucket Circuit Relief | OUT<br>IN | ✷ 5555 ± 70 psi | Bucket Circuit<br>* P1 | | |
| Arm Circuit Relief | OPEN<br>CLOSE | ✷ 5555 ± 70 psi | Arm Circuit<br>* P2 | | |
| Swing Motor Crossover Relief | LEFT<br>RIGHT | 4055 ± 70 psi | Swing Motor Crossover<br>* P2 | | |
| Travel Crossover Relief | LEFT<br>RIGHT | 6235 ± 70 PSI | Travel Crossover<br>P1 & P2 | | |
| Pilot Circuit | | **570** ± 45 psi | Pilot Test Port<br>* P3 | | |

✷**NOTE:** Circuit pressures are listed for reference only. Listed values are low flow settings and are not accurate when high flows are applied. However if adjusting secondary relief becomes necessary for service. Over set the main relief and run the engine at very low rpm's. less than half throttle.

https://truckmanualshub.com/



# CX210
## PRESSURE TESTING
PRESSURE SPECIFICATIONS

***Name:*** _____

***PIN #____***

| Condition | **CX210** |
|---|---|
| Work mode | S : Standard Mode |
| Hydraulic oil temperature | 45 ~ 55 ° C<br>113 ~ 131 °F |
| Full Throttle No-load engine revolutions in: **H Mode** | 1950 r.p.m.<br>(H Mode) |

| Part Name | | Set Pressure | Measuring Method | Reading | |
|---|---|---|---|---|---|
| Main Relief | STANDARD | **4970** ± 45 psi | Arm Circuit<br>* P1 or P2 | | |
| | POWER BOOST | **5410** ± 45 psi | Arm Circuit and Power Boost button<br>* P1 or P2 | | |
| Boom Circuit Relief | UP | ✷ 5685 ± 70 psi | Boom Up Circuit<br>* P2 | | |
| | DOWN | ✷ 3555 ± 70 psi | Boom Down Circuit<br>* P2 | | |
| Bucket Circuit Relief | OUT<br>IN | ✷ 5685 ± 70 psi | Bucket Circuit<br>* P2 | | |
| Arm Circuit Relief | OPEN<br>CLOSE | ✷ 5685 ± 70 psi | Arm Circuit<br>* P1 | | |
| Swing Motor Crossover Relief | LEFT<br>RIGHT | 4055 ± 70 psi | Swing Motor Crossover<br>* P1 | | |
| Travel Crossover Relief | LEFT<br>RIGHT | 5120 ± 70 psi | Travel Crossover<br>*P1 & P2 | | |
| Pilot Circuit | | **570** ± 45 psi | Pilot Test Port<br>* P3 | | |

✷**NOTE:** Circuit pressures are listed for reference only. Listed values are low flow settings and are not accurate when high flows are applied. However if adjusting secondary relief becomes necessary for service. Over set the main relief and run the engine at very low rpm's. less than half throttle.

https://truckmanualshub.com/



# CX240
## PRESSURE TESTING
PRESSURE SPECIFICATIONS

***Name:*** _____

***PIN #____***

| Condition | **CX240** |
|---|---|
| Work mode | S : Standard Mode |
| Hydraulic oil temperature | 45 ~ 55 ° C<br>113 ~ 131 °F |
| Full Throttle Loaded engine revolutions in: **H Mode** | 2150 r.p.m.<br>(H Mode) |

| Part Name | | Set Pressure | Measuring Method | Reading | |
|---|---|---|---|---|---|
| Main Relief | STANDARD | **4970** ± 45 psi | Arm Circuit<br>* P1 or P2 | | |
| | POWER BOOST | **5410** ± 45 psi | Arm Circuit and Power Boost button<br>* P1 or P2 | | |
| Boom Circuit Relief | UP | ✷ 5685 ± 70 psi | Boom Up Circuit<br>* P2 | | |
| | DOWN | ✷ 3555 ± 70 psi | Boom Down Circuit<br>* P2 | | |
| Bucket Circuit Relief | OUT<br>IN | ✷ 5685 ± 70 psi | Bucket Circuit<br>* P2 | | |
| Arm Circuit Relief | OPEN<br>CLOSE | ✷ 5685 ± 70 psi | Arm Circuit<br>* P1 | | |
| Swing Motor Crossover Relief | LEFT<br>RIGHT | 4055 ± 70 psi | Swing Motor Crossover<br>* P1 | | |
| travel Crossover Relief | LEFT<br>RIGHT | 5120 ± 70 PSI | Travel Crossover<br>* P1 & P2 | | |
| Pilot Circuit | | **570** ± 45 psi | Pilot Test Port<br>* P3 | | |

✷**NOTE:** Circuit pressures are listed for reference only. Listed values are low flow settings and are not accurate when high flows are applied. However if adjusting secondary relief becomes necessary for service. Over set the main relief and run the engine at very low rpm's. less than half throttle.

https://truckmanualshub.com/

CASE

## Construction Equipment Service Training

# CX SERIES EXCAVATOR

## Section 8 -- Engine Electronic Fuel System

(2001)

Training Pays

https://truckmanualshub.com/

**CASE CORPORATION**
**700 STATE STREET**
**RACINE, WI 53404 U.S.A.**

**CASE CANADA CORPORATION**
**3350 SOUTH SERVICE ROAD**
**BURLINGTON, ON L7N 3M6 CANADA**

**© 2001 Case Corporation**
**All Rights Reserved**

Printed in U.S.A.

https://truckmanualshub.com/



# Table of Contents

## Section 8 – Engine Electronic Fuel System

PAGE NO.

Engine Component Changes ---------- 2
Electronic Control System ---------- 3
Speed Sensor Ring ---------- 6
Engine Component Location (left side) ---------- 7
Engine Component Location (right side) ---------- 8
Fuel System Function ---------- 9
Air Heater ---------- 12
Fuel Connectors ---------- 14
Fuel System troubleshooting ---------- 16
Fault Code Conditions ---------- 18
Fault Code Listings ---------- 19

https://truckmanualshub.com/



# ENGINE COMPONENT CHANGES

The new 24 valve, 5.9 Liter engines have a full authority electronic control fuel injection system. Numerous changes have been implemented into the Engine, compared to the lower horsepower 5.9 Liter Family I engines. These engines have four valves per cylinder to optimize air flow, fuel economy and emissions. The fuel injectors are located vertically in the center of the cylinder for improved fuel atomization and uses a fuel system that is totally electronically controlled.

Other changes made in the Engine include the following:

The engine block now uses straight thread o-ring fittings in place of taper pipe thread fittings, a thicker camshaft bushing is installed at the front of the block, the pistons differ in the ring groove configuration as well as in the combustion chamber which can include fiber reinforcement and anodize coating in the higher horsepower ratings. A stronger connecting rod configuration, stronger main bearing cap bolts, a wider gear housing and a relocated air compressor mount are incorporated into the engine and a speed indicator ring is located between the number five and six cylinders of the crankshaft. The camshaft uses wider lobes along with wider faces on the lifters and stronger push rods with hardened sockets.

The cylinder head uses four valves per cylinder, common length head bolts (130mm), an integral fuel return rifle through the length of the head and a one piece valve cover. New valve springs and a new style rocker arm are also used. There is also a new design exhaust manifold and a waste gate turbocharger along with an air to air after-cooler.

The lubrication system uses an improved oil pump, oil cooler and oil filter. Changes in the cooling system include a redesigned head gasket for increased coolant flow and a water pump with-out a shroud has been incorporated.

The fuel system includes an injection pump with electronic control of the timing, speed and fuel delivery, a new style injector and a new electronic fuel lift pump.

https://truckmanualshub.com/



# ELECTRONIC CONTROL SYSTEM

The electronic control system for the Case 24 valve 5.9 Liter Engine uses input information from a number of sensors to determine the quantity and timing of the fuel delivery to the engine.

The engine control module (ECM) is located on the left side of the engine and has two 50 pin connectors for inputs and outputs. All engine electrical connections are made to the rear 50 pin connector with the exception of the throttle, idle validation and water in the fuel (WIF) sensors, which connect at the front 50 pin connector.

## Inputs:

- The engine speed sensor (ESS) is a three wire sensor, located on the lower left side of the engine, just above the oil pan rail. It is a three wire magnetic sensor that measures speed and timing for fuel injection from a removable two piece multiple tooth speed ring mounted on the crankshaft between #5 and #6 cylinders.
- The engine position sensor is a three wire sensor, located at the left rear of the timing gear cover, below the injection pump. The purpose of this sensor is to verify the position of the #1 piston during diagnostic testing.
- The intake manifold temperature sensor is a two wire sensor, located at the left rear of the cylinder head and indicates the temperature of the intake manifold air.
- The intake manifold pressure sensor is a three wire sensor, located at the left rear of the cylinder head and indicates the turbocharger boost pressure.
- The coolant temperature sensor is a two wire sensor, located at the top front right of the cylinder head and indicates the coolant temperature in the engine.
- The engine oil pressure sensor is a three wire sensor, located at the left center of the engine, just below the electronic control module.
- A "water in the fuel" sensor alerts the operator to drain the water from the filter.
- A throttle potentiometer provides desired speed information to the ECM.
- An idle validation switch on the throttle assembly provides low idle position information to the ECM.
- A data buss connector (J1939) transmits communication between the Electronic Control Module (ECM) and other onboard controllers.

24 volt power for the system is provided by the battery through the rear connector of the Electronic Control Module.

https://truckmanualshub.com/



# ELECTRONIC CONTROL SYSTEM

## Outputs

- The electrically operated lift pump is located at the left rear of the engine and is controlled by the Electronic Control Module (ECM). The pump will operate for 2 seconds when the key is first turned on. It also runs throughout the cranking mode and will continue to run for 25 seconds after cranking stops without the engine running. The pump runs constantly when the engine is running. The pump draws fuel from the tank and supplies pressurized fuel to the filter and pump. Lift pump pressure must not exceed 7 PSI in the non-running mode and 10 PSI at maximum speed.

- The Fuel Pump Control Module (FPCM) receives fuel delivery requirement information and electrical power from the Engine Electronic Control Module (ECM). The Fuel Pump Control Module determines the delivery rate and injection timing by controlling the metering valve in the Bosch VP44 fuel injection pump.

  Communication of information between the Engine Electronic Control Module (ECM) and the Fuel Pump Control Module (FPCM) is provided by a second data buss.

  Output information from the Fuel Pump Control Valve to the Electronic Control Module include fuel temperature in the pump housing and fuel pump timing.

- A Bosch relay, located near the front left engine mount supplies power to the fuel injection pump. The relay receives electrical power from the ECM.

- An intake manifold grid heater uses battery voltage to heat the incoming air for cold start aid. The grid heater is controlled by two relays which are controlled by the ECM.

https://truckmanualshub.com/



# FLOW CHART

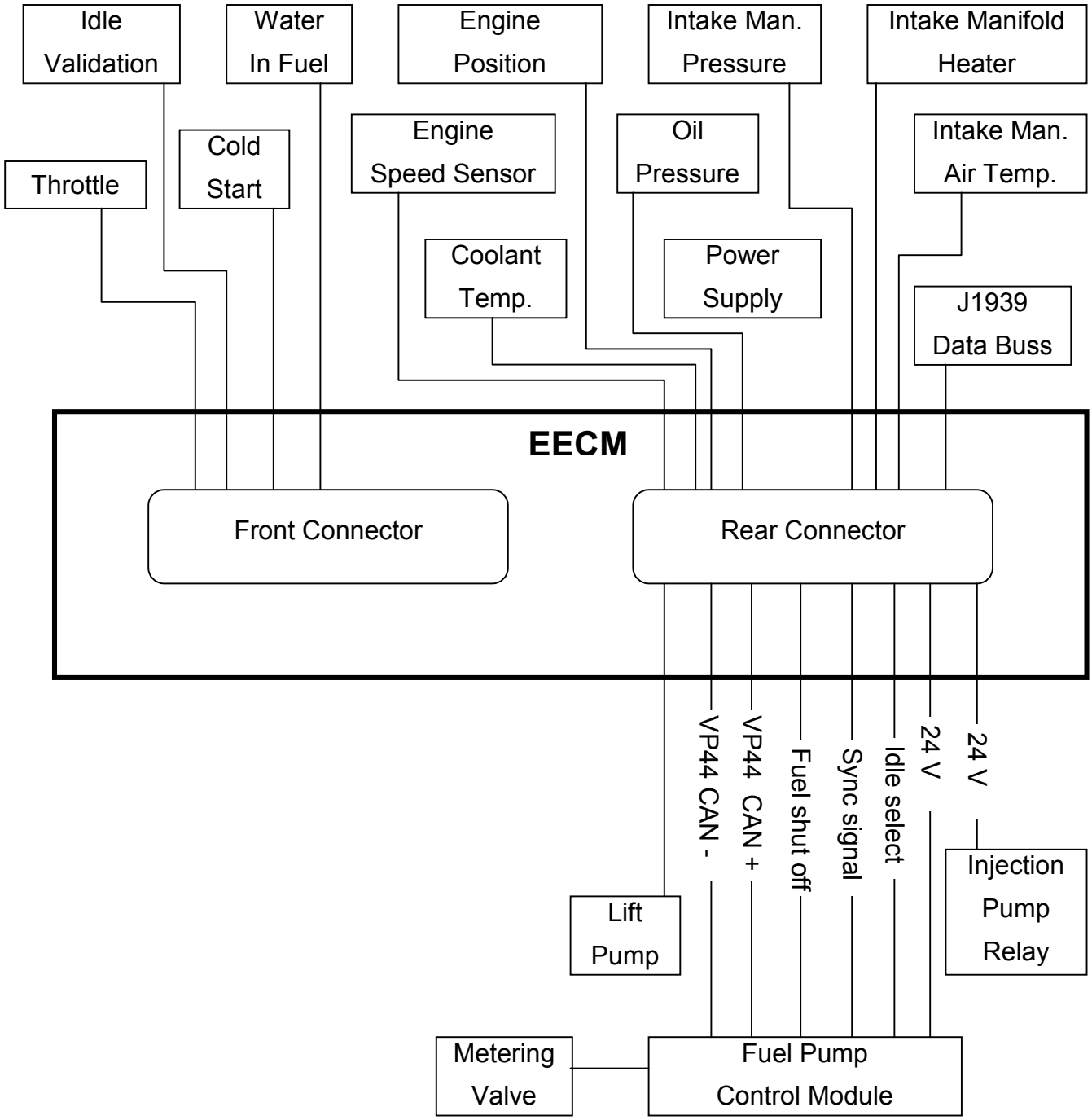

https://truckmanualshub.com/



# ENGINE SPEED SENSOR RING

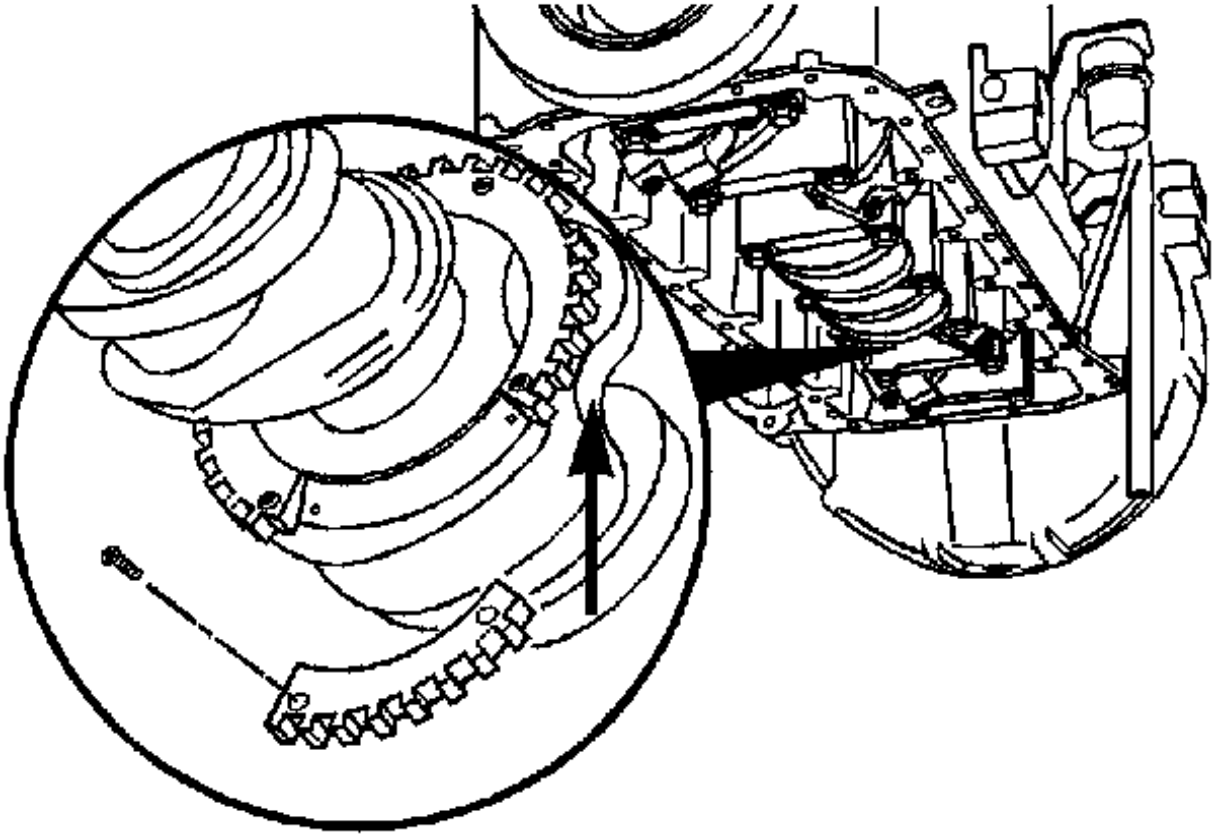

https://truckmanualshub.com/



# ENGINE COMPONENT LOCATION
# LEFT SIDE

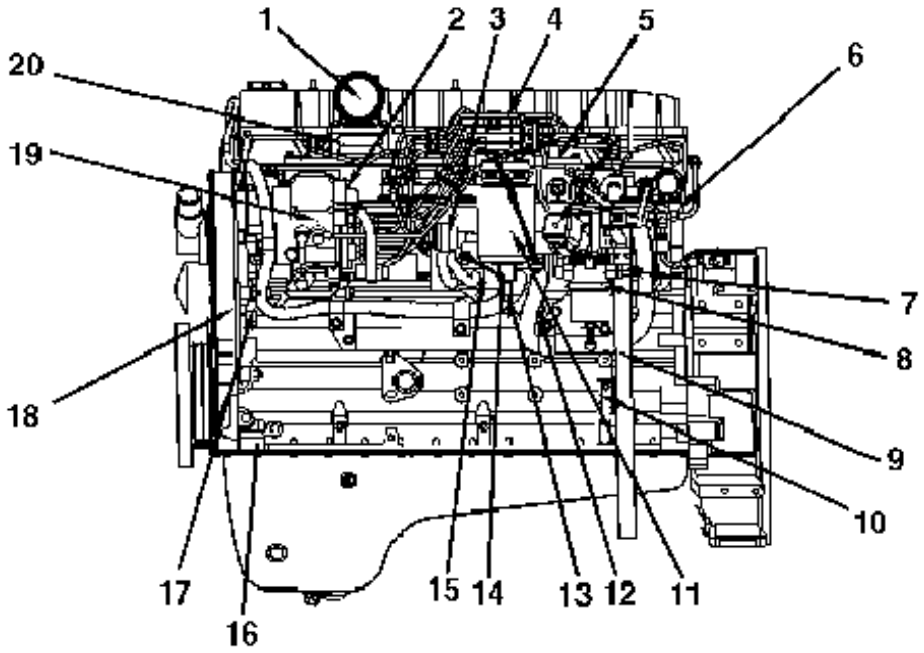


1. Engine Air Inlet
2. VP44 Connector
3. 23 pin OEM Connector
4. High Pressure Fuel Lines
5. Intake Manifold
6. ¾ NPTF (in) Heater Return
7. Fuel Inlet Connection
8. Fuel Lift Pump
9. Crankcase Breather
10. Engine speed Sensor
11. Fuel Filter/ Water Separator
12. Oil Pressure Switch
13. WIF Sensor
14. Fuel Water Drain
15. Electronic Control Module
16. VP44 Injection Pump Relay
17. Engine Position Sensor
18. Engine Data Plate
19. Fuel Injection Pump
20. Intake Air Pre-heater

https://truckmanualshub.com/



# ENGINE COMPONENT LOCATION
## RIGHT SIDE

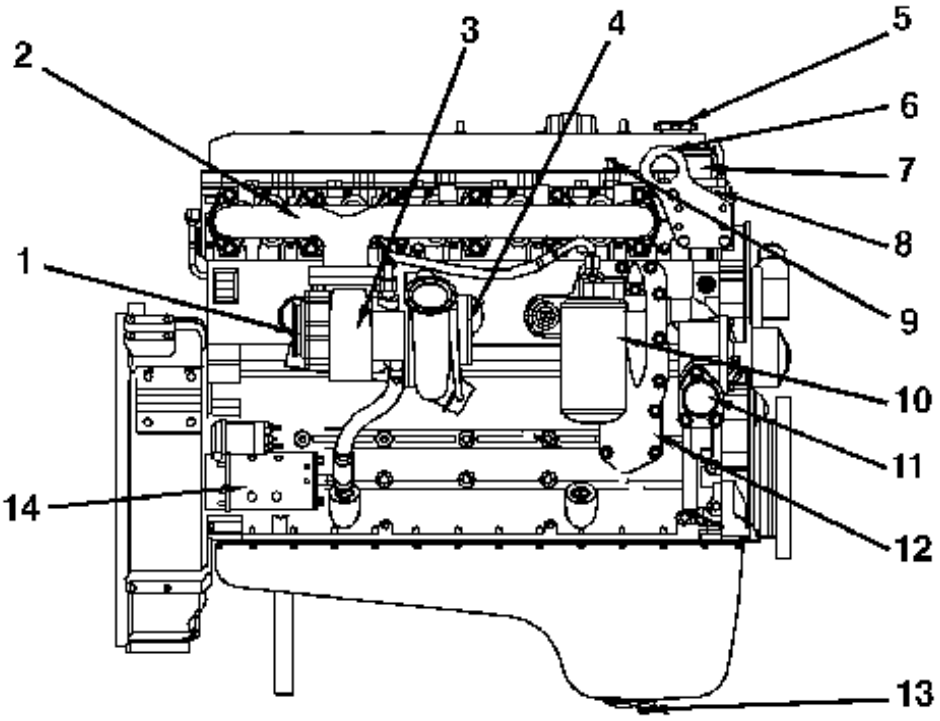


1. Turbocharger Outlet Connection
2. Exhaust Manifold
3. Turbocharger
4. Turbocharger Inlet Connection
5. Oil Fill
6. Front Engine Lifting Bracket
7. Coolant Outlet
8. Thermostat Housing
9. Coolant Line Connector
10. Oil Filter
11. Coolant Inlet
12. Oil Cooler
13. Oil Drain
14. Starter Motor and Solenoid

https://truckmanualshub.com/



# FUEL SYSTEM FUNCTION

Fuel is drawn from the fuel tank and passes through an inline filter prior to entering the fuel lift pump. The 24 Volt DC pump is controlled by the Electronic Control Module through pulse width modulation (PWM). The pump operates at a maximum pressure of 10 PSI when the engine is running and at a maximum pressure of 7 PSI when cranking. Pressures greater than 7 PSI can result in hard start/ no start problems. A relief valve in the head of the pump re-circulates the fuel and regulates discharge pressure. The pump will run for 2 seconds when the key is turned on. When cranking, the pump runs and continues to run for 25 seconds after cranking stops. The pump runs continuously when the engine is running however, if the engine stops with the key still on, the pump stops running. A 528 mesh screen at the inlet to the lift pump can be removed and cleaned if required.

The fuel filter/ water separator is located between the fuel lift pump and the fuel injection pump. Water will collect in the lower portion of the filter and must be drained to prevent damage to the fuel injection pump. A water in the fuel (WIF) sensor alerts the operator when water should be vented from the filter.

Fuel entering the Bosch VP44 Fuel Injection Pump fills the pump housing with fuel. Fuel is used for cooling and lubricating the pump components. Fuel first enters a vane type transfer pump which has a maximum regulated pressure of 300 PSI. Excess fuel from the vane pump regulator returns to the vane pump inlet. Fuel from the vane pump enters a metering control valve through a fill slot in the pump rotor.

When the Fuel Pump Control Module (FPCM) indicates no fuel needed, fuel flows through the open metering valve and to the discharge valve in the distributor at transfer pump pressure. Fuel at transfer pressure also forces the three pumping plungers outward against the cam ring. As the pump shaft rotates, the pumping plungers are forced inward by the lobes on the cam ring, forcing fuel to flow back through the open metering valve. At this time, as dictated by the FPCM, the metering valve closes, forcing the fuel to flow out the discharge fitting and on to the specific fuel injector. Although the injectors popping pressure is set at 4500 PSI, fuel pressure can reach 20,000 PSI during the injection period. When the proper amount of fuel has been delivered as determined by the FPCM, the metering valve opens and allows fuel to flow back through the open metering valve. With each revolution of the injection pump, fuel is supplied to all six cylinders in the proper firing order. The ECM determines the quantity of fuel needed and sends this information to the FPCM. The FPCM then determines the time of injection based on ECM information of the engine's load and speed.

Fuel temperature in the injection pump is measured by an internal temperature sensor. The temperature is monitored by the FPCM which adjusts fuel flow based on the temperature. Heat is removed from the injection pump by providing an excess supply of fuel. A return flow line with an overflow valve allows 70% of the fuel supplied to be returned to the tank. The overflow valve uses a spring and check ball to regulate housing pressure at approximately 14 PSI. A small vent prior to the check ball allows venting of air from the housing.

https://truckmanualshub.com/



# FUEL SYSTEM FUNCTION

Fuel from the injection pump is sent to the injectors through high pressure injection lines in accordance with the engines firing order. The high pressure lines are connected to the distributor housing fittings at the pump and at fuel connectors at the cylinder head. The connectors direct the fuel through edge filters and on to the injectors. Fuel pressure builds in the injector until pressure under the needle becomes greater than the injector spring pressure allowing the needle to raise. Small spray holes in the injector tip allows fuel to exit the injector. Leakage from the injector passes through a rifled passage drilled through the length of the cylinder head and joins the return flow of fuel.

Pump timing is altered by changing the position of the cam ring in the injection pump. Timing is controlled by the master piston in the timing advance mechanism. During the cranking cycle the return spring holds the master piston and cam ring in the retarded position. This causes injection to occur at approximately top dead center. Transfer pressure is delivered to the master piston control valve and servo. As engine speed increases, transfer pressure increases causing the master piston to move, compressing the return spring, causing the cam ring to rotate and causing injection to occur earlier.

The pulsing timing control valve, activated by the ECM, can retard timing when energized, by venting pressure from the advance mechanism and allowing the return spring to move the master piston in the retard direction. This feature permits changes in timing up to 30 engine degrees.

The calculated timing of the Engine ECM is sent to the FPCM where it is controlled. An Incremental Angle Timing (IAT) ring in the injection pump determines the beginning and end of injection. Timing information from the IAT is compared to the timing information from the ECM for accuracy. If a variation of 3 degrees or more occurs, the FPCM data is retained however, the engine will operate at a reduced output (limp home mode).

The Bosch VP44 injection pump is fixed position mounted and cannot be rotated to alter timing. Static pump timing for a specific application is obtained through the use of the proper drive shaft key. Keys are offset as required by the timing requirements, based on pump manufacturers tolerances. Keys are identified by a two digit part number on the top of the key along with an arrow which points toward the injection pump. The required key part number can be found on the injection pump identification plate.

https://truckmanualshub.com/



# FLOW CHART

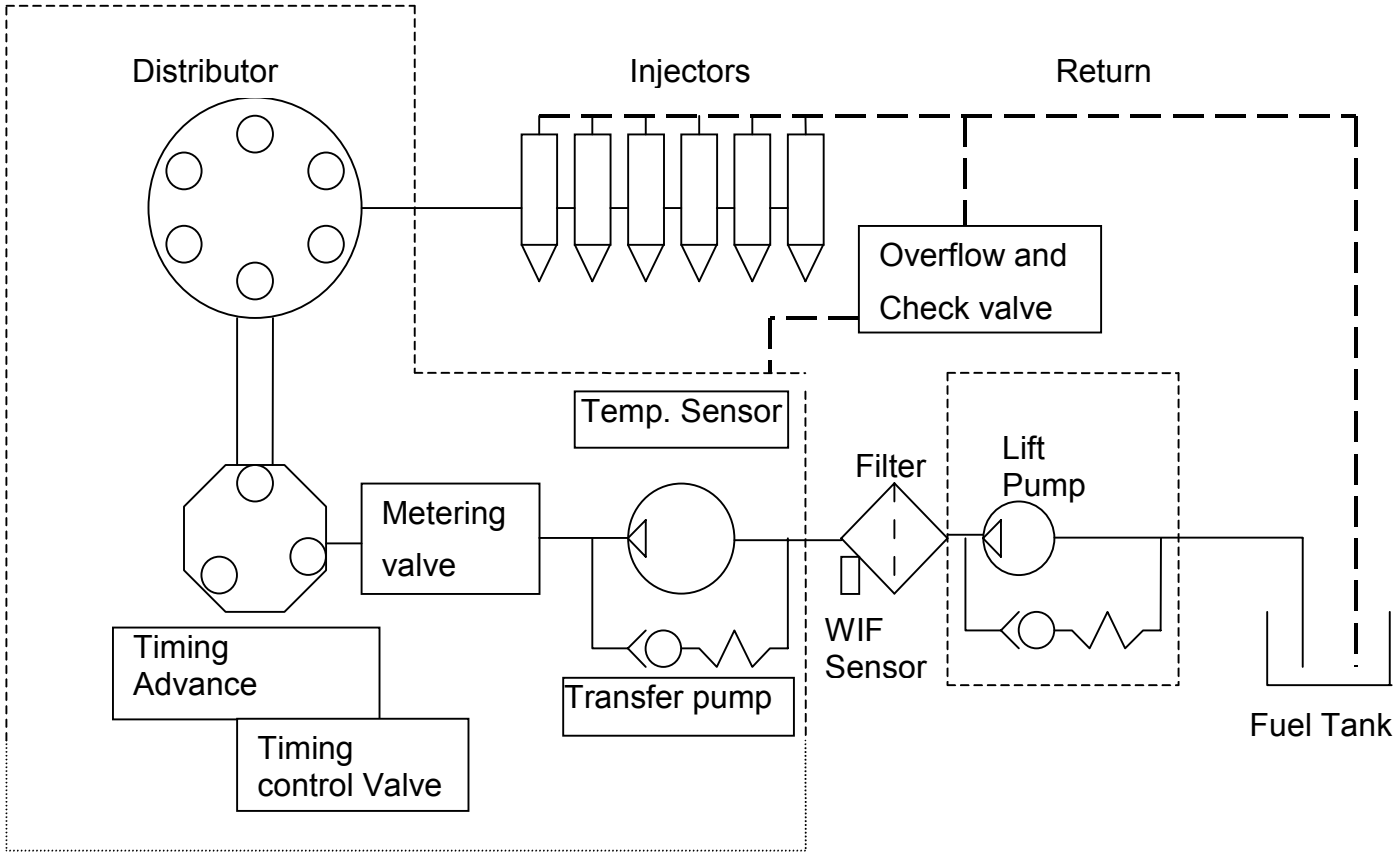

https://truckmanualshub.com/



# AIR HEATER

An air heater at the inlet of the intake manifold, assists in cold starting of the engine and the reduction of white smoke during warm-up. The air heater is a solenoid operated integrated grid device, installed at the entrance to the intake manifold and is controlled by the ECM.

The ECM determines when to actuate the air heater based on intake air temperature and fuel temperature. If the intake air temperature sensor fails, the fuel temperature sensor will be used. An Engine Pre Heat indicator in the machine monitor indicates the air heater is energized and preheating.

The air heater uses two separate grids to heat the air. After start up the grids are cycled on and off to reduce white smoke during warm up. The heat cycle is determined by the ECM based on intake air temperature and fuel temperature. If the fuel temperature is lower than intake air temperature, fuel temperature will take priority in controlling the cycle.

If the engine does not start, the pre-heat cycle can be restarted by turning the key off and back on. The air heater functions are terminated when the engines load exceeds 10% for more than 10 seconds or when intake air exceeds 66 degrees F. The two grids of the air heater receive current from the battery through two separate Bosch relays. The relays are controlled by the ECM.

https://truckmanualshub.com/



# AIR HEATER

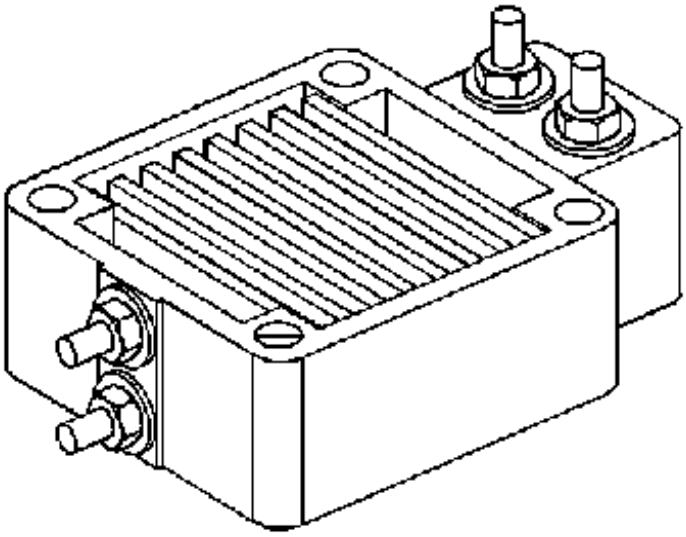

https://truckmanualshub.com/



# FUEL CONNECTORS

The high pressure fuel lines are connected between the injection pump and the left side of the cylinder head. The injectors are mounted perfectly vertical, from the top of the cylinder head, at the center of the piston. High pressure fuel flows from the high pressure lines, through connectors, and into the injectors. The high pressure fuel is sealed at both ends of the connectors with a tapered metal to metal fit. Because of this metal to metal fit, torque on the high pressure fuel line fittings at the cylinder head is critical. Insufficient torque can result in internal and/ or external fuel leakage. Internal leakage will result in poor cylinder performance but will not be evident because internal leakage flows into the rifle drilled fuel return passage in the cylinder head and returns to the tank. Excessive torque on the high pressure line fittings can distort the fuel injector, causing it to stick and malfunction, possibly causing poor engine performance.

The injector is sealed to the combustion chamber at the base of the injector using a 1.5 mm thick copper sealing washer. Use of a sealing washer of different thickness results in improper injector tip protrusion and cause combustion problems.

https://truckmanualshub.com/



# FUEL CONNECTOR

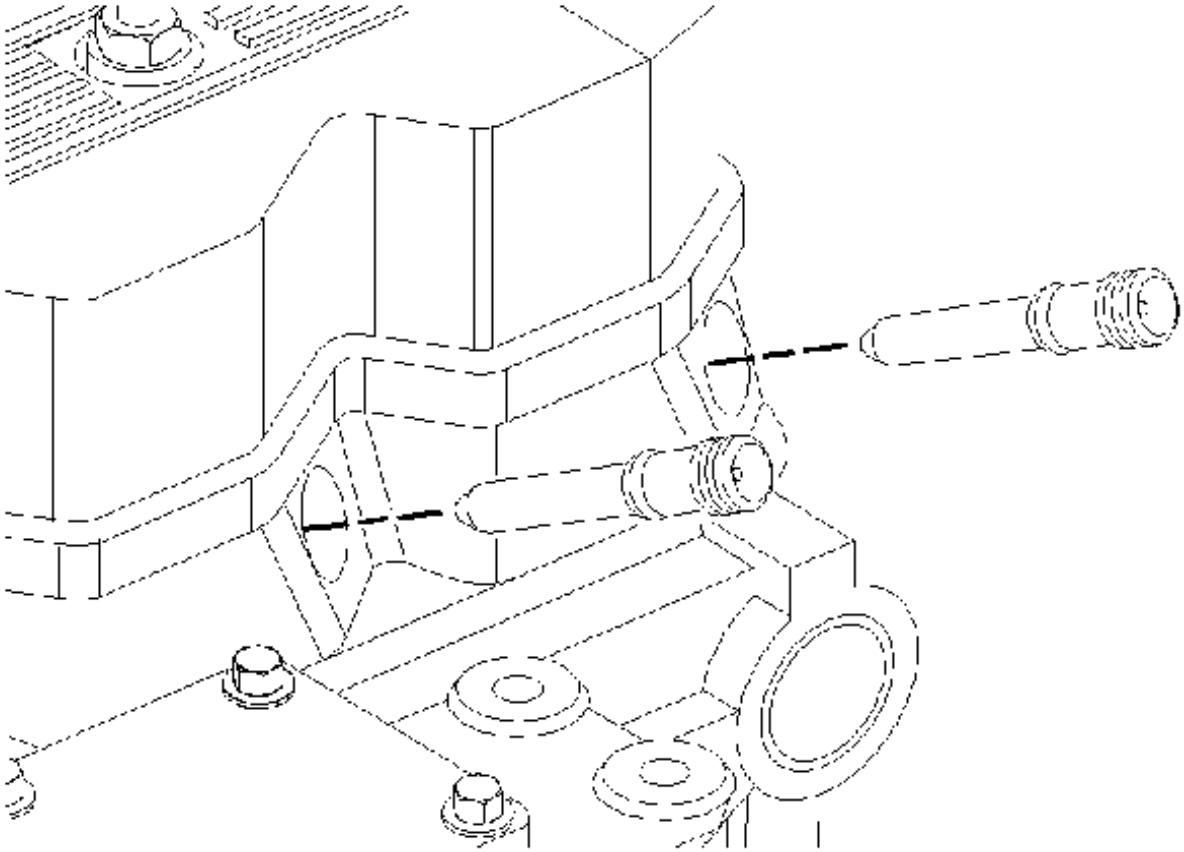

https://truckmanualshub.com/



# FUEL SYSTEM TROUBLESHOOTING

Retrieval of fault code information from the Case 24 Valve Engine Control Module can be done from the vehicle instrument monitor. The Service manual and the troubleshooting section of this manual cover the fuel system diagnostics.

When Case 24 Valve, 5.9 Liter Engine running or performance problems are encountered, use the following troubleshooting steps. Refer to the TS section of the Service Manual for troubleshooting trees for customer complaints.

- Bleed air from the system. Air can be removed from the system by running the electric lift pump. Momentarily bumping the crank mode of the ignition key starts a 25 second cycle of the lift pump. This allows fuel to fill the system, venting any air entrapment through the overflow valve and back to the fuel tank. Bleeding air from the high pressure lines requires loosening the connector fittings on at least two high pressure lines and cranking the engine until clear fuel is present.
- Install a test connector at the inlet to the fuel filter. Install a clear tube with a shut off valve between the test connector and the fuel tank. Run the engine at full throttle. Slowly open the valve and look for air in the discharging fuel. Air in the fuel indicates a restriction in the inlet or insufficient lift pump pressure..
- Tee in a test connector at the inlet of the lift pump. Run the engine at wide open throttle. Restriction at the lift pump inlet must not exceed 6 in. Hg. Restrictions greater than 6 in. can be caused by the inline filter or the tank strainer.
- Measure lift pump discharge pressure. Install a test connector at the fuel filter outlet. Cranking pressure must not exceed 7 PSI while pressure at low idle must be at least 10 PSI. If running pressure is low suspect the mesh screen in the lift pump inlet.
- Measure the pressure drop across the filter. Install connectors at the inlet and outlet of the filter. Measure the pressure before and after the filter while running at wide open throttle. The differential pressure must be less than 5 PSI.

https://truckmanualshub.com/



# FUEL SYSTEM DIAGRAM

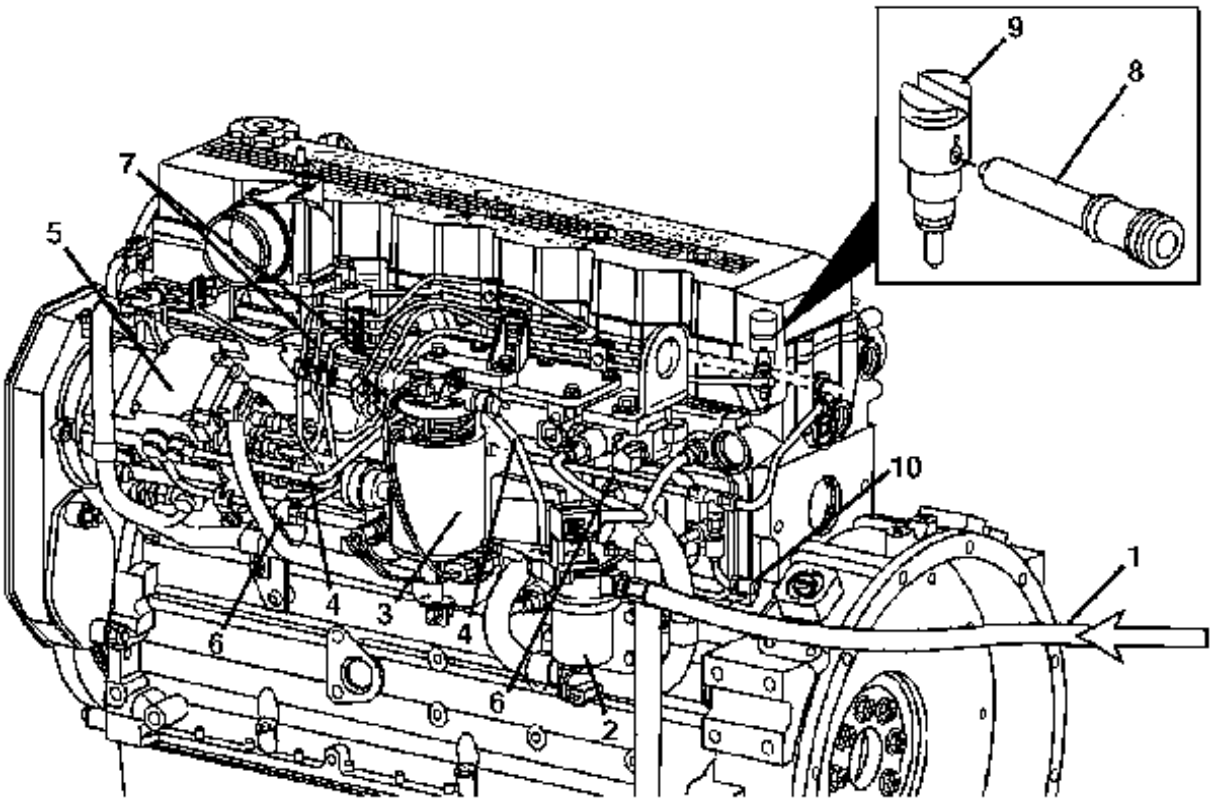


1. Fuel Supply from Tank
2. Electronic lift pump
3. Fuel Filter /Water Separator
4. Low Pressure Supply Lines
5. Bosch VP44 Injection Pump
6. Fuel Drain Line
7. High Pressure Supply Lines
8. Fuel Connector
9. Robert Bosch closed nozzle injector
10. Fuel Return to the Supply Tank

https://truckmanualshub.com/



# FAULT CODE CONDITIONS

The instrument panel provides fault code information to the operator. They consist of Engine Control fault codes and Engine Protection fault codes. These fault codes can be ACTIVE (currently present) or INACTIVE (not currently present).

Engine Protection fault codes consist of the following:

| | | |
|---|---|---|
| High Coolant Temperature | = | a de-rate of engine performance & a monitor display. |
| High Intake Manifold Temp. | = | a de-rate of engine performance. |
| High Fuel Temperature | = | a de-rate of engine performance. |
| Low Engine Oil Pressure | = | a de-rate of engine performance & a monitor display. |
| Water in Fuel | = | a fault code warning. |
| Engine Over speed | = | a fault code warning. |

A fault code storage in the Electronic Control Module provides:

1. Trip information
2. Maintenance monitoring
3. J1939 data buss event log
4. Electronic control module internal data-plate information.

An engine warm up control adjusts for cold start up conditions:

- An increase in the low idle speed for first 20 seconds when coolant is cold.
- Fuel flow is limited at cold start up until full engine oil pressure is obtained.

https://truckmanualshub.com/



# FAULT CODE LISTING

| Fault | Associated Hardware | Reason | Effect (only with active code) |
|---|---|---|---|
| F111 | Electronic Control Module | ECM internal hardware error | Possible no effect, rough running engine or no start. |
| F115 | Crankshaft position sensor | No speed or position signal at pin 17 of engine harness | Engine power de-rate with possible white smoke |
| F122 | Boost pressure sensor high | High voltage at pin 45 of engine harness. | Engine will de-rate to no boost fueling. |
| F123 | Boost pressure sensor low | Low voltage at pin 45 of engine harness. | Engine will de-rate to no boost fueling |
| F131 | Accelerator pedal positioning sensor | High voltage at pin 30 of OEM connector | Engine idles when idle validation switch indicates idle and ramps up to a default speed when validation is off idle. |
| F132 | Accelerator pedal positioning sensor | Low voltage at pin 30 of OEM connector | Same as above. |
| F135 | Engine oil pressure sensor high | High voltage at pin 33 of engine harness | Default value used. No engine protection for oil pressure |
| F141 | Engine oil pressure sensor low | Low voltage at pin 33 of engine harness | Default value used. No engine protection for oil pressure |
| F143 | Oil pressure low | Pressure measured below minimum protection limits | Power de-rate and possible shut-down. |
| F144 | Coolant temperature sensor high | High voltage at pin 23 of engine harness | Default value used. No protection for coolant temp. |
| F145 | Coolant temp. sensor low | Low voltage at pin 23 of engine harness | Default value used. No protection for coolant temp. |
| F146 | Coolant temp. sensor/ EPF | Coolant temp. has exceeded minimum protection limits. | Power de-rate, possible engine shut-down |

https://truckmanualshub.com/



# FAULT CODE LISTING

| Fault | Associated Hardware | Reason | Effect (only with active code) |
|---|---|---|---|
| F151 | Coolant temp. sensor/ EPF | Coolant temp. has exceeded maximum protection limits | Power de-rate, possible engine shut-down |
| F153 | Intake air temp. sensor high | High voltage at pin 34 of engine harness. | Default value used. No engine protection for intake temp. |
| F154 | Intake air temp. sensor low | Low voltage at pin 34 of engine harness. | Default value used. No engine protection for intake temp. |
| F155 | Intake air temp. sensor/EPF | Intake air temp. has exceeded maximum protection limits | Speed de-rate and possible engine shut-down. |
| F234 | Crankshaft position sensor | Engine speed signal indicates over speed. | Fuel to injectors is stopped until speed drops below over speed limit. |
| F235 | Coolant level sensor/ EPF | Coolant level signal indicates low level at pin 37 of Engine harness. | Power de-rate and possible engine shut-down. |
| F261 | Fuel temp. sensor indicates over heating of fuel. | FPCM indicates fuel temp. has exceeded limits. | Power de-rate. |
| F264 | Fuel temp. sensor | High or low voltage at temp. sensor in injection pump. | Default value used for temp. Possible low power. |
| F278 | Lift pump relay | Error in lift pump circuit at pin 11 of engine harness. | Possible low power, engine may die, run rough or be hard to start |
| F283 | ESS crankshaft position sensor high. | High voltage at pin 8 of engine harness. | ECM will use injection pump speed as back up. Possible white smoke and power loss. |

https://truckmanualshub.com/



# FAULT CODE LISTING

| Fault | Associated Hardware | Reason | Effect (only with active code) |
|---|---|---|---|
| F284 | ESS crankshaft position sensor low. | Low voltage at pin 8 of engine harness. | ECM will use injection pump speed as back up. Possible white smoke and power loss. |
| F319 | ECM | Power to real time clock has been interrupted or is no longer valid. | Time stamp in ECM power down data will be incorrect |
| F352 | Sensor voltage supply | Low voltage at engine speed sensor +5 VDC at pin 10 of engine harness. | Default value is used. Engine power will de-rate to no boost fueling and loss of protection for oil pressure, intake boost pressure and intake air temp. |
| F361 | VP44 fuel system high current. | High current at the VP44 pump control valve. | Fueling to injectors is stopped and engine shuts down. |
| F362 | VP44 fuel system open | Low or no current at the VP44 pump control valve. | Engine will lose power and may shut down. |
| F363 | VP44 fuel system feed back error. | No fuel control valve movement detected by the controller. | Engine power loss. |
| F364 | VP44 fuel system communication error | No communication or invalid data transfer on data buss between ECM and FPCM at pins 4 and 13 of engine harness. | Engine will run at back up mode set speed when throttle is off idle. |
| F365 | VP44 fuel system low | Low voltage at VP44 controller supply voltage circuit. | Engine may lose power and may shut down. |
| F366 | VP44 fuel system measuring error | Fuel pump controller voltage not within 6 to 24 VDC. | Engine will lose power and may shut down. |

https://truckmanualshub.com/



# FAULT CODE LISTING

| Fault | Associated Hardware | Reason | Effect (only with active code) |
|---|---|---|---|
| F367 | VP44 fuel system IAT error | Fuel pump position sensor signal lost. | Fueling to injectors is stopped and engine shuts down. |
| F368 | VP44 Fuel system timing error. | Fuel pump controller can not achieve valve sent from the ECM. | Significant engine power loss. |
| F369 | VP44 Fuel system sync error. | Fuel pump controller does not detect engine position pulse at pin 7 of the engine harness. | Significant engine power loss. Possible white smoke. |
| F372 | VP44 Fuel system idle validation error. | Fuel pump controller detects continuous voltage, an open or a short at idle select pin 16 of the engine harness. | If communication is lost between the ECM and FPCM, engine will only run at or near low idle. |
| F373 | VP44 Fuel system FSO is high. | High voltage at VP44 shut off signal, pin 6 of the engine harness. | Fueling to injectors is stopped and engine shuts down. |
| F374 | VP44 Fuel pump shut off error. | Pump controller has detected an internal error. | Response will vary from some power loss to engine shut down. |
| F376 | VP44 Fuel system mismatch error. | No calibration in fuel pump controller. | Fueling to injectors is stopped and engine shuts down. |
| F377 | Fuel pump power shut off relay. | Pump controller does not power down when key switch power is removed from the ECM. | Insufficient battery voltage. |
| F381 | Intake air heater control error. (Rly2) | Error detected in cold start relay 1 at pin 41 of the OEM harness. | Insufficient heat, possible white smoke and hard starting. |

https://truckmanualshub.com/



# FAULT CODE LISTING

| Fault | Associated Hardware | Reason | Effect (only with active code) |
|---|---|---|---|
| F386 | Engine sensor voltage high. | High voltage at engine position sensor 5VDC at pin 10 of the engine harness. | Default value used. Engine will de-rate to no boost fueling with loss of engine protection. |
| F391 | Fuel pump power shut off relay. | Error detected at VP44 power relay enable circuit at pin 43 of engine harness. | Possible no effect on engine or engine may not run. |
| F415 | Oil pressure sensor/ EPF | Signal indicates pressure is below the very low engine protection limit. | Speed de-rate and possible engine shut down. |
| F418 | Water in Fuel sensor. | Signal indicates the water in the fuel filter should be drained. | Water in fuel can lead to severe fuel system damage. |
| F422 | Coolant level sensor | Voltage at both high and low level signal pins 27 and 37 of the engine harness or no voltage at both . | No engine protection for coolant level. |
| F429 | Water in Fuel sensor. | Low voltage at WIF signal pin 40 of the OEM harness. | No water in fuel protection. |
| F431 | Accelerator pedal position sensor low. | Idle validation signals on pins 25 and 26 of the OEM harness indicates voltage detected simultaneously on both pins (open circuit) | No effect on engine performance but loss of idle verification. |
| F433 | Boost pressure sensor high. | Signal indicates pressure is high when engine conditions indicate signal should be low. | Possible over fueling during acceleration with increased black smoke. |
| F434 | Electronic Control Module | Supply voltage to the ECM fell below 6 VDC for a fraction of a second **or** ECM was not allowed to power down correctly. | Possible no performance effect or engine stopping or hard starting. |

https://truckmanualshub.com/



# FAULT CODE LISTING

| Fault | Associated Hardware | Reason | Effect (only with active code) |
|---|---|---|---|
| F441 | Battery voltage low | Voltage detected at ECM power supply, pins 38, 39 and 40 of the engine harness indicates voltage is below 6 VDC. | Engine will stop running or run rough. |
| F442 | Battery voltage high | Voltage detected at ECM power supply, pins 38, 39 and 40 of the engine harness indicates voltage is above the maximum voltage. | No effect on engine performance. |
| F443 | Accelerator pedal position sensor. | Low voltage detected at throttle position sensor +5 VDC supply pin 29 of the OEM harness. | Engine idles when idle validation switch indicates idle and ramps up to a default set speed when validation indicates off idle. |
| F488 | Intake air temp sensor/ EPF | Intake manifold air temp signal indicates intake temp. above minimum engine protection threshold. | Power de-rate and possible engine shut down. |
| F517 | Fuel pump control valve is mechanically stuck. | A mechanically stuck control valve has been detected. | Engine may shut down. |
| F524 | High speed governor droop selection switch. | Error detected in selector switch at pin 24 of engine harness. | Operator can not select alternate HSG group. Normal droop is used. |
| F611 | Hot shut down error. | ECM detected the engine has initiated a protection shut down or has been keyed off while above a specified load limit. | No effect. |

https://truckmanualshub.com/

CASE

## Construction Equipment Service Training

# CX SERIES EXCAVATOR

## Section 9 -- Miscellaneous

(2001)

Training Pays

https://truckmanualshub.com/

**CASE CORPORATION**
**700 STATE STREET**
**RACINE, WI 53404 U.S.A.**

**CASE CANADA CORPORATION**
**3350 SOUTH SERVICE ROAD**
**BURLINGTON, ON L7N 3M6 CANADA**

**© 2001 Case Corporation**
**All Rights Reserved**

Printed in U.S.A.

https://truckmanualshub.com/

CASE

## Construction Equipment Service Training

# CX SERIES EXCAVATOR

## Section 10 -- Schematics

(2001)

Training Pays

https://truckmanualshub.com/

**CASE CORPORATION**
**700 STATE STREET**
**RACINE, WI 53404 U.S.A.**

**CASE CANADA CORPORATION**
**3350 SOUTH SERVICE ROAD**
**BURLINGTON, ON L7N 3M6 CANADA**

**© 2001 Case Corporation**
**All Rights Reserved**

Printed in U.S.A.