https://truckmanualshub.com/

SERVICE MANUAL

WE170B / WE190B

Wheeled Excavator

Part number 48017211
English
May 2016

NEW HOLLAND
CONSTRUCTION

© 2016 CNH Industrial Italia S.p.A. All Rights Reserved.

https://truckmanualshub.com/

NEW HOLLAND
CONSTRUCTION

SERVICE MANUAL

WE170B
WE190B

48017211 02/05/2016

EN

Find manuals at https://best-manuals.com

https://truckmanualshub.com/

Contents

INTRODUCTION

Engine 10

[10.202] Air cleaners and lines 10.1

[10.206] Fuel filters 10.2

[10.216] Fuel tanks 10.3

[10.218] Fuel injection system 10.4

[10.254] Intake and exhaust manifolds and muffler 10.5

[10.310] Aftercooler 10.6

[10.400] Engine cooling system 10.7

Transmission 21

[21.105] Powershift transmission lubrication system 21.1

[21.113] Powershift transmission 21.2

[21.135] Powershift transmission external controls 21.3

[21.155] Powershift transmission internal components 21.4

Four-Wheel Drive (4WD) system 23

[23.314] Drive shaft 23.1

Front axle system 25

[25.100] Powered front axle 25.1

[25.102] Front bevel gear set and differential 25.2

[25.108] Final drive hub, steering knuckles, and shafts 25.3

[25.122] Axle suspension control 25.4

Rear axle system 27

[27.100] Powered rear axle 27.1

[27.106] Rear bevel gear set and differential 27.2

[27.120] Planetary and final drives 27.3

Brakes and controls 33

Find manuals at https://best-manuals.com

https://truckmanualshub.com/

[33.110] Parking brake or parking lock 33.1
[33.202] Hydraulic service brakes 33.2
Hydraulic systems 35
[35.000] Hydraulic systems 35.1
[35.106] Variable displacement pump 35.2
[35.300] Reservoir, cooler, and filters 35.3
[35.304] Combination pump units 35.4
[35.352] Hydraulic swing system 35.5
[35.353] Hydraulic travel system 35.6
[35.354] Hydraulic central joint 35.7
[35.357] Pilot system 35.8
[35.359] Main control valve 35.9
[35.360] Hammer and rotating bucket hydraulic system 35.10
[35.703] Stabilizer hydraulic system 35.11
[35.730] Positioning arm hydraulic system 35.12
[35.736] Boom hydraulic system 35.13
[35.737] Dipper hydraulic system 35.14
[35.738] Excavator and backhoe bucket hydraulic system 35.15
[35.741] Dozer blade cylinders 35.16
Frames and ballasting 39
[39.103] Swing ring assembly 39.1
[39.129] Stabilizers 39.2
[39.140] Ballasts and supports 39.3
Steering 41
[41.101] Steering control 41.1
[41.106] Tie rods 41.2
[41.200] Hydraulic control components 41.3
[41.216] Cylinders 41.4

Find manuals at https://best-manuals.com

https://truckmanualshub.com/

Wheels 44
[44.511] Front wheels 44.1
[44.520] Rear wheels 44.2
Cab climate control 50
[50.200] Air conditioning 50.1
Electrical systems 55
[55.000] Electrical system 55.1
[55.010] Fuel injection system 55.2
[55.011] Fuel tank system 55.3
[55.012] Engine cooling system 55.4
[55.014] Engine intake and exhaust system 55.5
[55.015] Engine control system 55.6
[55.020] Transmission speed sensors 55.7
[55.036] Hydraulic system control 55.8
[55.050] Heating, Ventilation, and Air-Conditioning (HVAC) control system 55.9
[55.100] Harnesses and connectors 55.10
[55.110] Electrical rotary joint 55.11
[55.302] Battery 55.12
[55.404] External lighting 55.13
[55.416] Swing control system 55.14
[55.425] Boom, dipper, and bucket control system 55.15
[55.512] Cab controls 55.16
[55.514] Cab lighting 55.17
[55.525] Cab engine controls 55.18
[55.530] Camera 55.19
[55.640] Electronic modules 55.20
Booms, dippers, and buckets 84
[84.100] Bucket 84.1

Find manuals at https://best-manuals.com

[84.910] Boom 84.2

Dozer blade and arm 86

[86.110] Dozer blade 86.1

Platform, cab, bodywork, and decals 90

[90.118] Protections and footboards 90.1

[90.124] Pneumatically-adjusted operator seat 90.2

[90.150] Cab 90.3

[90.151] Cab interior 90.4

Find manuals at https://best-manuals.com

https://truckmanualshub.com/

Find manuals at https://best-manuals.com

https://truckmanualshub.com/

INTRODUCTION

Find manuals at https://best-manuals.com

https://truckmanualshub.com/

Contents

INTRODUCTION

Foreword - Important notice regarding equipment servicing 3
Safety rules 4
Personal safety 5
Torque 14
Basic instructions - Shop and assembly 23
Basic instructions - How to use the maintenance standard and precautions 25
Basic instructions - Precaution for disassembly and assembly 27
Basic instructions - Electrical equipment precautions 29
General specification 30
Fluids and lubricants 36
Capacities 39
Hydraulic contamination 40
Product identification (*) 41
Product identification (*) 43
Product identification - Machine orientation 45
Product overview 46

(*) See content for specific models

Find manuals at https://best-manuals.com

Foreword - Important notice regarding equipment servicing

All repair and maintenance work listed in this manual must be carried out only by qualified dealership personnel, strictly complying with the instructions given, and using, whenever possible, the special tools.

Anyone who performs repair and maintenance operations without complying with the procedures provided herein shall be responsible for any subsequent damages.

The manufacturer and all the organizations of its distribution chain, including - without limitation - national, regional, or local dealers, reject any responsibility for damages caused by parts and/or components not approved by the manufacturer, including those used for the servicing or repair of the product manufactured or marketed by the manufacturer. In any case, no warranty is given or attributed on the product manufactured or marketed by the manufacturer in case of damages caused by parts and/or components not approved by the manufacturer.

The manufacturer reserves the right to make improvements in design and changes in specifications at any time without notice and without incurring any obligation to install them on units previously sold. Specifications, descriptions, and illustrative material herein are as accurate as known at time of publication but are subject to change without notice.

In case of questions, refer to your NEW HOLLAND CONSTRUCTION Sales and Service Networks.

Find manuals at https://best-manuals.com

Safety rules

Personal safety

This is the safety alert symbol. It is used to alert you to potential personal injury hazards. Obey all safety messages that follow this symbol to avoid possible death or injury.

Throughout this manual you will find the signal words DANGER, WARNING, and CAUTION followed by special instructions. These precautions are intended for the personal safety of you and those working with you.

Read and understand all the safety messages in this manual before you operate or service the machine.

DANGER indicates a hazardous situation that, if not avoided, will result in death or serious injury.

WARNING indicates a hazardous situation that, if not avoided, could result in death or serious injury.

CAUTION indicates a hazardous situation that, if not avoided, could result in minor or moderate injury.

FAILURE TO FOLLOW DANGER, WARNING, AND CAUTION MESSAGES COULD RESULT IN DEATH OR SERIOUS INJURY.

Machine safety

NOTICE: *Notice indicates a situation that, if not avoided, could result in machine or property damage.*

Throughout this manual you will find the signal word Notice followed by special instructions to prevent machine or property damage. The word Notice is used to address practices not related to personal safety.

Information

NOTE: *Note indicates additional information that clarifies steps, procedures, or other information in this manual.*

Throughout this manual you will find the word Note followed by additional information about a step, procedure, or other information in the manual. The word Note is not intended to address personal safety or property damage.

Personal safety

Carefully read this Manual before proceeding with maintenance, repairs, refuelling or other machine operations.

Repairs have to be carried out only by authorized and instructed staff; specific precautions have to be taken when grinding, welding or when using mallets or heavy hammers.

Not authorized persons are not allowed to repair or carry out maintenance on this machine. Do not carry out any work on the equipment without prior authorization.

Ask your employer about the safety instructions in force and safety equipment.

Nobody should be allowed in the cab during machine maintenance unless he is a qualified operator helping with the maintenance work.

If it is necessary to move the equipment to carry out repairs or maintenance, do not lift or lower the equipment from any other position than the operator's seat.

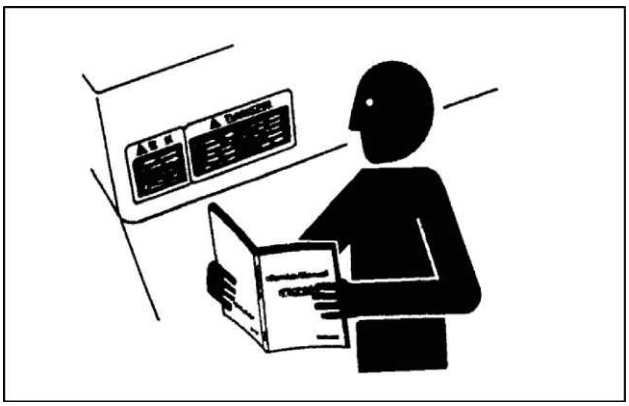

TULI12WEX2004AA 1

Never carry out any operation on the machine when the engine is running, except when specifically indicated.

Stop the engine and ensure that all pressure is relieved from hydraulic circuits before removing caps, covers, valves, etc.

All repair and maintenance operations should be carried out with the greatest care and attention.

Service stairs and platforms used in a workshop or in the field should be built in compliance with the safety rules in force.

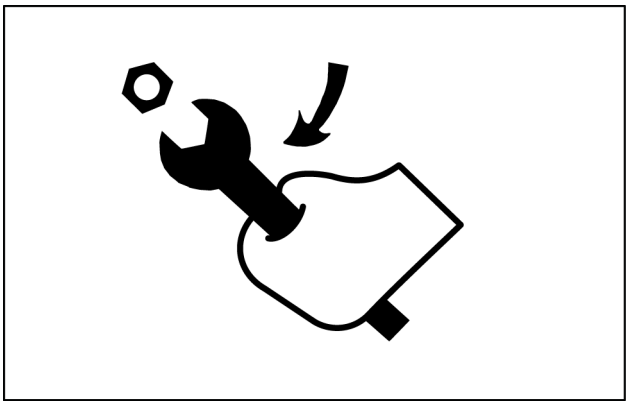

TULI12WEX2005AA 2

Any functional disorders, especially those affecting the safety of the machine, should therefore be rectified immediately.

⚠ DANGER

Unexpected movement!
Make sure parking brake is applied. Secure machine with wheel chocks.
Failure to comply will result in death or serious injury.

D0013A

Before performing any work on the machine, attach a maintenance in progress tag. This tag can be applied on the left-hand control lever, safety lever or cab door.

Emergency

Be prepared for emergencies. Always keep a fire extinguisher and first aid kit readily available. Ensure that the fire extinguisher is serviced in accordance with the manufacturer's instructions.

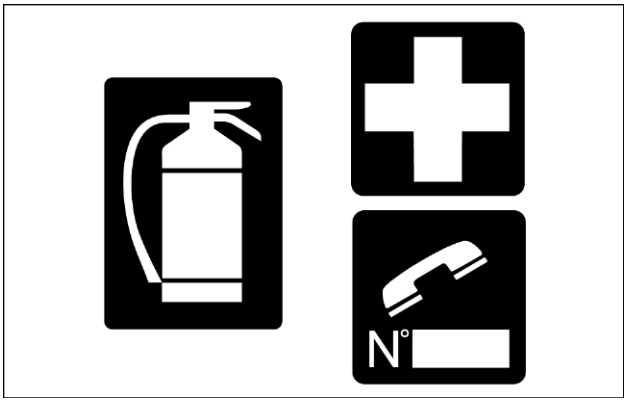

SMIL12WEX0174AA 3

Equipment

Wear close fitting clothing and safety equipment appropriate for the job:

- Safety helmet
- Safety shoes
- Heavy gloves
- Reflective clothing
- Wet weather clothing

If working conditions require, the following personal safety equipment should be on hand:

- Respirators (or dust proof masks)
- Ear plugs or acoustic ears protections
- Goggles with lateral shield or masks for eyes protection

Do not wear rings, wristwatches, jewels, unbuttoned or flapping clothing such as ties, torn clothes, scarves, open jackets or shirts with open zips which could get caught into moving parts.

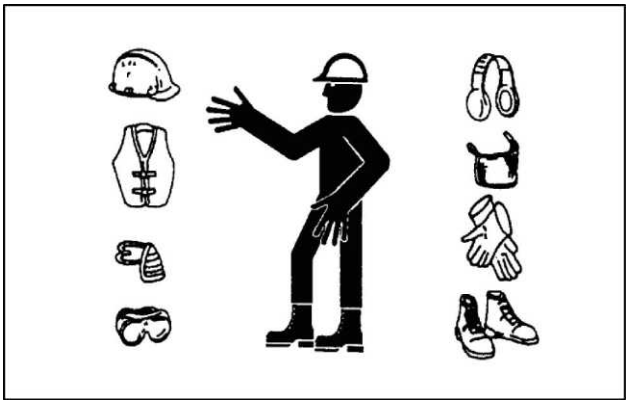

TULI12WEX2008AA 4

Engine - Radiator

Never leave the engine running in enclosed spaces without proper ventilation which is able to evacuate toxic exhaust gases- Keep the exhaust manifold and tube free from combustible materials.

Do not refuel with the engine running, especially if hot, as this increases fire hazard in case of fuel spillage.

Never attempt to check or adjust the belts when the engine is running.

Never lubricate the machine with the engine running.

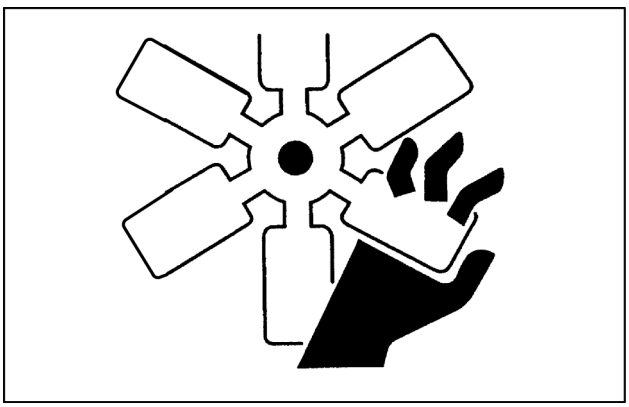

TULI12WEX2009AA 5

Pay attention to rotating components and do not allow to anyone to approach these areas to avoid becoming entangled.

Hands, clothing or tools getting caught in the fan blades or transmission belts, can cause amputations, violent hemorrages and generate conditions of grave danger. For this reason avoid touching or approaching all rotating or moving parts.

A surging spray of the coolant from the radiator can cause serious burns and scalds.

Before checking the coolant level, shut-off the engine and allow machine to cool down the radiator and hoses. Slowly unscrew the cap to release any residual pressure.

If it is necessary to remove the cap while engine is hot, wear safety clothes and equipment, then loosen the cap slowly to relieve the pressure gradually.

When checking the fuel, oil and coolant levels, use lights and lamps explicitly designated as explosion proof. If these types of lamps are not use, fires or explosions may occur.

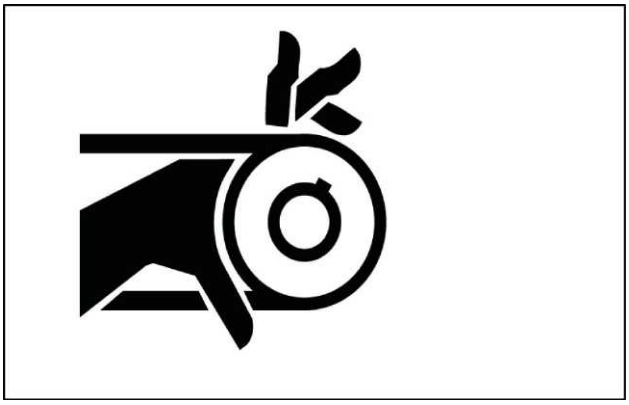

TULI12WEX2010AA 6

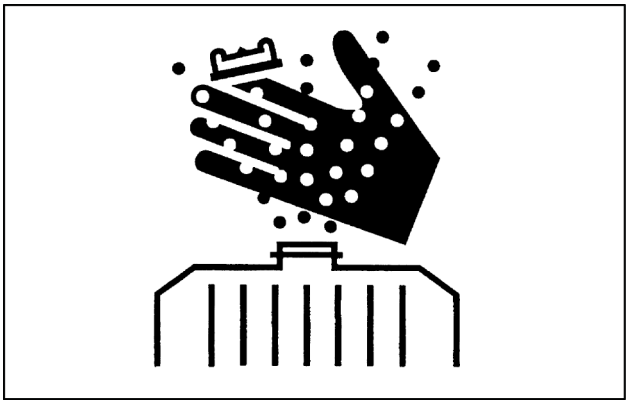

TULI12WEX2011AA 7

Hydraulic systems

Jets of fluids under pressure can penetrate the skin causing serious injuries.

Avoid this hazard by relieving pressure before disconnecting hydraulic or other lines.

Relieve the residual pressure by moving the hydraulic control levers several times.

Tighten all connections before applying pressure.

To protect the eyes wear a facial shield or safety goggles.

Protect your hands and body from possible jets of fluids under pressure.

Swallowing hydraulic oil is a severe health hazard.

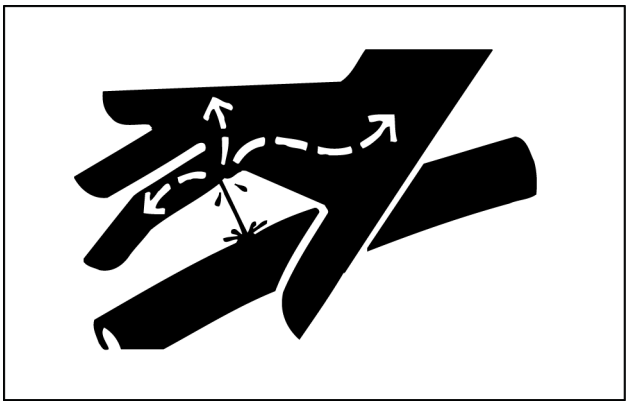

TULI12WEX2012AA 8

https://truckmanualshub.com/

When hydraulic oil has been swallowed, avoid vomiting, but consult a doctor or go to a hospital.

If an accident occurs, see a doctor familiar with this type of injury immediately.

Any fluid penetrating the skin must be removed within few hours to avoid serious infections.

Flammable splashes may originate because of heating near lines with fluids under pressure, resulting in serious burns. Do not weld or use torches near lines containing fluids or other flammable materials.

Lines under pressure can accidentally be pierced when the heat expands beyond the area immediately heated.

Arrange for temporary fire resistant shields to protect hoses or other components during welding or torch use.

Have any visible leakage repaired immediately.

Discharged oil pollutes the environment. Soak up any oil that has spilled with a proper binding agent. Sweep up binding agent and dispose of it separately from other waste.

Never search for leakages with fingers; instead, use a piece of cardboard and always wear goggles.

Never repair a damaged line; always replace it. Replace hydraulic hoses immediately on detecting any damaged or moist areas.

Always store hydraulic oil in the original containers.

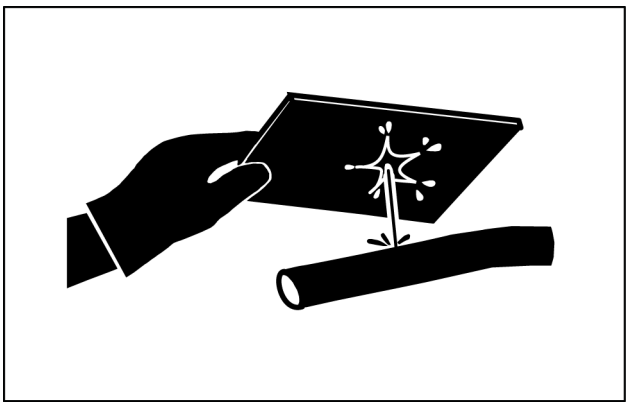

TULI12WEX2013AA 9

Hoses and tubes

Always replace hoses and tubes if the cone end or the end connections on the hose are damaged.

When installing a new hose, loosely connect each end and make sure the hose takes up the correct position before tightening the connections. Clamps should be tightened sufficiently to hold the hose without crushing and to prevent chafing.

After hose replacement to a moving component, check that the hose does not foul by moving the component through the complete range of travel. Be sure any hose which has been installed is not kinked or twisted.

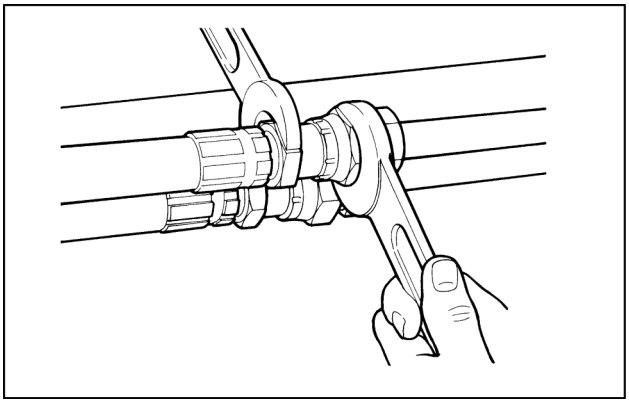

TULI12WEX2014AA 10

Hose connections which are damaged, dented, crushed or leaking, restrict oil flow and the productivity of the components being served. Connectors which show signs of movement from the original position have failed and will ultimately separate completely.

A hose with a frayed outer sheath will allow water penetration. Concealed corrosion of the wire reinforcement could subsequently occur along the hose length with resultant hose failure.

Ballooning of the hose indicates an internal leakage due to structural failure. This condition rapidly deteriorates and total hose failure soon occurs.

Kinked, crushed, stretched or deformed hoses generally suffer internal structural damage which can result in oil restriction, a reduction in the speed of operation and ultimate hose failure.

Free-moving, unsupported hoses must never be allowed to touch each other or related working surfaces. This causes chafing which reduces hose life.

O-rings

Replace O-rings, seal rings and gaskets whenever they are disassembled.

Never mix new and old seals or O-rings, regardless of condition. Always lubricate new seal rings and O-rings with hydraulic oil before installation to relevant seats.

This will prevent the O-rings from rolling over and twisting during mounting which will jeopardize sealing.

Battery

Batteries give off explosive gases.

Never handle naked flames and unshielded light sources near batteries. (No smoking is addressed in next instruction).

To prevent any risk of explosion, observe the following instructions:

- When disconnecting the battery cables, always disconnect the negative (-) cable first.
- To reconnect the battery cables, always connect the negative (-) cable last.
- Never short-circuit the battery terminals with metal objects.
- Do not weld, grind or smoke near a battery.

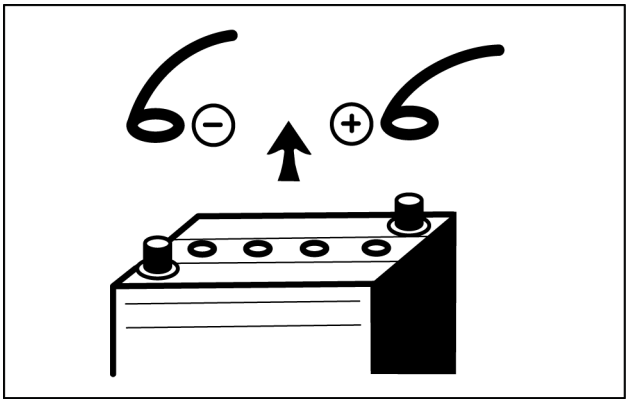

TULI12WEX2015AA 11

Battery electrolyte causes severe burns. The battery contains sulphuric acid. Avoid any contact with the skin, eyes or clothing.

Antidote:

- EXTERNAL: Rinse well with water, removing any soiled clothing.
- INTERNAL: Avoid vomiting. Drink water to rinse your mouth. Consult a doctor.
- EYES: Rinse abundantly with water for **15 min** and consult a doctor.
- When the electrolyte of a battery is frozen, it can explode if you attempt to charge the battery or if you try to start the engine using a booster battery. Always keep the battery charged to prevent the electrolyte freezing.

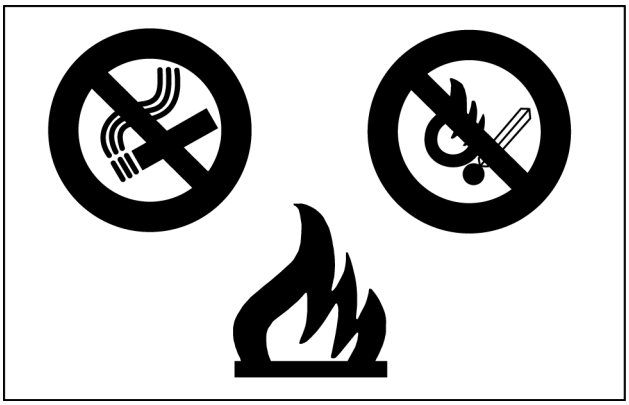

TULI12WEX2016AA 12

Provide good ventilation when changing a battery or using a battery in an enclosed space. Always protect your eyes when working near a battery.

Never set tools down on the battery. They may induce a short circuit, causing irreparable damage to the battery and injuring persons.

Never wear metal necklaces, bracelets or watch straps when working on the battery. The metal parts may induce a short circuit resulting in burns.

Dispose of used batteries separately from other waste in the interests of environmental protection.

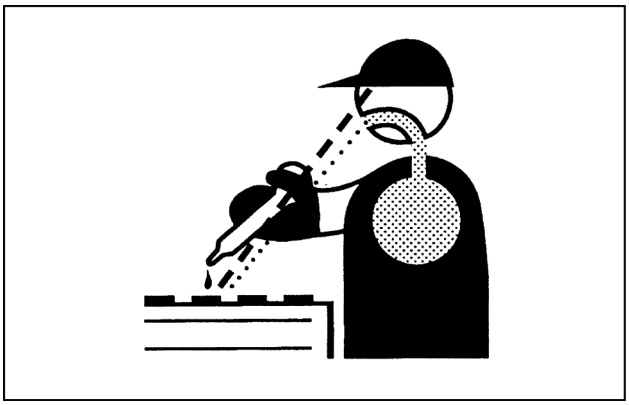

TULI12WEX2017AA 13

Flammable liquids

When handling flammable liquids:

- Do not smoke.
- Keep away from unshielded light sources and naked flames.

Fuels often have a low flash point and are readily ignited.

Never attempt to extinguish burning liquids with water. Use:

- Dry powder
- Carbon dioxide
- Foam

Water used for extinguishing purposes would vaporize instantaneously on contact with burning substances and spread burning oil, for example, over a wide area. Water generates short circuits in the electrical system, possibly producing new hazards.

TULI12WEX2016AA 14

Stay away from open flames during refilling of hydraulic oil or fuel.

Fuel or oil spills can cause slipping hazards; thoroughly contain and clean affected areas.

Always tighten the safety plugs of fuel tank and hydraulic oil tank firmly.

Never use fuel to clean machine parts that will be exposed to dirt or debris.

Use a non-inflammable product for cleaning parts.

Always perform fuel or oil refilling in well aired and ventilated areas.

TULI12WEX2018AA 15

During refuelling hold the pistol firmly and always keep it in contact with the filler neck until the end of the refuelling, to avoid arcing due to static electricity.

Do not overfill the tank but leave a space for fuel expansion.

Never refuel when the engine is running.

Take all the necessary safety measures when welding, grinding or when working near a naked flame.

TULI12WEX2019AA 16

Tires

Before inflating the tires, always check the condition of rims and the outer condition of tires to find out the presence of dents, cuts, tears of reinforcement plies or other faults. Before inflating a tire, make sure that there are no nearby persons, then position yourself at tread side.

When inflating tires, ensure tire pressure does not exceed that prescribed by the tire manufacturer. Ensure that the pressure of the right tire corresponds to the pressure of the left tire.

NOTE: *The front and rear tire pressures may be different.*

Never use reconditioned rims because possible welds, heat treatments or brazings not performed correctly can weaken the wheels and cause following damages or failures. Deflate the tires before their disassembly.

Before taking out possible jammed objects from the rims, it is necessary to deflate the tires. Inflate tires by means of an inflation pistol complete with extension and pressure control valve.

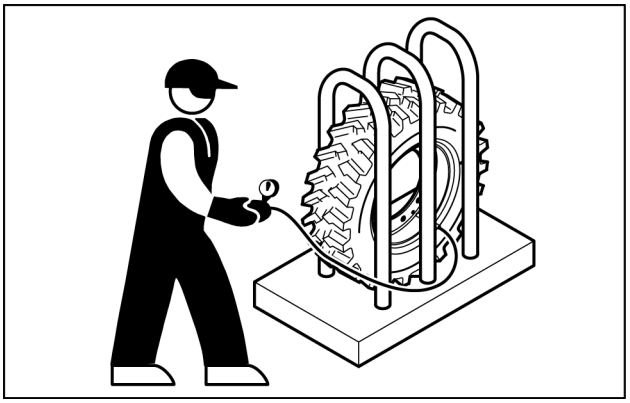

TULI12WEX2020AA 17

Cleaning

Clean the exterior of all components before carrying out any form of repair. Dirt and dust can reduce the efficient working life of a component and lead to costly replacement.

Solvents should be checked that they are suitable for the cleaning of components and also that they do not risk the personal safety of the user.

Dirt, oil, grease and scattered tools are dangerous for people, because they can create slipping or tripping hazards.

For machine cleaning, use a jet of warm water or steam under pressure and commercial detergents. Never use fuel, petroleum or solvents, because they can leave an oily residue that attracts dust, and solvents (even if weak) damage the paint and can lead to the information of rust.

Never use water jets or steam on sensors, connectors or other electric components.

Avoid direct spray of seals and seams to prevent water penetration inside the cab.

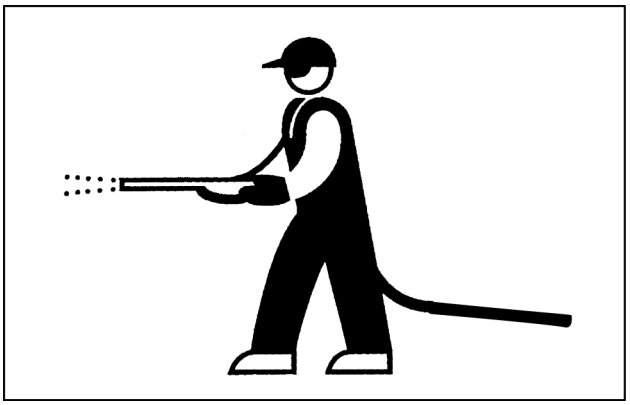

TULI12WEX2021AA 18

Waste disposal

Improperly disposing of waste can threaten the environment.

Each country has its own Regulations on this subject. It is therefore advisable to prepare suitable containers to collect and store momentarily all solid and fluid materials that must not be scattered in the environment to avoid pollution.

At preset intervals these products will be delivered to disposal stations legally recognized and present in this Country.

Hereunder are listed some products of the machine requiring disposal:

- Lubricating oil
- Brake system oil
- Coolant mixture, condensation rests and pure antifreeze
- Fuel
- Filter elements, oil and fuel filters
- Filter elements, air filters
- Battery

Also polluting rags, paper, sawdust and gloves must be disposed in compliance with the same procedures.

Do not use food or beverage containers that may mislead someone into drinking from them. Do not pour waste onto the ground, down a drain, or into any water source. Air conditioning refrigerants escaping into the air can damage the Earth's atmosphere. Government regulations may require a certified air conditioning service centre to recover and recycle used air conditioning refrigerants. Obtain information on the proper way to recycle or dispose of waste from your local environmental or recycling centre, or from your Dealer.

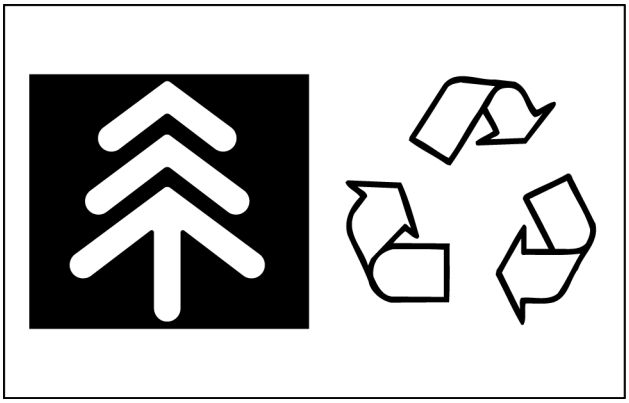

TULI12WEX2022AA 19

Torque

Bolt types

NOTICE: *Use tools appropriate for the work to be done. Makeshift tools and procedures can create safety hazards. For loosening and tightening nuts and bolts, use the correct tools. Avoid bodily injury caused by slipping wrenches.*

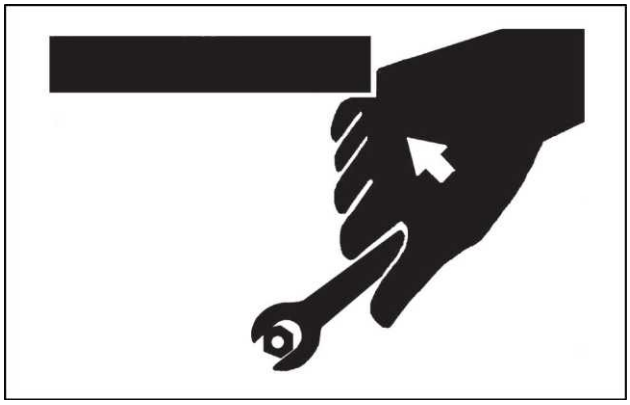

TULI12ECX0475AA 1

Tighten nuts or bolts to torque specifications. There are two kinds of bolts; hexagon T bolts **(1)** and socket bolts **(2)**. The two types of bolts are made from different materials. The correct type of bolt must be used when assembling the machine and/or components.

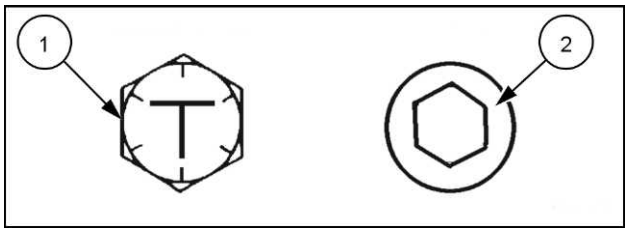

RAPH12CEX1320AA 2

Specified tightening torque chart

Bolt dia.	Wrench size	Hexagon wrench size	T bolt, socket bolt
M8	**13 mm**	**6 mm**	**29.5 N·m (22 lb ft)**
M10	**17 mm**	**8 mm**	**64 N·m (47 lb ft)**
M12	**19 mm**	**10 mm**	**108 N·m (80 lb ft)**
M14	**22 mm**	**12 mm**	**175 N·m (129 lb ft)**
M16	**24 mm**	**14 mm**	**265 N·m (195 lb ft)**
M18	**27 mm**	**14 mm**	**390 N·m (288 lb ft)**
M20	**30 mm**	**17 mm**	**540 N·m (398 lb ft)**
M22	**32 mm**	**17 mm**	**740 N·m (546 lb ft)**
M24	**36 mm**	**19 mm**	**930 N·m (686 lb ft)**
M27	**41 mm**	**19 mm**	**1370 N·m (1010 lb ft)**
M30	**46 mm**	**22 mm**	**1910 N·m (1409 lb ft)**
M33	**50 mm**	**24 mm**	**2550 N·m (1881 lb ft)**
M36	**55 mm**	**27 mm**	**3140 N·m (2316 lb ft)**

1. Apply lubricant (i.e. white zinc B dissolved into spindle oil) to nuts and bolts to stabilize their friction coefficients.
2. Torque tolerance is ± **10 %**.
3. Be sure to use bolts of correct length. Bolts that are too long cannot be tightened, as the bolt tip comes into contact with the bottom of the bolt hole. Bolts that are too short cannot develop sufficient tightening force.
4. The torques given in the chart are for general use only.
   Do not use these torques if a different torque is given for a specific application.
5. Make sure that the nut and bolt threads are clean before installing. Remove dirt or corrosion, if any.

Bolt tightening order

When tightening two or more bolts, tighten them alternately, as shown, to ensure even tightening.

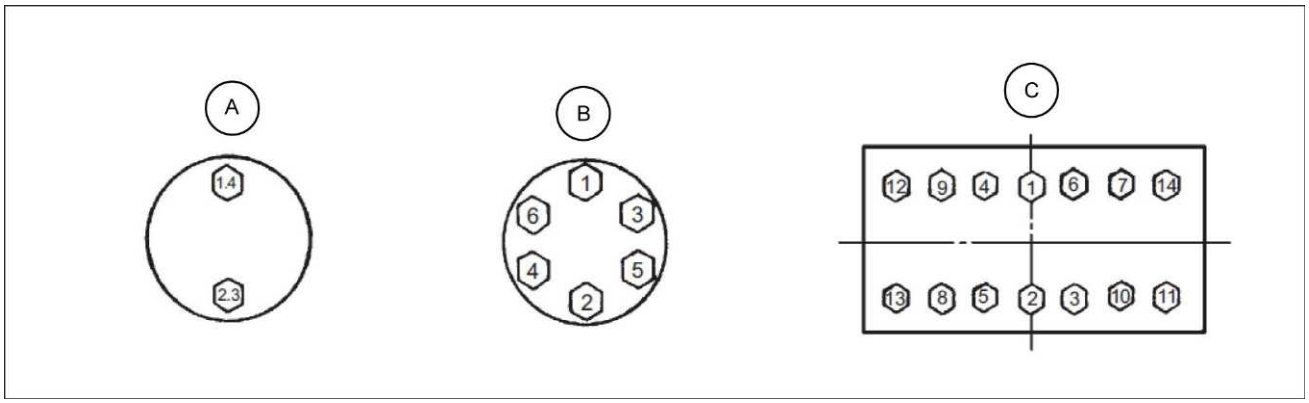

SMIL13CEX0149EA 3

A Equally tighten upper and lower alternately
B Tighten diagonally
C Tighten from center and diagonally

Service recommendations for split flange

1. Be sure to clean and inspect sealing surfaces. Scratches/roughness cause leaks and seal wear. Unevenness causes seal extrusion. If defects cannot be polished out, replace the component.
2. Be sure to use only specified O-rings. Inspect O-rings for any damage. Take care not to file O-ring surfaces. When installing an O-ring into a groove, use grease to hold it in place.
3. Loosely assemble split flange halves. Make sure that the split is centrally located and perpendicular to the port. Hand-tighten the bolts to hold the parts in place. Take care not to pinch the O-ring.
4. Tighten bolts alternately and diagonally, as shown, to ensure even tightening.
5. Do not use air wrenches. Using an air wrench often causes tightening of one bolt fully before tighten the others, resulting in damage to O-rings or uneven tightening of bolts.

A - WRONG

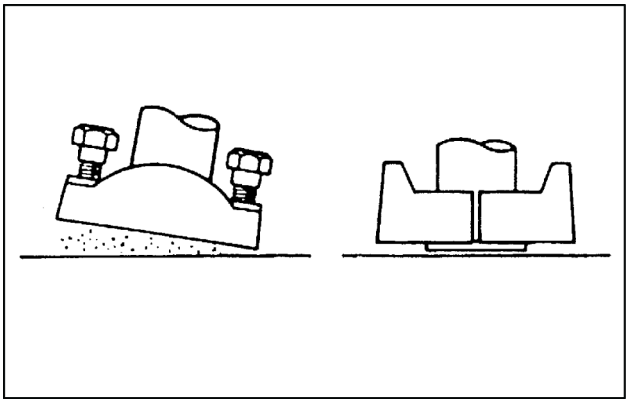

TULI12ECX0802AA 4

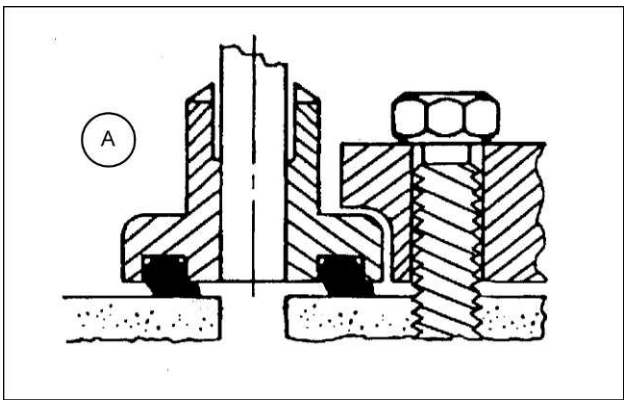

SMIL13CEX0150AA 5

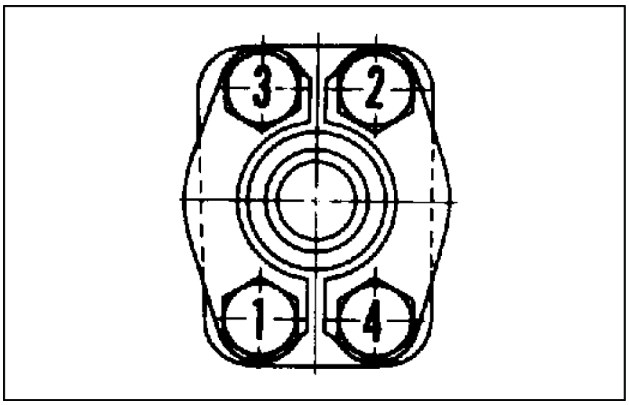

TULI12ECX0804AA 6

Nut and bolt lockings

Lock plate

NOTICE: *Do not reuse lock plates. Do not try to bend the same point twice.*

Cotter pin

NOTICE: *Do not reuse cotter pins. Match the holes in the bolt and nut while tightening, not while loosening.*

Lock wire

NOTICE: *Apply wire to bolts in the bolt tightening direction, not in the bolt-loosening direction.*

A - RIGHT

B - WRONG

C - Bend along edge sharply

D - Do not bend it round

E - Tighten

F - Loosen

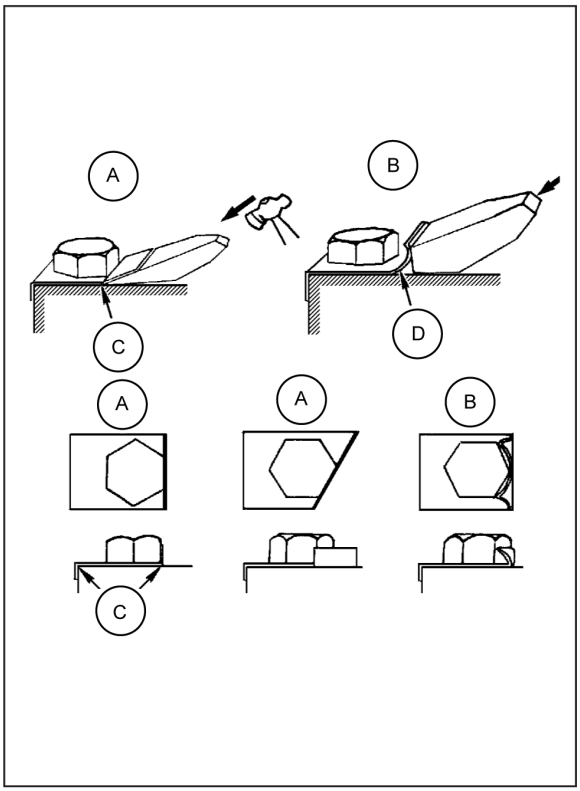

SMIL13CEX0151BA 7

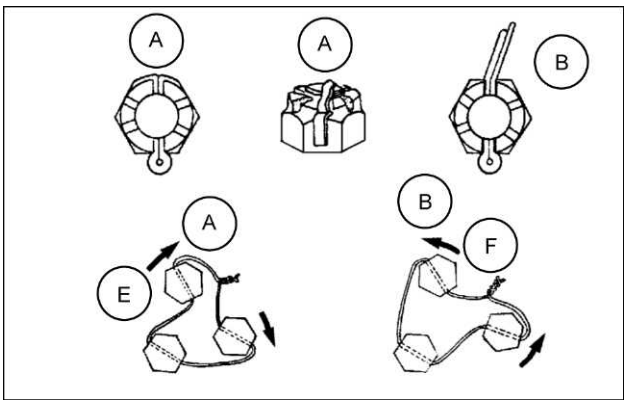

SMIL13CEX0152AA 8

Piping joint

Pipe thread connection/Union joint tightening torque specifications

Union joint

Metal sealing faces **(4)** and **(5)** of adaptor **(1)** and hose **(2)** fit together to seal pressure oil. Union joints are used to join small-diameter lines.

1. Do not over tighten union nut **(3)**. Excessive force will be applied to metal sealing surfaces **(4)** and **(5)**, possibly cracking adaptor **(1)**. Be sure to tighten union nut **(3)** to specifications.
2. Scratches or other damage to sealing surfaces **(4)** or **(5)** will cause oil leakage at the joint. Take care not to damage them when connecting/disconnecting.

A - Joint body

B - Male Union Joint

C - Female Union Joint

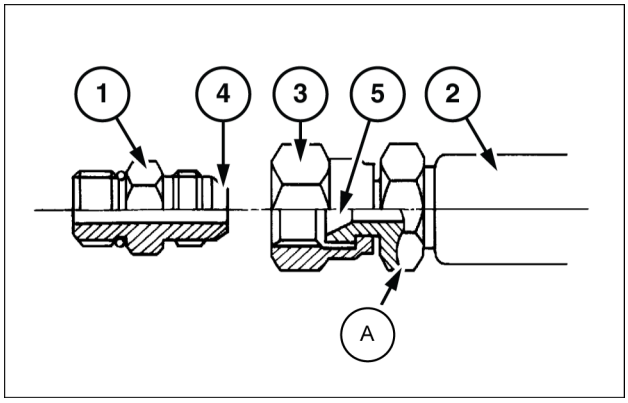

SMIL13CEX0153AB 9

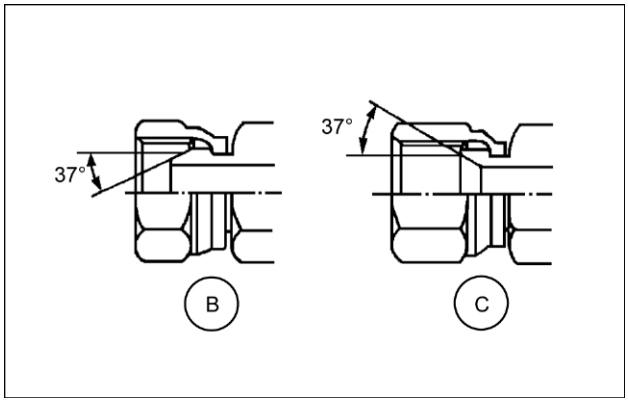

SMIL13CEX0154AA 10

Type	Wrench size		Tightening torque
	Union nut	Joint body	
37° Union joint	**19 mm**	**17 mm**	**29 N·m (21 lb ft)**
	22 mm	**19 mm**	**39 N·m (29 lb ft)**
	27 mm	**22 mm**	**78.5 N·m (58 lb ft)**
	36 mm	**30 mm, 32 mm**	**157 N·m (116 lb ft)**
	41 mm	**36 mm**	**205 N·m (151 lb ft)**
	50 mm	**46 mm**	**323.6 N·m (239 lb ft)**

NOTE: *Tightening torque for the non union type 37° male joint is the same as the 37° female union joint.*

O-ring seal joint

O-ring **(6)** seats against the end face of adaptor **(7)** to seal pressure oil.

O-ring procedures:

1. Be sure to replace O-ring **(6)** with a new one when reconnecting.
2. Before tightening union nut **(9)**, confirm that O-ring **(6)** is seated correctly in O-ring groove **(8)**. Tightening union nut **(9)** with O-ring **(6)** displaced will damage O-ring, resulting in oil leakage.
3. Take care not to damage O-ring groove **(8)** or sealing face **(10)**. Damage to O-ring **(6)** will cause oil leakage.
4. If union nut **(9)** is found to be loose, causing oil leakage, do not tighten it to stop the leak. Instead, replace O-ring **(6)** with a new one, then tighten union nut **(9)** after confirming that O-ring **(6)** is securely seated in place.

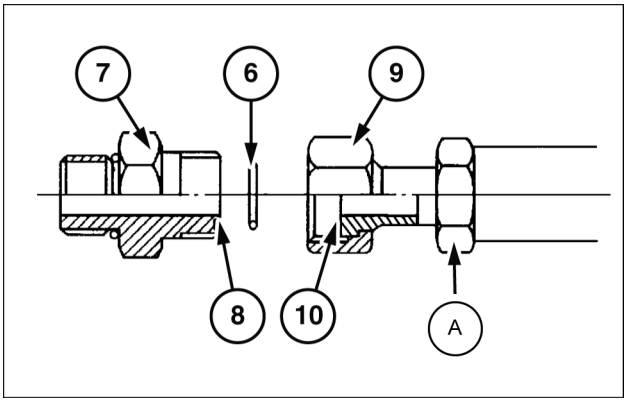

SMIL13CEX0155AB 11

A Joint body

Wrench size		Tightening torque
Union nut	Joint body	
19 mm	17 mm	29.4 N·m (22 lb ft)
22 mm	19 mm	68.6 N·m (51 lb ft)
27 mm	22 mm	93 N·m (69 lb ft)
30 mm	27 mm	137.3 N·m (101 lb ft)
36 mm	30 mm	175 N·m (129 lb ft)
41 mm	36 mm	205 N·m (151 lb ft)
50 mm	46 mm	320 N·m (236 lb ft)

Screwed-in connection

NOTICE: *Many types of screwed-in connections are used for hose connections.*
Be sure to confirm that the thread pitch and thread type (tapered or straight) are the correct type before using any screw-in connection.

A - Male Tapered Thread

B - Female Straight Thread

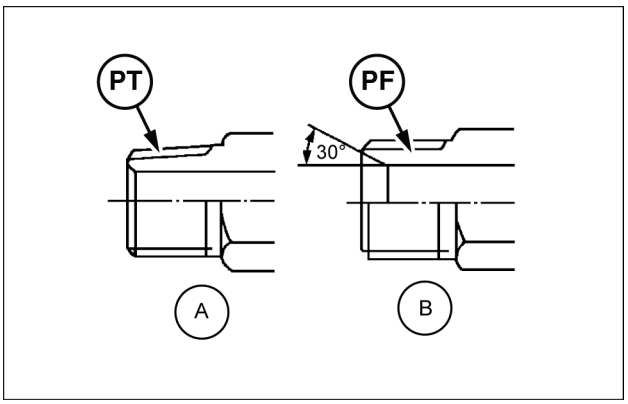

SMIL13CEX0156AB 12

Male tapered thread	
Wrench joint body	Tightening torque
17 mm, 19 mm	34 N·m (25 lb ft)
22 mm	49 N·m (36 lb ft)
27 mm	93 N·m (69 lb ft)
32 mm, 36 mm	157 N·m (116 lb ft)
41 mm	205 N·m (151 lb ft)
50 mm	320 N·m (236 lb ft)
60 mm	410 N·m (302 lb ft)

Seal tape application

Seal tape is used to seal clearances between male and female threads, so as to prevent any leakage between threads.

Be sure to apply just enough seal tape to fill up thread clearances. Do not overwrap.

- Application procedure

Confirm that the thread surface is clean, free of dirt or damage.

Apply seal tape around threads as shown. Wrap seal tape in the same direction as the threads.

A - Internal Thread

B - External Thread

C - Clearance

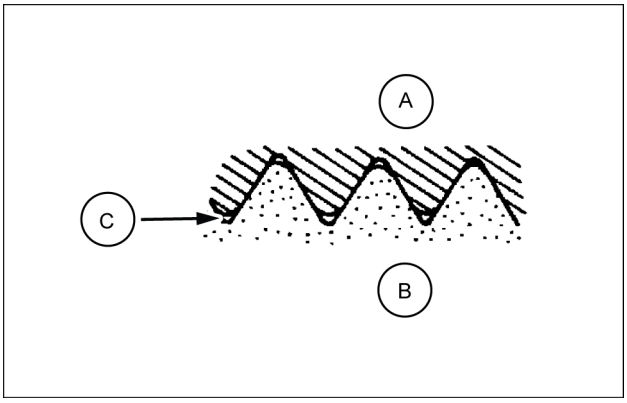

SMIL13CEX0157AB 13

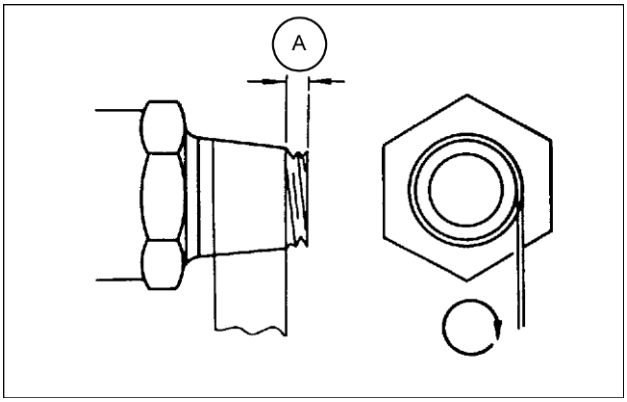

SMIL13CEX0158AA 14

A Leave one to two pitch threads uncovered

Low-pressure-hose clamp tightening torque

Low-pressure-hose clamp tightening torque differs depending on the type of clamp.

See below for correct tightening torque of each type of low-pressure-hose clamp.

T-bolt type band clamp: **4.4 N·m** (**3.25 lb ft**)

Worm gear type band clamp: **5.9 - 6.9 N·m** (**4.4 - 5.1 lb ft**)

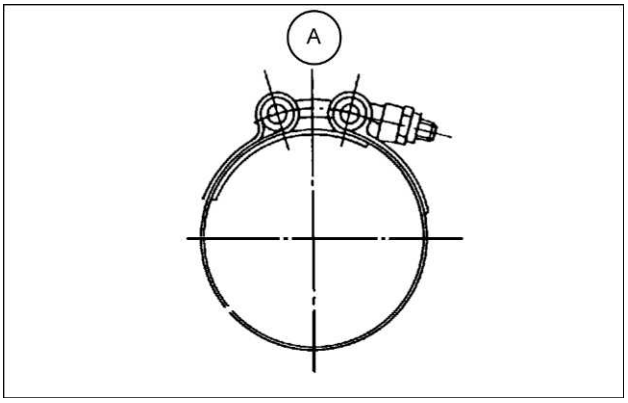

SMIL13CEX0159AA 15

A - T-Bolt Type

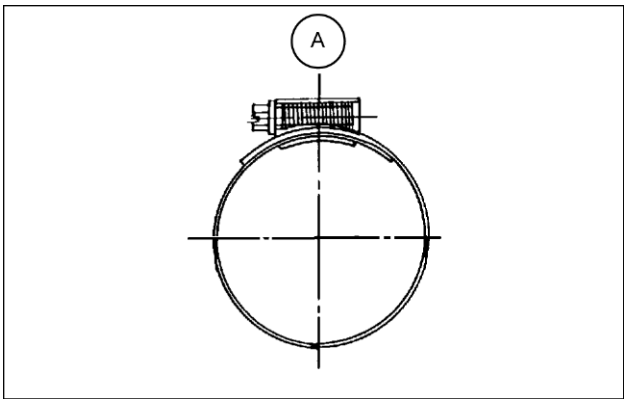

SMIL13CEX0160AA 16

A - Worm Gear Type

Connecting hose

1. When replacing hoses, be sure to use only genuine parts. Using hoses other than genuine hoses may cause oil leakage, hose rupture or separation of fitting, possibly resulting in a fire on the machine.
2. Do not install hoses kinked. Application of high oil pressure, vibration, or an impact to a kinked hose may result in oil leakage, hose rupture or separation of fitting.
   Utilize print marks on hoses when installing hoses to prevent hose from being installed kinked.
3. If hoses rub against each other, wear to the hoses will result, leading to hose rupture. Take necessary measures to protect hoses from rubbing against each other.
   Take care that hoses do not come into contact with moving parts or sharp objects.

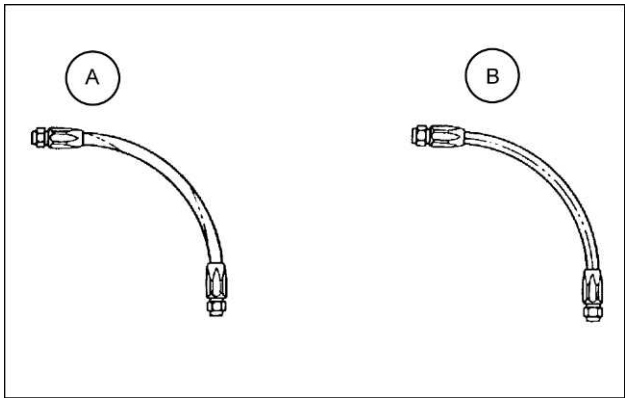

SMIL13CEX0161AA 17

A - WRONG
B - RIGHT
C - Rubbing Against Each Other

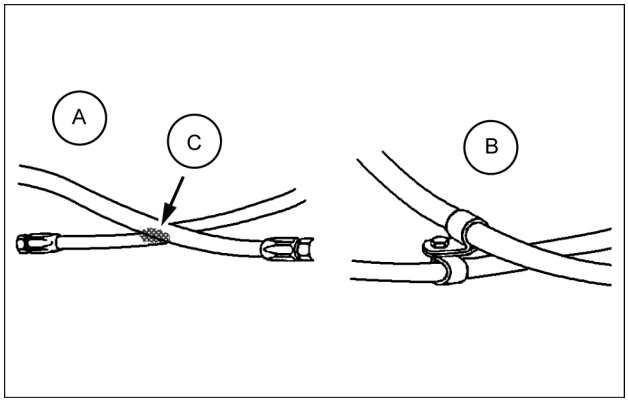

SMIL13CEX0162AB 18

A - WRONG
B - RIGHT
C - Clamp
D - Clamp
E - Rubbing

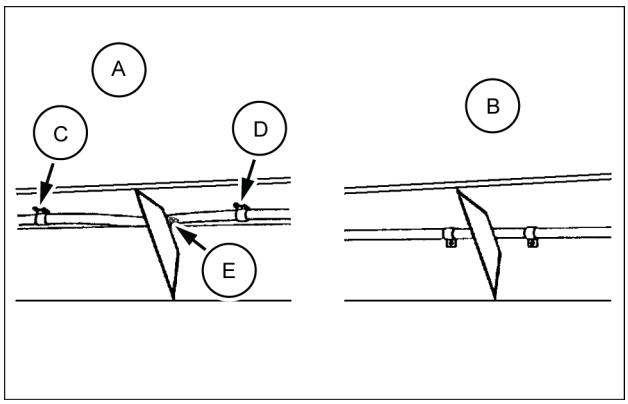

SMIL13CEX0163AB 19

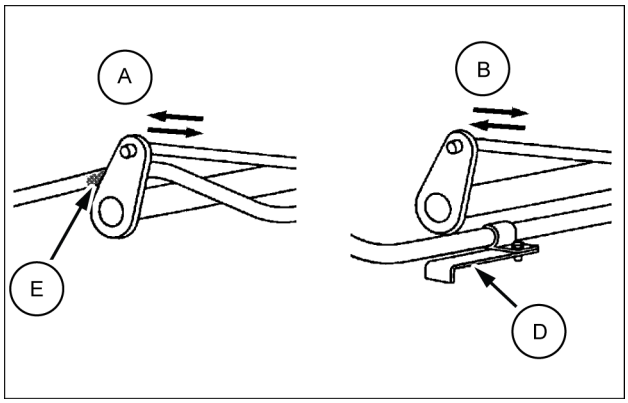

SMIL13CEX0164AB 20

Basic instructions - Shop and assembly

Shimming

For each adjustment operation, select adjusting shims and measure the adjusting shims individually using a micrometer, then add up the recorded values. Do not rely on measuring the entire shimming set, which may be incorrect, or the rated value shown on each shim.

Rotating shaft seals

For correct rotating shaft seal installation, proceed as follows:

1. Before assembly, allow the seal to soak in the oil it will be sealing for at least thirty minutes.
2. Thoroughly clean the shaft and check that the working surface on the shaft is not damaged.
3. Position the sealing lip facing the fluid.

   NOTE: *With hydrodynamic lips, take into consideration the shaft rotation direction and position the grooves so that they will move the fluid towards the inner side of the seal.*
4. Coat the sealing lip with a thin layer of lubricant (use oil rather than grease). Fill the gap between the sealing lip and the dust lip on double lip seals with grease.
5. Insert the seal in its seat and press down using a flat punch or seal installation tool. Do not tap the seal with a hammer or mallet.
6. While you insert the seal, check that the seal is perpendicular to the seat. When the seal settles, make sure that the seal makes contact with the thrust element, if required.
7. To prevent damage to the seal lip on the shaft, position a protective guard during installation operations.

O-ring seals

Lubricate the O-ring seals before you insert them in the seats. This will prevent the O-ring seals from overturning and twisting, which would jeopardize sealing efficiency.

Sealing compounds

Apply a sealing compound on the mating surfaces when specified by the procedure. Before you apply the sealing compound, prepare the surfaces as directed by the product container.

Spare parts

Only use CNH Original Parts or NEW HOLLAND CONSTRUCTION Original Parts.

Only genuine spare parts guarantee the same quality, duration, and safety as original parts, as they are the same parts that are assembled during standard production. Only CNH Original Parts or NEW HOLLAND CONSTRUCTION Original Parts can offer this guarantee.

When ordering spare parts, always provide the following information:

- Machine model (commercial name) and Product Identification Number (PIN)
- Part number of the ordered part, which can be found in the parts catalog

Protecting the electronic and/or electrical systems during charging and welding

To avoid damage to the electronic and/or electrical systems, always observe the following practices:

1. Never make or break any of the charging circuit connections when the engine is running, including the battery connections.
2. Never short any of the charging components to ground.
3. Always disconnect the ground cable from the battery before arc welding on the machine or on any machine attachment.
   - Position the welder ground clamp as close to the welding area as possible.
   - If you weld in close proximity to a computer module, then you should remove the module from the machine.
   - Never allow welding cables to lie on, near, or across any electrical wiring or electronic component while you weld.
4. Always disconnect the negative cable from the battery when charging the battery in the machine with a battery charger.

   NOTICE: *If you must weld on the unit, you must disconnect the battery ground cable from the machine battery. The electronic monitoring system and charging system will be damaged if this is not done.*
5. Remove the battery ground cable. Reconnect the cable when you complete welding.

⚠ WARNING

Battery acid causes burns. Batteries contain sulfuric acid.
Avoid contact with skin, eyes or clothing. Antidote (external): Flush with water. Antidote (eyes): flush with water for 15 minutes and seek medical attention immediately. Antidote (internal): Drink large quantities of water or milk. Do not induce vomiting. Seek medical attention immediately.
Failure to comply could result in death or serious injury.

W0111A

Special tools

The special tools that NEW HOLLAND CONSTRUCTION suggests and illustrate in this manual have been specifically researched and designed for use with NEW HOLLAND CONSTRUCTION machines. The special tools are essential for reliable repair operations. The special tools are accurately built and rigorously tested to offer efficient and long-lasting operation.

By using these tools, repair personnel will benefit from:

- Operating in optimal technical conditions
- Obtaining the best results
- Saving time and effort
- Working in safe conditions

Basic instructions - How to use the maintenance standard and precautions

Application

WHEN THE MACHINE IS NEW

Confirm that the performances are in accordance with standard specifications as compared to the performance standards.

AT SPECIFIC SELF INSPECTION (RULE BY COUNTRY)

Use the data for the criterion, for the purpose of correction, adjustment and replacement.

WHEN PERFORMANCES ARE DETERIORATED

Determine whether it is caused by a fault or end of service life after long hours of operation, to be used for safety and economical considerations.

WHEN MAIN COMPONENTS ARE REPLACED

For example, use data to restore performances of pumps and others.

Terminology

STANDARD VALUES

Values to be used to condition or assemble a new machine. Where special notes are not given, these values represent standard specifications (machine with standard attachments and standard shoes).

REFERENCE VALUES FOR REMEDY

Values at which readjustment is required. In order to ensure performance and safety it is strictly prohibited to use the machine over the specified values.

SERVICE LIMIT

This is the limit value at which reconditioning is impossible without replacement of parts. If the value is expected to exceed the service limit before next inspection and correction are performed, replace the parts immediately. The operation over the specified values causes increase of damage and requires the down time of machine, and also causes safety problems.

Cautions to be exercised at judgment

EVALUATION OF MEASURED DATA

Disagreement of measuring conditions, variations of data peculiar to a new machine, and measuring errors are to be evaluated. Determine generally at what levels measured values are located, instead of determining whether or not values fall within or run out of the reference values.

DETERMINING CORRECTION, ADJUSTMENT OR REPLACEMENT

Machine performances deteriorate with time as parts wear and some deteriorated performances may be restored to new levels. Therefore, determine correction, adjustment or replacement, depending upon the operating hours, kind of work and circumstances in which the machine is placed, and condition the machine performances to its most desirable levels.

Other cautions to be exercised

PARTS LIABLE TO DEGRADE

Rubber products, such as, hydraulic hoses, O-rings, and oil seals deteriorate with time; replace them at regular intervals or at overhauls.

https://truckmanualshub.com/

PARTS REQUIRING REGULAR REPLACEMENT

Out of critical hoses that are necessary to secure safety, we designate Very Important Parts (V.I.P) and recommend that they should be replaced regularly.

INSPECTION AND REPLACEMENT OF OILS AND GREASES

In performing maintenance, it is necessary for the user to familiarize himself with how to handle the machine safely, cautions to be exercised and inspection/lubrication procedures. Refer to the Operators Manuals as well.

Basic instructions - Precaution for disassembly and assembly

Preparations for disassembly

- Thoroughly wash the machine before bringing it into the shop. Bringing a dirty machine into the shop may cause machine components to be contaminated during disassembling/assembling, resulting in damage to machine components, as well as decreased efficiency in service work.
- Be sure to thoroughly understand all disassembling/assembling procedures beforehand, to help avoid incorrect disassembling of components as well as personal injury.
- Check and record the items listed below to prevent problems from occurring in the future.

1. The machine model, machine serial number, and hour meter reading.
2. Reason for disassembly (symptoms, failed parts, and causes).
3. Clogging of filters and oil, water or air leaks, if any.
4. Capacities and condition of lubricants.
5. Loose or damaged parts.

- Prepare the necessary tools to be used and the area for disassembling work.
- Wear appropriate clothing, safety shoes, safety helmet, goggles, and clothes with long sleeves.
- Confirm ready access to a first-aid kit and fire extinguisher, as well as appropriate emergency personnel contacts in the case of a medical accident or fire.
- Before performing any work on the machine, follow lockout/tagout procedures by attaching a “maintenance in progress tag”. This tag can be applied on the left-hand control lever, safety lever or cab door. Notify those with access to the machine that you will be performing the maintenance.

Disassembling and assembling hydraulic equipment

- Before removing lines, release the pressure of hydraulic oil tank, or open the cover on the return side to tank, and take out the filter.
- Drain the oil in removed lines into an appropriate container to prevent oil contamination.
- Protect open connections with plugs or caps to prevent oil from leaking and debris from contaminating the system.
- Thoroughly clean the outside of components before disassembling, and drain hydraulic oil and gear oil before disassembly.

Disassembling hydraulic equipment

- Impaired performance and function of hydraulic equipment after unauthorized service may not be covered under warranty by the manufacturer. Consult your local dealer for service.
- If it is unavoidably necessary to disassemble and modify, it should be carried out by experts or personnel qualified through service training.
- Make match mark on parts for reassembling.
- Before disassembling, read instructions in advance, and determine if the service is required to be performed by an authorized dealer.
- Use appropriate specialty tools and jigs if required.
- If parts can not be removed as specified by the procedure, never force removal. Check for other failures that may be causing binding or interference.
- Inspect parts for wear and clearance; record the measured values. Replace components if the values fall outside of the recommended range.
- If an abnormality is detected, repair or replace the parts.
- When removing parts, use appropriate markings or labels to ensure thy can be reinstalled in the correct order and location without confusion.
- For common parts, pay attention to the quantity and locations of each group of components.

Reassembling hydraulic equipment

- Clean parts in a well ventilated room.
- Remove residual oil with compressed air, and apply fresh hydraulic oil or gear oil to surfaces before reassembly.
- Replace removed o-rings, back-up rings and oil seals with new ones. Apply gear oil on them before reassembling.
- Thoroughly clean and dry surfaces on which liquid sealant must be reapplied.
- Before assembling, remove rust preventives on new parts.
- Use special tools to fit bearings, bushing and oil seal.
- Assemble parts matching to the marks.
- After completion, check that there is no omission of parts.

Basic instructions - Electrical equipment precautions

⚠ WARNING

Battery acid causes burns. Batteries contain sulfuric acid.
Avoid contact with skin, eyes or clothing. Antidote (external): Flush with water. Antidote (eyes): flush with water for 15 minutes and seek medical attention immediately. Antidote (internal): Drink large quantities of water or milk. Do not induce vomiting. Seek medical attention immediately.
Failure to comply could result in death or serious injury.

W0111A

- The disassembly of electrical equipment is not allowed.
- Handle equipment with care so as not to drop it or bump it.
- Connector should be removed by unlocking while holding the connector.
- Never disconnect electrical plugs by pulling on the wires. Always use only the electrical connectors to make the disconnection.
- Check that connector is connected and locked completely.
- Engine key off before removing and connecting connector.
- Engine key off before touching terminals of starter and alternator.
- Wash machine with care so as not to splash water on electrical equipment and connector.
- If water has entered a sealed connection, thoroughly dry both connectors before reconnecting
- Remove battery grounding terminal before beginning work close to battery and battery relay with tools.

General specification

Hydraulic system

The hydraulic system is supplied by 3 pumps, a variable displacement pump, an independent pump for swing and a double gear pump for steering, brake, pilot hydraulic system and grab rotation. The engine and the pumps are monitored and controlled by the “Engine Speed Control” selector located in cab.

Circuit pressure

	WE170B	WE190B
Attachment (triple articulation)	**340 bar** (**4930 psi**)	**340 bar** (**4930 psi**)
Travel	**370 bar** (**5365 psi**)	**370 bar** (**5365 psi**)
Power boost	**370 bar** (**5365 psi**)	**370 bar** (**5365 psi**)
Swing	**390 bar** (**5655 psi**)	**360 bar** (**5220 psi**)
Pilot system	**45 bar** (**653 psi**)	**45 bar** (**653 psi**)

Pumps

Variable displacement pump

	WE170B - WE190B
Model	A8V080 LA1H2/63R1
Power	**103 kW** (**140 Hp**)
Engine speed	**2000 RPM**
Maximum flow rate at **1800 RPM** (heavy)	2 x **155 l/min** (**40.9 US gpm**)

Rotation pump

	WE170B	WE190B
Model	A4VG40 DE4D T1/32R	A4VG56 DE4D T1/32R
Service pressure	**380 - 400 bar** (**5510 - 5800 psi**)	**350 - 370 bar** (**5075 - 5365 psi**)
Engine speed	**1800 RPM**	**2000 RPM**
Auxiliary pump volume	**8.6 cm³** (**0.52 in³**)	**11.6 cm³** (**0.71 in³**)
Main pump volume	**40 cm³** (**2.44 in³**)	**56 cm³** (**3.42 in³**)
Maximum flow rate at **1800 RPM** (heavy)	**76.8 - 81 l/min** (**20.3 - 21.4 US gpm**)	**107.5 - 113 l/min** (**28.4 - 29.9 US gpm**)

Gear pump

	WE170B - WE190B
Model	WSP20.11,2-03S1-L
Pump P1 displacement	**11.891 cm³/rev** (**0.73 in³/rev**)
Pump P2 displacement	**11.891 cm³/rev** (**0.73 in³/rev**)
Max continuous pressure (P1)	**230 bar** (**3335 psi**)
Max intermittent pressure (P2)	**280 bar** (**4060 psi**)
Min rotation speed (P1)	**600 RPM**
Max rotation speed (P1)	**2300 RPM**

Cylinder

Cylinder (Ø tube assy. x Ø rod assy. x stroke)

	WE170B	WE190B
Boom (mono)	**110 mm** (**4.33 in**) x **80 mm** (**3.15 in**) x **1170 mm** (**46.06 in**) ± **1.8 mm** (**0.07 in**)	**115 mm** (**4.53 in**) x **80 mm** (**3.15 in**) x **1170 mm** (**46.06 in**) ± **1.8 mm** (**0.07 in**)
Dipper	**115 mm** (**4.53 in**) x **80 mm** (**3.15 in**) x **1245 mm** (**49.02 in**) ± **1.8 mm** (**0.07 in**)	**125 mm** (**4.92 in**) x **90 mm** (**3.54 in**) x **1290 mm** (**50.79 in**) ± **1.8 mm** (**0.07 in**)
Bucket	**100 mm** (**3.94 in**) x **70 mm** (**2.76 in**) x **1025 mm** (**40.35 in**) ± **1.8 mm** (**0.07 in**)	**105 mm** (**4.13 in**) x **75 mm** (**2.95 in**) x **1025 mm** (**40.35 in**) ± **1.8 mm** (**0.07 in**)
Boom (triple articulation)	**110 mm** (**4.33 in**) x **80 mm** (**3.15 in**) x **1020 mm** (**40.16 in**) ± **1.8 mm** (**0.07 in**)	**115 mm** (**4.53 in**) x **80 mm** (**3.15 in**) x **1020 mm** (**40.16 in**) ± **1.8 mm** (**0.07 in**)
Positioning (triple articulation)	**155 mm** (**6.10 in**) x **85 mm** (**3.35 in**) x **745 mm** (**29.33 in**) ± **3.15 mm** (**0.12 in**)	**155 mm** (**6.10 in**) x **85 mm** (**3.35 in**) x **745 mm** (**29.33 in**) ± **3.15 mm** (**0.12 in**)

Swing

The swing function is actuated by a closed hydraulic circuit, driving a mechanical gearbox with built-in automatic static brake.

	WE170B	WE190B
Swing speed	**8.6 RPM**	**9 RPM**
Swing torque (SAE J1371)	**42400 N·m** (**31273 lb ft**)	**53000 N·m** (**39091 lb ft**)

Slewing gearbox

	WE170B	WE190B
Model	705T2F/22,11	705T2F/24,22
Total displacement	**1245.4 cm³/rev** (**76.0 in³/rev**)	**1356.3 cm³/rev** (**82.8 in³/rev**)
Hydraulic motor displacement	**56 cm³/rev** (**3.4 in³/rev**)	**56 cm³/rev** (**3.4 in³/rev**)
Total reduction ratio	22.24	24.22
Maximum oil delivery	**80 l/min** (**21.13 US gpm**)	**112 l/min** (**29.59 US gpm**)
Hydraulic motor maximum pressure	**370 bar** (**5365 psi**)	**320 bar** (**5365 psi**)
Maximum input speed	**1429 RPM**	**2000 RPM**
Gearbox output torque	**7334 N·m** (**5409 lb ft**)	**6908 N·m** (**5409 lb ft**)
Gearbox output speed	**64.3 RPM**	**82.6 RPM**
Oil quantity	**3.5 l** (**0.92 US gal +/- 10%**)	**3.5 l** (**0.92 US gal +/- 10%**)
Dry weight	**120 kg** (**265 lb +/- 10%**)	**120 kg** (**265 lb +/- 10%**)
Breaking torque	**602 N·m** (**444 lb ft +/- 10%**)	**521 N·m** (**384 lb ft +/- 10%**)
Complete opening pressure	**14.3 bar** (**207 psi**)	**12.38 bar** (**180 psi**)
Max operating pressure	**50 bar** (**725 psi**)	**50 bar** (**725 psi**)
Number of internally toothed steel discs	4	4
Number of sintered bronze discs with external teeth	5	5

Travel

Transmission with clutch pack.

	WE170B	WE190B
Maximum travel speed at job	**5 km/h (3.1 mph)**	**5 km/h (3.1 mph)**
Maximum travel speed at job site (optional)	**8.4 km/h (5.2 mph)**	**9 km/h (5.6 mph)**
Maximum travel speed on the road	**20 km/h (12.4 mph)**	**20 km/h (12.4 mph)**
High speed on road (optional)	**35 km/h (21.7 mph)**	**35 km/h (21.7 mph)**
Maximum drawbar pull (field)	**92 kN (20682.4 lb)**	**112 kN (25178.6 lb)**

Travel motor

	WE170B	WE190B
Model	**20 km/h (12.4 mph)**: A6VM107 HA1T/63W-VAB 370A **35 km/h (21.7 mph)**: A6VM107 HA1TA/63W-VAB 370A-SK	A6VM140 HA1T/63W-VZB 380A
Maximum intake volume Vgmax	**107 cm³/rev (6.5 in³/rev)**	**140 cm³/rev (8.5 in³/rev)**
Minimum intake volume Vgmin	**20 km/h (12.43 mph) : 69 cm³/rev (4.21 in³/rev)** **35 km/h (21.75 mph) : 38 cm³/rev (2.32 in³/rev)**	**20 km/h (12.43 mph) : 88 cm³/rev (5.37 in³/rev)** **35 km/h (21.75 mph) : 42 cm³/rev (2.56 in³/rev)**
N/max at Vgmax	**20 km/h (12.4 mph): 1400 RPM** **35 km/h (21.7 mph): 1514 RPM**	**20 km/h (12.4 mph): 1400 RPM** **35 km/h (21.7 mph): 1500 RPM**
N/max at Vgmin	**20 km/h (12.43 mph) : 2200 RPM** **35 km/h (21.75 mph) : 4150 RPM**	**20 km/h (12.43 mph) : 2200 RPM** **35 km/h (21.75 mph) : 4500 RPM**
Nmax	**4500 RPM**	**4500 RPM**
Rated pressure PN	**400 bar (5800 psi)**	**400 bar (5800 psi)**
Service pressure P	**370 bar (5365 psi)**	**370 bar (5365 psi)**
Maximum pressure PMAX	**450 bar (6525 psi)**	**450 bar (6525 psi)**
Adjustment start	**320 bar (4640 psi)**	**320 bar (4640 psi)**
Adjustment end	**330 bar (4785 psi)**	**330 bar (4785 psi)**
Hydraulic override (port x) Vgmin at Px Vgmax at Px	**0 bar (0 psi)** **45 bar (653 psi)**	**0 bar (0 psi)** **45 bar (653 psi)**

Tires

WE170B

Tire	Manufacturer	Type	Pressure	V (max)
Twin	Mitas	**10.00-20 PR16 NB38**	**7.5 bar (109 psi)**	**35 km/h (21.75 mph)**
	Bandenmarkt	**315/80 R 22.5**	**8.5 bar (123 psi)**	**35 km/h (21.75 mph)**
Single	Mitas	**600/40 - 22.5**	**6.25 bar (91 psi)**	**35 km/h (21.75 mph)**
	Michelin	**18 R19.5 XF**	**7.5 bar (109 psi)**	**35 km/h (21.75 mph)**
	Alliance	**620/40 - 22.5**	**7.0 bar (102 psi)**	**35 km/h (21.75 mph)**

WE190B

Tire	Manufacturer	Type	Pressure	V (max)
Twin	Mitas	**10.00-20 PR16 NB38**	**7.5 bar (109 psi)**	**35 km/h (21.75 mph)**
	Mitas	**11.00-20 PR16 NB38**	**7.25 bar (105 psi)**	**35 km/h (21.75 mph)**
Single	Mitas	**600/40 - 22.5**	**6.25 bar (91 psi)**	**35 km/h (21.75 mph)**
	Michelin	**18 R22.5 XF**	**7.5 bar (109 psi)**	**35 km/h (21.75 mph)**
	Alliance	**620/40 - 22.5**	**7.0 bar (102 psi)**	**35 km/h (21.75 mph)**

Brakes

Service brake

Wet, actives on all wheels.

Parking brake

Mechanical brake at springs actuation, active on transmission.

Steering

	WE170B - WE190B
Turning circle diameter (with **10.00-20** twin tyres)	**15 m** (**49.21 ft**)

Power steering

	WE170B - WE190B
Model	OSPD 60/185 LS
Displacement	**60 - 185 cm³/rev** (**3.66 - 11.29 in³/rev**)
Maximum steering pressure	**190 - 200 bar** (**2755 - 2900 psi**)
Shock valve adjustment	**240 - 260 bar** (**3480 - 3770 psi**)

Electrical system

	WE170B - WE190B
Service voltage	**24 V**
Batteries	2 x **12 V**
Batteries rating	**100 A·h**
Alternator	**70 A**
Starter motor	**4 kW** (**5.44 Hp**)

Fuel system

	WE170B - WE190B
Tank capacity	**274 l** (**72.38 US gal**)

Engine

	WE170B	WE190B
Type	F4GE9684F*J602	F4GE9684E*J607
Displacement	**6.7 l** (**1.8 US gal**)	**6.7 l** (**1.8 US gal**)
Operation	Turbo charged, direct injection from rotary pump	Turbo charged, direct injection from rotary pump
Cylinders number	6	6
Cylinders arrangement	in line	in line
Valves per cylinders	2	2
Bore	**104 mm** (**4.09 in**)	**104 mm** (**4.09 in**)
Stroke	**132 mm** (**5.20 in**)	**132 mm** (**5.20 in**)
Power	**105 kW** (**142.76 Hp**) at **2000 RPM**	**118 kW** (**160.44 Hp**) at **2000 RPM**
Maximum torque	**575 N·m** (**424 lb ft**) at **1200 RPM**	**670 N·m** (**424 lb ft**) at **1200 RPM**
Rated rpm	**2000 RPM**	**2000 RPM**
Injection pump	24V, mechanical, rotary VE Bosch	24V, mechanical, rotary VE Bosch
Alternator - voltage - current	 **24 V** **70 A**	 **24 V** **70 A**
Starter motor - power - voltage	 **4 kW** (**5.4 Hp**) **24 V**	 **4 kW** (**5.4 Hp**) **24 V**
Compression ratio	16.5	16.5
Weight	**550 kg** (**1212.5 lb**)	**550 kg** (**1212.5 lb**)

WE170B – Monoboom Version – Weights

Dipper (**mm**)	Rear stabilizers (**kg**)	Rear blade (**kg**)	Front and rear stabilizers (**kg**)	Front blade and rear stabilizer (**kg**)
2200	17250	16950	18250	17850
2600	17300	17000	18300	17900
3100	17370	17070	18370	17970

***NOTE: 1 mm** (**0.039 in**) and **1 kg** (**2.205 lb**)*

Weight include bucket **480 kg** (**1058.2 lb**) and quick coupler **250 kg** (**551.2 lb**)

WE170B – Triple Articulation Version – Weights

Dipper (**mm**)	Rear stabilizers (**kg**)	Rear blade (**kg**)	Front and rear stabilizers (**kg**)	Front blade and rear stabilizer (**kg**)
2200	17400	17100	18400	18000
2600	17450	17150	18450	18050
3100	17520	17220	18520	18120

***NOTE: 1 mm** (**0.039 in**) and **1 kg** (**2.205 lb**)*

Weight include bucket **480 kg** (**1058.2 lb**) and quick coupler **250 kg** (**551.2 lb**)

WE190B – Monoboom Version (2550 mm (100.4 in) axle width) – Weights

Dipper (**mm**)	Rear stabilizers (**kg**)	Rear blade (**kg**)	Front and rear stabilizers (**kg**)	Front blade and rear stabilizers (**kg**)
2200	18550	18150	19650	19150
2600	18600	18200	19700	19200
3100	18700	18300	19800	19300

***NOTE: 1 mm** (**0.039 in**) and **1 kg** (**2.205 lb**)*

Weight include bucket **610 kg** (**1344.8 lb**) and quick coupler **250 kg** (**551.2 lb**)

WE190B – Monoboom Version (2750 mm (108.3 in) axle width) – Weights

Dipper (**mm**)	Rear stabilizers (**kg**)	Rear blade (**kg**)	Front and rear stabilizers (**kg**)	Front blade and rear stabilizers (**kg**)
2200	18650	18250	19750	19250
2600	18700	18300	19800	19300
3100	18800	18400	19900	19400

***NOTE: 1 mm** (**0.039 in**) and **1 kg** (**2.205 lb**)*

Weight include bucket **610 kg** (**1344.8 lb**) and quick coupler **250 kg** (**551.2 lb**)

WE190B – Triple Articulation Version (2550 mm (100.4 in) axle width) – Weights

Dipper (**mm**)	Rear stabilizers (**kg**)	Rear blade (**kg**)	Front and rear stabilizers (**kg**)	Front blade and rear stabilizer (**kg**)
2200	18950	18550	20000	19500
2600	19000	18600	20050	19550
3100	19100	18700	20150	19650

***NOTE: 1 mm** (**0.039 in**) and **1 kg** (**2.205 lb**)*

Weight include bucket **610 kg** (**1344.8 lb**) and quick coupler **250 kg** (**551.2 lb**)

WE190B –Triple Articulation Version (2750 mm (108.3 in) axle width) – Weights

Dipper (**mm**)	Rear stabilizers (**kg**)	Rear blade (**kg**)	Front and rear stabilizers (**kg**)	Front blade and rear stabilizer (**kg**)
2200	19050	18650	20100	19650
2600	19100	18700	20150	19700
3100	19200	18800	20250	19800

***NOTE: 1 mm** (**0.039 in**) and **1 kg** (**2.205 lb**)*

Weight include bucket **610 kg** (**1344.8 lb**) and quick coupler **250 kg** (**551.2 lb**)

Fluids and lubricants

Recommended fluids and applications	NH specification	International specification
Engine and gear box oil **NEW HOLLAND AMBRA MASTERGOLD™ HSP ENGINE OIL SAE 15W-40**	NH 330 H	API CI-4, ACEA E7
Swing gear, front steering and rear rigid axle body, front steering and rear rigid axle final drive oil **NEW HOLLAND AMBRA TRX 80W-140**	NH 600 TR	API GL 4
Engine coolant fluid **NEW HOLLAND AMBRA ACTIFULL™ OT EXTENDED LIFE COOLANT** (If a premixed coolant is not available, mix the concentrate with **50 %** of water)	MAT 3624	ASTM 6210, Fully Organic Technology (OAT)
Hydraulic system oil **NEW HOLLAND AMBRA HYDROSYSTEM 68 HV (1)**	NH 668 HV	DIN 51524 T2 MIL-H-24459
Ball bearing grease NEW HOLLAND AMBRA MG2	NH 585/GR	NLGI2
Attachment grease NEW HOLLAND AMBRA GR EXP	NH 587/GR	NLGI2
Windscreen washer **TUTELA PROFESSIONAL SC35**	-	-

NOTE: (1) *if the machine was filled with biodegradable hydraulic oil PANOLIN HLP SYNTH 46 (option), take note that this oil cannot be mixed with mineral hydraulic oil.*

Engine coolant

NEW HOLLAND CONSTRUCTION requires the use of a fully formulated Organic Acid Technology (OAT) based coolant. **NEW HOLLAND AMBRA ACTIFULL™ OT EXTENDED LIFE COOLANT** is the reference genuine product.

NOTICE: *Use of different coolant brands is not recommended.*

NOTICE: *Never add Supplemental Coolant Additives (SCA) when using* ***NEW HOLLAND AMBRA ACTIFULL™ OT EXTENDED LIFE COOLANT****.*

NOTICE: *Never mix* ***NEW HOLLAND AMBRA ACTIFULL™ OT EXTENDED LIFE COOLANT*** *coolant with conventional coolant. Mixing OAT based coolant with conventional coolant will reduce the effectiveness of OAT coolant.*

NOTICE: *If only conventional coolant is available, a complete changeover of the fluid into the cooling system shall be carried out. Refer to the procedure described in the Chapter 7 (Engine coolant replacement). The engine cooling system shall always be refilled with coolant solution made by mixture of antifreeze and distilled (deionized) water.*

NOTICE: *Never refill the cooling system with only antifreeze. Never refill the cooling system with only water. Using* ***NEW HOLLAND AMBRA ACTIFULL™ OT EXTENDED LIFE COOLANT****, a 50/50 mixture of antifreeze and distilled (deionized) water grants proper performance of the engine cooling system in the above mentioned operating temperature range of the machine.*

NEW HOLLAND AMBRA ACTIFULL™ OT EXTENDED LIFE COOLANT is available as:

- 50/50 PREMIXED coolant solution ready for usage.
- CONCENTRATE antifreeze to be mixed 50/50 with distilled (deionized) water.

NOTICE: *If operating in extreme winter climate, a coolant solution made by 60/40 antifreeze/distilled (deionized) water mixture shall be used in order to grant proper performance of the engine cooling system.*

NOTICE: *Never use coolant solution with more than 60 % of antifreeze. This affects the cooling capacity of the mixture. When the coolant solution is prepared starting from the CONCENTRATE product, the antifreeze concentration in the mixture of antifreeze and distilled (deionized) water can be determined with a refractometer designed to measure ethylene glycol content.*

If distilled (deionized) water is not available, use water for dilution with the following properties:

Property	Maximum limit
Total Solids	340 ppm
Total Hardness	340 ppm
Chloride (Cl)	340 ppm
Sulfate (SO4)	100 ppm
Acidity pH	5.5 to 9.0

NOTICE: *Never use hard water, sea water and softened sea water that has been conditioned with salt. The minerals and salts present in potable water can cause corrosion and deposits resulting in shortened engine life.*

Fuel

Use only Ultra-Low Sulphur Diesel (S10) that meets **EN 590** specifications.

Using other types of fuel may lead to stalled engine output or deterioration in fuel economy.

NOTICE: *The warranty shall be invalid if any serious defect is caused by usage of any other fuel. Using fuel other than recommended may cause damage to the fuel injection pump, injector, and other fuel supply system or the engine. NEW HOLLAND CONSTRUCTION may not be responsible to any of such damages.*

If the temperature drops below the fuel cloud point, output deficiency or engine start problems may occur due to wax crystals.

NOTICE: *If operating in severe winter climate, consult the fuel supplier or the NEW HOLLAND CONSTRUCTION dealer for specific diesel fuel according to the* ***EN 590*** *to be used.*

Conditions applicable to diesel fuel. The diesel fuel used must:

- be free from dust particles, even minute ones,
- have the proper viscosity,
- have a high cetane number,
- present great fluidity at low temperatures,
- have low sulphur content,
- have very little residual carbon.

It is recommended that the following safety information be considered in order to prevent damage to the engine fuel supply system.

- Some fuel suppliers mix old engine oil and diesel fuel.
- Makers of larger engine permit the use of this kind of fuel.
- However, do not use diesel fuel contaminated with engine oil in customer's engines.
- Not only will this fuel damage the engine, it may also have a negative impact on the exhaust gas purification function.
- Before using diesel fuel, confirm with the supplier whether the fuel complies with the above specifications.

NOTICE: *consult the supplier or the NEW HOLLAND CONSTRUCTION Dealer regarding appropriate use of fuel additives.*

NOTICE: *in order to prevent condensation during cold weather, fill the fuel tank to full after the completing the day's work.*

Fuel storage:

Long storage can lead to the accumulation of impurities and condensation in the fuel. Engine trouble can often be traced to the presence of water in the fuel. The storage tank must be placed outside and the temperature of the fuel should be kept as low as possible. Drain off water and impurities regularly.

Environment and ecology

Before carrying out any maintenance operation on this machine and before disposing of used fluids or lubricants, always think of the environment. Never throw oil or fluid on the ground and never place it in leaking receptacles.

Consult your local ecological recycling center or your NEW HOLLAND CONSTRUCTION Dealer to obtain information on the correct method of disposing of these lubricants.

The following are recommendations which may be of assistance:

- Become acquainted with and ensure that you understand the relative legislation applicable to your country.
- Where no legislation exists, obtain information from suppliers of oils, filters, batteries, fuels, antifreeze, cleaning agents, etc., with regard to their effect on man and nature and how to safely store, use and dispose of these substances.
- Local Environmental Agency will, in many cases, be able to help you as well.

Capacities

WE170B

Engine	**16 L** (**3.5 UK gal**)
Swing gear	**4.2 L** (**0.9 UK gal**)
Total cooling system	**22 L** (**4.8 UK gal**)
Fuel tank	**274 L** (**60.3 UK gal**)
Front steering axle body	**9.5 L** (**2.1 UK gal**)
Rear rigid axle body	**12 L** (**2.6 UK gal**)
Front steering and rear rigid axle final drive	2 x **2.5 L** (**0.5 UK gal**)
Gear box	**2.5 L** (**0.5 UK gal**)
Hydraulic oil tank	**87 L** (**19.1 UK gal**)
Total hydraulic oil system	**230 L** (**50.6 UK gal**)
Air conditioning	**770 - 870 g** (**27.2 - 30.7 oz**)
Windscreen washer tank	**1.5 L** (**0.3 UK gal**)
Ball bearing	**13.5 kg** (**29.8 lb**)

WE190B

Engine	**16 L** (**3.5 UK gal**)
Swing gear	**4.2 L** (**0.9 UK gal**)
Total cooling system	**22 L** (**4.8 UK gal**)
Fuel tank	**274 L** (**60.3 UK gal**)
Front steering axle body (**2.5 m** (**8.2 ft**))	**9.5 L** (**2.1 UK gal**)
Front steering axle body (**2.75 m** (**9.02 ft**))	**10.4 L** (**2.3 UK gal**)
Rear rigid axle body (**2.5 m** (**8.2 ft**))	**12 L** (**2.6 UK gal**)
Rear rigid axle body (**2.75 m** (**9.02 ft**))	**12.4 L** (**2.7 UK gal**)
Front steering and rear rigid axle final drive	2 x **2.5 L** (**0.5 UK gal**)
Gear box	**2.5 L** (**0.5 UK gal**)
Hydraulic oil tank	**87 L** (**19.1 UK gal**)
Total hydraulic oil system	**235 L** (**51.7 UK gal**)
Air conditioning	**770 - 870 g** (**27.2 - 30.7 oz**)
Windscreen washer tank	**1.5 L** (**0.3 UK gal**)
Ball bearing	**13.5 kg** (**29.8 lb**)

Hydraulic contamination

Contamination in the hydraulic system is a major cause of the malfunction of hydraulic components. Contamination is any foreign material in the hydraulic oil.

Contamination can enter the hydraulic system in several ways:

- When you drain the oil or disconnect any line
- When you disassemble a component
- From normal wear of the hydraulic components
- From damaged seals or worn seals
- From a damaged component in the hydraulic system

All hydraulic systems operate with some contamination. The design of the components in this hydraulic system permits efficient operation with a small amount of contamination. An increase in this amount of contamination can cause problems in the hydraulic system.

The following list includes some of these problems:

- Cylinder rod seals that leak
- Control valve spools that do not return to neutral
- Movement of control valve spools is difficult
- Hydraulic oil that becomes too hot
- Pump gears, housing, and other parts that wear rapidly
- Relief valves or check valves held open by dirt
- Quick failure of components that have been repaired
- Slow cycle times are slow. The machine does not have enough power.

If your machine has any of these problems, check the hydraulic oil for contamination.

There are two types of contamination: microscopic and visible.

Microscopic contamination occurs when very fine particles of foreign material are suspended in the hydraulic oil. These particles are too small to see or feel. Microscopic contamination can be found by identification of the following problems or by testing in a laboratory.

Examples of problems caused by microscopic contamination:

- Cylinder rod seals that leak
- Control valve spools that do not return to neutral
- The hydraulic system has a high operating temperature

Visible contamination is foreign material that can be found by sight, touch, or odor. Visible contamination can cause a sudden failure of components.

Examples of problems caused by visible contamination:

- Particles of metal or dirt in the oil
- Air in the oil
- Dark or thick oil
- Oil with an odor of burned oil
- Water in the oil

If you find contamination, use a portable filter to clean the hydraulic system.

Product identification

WE190B	LA

IDENTIFICATION DATA

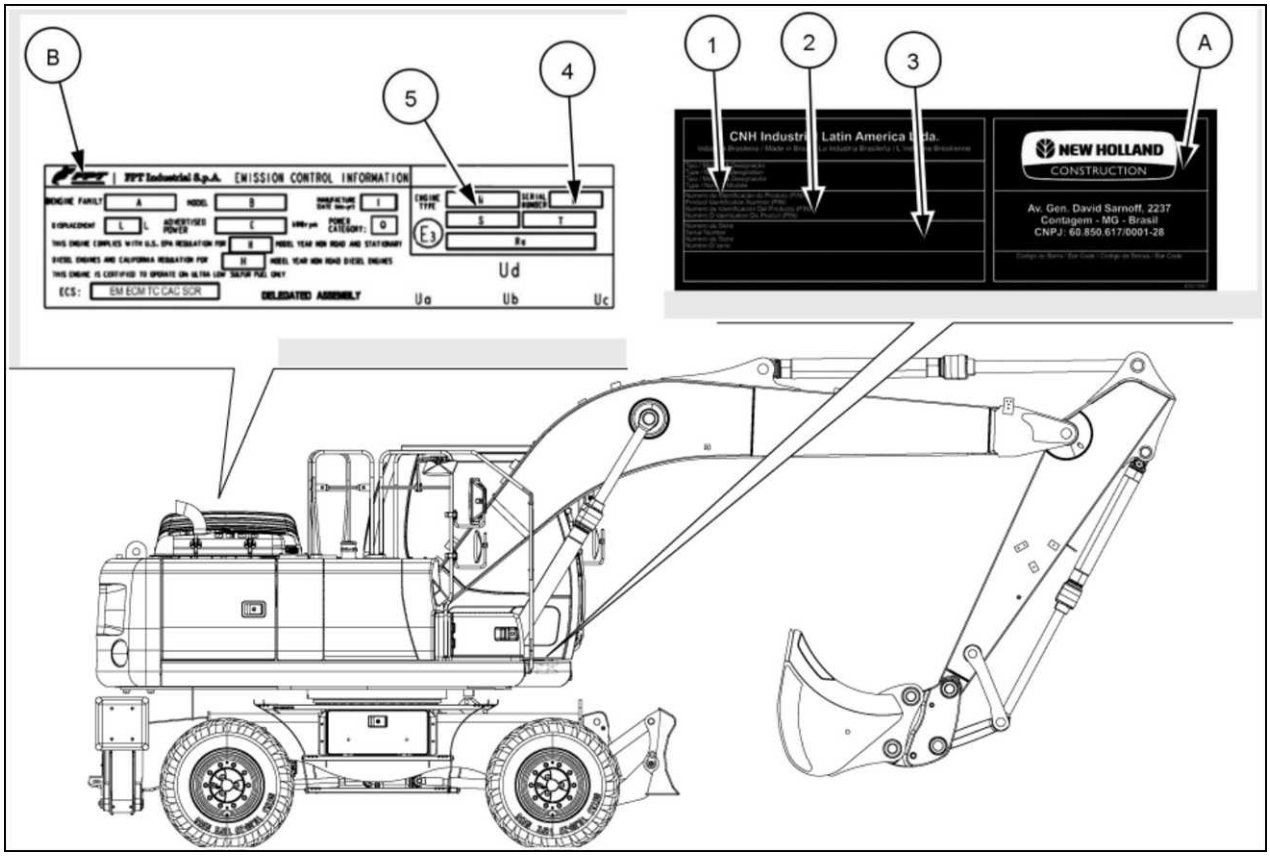

SMIL15WEX0005FB 1

Machine identification plate (A)

1. Model
2. Product identification number
3. Serial number

Engine identification plate (B)

4. Engine serial number
5. Engine emission stage approval number

FOPS (Falling Objects Protective Structure) plate

The FOPS plate is located on the protective grid.

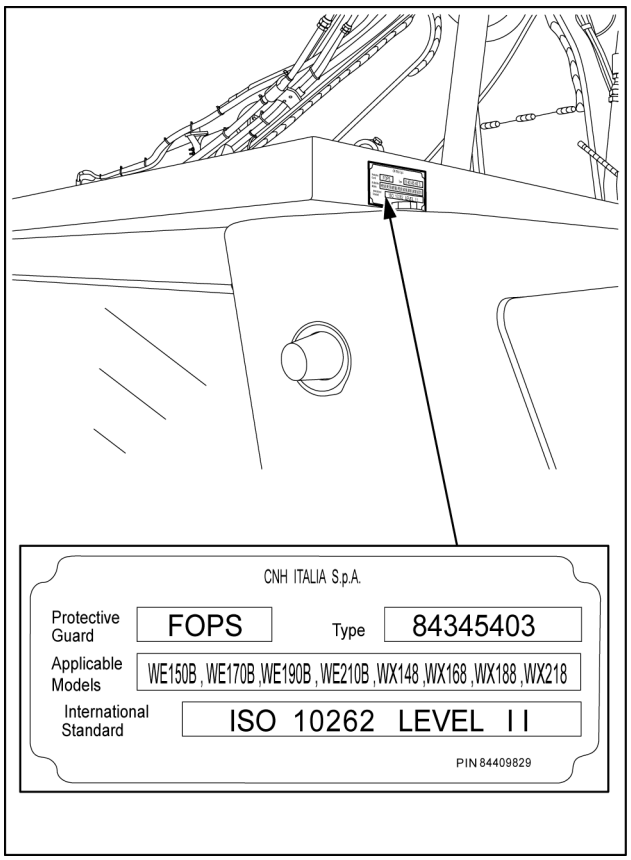

SMIL13WEX0323BA 2

ROPS (Roll-Over Protective Structure) plate

The ROPS plate is located in the cab near the cab interior lighting.

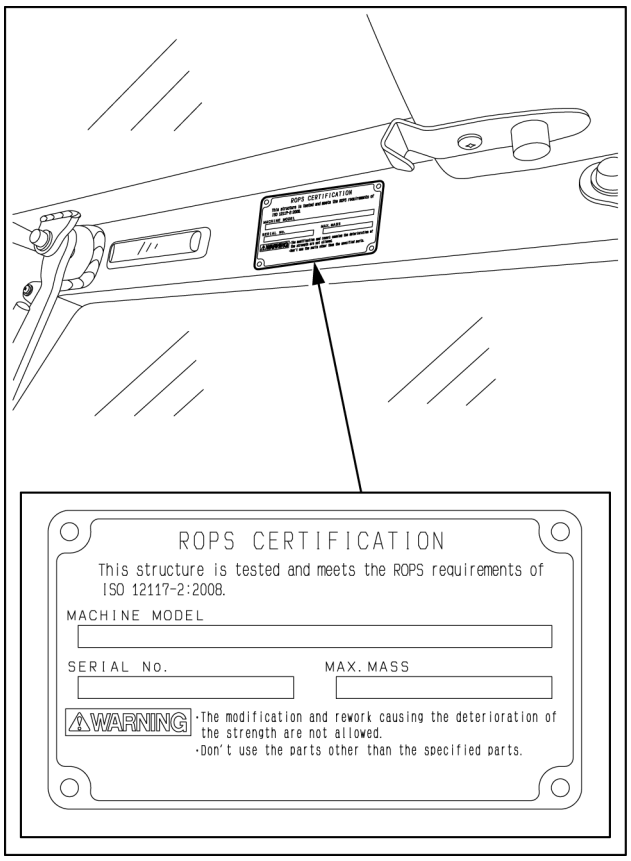

SMIL13WEX0324BA 3

Product identification

WE170B	LA

IDENTIFICATION DATA

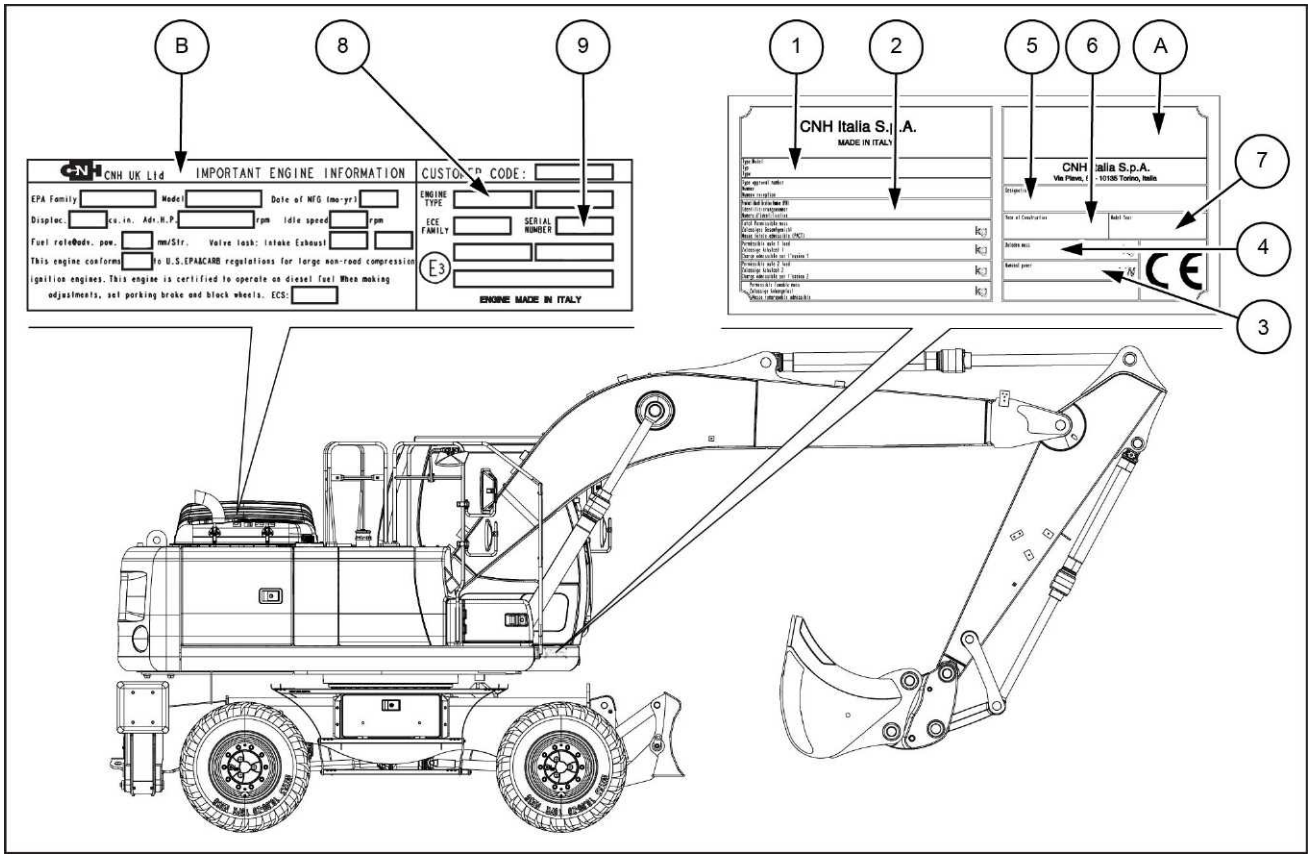

SMIL13WEX0322FB 1

Machine identification plate (A)

1. Model
2. Product identification number
3. Nominal power
4. Unladen mass
5. Category (Hydraulic Excavator)
6. Year of construction
7. Model year

Engine identification plate (B)

8. Engine type
9. Engine serial number

https://truckmanualshub.com/

This as a preview PDF file from **best-manuals.com**

Best Manuals

Download full PDF manual at **best-manuals.com**