https://truckmanualshub.com/

An Oshkosh Corporation Company

Operation and Safety Manual

Original Instructions, Keep this manual with the machine at all times.

Models

1930ES/2030ES/ 2630ES/ 2646ES/3246ES

ANSI

P/N - 3121165
May 1, 2013

Downloaded from www.Manualslib.com manuals search engine

https://truckmanualshub.com/

FOREWORD

This manual is a very important tool! Keep it with the machine at all times.

The purpose of this manual is to provide owners, users, operators, lessors, and lessees with the precautions and operating procedures essential for the safe and proper machine operation for its intended purpose.

Due to continuous product improvements, JLG Industries, Inc. reserves the right to make specification changes without prior notification. Contact JLG Industries, Inc. for updated information.

NOTICE

IT IS A GOOD PRACTICE TO AVOID PRESSURE-WASHING ELECTRICAL/ELECTRONIC COMPONENTS. SHOULD PRESSURE-WASHING BE UTILIZED TO WASH AREAS CONTAINING ELECTRICAL/ELECTRONIC COMPONENTS, JLG INDUSTRIES, INC. RECOMMENDS A MAXIMUM PRESSURE OF 750 PSI (52 BAR) AT A MINIMUM DISTANCE OF 12 INCHES (30.5 CM) AWAY FROM THESE COMPONENTS. IF ELECTRICAL/ELECTRONIC COMPONENTS ARE SPRAYED, SPRAYING MUST NOT BE DIRECT AND BE FOR BRIEF TIME PERIODS TO AVOID HEAVY SATURATION.

Downloaded from www.Manualslib.com manuals search engine

https://truckmanualshub.com/

SAFETY ALERT SYMBOLS AND SAFETY SIGNAL WORDS

This is the Safety Alert Symbol. It is used to alert you to the potential personal injury hazards. Obey all safety messages that follow this symbol to avoid possible injury or death

DANGER

INDICATES AN IMMINENTLY HAZARDOUS SITUATION. IF NOT AVOIDED, WILL RESULT IN SERIOUS INJURY OR DEATH. THIS DECAL WILL HAVE A RED BACKGROUND.

WARNING

INDICATES A POTENTIALITY HAZARDOUS SITUATION. IF NOT AVOIDED, COULD RESULT IN SERIOUS INJURY OR DEATH. THIS DECAL WILL HAVE AN ORANGE BACKGROUND.

CAUTION

INDICATES A POTENTIALITY HAZARDOUS SITUATION. IF NOT AVOIDED, MAY RESULT IN MINOR OR MODERATE INJURY. IT MAY ALSO ALERT AGAINST UNSAFE PRACTICES. THIS DECAL WILL HAVE A YELLOW BACKGROUND.

NOTICE

INDICATES INFORMATION OR A COMPANY POLICY THAT RELATES DIRECTLY OR INDIRECTLY TO THE SAFETY OF PERSONNEL OR PROTECTION OF PROPERTY.

Downloaded from www.Manualslib.com manuals search engine

https://truckmanualshub.com/

⚠ WARNING

THIS PRODUCT MUST COMPLY WITH ALL SAFETY RELATED BULLETINS. CONTACT JLG INDUSTRIES, INC. OR THE LOCAL AUTHORIZED JLG REPRESENTATIVE FOR INFORMATION REGARDING SAFETY-RELATED BULLETINS WHICH MAY HAVE BEEN ISSUED FOR THIS PRODUCT.

NOTICE

JLG INDUSTRIES, INC. SENDS SAFETY RELATED BULLETINS TO THE OWNER OF RECORD OF THIS MACHINE. CONTACT JLG INDUSTRIES, INC. TO ENSURE THAT THE CURRENT OWNER RECORDS ARE UPDATED AND ACCURATE.

NOTICE

JLG INDUSTRIES, INC. MUST BE NOTIFIED IMMEDIATELY IN ALL INSTANCES WHERE JLG PRODUCTS HAVE BEEN INVOLVED IN AN ACCIDENT INVOLVING BODILY INJURY OR DEATH OF PERSONNEL OR WHEN SUBSTANTIAL DAMAGE HAS OCCURRED TO PERSONAL PROPERTY OR THE JLG PRODUCT.

For:

- Accident Reporting
- Product Safety Publications
- Current Owner Updates
- Questions Regarding Product Safety
- Standards and Regulations Compliance Information
- Questions Regarding Special Product Applications
- Questions Regarding Product Modifications

Contact:

Product Safety and Reliability Department
JLG Industries, Inc.
13224 Fountainhead Plaza
Hagerstown, MD 21742

or Your Local JLG Office
(See addresses on manual rear cover)

In USA:

Toll Free: 877-JLG-SAFE (877-554-7233)

Outside USA:

Phone: 240-420-2661
E-mail: ProductSafety@JLG.com

Downloaded from www.Manualslib.com manuals search engine

https://truckmanualshub.com/

REVISION LOG

Original Issue. . . . . .March 31, 2003
Revised . . . . . .April 30, 2003
Revised . . . . . .May 21, 2003
Revised . . . . . .June 13, 2003
Revised . . . . . .June 25, 2003
Revised . . . . . .August 26, 2003
Revised . . . . . .December 3, 2003
Revised . . . . . .March 3, 2004
Revised . . . . . .September 17, 2004
Revised . . . . . .June 15, 2005
Revised . . . . . .September 12, 2005
Revised . . . . . .October 21, 2005
Revised . . . . . .February 16, 2006
Revised . . . . . .April 11, 2007
Revised . . . . . .February 19, 2010
Revised . . . . . .January 18, 2011
Revised . . . . . .July 13, 2011
Revised . . . . . .September 28, 2012
Revised . . . . . .May 1, 2013

Downloaded from www.Manualslib.com manuals search engine

https://truckmanualshub.com/

SECTION - PARAGRAPH, SUBJECT **PAGE**

SECTION - 1 - SAFETY PRECAUTIONS

1.1 GENERAL....1-1
1.2 PRE-OPERATION....1-1
Operator Training and Knowledge.... 1-1
Workplace Inspection.... 1-2
Machine Inspection.... 1-3
1.3 OPERATION....1-3
General.... 1-3
Trip and Fall Hazards.... 1-4
Electrocution Hazards.... 1-5
Tipping Hazards.... 1-7
Crushing and Collision Hazards.... 1-8
1.4 TOWING, LIFTING, AND HAULING....1-9
1.5 MAINTENANCE....1-10
General.... 1-10
Maintenance Hazards.... 1-10
Battery Hazards.... 1-11

SECTION - 2 - USER RESPONSIBILITIES, MACHINE PREPARATION & INSPECTION

2.1 PERSONNEL TRAINING....2-1
Operator Training.... 2-1
Training Supervision.... 2-1
Operator Responsibility.... 2-1
2.2 PREPARATION, INSPECTION, AND MAINTENANCE....2-2
Pre-Start Inspection.... 2-4
Function Check.... 2-5
General.... 2-8

SECTION - 3 - USER RESPONSIBILITIES AND MACHINE CONTROLS

3.1 GENERAL....3-1
3.2 PERSONNEL TRAINING....3-1
Operator Training.... 3-1
Training Supervision.... 3-2
Operator Responsibility.... 3-2
3.3 OPERATING CHARACTERISTICS AND LIMITATIONS....3-2
General.... 3-2
Placards.... 3-2
Capacities.... 3-2
Stability.... 3-3
3.4 CONTROLS AND INDICATORS....3-3
Ground Control Station.... 3-3
3.5 PLATFORM CONTROL STATION....3-5
3.6 MDI (MULTIFUNCTION DIGITAL INDICATOR)....3-9
MDI Description.... 3-10

Downloaded from www.Manualslib.com manuals search engine

https://truckmanualshub.com/

TABLE OF CONTENTS

SECTION - PARAGRAPH, SUBJECT **PAGE**

SECTION - 4 - MACHINE OPERATION

4.1 DESCRIPTION 4-1
4.2 OPERATION 4-1
Platform/Ground Select Switch 4-1
Emergency Stop Switch 4-1
4.3 RAISING AND LOWERING 4-2
Raising 4-2
Lowering 4-2
Arm Guards (If equipped) 4-3
Platform Extension 4-3
Fold-Down Rails 4-3
4.4 STEERING 4-4
4.5 DRIVING 4-4
Driving Forward 4-5
Driving in Reverse 4-5
4.6 PARKING AND STOWING 4-7
4.7 BATTERY CHARGING 4-8
Operation 4-8
Battery Charger Fault Codes 4-9
4.8 PLATFORM LOADING 4-10
4.9 SAFETY PROP 4-10
4.10 TIE DOWN/LIFT LUGS 4-11
4.11 LIFTING 4-11
4.12 TOWING 4-13
Remote Electric Brake Release 4-13

SECTION - PARAGRAPH, SUBJECT **PAGE**

Push Button Electric Brake Release 4-13
Mechanical Brake Release 4-14
Mechanical Brake Release 4-15
Mechanical Brake Release 4-16
4.13 DIAGNOSTIC TROUBLE CODES (DTC) 4-18
Introduction 4-18
4.14 DTC CHECK TABLES - CONTROL MODULE 4-19
0-0 Help Comments 4-19
2-1 Power-Up 4-21
2-2 Platform Controls 4-21
2-3 Ground Controls 4-23
2-5 Function Prevented 4-23
3-1 Line Contactor Open Circuit 4-25
3-2 Line Contactor Short Circuit 4-26
3-3 Ground Output Driver 4-26
4-2 Thermal Limit (SOA) 4-29
4-4 Battery Supply 4-29
6-6 Communication 4-30
6-7 Accessory 4-31
7-7 Electric Motor 4-31
8-1 Tilt Sensor 4-32
8-2 Platform Load Sense 4-33
9-9 Hardware 4-33

Downloaded from www.Manualslib.com manuals search engine

https://truckmanualshub.com/

SECTION - PARAGRAPH, SUBJECT **PAGE**

SECTION - 5 - EMERGENCY PROCEDURES

5.1 GENERAL....5-1
Emergency Stop Switch 5-1
Manual Descent.... 5-1
5.2 EMERGENCY OPERATION 5-2
Operator Unable to Control Machine.... 5-2
Platform Caught Overhead 5-3
Righting of Tipped Machine 5-3
Post-Incident Inspection.... 5-3
5.3 INCIDENT NOTIFICATION 5-3

SECTION - 6 - GENERAL SPECIFICATIONS AND OPERATOR MAINTENANCE

6.1 INTRODUCTION 6-1
6.2 OPERATING SPECIFICATIONS 6-2
Dimensional Data 6-6
Motors.... 6-7
Batteries 6-7
Capacities 6-8
Tires 6-8
6.3 CRITICAL STABILITY WEIGHTS....6-9
Lubrication 6-10
6.4 OPERATOR MAINTENANCE 6-11
Oil Check Procedure (1) 6-12
Lower (2) & Upper Slide Pads (3) 6-13

SECTION - PARAGRAPH, SUBJECT **PAGE**

6.5 TIRES AND WHEELS 6-15
Tire Wear and Damage.... 6-15
Wheel and Tire Replacement.... 6-15
Wheel Installation 6-15
6.6 SUPPLEMENTAL INFORMATION 6-16

SECTION - 7 - INSPECTION AND REPAIR LOG

Downloaded from www.Manualslib.com manuals search engine

https://truckmanualshub.com/

TABLE OF CONTENTS

SECTION - PARAGRAPH, SUBJECT **PAGE**

LIST OF FIGURES

2-1. Daily Walk-Around Inspection - Sht. 1 of 3 2-7
2-2. Daily Walk-Around Inspection - Sht. 2 of 3 2-8
2-3. Daily Walk-Around Inspection - Sht. 3 of 3 2-9
2-4. Switch Location - 1 of 2 2-10
2-5. Switch Location - 2 of 2 2-11
3-1. Ground Control Station 3-4
3-2. Battery Charger Status 3-4
3-3. Platform Control Station 3-5
3-4. MDI Indicator - Location and Description 3-9
3-4. Decal Location - 1930ES- Sht. 1 of 2 3-11
3-5. Decal Location - 1930ES - Sht. 2 of 2 3-12
3-6. Decal Location - 2030ES & 2630ES - Sht. 1 of 2 . 3-13
3-7. Decal Location - 2030ES & 2630ES - Sht. 2 of 2 . 3-14
3-8. Decal Location - 2646ES & 3246ES - Sht. 1 of 2 . 3-15
3-9. Decal Location - 2646ES & 3246ES - Sht. 2 of 2 . 3-16
4-1. Grade and Sideslope.....4-6
4-2. Securing Control Station to Platform 4-7
4-3. Lifting and Tie Down Diagram 4-12
4-4. Manual Disengage..... 4-14
4-5. Manual Disengage..... 4-15
4-6. Manual Disengage..... 4-16
4-7. Lifting and Tie Down Chart..... 4-17
6-1. Lubrication Diagram..... 6-11
6-2. Lower Slide Pad Channel..... 6-13
6-3. Upper Slide Pad Channel 6-14

LIST OF TABLES

1-1 Minimum Approach Distances (M.A.D.) 1-6
2-1 Inspection and Maintenance Table 2-3
2-2 Tilt vs. Height 2-6
2-3 High Drive Speed Cutout Height..... 2-6
3-1 Decal Location Legend 3-17
4-1 Battery Charger Flash Codes..... 4-9
6-1 Operating Specifications 6-2
6-2 Platform Capacities 6-5
6-3 Dimensions 6-6
6-4 Battery Specifications 6-7
6-5 Capacities..... 6-8
6-6 Tire Specifications..... 6-8
6-7 Critical Stability Weights..... 6-9
6-8 Hydraulic Oil Specifications.....6-10
6-9 Wheel Torque Chart.....6-16
7-1 Inspection and Repair Log..... 7-1

Downloaded from www.Manualslib.com manuals search engine

https://truckmanualshub.com/

SECTION 1. SAFETY PRECAUTIONS

1.1 GENERAL

This section outlines the necessary precautions for proper and safe machine usage and maintenance. In order to promote proper machine usage, it is mandatory that a daily routine is established based on the content of this manual. A maintenance program, using the information provided in this manual and the Service and Maintenance Manual, must also be established by a qualified person and must be followed to ensure that the machine is safe to operate.

The owner/user/operator/lessor/lessee of the machine should not accept operating responsibility until this manual has been read, training is accomplished, and operation of the machine has been completed under the supervision of an experienced and qualified operator.

These sections contain the responsibilities of the owner, user, operator, lessor, and lessee concerning safety, training, inspection, maintenance, application, and operation.If there are any questions with regard to safety, training, inspection, maintenance, application, and operation, please contact JLG Industries, Inc. ("JLG").

WARNING

FAILURE TO COMPLY WITH THE SAFETY PRECAUTIONS LISTED IN THIS MANUAL COULD RESULT IN MACHINE DAMAGE, PROPERTY DAMAGE, PERSONAL INJURY OR DEATH.

Downloaded from www.Manualslib.com manuals search engine

https://truckmanualshub.com/

1.2 PRE-OPERATION

Operator Training and Knowledge

- The Operators and Safety Manual must be read in its entirety before operating the machine. For clarification, questions, or additional information regarding any portions of this manual, contact JLG Industries, Inc.

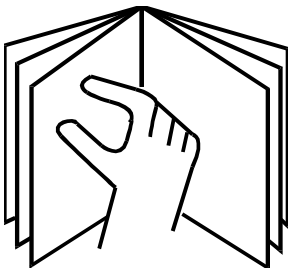

- An operator must not accept operating responsibilities until adequate training has been given by competent and authorized persons.
- Allow only those authorized and qualified personnel to operate the machine who have demonstrated that they understand the safe and proper operation and maintenance of the unit.
- Read, understand, and obey all DANGERS, WARNINGS, CAUTIONS, and operating instructions on the machine and in this manual.
- Ensure that the machine is to be used in a manner which is within the scope of its intended application as determined by JLG.
- All operating personnel must be familiar with the emergency controls and emergency operation of the machine as specified in this manual.
- Read, understand, and obey all applicable employer, local, and governmental regulations as they pertain to your utilization and application of the machine.

Workplace Inspection

- Precautions to avoid all hazards in the work area must be taken by the user before operation of the machine.
- Do not operate or raise the platform from a position on trucks, trailers, railway cars, floating vessels, scaffolds or other equipment unless the application is approved in writing by JLG.
- Before operation, check work area for overhead hazards such as electric lines, bridge cranes, and other potential overhead obstructions.
- Check floor surfaces for holes, bumps, drop-offs, obstructions, debris, concealed holes, and other potential hazards.

Downloaded from www.Manualslib.com manuals search engine

https://truckmanualshub.com/

- Check the work area for hazardous locations. Do not operate the machine in hazardous environments unless approved for that purpose by JLG.
- Ensure that the ground conditions are adequate to support the maximum tire load indicated on the tire load decals located on the chassis adjacent to each wheel.
- Do not operate the machine when wind conditions exceed 28 mph (12.5 m/s).
- This machine can be operated in nominal ambient temperatures of 0°F to 104°F (-20°C to 40°C). Consult JLG to optimize operation outside of this temperature range.

Machine Inspection

- Do not operate this machine until the inspections and functional checks have been performed as specified in Section 2 of this manual.
- Do not operate this machine until it has been serviced and maintained according to the maintenance and inspection requirements as specified in the machine's Service and Maintenance Manual.
- Ensure all safety devices are operating properly. Modification of these devices is a safety violation.

⚠ WARNING

MODIFICATION OR ALTERATION OF AN AERIAL WORK PLATFORM SHALL BE MADE ONLY WITH PRIOR WRITTEN PERMISSION FROM THE MANUFACTURER.

- Do not operate any machine on which the safety or instruction placards or decals are missing or illegible.
- Check the machine for modifications to original components. Ensure that any modifications have been approved by JLG.
- Avoid accumulation of debris on platform deck. Keep mud, oil, grease, and other slippery substances from footwear and platform deck.

1.3 OPERATION

General

- Do not use the machine for any purpose other than positioning personnel, their tools, and equipment.
- Before operation, the user must be familiar with the machine capabilities and operating characteristics of all functions.
- Never operate a malfunctioning machine. If a malfunction occurs, shut down the machine. Remove the unit from service and notify the proper authorities.

Downloaded from www.Manualslib.com manuals search engine

https://truckmanualshub.com/

- Do not remove, modify, or disable any safety devices.
- Never slam a control switch or lever through neutral to an opposite direction. Always return switch to neutral and stop before moving the switch to the next function. Operate controls with slow and even pressure.
- Do not allow personnel to tamper with or operate the machine from the ground with personnel in the platform, except in an emergency.
- Do not carry materials directly on platform railing unless approved by JLG.
- When two or more persons are in the platform, the operator shall be responsible for all machine operations.
- Always ensure that power tools are properly stowed and never left hanging by their cord from the platform work area.
- Do not assist a stuck or disabled machine by pushing or pulling except by pulling at the chassis tie-down lugs.
- Stow scissor arm assembly and shut off all power before leaving machine.

Electrocution Hazards

- This machine is not insulated and does not provide protection from contact or proximity to electrical current.

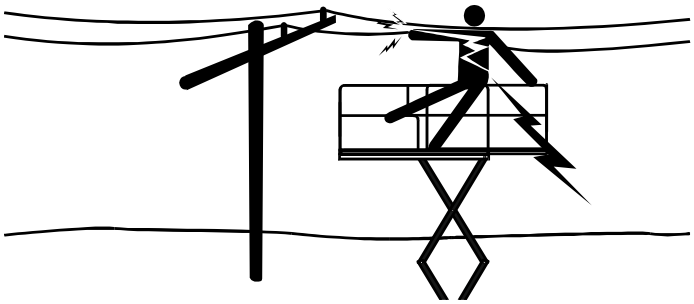

- Maintain safe clearance from electrical lines, apparatus, or any energized (exposed or insulated) parts in accordance with the Minimum Approach Distance (M.A.D.) as specified in Table 1-1 on page 1-5
- Allow for machine movement and electrical line swaying.
- Maintain a clearance of at least 10 ft (3 m) between any part of the machine and its occupants, their tools, and their equipment from any electrical line or apparatus carrying up to 50,000 volts. One foot additional clearance is required for every additional 30,000 volts or less.

Downloaded from www.Manualslib.com manuals search engine

https://truckmanualshub.com/

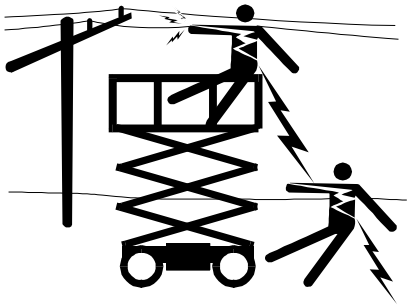

Table 1-1.Minimum Approach Distances (M.A.D.)

Voltage Range (Phase to Phase)	MINIMUM APPROACH DISTANCE in Feet (Meters)
0 to 50KV	10 (3)
Over 50 KV to 200 KV	15 (5)
Over 200 KV to 350 KV	20 (6)
Over 350 KV to 500 KV	25 (8)
Over 500 KV to 750 KV	35 (11)
Over 750 KV to 1000 KV	45 (14)
NOTE: This requirement shall apply except where employer, local or governmental regulations are more stringent.	

- The minimum approach distance may be reduced if insulating barriers are installed to prevent contact, and the barriers are rated for the voltage of the line being guarded. These barriers shall not be part of (or attached to) the machine. The minimum approach distance shall be reduced to a distance within the designed working dimensions of the insulating barrier. This determination shall be made by a qualified person in accordance with the employer, local, or governmental requirements for work practices near energized equipment.

DANGER

DO NOT MANEUVER MACHINE OR PERSONNEL INSIDE PROHIBITED ZONE (M.A.D.). ASSUME ALL ELECTRICAL PARTS AND WIRING ARE ENERGIZED UNLESS KNOWN OTHERWISE.

Downloaded from www.Manualslib.com manuals search engine

https://truckmanualshub.com/

Trip and Fall Hazards

- JLG Industries, Inc. recommends that all persons in the platform wear a full body harness with a lanyard attached to an authorized lanyard anchorage point while operating this machine. For further information regarding fall protection requirements on JLG products, contact JLG Industries, Inc.

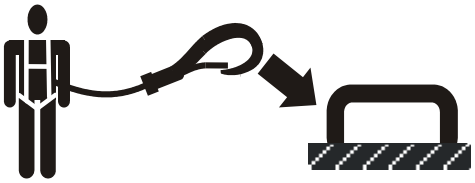

- Prior to operation, ensure all gates and rails are fastened and secured in their proper position. Identify the designated lanyard anchorage point(s) at the platform and securely attach the lanyard. Attach only one (1) lanyard per lanyard anchorage point.
- Keep both feet firmly positioned on the platform floor at all times. Never position ladders, boxes, steps, planks, or similar items on unit to provide additional reach for any purpose.
- Never use the scissor arm assembly to gain access to or leave the platform.

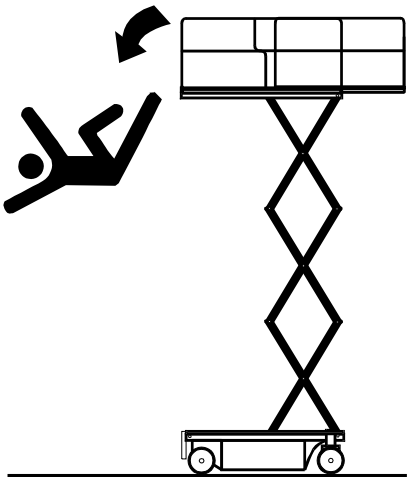

- Use extreme caution when entering or leaving platform. Ensure that the scissor arm assembly is fully lowered. Face the machine when entering or leaving the platform. Always maintain “three point contact” with the machine, using two hands and one foot or two feet and one hand at all times during entry and exit.
- Keep oil, mud, and slippery substances cleaned from footwear and the platform floor.

Downloaded from www.Manualslib.com manuals search engine

https://truckmanualshub.com/

Tipping Hazards

- Ensure that the ground conditions are adequate to support the maximum tire load indicated on the tire load decals located on the chassis adjacent to each wheel. Do not travel on unsupported surfaces.
- The user should be familiar with the driving surface before driving. Do not exceed the allowable sideslope and grade while driving.

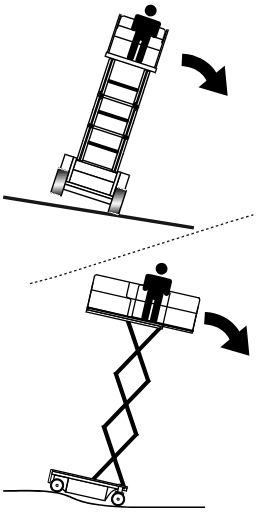

- Do not elevate platform or drive with platform elevated while on or near a sloping, uneven, or soft surface. Ensure machine is positioned on a firm, level and smooth surface before elevating platform or driving with the platform in the elevated position.
- Before driving on floors, bridges, trucks, and other surfaces, check allowable capacity of the surfaces.
- Never exceed the maximum work load as specified on the platform. Keep all loads within the confines of the platform, unless authorized by JLG.
- Keep the chassis of the machine a minimum of 0.6 m (2 ft) from holes, bumps, drop-offs, obstructions, debris, concealed holes, and other potential hazards at the ground level.
- Never attempt to use the machine as a crane. Do not tie-off machine to any adjacent structure. Never attach wire, cable, or any similar items to platform.
- Do not cover the platform sides or carry large surface-area items in the platform when operating outdoors. The addition of such items increases the exposed wind area of the machine.
- Do not increase the platform size with unauthorized deck extensions or attachments.

Downloaded from www.Manualslib.com manuals search engine

https://truckmanualshub.com/

- If scissor arm assembly or platform is caught so that one or more wheels are off the ground, all persons must be removed before attempting to free the machine. Use cranes, forklift trucks, or other appropriate equipment to stabilize machine and remove personnel.

Crushing and Collision Hazards

- Approved head gear must be worn by all operating and ground personnel.
- Keep hands and limbs out of the scissor arm assembly during operation.
- Watch for obstructions around machine and overhead when driving. Check clearances above, on sides, and bottom of platform when lifting or lowering platform.

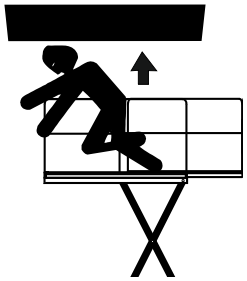

- During operation, keep all body parts inside platform railing.
- Always post a lookout when driving in areas where vision is obstructed.
- Keep non-operating personnel at least 1.8 m (6 ft) away from machine during all driving operations.
- Under all travel conditions, the operator must limit travel speed according to conditions of ground surface, congestion, visibility, slope, location of personnel, and other factors causing hazards of collision or injury to personnel.
- Be aware of stopping distances in all drive speeds. When driving in high speed, switch to low speed before stopping. Travel grades in low speed only.
- Do not use high speed drive in restricted or close quarters or when driving in reverse.
- Exercise extreme caution at all times to prevent obstacles from striking or interfering with operating controls and persons in the platform.
- Ensure that operators of other overhead and floor level machines are aware of the aerial work platform's presence. Disconnect power to overhead cranes. Barricade floor area if necessary.
- Avoid operating over ground personnel. Warn personnel not to work, stand, or walk under a raised platform. Position barricades on floor as necessary.

Downloaded from www.Manualslib.com manuals search engine

https://truckmanualshub.com/

1.4 TOWING, LIFTING, AND HAULING

- Never allow personnel in platform while towing, lifting, or hauling.
- This machine should not be towed, except in the event of emergency, malfunction, power failure, or loading/unloading. Refer to emergency towing procedures.
- Ensure platform is fully retracted and completely empty of tools prior to towing, lifting or hauling.
- When lifting machine with a forklift, position forks only at designated areas of the machine. Lift with a forklift of adequate capacity.
- Refer to Section 4 for lifting information.

1.5 MAINTENANCE

General

This section contains general safety precautions which must be observed during maintenance of this machine. Additional precautions to be observed during machine maintenance are inserted at the appropriate points in this manual and in the Service and Maintenance Manual. It is of utmost importance that maintenance personnel pay strict attention to these precautions to avoid possible injury to personnel or damage to the machine or property. A maintenance program must be established by a qualified person and must be followed to ensure that the machine is safe.

Maintenance Hazards

- Shut off power to all controls and ensure that all operating systems are secured from inadvertent motion prior to performing any adjustments or repairs.
- Never work under an elevated platform until it has been fully lowered to the full down position, if possible, or otherwise supported and restrained from movement with appropriate safety props, blocking, or overhead supports.
- Always relieve hydraulic pressure from all hydraulic circuits before loosening or removing hydraulic components.
- Always disconnect batteries when servicing electrical components or when performing welding on the machine.

Downloaded from www.Manualslib.com manuals search engine

https://truckmanualshub.com/

- Shut down the engine (if equipped) while fuel tanks are being filled.
- Ensure replacement parts or components are identical or equivalent to original parts or components.
- Never attempt to move heavy parts without the aid of a mechanical device. Do not allow heavy objects to rest in an unstable position. Ensure adequate support is provided when raising components of the machine.
- Remove all rings, watches, and jewelry when performing any maintenance. Do not wear loose fitting clothing or long hair unrestrained which may become caught or entangled in equipment.
- Use only clean approved non-flammable cleaning solvents.
- Never alter, remove, or substitute any items such as counterweights, tires, batteries, platforms or other items that may reduce or affect the overall weight or stability of the machine.
- Reference the Service and Maintenance Manual for the weights of critical stability items.

WARNING

MODIFICATION OR ALTERATION OF AN AERIAL WORK PLATFORM SHALL BE MADE ONLY WITH PRIOR WRITTEN PERMISSION FROM THE MANUFACTURER.

Battery Hazards

- Always disconnect batteries when servicing electrical components or when performing welding on the machine.
- Do not allow smoking, open flame, or sparks near battery during charging or servicing.
- Do not contact tools or other metal objects across the battery terminals.
- Always wear hand, eye, and face protection when servicing batteries. Ensure that battery acid does not come in contact with skin or clothing.

WARNING

BATTERY FLUID IS HIGHLY CORROSIVE. AVOID CONTACT WITH SKIN AND CLOTHING AT ALL TIMES. IMMEDIATELY RINSE ANY CONTACTED AREA WITH CLEAN WATER AND SEEK MEDICAL ATTENTION.

- Charge batteries only in a well ventilated area.
- Avoid overfilling the battery fluid level. Add distilled water to batteries only after the batteries are fully charged.

Downloaded from www.Manualslib.com manuals search engine

https://truckmanualshub.com/

SECTION 2. USER RESPONSIBILITIES, MACHINE PREPARATION & INSPECTION

2.1 PERSONNEL TRAINING

The aerial platform is a personnel handling device; so it is necessary that it be operated and maintained only by trained personnel.

Persons under the influence of drugs or alcohol or who are subject to seizures, dizziness or loss of physical control must not operate this machine.

Operator Training

Operator training must cover:

1. Use and limitations of the controls in the platform and at the ground, emergency controls and safety systems.
2. Control labels, instructions, and warnings on the machine.
3. Rules of the employer and government regulations.
4. Use of approved fall protection device.
5. Enough knowledge of the mechanical operation of the machine to recognize a malfunction or potential malfunction.
6. The safest means to operate the machine where overhead obstructions, other moving equipment, and obstacles, depressions, holes, drop-offs.
7. Means to avoid the hazards of unprotected electrical conductors.
8. Specific job requirements or machine application.

Training Supervision

Training must be done under the supervision of a qualified person in an open area free of obstructions until the trainee has developed the ability to safely control and operate the machine.

Operator Responsibility

The operator must be instructed that he/she has the responsibility and authority to shut down the machine in case of a malfunction or other unsafe condition of either the machine or the job site.

Downloaded from www.Manualslib.com manuals search engine

https://truckmanualshub.com/

2.2 PREPARATION, INSPECTION, AND MAINTENANCE

The table below covers the periodic machine inspections and maintenance recommended by JLG Industries, Inc. Consult local regulations for further requirements for aerial work platforms. The frequency of inspections and maintenance must be increased as necessary when the machine is used in a harsh or hostile environment, if the machine is used with increased frequency, or if the machine is used in a severe manner.

Table 2-1. Inspection and Maintenance Table

Type	Frequency	Primary Responsibility	Service Qualification	Reference
Pre-Start Inspection	Before using each day; or whenever there's an Operator change.	User or Operator	User or Operator	Operation and Safety Manual
Pre-Delivery Inspection *(see note below)*	Before each sale, lease, or rental delivery.	Owner, Dealer, or User	Qualified JLG Mechanic	Service and Maintenance Manual and applicable JLG inspection form
Frequent Inspection	In service for 3 months or 150 hours, whichever comes first; or Out of service for a period of more than 3 months; or Purchased used.	Owner, Dealer, or User	Qualified JLG Mechanic	Service and Maintenance Manual and applicable JLG inspection form
Annual Machine Inspection *(see note below)*	Annually, no later than 13 months from the date of prior inspection.	Owner, Dealer, or User	Factory Trained Service Technician (Recommended)	Service and Maintenance Manual and applicable JLG inspection form
Preventative Maintenance	At intervals as specified in the Service and Maintenance Manual.	Owner, Dealer, or User	Qualified JLG Mechanic	Service and Maintenance Manual

NOTE: *Inspection forms are available from JLG. Use the Service and Maintenance Manual to perform inspections.*

NOTICE

JLG INDUSTRIES, INC. RECOGNIZES A FACTORY-TRAINED SERVICE TECHNICIAN AS A PERSON WHO HAS SUCCESSFULLY COMPLETED THE JLG SERVICE TRAINING SCHOOL FOR THE SPECIFIC JLG PRODUCT MODEL.

Downloaded from www.Manualslib.com manuals search engine

https://truckmanualshub.com/

Pre-Start Inspection

The Pre-Start Inspection should include each of the following:

1. **Cleanliness –** Check all surfaces for leakage (oil, fuel, or battery fluid) or foreign objects. Report any leakage to the proper maintenance personnel.
2. **Structure** - Inspect the machine structure for dents, damage, weld or parent metal cracks or other discrepancies.

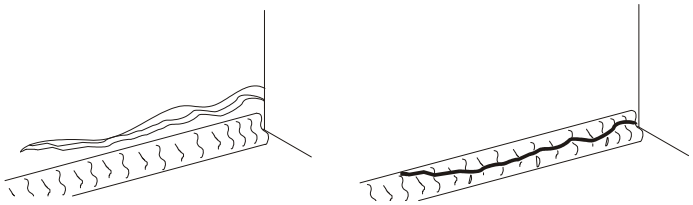

3. **Decals and Placards** – Check all for cleanliness and legibility. Make sure none of the decals and placards are missing. Make sure all illegible decals and placards are cleaned or replaced.
4. **Operation and Safety Manuals** – Make sure a copy of the Operator and Safety Manual, AEM Safety Manual (ANSI markets only), and ANSI Manual of Responsibilities (ANSI markets only) is enclosed in the weather resistant storage container.
5. **"Walk-Around" Inspection** – Refer to Figure 2-1
6. **Battery –** Charge as required.
7. **Fuel** (Combustion Engine Powered Machines) – Add the proper fuel as necessary.
8. **Engine Oil Supply** (If equipped) - Ensure the engine oil level is at the full mark on the dipstick and the filler cap is secure.
9. **Fluid Levels** – Check the hydraulic oil level. Ensure hydraulic oil is added as required.
10. **Accessories/Attachments** - Reference the Operator and Safety Manual of each attachment or accessory installed upon the machine for specific inspection, operation, and maintenance instructions.
11. **Function Check** – Once the "Walk-Around" Inspection is complete, perform a functional check of all systems in an area free of overhead and ground level obstructions. Refer to Section 4 for more specific operating instructions.

Downloaded from www.Manualslib.com manuals search engine

https://truckmanualshub.com/

Function Check

Perform the Function Check as follows:

1. From the ground control console with no load in the platform:
   - **a.** Check that all guards protecting the function control switches and controllers are in place.
   - **b.** Operate all functions and check all limiting and cutout switches.
   - **c.** Check manual descent.
   - **d.** Ensure that all machine functions are disabled when the Emergency Stop Button is depressed.
2. From the platform control console:
   - **a.** Ensure that the control console is firmly secured in the proper location.
   - **b.** Check that all guards protecting the function control switches and controllers are in place.
   - **c.** Operate all functions and check all limiting and cutout switches.
   - **d.** Ensure that all machine functions are disabled when the Emergency Stop Button is depressed.
3. With the platform in the transport (stowed) position:
   - **a.** Drive the machine on a grade, not to exceed the rated gradeability, and stop to ensure the brakes hold.
   - **b.** Check the tilt indicator light to ensure proper operation. The light should be illuminated when tilted.

Downloaded from www.Manualslib.com manuals search engine

https://truckmanualshub.com/

Table 2-2. Tilt Activation vs. Height

Model	Tilt Setting (front to back)	Tilt Setting (side to side)	Maximum Deck Elevation	
	Degrees		Feet	Meters
1930ES	3	1.5	18.75 (Full)	5.7
		2	14	4.3
		2.5	11	3.4
		3	9	2.7
2030ES	3	1.5	20 (Full)	6
		2	15	4.5
		2.5	12	3.7
		3	10	3
2630ES	3	1.5	25.4 (Full)	7.7
		2	20	6
		2.5	16	4.9
		3	13	4
2646ES	3	2	26 (Full)	7.9
		2.5	22	6.7
		3	20	6
3246ES	3	2	31.75 (Full)	9.7
		2.5	22	6.7
		3	20	6

Table 2-3. High Drive Speed Cutout Height

Model	High Drive Speed Cutout Height	
1930ES	54 in.	1.4 m
2030ES	66 in.	1.7 m
2630ES	76 in.	1.9 m
2646ES	76 in.	1.9 m
3246ES	76 in.	1.9 m

Downloaded from www.Manualslib.com manuals search engine

https://truckmanualshub.com/

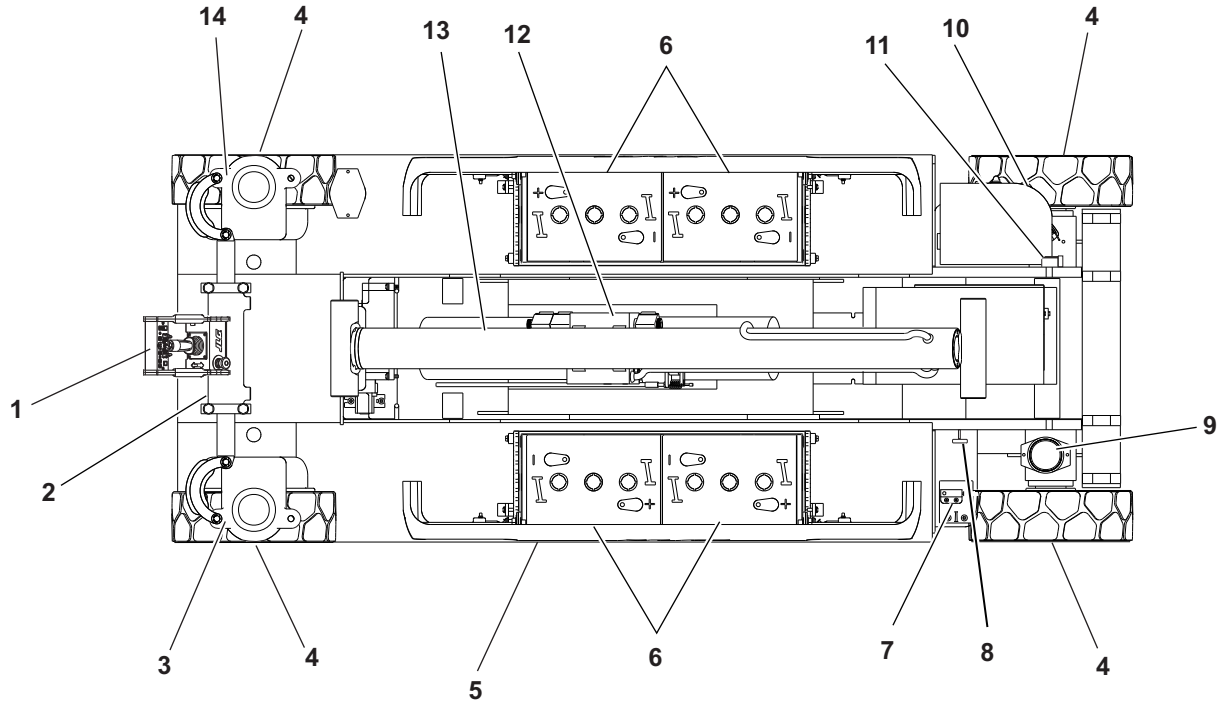

Figure 2-1. Daily Walk-Around Inspection - Sheet 1 of 2

Downloaded from www.Manualslib.com manuals search engine

https://truckmanualshub.com/

General

Begin the "Walk-Around Inspection" at Item 1, as noted on the diagram. Continue Left (counterclockwise viewed from top) checking each item in sequence for the conditions listed in the following checklist.

WARNING

TO AVOID POSSIBLE INJURY, BE SURE MACHINE POWER IS "OFF" DURING "WALK-AROUND INSPECTION".

NOTICE

DO NOT OVERLOOK VISUAL INSPECTION OF CHASSIS UNDERSIDE. CHECKING THIS AREA OFTEN RESULTS IN DISCOVERY OF CONDITIONS WHICH COULD CAUSE EXTENSIVE MACHINE DAMAGE.

NOTE: *On each item, make sure there are no loose or missing parts, that they are securely fastened, and that no visible damage exists in addition to any other criteria mentioned.*

1. Platform Control Console - Placard secure and legible, control lever and switches return to neutral, control lever lock and emergency stop switch function properly, manual in storage box.
2. Steer Cylinder - See Note
3. Spindle, Tie Rod, Drive Motor and Steer Linkage (left front) - See Note
4. Wheels and Tires - Properly secured, no missing lug nuts. Refer to Section 6, Tires and Wheels. Inspect wheels for damage and corrosion.
5. Pothole Protection System - See Note
6. Battery Compartment - Proper electrolyte level.
7. Proximity Switch - See Note
8. Manual Descent - See Note
9. Beacon - See Note
10. Ground Controls - Placard secure and legible, control switches return to neutral position, emergency stop switch functions properly. Control markings legible.
11. Rotary Angle Switch - See Note
12. Hydraulic Pump/Motor, Control Valve Installation - No unsupported wires or hoses; no damaged or broken wires - See Note
13. Lift Cylinder - See Note
14. Spindle, Tie Rod, Drive Motor and Steer Linkage (left front) - See Note
15. Sizzor Arms, Pivot Pins and Sliding Wear Pads (Not Shown) - See Note
16. Platform/Handrail Installation (Not Shown) - See Note

Figure 2-2. Daily Walk-Around Inspection - Sheet 2 of 2

Downloaded from www.Manualslib.com manuals search engine

https://truckmanualshub.com/

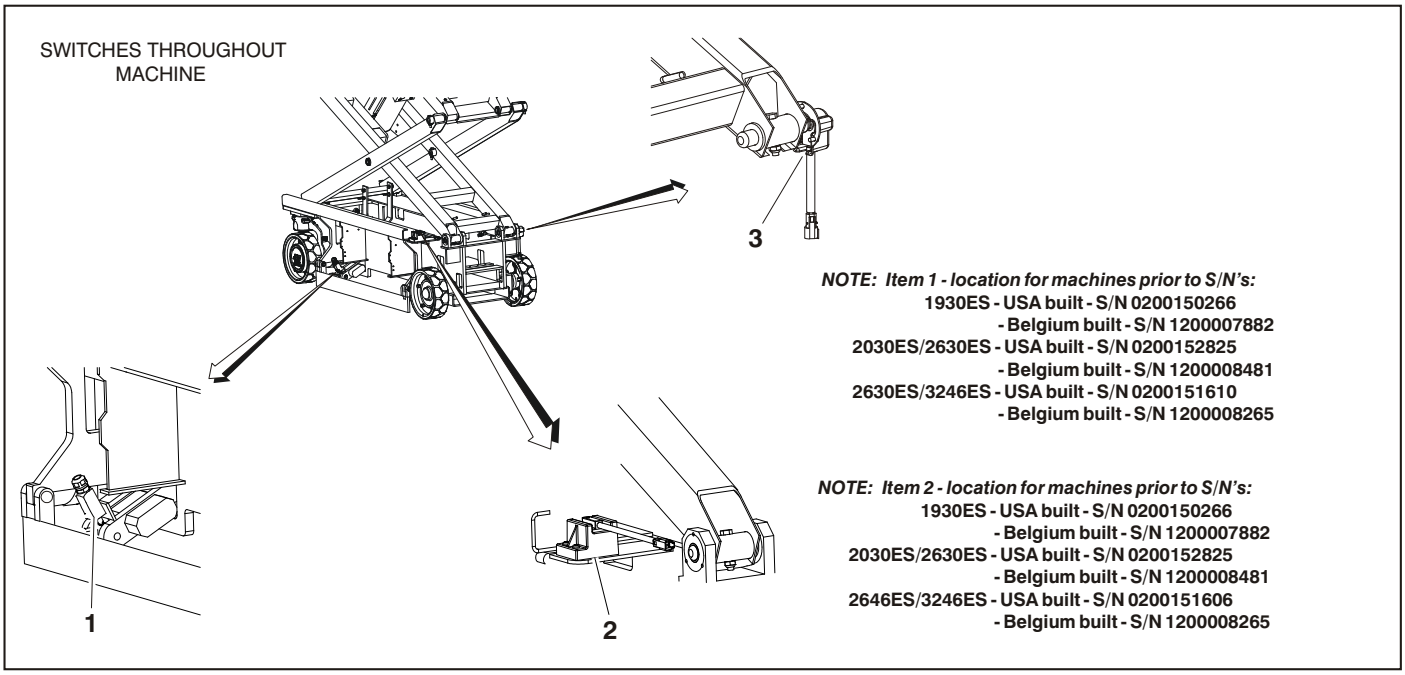

1. Pothole Switch - (Typical on opposite side of machine)

2. Proximity Switch

3. Rotary Angle Switch

Figure 2-3. Switch Location - 1 of 2

Downloaded from www.Manualslib.com manuals search engine

https://truckmanualshub.com/

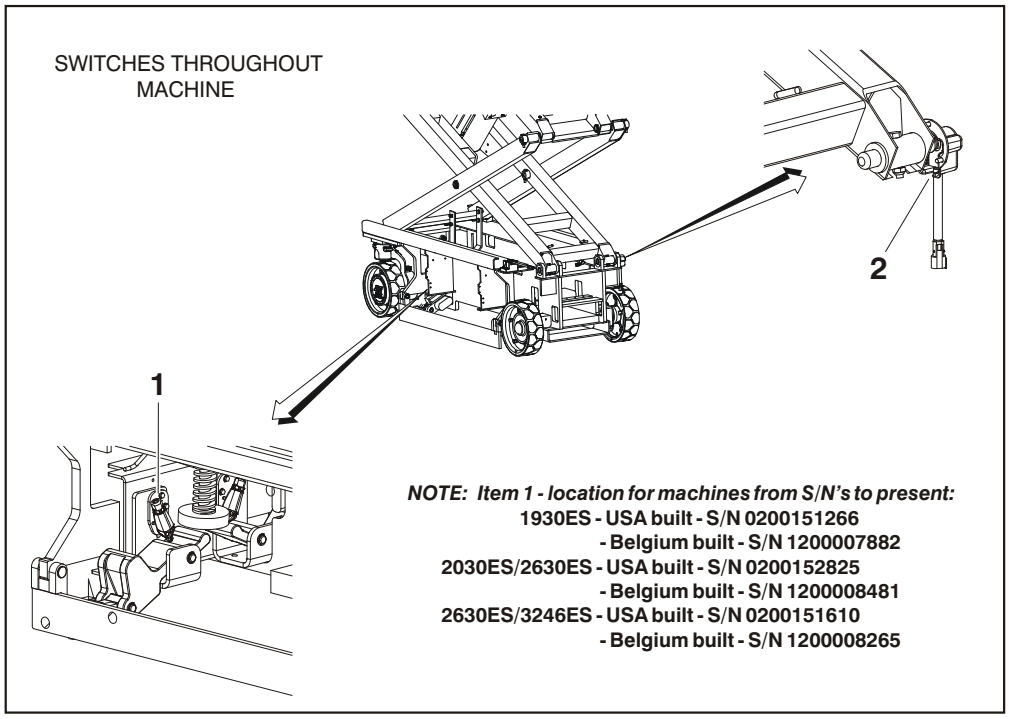

1. Pothole Switch (Typical on opposite side of machine)
2. Rotary Angle Switch

Figure 2-5. Switch Location - 2 of 2

Downloaded from www.Manualslib.com manuals search engine

https://truckmanualshub.com/

NOTES:

Downloaded from www.Manualslib.com manuals search engine

https://truckmanualshub.com/

SECTION 3. USER RESPONSIBILITIES AND MACHINE CONTROLS

3.1 GENERAL

NOTICE

SINCE THE MANUFACTURER HAS NO DIRECT CONTROL OVER MACHINE APPLICATION AND OPERATION, CONFORMANCE WITH GOOD SAFETY PRACTICES IN THESE AREAS IS THE RESPONSIBILITY OF THE USER AND HIS OPERATING PERSONNEL.

This section provides the necessary information needed to understand control functions. Included in this section are the operating characteristics and limitations, and functions and purposes of controls and indicators. It is important that the user read and understand the proper procedures before operating the machine. These procedures will aid in obtaining optimum service life and safe operation.

3.2 PERSONNEL TRAINING

The scissor lift is a personnel handling device; therefore, it is essential that it be operated and maintained only by authorized personnel who have demonstrated that they understand the proper use and maintenance of the machine. It is important that all personnel who are assigned to and responsible for the operation and maintenance of the machine undergo a thorough training program and check out period in order to become familiar with the characteristics prior to operating the machine.

Persons under the influence of drugs or alcohol or who are subject to seizures, dizziness or loss of physical control must not be permitted to operate the machine.

Operator Training

Operator training must include instruction in the following:

1. Use and limitations of the platform controls, ground controls, emergency controls and safety systems.
2. Knowledge and understanding of this manual and of the control markings, instructions and warnings on the machine itself.
3. Knowledge and understanding of all safety work rules of the employer and of Federal, State and Local Statutes, including training in the recognition and avoidance of potential hazards in the work place; with particular attention to the work to be performed.
4. Proper use of all required personnel safety equipment.
5. Sufficient knowledge of the mechanical operation of the machine to recognize a malfunction or potential malfunction.

Downloaded from www.Manualslib.com manuals search engine

https://truckmanualshub.com/

6. The safest means to operate near overhead obstructions, other moving equipment, obstacles, depressions, holes, drop-offs, etc. on the supporting surface.
7. Means to avoid the hazards of unprotected electrical conductors.
8. Any other requirements of a specific job or machine application.

Training Supervision

Training must be done under the supervision of a qualified operator or supervisor in an open area free of obstructions until the trainee has developed the ability to safely control a scissor lift in congested work locations.

Operator Responsibility

The operator must be instructed that he has the responsibility and authority to shut down the machine in case of a malfunction or other unsafe condition of either the machine or the job site and to request further information from his supervisor or JLG Distributor before proceeding.

NOTE: *Manufacturer or Dealer will provide qualified persons for training assistance with first unit(s) delivered and thereafter as requested by user or his personnel.*

3.3 OPERATING CHARACTERISTICS AND LIMITATIONS

General

A thorough knowledge of the operating characteristics and limitations of the machine is always the first requirement for any user, regardless of user's experience with similar types of equipment.

Placards

Important points to remember during operation are provided at the control stations by DANGER, WARNING, CAUTION, IMPORTANT and INSTRUCTION placards. This information is placed at various locations for the express purpose of alerting personnel of potential hazards constituted by the operating characteristics and load limitations of the machine. See foreword for definitions of the above placards.

Capacities

Raising platform above horizontal with or without any load in platform, is based on the following criteria:

1. Machine is positioned on a smooth, firm and level surface.
2. Load is within manufacturer's rated capacity.
3. All machine systems are functioning properly.

Downloaded from www.Manualslib.com manuals search engine

https://truckmanualshub.com/

Stability

This machine, as originally manufactured by JLG and operated within its rated capacity on a smooth, firm and level supporting surface, provides a stable aerial platform for all platform positions.

3.4 CONTROLS AND INDICATORS

Ground Control Station

WARNING

DO NOT OPERATE FROM GROUND CONTROL STATION WITH PERSONNEL IN THE PLATFORM EXCEPT IN AN EMERGENCY.
PERFORM AS MANY PRE-OPERATIONAL CHECKS AND INSPECTIONS FROM THE GROUND CONTROL STATION AS POSSIBLE.

NOTE: *When the machine is shut down for overnight parking or battery charging, the emergency stop and power select switches must be positioned to off to prevent draining the batteries.*

1. Platform/Ground Control Switch
   A three position, key-operated power select switch supplies operating power to the platform or ground controls, as selected. When positioned to platform, the switch provides power to the emergency stop switch at the platform controls. When positioned to ground, the switch provides power to the ground control. The ground control emergency stop switch provides power to the key switch. With the power select switch in the center off position, power is shut off to both platform and ground controls.
2. Platform Lift/Lower Switch - A three position, momentary contact Lift control switch provides raising and lowering of the platform when positioned to up or down.
3. Emergency Stop Switch - A two-position, red, mushroom-shaped emergency stop switch, when positioned to ON with the power selector switch positioned to ground, furnishes operating power to the ground control station. In addition, the switch can be used to turn off power to the function controls in the event of an emergency. Power is turned on by pulling the switch out (on), and is turned off by depressing switch.

Downloaded from www.Manualslib.com manuals search engine

https://truckmanualshub.com/

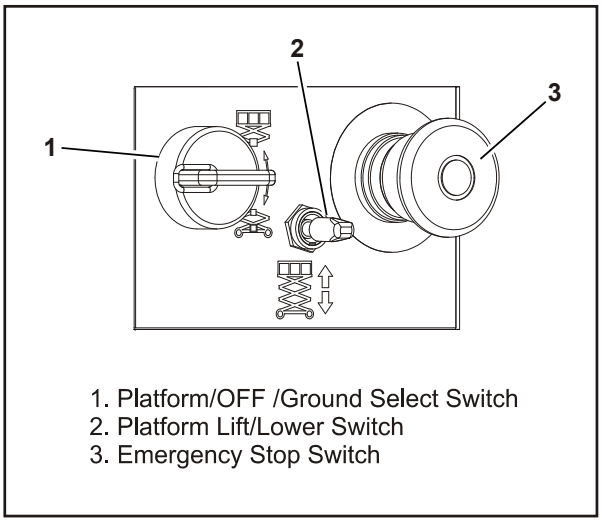

Figure 3-1. Ground Control Station

4. Battery Charger Status - This panel, located to the right of the ground control box, is designed to give the operator an accurate read on the status of the battery charger.

- **a.** Green = Charge complete
- **b.** Yellow = Charging in process
- **c.** Red = Charging abnormal

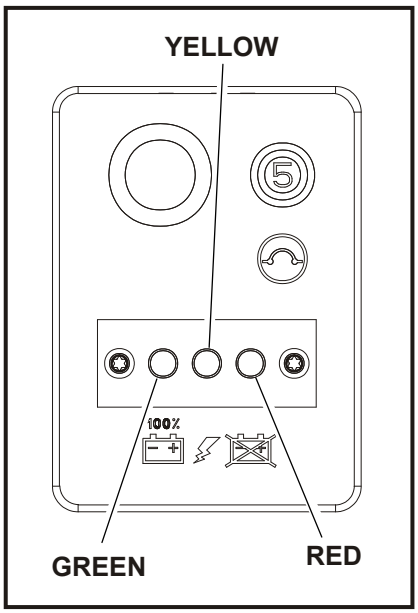

Figure 3-2. Battery Charger Status

Downloaded from www.Manualslib.com manuals search engine

https://truckmanualshub.com/

3.5 PLATFORM CONTROL STATION

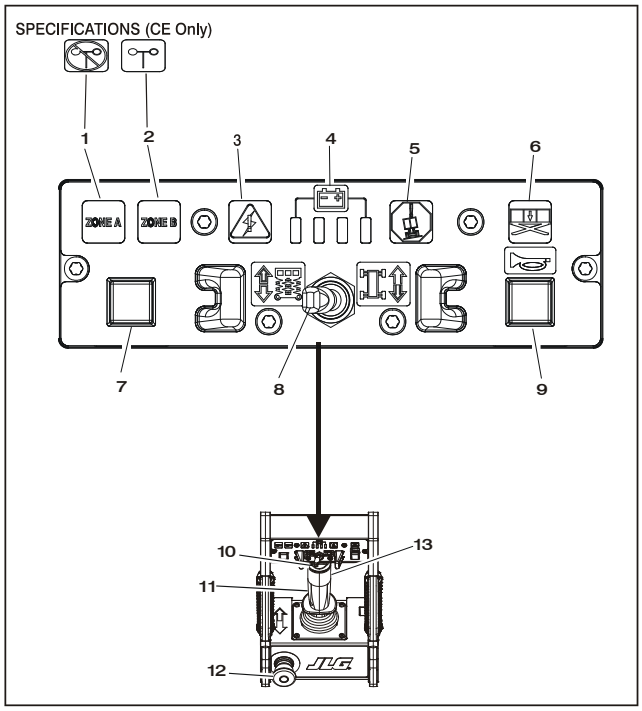

1. Indoor (CE) / Zone A Capacity (ANSI)*
2. Outdoor (CE) / Zone B Capacity (ANSI)
3. System Distress
4. Battery Discharge Indicator
5. Tilt Indicator
6. Overload Indicator
7. Capacity Select Switch
8. Lift/Drive Select Switch
9. Horn
10. Steer Switch
11. Controller
12. Emergency Stop Switch
13. Trigger Switch

NOTE: **There is no light equipped on a single capacity ANSI machine.*

Figure 3-3. Platform Control Station

Downloaded from www.Manualslib.com manuals search engine

https://truckmanualshub.com/

NOTE: *The platform control indicator panel uses different shaped symbols to alert the operator to different types of operational situations that could arise. The meaning of those symbols are explained below.*

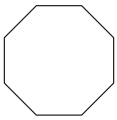

Indicates a potentially hazardous situation, which if not corrected, could result in serious injury or death. This indicator will be red.

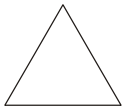

Indicates an abnormal operating condition, which if not corrected, may result in machine interruption or damage. This indicator will be yellow.

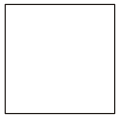

Indicates important information regarding the operating condition, i.e. procedures essential for safe operation. This indicator will be green with the exception of the capacity indicator which will be green or yellow depending upon platform position.

1. Indoor (CE) / Zone A Capacity (ANSI/AUS) - This indicator light will be illuminated when the Indoor (CE) or Zone A (ANSI/AUS) capacity is selected.
2. Outdoor (CE) / Zone B Capacity (ANSI/AUS) - This indicator light will be illuminated when the Outdoor (CE) or Zone B (ANSI/AUS) capacity is selected.
3. System Distress Indicator - This indicator will light up with a fault flash code that will determine where a problem, within the system, exists.
4. Battery Discharge Indicator (BDI) - This set of lights is designed to let the operator know the condition of the batteries.
5. Tilt Indicator Warning Light - A red warning light on the control panel that illuminates when the chassis is on a slope greater than what the machine is programmed for.
6. Overload Indicator (If Equipped) - Indicates the platform has been overloaded. An audible alarm will also signal when the platform is overloaded.

NOTE: *If the Overload Indicator is illuminated, all functions will be prevented from the platform controls. Using the ground controls or manual descent, fully lower the machine and reduce the weight in the platform so as to not exceed the rated workload indicated on the capacity decal.*

7. Capacity Select Switch - On model 2630ES/3246ES machines this switch is used to choose allowable capacity zone. On all CE machines, except the 2630ES, this switch is used to select either indoor or outdoor capacity zone.

Downloaded from www.Manualslib.com manuals search engine

https://truckmanualshub.com/

8. Lift/Drive Select - This toggle switch is used to select either drive or lift. After selecting a function, the controller must be moved in the proper direction in order to activate that function. The function must be selected with the joystick in the neutral position. Otherwise, the function select will not occur.
9. Horn - This push-button switch, when activated, permits the operator to warn jobsite personnel when the machine is operating in the area.
10. Steer Switch - The steer switch is a thumb operated switch located at the top of the control handle. Depressing the switch to the right will steer the wheels to the right. Depressing the switch to the left will steer the wheels to the left.
11. Controller - The control handle controls three functions: drive, lift, and steer. The drive and lift switch must be selected prior to moving the control handle. After selecting the drive function, moving the control handle forward will drive the machine forward and moving the control handle backwards will drive the machine backward. After selecting the lift function, moving the control handle backward will raise the platform and moving the control handle forward will lower the platform. The speed on all selected functions is proportionally controlled by the distance of travel of the hand controller. The thumb-operated steer switch on top of the hand controller activates the steer wheels in the direction activated (right or left).
12. Emergency Stop Switch - A two-position, red, mushroom-shaped emergency stop switch functions to provide power to the platform control station and also to turn off power to the platform function controls in the event of an emergency. With the power selector switch positioned to platform, power is turned on by pulling the switch out (on), and is turned off by pushing the switch in (off).
13. Trigger Switch - This switch is located on the front of the controller. The trigger switch acts as an enable and must be depressed when operating the drive, steer and lift functions. When released, the function being operated will stop.

⚠ CAUTION

IF THE TILT INDICATOR WARNING LIGHT OR HORN IS ON WHEN PLATFORM IS RAISED, LOWER PLATFORM COMPLETELY, THEN REPOSITION MACHINE SO THAT IT IS LEVEL BEFORE RAISING PLATFORM.

14. Tilt Alarm Warning Horn - The Tilt Alarm Warning Horn is activated when the chassis is on a slope greater than what the machine is programmed for and the platform is elevated.

Downloaded from www.Manualslib.com manuals search engine

https://truckmanualshub.com/

NOTE: *ANSI/CSA/AUS machines are equipped with a tilt interlock which cuts out drive and lift up functions when chassis is on a slope greater than what is allowable for the machine and the platform is elevated.*

CAUTION

DO NOT "LOWER" WITHOUT COMPLETELY RETRACTING THE PLATFORM EXTENSION.

CAUTION

DO NOT OPERATE MACHINE IF HIGH DRIVE SPEED OPERATES WHEN PLATFORM IS RAISED ABOVE THE STOWED POSITION.

Downloaded from www.Manualslib.com manuals search engine

https://truckmanualshub.com/

3.6 MDI (MULTIFUNCTION DIGITAL INDICATOR)

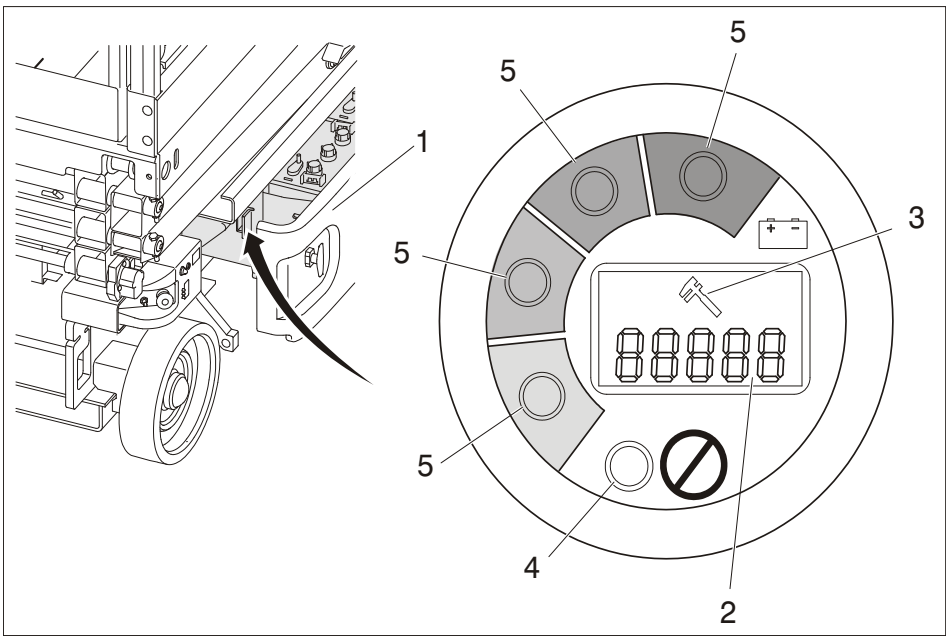

1. Battery Compartment
2. Diagnostic Trouble Code LCD
3. Wrench Icon (Fault)
4. Fault LED
5. Battery Discharge Indicator (BDI)

Figure 3-3. MDI Indicator - Location and Description

Downloaded from www.Manualslib.com manuals search engine

https://truckmanualshub.com/

MDI Description

Located in the battery compartment on the left side of the machine *(See Figure 3-3.)* is a Multifunction Digital Indicator (MDI). The purpose of the MDI is to display Diagnostic Trouble Codes (DTC) when a functional problem occurs with the machine. The MDI is plugged into the diagnostic connector in the battery compartment.

When a problem occurs:

1. A Wrench Icon will display on the Diagnostic Trouble Code LCD display.
2. A three to five digit DTC will display on the Diagnostic Trouble Code LCD display, below the wrench icon.

NOTE: *When more than one DTC exists, each DTC will be displayed on the LCD for 3 seconds before changing to the next DTC. Once the last active DTC is displayed, the display will recycle indefinitely until the DTC's are corrected.*

3. The red Fault LED will illuminate (this does not apply to 00x DTC's; the Fault LED will not illuminate for these DTC's).

NOTE: *For DTC's and descriptions, refer to Section 4.13, Diagnostic Trouble Codes (DTC) Check Tables.*

Also located on the MDI are Battery Discharge Indicators (BDI). These green LEDs indicate the level of charge in the batteries.

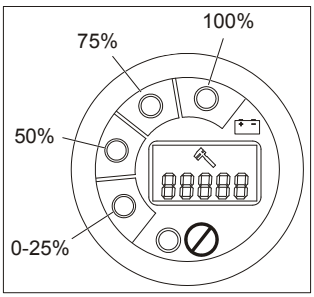

Battery Charge/Discharge Indicator

NOTE: *When the batteries are completely discharged, the LED in the 0-25% range "red area" will flash.*

- The BDI will convey the same information as the BDI on the platform control station. (see Figure 3-3., Platform Control Station)
- Under normal driving conditions the BDI's will be illuminated. When a DTC exists (other than 00x DTC's) the BDI LEDs will not be illuminated.

Downloaded from www.Manualslib.com manuals search engine

https://truckmanualshub.com/

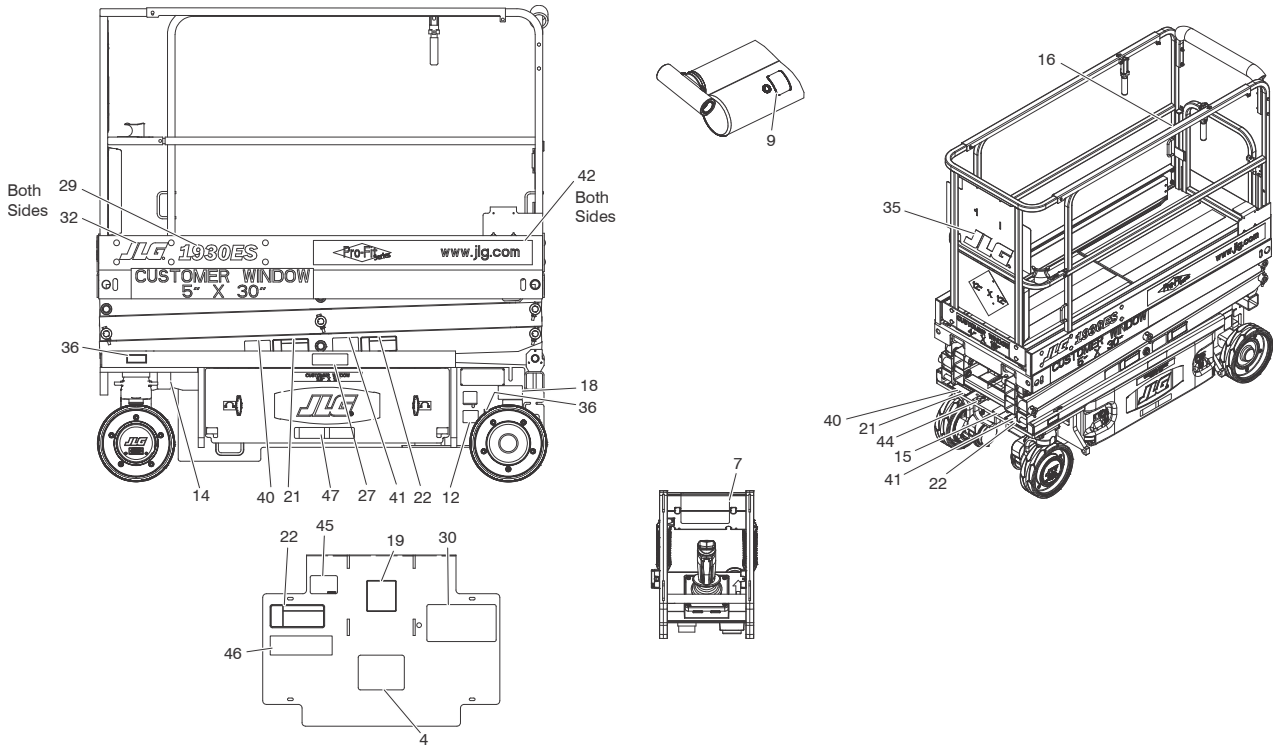

Figure 3-3. Decal Location - 1930ES- Sheet 1 of 2

Downloaded from www.Manualslib.com manuals search engine

https://truckmanualshub.com/

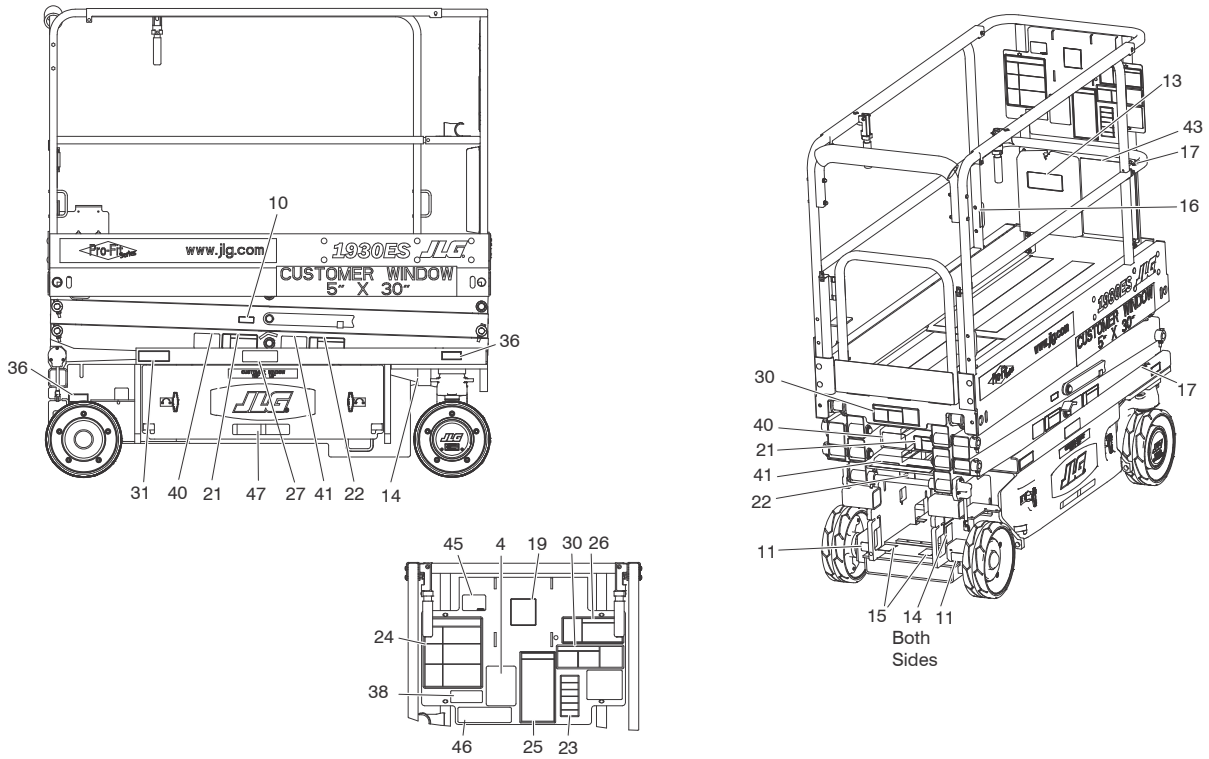

Figure 3-4. Decal Location - 1930ES - Sheet 2 of 2

Downloaded from www.Manualslib.com manuals search engine

https://truckmanualshub.com/

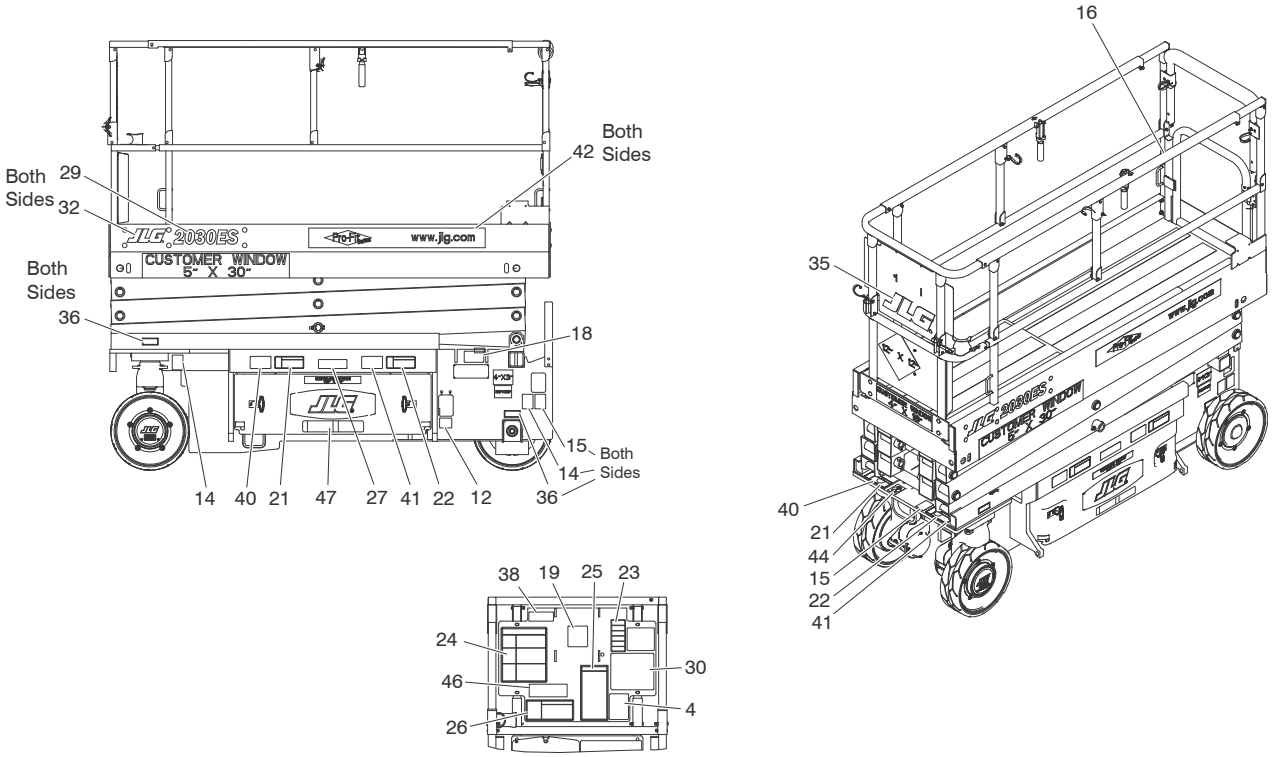

Figure 3-5. Decal Location - 2030ES & 2630ES - Sheet 1 of 2

Downloaded from www.Manualslib.com manuals search engine

https://truckmanualshub.com/

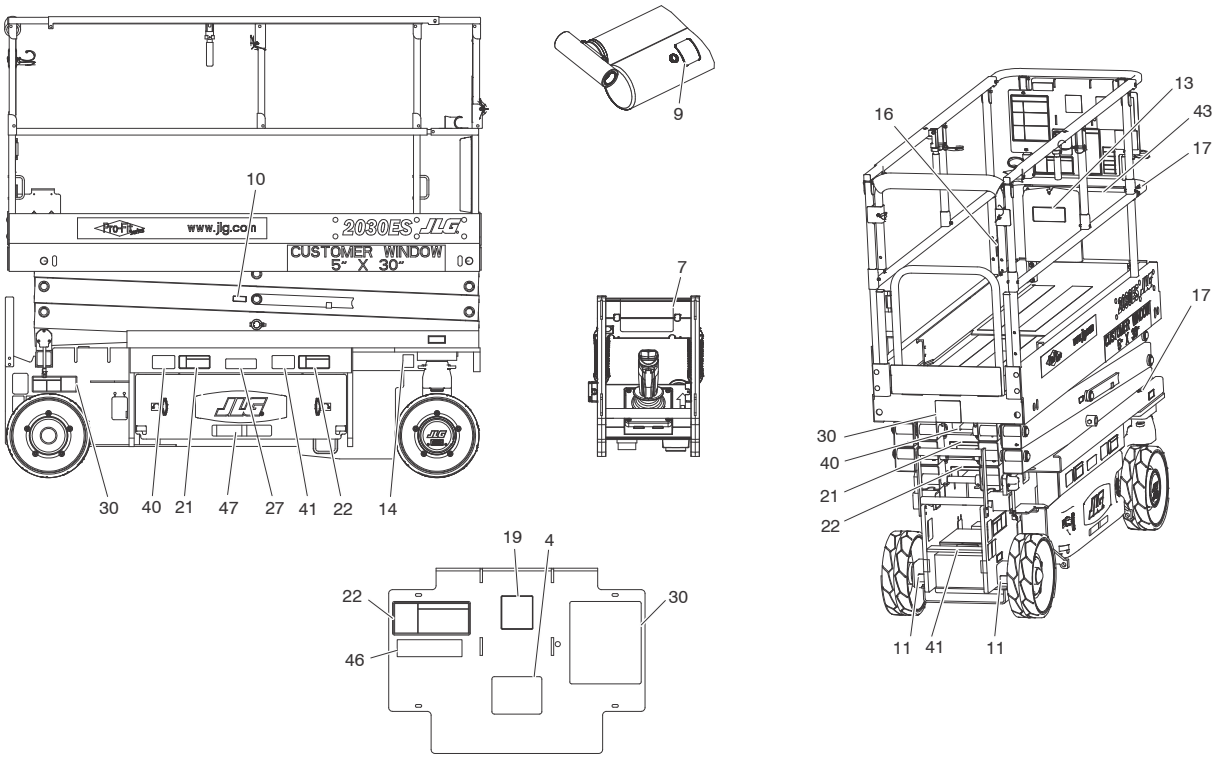

Figure 3-6. Decal Location - 2030ES & 2630ES - Sheet 2 of 2

Downloaded from www.Manualslib.com manuals search engine

https://truckmanualshub.com/

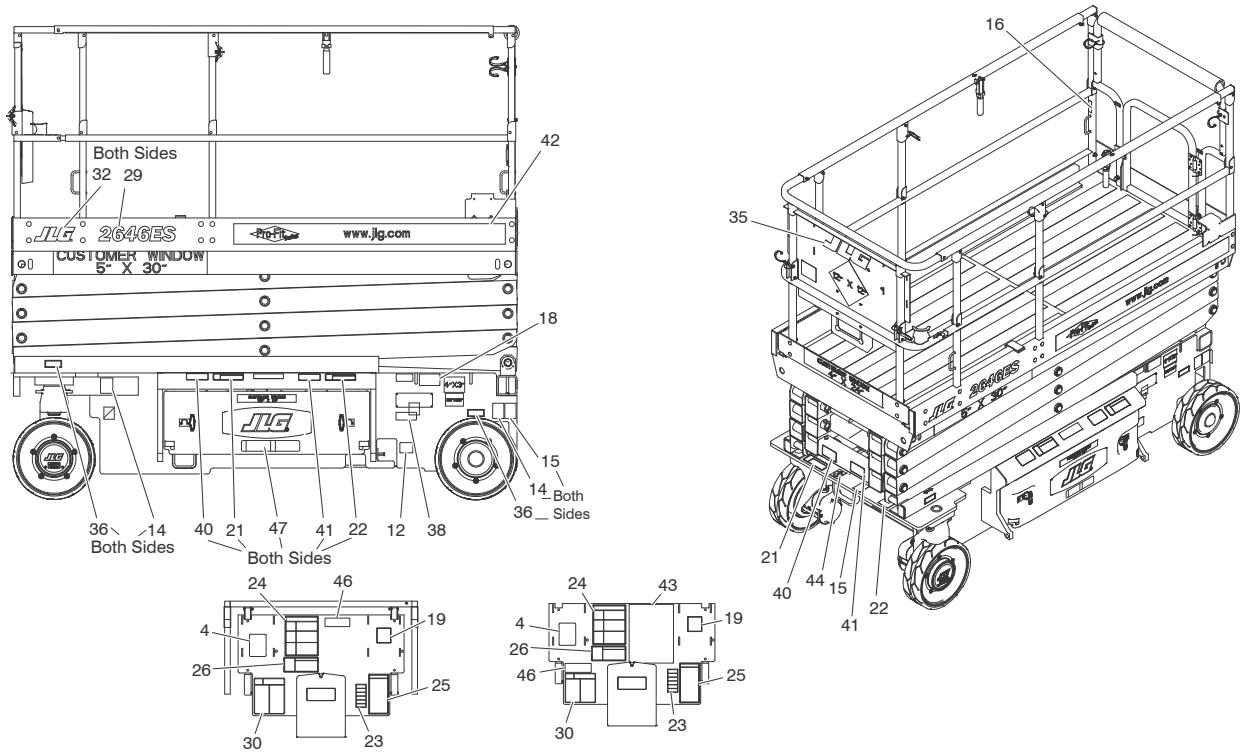

Figure 3-7. Decal Location - 2646ES & 3246ES - Sheet 1 of 2

Downloaded from www.Manualslib.com manuals search engine

https://truckmanualshub.com/

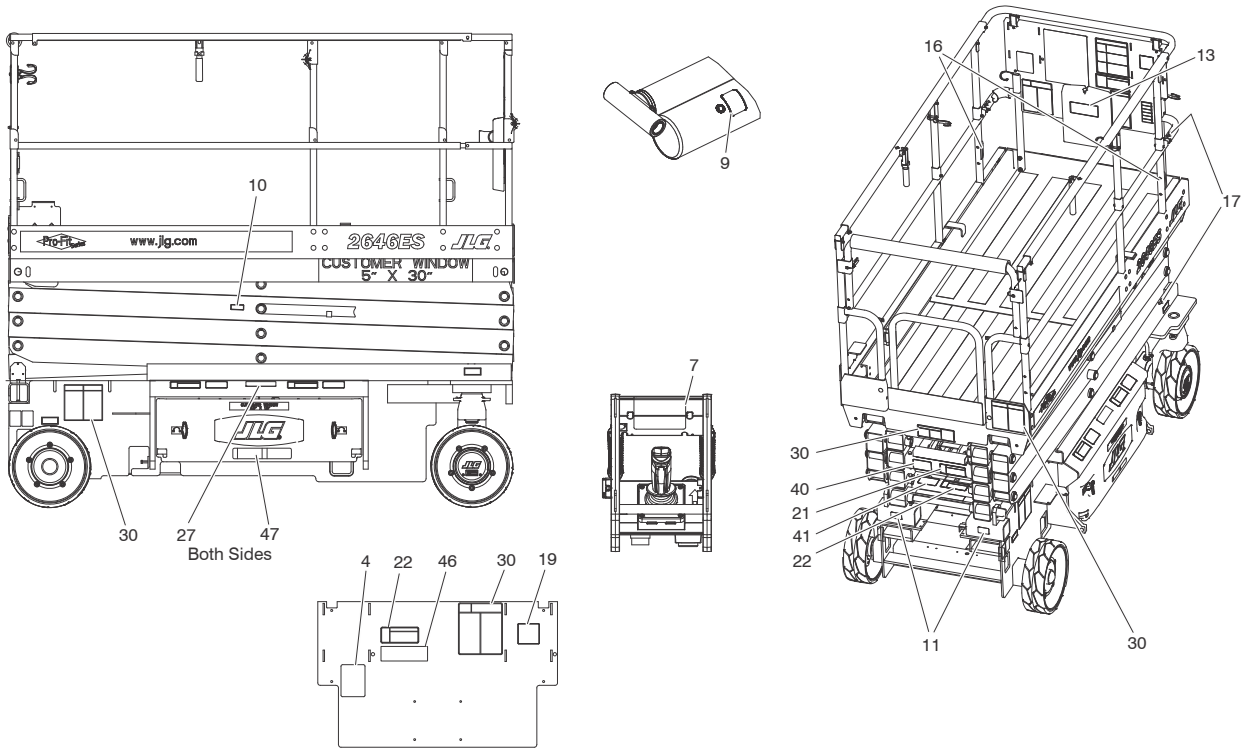

Figure 3-8. Decal Location - 2646ES & 3246ES - Sheet 2 of 2

Downloaded from www.Manualslib.com manuals search engine

https://truckmanualshub.com/

Table 3-1. Decal Location Legend

Item	ANSI 0275220-3	CE 0275221-3	Australian 0275222-3	English/French 0275223-3	English/ Spanish 0275224-3	Portuguese/ Spanish 0275225-3	English/ Chinese 0275226-3	Korean 0275227-3
1-3	N/A	N/A	N/A	N/A	N/A	N/A	N/A	N/A
4	1700584	1700584	1700584	1700584	1700584	1700584	1700584	1700584
5-6	N/A	N/A	N/A	N/A	N/A	N/A	N/A	N/A
7	1702631	1702631	1702631	1702631	1702631	1702631	1702631	1702631
8	N/A	N/A	N/A	N/A	N/A	N/A	N/A	N/A
9	1704412	1704412	1704412	1704412	1704412	1704412	1704412	1704412
10	1705693	1705693	1705693	1705693	1705693	1705693	1705693	1705693
11	1704016	1704016	1704016	1704016	1703817	1703817	1704016	1704016
12	1702155	1702155	1702155	1702155	1702155	1702155	1702155	1702155
13	1701509	1701509	1701509	1701509	1701509	1701509	1701509	1701509
14	1703811	1703811	1703811	1703811	1703811	1703811	1703811	1703811
15	1703814	1703814	1703814	1703814	1703814	1703814	1703814	1703814
16	1704277	1704277	1704277	1704277	1704277	1704277	1704277	1704277
17	1703819	1703819	1703819	1703819	1703819	1703819	1703819	1703819
18	1703822	1703822	1703822	1703822	1703822	1703822	1703822	1703822

Downloaded from www.Manualslib.com manuals search engine

https://truckmanualshub.com/

Table 3-1. Decal Location Legend

Item	ANSI 0275220-3	CE 0275221-3	Australian 0275222-3	English/French 0275223-3	English/ Spanish 0275224-3	Portuguese/ Spanish 0275225-3	English/ Chinese 0275226-3	Korean 0275227-3
19	1705692	1705692	1705692	1705692	1705692	1705692	1705692	1705692
20	N/A	N/A	N/A	N/A	N/A	N/A	N/A	N/A
21	1705694	1705673	1705673	1705694	1705694	1705722	1705694	1705694
22	1705695	1705671	1705671	1705695	1705695	1703834	1705695	1705695
23	1705686	N/A	N/A	1705723	1705720	1705726	1705946	1706057
24	1705680	N/A	N/A	1705680	1705680	1705894	1705680	1705680
25	1705679	N/A	N/A	1705679	1705679	1705727	1705679	1705679
26	1705681	N/A	N/A	1705681	1705681	1705721	1705681	1705681
27	1703813	1705670	1705670	1704340	1704339	1704341	1704344	1707022
28	N/A	N/A	N/A	N/A	N/A	N/A	N/A	N/A
29 (1930ES) (2030ES) (2630ES) (2646ES) (3246ES)	 1705642 1705643 1705644 1705645 1705646	 1705642 1705643 1705644 1705645 1705646	 1705642 1705643 1705644 1705645 1705646	 1705642 1705643 1705644 1705645 1705646	 1705642 1705643 1705644 1705645 1705646	 1705642 1705643 1705644 1705645 1705646	 1705642 1705643 1705644 1705645 1705646	 1705642 1705643 1705644 1705645 1705646

Downloaded from www.Manualslib.com manuals search engine

https://truckmanualshub.com/

Table 3-1. Decal Location Legend

Item	ANSI 0275220-3	CE 0275221-3	Australian 0275222-3	English/French 0275223-3	English/ Spanish 0275224-3	Portuguese/ Spanish 0275225-3	English/ Chinese 0275226-3	Korean 0275227-3
30								
(1930ES)	1705638	1705666	1705666	1705638	1705638	1705638	1705638	1705638
(2030ES)	1705639	1705667	1705667	1705639	1705639	1705639	1705639	1705639
(2630ES)	1705941	1705942	1705887	1705941	1705941	1705941	1705941	1705941
(2646ES)	1705640	1705668	1705668	1705640	1705640	1705640	1705640	1705640
(3246ES)	1705641	1705704	1705819	1705641	1705641	1705641	1705641	1705641
31	1705699	N/A	N/A	N/A	N/A	N/A	1705699	N/A
32	0272870	0272870	0272870	0272870	0272870	0272870	0272870	0272870
33 - 34	N/A	N/A	N/A	N/A	N/A	N/A	N/A	N/A
35	0272870	0272870	0272870	0272870	0272870	0272870	0272870	0272870
36								
(1930ES)	1705647	1705648	1705648	1705647	1705647	1705647	1705647	1705647
(2030ES)	1704134	1706310	1706310	1704134	1704134	1704134	1704134	1704134
(2630ES)	1706310	1706310	1706310	1706310	1706310	1706310	1706310	1706310
(2646ES)	1706311	1706312	1706312	1706311	1706311	1706311	1706311	1706311
(3246ES)	1706311	1706312	1706312	1706311	1706311	1706311	1706311	1706311
37	N/A	N/A	N/A	N/A	N/A	N/A	N/A	N/A
38	N/A	N/A	N/A	1705303	N/A	1705303	N/A	N/A

Downloaded from www.Manualslib.com manuals search engine

https://truckmanualshub.com/

Table 3-1. Decal Location Legend

Item	ANSI 0275220-3	CE 0275221-3	Australian 0275222-3	English/French 0275223-3	English/ Spanish 0275224-3	Portuguese/ Spanish 0275225-3	English/ Chinese 0275226-3	Korean 0275227-3
39	N/A	N/A	N/A	N/A	N/A	N/A	N/A	3251243
40	N/A	N/A	N/A	1705717	1705725	1705725	1705943	1706052
41	N/A	N/A	N/A	1705718	1705724	1705724	1705944	1706056
42 (1930ES) (2030ES) (2630ES) (2646ES) (3246ES)	 1705850 1705850 1705850 1705851 1705851	 1705850 1705850 1705850 1705851 1705851	 1705850 1705850 1705850 1705851 1705851	 1705850 1705850 1705850 1705851 1705851	 1705850 1705850 1705850 1705851 1705851	 1705850 1705850 1705850 1705851 1705851	 1705850 1705850 1705850 1705851 1705851	 1705850 1705850 1705850 1705851 1705851
43	N/A	N/A	N/A	3252098	1705719	1705719	1705945	1706053
44	1701499	1701499	1701499	1701499	1701499	1701499	1701499	1701499
45 (1930ES)	 1001092071	 1001092497	 1001092071	 1001092580	 1001092071	 1001092071	 1001092071	 1001092071
46	1001094359	1001094359	1001094359	1001094359	1001094359	1001094359	1001094359	1001094359
47	1001146794	1001146795	1001146795	1001146794	1001146794	1001146794	1001146794	1001146794

Downloaded from www.Manualslib.com manuals search engine

https://truckmanualshub.com/

SECTION 4. MACHINE OPERATION

4.1 DESCRIPTION

This machine is a self-propelled aerial work platform on top of an elevating 'scissor' mechanism. The Scissor Lift's intended purpose is to position personnel with their tools and supplies at positions above ground level. The machine can be used to reach work areas located above machinery or equipment positioned at ground level.

The JLG Scissor Lift has a primary operator Control Station in the platform. From this Control Station, the operator can drive and steer the machine in both forward and reverse directions, raise and lower the platform and, if equipped, operate the powered deck extension. The machine has a Ground Control Station which will override the Platform Control Station. Ground Controls operate lift up and down. Ground Controls are to be used only in an emergency to lower the platform to the ground should the operator in the platform be unable to do so.

NOTE: *All platform extension capacities are 250 lb (120 kg).*

4.2 OPERATION

Platform/Ground Select Switch

The power selector switch functions to direct electrical power to the desired control station. With the switch in the ground position, power is supplied to the emergency stop switch at the ground control station. When the switch is in the platform position, power is supplied to the emergency stop switch at the platform control station. The switch should be in the off position when parking the machine overnight.

Emergency Stop Switch

This switch, when in the on (out) position, provides electrical power to the ground controls or platform controls, as applicable. In addition, the switch can be used to turn off power (push the switch IN) to the function controls in the event of an emergency.

Downloaded from www.Manualslib.com manuals search engine

https://truckmanualshub.com/

4.3 PLATFORM OPERATION

WARNING

ONLY RAISE PLATFORM ON A FIRM, LEVEL AND SMOOTH SURFACE FREE OF OBSTRUCTIONS AND HOLES.

NOTE: *When selecting between the Lift/Drive functions, the controller must be in the neutral position for 3 seconds before the function change is effective. The machine is inoperable at this point.*

Raising

1. If the machine is shut down, place the power selector switch to the desired position (platform or ground).
2. Position the applicable emergency stop switch to the "ON" position.

NOTE: *If the machine is equipped with a footswitch (Japanese Specification Only), the footswitch must be depressed in conjunction with the red trigger switch, located on the controller. Power is removed from the platform controls when the footswitch is released.*

3. If operating from the ground controls, position the lift switch to up and hold until desired elevation is achieved. If operating from the platform controls, select lift function, squeeze and hold the red trigger switch, move the controller backward (up) and hold until desired elevation is reached. The lift switch works in conjunction with the enable switch. Releasing the trigger switch will stop the function being operated.

Lowering

WARNING

ENSURE SCISSOR ARM AREA IS FREE OF PERSONNEL PRIOR TO LOWERING PLATFORM.

NOTE: *The machine is equipped with a descent alarm which will sound as the platform is being lowered (CE Optional).*

If operating from the ground controls, position the lift switch to down and hold until desired elevation is achieved or until platform is fully lowered.

If operating from the platform controls, select lift function squeeze the red trigger switch and push the controller forward (down) and hold until desired elevation is reached or until platform is fully lowered. The lift switch works in conjunction with the enable switch. Releasing the trigger switch will stop the function being operated.

Downloaded from www.Manualslib.com manuals search engine

https://truckmanualshub.com/

Arm Guards (If equipped)

If the machine is equipped with arm guards, the platform will stop lowering and an alarm will sound once it has reached a pre-set height. At this point, the trigger switch and controller must be released before the lowering function can begin again.

WARNING

DO NOT 'LOWER' WITHOUT COMPLETELY RETRACTING THE PLATFORM EXTENSION.

Platform Extension

The machine is equipped with a mechanically extendable deck, giving the operator better access to worksites. On the 1930ES/2030ES/2630ES this extension adds 3 ft (0.9 m) and on the 2646ES and 3246ES the extension adds 4 ft (1.2 m) to the front of the platform. To extend the deck, pull out handles from latch and swing up, then use the handles and handrail to push the extendable deck out. To retract the deck, pull out the handles from latch and swing up, use the handles and handrail to pull and retract the deck. Be sure the handles are in place after the deck is retracted. Maximum capacity of the deck extension is 250 lbs (120 kg).

Downloaded from www.Manualslib.com manuals search engine

https://truckmanualshub.com/

Fold-Down Rails

WARNING

DO NOT RAISE PLATFORM WITH RAILS FOLDED DOWN. THE RAILS MUST BE IN THE UPRIGHT POSITION AND PROPERLY PINNED WHEN RAISING THE PLATFORM.

NOTE: *The rails must only be folded down when the machine is in the stowed (fully lowered) position.*

NOTE: *Ensure that the drywall gate at the rear of the machine is up and locked in position.*
Platform control box should be removed and placed on the platform with rails folded down.

1. To fold down the rails, remove the four (4) bail pins at the two front corners and center of the rails.
2. Taking a firm hold on the top rails, carefully push forward and lower until the top rail rests on the middle rail.
3. To raise the rails back to the upright position, firmly pull the rails toward the back of the machine and replace the bail pins into the rails. Return drywall gate to the lowered position.

WARNING

AFTER THE RAILS HAVE BEEN FOLDED DOWN, USE EXTREME CAUTION WHEN EXITING AND ENTERING THE PLATFORM.

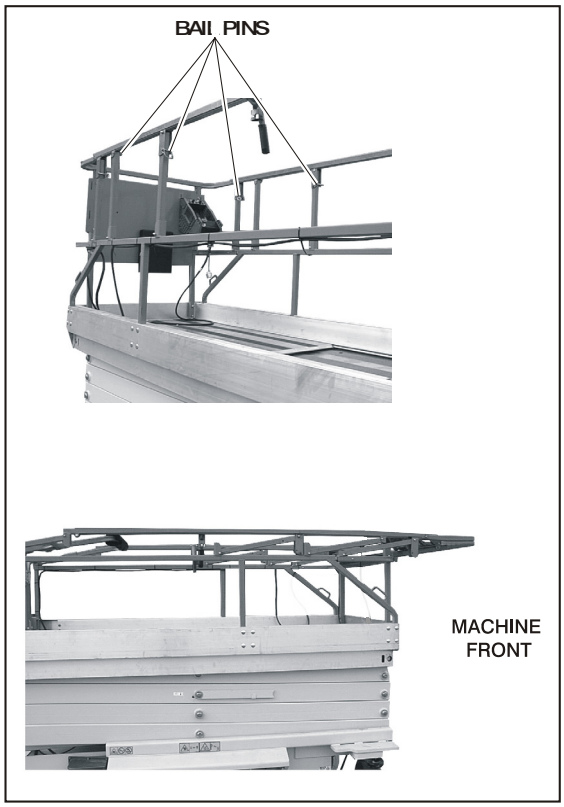

Downloaded from www.Manualslib.com manuals search engine

https://truckmanualshub.com/

4.4 STEERING

To steer the machine, the thumb operated steer control switch on the controller handle is positioned to the right for traveling right, or to the left for traveling left. When released, the switch will return to the center-off position and the wheels will remain in the previously selected position. To return the wheels to the straightened position, the switch must be activated in the opposite direction until the wheels are centered.

4.5 DRIVING

⚠ WARNING

DO NOT DRIVE WITH PLATFORM RAISED EXCEPT ON A SMOOTH, FIRM AND LEVEL SURFACE FREE OF OBSTRUCTIONS AND HOLES.

TO AVOID LOSS OF TRAVEL CONTROL OR UPSET ON GRADES AND SIDESLOPES, DO NOT DRIVE MACHINE ON GRADES OR SIDESLOPES EXCEEDING THOSE SPECIFIED. REFERENCE FIGURE 4-1., GRADE AND SIDESLOPE.

Driving Forward

1. Place power selector switch at ground control station to "Platform."
2. Position emergency stop switch at platform control station to "On" position.
3. Select "Drive" on the drive/lift select switch.
4. Squeeze controller (joystick), depressing red trigger on front of joystick, and move joystick forward for duration of travel. The drive system is proportional so for additional drive speed, push the joystick further in the direction of travel. Releasing the trigger will stop the function being operated.

Driving in Reverse

1. Position power selector switch at ground control station to "Platform."
2. Position emergency stop switch at platform control station to "On" position.
3. Squeeze joystick, depressing red trigger on front of joystick, and move joystick backward (reverse) for duration of travel. The drive system is proportional so for additional drive speed, push the joystick further in the direction of travel. Releasing the trigger will stop the function being operated.

Downloaded from www.Manualslib.com manuals search engine

https://truckmanualshub.com/

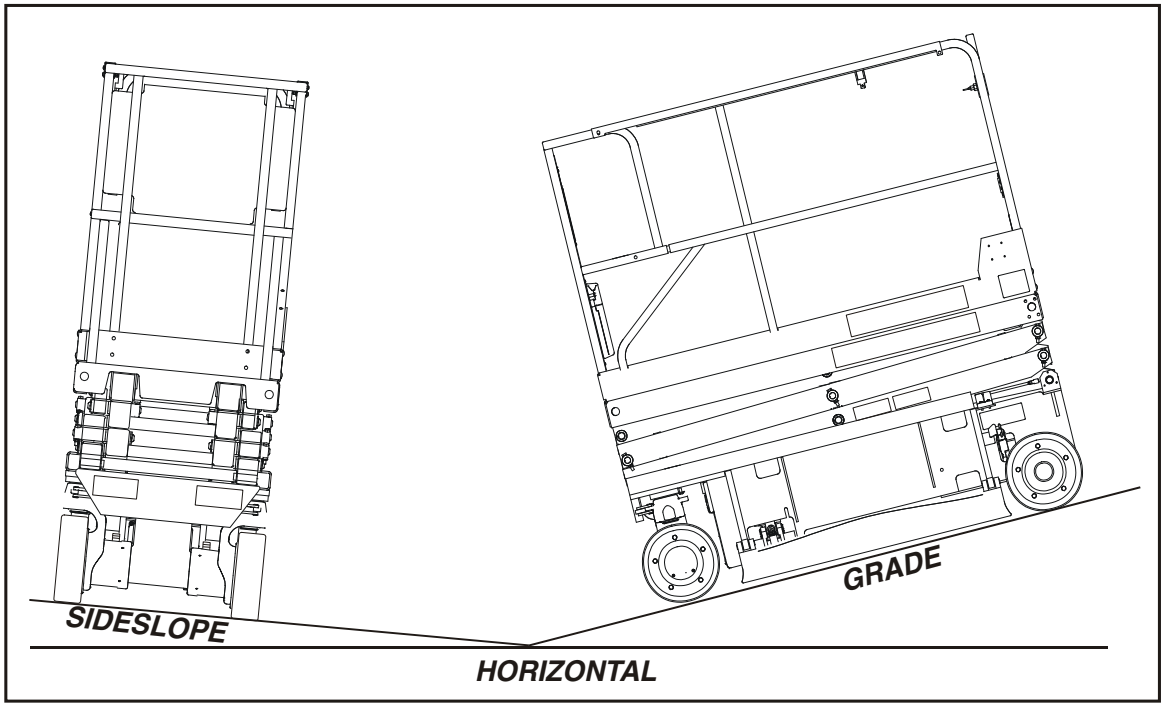

Figure 4-1. Grade and Sideslope

Downloaded from www.Manualslib.com manuals search engine

https://truckmanualshub.com/

4.6 PARKING AND STOWING

Park and stow the machine as follows:

1. Drive the machine to a reasonably well-protected and well-ventilated area.
2. Ensure the platform is fully lowered.
3. Position the emergency stop switch to the "Off" position.
4. If necessary, cover the instruction placards, caution and warning decals so that they will be protected from hostile environment.
5. Chock at least two wheels when parking the machine for an extended period of time.
6. Turn the power selector switch to "Off" and remove the key to disable the machine and prevent unauthorized use. The platform control station can also be secured to it's mounting plate, see Figure 4-2.
7. If equipped with the optional anti-vandal package, the platform and ground control box assemblies may be covered and locked to prevent access.

NOTICE

DO NOT OPERATE MACHINE FROM THE PLATFORM OR GROUND CONTROLS WITH THE ANTI-VANDAL COVERS CLOSED AND LOCKED IN PLACE.

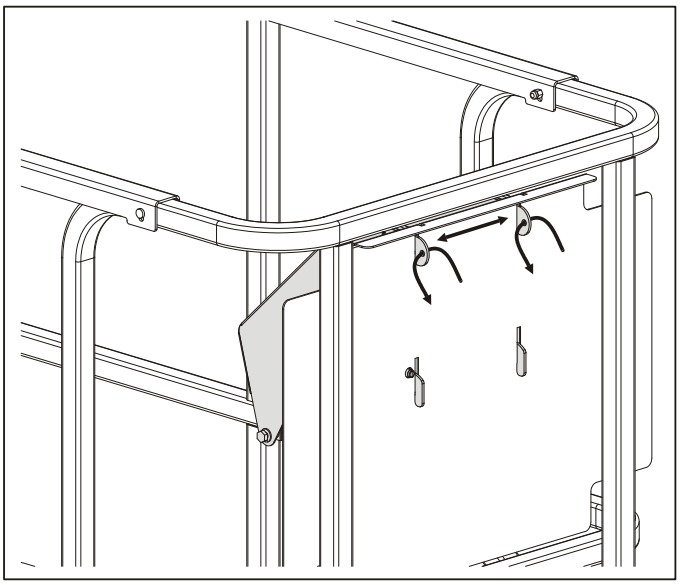

Figure 4-2. Securing Control Station to Platform

NOTE: *If machine is not equipped with the anti-vandal covers option to prevent unauthorized removal, the platform control station can be secured to it's mount by placing a lock through one or more of the holes located on it's upper mounting tabs.*

Downloaded from www.Manualslib.com manuals search engine

https://truckmanualshub.com/

4.7 BATTERY CHARGING

Operation

NOTE: *Be sure that machine is parked in a well ventilated area before charging begins.*

⚠ DANGER

ONLY PLUG THE CHARGER INTO A PROPERLY INSTALLED AND GROUNDED OUTLET. DO NOT USE GROUND ADAPTORS OR MODIFY PLUG. DO NOT TOUCH NON-INSULATED PORTION OF OUTPUT CONNECTOR OR NON-INSULATED BATTERY TERMINAL.

ALWAYS DISCONNECT THE AC SUPPLY BEFORE MAKING OR BREAKING THE CONNECTIONS TO THE BATTERY BEFORE CHARGING.

DO NOT OPEN OR DISASSEMBLE CHARGER.

DO NOT OPERATE CHARGER IF THE AC SUPPLY CORD IS DAMAGED OR IF THE CHARGER HAS RECEIVED A SHARP BLOW, BEEN DROPPED, OR OTHERWISE DAMAGED IN ANY WAY.

The battery charger receptacle is located at the right rear of the machine near the ground control panel.

1. Connect the charger to a grounded outlet.

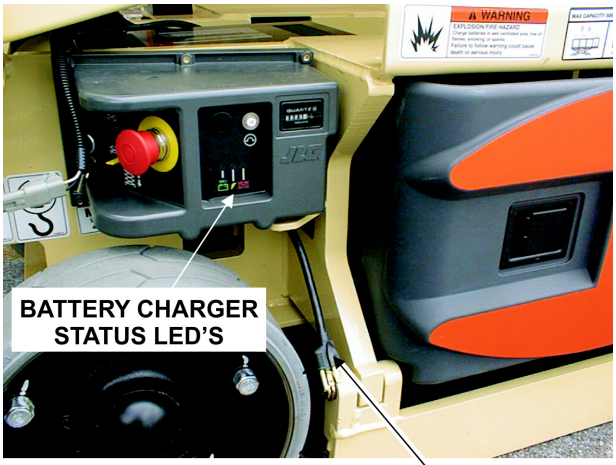

2. On the Battery Charger, the charger will automatically turn on and go through a short LED indicator self-test. All LED's will flash in an up and down sequence for two seconds.
3. The batteries are fully charged when green light on the battery charger status panel is illuminated.

Downloaded from www.Manualslib.com manuals search engine

https://truckmanualshub.com/

NOTE: *If the charger is left plugged in, the charger will automatically restart a complete charge cycle if the batteries voltage drops below a minimum voltage or 30 days has elapsed.*

Battery Charger Fault Codes

If a fault occurred during charging, the red "Fault" LED will flash with a code. The number of flashes corresponds to the error. Refer to Table 4-1, Battery Charger Flash Codes.

Table 4-1. Battery Charger Flash Codes

Flash(s)	Fault	Fault Removal
1	Battery voltage high	Auto-recover - Indicates a high battery pack voltage
2	Battery voltage low	Auto-recover - Indicates either a battery pack failure, battery pack not connected to charger or battery volts per cell is less than 0.5 VDC. Check the battery pack and connections
3	Charge time-out	Indicates the batteries did not charge in the allowed time. This could occur if the batteries are a larger capacity than the algorithm is intended for or if the batteries are damaged old or in poor condition.
4	Check battery	Indicates the batteries could not be trickle charged up to the minimum voltage per cell level required for the charge to be started.
5	Over-temperature	Auto-recover - Indicates charger has shut down due to high internal temperature
6	QuiQ fault	Indicates that the battery will not accept charge current, or an internal fault has been detected in the charger. This fault will nearly always be set within the first 30 seconds of operation. Once it has been determined that the batteries and connections are not faulty and fault 6 is again displayed after interrupting AC power for at least 10 seconds, the charger must be brought to a qualified service depot.

Downloaded from www.Manualslib.com manuals search engine

https://truckmanualshub.com/

4.8 PLATFORM LOADING

The platform maximum rated load capacity is shown on a placard located on the platform and is based upon the following criteria:

1. The machine is positioned on a firm, uniform surface.
2. All braking devices are engaged.
3. Refer to Section 6 for the maximum platform capacity.

NOTE: *It is important to remember that the load should be evenly distributed on the platform. The load should be placed near the center of the platform when possible.*

4.9 SAFETY PROP

CAUTION

THE SAFETY PROP MUST BE USED WHENEVER MAINTENANCE PERFORMED ON THE MACHINE REQUIRES THE SCISSOR ARMS TO BE RAISED AND ONLY WITH NO LOAD IN THE PLATFORM.

To engage the safety prop, raise the platform, swing the safety prop from it's stowed position located on the right side of the machine. Lower the platform until the safety prop rests on the designated safety prop rest.

To store the safety prop, raise the platform, swing the safety prop around and restore it back to its stowed position.

Downloaded from www.Manualslib.com manuals search engine

https://truckmanualshub.com/

4.10 TIE DOWN/LIFT LUGS

When transporting the machine, the platform extension must be fully retracted and the platform fully lowered in the stowed mode with the machine securely tied down to the truck or trailer deck. There are two tie-down/lift lugs located at the rear of the machine for lifting and tieing down. There is a single tie-down lug at the front of the machine. This lug is designed for tieing down only. Do not attempt to lift machine from the front lug.

CAUTION

LIFTING THE MACHINE FROM THE SIDES USING A FORK TRUCK IS NOT RECOMMENDED BY JLG. IN THE EVENT THAT THE MACHINE NEEDS TO BE LIFTED FROM THE SIDES CAUTION MUST BE USED TO AVOID JAMMING THE POT HOLE PROTECTION BARS UP AGAINST THE FRAME.
EVERY TIME THE MACHINE IS LIFTED FORM THE SIDE, BE SURE AND TEST THE POT HOLE PROTECTION SYSTEM BEFORE THE MACHINE IS PUT BACK INTO OPERATION.

4.11 LIFTING

In the event that the machine must be lifted, there is a forktruck pocket located at the rear of the machine. The machine can also be lifted using a proper spreader bar and straps/chains. Reference Figure 4-3., Lifting and Tie Down Diagram.

Downloaded from www.Manualslib.com manuals search engine

https://truckmanualshub.com/

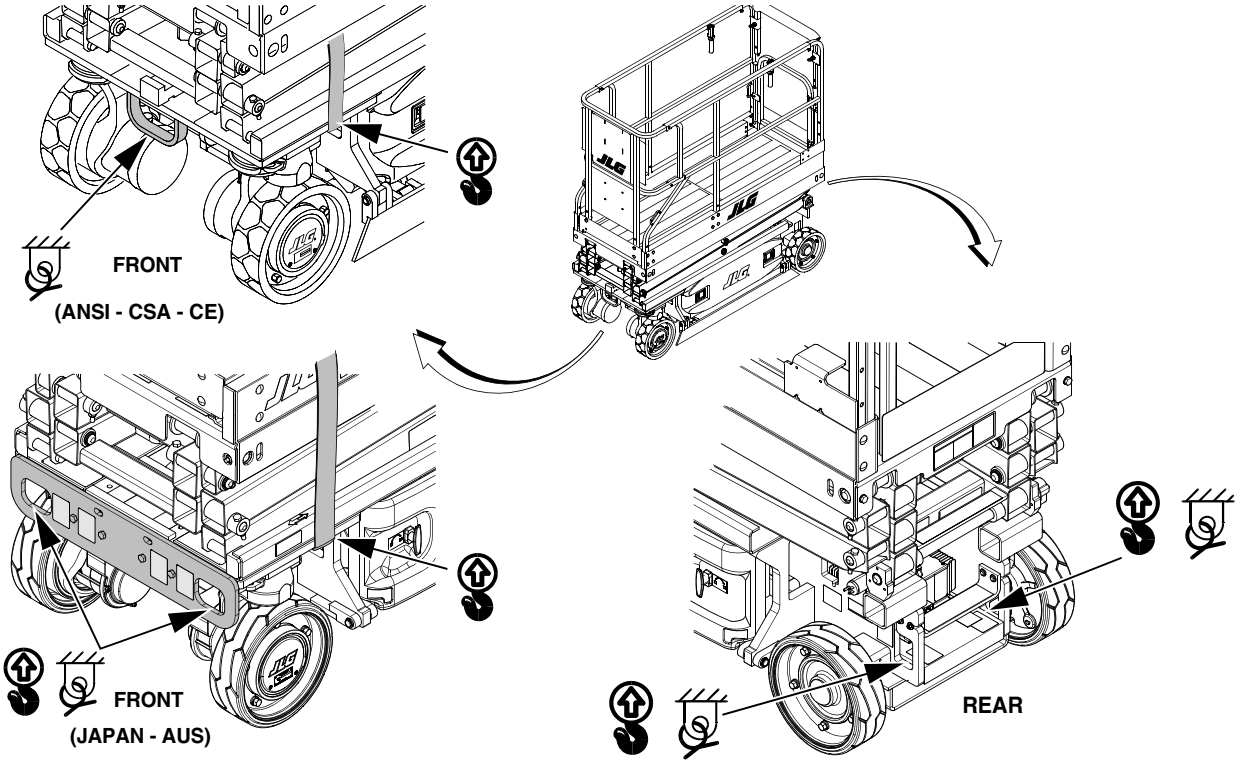

Figure 4-3. Lifting and Tie Down Diagram

Downloaded from www.Manualslib.com manuals search engine

https://truckmanualshub.com/

4.12 TOWING

It is not recommended that this machine be towed, except in the event of an emergency such as a machine malfunction or a total machine power failure.

NOTE: *The machine may be equipped with a remote electric brake release, a push button electric brake release, or both styles of electric brake release.*

WARNING

RUNAWAY VEHICLE/MACHINE HAZARD. MACHINE HAS NO TOWING BRAKES, TOWING VEHICLE MUST BE ABLE TO CONTROL MACHINE AT ALL TIMES. ON-HIGHWAY TOWING NOT PERMITTED. FAILURE TO FOLLOW INSTRUCTIONS COULD CAUSE SERIOUS INJURY OR DEATH.

MAXIMUM TOWING SPEED 5 MPH (8 KPH) FOR NO FURTHER THAN 60 FEET (18 M).

MAXIMUM TOWING GRADE 25%.

Remote Electric Brake Release

1. Chock wheels or secure machine with tow vehicle.
2. Pull the emergency stop switch out and position the keyswitch to ground mode.
3. The brake release cable hangs on a hook in the battery compartment on the opposite side of the ground control panel.
4. Locate brake release plug near the analyzer plug at the left front corner of the machine and plug the release cable into the plug.
5. Depress switch to release brakes.
6. When finished towing; release switch, unplug release switch and return brake switch to the proper storage area in the battery compartment.

Push Button Electric Brake Release

NOTE: *The push button electric brake release is located on the right side of the machine just forward of the ground control box.*

1. Chock wheels or secure machine with tow vehicle.
2. Pull the emergency stop switch out and position the keyswitch to ground mode.
3. Push the button once to release the brakes.
4. To reset the brakes, push the button again, or push in the emergency stop switch, or take the ground control keyswitch out of the ground mode position.

Downloaded from www.Manualslib.com manuals search engine

https://truckmanualshub.com/

Mechanical Brake Release

Machines, USA built prior to s/n 0200118041:
Machines, Belgium built prior to s/n 1200001487:

1. Chock wheels or secure machine with tow vehicle.
2. Power machine in ground mode.
3. Remove the **three cover bolts (1)**, from the back of drive motor unit.
4. Remove **brake cover (2)**.
5. Locate the **2 disengage bolts (3)** that are stored in the motor end cap. Remove bolts and insert them into the **two disengage holes (4)** in the brake housing, see Item 4 in Figure 4-4., Manual Disengage.
6. Tighten down the bolts and the brake on that drive motor will disengage.
7. Repeat this procedure on opposite wheel drive. With both drive motor brakes now disengaged, the machine can be moved manually.
8. After towing is complete, chock wheels and remove **2 disengage bolts (3)** from **disengage holes (4)**. Insert bolts back into original holes in motor end cap.
9. Reinstall **cover (2)**.

⚠ CAUTION

AFTER THE MACHINE IS TOWED, THE DISENGAGE BOLTS MUST BE REMOVED FROM THE BRAKE DISENGAGE HOLES. THE BRAKES CANNOT BE ENGAGED WITH THE DISENGAGE BOLTS IN THE BRAKE DISENGAGE HOLES. THIS WILL CAUSE THE MACHINE TO ROLL WHEN PARKED ON AN INCLINE.

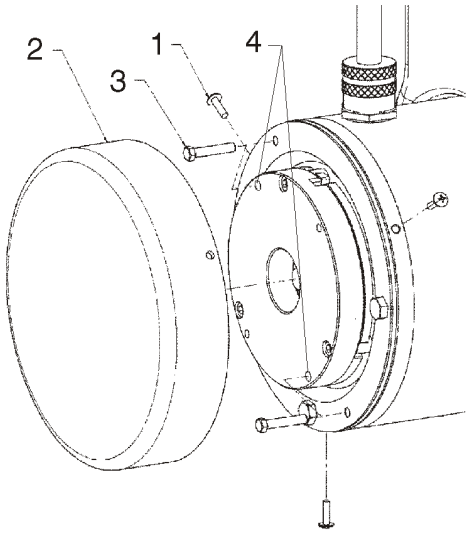

Figure 4-4. Manual Disengage

Downloaded from www.Manualslib.com manuals search engine

https://truckmanualshub.com/

Mechanical Brake Release

Machines, USA built s/n 0200152825 to s/n 0200170585:
Machines, Belgium built s/n 1200008481 to s/n 1200015159:

1. Chock wheels or secure machine with tow vehicle.
2. Power machine in ground mode.
3. Remove the **two cover bolts (1), cover (2), and cover o-ring seal (3)** from the back of drive motor unit.
4. Insert the **cover bolts (1)** into the **two disengage holes in the brake housing (4)**, see Item 4 in Figure 4-5., Manual Disengage.
5. Tighten down the bolts and the brake on that drive motor will disengage.
6. Repeat this procedure on opposite wheel drive. With both drive motor brakes now disengaged, the machine can be moved manually.
7. After towing is complete, chock wheels and **remove cover bolts (1)** from **disengage holes (4)**.
8. Reinstall **cover (2)**. Before installation, check the **cover o-ring seal (3)** for damage, replace if necessary.

CAUTION

AFTER THE MACHINE IS TOWED, THE DISENGAGE BOLTS MUST BE REMOVED FROM THE BRAKE DISENGAGE HOLES. THE BRAKES CANNOT BE ENGAGED WITH THE DISENGAGE BOLTS IN THE BRAKE DISENGAGE HOLES. THIS WILL CAUSE THE MACHINE TO ROLL WHEN PARKED ON AN INCLINE.

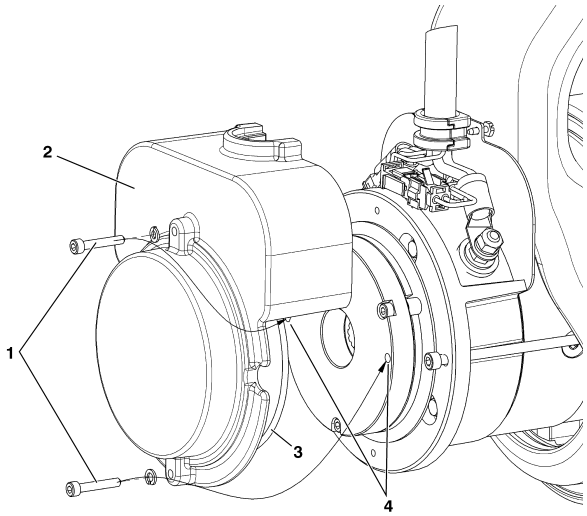

Figure 4-5. Manual Disengage

Mechanical Brake Release

Machines, USA built s/n 0200170585 to Present:
Machines, Belgium built s/n 1200015159 to Present:

Downloaded from www.Manualslib.com manuals search engine

https://truckmanualshub.com/

1. Chock wheels or secure machine with tow vehicle.
2. Ensure E-stop button is pushed in to the "OFF" position.
3. Remove the two **cover bolts (2)** and **brake cover (1).**
4. Insert the **cover bolts (2)** into the two **disengage holes (3)** in the brake housing, see item 3 in Figure 4-6., Manual Disengage.
5. Tighten down the **cover bolts (2)** and the brake on that drive motor will disengage.
6. Repeat this procedure on opposite wheel drive. With both drive motor brakes now disengaged, the machine can be moved manually.
7. After towing is complete, chock wheels and remove **cover bolts (2)** from **disengage holes (3)**.
8. Reinstall **brake cover (1)**.

⚠ CAUTION

AFTER THE MACHINE IS TOWED, THE DISENGAGE BOLTS MUST BE REMOVED FROM THE BRAKE DISENGAGE HOLES. THE BRAKES CANNOT BE ENGAGED WITH THE DISENGAGE BOLTS IN THE BRAKE DISENGAGE HOLES. THIS WILL CAUSE THE MACHINE TO ROLL WHEN PARKED ON AN INCLINE.

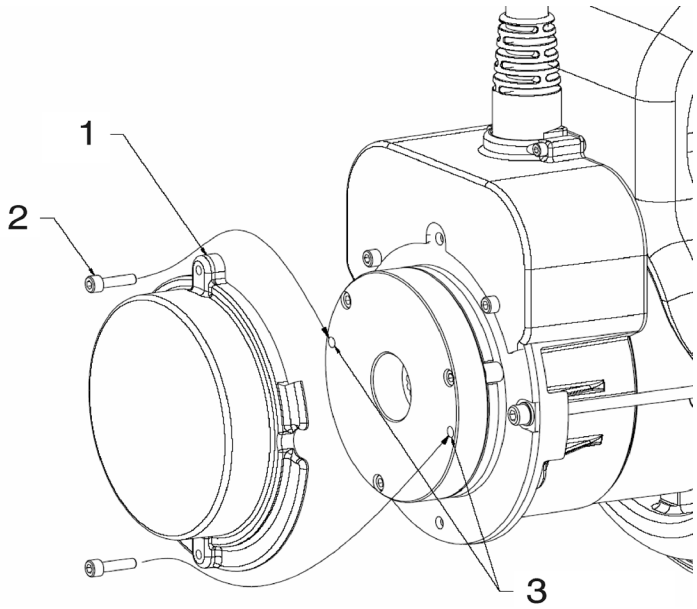

Figure 4-6. Manual Disengage

Downloaded from www.Manualslib.com manuals search engine

https://truckmanualshub.com/

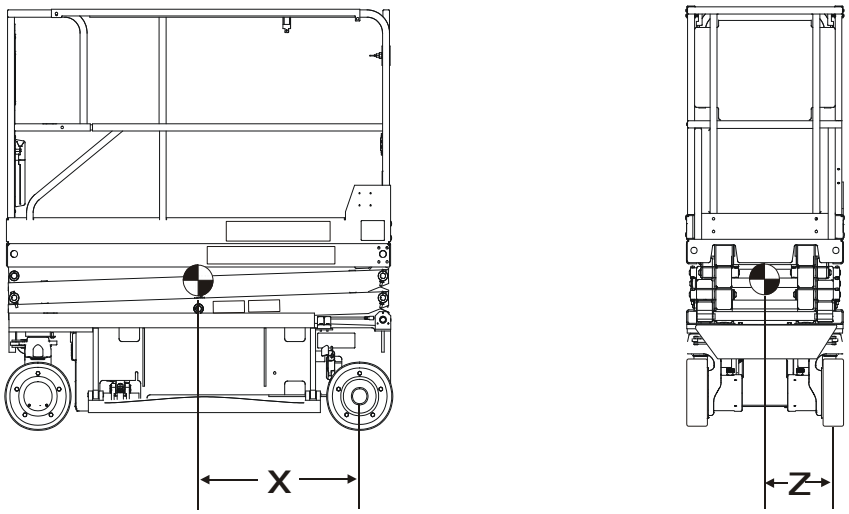

MODEL	WHEELBASE (in.)	X (in.)	Z (in.)
1930ES	63	33.5	13
2030ES	73.9	38.5	13
2630ES	73.9	38.5	13
2646ES	82.32	43.8	20.5
3246ES	82.32	43.8	20.5

MODEL	WHEELBASE (cm.)	X (cm.)	Z (cm.)
1930ES	160	83.7	33
2030ES	187.7	98.9	33
2630ES	187.7	97.8	33
2646ES	209.1	108.6	52
3246ES	209.1	108.4	52

Figure 4-7. Lifting and Tie Down Chart

Downloaded from www.Manualslib.com manuals search engine

https://truckmanualshub.com/

4.13 DIAGNOSTIC TROUBLE CODES (DTC)

Introduction

This sub-section provides a reference for Diagnostic Trouble Codes (DTC) read from the Multifunction Digital Indicator (MDI). For more information on the MDI, refer to Section 3. For information on the locations of any limit switches/sensors, refer to Section 2. DTCs are sorted in groups by the first two digits, which is also the system distress lamp flash code. To troubleshoot multiple DTCs, start with the DTC with the higher first two digits. **If a correction is made during a check, conclude the check by cycling the machine power, using the emergency stop switch.**

Downloaded from www.Manualslib.com manuals search engine

https://truckmanualshub.com/

4.14 DIAGNOSTIC TROUBLE CODES (DTC) CHECK TABLES

0-0 Help Comments

DTC	FAULT MESSAGE	DESCRIPTION	CHECK
Error	Error (Displayed on MDI)	The MDI is powered, but cannot communicate with the control system.	• Check the MDI connector. • Check the diagnostic connector. Refer problem to a qualified JLG mechanic.
001	EVERYTHING OK	The normal help message in platform mode. Displays on the analyzer only.	
002	GROUND MODE OK	The normal help message in ground mode. Displays on the analyzer only.	
003	ALARM SOUNDING - TILTED & ABOVE ELEVATION	Control system senses that the platform is elevated and the vehicle is tilted, and the machine not configured to cutout.	• Check that the machine is tilted. If so, lower the platform and reposition the machine to a level surface. • Fully stow the platform. • The tilt sensor is part of the ground control box. Check that the ground control box is secured to the machine. • Check that the pothole protection switches are securely mounted. • Check that the elevation angle sensor is securely mounted. Refer problem to a qualified JLG mechanic.

Downloaded from www.Manualslib.com manuals search engine

https://truckmanualshub.com/

0-0 Help Comments

DTC	FAULT MESSAGE	DESCRIPTION	CHECK
004	DRIVING AT CUTBACK - ABOVE ELEVATION	The platform is elevated and the machine is driving.	• Fully stow the platform. • Check that the elevation angle sensor is securely mounted. • Check that the pothole protection switches are securely mounted. Refer problem to a qualified JLG mechanic.
005	DRIVE & LIFT UP PREVENTED - TILTED & ELEVATED	Driving is not possible since the platform is elevated and the chassis is not level.	• Check that the machine is tilted. If so, lower the platform and reposition the machine to a level surface. • Fully stow the platform. • The tilt sensor is part of the ground control box. Check that the ground control box is secured to the machine. • Check that the pothole protection switches are securely mounted. • Check that the elevation angle sensor is securely mounted. Refer problem to a qualified JLG mechanic.
006	LIFT UP PREVENTED - MAX HEIGHT ZONE A	The vehicle has reached the maximum height and further lift up motion is not possible. Applicable to 2630ES or 3246ES.	• Check that the zone is set appropriately for the platform load. • Check that the platform height is at the rated maximum height specification (20′ for 2630 or 26′ for the 3246). • Check that the elevation angle sensor is securely mounted. • If there are any elevation sensor faults (DTC 251, 252, 2511, or 2512), troubleshoot those first. Refer problem to a qualified JLG mechanic.

Downloaded from www.Manualslib.com manuals search engine

https://truckmanualshub.com/

0-0 Help Comments

DTC	FAULT MESSAGE	DESCRIPTION	CHECK
007	DRIVING AT CUTBACK - POTHOLE STILL ENGAGED	While stowed, drive speed is reduced since the control system detected that the pot-hole protection mechanism failed to retract.	• Check for obstructions around the pot-hole protection mechanisms. • Check that the PHP switches are securely mounted. Refer problem to a qualified JLG mechanic.
008	FUNCTIONS LOCKED OUT - SYSTEM POWERED DOWN	After 2 hours without activity, the control system enters a low-power state to pre-serve battery charge.	• Normal operation should resume after power is cycled off then back on. • Check batteries charge, condition, etc. Refer problem to a qualified JLG mechanic.
009	DRIVE PREVENTED - ELEVATED ABOVE DRIVE CUTOUT HEIGHT	The platform is elevated above the cali-brated cutout height.	• Check that the elevation angle sensor is securely mounted. Refer problem to a qualified JLG mechanic.

2-1 Power-Up

DTC	FAULT MESSAGE	DESCRIPTION	CHECK
211	POWER CYCLE	This help message is issued at each power cycle. Displays on the analyzer only.	Normal operation. No check necessary.
212	KEYSWITCH FAULTY	Both platform and ground modes are selected simultaneously. Defaults to ground mode.	Refer problem to a qualified JLG mechanic.

Downloaded from www.Manualslib.com manuals search engine

https://truckmanualshub.com/

2-2 Platform Controls

DTC	FAULT MESSAGE	DESCRIPTION	CHECK
221	FUNCTION PROBLEM - HORN PERMANENTLY SELECTED	The horn switch was closed during power-up in platform mode.	• Check if the horn switch is damaged, obstructed or jammed. Refer problem to a qualified JLG mechanic.
222	FUNCTION PROBLEM - INDOOR / OUTDOOR PERMANENTLY SELECTED	The indoor / outdoor (zone A / zone B) switch was closed during power-up in platform mode.	• Check if the indoor/outdoor (zone A / zone B) capacity switch is damaged, obstructed or jammed. Refer problem to a qualified JLG mechanic.
223	FUNCTION PROBLEM - DRIVE & LIFT ACTIVE TOGETHER	The drive and lift inputs are closed simultaneously in platform mode.	• Check drive/lift switch for visible damage. Refer problem to a qualified JLG mechanic.
224	FUNCTION PROBLEM - STEER LEFT PERMANENTLY SELECTED	The steer left switch was closed during power-up in platform mode.	• Check if the steer left switch is obstructed or jammed. Refer problem to a qualified JLG mechanic.
225	FUNCTION PROBLEM - STEER RIGHT PERMANENTLY SELECTED	The steer right switch was closed during power-up in platform mode.	• Check if the steer right switch is obstructed or jammed. Refer problem to a qualified JLG mechanic.
226	ACCELERATOR FAULTY - WIPER OUT OF RANGE	There is a problem with the joystick.	• Center joystick and check to see if a power cycle will clear DTC. Refer problem to a qualified JLG mechanic.
227	STEER SWITCHES FAULTY	The steer left and steer right inputs were closed simultaneously.	• Check if the steer switches are damaged, obstructed or jammed. Refer problem to a qualified JLG mechanic.
228	FUNCTION LOCKED OUT - ACCELERATOR NOT CENTERED	The joystick was not centered at power-up.	• Release joystick and allow to center. • Check if the joystick is obstructed or jammed. Refer problem to a qualified JLG mechanic.
229	FUNCTION PROBLEM - TRIGGER PERMANENTLY CLOSED	The trigger switch was closed during power-up in platform mode.	• Check if the trigger switch is obstructed or jammed. Refer problem to a qualified JLG mechanic.

Downloaded from www.Manualslib.com manuals search engine

https://truckmanualshub.com/

2-2 Platform Controls

DTC	FAULT MESSAGE	DESCRIPTION	CHECK
2210	TRIGGER CLOSED TOO LONG WHILE IN NEUTRAL	The trigger switch was closed for more than five seconds while the joystick was centered.	• Check if the trigger switch is obstructed or jammed. Refer problem to a qualified JLG mechanic.
2232	FUNCTION PROBLEM - DRIVE & LIFT BOTH OPEN	The drive and lift inputs are both de-energized in platform mode.	• Check if either function is active, if Yes; Refer problem to a qualified JLG mechanic.

2-3 Ground Controls

DTC	FAULT MESSAGE	DESCRIPTION	CHECK
231	FUNCTION PROBLEM - LIFT PERMANENTLY SELECTED	The ground control box lift switch was closed up or down, during power-up in ground mode.	• Check if the lift switch is obstructed or jammed. Refer problem to a qualified JLG mechanic.
232	GROUND LIFT UP / DOWN ACTIVE TOGETHER	The lift up / down inputs are closed simultaneously.	• Check if the lift switch is obstructed or jammed. Refer problem to a qualified JLG mechanic.
233	FUNCTION PROBLEM - BRAKE RELEASE PERMANENTLY SELECTED	The manual brake release switch was closed during power-up.	• Check if the brake release switch is obstructed or jammed. Refer problem to a qualified JLG mechanic.

Downloaded from www.Manualslib.com manuals search engine

https://truckmanualshub.com/

2-5 Function Prevented

DTC	FAULT MESSAGE	DESCRIPTION	CHECK
251	ELEV ANGLE SENSOR FAULTY - VOLTAGE OUT OF RANGE	There is a problem with the elevation angle sensor input.	• Check that the platform elevation sensor is securely mounted and undamaged. Refer problem to a qualified JLG mechanic.
252	ELEV ANGLE SENSOR HAS NOT BEEN CALIBRATED	The elevation angle sensor has not been calibrated.	Refer problem to a qualified JLG mechanic.
253	DRIVE PREVENTED - CHARGER CONNECTED	Driving is not possible while the vehicle is charging.	• Check if the charger is connected to off board power source and disconnect if desired. Refer problem to a qualified JLG mechanic.
254	DRIVE & LIFT UP PREVENTED - CHARGER CONNECTED	Drive or lift is not possible while the vehicle is charging AND is configured to prevent all motion.	• Check if the charger is connected to off board power source and disconnect if desired. Refer problem to a qualified JLG mechanic.
255	PLATFORM OVERLOADED	The load sensing system measured platform load is excessive.	• Remove excess weight from the platform. • Check that the platform is not caught on something, preventing up or down movement. Refer problem to a qualified JLG mechanic.
256	DRIVE PREVENTED - POTHOLE NOT ENGAGED	Driving is not possible while elevated since the pot-hole protection system failed to deploy.	• Check for obstructions or mechanical problems around the pot-hole protection mechanisms. • Check that the PHP switches are securely mounted. Refer problem to a qualified JLG mechanic.

Downloaded from www.Manualslib.com manuals search engine

https://truckmanualshub.com/

2-5 Function Prevented

DTC	FAULT MESSAGE	DESCRIPTION	CHECK
257	ELEV PROX PERMANENTLY CLOSED - CHECK PROX AND ANGLE ADJUSTMENT	The elevation proximity switch shows the platform to be stowed, while the elevation angle sensor shows the platform to be raised. The elevation proximity switch is only found on certain older lifts. This switch is not used on current machines so this DTC should not occur.	Refer problem to a qualified JLG mechanic.
258	DRIVE & LIFT PREVENTED - BRAKES ELECTRICALLY RELEASED FOR TOWING	Manual brake release mode is activated with the switch in the battery box near the ground control box. Drive or lift is not possible.	• Push manual brake release switch again or cycle power to clear manual brake release mode. • Check if the brake release switch is obstructed or jammed. Refer problem to a qualified JLG mechanic.
259	MODEL CHANGED - HYDRAULICS SUSPENDED - CYCLE EMS	The model selection has been changed.	Refer problem to a qualified JLG mechanic.
2510	DRIVE PREVENTED - BRAKES NOT RELEASING	There is a problem with the drive or brake system.	• Ensure vehicle is not stuck on something preventing movement. Refer problem to a qualified JLG mechanic.
2511	ELEV ANGLE SENSOR FAULTY - NOT MOUNTED	The input voltage from the elevation angle sensor indicates the elevation angle sensor is not mounted.	• Check that the elevation angle sensor is securely mounted. Refer problem to a qualified JLG mechanic.
2512	ELEV ANGLE SENSOR NOT DETECTING CHANGE	The input voltage from the elevation angle sensor did not change while vehicle was lifting up.	• Check that the elevation angle sensor is securely mounted. Refer problem to a qualified JLG mechanic.

Downloaded from www.Manualslib.com manuals search engine

https://truckmanualshub.com/

3-1 Line Contactor Open Circuit

DTC	FAULT MESSAGE	DESCRIPTION	CHECK
311	OPEN CIRCUIT LINE CONTACTOR	There is a problem with the line contactor.	Refer problem to a qualified JLG mechanic.
312	CONTACTOR DRIVER PERMANENTLY OFF	There is a problem with the power module line contactor control.	Refer problem to a qualified JLG mechanic.

3-2 Line Contactor Short Circuit

DTC	FAULT MESSAGE	DESCRIPTION	CHECK
321	LINE CONTACTOR MISWIRED ON OR WELDED	There is a problem with the line contactor.	Refer problem to a qualified JLG mechanic.
322	CONTACTOR DRIVER PERMANENTLY ON	There is a problem with the power module line contactor control.	Refer problem to a qualified JLG mechanic.
326	AUXILIARY RELAY - SHORT TO BATTERY	There is a problem with the auxiliary relay contacts or wiring.	Refer problem to a qualified JLG mechanic.

Downloaded from www.Manualslib.com manuals search engine

https://truckmanualshub.com/

3-3 Ground Output Driver

DTC	FAULT MESSAGE	DESCRIPTION	CHECK
331	BRAKE SHORT TO BATTERY	A problem has been detected in this function.	Refer problem to a qualified JLG mechanic.
332	BRAKE OPEN CIRCUIT	A problem has been detected in this function.	Refer problem to a qualified JLG mechanic.
333	LIFT UP SHORT TO BATTERY	A problem has been detected in this function.	Refer problem to a qualified JLG mechanic.
334	LIFT UP OPEN CIRCUIT	A problem has been detected in this function.	Refer problem to a qualified JLG mechanic.
335	LIFT DN SHORT TO BATTERY	A problem has been detected in this function.	Refer problem to a qualified JLG mechanic.
336	LIFT DN OPEN CIRCUIT	A problem has been detected in this function.	Refer problem to a qualified JLG mechanic.
337	STEER LEFT SHORT TO BATTERY	A problem has been detected in this function.	Refer problem to a qualified JLG mechanic.
338	STEER LEFT OPEN CIRCUIT	A problem has been detected in this function.	Refer problem to a qualified JLG mechanic.
339	STEER RIGHT SHORT TO BATTERY	A problem has been detected in this function.	Refer problem to a qualified JLG mechanic.

Downloaded from www.Manualslib.com manuals search engine

https://truckmanualshub.com/

3-3 Ground Output Driver

DTC	FAULT MESSAGE	DESCRIPTION	CHECK
3310	STEER RIGHT OPEN CIRCUIT	A problem has been detected in this function.	Refer problem to a qualified JLG mechanic.
3311	GROUND ALARM SHORT TO BATTERY	A problem has been detected in this function.	Refer problem to a qualified JLG mechanic.
3312	LEFT BRAKE SHORT TO BATTERY	A problem has been detected in this function.	Refer problem to a qualified JLG mechanic.
3313	RIGHT BRAKE SHORT TO BATTERY	A problem has been detected in this function.	Refer problem to a qualified JLG mechanic.
3314	LEFT BRAKE OPEN CIRCUIT	A problem has been detected in this function.	Refer problem to a qualified JLG mechanic.
3315	RIGHT BRAKE OPEN CIRCUIT	A problem has been detected in this function.	Refer problem to a qualified JLG mechanic.
33297	LEFT BRAKE - SHORT TO GROUND	A problem has been detected in this function.	Refer problem to a qualified JLG mechanic.
33298	STEER LEFT VALVE - SHORT TO GROUND	A problem has been detected in this function.	Refer problem to a qualified JLG mechanic.
33299	LINE CONTACTOR COIL - SHORT TO BATTERY	A problem has been detected in this function.	Refer problem to a qualified JLG mechanic.
33302	NEGATIVE SUPPLY - SHORT TO BATTERY	A problem has been detected in this function.	Refer problem to a qualified JLG mechanic.

Downloaded from www.Manualslib.com manuals search engine

https://truckmanualshub.com/

3-3 Ground Output Driver

DTC	FAULT MESSAGE	DESCRIPTION	CHECK
33303	NEGATIVE SUPPLY - SHORT TO GROUND	A problem has been detected in this function.	Refer problem to a qualified JLG mechanic.
33304	RIGHT BRAKE - SHORT TO GROUND	A problem has been detected in this function.	Refer problem to a qualified JLG mechanic.
33305	STEER RIGHT VALVE - SHORT TO GROUND	A problem has been detected in this function.	Refer problem to a qualified JLG mechanic.
33406	LIFT UP VALVE - SHORT TO GROUND	A problem has been detected in this function.	Refer problem to a qualified JLG mechanic.
33407	LIFT DN VALVE - SHORT TO GROUND	A problem has been detected in this function.	Refer problem to a qualified JLG mechanic.

4-2 Thermal Limit (SOA)

DTC	FAULT MESSAGE	DESCRIPTION	CHECK
421	POWER MODULE TOO HOT - PLEASE WAIT	The power module has reached thermal cutout.	• Power down and allow to cool. • Do not operate in ambients over 140° F (60° C). Refer problem to a qualified JLG mechanic.
422	DRIVING AT CUTBACK - POWER MODULE CURRENT LIMIT	The drive portion of the power module has reached thermal limit.	Refer problem to a qualified JLG mechanic.

Downloaded from www.Manualslib.com manuals search engine

https://truckmanualshub.com/

4-2 Thermal Limit (SOA)

DTC	FAULT MESSAGE	DESCRIPTION	CHECK
423	LIFT UP AT CUTBACK - POWER MODULE CURRENT LIMIT	The lift up portion of the power module has reached thermal limit.	Refer problem to a qualified JLG mechanic.

4-4 Battery Supply

DTC	FAULT MESSAGE	DESCRIPTION	CHECK
441	BATTERY VOLTAGE TOO LOW - SYSTEM SHUTDOWN	A problem has been detected with the batteries or power module.	• Recharge batteries or check for damaged batteries. • Check battery charger function. Refer problem to a qualified JLG mechanic.
442	BATTERY VOLTAGE TOO HIGH - SYSTEM SHUTDOWN	A problem has been detected with the batteries or power module.	• May be due to improper battery charging or incorrect voltage batteries being used. Refer problem to a qualified JLG mechanic.
443	LSS BATTERY VOLTAGE TOO HIGH	A problem has been detected with the load sense system.	• May be due to improper battery charging or incorrect voltage batteries being used. Refer problem to a qualified JLG mechanic.
444	LSS BATTERY VOLTAGE TOO LOW	A problem has been detected with the load sense system.	• Recharge batteries or check for damaged batteries. Refer problem to a qualified JLG mechanic.
446 4421 4422	LOGIC SUPPLY VOLTAGE OUT OF RANGE	The System Module logic supply voltage was measured to be out of normal operating range.	• Check for severely discharged battery, loose cables or for damaged battery; otherwise; • Refer problem to a qualified JLG mechanic.

Downloaded from www.Manualslib.com manuals search engine

https://truckmanualshub.com/

6-6 Communication

DTC	FAULT MESSAGE	DESCRIPTION	CHECK
661	CANBUS FAILURE - POWER MODULE	The control system failed to receive messages from the power module.	Refer problem to a qualified JLG mechanic.
662	CANBUS FAILURE - PLATFORM MODULE	In platform mode, the control system failed to receive messages from the platform board.	Refer problem to a qualified JLG mechanic.
663	CANBUS FAILURE - LOAD SENSING SYSTEM MODULE	With load sensing system enabled, the control system failed to receive messages from the load sensing system module.	Refer problem to a qualified JLG mechanic.
664	CANBUS FAILURE - ACCESSORY MODULE	An accessory module has stopped communication.	• See accessory module documentation for troubleshooting. Refer problem to a qualified JLG mechanic.
6635	CANBUS FAILURE - CHASSIS TILT SENSOR	Machine control system lost communication with the machines' tilt sensor.	Refer problem to a qualified JLG mechanic.

6-7 Accessory

DTC	FAULT MESSAGE	DESCRIPTION	CHECK
671	ACCESSORY FAULT	An accessory module is reporting a fault.	• See accessory module documentation for troubleshooting. Refer problem to a qualified JLG mechanic.

Downloaded from www.Manualslib.com manuals search engine

https://truckmanualshub.com/

7-7 Electric Motor

DTC	FAULT MESSAGE	DESCRIPTION	CHECK
771	OPEN CIRCUIT DRIVE MOTOR WIRING	The power module detected a problem in the drive motors' power circuit wiring.	Refer problem to a qualified JLG mechanic.
772	STALLED TRACTION MOTOR OR POWER WIRING ERROR	The power module detected a problem in the drive motors' power circuit wiring.	Refer problem to a qualified JLG mechanic.
773	CAPACITOR BANK FAULT - CHECK POWER CIRCUITS	The power module detected a problem in the pump or drive motors' power circuit wiring.	Refer problem to a qualified JLG mechanic.
774	SHORT CIRCUIT FIELD WIRING	The power module detected a problem in the drive motors' power circuit wiring.	Refer problem to a qualified JLG mechanic.
775	OPEN CIRCUIT FIELD WIRING	The power module detected a problem in the drive motors' power circuit wiring.	Refer problem to a qualified JLG mechanic.
776	STALLED PUMP MOTOR OR POWER WIRING ERROR	The power module detected a problem in the drive motors' power circuit wiring.	Refer problem to a qualified JLG mechanic.
777	OPEN CIRCUIT PUMP MOTOR WIRING	The power module detected a problem in the drive motors' power circuit wiring.	Refer problem to a qualified JLG mechanic.
778	TRACTION T HIGH - CHECK POWER CIRCUITS	The power module detected a problem in the drive motors' power circuit wiring.	Refer problem to a qualified JLG mechanic.
779	TRACTION T LOW - CHECK POWER CIRCUITS	The power module detected a problem in the drive motors' power circuit wiring.	Refer problem to a qualified JLG mechanic.

Downloaded from www.Manualslib.com manuals search engine

https://truckmanualshub.com/

7-7 Electric Motor

DTC	FAULT MESSAGE	DESCRIPTION	CHECK
7710	PUMP P HIGH - CHECK POWER CIRCUITS	The power module detected a problem in the drive motors' power circuit wiring.	Refer problem to a qualified JLG mechanic.
7711	PUMP P LOW - CHECK POWER CIRCUITS	The power module detected a problem in the drive motors' power circuit wiring.	Refer problem to a qualified JLG mechanic.
7741	ARMATURE BRAKING CURRENT TOO HIGH	The power module has detected excessive braking current .	This can be caused by transporting an excessive load on a steep grade.
7742	FIELD VOLTAGE IMPROPER	The power module detected a problem in the drive motors' power circuit wiring.	Recycle power on/off, if problem persists; Refer problem to a qualified JLG mechanic.

8-1 Tilt Sensor

DTC	FAULT MESSAGE	DESCRIPTION	CHECK
811	TILT SENSOR NOT CALIBRATED	The tilt sensor calibration has not been performed.	Refer problem to a qualified JLG mechanic.
812	NO DATA FROM TILT SENSOR - NOT CONNECTED OR FAULTY	No signal from tilt sensor.	Refer problem to a qualified JLG mechanic.

Downloaded from www.Manualslib.com manuals search engine

https://truckmanualshub.com/

8-2 Platform Load Sense

DTC	FAULT MESSAGE	DESCRIPTION	CHECK
821	LSS CELL #1 ERROR	A problem has been detected with the load sense system.	Refer problem to a qualified JLG mechanic.
822	LSS CELL #2 ERROR	A problem has been detected with the load sense system.	Refer problem to a qualified JLG mechanic.
823	LSS CELL #3 ERROR	A problem has been detected with the load sense system.	Refer problem to a qualified JLG mechanic.
824	LSS CELL #4 ERROR	A problem has been detected with the load sense system.	Refer problem to a qualified JLG mechanic.
825	LSS HAS NOT BEEN CALIBRATED	The load sensing system module has not been calibrated	Refer problem to a qualified JLG mechanic.

9-9 Hardware

DTC	FAULT MESSAGE	DESCRIPTION	CHECK
991	LSS WATCHDOG RESET	A problem has been detected with the load sense system.	Refer problem to a qualified JLG mechanic.
992	LSS EEPROM ERROR	A problem has been detected with the load sense system.	Refer problem to a qualified JLG mechanic.
993	LSS INTERNAL ERROR - PIN EXCITA-TION	A problem has been detected with the load sense system.	Refer problem to a qualified JLG mechanic.

Downloaded from www.Manualslib.com manuals search engine

https://truckmanualshub.com/

9-9 Hardware

DTC	FAULT MESSAGE	DESCRIPTION	CHECK
994	LSS INTERNAL ERROR - DRDY MISSING FROM A/D	A problem has been detected with the load sense system.	Refer problem to a qualified JLG mechanic.
995	POWER MODULE FAILURE - PERSONALITY RANGE ERROR	A problem has been detected with the power module.	Refer problem to a qualified JLG mechanic.
996	POWER MODULE FAILURE - INTERNAL ERROR	A problem has been detected with the power module.	Refer problem to a qualified JLG mechanic.
997	POWER MODULE FAILURE - CHECK POWER CIRCUITS OR MOSFET SHORT CIRCUIT	A problem has been detected with the power module.	Refer problem to a qualified JLG mechanic.
998	EEPROM FAILURE - CHECK ALL SETTINGS	A problem has been detected with the ground board.	Refer problem to a qualified JLG mechanic.
999	FUNCTION LOCKED OUT - POWER MODULE SOFTWARE VERSION IMPROPER	The power module software version is not compatible with the rest of the system.	Refer problem to a qualified JLG mechanic.
9910	FUNCTION LOCKED OUT - PLATFORM MODULE SOFTWARE VERSION IMPROPER	The platform board software version is not compatible with the rest of the system.	Refer problem to a qualified JLG mechanic.
9911	FUNCTION LOCKED OUT - LSS MODULE SOFTWARE VERSION IMPROPER	The load sensing system module software version is not compatible with the rest of the system.	Refer problem to a qualified JLG mechanic.
9912	POWER MODULE FAILURE - SYSTEM MONITOR	A problem has been detected with the power module.	Refer problem to a qualified JLG mechanic.

Downloaded from www.Manualslib.com manuals search engine

https://truckmanualshub.com/

9-9 Hardware

DTC	FAULT MESSAGE	DESCRIPTION	CHECK
9924	FUNCTIONS LOCKED OUT - MACHINE NOT CONFIGURED	A new ground board was installed but not configured.	Refer problem to a qualified JLG mechanic.

Downloaded from www.Manualslib.com manuals search engine

https://truckmanualshub.com/

9-9 Hardware

DTC	FAULT MESSAGE	DESCRIPTION	CHECK
9950 9951 9952 9953 9954 9955 9956 9957 9958 9960 9962 9963 9964 9969 9971 9970 99143 99144 99145 99146 99147 99148 99149	POWER MODULE FAILURE - INTERNAL ERROR	A problem has been detected with the power module.	Cycle machine power on /off a few times if this doesn't clear the DTC, refer problem to a qualified JLG mechanic.

Downloaded from www.Manualslib.com manuals search engine

https://truckmanualshub.com/

NOTES:

Downloaded from www.Manualslib.com manuals search engine

https://truckmanualshub.com/

SECTION 5. EMERGENCY PROCEDURES

5.1 GENERAL

This section provides information on the procedures to be followed and on the systems and controls to be used in the event an emergency situation is encountered during machine operation. Prior to operation of the machine and periodically thereafter, the entire operating manual, including this section, should be reviewed by all personnel whose responsibilities include any work or contact with the machine.

Emergency Stop Switch

These large red buttons, one located at the Ground Control Station and one at the Platform Control Station, will immediately stop the machine when depressed.

WARNING

CHECK MACHINE DAILY TO MAKE SURE EMERGENCY STOP BUTTON IS IN PLACE AND THAT GROUND CONTROL INSTRUCTIONS ARE IN PLACE AND LEGIBLE.GROUND CONTROL STATION

The Ground Control Station is located on the left side of the machine frame. The controls on this panel provide the means for overriding the platform controls and for controlling the platform lift up and down functions from the ground. Place the power select switch in the ground position and operate the lift switch to lift up or down.

Manual Descent

The manual descent valve is used, in the event of total power failure, to lower the platform using gravity. The manual descent handle is located at the rear of the machine, above the left rear wheel. The handle is connected, by a cable, to the manual descent valve on the lift cylinder. Pulling the manual descent handle opens the valve spool, lowering the platform.

Downloaded from www.Manualslib.com manuals search engine

https://truckmanualshub.com/

5.2 EMERGENCY OPERATION

Use of Ground Controls

NOTICE

KNOW HOW TO USE THE GROUND CONTROLS IN AN EMERGENCY SITUATION.

Ground personnel must be thoroughly familiar with the machine operating characteristics and the ground control functions. Training should include operation of the machine, review and understanding of this section and hands-on operation of the controls in simulated emergencies.

Operator Unable to Control Machine

1. Operate the machine from ground controls ONLY with the assistance of other personnel and equipment (cranes, overhead hoists, etc.) as may be required to safely remove the danger or emergency condition.
2. Other qualified personnel on the platform may use the platform controls. DO NOT CONTINUE OPERATION IF CONTROLS DO NOT FUNCTION NORMALLY.
3. Cranes, forklift trucks or other equipment which may be available are to be used to remove platform occupants and stabilize motion of the machine in case machine controls are inadequate or malfunction when used.

Downloaded from www.Manualslib.com manuals search engine

https://truckmanualshub.com/

Platform Caught Overhead

If the platform becomes jammed or snagged in overhead structures or equipment, do not continue operation of the machine from either the platform or the ground until the operator and all personnel are safely moved to a secure location. Only then should an attempt be made to free the platform using any necessary equipment and personnel. Do not operate controls to cause one or more wheels to leave the ground.

Righting of Tipped Machine

A forktruck of suitable capacity or equivalent equipment should be placed under the elevated side of the chassis, with a crane or other suitable lifting equipment used to lift the platform while the chassis is lowered by the forklift or other equipment.

Post-Incident Inspection

Following any incident, thoroughly inspect the machine and test all functions first from the ground controls, then from the platform controls. Do not lift above 10 feet (3 meters) until you are secure that all damage has been repaired, if required, and that all controls are operating correctly.

5.3 INCIDENT NOTIFICATION

It is imperative that JLG Industries, Inc. be notified immediately of any incident involving a JLG product. Even if no injury or property damage is evident, the Product Safety and Reliability Department at the factory should be contacted by telephone and provided with all necessary details.

Contact at 1-877-JLG-SAFE (554-7233) between the hours of 8:00 AM - 4:45 PM Eastern Standard time.

It should be noted that failure to notify the Manufacturer of an incident involving a JLG Industries product within 48 hours of such an occurrence may void any warranty consideration on that particular machine.

Downloaded from www.Manualslib.com manuals search engine

https://truckmanualshub.com/

NOTES:

Downloaded from www.Manualslib.com manuals search engine

https://truckmanualshub.com/

SECTION 6. GENERAL SPECIFICATIONS AND OPERATOR MAINTENANCE

6.1 INTRODUCTION

This section of the manual provides additional necessary information to the operator for proper operation and maintenance of this machine.

The maintenance portion of this section is intended as information to assist the machine operator to perform daily maintenance tasks only, and does not replace the more thorough Preventive Maintenance and Inspection Schedule included in the Service and Maintenance Manual.

Other Publications Available Specific to this Machine:

Service and Maintenance Manual.....3121166

Illustrated Parts Manual 3121167

Downloaded from www.Manualslib.com manuals search engine

https://truckmanualshub.com/

6.1 OPERATING SPECIFICATIONS

Table 6-1. Operating Specifications

Model	1930ES	2030ES	2630ES	2646ES	3246ES
Maximum Stowed Travel Grade (Gradeability) - Refer to Figure 4-1. on page 4-6	25%	25%	25%	25%	25%
Maximum Stowed Travel Grade (Sideslope) - Refer to Figure 4-1. on page 4-6	5°	5°	5°	5°	5°
Maximum Platform Height	18.75 ft 5.7 m	20 ft 6 m	25.5 ft 7.75 m	26 ft 7.9 m	32 ft 9.8 m
Maximum Tire Load: ANSI CE	 1365 lb (620 kg) 1540 lb (699 kg)	 1660 (755) 1835 lb (832 kg)	 1885 lb (832 kg) 1835 lb (832 kg)	 2070 lb (939 kg) 2320 lb (1052 kg)	 2070 lb (939 kg) 2320 lb (1052 kg)
Ground Bearing Pressure (ANSI)	109 psi (7.7 kg/cm^2)	81 psi (5.7 kg/cm^2)	90 psi (6.3 kg/cm^2)	87 psi (6.1 kg/cm^2)	87 psi (6.1 kg/cm^2)
Ground Bearing Pressure (CE)	8.7 kg/cm^2 (123 psi)	6.3 kg/cm^2 (90 psi)	6.3 kg/cm^2 (90 psi)	6.9 kg/cm^2 (98 psi)	6.9 kg/cm^2 (98 psi)
Maximum Drive Speed	3 mph (4.8 kmh)	3 mph (4.8 kmh)	2.75 mph (4.4 kmh)	2.5 mph (4 kmh)	2.5 mph (4 kmh)
Maximum Wind Speed	28 mph (12.5 m/s) *(Depending on model, market, and indoor/outdoor selection, see Table 6-2, Platform Capacities on page 6-5)*				

Downloaded from www.Manualslib.com manuals search engine

https://truckmanualshub.com/

Table 6-1. Operating Specifications

Model	1930ES	2030ES	2630ES	2646ES	3246ES
Maximum Horizontal Manual Side Force:					
ANSI/CSA	100 lb force (445 N)	120 lb force (533 N)	N/A	150 lb force (667 N)	N/A
ANSI/CSA (Indoor)	N/A	N/A	N/A	N/A	N/A
ANSI/CSA (Outdoor)	N/A	N/A	N/A	N/A	N/A
ANSI/CSA (Zone A)	N/A	N/A	120 lb force (533 N)	N/A	150 lb force (667 N)
ANSI/CSA (Zone B)	N/A	N/A	100 lb force (445 N)	N/A	105 lb force (467 N)
CE (Indoor)	90 lb force (400 N)	90 lb force (400 N)	90 lb force (400 N)	90 lb force (400 N)	90 lb force (400 N)
CE (Outdoor)	45 lb force (200 N)	45 lb force (200 N)	N/A	90 lb force (400 N)	45 lb force (200 N)
AUS (Indoor)	90 lb force (400 N)	90 lb force (400 N)	N/A	90 lb force (400 N)	N/A
AUS (Indoor Zone A)	N/A	N/A	90 lb force (400 N)	N/A	90 lb force (400 N)
AUS (Indoor Zone B)	N/A	N/A	90 lb force (400 N)	N/A	90 lb force (400 N)
AUS (Outdoor)	45 lb force (200 N)	45 lb force (200 N)	N/A	90 lb force (400 N)	N/A
AUS (Outdoor Zone A)	N/A	N/A	N/A	N/A	N/A
AUS (Outdoor Zone B)	N/A	N/A	N/A	N/A	45 lb force (200 N)
Maximum Hydraulic Pressure	1800 psi	1800 psi	1700 psi (single) 1950 psi (dual)	2000 psi	2000 psi
Inside Steer Angle	90°	90°	90°	90°	90°
Outside Steer Angle	69°	73°	73°	67°	67°
Electrical System Voltage (DC)	24V	24V	24V	24V	24V
Approximate Gross Machine Weight - ANSI/CSA	2685 lbs	3830 lbs	4815 lbs (single) 4750 lbs (dual)	4945 lbs	4945 lbs

Downloaded from www.Manualslib.com manuals search engine

https://truckmanualshub.com/

Table 6-1. Operating Specifications

Model	1930ES	2030ES	2630ES	2646ES	3246ES
Approximate Gross Machine Weight - CE/Australia	1495 kg	2064 kg	2198 kg (single) 2155 kg (dual)	2706 kg	2871 kg
Approximate Gross Machine Weight - Japan	1297 kg	1755 kg	2198 kg (single) 2155 kg (dual)	2257 kg	2257 kg
Ground Clearance with pot hole protection system up	3.5 in (8.9 cm)				
Ground Clearance with pot hole protection system down	1 in (2.5 cm)	.75 in (1.9 cm)			

Downloaded from www.Manualslib.com manuals search engine

https://truckmanualshub.com/

Table 6-2. Platform Capacities

MODEL	ANSI/CSA/JPN		CE				AUSTRALIAN			
			INDOOR		OUTDOOR		INDOOR		OUTDOOR	
	Max Capacity	Max Persons	Max Capacity	Max Persons	Max Capacity	Max Persons	Max Capacity	Max Persons	Max Capacity	Max Persons
1930ES	500 lb (227 kg)	2	230 kg	2	120 kg	1	230 kg	2	120 kg	1
2030ES	800 lb (363 kg)	2	360 kg	2	160 kg	1	360 kg	2	160 kg	1
2630ES single cap	500 lb (227 kg)	2	230 kg	2	N/A	N/A	230 kg	2	N/A	N/A
2630ES dual cap. to 20 ft	800 lb (363 kg)	2	360 kg	2	N/A	N/A	360 kg	2	N/A	N/A
2630ES dual cap. to 26 ft	500 lb (227 kg)	2	230 kg	2	N/A	N/A	230 kg	2	N/A	N/A
2646ES	1000 lb (454 kg)	2	450 kg	2	230 kg	2	450 kg	2	230 kg	2
3246ES to 26 ft.	Zone A 1000 lb (454 kg)	2	450kg	2	320 kg	1	450 kg	2	320 kg	1
3246ES to 32 ft.	Zone B 700 lb (317 kg)	2	320kg	2	320 kg	1	320 kg	2	320 kg	1

Downloaded from www.Manualslib.com manuals search engine

https://truckmanualshub.com/

Dimensional Data

Table 6-3. Dimensions

Model	1930ES		2030ES		2630ES		2646ES		3246ES	
Unit of Measure	feet	meter	feet	meter	feet	meter	feet	meter	feet	meter
Platform Height - Elevated	18.75	5.7	20	6	25.5	7.77	26	7.9	31.8	9.7
Platform Height - Stowed	2.9	0.9	3.6	1.1	4	1.2	4	1.2	4	1.2
Working Height	25	7.6	26	7.9	32	9.8	32	9.8	38	11.6
Overall Stowed Machine Height - Rails Up	6.5	2	7.2	2.2	7.7	2.3	7.7	2.3	7.7	2.3
Overall Stowed Machine Height - Rails Collapsed	N/A	N/A	6	1.8	6.4	1.9	6.4	1.9	6.4	1.9
Rail Height (From platform floor)	3.6	1.1	3.6	1.1	3.6	1.1	3.6	1.1	3.6	1.1
Overall Machine Width	2.5	0.8	2.5	0.8	2.5	0.8	3.7	1.2	3.7	1.2
Overall Machine Length - Deck Retracted	6	1.9	7.5	2.3	7.5	2.3	8.2	2.5	8.2	2.5
Overall Machine Length - Deck Extended	9	2.8	10.5	3.2	10.5	3.2	12.4	3.8	12.4	3.8
Platform Size - Length	6.1	1.9	7.5	2.3	7.5	2.3	8.2	2.5	8.2	2.5
Platform Size - Width	2.5	0.8	2.5	0.8	2.5	0.76	3.7	1.1	3.7	1.1
Platform Extension Length	3	0.9	3	0.9	3	0.9	4.2	1.3	4.2	1.3
Wheelbase	63	1.6	73.9	1.9	73.9	1.9	82.3	2	82.3	2

Downloaded from www.Manualslib.com manuals search engine

https://truckmanualshub.com/

Motors

Drive Motor

Type: Shunt Wound, Sepex 24V DC

Power: 0.65 Horsepower @ 3750 rpm

Hydraulic Pump/Electric Motor Assembly (All Models)

Type: Series Wound Permanent Magnet 24V DC

Power: 3kW

Batteries

Table 6-4. Battery Specifications

Voltage	6V per battery
Amp Hour (Standard Battery)	220 Amp
Amp Hour (Optional High Output Battery)	245 Amp

Downloaded from www.Manualslib.com manuals search engine

https://truckmanualshub.com/

Capacities

Table 6-5. Fluid Capacities

Model	1930ES/	2030ES/2630ES	2646ES/3246ES
Hydraulic Tank	2 Gal. (7.6 L)	2 Gal. (7.6 L)	3 Gal. (11.3 L)
Hydraulic System (Including Tank)	2.2 Gal (8.3 L)	2.8 Gal (10.6 L)	5.3 Gal (19.9 L)

Tires

Table 6-6. Tire Specifications

Model	1930ES	2030ES	2630ES	2646ES	3246ES
Size	323mm x 100mm	406 mm x 125 mm			
Max Tire Load	2500 lbs (1134 kg)	4000 lbs (1814 kg)			
Wheel Bolt Torque	105 - 120 ft lb (142-163 Nm)				

Downloaded from www.Manualslib.com manuals search engine

https://truckmanualshub.com/

6.1 CRITICAL STABILITY WEIGHTS

WARNING

DO NOT REPLACE ITEMS CRITICAL TO STABILITY, SUCH AS BATTERIES OR SOLID TIRES, WITH ITEMS OF DIFFERENT WEIGHT OR SPECIFICATION. DO NOT MODIFY UNIT IN ANY WAY TO AFFECT STABILITY.

Table 6-7. Critical Stability Weights

Component	1930 ES	2030ES	2630ES	2646ES	3246ES
Wheel and Tire Assembly (each)	22 lbs (9.8 kg)	42 lbs (19 kg)			
Wheel/Tire and Drive Assembly (each)	117 lbs (53 kg)	162 lbs (73.4 kg)			
Lift Cylinder	176 lbs(80 kg)	205 lbs (93 kg)		263 lbs (119 kg)	283 lbs (128 kg)
Batteries: (each) 220 Amp 220 Amp (used with Inverter/Charger) 245 Amp	 60 lbs (27 kg) 66 lbs (30 kg) N/A	 60 lbs (27 kg) 66 lbs (30 kg) 70 lbs (32 kg)			

Downloaded from www.Manualslib.com manuals search engine

https://truckmanualshub.com/

Lubrication

NOTE: *Aside from JLG recommendations, it is not advisable to mix oils of different brands or types, as they may not contain the same required additives or be of comparable viscosities.*

Table 6-8. Hydraulic Oil Specifications

SPECIFICATION	MOBIL DTE 11M	MOBIL EAL ENVIRONSYN 32
ISO Viscosity Grade	#15	#32
Gravity API	31.9	—
Pour Point, Max	-40°F (-40°C)	-59°F (-51°C)
Flash Point, Min.	330°F (166°C)	514°F (268°C)
VISCOSITY SPECIFICATIONS		
at 40°C	15 cSt	33.1 cSt
at 100°C	4.1 cSt	6.36 cSt
at 100°F	80 SUS	—
at 210°F	43 SUS	—
cp at -30°F	3.2	—
Viscosity Index	140	147

Downloaded from www.Manualslib.com manuals search engine

https://truckmanualshub.com/

6.1 OPERATOR MAINTENANCE

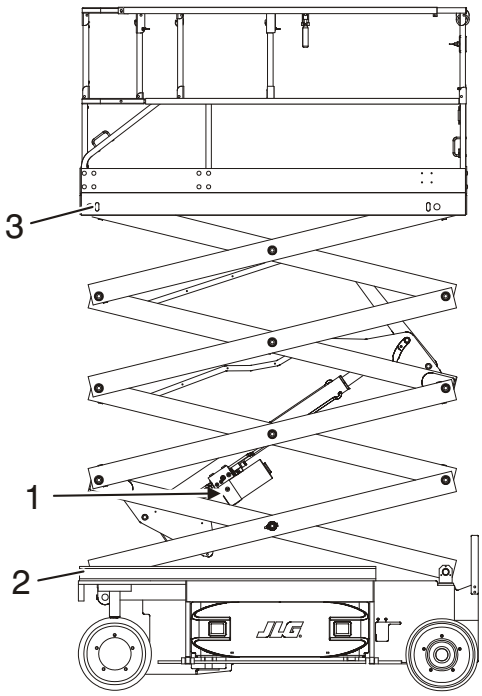

1. Hydraulic Oil
2. Lower Slide Pads
3. Upper Slide Pads

Figure 6-1. Lubrication Diagram

Downloaded from www.Manualslib.com manuals search engine

https://truckmanualshub.com/

Oil Check Procedure (1)

- Lube Point(s) - FIll Plug
- Capacity:

1930ES/2030ES/2630ES	2646ES/3246ES
2 Gal. (7.6 L)	3 Gal. (11.3 L)

- Lube - Hydraulic Oil
- Interval - Every 6 months

1. With the scissor lift on a flat and level surface and the platform empty, elevate machine and swing safety prop out of it's stowed position.
2. Continue to elevate the platform until the fill plug, located on the right side of the tank attached to the lift cylinder, is fully accessible.

CAUTION

ENSURE THE SCISSOR ARMS ARE PROPERLY SUPPORTED.

NOTE: *The 2630ES/2646ES/3246ES platforms will have to be raised higher than the 1930ES and 2030ES in order to access the oil plug.*

3. Wipe all dirt and debris from the filler plug area.
4. Slowly remove the fill plug venting any pressure that may be built up in the reservoir.
5. To check the oil level, lower platform so it rests on the safety prop.

CAUTION

THERE MAY BE UP TO 10 PSI OF PRESSURE IN THE TANK.

Downloaded from www.Manualslib.com manuals search engine

https://truckmanualshub.com/

6. With the plug removed, the oil level should be completely full, at the top of the fill port with scissor arms resting on the safety prop. from the fill port.
7. If additional oil is required, add proper grade of oil by using a funnel with a flexible spout or a plastic squeeze bottle. Fill until oil weeps out of opening.

NOTE: *Care should be taken not to introduce any impurities (dirt, water etc.) while plug is removed.*

8. Replace plug and torque to 40 ft lbs (56 Nm).
9. Any time a hydraulic component is removed or replaced, cycle the scissor arms several times and refer to steps 3 and 4 to recheck oil level.

Lower (2) & Upper Slide Pads (3)

Lube - White Lithium Grease

Interval - Every 6 months

1. With the platform empty, elevate machine and swing safety prop out of it's stowed position.

CAUTION

ENSURE THE SCISSOR ARMS ARE PROPERLY SUPPORTED.

2. Locate the Lower and Upper Slide Pads and remove all dirt and debris from the slide channel area (1, 2). Refer to Figure 6-2., Lower Slide Pad Channel.

Downloaded from www.Manualslib.com manuals search engine

https://truckmanualshub.com/

3. Apply a layer of grease along the inside and bottom of the lower slide channel (1) on both sides of the machine.

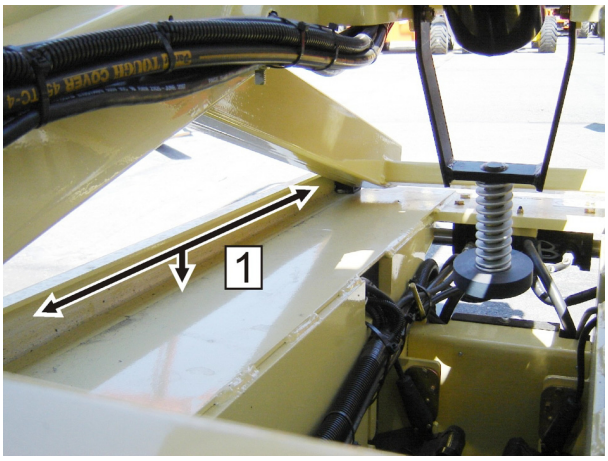

Figure 6-2. Lower Slide Pad Channel

4. Apply a layer of grease along the inside and top of the upper slide channel (2) on both sides of the machine. Refer to Figure 6-3., Upper Slide Pad Channel.

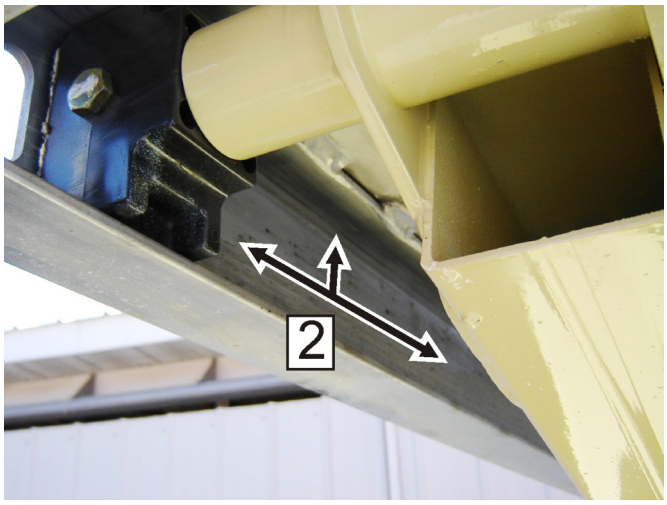

Figure 6-3. Upper Slide Pad Channel

NOTE: *Recommended lubricating intervals are based on machine operations under normal conditions. For machines used in multi-shift operations and/or exposed to hostile environments or conditions, lubrication frequencies must be increased accordingly.*

Downloaded from www.Manualslib.com manuals search engine

https://truckmanualshub.com/

6.1 TIRES AND WHEELS

Tire Wear and Damage

Inspect tires periodically for wear or damage. Tires with worn edges or distorted profiles require replacement. Tires with significant damage in the tread area or side wall, require immediate evaluation before placing the machine into service.

Wheel and Tire Replacement

Replacement wheels must have the same diameter and profile as the original. Replacement tires must be the same size and rating as the tire being replaced.

Wheel Installation

It is extremely important to apply and maintain proper wheel mounting torque.

⚠ WARNING

WHEEL NUTS MUST BE INSTALLED AND MAINTAINED AT THE PROPER TORQUE TO PREVENT LOOSE WHEELS, BROKEN STUDS, AND POSSIBLE SEPARATION OF WHEEL FROM THE AXLE. BE SURE TO USE ONLY THE NUTS MATCHED TO THE CONE ANGLE OF THE WHEEL.

Tighten the lug nuts to the proper torque to prevent wheels from coming loose. Use a torque wrench to tighten the fasteners. If you do not have a torque wrench, tighten the fasteners with a lug wrench, then immediately have a service garage or dealer tighten the lug nuts to the proper torque. Over-tightening will result in breaking the studs or permanently deforming the mounting stud holes in the wheels. The proper procedure for attaching wheels is as follows:

1. Start all nuts by hand to prevent cross threading. DO NOT use a lubricant on threads or nuts.
2. Tighten nuts in the following sequence.

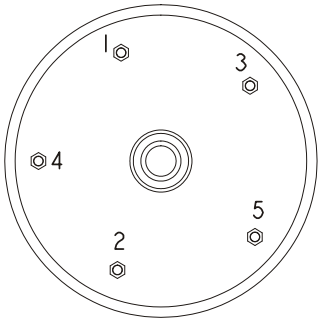

3. The tightening of the nuts should be done in stages. Following the recommended sequence, tighten nuts per wheel torque.

Downloaded from www.Manualslib.com manuals search engine

https://truckmanualshub.com/

Table 6-9. Wheel Torque Chart

TORQUE SEQUENCE		
1st Stage	2nd Stage	3rd Stage
20-30 ft lbs (28 - 42 Nm)	65-80 ft lbs (91 - 112 Nm)	105 - 120 ft lbs (142 - 163 Nm)

4. Wheel nuts should be torqued after the first 50 hours of operation and after each wheel removal. Check torque every 3 months or 150 hours of operation.

6.1 SUPPLEMENTAL INFORMATION

The following information is provided in accordance with the requirements of the European Machinery Directive 2006/42/EC and is only applicable to CE machines.

For electric powered machines, the equivalent continuous A-Weighted sound pressure level at the work platform is less than 70dB(A).

For combustion engine powered machines, guaranteed Sound Power Level (LWA) per European Directive 2000/ 14/EC (Noise Emission in the Environment by Equipment for Use Outdoors) based on test methods in accordance with Annex III, Part B, Method 1 and 0 of the directive, is 109 dB.

The vibration total value to which the hand-arm system is subjected does not exceed 2,5 m/s2. The highest root mean square value of weighted acceleration to which the whole body is subjected does not exceed 0,5 m/s2.

Downloaded from www.Manualslib.com manuals search engine

https://truckmanualshub.com/

SECTION 7. INSPECTION AND REPAIR LOG

Machine Serial Number _____

Table 7-1. Inspection and Repair Log

Date	Comments

Downloaded from www.Manualslib.com manuals search engine

https://truckmanualshub.com/

Table 7-1. Inspection and Repair Log

Date	Comments

Downloaded from www.Manualslib.com manuals search engine

Downloaded from www.Manualslib.com manuals search engine

https://truckmanualshub.com/

An Oshkosh Corporation Company

TRANSFER OF OWNERSHIP

To Product Owner:

If you now own but ARE NOT the original purchaser of the product covered by this manual, we would like to know who you are. For the purpose of receiving safety-related bulletins, it is very important to keep JLG Industries, Inc. updated with the current ownership of all JLG products. JLG maintains owner information for each JLG product and uses this information in cases where owner notification is necessary.

Please use this form to provide JLG with updated information with regard to the current ownership of JLG products. Please return completed form to the JLG Product Safety & Reliability Department via facsimile or mail to address as specified below.

Thank You,

Product Safety & Reliability Department

JLG Industries, Inc.

13224 Fountainhead Plaza
Hagerstown, MD 21742
USA
Telephone: +1-717-485-6591
Fax: +1-301-745-3713

NOTE: Leased or rented units should not be included on this form.

Mfg. Model: _____

Serial Number: _____

Previous Owner: _____

Address: _____

_____

Country: _____ **Telephone: (_____)** _____

Date of Transfer: _____

Current Owner: _____

Address: _____

_____

Country: _____ **Telephone: (_____)** _____

Who in your organization should we notify?

Name: _____

Title:_____

https://truckmanualshub.com/

PROPOSITION 65 WARNING

- **Battery posts, terminals and related accessories contain lead and lead compounds, chemicals known to the State of California to cause cancer and reproductive harm.**
- **Batteries also contain other chemicals known to the State of California to cause cancer.**
- **Wash hands after handling.**

Downloaded from www.Manualslib.com manuals search engine

https://truckmanualshub.com/

An Oshkosh Corporation Company

Corporate Office
JLG Industries, Inc.
1 JLG Drive
McConnellsburg PA. 17233-9533
USA
(717) 485-5161
(717) 485-6417

JLG Worldwide Locations

JLG Industries (Australia)
P.O. Box 5119
11 Bolwarra Road
Port Macquarie
N.S.W. 2444
Australia
+61 2 65 811111
+61 2 65813058

JLG Latino Americana Ltda.
Rua Eng. Carlos Stevenson,
80-Suite 71
13092-310 Campinas-SP
Brazil
+55 19 3295 0407
+55 19 3295 1025

JLG Industries (UK) Ltd
Bentley House
Bentley Avenue
Middleton
Greater Manchester
M24 2GP - England
+44 (0)161 654 1000
+44 (0)161 654 1001

JLG France SAS
Z.I. de Baulieu
47400 Fauillet
France
+33 (0)5 53 88 31 70
+33 (0)5 53 88 31 79

JLG Deutschland GmbH
Max-Planck-Str. 21
D - 27721 Ritterhude - Ihlpohl
Germany
+49 (0)421 69 350 20
+49 (0)421 69 350 45

JLG Equipment Services Ltd.
Rm 1107 Landmark North
39 Lung Sum Avenue
Sheung Shui N. T.
Hong Kong
(852) 2639 5783
(852) 2639 5797

JLG Industries (Italia) s.r.l.
Via Po. 22
20010 Pregnana Milanese - MI
Italy
+39 029 359 5210
+39 029 359 5845

Oshkosh-JLG Singapore Technology
Equipment Pte Ltd
29 Tuas Ave 4,
Jurong Industrial Estate
Singapore, 639379
+65-6591 9030
+65-6591 9031

Plataformas Elevadoras
JLG Iberica, S.L.
Trapadella, 2
P.I. Castellbisbal Sur
08755 Castellbisbal, Barcelona
Spain
+34 93 772 4700
+34 93 771 1762

JLG Sverige AB
Enkopingsvagen 150
Box 704
SE - 176 27 Jarfalla
Sweden
+46 (0)850 659 500
+46 (0)850 659 534

Downloaded from www.Manualslib.com manuals search engine