https://truckmanualshub.com/

WSM

WORKSHOP MANUAL

TRACTOR,FRONT LOADER, BACKHOE,ROTARY MOWER

BX23S,LA340,BT603, RCK54D,RCK60D, RCK54,RCK60B

Kubota

KiSC issued 03, 2017 A

https://truckmanualshub.com/

TO THE READER

This Workshop Manual tells the servicing personnel about the mechanism, servicing and maintenance of *BX23S*. It contains 4 parts: "Information", "General", "Mechanism", and "Servicing".

Information

This section primarily contains information below.

- Safety first
- Safety decal
- Specifications
- Dimensions

General

This section primarily contains information below.

- Engine identification
- Model identification
- General precautions
- Maintenance check list
- Check and maintenance
- Special tools

Mechanism

This section contains information on the structure and the function of the unit. Before you continue with the subsequent sections, make sure that you read this section.

Servicing

This section primarily contains information below.

- Troubleshooting
- Servicing specifications
- Tightening torques
- Checking, disassembling and servicing

All illustrations, photographs and specifications contained in this manual are of the newest information available at the time of publication.

Kubota reserves the right to change all information at any time without notice.

Since this manual includes many models, information or illustrations and photographs can show more than one model.

March, 2017

© KUBOTA Corporation

https://truckmanualshub.com/

CONTENTS

1. INFORMATION

SAFETY FIRST 1-1
1. Safety first 1-1
2. Before you start service 1-2
3. Start safely 1-2
4. Operate safely 1-2
5. Protect against high pressure spray 1-3
6. Avoid hot exhaust 1-3
7. Exhaust filter cleaning 1-3
8. Prevent a fire 1-4
9. Keep a good airflow in the work area 1-4
10. Discard fluids correctly 1-4
11. Prevent acid burns 1-4
12. Prepare for emergencies 1-5
SAFETY LABEL 1-7
1. Safety labels for BX tractor 1-7
2. Safety labels for mower 1-12
3. Safety labels for loader 1-13
4. Safety labels for backhoe 1-15
SPECIFICATIONS 1-17
1. BX tractor specifications 1-17
2. Mower specifications 1-19
3. Loader specifications 1-20
3.1 Loader specifications 1-20
3.2 Bucket specifications 1-21
3.3 Dimensional specifications of loader 1-22
3.4 Operational specifications of loader 1-23
4. Backhoe specifications 1-25
4.1 Backhoe specifications 1-25
4.2 Backhoe dimensions 1-26
4.3 Backhoe lift capacity 1-27
TRAVELING SPEEDS 1-29
DIMENSIONS 1-31

2. GENERAL

IDENTIFICATION 2-1
1. Tractor identification 2-1
1.1 Checking serial number and hour meter 2-1
1.2 Cylinder number 2-1
2. Checking mower identification 2-2
3. Checking loader identification 2-2
4. Checking backhoe identification 2-2
GENERAL PRECAUTIONS 2-3
HANDLING PRECAUTIONS FOR ELECTRICAL PARTS AND WIRING 2-5
LUBRICANTS, FUEL AND COOLANT 2-7
1. BX tractor 2-7
1.1 Lubricants, fuel, and coolant 2-7
1.1.1 Fuel 2-8
1.1.2 Engine oil 2-8
1.1.3 Transmission oil 2-8
1.2 Overview of biodiesel fuel (BDF) 2-9
2. Mower 2-11
2.1 Lubricants 2-11
TIGHTENING TORQUES 2-13

https://truckmanualshub.com/

1. General use screws, bolts and nuts 2-13
2. Stud bolts 2-13
3. Metric screws, bolts and nuts 2-14
4. American standard screws, bolts and nuts with UNC or UNF threads 2-14
5. Plugs 2-14
6. Adapters, elbows and others 2-15
MAINTENANCE CHECK LIST 2-17
1. BX tractor service intervals 2-17
2. Mower service intervals 2-19
CHECK AND MAINTENANCE 2-21
1. Periodic service 2-21
1.1 Opening bonnet 2-21
1.2 Daily check 2-21
1.2.1 Walk around inspection 2-21
1.2.2 Checking fuel gauge and refueling 2-21
1.2.3 Checking engine oil level 2-22
1.2.4 Checking transmission fluid level 2-22
1.2.5 Checking coolant level 2-23
1.2.6 Cleaning panel and radiator screen 2-23
1.2.7 Checking brake pedal 2-24
1.2.8 Checking gauges, meters, and Easy Checker™ 2-24
1.2.9 Checking head light, hazard light, and tail light 2-24
1.2.10 Checking seat belt and ROPS 2-24
1.2.11 Checking and cleaning electrical wiring and battery cables 2-24
1.2.12 Checking movable parts 2-25
1.3 Check points of initial 50 hours 2-25
1.3.1 Changing engine oil 2-25
1.3.2 Replacing engine oil filter 2-25
1.3.3 Replacing transmission oil filter 2-26
1.3.4 Changing transmission fluid 2-26
1.3.5 Cleaning transmission strainer 2-27
1.4 Check points of every 50 hours 2-27
1.4.1 Greasing 2-27
1.4.2 Checking engine start system 2-29
1.4.3 Checking operator presence control (OPC) system 2-29
1.4.4 Checking wheel bolt torque 2-30
1.4.5 Cleaning lock lever shaft 2-30
1.5 Check points of every 100 hours 2-30
1.5.1 Checking battery condition 2-30
1.5.2 Cleaning air cleaner element 2-32
1.5.3 Checking fuel filter 2-32
1.5.4 Adjusting fan belt tension 2-33
1.5.5 Adjusting HST neutral spring 2-33
1.5.6 Adjusting brake pedal 2-34
1.6 Check point of every 200 hours 2-34
1.6.1 Replacing engine oil filter 2-34
1.6.2 Changing engine oil 2-35
1.6.3 Replacing transmission oil filter 2-35
1.6.4 Adjusting toe-in 2-36
1.7 Check points of every 400 hours 2-36
1.7.1 Adjusting front axle pivot 2-36
1.7.2 Changing transmission fluid 2-37
1.7.3 Cleaning transmission strainer 2-38
1.7.4 Changing front axle case oil 2-38
1.7.5 Replacing fuel filter element 2-38
1.8 Check points of every 800 hours 2-39
1.8.1 Adjusting engine valve clearance 2-39
1.9 Check points of every 1000 hours or 1 year 2-39

https://truckmanualshub.com/

1.9.1 Replacing air cleaner element 2-39
1.10 Check points of every 1500 hours 2-39
1.10.1 Checking injection pressure of fuel injection nozzle 2-39
1.11 Check points of every 2000 hours or 2 years 2-39
1.11.1 Flushing cooling system and changing coolant 2-39
1.11.2 Antifreeze 2-40
1.12 Check points of every 3000 hours 2-41
1.12.1 Checking injection pump 2-41
1.13 Check points of every 1 year 2-41
1.13.1 Checking intake air line 2-41
1.13.2 Checking radiator hoses and hose clamps 2-41
1.13.3 Checking power steering line 2-41
1.13.4 Checking fuel lines 2-42
1.13.5 Checking engine breather hose 2-42
1.14 Check points of every 4 years 2-43
1.14.1 Replacing radiator hose 2-43
1.14.2 Replacing fuel hose 2-43
1.14.3 Replacing power steering hose 2-43
1.14.4 Replacing intake air line 2-43
1.14.5 Replacing engine breather hose 2-43
1.15 Service as required 2-43
1.15.1 Bleeding fuel system 2-43
1.15.2 Replacing fuse 2-43
1.15.3 Replacing light bulb 2-44
2. Mower 2-44
2.1 Check points of daily or each use 2-44
2.1.1 Retightening mower blade screw 2-44
2.1.2 Checking mower blade 2-45
2.1.3 Checking mower belt 2-45
2.1.4 Checking gear box oil level 2-45
2.1.5 Greasing spindle shafts, belt tension pivot and tension pulley 2-46
2.1.6 Greasing front and rear anti-scalp rollers 2-46
2.1.7 Greasing universal joint 2-46
2.2 Check points of initial 50 hours 2-47
2.2.1 Changing gear box oil 2-47
2.3 Check point of every 150 hours 2-47
2.3.1 Changing gear box oil 2-47
2.4 Check points of every 1 year 2-47
2.4.1 Checking gear box oil seal 2-47
2.5 Check point of every 4 years 2-48
2.5.1 Replacing gear box oil seal 2-48
3. Front loader 2-48
3.1 Check points of daily or each use 2-48
3.1.1 Checking transmission fluid level 2-48
3.1.2 Checking hydraulic hoses 2-48
3.2 Check points of every 10 hours 2-49
3.2.1 Greasing loader 2-49
3.3 Check points of every 50 hours 2-49
3.3.1 Checking torque of main frame bolt and nut 2-49
4. Backhoe 2-49
4.1 Check points of daily or each use 2-49
4.1.1 Checking transmission fluid level 2-49
4.1.2 Checking hydraulic hoses 2-49
4.1.3 Checking backhoe mounting pin 2-50
4.2 Check points of every 10 hours 2-50
4.2.1 Greasing backhoe 2-50
4.3 Check points of every 50 hours 2-51
4.3.1 Checking torque sub frame bolt and nut 2-51

https://truckmanualshub.com/

TIRES, WHEELS, AND BALLAST 2-53
1. Tires 2-53
1.1 Inflation pressure of tires 2-53
1.2 Dual tires 2-53
2. Wheel tread 2-53
2.1 Front wheels 2-54
2.2 Rear wheels 2-54
3. Ballast 2-55
3.1 Front ballast 2-55
3.2 Rear ballast 2-55
IMPLEMENT LIMITATIONS 2-57
1. Implement limitation tables 2-57
SPECIAL TOOLS 2-61
1. Special tools for engine 2-61
1.1 Special use puller set 2-61
1.2 Diesel engine compression tester (for injection nozzle) 2-61
1.3 Nozzle tester 2-61
1.4 Injection pump pressure tester 2-61
1.5 Valve guide replacing tool 2-62
1.6 Bushing replacing tool 2-63
1.7 Flywheel stopper 2-64
1.8 Crankshaft bearing 1 replacing tool 2-64
2. Special tools for tractor 2-65
2.1 Tie-rod end lifter 2-65
2.2 Independent PTO clutch spring compression tool 2-65
2.3 Disassembling and assembling stand (1/2) 2-66
2.4 Disassembling and assembling stand (2/2) 2-68
2.5 Check and high pressure relief valve assembly tool 2-70

3. ENGINE

MECHANISM 3-1
1. Engine body 3-1
1.1 Function of cylinder block 3-1
1.2 Function of closed breather 3-1
1.3 Function of half-floating head cover 3-1
1.4 Function of piston 3-2
1.5 Function of piston ring 3-2
1.6 Function of connecting rod 3-2
1.7 Function of crankshaft 3-2
1.8 Function of camshaft 3-3
1.9 Function of rocker arm 3-3
1.10 Function of flywheel 3-3
1.11 Function of timing gears 3-4
2. Lubricating system 3-5
2.1 Overview of lubricating system 3-5
2.2 Function of oil strainer 3-7
2.3 Function of oil pump 3-7
2.4 Function of oil filter 3-7
2.5 Function of relief valve 3-8
2.6 Function of oil pressure switch 3-8
3. Cooling system 3-9
3.1 Overview of cooling system 3-9
3.2 Function of water pump 3-11
3.3 Function of radiator 3-11
3.4 Function of radiator cap 3-11
4. Fuel system 3-12
4.1 Overview of fuel system 3-12
4.2 Function of fuel filter 3-12

https://truckmanualshub.com/

4.3 Function of fuel feed pump 3-12
4.4 Function of injection nozzle 3-12
SERVICING 3-15
1. Troubleshooting for engine 3-15
2. Servicing specifications for engine 3-19
3. Tightening torques for engine 3-23
4. Checking and adjusting 3-24
4.1 Engine body 3-24
4.1.1 Checking compression pressure 3-24
4.1.2 Checking valve clearance 3-24
4.2 Lubricating system 3-25
4.2.1 Checking engine oil pressure 3-25
4.3 Cooling system 3-26
4.3.1 Checking fan belt tension 3-26
4.3.2 Checking fan belt damage and wear 3-26
4.3.3 Checking radiator cap air leakage 3-26
4.3.4 Checking radiator water leakage 3-27
4.3.5 Checking thermostat valve opening temperature 3-27
4.4 Fuel system 3-28
4.4.1 Checking injection timing 3-28
4.4.2 Checking fuel tightness of pump element 3-29
4.4.3 Checking fuel tightness of delivery valve 3-29
4.4.4 Checking nozzle spraying condition 3-29
4.4.5 Checking fuel injection pressure 3-30
4.4.6 Checking valve seat tightness 3-30
4.4.7 Checking nozzle holder 3-31
5. Disassembling and assembling 3-31
5.1 Separating engine 3-31
5.1.1 Draining engine oil 3-31
5.1.2 Removing battery 3-32
5.1.3 Removing bonnet 3-33
5.1.4 Disconnecting wiring harness and ground cables 3-33
5.1.5 Disconnecting fuel hoses 3-34
5.1.6 Disconnecting accelerator wire 3-34
5.1.7 Disconnecting propeller shaft assembly 3-35
5.1.8 Separating engine 3-35
5.1.9 Draining coolant and removing outer engine parts 3-36
5.2 Disassembling the engine 3-36
5.2.1 Cylinder head and valve 3-36
5.2.2 Gear case and timing gears 3-40
5.2.3 Piston and connecting rod 3-44
5.2.4 Flywheel and crankshaft 3-46
6. Servicing 3-48
6.1 Cylinder head and valve 3-48
6.1.1 Checking top clearance 3-48
6.1.2 Checking cylinder head surface flatness 3-48
6.1.3 Checking cylinder head flaw 3-49
6.1.4 Checking valve recessing 3-49
6.1.5 Checking clearance between valve stem and valve guide 3-49
6.1.6 Replacing valve guide 3-50
6.1.7 Checking valve seating 3-51
6.1.8 Correcting valve 3-51
6.1.9 Correcting valve seat 3-51
6.1.10 Lapping valve 3-52
6.1.11 Checking free length and tilt of valve spring 3-52
6.1.12 Checking valve spring setting load 3-52
6.1.13 Checking oil clearance between rocker arm and rocker arm shaft 3-53
6.1.14 Checking push rod alignment 3-53

https://truckmanualshub.com/

6.1.15 Checking oil clearance between tappet and tappet guide bore 3-53
6.2 Timing gears, camshaft and governor gear 3-54
6.2.1 Checking timing gear backlash 3-54
6.2.2 Checking idle gear 1 side clearance 3-54
6.2.3 Checking camshaft side clearance 3-54
6.2.4 Checking camshaft alignment 3-55
6.2.5 Checking cam height 3-55
6.2.6 Checking oil clearance of camshaft journal 3-55
6.2.7 Checking oil clearance between idle gear 1 shaft and idle gear bushing 3-56
6.2.8 Replacing idle gear bushing 3-56
6.3 Piston and connecting rod 3-56
6.3.1 Checking piston pin bore I.D. 3-56
6.3.2 Checking oil clearance between piston pin and small end bushing 3-56
6.3.3 Replacing small end bushing 3-57
6.3.4 Checking connecting rod alignment 3-57
6.3.5 Checking piston ring gap 3-57
6.3.6 Checking clearance between piston ring and piston ring groove 3-58
6.4 Crankshaft 3-58
6.4.1 Checking crankshaft side clearance 3-58
6.4.2 Checking crankshaft alignment 3-59
6.4.3 Checking oil clearance between crankpin and crankpin bearing 3-59
6.4.4 Checking oil clearance between crankshaft journal and crankshaft bearing 1 3-60
6.4.5 Replacing crankshaft bearing 1 3-61
6.4.6 Checking oil clearance between crankshaft journal and crankshaft bearing 2 and crankshaft bearing 3 3-62
6.5 Cylinder 3-63
6.5.1 Checking cylinder wear 3-63
6.5.2 Correcting cylinder (Oversize) 3-63
6.6 Oil pump 3-64
6.6.1 Checking rotor lobe clearance 3-64
6.6.2 Checking clearance between outer rotor and pump body 3-64
6.6.3 Checking clearance between rotor and cover 3-64
6.7 Relief valve spring 3-65
6.7.1 Checking relief valve 3-65

4. TRANSAXLE

MECHANISM 4-1
1. Structure of transaxle 4-1
2. Traveling system 4-2
2.1 Hydrostatic transmission 4-2
2.1.1 Structure of hydrostatic transmission 4-2
2.1.2 Oil flow of hydrostatic transmission 4-3
2.1.3 Structure of HST control linkage 4-8
2.1.4 Speed set linkage 4-9
2.2 Range gear shift section 4-12
2.2.1 Structure of range gear shift 4-12
2.3 Front wheel drive section 4-13
2.3.1 Structure of front wheel drive 4-13
2.4 Differential gear section 4-14
2.4.1 Structure of differential gears 4-14
2.4.2 Structure of differential lock 4-16
2.5 Brake section 4-17
2.5.1 Structure of brake system 4-17
3. PTO system 4-19
3.1 Structure of PTO system 4-19
3.1.1 Function of PTO clutch relief valve 4-20
3.1.2 Engaged function of PTO clutch 4-20
3.1.3 Disengaged function of PTO clutch 4-20

https://truckmanualshub.com/

3.2 Structure of mid and rear PTO 4-21
4. Others 4-22
4.1 Hydraulic pump drive gear section 4-22
4.1.1 Structure of hydraulic pump drive gear 4-22
SERVICING 4-23
1. Troubleshooting for transaxle 4-23
2. Servicing specifications for transaxle 4-27
3. Tightening torques for transaxle 4-28
4. Checking and adjusting 4-29
4.1 Adjusting maximum speed 4-29
4.2 Adjusting HST neutral position 4-29
4.3 Checking and adjusting HST neutral spring (dynamic braking) 4-30
4.4 Checking charge relief pressure 4-31
4.5 Checking high relief pressure (Forward) 4-32
4.6 Checking high relief pressure (Reverse) 4-33
4.7 Readjusting relief valve (When HST does not work due to its loose hexagon socket head screw) 4-33
4.8 Checking PTO clutch operating pressure 4-34
4.9 Adjusting brake pedal free travel 4-35
5. Disassembling and assembling 4-35
5.1 Separating transaxle 4-35
5.1.1 Draining transmission fluid 4-35
5.1.2 Removing battery 4-36
5.1.3 Removing lift rod and lower link 4-36
5.1.4 Removing ROPS 4-37
5.1.5 Removing seat 4-37
5.1.6 Removing step 4-37
5.1.7 Removing fender 4-38
5.1.8 Removing fuel tank 4-38
5.1.9 Removing rear wheel 4-39
5.1.10 Removing fender center stay 4-39
5.1.11 Removing fender bracket and hitch plate 4-39
5.1.12 Removing transaxle assembly 4-40
5.1.13 Removing brake pedal 4-41
5.1.14 Removing propeller shaft 4-41
5.1.15 Removing differential lock pedal 4-41
5.1.16 Removing speed control pedal, HST damper, and cruise rod 4-42
5.2 Hydrostatic transmission 4-42
5.2.1 Removing levers and mower lift arm 4-42
5.2.2 Removing PTO clutch valve 4-43
5.2.3 Removing oil cooler cover 4-43
5.2.4 Removing center section and valve plates 4-43
5.2.5 Removing check and high pressure relief valve plug 4-44
5.2.6 Checking check and high pressure relief valve 4-44
5.2.7 Removing cylinder block 4-45
5.2.8 Removing cylinder block and piston 4-45
5.2.9 Removing swashplate and trust roller bearing 4-46
5.2.10 Removing 4WD detent ball 4-47
5.2.11 Removing neutral arm and trunnion arm 4-47
5.3 Hydraulic cylinder 4-47
5.3.1 Removing hydraulic cylinder 4-47
5.4 Transaxle shafts 4-48
5.4.1 Removing transaxle case front cover 4-48
5.4.2 Removing hydraulic pump assembly 4-49
5.4.3 Removing rear PTO cover assembly 4-50
5.4.4 Disassembling rear axle (L.H.) 4-50
5.4.5 Removing rear axle case (R.H.) 4-51
5.4.6 Removing 66T final gear 4-52
5.4.7 Removing rear axle case, R.H. and brake 4-53

https://truckmanualshub.com/

5.4.8 Removing PTO clutch assembly 4-54
5.5 Assembling shafts 4-54
5.5.1 Assembling select arms and HST pump shaft (PTO clutch shaft) 4-54
5.5.2 Assembling front wheel drive shaft, shifter, spiral bevel pinion shaft and mid-PTO shaft 4-55
6. Servicing 4-56
6.1 Hydrostatic transmission 4-56
6.1.1 Checking center section 4-56
6.1.2 Checking charge relief valve 4-56
6.1.3 Checking check and high pressure relief valve 4-56
6.1.4 Checking cylinder block assembly 4-57
6.1.5 Checking thrust washer, thrust roller bearing, thrust plate and cradle bearing 4-57
6.1.6 Checking pump shaft (PTO clutch shaft) 4-57
6.1.7 Checking needle bearing 4-58
6.2 Transaxle case 4-58
6.2.1 Checking bearing 4-58
6.2.2 Checking PTO clutch disc wear 4-58
6.2.3 Checking separate plate and back plate wear 4-58
6.2.4 Checking flatness of clutch piston, pressure plate and steel plate 4-59
6.2.5 Checking clutch spring free length 4-59
6.2.6 Checking PTO brake disc wear 4-59
6.2.7 Checking PTO brake plate 4-59
6.2.8 Checking clearance between differential case and differential side gear 4-60
6.2.9 Checking clearance between differential pinion shaft and differential pinion 4-60
6.2.10 Checking backlash between differential pinion and differential side gear 4-60
6.2.11 Checking backlash between spiral bevel pinion gear and bevel gear 4-61
6.2.12 Checking brake cam lever movement 4-61
6.2.13 Checking flatness of actuator and bearing holder 4-61
6.2.14 Checking height of cam plate and ball 4-62
6.2.15 Checking brake disc and friction plate wear 4-62

5. FRONT AXLE

MECHANISM 5-1
1. Structure of front axle 5-1
2. Front wheel alignment 5-2
2.1 Camber of front axle 5-2
2.2 Kingpin angle of front axle 5-2
2.3 Caster of front axle 5-2
2.4 Toe-in of front axle 5-2
SERVICING 5-5
1. Troubleshooting for front axle 5-5
2. Servicing specifications for front axle 5-6
3. Tightening torques for front axle 5-7
4. Checking and adjusting 5-8
4.1 Adjusting toe-in 5-8
4.2 Adjusting front axle rocking force 5-8
4.3 Adjusting front wheel steering angle 5-9
5. Disassembling and assembling 5-9
5.1 Separating front axle assembly 5-9
5.1.1 Draining front axle case oil 5-9
5.1.2 Removing battery 5-9
5.1.3 Removing bonnet 5-10
5.1.4 Removing front wheel and propeller shaft cover 5-10
5.1.5 Disconnecting propeller shaft 5-10
5.1.6 Removing front axle assembly 5-11
5.2 Front axle assembly 5-11
5.2.1 Removing power steering cylinder 5-11
5.2.2 Removing bevel gear case and front gear case 5-12
5.2.3 Removing front gear case cover 5-12

https://truckmanualshub.com/

5.2.4 Removing 36T bevel gear and front axle shaft 5-13
5.2.5 Removing front gear case and bevel gear case 5-13
5.2.6 Removing bevel pinion shaft and differential gear assembly 5-14
5.2.7 Removing differential gear 5-14
6. Servicing 5-15
6.1 Checking clearance between differential case and differential side gear 5-15
6.2 Checking clearance between differential pinion shaft and differential pinion 5-15
6.3 Checking backlash between differential pinion and differential side gear 5-16
6.4 Checking turning torque of bevel pinion shaft 5-16
6.5 Checking backlash between bevel pinion shaft and bevel gear 5-17
6.6 Checking backlash between 12T bevel gear and 15T bevel gear 5-17
6.7 Checking clearance between center pin and pin support bushing 5-18

6. STEERING

MECHANISM 6-1
1. Structure of steering system 6-1
2. Hydraulic circuit of steering 6-2
3. Steering controller 6-3
3.1 Structure of steering controller 6-3
3.1.1 Control valve 6-3
3.1.2 Metering device 6-3
3.1.3 Relief valve 6-4
4. Steering cylinder 6-5
4.1 Structure of steering cylinder 6-5
SERVICING 6-7
1. Troubleshooting for steering 6-7
2. Servicing specifications for steering 6-9
3. Tightening torques for steering 6-10
4. Checking and adjusting 6-11
4.1 Checking relief valve operating pressure 6-11
5. Disassembling and assembling 6-11
5.1 Power steering cylinder 6-11
5.1.1 Removing adapter and tie-rod 6-11
5.1.2 Disassembling steering cylinder 6-12
5.2 Separating power steering controller 6-12
5.2.1 Removing battery 6-12
5.2.2 Removing steering wheel 6-13
5.2.3 Removing upper panel 6-13
5.2.4 Removing steering controller 6-13
5.3 Separating power steering cylinder 6-14
5.3.1 Removing bonnet 6-14
5.3.2 Removing front axle assembly 6-14
5.3.3 Removing power steering cylinder 6-15
6. Servicing 6-15
6.1 Checking steering cylinder I.D. 6-15
6.2 Checking clearance between rod and guide 6-15

7. HYDRAULIC SYSTEM

MECHANISM 7-1
1. Structure of hydraulic system 7-1
2. Hydraulic circuit 7-2
3. Hydraulic pump 7-4
3.1 Outline of hydraulic pump 7-4
3.2 Structure of hydraulic pump 7-4
3.3 Specification of hydraulic pump 7-4
4. Control valve 7-4
4.1 Outline of control valve 7-4
4.2 Function of control valve 7-5

https://truckmanualshub.com/

4.2.1 Control valve in neutral position 7-5
4.2.2 Control valve in lift position 7-6
4.2.3 Control valve in down position 7-7
5. Flow priority valve 7-8
5.1 Outline of flow priority valve 7-8
5.2 Structure of flow priority valve 7-9
5.3 Specification of flow priority valve 7-10
6. Relief valve 7-10
6.1 Outline of relief valve 7-10
6.2 Structure of relief valve 7-11
6.3 Function of relief valve 7-12
6.4 Specification of relief valve 7-13
7. Hydraulic cylinder 7-14
7.1 Structure of hydraulic cylinder 7-14
8. Hydraulic block type outlet 7-15
8.1 Structure of hydraulic block type outlet 7-15
9. Mower linkage 7-16
9.1 Structure of mower linkage 7-16
10. Front loader valve 7-17
10.1 Structure 7-17
10.1.1 Structure of front loader valve and pipe 7-17
10.1.2 Structure of front loader control valve 7-18
10.2 Front loader hydraulic circuit 7-19
10.3 Function of loader control valve 7-20
10.3.1 Loader control lever in neutral position 7-20
10.3.2 Loader control lever in up position 7-21
10.3.3 Loader control lever in down position 7-23
10.3.4 Loader control lever in floating position 7-25
10.3.5 Loader control lever in roll-back position 7-27
10.3.6 Loader control lever in dump position 7-30
SERVICING 7-33
1. Troubleshooting for hydraulic system 7-33
2. Servicing specifications for hydraulic system 7-34
3. Tightening torques for hydraulic system 7-35
4. Checking and adjusting 7-36
4.1 Relief valve 7-36
4.1.1 Checking relief valve setting pressure 7-36
4.2 Pump and priority valve 7-36
4.2.1 Checking hydraulic pump oil flow 7-36
4.2.2 Checking power steering oil flow 7-37
4.3 Mower lift linkage 7-38
4.3.1 Adjusting mower lift linkage 7-38
5. Disassembling and assembling 7-38
5.1 Hydraulic pump 7-38
5.1.1 Removing battery 7-38
5.1.2 Removing lift rod and lower link 7-39
5.1.3 Removing ROPS 7-39
5.1.4 Removing seat 7-40
5.1.5 Removing step 7-40
5.1.6 Removing fender 7-40
5.1.7 Removing fuel tank 7-41
5.1.8 Removing fender center stay 7-41
5.1.9 Removing hydraulic pump 7-41
5.2 Hydraulic cylinder block 7-42
5.2.1 Removing battery 7-42
5.2.2 Removing lift rod and lower link 7-43
5.2.3 Removing ROPS 7-43
5.2.4 Removing seat 7-43

https://truckmanualshub.com/

5.2.5 Removing step 7-43
5.2.6 Removing fender 7-44
5.2.7 Removing fuel tank 7-44
5.2.8 Removing fender center stay 7-45
5.2.9 Removing mower linkage and wire harness 7-45
5.2.10 Removing hydraulic cylinder block 7-45
5.3 Hydraulic cylinder and control valve 7-46
5.3.1 Removing control valve 7-46
5.3.2 Removing control valve lever 7-46
5.3.3 Removing lift arm, hydraulic arm shaft and hydraulic arm 7-46
5.3.4 Removing hydraulic piston 7-47
5.3.5 Removing lowering speed adjusting valve 7-47
5.4 Mower lift linkage 7-48
5.4.1 Disassembling mower linkage 7-48
5.5 Control valve (Front loader) 7-49
5.5.1 Removing battery 7-49
5.5.2 Removing ROPS 7-49
5.5.3 Removing seat 7-49
5.5.4 Removing step 7-49
5.5.5 Removing fender 7-50
5.5.6 Removing control valve 7-50
5.5.7 Disassembling control valve 7-51
6. Servicing 7-52
6.1 Hydraulic pump 7-52
6.1.1 Checking clearance between tip of gear tooth and casing 7-52
6.1.2 Checking clearance between bushing and shaft 7-52
6.1.3 Checking side plate thickness 7-53
6.2 Hydraulic cylinder 7-53
6.2.1 Checking hydraulic cylinder bore 7-53
6.2.2 Checking hydraulic arm shaft bushing 7-53

8. ELECTRICAL SYSTEM

MECHANISM 8-1
1. Wiring diagram of BX tractor 8-1
2. Electrical connector chart 8-2
3. Reading electrical circuit diagrams 8-3
3.1 How to read wiring diagram 8-3
3.2 Layout of connector diagrams 8-6
3.3 Precautions on handling electrical connectors 8-7
4. Starting system 8-8
4.1 Electrical circuit of starting system 8-8
4.2 Function of relay 8-9
4.3 Function of starter 8-9
4.4 Function of glow plug 8-10
4.5 Function of safety switch 8-10
4.6 Function of fuel pump 8-10
5. OPC (Operator Presence Control) system 8-11
5.1 Electrical circuit of OPC timer 8-11
6. Charging system 8-12
6.1 Electrical circuit for charging system 8-12
6.2 Function of IC regulator (3P connector type) 8-13
7. Lighting system 8-14
7.1 Electrical circuit for lighting system 8-14
8. Gauges 8-15
8.1 Electrical circuit of gauge system 8-15
8.2 Meter panel 8-16
8.2.1 Function of hour meter 8-16
8.2.2 Function of tachometer 8-16

https://truckmanualshub.com/

8.2.3 Function of fuel gauge 8-16
8.2.4 Function of coolant temperature gauge 8-16
8.3 Function of fuel level sensor 8-17
8.4 Function of coolant temperature sensor 8-17
8.5 Function of oil pressure switch 8-18
9. Others 8-19
9.1 Electrical circuit for accessory 8-19
9.2 Function of DC outlet 8-20
SERVICING 8-21
1. Troubleshooting for electrical system 8-21
2. Servicing specifications for electrical system 8-27
3. Tightening torques for electrical system 8-28
4. Checking and adjusting 8-29
4.1 Battery 8-29
4.1.1 Checking battery voltage 8-29
4.1.2 Checking battery terminal connection 8-29
4.1.3 Checking battery specific gravity 8-29
4.2 Main switch 8-30
4.2.1 Checking main switch connector voltage 8-30
4.2.2 Checking main switch continuity at off position 8-30
4.2.3 Checking main switch continuity at on position 8-31
4.2.4 Checking main switch continuity at preheat position 8-31
4.2.5 Checking main switch continuity at start position 8-31
4.3 Starter 8-31
4.3.1 Checking motor 8-31
4.3.2 Testing starter magnet switch (pull-in, holding coils) 8-32
4.4 Glow plug 8-32
4.4.1 Checking glow plug lead terminal voltage 8-32
4.4.2 Checking glow plug continuity 8-33
4.5 Safety switch 8-33
4.5.1 Checking PTO shift lever switch continuity 8-33
4.5.2 Checking HST neutral switch continuity 8-34
4.6 Operator presence control (OPC) system 8-34
4.6.1 Checking seat switch and seat turnover switch continuity 8-34
4.6.2 Checking OPC timer 8-35
4.7 Fuel pump 8-36
4.7.1 Checking fuel pump connector voltage 8-36
4.7.2 Checking fuel pump continuity 8-36
4.8 Engine stop solenoid 8-36
4.8.1 Testing engine stop solenoid 8-36
4.9 Timer relay 8-37
4.9.1 Checking timer relay connector voltage 8-37
4.9.2 Testing timer relay 8-37
4.10 Charging system 8-37
4.10.1 Checking battery charging current 8-37
4.11 Combination switch 8-38
4.11.1 Removing combination switch 8-38
4.11.2 Checking combination switch connector voltage 8-38
4.11.3 Checking head light switch continuity when setting switch at OFF position 8-38
4.11.4 Checking head light switch continuity when setting switch at ON position 8-39
4.11.5 Checking turn signal light switch continuity when setting switch knob at OFF position 8-39
4.11.6 Checking turn signal light switch continuity when setting switch knob at RIGHT position 8-40
4.11.7 Checking turn signal light switch continuity when setting switch knob at LEFT position 8-40
4.11.8 Checking hazard switch continuity when setting switch knob at OFF position 8-41
4.11.9 Checking hazard switch continuity when setting switch knob at ON position 8-41
4.11.10 Checking flasher unit connector voltage 8-41
4.11.11 Testing flasher unit actuation 8-42
4.12 Gauge 8-43

https://truckmanualshub.com/

4.12.1 Checking charge lamp (charging circuit) 8-43
4.12.2 Checking engine oil pressure lamp 8-43
4.12.3 Checking engine oil pressure switch continuity 8-44
4.12.4 Checking fuel level sensor continuity 8-44
4.12.5 Checking coolant temperature sensor connector voltage 8-44
4.12.6 Checking coolant temperature sensor continuity 8-45
4.12.7 Checking hour meter and tachometer 8-45
4.13 Accessory 8-46
4.13.1 Checking DC outlet connector voltage 8-46
4.13.2 Checking DC outlet continuity 8-46
4.14 Meter panel 8-46
4.14.1 Checking connector voltage, sensor resistance and switch 8-46
5. Disassembling and assembling 8-47
5.1 Starter 8-47
5.1.1 Disassembling starter motor 8-47
5.1.2 Removing magnet switch 8-48
5.1.3 Removing plunger 8-48
5.2 Alternator 8-48
5.2.1 Removing pulley 8-48
5.2.2 Removing rear end cover 8-48
5.2.3 Removing brush holder 8-48
5.2.4 Removing IC regulator 8-49
5.2.5 Removing rectifier 8-49
5.2.6 Removing rear end frame 8-49
5.2.7 Removing rotor 8-49
5.2.8 Removing retainer plate 8-50
5.2.9 Removing bearing on drive end side 8-50
5.2.10 Removing bearing at slip ring side 8-50
6. Servicing 8-50
6.1 Starter 8-50
6.1.1 Checking overrunning clutch 8-50
6.1.2 Checking commutator and mica 8-51
6.1.3 Checking brush wear 8-51
6.1.4 Checking brush holder 8-52
6.1.5 Checking armature coil 8-52
6.1.6 Checking field coil 8-52
6.2 Alternator 8-52
6.2.1 Checking bearing 8-52
6.2.2 Checking stator 8-53
6.2.3 Checking rotor 8-53
6.2.4 Checking slip ring 8-53
6.2.5 Checking brush wear 8-53
6.2.6 Checking rectifier 8-54

9. MOWER

MECHANISM 9-1
1. Structure of power transmission of mower 9-1
2. Structure of lifting mechanism of mower 9-2
SERVICING 9-3
1. Troubleshooting for mower 9-3
2. Servicing specifications for mower 9-4
3. Tightening torques for mower 9-5
4. Setting up mower [RCK54D-26BX and RCK60D-26BX] 9-6
4.1 Assembling mower 9-6
4.2 Setting mower 9-6
4.3 Mounting front link 9-7
4.4 Mounting frame link 9-8
4.5 Setting tractor 9-8

https://truckmanualshub.com/

4.6 Mounting mower 9-9
5. Checking and adjusting 9-10
5.1 Mower adjustment 9-10
5.1.1 Adjusting mower link 9-10
5.1.2 Adjusting front and rear cutting height 9-10
5.1.3 Adjusting left and right cutting height 9-11
5.1.4 Adjusting cutting height 9-12
5.2 Checking mower blade and belt 9-14
5.2.1 Checking mower blade 9-14
5.2.2 Checking mower belt 9-14
6. Disassembling and assembling 9-15
6.1 Removing ramps and belt covers 9-15
6.2 Removing mower blades 9-15
6.3 Removing blade boss 9-15
6.4 Removing gear box and mower belt 9-16
6.5 Disassembling gear box 9-16
6.6 Removing center pulley holder 9-17
6.7 Removing outer pulley and blade shaft 9-17
7. Servicing 9-18
7.1 Adjusting turning torque of pinion shaft 9-18
7.2 Adjusting backlash between bevel gears 9-18

10. FRONT LOADER

MECHANISM 10-1
1. Hydraulic circuit 10-1
2. Front remote hydraulic control system (if equipped) 10-3
2.1 Operating control lever 10-3
3. Boom cylinder and bucket cylinder 10-4
3.1 Structure of boom cylinder and bucket cylinder 10-4
4. One touch front loader 10-5
4.1 Outline of one touch front loader 10-5
5. One lever quick touch 4 lines coupler 10-5
5.1 Structure of one lever quick touch 4 lines coupler 10-5
6. Auto lock attachment and detachment 10-5
6.1 Outline of auto lock attachment and detachment 10-5
6.2 Function of auto lock attachment and detachment 10-6
7. Mechanical loader frame standing mechanism 10-6
7.1 Structure of mechanical loader frame standing mechanism 10-6
8. 3rd function valve (If equipped) 10-7
8.1 Structure of 3rd function valve 10-7
8.2 Function of 3rd function valve 10-8
8.2.1 Activation switch in off position 10-8
8.2.2 Activation switch in on position 10-9
SERVICING 10-11
1. Troubleshooting for front loader 10-11
2. Tightening torques for front loader 10-13
3. Checking and adjusting 10-14
3.1 Loader stand 10-14
3.1.1 Adjusting height of loader stand 10-14
3.2 Front hydraulic valve main switch and relay 10-17
3.2.1 Checking front hydraulic valve main switch continuity 10-17
3.2.2 Checking connector voltage of front hydraulic valve main switch 10-18
3.2.3 Checking relay 10-18
3.3 3rd function solenoid valve 10-19
3.3.1 Checking 3rd function solenoid valve continuity 10-19
3.3.2 Checking connector voltage of 3rd function solenoid valve 10-19
4. Disassembling and assembling 10-19
4.1 Removing and attaching front loader 10-19

https://truckmanualshub.com/

4.1.1 Removing loader 10-19
4.1.2 Reinstalling loader 10-23
4.2 Bucket, boom and hydraulic cylinders 10-26
4.2.1 Attaching attachments 10-26
4.2.2 Removing attachments 10-28
4.2.3 Removing bucket cylinder 10-29
4.2.4 Removing boom cylinder and hydraulic tubes 10-29
4.2.5 Removing piston rod assembly 10-29
4.2.6 Removing cylinder head, piston and nut 10-30
4.2.7 Removing piston seal and O-ring 10-31
4.2.8 Installing O-ring and piston seal 10-31
4.3 Side frames, front guard and main frames 10-31
4.3.1 Removing side frames 10-31
4.3.2 Removing front guard 10-32
4.3.3 Removing main frames 10-32
4.4 3rd function valve (If equipped) 10-32
4.4.1 Removing 3rd function valve 10-32
4.4.2 Removing hydraulic tubes of 3rd function 10-33
5. Servicing 10-33
5.1 Piston rod 10-33
5.1.1 Checking piston rod bend 10-33

11. BACKHOE

MECHANISM 11-1
1. Hydraulic circuit 11-1
2. Control valve 11-2
2.1 Structure of backhoe control valve 11-2
2.2 Function of backhoe control valve 11-4
2.2.1 Backhoe control valve in neutral position 11-4
2.2.2 Backhoe control valve in swing right position 11-5
2.2.3 Backhoe control valve in swing left position 11-6
2.2.4 Backhoe control valve in boom up position 11-7
2.2.5 Backhoe control valve in boom down position 11-8
2.2.6 Backhoe control valve in L.H. stabilizer shrink position 11-9
2.2.7 Backhoe control valve in L.H. stabilizer extend position 11-10
2.2.8 Backhoe control valve in R.H. stabilizer shrink position 11-11
2.2.9 Backhoe control valve in R.H. stabilizer extend position 11-12
2.2.10 Backhoe control valve in dipperstick crowd position 11-13
2.2.11 Backhoe control valve in dipperstick extend position 11-14
2.2.12 Backhoe control valve in bucket roll-back position 11-15
2.2.13 Backhoe control valve in bucket dump position 11-16
2.3 Structure of overload relief valve 11-17
2.3.1 Function of relief position 11-17
2.3.2 Function of anti-cavitation position 11-18
3. Structure of hydraulic cylinder 11-19
SERVICING 11-21
1. Troubleshooting for backhoe 11-21
2. Servicing specifications for backhoe 11-23
3. Tightening torques for backhoe 11-25
4. Checking and adjusting 11-26
4.1 Checking relief valve setting pressure 11-26
4.2 Checking control lever operation force 11-26
4.3 Checking stabilizer control lever operation force 11-26
5. Disassembling and assembling 11-26
5.1 Removing backhoe 11-26
5.1.1 Preparing to remove backhoe 11-26
5.1.2 Releasing mounting pins 11-27
5.1.3 Disconnecting hydraulic hoses 11-28

https://truckmanualshub.com/

5.1.4 Removing backhoe 11-28
5.2 Installing backhoe 11-28
5.2.1 Preparing to install backhoe 11-28
5.2.2 Connecting hydraulic hoses 11-29
5.2.3 Setting mounting pins 11-29
5.2.4 Installing backhoe 11-29
5.3 Disassembling backhoe 11-30
5.3.1 Removing bucket 11-31
5.3.2 Removing dipperstick and bucket cylinder 11-31
5.3.3 Removing dipperstick cylinder, boom, boom cylinder, and hoses 11-32
5.3.4 Removing swing frame 11-33
5.3.5 Removing swing cylinder 11-33
5.3.6 Removing stabilizers and stabilizer cylinder 11-33
5.3.7 Removing lever support and control valve 11-34
5.3.8 Removing backhoe main frame 11-35
5.4 Disassembling control valve 11-35
5.5 Disassembling cylinder (Boom, dipperstick, bucket, swing, stabilizer) 11-35
5.5.1 Removing cylinder rod assembly 11-35
5.5.2 Removing cylinder head, piston, and nut 11-36
5.5.3 Checking cylinder adaptor angle 11-36
5.5.4 Removing piston seal and O-ring 11-37
5.5.5 Installing O-ring and piston seal 11-37
6. Servicing 11-38
6.1 Checking clearance between pin and bushing 11-38
6.2 Checking thrust washer wear 11-41
6.3 Checking piston rod bend 11-41

https://truckmanualshub.com/

1. INFORMATION

https://truckmanualshub.com/

SAFETY FIRST

1. Safety first

This symbol, the industry's "Safety Alert Symbol", is used throughout this manual and on labels on the machine itself to warn of the possibility of personal injury. Read these instructions carefully. It is essential that you read the instructions and safety regulations before you try to repair or use this unit.

DANGER
- **Indicates an imminently hazardous situation which, if not avoided, will result in death or serious injury.**

WARNING
- **Indicates a potentially hazardous situation which, if not avoided, could result in death or serious injury.**

CAUTION
- **Indicates a potentially hazardous situation which, if not avoided, may result in minor or moderate injury.**

IMPORTANT
- **Indicates that equipment or property damage could result if instructions are not followed.**

NOTE
- **Gives helpful information.**

2. Before you start service

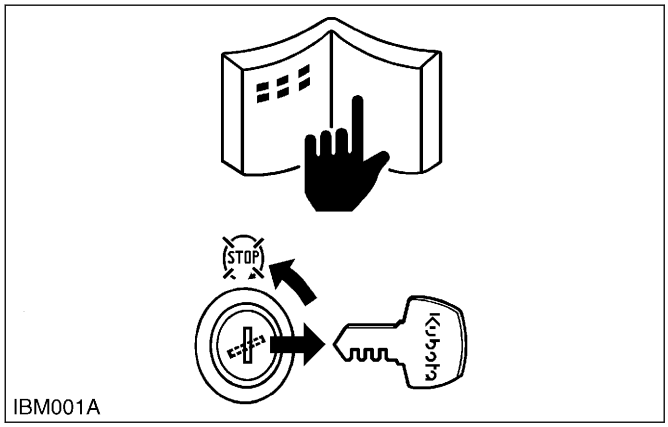

IBM001A

- Read all instructions and safety instructions in this manual and on your machine safety decals.
- Clean the work area and machine.
- Park the machine on a stable and level ground, and set the parking brake.
- Lower the implement to the ground.
- Stop the engine, then remove the key.
- Disconnect the battery negative cable.
- Hang a “**DO NOT OPERATE**” tag in the operator station.

3. Start safely

IBM002A

- Do not do the procedures below when you start the engine.
  1. Short across starter terminals.
  2. Bypass the safety start switch.
- Do not alter or remove any part of machine safety system.
- Before you start the engine, make sure that all shift levers are in neutral positions or in disengaged positions.
- Do not start the engine when you stay on the ground. Start the engine only from operator's seat.

4. Operate safely

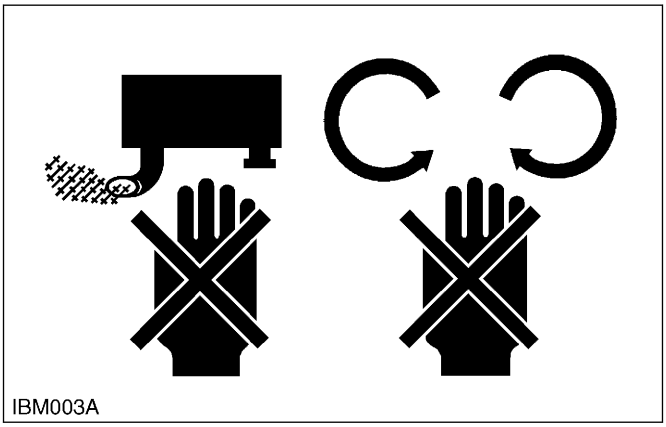
IBM003A

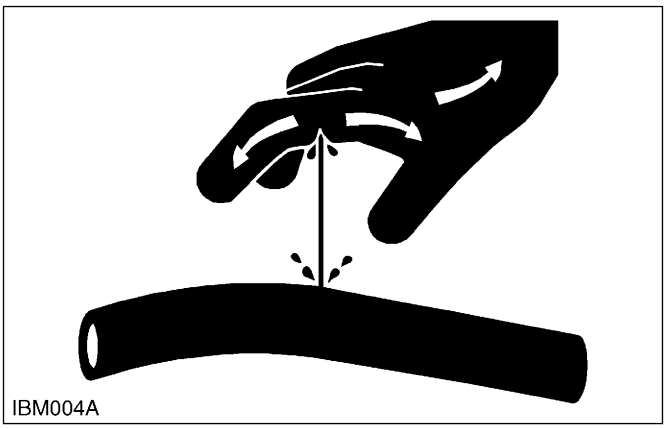
IBM004A

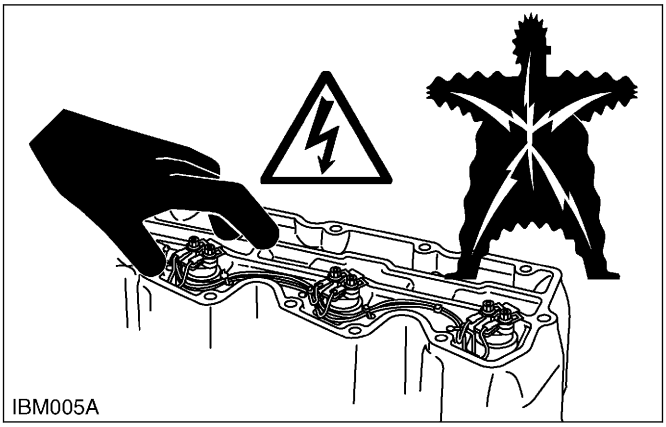
IBM005A

- Do not use the machine after you consume alcohol or medication or when you are tired.
- Put on applicable clothing and safety equipment.
- Use applicable tools only. Do not use alternative tools or parts.
- When 2 or more persons do servicing, make sure that you do it safely.
- Do not touch the hot parts or parts that turn when the engine operates.
- Do not remove the radiator cap when the engine operates, or immediately after it stops. If not, hot water can spout out from the radiator. Only remove the radiator cap when it is at a sufficiently low temperature to touch with bare hands. Slowly

https://truckmanualshub.com/

loosen the cap to release the pressure before you remove it fully.
- Released fluid (fuel or hydraulic oil) under pressure can cause damage to the skin and cause serious injury. Release the pressure before you disconnect hydraulic or fuel lines. Tighten all connections before you apply the pressure.
- Do not open a fuel system under high pressure. The fluid under high pressure that stays in fuel lines can cause serious injury. Do not disconnect or repair the fuel lines, sensors, or any other components between the fuel pump and injectors on engines with a common rail fuel system under high pressure.
- Put on an applicable ear protective device (earmuffs or earplugs) to prevent injury against loud noises.
- Be careful about electric shock. The engine generates a high voltage of more than DC100 V in the ECU and is applied to the injector.

5. Protect against high pressure spray

9Y1200165INI019A

- Spray from high pressure nozzles can penetrate the skin and cause serious injury. Keep spray from contacting hands or body.
- If an accident occurs, see a doctor immediately. Any high pressure spray injected into the skin must be surgically removed within a few hours or gangrene may result.
  Doctors unfamiliar with this type of injury should reference a knowledgeable medical source.

6. Avoid hot exhaust

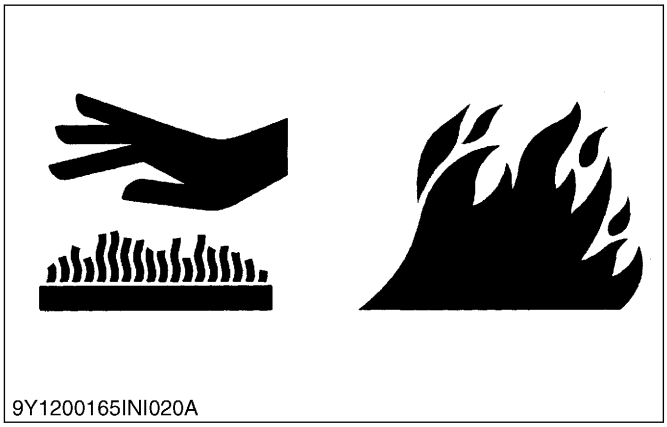
9Y1200165INI020A

- Servicing machine or attachments with engine operating can result in serious personal injury. Avoid exposure and skin contact with hot exhaust gases and components.
- Exhaust parts and streams become very hot during operation. Exhaust gases and components reach temperatures hot enough to burn people, ignite, or melt common materials.

7. Exhaust filter cleaning

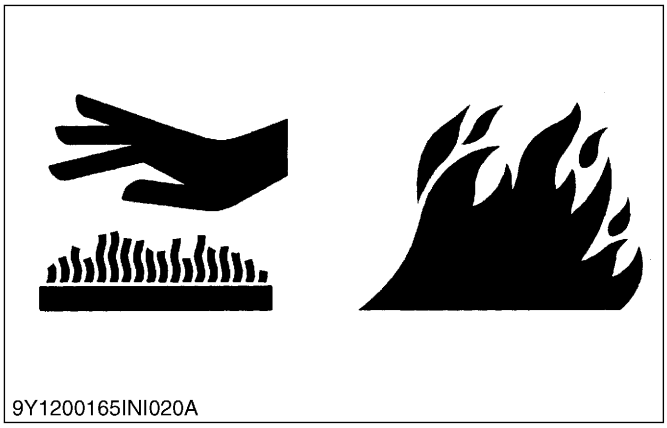
9Y1200165INI020A

- Servicing machine or attachments during exhaust filter cleaning can result in serious personal injury. Avoid exposure and skin contact with hot exhaust gases and components.
- During auto or manual/stationary exhaust filter cleaning operations, the engine will operate at elevated idle and hot temperatures for an extended period of time. Exhaust gases and exhaust filter components reach temperatures hot enough to burn people, or ignite, or melt common materials.

https://truckmanualshub.com/

8. Prevent a fire

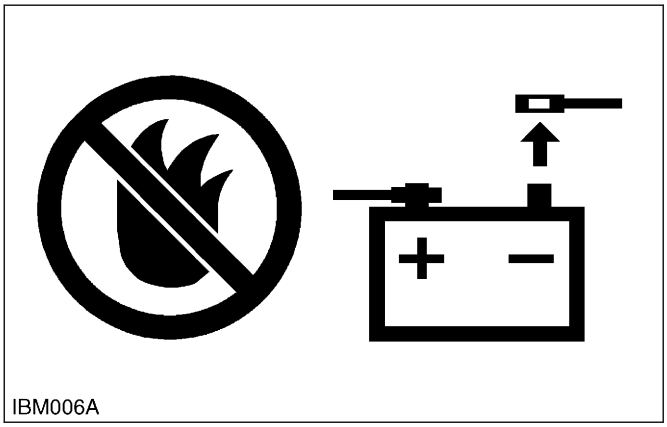

- Fuel is very flammable and explosive under some conditions. Do not smoke or let flames or sparks in your work area.
- To prevent sparks from an accidental short circuit, always disconnect the battery negative cable first and connect it last.
- The battery gas can cause an explosion. Keep the sparks and open flame away from the top of battery, especially when you charge the battery.
- Make sure that you do not spill fuel on the engine.

9. Keep a good airflow in the work area

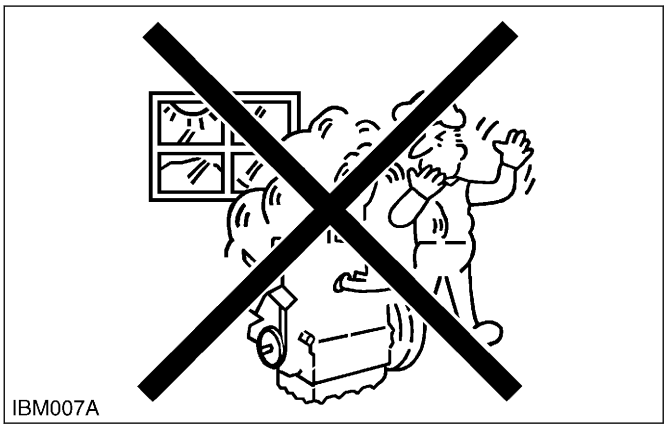

- If the engine is in operation, make sure that the area has good airflow. Do not operate the engine in a closed area. The exhaust gas contains poisonous carbon monoxide.

10. Discard fluids correctly

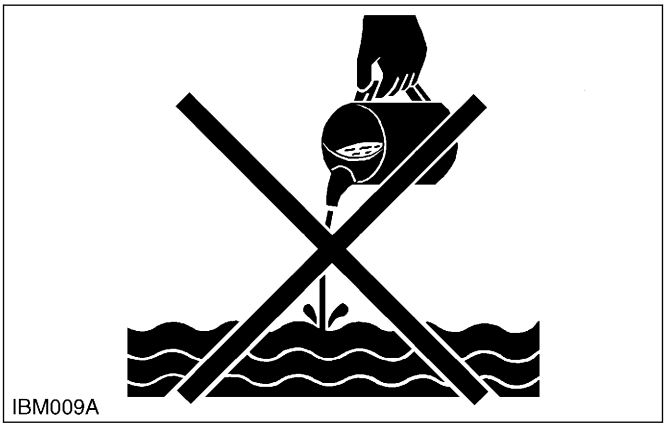

- Do not discard fluids on the ground, down the drain, into a stream, pond, or lake. Obey related environmental protection regulations when you discard oil, fuel, coolant, electrolyte and other dangerous waste.

11. Prevent acid burns

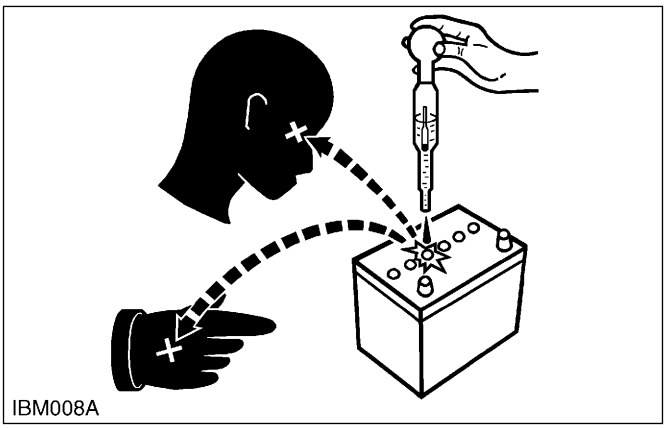

- Keep electrolyte away from your eyes, hands and clothing. Sulfuric acid in battery electrolyte is poisonous and it can burn your skin and clothing and cause blindness. If you spill electrolyte on yourself, clean yourself with water, and get medical aid immediately.

https://truckmanualshub.com/

12. Prepare for emergencies

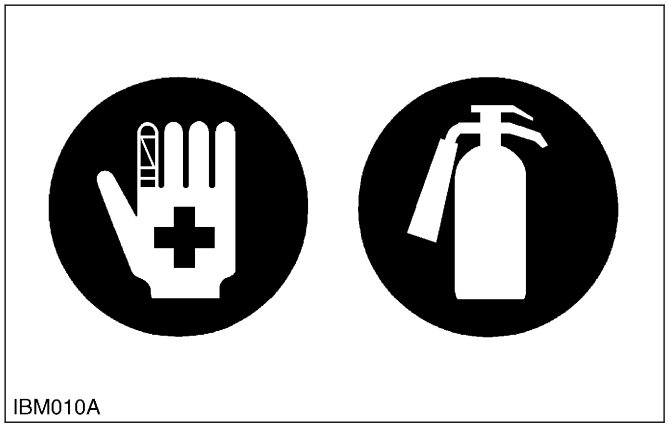

- Keep a first aid kit and fire extinguisher ready at all times.
- Keep the emergency contact telephone numbers near your telephone at all times.

https://truckmanualshub.com/

https://truckmanualshub.com/

SAFETY LABEL

1. Safety labels for BX tractor

The safety labels are installed on the machine. If a label becomes damaged, illegible or is not on the machine, replace it. The label part number is listed in the parts list.

(1) Part No. K2871-6548-1

1AGAJBMAP0460

(2) Part No. K1272-6585-2
Diesel fuel only
No fire

1BDAHAOAP002A

(3) Part No. K2591-6557-2

1HNAAACAP0690

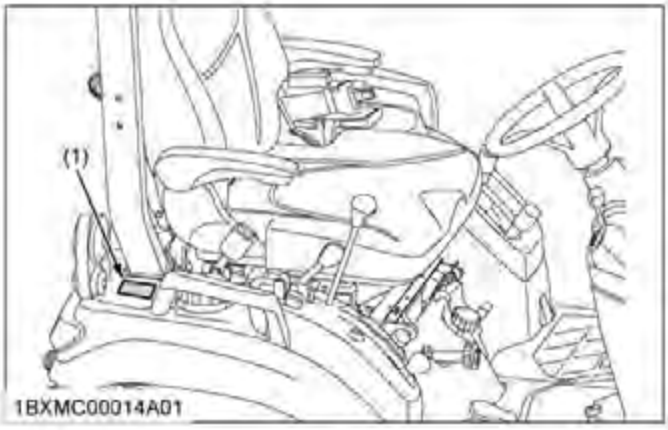

1BXMC00014A01

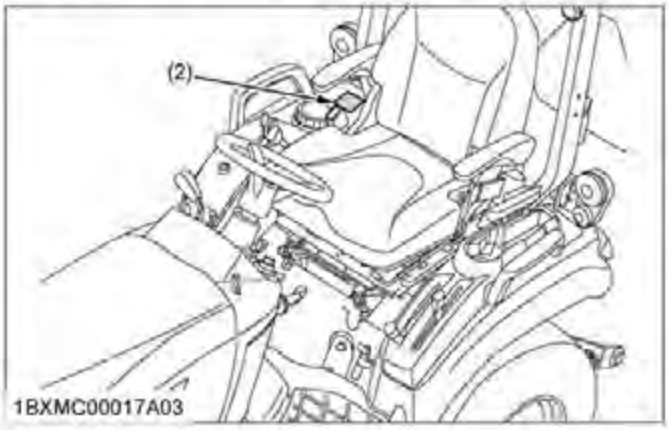

1BXMC00017A03

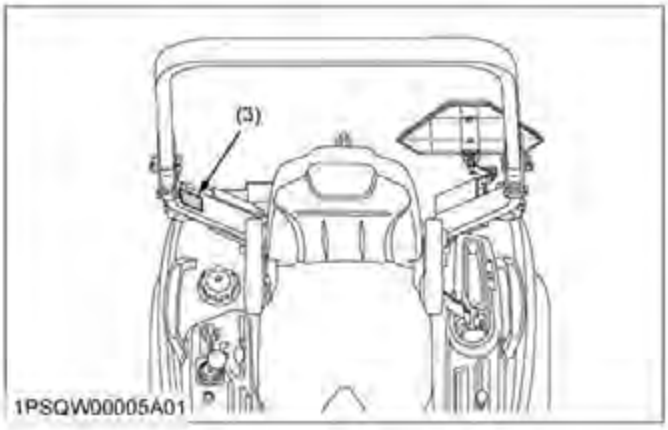

1PSQW00005A01

1PSQW00006A01

(1) Part No. K2581-6554-1

1AGAJBMAP0470

(2) Part No. K2581-6555-1

1AGAJBMAP0480

(3) Part No. K2871-6556-1

1AGAJBMAP0490

(4) Part No. K2871-6552-2

1AGAJBMAP0500

(5) Part No. K2651-6568-1

1AYAACAAP1000

(6) Part No. K2871-6558-1

1AGAJBMAP0530

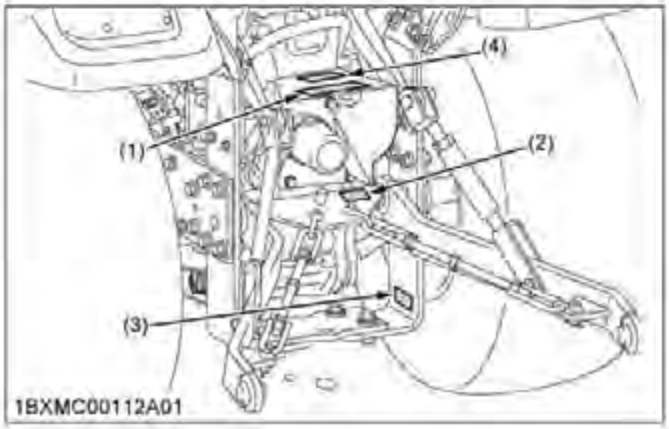

1BXMC00112A01

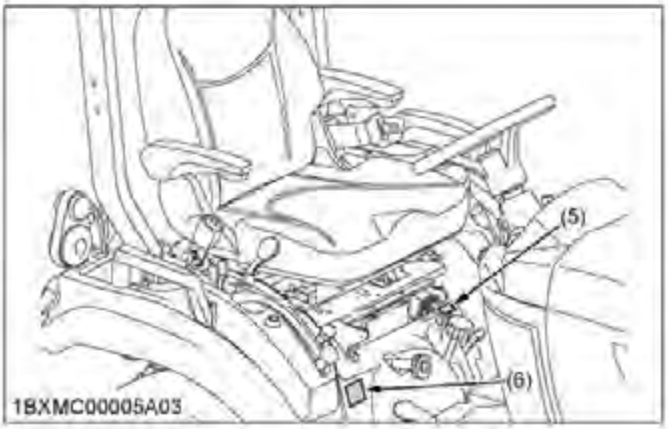

1BXMC00005A03

(1) Part No. K2871-6541-1

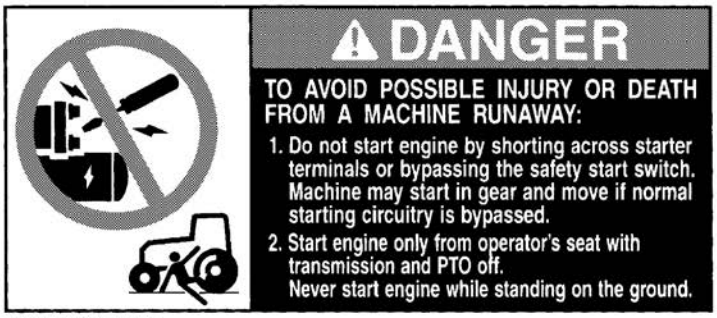

1AGAJAXAP048E

(2) Part No. K2581-6547-1
Stay clear of engine fan and fanbelt.

1AGAJAXAP049E

(3) Part No. K2581-6543-1
Stay clear of engine fan and fanbelt.

1AGAJAXAP052E

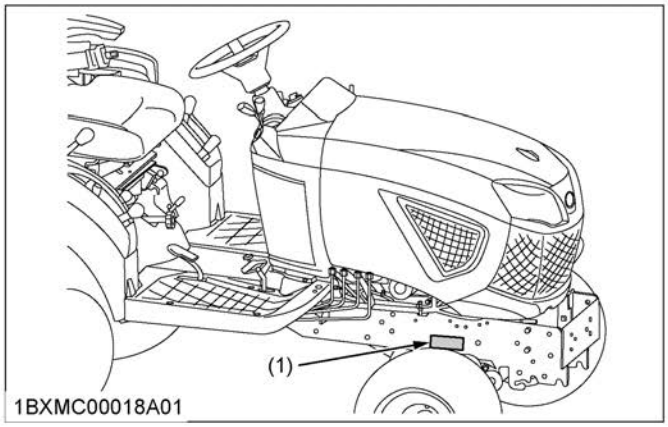

1BXMC00018A01

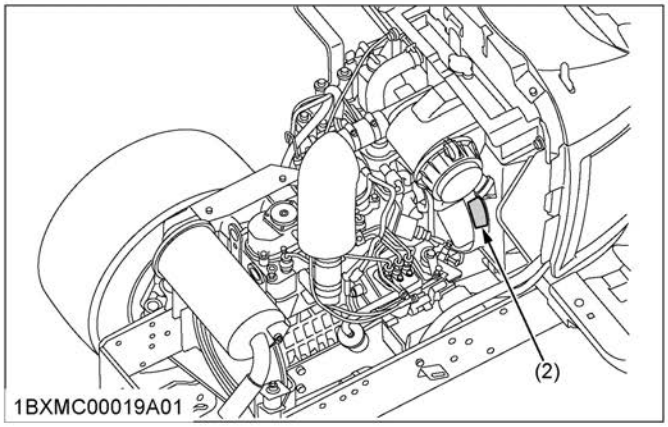

1BXMC00019A01

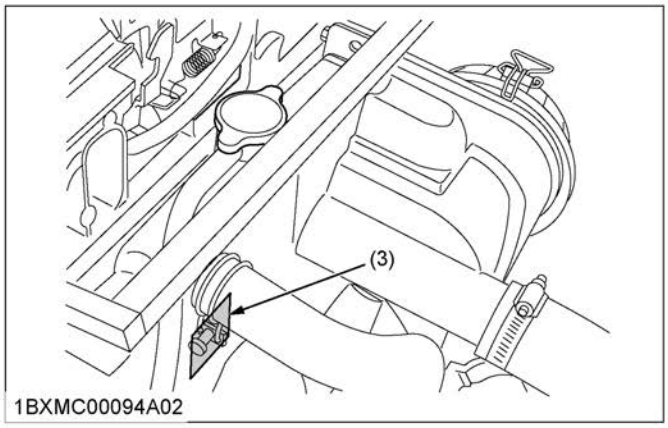

1BXMC00094A02

1PSQW00007A01

(1) Part No. K7591-6114-2

1AYAACQAP256A

(2) Part No. K2871-6564-1

1AGAJBMAP0560

(3) Part No. K2871-6542-1
Do not touch hot surface like muffler, etc.

1AGAJBMAP0520

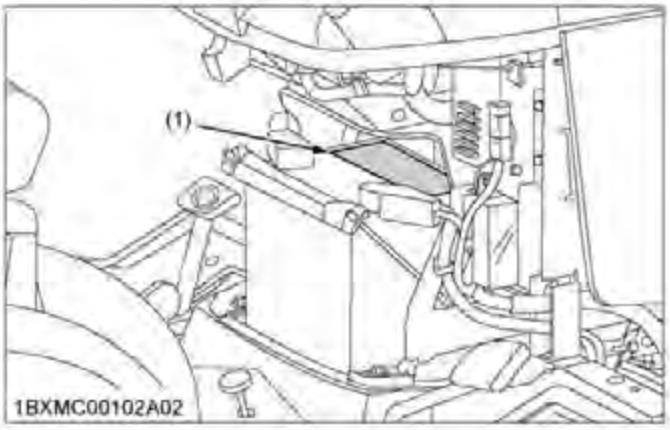

1BXMC00102A02

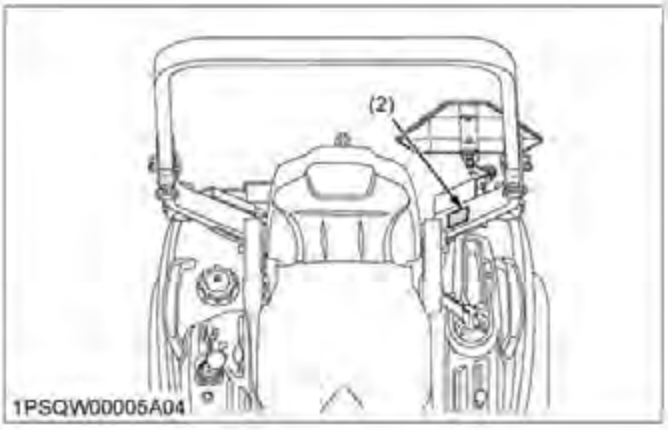

1PSQW00005A04

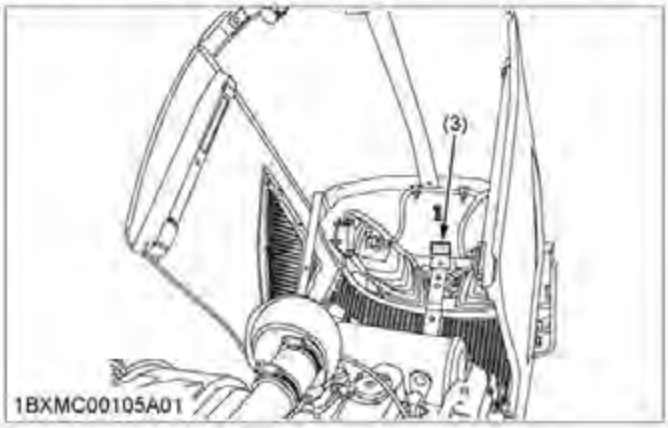

1BXMC00105A01

1PSQW00008A01

2. Safety labels for mower

The safety labels are installed on the mower. If a label becomes damaged, illegible or is not on the mower, replace it. The label part number is listed in the parts list.

[RCK60D-26BX]

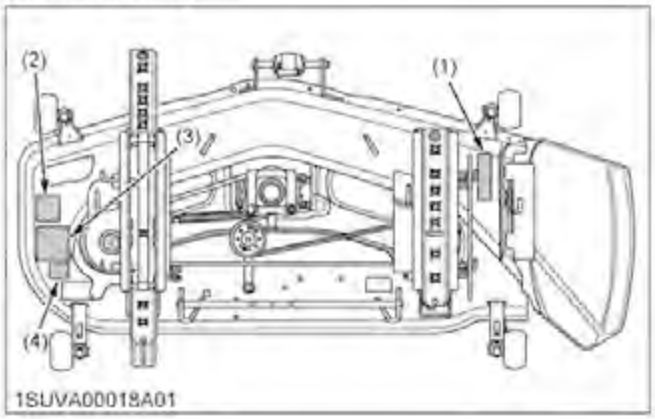

[RCK54D-26BX]

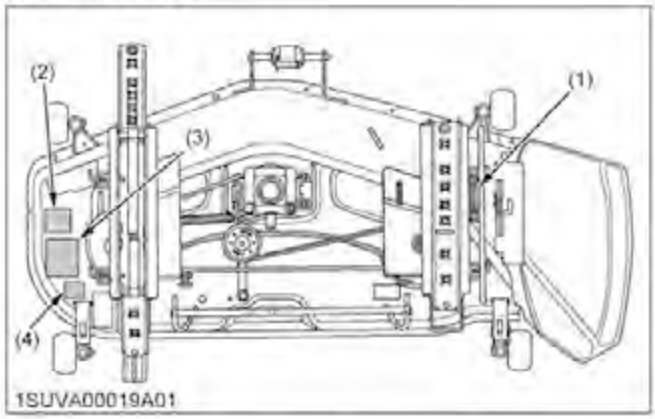

(1) Part No. K5112-7311-2

1BDACADAP003E

(2) Part No. K5112-7312-2

1BDACADAP004E

(3) Part No. K5384-4715-1

1BDACBLAP051A

(4) Part No. K5384-4171-1

1BDACAMAP085A

2LEOP00023A01enUS

https://truckmanualshub.com/

3. Safety labels for loader

The safety labels are installed on the loader. If a label becomes damaged, illegible or is not on the loader, replace it. The label part number is listed in the parts list.

(1) Part No. 7J061-5645-1

1AIABAHAP019G

(2) Part No. 7J246-5641-1

1AIABAHAP017A

(3) Part No. 7J246-5643-1

1AIABAHAP016A

(4) Part No. 7J246-5642-1

1AIABAHAP018A

(5) Part No. 7J246-5644-2

1AIABAHAP020A

(6) Part No. 7J061-5649-1

1AIABACAP084A

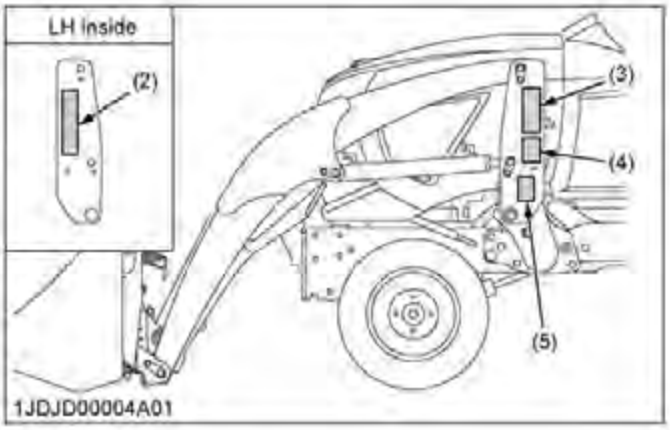

1JDJD00004A01

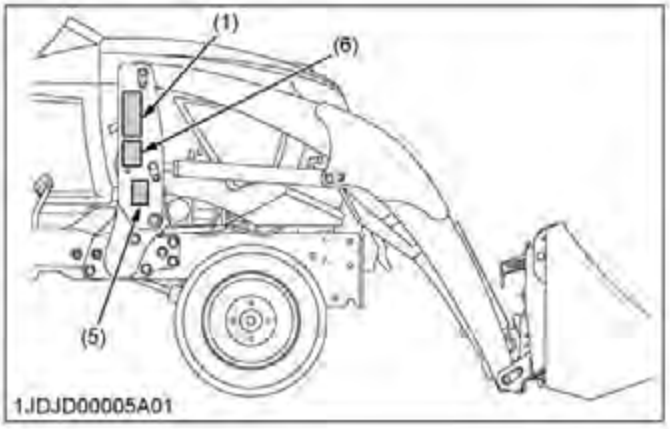

1JDJD00005A01

1JDJD00002A01

(1) Part No. 7J626-3648-1

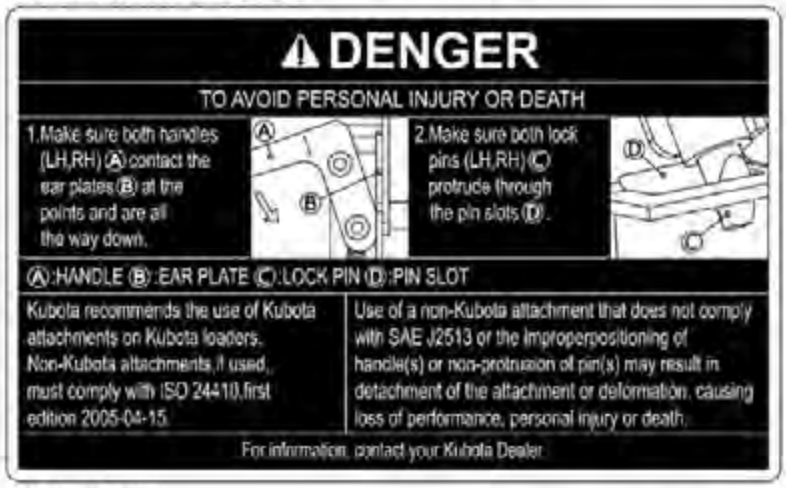

1AIABELAP0440

(2) Part No. 7J048-3923-4

1AIABELAP0380

(3) Part No. 7J246-5643-1

1AIABACAP075A

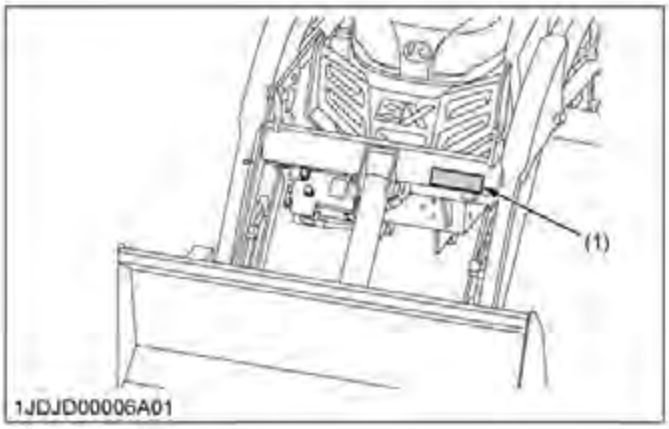

1JDJD00006A01

[BX2415 Pallet Fork]

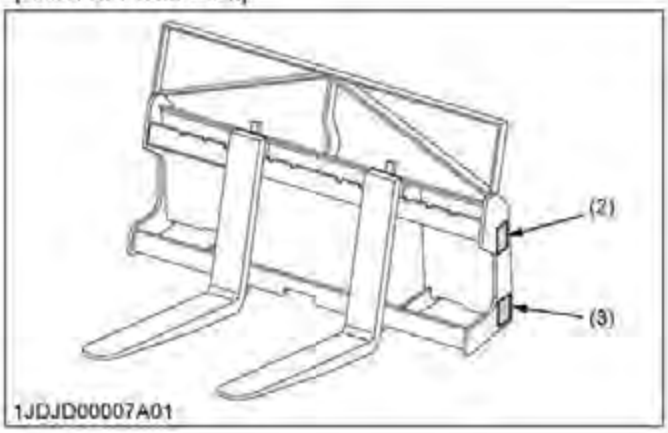

1JDJD00007A01

1JDJD00003A01

https://truckmanualshub.com/

4. Safety labels for backhoe

The safety labels are installed on the backhoe. If a label becomes damaged, illegible or is not on the backhoe, replace it. The label part number is listed in the parts list.

DANGER, WARNING AND CAUTION LABELS OF THE BACKHOE

(1) Part No. 75597-7528-1

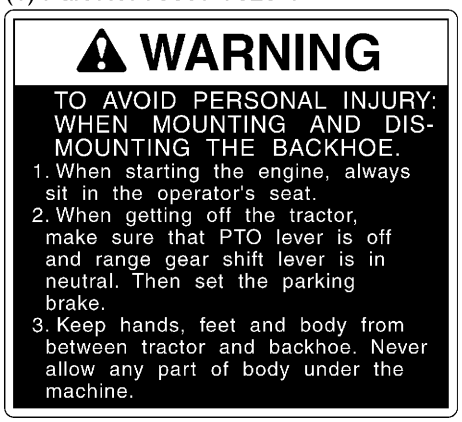

1HNAAACAP008E

(2) Part No. 75595-7517-2

1HNAAACAP011E

(3) Part No. 75595-7524-2

1HNAAACAP012E

(4) Part No. 7K501-7529-1

1AJABAEAP028A

(5) Part No. 75597-7517-2

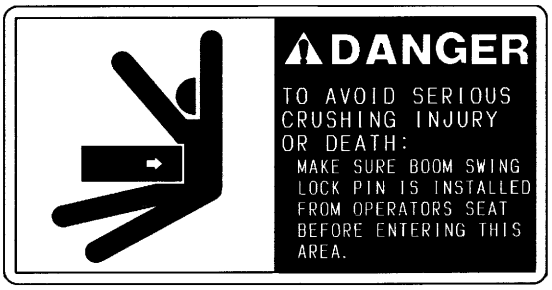

1HNAAACAP010E

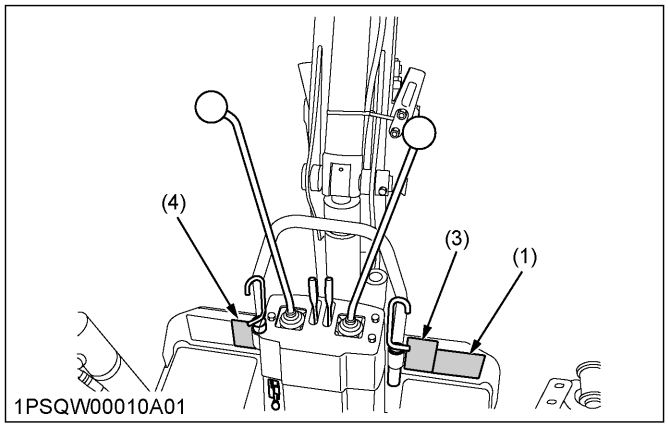

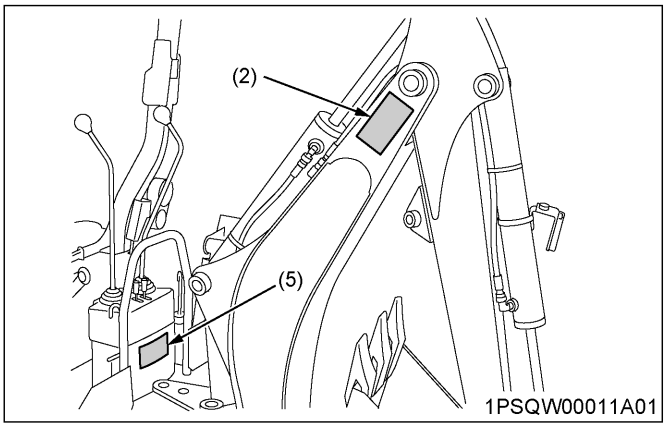

1PSQW00009A01

[BX6316 MECHANICAL THUMB] (Option for BT603)

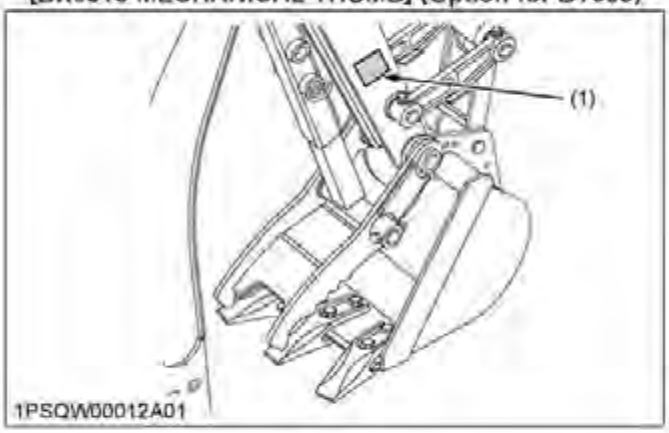

(1) Part No. 7K523-8452-1 (Both sides)

1PSQW00013A01

https://truckmanualshub.com/

SPECIFICATIONS

1. BX tractor specifications

Model			BX23S
PTO power*1			13.2 kW (17.7 HP)
Engine	Maker		KUBOTA
	Model		D902
	Type		Liquid-cooled, 4-cycle diesel
	Number of cylinders		3
	Bore and stroke		72.0 × 73.6 mm (2.83 × 2.90 in.)
	Total displacement		898 cm^3 (54.8 cu. in.)
	Engine gross power*2		17.1 kW (23.0 HP)
	Rated revolution		55.0 to 58.3 r/s (3300 to 3500 rpm)
	Low idling revolution		1350 to 1550 rpm
	Maximum torque		56.1 N·m (41.4 lbf·ft)
	Battery		12 V, CCA: 560 A, RC: 86 min.
	Fuel		Diesel fuel No.1 [below -10 ℃ (14 ℉)] Diesel fuel No.2 [above -10 ℃ (14 ℉)]
Capacities	Fuel tank		25 L (6.6 U.S.gals.)
	Engine crankcase (with filter)		3.3 L (3.5 U.S.qts.)
	Engine coolant		3.1 L (3.3 U.S.qts.)
	Recovery tank		0.4 L (0.4 U.S.qts.)
	Transmission case		11.3 L (2.99 U.S.gals.)
Dimensions	Overall length (without 3p)		2210 mm (87.01 in.)
	Overall length (with 3p)		2515 mm (99.02 in.)
	Overall width (Min. tread)		1145 mm (45.08 in.)
	Overall height	(with ROPS)	2190 mm (86.22 in.)
		(Top of seat)	1255 mm (49.41 in.)
	Wheel base		1400 mm (55.12 in.)
	Min. ground clearance		148 mm (5.83 in.)
	Tread	Front	930 mm (36.6 in.)
		Rear	820 mm (32.2 in.)
Weight (with ROPS)			725 kg (1600 lbs)
Clutch			N/A
Traveling system	Tire	Front: Turf/Bar/industrial	18 × 8.50-10
		Rear: Turf/Bar/industrial	26 × 12.00-12
	Steering		Hydrostatic type power steering
	Transmission		Main: Hydrostatic transmission, High-Low gear shift (2 forward, 2 reverse)

(Continued)

Model			BX23S
Traveling system	Brake		Wet disk type
	Min. turning radius		2.3 m (7.5 ft)
Hydraulic unit	Hydraulic control system		Directional control, auto-return lever system
	Pump capacity		23.5 L/min. (6.21 gals/min)
	System pressure		12.3 to 12.8 MPa (126 to 130 kgf/cm^2) [1790 to 1850 psi]
	3-point hitch		SAE Category 1
	Max. lift force*3	At lift points	5390 N (1212 lbs)
		24 in. behind lift points	3040 N (680.4 lbs)
	Remote control valve coupler (Rear: Option)	System	2 valves
		Coupler	ISO 7241-1 series A
	Remote control valve coupler (Front: Option)	System	2 valves
		Coupler (Fitting)	ISO 7241-1 series B
PTO	Rear PTO	PTO shaft	SAE 1-3/8, 6 splines
		Revolution	STD (2500 rpm)
	Mid PTO	PTO shaft	USA No. 5 (KUBOTA 10-tooth) involute spline
		Revolution	STD (2500 rpm)

*1 Manufacturer's estimate
*2 SAE J1995
*3 See and check "Implement limitation tables".

https://truckmanualshub.com/

2. Mower specifications

Model		RCK60D-26BX	RCK54D-26BX
Suitable tractor		BX23S	
Mounting method		Drive-over-quick-joint, parallel linkage	
		Drive-over-suspended-linkage	
Adjustment of cutting height		Dial gauge	
Cutting width		1524 mm (60 in.)	1372 mm (54 in.)
Cutting height		25 to 102 mm (1.0 to 4.0 in.)	
Weight	Mower	115 kg (250 lbs)	103 kg (227 lbs)
	Mower with frame link*1	134 kg (295 lbs)	122 kg (269 lbs)
Blade spindle speed		44.1 r/s (2647 rpm)	49.5 r/s (2969 rpm)
Blade tip velocity		72.5 m/s (14271 fpm)	73.8 m/s (14527 fpm)
Blade length		523 mm (20.6 in.)	475 mm (18.7 in.)
Number of blades		3	
Dimensions	Overall length	1000 mm (39.4 in.)	928 mm (36.5 in.)
	Overall width	1930 mm (76.0 in.)	1780 mm (66.5 in.)
	Overall height (Min.)	281 mm (11.0 in.)	
Tire		Industrial, turf*2	

*1 Remove the frame link when rear attachment is on. Remove the frame link when snow attachment is on.

*2 Bar tires are prohibited from driving over mower deck.

3. Loader specifications

3.1 Loader specifications

Loader model		LA340 and LA340S
Tractor model		BX23S
Boom cylinder	Bore	40 mm (1.6 in.)
	Stroke	326 mm (12.8 in.)
Bucket cylinder	Bore	65 mm (2.6 in.)
	Stroke	196 mm (7.72 in.)
Control valve		One detent float position, single bucket dump, power beyond circuit
Rated flow		14 L/m (3.7 GPM)
Maximum pressure		12.8 MPa (131 kg/cm^2) [1860 psi]
Net weight (approximate)		217 kg (478 lbs)*1

*1 Include the quick bucket 48 in.

https://truckmanualshub.com/

3.2 Bucket specifications

Loader model		LA340	LA340S
Model		Square 48 in.	
Type		Rigid	Quick hitch
Width		1219 mm (47.99 in.)	
Depth		491 mm (19.3 in.)	470 mm (18.5 in.)
Height (M)		465 mm (18.3 in.)	523 mm (20.6 in.)
Length (N)		538 mm (21.2 in.)	586 mm (23.1 in.)
Capacity	Struck	0.14 m^3 (4.9 cu.ft.)	0.13 m^3 (4.6 cu.ft.)
	Heaped	0.17 m^3 (6.0 cu.ft.)	
Weight		60 kg (130 lbs.)	56 kg (120 lbs.)

3.3 Dimensional specifications of loader

Loader model		LA340	LA340S
Tractor model		BX23S	
A	Max. lift height (to bucket pivot pin)	1804 mm (71.02 in.)	
B	Max. lift height under level bucket	1662 mm (65.43 in.)	1664 mm (65.51 in.)
C	Clearance with bucket dumped	1323 mm (52.09 in.)	1288 mm (50.71 in.)
D	Reach at max. lift height (Dumping reach)	646 mm (25.4 in.)	677 mm (26.7 in.)
E	Max. dump angle	0.785 rad (45°)	
F	Reach with bucket on ground	1392 mm (54.80 in.)	1438 mm (56.61 in.)
G	Bucket roll-back angle	0.51 rad (29°)	
H	Digging depth	125 mm (4.92 in.)	122 mm (4.80 in.)
J	Overall height in carrying position	990 mm (39.0 in.)	

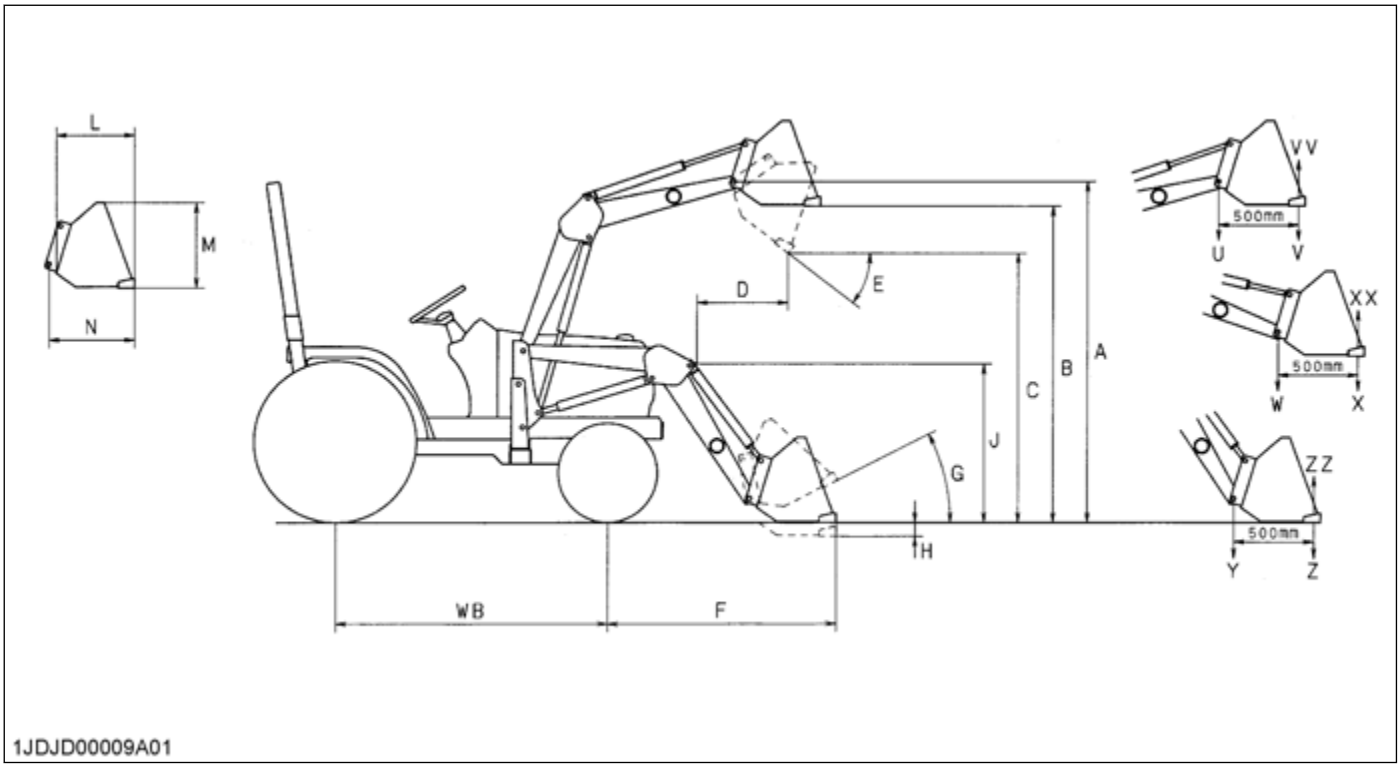

https://truckmanualshub.com/

3.4 Operational specifications of loader

Loader model		LA340	LA340S
Tractor model		BX23S	
U	Lift capacity (Bucket pivot pin, max. height)	335 kg (739 lbs)	278 kg (613 lbs)
V	Lift capacity (500 mm forward, max. height)	231 kg (509 lbs)	192 kg (423 lbs)
W	Lift capacity (Bucket pivot pin, 1500 mm height)	372 kg (820 lbs)	317 kg (699 lbs)
X	Lift capacity (500 mm forward, 1500 mm height)	268 kg (591 lbs)	229 kg (505 lbs)
Y	Breakout force (Bucket pivot pin)	6258 N (1407 lbs)	5719 N (1286 lbs)
Z	Breakout force (500 mm forward)	4389 N (986.7 lbs)	4008 N (901.0 lbs)
VV	Bucket roll-back force at max. height	4731 N (1064 lbs)	4431 N (996.1 lbs)
XX	Bucket roll-back force at 1500 mm height	5557 N (1249 lbs)	5264 N (1183 lbs)
ZZ	Bucket roll-back force at ground level	5456 N (1227 lbs)	5195 N (1168 lbs)
Raising time		3.3 s	
Lowering time		2.5 s	
Bucket dumping time		2.7 s	
Bucket rollback time		2.3 s	

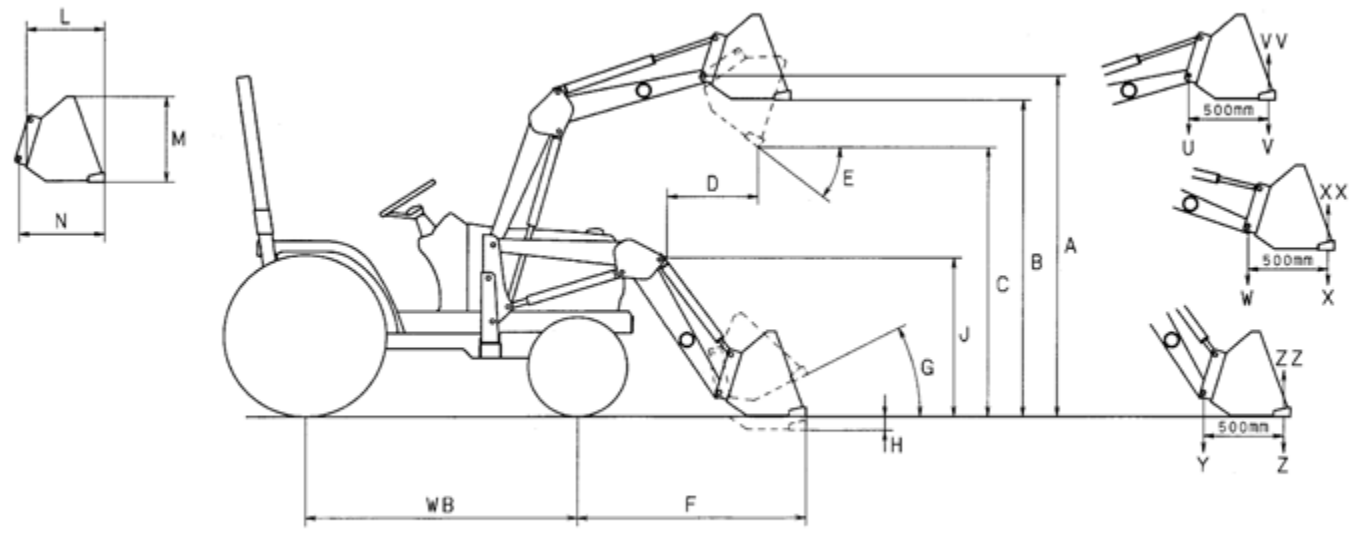

1JDJD00009A01

LA340

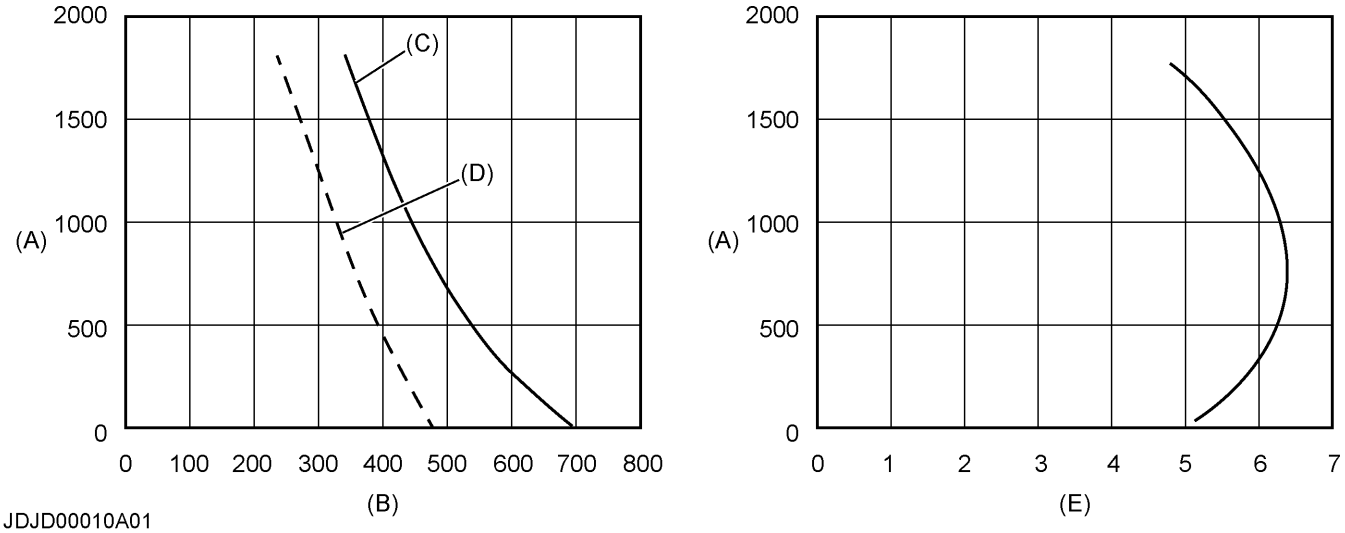

LA340S

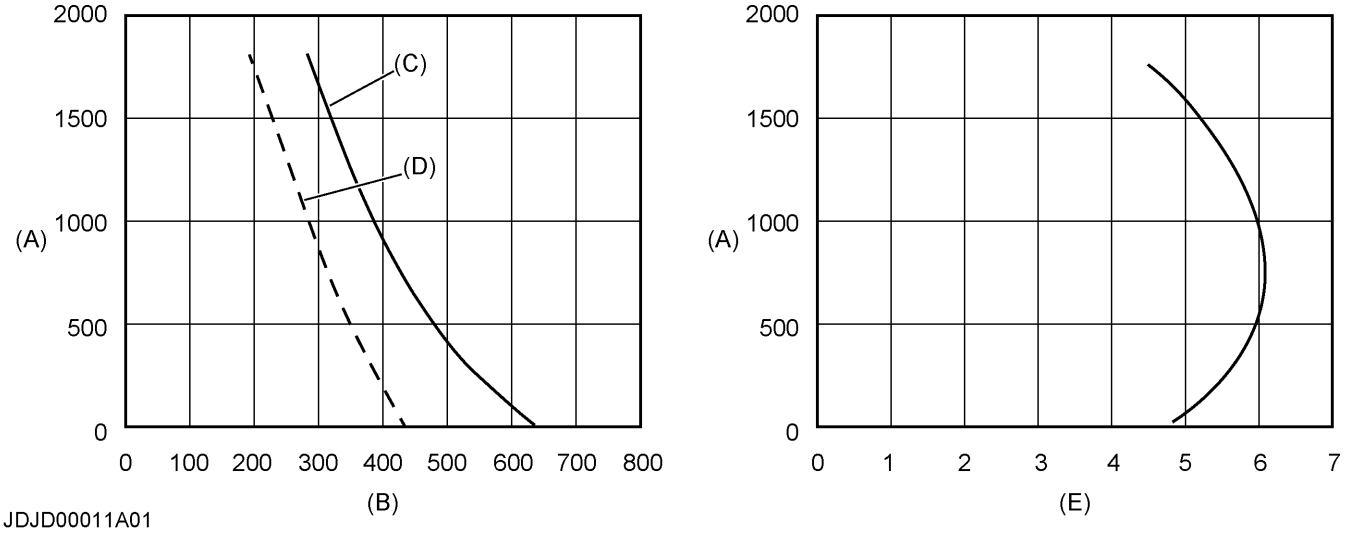

(A) Height (mm)
(B) Lift capacity (kg)
(C) At pivot pin
(D) 500 mm forward of pivot pin
(E) Rollback force (kN)

https://truckmanualshub.com/

4. Backhoe specifications

4.1 Backhoe specifications

Digging force (Per SAE J49)

With bucket cylinder	8610 N (1936 lbs)
With dipperstick cylinder	5209 N (1171 lbs)

Cycle time (Seconds)

Boom cylinder, extend	4.5 s
Boom cylinder, retract	3.7 s
Swing cylinder, from 90 degrees to center	1.5 s
Dipperstick cylinder, extend	4.1 s
Dipperstick cylinder, retract	3.4 s
Bucket cylinder, extend	3.1 s
Bucket cylinder, retract	2.4 s
Stabilizer cylinder, max. height to ground	2.9 s
Stabilizer cylinder, ground to max. height	2.3 s

Hydraulic cylinders

	Boom	Dipperstick	Bucket	Stabilizer	Swing
Rod diameter	3.0 cm (1.2 in.)	2.5 cm (0.98 in.)	2.5 cm (0.98 in.)	2.5 cm (0.98 in.)	3.0 cm (1.2 in.)
Cylinder bore	6.5 cm (2.6 in.)	6.0 cm (2.4 in.)	5.0 cm (2.0 in.)	6.0 cm (2.4 in.)	6.0 cm (2.4 in.)

Bucket sizes

	Width	SAE truck capacity	SAE heaped capacity	Number of teeth	Weight
Trenching 8 in.	20.3 cm (7.99 in.)	0.009 m^3 (0.317 cu.ft.)	0.011 m^3 (0.388 cu.ft.)	2	10 kg (22 lbs)
Trenching 12 in.	30.5 cm (12.0 in.)	0.014 m^3 (0.494 cu.ft.)	0.020 m^3 (0.706 cu.ft.)	3	13 kg (29 lbs)
Trenching 16 in.	40.6 cm (16.0 in.)	0.020 m^3 (0.706 cu.ft.)	0.029 m^3 (1.024 cu.ft.)	3	16 kg (35 lbs)

4.2 Backhoe dimensions

Model		BT603
(A)	Transport height	1719 mm (67.68 in.)
(B)	Stabilizer spread-transport	1296 mm (51.02 in.)
(C)	Ground clearance	240 mm (9.45 in.)
(E)	Overall width	1128 mm (44.41 in.)
(F)	Maximum digging depth	1889 mm (74.37 in.)
(G)	Digging depth, 2 ft. flat bottom	1842 mm (72.52 in.)
(H)	Digging depth, 8 ft. flat bottom	1059 mm (41.69 in.)
(J)	Operating height, fully raised	2539 mm (99.96 in.)
(K)	Loading height	1533 mm (60.35 in.)
(L)	Loading reach	1016 mm (40.00 in.)
(M)	Reach from swing pivot	2612 mm (102.8 in.)
(N)	Swing pivot to rear axle center line	726 mm (28.6 in.)
(P)	Bucket rotation	3.14 rad (180°)
(R)	Stabilizer spread-operating	1862 mm (73.31 in.)
(A3)	Angle of departure per SAE J1234	0.351 rad (20.1°)
(U)	Leveling angle	0.19 rad (11°)
Swing arc		2.44 rad (140°)

NOTE

- **The specifications are taken with KUBOTA BX23S tractor. (Tire size: Front 18×8.5-10, Rear 26×12.00-12)**

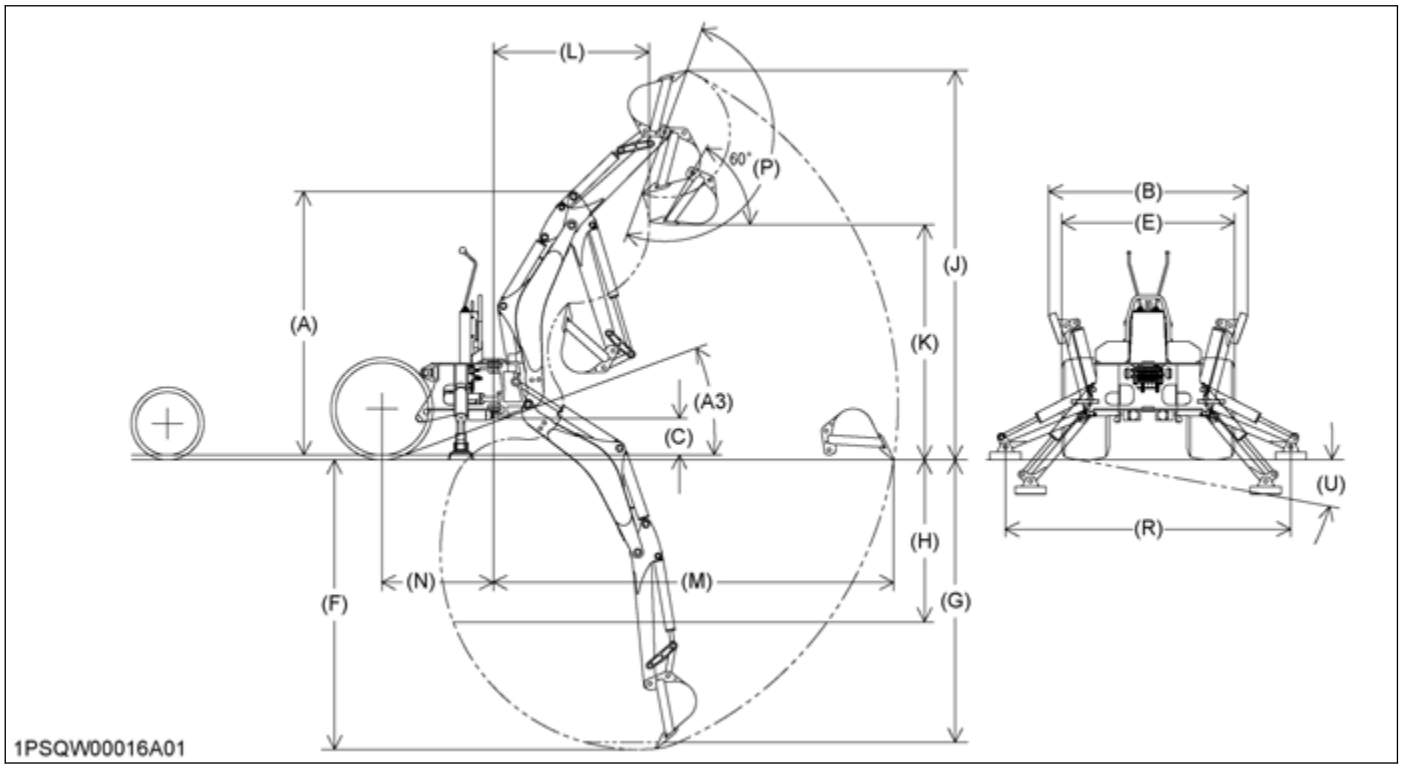

https://truckmanualshub.com/

4.3 Backhoe lift capacity

The lift capacities shown are 87% of maximum lift force, according to SAE definition.

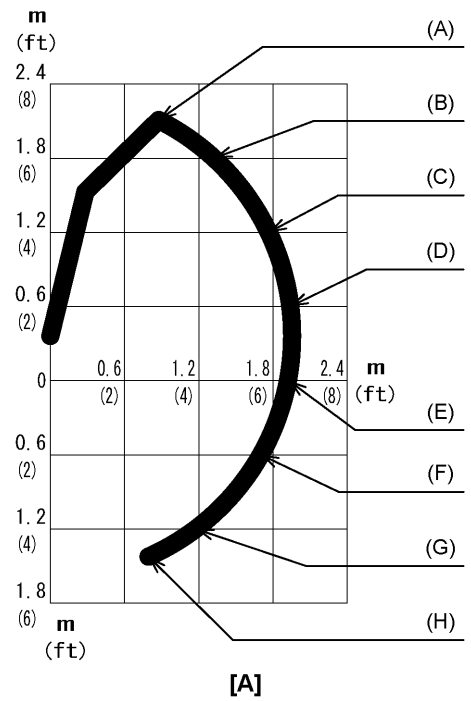

1PSQW00017A01

[A]	Rated lift capacity (over end)-kg (lbs)	(D)	209 kg (461 lbs)
		(E)	203 kg (448 lbs)
(A)	192 kg (423 lbs)	(F)	201 kg (443 lbs)
(B)	212 kg (467 lbs)	(G)	214 kg (472 lbs)
(C)	215 kg (474 lbs)	(H)	262 kg (578 lbs)

https://truckmanualshub.com/

TRAVELING SPEEDS

Model		BX23S
Tire size (Rear)		26 × 12.00-12
Speed control pedal	Range gear shift lever	(At max. engine rpm)
Forward	Low	0 to 6.5 km/h 0 to 4.0 mph
	High	0 to 13.5 km/h 0 to 8.38 mph
Reverse	Low	0 to 5.0 km/h 0 to 3.1 mph
	High	0 to 10.5 km/h 0 to 6.52 mph

https://truckmanualshub.com/

DIMENSIONS

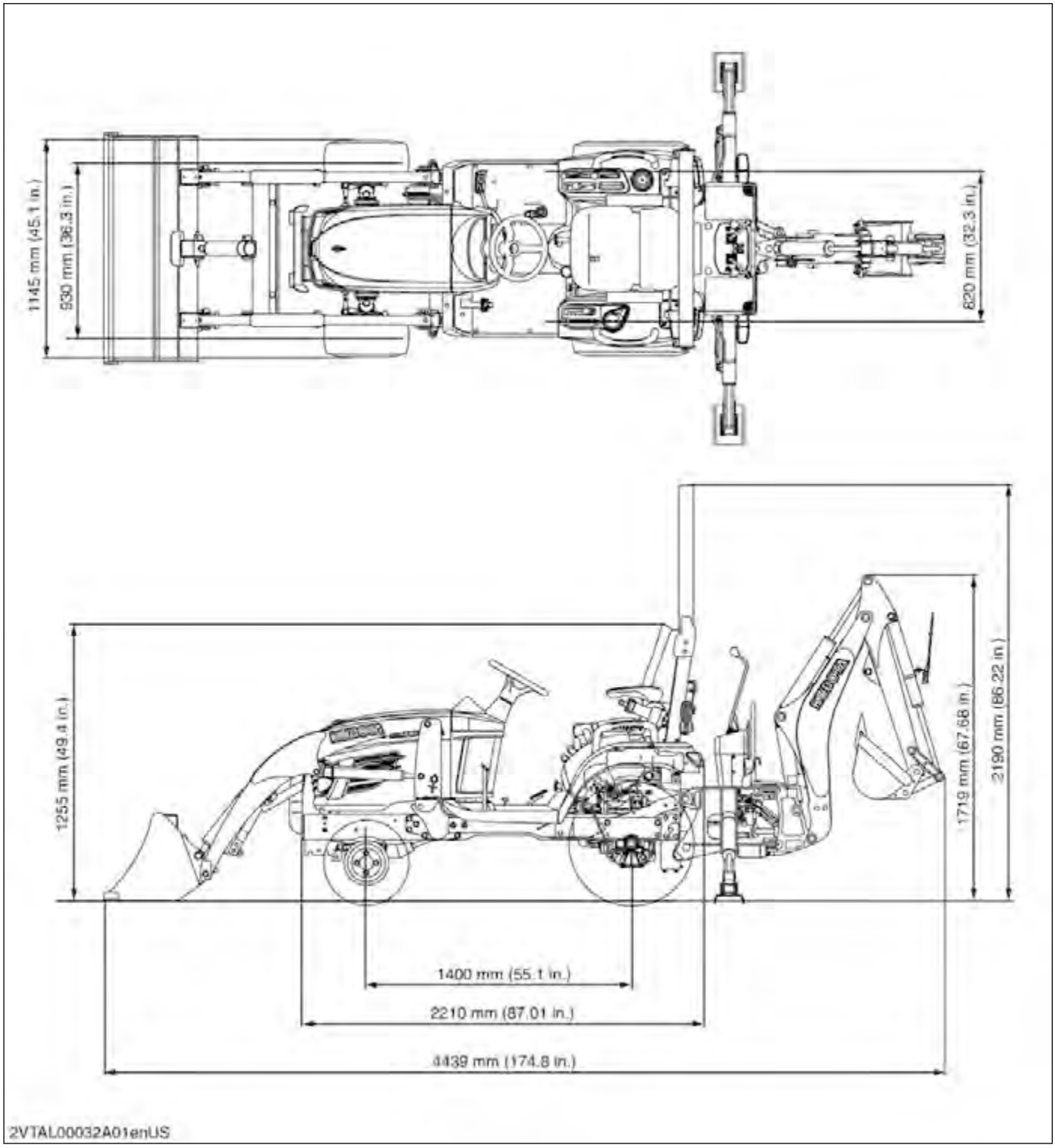
1145 mm (45.1 in.)
930 mm (36.3 in.)
820 mm (32.3 in.)
1255 mm (49.4 in.)
1719 mm (67.68 in.)
2190 mm (86.22 in.)
1400 mm (55.1 in.)
2210 mm (87.01 in.)
4439 mm (174.8 in.)
2VTAL00032A01enUS

https://truckmanualshub.com/

https://truckmanualshub.com/

2. GENERAL

https://truckmanualshub.com/

IDENTIFICATION

1. Tractor identification

1.1 Checking serial number and hour meter

- When contacting your local KUBOTA distributor, always specify engine serial number, tractor serial number and hour meter reading.

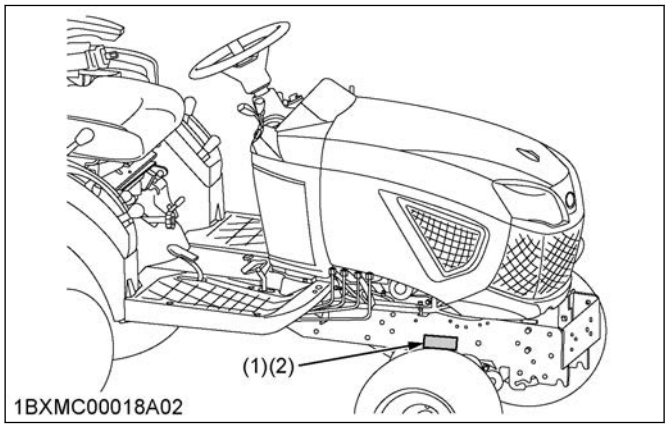

(1) Tractor identification plate (2) Tractor serial number

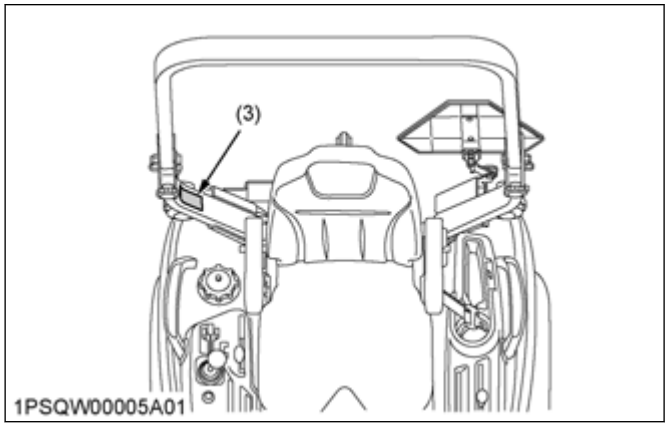

(3) ROPS identification plate

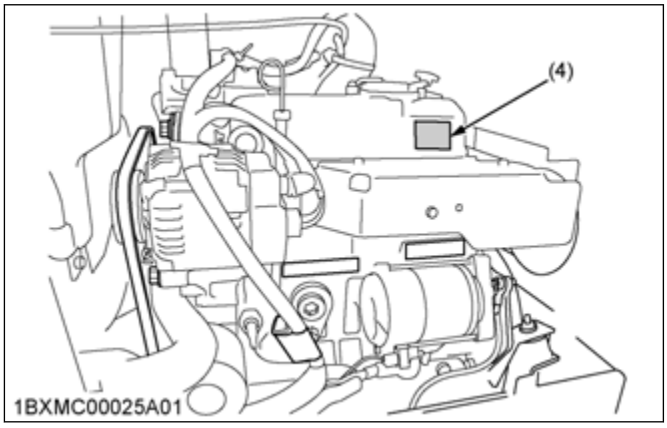

(4) Engine serial number

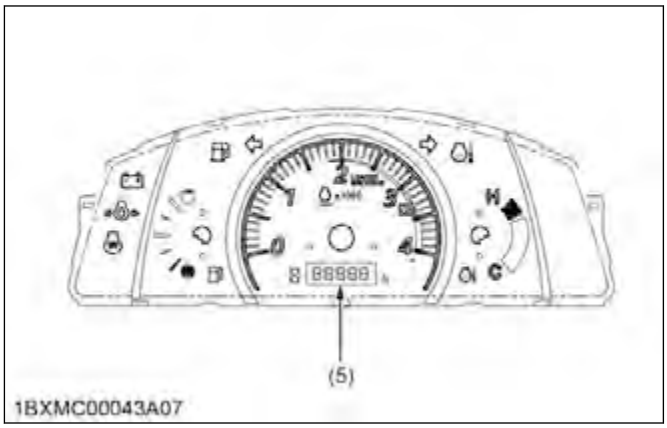

(5) Hour meter

1.2 Cylinder number

The cylinder numbers of KUBOTA diesel engine are designated as shown in the figure.

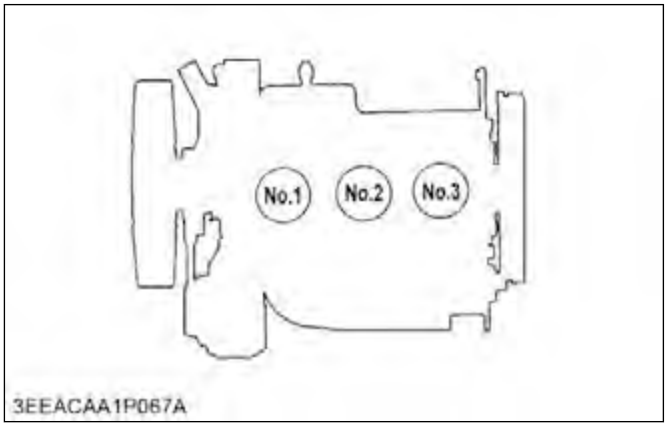

The sequence of cylinder numbers is given as No.1, No.2 and No.3 starting from the gear case side.

2. Checking mower identification

- When contacting your local KUBOTA distributor, always specify mower serial number.

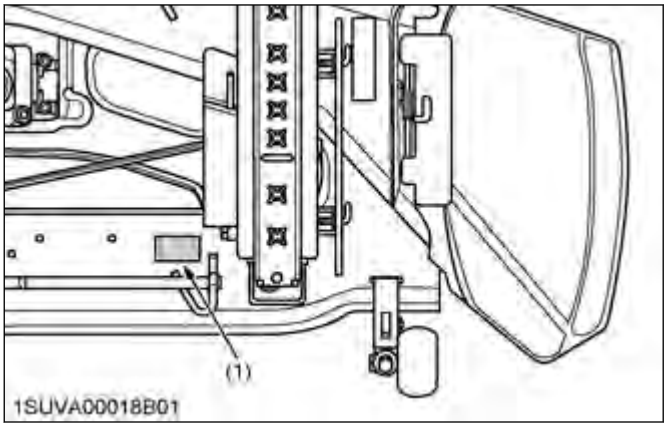

(1) Mower serial number

3. Checking loader identification

- When contacting your local KUBOTA distributor, always specify loader serial number.

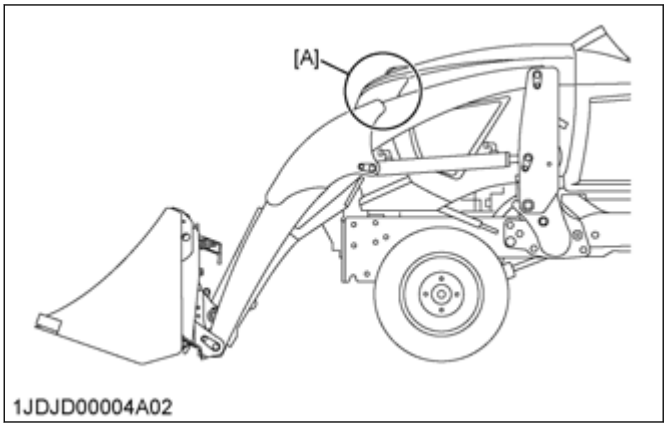

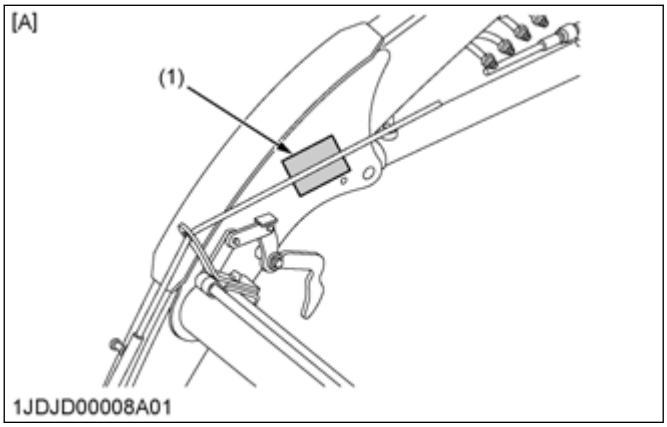

(1) Loader serial number [A] Boom R.H. inside

4. Checking backhoe identification

- When contacting your local KUBOTA distributor, always specify backhoe serial number.

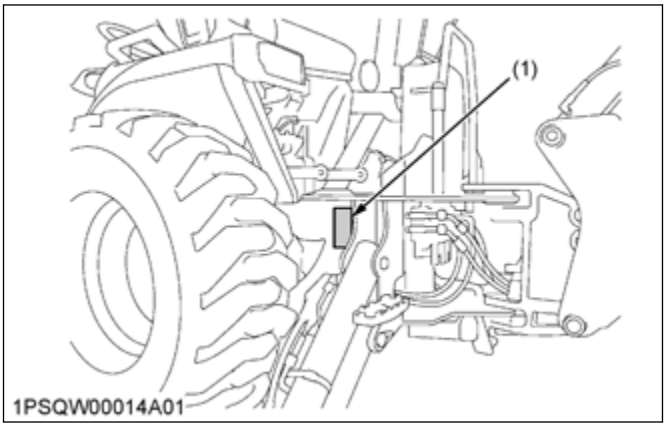

(1) Backhoe serial number

GENERAL PRECAUTIONS

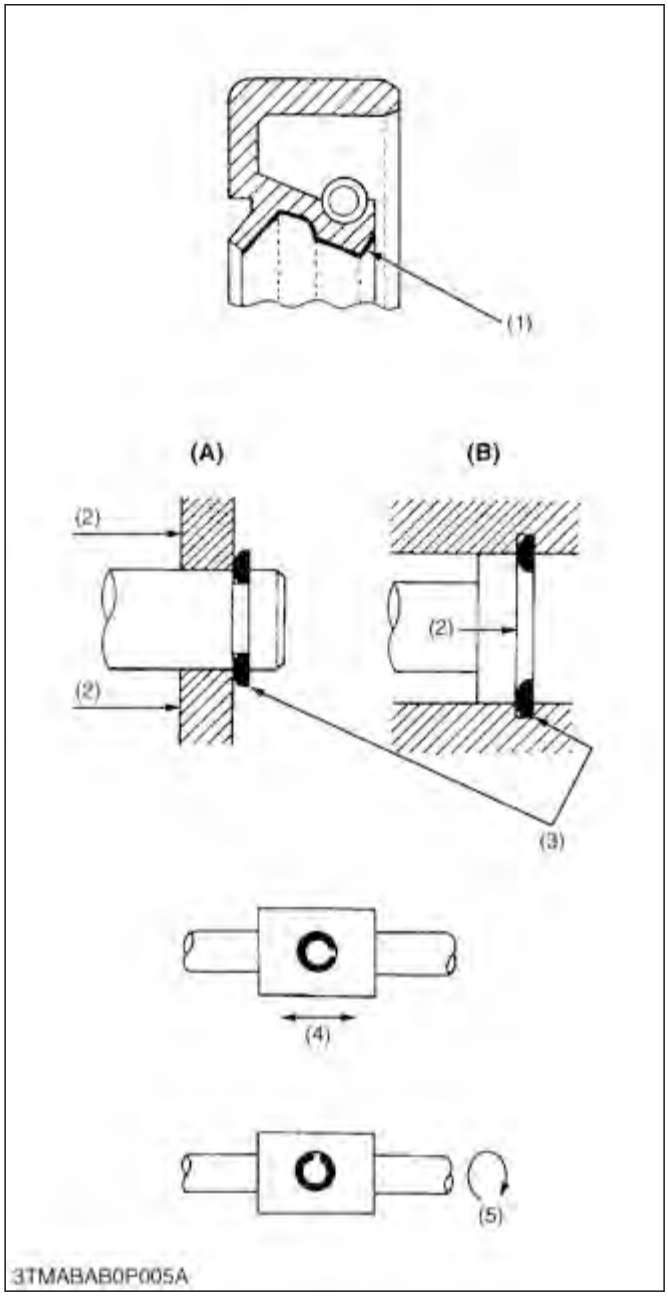

(1) Grease
(2) Force
(3) Sharp edge
(4) Axial force
(5) Rotating movement
(A) External circlip
(B) Internal circlip

- When you disassemble, carefully put the parts in a clean area to make it easy to find the parts. You must install the screws, bolts and nuts in their initial position to prevent the reassembly errors.
- When it is necessary to use special tools, use KUBOTA special tools. Refer to the drawings when you make special tools that you do not use frequently.
- Before you disassemble or repair machine, make sure that you always disconnect the ground cable from the battery first.
- Remove oil and dirt from parts before you measure.
- Use KUBOTA genuine parts for replacement to keep the machine performance and to make sure of safety.
- You must replace the gaskets and O-rings when you assemble again. Apply grease (1) to new O-rings or oil seals before you assemble.
- When you assemble the external or internal snap rings, make sure that the sharp edge (3) faces against the direction from which force (2) is applied.
- When inserting spring pins, their splits must face the direction from which a force is applied.
- To prevent damage to the hydraulic system, use specified fluid or equivalent.
- Clean the parts before you measure them.
- Tighten the fittings to the specified torque. Too much torque can cause damage to the hydraulic units or the fittings. Not sufficient torque can cause oil leakage.
- When you use a new hose or pipe, tighten the nuts to the specified torque. Then loosen (approx. by 45°) and let them be stable before you tighten to the specified torque (This is not applied to the parts with seal tape.).
- When you remove the two ends of a pipe, remove the lower end first.
- Use two pliers in removal and installation. One to hold the stable side, and the other to turn the side you remove to prevent twists.
- Make sure that the sleeves of flared connectors and tapers of hoses are free of dust and scratches.
- After you tighten the fittings, clean the joint and apply the maximum operation pressure 2 to 3 times to check oil leakage.

https://truckmanualshub.com/

https://truckmanualshub.com/

HANDLING PRECAUTIONS FOR ELECTRICAL PARTS AND WIRING

IMPORTANT

- **Check electrical wiring for damage and loosened connection every year. To this end, educate the customer to do his or her own check and at the same time recommend the dealer to perform periodic check for a fee.**
- **Do not try to modify or remodel any electrical parts and wiring.**
- **When removing the battery cables, disconnect the negative cable first. When installing the battery cables, connect the positive cable first.**

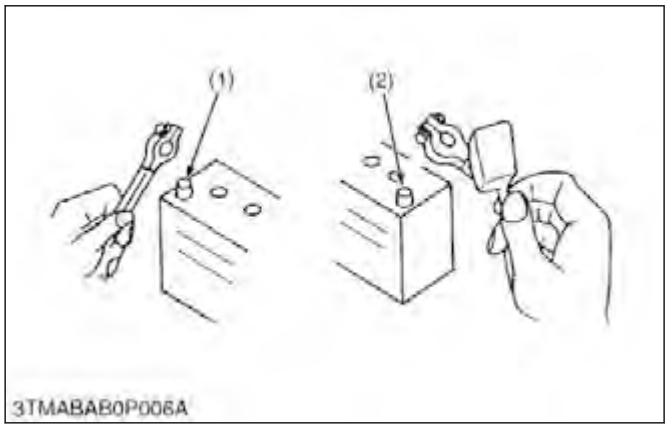

(1) Negative terminal (2) Positive terminal

To ensure safety and prevent damage to the machine and surrounding equipment, heed the following precautions in handling electrical parts and wiring.

https://truckmanualshub.com/

https://truckmanualshub.com/

LUBRICANTS, FUEL AND COOLANT

1. BX tractor

1.1 Lubricants, fuel, and coolant

IMPORTANT

- **To prevent serious damage to hydraulic systems, use only KUBOTA genuine fluid or its equivalent.**

No.	Locations	Capacities	Grade	
1	Fuel	25 L 6.6 U.S.gals 5.5 Imp.gals	• No. 2-D diesel fuel • No. 1-D diesel fuel if temperature is below -10 ℃ (14 ℉)	
2	Coolant with recovery tank	3.1 L 3.3 U.S.qts 2.7 Imp.qts	Fresh clean soft water with anti-freeze	
3	Engine crankcase*1	3.3 L 3.5 U.S.qts 2.9 Imp.qts	• **Engine oil** API Service Classification CF or higher	
			Above 25 ℃ (77 ℉)	SAE30, SAE10W-30 or 15W-40
			-10 ℃ to 25 ℃ (14 ℉ to 77 ℉)	SAE20, SAE10W-30, or 15W-40
			Below -10 ℃ (14 ℉)	SAE10W-30
4	Transmission case	11.3 L 2.99 U.S.gals 2.49 Imp.gals	• KUBOTA SUPER UDT-2 fluid*2	
5	Front axle case	3.6 L 3.8 U.S.qts 3.2 Imp.qts	• KUBOTA SUPER UDT-2 fluid or SAE 80-SAE90 gear oil*2	
6	**Greasing**	**No. of greasing points**	**Capacity**	**Type of grease**
	Battery terminal	2	Moderate amount	Multipurpose EP2 Grease (NLGI Grade No. 2)
	Speed control pedal	1	Until grease overflow	
	Bonnet lock	1	Moderate amount	
	Bonnet guide	1	Moderate amount	

*1 Oil amount when the oil level is at the upper level of the oil level gauge.

*2 The product name of KUBOTA genuine UDT fluid may be different from that in the operator's manual depending on countries or territories.

1.1.1 Fuel

- Use the ultra low sulfur diesel fuel only [below 0.0015 % (15 ppm)] for these engines.
- Cetane number of 45 minimum. Cetane number greater than 50 is preferred, especially for temperatures below −20 °C (−4 °F) or elevations above 1500 m (5000 ft).
- Diesel fuels specified to EN 590 or ASTM D975 are recommended.
- No.2-D is a distillate fuel of lower volatility for engines in industrial and heavy mobile service. (SAE J313 JUN87)

1.1.2 Engine oil

- Oil used in the engine should have an American Petroleum Institute (API) service classification and Proper SAE Engine Oil according to the ambient temperatures.
- Refer to the following table for the suitable API classification engine oil according to the engine type (with internal EGR, external EGR or non-EGR) and the fuel.

Fuel used	Engine oil classification (API classification)	
	Oil class of engines except external EGR	Oil class of engines with external EGR
Ultra Low Sulfur Fuel [< 0.0015% (< 15 ppm)]	CF, CF-4, CG-4, CH-4 or CI-4	CF or CI-4 (Class CF-4, CG-4 and CH-4 engine oils cannot be used on EGR type engines)

EGR:
Exhaust gas re-circulation

- The CJ-4 engine oil is intended for diesel particulate filter (DPF) type engines, and cannot be used on this tractor.

1.1.3 Transmission oil

*KUBOTA Super UDT-2: For an enhanced ownership experience, we highly recommend Super UDT-2 to be used instead of standard hydraulic/transmission fluid.
Super UDT-2 is a proprietary KUBOTA formulation that deliveries superior performance and protection in all operating conditions.
Regular UDT is also permitted for use in this machine.

- Indicated capacities of water and oil are manufacturer's estimate.

https://truckmanualshub.com/

1.2 Overview of biodiesel fuel (BDF)

B0-B20 biodiesel fuels (BDF)
You can use mixed diesel fuels containing 20% or less biodiesel under the following conditions.

IMPORTANT
- **Concentrations greater than B5 (5%) are not approved for common rail engines and engines with aftertreatment device. Using concentrations greater than B5 (5%) can cause damage and reduce engine life.**
- **Refuel and use the fuel with caution in order to avoid contact with the fuel and spillage that could create a potential environmental or fire hazard. Wear appropriate protective equipment when refueling.**

Applicable BDF
- You can use blended diesel fuels containing 6% through 20% BDF (B6-B20) which comply with American society for testing and materials (ASTM) D7467 standard, as revised, without adversely affecting the performance and durability of the engine and the components of the fuel system.
- Any mineral-oil-diesel-fuel, if used, must conform to ASTM D975 (or the European EN590) Standard, as revised.
  B100 fuel used to generate biodiesel-blended-fuels must meet ASTM D6751 (or EN14214) Standard, as revised.
  The final blended fuel B20 must conform to ASTM D7467 standard, as revised.
  Straight-vegetable-oil is not allowed in any blended fuel.
- Allowable blended fuel is mineral-oil-diesel-fuel blended with B100 (for example 100% BDF).
  The blended fuel ratio shall be less than 20% B100 and 80% or more diesel fuel.
  Purchase the B100 source used for biodiesel blends from an accredited BQ-9000 marketer or producer.
  You can find more information about qualified marketer(s) and producer(s) at *http://www.bq-9000.org*.

Product warranty, emission, and other precautions
- The engine-emission-control-system was certified according to current regulations based on the use of non-BDF. When using BDF, the owner is advised to check applicable local and federal emission regulations, and comply with all of them.
- BDF may cause restricted or clogged fuel filters during cold weather conditions, resulting in the engine not operating properly.
- BDF encourages the growth of microorganisms which may cause degradation of the fuel. Degradation of the fuel may cause corrosion of the fuel line or reduce the fuel filter flow earlier than expected.
- BDF inherently absorbs moisture which may cause degradation of the fuel earlier than expected. To avoid absorbing moisture of BDF, drain the water separator and the fuel-filter-port often.
- Do not use biodiesel whose concentrations higher than 20% (for example, greater than B20).
  Higher concentrated biodiesel will affect engine performance and fuel consumption, and degradation of the fuel system components may occur.
- Do not readjust the engine-fuel-control-system because readjusting it will violate the emission-control-levels for which the equipment was approved.
- Compared with soybean-based and rapeseed-based feedstock, palm-oil-based feedstock has a thicker consistency (for example, higher viscosity) at lower temperatures.
  Consequently, palm-oil-based feedstock may reduce performance of the fuel filter, particularly during cold weather conditions.
- The KUBOTA warranty, as specified in the Owner's Warranty Information Guide, only covers flaws in product materials and workmanship. Accordingly, The KUBOTA warranty do not cover any problems that may arise due to the use of poor quality fuels that fail to meet the preceding requirements, whether biodiesel or mineral-oil-based.

Routine using
- Avoid spilling BDF onto painted surfaces because this may damage the finish. If the fuel is spilled, immediately wipe clean and flush with soapy water to avoid permanent damage.
- When using BDF, you are advised to keep a full tank of the fuel, especially overnight and during short term storage, to reduce condensation within the tank. Be sure to tighten the fuel cap after refueling to prevent moisture build up within the tank. Water in the biodiesel mixture will damage the fuel filters and may damage the engine components.

Maintenance requirements when using BDF B0 through B5
Extended oil-change-intervals may result in premature wear or engine damage.

Maintenance requirements when using BDF B6 through B20
The maintenance interval for fuel related parts changes.

See the following table for the new maintenance interval.

Items		Interval	Remarks
Fuel filter	Check	Every 50 hr	
	Replace	Every 200 hr	
Fuel hose	Check	Every 6 months	Replace if any deterioration (crack, hardening, scar, or deformation) or damage occurred.
	Replace	Every 2 years	Consult your local KUBOTA Dealer for this service.

Long term storage for B5

- BDF easily deteriorates due to oxygen, water, heat, and foreign substances. Do not store B5 longer than three months.
- When using B5 fuel and storing the machine longer than three months, drain the fuel from the tanks and replace with light-mineral-oil-diesel-fuel. Subsequently, operate the engine at least the following minutes to remove all of the biodiesel from the fuel lines.

Operating the engine	30 minutes

Long term storage for B6 through B20

- BDF easily deteriorates due to oxygen, water, heat, and foreign substances. Do not store B6 through B20 longer than one month.
- When using B6 through B20 fuel and storing the machine longer than one months, drain the fuel from the tanks and replace with light-mineral-oil-diesel-fuel. Subsequently, operate the engine at least the following minutes to remove all of the biodiesel from the fuel lines.

Operating the engine	30 minutes

https://truckmanualshub.com/

2. Mower

2.1 Lubricants

No.	Place	Capacity	Lubricant
1	Gear box	0.36 L 0.38 U.S.qts 0.32 Imp.qts	• SAE 90 gear oil (API Service GL —5 gear oil)

Greasing			
No.	**Place**	**Capacity**	**Type of grease**
2	Universal joint	Until grease overflows	SAE multi-purpose type grease NLGI-2 or NLGI-1 (GC-LB)
3	Three spindle shafts		
4	Belt tension pulley		
5	Belt tension pivot		
7	Front and rear anti-scalp roller		

https://truckmanualshub.com/

TIGHTENING TORQUES

1. General use screws, bolts and nuts

Indication on top of bolt	4 No-grade or 4T						7 7T						9 9T		
Indication on top of nut	No-grade or 4T												6T		
Material of opponent part	Ordinariness			Aluminum			Ordinariness			Aluminum			Ordinariness		
Unit	N·m	kgf·m	lbf·ft	N·m	kgf·m	lbf·ft	N·m	kgf·m	lbf·ft	N·m	kgf·m	lbf·ft	N·m	kgf·m	lbf·ft
M6	7.9 to 9.3	0.80 to 0.95	5.8 to 6.8	7.9 to 8.8	0.80 to 0.90	5.8 to 6.5	9.81 to 11.2	1.00 to 1.15	7.24 to 8.31	7.9 to 8.8	0.80 to 0.90	5.8 to 6.5	12.3 to 14.2	1.25 to 1.45	9.05 to 10.4
M8	18 to 20	1.8 to 2.1	13 to 15	17 to 19	1.7 to 2.0	13 to 14	24 to 27	2.4 to 2.8	18 to 20	18 to 20	1.8 to 2.1	13 to 15	30 to 34	3.0 to 3.5	22 to 25
M10	40 to 45	4.0 to 4.6	29 to 33	32 to 34	3.2 to 3.5	24 to 25	48 to 55	4.9 to 5.7	36 to 41	40 to 44	4.0 to 4.5	29 to 32	61 to 70	6.2 to 7.2	45 to 52
M12	63 to 72	6.4 to 7.4	47 to 53	—	—	—	78 to 90	7.9 to 9.2	58 to 66	63 to 72	6.4 to 7.4	47 to 53	103 to 117	10.5 to 12.0	76.0 to 86.7
M14	108 to 125	11.0 to 12.8	79.6 to 92.5	—	—	—	124 to 147	12.6 to 15.0	91.2 to 108	—	—	—	167 to 196	17.0 to 20.0	123 to 144
M16	167 to 191	17.0 to 19.5	123 to 141	—	—	—	197 to 225	20.0 to 23.0	145 to 166	—	—	—	260 to 304	26.5 to 31.0	192 to 224
M18	246 to 284	25.0 to 29.0	181 to 209	—	—	—	275 to 318	28.0 to 32.5	203 to 235	—	—	—	344 to 402	35.0 to 41.0	254 to 296
M20	334 to 392	34.0 to 40.0	246 to 289	—	—	—	368 to 431	37.5 to 44.0	272 to 318	—	—	—	491 to 568	50.0 to 58.0	362 to 419

2. Stud bolts

Material of opponent part	Ordinariness			Aluminum		
Unit	N·m	kgf·m	lbf·ft	N·m	kgf·m	lbf·ft
M8	12 to 15	1.2 to 1.6	8.7 to 11	8.9 to 11	0.90 to 1.2	6.5 to 8.6
M10	25 to 31	2.5 to 3.2	18 to 23	20 to 25	2.0 to 2.6	15 to 18
M12	30 to 49	3.0 to 5.0	22 to 36	31	3.2	23
M14	62 to 73	6.3 to 7.5	46 to 54	—	—	—
M16	98.1 to 112	10.0 to 11.5	72.4 to 83.1	—	—	—
M18	172 to 201	17.5 to 20.5	127 to 148	—	—	—

3. Metric screws, bolts and nuts

Grade	8.8 Property class 8.8			10.9 Property class 10.9		
Unit	N·m	kgf·m	lbf·ft	N·m	kgf·m	lbf·ft
M8	24 to 27	2.4 to 2.8	18 to 20	30 to 34	3.0 to 3.5	22 to 25
M10	48 to 55	4.9 to 5.7	36 to 41	61 to 70	6.2 to 7.2	45 to 52
M12	78 to 90	7.9 to 9.2	58 to 66	103 to 117	10.5 to 12.0	76.0 to 86.7
M14	124 to 147	12.6 to 15.0	91.2 to 108	167 to 196	17.0 to 20.0	123 to 144
M16	197 to 225	20.0 to 23.0	145 to 166	260 to 304	26.5 to 31.0	192 to 224

4. American standard screws, bolts and nuts with UNC or UNF threads

Grade	SAE GR.5			SAE GR.8		
Unit	N·m	kgf·m	lbf·ft	N·m	kgf·m	lbf·ft
1/4	11.7 to 15.7	1.20 to 1.60	8.63 to 11.5	16.3 to 19.7	1.67 to 2.00	12.0 to 14.6
5/16	23.1 to 27.7	2.36 to 2.82	17.0 to 20.5	33 to 39	3.4 to 3.9	25 to 28
3/8	48 to 56	4.9 to 5.7	36 to 41	61 to 73	6.3 to 7.4	45 to 53
1/2	110 to 130	11.3 to 13.2	81.2 to 95.8	150 to 178	15.3 to 18.1	111 to 131
9/16	150 to 178	15.3 to 18.1	111 to 131	217 to 260	22.2 to 26.5	160 to 191
5/8	204 to 244	20.8 to 24.8	151 to 179	299 to 357	30.5 to 36.4	221 to 263

5. Plugs

Shape	Size	Material of opponent part					
		Ordinariness			Aluminum		
		N·m	kgf·m	lbf·ft	N·m	kgf·m	lbf·ft
Tapered screw 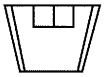	R1/8	13 to 21	1.3 to 2.2	9.4 to 15	13 to 19	1.3 to 2.0	9.4 to 14
	R1/4	25 to 44	2.5 to 4.5	18 to 32	25 to 34	2.5 to 3.5	18 to 25
	R3/8	49 to 88	5.0 to 9.0	37 to 65	49 to 58	5.0 to 6.0	37 to 43
	R1/2	58.9 to 107	6.00 to 11.0	43.4 to 79.5	59 to 78	6.0 to 8.0	44 to 57
Straight screw 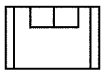	G1/4	25 to 34	2.5 to 3.5	18 to 25	—	—	—
	G3/8	62 to 82	6.3 to 8.4	46 to 60	—	—	—
	G1/2	49 to 88	5.0 to 9.0	37 to 65	—	—	—

https://truckmanualshub.com/

6. Adapters, elbows and others

Item	Thread size	Tightening torque		
Adjustable elbow, adapter (O-ring port) (UNF)	9/16	37 to 44 N·m	3.8 to 4.4 kgf·m	28 to 32 lbf·ft
	3/4	48 to 54 N·m	4.9 to 5.5 kgf·m	36 to 39 lbf·ft
	7/8	77 to 85 N·m	7.9 to 8.6 kgf·m	57 to 62 lbf·ft
Hose fitting, flare nut (UNF)	9/16	25 to 28 N·m	2.6 to 2.8 kgf·m	19 to 20 lbf·ft
	3/4	36 to 40 N·m	3.7 to 4.0 kgf·m	27 to 29 lbf·ft
	7/8	43 to 50 N·m	4.4 to 5.0 kgf·m	32 to 36 lbf·ft
Adapter (NPT)	1/4	30 to 50 N·m	3.1 to 5.0 kgf·m	23 to 36 lbf·ft
	3/8	39 to 60 N·m	4.0 to 6.1 kgf·m	29 to 44 lbf·ft
	1/2	49 to 58 N·m	5.0 to 5.9 kgf·m	37 to 42 lbf·ft
Grease fitting	1/8-27	4.1 to 6.7 N·m	0.42 to 0.69 kgf·m	3.0 to 5.0 lbf·ft
	1/4-18	4.1 to 6.7 N·m	0.42 to 0.69 kgf·m	3.0 to 5.0 lbf·ft

NOTE

- **When connecting a hose with flare nut, after tightening the nut with specified torque, return it at approximately 45 degrees (0.79 rad) and re-tighten it to specified torque.**

https://truckmanualshub.com/

MAINTENANCE CHECK LIST

1. BX tractor service intervals

No.	Items		Indication on hour meter														Since then	Reference page		
			50	100	150	200	250	300	350	400	450	500	550	600	650	700				
1	Engine oil	Change	◎			○				○				○			every 200 Hr	2-25	*1	
2	Engine oil filter	Replace	◎			○				○				○			every 200 Hr	2-25	*1	
3	Transmission oil filter	Replace	◎			○				○				○			every 200 Hr	2-26	*1	
4	Transmission fluid	Change	◎							○							every 400 Hr	2-26	*1	
5	Transmission strainer	Clean	◎							○							every 400 Hr	2-27	*1	
6	Engine start system	Check	○	○	○	○	○	○	○	○	○	○	○	○	○	○	every 50 Hr	2-29		
7	OPC system	Check	○	○	○	○	○	○	○	○	○	○	○	○	○	○	every 50 Hr	2-29		
8	Greasing	—	○	○	○	○	○	○	○	○	○	○	○	○	○	○	every 50 Hr	2-27		
9	Wheel bolt torque	Check	○	○	○	○	○	○	○	○	○	○	○	○	○	○	every 50 Hr	2-30		
10	Lock lever	Clean	○	○	○	○	○	○	○	○	○	○	○	○	○	○	every 50 Hr	2-30		
11	Battery condition	Check		○		○		○		○		○		○		○	every 100 Hr	2-30	*B	
12	Air cleaner element	Clean		○		○		○		○		○		○		○	every 100 Hr	2-25		
		Replace															every 1000 Hr or 1 year	2-39		@
13	Fuel filter element	Check		○		○		○		○		○		○		○	every 100 Hr	2-32		
		Replace								○							every 400 Hr	2-38		@
14	Fan belt	Adjust		○		○		○		○		○		○		○	every 100 Hr	2-33		
15	HST neutral spring	Adjust		○		○		○		○		○		○		○	every 100 Hr	2-33		
16	Brake pedal	Adjust		○		○		○		○		○		○		○	every 100 Hr	2-34		
17	Toe-in	Adjust				○				○				○			every 200 Hr	2-36		
18	Front axle case oil	Change								○							every 400 Hr	2-38		
19	Front axle pivot	Adjust								○							every 400 Hr	2-36		
20	Engine valve clearance	Adjust															every 800 Hr	2-39		
21	Injection pressure of the fuel injection nozzle	Check															every 1500 Hr	2-39		@
22	Cooling system	Flush															every 2000 Hr or 2 years	2-39	*4	
23	Coolant	Change															every 2000 Hr or 2 years	2-39 2-40	*4	
24	Injection pump	Check															every 3000 Hr	2-41		@
25	Radiator hose and clamp	Check															every 1 year	2-41	*R	
		Replace															every 4 years	2-43		
26	Power steering oil line	Check															every 1 year	2-41	*R	
		Replace															every 4 years	2-43		
27	Fuel line	Check															every 1 year	2-42	*R	
		Replace															every 4 years	2-43		@
28	Intake air line	Check															every 1 year	2-41	*R	@

(Continued)

https://truckmanualshub.com/

No.	Items		Indication on hour meter														Since then	Reference page		
			50	100	150	200	250	300	350	400	450	500	550	600	650	700				
28	Intake air line	Replace															every 4 years	2-43		@
29	Engine breather hose	Check															every 1 year	2-42	*R	
		Replace															every 4 years	2-43		
30	Fuel system	Bleed															Service as required	2-43		
31	Fuse	Replace																2-43		
32	Light bulb	Replace																2-44		

IMPORTANT

- **You must do the jobs indicated by ◎ after the first 50 hours of operation.**
- **The items which is @ marked are registered as the emission related critical parts by KUBOTA in the U.S.EPA nonroad emission regulation. As the engine owner, you are responsible for the performance of the required maintenance on the engine according to the preceding instruction.**
  Please see Warranty Statement in detail.

*1 The initial 50 hours should not be a replacement (changing) cycle.

*B When the battery is used for less than 100 hours per year, check the battery condition by reading the indicator annually.

*2 You should clean the air cleaner more often in dusty conditions than in normal conditions.

*3 Every 1,000 hours or every 1 year whichever comes faster.

*4 Every 2,000 hours or every 2 years whichever comes faster.

*R Replace if any deterioration (crack, hardening, scar, or deformation) or damage occurred.

https://truckmanualshub.com/

2. Mower service intervals

To keep the mower working in good condition as well as to avoid any accident and trouble, do periodic inspection and maintenance. Check the following points before use.

No.	Item	Service interval					Reference page
		Daily check	Every 50 hrs	Every 150 hrs	Every 1 year	Every 4 years	
1	Oil leakage check	○					—
2	Make sure blade bolts are tight.	○					2-44
3	Blade wear check	○					2-45
4	Belt wear check	○					2-45
5	All hardware check	○					—
6	Make sure that all pins are in place.	○					—
7	Mower deck cleaning	○					—
8	Greasing • Universal joint • Three spindle shafts • Belt tension pulley • Belt tension pivot • Front and rear anti-scalp rollers • Frame link	○					2-46 2-46 2-46
9	Gear box oil check	○					2-45
10	Gear box oil change		◎	○			2-47
11	Gear box oil seal check				○*1		2-47
12	Gear box oil seal replace					○	2-48

IMPORTANT

- **The jobs indicated by ◎ must be done after the first 50 hours of operation.**

*1 Replace the gear box oil seal if any deterioration (crack, hardening, scar, or deformation) or damage occurred.

https://truckmanualshub.com/

CHECK AND MAINTENANCE

1. Periodic service

WARNING

To avoid serious injury or death:

- **Do not work under any hydraulically supported devices. Working under any hydraulically supported devices can settle, suddenly leak down, or be accidentally lowered.**
- **If necessary to work under the tractor or any machine elements for servicing or adjustment, securely support the tractor or any machine elements with stands or suitable blocking beforehand.**

1.1 Opening bonnet

WARNING

- **Never open the bonnet while the engine operates.**
- **Do not touch the muffler or the exhaust pipes while they are hot.**
  Touching the hot muffler or exhaust pipes could cause severe burns.

1. Pull the guard forward.
2. Pull the bonnet open lever to release the latch to open the bonnet, and open the bonnet.

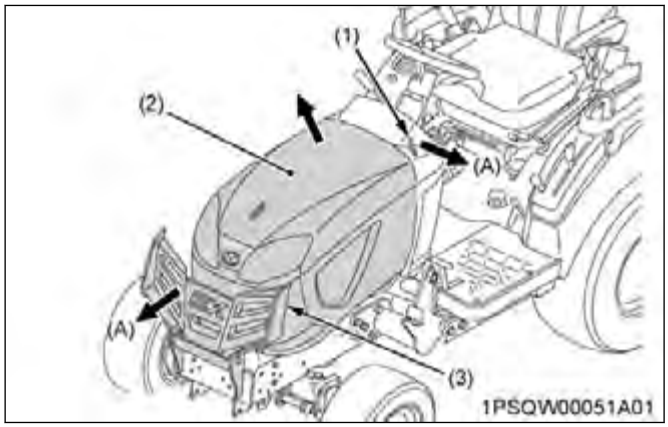

(1) Bonnet open lever (A) Pull
(2) Bonnet
(3) Front guard

1.2 Daily check

WARNING

- **To avoid serious injury or death:**
  Take the following precautions when checking the tractor.
  - **Park the machine on firm and level ground.**
  - **Set the parking brake.**
  - **Lower the implement to the ground.**
  - **Release all residual pressure of the hydraulic system.**
  - **Stop the engine and remove the key.**

For your own safety and maximum service life of the machine, make a thorough daily inspection before operating the machine or starting the engine.

1.2.1 Walk around inspection

Look around and under the tractor for such items as loose bolts, trash build-up, oil or coolant leaks, or broken or worn parts.

1.2.2 Checking fuel gauge and refueling

WARNING

To avoid serious injury or death:

- **Do not smoke while refueling.**
- **Be sure to stop the engine and remove the key before refueling.**

To avoid allergic skin reaction:

- **Wash hands immediately after contact with diesel fuel.**

IMPORTANT

- **Do not permit dirt, trash, or water to get into the fuel system.**
- **Be careful not to empty the fuel tank, otherwise air will enter the fuel system, necessitating bleeding before next starting the engine.**
- **Be careful not to spill the fuel during refueling. If you should spill, wipe it off at once, or it may cause a fire.**
- **To prevent water condensation and water accumulation in the fuel tank, fill the tank before parking overnight.**

Using fuel

Temperature	fuel
Above -10 ℃ (14 ℉)	Grade No. 2-Diesel fuel
Below -10 ℃ (14 ℉)	Grade No. 1-Diesel fuel

1. Turn the key switch to the **ON** position and check the amount of fuel by the fuel gauge.

2. Fill the fuel tank with fuel when the fuel gauge shows as follows.

Amount of fuel for refueling		1/4 or less in the fuel tank
Fuel tank	Capacity	25 L 6.6 U.S.gals.

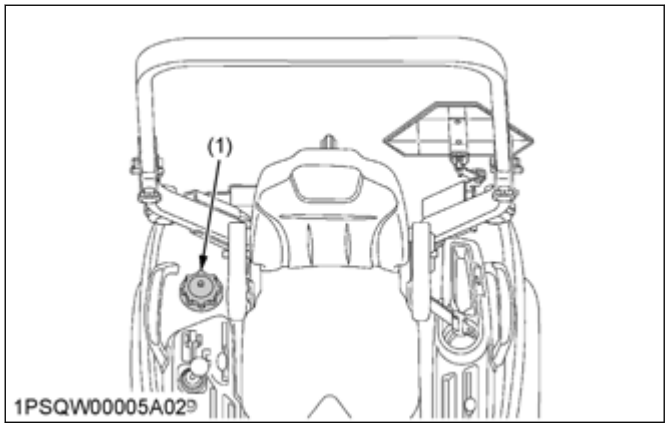

(1) Fuel tank cap

1.2.3 Checking engine oil level

WARNING

To avoid serious injury or death:

- **Be sure to stop the engine before checking the engine oil level.**

IMPORTANT

- **When using an engine oil of different maker or viscosity from the previous one, remove all of the old oil and oil filter. Never mix two different types of oil.**
- **If the engine oil level is low, do not operate the engine.**
- **When using the BT603 Backhoe and checking oil level, locate the tractor, the loader, and the backhoe on a flat surface and set the loader and the backhoe as illustrated as follows.**

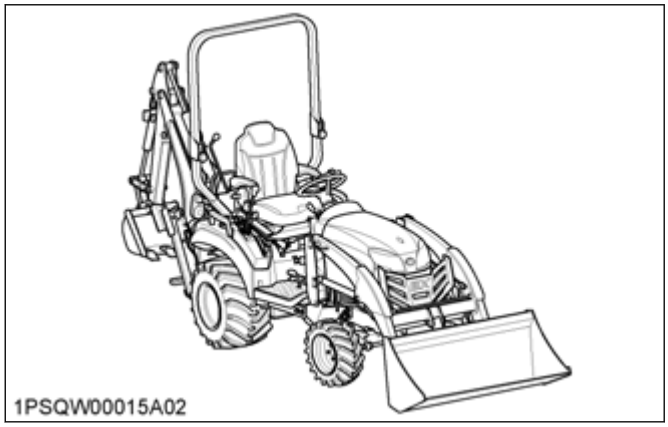

1. Park the machine on a firm, flat, and level surface.
2. Check the engine oil before starting the engine, or, after five minutes or more when the engine has been stopped.
3. To check the engine oil level, draw out the dipstick, wipe it clean, replace it, and draw it out again.
4. Check to see that the engine oil level lies between the two notches.
5. If the engine oil level is too low, add new oil to the prescribed level at the oil inlet.

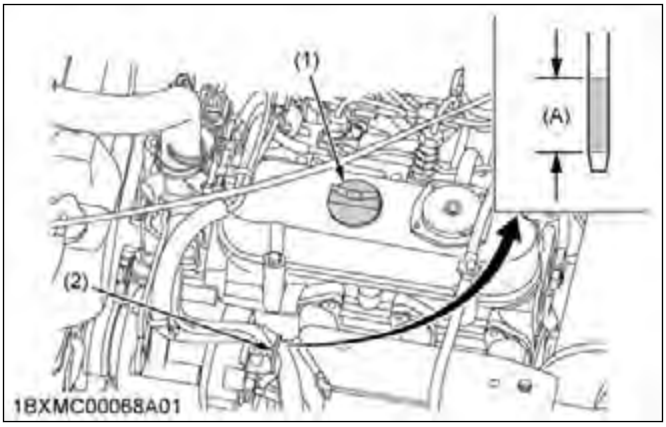

(1) Oil inlet
(2) Dipstick
(A) Engine oil level is acceptable within this range.

RELATED PAGE
LUBRICANTS, FUEL AND COOLANT on page 2-7

1.2.4 Checking transmission fluid level

WARNING

To avoid serious injury or death:

- **Park the tractor on a firm, flat, and level surface, lower the implement to the ground, and stop the engine.**

IMPORTANT

- **If the transmission fluid level is low, do not operate the engine.**

1. To check the transmission fluid level, check the dipstick as the following procedure.
   a. Draw out the dipstick.
   b. Wipe the dipstick clean.
   c. Replace the dipstick.
   d. Draw the dipstick out again.
2. Check to see that the transmission fluid level lies between the two notches.

https://truckmanualshub.com/

3. If the transmission fluid level is too low, add new fluid to the prescribed level at the oil inlet.

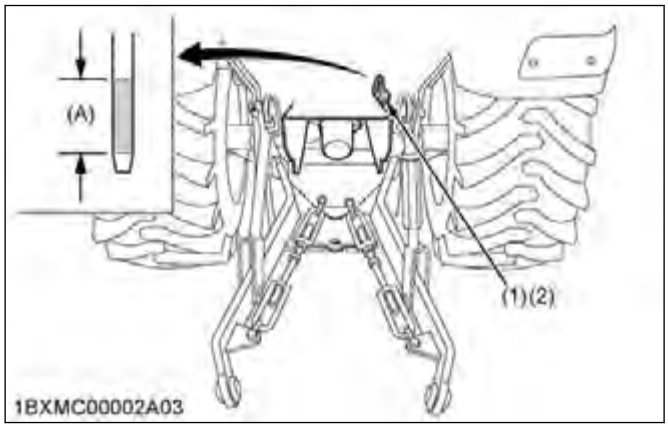

(1) Oil inlet
(2) Dipstick
(A) Transmission fluid level is acceptable within this range.

RELATED PAGE
LUBRICANTS, FUEL AND COOLANT on page 2-7

1.2.5 Checking coolant level

WARNING

To avoid serious injury or death:

- **Be sure to stop the engine and remove the key before checking coolant level.**
- **Do not remove the radiator cap while the coolant is hot. When coolant is cool, slowly rotate the radiator cap to the first stop and allow sufficient time for excess pressure to escape before removing the radiator cap completely.**

IMPORTANT

- **If the radiator cap has to be removed, follow the preceding warning and securely retighten the radiator cap.**
- **Use clean, fresh, soft water and anti-freeze to fill the recovery tank.**

1. Check to see that the coolant level is between the "**H**" and "**L**" marks of the recovery tank.
2. When the coolant level drops due to evaporation, add soft water only. In case of leakage, add antifreeze and soft water in the specified mixing ratio up to the "**H**" level.

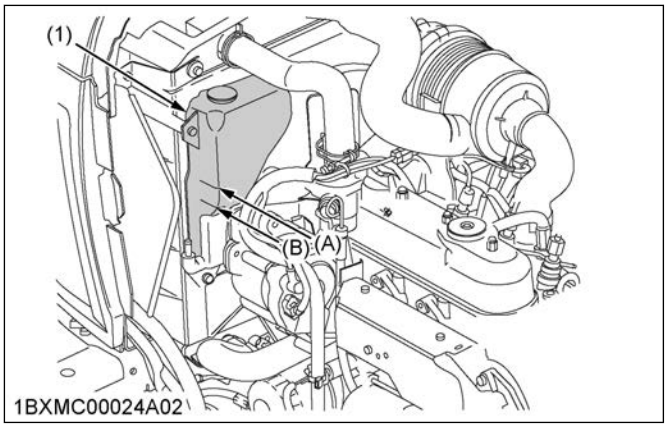

(1) Recovery tank
(A) "**H**"
(B) "**L**"

RELATED PAGE
LUBRICANTS, FUEL AND COOLANT on page 2-7

1.2.6 Cleaning panel and radiator screen

WARNING

To avoid serious injury or death:

- **Be sure to stop the engine and remove the key before removing the screen.**
- **Before checking or cleaning the panel, wait long enough until it cools down.**

IMPORTANT

- **The panel and the radiator screen must be clean from debris to prevent the engine from overheating and to allow good air intake for the air cleaner.**
- **Be sure to reinstall the panel on the pillar completely to prevent the invasion of dust.**
- **Be sure to stop the engine to avoid personal injury and to allow good air intake for air cleaner.**

1. Check the panel and the radiator screen to be sure that they are clean from debris.

2. Remove the radiator screen, and then remove all the foreign material.

■ **NOTE**
- **If the dust or chaff is accumulated in the battery compartment, open the panel and clean completely.**

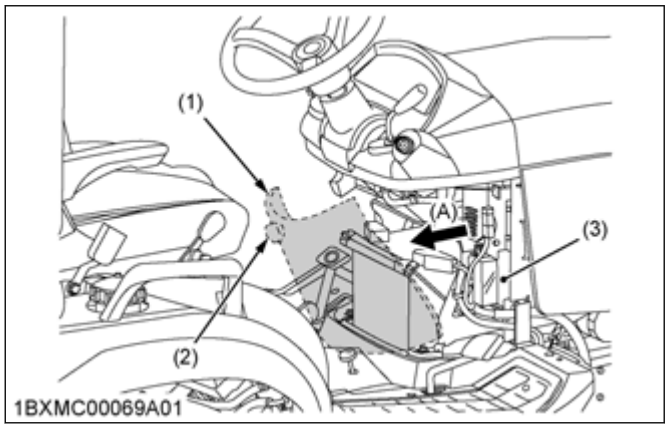

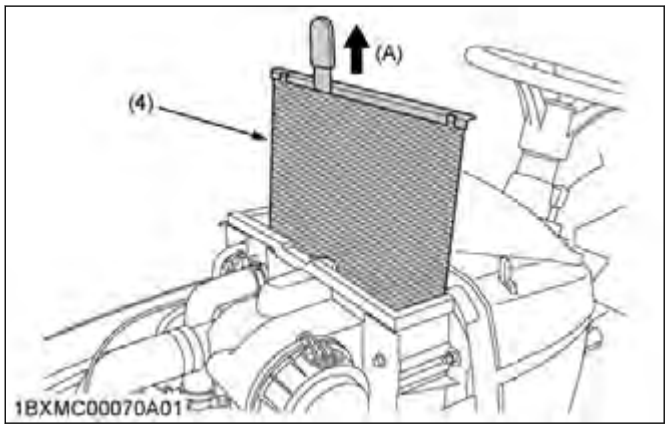

(1) Panel
(2) Knob
(3) Center pillar
(4) Radiator screen
(A) Remove

1.2.7 Checking brake pedal

1. Inspect the brake pedal for free travel, and smooth operation.
2. Adjust the brake pedal if incorrect measurement is found.

1.2.8 Checking gauges, meters, and Easy Checker™

1. Inspect the instrument panel for broken gauge(s), meter(s) and Easy Checker™ lamps.
2. Replace the gauge(s), the meter(s), or the Easy Checker™ if they are broken.

1.2.9 Checking head light, hazard light, and tail light

1. Inspect the lights for broken bulbs and lenses.
2. Replace the lights if they are broken.

1.2.10 Checking seat belt and ROPS

1. Always check condition of the seat belt and the ROPS attaching hardware before operating the tractor.
2. Replace the seat belt or the ROPS if it is damaged.

1.2.11 Checking and cleaning electrical wiring and battery cables

⚠ **WARNING**

To avoid serious injury or death:
- **A loosened terminal or connector, or damaged wire may affect the performance of the electrical components or cause short circuits. Leakage of electricity could result in a fire hazard, a dead battery, or damage to the electrical components.**
- **Replace the damaged wires or connections promptly.**
- **If a fuse blows soon after replacement, do not use the capacity larger than recommended or bypass the fuse system.**
- **Many wiring connections are protected by waterproof plugs. Plug and unplug these connections carefully and make sure that they are sealed correctly after assembly.**
- **Accumulation of dust, chaff, and deposits of spilled fuel around the battery, electrical wiring, engine, or exhaust system may cause fire hazards.**
  Clean around the battery, electrical wiring, engine or exhaust system before starting to work.
- **To avoid premature electrical malfunctions, do not apply high pressure water directly to the battery, the wiring, the connectors, the electrical components, or the instrument panel.**

- Inspect the following check items regularly.
  – Check the wiring for chafed or cracked insulation.
  – Check the wiring harness clamps. Replace them if necessary.
  – Check the connectors and the terminals for looseness, contamination, or overheated or discolored connections.
  – Check the instrument panel for correct operation of the switches and the gauges.

https://truckmanualshub.com/

1.2.12 Checking movable parts

1. If any of the movable parts, such as levers and pedals, is not smoothly moved because of rust or sticky material, remove the rust or the sticky material, and apply oil or grease on the relevant spot.
   Do not force the movable parts into motion. Otherwise, the machine may get damaged.

1.3 Check points of initial 50 hours

1.3.1 Changing engine oil

WARNING

To avoid serious injury or death:

- **Be sure to stop the engine and remove the key before changing the oil.**
- **Oil can be hot and can burn. Allow the engine to cool down sufficiently.**

Engine oil with filter	Capacity	3.3 L 3.49 U.S.qts.

1. To drain the used engine oil, remove the drain plug at the bottom of the engine, and drain the engine oil completely into the oil pan.
2. After draining of the used engine oil, reinstall the drain plug.
3. Fill the engine with the new engine oil up to the upper notch on the dipstick.
4. Properly dispose of the used engine oil.

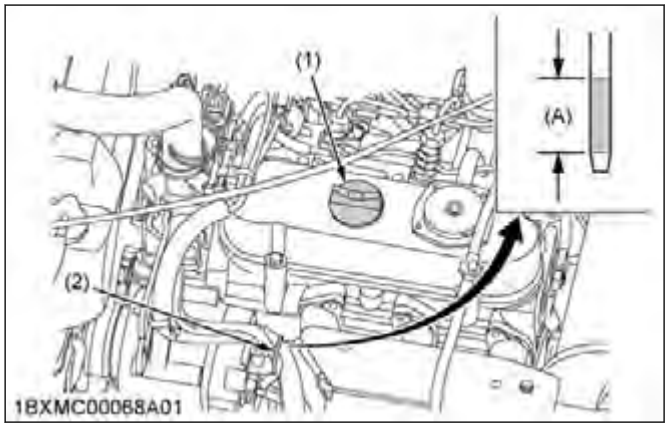

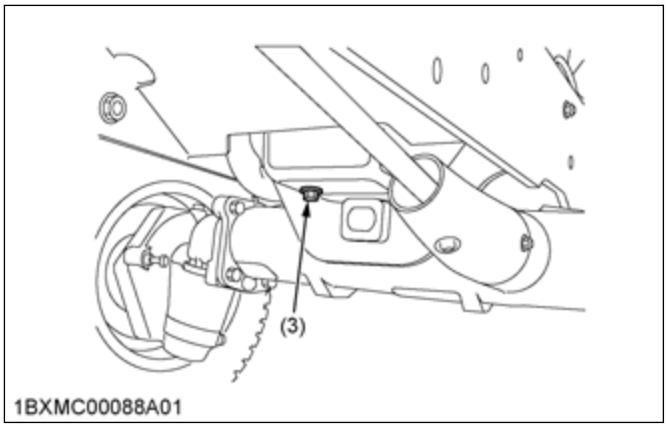

(1) Oil inlet
(2) Dipstick
(3) Drain plug
(A) Oil level is acceptable within this range.

RELATED PAGE

LUBRICANTS, FUEL AND COOLANT on page 2-7

1.3.2 Replacing engine oil filter

WARNING

To avoid serious injury or death:

- **Be sure to stop the engine before replacing the oil filter cartridge.**
- **Oil can be hot and can burn. Allow the engine to cool down sufficiently.**

IMPORTANT

- **To prevent serious damage to the engine, use only a KUBOTA genuine filter.**

1. Remove the oil filter.
2. Put a film of the clean engine oil on the rubber seal of the new filter.
3. Tighten the filter quickly until it contacts the mounting surface.
4. Tighten filter by hand an additional 1/2 turn only.
5. After the new filter has been replaced, the engine oil normally decreases a little. Make sure that the engine oil does not leak through the seal and be sure to check the oil level on the dipstick.
6. Fill the engine with the engine oil up to the prescribed level.

7. Properly dispose of the used engine oil.

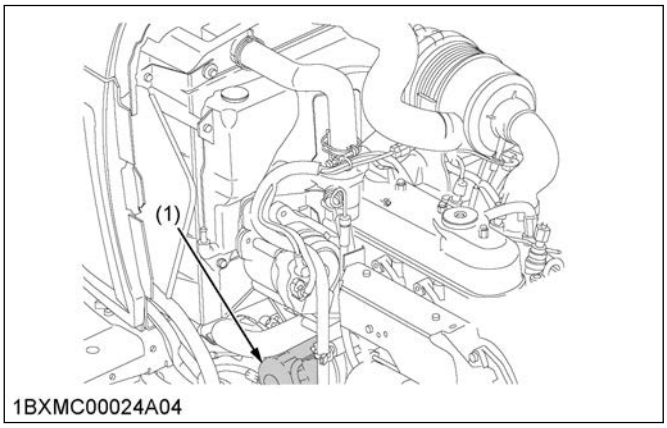

(1) Engine oil filter

RELATED PAGE
LUBRICANTS, FUEL AND COOLANT on page 2-7

1.3.3 Replacing transmission oil filter

WARNING

To avoid serious injury or death:

- **Be sure to stop the engine before changing the transmission oil filter cartridge.**
- **Oil can be hot and can burn. Allow the engine to cool down sufficiently.**

IMPORTANT

- **To prevent serious damage to the hydraulic system, use only a KUBOTA genuine filter.**

1. Remove the transmission oil filter.
2. Put a film of clean transmission oil on rubber seal of new transmission oil filter.
3. Tighten the transmission oil filter quickly until it contacts the mounting surface.
4. Tighten the transmission oil filter by hand an additional 1/2 turn only.
5. After the new transmission oil filter has been replaced, the transmission fluid level will decrease a little. Make sure that the transmission fluid does not leak through the seal, and check the fluid level.
6. Check the dipstick and refill with oil to prescribed level.
7. Properly dispose of used oil.

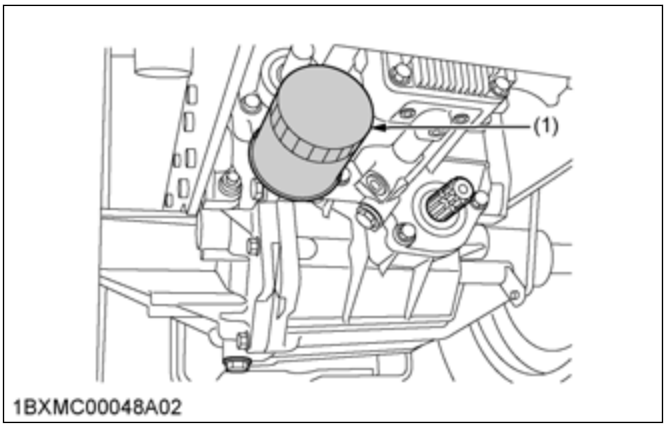

(1) Filter

RELATED PAGE
LUBRICANTS, FUEL AND COOLANT on page 2-7

1.3.4 Changing transmission fluid

WARNING

To avoid serious injury or death:

- **Oil can be hot and can burn. Allow the engine to cool down sufficiently.**

1. To drain the used transmission fluid, remove the drain plug at the bottom of the transmission case and drain the transmission fluid completely into the oil pan.

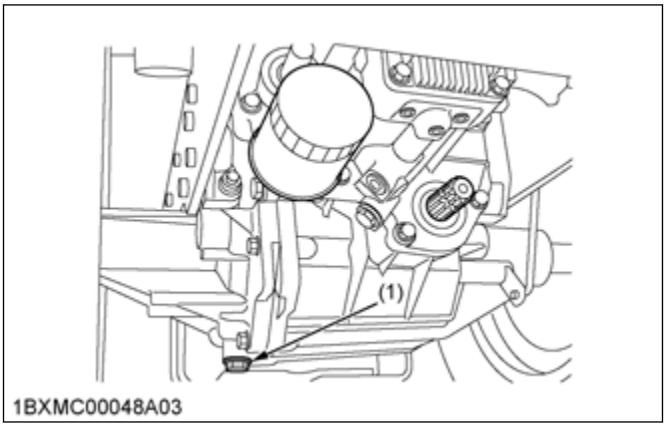

(1) Drain plug

2. After draining the transmission fluid, reinstall the drain plug.
3. Clean the transmission strainer.

https://truckmanualshub.com/

4. Fill with new transmission fluid up to the upper notch on the dipstick.

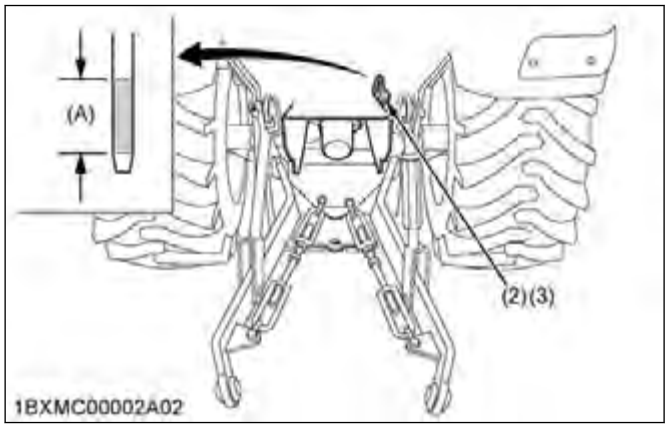

(2) Oil inlet
(3) Dipstick
(A) Transmission fluid level is acceptable within this range.

Transmission fluid	Capacity	11.3 L 11.9 U.S.qts 9.94 Imp.qts

5. After operating the engine for a few minutes, stop it and check the transmission fluid level again.
6. If the transmission fluid level is lower than the prescribed level shown on the dipstick (3), add fluid to the prescribed level.
7. Properly dispose of used transmission fluid.

IMPORTANT

- **Do not operate the tractor immediately after changing the transmission fluid.**
  Operate the engine at medium speed for a few minutes to prevent damage to the transmission.

RELATED PAGE
LUBRICANTS, FUEL AND COOLANT on page 2-7

1.3.5 Cleaning transmission strainer

1. When changing the transmission fluid, disassemble and rinse the transmission strainer with nonflammable solvent to completely clean off filings. When reassembling the transmission strainer, be careful not to damage the parts.

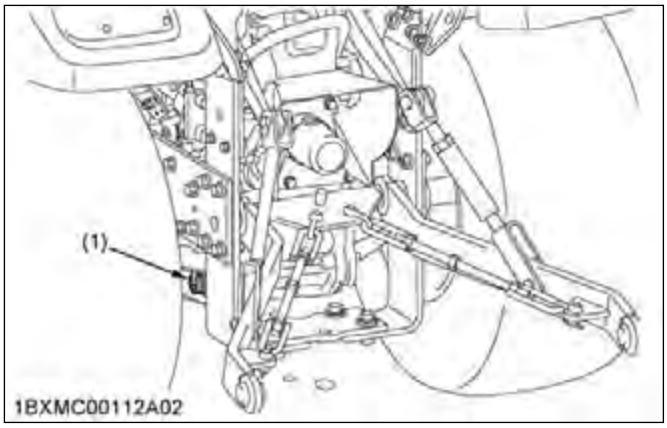

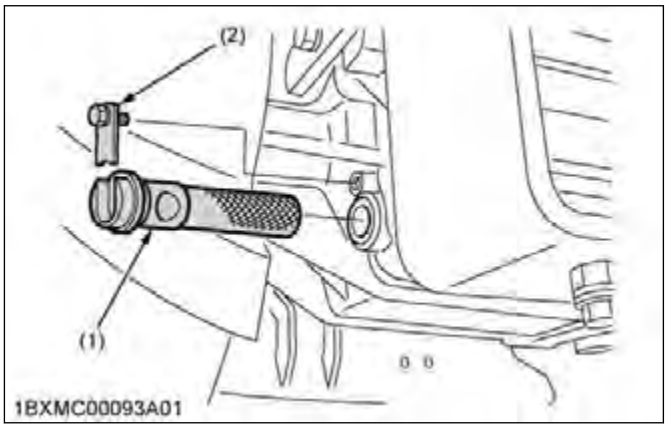

(1) Transmission strainer
(2) Filter plate

NOTE

- **Since the fine filings in the oil can damage the precision component parts of the hydraulic system, the end of the suction line is provided with an oil strainer.**

1.4 Check points of every 50 hours

1.4.1 Greasing

NOTE

- **If the machine is operated in extremely wet and muddy conditions, lubricate grease fittings more often.**

1. Apply a small amount of multipurpose grease to the following points

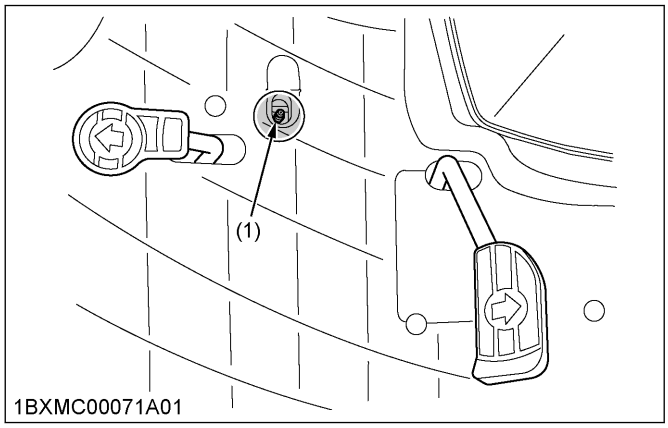

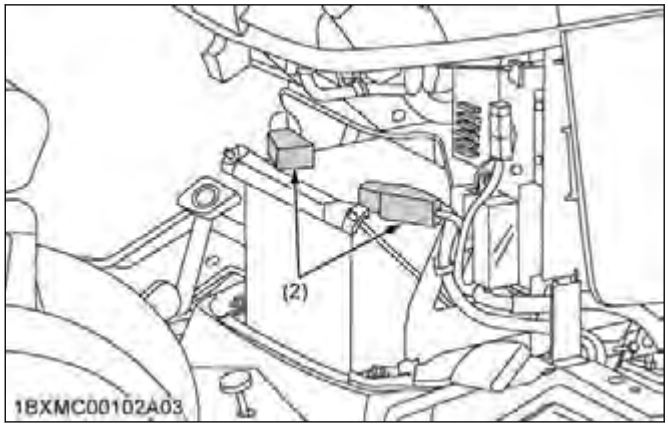

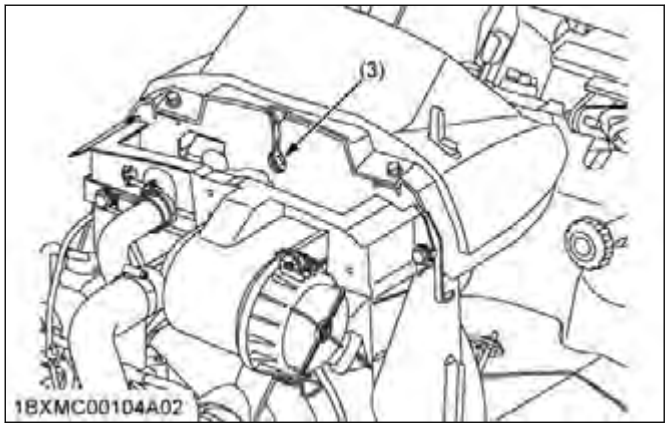

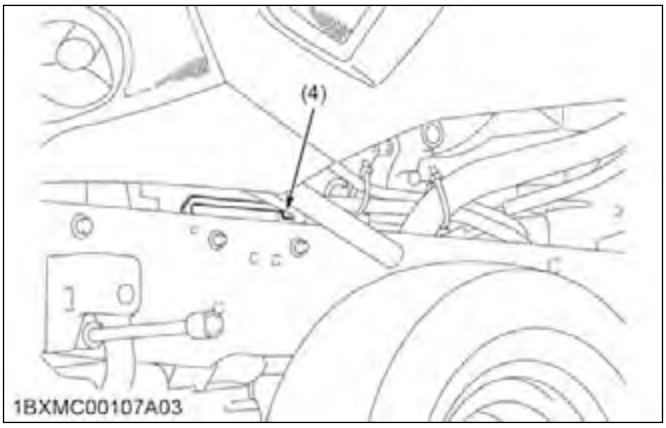

(1) Speed control pedal
(2) Battery terminals
(3) Bonnet lock
(4) Bonnet guide rod

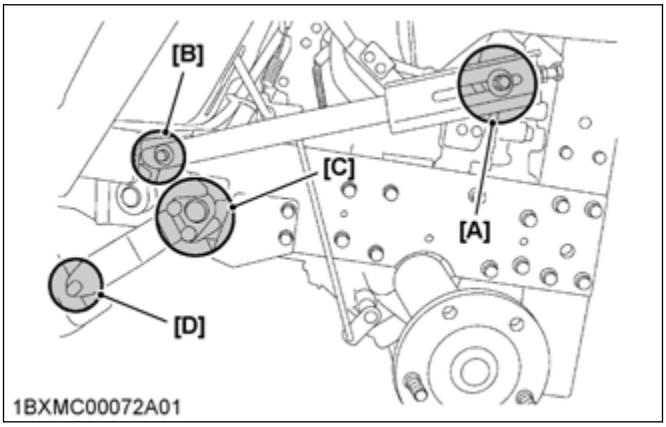

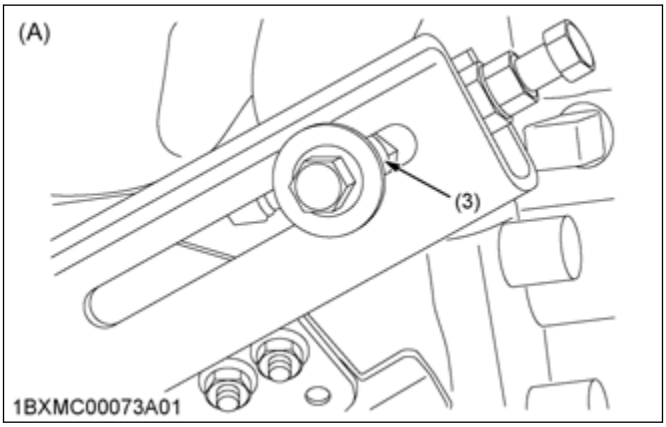

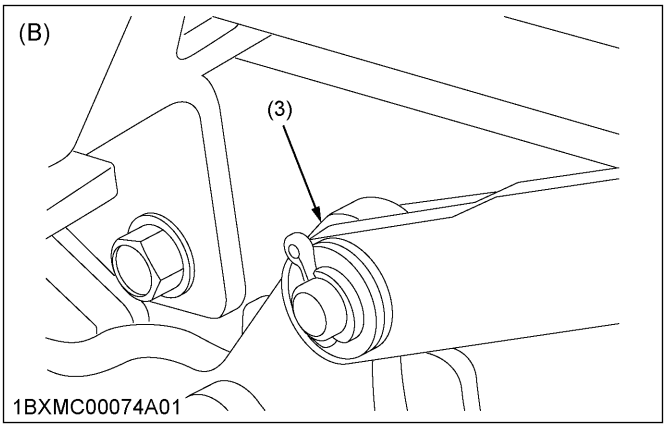

https://truckmanualshub.com/

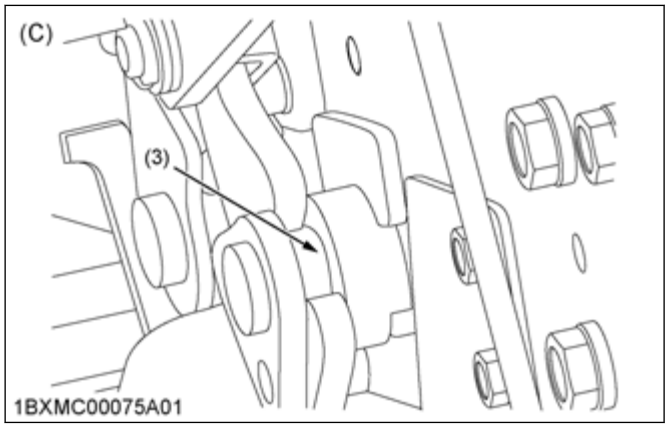

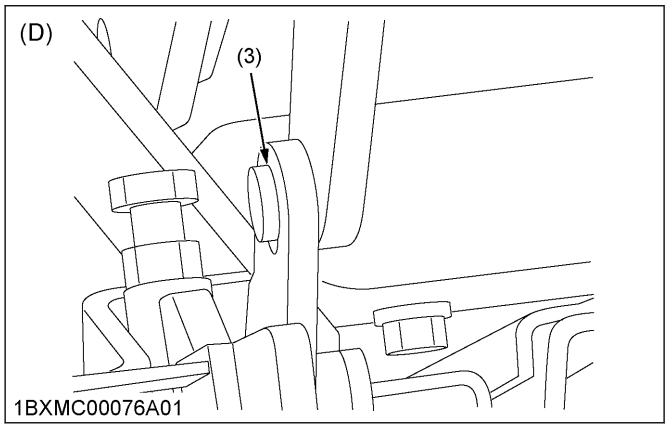

(3) Bonnet lock
[A] Figure (A)
[B] Figure (B)
[C] Figure (C)
[D] Figure (D)

RELATED PAGE
LUBRICANTS, FUEL AND COOLANT on page 2-7

1.4.2 Checking engine start system

WARNING

To avoid serious injury or death:

- **Do not allow anyone near the tractor while testing.**
- **If the tractor does not pass the test, do not operate the tractor.**

Preparation before testing

1. Sit on the operator's seat.
2. Set the parking brake and stop the engine.
3. Shift the range gear shift lever to the neutral position.
4. Check whether the speed control pedal is in the neutral position.
5. **Shift the PTO clutch lever to the off position.**

[Test 1] Switch for the speed control pedal

1. Make sure that the range gear shift lever is set in the neutral position.
2. Depress the speed control pedal.
3. Turn the key to the start position.
   The engine must not crank.

[Test 2] Switch for the PTO clutch lever

1. Make sure that the range gear shift lever is set in the neutral position.
2. Make sure that the speed control pedal is set in the neutral position.
3. **Shift the PTO clutch lever to the on position.**
4. Turn the key to the start position.
   The engine must not crank.

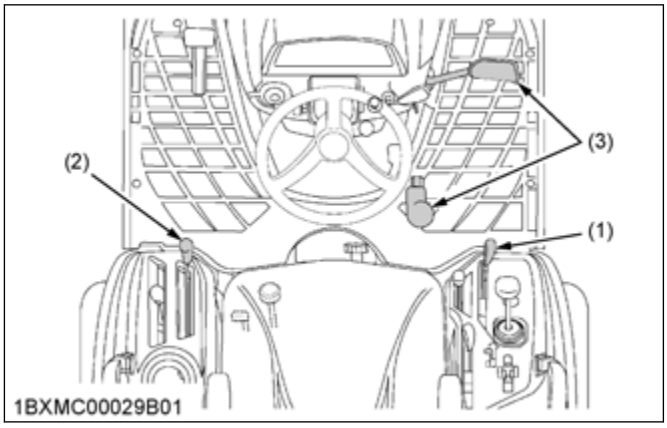

(1) Range gear shift lever (Hi-Lo)
(2) PTO clutch lever
(3) Speed control pedal

1.4.3 Checking operator presence control (OPC) system

WARNING

To avoid serious injury or death:

- **Do not allow anyone near the tractor while testing.**
- **If the tractor does not pass the test, do not operate the tractor.**

Preparation before testing

1. Sit on the operator's seat.
2. Set the parking brake and stop the engine.
3. Shift the range gear shift lever to the neutral position.
4. Check whether the speed control pedal is in the neutral position.
5. Shift the PTO clutch lever to the off position.

[Test 1] Switches for the operator's seat and the speed control pedal

1. Start the engine.
2. Depress the speed control pedal.
3. Stand up.
   Do not get off the machine.
   The engine must stop after approximately one second.

[Test 2] Switches for the operator's seat and the PTO clutch lever

1. Start the engine.
2. Engage the PTO clutch lever.

3. Stand up.
   Do not get off the machine.
   The engine must stop after approximately one second.

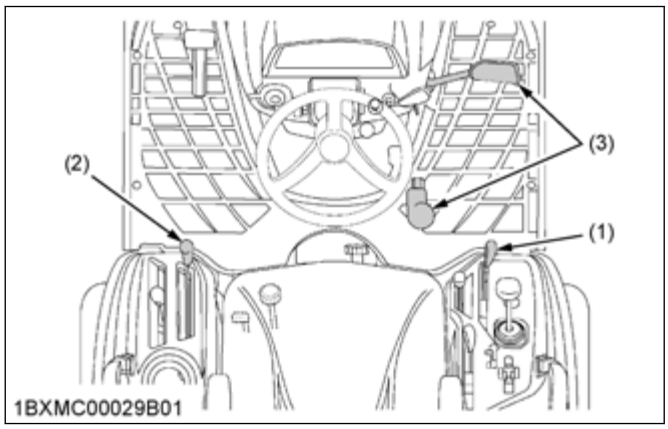

(1) Range gear shift lever (Hi-Lo)
(2) PTO clutch lever
(3) Speed control pedal

1.4.4 Checking wheel bolt torque

WARNING

To avoid serious injury or death:

- **Never operate the tractor with a loose rim, wheel, or axle.**
- **Any time bolts are loosened, retighten to the specified torque.**
- **Check all bolts frequently and keep them tight.**

1. Check the wheel bolts regularly especially when new.
2. If they are loose, tighten them as follows.

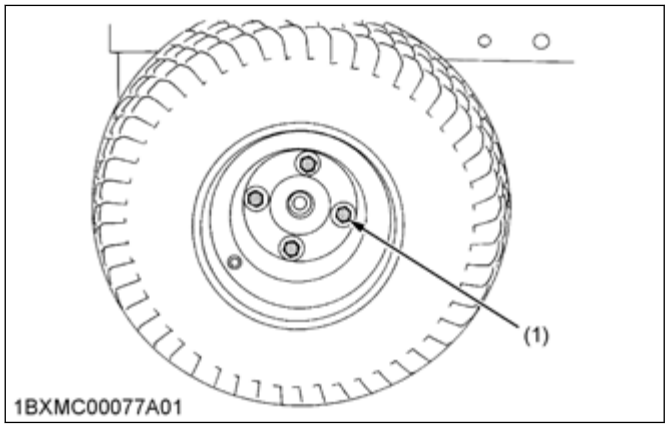

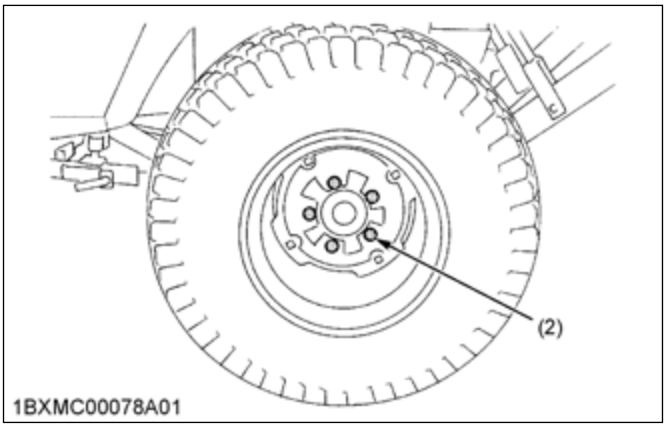

(1) Front wheel bolt
(2) Rear wheel bolt

Tightening torque	Front wheel bolt	149.2 to 179.0 N·m 15.2 to 18.3 kgf·m 110 to 132 lbf·ft
	Rear wheel bolt	108.5 to 130.2 N·m 11.1 to 13.3 kgf·m 80 to 96 lbf·ft

1.4.5 Cleaning lock lever shaft

1. Before you use the lock lever, clean the lever movable area (1).

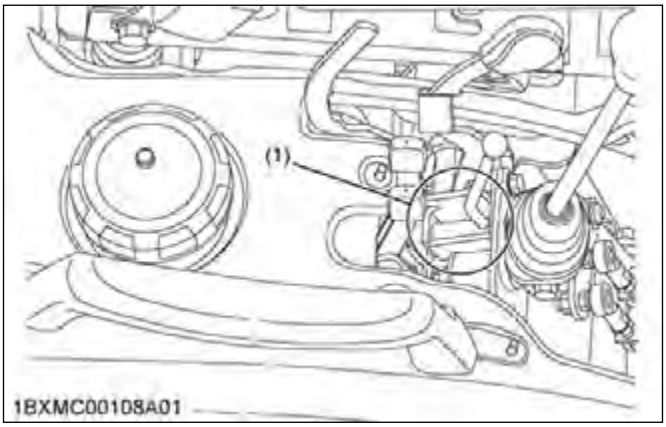

(1) Lever movable area

1.5 Check points of every 100 hours

1.5.1 Checking battery condition

DANGER

To avoid the possibility of battery explosion:

For the refillable type battery, follow the instructions below.

- **Do not use or charge the refillable type battery if the fluid level is below the "LOWER" (lower limit level) mark. Otherwise, the battery component parts may prematurely deteriorate, which may shorten the battery's service life or cause an explosion.**

https://truckmanualshub.com/

- **Check the fluid level regularly and add distilled water as required so that the fluid level is between the “UPPER” and “LOWER” levels.**

DANGER

To avoid serious injury or death:

- **When the battery is being activated, hydrogen and oxygen gases in the battery are extremely explosive. Keep open sparks and flames away from the battery at all times, especially when charging the battery.**

WARNING

To avoid serious injury or death:

- **Batteries, battery posts, terminals and related accessories contain lead and lead compounds, and other chemicals known to the State of California to cause cancer and birth problems or other reproductive harm. Wash hands after handling.**
- **Never remove the battery cap while the engine operates.**
- **Keep electrolyte away from eyes, hands and clothes. If you are spattered with it, wash it away completely with water immediately and get medical attention.**
- **Keep open sparks and flames away from the battery at all times. Hydrogen gas mixed with oxygen becomes very explosive.**
- **Wear eye protection and rubber gloves when working around battery.**

IMPORTANT

- **The factory-installed battery is of non-refillable type. If the battery is weak, charge the battery or replace it with new one.**
- **Mishandling the battery shortens the service life and adds to maintenance costs.**
  The original battery is maintenance free, but needs some servicing.
  If the battery is weak, the engine will be difficult to start and the lights will be dim. It is important to check the battery periodically.
- **When exchanging an old battery for new one, use battery of equal specification in table below.**

Battery type	Volts	Reserve capacity	Cold cranking amps	Normal charging rate
526RMF	12 V	86 min.	560	8.6 A

Maintenance-free, non-accessible batteries are designed to eliminate the need to add water. Yet the volume of electrolyte above plates may eventually become depleted due to abnormal conditions such as high heat or improper regulator setting. Use a voltmeter to check the state of charge. See reference chart below to determine if charging is necessary.

Battery voltage	Reference state of charge
12.6 V	100% (Full charge)
12.4 V	75%
12.2 V	50%
12.0 V	25%
11.8 V	0%

Battery charging

DANGER

To avoid serious injury or death:

- **When the battery is being activated, hydrogen and oxygen gases in the battery are extremely explosive. Keep open sparks and flames away from the battery at all times, especially when charging the battery.**

WARNING

To avoid serious injury or death:

- **When disconnecting the cable from the battery, start with the negative terminal first. When connecting the cable to the battery, start with the positive terminal first.**
- **Never check battery charge by placing a metal object across the posts. Use a voltmeter or hydrometer.**

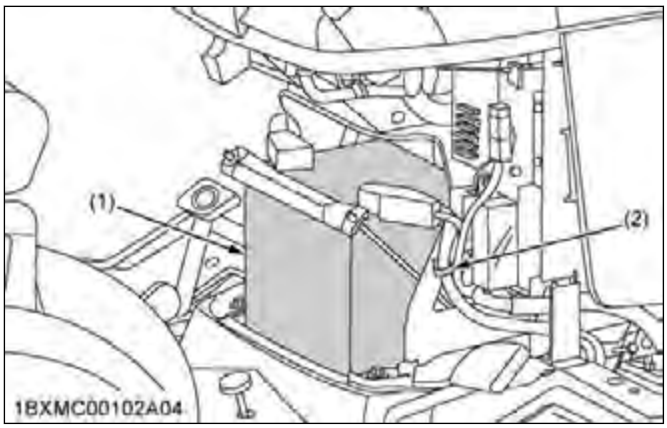

(1) Battery (2) Clamp

1. To slow charge the battery, connect the battery positive terminal to the charger positive terminal and the negative to the negative, then charge for at least 1 hour at 6.5 amperes.
2. A boost charge is only for emergencies. It will partially charge the battery at a high rate and in a short time. When using a boost-charged battery, it is necessary to recharge the battery as early as

possible. Failure to do this will shorten the battery's service life.
3. When the specific gravity of electrolyte is between 1.27 and 1.29 the charging is completed.

Battery for storage
1. When storing the machine for a long period, remove the battery from machine, adjust the electrolyte to the proper level and store in a dry place out of direct sunlight.
2. The battery self-discharges while it is stored. Recharge it once every 3 months in hot seasons and once every 6 months in cold seasons.

1.5.2 Cleaning air cleaner element

WARNING
To avoid serious injury or death:
- **Be sure to stop the engine and remove the key before cleaning the air cleaner element.**

IMPORTANT
- **The air cleaner uses a dry element. Never apply oil to the air cleaner.**
- **Do not operate the engine with filter element removed.**
- **Align the arrow marks when reinstalling the cover. If the cover is improperly fitted, dust passes by the baffle and directly adheres to the air cleaner element.**

NOTE
- **Check to see if the evacuator valve is blocked with dust.**
  Open the evacuator valve once a week under ordinary conditions or daily when used in a dusty place to get rid of large particles of dust and dirt.

Cleaning dust from the air cleaner element
1. Remove the air cleaner cover and the element.
2. When dry dust adheres to the element, blow compressed air from the inside, turning the element. Pressure of compressed air must be below 205 kPa (2.1 kgf/cm^2, 30 psi).

Cleaning carbon or oil from the air cleaner element
1. Remove the air cleaner cover and the element.
2. Soak the air cleaner element in detergent for 15 minutes.
3. Then wash it several times in water.
4. Rinse the air cleaner element with clean water.
5. Dry the air cleaner element naturally.
6. After the air cleaner element is fully dried, inspect inside of it with a light and check if it is damaged or not.
   Refer to the instructions on the label attached to the case.

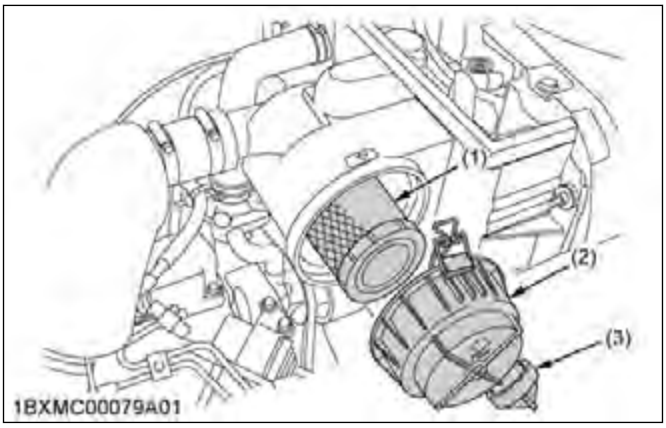

(1) Element
(2) Cover
(3) Evacuator valve

1.5.3 Checking fuel filter

WARNING
To avoid serious injury or death:
- **Stop the engine and remove the key before checking the fuel lines and the fuel filter.**
- **Check the fuel lines periodically. The fuel lines are subject to wear and aging. Fuel may leak out onto the running engine, causing a fire.**

IMPORTANT
- **When the fuel line is disconnected for maintenance or repair, plug both ends of the fuel line with a clean plug of suitable size to prevent dust and dirt from entering. You must take particular care of the fuel filter in order to avoid dust and dirt getting into the fuel system. Entrance of dust and dirt causes malfunction of the fuel pump.**

The fuel line is made of rubber and ages regardless of service period.

1. Inspect the fuel filter.
2. After inspection of the fuel filter, if the fuel line and clamps are found damaged or deteriorated, replace them.

https://truckmanualshub.com/

3. Check the fuel filter. If the fuel filter is clogged by debris or contaminated by water, replace it.

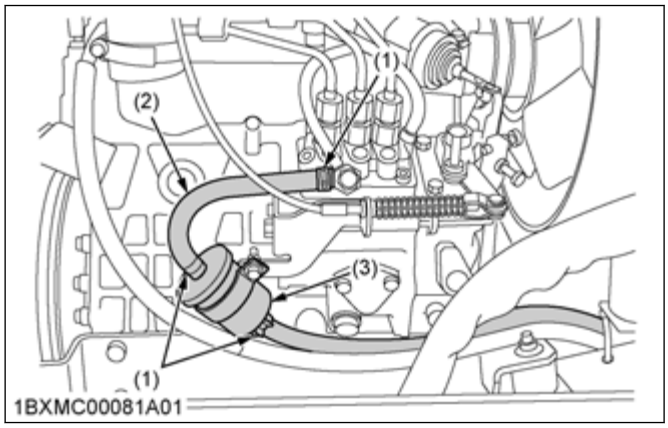

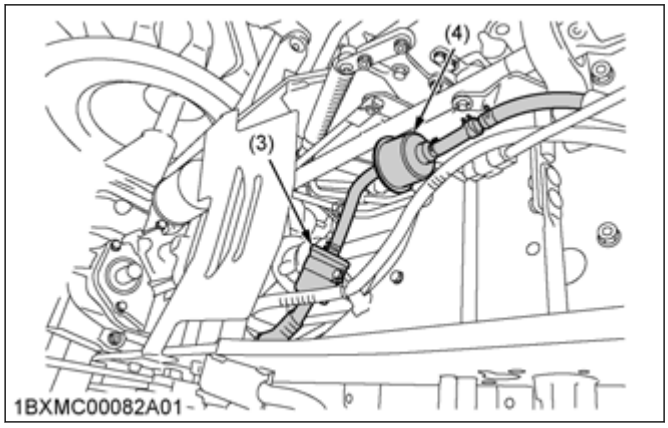

(1) Pipe clamps
(2) Fuel line
(3) Fuel filter
(4) Fuel pump

NOTE
- **If the fuel line is removed, be sure to properly bleed the fuel system.**

1.5.4 Adjusting fan belt tension

WARNING
To avoid serious injury or death:
- **Be sure to stop the engine and remove the key before checking the fan belt tension.**

1. Stop the engine and remove the key.
2. Apply moderate thumb pressure to belt between pulleys.

Fan belt tension	Factory specification	A deflection of between 7 to 9 mm (0.28 to 0.35 in.) when the belt is pressed in the middle of the span.

3. If tension is incorrect, loosen the alternator mounting bolts and, using a lever placed between the alternator and the engine block, pull the alternator out until the deflection of the belt falls within acceptable limits.

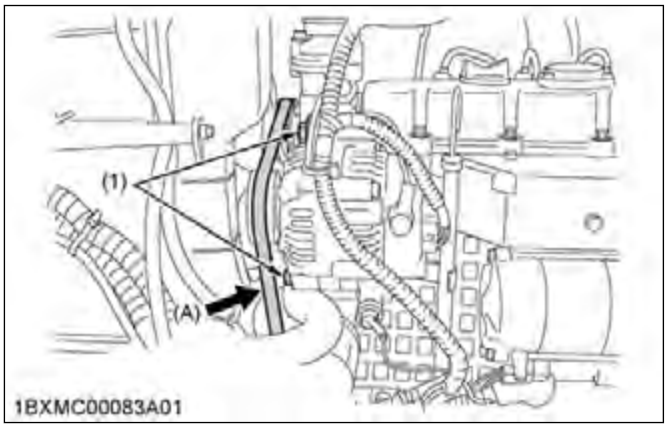

(1) Bolt
(A) Check the belt tension.

4. Replace fan belt if it is damaged.

1.5.5 Adjusting HST neutral spring

WARNING
- **Do not operate if tractor moves on level ground with foot off speed control pedal.**
- **If tractor moves on level ground with foot off the pedal, or, if the pedal is too slow in returning to neutral position when removing the foot from the pedal, adjust the HST neutral spring.**

The HST neutral spring located under the front right side of the fender can adjust returning speed of speed control pedal. Since the HST neutral spring tension is weakened, the HST tension should be checked and adjusted every 100 hours.

Checking the HST neutral spring tension: Dynamic braking
1. Start the engine and hold the maximum engine speeds.
2. Operate the machine on the concrete level ground.
3. Shift the range gear shift lever to hi position.
4. Depress the speed control pedal to forward.
5. Release the foot from the speed control pedal.
6. Check the distance between the foot releasing point (A) and the machine stopping point (B). If distance (L) is more than approximately 3 m (10 ft.), strengthen the HST neutral spring tension so that the machine will stop in approximately 3 m (10 ft.) after releasing the foot from the speed control pedal.

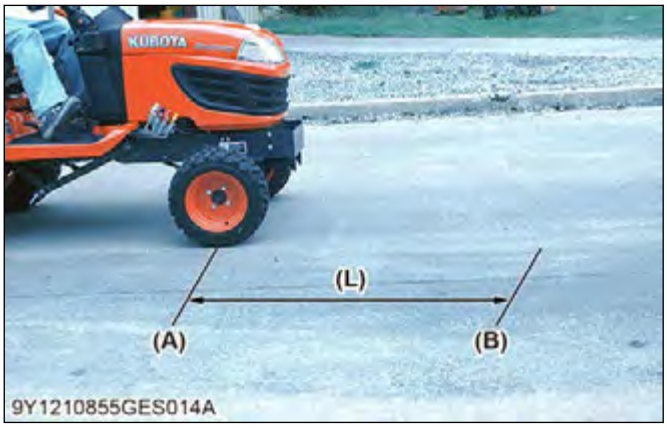

(A) Foot releasing point
(B) Machine stopping point
(L) Distance between foot releasing point and the machine stopping point

Adjusting the HST neutral spring tension: Dynamic braking

1. Remove the step from the machine.
2. Loosen the lock nut (2).

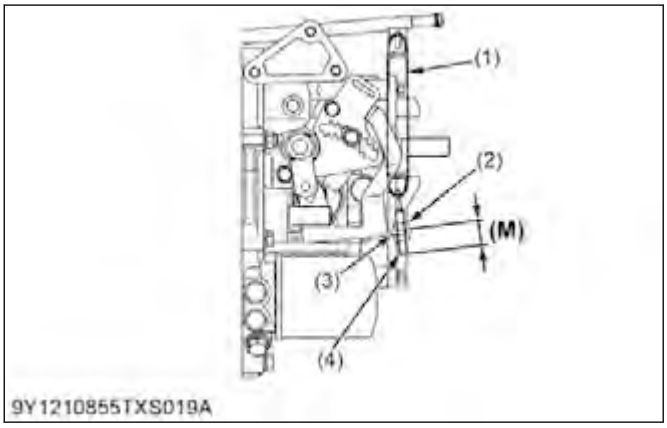

(1) HST neutral spring
(2) Lock nut
(3) Adjusting nut
(4) Adjusting rod
(M) Length of adjusting rod from stay

3. Adjust the adjusting nut (3) on the adjusting rod (4).
4. Tighten the lock nut (2).
5. Start the engine and check dynamic brake as mentioned former.
6. If the machine will not stop with dynamic brake in approximately 3 m (10 ft.), adjust the neutral spring again.

Length (M)	Factory specification	10 mm 0.39 in.

1.5.6 Adjusting brake pedal

WARNING

To avoid serious injury or death:

- **Stop the engine, remove the key, lower the implement to the ground, and chock the wheels before checking the brake pedal.**
- **Even if free travel of the brake pedal is within the limitation, adjust the brake pedal.**

1. Release the parking brake.
2. Loosen the lock nut and turn the turnbuckle to adjust the rod length so that the brake free travel is 10 mm (0.4 in.).
3. Extend the turnbuckle one additional turn.
4. Retighten the lock nut.
5. Depress the brake pedal several times and make sure that free travel is inside factory specification.

Brake pedal free travel	Factory specification	25 to 35 mm 1.0 to 1.4 in.

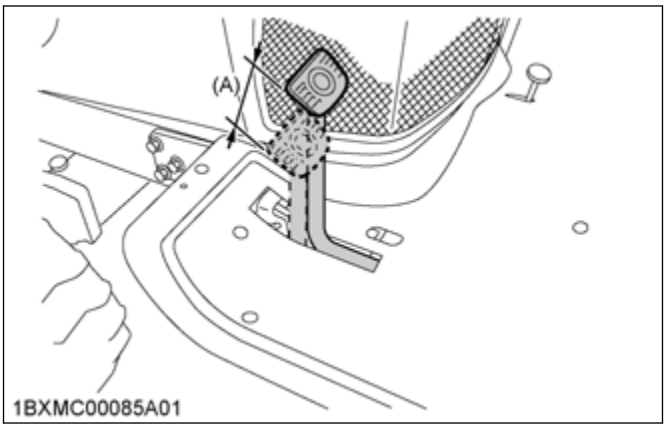

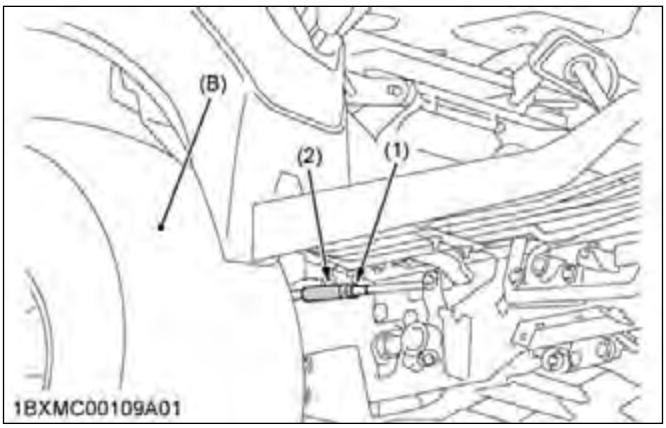

(1) Lock nut
(2) Turnbuckle
(A) Free travel
(B) Right rear tire

1.6 Check point of every 200 hours

1.6.1 Replacing engine oil filter

WARNING

To avoid serious injury or death:

- **Be sure to stop the engine before replacing the oil filter cartridge.**
- **Oil can be hot and can burn. Allow the engine to cool down sufficiently.**

IMPORTANT

- **To prevent serious damage to the engine, use only a KUBOTA genuine filter.**

1. Remove the oil filter.
2. Put a film of the clean engine oil on the rubber seal of the new filter.
3. Tighten the filter quickly until it contacts the mounting surface.
4. Tighten filter by hand an additional 1/2 turn only.
5. After the new filter has been replaced, the engine oil normally decreases a little. Make sure that the engine oil does not leak through the seal and be sure to check the oil level on the dipstick.
6. Fill the engine with the engine oil up to the prescribed level.
7. Properly dispose of the used engine oil.

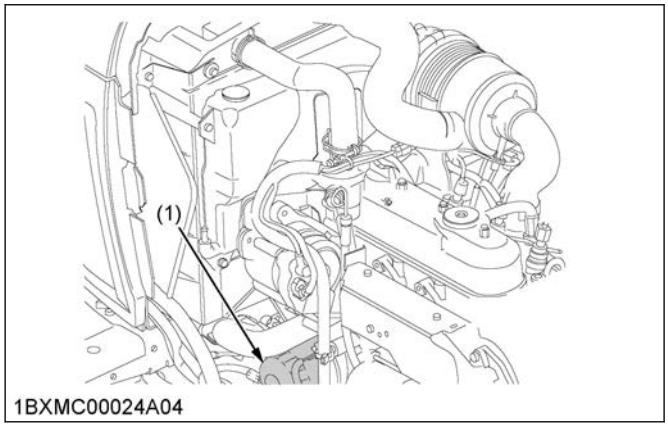

(1) Engine oil filter

1.6.2 Changing engine oil

WARNING

To avoid serious injury or death:

- **Be sure to stop the engine and remove the key before changing the oil.**
- **Oil can be hot and can burn. Allow the engine to cool down sufficiently.**

Engine oil with filter	Capacity	3.3 L 3.49 U.S.qts.

1. To drain the used engine oil, remove the drain plug at the bottom of the engine, and drain the engine oil completely into the oil pan.
2. After draining of the used engine oil, reinstall the drain plug.
3. Fill the engine with the new engine oil up to the upper notch on the dipstick.
4. Properly dispose of the used engine oil.

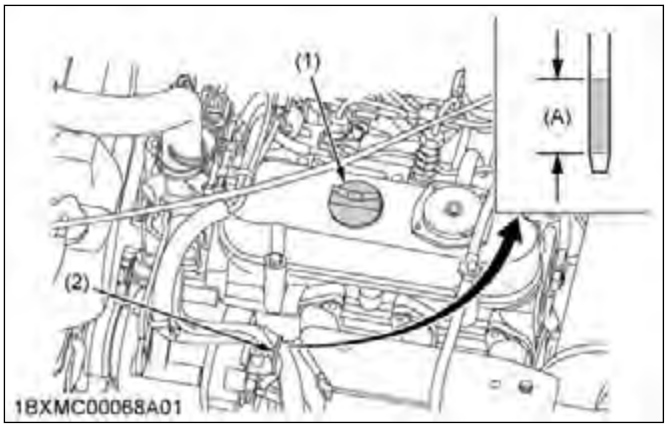

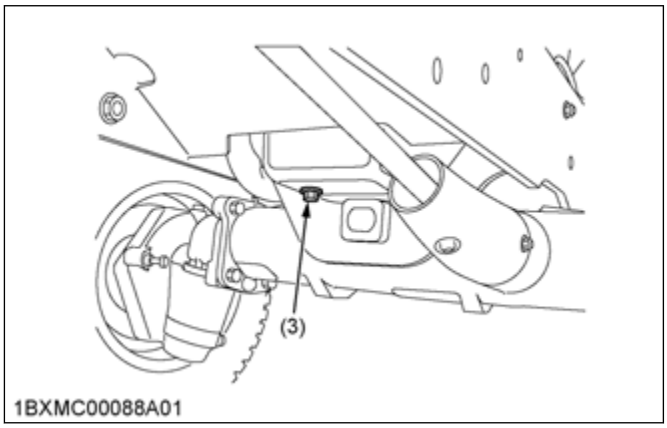

(1) Oil inlet
(2) Dipstick
(3) Drain plug
(A) Oil level is acceptable within this range.

1.6.3 Replacing transmission oil filter

WARNING

To avoid serious injury or death:

- **Be sure to stop the engine before changing the transmission oil filter cartridge.**
- **Oil can be hot and can burn. Allow the engine to cool down sufficiently.**

IMPORTANT

- **To prevent serious damage to the hydraulic system, use only a KUBOTA genuine filter.**

1. Remove the transmission oil filter.
2. Put a film of clean transmission oil on rubber seal of new transmission oil filter.
3. Tighten the transmission oil filter quickly until it contacts the mounting surface.
4. Tighten the transmission oil filter by hand an additional 1/2 turn only.
5. After the new transmission oil filter has been replaced, the transmission fluid level will decrease a little. Make sure that the transmission fluid does not leak through the seal, and check the fluid level.

6. Check the dipstick and refill with oil to prescribed level.
7. Properly dispose of used oil.

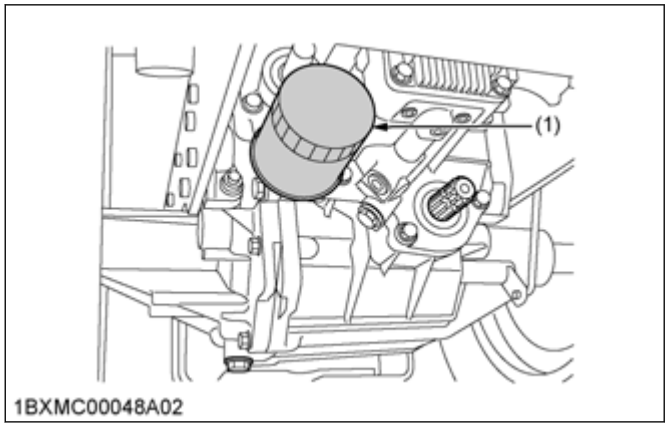

(1) Filter

1.6.4 Adjusting toe-in

WARNING

To avoid serious injury or death:

- **Park the tractor on a firm, flat, and level place.**
- **Lower the implement to the ground, and apply the parking brake.**
- **Stop the engine and remove the key.**

Checking toe-in

1. Turn the steering wheel so that the front wheels are in the straight ahead position.
2. Measure the distance between the tire beads at front of the tires, and at the hub heights.
3. Measure the distance between the tire beads at rear of the tires, and at the hub heights.
4. Front distance should be 0 to 5.0 mm (0 to 0.2 in.) less that rear distance. If front distance is not proper length, adjust the length of the tie rod.

Toe-in ((B) − (A))	Factory specification	0 to 5.0 mm 0 to 0.2 in.

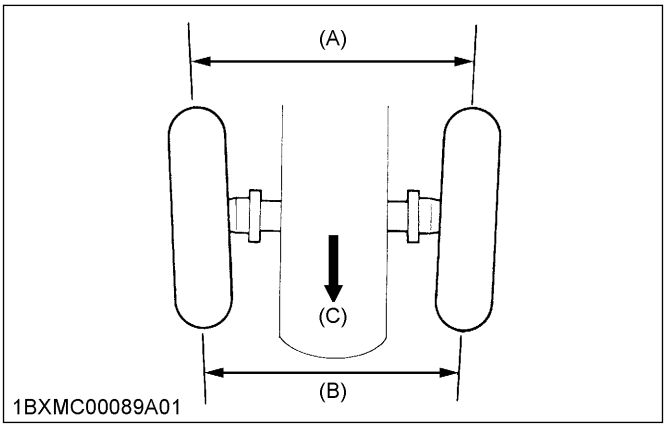

(A) Wheel-to-wheel distance at rear
(B) Wheel-to-wheel distance at front
(C) Front

Adjusting toe-in

1. Loosen the lock nuts and turn the tie-rod to adjust the rod length until the proper toe-in measurement is obtained.
2. Retighten the lock nuts.

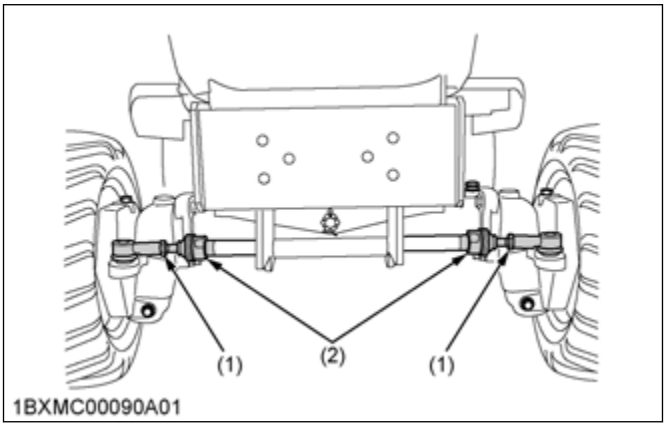

(1) Lock nut
(2) Tie-rod

1.7 Check points of every 400 hours

1.7.1 Adjusting front axle pivot

WARNING

To avoid serious injury or death:

- **Be sure to stop the engine and remove the key before adjusting the front axle pivot.**

If the front axle pivot pin adjustment is not correct, front wheel vibration can occur causing vibration in the steering wheel.

1. Remove the split pin and tighten the adjusting nut.

Tightening torque	Adjusting nut	20 N·m 2.0 kgf·m 15 lbf·ft

2. Make sure that one of the nut slots aligns with the split pin hole.

https://truckmanualshub.com/

3. Tighten the nut slightly if necessary when aligning the nut slots with the split pin hole.
4. Replace the split pin.

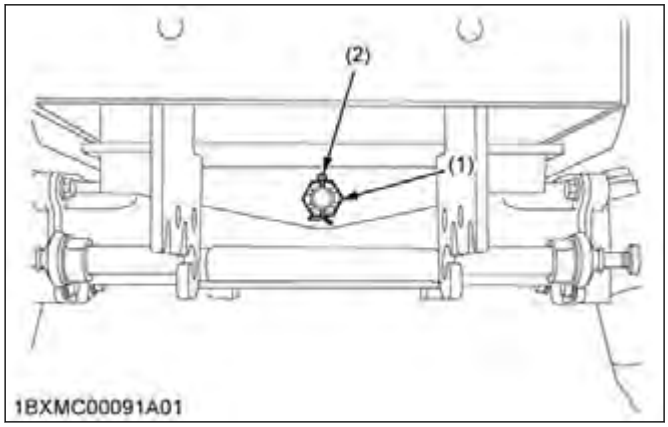

(1) Adjusting nut (2) Split pin

1.7.2 Changing transmission fluid

WARNING

To avoid serious injury or death:

- **Oil can be hot and can burn. Allow the engine to cool down sufficiently.**

1. To drain the used transmission fluid, remove the drain plug at the bottom of the transmission case and drain the transmission fluid completely into the oil pan.

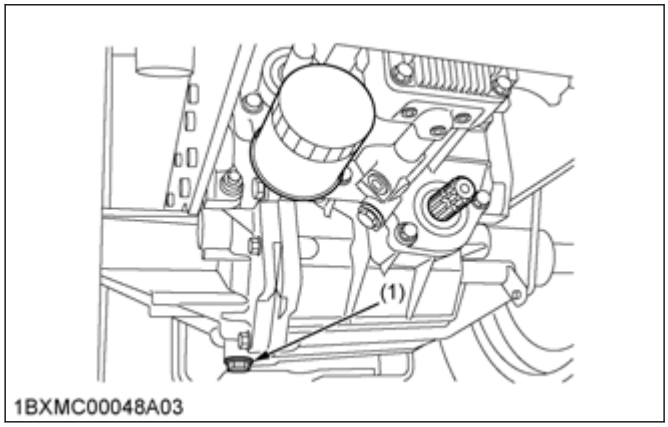

(1) Drain plug

2. After draining the transmission fluid, reinstall the drain plug.
3. Clean the transmission strainer.
4. Fill with new transmission fluid up to the upper notch on the dipstick.

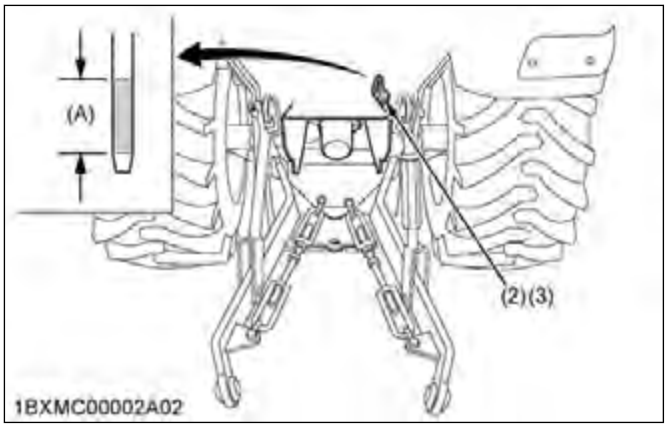

(2) Oil inlet
(3) Dipstick
(A) Transmission fluid level is acceptable within this range.

Transmission fluid	Capacity	11.6 L 12.3 U.S.qts 10.2 Imp.qts

5. After operating the engine for a few minutes, stop it and check the transmission fluid level again.
6. If the transmission fluid level is lower than the prescribed level shown on the dipstick (3), add fluid to the prescribed level.
7. Properly dispose of used transmission fluid.

IMPORTANT

- **Do not operate the tractor immediately after changing the transmission fluid.**
  Operate the engine at medium speed for a few minutes to prevent damage to the transmission.

RELATED PAGE

LUBRICANTS, FUEL AND COOLANT on page 2-7

1.7.3 Cleaning transmission strainer

1. When changing the transmission fluid, disassemble and rinse the transmission strainer with nonflammable solvent to completely clean off filings. When reassembling the transmission strainer, be careful not to damage the parts.

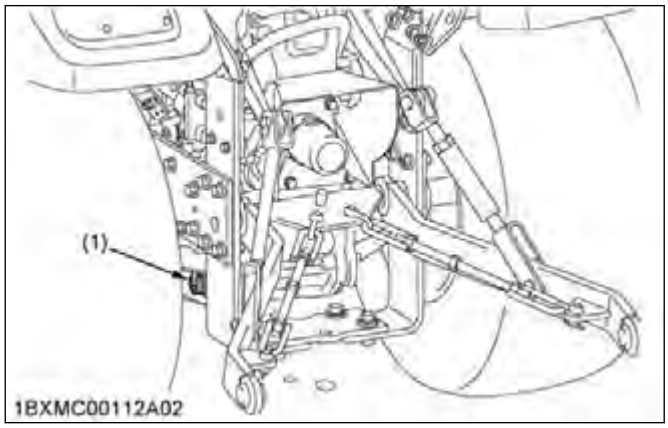

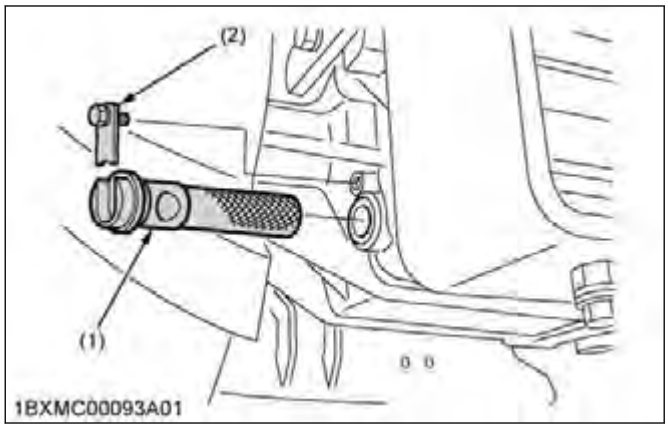

(1) Transmission strainer (2) Filter plate

NOTE

- **Since the fine filings in the oil can damage the precision component parts of the hydraulic system, the end of the suction line is provided with an oil strainer.**

1.7.4 Changing front axle case oil

WARNING

To avoid serious injury or death:

- **Be sure to stop the engine and remove the key before changing the front axle case oil.**

1. Park the tractor on a firm, flat, and level place.
2. To drain the used front-axle-case-oil, remove the right and left drain plugs and oil gauge at the front axle case.

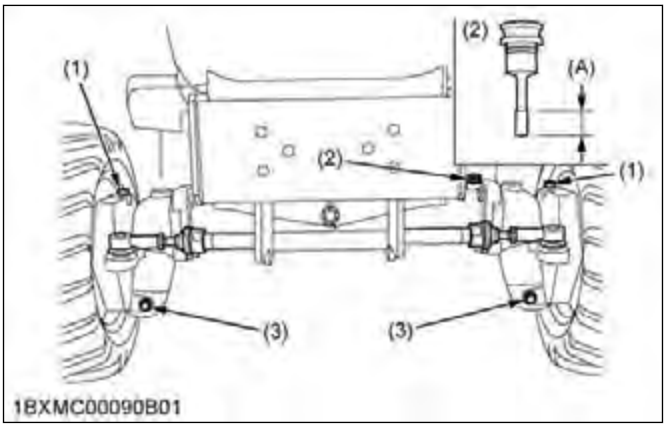

(1) Breather plug
(2) Oil gauge with dipstick
(3) Drain plug
(A) Front axle case oil level is acceptable within this range.

3. Drain the front-axle-case-oil completely into the oil pan.
4. After draining the front-axle-case-oil, reinstall the drain plugs.
5. Remove the right and left breather plugs.
6. Fill with new front-axle-case-oil up to the upper notch on the dipstick.

Front axle case oil	Capacity	4.7 L 5.0 U.S.qts 4.1 Imp.qts

IMPORTANT

- **After 10 minutes, check the front-axle-case-oil level again. If the front-axle-case-oil level is lower than the prescribed level, add the front-axle-case-oil to prescribed level.**

7. After filling with front-axle-case-oil, reinstall the oil gauge and breather plugs.

RELATED PAGE
LUBRICANTS, FUEL AND COOLANT on page 2-7

1.7.5 Replacing fuel filter element

NOTE

- **If the fuel line is removed, be sure to properly bleed the fuel system.**

1. Disconnect the fuel hoses and replace the fuel filter (2).

https://truckmanualshub.com/

2. Disconnect the fuel hoses and loosen the pipe clamp to replace the fuel filter (5).

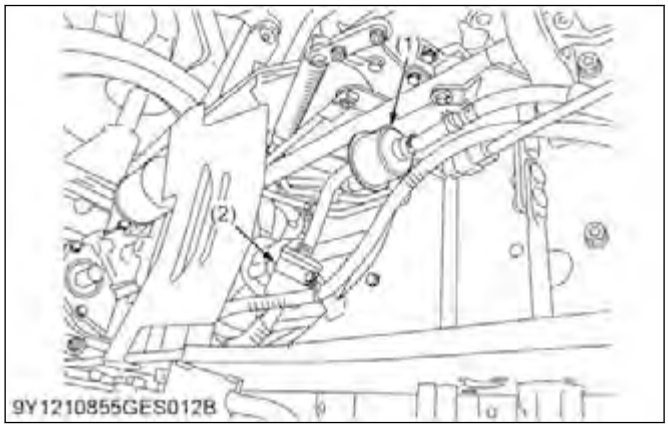

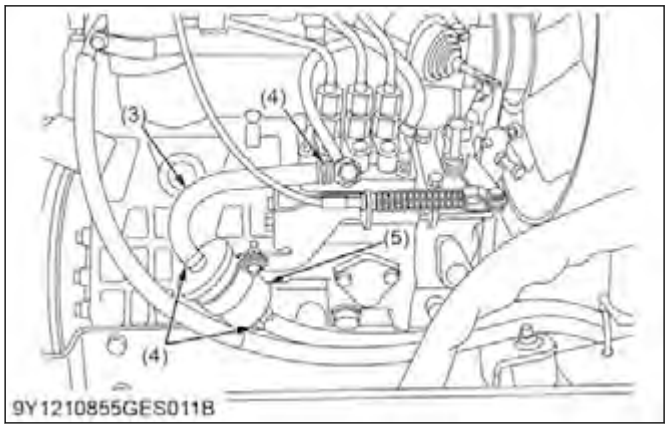

(1) Fuel pump
(2) Fuel filter
(3) Fuel line
(4) Hose clamp
(5) Fuel filter

1.8 Check points of every 800 hours

1.8.1 Adjusting engine valve clearance

- See *"Checking engine vale clearance"*.

— RELATED PAGE —
4.1.2 Checking valve clearance on page 3-24

1.9 Check points of every 1000 hours or 1 year

Be sure to do the following servicing once every 1000 hours or yearly, whichever comes first.

1.9.1 Replacing air cleaner element

See *"Cleaning air cleaner element"*.

— RELATED PAGE —
1.5.2 Cleaning air cleaner element on page 2-32

1.10 Check points of every 1500 hours

1.10.1 Checking injection pressure of fuel injection nozzle

- See *"Checking fuel injection pressure"*.

— RELATED PAGE —
4.4.5 Checking fuel injection pressure on page 3-30

1.11 Check points of every 2000 hours or 2 years

1.11.1 Flushing cooling system and changing coolant

WARNING

To avoid serious injury or death:

- **Do not remove the radiator cap while the coolant is hot. When the coolant is cool, slowly rotate the radiator cap to the first stop and allow sufficient time for excess pressure to escape before removing the radiator cap completely.**

IMPORTANT

- **Do not start the engine without coolant.**
- **Use clean, fresh soft water and the anti-freeze to fill the radiator and the recovery tank.**
- **When mixing the anti-freeze with water, the anti-freeze mixing ratio is 50%.**
- **Securely tighten the radiator cap. If the radiator cap is loose or improperly fitted, water may leak out and the engine could overheat.**

Coolant (with recovery tank)	Capacity	3.1 L 3.3 U.S.qts 2.7 Imp.qts

1. Stop the engine and let it cool down.
2. To drain the coolant, open the radiator drain plug or the engine drain plug and remove the radiator cap. The radiator cap must be removed to completely drain the coolant.
3. After all coolant is drained, close the drain plug.
4. Fill the radiator with clean soft water and the cooling system cleaner.
5. Follow directions of the instruction of cooling system cleaner.
6. After flushing the radiator, fill it with clean soft water and the anti-freeze until the coolant level is just below the radiator cap.
7. Install the radiator cap securely.
8. Fill the recovery tank with coolant up to the "**H**" mark on the recovery tank.
9. Start and operate the engine for a few minutes.

10. Stop the engine and let it cool.
11. Check the coolant level of the recovery tank and add the coolant if necessary.

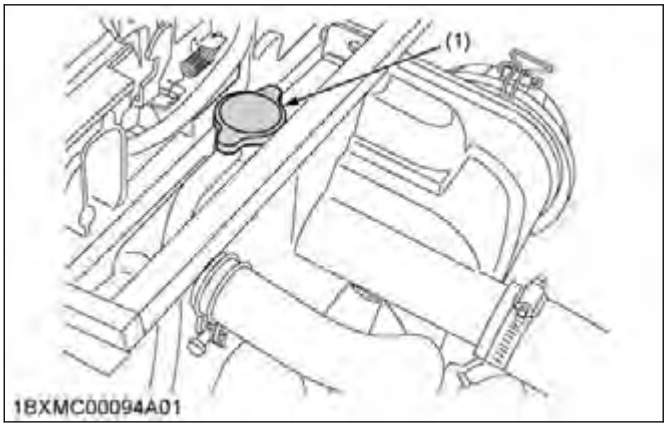

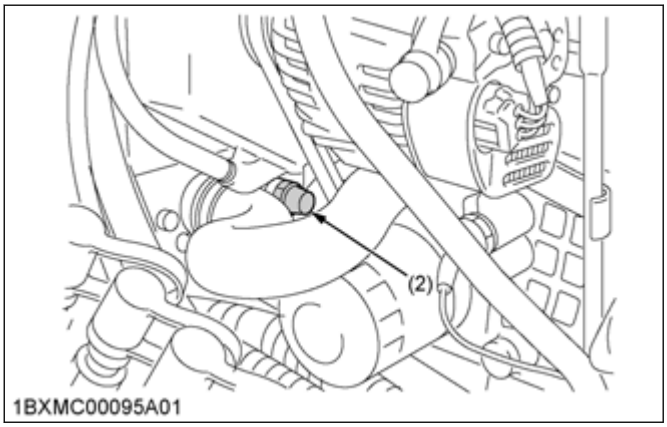

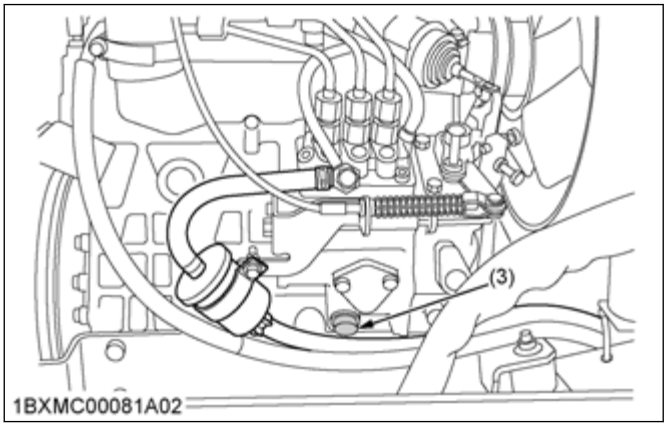

(1) Radiator cap
(2) Radiator drain plug
(3) Engine drain plug

RELATED PAGE
LUBRICANTS, FUEL AND COOLANT on page 2-7

1.11.2 Antifreeze

WARNING
To avoid serious injury or death:

- **When using the antifreeze, put on some protection such as rubber gloves. The antifreeze contains poison.**
- **If someone drank antifreeze, seek immediate medical help. Do not make a person throw up unless told to throw up by poison-control-center or a health care professional. Use standard first aid and CPR for signs of shock or cardiac arrest. Call your local poison control center or your local emergency number for further assistance.**
- **When the antifreeze comes in contact with the skin or clothing, wash it off immediately.**
- **Do not mix different types of the antifreeze. The mixture can produce chemical reaction causing harmful substances.**
- **The antifreeze is extremely flammable and explosive under certain conditions. Keep fire and children away from the antifreeze.**
- **When draining fluids from the engine, place some container underneath the engine body.**
- **Do not pour waste onto the ground, down a drain, or into any water source.**
- **Also, follow the relevant environmental protection regulations when disposing of the antifreeze.**

Always use a 50/50 mix of long-life coolant and clean soft water in KUBOTA engines.

NOTE
- **The following data represent industry standards that necessitate a minimum glycol content in the concentrated antifreeze.**

- Long-life coolant (hereafter LLC) comes in several types. Use ethylene glycol (EG) type for this engine.
- Before using LLC-mixed cooling water, fill the radiator with fresh water and empty it again.
  Repeat this procedure two times or three times to clean up the inside.
- Mixing the LLC

Premix	50% LLC with 50% clean soft water.

  When mixing, stir it up well, and then fill into the radiator.
- Adding the LLC.
  – Add only water if the mixture reduces in amount by evaporation.
  – If there is a mixture leak, add the LLC of the same manufacturer and type in the same mixture percentage.

IMPORTANT
- **Never add any long-life coolant of different manufacturer. Different brands may have different additive components,**

and the engine may fail to perform as specified.

- When the LLC is mixed, do not use any radiator cleaning agent. The LLC contains anticorrosive agent. If mixed with the cleaning agent, sludge may build up, adversely affecting the engine parts.
- KUBOTA's genuine long-life coolant has a service life of two years.
  Be sure to change the coolant every two years.
- The procedure for the mixing of water and the antifreeze differs according to the make of the antifreeze and the ambient temperature. Refer to SAE J1034 standard, more specifically also to SAE J814c.

Antifreeze	Freezing point		Boiling point*1	
50Vol%	-37 ℃	-34 ℉	108 ℃	226 ℉

*1 At 1.013 × 10^5 Pa (760 mmHg) atmospheric pressure. A higher boiling point is obtained by using a radiator pressure cap which permits the development of pressure within the cooling system.

1.12 Check points of every 3000 hours

1.12.1 Checking injection pump

- See *"Fuel system"* for checking injection pump.

RELATED PAGE
4. Fuel system on page 3-12

1.13 Check points of every 1 year

1.13.1 Checking intake air line

WARNING

To avoid serious injury or death:

- **Stop the engine and remove the key before checking the intake air line.**

1. Check to see that the hose and the hose clamps are tight and not damaged.
2. If the hose and the clamps are found worn or damaged, replace or repair them at once.

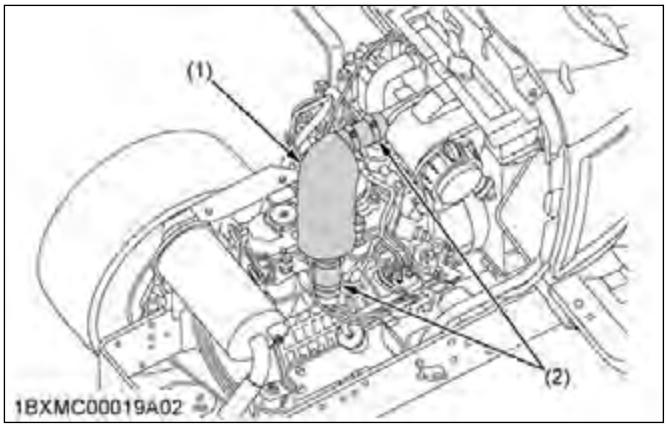

(1) Hose (2) Hose clamps

1.13.2 Checking radiator hoses and hose clamps

WARNING

To avoid serious injury or death:

- **Be sure to stop the engine and remove the key before checking the radiator hose and the hose clamps.**

1. If the hose clamps are loose or water leaks, tighten them securely.
2. Replace the radiator hoses and tighten the hose clamps securely if you checked and found that the radiator hoses are swollen, hardened, or cracked.
3. Properly dispose of used coolant.

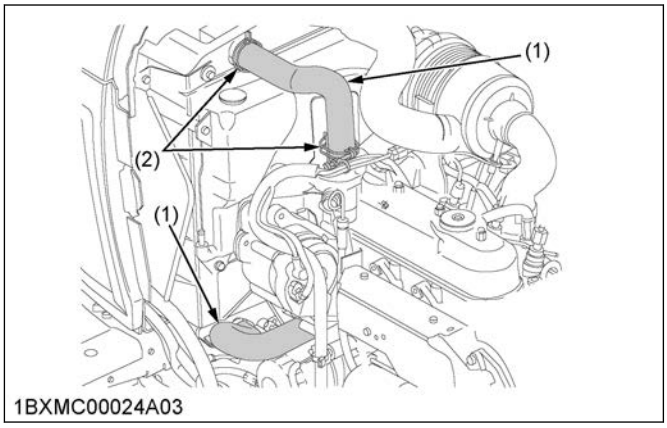

(1) Radiator hoses (2 pcs) (2) Hose clamps (4 pcs)

1.13.3 Checking power steering line

WARNING

To avoid serious injury or death:

- **Be sure to stop the engine and remove the key before checking the power steering line.**

1. Check to see that all power steering lines are tight and not damaged.

2. If the power steering pressure hoses are found to be worn or damaged, replace or repair them at once.

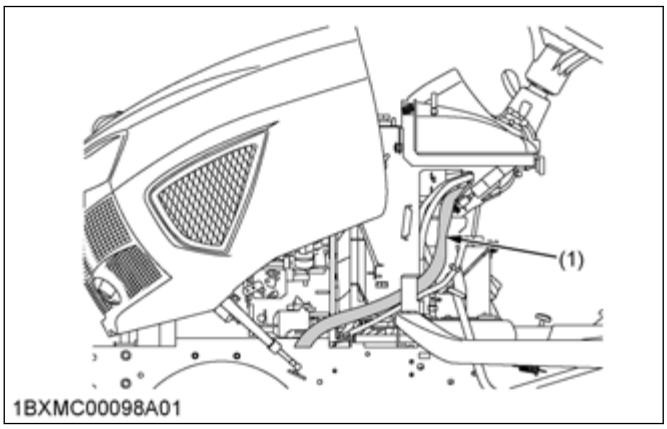

(1) Power steering pressure hose

1.13.4 Checking fuel lines

WARNING

To avoid serious injury or death:

- **Stop the engine and remove the key before checking the fuel lines and fuel filter.**
- **Check the fuel lines periodically. The fuel lines are subject to wear and aging. Fuel may leak out onto the running engine, causing a fire.**

IMPORTANT

- **When the fuel line is disconnected for maintenance or repair, plug both ends of the fuel line with a clean plug of suitable size to prevent dust and dirt from entering. You must take particular care of the fuel lines in order to avoid dust and dirt getting into the fuel system. Entrance of dust and dirt causes malfunction of the fuel pump.**

The fuel line is made of rubber and ages regardless of service period.

1. Inspect the fuel lines.
2. After inspection, if the fuel lines and clamps are found damaged or deteriorated, replace them.
3. Check the fuel filter. If the fuel filter is clogged by debris or contaminated by water, replace it.

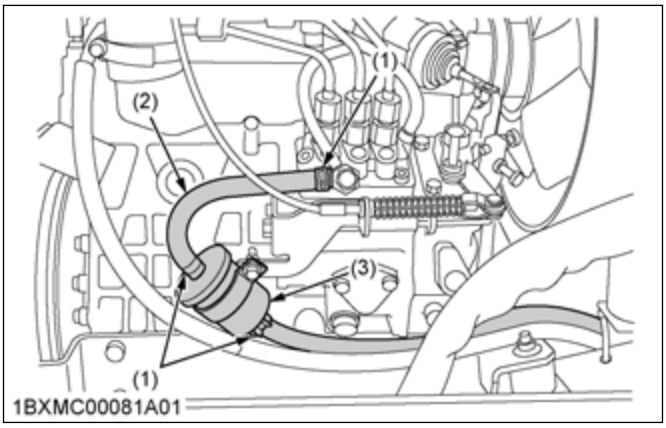

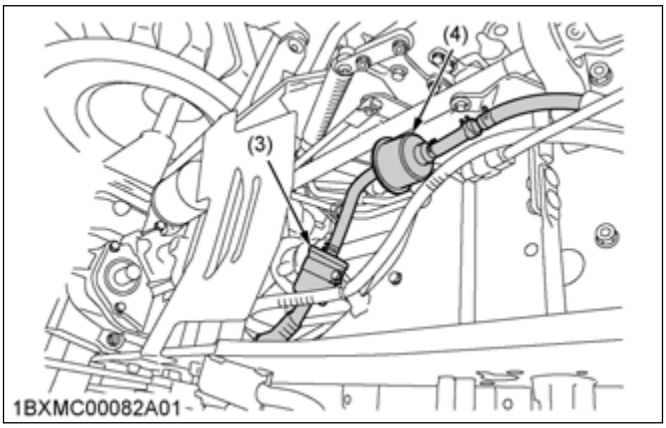

(1) Pipe clamps
(2) Fuel line
(3) Fuel filter
(4) Fuel pump

NOTE

- **If the fuel line is removed, be sure to properly bleed the fuel system.**

1.13.5 Checking engine breather hose

1. Check the engine breather hose (1) for damage.
2. If the engine breather hose (1) is damaged, replace it with new one.

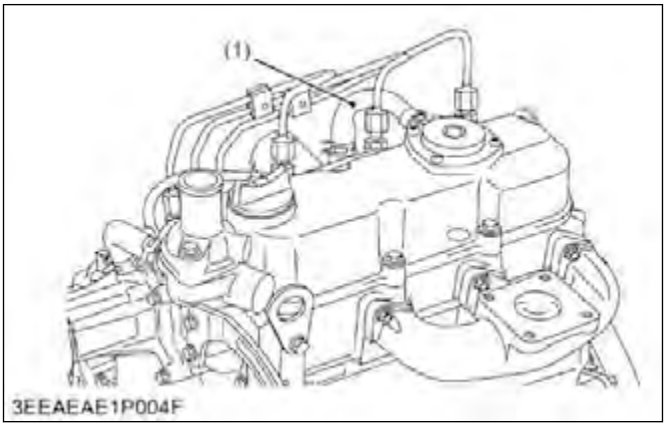

(1) Engine breather hose

1.14 Check points of every 4 years

1.14.1 Replacing radiator hose

1. Replace the radiator hoses and tighten the hose clamps securely.

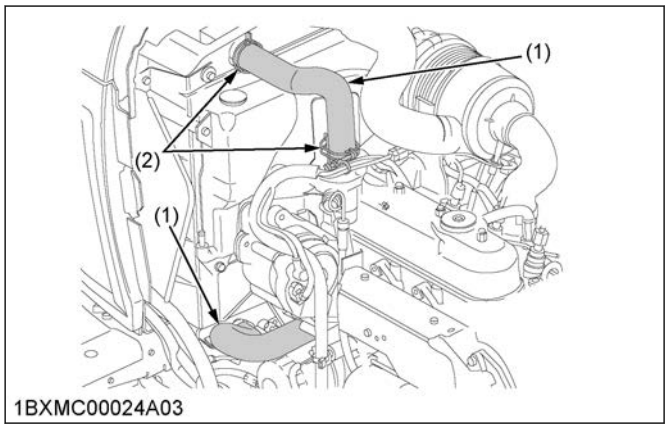

(1) Radiator hoses (2 pcs) (2) Hose clamps (4 pcs)

1.14.2 Replacing fuel hose

- See *"Checking fuel lines"*.

RELATED PAGE
1.13.4 Checking fuel lines on page 2-42

1.14.3 Replacing power steering hose

- See *"Checking power steering line"*.

RELATED PAGE
1.13.3 Checking power steering line on page 2-41

1.14.4 Replacing intake air line

- See "Checking intake air line".

RELATED PAGE
1.13.1 Checking intake air line on page 2-41

1.14.5 Replacing engine breather hose

- See *"Checking engine breather hose"*.

RELATED PAGE
1.13.5 Checking engine breather hose on page 2-42

1.15 Service as required

1.15.1 Bleeding fuel system

Air must be removed:
- When the fuel filter or lines are removed.
- When the tank is completely empty.
- After the tractor has not been used for a long period of time.

Bleeding procedure

1. Fill the fuel tank with fuel.
2. Turn the key switch to the **ON** position for about 30 seconds.
   This allows the fuel pump (1) to work and pump air out of the fuel system.

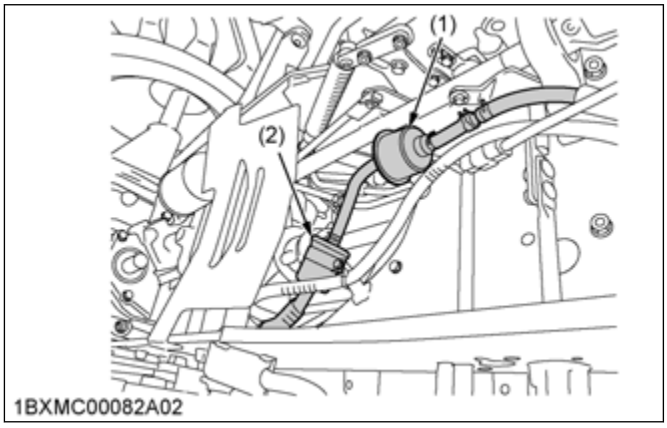

(1) Fuel pump (2) Fuel filter

3. Start the engine and operate for about 30 seconds, and then stop the engine.

1.15.2 Replacing fuse

The electrical system of the tractor is protected from potential damage by fuses.
A blown fuse indicates that there is an overload or short somewhere in the electrical system.

1. If any of the fuses should blow, replace with a new fuse with the same capacity.

IMPORTANT

- **Before replacing a blown fuse, determine why the fuse blew and make any necessary repairs. Failure to follow this procedure may result in serious damage to the electrical system of the tractor.**

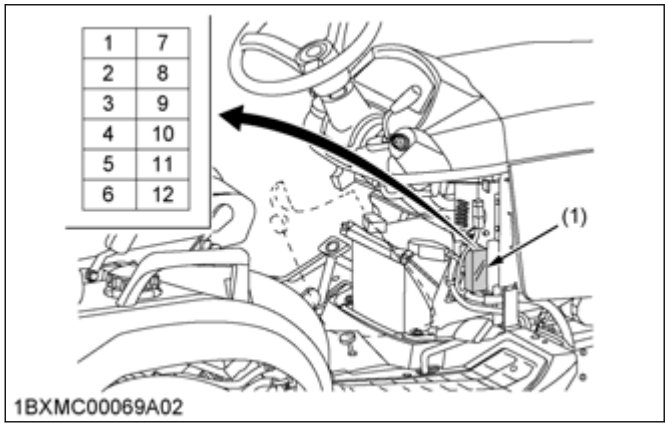

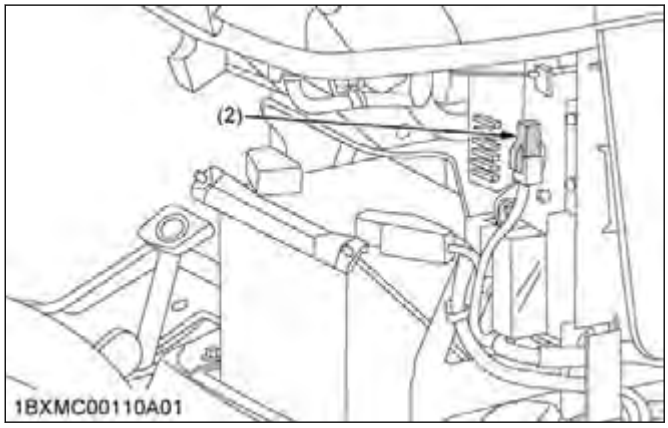

(1) Fuse box (2) Slow blow fuse

Protected circuit

Fuse box

Fuse No.	Capacity	Protected circuit
1	—	—
2	—	—
3	10 A	Option (3rd-function)
4	10 A	OPC
5	15 A	DC outlet
6	5 A	Fuel pump
7	—	-
8	5 A	Glow indicator
9	5 A	Meter
10	15 A	Stop solenoid
11	20 A	Lamp
12	20 A	Option (work light)

Slow blow fuse

Capacity	Protected circuit
50 A	Check circuit against wrong battery connection

1.15.3 Replacing light bulb

Light	Capacity
Head light	37.5 W × 2
Tail light	12.8 W × 2
Hazard light	27 W × 2

Head light

1. Take the light bulb out of the body of the light and replace with a new one.

Other lights

1. Remove the lens and replace the light bulb.

2. Mower

2.1 Check points of daily or each use

2.1.1 Retightening mower blade screw

NOTE

- **To avoid injury, always handle the mower blade with care.**

https://truckmanualshub.com/

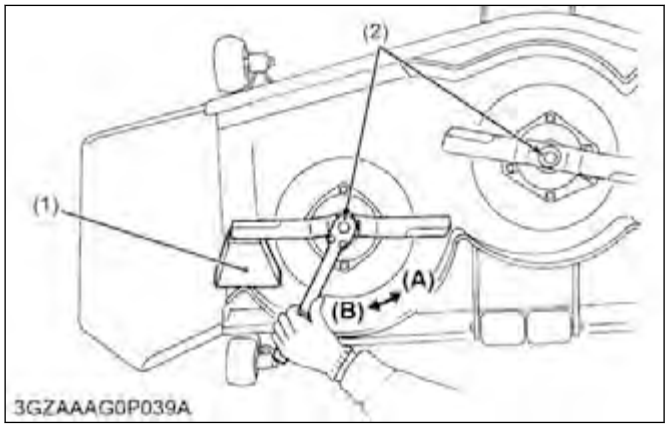

(1) Wooden block
(2) Mower blade screw
(A) Loosen (Counterclockwise)
(B) Tighten (Clockwise)

1. Tilt up the mower and turn it over to expose the mower blades.
2. Wedge a wooden block (1) securely between the mower blade and mower deck.
3. Retighten the mower blade screw to the specified torque.

RCK54D-26BX and RCK60D-26BX

Tightening torque	Mower blade screw	102.9 to 117.6 N·m 10.5 to 12.0 kgf·m 75.9 to 86.8 lbf·ft

4. If the mower blade screw (2) is worn or broken, replace it.

2.1.2 Checking mower blade

WARNING

To avoid serious injury or death:

- **Be sure to stop the engine and remove the key.**
- **Blades may be sharp. When you handle blades, wear heavy gloves or wrap end of blade with a rag.**

IMPORTANT

- **Use the proper metric size box or socket wrench to tighten or loosen the blade mounting bolt.**

NOTE

- **Before checking or replacing the blade, wipe grass and mud off the top and inside of the mower.**
- **Especially clean up the inside of the belt cover, because otherwise the belt life will be reduced.**

1. The blade cutting edges must be kept sharp at all times. Sharpen the cutting edges, if they resemble blade (B). Replace the blades if they appear similar to blade (C).

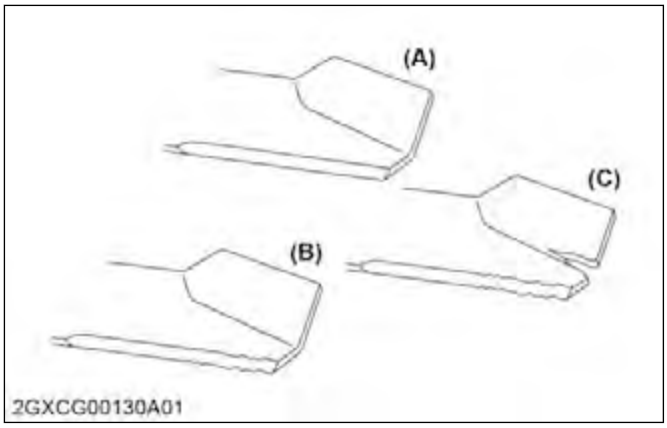

(A) New blade
(B) Worn blade
(C) Cracked blade

2.1.3 Checking mower belt

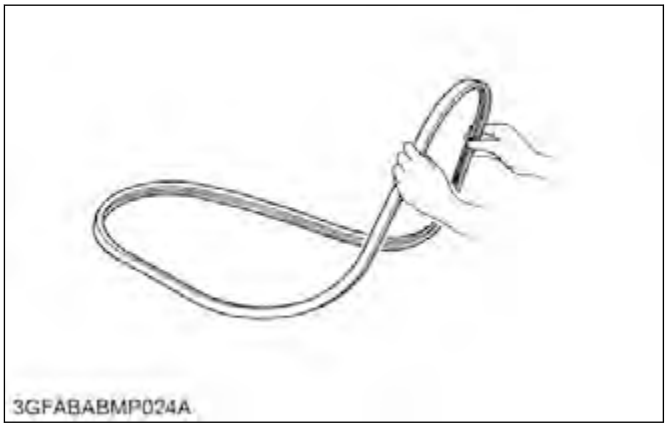

1. Inspect the mower belt.
2. Replace the mower belt, if there is any damage found.

2.1.4 Checking gear box oil level

IMPORTANT

- **Use the specified gear oil.**

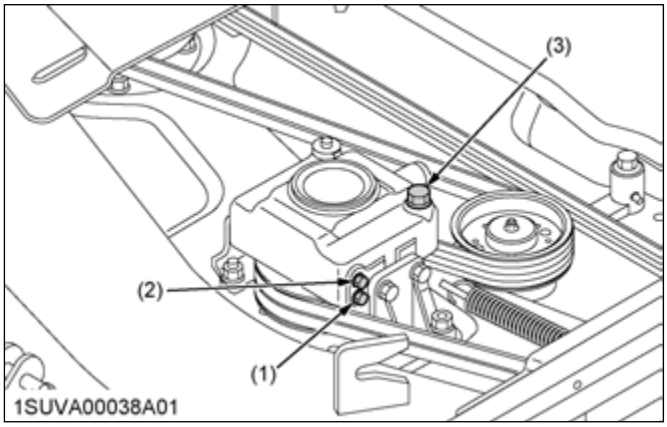

(1) Drain plug
(2) Check plug
(3) Oil filler plug

1. Place the mower on level ground.
2. Loosen the check plug (2), and check to see if oil seems from the opening.
3. If the oil level is low, remove the oil filler plug (3) and add new gear oil.

RELATED PAGE
LUBRICANTS, FUEL AND COOLANT on page 2-7

2.1.5 Greasing spindle shafts, belt tension pivot and tension pulley

1. Grease the grease fittings (1), (2), (3) if the amount of grease is insufficient.

[Only for RCK54D-26BX]

2. Remove the ramp bracket (5) for greasing spindle shafts. To remove the ramp bracket, remove the pin (6) and clevis pin (4) and slide the ramp bracket to the rear side (A). Then lift up (B) the ramp bracket to remove from mower deck.

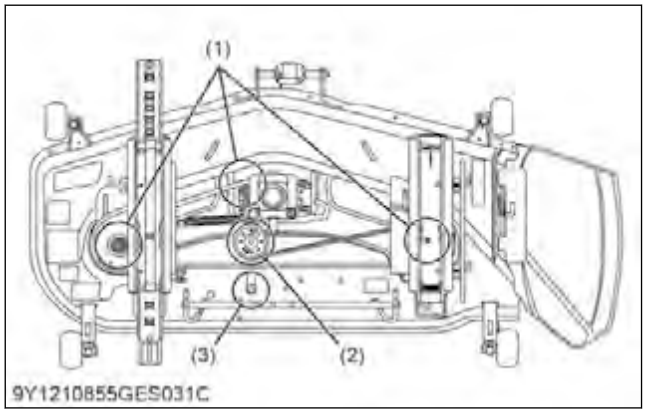

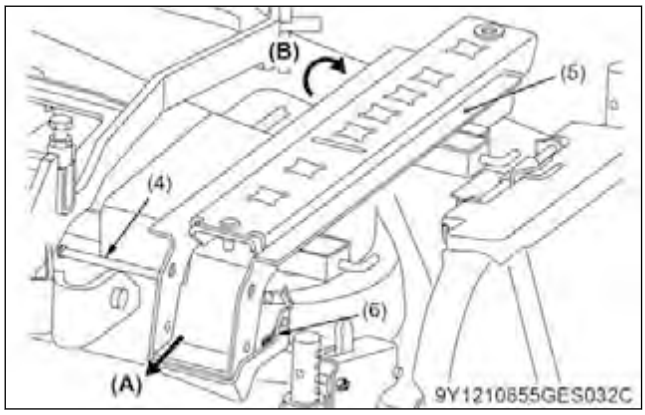

(1) Grease fitting (Spindle shaft)
(2) Grease fitting (Belt tension pulley)
(3) Grease fitting (Belt tension pivot)
(4) Clevis pin
(5) Ramp bracket
(6) Pin
(A) Rear
(B) Up

2.1.6 Greasing front and rear anti-scalp rollers

1. Grease the grease fitting (1), (2) of the front and rear anti-scalp rollers if the amount of grease is insufficient.

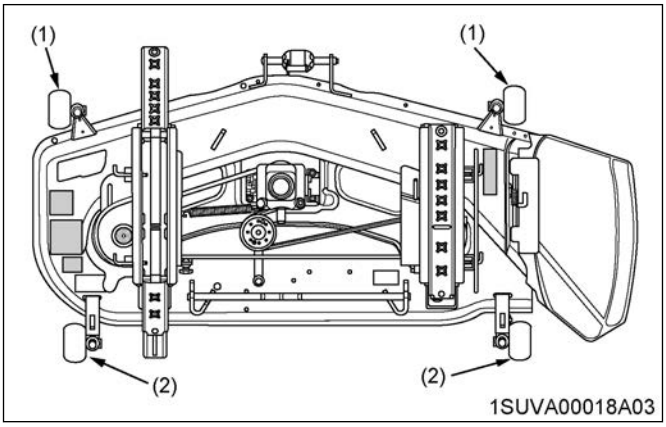

(1) Grease fitting (Front anti-scalp roller)
(2) Grease fitting (Rear anti-scalp roller)

2.1.7 Greasing universal joint

1. Grease the internal splines (1) and grease fittings (2) of the universal joint if the amount of grease is insufficient.

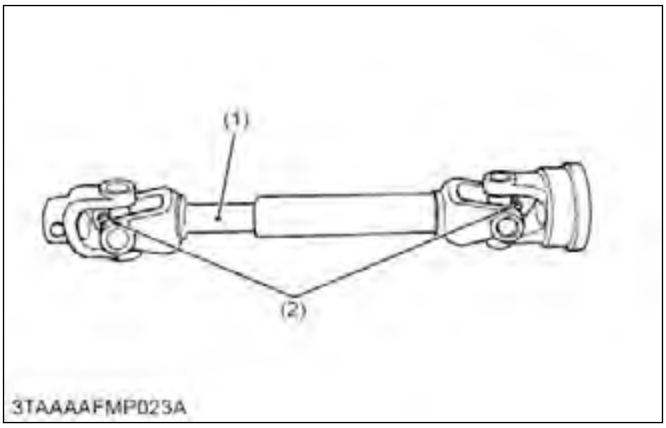

(1) Spline
(2) Grease fitting

https://truckmanualshub.com/

2. Grease between the hole and rod (3).

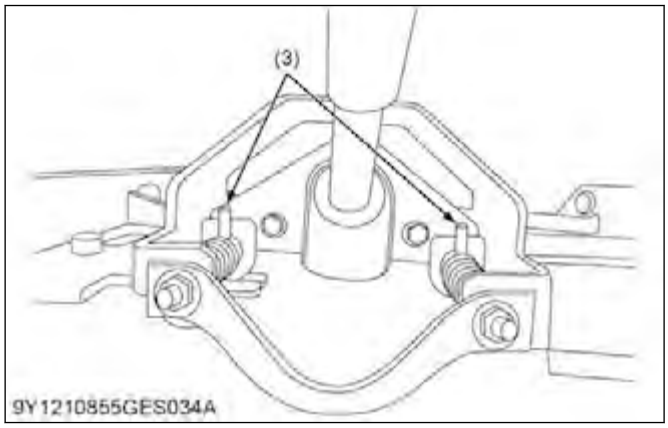

(3) Hole and rod

2.2 Check points of initial 50 hours

2.2.1 Changing gear box oil

CAUTION

- **Be sure to stop the engine and remove the key before changing the oil.**

IMPORTANT

- **Use the specified gear oil.**

1. Dismount the mower from the tractor, and place the mower on level ground.
2. Remove the oil filler plug (3).
3. Remove the drain plug (1), and drain the used oil completely.

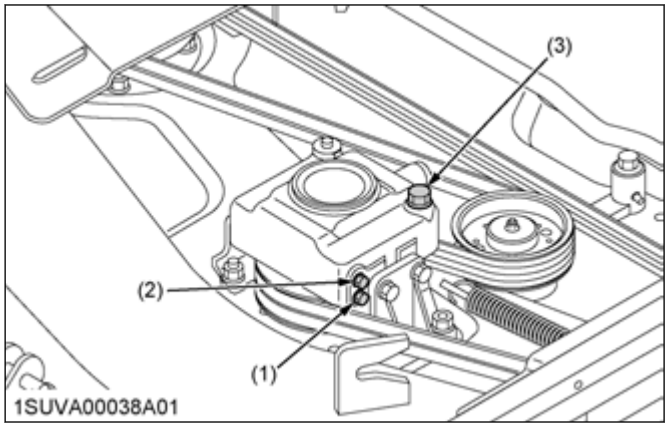

(1) Drain plug
(2) Check plug
(3) Oil filler plug

4. After draining the used oil, reinstall the drain plug.
5. Fill with new oil up to the specified level.

RELATED PAGE
LUBRICANTS, FUEL AND COOLANT on page 2-7

2.3 Check point of every 150 hours

2.3.1 Changing gear box oil

1. See *"Changing gear box oil"* in *"Check points of initial 50 hours"*.

RELATED PAGE
2.2.1 Changing gear box oil on page 2-47

2.4 Check points of every 1 year

2.4.1 Checking gear box oil seal

1. Check the gear box oil seals (1), (2) for leaks. If oil seals are leaking, replace them.

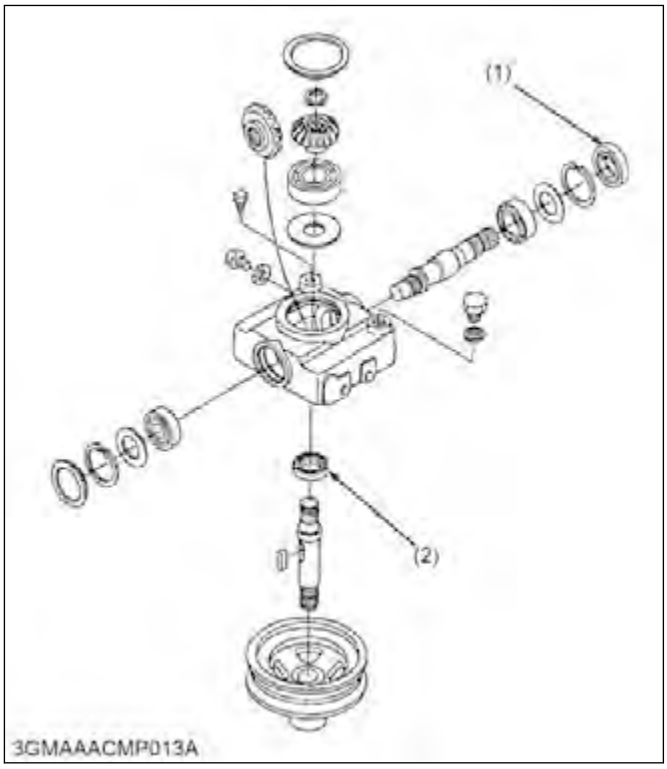

(1) Oil seal
(2) Oil seal

2.5 Check point of every 4 years

2.5.1 Replacing gear box oil seal

1. Replace the gear box oil seals (1), (2) with new ones.

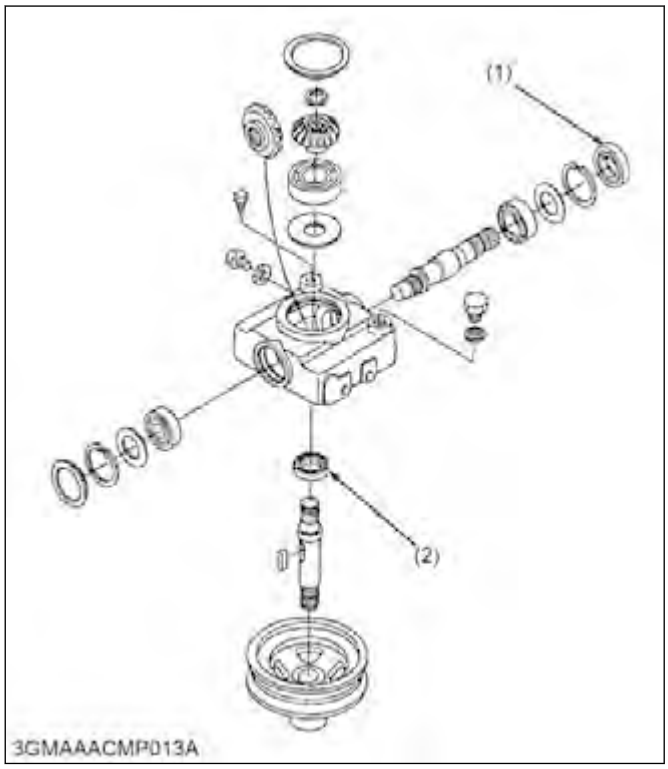

(1) Oil seal (2) Oil seal

3. Front loader

3.1 Check points of daily or each use

3.1.1 Checking transmission fluid level

WARNING

To avoid serious injury or death:

- **Park the tractor on a firm, flat, and level surface, lower the implement to the ground, and stop the engine.**

IMPORTANT

- **If the transmission fluid level is low, do not operate the engine.**

1. To check the transmission fluid level, check the dipstick as the following procedure.
   a. Draw out the dipstick.
   b. Wipe the dipstick clean.
   c. Replace the dipstick.
   d. Draw the dipstick out again.
2. Check to see that the transmission fluid level lies between the two notches.
3. If the transmission fluid level is too low, add new fluid to the prescribed level at the oil inlet.

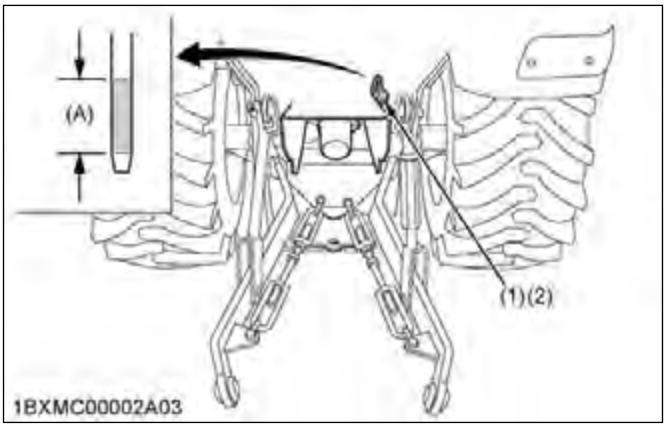

(1) Oil inlet
(2) Dipstick
(A) Transmission fluid level is acceptable within this range.

3.1.2 Checking hydraulic hoses

WARNING

To avoid serious injury or death:

- **Escaping the hydraulic fluid under pressure can obtain sufficient force to penetrate skin, causing serious personal injury.**
- **Before disconnecting lines, be sure to relieve all pressure. Before applying pressure to the loader system, be sure that all connections are tight and that lines, tubes, and hoses are not damaged. Fluid escaping from a very small hole can be almost invisible. Use a piece of cardboard or wood, rather than your hands, to search for suspected leaks.**
- **If you are injured by escaping fluid, see a doctor at once. Serious infection or allergic reaction will develop if proper medical treatment is not administered immediately.**

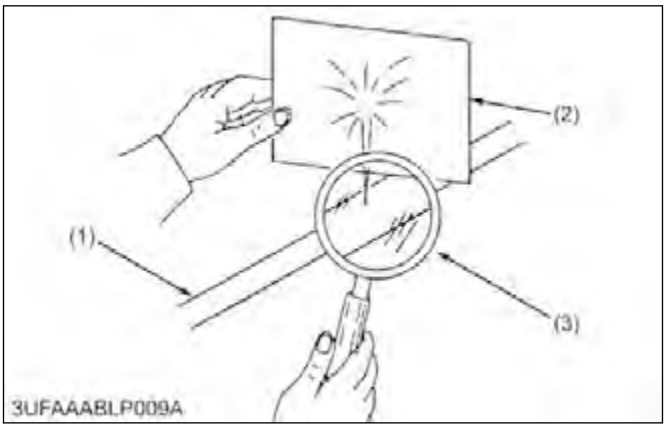

(1) Hydraulic hose
(2) Cardboard
(3) Magnifying glass

1. With the engine off and bucket on the ground, inspect all hydraulic hoses for cuts or wear.
2. Check for signs of leaks and make sure all fittings are tight.

https://truckmanualshub.com/

3. If damage is found, replace the hoses.

3.2 Check points of every 10 hours

3.2.1 Greasing loader

1. Grease the grease fittings of the front loader in the locations shown.
2. Grease the joints of the control lever linkage.

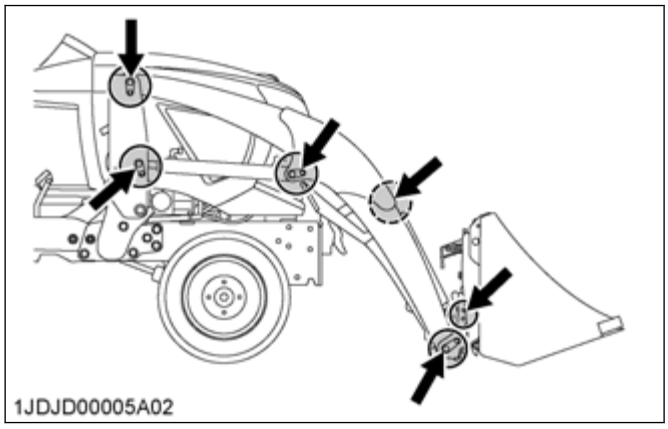

3.3 Check points of every 50 hours

3.3.1 Checking torque of main frame bolt and nut

WARNING

To avoid serious injury or death:

- **Never operate the front loader with a loose main frame.**
- **Any time bolts and nuts are loosened, retighten to specified torque.**
- **Check all bolts and nuts frequently and keep them tight.**
- **Check the bolts and nuts of the main frame regularly especially when they are new. If the bolts and nuts of the main frame are loose, tighten them as follows.**

1. Check the torque of bolts and nuts.

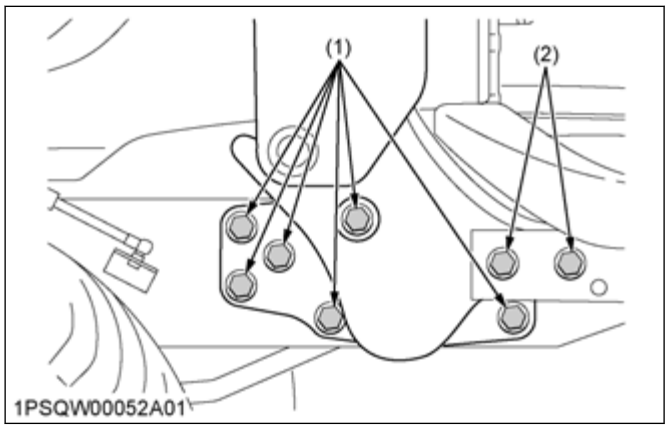

(1) Bolt and nut of the main frame
(2) Bolt and nut of the main frame

Tightening torque	Bolt and nut (1)	147 N·m 15.0 kgf·m 108 lbf·ft
	Bolt and nut (2)	203 N·m 20.7 kgf·m 150 lbf·ft

4. Backhoe

4.1 Check points of daily or each use

4.1.1 Checking transmission fluid level

WARNING

To avoid serious injury or death:

- **Park the tractor on a firm, flat, and level surface, lower the implement to the ground, and stop the engine.**

IMPORTANT

- **If the transmission fluid level is low, do not operate the engine.**

1. To check the transmission fluid level, check the dipstick as the following procedure.
   a. Draw out the dipstick.
   b. Wipe the dipstick clean.
   c. Replace the dipstick.
   d. Draw the dipstick out again.
2. Check to see that the transmission fluid level lies between the two notches.
3. If the transmission fluid level is too low, add new fluid to the prescribed level at the oil inlet.

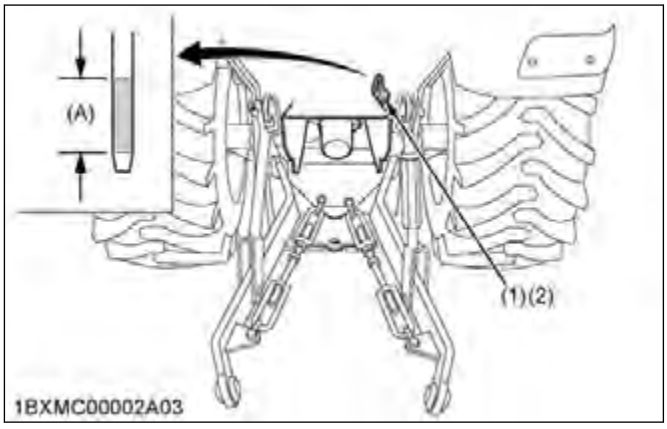

(1) Oil inlet
(2) Dipstick
(A) Transmission fluid level is acceptable within this range.

4.1.2 Checking hydraulic hoses

WARNING

To avoid serious injury or death:

- **Escaping the hydraulic fluid under pressure can obtain sufficient force to penetrate skin, causing serious personal injury.**
- **Before disconnecting lines, be sure to relieve all pressure. Before applying pressure to the loader system, be sure that all connections are tight and that lines, tubes, and hoses are not damaged. Fluid escaping from a very small hole can be almost invisible. Use a piece of cardboard or wood, rather than your hands, to search for suspected leaks.**
- **If you are injured by escaping fluid, see a doctor at once. Serious infection or allergic reaction will develop if proper medical treatment is not administered immediately.**

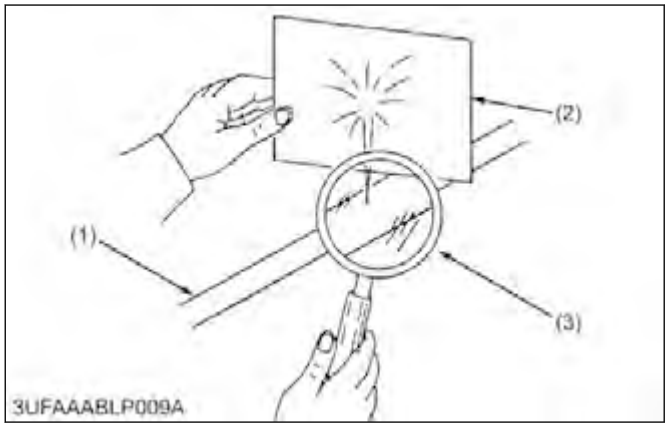

(1) Hydraulic hose
(2) Cardboard
(3) Magnifying glass

1. With the engine off and bucket on the ground, inspect all hydraulic hoses for cuts or wear.
2. Check for signs of leaks and make sure all fittings are tight.
3. If damage is found, replace the hoses.

4.1.3 Checking backhoe mounting pin

1. Check that the backhoe mounting pin is inserted into the hole of the main frame and the slide bar.

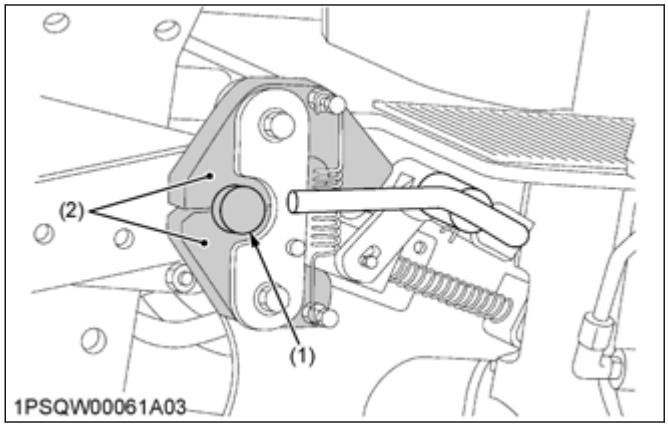

(1) Mounting pin
(2) Support hooks

4.2 Check points of every 10 hours

4.2.1 Greasing backhoe

1. Grease the grease fittings of the backhoe in the locations shown.

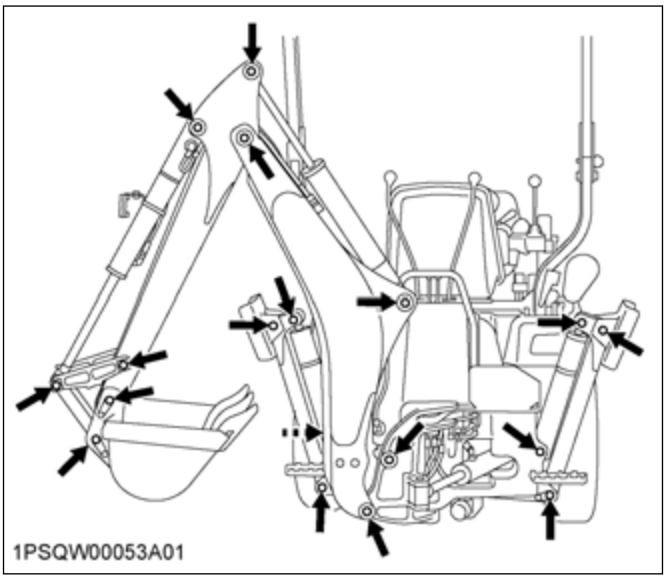

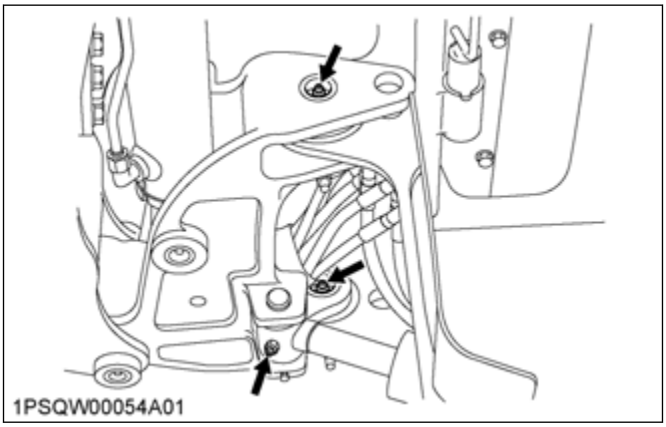

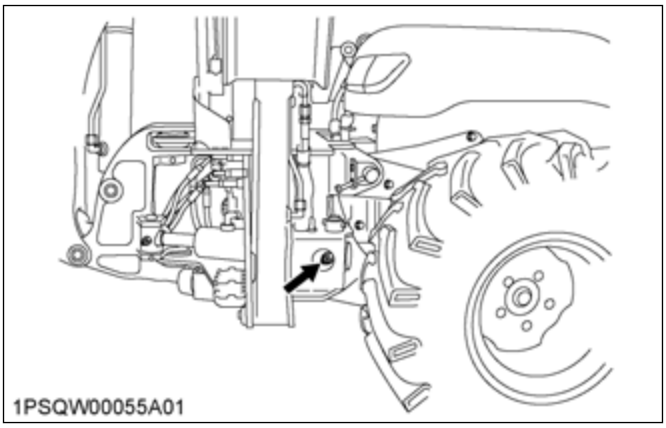

https://truckmanualshub.com/

4.3 Check points of every 50 hours

4.3.1 Checking torque sub frame bolt and nut

WARNING

To avoid serious injury or death:

- **Never operate the backhoe and front loader with a loose sub frame.**
- **Any time bolts and nuts are loosened, retighten to specified torque.**
- **Check all bolts and nuts frequently and keep them tight.**
- **Check the bolts and nuts of the main frame regularly especially when they are new. If the bolts and nuts of the sub frame are loose, tighten them as follows.**

1. Check the torque of bolts and nuts.

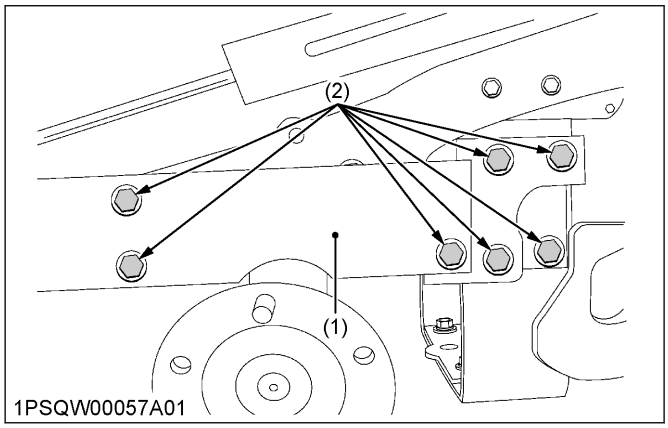

(1) Sub frame (2) Bolt

Tightening torque	Bolt	147 N·m 15.0 kgf·m 108 lbf·ft

https://truckmanualshub.com/

TIRES, WHEELS, AND BALLAST

1. Tires

WARNING

To avoid serious injury or death:

- **Do not try to mount a tire on a rim. Only a qualified person with the proper equipment should mount a tire on a rim.**
- **Always keep the correct tire pressure.**
  Do not inflate the tires above the recommended pressure shown in the *"Inflation pressure of tires"* section.

IMPORTANT

- **Do not use tires other than those approved by KUBOTA.**
- **When you intend to mount different size of tires from equipped ones, consult your dealer about front drive gear ratio for details.**
  Excessive wear of tires may occur due to improper gear ratio.

1.1 Inflation pressure of tires

Though the tire pressure is factory-set to the prescribed level, it naturally drops slowly in the course of time. Thus, check it everyday and inflate as necessary.

	Tire sizes	Inflation pressure
Rear	26×12.00-12 Turf	100 kPa (1.0 kgf/cm^2) [14 psi]
	26×12.00-12 Bar	120 kPa (1.2 kgf/cm^2) [17 psi]
	26×12.00-12 Ind.	120 kPa (1.2 kgf/cm^2) [17 psi]
Front	18×8.50-10 Turf	120 kPa (1.2 kgf/cm^2) [17 psi]
	18×8.50-10 Bar	150 kPa (1.5 kgf/cm^2) [22 psi]
	18×8.50-10 Ind.	150 kPa (1.5 kgf/cm^2) [22 psi]

NOTE

- **Keep the maximum pressure in front tires, if using a front loader or when equipped with a full load of front weight.**

1.2 Dual tires

Dual tires are not approved.

2. Wheel tread

WARNING

To avoid serious injury or death:

- **Support the tractor securely on stands before removing a wheel.**
- **Never operate the tractor with a loose rim, wheel, or axle.**

IMPORTANT

- **When re-fitting or adjusting a wheel, follow the procedure.**
  1. **Tighten the bolts to the torques as shown in the following table.**

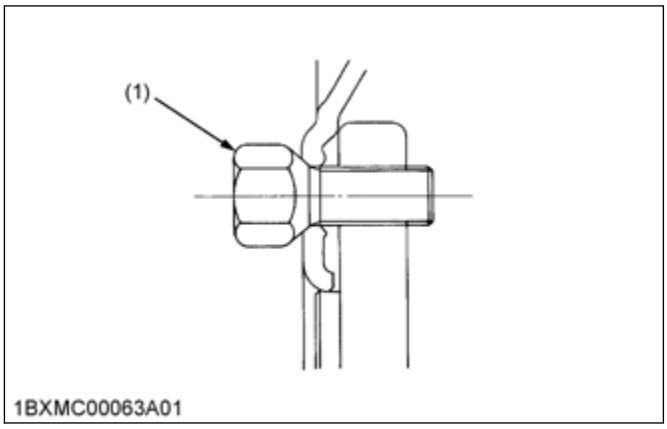

(1) Bolt

	Tightening torques
Front	149.2 N·m to 179.0 N·m (15.2 kgf·m to 18.3 kgf·m) [110 lbf·ft to 132 lbf·ft]
Rear	108.5 N·m to 130.2 N·m (11.1 kgf·m to 13.3 kgf·m) [80 lbf·ft to 96 lbf·ft]

  2. **Then recheck as the following table.**

Timing to recheck the bolts	After driving the tractor 200 m (200 yards), after 1 day (8 hours), and thereafter every 50 hours

NOTE

- **Use the tapered bolts for wheels with beveled or tapered holes.**

2.1 Front wheels

IMPORTANT

- **Do not turn the front discs to obtain wider tread.**
- **Always attach the front wheels as shown in the following table.**
  If you do not attach the front wheels as illustrated in the table, transmission parts may be damaged.

You cannot adjust width of the front tread.

Model	BX23S
Tire	18×8.50-10 Turf, 18×8.50-10 Bar, 18×8.50-10 Ind.
Tread	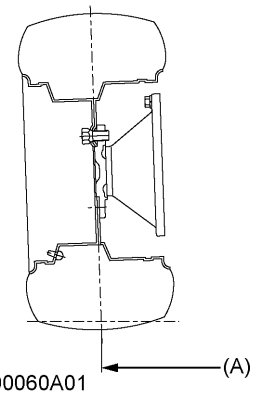
	(A) 910 mm (35.8 in.)

How to jack up the front axle

WARNING

To avoid serious injury or death:

- **Before jacking up the tractor, park it on a firm and level ground and chock the rear wheels.**
- **Fix the front axle to keep it from pivoting.**
- **Select jacks that withstand the machine weight and set them up at jack point (2).**

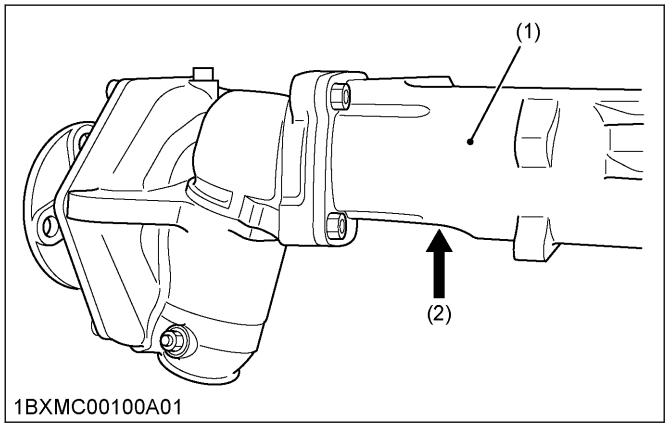

(1) Front axle case (2) Jack point

2.2 Rear wheels

IMPORTANT

- **Do not turn the rear discs to obtain wider tread.**
- **Always attach the rear wheels as shown in the following table.**
  If you do not attach the rear wheels as illustrated in the table, transmission parts may be damaged.

You cannot adjust width of the rear tread.

Model	BX23S
Tire	26×12.00-12 Turf, 26×12.00-12 Bar, 26×12.00-12 Ind.
Tread	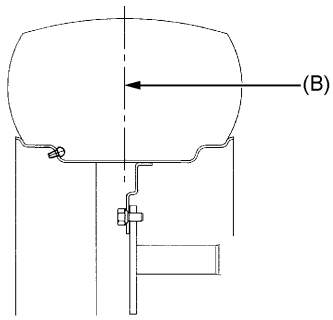
	(B) 820 mm (32.2 in.)

How to jack up rear part of the tractor

WARNING

To avoid serious injury or death:

- **Before jacking up the tractor, park it on a firm and level ground and chock the front wheels.**
- **Fix the front axle to keep it from pivoting.**
- **Select jacks that withstand the machine weight and set them up as shown in the following figure.**

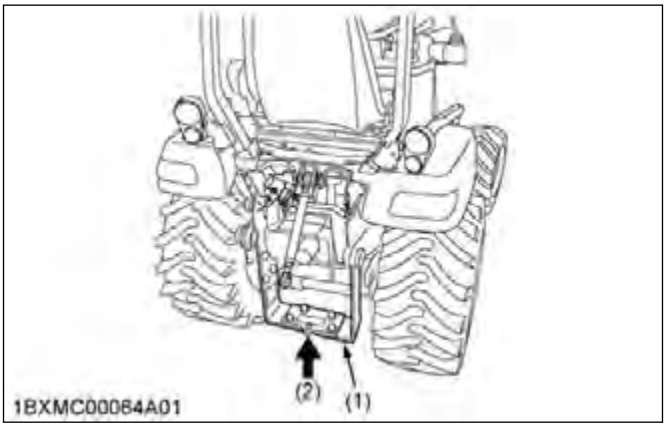

(1) Frame (2) Jack point

https://truckmanualshub.com/

3. Ballast

WARNING

To avoid serious injury or death:

- **You will need the additional ballast for transporting the heavy implements. When the implement is raised, drive slowly over rough ground, regardless of how much ballast is used.**
- **Do not fill the front wheels with liquid to keep steering control.**

NOTE

- **The ballast is not required when doing the normal operations with the BX23E tractor, the LA340 loader, and the BT603 backhoe connected in factory settings.**

3.1 Front ballast

IMPORTANT

- **Do not overload tires.**
- **Add no more weight than indicated in the following table.**

Maximum weight	125 kg (275 lbs)

Add weights if needed to improve traction or for stability. Heavy pulling and heavy rear mounted implements tend to lift front wheels. Add enough ballast to keep steering control and prevent tip over.
Remove weight when no longer needed.

3.2 Rear ballast

Add weight to rear wheels if needed to improve traction or for stability. The amount of rear ballast should be matched to job and the ballast should be removed when it is not needed.

Liquid ballast in rear tires

The weight should be added to the tractor in the form of liquid ballast.
Water and calcium chloride solution provides safe economical ballast. Using the liquid ballast properly will prevent tires, tubes, or rims from damaging. The addition of calcium chloride is recommended to prevent the water from freezing. The addition of calcium chloride for weighting the wheels has the full approval of the tire companies. Consult your tire dealer for addition of calcium chloride.

Liquid weight per tire (75 percent filled)

Tire sizes	26×12.00-12
Slush free at -10 ℃ (14 ℉) Solid at -30 ℃ (-22 ℉) [Approx. 1 kg (2 lbs) $CaCl_2$ per 4 L (1 gal) of water]	45 kg (99 lbs)
Slush free at -24 ℃ (-11 ℉) Solid at -47 ℃ (-52 ℉) [Approx. 1.5 kg (3.5 lbs) $CaCl_2$ per 4 L (1 gal) of water]	50 kg (110 lbs)
Slush free at -47 ℃ (-52 ℉) Solid at -52 ℃ (-62 ℉) [Approx. 2.25 kg (5 lbs) $CaCl_2$ per 4 L (1 gal) of water]	56 kg (123 lbs)

IMPORTANT

- **Do not fill tires with water or solution more than the correct percentage of full capacity as shown in the following table to the level of valve stem at 12 o'clock position.**

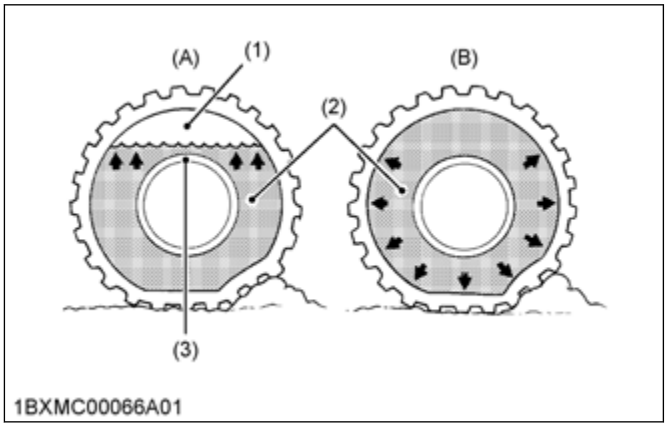

(1) Air
(2) Water
(3) Valve stem
(A) Correct
(B) Incorrect

	Correct	Incorrect
Amount of water	75% of full capacity of tire	100% of full capacity of tire
Characteristic	Air compresses like a cushion.	Water cannot be compressed.

- **To avoid damage of the transmission, do not use the rear wheel weights and liquid ballast at the same time.**
- **Do not add liquid ballast or any other weights to the front tires.**
- **While BT603 backhoe is installed on the tractor, remove liquid ballast from the rear tires.**

NOTE

- **When mounting a heavy implement, a liquid in the tire may not be required.**

Rear wheel weight (option)

You can install the rear wheel weight to the 3-point hitch.

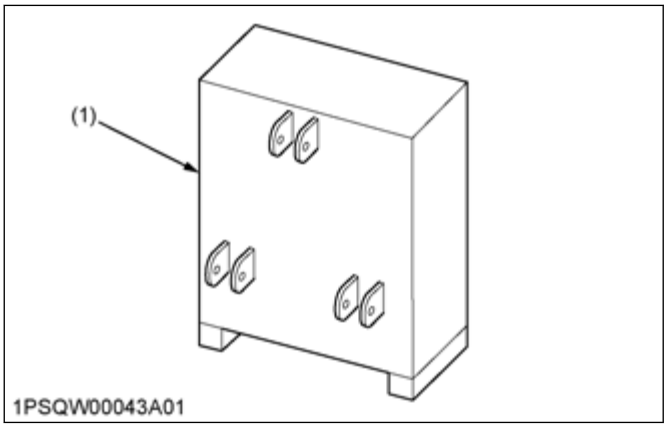

(1) Rear wheel weight

NOTE

- **Besides the rear wheel weight, a 3-point kit is required for installing the weight.**

https://truckmanualshub.com/

IMPLEMENT LIMITATIONS

1. Implement limitation tables

IMPORTANT

The KUBOTA tractor has been thoroughly tested for proper performance with implements sold or approved by KUBOTA.
Do not use the following implements:

- **Implements which are not sold or approved by KUBOTA**
- **Implements which exceed the maximum specifications listed in the following table**
- **Implements which are otherwise unfit for use with the KUBOTA tractor**

These implements may result in malfunctions or failures of the tractor, damage to other property, and injury to the operator or others.

NOTE

- **Any malfunctions or failures of the tractor resulting from use with improper implements are not covered by the warranty.**

Model		BX23S
Tread (Max. width)	Front	930 mm (36.6 in.)
	Rear	820 mm (32.2 in.)
Lower link end max. lifting weight W_0		550 kg (1210 lbs)
Actual figures	Implement weight W_1 and / or size	As in *"Implement weight list"*
	Max. hitch load W_2	250 kg (551 lbs)
	Trailer loading weight W_3 (Max. capacity)	800 kg (1760 lbs)
	Total weight W_4	1100 kg (2425 lbs)

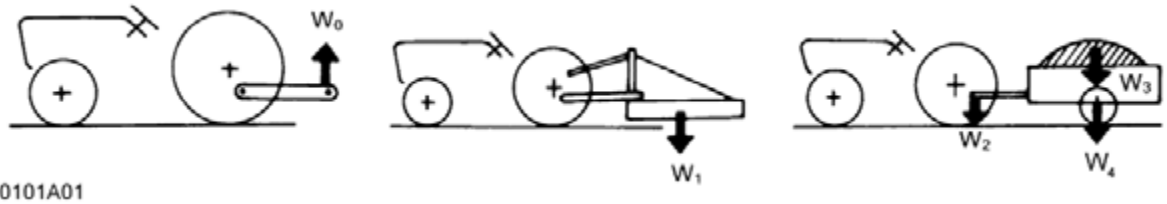

1BXMC00101A01

Lower link end max. lifting weight W_0
The max. allowable load which can be put on the lower link end
Implement weight W_1
The implement's weight which can be put on the lower link
Max. hitch load W_2
The max. loading weight for hitching
Trailer loading weight W_3
The max. loading weight for trailer (without trailer's weight)
Total weight W_4
The max. loading weight for trailer with trailer's weight

NOTE

- **Implement size may vary depending on soil operating conditions.**
- **Strictly follow the instructions outlined in the operator's manual of the mounted or trailed machinery or trailer, and do not operate the combination tractor-machine or tractor-trailer unless all instructions have been followed.**
- **When you use the forestry application, there are following hazards:**
  - **toppling trees, primarily in case a rear-mounted-tree-grab-crane is mounted at the rear of the tractor**
  - **penetrating objects in the operator's enclosure, primarily in case a winch is mounted at the rear of the tractor**

https://truckmanualshub.com/

To deal with these hazards and other related hazards, the tractor requires optional equipment such as operator protective structure (OPS), falling object protective structure (FOPS), and so on. This optional equipment, however, is not available for this tractor. Without optional equipment such as OPS and FOPS, the use of the tractor is limited to tractor specific applications like transport and stationary work.

https://truckmanualshub.com/

Implement weight list

Implement		Remarks	BX23S
Backhoe*1		Max. digging depth	1840 mm (6 ft)
		Max. weight	w/o bucket 266 kg (586 lbs)
Front-end loader*2		Max. lifting capacity (Bucket pivot pin, max. height)*3	335 kg (739 lbs)
		Max. width	122 cm (48 in.)
		Sub frame	Necessary
Mower	Mid-mount	Max. cutting width	152 cm (60 in.)
		Max. weight	134 kg (295 lbs)
	Rotary-Cutter (1 blade)	Max. cutting width	122 cm (48 in.)
		Max. weight	181 kg (400 lbs)
	Rear-mount (2 or 3 blade)	Max. cutting width	152 cm (60 in.)
		Max. weight	262 kg (577 lbs)
	Flail-mower	Max. cutting width	107 cm (42 in.)
	Sickle bar	Max. cutting width	122 cm (48 in.)
Rotary tiller		Max. tilling width	127 cm (50 in.)
		Max. weight	197 kg (435 lbs)
Bottom plow		Max. size	14 × 1 in.
Disc plow		Max. size	22 × 1 in.
Cultivator		Max. size	122 cm (48 in.) 1 Row
Disc harrow		Max. harrowing width	122 cm (48 in.)
		Max. weight	249 kg (549 lbs)
Sprayer		Max. tank capacity	150 L (40 U.S.gals.)
Front blade		Max. cutting width	152 cm (60 in.)
		Sub frame	Necessary
Rear blade		Max. cutting width	152 cm (60 in.)
		Max. weight	112 kg (248 lbs)
Box blade		Max. cutting width	152 cm (60 in.)
		Max. weight	170 kg (375 lbs)
Snow blower (Front)		Max. working width	127 cm (50 in.)
		Max. weight	160 kg (353 lbs)
		Sub frame	Necessary
Post hole digger		Digging depth	114 cm (45 in.)
Rotary broom		Cleaning width	119 cm (47 in.)
Trailer		Max. load capacity	800 kg (1765 lbs)*4
		Max. weight	1100 kg (2425 lbs)

*1 KUBOTA provides BT603 backhoe for BX23S. No other backhoe installed by 3-point hitch is permitted for BX23S.
*2 KUBOTA provides LA340 and LA340S Front-end Loader for BX23S.
*3 The value contains the weight of KUBOTA standard bucket.
*4 Reduce speed and trailer loads when operating in slippery conditions or when operating on slopes and using front wheel drive.

https://truckmanualshub.com/

https://truckmanualshub.com/

SPECIAL TOOLS

1. Special tools for engine

1.1 Special use puller set

Use exclusively to pull out bearing, gears and other parts with ease.

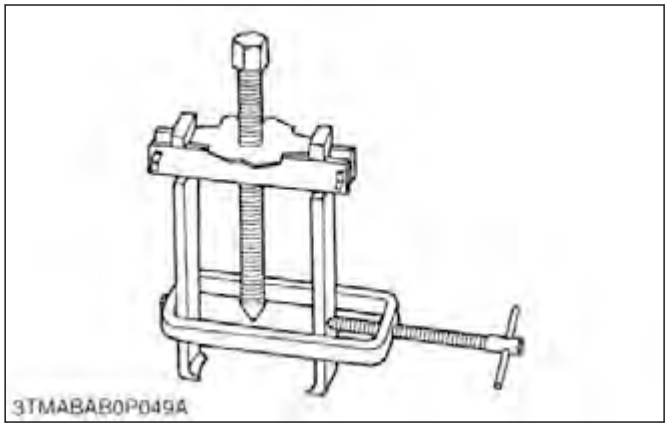

Code No.
- 07916-09032

1.2 Diesel engine compression tester (for injection nozzle)

Use to measure diesel engine compression and diagnostics of need for major overhaul.

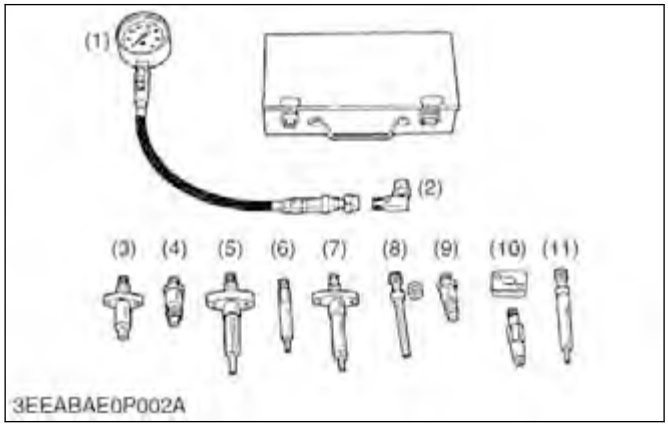

(1) Gauge
(2) L joint
(3) Adaptor A
(4) Adaptor B
(5) Adaptor C
(6) Adaptor E
(7) Adaptor F
(8) Adaptor G
(9) Adaptor H
(10) Adaptor I
(11) Adaptor J

Code No.
- 07909-30208 (Assembly)
- 07909-30934 (A to F)
- 07909-31211 (E and F)
- 07909-31231 (H)
- 07909-31251 (G)
- 07909-31271 (I)
- 07909-31281 (J)

1.3 Nozzle tester

Use to check the fuel injection pressure and spray pattern of nozzle.

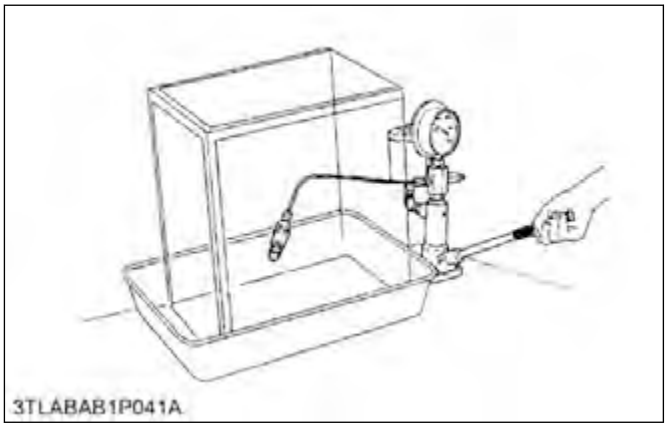

Code No.
- 07909-31361

Measuring range
- 0 to 50 MPa (0 to 500 kgf/cm^2, 0 to 7200 psi)

1.4 Injection pump pressure tester

Use to check fuel tightness of injection pumps.

NOTE
- **The special tools are not provided, so make them referring to the figure.**

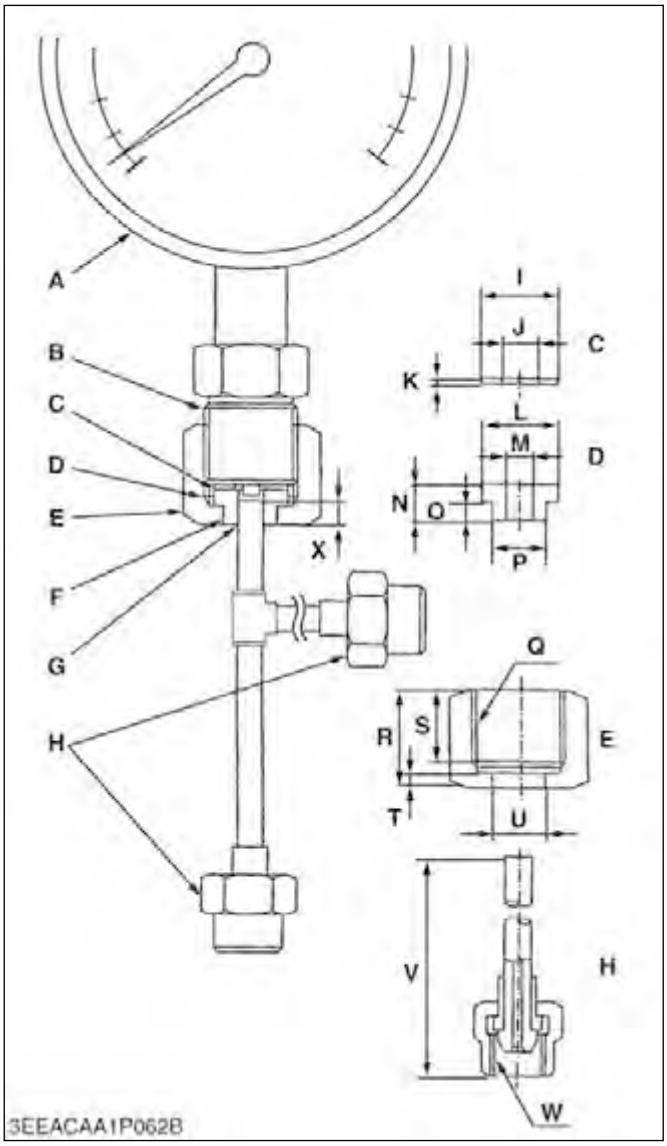

A	**Pressure gauge full scale:** More than 29.4 MPa (300 kgf/cm^2, 4267 psi)
B	PF 1/2
C	Copper gasket
D	Flange (Material: Steel)
E	Hex. nut 27 mm (1.1 in.) across the plate
F	Adhesive application
G	Fillet welding on the enter circumference
H	Retaining nut
I	17 mm dia. (0.67 in. dia.)
J	8.0 mm dia. (0.31 in. dia.)
K	1.0 mm (0.039 in.)
L	17 mm dia. (0.67 in. dia.)
M	6.10 to 6.20 mm dia. (0.241 to 0.244 in. dia.)
N	8.0 mm (0.31 in.)
O	4.0 mm (0.16 in.)
P	11.97 to 11.99 mm dia. (0.4713 to 0.4720 in. dia.)
Q	PF 1/2
R	23 mm (0.91 in.)
S	17 mm (0.67 in.)
T	4.0 mm (0.16 in.)
U	12.00 to 12.02 mm dia. (0.4725 to 0.4732 in. dia.)
V	100 mm (3.94 in.)
W	M12 × P1.5
X	5.0 mm (0.20 in.)

1.5 Valve guide replacing tool

Use to press out and press fit the valve guide.

NOTE

- **The special tools are not provided, so make them referring to the figure.**

https://truckmanualshub.com/

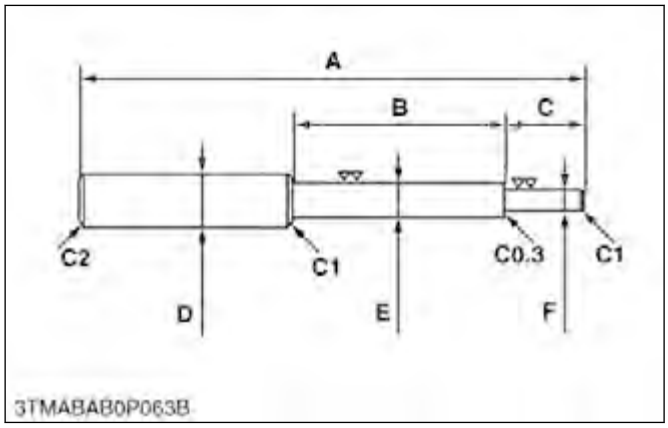

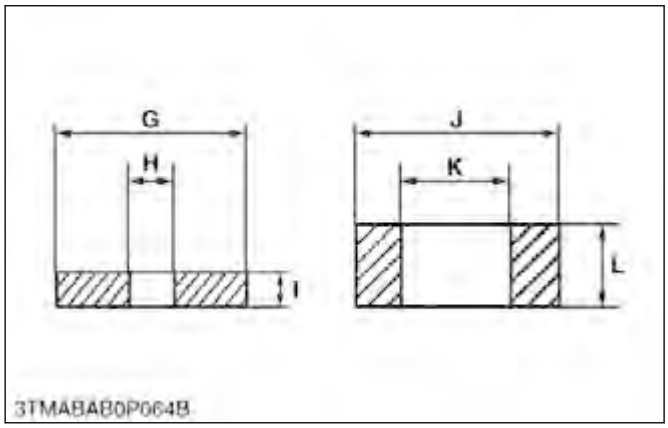

D902-E4

A	220 mm (8.66 in.)
B	80 mm (3.1 in.)
C	40 mm (1.6 in.)
D	20 mm dia. (0.79 in. dia.)
E	9.960 to 9.980 mm dia. (0.3922 to 0.3929 in. dia.)
F	5.50 to 5.70 mm dia. (0.217 to 0.224 in. dia.)
G	25 mm dia. (0.98 in. dia.)
H	6.00 to 6.10 mm dia. (0.237 to 0.240 in. dia.)
I	5.0 mm (0.20 n.)
J	18 mm dia. (0.71 in. dia.)
K	10.6 to 10.7 mm dia. (0.418 to 0.421 in. dia.)
L	6.90 to 7.10 mm (0.272 to 0.279 in.)
C1	Chamfer 1.0 mm (0.039 in.)
C2	Chamfer 2.0 mm (0.079 in.)
C0.3	Chamfer 0.3 mm (0.012 in.)

1.6 Bushing replacing tool

Use to press out and press fit the bushing.
D902-E4

NOTE
- **The special tools are not provided, so make them referring to the figure.**

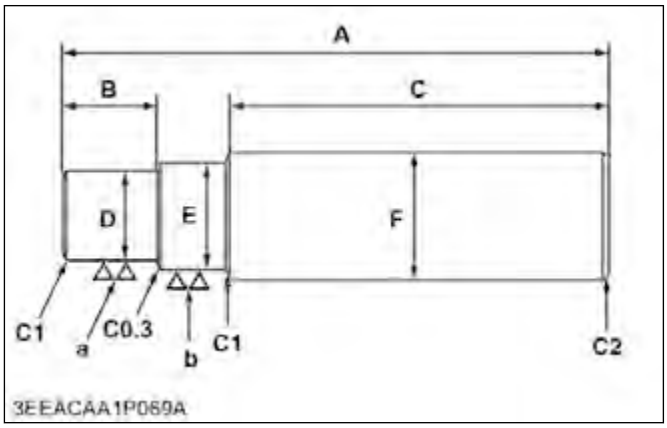

[For small end bushing]

A	145 mm (5.71 in.)
B	20 mm (0.79 in.)
C	100 mm (3.94 in.)
D	19.90 to 19.95 mm dia. (0.7835 to 0.7854 in. dia.)
E	21.90 to 21.95 mm dia. (0.8622 to 0.8642 in. dia.)
F	25 mm dia. (0.98 in. dia.)
C1	Chamfer 1.0 mm (0.039 in.)
C2	Chamfer 2.0 mm (0.079 in.)
C0.3	Chamfer 0.3 mm (0.012 in.)
a	6.3 µm (250 µin.)
b	6.3 µm (250 µin.)

[For idle gear bushing]

A	150 mm (5.91 in.)
B	23 mm (0.91 in.)
C	100 mm (3.94 in.)
D	19.90 to 19.95 mm dia. (0.7835 to 0.7854 in. dia.)
E	21.90 to 21.95 mm dia. (0.8622 to 0.8642 in. dia.)
F	25 mm dia. (0.98 in. dia.)
C1	Chamfer 1.0 mm (0.039 in.)
C2	Chamfer 2.0 mm (0.079 in.)
C0.3	Chamfer 0.3 mm (0.012 in.)
a	6.3 µm (250 µin.)
b	6.3 µm (250 µin.)

1.7 Flywheel stopper

Use to loosen and tighten the flywheel screw.

NOTE

- **The special tools are not provided, so make them referring to the figure.**

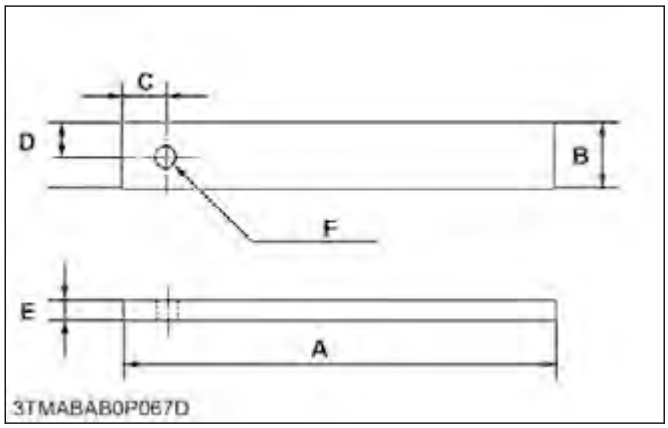

A	200 mm (7.87 in.)
B	30 mm (1.18 in.)
C	20 mm (0.79 n.)
D	15 mm (0.59 in.)
E	8 mm (0.31 in.)
F	10 mm dia. (0.39 in. dia.)

1.8 Crankshaft bearing 1 replacing tool

Use to press out and press fit the crankshaft bearing 1.

NOTE

- **The special tools are not provided, so make them referring to the figure.**

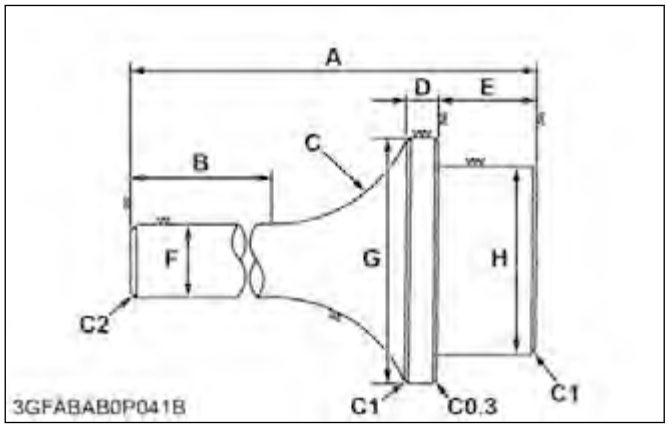

[Press out]

	D902-E4
A	135 mm (5.31 in.)
B	72 mm (2.8 in.)
C	40 mm radius (1.6 in. radius)
D	10 mm dia. (0.39 in. dia.)
E	22 mm (0.87 in.)
F	20 mm dia. (0.79 in. dia.)
G	47.90 to 47.95 mm dia. (1.886 to 1.887 in. dia.)
H	43.90 to 43.95 mm dia. (1.729 to 1.730 in. dia.)
C1	Chamfer 1.0 mm (0.039 in.)
C2	Chamfer 2.0 mm (0.079 in.)
C0.3	Chamfer 0.30 mm (0.012 in.)

[Press fit]

	D902-E4
A	130 mm (5.12 in.)
B	72 mm (2.83 in.)
C	40 mm radius (1.6 in. radius)
D	9.0 mm (0.35 in.)
E	24 mm (0.94 in.)
F	20 mm dia. (0.79 in. dia.)
G	68 mm dia. (2.7 in. dia.)
H	43.90 to 43.95 mm dia. (1.729 to 1.730 in. dia.)
C1	Chamfer 1.0 mm (0.039 in.)
C2	Chamfer 2.0 mm (0.079 in.)
C0.3	Chamfer 0.30 mm (0.012 in.)

https://truckmanualshub.com/

2. Special tools for tractor

2.1 Tie-rod end lifter

Use to remove the tie-rod end with ease.

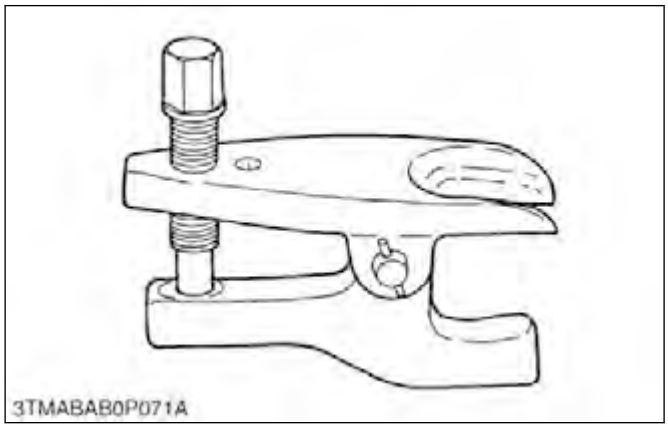

Code No.

- 07909-39051

2.2 Independent PTO clutch spring compression tool

Use for compressing the spring into the spline boss.
B30 series, BX50 series, BX60 series, BX24, BX25 tractor

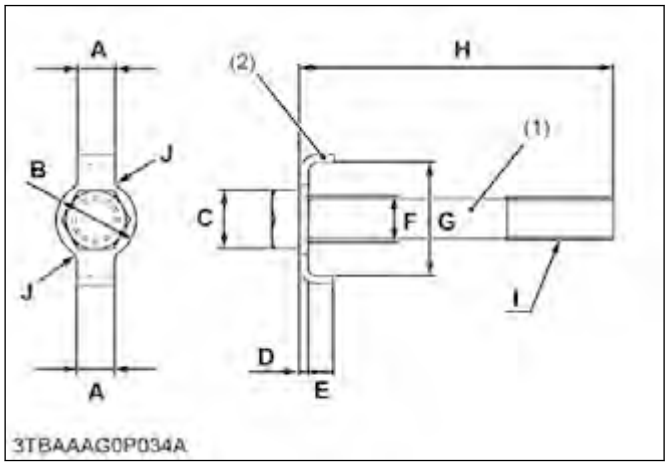

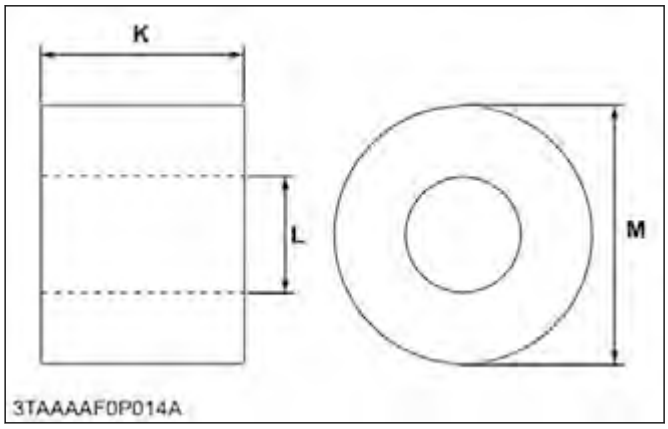

A	12 mm (0.47 in.)
B	25.4 mm (1.00 in.)
C	19 mm radius (0.75 in.) Hex.
D	2.7 mm (0.11 in.)
E	8 mm (0.31 in.)
F	15 mm dia. (0.59 in. dia.)
G	37 mm (1.46 in.)
H	70 mm (2.76 in.)
I	M14 × 1.5
J	R 3 mm (0.12 in.)
K	30 mm (1.18 in.)
L	17 mm (0.67 in.)
M	38 mm (1.50 in.)

2.3 Disassembling and assembling stand (1/2)

Use to disassembling transaxle assembly and to assembling transaxle assembly.

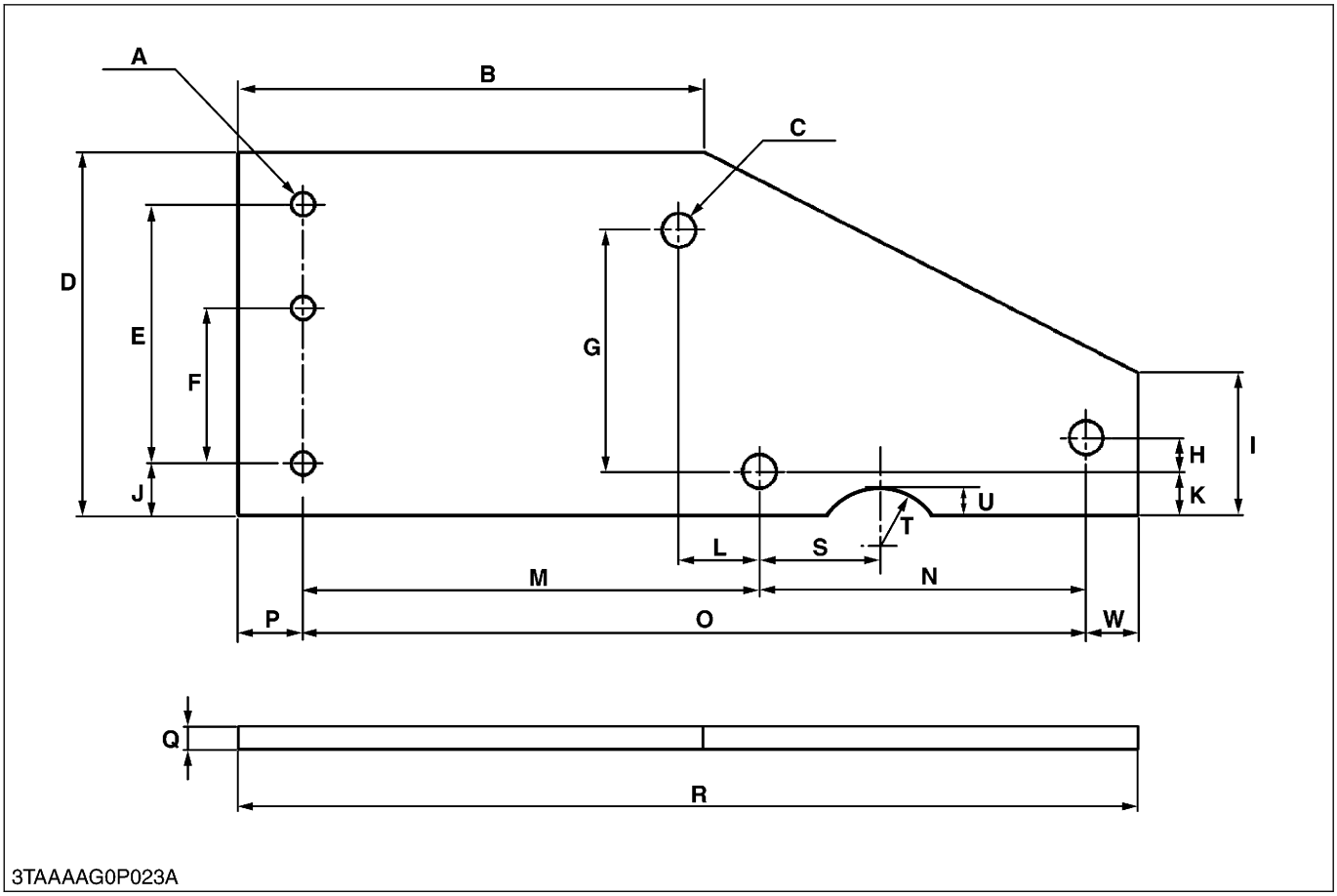

3TAAAAG0P023A

A	ϕ9 mm (ϕ0.35 in.) 3 holes
B	225 mm (8.86 in.)
C	ϕ13 mm (ϕ0.51 in.) 3 holes
D	140 mm (5.51 in.)
E	99.5 to 100.5 mm (3.92 to 3.95 in.)
F	59.5 to 60.5 mm (2.35 to 2.38 in.)
G	92.5 to 93.5 mm (3.65 to 3.68 in.)
H	12.5 to 13.5 mm (0.50 to 0.53 in.)
I	55 mm (2.17 in.)
J	20 mm (0.79 in.)
K	17 mm (0.67 in.)
L	30.5 to 31.5 mm (1.21 to 1.24 in.)
M	226 mm (8.90 in.)
N	125.5 to 126.5 mm (4.95 to 4.98 in.)
O	352 mm (13.86 in.)
P	25 mm (0.98 in.)
Q	9.5 mm (0.37 in.)

(Continued)

https://truckmanualshub.com/

R	397 mm (15.63 in.)
S	46 mm (1.81 in.)
T	R25 mm (0.98 in.)
U	11 mm (0.43 in.)
W	20 mm (0.79 in.)

2.4 Disassembling and assembling stand (2/2)

Use to disassembling transaxle assembly and to assembling transaxle assembly.

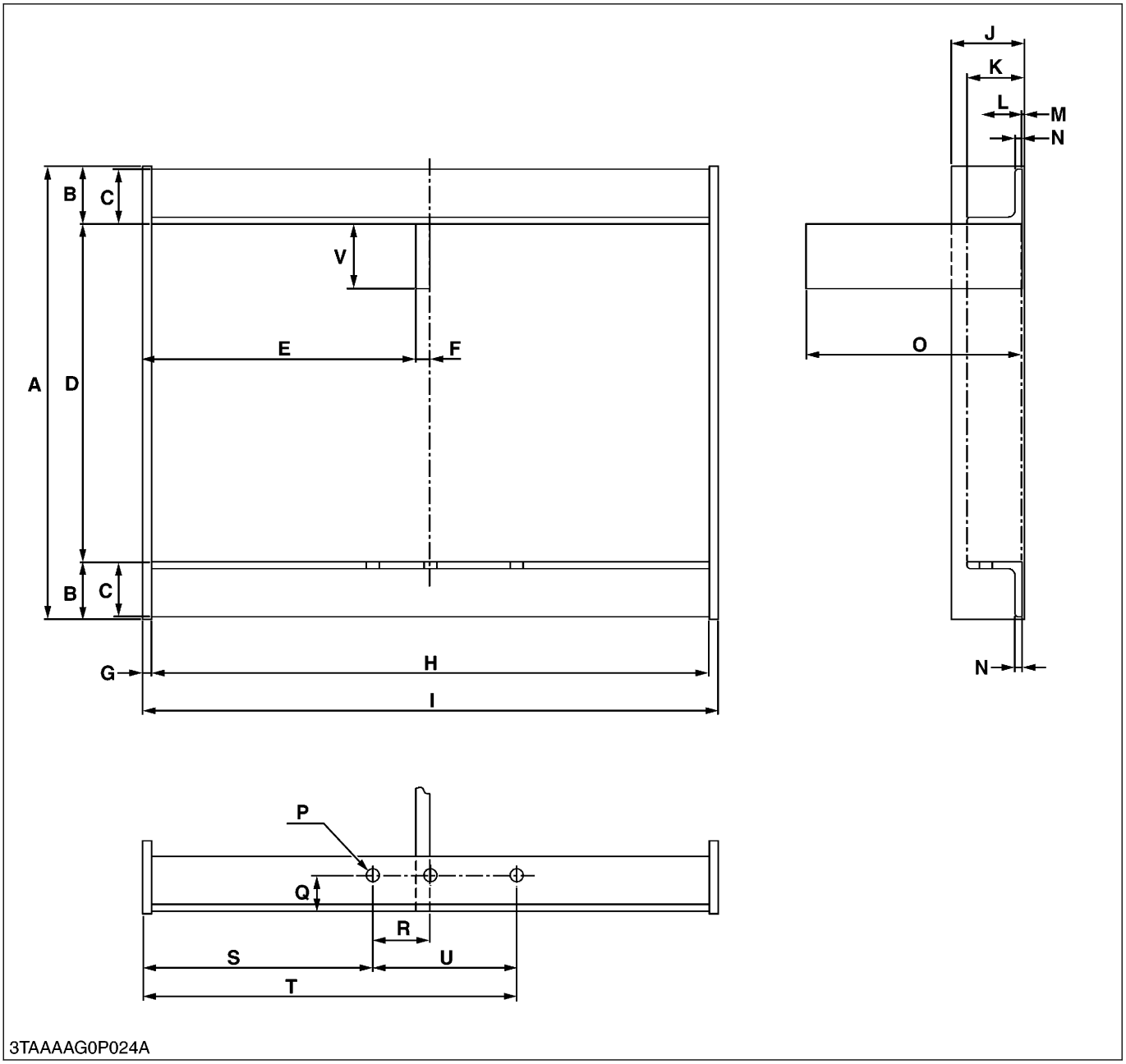

A	311 mm (12.24 in.)
B	40 mm (1.57 in.)
C	38.1 mm (1.50 in.)
D	235 mm (9.25 in.)
E	170 mm (6.69 in.)
F	9.5 mm (0.37 in.)
G	6.4 mm (0.25 in.)
H	365 mm (14.37 in.)
I	377.8 mm (14.87 in.)

(Continued)

https://truckmanualshub.com/

J	50.8 mm (2.00 in.)
K	40 mm (1.57 in.)
L	38.1 mm (1.50 in.)
M	1.9 mm (0.07 in.)
N	4.8 mm (0.19 in.)
O	200 mm (7.87 in.)
P	ϕ9 mm (ϕ0.35 in.), 3 holes
Q	25 mm (0.98 in.)
R	39.5 to 40.5 mm (1.56 to 1.59 in.)
S	140 mm (5.51 in.)
T	260 mm (10.24 in.)
U	99.5 to 100.5 mm (3.92 to 3.95 in.)
V	45 mm (1.77 in.)

2.5 Check and high pressure relief valve assembly tool

Use for readjusting relief valve pressure.

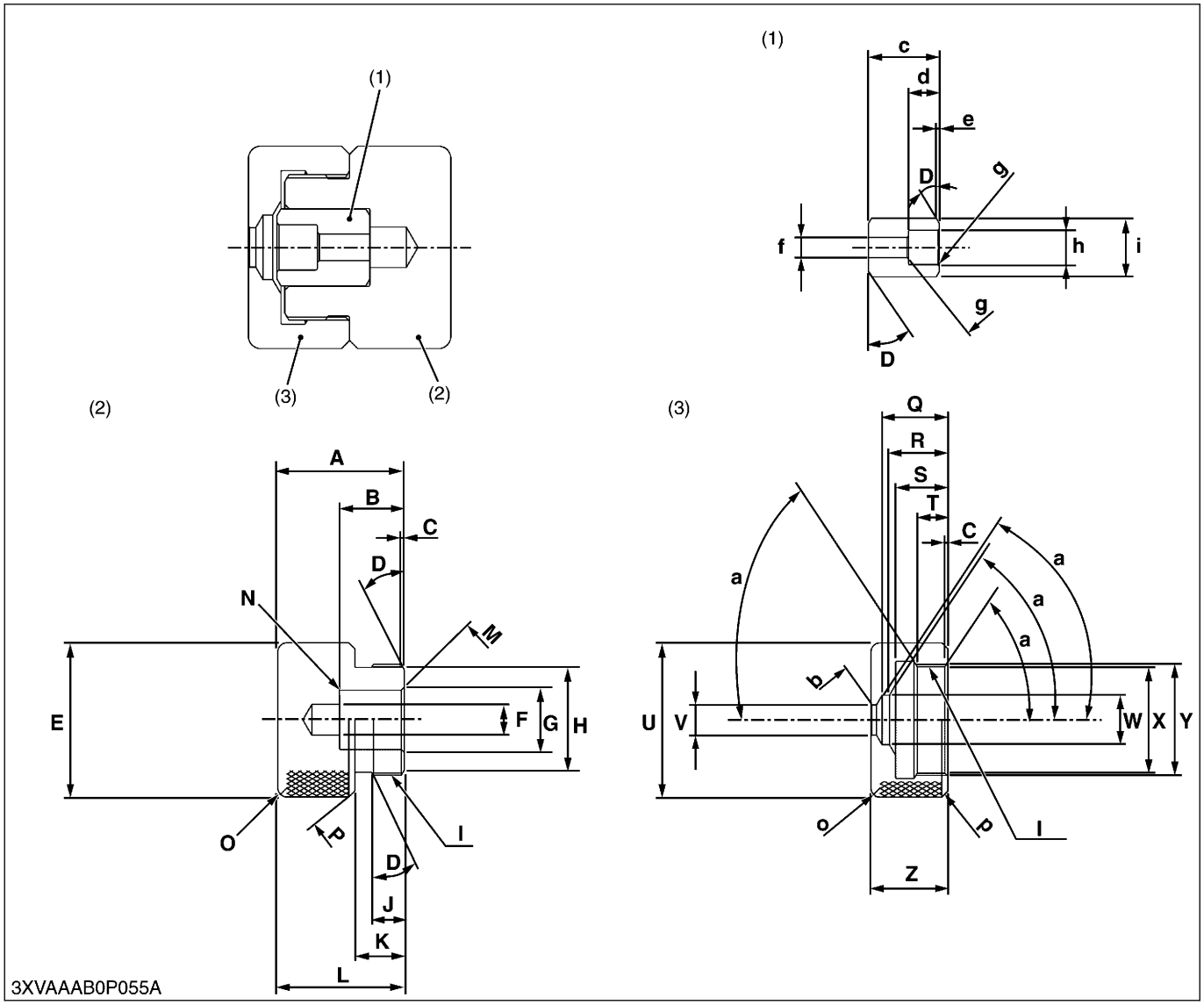

A	30 mm (1.181 in.)
B	21 mm (0.827 in.)
C	1 mm (0.039 in.)
D	0.52 rad (30°)
E	50 mm dia. (1.969 in. dia.)
F	10 mm dia. (0.394 in. dia.)
G	9.1 to 9.3 mm dia. (0.359 to 0.366 in. dia.)
H	34 mm dia. (1.336 in. dia.)
I	M36 × 1.5 mm pitch
J	10 mm (0.394 in.)
K	16 mm (0.630 in.)
L	41 mm (1.614 in.)

(Continued)

https://truckmanualshub.com/

M	Chamfer 1 mm (0.039 in.)
N	Chamfer 0.4 mm (0.157 in.)
O	Chamfer 3 mm (0.118 in.)
P	Chamfer 2 mm (0.079 in.)
Q	21.4 mm (0.843 in.)
R	19 mm (0.748 in.)
S	17 mm (0.669 in.)
T	10 mm (0.393 in.)
U	50 mm dia. (1.969 in. dia.)
V	9.8 mm dia. (0.386 in. dia.)
W	16 mm dia. (0.629 in. dia.)
X	34.5 mm dia. (1.358 in. dia.)
Y	38 mm dia. (1.496 in. dia.)
Z	25 mm (0.984 in.)
a	1.05 rad (10°)
b	Chamfer 0.3 mm (0.012 in.)
c	23 mm (0.906 in.)
d	10 mm (0.394 in.)
e	1 mm (0.039 in.)
f	6.5 mm (0.256 in.)
g	Chamfer 0.5 mm (0.020 in.)
h	11.1 to 11.3 mm (0.437 to 0.445 in.)
i	18.8 to 19.0 mm (0.740 to 0.748 in.)
(1)	Spacer
(2)	Block
(3)	Cap

https://truckmanualshub.com/

3. ENGINE

https://truckmanualshub.com/

MECHANISM

1. Engine body

1.1 Function of cylinder block

The cylinder block is the main housing of engine and supports the other main parts.

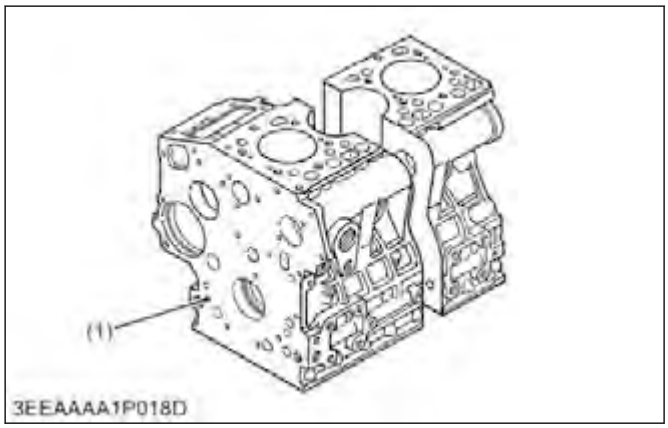

(1) Cylinder block

The cylinder block is usually of integrated cast iron construction, and includes complete passages for coolant and lubricating oil.

1.2 Function of closed breather

Closed breather system has been adopted to prevent the release of blow-by gas into the atmosphere.

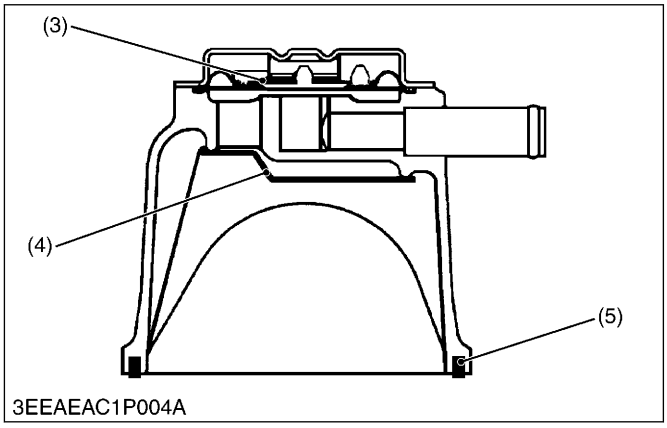

(1) Breather hose
(2) Cylinder head cover
(3) Breather valve
(4) Oil shield
(5) Rubber packing

After its oil content is filtered by oil shield (4), the blow by gas in fed back to the intake manifold through breather valve (3) to be used for re-combustion.

1.3 Function of half-floating head cover

The half-floating head cover helps reduce noise coming from the cylinder head.

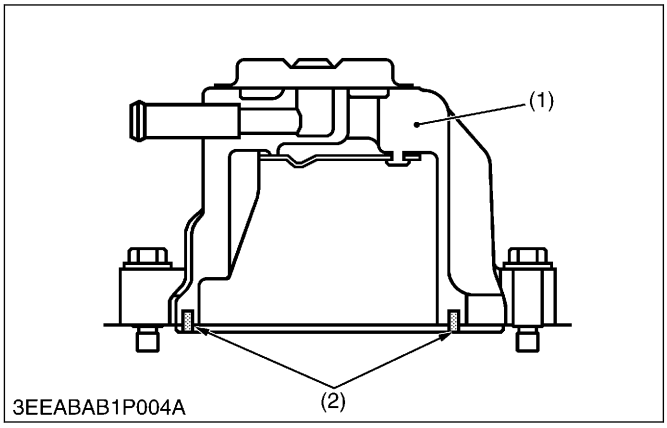

(1) Cylinder head cover
(2) Rubber packing

Rubber packing (2) is fitted in to keep the cylinder head cover (1) 0.5 mm (0.02 in.) or so off the cylinder head.

1.4 Function of piston

The piston creates the forces for the suction, compression, power and exhaust cycles.

(1) Molybdenum disulfide

The reciprocating motion of a piston in the engine cylinder creates the forces for the suction, compression, power and exhaust cycles. The piston's skirt is coated with molybdenum disulfide (MoS_2) which reduces the piston slap noise and thus the entire operating noise. The molybdenum disulfide (MoS_2) (1) improves the fit of the piston with the cylinder and helps to prevent scorching. This material helps resist metal wears even with little lube oil.

1.5 Function of piston ring

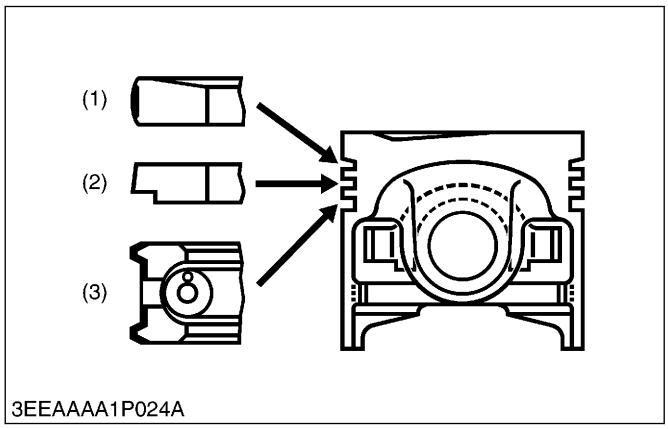

(1) Top compression ring
(2) Second compression ring
(3) Oil control ring

Piston rings are classified as compression and oil control rings. Diesel engine has two or three compression rings around the piston head and one oil ring just below them. The compression rings prevent gases from leaking by the piston during the compression and expansion strokes. They seal by expanding out against the cylinder wall. The rings expand by their own tension and also by combustion pressure behind the rings during the expansion stroke. The compression rings are split for easy assembly on the piston. The piston rings are usually made of hardened cast iron. To reduce the wear on the ring, they are often plated with chrome on their contact faces, or are coated their contact faces with molybdenum disulfide.

- The top compression ring (1) is a keystone type ring to get durability against heavy load.
- The second compression ring (2) is an undercut ring to prevent shortage of oil.
- The main job of the oil control ring (3) is to wipe the excess oil from the cylinder walls. This oil is fed through slots in the rings to holes in the piston groove, where it returns to the crankcase. For better oil control, spring expanders are often used under the oil control ring.

1.6 Function of connecting rod

The connecting rod connects the piston to the crankshaft.

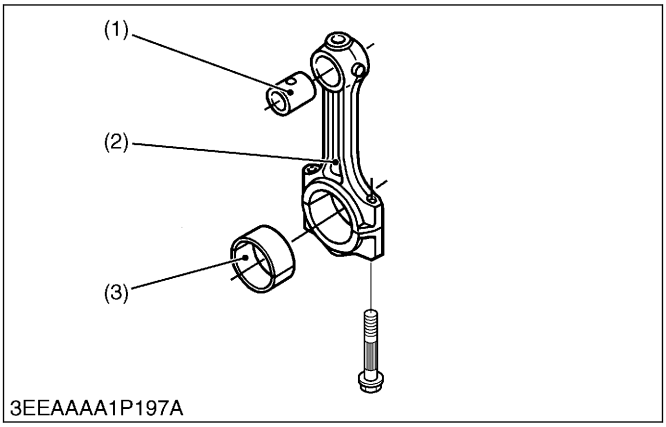

(1) Small end bushing
(2) Connecting rod
(3) Crankpin bushing

The connecting rod must be light and yet strong enough to transmit the thrust of the piston to crankshaft. The big end of connecting rod has a crankpin bushing (3) (split type) and the small end has a small end bushing (1) (solid type).

1.7 Function of crankshaft

The crankshaft converts the up-and-down motion of the pistons into rotary motion. It ties together the reactions

https://truckmanualshub.com/

of all the pistons into one rotary force that drives the machine.

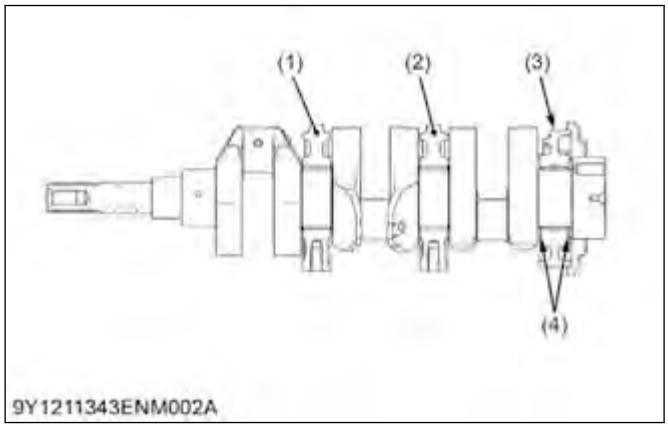

(1) Front split type bearing
(2) Intermediate split type bearing
(3) Rear split type bearing
(4) Thrust bearings

The crankshaft is made of tough special alloy steel, and the journals, pins and oil seal sliding portions are induction hardened to increase the hardness for higher wear resistance. The front journal is supported by a split type (1) and the intermediate journal by a split type (2), and the rear journal by a split type (3) with thrust bearings (4). The crankshaft is provided with an oil gallery, through which engine oil is fed to the crankpin portion, and lubricates it.

1.8 Function of camshaft

The camshaft controls the opening and closing of the intake and exhaust valves in the cylinder head.

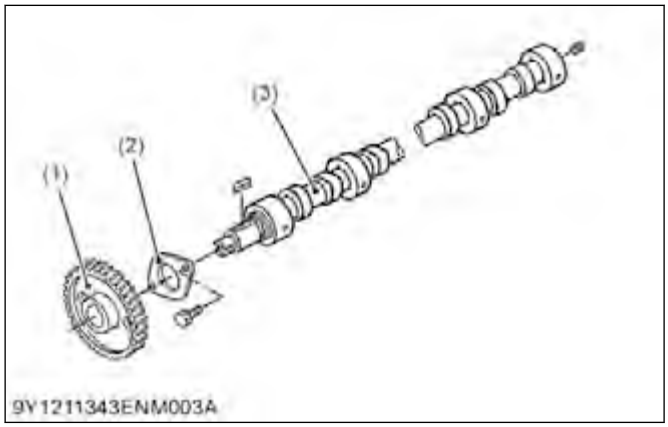

(1) Cam gear
(2) Camshaft stopper
(3) Camshaft

The camshaft (3) is normally driven by gearing from the crankshaft. This is made of special cast iron, and the journal and cam sections are chilled to resist wear. One intake and one exhaust cam is provided for each cylinder. The journal diameters are large to permit removal of the shaft from its bore. The journal sections are force lubricated.

1.9 Function of rocker arm

The rocker arm is an oscillating lever that conveys radial movement from the camshaft lobes into linear movement at the exhaust and intake valves to open and close them.

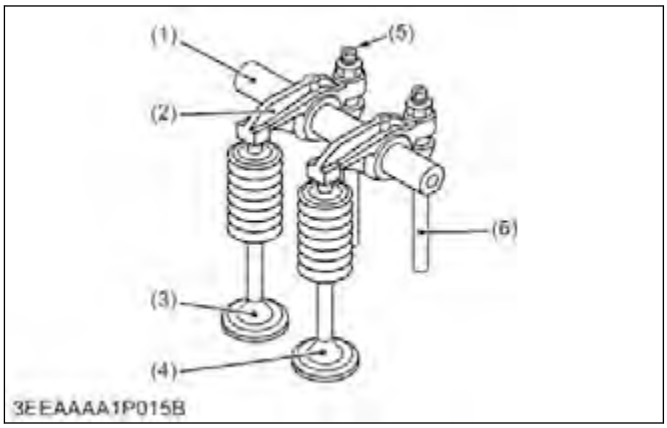

(1) Rocker arm shaft
(2) Rocker arm
(3) Exhaust valve
(4) Intake valve
(5) Adjusting screw
(6) Push rod

The rocker arms (2) are mounted on a rocker arm shaft (a single hollow shaft) (1) at the top of the engine. When the push rods (6) move up, the mating rocker arm is moved down, contacting its valve stem tip and opening the valve. Lubricating oil pressurized through the rocker arm bracket to the rocker arm shaft, which serves as a fulcrum so that the rocker arm and the entire system are lubricated sufficiently.

1.10 Function of flywheel

A flywheel is a rotating mechanical device that is used to store rotational energy.

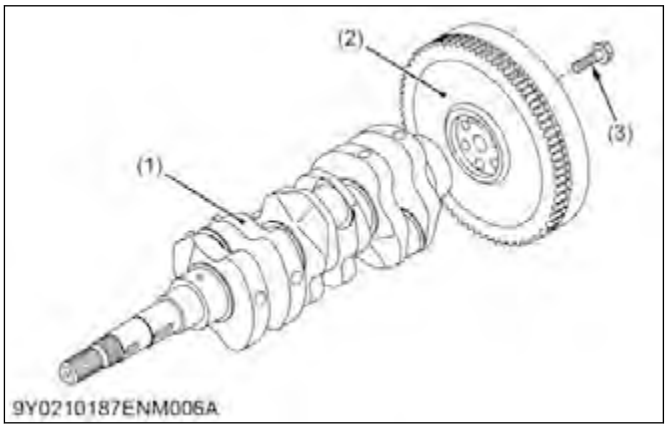

(1) Crankshaft
(2) Flywheel
(3) Flywheel screw

The flywheel (2) is generally made of heavy cast iron or steel and has gear teeth around its outer rim, which mesh with the drive pinion of starter. The flywheel stores the rotating force in the combustion stroke as inertial energy, reduces crankshaft rotating speed fluctuation and keeps the smooth rotating conditions.

The flywheel periphery is inscribed with the marks showing fuel injection timing angle lines and top dead center mark TC. The flywheel (2) mounted on the rear of the crankshaft (1) is a stabilizer for the whole engine.

1.11 Function of timing gears

The timing gears correctly control fuel injection to the cylinders and valve timing.

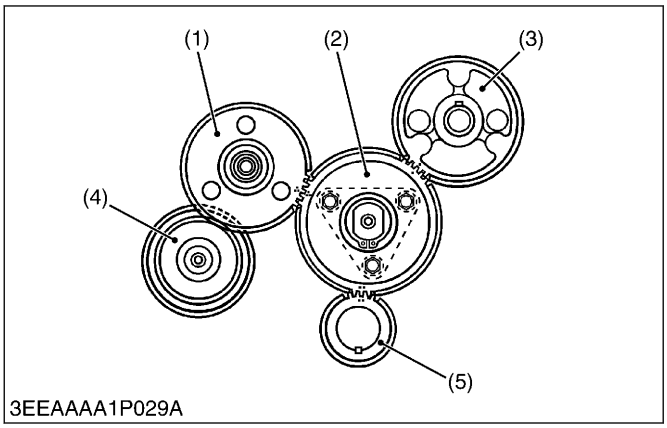

(1) Injection pump gear
(2) Idle gear
(3) Cam gear
(4) Governor gear
(5) Crank gear

The timing gears transmit torque from the crankshaft to the oil pump and injection pump and, at the same time, correctly control fuel injection to the cylinders and valve timing. Each gear has a mating mark inscribed on it for correct and easy assembly and is spherical with teeth set obliquely to the axis of rotation to rotate smoothly and reduce noise. The crankshaft is the hub around which other parts of the engine can be timed and driven. This is done by the meshing of gears as shown in the figure.

https://truckmanualshub.com/

2. Lubricating system

2.1 Overview of lubricating system

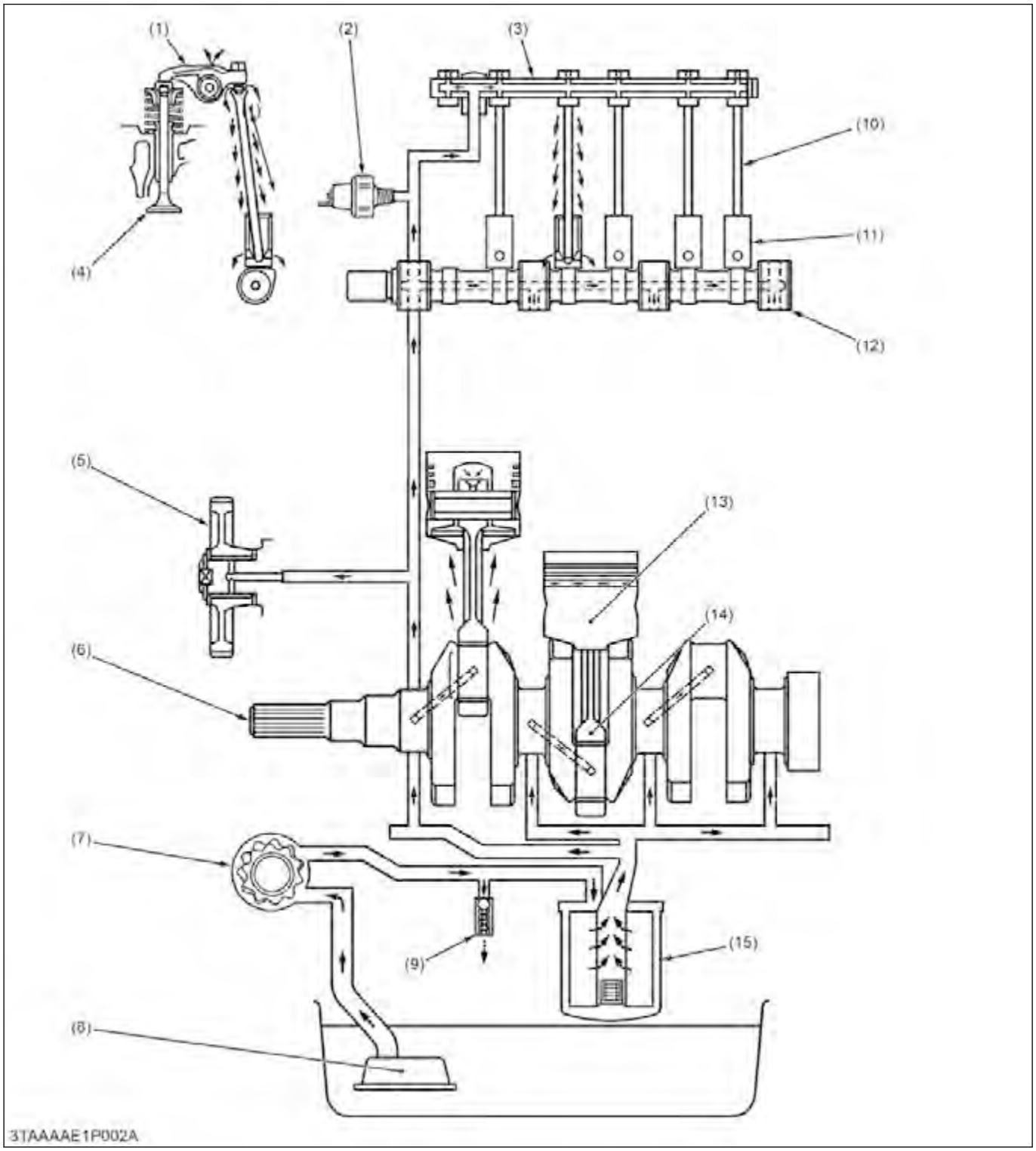

(1) Rocker arm	(5) Idle gear	(9) Relief valve	(13) Piston
(2) Oil pressure switch	(6) Crankshaft	(10) Push rod	(14) Connecting rod
(3) Rocker arm shaft	(7) Oil pump	(11) Tappet	(15) Oil filter cartridge
(4) Valve	(8) Oil strainer	(12) Camshaft	

This engine's lubricating system consists of oil strainer (8), oil pump (7), relief valve (9), oil filter cartridge (15) and oil pressure switch (2).

The oil pump sucks lubricating oil from the oil pan through the oil strainer and the oil flows down to the filter cartridge, where it is further filtered. Then the oil is forced to crankshaft (6), connecting rods (14), idle gear (5), camshaft (12) and rocker arm shaft (3) to lubricate each part.
Some part of oil, splashed by the crankshaft or leaking and dropping from gaps of each part, lubricates these parts: piston (13), cylinders, small ends or connecting rods, tappets (11), push rods (10), inlet and exhaust valves (4) and timing gears.

https://truckmanualshub.com/

2.2 Function of oil strainer

The oil strainer strains large particles from the oil.

(1) Oil strainer (2) Mesh screen

The strainer (1) has a mesh screen (2) suitable for straining large particles from the oil and yet passes a sufficient quantity of oil to the inlet side of the oil pump. The strainer is located so all oil entering the pump from the oil pan must flow through it.

2.3 Function of oil pump

The oil pump circulates engine oil under pressure to the rotating bearings, the pistons and the camshaft.

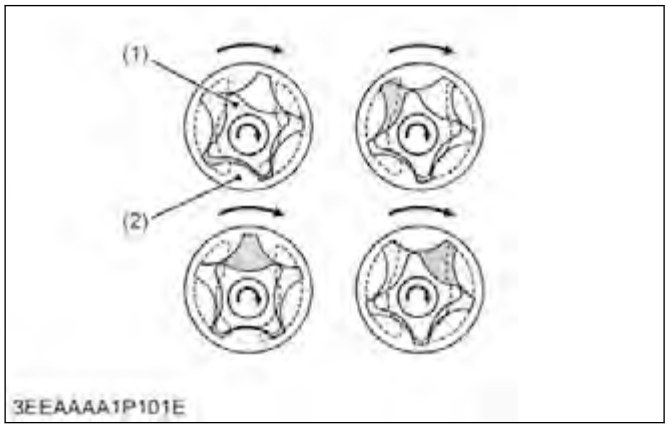

(1) Inner rotor (2) Outer rotor

The oil pump sucks lubricating oil from the oil pan through the oil strainer and the oil flows down to the oil filter. The rotor pump is driven from the crankshaft. This oil pump has an inner rotor (1) and an outer rotor (2). The inner rotor (1), which is driven by crankshaft, rotates the outer rotor (2) in the same direction. The inner rotor (1) has one less lobe than the outer rotor (2), and they are eccentrically engaged with each other.

2.4 Function of oil filter

The oil filter is responsible for filtering impurities from the oil.

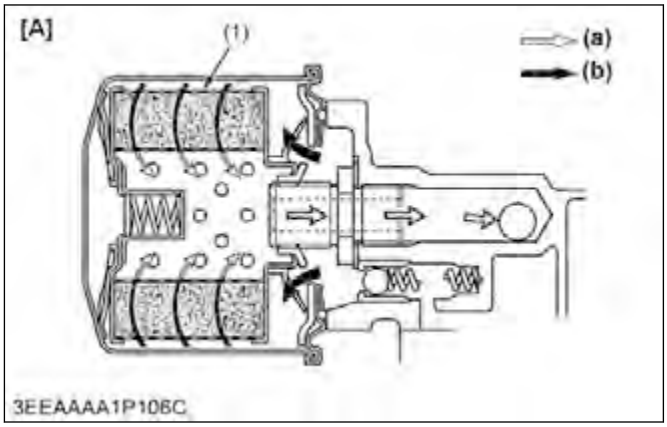

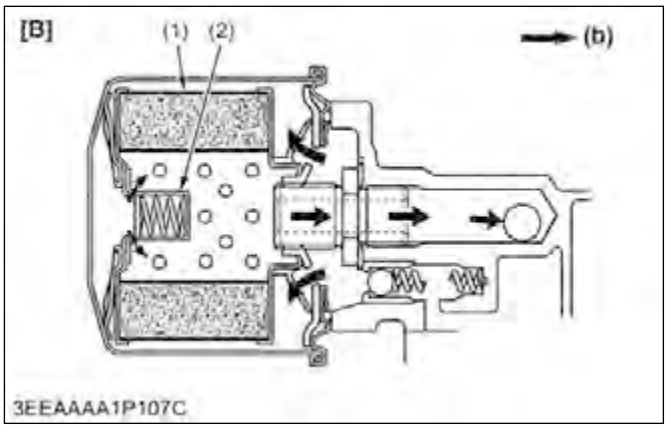

(1) Filter element (b) Unfiltered oil
(2) Bypass valve [A] Bypass valve closed
(a) Filtered oil [B] Bypass valve open

In the filtration system, there is only one oil flow from the oil pump to the oil filter cartridge. After filtering, the oil goes to the lubricating portion, and is returned to the crankcase. When the filter cartridge is new, there is very little pressure drop through the filter element (1). However, if the filter gets clogged, the resulting pressure (the oil pressure in inlet line builds up by 98 kPa (1.0 kgf/cm^2, 14 psi) more than the outlet line) will open the bypass valve (2) and allow unfiltered oil to bypass to the lubricating portion.

2.5 Function of relief valve

The relief valve prevents the damage of the lubricating system due to high oil pressure.

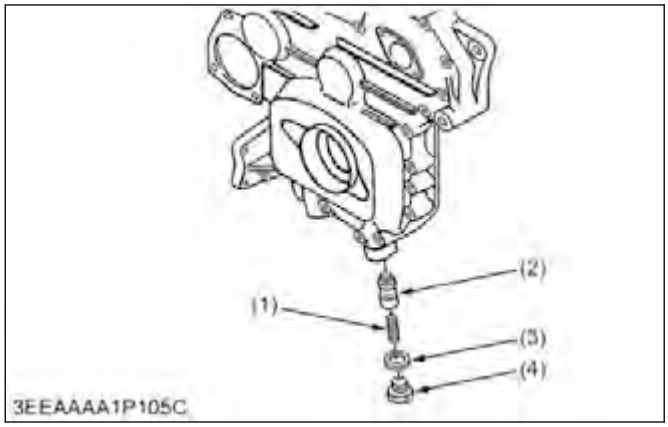

(1) Spring
(2) Poppet
(3) Gasket
(4) Plug

The valve is closed when the spring tension is greater than the oil pressure at the inlet. The spring tension holds poppet (2) securely in position. The valve opens when the oil pressure at the inlet exceeds that of the spring (1). This pushes the poppet off the inlet hole and oil flows through the valve.

2.6 Function of oil pressure switch

The oil pressure switch activates the oil warning light when the oil pressure falls below specified value.

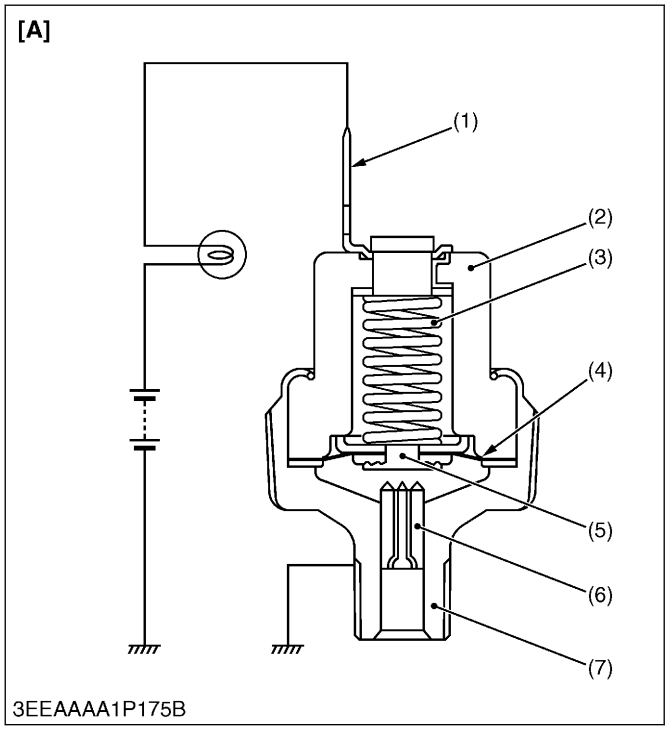

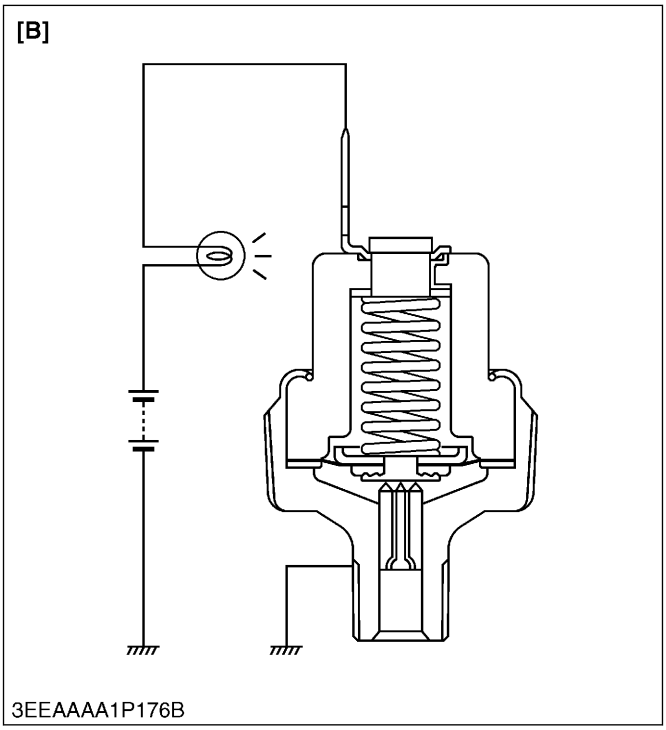

(1) Terminal
(2) Insulator
(3) Spring
(4) Diaphragm
(5) Contact rivet
(6) Contact
(7) Oil switch body
[A] At proper oil pressure
[B] At lower oil pressure

The oil pressure switch is mounted on the cylinder block and is led to the lubricating oil passage. When the oil pressure falls below the specified value, the oil pressure-warning lamp lights.

[A] At the proper oil pressure

When the engine is started and as the proper oil pressure builds, the diaphragm (4) is pushed up. This separates the contact rivet (5) and breaks the circuit, causing the lamp to go out.

[B] At lower oil pressure

If the oil pressure drops, the resulting deflection of the diaphragm (4) will close the contact rivet (5) and again complete the circuit. The lighted lamp warns that the pressure of the lubricating system has dropped below the pressure setting.

https://truckmanualshub.com/

3. Cooling system

3.1 Overview of cooling system

The cooling system cools the engine while it operates to prevent overheating and keep a proper operating temperature. KUBOTA engines are used pressurized forced-circulation type. This system consists of a radiator (1), water pump (2), cooling fan (3), thermostat (4) and coolant temperature sensor (some models). The coolant is cooled through the radiator core, and the fan set behind the radiator pulls cooling air through the core to improve cooling. When the coolant in the engine is at a low temperature, the thermostat valve is closed so that the coolant is circulated in the engine through the bypass pipe. When the temperature of the coolant becomes the valve opening temperature of thermostat (4), the thermostat (4) opens the valve to return the heated coolant to the radiator (1). The water pump (2) sucks the cooled coolant, forces it into the cylinder block (6) and draws out the hot coolant. Some engines employ the bottom bypass system to improve the cooling performance of radiator and the three step valve opening type thermostat to reduce thermal shock radically.

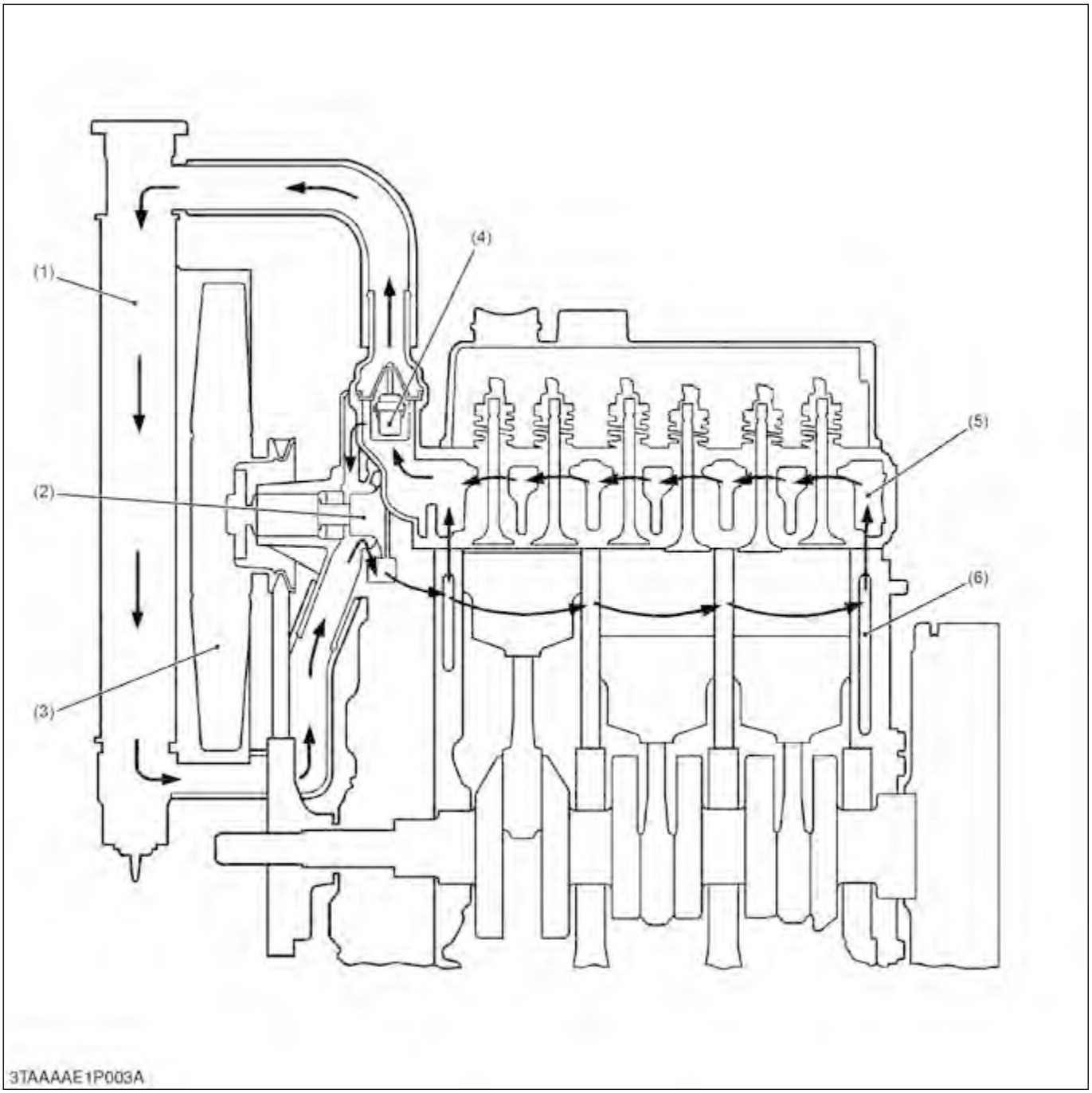

(1) Radiator
(2) Water pump
(3) Cooling fan
(4) Thermostat
(5) Cylinder head
(6) Cylinder head

https://truckmanualshub.com/

3.2 Function of water pump

The water pump circulates the coolant through the system.

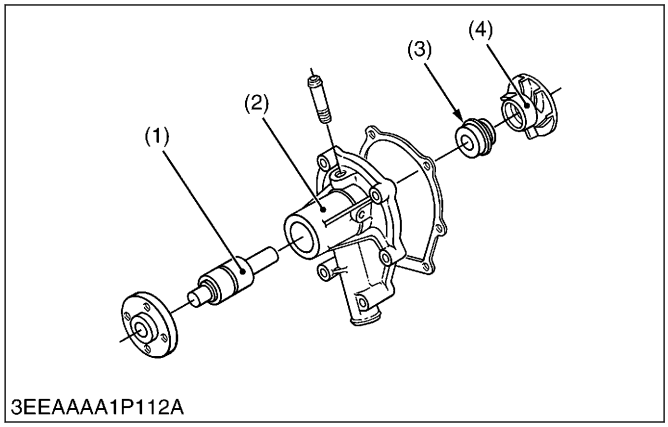

(1) Bearing unit
(2) Pump body
(3) Mechanical seal
(4) Impeller

If the pump fails to circulate the coolant, heat is not removed from the engine and overheating damage may occur. KUBOTA engines use a centrifugal type, and is driven by the crankshaft via a fan belt. It is compose of a pump body (2), impeller (4), mechanical seal (3) and bearing unit (1).

3.3 Function of radiator

The radiator is one of the major components of coolant cooling system.

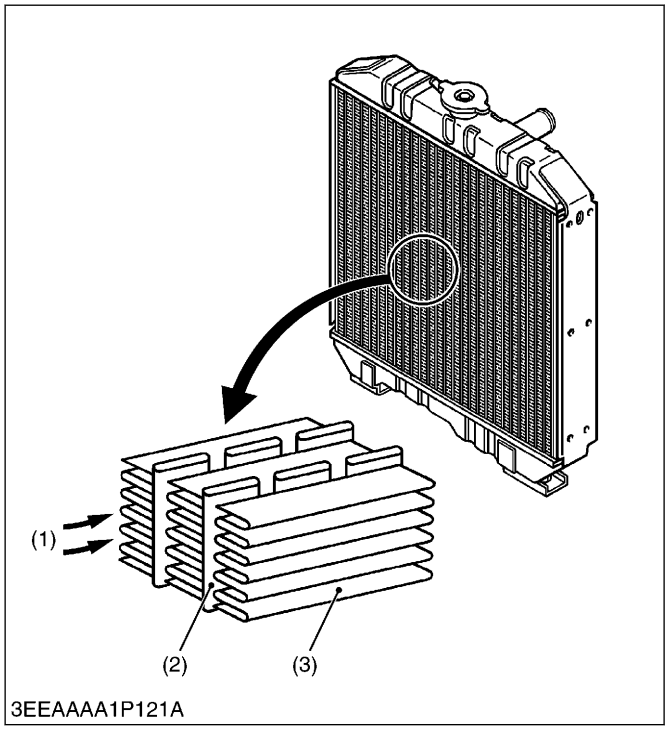

(1) Cooling air
(2) Tube
(3) Fin

The radiator is one of the major components of coolant cooling system. It is here that heat in the coolant is released to the atmosphere. The radiator core consists of water carrying tubes (2) and fins (3) at a right angle to the tubes. KUBOTA engines use corrugated fin type core which has a right weight and high heat transfer rate. Radiators are usually made of copper or brass. Recently, however, aluminum-made radiators are introduced for their light weight.

3.4 Function of radiator cap

The radiator cap keeps coolant from boiling out or evaporating.

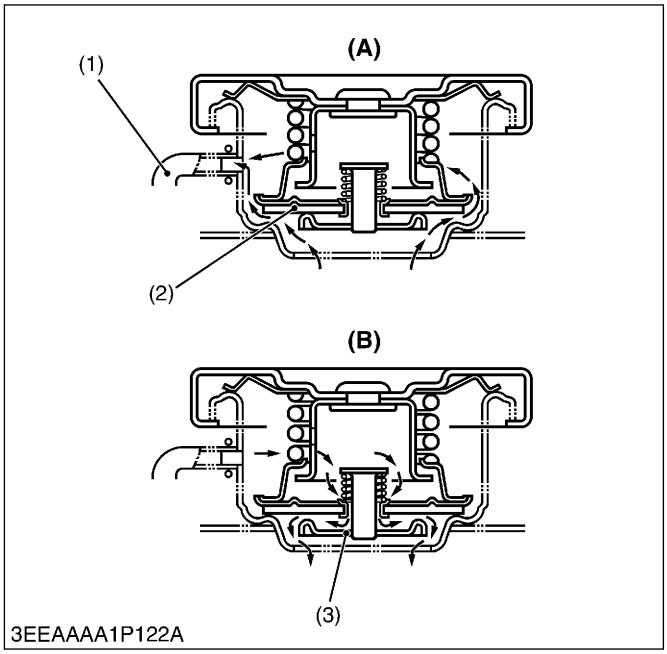

(1) Overflow tube
(2) Pressure valve
(3) Vacuum valve
(A) Pressure valve open
(B) Vacuum valve open

The pressure system permits operating the engine at a higher temperature without boiling the coolant or losing it by evaporation. The radiator cap consists of a pressure valve (2), vacuum valve (3), valve springs, gasket, and has two functions.

(A) Pressure valve open

The pressure valve (2) in the cap permits the escape of coolant or steam when the pressure reaches a certain point (88 kPa, 0.90 kgf/cm^2, 13 psi).

(B) Vacuum valve open

The vacuum valve (3) in the cap opens to prevent a vacuum in the cooling system.

4. Fuel system

4.1 Overview of fuel system

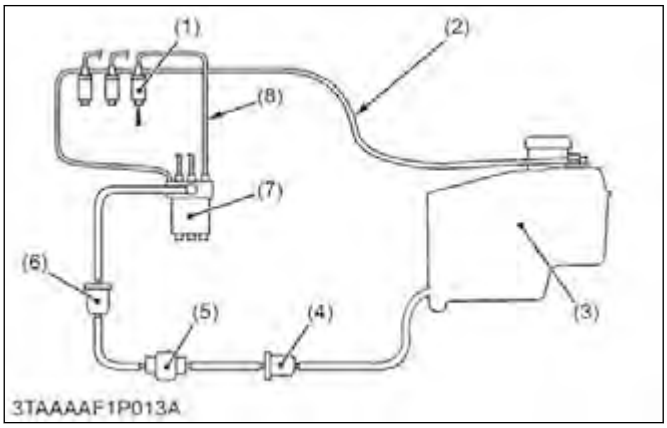

(1) Injection nozzle
(2) Fuel overflow pipe
(3) Fuel tank
(4) Fuel filter
(5) Fuel feed pump
(6) Fuel filter
(7) Injection pump
(8) Injection pipe

Fuel from the fuel tank (3) passes through the fuel filter (4), and then enters the injection pump (7) after impurities such as dirt, water, etc. are removed. The fuel pressurized by the injection pump to the opening pressure (13.7 to 14.7 MPa, 140 to 150 kgf/cm^2, 1990 to 2133 psi), of the injection nozzle (1) is injected into the combustion chamber. Part of the fuel fed to the injection nozzle (1) lubricates the moving parts of the needle valve inside the nozzle, then returns to the fuel tank through the fuel overflow pipe (2) from the upper part of the nozzle holder.

4.2 Function of fuel filter

The fuel filter filters impurities from the fuel.

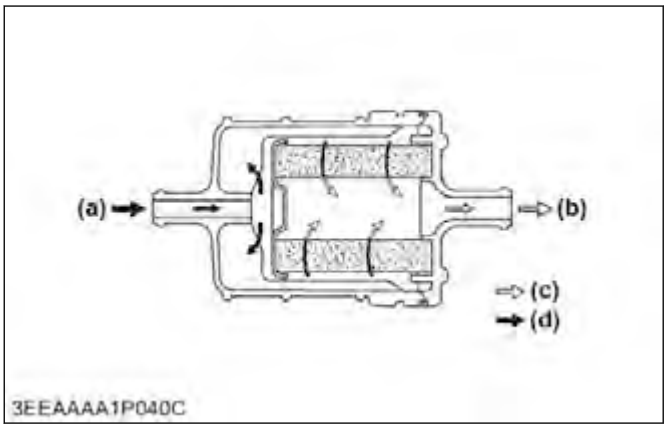

(a) Fuel in
(b) Fuel out
(c) Filtered fuel
(d) Unfiltered fuel

In-line filter is installed in the fuel line with an electromagnetic fuel feed pump and is used to filter impurities such as dirt, water, etc.

4.3 Function of fuel feed pump

An electromagnetic fuel feed pump is used when a fuel tank is set below the pump of the engine.

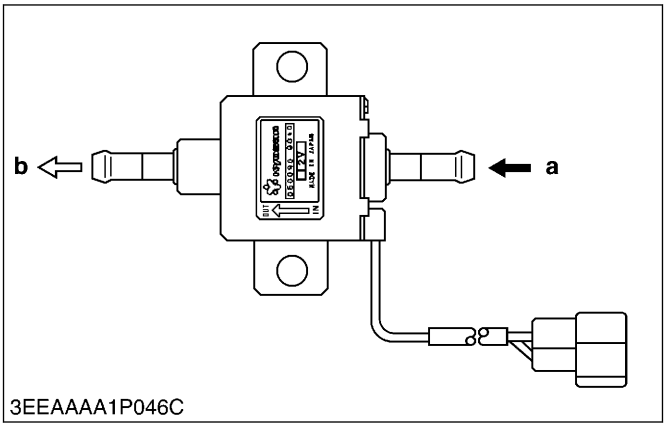

a: Fuel in
b: Fuel out

An electromagnetic fuel feed pump uses a transistor that causes the pump to start pumping fuel when the main switch is turned to the **ON** position. Therefore, fuel is supplied to the injection pump regardless of engine speed. This pump is driven by the battery. It can therefore be operated even with the engine being stopped.

4.4 Function of injection nozzle

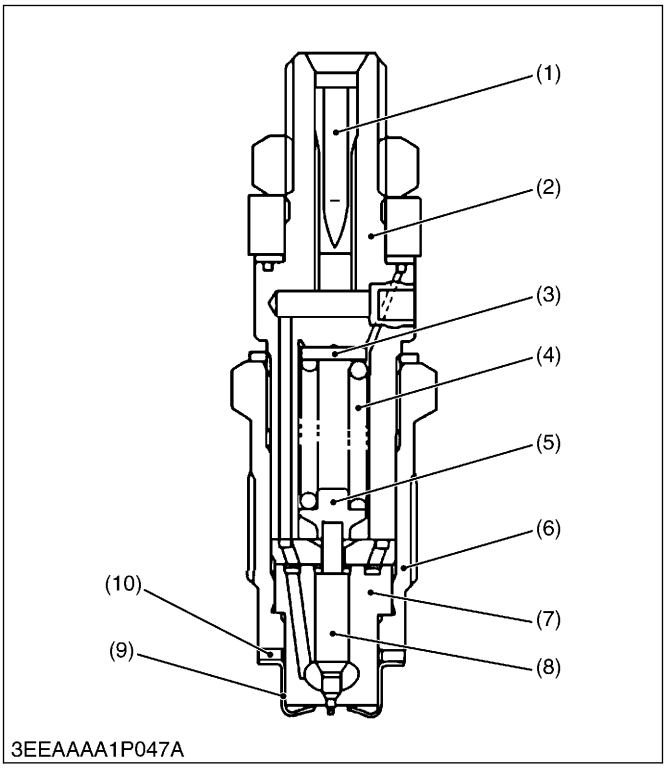

(1) Bar filter
(2) Nozzle holder body
(3) Adjusting washer
(4) Nozzle spring
(5) Push rod
(6) Retaining nut
(7) Nozzle piece
(8) Needle valve
(9) Heat seal
(10) Gasket

https://truckmanualshub.com/

Uses as E-TVCS system, the small-sized DENSO made OPD mini nozzle is of a flat-cut-provided double throttle type. This type of nozzle is designed to control the injection quantity when the lift rate is low at start of the injection, and to cut down on the knocking sound caused by excessive fuel injection by giving the needle valve (8) section more taper than before to prevent the rapid increase in the injection quantity when the initial injection turns into the full-force injection. Also, employed to prevent the injection quantity loss in the throttle section caused by carbon, the flat cut provided at the needle valve section helps the throttle withstand long use and reduce as much knocking sound as when it was new. The heat seal (9) is employed to improve the durability and reliability of the nozzle.

https://truckmanualshub.com/

SERVICING

1. Troubleshooting for engine

Symptom	Probable cause and checking procedure	Solution	Reference page
Engine does not start	1. No fuel	Fill with fuel	2-7
	2. Air in fuel system	Vent air	2-43
	3. Fuel line clogged	Clean or replace	2-42
	4. Water in fuel system	Change fuel and repair or replace fuel system	2-42
	5. Fuel filter clogged	Replace	2-32
	6. Excessively high viscosity of fuel or engine oil at low temperature	Use specified fuel or engine oil	2-7
	7. Fuel with low cetane number	Use specified fuel	2-7
	8. Fuel leak due to loose injection pipe retaining nut	Tighten retaining nut	3-37
	9. Incorrect injection timing	Adjust	3-28
	10. Fuel camshaft worn	Replace	3-43
	11. Injection nozzle clogged	Clean or replace	3-37
	12. Injection pump malfunctioning	Repair or replace	3-42
	13. Seizure of crankshaft, camshaft, piston, cylinder or bearing	Repair or replace	3-44 3-47
	14. Compression leak from cylinder	Replace head gasket, tighten cylinder head screw glow plug and nozzle holder	3-24 3-38
	15. Improper valve timing	Correct or replace timing gear	3-43
	16. Piston ring and cylinder worn	Replace	3-45
	17. Excessive valve clearance	Adjust	3-24
Starter does not operate	1. Battery discharged	Charge	2-30
	2. Starter malfunctioning	Repair or replace	8-47
	3. Main switch malfunctioning	Replace	8-30
	4. Wiring disconnected	Connect	—
	5. Safety switch malfunctioning	Check and replace	8-33
Engine revolution is not smooth	1. Fuel filter clogged or dirty	Replace	2-32

(Continued)

Symptom	Probable cause and checking procedure	Solution	Reference page
Engine revolution is not smooth	2. Air cleaner clogged	Clean or replace	2-32
	3. Fuel leak due to loose injection pipe retaining nut	Tighten retaining nut	3-37
	4. Injection pump malfunctioning	Repair or replace	3-42
	5. Incorrect nozzle opening pressure	Adjust	3-30
	6. Injection nozzle stuck or clogged	Repair or replace	3-37
	7. Governor malfunctioning	Repair	3-42
Either white or blue exhaust gas is observed	1. Excessive engine oil	Reduce to specified amount	2-25
	2. Piston ring and cylinder worn or stuck	Repair or replace	3-45
	3. Incorrect injection timing	Adjust	3-28
	4. Deficient compression	Check	3-24
Either black or dark gray exhaust gas is observed	1. Overload	Decrease the load	—
	2. Low grade fuel used	Use specified fuel	2-7
	3. Fuel filter clogged	Replace	2-32
	4. Air cleaner clogged	Clean or replace	2-32
	5. Deficient nozzle injection	Repair or replace nozzle	3-37
Deficient output	1. Incorrect injection timing	Adjust	3-28
	2. Engine's moving parts seem to be seizing	Repair or replace	—
	3. Injection pump malfunctioning	Repair or replace	3-42
	4. Deficient nozzle injection	Repair or replace nozzle	3-37
	5. Air cleaner dirty or clogged	Clean or replace	2-32
	6. Compression leak	Replace head gasket, tighten cylinder head screws, glow plug and nozzle holder	3-38 3-37
Excessive lubricant oil consumption	1. Piston ring's gap facing the same direction	Shift ring gap direction	3-45
	2. Oil ring worn or stuck	Replace	3-45
	3. Piston ring groove worn	Replace piston	3-45
	4. Valve stem and valve guide worn	Replace	3-49
	5. Crankshaft bearing and crank pin bearing worn	Replace	3-59 3-61

(Continued)

Symptom	Probable cause and checking procedure	Solution	Reference page
Excessive lubricant oil consumption	6. Oil leaking due to damaged seals or packing	Replace	—
Fuel mixed into lubricant oil	1. Injection pump's plunger is worn	Repair or replace	3-42
	2. Deficient nozzle injection	Repair or replace nozzle	3-37
	3. Injection pump broken	Replace	3-42
Water mixed into lubricant oil	1. Head gasket damaged	Replace	3-38
	2. Cylinder block or cylinder head flawed	Replace	—
Low oil pressure	1. Engine oil insufficient	Fill	2-7
	2. Oil strainer clogged	Clean	3-40
	3. Relief valve stuck with dirt	Clean	3-65
	4. Relief valve spring weak or broken	Replace	3-65
	5. Excessive oil clearance of crankshaft bearing	Replace	3-47 3-62
	6. Excessive oil clearance of crankpin bearing	Replace	3-47 3-59
	7. Excessive oil clearance of rocker arm	Replace	3-38 3-53
	8. Oil passage clogged	Clean	—
	9. Different type of oil	Used specified type of oil	2-7
	10. Oil pump damaged	Replace	3-41
	11. Oil filter clogged	Replace	2-25
High oil pressure	1. Different type of oil	Used specified type of oil	2-7
	2. Relief valve damaged	Replace	3-25 3-65
Engine overheated	1. Engine oil insufficient	Fill	2-7
	2. Fan belt broken or elongated	Replace or adjust	3-26
	3. Coolant insufficient	Fill	2-7
	4. Radiator net and radiator fin clogged with dust	Clean	—
	5. Inside of radiator corroded	Clean or replace	2-39
	6. Coolant flow route corroded	Clean or replace	2-39
	7. Radiator cap damaged	Replace	3-26
	8. Overload running	Reduce the load	—
	9. Head gasket damaged	Replace	3-38

(Continued)

Symptom	Probable cause and checking procedure	Solution	Reference page
Engine overheated	10. Incorrect injection timing	Adjust	3-28
	11. Unsuitable fuel used	Use specified fuel	2-7
Battery quickly discharged	1. Battery electrolyte insufficient	Fill with distilled water and charge	2-30
	2. Fan belt slips	Adjust belt tension or replace	3-26
	3. Wiring disconnected	Connect	—
	4. Rectifier damaged	Replace	8-49
	5. Alternator damaged	Replace	8-48
	6. Battery damaged	Replace	—

https://truckmanualshub.com/

2. Servicing specifications for engine

Engine body

Item		Factory specification	Allowable limit
Cylinder head surface	Flatness	—	0.005 mm 0.002 in.
Top clearance		0.55 to 0.70 mm 0.022 to 0.027 in.	—
Compression pressure		3.53 to 4.02 MPa 36.0 to 41.0 kgf/cm^2 512 to 583 psi	2.55 MPa 26.0 kgf/cm^2 370 psi
Variance among cylinders		—	10% or less
Valve seat	Angle (Intake)	0.79 rad 45°	—
	Angle (Exhaust)	0.79 rad 45°	—
	Width	2.12 mm 0.0835 in.	—
Valve face	Angle (Intake)	0.79 rad 45°	—
	Angle (Exhaust)	0.79 rad 45°	—
Valve recessing	Intake and exhaust	0.10 (protrusion) to 0.10 (recessing) mm 0.0039 (protrusion) to 0.0039 (recessing) in.	0.30 (recessing) mm 0.012 (recessing) in.
Valve stem to valve guide	Clearance	0.030 to 0.057 mm 0.0012 to 0.0022 in.	0.10 mm 0.0039 in.
• Valve stem	O.D.	5.968 to 5.980 mm 0.2350 to 0.2354 in.	—
• Valve guide	I.D.	6.010 to 6.025 mm 0.2367 to 0.2372 in.	—
Valve clearance (Cold)		0.145 to 0.185 mm 0.00571 to 0.00728 in.	—
Valve spring	Free length	31.3 to 31.8 mm 1.24 to 1.25 in.	28.4 mm 1.12 in.
	Tilt	—	1.2 mm 0.047 in.
	Setting load	65 N / 27.0 mm 6.6 kgf / 27.0 mm 15 lbf / 1.06 in.	55 N / 27.0 mm 5.6 kgf / 27.0 mm 12 lbf / 1.06 in.
Rocker arm shaft to rocker arm	Clearance	0.016 to 0.045 mm 0.00063 to 0.0017 in.	0.15 mm 0.0059 in.
• Rocker arm shaft	O.D.	10.473 to 10.484 mm 0.41233 to 0.41275 in.	—
• Rocker arm	I.D.	10.500 to 10.518 mm 0.41339 to 0.41409 in.	—
Push rod	Alignment	—	0.25 mm 0.0098 in.
Tappet to tappet guide	Clearance	0.016 to 0.052 mm 0.00063 to 0.0020 in.	0.10 mm 0.0039 in.
• Tappet guide	I.D.	18.000 to 18.018 mm 0.70867 to 0.70937 in.	—

(Continued)

Item		Factory specification	Allowable limit
• Tappet	O.D.	17.966 to 17.984 mm 0.70733 to 0.70803 in.	—
Camshaft	Side clearance	0.15 to 0.31 mm 0.0059 to 0.012 in.	0.80 mm 0.031 in.
	Alignment	—	0.01 mm 0.0004 in.
Cam height	Intake	26.88 mm 1.058 in.	26.83 mm 1.056 in.
	Exhaust	26.88 mm 1.058 in.	26.83 mm 1.056 in.
Camshaft journal to cylinder block bore	Oil clearance	0.050 to 0.091 mm 0.0020 to 0.0035 in.	0.15 mm 0.0059 in.
• Camshaft journal	O.D.	32.934 to 32.950 mm 1.2967 to 1.2972 in.	—
• Camshaft block bore	I.D.	33.000 to 33.025 mm 1.2993 to 1.3001 in.	—
Timing gear			
• Crank gear to idle gear 1	Backlash	0.0430 to 0.124 mm 0.00170 to 0.00488 in.	0.15 mm 0.0059 in.
• Idle gear 1 to cam gear	Backlash	0.0470 to 0.123 mm 0.00185 to 0.00484 in.	0.15 mm 0.0059 in.
• Idle gear 1 injection pump gear	Backlash	0.0460 to 0.124 mm 0.00182 to 0.00488 in.	0.15 mm 0.0059 in.
• Crank gear to oil pump drive gear	Backlash	0.0410 to 0.123 mm 0.00162 to 0.00484 in.	0.15 mm 0.0059 in.
Idle gear shaft to gear bushing			
• Idle gear 1	Clearance	0.020 to 0.084 mm 0.00079 to 0.0033 in.	0.10 mm 0.0039 in.
• Idle gear bushing	I.D.	20.000 to 20.051 mm 0.78741 to 0.78940 in.	—
• Idle gear shaft 1	O.D.	19.967 to 19.980 mm 0.78611 to 0.78661 in.	—
Idle gear			
• Idle gear 1	Side clearance	0.20 to 0.51 mm 0.0079 to 0.020 in.	0.80 mm 0.031 in.
Piston pin bore	I.D.	20.000 to 20.013 mm 0.78741 to 0.78791 in.	20.05 mm 0.7894 in.
Piston ring to piston ring groove			
• Second ring	Clearance	0.0900 to 0.0120 mm 0.00355 to 0.00472 in.	0.15 mm 0.0059 in.
• Oil ring	Clearance	0.040 to 0.080 mm 0.0016 to 0.0031 in.	0.15 mm 0.0059 in.
Piston ring gap	Top ring	0.20 to 0.35 mm 0.0079 to 0.013 in.	1.25 mm 0.0492 in.
	Second ring	0.35 to 0.50 mm 0.014 to 0.019 in.	1.25 mm 0.0492 in.
	Oil ring	0.20 to 0.35 mm 0.0079 to 0.013 in.	1.25 mm 0.0492 in.

(Continued)

Item		Factory specification	Allowable limit
Connecting rod	Alignment	—	0.05 mm 0.002 in.
Piston pin to small end bushing	Clearance	0.015 to 0.075 mm 0.0059 to 0.0029 in.	0.15 mm 0.0059 in.
• Piston pin	O.D.	20.002 to 20.011 mm 0.78748 to 0.78783 in.	—
• Small end bushing	I.D.	20.025 to 20.040 mm 0.78839 to 0.78897 in.	—
Crankshaft	Side clearance	0.15 to 0.31 mm 0.0059 to 0.012 in.	0.50 mm 0.020 in.
	Alignment	—	0.02 mm 0.0008 in.
Crankshaft to crankshaft bearing 1	Oil clearance	0.0340 to 0.106 mm 0.00134 to 0.00417 in.	0.20 mm 0.0079 in.
• Crankshaft	O.D.	43.934 to 43.950 mm 1.7297 to 1.7303 in.	—
• Crankshaft bearing 1	I.D.	43.984 to 44.040 mm 1.7317 to 1.7338 in.	—
Crankshaft to crankshaft bearing 2	Oil clearance	0.028 to 0.059 mm 0.0011 to 0.0023 in.	0.20 mm 0.0079 in.
• Crankshaft journal	O.D.	43.934 to 43.950 mm 1.7297 to 1.7303 in.	—
• Crankshaft bearing 2	I.D.	43.978 to 43.993 mm 1.7315 to 1.7320 in.	—
Crankshaft to crankshaft bearing 3	Oil clearance	0.028 to 0.059 mm 0.0011 to 0.0023 in.	0.20 mm 0.0079 in.
• Crankshaft journal	O.D.	43.934 to 43.950 mm 1.7297 to 1.7303 in.	—
• Crankshaft bearing 3	I.D.	43.978 to 43.993 mm 1.7315 to 1.7320 in.	—
Crankpin to crankpin bearing	Oil clearance	0.020 to 0.051 mm 0.00079 to 0.0020 in.	0.15 mm 0.0059 in.
• Crankpin	O.D.	33.959 to 33.975 mm 1.3370 to 1.3375 in.	—
• Crankpin bearing	I.D.	33.995 to 34.010 mm 1.3384 to 1.3389 in.	—
Cylinder liner I.D.		72.000 to 72.019 mm 2.8347 to 2.8353 in.	72.150 mm 2.8406 in.
Cylinder (Oversize)		72.250 to 72.269 mm 2.8445 to 2.8452 in.	72.400 mm 2.8504 in.

Lubricating system

Item		Factory specification	Allowable limit
Engine oil pressure	At idle speed	More than 49 kPa 0.50 kgf/cm^2 7.1 psi	—
	At rated speed	197 to 441 kPa 2.0 to 4.50 kgf/cm^2 28.5 to 64.0 psi	147 kPa 1.50 kgf/cm^2 21.3 psi

(Continued)

Item		Factory specification	Allowable limit
Inner rotor to outer rotor	Clearance	0.030 to 0.14 mm 0.0012 to 0.0055 in.	—
Outer rotor to pump body	Clearance	0.070 to 0.15 mm 0.0028 to 0.0059 in.	—
Inner rotor to cover	Clearance	0.0750 to 0.135 mm 0.00296 to 0.00531 in.	—
Relief valve spring	Length	32 mm 1.26 in.	28 mm 1.10 in.

Cooling system

Item		Factory specification	Allowable limit
Thermostat	Valve opening temperature (at beginning)	69.5 to 72.5 ℃ 157.1 to 162.5 ℉	—
	Valve opening temperature (opened completely)	85 ℃ 185 ℉	—
Radiator	Water leakage test pressure	No leak at specified pressure	—
Radiator cap	Pressure falling time	10 seconds or more 88 → 59 kPa 0.90 → 0.60 kgf/cm^2 13 → 8.5 psi	—
Fan belt	Tension	7 to 9 mm / 98 N (10 kgf, 22 lbf) 0.28 to 0.35 in. / 98 N (10 kgf, 22 lbf)	—

Fuel system

Item		Factory specification	Allowable limit
Injection pump	Injection timing	0.3360 to 0.3621 rad 19.25 to 20.75° before T.D.C.	—
Pump element	Fuel tightness	—	13.73 MPa 140.0 kgf/cm^2 1991 psi
Delivery valve	Fuel tightness	10 seconds 13.73 → 12.75 MPa 140.0 → 130.0 kgf/cm^2 1991 → 1849 psi	5 seconds 13.73 → 12.75 MPa 140.0 → 130.0 kgf/cm^2 1991 → 1849 psi
Injection nozzle	Injection pressure	13.73 to 12.75 MPa 140.0 to 150.0 kgf/cm^2 1991 to 2133 psi	—
Injection nozzle valve seat	Valve seat tightness	When the pressure is 12.75 MPa (130.0 kgf/cm^2, 1849 psi), the valve seat must be fuel tightness	—

https://truckmanualshub.com/

3. Tightening torques for engine

Tightening torques of screws, bolts and nuts on the table below are especially specified.

NOTE

- **In removing and applying the bolts and nuts marked with "*", a pneumatic wrench or similar pneumatic tool, if employed, must be used with enough care not to get them seized.**
- **For the screws, bolts and nuts with the mark "*", apply engine oil to their threads and seats before you tighten.**
- **The letter "M" in Dimension × Pitch shows that the screw, bolt or nut dimensions are in the metric system. The dimension is the nominal external diameter in mm of the threads. The pitch is the nominal distance in mm between 2 threads.**

Item	Dimension × Pitch	N·m	kgf·m	lbf·ft
Cylinder head cover screw	M6 × 1.0	9.81 to 11.2	1.00 to 1.15	7.24 to 8.31
Cylinder head screw	M8 × 1.25	38 to 42	3.8 to 4.3	28 to 31
*Main bearing case screw 1	M6 × 1.0	13 to 15	1.3 to 1.6	9.4 to 11
*Main bearing case screw 2	M7× 1.0	27 to 30	2.7 to 3.1	20 to 22
*Flywheel screw	M10 × 1.25	54 to 58	5.5 to 6.0	40 to 43
*Connecting rod screw	M7 × 0.75	27 to 30	2.7 to 3.1	20 to 22
*Rocker arm bracket screw	M6 × 1.0	9.81 to 11.2	1.00 to 1.15	7.24 to 8.31
*Fan drive pulley screw	M12 × 1.5	118 to 127	12.0 to 13.0	86.8 to 94.0
Bearing case cover mounting screw	M6 × 1.0	9.81 to 11.2	1.00 to 1.15	7.24 to 8.31
Glow plug	M8 × 1.0	7.9 to 14	0.80 to 1.5	5.8 to 10
Nozzle holder assembly	M20 × 1.5	49 to 68	5.0 to 7.0	37 to 50
Nozzle holder	—	35 to 39	3.5 to 4.0	26 to 28
Oil pressure switch	PT 1/8	15 to 19	1.5 to 2.0	11 to 14
Injection pipe retaining nut	M12 × 1.5	25 to 34	2.5 to 3.5	18 to 25
Overflow pipe retaining nut	M12× 1.5	20 to 24	2.0 to 2.5	15 to 18
Drain plug with copper gasket	M12 × 1.25	33 to 37	3.3 to 3.8	24 to 27
Oil filter joint	—	40 to 49	4.0 to 5.0	29 to 36

RELATED PAGE

TIGHTENING TORQUES on page 2-13

4. Checking and adjusting

4.1 Engine body

4.1.1 Checking compression pressure

NOTE

- **Check the compression pressure with the specified valve clearance.**
- **Always use a fully charged battery for performing this test.**
- **Variances in cylinder compression values should be under 10%.**

1. Operate the engine until it is warmed up.
2. Stop the engine.
3. Remove the air cleaner, the muffler and all glow plugs (or nozzles).
4. Set a compression tester with the adapter to the glow plug hole (or nozzle hole).

   Nozzle hole:
   Adapter H (07909-31231)

   Glow plug hole:
   Adapter L (07909-31301)
5. Disconnect the connector of engine stop solenoid and keep the engine stop position (non-injection). Then, operate the engine with the starter and measure the compression pressure.
6. Repeat steps 4 and 5 for each cylinder.
7. If the measurement is below the allowable limit, apply a small amount of oil to the cylinder wall through the glow plug hole (or nozzle hole) and measure the compression pressure again.

Compression pressure	Factory specification	3.53 to 4.02 MPa 36.0 to 41.0 kgf/cm^2 512 to 583 psi
	Allowable limit	2.55 MPa 26.0 kgf/cm^2 370 psi

8. If the compression pressure is still less than the allowable limit, check the top clearance, valve clearance and cylinder head.
9. If the compression pressure increases after applying oil, check the cylinder wall and piston rings.

4.1.2 Checking valve clearance

IMPORTANT

- **Valve clearance must be checked and adjusted when engine is cold.**

NOTE

- **The sequence of cylinder numbers is given as No. 1, No. 2 and No. 3 starting from the gear case side.**
- **After adjusting the valve clearance, secure the adjusting screw with the lock nut.**

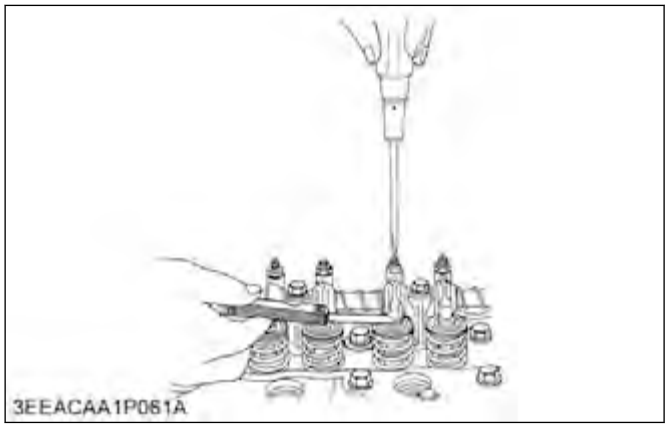

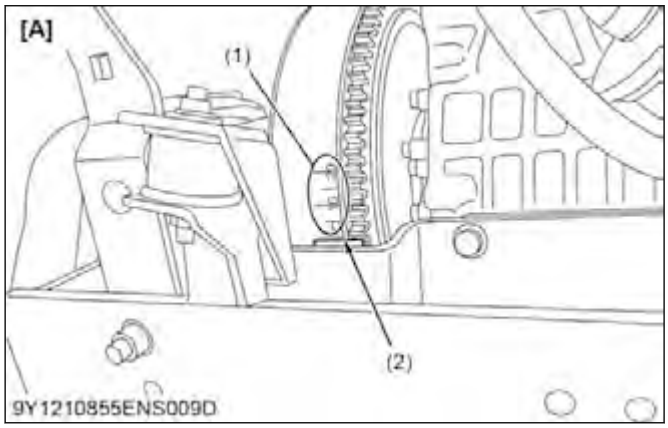

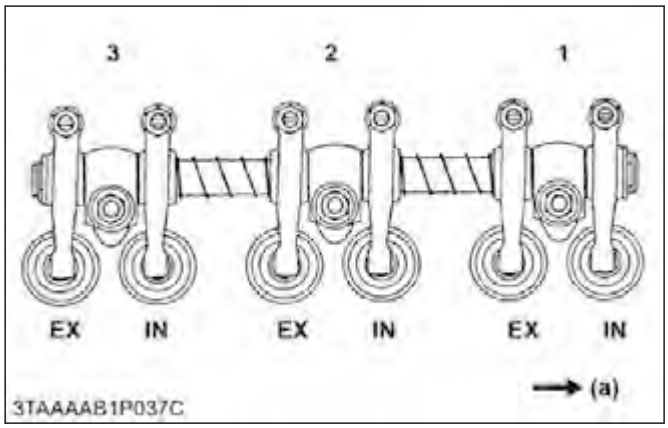

(1) "**1TC**" and "timing line"
(2) Alignment mark
(a) Gear case side
[A] D902-E4

Adjustable cylinder location of piston	Number of cylinders Valve arrangement	
	Intake valve	Exhaust valve
No. 1	★	★
No. 2	☆	★
No. 3	★	☆

Valve clearance marked with "★" can be adjusted.

1. Remove the cylinder head cover and the glow plugs.
2. Align the "**1TC**" mark at "**1TC**" and "timing line" (1) on the flywheel and alignment mark (2) on the rear end plate so that the No. 1 piston comes to the compression top dead center.
3. Check the following valve clearance marked with "★" using a feeler gauge.
4. If the clearance is not within the factory specifications, adjust with the adjusting screw.

Intake and exhaust valve clearance (Cold)	Factory specification	0.145 to 0.185 mm 0.00571 to 0.00728 in.

5. Then turn the flywheel 6.28 rad (360°), and align the "**1TC**" mark at "**1TC**" and "timing line" (1) on the flywheel and alignment mark (2) on the rear end plate so that the No. 1 piston comes to the overlap position.
6. Check the following valve clearance marked with "☆" using a feeler gauge.
7. If the clearance is not within the factory specifications, adjust with the adjusting screw.

4.2 Lubricating system

4.2.1 Checking engine oil pressure

1. Remove the engine oil pressure switch, and set an oil pressure tester.
2. Start the engine. After warming up, measure the oil pressure of both idling and rated speeds.

3. If the oil pressure is less than the allowable limit, check the following.
   - Engine oil insufficient
   - Oil pump damaged
   - Oil strainer clogged
   - Oil filter cartridge clogged
   - Oil gallery clogged
   - Excessive oil clearance
   - Foreign matter in the relief valve
   - Relief valve spring length.

Engine oil pressure	At idle speed	Factory specification	More than 49 kPa 1.0 kgf/cm^2 14 psi
	At rated speed	Factory specification	197 to 441 kPa 2.00 to 4.50 kgf/cm^2 28.5 to 64.0 psi
		Allowable limit	147 kPa 1.50 kgf/cm^2 21.3 psi

(When reassembling)
- After checking the engine oil pressure, tighten the engine oil pressure switch to the specified torque.

Tightening torque	Oil pressure switch	15 to 19 N·m 1.5 to 2.0 kgf·m 11 to 14 lbf·ft

4.3 Cooling system

4.3.1 Checking fan belt tension

1. Measure the deflection (A), depressing the belt halfway between the fan drive pulley and alternator pulley at specified force.

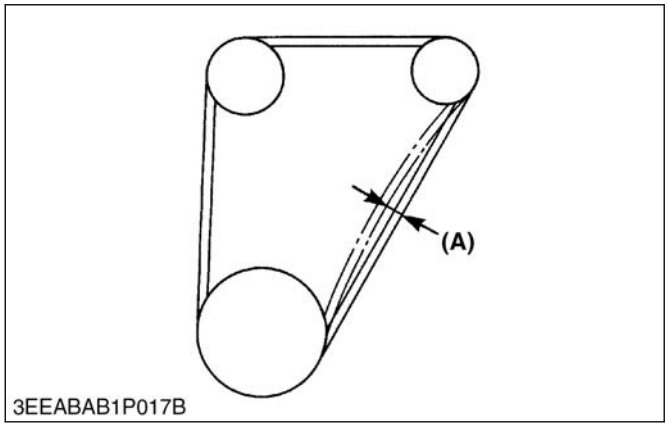

(A) Deflection

2. If the measurement is not within the factory specifications, loosen the alternator mounting screws and relocate the alternator to adjust.

Depressing fan belt	Specified force	98 N 10 kgf 22 lbf

Deflection (A)	Factory specification	7.0 to 9.0 mm 0.28 to 0.35 in.

4.3.2 Checking fan belt damage and wear

1. Check the fan belt for damage.
2. If the fan belt is damaged, replace it.

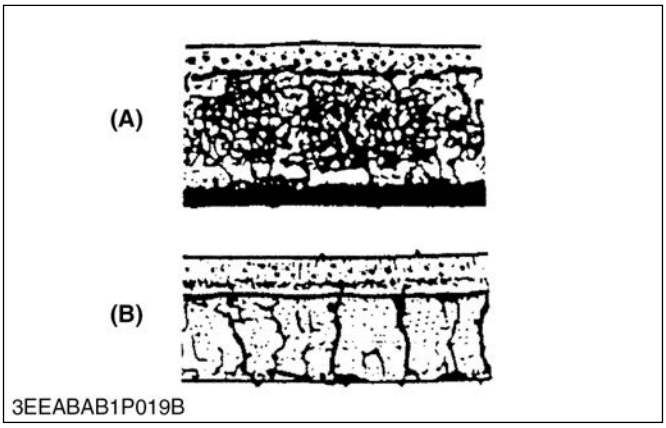

(A) Good (B) Bad

3. Check if the fan belt is worn and sunk in the pulley groove.
4. If the fan belt is nearly worn out and deeply sunk in the pulley groove, replace it.

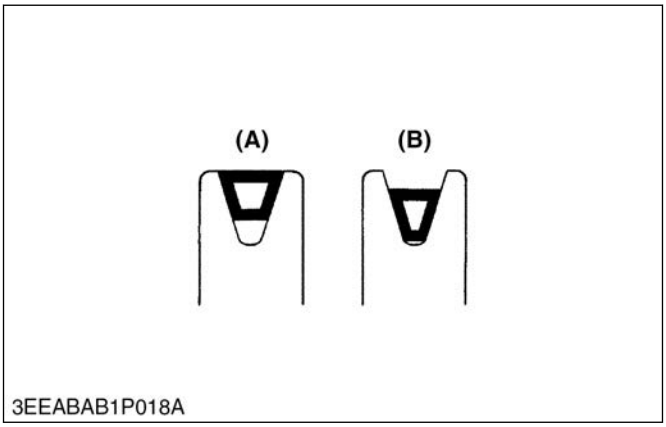

(A) Good (B) Bad

4.3.3 Checking radiator cap air leakage

⚠ CAUTION
- **When removing the radiator cap, wait at least ten minutes after the engine has stopped and cooled down. Otherwise, hot water may gush out, scalding nearby people.**

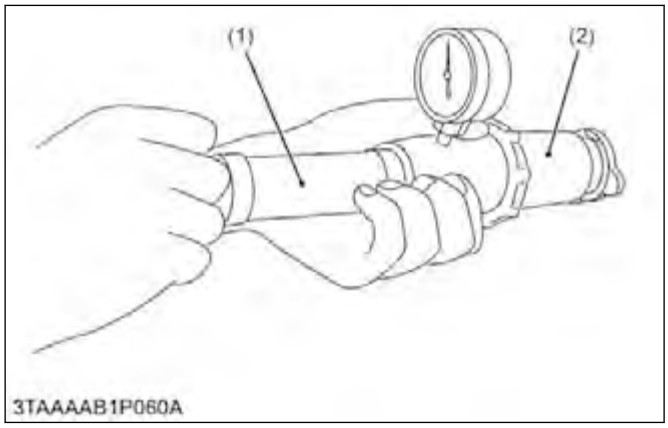

(1) Radiator tester (2) Adapter

1. Set a radiator tester (1) and an adapter (2) on the radiator cap.
2. Apply the specified pressure.

Specified pressure	88 kPa 0.90 kgf/cm^2 13 psi

3. If the measurement is less than the factory specification, replace the radiator cap.

Pressure falling time	Factory specification	More than 10 seconds for pressure fall 88 → 59 kPa (0.90 → 0.60 kgf/cm^2, 13 → 8.5 psi)

4.3.4 Checking radiator water leakage

CAUTION

- **When removing the radiator cap, wait at least ten minutes after the engine has stopped and cooled down. Otherwise, hot water may gush out, scalding nearby people.**

NOTE

- **The pressure of the leak test is different from each radiator specification.**
  Thus, do the leak test referring to the test pressure of each radiator specification.

1. Pour a specified amount of water into the radiator.
2. Set a radiator tester (1) and an adaptor (2) and raise the water pressure to the specified pressure.

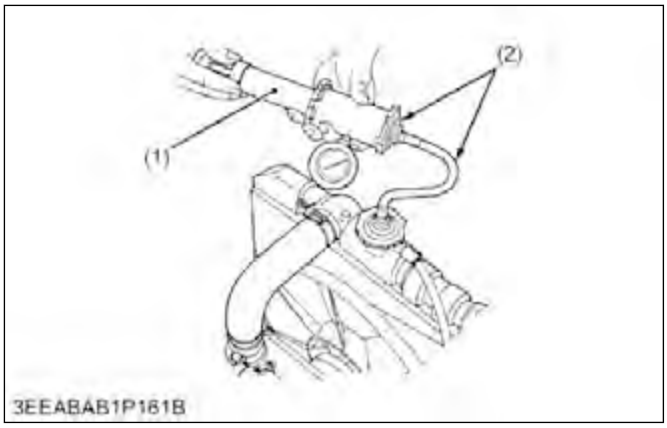

(1) Radiator tester (2) Adapter

Radiator water leakage test pressure	Factory specification	No leak at specified pressure

3. Check the radiator for water leaks.
4. For water leak from the pinhole, repair with the radiator cement. When water leak is excessive, replace the radiator.

4.3.5 Checking thermostat valve opening temperature

CAUTION

- **When removing the radiator cap, wait at least ten minutes after the engine has stopped and cooled down. Otherwise, hot water may gush out, scalding nearby people.**

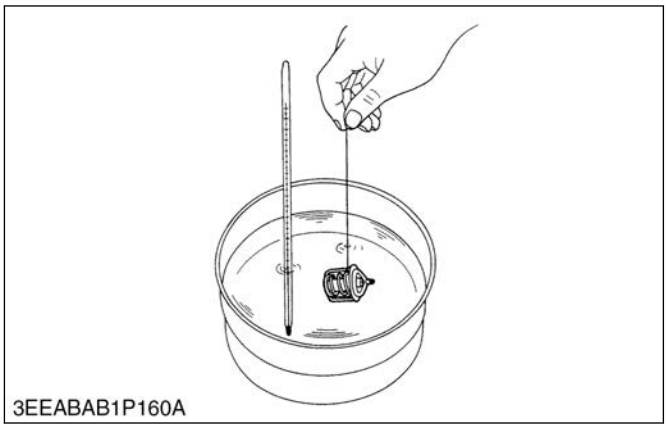

1. Suspend the thermostat in the water by a string with its end inserted between the valve and seat.
2. Heating the water gradually, read the temperature when the valve opens and leaves the string.
3. Continue heating and read the temperature when the valve opens.

Valve opens	Approximately	8 mm 0.3 in.

4. If the measurement is not within the factory specifications, replace the thermostat.

Thermostat's valve opening temperature	Factory specification	69.5 to 72.5 ℃ 157.1 to 162.5 ℉
Temperature at which thermostat completely opens		85 ℃ 185 ℉

4.4 Fuel system

4.4.1 Checking injection timing

NOTE

- **The liquid gasket is not required for assembling.**
- **Shims are available in thickness of 0.20 mm (0.0079 in.), 0.25 mm (0.0098 in.), 0.30 mm (0.012 in.) and 0.175 mm (0.00689 in.). Combine these shims for adjustments.**
- **Addition or reduction of shim (0.05 mm, 0.002 in.) delays or advances the injection timing by approx. 0.009 rad (0.5°).**
- **In disassembling and replacing the injection pump, be sure to use the same number of new shims with the same thickness.**
- **The 0.175 mm thick shim is coated only on the lower face. Therefore, do not use the 0.175 mm thick shim as the top shim of the combination (injection pump side), because this can cause oil leakage.**

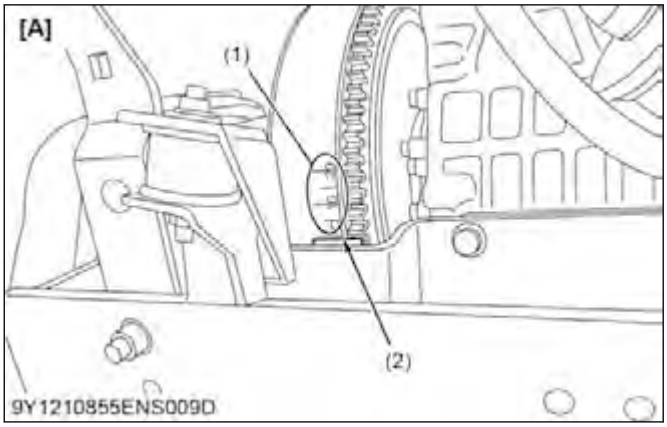

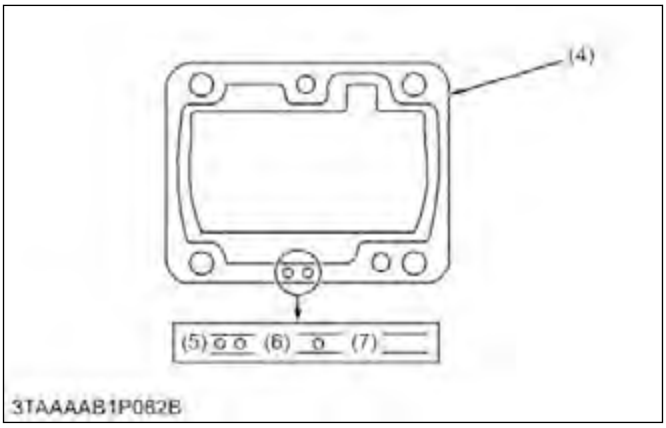

(1) "**1TC**" and "timing line"
(2) Alignment mark
(4) Shim (Soft metal gasket shim)
(5) Two-holes:
0.20 mm (0.0079 in.)
0.175 mm (0.00689 in.)
(6) One-hole:
0.175 mm (0.00689 in.)
(7) Without hole:
0.30 mm (0.012 in.)
[A] D902-E4

1. Remove the injection pipes.
2. Remove the engine stop solenoid.
3. Turn the flywheel counterclockwise (viewed from flywheel side) until the fuel fills up to the hole of the delivery valve holder (3) for No. 1 cylinder.

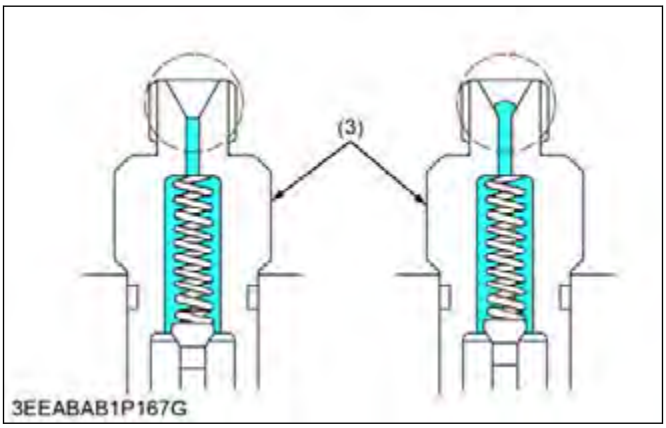

(3) Delivery valve holder

4. After the fuel fills up to the hole of the delivery valve holder for No. 1 cylinder, turn back (clockwise) the flywheel around 1.6 rad (90°).
5. Turn the flywheel counterclockwise to set at around 0.44 rad (25°) before T.D.C.
6. Slowly turn the flywheel counterclockwise and stop turning when the fuel begins to come up, to get the present injection timing.
7. Check to see the degree on flywheel.
   The flywheel has mark "**1TC**", "**10**" and "**20**" for the crank angle before the top dead center of No. 1 cylinder.

8. If injection timing is out of adjustment, readjust the timing with shims.

Injection timing	Factory specification	0.3360 to 0.3621 rad (19.25 to 20.75°) before T.D.C.

4.4.2 Checking fuel tightness of pump element

NOTE

- **Never try to disassemble the injection pump assembly. For repairs, you are strongly requested to contact a Kubota-authorized pump service shop.**

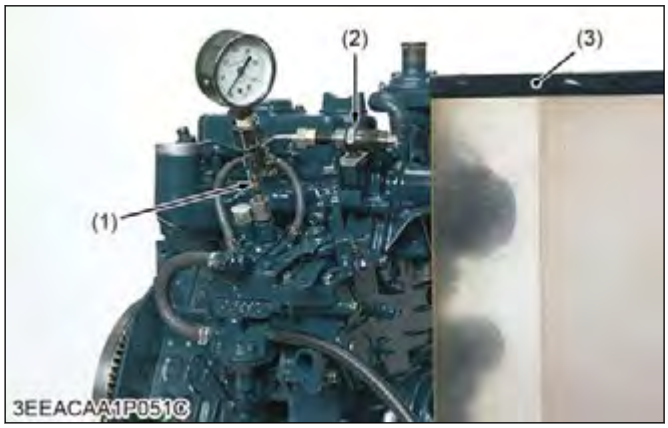

(1) Injection pump pressure tester
(2) Injection nozzle
(3) Protection cover for jetted fuel

1. Remove the engine stop solenoid.
2. Remove the injection pipes and glow plugs.
3. Install the injection pump pressure tester to the injection pump.
4. Install the injection nozzle (2) jetted with the proper injection pressure to the injection pump pressure tester (1). (Refer to the photo.)
5. Set the speed control lever to the maximum speed position.
6. Run the starter to increase the pressure.
7. If the pressure cannot reach the allowable limit, replace the pump with new one or repair with a Kubota-authorized pump service shop.

Fuel tightness of pump element	Allowable limit	13.73 MPa 140.0 kgf/cm^2 1991 psi

4.4.3 Checking fuel tightness of delivery valve

NOTE

- **Never try to disassemble the injection pump assembly. For repairs, you are strongly requested to contact a Kubota-authorized pump service shop.**

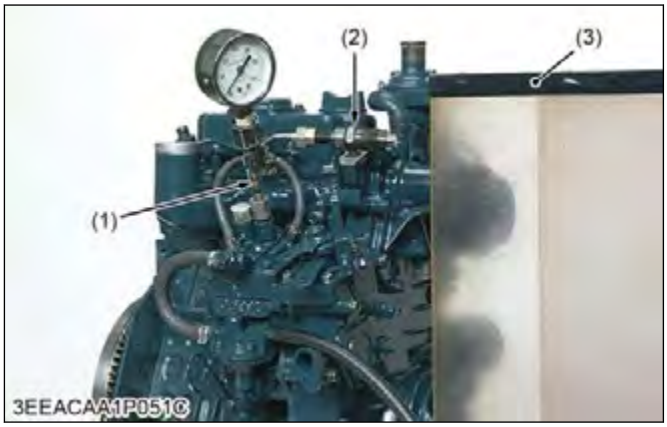

(1) Injection pump pressure tester
(2) Injection nozzle
(3) Protection cover for jetted fuel

1. Remove the engine stop solenoid.
2. Remove the injection pipes and glow plugs.
3. Set a pressure tester to the fuel injection pump.
4. Install the injection nozzle (2) jetted with the proper injection pressure to the injection pump pressure tester (1).
5. Run the starter to increase the pressure.
6. Stop the starter when the fuel jets from the injection nozzle. After that, turn the flywheel by the hand and raise the pressure.
7. Now turn the flywheel back about half a turn (to keep the plunger free). Keep the flywheel at this position and clock the time taken for the pressure to drop.
8. Measure the time needed to decrease the pressure.
9. If the measurement is less than allowable limit, replace the pump with new one or repair with a Kubota-authorized pump service shop.

Fuel tightness of delivery valve	Factory specification	10 seconds 13.73 → 12.75 MPa 140.0 → 130.0 kgf/cm^2 1991 → 1849 psi
	Allowable limit	5 seconds 13.73 → 12.75 MPa 140.0 → 130.0 kgf/cm^2 1991 → 1849 psi

4.4.4 Checking nozzle spraying condition

CAUTION

- **Check the nozzle injection pressure and condition after you make sure that there is nobody standing in the direction the fume goes. If the fume from the nozzle directly contacts the**

human body, cells may be destroyed and blood poisoning may be caused.

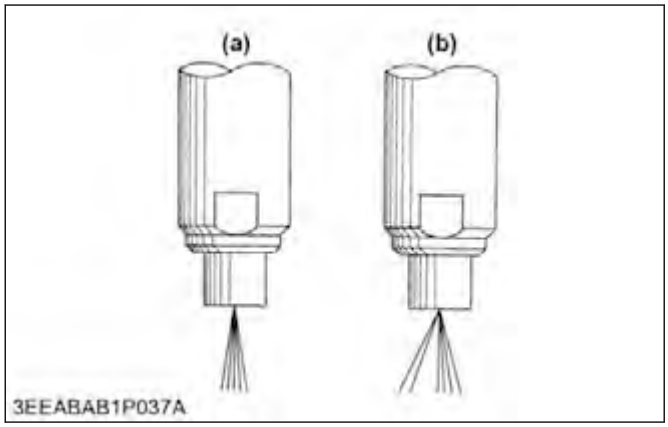

(a) Good (b) Bad

1. Set the injection nozzle to a nozzle tester, and check the nozzle spraying condition.
2. If the spraying condition is damaged, replace the nozzle piece.

4.4.5 Checking fuel injection pressure

CAUTION

- **Check the nozzle injection pressure and condition after you make sure that there is nobody standing in the direction the fume goes. If the fume from the nozzle directly contacts the human body, cells may be destroyed and blood poisoning may be caused.**

(Reference)

Pressure variation (0.01 mm (0.0004 in.))	Factory specification	Approximately 235 kPa 2.4 kgf/cm^2 34 psi

Pressure variation difference of adjusting washer thickness

1. Set the injection nozzle to a nozzle tester.

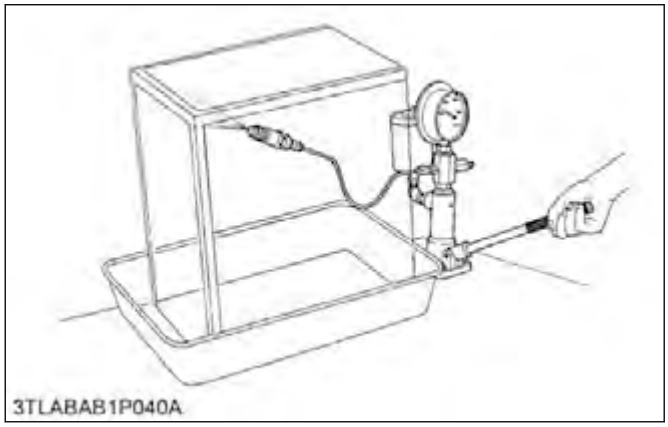

2. Slowly move the tester handle to measure the pressure at which fuel begins jetting out from the nozzle.
3. If the measurement is not within the factory specifications, replace the adjusting washer (1) in the nozzle holder to adjust it.

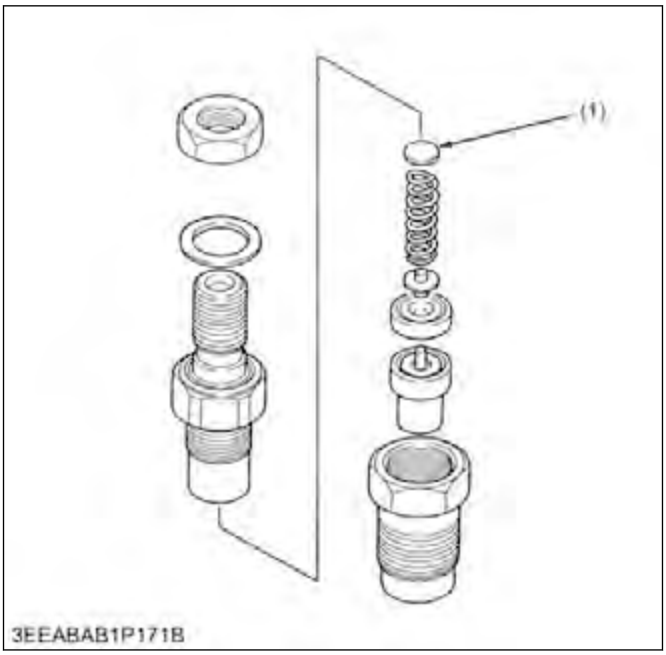

(1) Adjusting washer

Fuel injection pressure	Factory specification	13.73 to 14.70 MPa 140.0 to 150.0 kgf/cm^2 1992 to 2133 psi

4.4.6 Checking valve seat tightness

CAUTION

- **Check the nozzle injection pressure and condition after you make sure that there is nobody standing in the direction the fume goes. If the fume from the nozzle directly contacts the human body, cells may be destroyed and blood poisoning may be caused.**

https://truckmanualshub.com/

1. Set the injection nozzle to a nozzle tester.

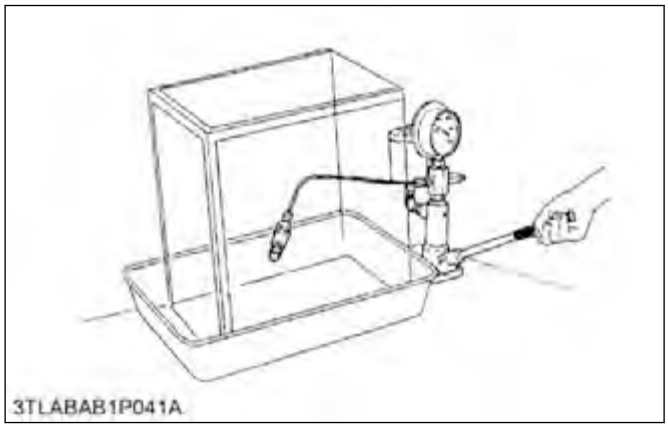

2. Raise the fuel pressure, and keep at specified pressure for 10 seconds.

Valve seat tightness	Factory specification	No fuel leak at 12.75 MPa 130.0 kgf/cm^2 1849 psi

3. If any fuel leak is found, replace the nozzle piece.

4.4.7 Checking nozzle holder

CAUTION

- **Check the nozzle injection pressure and condition after you make sure that there is nobody standing in the direction the fume goes. If the fume from the nozzle directly contacts the human body, cells may be destroyed and blood poisoning may be caused.**

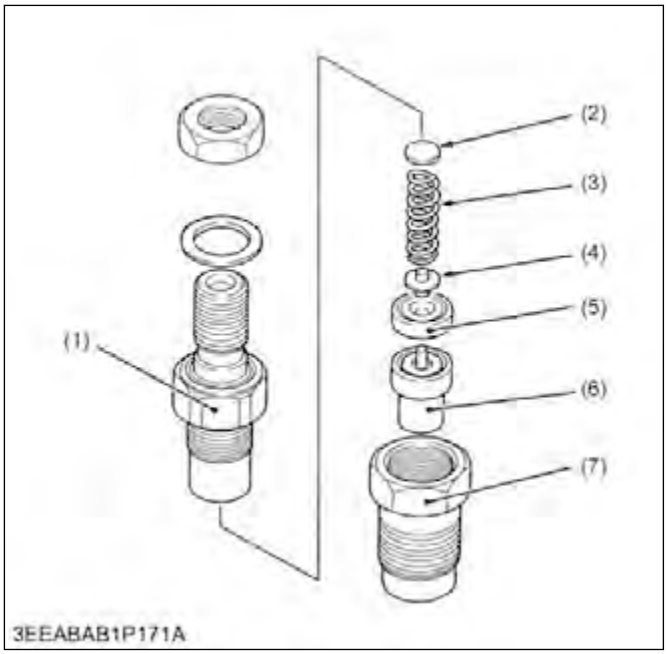

(1) Nozzle holder
(2) Adjusting washer
(3) Nozzle spring
(4) Push rod
(5) Distance piece
(6) Nozzle piece
(7) Nozzle retaining nut

1. Secure the nozzle retaining nut (7) with a vise.
2. Remove the nozzle holder (1), and remove parts inside.

(When reassembling)

- Assemble the nozzle in clean fuel oil.
- Install the push rod (4), noting its direction.
- After assembling the nozzle, be sure to adjust the fuel injection pressure.

Tightening torque	Nozzle holder	35 to 39 N·m 3.5 to 4.0 kgf·m 26 to 28 lbf·ft
	Overflow pipe retaining nut	20 to 24 N·m 2.0 to 2.5 kgf·m 15 to 18 lbf·ft
	Nozzle holder assembly	49 to 68 N·m 5.0 to 7.0 kgf·m 37 to 50 lbf·ft

5. Disassembling and assembling

5.1 Separating engine

5.1.1 Draining engine oil

1. Start and warm up the engine for approx. 5 minutes.
2. Place an oil pan underneath the engine.

3. Remove the drain plug (1) to drain oil.

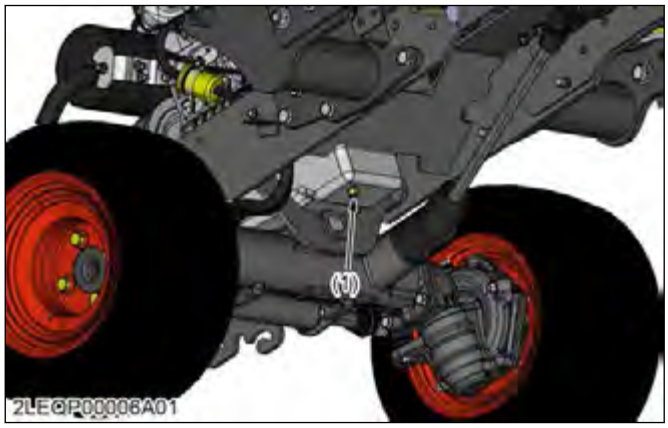

(1) Drain plug

4. After draining, reinstall the drain plug (1).

(When refilling)

IMPORTANT

- **Never mix two different type of oil.**
- **Use the proper SAE Engine Oil according to ambient temperature.**

- Fill the engine with the new engine oil through the oil inlet (2) to the upper line on the dipstick (3).

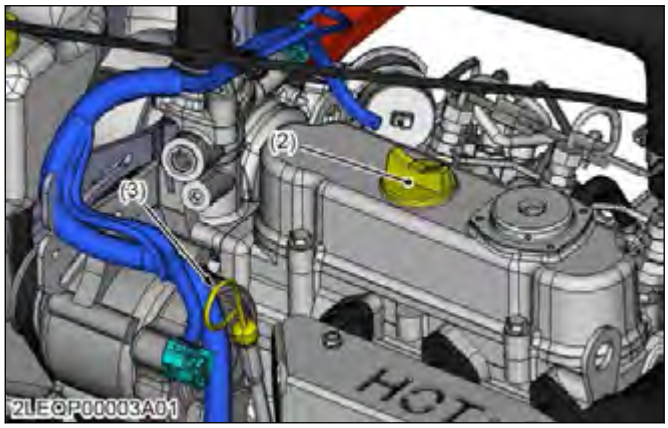

(2) Oil inlet (3) Dipstick

Engine oil	Capacity	3.1 L 3.3 U.S.qts 2.7 Imp.qts

Tightening torque	Drain plug with copper gasket (M12, 1.25)	33 to 37 N·m 3.3 to 3.8 kgf·m 24 to 27 lbf·ft

RELATED PAGE
LUBRICANTS, FUEL AND COOLANT on page 2-7

5.1.2 Removing battery

WARNING

To avoid serious injury or death:

- **When disconnecting the battery cables, disconnect the negative cable from the battery first.**
- **When connecting, connect the positive cable to the battery first.**

1. Remove the under panel (1).

(1) Under panel

2. Disconnect the negative cable (3) from the battery (2).
3. Disconnect the positive cable (4) from the battery (2) and remove the battery.

(2) Battery (4) Positive cable
(3) Negative cable

https://truckmanualshub.com/

5.1.3 Removing bonnet

(1) Bonnet
(2) Bonnet bracket
(3) Front guard

1. Remove the front guard (3).
2. Open the bonnet.
3. Disconnect the headlight harness from the headlights and bonnet.
4. Disconnect the bonnet guide rod from the bonnet.
5. Disconnect the L.H. and R.H. bonnet brackets (2) from the frame.
6. Remove the bonnet (1).

5.1.4 Disconnecting wiring harness and ground cables

1. Disconnect the starter connector and cable (1), oil pressure switch (2), alternator connector and cable (3) and coolant temperature switch (4).

(1) Starter connectors
(2) Oil pressure switch
(3) Alternator connectors
(4) Coolant temperature switch

2. Disconnect the stop solenoid (5) and glow plug wire (6).

(5) Stop solenoid
(6) Glow plug

3. Disconnect the ground cables (7), (8), and (9).

(7) Ground cable (Starer to frame)
(8) Ground cable (Harness to frame)
(9) Ground cable (Battery to L.H. engine support)
(10) Ground cable (Wire harness to R.H. engine support)
(11) Nut

(When reassembling)

Tightening torque	Engine mounting nut	24 to 27 N·m 2.4 to 2.8 kgf·m 18 to 20 lbf·ft

5.1.5 Disconnecting fuel hoses

1. Disconnect fuel return hose (1) and fuel supply hose (2) from engine.

2. Disconnect fuel filter (3) from engine.

(1) Fuel return hose
(2) Fuel supply hose
(3) Fuel filter

5.1.6 Disconnecting accelerator wire

1. Disconnect accelerator wire (2) from speed control lever (1).

(1) Speed control lever
(2) Accelerator wire

5.1.7 Disconnecting propeller shaft assembly

1. Disconnect the propeller shaft assembly (1) from the propeller spacer (3).

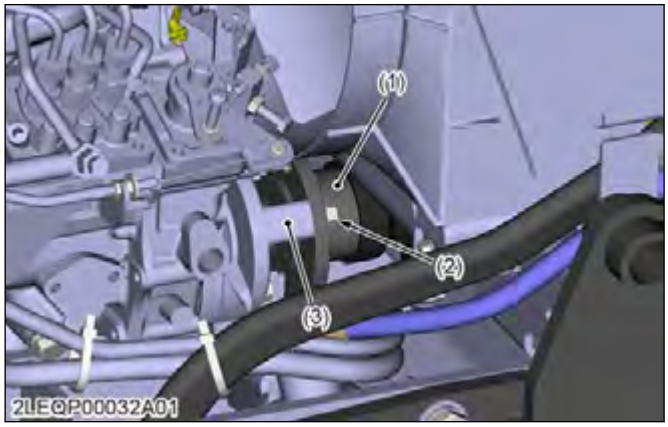

(1) Propeller shaft assembly
(2) Bolt
(3) Propeller spacer

(When reassembling)

Tightening torque	Propeller shaft assembly bolt	24 to 27 N·m 2.4 to 2.8 kgf·m 18 to 20 lbf·ft

5.1.8 Separating engine

WARNING

To avoid serious injury or death:

- **The engine is heavy. Use a hoist or crane when removing the engine.**

1. Remove the engine mounting nuts (1) from both sides of the engine.

NOTE

- **The rear engine mounting nuts secure ground cables to the L.H. and R.H. engine supports. If the rear engine mounting nuts have already been removed from a previous step, just remove the front engine mounting nuts.**

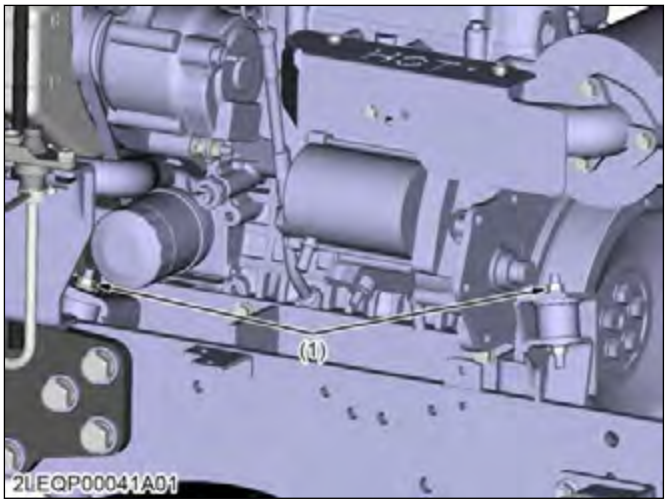

(1) Engine mounting nut

2. Securely attach the lifting chain to the engine hooks (2), (3) and separate the engine assembly with the radiator from the frame.

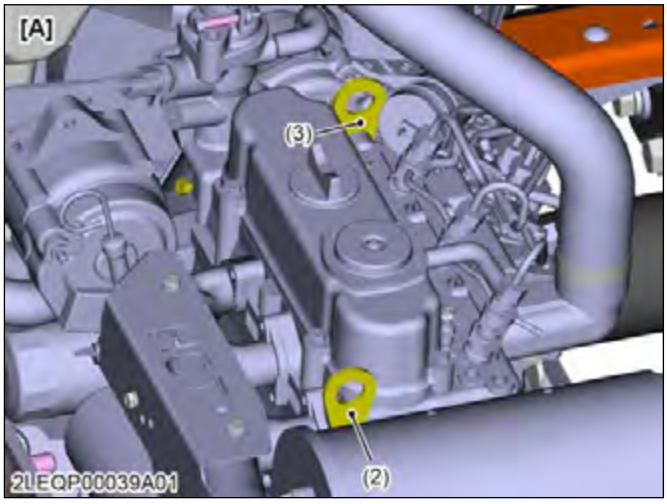

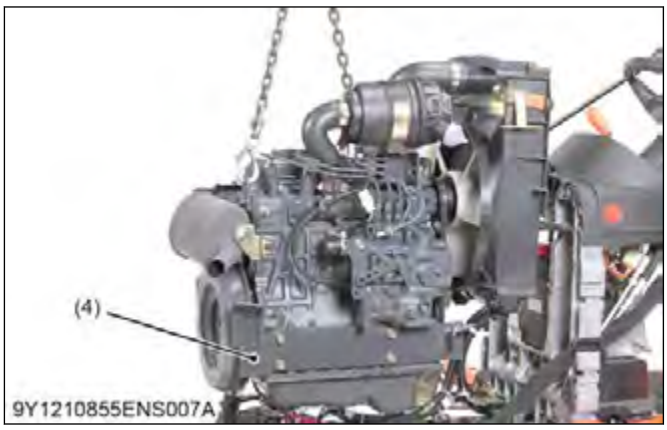

(2) Front engine hook
(3) Rear engine hook
(4) Engine support
[A] D902-E4

3. Remove the L.H. and R.H. engine supports (4).

(When reassembling)

Tightening torque	Engine mounting nut	24 to 27 N·m 2.4 to 2.8 kgf·m 18 to 20 lbf·ft
	Cushion mounting nut	24 to 27 N·m 2.4 to 2.8 kgf·m 18 to 20 lbf·ft
	Engine support mounting screw	48 to 55 N·m 4.9 to 5.7 kgf·m 36 to 41 lbf·ft

5.1.9 Draining coolant and removing outer engine parts

CAUTION

- **Never open the radiator cap while operating or immediately after stopping. Otherwise, hot water will spout out from the radiator. Wait for more than ten minutes to cool the radiator, before opening the cap.**

1. Connect the engine stands (9) to the crankcase.
2. Open the radiator drain plug, and remove radiator cap to completely drain the coolant.
3. After all coolant is drained, close the drain plug.
4. Loosen the inlet hose band and the radiator hose bands, and remove the radiator (1) with the radiator hoses (2) and the air cleaner (3).
5. Loosen the fan belt. Remove the alternator (6), the starter motor (8), the fan and the fan belt.
6. Remove the heat proof cover (7), the muffler (5) and the exhaust manifold.

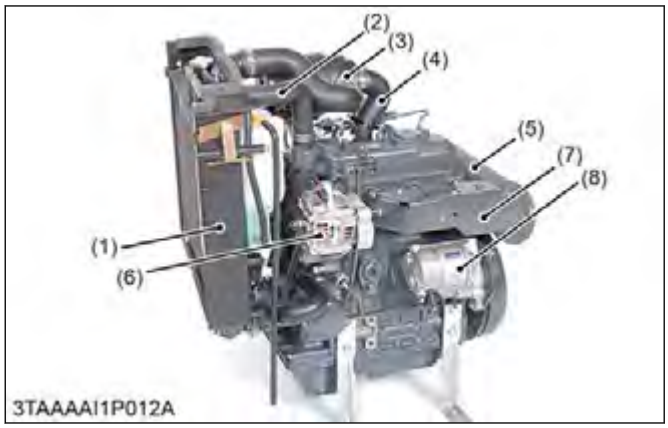

(1) Radiator
(2) Radiator hose
(3) Air cleaner
(4) Inlet hose
(5) Muffler
(6) Alternator
(7) Heat proof cover
(8) Starter motor
(9) Engine stand

(When reassembling)

Coolant with recovery tank	Capacity	2.7 L 2.8 U.S.qts 2.4 Imp.qts

RELATED PAGE
LUBRICANTS, FUEL AND COOLANT on page 2-7

5.2 Disassembling the engine

5.2.1 Cylinder head and valve

5.2.1.1 Removing cylinder head cover

1. Disconnect the breather hose.
2. Remove the cylinder head cover nuts.
3. Remove the cylinder head cover (1).

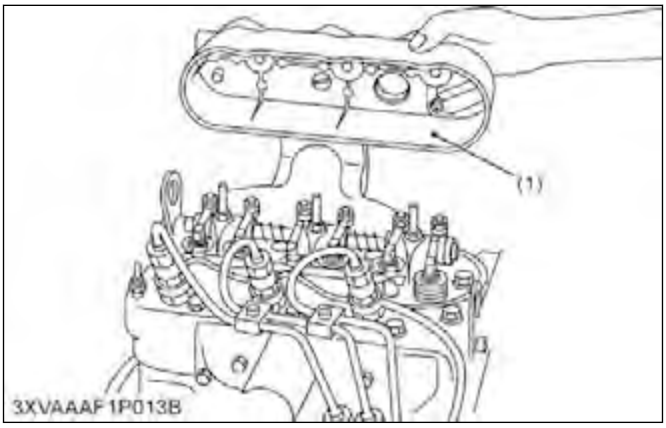

(1) Cylinder head cover

(When reassembling)

- Check to see if the cylinder head cover gasket is not damaged.

https://truckmanualshub.com/

Tightening torque	Cylinder head cover screw	9.81 to 11.2 N·m 1.00 to 1.15 kgf·m 7.24 to 8.31 lbf·ft

5.2.1.2 Removing injection pipes

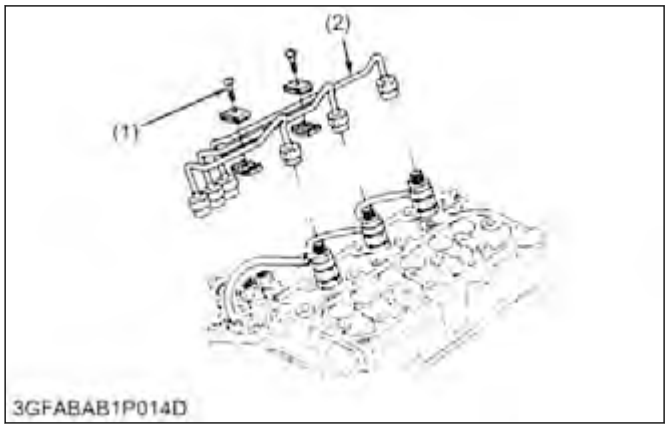

(1) Pipe clamp (2) Injection pipe

1. Loosen the screws to the pipe clamp (1).
2. Remove the injection pipes (2).

(When reassembling)

- Send compressed air into the pipes to blow out dust. Then, reassemble the pipes in the reverse order.

Tightening torque	Injection pipe retaining nut	25 to 34 N·m 2.5 to 3.5 kgf·m 18 to 25 lbf·ft

5.2.1.3 Removing nozzle holder assembly and glow plug

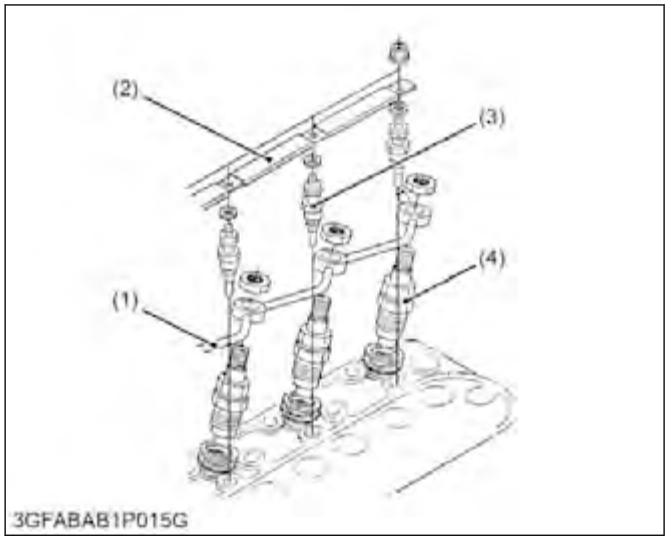

(1) Overflow pipe (3) Glow plug
(2) Lead (4) Nozzle holder assembly

1. Remove the overflow pipe (1).
2. Remove the nozzle holder assemblies (4).
3. Remove the copper gasket (5) and heat seal (6).

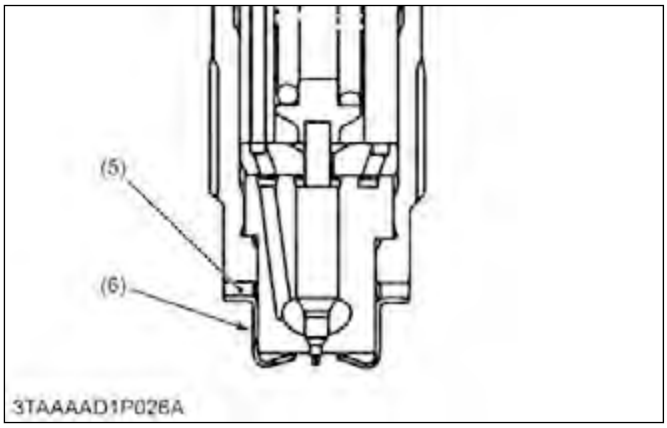

(5) Copper gasket (6) Heat seal

4. Remove the lead (2) from the glow plugs (3).
5. Remove the glow plugs (3).

(When reassembling)

- Replace the copper gasket and heat seal with new ones.

Tightening torque	Overflow pipe retaining nut	20 to 24 N·m 2.0 to 2.5 kgf·m 15 to 18 lbf·ft
	Nozzle holder assembly	49 to 68 N·m 5.0 to 7.0 kgf·m 37 to 50 lbf·ft
	Glow plug	7.9 to 14 N·m 0.80 to 1.5 kgf·m 5.8 to 10 lbf·ft

5.2.1.4 Removing nozzle heat seal

IMPORTANT

- **Use a plus (phillips head) screw driver (1) that has a diameter which is bigger than the heat seal hole.**

Heat seal hole	Factory specification	Approximately 6 mm (1/4 in.)

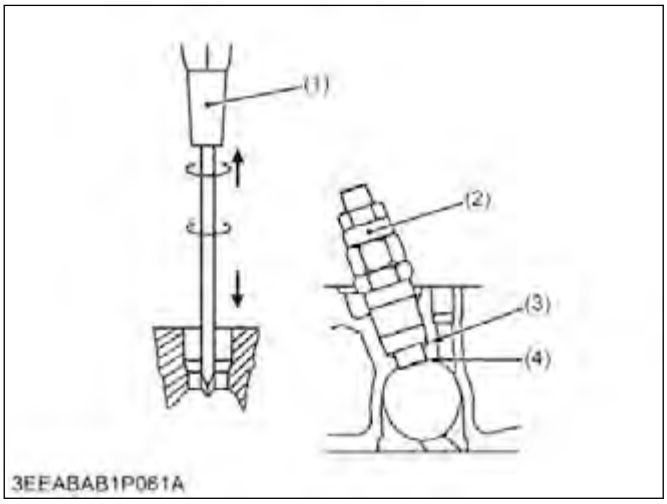

(1) Plus screw driver
(2) Injection nozzle
(3) Injection nozzle gasket
(4) Heat seal

1. Drive screw driver (1) lightly into the heat seal hole.
2. Turn screw driver three or four times each way.
3. While turning the screw driver, slowly pull the heat seal (4) out together with the injection nozzle gasket (3).
4. If the heat seal drops, repeat the above procedure.

(When reassembling)

- Heat seal and injection nozzle gasket must be changed when the injection nozzle is removed for cleaning or for service.

5.2.1.5 Removing rocker arm and push rod

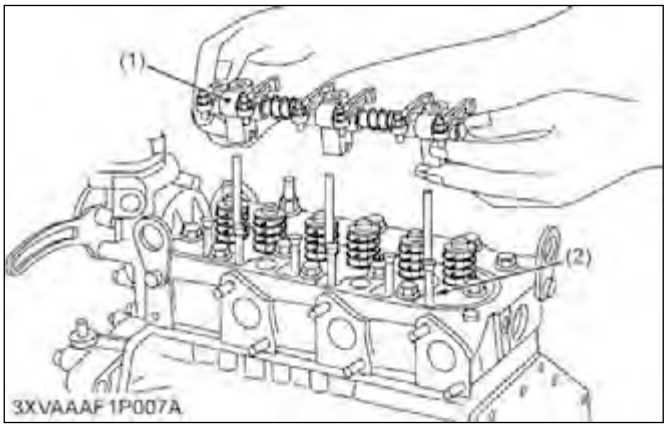

(1) Rocker arm assembly
(2) Push rod

1. Remove the rocker arm bracket screw.
2. Remove the rocker arm assembly (1).
3. Remove the push rods (2).

(When reassembling)

IMPORTANT

- **After installing the rocker arm, be sure to adjust the valve clearance.**
- When refitting the push rods (2) into the tappets (3), make sure the push rod locates correctly into the tappet seat.

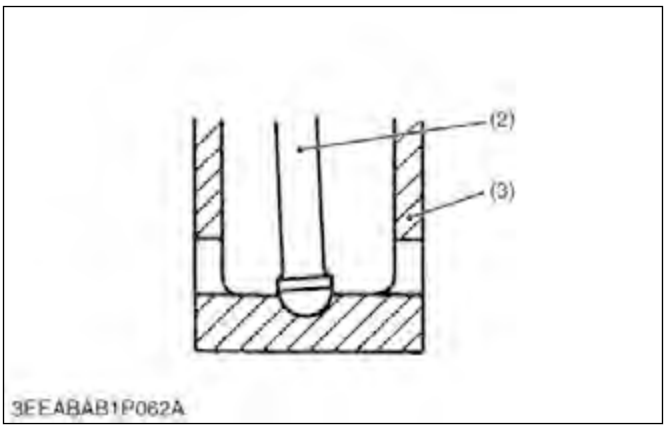

(2) Push rod
(3) Tappet

Tightening torque	Rocker arm bracket screw	9.81 to 11.2 N·m 1.00 to 1.15 kgf·m 7.24 to 8.31 lbf·ft

5.2.1.6 Removing cylinder head and cylinder head gasket

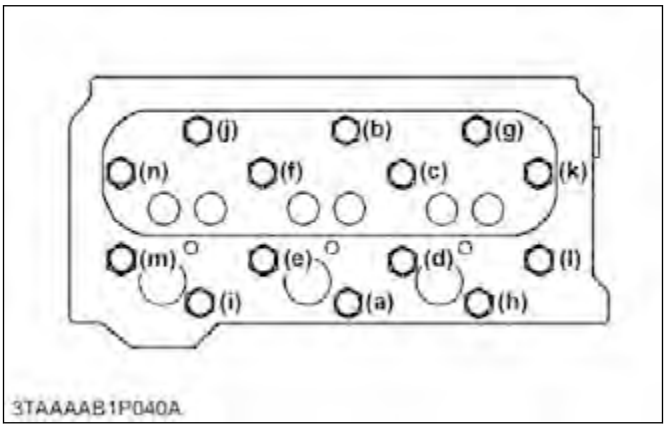

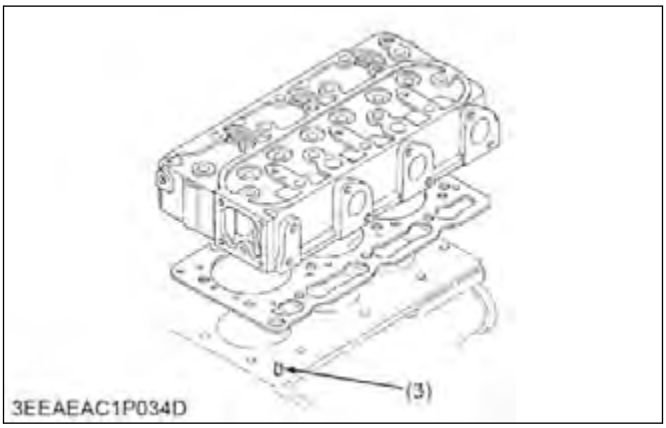

(3) Pin pipe

(n) to (a):
To loosen

https://truckmanualshub.com/

(a) to (n):
To tighten

1. Loosen the pipe clamps (1), and remove the water return pipe (2).

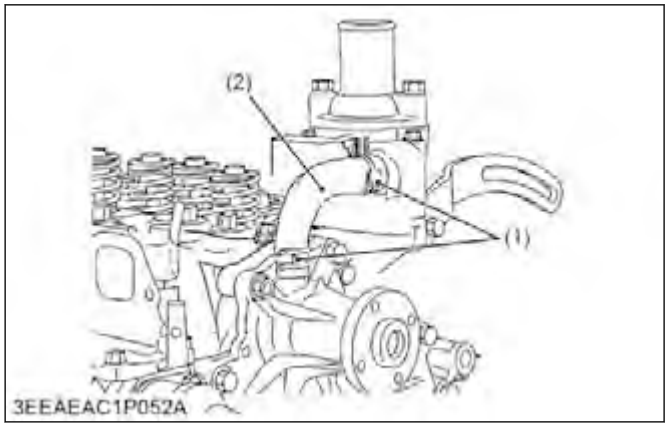

(1) Clamp (2) Return pipe

2. Remove the cylinder head screw in the order of (n) to (a) and remove the cylinder head.
3. Remove the cylinder head gasket.

(When reassembling)

NOTE
- **Do not use O-ring on the pin pipe.**
- **It is not necessary to retighten the cylinder head screw and to readjust valve clearance after engine warmed up.**

- Replace the cylinder head gasket with a new one.
- When mounting the gasket, set it to the pin pipe holes. Be careful not to mount it reversely.
- The cylinder head should be free of scratches and dust.
- Install the cylinder head, using care not to damage the gasket.
- After applying engine oil to the thread of screws, tighten them in several steps and specified sequence (a) to (n).

Tightening torque	Cylinder head screw	38 to 42 N·m 3.8 to 4.3 kgf·m 28 to 31 lbf·ft

5.2.1.7 Removing tappets

IMPORTANT
- **Do not change the combination of tappet and tappet guide.**

1. Remove the tappets (1) from the crankcase.

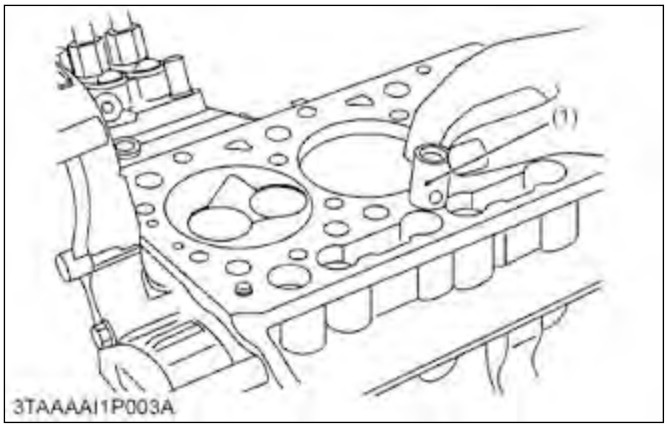

(1) Tappet

(When reassembling)
- Visually check the contact between tappets and cams for proper rotation. If problem is found, replace tappets.
- Before installing the tappets, apply engine oil thinly around them.

5.2.1.8 Removing valves

IMPORTANT
- **Do not change the combination of valve and valve guide.**

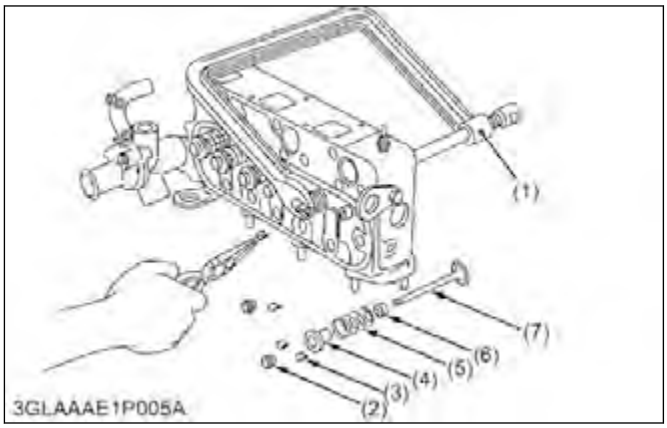

(1) Valve spring replacer
(2) Valve cap
(3) Valve spring collet
(4) Valve spring retainer
(5) Valve spring
(6) Valve stem seal
(7) Valve

1. Remove the valve caps (2).
2. Remove the valve spring collet (3), pushing the valve spring retainer (4) by valve spring replacer (1).
3. Remove the valve spring retainer (4), valve spring (5) and valve stem seal (6).
4. Remove the valve (7).

(When reassembling)
- Wash the valve stem and valve guide hole, and apply engine oil sufficiently.

- After installing the valve spring collets, lightly tap the stem to assure proper fit with a plastic hammer.

5.2.1.9 Removing thermostat assembly

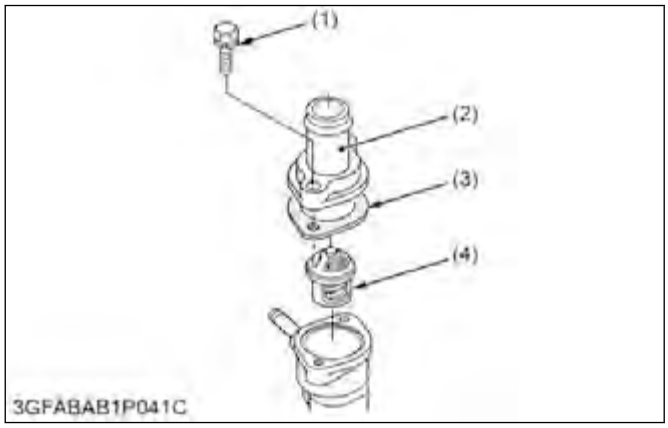

(1) Thermostat cover mounting screw
(2) Thermostat cover
(3) Thermostat cover gasket
(4) Thermostat assembly

1. Remove the thermostat cover mounting screws (1), and remove the thermostat cover (2).
2. Remove the thermostat assembly (4).

(When reassembling)

- Apply a liquid gasket (Three Bond 1215 or equivalent) only at the thermostat cover side of the gasket (3).

5.2.2 Gear case and timing gears

5.2.2.1 Removing oil pan and oil strainer

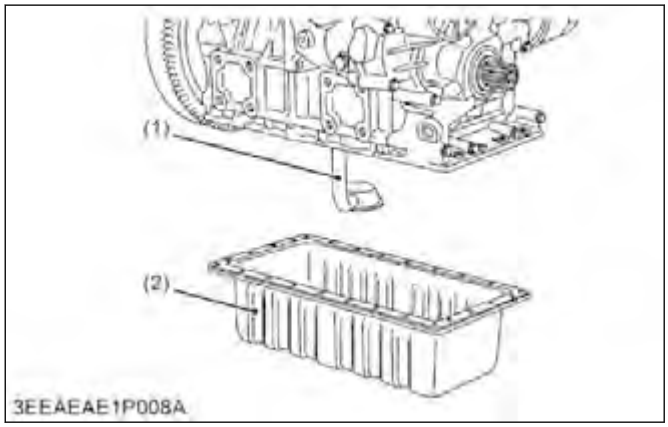

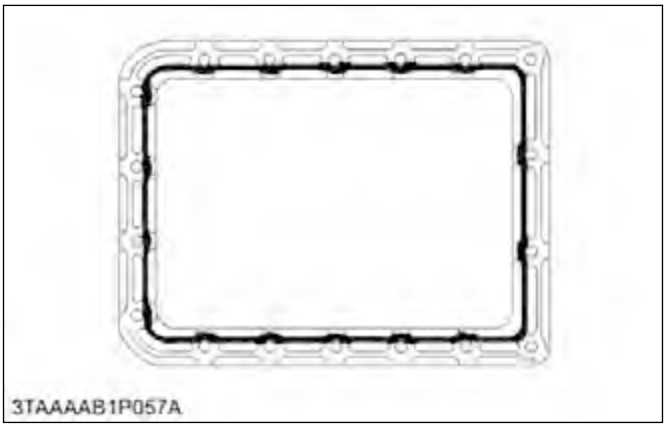

(1) Oil strainer
(2) Oil pan

1. Remove the oil pan mounting screws.
2. Remove the oil pan (2).
3. Remove the oil strainer (1).

(When reassembling)

IMPORTANT

- **Scrape off the old adhesive completely. Wipe the sealing surface clean using waste cloth soaked with gasoline. Now apply new adhesive thick all over the contact surface. Apply the adhesive also on the center of the flange as well as on the inner wall of each screw hole.**

New adhesive	Apply	Thickness 3.0 to 5.0 mm (0.12 to 0.19 in.)

- **Cut the nozzle of the "liquid gasket" container at its second notch. Apply "liquid gasket" about 5.0 mm (0.19 in.) thick. Within 20 minutes after the application of fluid sealant, reassemble the components. Wait then for about 30 minutes, and pour oil in the crankcase.**

Liquid gasket	Apply	Thickness 5.0 mm 0.19 in.

- After cleaning the oil strainer, check to see that the filter mesh in clean, and install it.
- Visually check the O-ring, apply engine oil, and install it.
- Securely fit the O-ring to the oil strainer.
- To avoid uneven tightening, tighten oil pan mounting screws in diagonal order from the center.

5.2.2.2 Removing fan drive pulley

1. Secure the flywheel to keep it from turning.
2. Remove the fan drive pulley screw.
3. Draw out the fan drive pulley with a puller.

https://truckmanualshub.com/

(When reassembling)

- Install the pulley to crankshaft, aligning the mark (1) on them (3-cylinder engine).

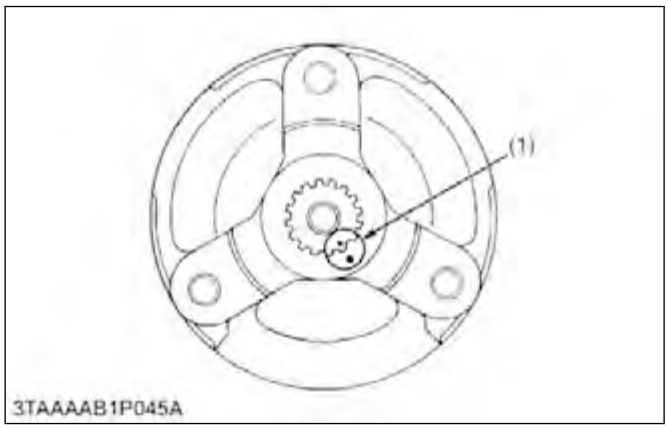

(1) Aligning mark

- Apply engine oil to the fan drive pulley retaining screw. And tighten it.

Tightening torque	Fan drive pulley screw	118 to 127 N·m 12.0 to 13.0 kgf·m 86.8 to 94.0 lbf·ft

5.2.2.3 Removing gear case

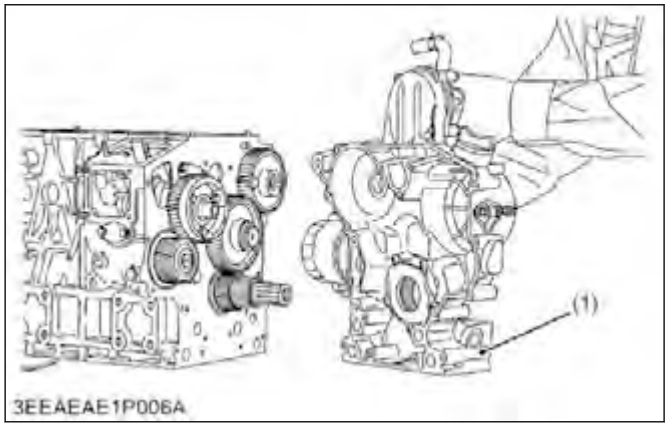

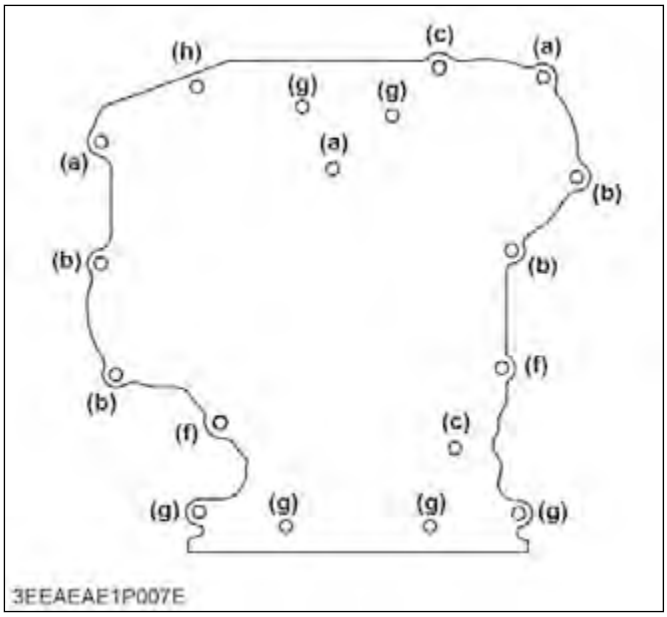

(1) Gear case
(a) Bolt length = 45 mm (1.8 in.)
(b) Bolt length = 50 mm (2.0 in.)
(c) Bolt length = 55 mm (2.2 in.)
(d) Bolt length = 65 mm (2.6 in.)
(e) Bolt length = 68 mm (2.7 in.)
(f) Bolt length = 70 mm (2.8 in.)
(g) Bolt length = 85 mm (3.3 in.)
(h) Nut

1. Remove the fuel feed pump.
2. Remove the gear case.

(When reassembling)

- Grease thinly to the oil seal, and install it, ensuring the lip does not come off.

5.2.2.4 Removing speed control plate

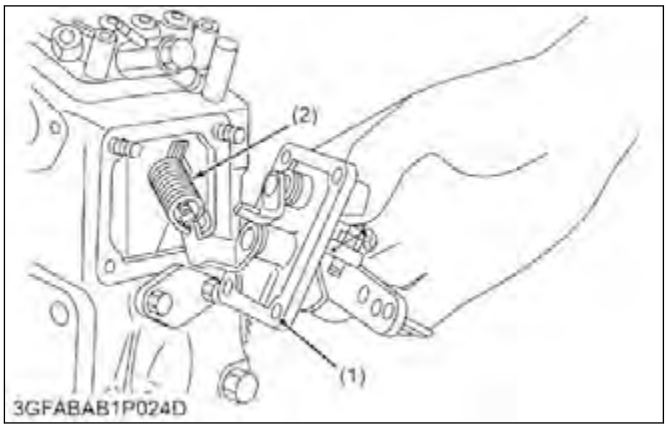

(1) Speed control plate
(2) Governor spring

1. Remove the engine stop solenoid.
2. Remove the speed control plate (1).

(When reassembling)

- Apply a liquid gasket (Three Bond 1215 or equivalent) to both sides of the solenoid cover gasket and control plate gasket.
- Be careful not to drop the governor spring (2) into the crankcase.

5.2.2.5 Removing injection pump

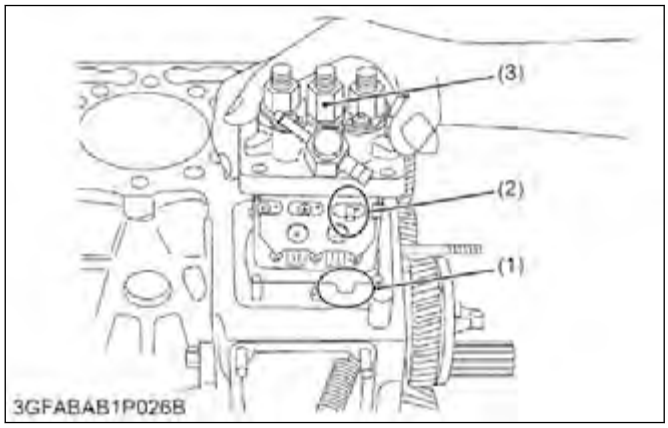

(1) Notch
(2) Control rack pin
(3) Injection pump
(4) Start spring
(5) Thrust lever
(6) Governor spring

1. Disconnect the start spring (4) on the thrust lever (5) side.
2. Align the control rack pin (2) with the notch (1) on the crankcase, and remove the injection pump (3).
3. Remove the injection pump shims.
4. In principle, the injection pump should not be disassembled.

(When reassembling)

NOTE

- **Addition or reduction of shim delays or advances the injection timing.**

Shim (0.05 mm (0.002 in.))	Delays or advances the injection timing	Approximately 0.0087 rad 0.50°

- **In disassembling and replacing, be sure to use the same number or new gasket shims with the same thickness.**
- When installing the injection pump, insert the control rack pin (2) firmly into the groove (7) of the thrust lever of fork lever.

(7) Groove

https://truckmanualshub.com/

5.2.2.6 Removing cam gear, idle gear 1, 2 and governor gear

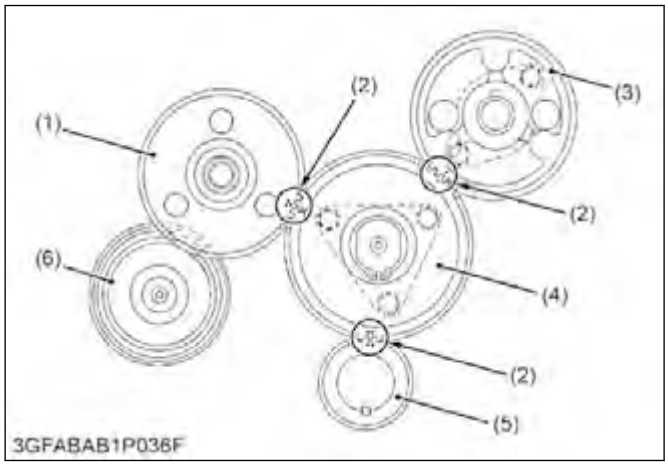

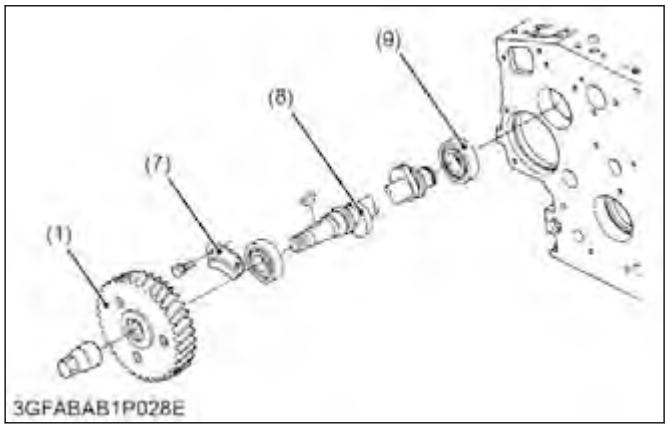

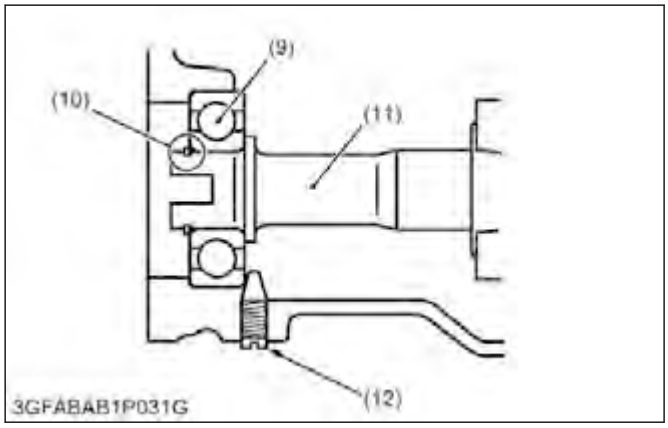

(1)	Fuel cam gear	(7)	Fuel camshaft stopper
(2)	Alignment mark	(8)	Fuel camshaft
(3)	Cam gear	(9)	Ball bearing
(4)	Idle gear 1	(10)	External snap ring
(5)	Crank gear	(11)	Governor shaft
(6)	Governor gear	(12)	Set screw

1. Remove the idle gear 1 (4).
2. Remove the fuel camshaft stopper (7).
3. Draw out the fuel cam gear (1) with fuel camshaft (8).
4. Remove the camshaft stopper bolt.
5. Remove the cam gear (3) with camshaft.

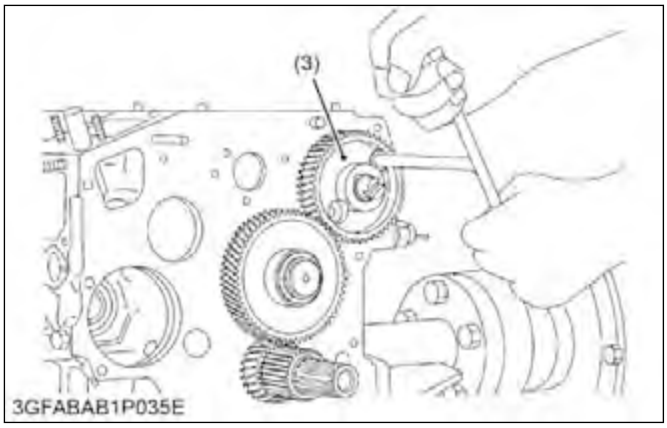

(3) Cam gear

6. Remove the external snap ring (10) from the governor shaft (11).
7. Remove the governor gear (6) with governor shaft (11).

NOTE

- **Three-lever type fork lever**
  To remove the governor shaft, follow the procedures in 5, 6 above and never remove fork lever and the max. torque limiter.

(When reassembling)

IMPORTANT

- **When replacing the ball bearing of governor shaft, securely fit the ball bearing (9) to the crankcase, apply an adhesive (Three Bond 1324B or equivalent) to the set screw (12), and fasten the screw until its tapered part contacts the circumferential end of the ball bearing.**
- **When installing the idle gear, be sure to align the alignment marks (2) on each gears.**

- Apply engine oil thinly to the fuel camshaft before installation.
- Make sure to assemble the external snap ring of the governor shaft.
- Check the governor shaft for smooth rotation.

5.2.3 Piston and connecting rod

5.2.3.1 Removing connecting rod

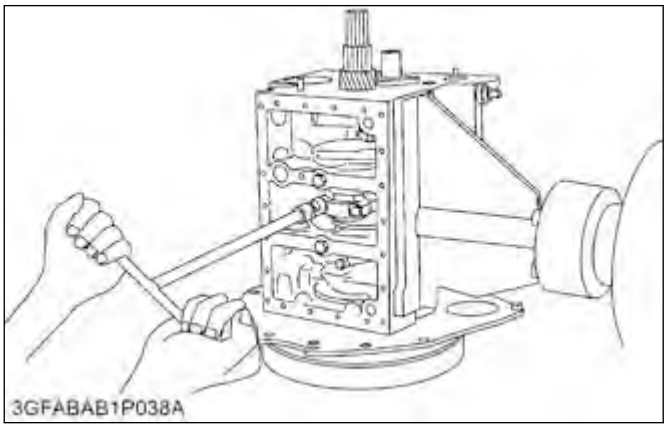

1. Remove the connecting rod cap.

(When reassembling)

- Align the marks (a) with each other. (Face the marks toward the injection pump.)

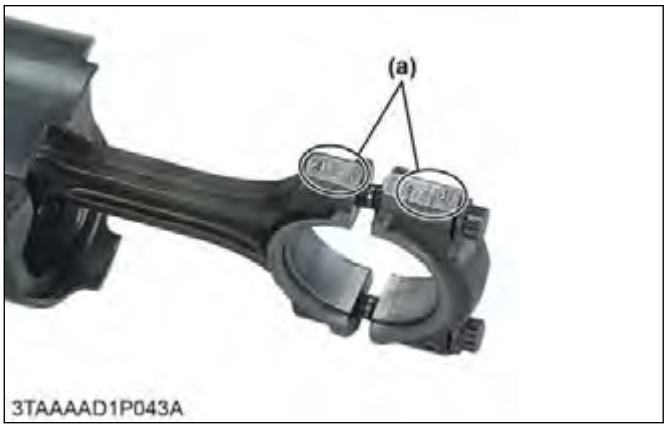

(a) Mark

- Apply engine oil to the connecting rod screws and lightly screw it in by hand, then tighten it to the specified torque.
  If the connecting rod screw does not screw in smoothly, clean the threads.
  If the connecting rod screw is still hard to screw in, replace it.

Tightening torque	Connecting rod screw	27 to 30 N·m 2.7 to 3.1 kgf·m 20 to 22 lbf·ft

5.2.3.2 Removing pistons

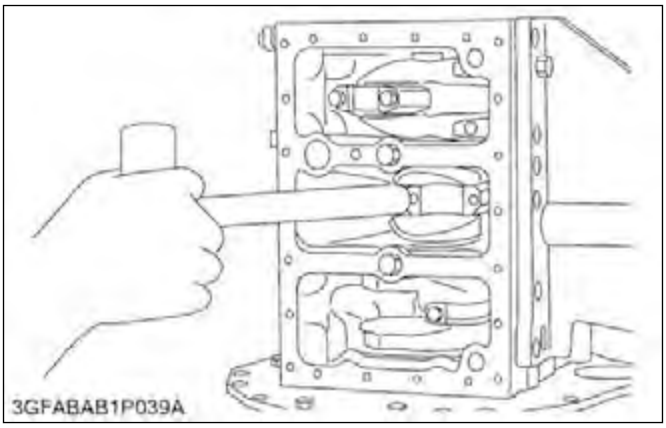

1. Turn the flywheel and bring the piston to top dead center.
2. Draw out the piston upward by lightly tapping it from the bottom of the crankcase with the grip of a hammer.
3. Draw out the other piston in the same method as above.

(When reassembling)

IMPORTANT

- **Do not change the combination of cylinder and piston. Make sure of the position of each piston by marking. For example, mark "1" on the No. 1 piston.**
- **When installing the piston into the cylinder, place the gaps of all the piston rings as shown in the figure.**

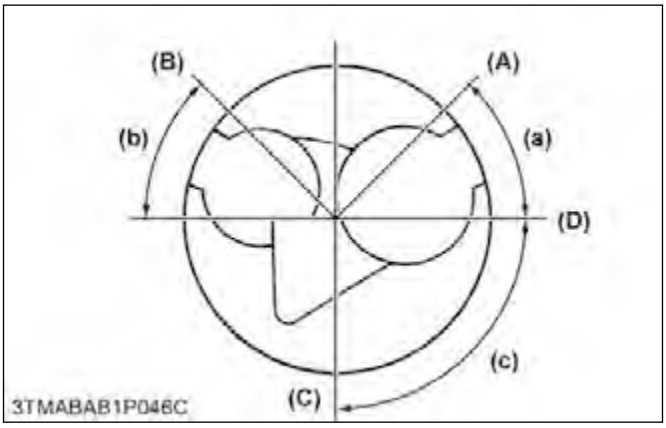

(A) Top ring gap
(B) Second ring gap
(C) Oil ring gap
(D) Piston pin hole
(a) 0.79 rad (45°)
(b) 0.79 rad (45°)
(c) 1.6 rad (90°)

- **Carefully insert the pistons using a piston ring compressor (1). Otherwise, their chrome-plated section may be scratched, causing trouble inside the cylinder.**

https://truckmanualshub.com/

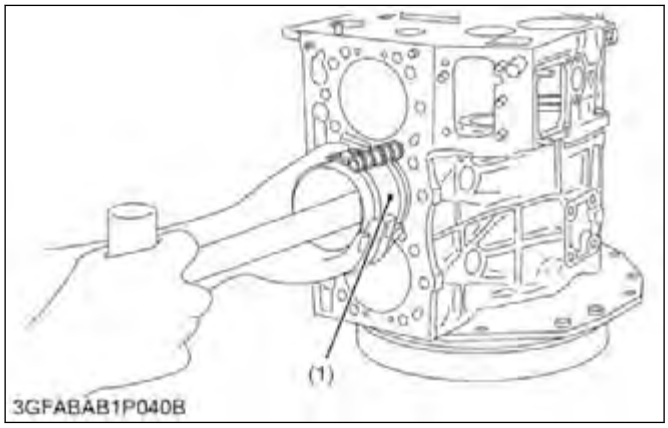

(1) Piston ring compressor

- Before inserting the piston into the cylinder, apply enough engine oil to the piston.
- When inserting the piston into the cylinder, face the mark on the connecting rod to the injection pump.

5.2.3.3 Removing piston ring and connecting rod

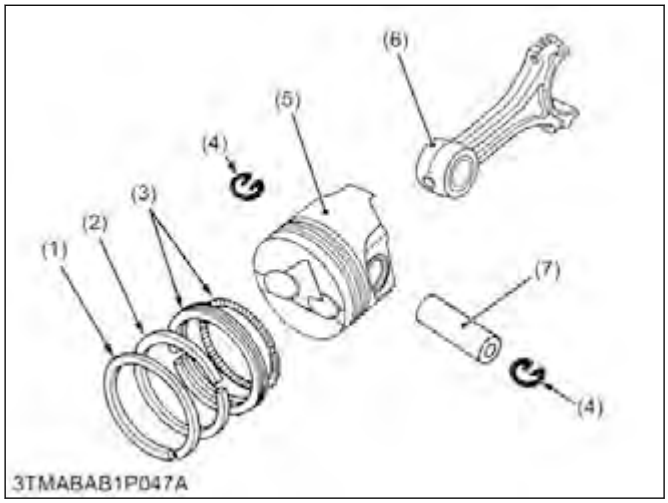

(1) Top ring
(2) Second ring
(3) Oil ring
(4) Piston pin snap ring
(5) Piston
(6) Connecting rod
(7) Piston pin

1. Remove the piston rings using a piston ring tool.
2. Remove the piston pin (7), and separate the connecting rod (6) from the piston (5).

(When reassembling)

NOTE

- **Mark the same number on the connecting rod and the piston so as not to change the combination.**

- Install the rings so that the manufacturer's mark (12) near the gap faces the top of the piston.

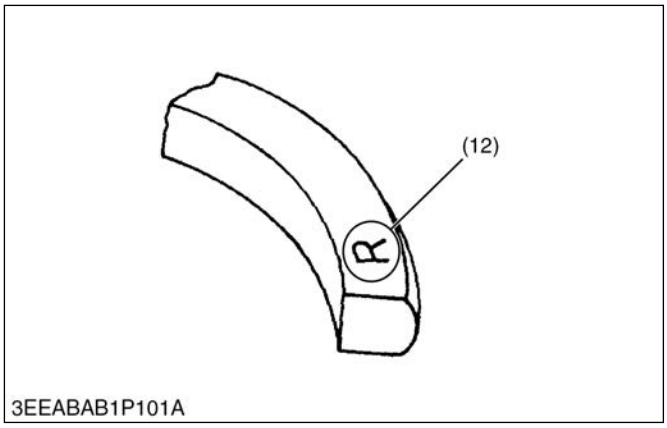

(12) Manufacturer's mark

- When installing the oil ring onto the piston, place the expander joint (10) on the opposite side of the oil ring gap (11).

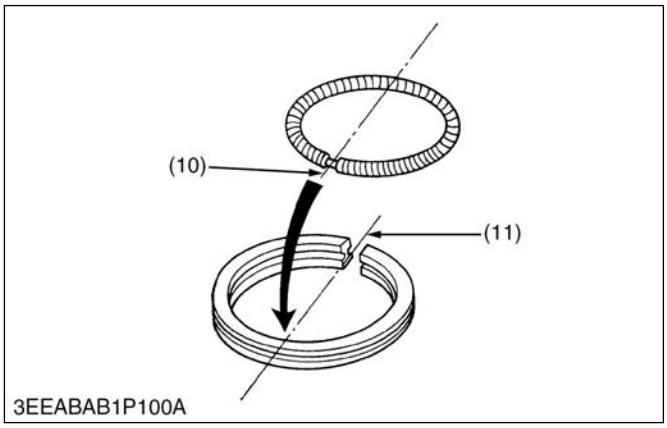

(10) Expander joint (11) Oil ring gap

- Apply engine oil to the piston pin.
- When installing the connecting rod to the piston, immerse the piston in oil and insert the piston pin to the piston.

Temperature of oil	Factory specification	For 10 to 15 minutes 80 ℃ (176 ℉)

- When installing the connecting rod to the piston, align the mark (8) on the connecting rod to the fan-shaped concave (9).

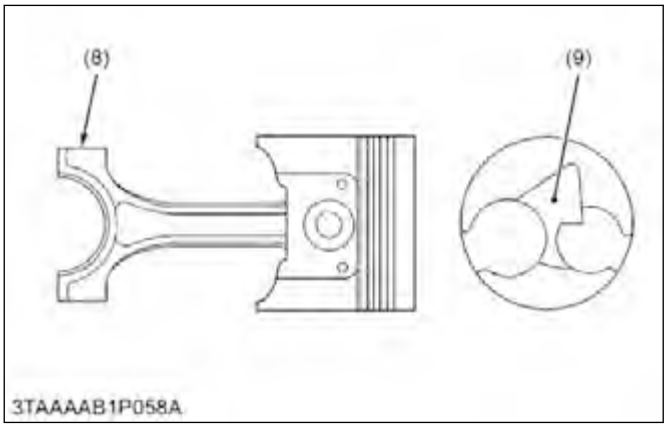

(8) Mark (9) Fan-shaped concave

5.2.4 Flywheel and crankshaft

5.2.4.1 Removing flywheel

1. Secure the flywheel to keep it from turning, using a flywheel stopper.
2. Remove all flywheel screws (1) and then remove the flywheel (2).

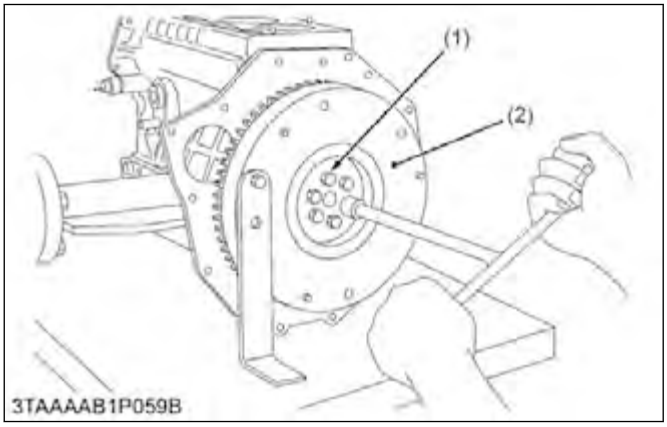

(1) Flywheel screw (2) Flywheel

(When reassembling)

- Align the "**1TC**" mark (a) on the outer surface of the flywheel horizontally with the alignment mark (b) on the rear end plate. Now fit the flywheel in position.

(a) "**1TC**" mark (b) Alignment mark

- Apply engine oil to the threads and the undercut surface of the flywheel screw and fit the screw.

Tightening torque	Flywheel screw	54 to 58 N·m 5.5 to 6.0 kgf·m 40 to 43 lbf·ft

5.2.4.2 Removing bearing case cover

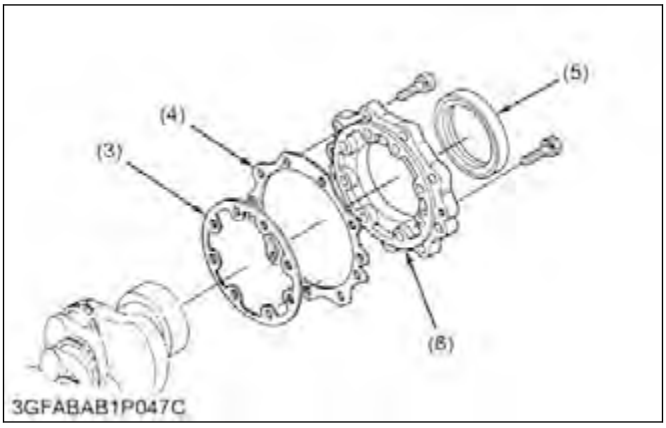

(1) Bearing case cover mounting screw (Inside)
(2) Bearing case cover mounting screw (Outside)
(3) Bearing case gasket
(4) Bearing case cover gasket
(5) Oil seal
(6) Bearing case cover
(a) Top mark "**UP**"

1. Remove the bearing case cover mounting screws.
2. Remove the bearing case cover (6).

(When reassembling)

- Fit the bearing case gasket (3) and the bearing case cover gasket (4) with correct directions.

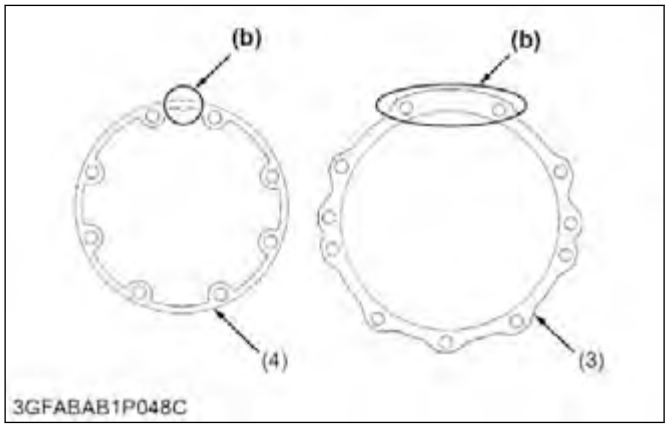

(3) Bearing case gasket
(4) Bearing case cover gasket
(b) Upside

- Install the bearing case cover (6) to position the casting mark "**UP**" on it upward.
- Apply engine oil to the oil seal (5) lip and be careful that it is not rolled when installing.
- Tighten the bearing case cover mounting screws with even force on the diagonal line.

Tightening torque	Bearing case cover mounting screw	9.81 to 11.2 N·m 1.00 to 1.15 kgf·m 7.24 to 8.31 lbf·ft

5.2.4.3 Removing crankshaft assembly

IMPORTANT

- **Be careful to protect crankshaft bearing 1 from scratches, caused by the crank gear, etc. (Wrap the gear in vinyl tape, etc.)**

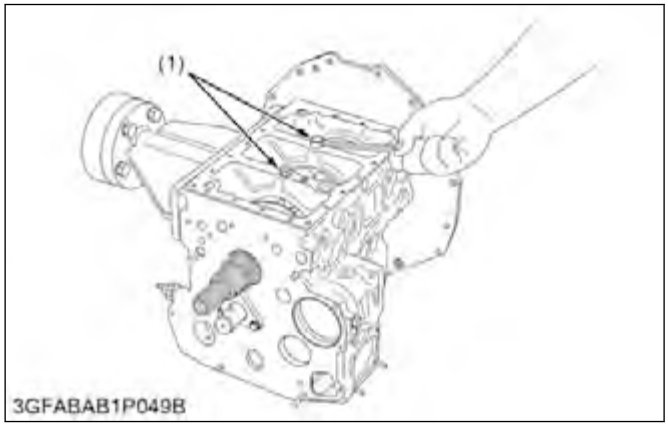

(1) Main bearing case screw 2

1. Remove the main bearing case screw 2 (1).
2. Pull out the crankshaft assembly.

(When reassembling)

- Clean the oil passage of the crankshaft with compressed air.
- Apply oil to the main bearing case screw 2 (1).
- Install the crankshaft assembly, aligning the screw hole of main bearing case with the screw hole of crankcase.
- Clean the oil passage of the crankshaft with compressed air.

Tightening torque	Main bearing case screw 2	27 to 30 N·m 2.7 to 3.1 kgf·m 20 to 22 lbf·ft

5.2.4.4 Removing main bearing case assembly

(1) Main bearing case assembly 1
(2) Main bearing case screw 1
(3) Thrust bearing

1. Remove the two main bearing case screws 1 (2) of each main bearing cases.
2. Remove the main bearing case from crankshaft.

(When reassembling)

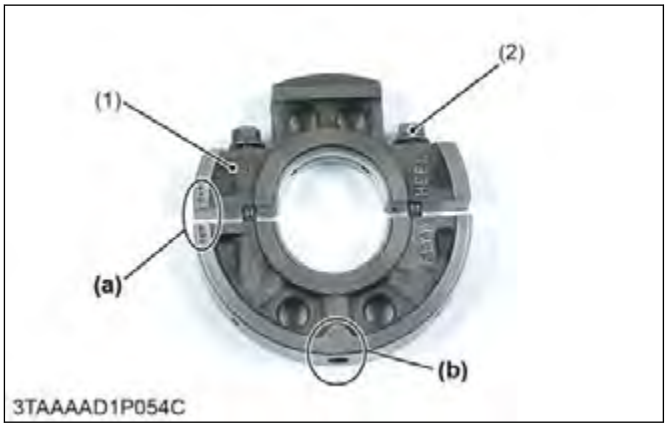

(1) Main bearing case assembly 1
(2) Main bearing case screw 1
(a) Alignment number
(b) Marking ("**A**", "**B**", "**C**")

- Clean the oil passage in the main bearing cases.
- Apply clean engine oil on the bearings.
- Install the main bearing case assemblies in the original positions.
  Since diameters of main bearing cases vary, install them in order of markings (b) ("**A**", "**B**", "**C**") from the gear case side.
- Match the alignment numbers (a) on the main bearing case assembly 1.
- When installing the main bearing case 1 and 2, face the mark "**FLYWHEEL**" to the flywheel.

- Install the thrust bearing (3) with its oil groove facing outward.
- Make sure that the main bearing case moves smoothly after tightening the main bearing case screw 1 to the specified torque.

Tightening torque	Main bearing case screw 1	13 to 15 N·m 1.3 to 1.6 kgf·m 9.4 to 11 lbf·ft

6. Servicing

6.1 Cylinder head and valve

6.1.1 Checking top clearance

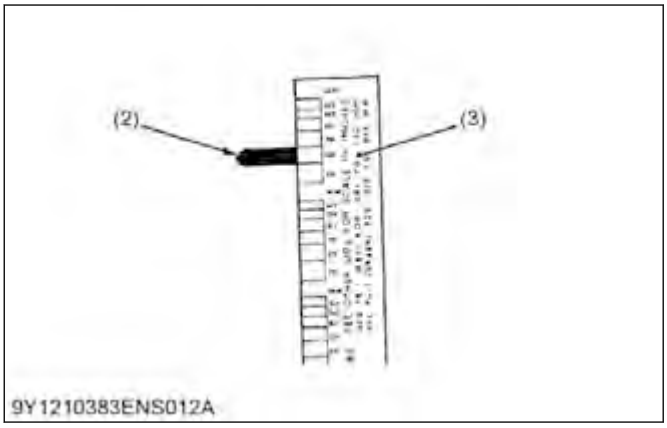

(2) Crushed plastigauge (3) Scale

1. Remove the cylinder head.
2. With the piston at T.D.C., use grease to affix three or four plastigauges (1) of a diameter 1.5 mm (0.059 in.) × 5.0 to 7.0 mm (0.20 to 0.27 in.) long to the crown of the piston; keep the gauges away from the intake valve and combustion chamber fittings.

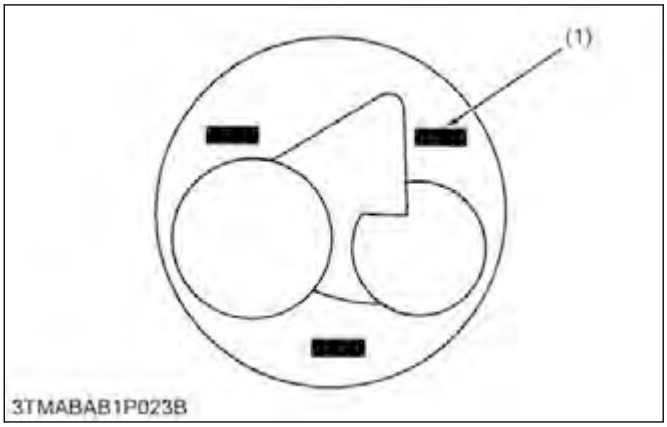

(1) Plastigauge

3. Take the piston to an intermediate position, install the cylinder head and tighten the head bolts to the specified torque.

Tightening torque	Cylinder head screw	38 to 42 N·m 3.8 to 4.3 kgf·m 28 to 31 lbf·ft

4. Turn the crankshaft so the piston goes through T.D.C.
5. Remove the cylinder head and compare the width of the crushed plastigauges (2) with the scale.
6. If they are out of specification, check the oil clearance of the crank pin, journals and piston pins.

Top clearance	Factory specification	0.55 to 0.70 mm 0.022 to 0.027 in.

NOTE
- **Top clearance = Width of the crushed plastigauge (2).**

6.1.2 Checking cylinder head surface flatness

IMPORTANT
- **Do not place the straightedge on the combustion chamber.**
- **Be sure to check the valve recessing after correcting.**

1. Clean the cylinder head surface.
2. Place a straightedge on the cylinder head's four sides and two diagonal as shown in the figure.

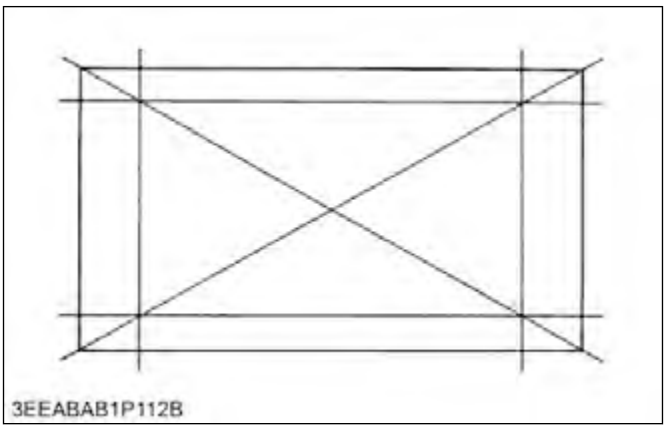

3. Measure the clearance with a thickness gauge.

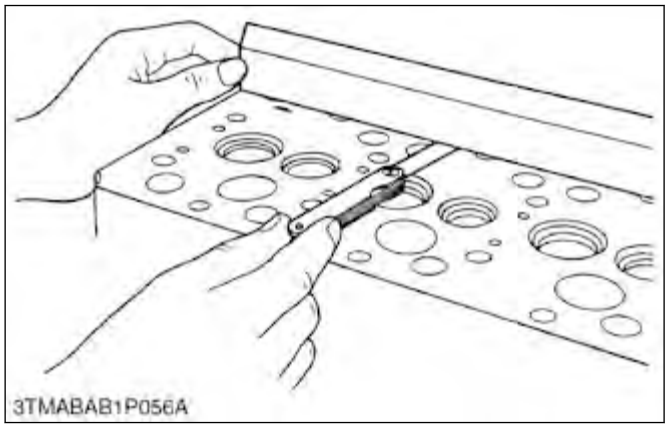

4. If the measurement exceeds the allowable limit, correct it with a surface grinder.

Cylinder head surface flatness	Allowable limit	0.05 mm 0.002 in.

6.1.3 Checking cylinder head flaw

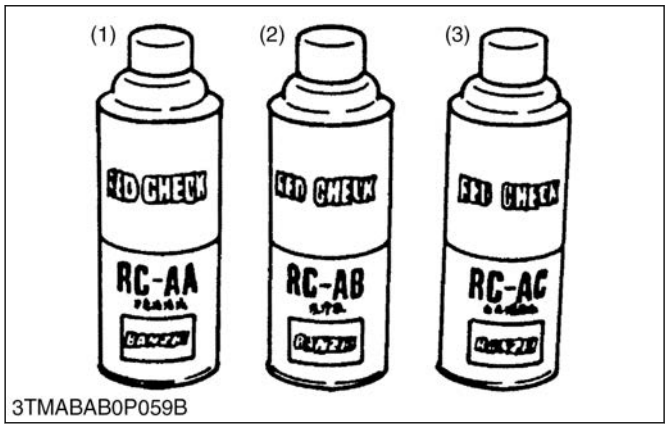

(1) Red permeative liquid
(2) Detergent
(3) White developer

1. Prepare an air spray red check.
2. Clean the surface of the cylinder head with detergent (2).
3. Spray the cylinder head surface with the red permeative liquid (1). Leave it five to ten minutes after spraying.
4. Wash away the red permeative liquid on the cylinder head surface with the detergent (2).
5. Spray the cylinder head surface with white developer (3).
6. If flawed, it can be identified as red marks.

6.1.4 Checking valve recessing

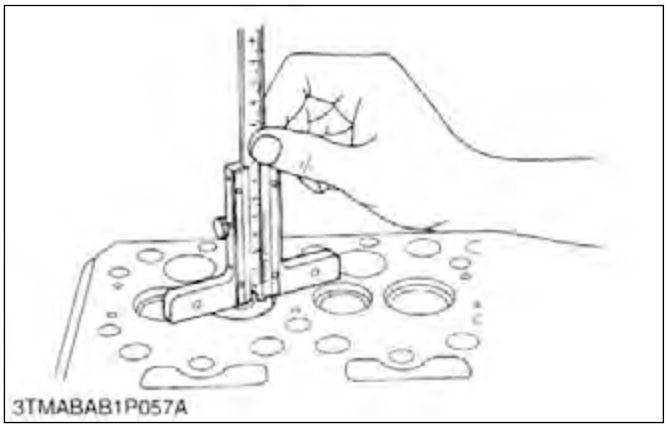

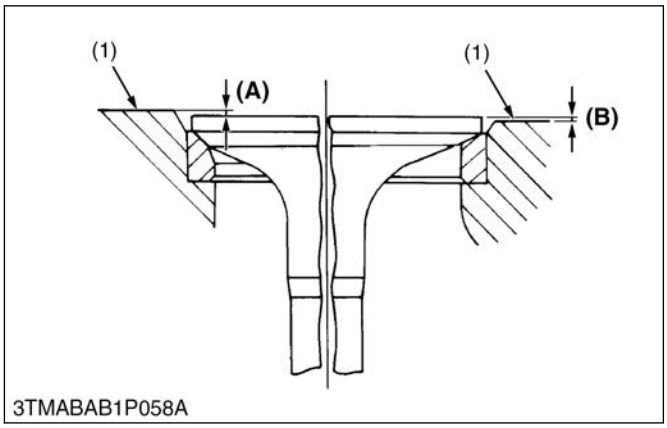

(1) Cylinder head surface
(A) Recessing
(B) Protrusion

1. Clean the cylinder head surface, valve face and valve seat.
2. Insert the valve into the valve guide.
3. Measure the valve recessing with a depth gauge.
4. If the measurement exceeds the allowable limit, replace the valve.

Valve recessing	Factory specification	0.10 (protrusion) to 0.10 (recessing) mm 0.0039 (protrusion) to 0.0039 (recessing) in.
	Allowable limit	0.30 (recessing) mm 0.012 (recessing) in.

5. If it still exceeds the allowable limit after replacing the valve, replace the cylinder head.

6.1.5 Checking clearance between valve stem and valve guide

1. Remove carbon from the valve guide section.

2. Measure the valve stem O.D. with an outside micrometer.

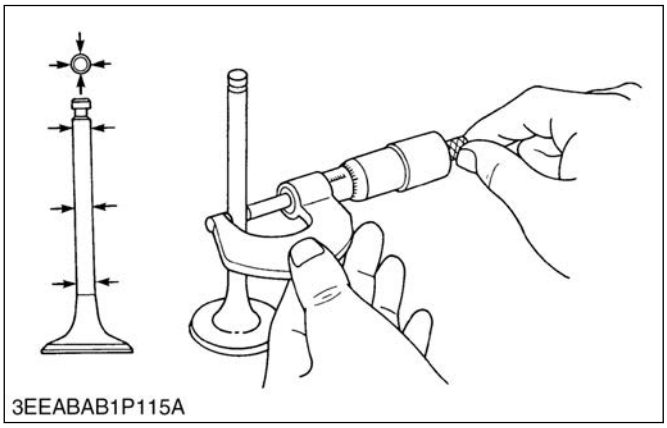

Valve stem O.D.	Factory specification	5.968 to 5.980 mm 0.2350 to 0.2354 in.

3. Measure the valve guide I.D. with a small hole gauge, and calculate the clearance.

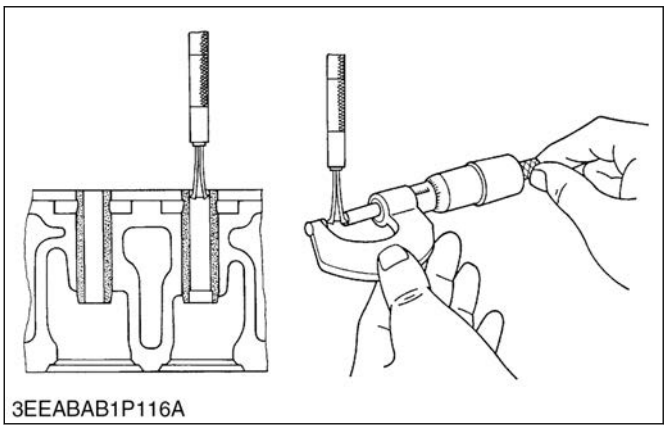

Valve guide I.D.	Factory specification	6.010 to 6.025 mm 0.2367 to 0.2372 in.

4. If the clearance exceeds the allowable limit, replace the valves. If it still exceeds the allowable limit, replace the valve guide.

Clearance between valve stem and valve guide	Factory specification	0.030 to 0.057 mm 0.0012 to 0.0022 in.
	Allowable limit	0.10 mm 0.0039 in.

6.1.6 Replacing valve guide

IMPORTANT

- **Do not hit the valve guide with a hammer during replacement.**

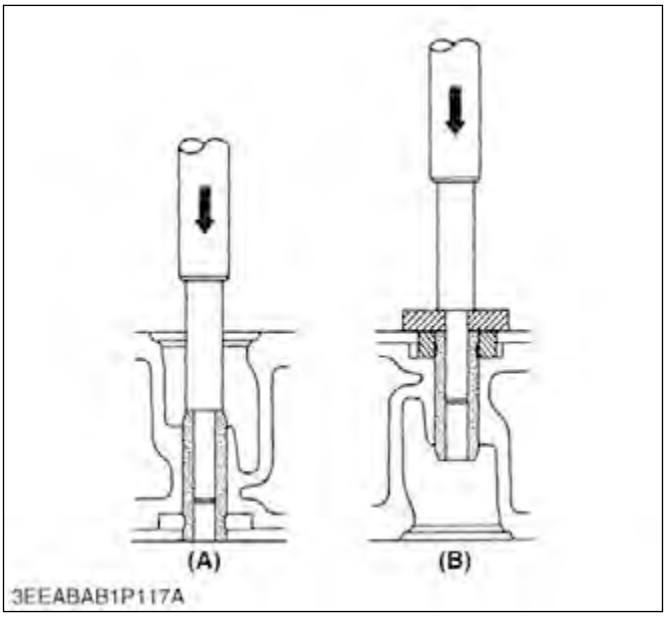

(A) When removing (B) When installing

(When removing)

1. Press out the used valve guide using a valve guide replacing tool. (See "Special tools".)

(When installing)

1. Clean a new valve guide and valve guide bore, and apply engine oil to them.
2. Press in a new valve guide using a valve guide replacing tool.
3. Ream precisely the I.D. of the valve guide to the specified dimension.

Valve guide I.D. (Intake and exhaust)	Factory specification	6.010 to 6.025 mm 0.2367 to 0.2372 in.

RELATED PAGE

1. Special tools for engine on page 2-61

6.1.7 Checking valve seating

1. Coat the valve face lightly with prussian blue and put the valve on its seat to check the contact.

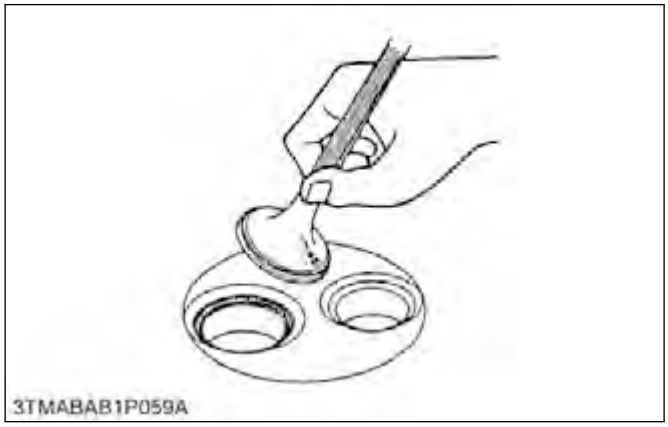

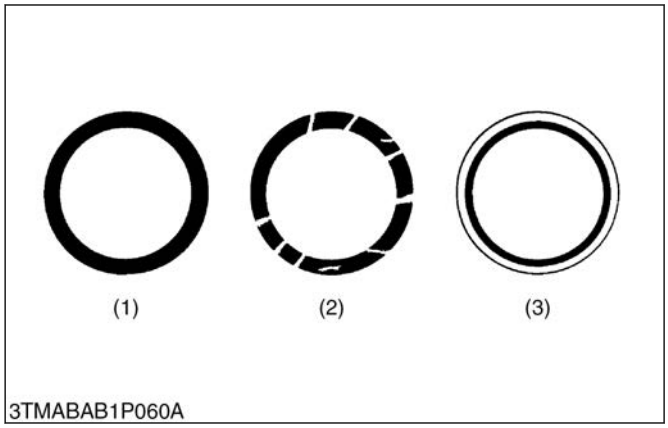

(1) Correct
(2) Incorrect
(3) Incorrect

2. If the valve does not seat all the way around the valve seat or the valve contact is less than 70%, correct the valve seating as follows.
3. If the valve contact does not comply with the reference value, replace the valve or correct the contact of valve seating.

Valve seat width	Factory specification	2.12 mm 0.835 in.

6.1.8 Correcting valve

NOTE

- **Before correcting the valve and seat, check the valve stem and the I.D. of valve guide section, and repair them if necessary.**

1. Correct the valve with a valve refacer.

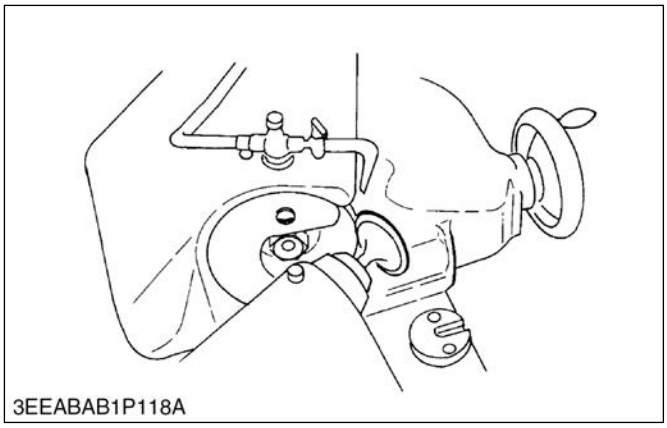

Valve face angle	Factory specification	0.79 rad 45°

6.1.9 Correcting valve seat

NOTE

- **Before correcting the valve and seat, check the valve stem and the I.D. of valve guide section, and repair them if necessary.**

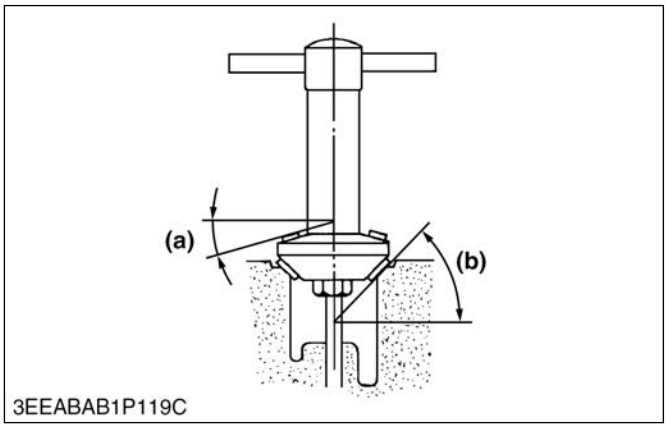

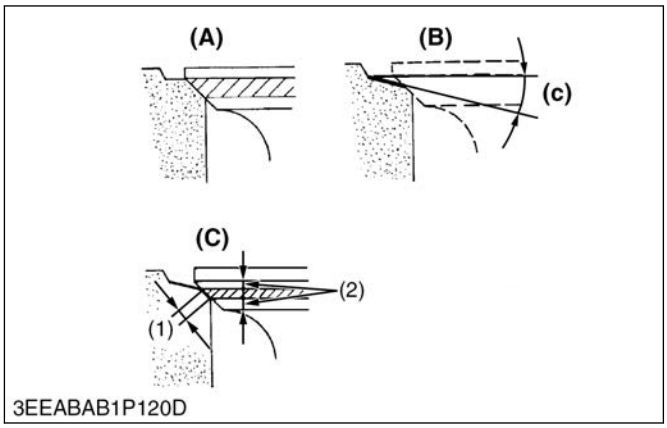

(1) Valve seat width
(2) Identical dimensions
(A) Check contact
(B) Correct seat width
(C) Check contact
(a) 0.26 rad (15°) or 0.52 rad (30°)
(b) 0.79 rad (45°) or 1.0 rad (60°)
(c) 0.52 rad (30°) or 0.26 rad (15°)

1. Slightly correct the seat surface with a 1.0 rad (60°) (intake valve) or 0.79 rad (45°) (exhaust valve) valve seat cutter.

Valve seat angle	Factory specification	0.79 rad 45°

2. Resurface the seat surface with a 0.52 rad (30°) valve seat cutter to intake valve seat and with a 0.26 rad (15°) valve seat cutter to exhaust valve seat so that the width is close to specified valve seat width (2.12 mm, 0.0835 in.).
3. After resurfacing the seat, inspect for even valve seating, apply a thin film of compound between the valve face and valve seat, and fit them with valve lapping tool.
4. Check the valve seating with prussian blue.
   The valve seating surface should show good contact all the way around.

NOTE

- **After correcting the valve seat, be sure to check the valve recessing.**

6.1.10 Lapping valve

IMPORTANT

- **When valve lapping is performed, be sure to check the valve recessing and adjust the valve clearance after assembling the valve.**

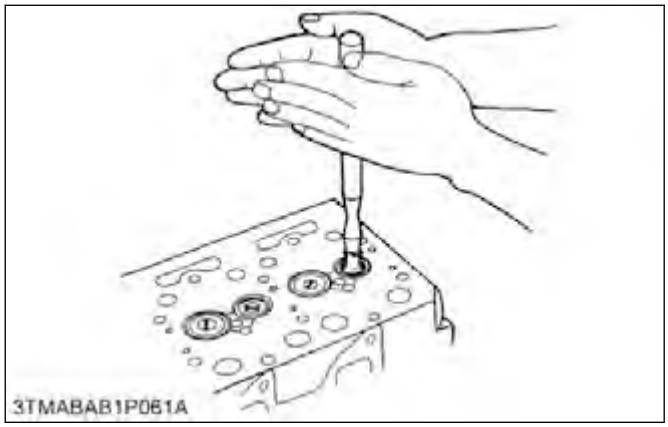

1. Apply compound evenly to the valve lapping surface.
2. Insert the valve into the valve guide. Lap the valve onto its seat with a valve flapper or screwdriver.
3. After lapping the valve, wash the compound away and apply oil, then repeat valve lapping with oil.
4. Apply prussian blue to the contact surface to check the seated rate. If it is less than 70%, repeat valve lapping again.

6.1.11 Checking free length and tilt of valve spring

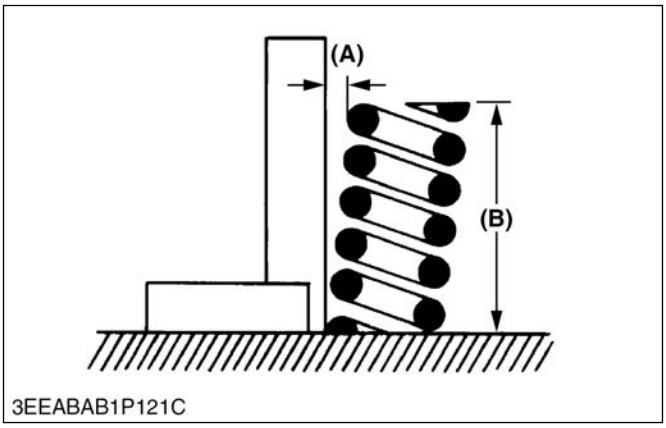

(A) Tilt (B) Free length

1. Measure the free length (B) of valve spring with vernier calipers. If the measurement is less than the allowable limit, replace it.

Free length (B)	Factory specification	31.3 to 31.8 mm 1.24 to 1.25 in.
	Allowable limit	28.4 mm 1.12 in.

2. Put the valve spring on a surface plate, place a square on the side of the valve spring.
3. Check to see if the entire side is in contact with the square. Rotate the valve spring and measure the maximum tilt (A). If the measurement exceeds the allowable limit, replace it.

Tilt (A)	Allowable limit	1.2 mm 0.047 in.

4. Check the entire surface of the valve spring for scratches. If there is any problem, replace it.

6.1.12 Checking valve spring setting load

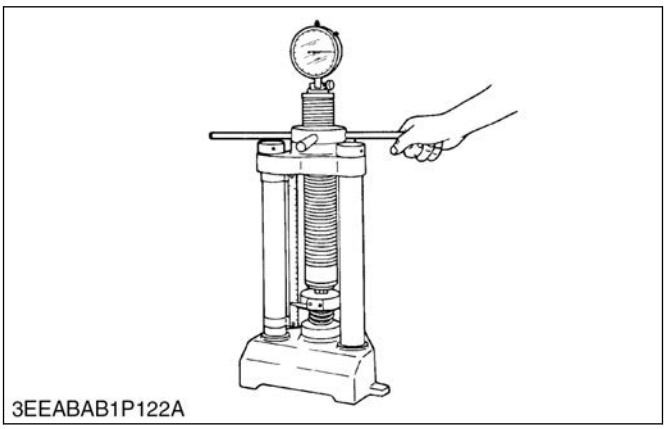

1. Place the valve spring on a tester and compress it to the same length it is actually compressed in the engine.

2. Read the compression load on the gauge.
3. If the measurement is less than the allowable limit, replace it.

Setting load / Setting length	Factory specification	65 N / 27.0 mm 6.6 kgf / 27.0 mm 15 lbf / 1.06 in.
	Allowable limit	55 N / 27.0 mm 5.6 kgf / 27.0 mm 12 lbf / 1.06 in.

6.1.13 Checking oil clearance between rocker arm and rocker arm shaft

3TAAAAD1P060A

1. Measure the rocker arm shaft O.D. with an outside micrometer.

Rocker arm shaft O.D.	Factory specification	10.473 to 10.484 mm 0.41233 to 0.41275 in.

2. Measure the rocker arm I.D. with an inside micrometer, and then calculate the oil clearance.

Rocker arm I.D.	Factory specification	10.500 to 10.518 mm 0.41339 to 0.41409 in.

3. If the oil clearance exceeds the allowable limit, replace the rocker arm and measure the oil clearance again. If it still exceeds the allowable limit, replace also the rocker arm shaft.

Oil clearance between rocker arm and rocker arm shaft	Factory specification	0.016 to 0.045 mm 0.00063 to 0.0017 in.
	Allowable limit	0.15 mm 0.0059 in.

6.1.14 Checking push rod alignment

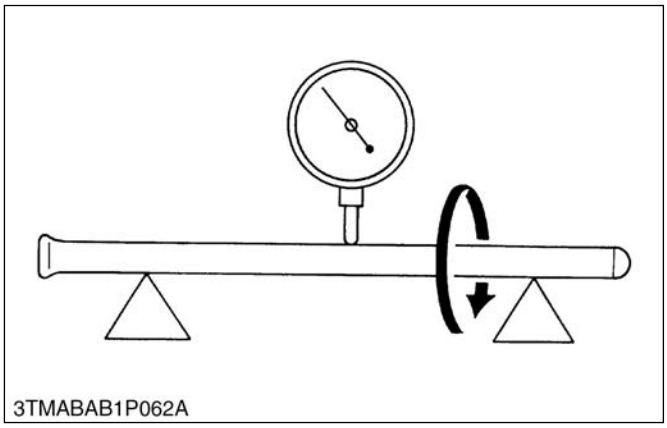
3TMABAB1P062A

1. Place the push rod on V blocks.
2. Measure the push rod alignment.
3. If the measurement exceeds the allowable limit, replace the push rod.

Push rod alignment	Allowable limit	0.25 mm 0.0098 in.

6.1.15 Checking oil clearance between tappet and tappet guide bore

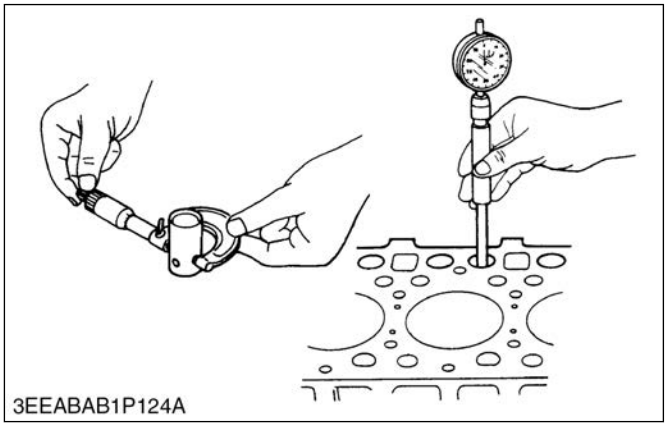
3EEABAB1P124A

1. Measure the tappet O.D. with an outside micrometer.

Tappet O.D.	Factory specification	17.966 to 17.984 mm 0.70733 to 0.70803 in.

2. Measure the I.D. of the tappet guide bore with a cylinder gauge, and calculate the oil clearance.

Tappet guide bore I.D.	Factory specification	18.000 to 18.018 mm 0.70867 to 0.70937 in.

3. If the oil clearance exceeds the allowable limit or the tappet is damaged, replace the tappet.

Oil clearance between tappet and tappet guide bore	Factory specification	0.016 to 0.052 mm 0.00063 to 0.0020 in.
	Allowable limit	0.10 mm 0.0039 in.

6.2 Timing gears, camshaft and governor gear

6.2.1 Checking timing gear backlash

[A] D902-E4

1. Set a dial indicator (lever type) with its tip on the gear tooth.
2. Move the gear to measure the backlash, holding its mating gear.
3. If the backlash exceeds the allowable limit, check the oil clearance of the shafts and the gear.

Backlash between idle gear and crank gear	Factory specification	0.0430 to 0.124 mm 0.00170 to 0.00488 in.
	Allowable limit	0.15 mm 0.0059 in.
Backlash between idle gear and cam gear	Factory specification	0.0470 to 0.123 mm 0.00185 to 0.00484 in.
	Allowable limit	0.15 mm 0.0059 in.
Backlash between idle gear and injection pump gear	Factory specification	0.0460 to 0.124 mm 0.00182 to 0.00488 in.
	Allowable limit	0.15 mm 0.0059 in.
Backlash between oil pump drive gear and crank gear	Factory specification	0.0410 to 0.123 mm 0.00162 to 0.00484 in.
	Allowable limit	0.15 mm 0.0059 in.

4. If the oil clearance is proper, replace the gear.

6.2.2 Checking idle gear 1 side clearance

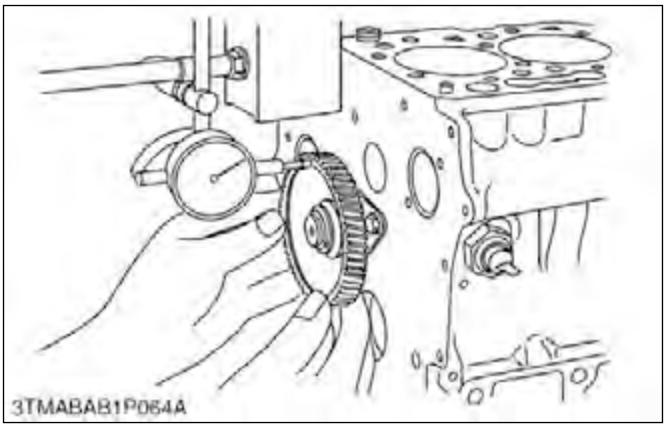

1. Set a dial indicator with its tip on the idle gear.
2. Measure the side clearance by moving the idle gear to the front and rear.
3. If the measurement exceeds the allowable limit, replace the idle gear collar.

Idle gear 1 side clearance	Factory specification	0.20 to 0.51 mm 0.0079 to 0.020 in.
	Allowable limit	0.80 mm 0.031 in.

6.2.3 Checking camshaft side clearance

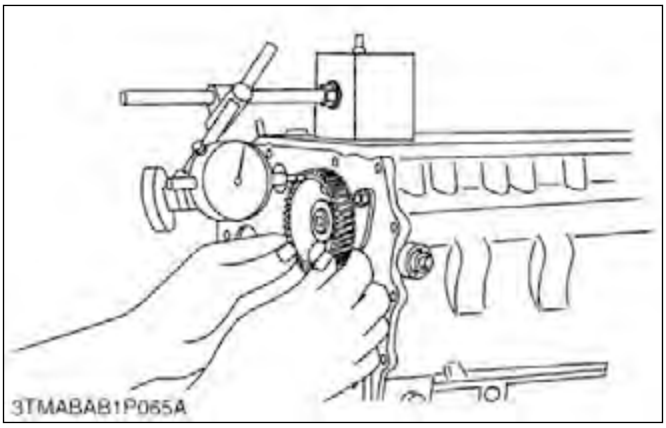

1. Set a dial indicator with its tip on the camshaft.
2. Measure the side clearance by moving the cam gear to the front to rear.
3. If the measurement exceeds the allowable limit, replace the camshaft stopper.

Camshaft side clearance	Factory specification	0.15 to 0.31 mm 0.0059 to 0.012 in.
	Allowable limit	0.50 mm 0.020 in.

https://truckmanualshub.com/

6.2.4 Checking camshaft alignment

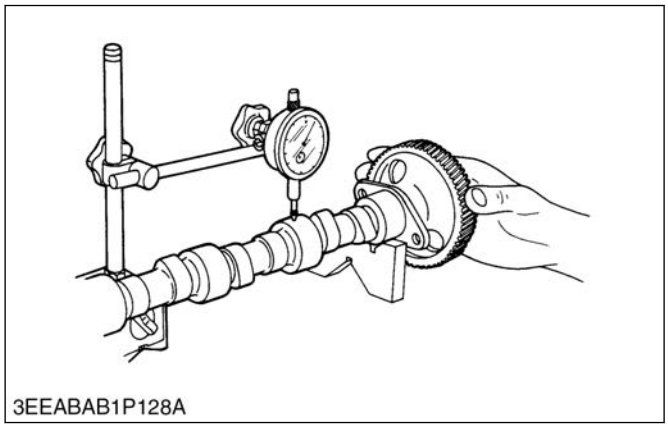

1. Support the camshaft with V blocks on the surface plate at both end journals.
2. Set a dial indicator with its tip on the intermediate journal.
3. Measure the camshaft alignment.
4. If the measurement exceeds the allowable limit, replace the camshaft.

Camshaft alignment	Allowable limit	0.01 mm 0.0004 in.

6.2.5 Checking cam height

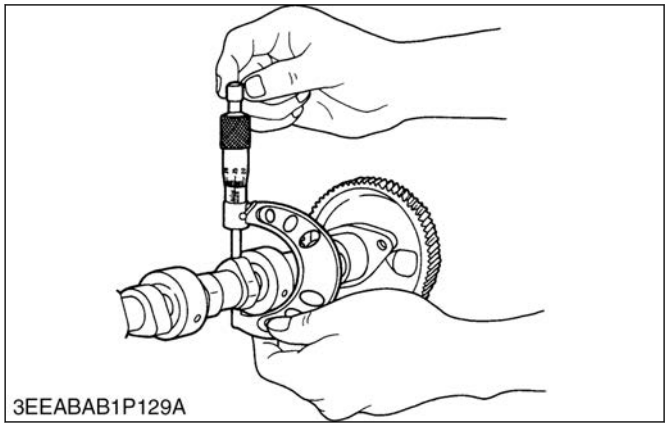

1. Measure the height of the cam at its highest point with an outside micrometer.
2. If the measurement is less than the allowable limit, replace the camshaft.

Cam height of intake and exhaust	Factory specification	26.88 mm 1.058 in.
	Allowable limit	26.83 mm 1.056 in.

6.2.6 Checking oil clearance of camshaft journal

1. Measure the camshaft journal O.D. with an outside micrometer.

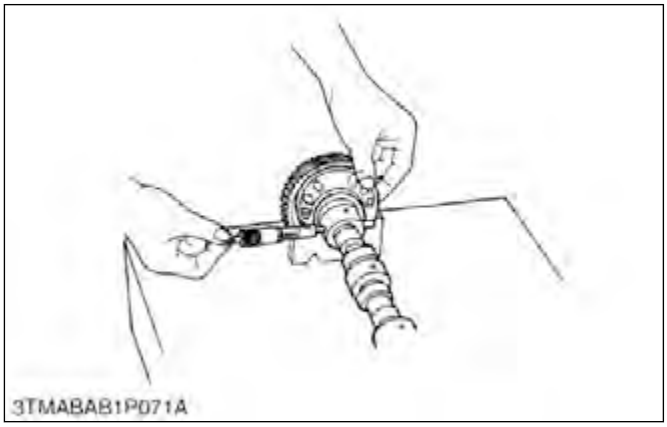

Camshaft journal O.D.	Factory specification	32.934 to 32.950 mm 1.2967 to 1.2972 in.

2. Measure the cylinder block bore I.D. for camshaft with a cylinder gauge, and calculate the oil clearance.

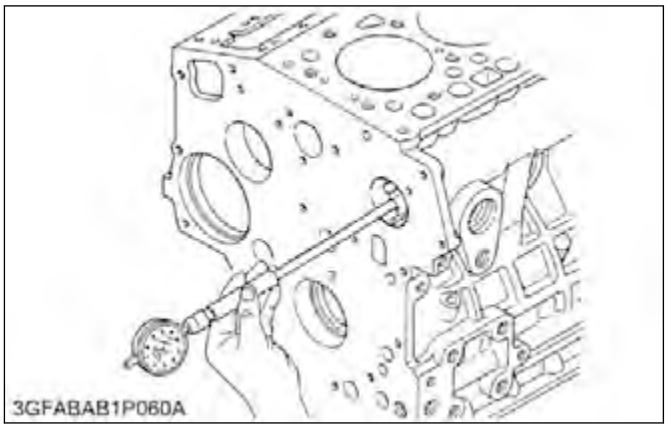

Camshaft bearing I.D. (Cylinder block bore I.D.)	Factory specification	33.000 to 33.025 mm 1.2993 to 1.3001 in.

3. If the oil clearance exceeds the allowable limit, replace the camshaft.

Oil clearance of camshaft journal	Factory specification	0.050 to 0.091 mm 0.0020 to 0.0035 in.
	Allowable limit	0.15 mm 0.0059 in.

6.2.7 Checking oil clearance between idle gear 1 shaft and idle gear bushing

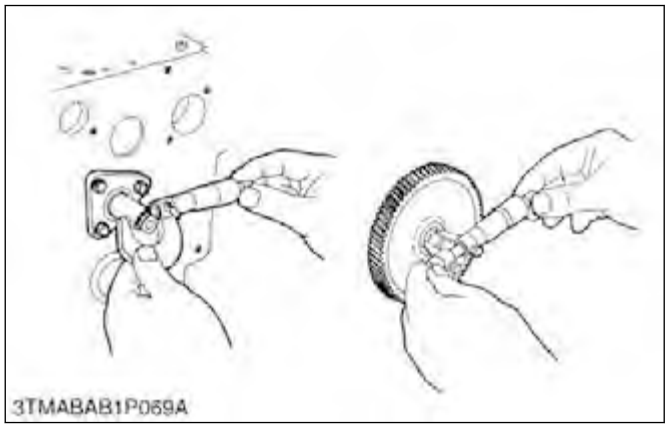

1. Measure the idle gear shaft O.D. with an outside micrometer.

Idle gear shaft 1 O.D.	Factory specification	19.967 to 19.980 mm 0.78611 to 0.78661 in.

2. Measure the idle gear bushing I.D. with an inside micrometer, and calculate the oil clearance.

Idle gear bushing 1 I.D.	Factory specification	20.000 to 20.051 mm 0.78741 to 0.78940 in.

3. If the oil clearance exceeds the allowable limit, replace the bushing. If it still exceeds the allowable limit, replace the idle gear shaft.

Oil clearance between idle gear shaft 1 and idle gear bushing	Factory specification	0.020 to 0.084 mm 0.00079 to 0.0033 in.
	Allowable limit	0.10 mm 0.0039 in.

6.2.8 Replacing idle gear bushing

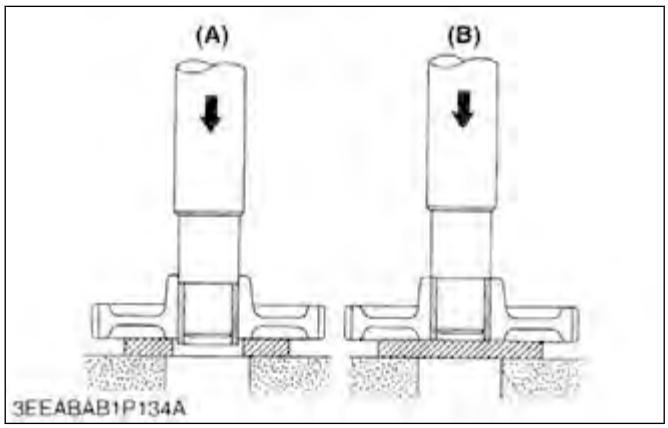

(A) When removing (B) When installing

(When removing)

1. Press out the used idle gear bushing using an idle gear bushing replacing tool.

(When installing)

1. Clean a new idle gear bushing and idle gear bore, and apply engine oil to them.
2. Press in a new bushing using an idle gear bushing replacing tool, until it is flush with the end of the idle gear.

6.3 Piston and connecting rod

6.3.1 Checking piston pin bore I.D.

1. Measure the piston pin bore I.D. in both the horizontal and vertical directions with a cylinder gauge.

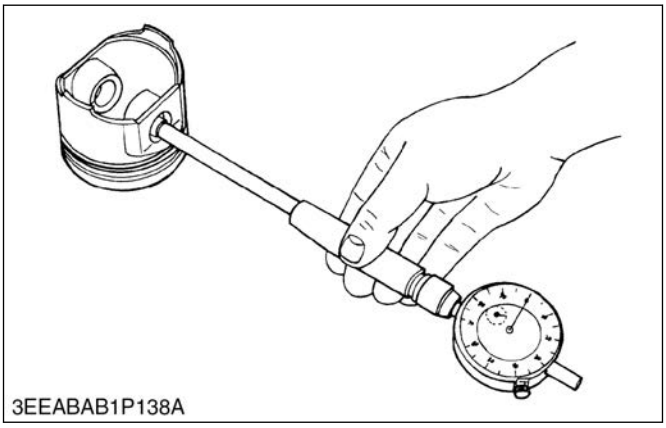

2. If the measurement exceeds the allowable limit, replace the piston.

Piston pin bore I.D.	Factory specification	20.000 to 20.013 mm 0.78741 to 0.78791 in.
	Allowable limit	20.05 mm 0.7894 in.

6.3.2 Checking oil clearance between piston pin and small end bushing

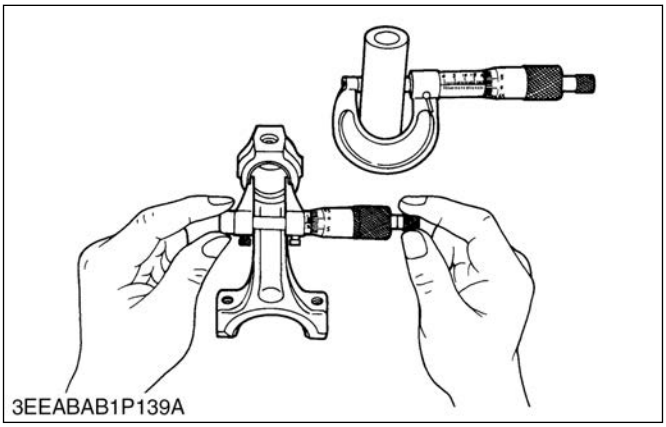

1. Measure the piston pin O.D. where it contacts the bushing with an outside micrometer.

Piston pin O.D.	Factory specification	20.002 to 20.011 mm 0.78748 to 0.78783 in.

2. Measure the small end bushing I.D. with an inside micrometer, and calculate the oil clearance.

Small end bushing I.D.	Factory specification	20.025 to 20.040 mm 0.78839 to 0.78897 in.

3. If the oil clearance exceeds the allowable limit, replace the bushing. If it still exceeds the allowable limit, replace the piston pin.

Oil clearance between piston pin and small end bushing	Factory specification	0.015 to 0.075 mm 0.00059 to 0.0029 in.
	Allowable limit	0.15 mm 0.0059 in.

6.3.3 Replacing small end bushing

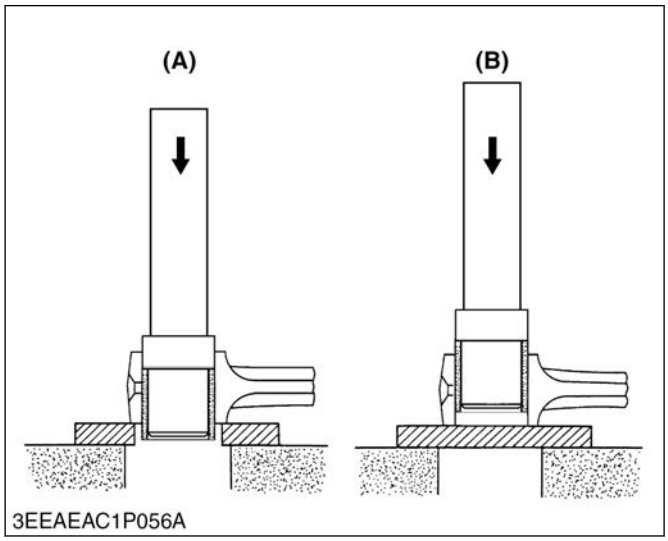

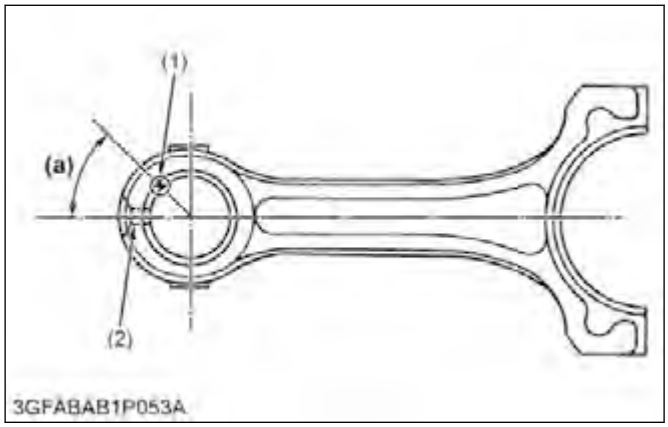

(1) Seam
(2) Oil hole
(A) When removing
(B) When installing
(a) 0.79 rad (45°)

Oil clearance between piston pin and small end bushing (Spare parts)	Factory specification	0.015 to 0.075 mm 0.00059 to 0.0029 in.
	Allowable limit	0.15 mm 0.0059 in.

Small end bushing I.D. (Spare parts)	Factory specification	20.026 to 20.077 mm 0.78843 to 0.79043 n.

(When removing)

1. Press out the used bushing using a small end bushing replacing tool. (See "Special tools".)

(When installing)

1. Clean a new small end bushing and bore, and apply engine oil to them.
2. Using a small end bushing replacing tool, press in a new bushing (service parts) being careful to see that the connecting rod oil hole matches the bushing hole.

6.3.4 Checking connecting rod alignment

NOTE

- **Since the I.D. of the connecting rod small end bushing is the basis of this check, check bushing for wear beforehand.**

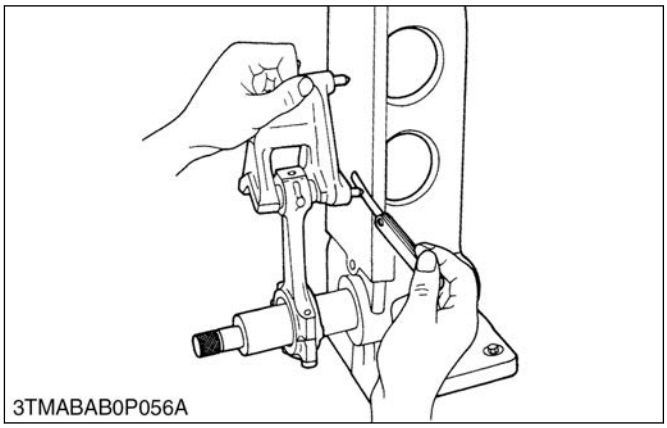

1. Install the piston pin into the connecting rod.
2. Install the connecting rod on the connecting rod alignment tool.
3. Put a gauge over the piston pin, and move it against the face plate.
4. If the gauge does not fit squarely against the face plate, measure the space between the pin of the gauge and the face plate.
5. If the measurement exceeds the allowable limit, replace the connecting rod.

Connecting rod alignment	Allowable limit	0.05 mm 0.002 in.

6.3.5 Checking piston ring gap

1. Insert the piston ring into the lower part of the cylinder (the least worn out part) with a piston.

2. Measure the ring gap with a thickness gauge.

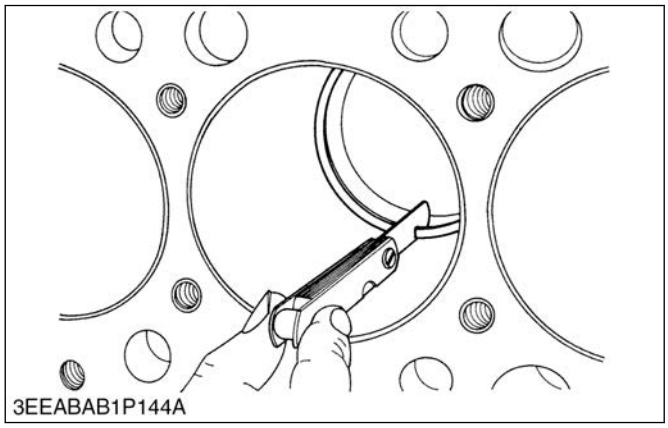

3. If the measurement exceeds the allowable limit, replace the piston ring.

Piston ring gap	Top ring	Factory specification	0.20 to 0.35 mm 0.0079 to 0.013 in.
		Allowable limit	1.25 mm 0.0492 in.
	Second ring	Factory specification	0.35 to 0.50 mm 0.014 to 0.019 in.
		Allowable limit	1.25 mm 0.0492 in.
	Oil ring	Factory specification	0.20 to 0.35 mm 0.0079 to 0.013 in.
		Allowable limit	1.25 mm 0.0492 in.

6.3.6 Checking clearance between piston ring and piston ring groove

1. Clean the rings and the ring grooves, and install each ring in its groove.
2. Measure the clearance between the ring and the groove with a feeler gauge or depth gauge.

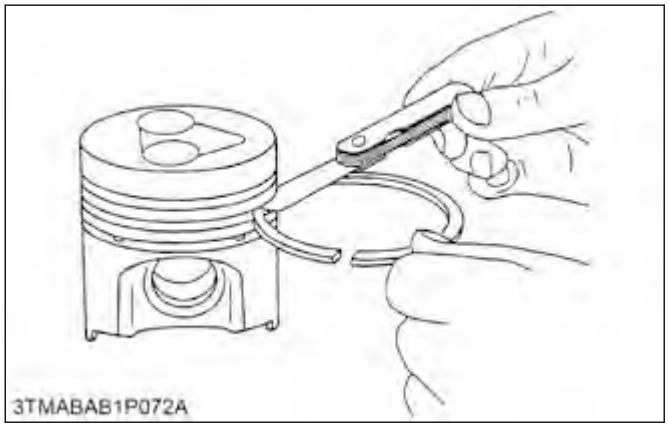

3. If the clearance exceeds the allowable limit, replace the piston ring.

Clearance between piston ring and piston ring groove	Second ring	Factory specification	0.0900 to 0.120 mm 0.00355 to 0.00472 in.
		Allowable limit	0.15 mm 0.0059 in.
	Oil ring	Factory specification	0.040 to 0.080 mm 0.0016 to 0.0031 in.
		Allowable limit	0.15 mm 0.0059 in.

4. If the clearance still exceeds the allowable limit with new ring, replace the piston.

6.4 Crankshaft

6.4.1 Checking crankshaft side clearance

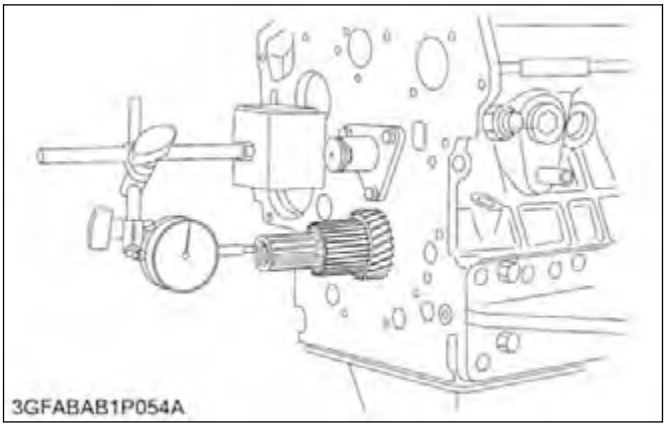

1. Set a dial indicator with its tip on the end of the crankshaft.
2. Measure the side clearance by moving the crankshaft to the front and rear.
3. If the measurement exceeds the allowable limit, replace the thrust bearings.

Crankshaft side clearance	Factory specification	0.15 to 0.31 mm 0.0059 to 0.012 in.
	Allowable limit	0.50 mm 0.020 in.

4. If the same size bearing is useless because of the crankshaft journal wear, replace it with an oversize one referring to the table and figure.
   (Reference)

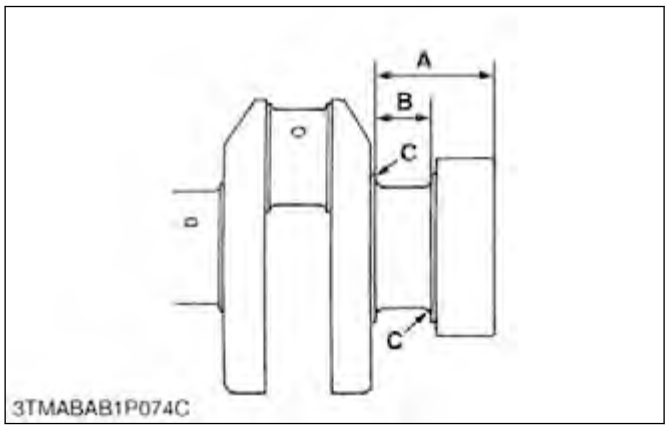

- Oversize thrust bearing

Oversize	Bearing	Code number	Marking
0.20 mm 0.0079 in.	Thrust bearing 1 02	15261-23950	020 OS
	Thrust bearing 2 02	15261-23970	020 OS
0.40 mm 0.016 in.	Thrust bearing 1 04	15261-23960	040 OS
	Thrust bearing 2 04	15261-23980	040 OS

- Oversize dimensions of crankshaft journal

Oversize	0.20 mm 0.0079 in.	0.40 mm 0.016 in.
Dimension A	46.10 to 46.30 mm 1.815 to 1.822 in.	46.30 to 46.50 mm 1.823 to 1.830 in.
Dimension B	23.40 to 23.45 mm 0.9213 to 0.9232 in.	23.80 to 23.85 mm 0.9370 to 0.9389 in.
Dimension C	1.8 to 2.2 mm radius 0.071 to 0.086 in. radius	1.8 to 2.2 mm radius 0.071 to 0.086 in. radius
The crankshaft journal must be fine-finished to higher than Rmax. = 0.8S		

6.4.2 Checking crankshaft alignment

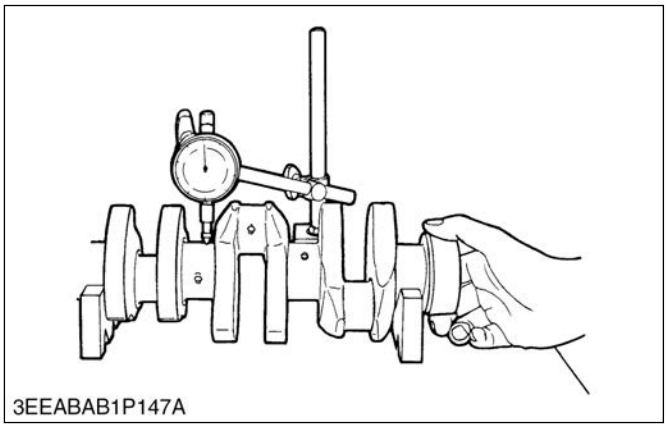

1. Support the crankshaft with V blocks on the surface plate at both end journals.
2. Set a dial indicator with its tip on the intermediate journal.
3. Measure the crankshaft alignment.
4. If the measurement exceeds the allowable limit, replace the crankshaft.

Crankshaft alignment	Allowable limit	0.02 mm 0.0008 in.

6.4.3 Checking oil clearance between crankpin and crankpin bearing

NOTE

- **Never insert the plastigauge into the crankpin oil hole.**
- **Be sure not to move the crankshaft while the connecting rod screws are tightened.**

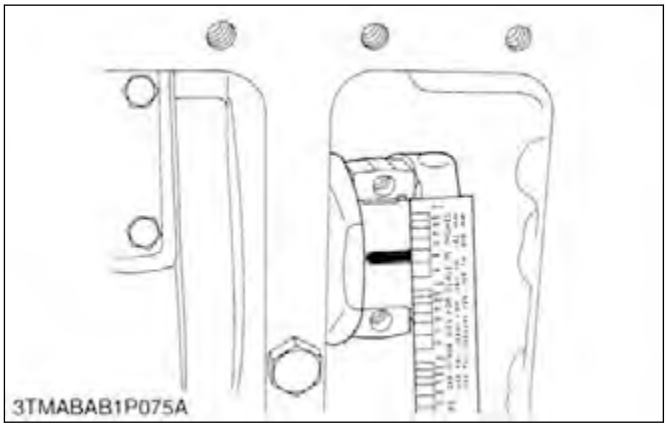

Crankpin O.D.	Factory specification	33.959 to 33.975 mm 1.3370 to 1.3375 in.
Crankpin bearing I.D.		33.995 to 34.010 mm 1.3384 to 1.3389 in.

1. Clean the crankpin and crankpin bearing.

2. Put a strip of plastigauge on the center of the crankpin.
3. Install the connecting rod cap and tighten the connecting rod screws to the specified torque, and remove the cap again.
4. Measure the amount of the flattening with the scale, and get the oil clearance.
5. If the oil clearance exceeds the allowable limit, replace the crankpin bearing.

Oil clearance between crankpin and crankpin bearing	Factory specification	0.020 to 0.051 mm 0.00079 to 0.0020 in.
	Allowable limit	0.15 mm 0.0059 in.

6. If the same size bearing is useless because of the crankpin wear, replace it with an undersize one referring to the table and figure.
(Reference)

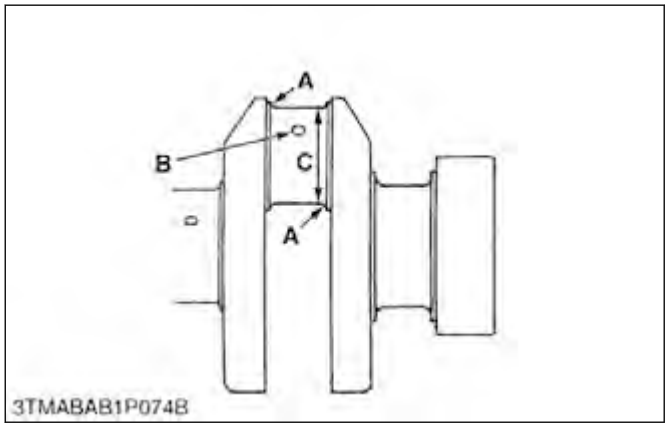

- Undersize crankpin bearing

Undersize	Bearing	Code number	Marking
0.20 mm 0.0079 in.	Crankpin bearing 02	15861-22970	020 US
0.40 mm 0.016 in.	Crankpin bearing 04	15861-22980	040 US

- Undersize dimensions of crankpin

Undersize	0.20 mm 0.0079 in.	0.40 mm 0.016 in.
Dimension A	2.3 to 2.7 mm radius 0.091 to 0.10 in. radius	2.3 to 2.7 mm radius 0.091 to 0.10 in. radius
*Dimension B	1.0 to 1.5 mm relief 0.040 to 0.059 in. relief	1.0 to 1.5 mm relief 0.040 to 0.059 in. relief
Dimension C	33.759 to 33.775 mm dia. 1.3291 to 1.3297 in. dia.	33.559 to 33.575 mm dia. 1.3213 to 1.3218 in. dia.
The crankshaft journal must be fine-finished to higher than Rmax. = 0.8S		

* Holes to be de-burred and edges rounded with 1.0 to 1.5 mm (0.040 to 0.059 in.) relief.

6.4.4 Checking oil clearance between crankshaft journal and crankshaft bearing 1

1. Measure the O.D. of the crankshaft front journal with an outside micrometer.

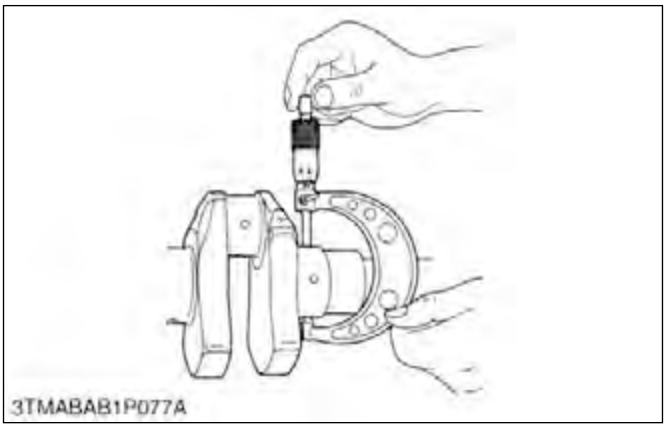

Crankshaft journal O.D.	Factory specification	43.934 to 43.950 mm 1.7297 to 1.7303 in.

2. Measure the I.D. of the crankshaft bearing 1 with an inside micrometer, and calculate the oil clearance.

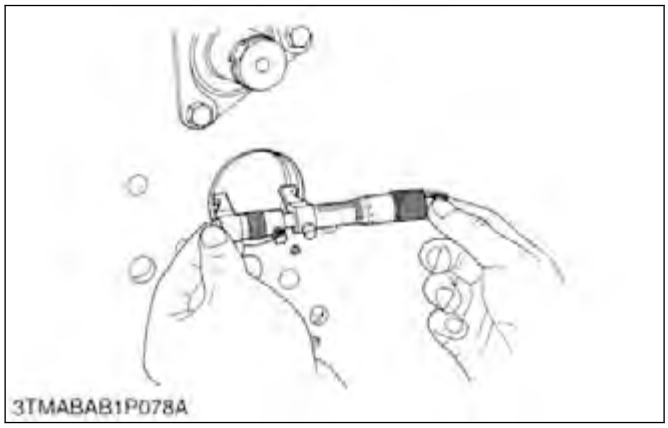

Crankshaft bearing 1 I.D.	Factory specification	43.984 to 44.040 mm 1.7317 to 1.7338 in.

3. If the oil clearance exceeds the allowable limit, replace the crankshaft bearing 1.

Oil clearance between crankshaft journal and crankshaft bearing 1	Factory specification	0.0340 to 0.106 mm 0.00134 to 0.00417 in.
	Allowable limit	0.20 mm 0.0079 in.

Oil clearance between crankshaft journal and crankshaft bearing 1	Factory specification	0.0340 to 0.114 mm 0.00134 to 0.00448 in.
	Allowable limit	0.20 mm 0.0079 in.

4. If the same size bearing is useless because of the crankshaft journal wear, replace it with an undersize one referring to the table and the figure.
(Reference)

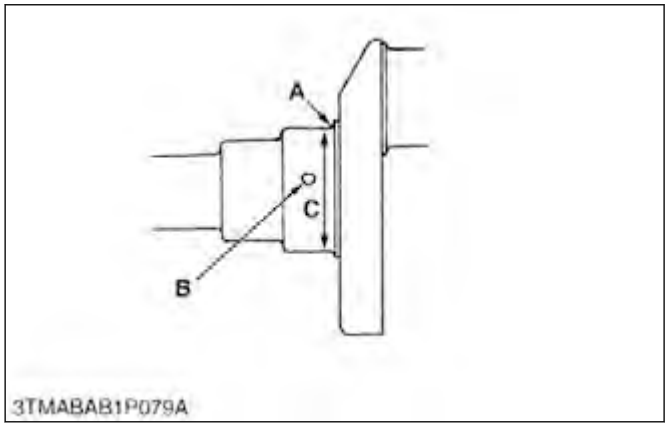

- Undersize crankshaft bearing 1

Undersize	Bearing	Code number	Marking
0.20 mm 0.0079 in.	Crankshaft bearing 1 02	1G460-23910	020 US
0.40 mm 0.016 in.	Crankshaft bearing 1 04	1G4601-2392 0	040 US

- Undersize dimensions of crankshaft journal

Undersize	0.20 mm 0.0079 in.	0.40 mm 0.016 in.
Dimension A	1.8 to 2.2 mm radius 0.071 to 0.086 in. radius	1.8 to 2.2 mm radius 0.071 to 0.086 in. radius
*Dimension B	1.0 to 1.5 mm relief 0.040 to 0.059 in. relief	1.0 to 1.5 mm relief 0.040 to 0.059 in. relief
Dimension C	43.734 to 43.750 mm dia. 1.7219 to 1.7224 in. dia.	43.534 to 43.550 mm dia. 1.7140 to 1.7145 in. dia.
The crankshaft journal must be fine-finished to higher than Rmax. = 0.8S		

* Holes to be de-burred and edges rounded with 1.0 to 1.5 mm (0.040 to 0.059 in.) relief.

6.4.5 Replacing crankshaft bearing 1

(When removing)

1. Press out the used crankshaft bearing 1 using a crankshaft bearing 1 replacing tool.

(When installing)

1. Clean a new crankshaft bearing 1 and crankshaft journal bore, and apply engine oil to them.
2. Using a crankshaft bearing 1 replacing tool, press in a new bearing 1 (2) so that its seam (1) directs toward the exhaust manifold side. (See figure.)

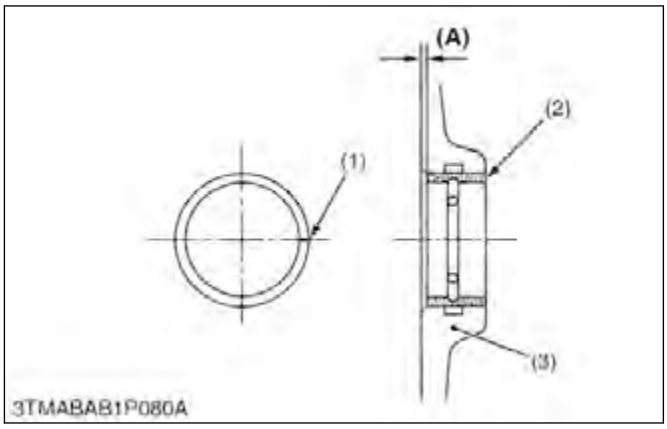

(1) Seam
(2) Crankshaft bearing 1
(3) Cylinder block
(A) Dimension

Dimension (A)	Factory specification	0 to 0.3 mm 0 to 0.01 in.

6.4.6 Checking oil clearance between crankshaft journal and crankshaft bearing 2 and crankshaft bearing 3

NOTE

- **Be sure not to move the crankshaft while the bearing case screws are tightened.**

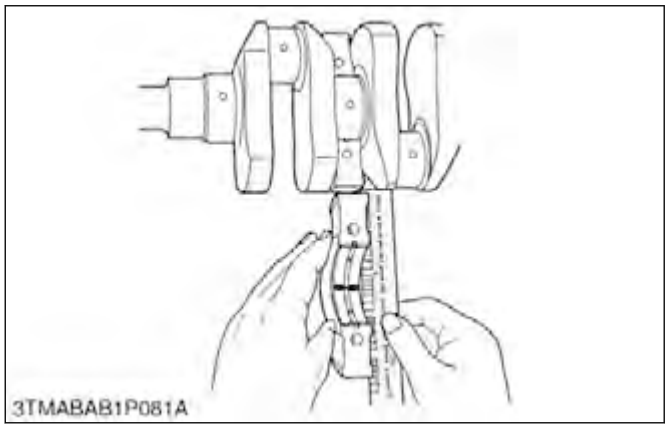

Crankshaft journal O.D. (Flywheel side)	Factory specification	43.934 to 43.950 mm 1.7297 to 1.7303 in.
Crankshaft bearing 2 I.D.		43.978 to 43.993 mm 1.7315 to 1.7320 in.
Crankshaft journal O.D. (Intermediate)		43.934 to 43.950 mm 1.7297 to 1.7303 in.
Crankshaft bearing 3 I.D.		43.978 to 43.993 mm 1.7315 to 1.7320 in.

1. Put a strip of plastigauge on the center of the journal.
2. Install the bearing case and tighten the bearing case screws 1 to the specified torque, and remove the bearing case again.
3. Measure the amount of the flattening with the scale and get the oil clearance.
4. If the oil clearance exceeds the allowable limit, replace the crankshaft bearing 2 (crankshaft bearing 3).

Oil clearance between crankshaft journal and crankshaft bearing 2 (crankshaft bearing 3)	Factory specification	0.028 to 0.059 mm 0.0011 to 0.0023 in.
	Allowable limit	0.20 mm 0.0079 in.

5. If the same size bearing is useless because of the crankshaft journal wear, replace it with an undersize one referring to the table and figure.

(Reference)

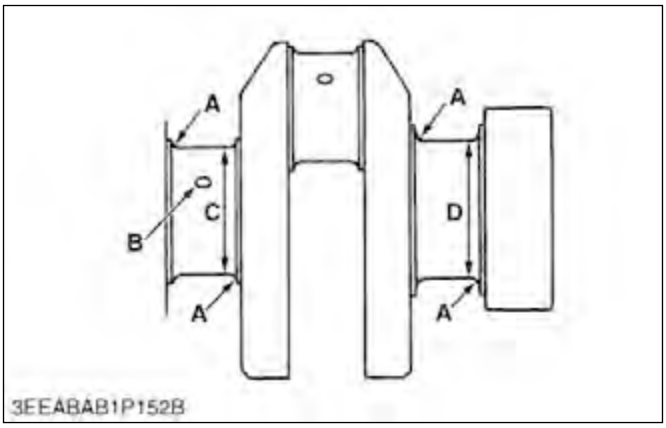

- Undersize crankshaft bearing 2 and 3 (0.20 mm (0.0079 in.))

Bearing	Code number	Marking
Crankshaft bearing 2 02	1G460-23930	020 US
Crankshaft bearing 3 02	1G460-23940	

- Undersize crankshaft bearing 2 and 3 (0.40 mm (0.016 in.))

Bearing	Code number	Marking
Crankshaft bearing 2 04	1G460-23950	040 US
Crankshaft bearing 3 04	1G460-23960	

- Undersize dimensions of crankshaft journal

Undersize	0.20 mm 0.0079 in.	0.40 mm 0.016 in.
Dimension A	1.8 to 2.2 mm radius 0.071 to 0.086 in. radius	1.8 to 2.2 mm radius 0.071 to 0.086 in. radius
*Dimension B	1.0 to 1.5 mm relief 0.040 to 0.059 in. relief	1.0 to 1.5 mm relief 0.040 to 0.059 in. relief
Dimension C	43.734 to 43.750 mm dia. 1.7219 to 1.7224 in. dia.	43.534 to 43.550 mm dia. 1.7140 to 1.7145 in. dia.
The crankshaft journal must be fine-finished to higher than Rmax. = 0.8S		

* Holes to be de-burred and edges rounded with 1.0 to 1.5 mm (0.040 to 0.059 in.) relief.

https://truckmanualshub.com/

6.5 Cylinder

6.5.1 Checking cylinder wear

1. Measure the I.D. of the cylinder at the six positions (see figure) with a cylinder gauge to find the maximum and minimum I.D.'s.

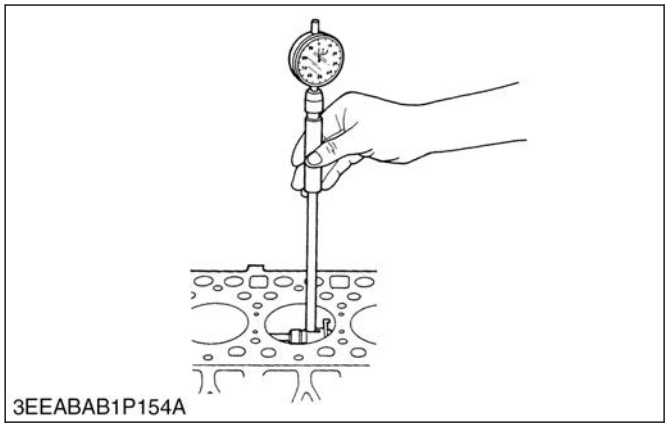

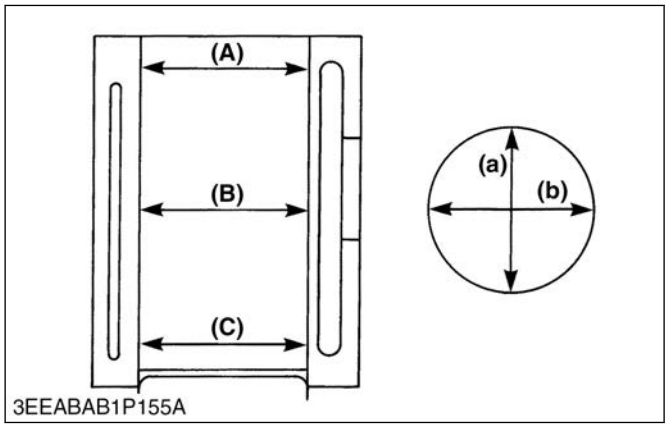

(A) Top
(B) Middle
(C) Bottom (Skirt)
(a) Right-angled to piston pin
(b) Piston pin direction

2. Get the difference (maximum wear) between the maximum and the minimum I.D.'s.
3. If the wear exceeds the allowable limit, bore and hone to the oversize dimension. (See "Correcting cylinder".)

Cylinder liner I.D.	Factory specification	72.000 to 72.019 mm 2.8347 to 2.8353 in.
	Allowable limit	72.150 mm 2.8406 in.

4. Visually check the cylinder wall for scratches. If deep scratches are found, the cylinder should be bored. (See "Correcting cylinder".)

6.5.2 Correcting cylinder (Oversize)

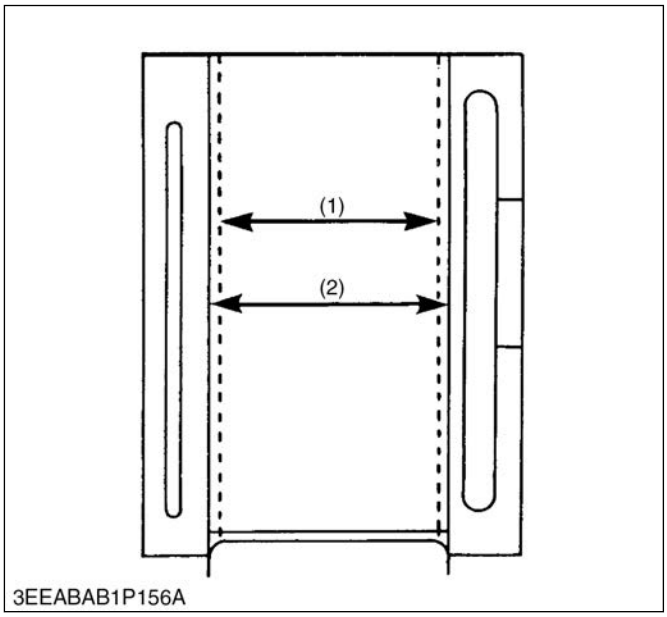

(1) Cylinder I.D. (Before correction)
(2) Cylinder I.D. (Oversize)

1. When the cylinder is worn beyond the allowable limit, bore and hone it to the specified dimension.

Cylinder liner I.D.	Factory specification	72.250 to 72.269 mm 2.8445 to 2.8452 in.
	Allowable limit	72.400 mm 2.8504 in.
Finishing		Hone to 2.2 to 3.0 µm Rz (87 to 110 µin. Rz)

2. Replace the piston and piston rings with oversize ones.

   Oversize:
   0.25 mm (0.0098 in.)

   Marking:
   025

NOTE

- **When the oversize cylinder is worn beyond the allowable limit, replace the cylinder block with a new one.**

6.6 Oil pump

6.6.1 Checking rotor lobe clearance

1. Measure the clearance between lobes of the inner rotor and the outer rotor with a thickness gauge.

2. If the clearance exceeds the factory specifications, replace the oil pump rotor assembly.

Rotor lobe clearance	Factory specification	0.030 to 0.14 mm 0.0012 to 0.0055 in.

6.6.2 Checking clearance between outer rotor and pump body

1. Measure the clearance between the outer rotor and the pump body with a thickness gauge.

2. If the clearance exceeds the factory specifications, replace the oil pump rotor assembly.

Clearance between outer rotor and pump body	Factory specification	0.070 to 0.15 mm 0.0028 to 0.0059 in.

6.6.3 Checking clearance between rotor and cover

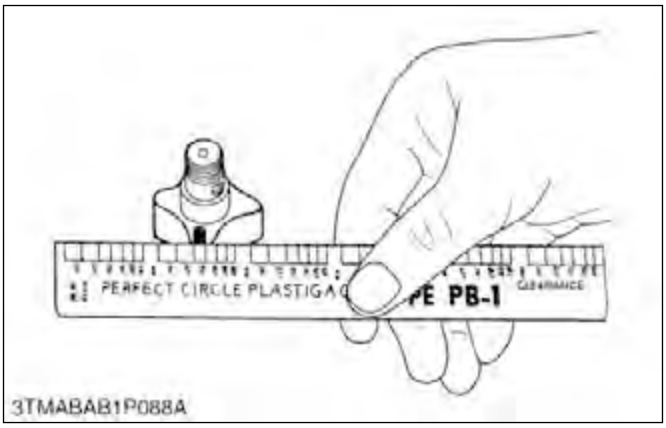

1. Put a strip of plastigauge onto the rotor face with grease.
2. Install the cover and tighten the screws.
3. Remove the cover carefully, and measure the amount of the flattening with the scale and get the clearance.
4. If the clearance exceeds the factory specifications, replace oil pump rotor assembly.

Clearance between rotor and cover	Factory specification	0.0750 to 0.135 mm 0.00296 to 0.00531 in.

https://truckmanualshub.com/

6.7 Relief valve spring

6.7.1 Checking relief valve

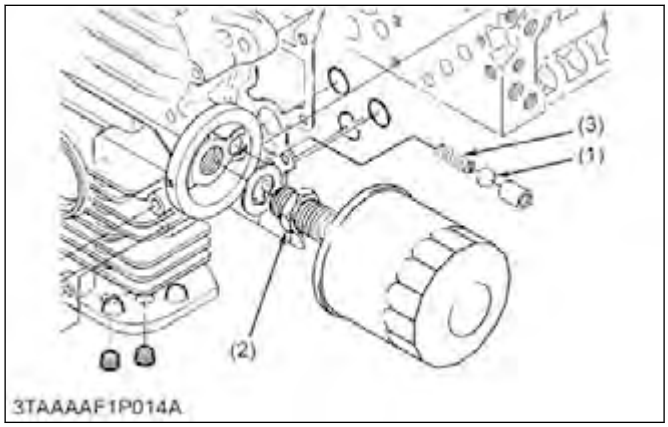

(1) Relief valve
(2) Joint
(3) Spring

1. Remove the oil filter base.
2. Check the relief valve for dirt, and the seat and ball for damage.
3. If damaged, replace.
4. Check the free length of spring.
5. If less than the allowable limit, replace.

Relief valve spring	Factory specification	32 mm 1.26 in.
	Allowable limit	28 mm 1.10 in.

(When reassembling)

Tightening torque	Joint	40 to 49 N·m 4.0 to 5.0 kgf·m 29 to 36 lbf·ft

https://truckmanualshub.com/

https://truckmanualshub.com/

4. TRANSAXLE

https://truckmanualshub.com/

MECHANISM

1. Structure of transaxle

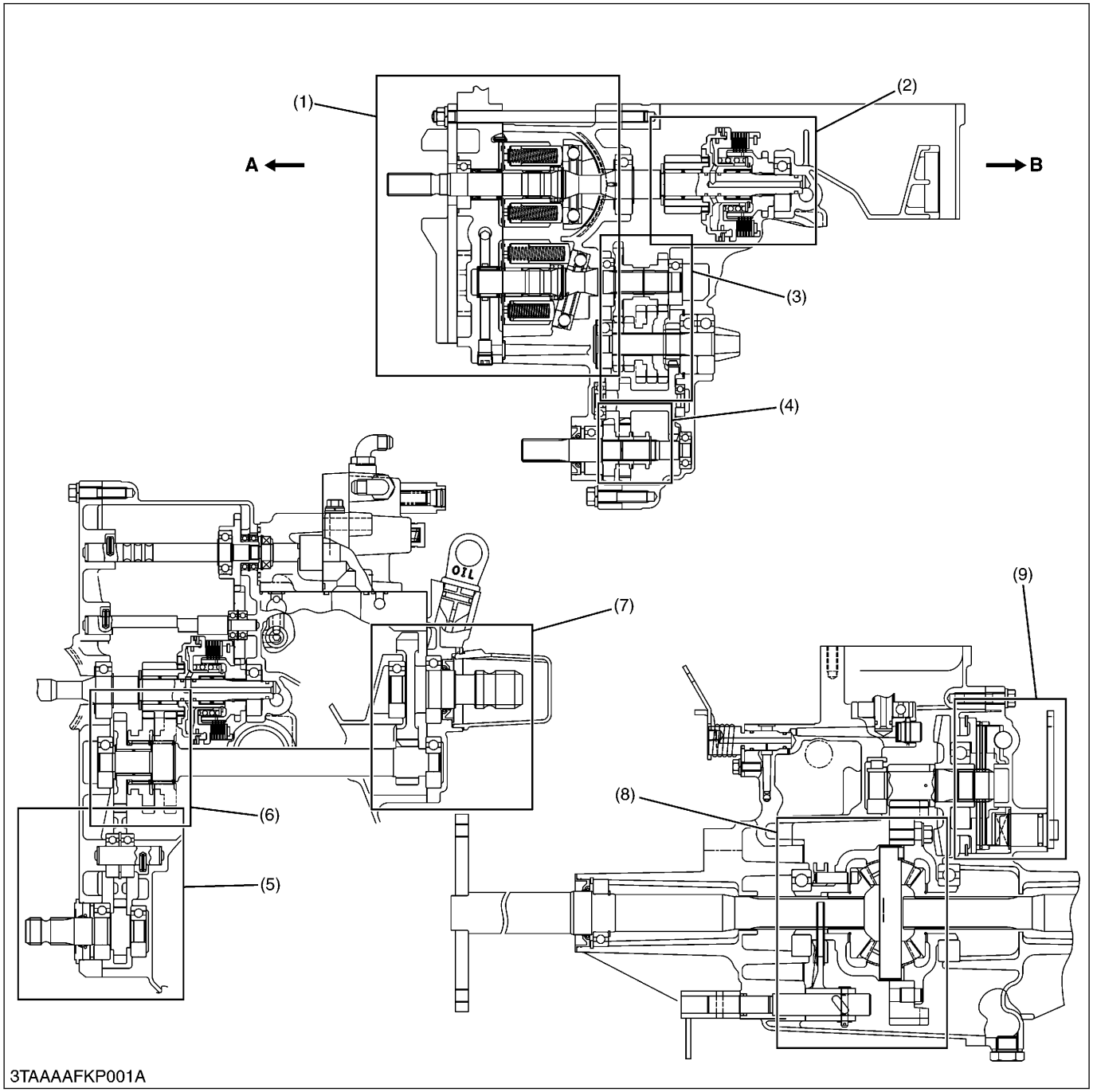

(1)	Hydrostatic transmission	(4)	Front wheel drive gear section	(7)	Rear PTO section	A:	Front side
(2)	PTO clutch section	(5)	Mid-PTO section	(8)	Differential gear section	B:	Rear side
(3)	Range gear shift section	(6)	PTO gear shift section	(9)	Brake section		

2. Traveling system

2.1 Hydrostatic transmission

2.1.1 Structure of hydrostatic transmission

The hydrostatic transmission consists of variable displacement piston pump, fixed displacement piston motor and valve system.

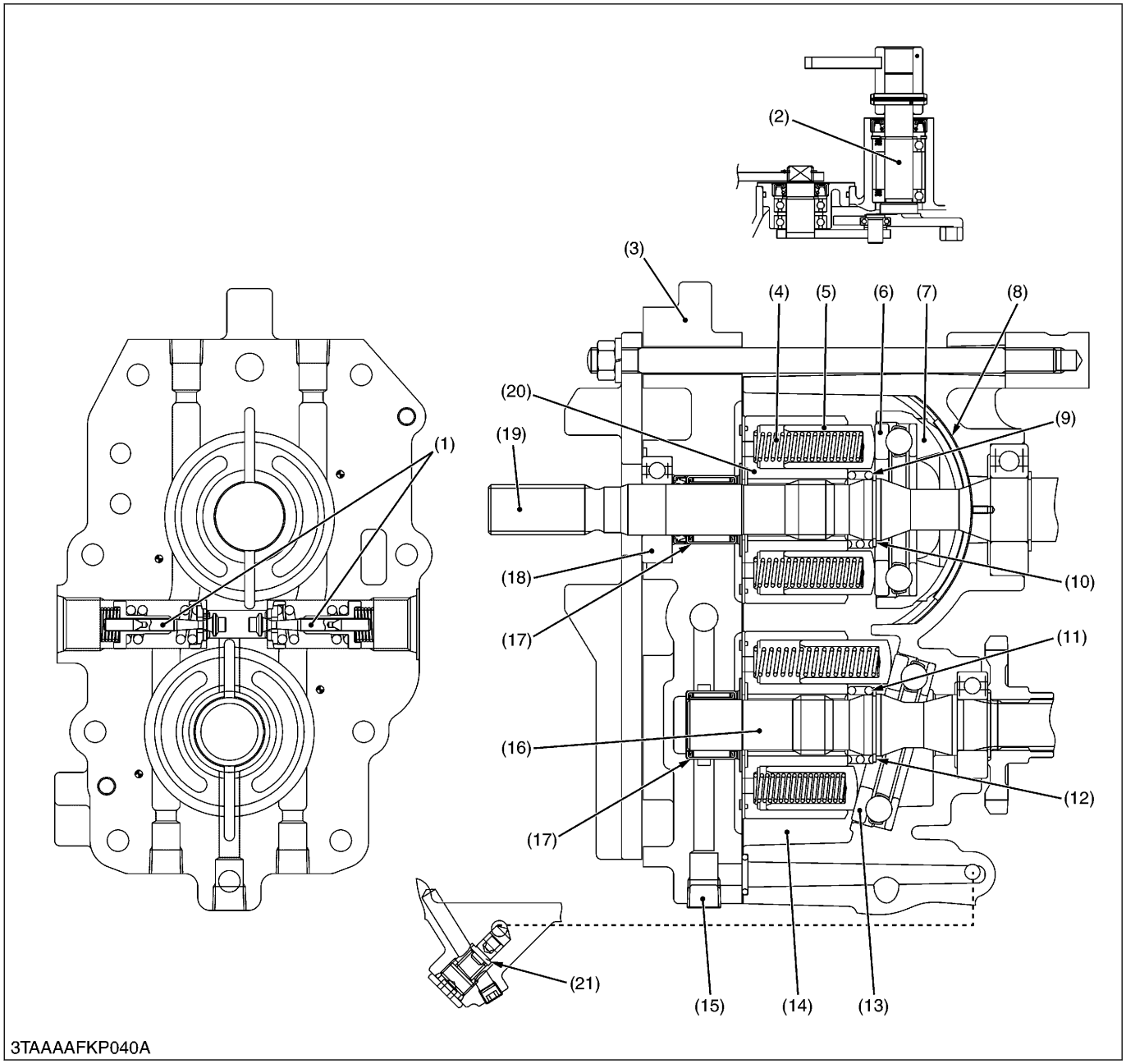

(1) Check and high pressure relief valve
(2) Trunnion arm
(3) Center section
(4) Piston spring
(5) Piston
(6) Thrust ball bearing
(7) Swashplate
(8) Cradle bearing
(9) Spring
(10) Circlip
(11) Spring
(12) Circlip
(13) Thrust ball bearing
(14) Cylinder block (Motor)
(15) Plug
(16) Motor shaft
(17) Needle bearing
(18) Ball bearing
(19) Pump shaft
(20) Cylinder block (Pump)
(21) Charge relief valve

https://truckmanualshub.com/

2.1.2 Oil flow of hydrostatic transmission

The pump and motor are joined in a closed hydraulic loop and most of oil circulates within the main oil circuit. A little oil lubricates and oozes out from the clearance between the moving parts of the case. Then oil in the main oil circuit of the HST needs to be supplied a want.
The oil from the power steering circuit flows into the HST for charging.
The charge oil aids smooth operation of pistons for pump and motor. The charge oil passes through the oil filter cartridge to charge relief valve port. The rest of oil passes through the charge relief valve into the HST housing. And overflow oil from HST housing return to the transmission case.

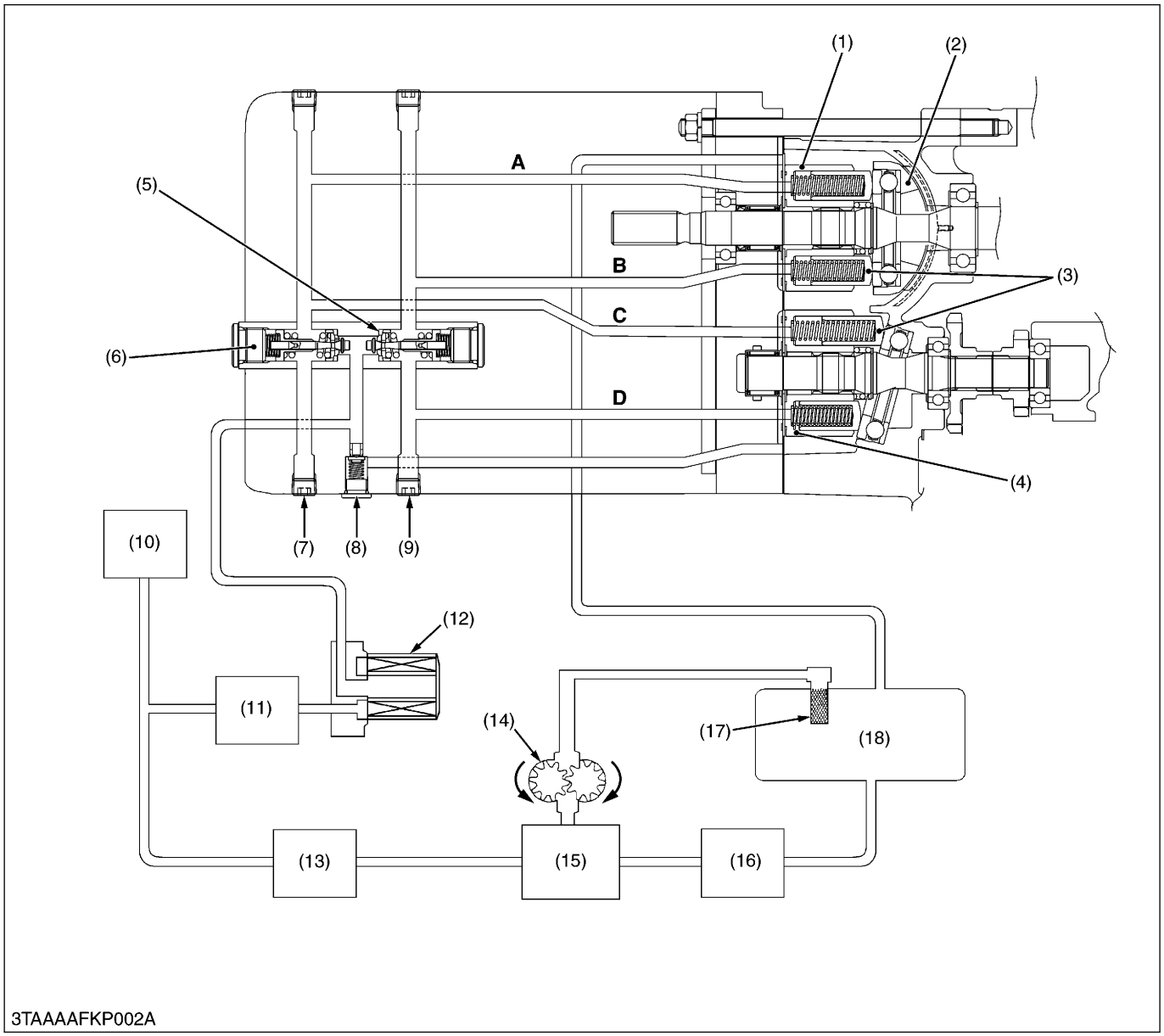

(1) Cylinder block (Pump)
(2) Swashplate
(3) Piston
(4) Cylinder block (Motor)
(5) Check and high pressure relief valve (Forward)
(6) Check and high pressure relief valve (Reverse)
(7) High pressure relief port plug (Forward)
(8) Charge relief valve
(9) High pressure relief port plug (Reverse)
(10) PTO clutch valve
(11) PTO relief valve
(12) Oil filter cartridge
(13) Power steering controller
(14) Hydraulic pump
(15) Flow priority valve (Hydraulic control valve)
(16) Position control valve
(17) Oil strainer
(18) Transmission case
A: A port
B: B port
C: C port
D: D port

2.1.2.1 Neutral position

When the speed control pedal is in neutral, the variable swashplate is not tilted as shown in figure. The pump pistons only rotate with cylinder block without reciprocating. Since the oil is not being pumped to the motor, the cylinder block in the motor is stationary and the output shaft does not move.

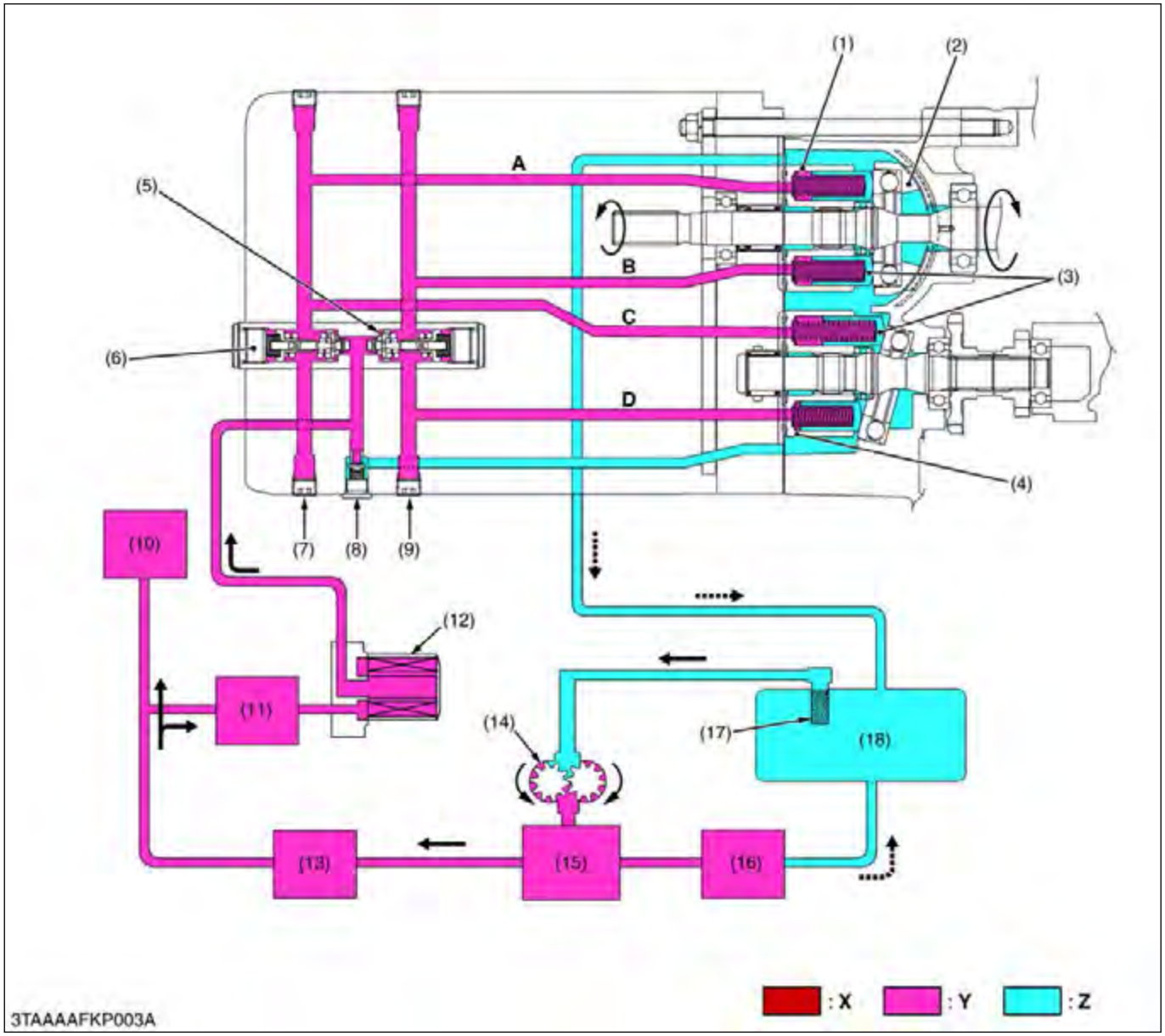

(1) Cylinder block (Pump)
(2) Swashplate
(3) Piston
(4) Cylinder block (Motor)
(5) Check and high pressure relief valve (Forward)
(6) Check and high pressure relief valve (Reverse)
(7) High pressure relief port plug (Forward)
(8) Charge relief valve
(9) High pressure relief port plug (Reverse)
(10) PTO clutch valve
(11) PTO relief valve
(12) Oil filter cartridge
(13) Power steering controller
(14) Hydraulic pump
(15) Flow priority valve (Hydraulic control valve)
(16) Position control valve
(17) Oil strainer
(18) Transmission case
A: A port
B: B port
C: C port
D: D port
X: High pressure
Y: Low pressure
Z: Free oil

https://truckmanualshub.com/

2.1.2.2 Forward position

When the speed control pedal is stepped on and in forward, the variable swashplate is tilted as shown in figure.
As the pump cylinder block rotates with the input shaft, oil is forced out of pump port B at high pressure. As pressure oil enters motor port D, the pistons, which align with port D, are pushed against the swashplate and slide down the inclined surface.
Then the output shaft rotates with the motor cylinder block. This drives the machine forward and the angle of pump swashplate determines the output shaft speed.
As the motor cylinder block continues to rotate, oil is forced out of motor port C at low pressure and returns to the pump.

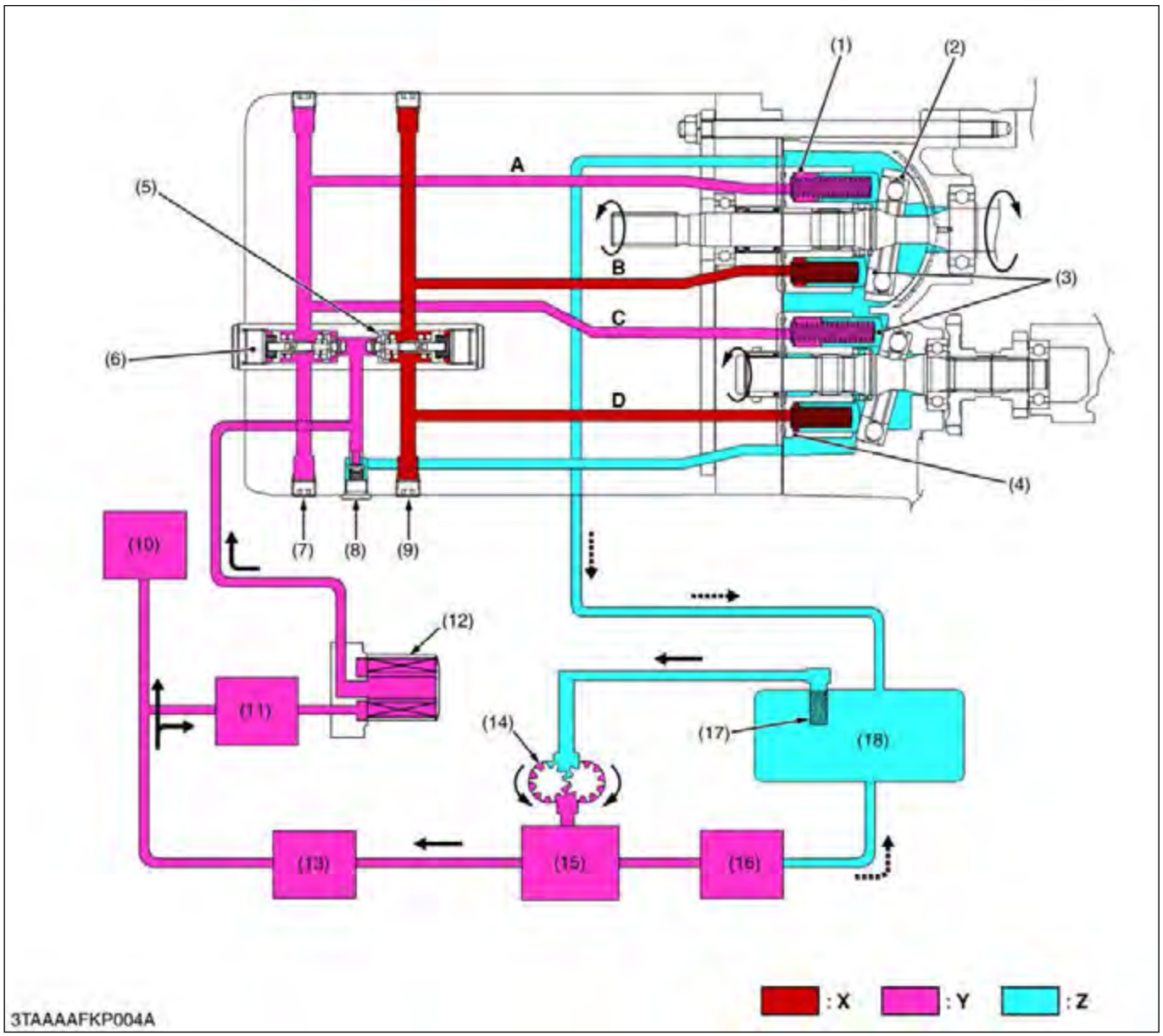

(1) Cylinder block (Pump)
(2) Swashplate
(3) Piston
(4) Cylinder block (Motor)
(5) Check and high pressure relief valve (Forward)
(6) Check and high pressure relief valve (Reverse)
(7) High pressure relief port plug (Forward)
(8) Charge relief valve
(9) High pressure relief port plug (Reverse)
(10) PTO clutch valve
(11) PTO relief valve
(12) Oil filter cartridge
(13) Power steering controller
(14) Hydraulic pump
(15) Flow priority valve (Hydraulic control valve)
(16) Position control valve
(17) Oil strainer
(18) Transmission case
A: A port
B: B port
C: C port
D: D port
X: High pressure
Y: Low pressure
Z: Free oil

2.1.2.3 Reverse position

When the speed control pedal is stepped on and in reverse, the variable swashplate is tilted as shown in figure.
As the pump cylinder block rotates with the input shaft, oil is forced out of pump port A at high pressure. As pressure oil enters motor port C, the pistons, which align with port C, are pushed against the swashplate and slide down the inclined surface.
Then the output shaft rotates with the motor cylinder block. This drives the machine rearward and the angle of pump swashplate determines the output shaft speed.
As the motor cylinder block continues to rotate, oil is forced out of motor port D at low pressure and returns to the pump.

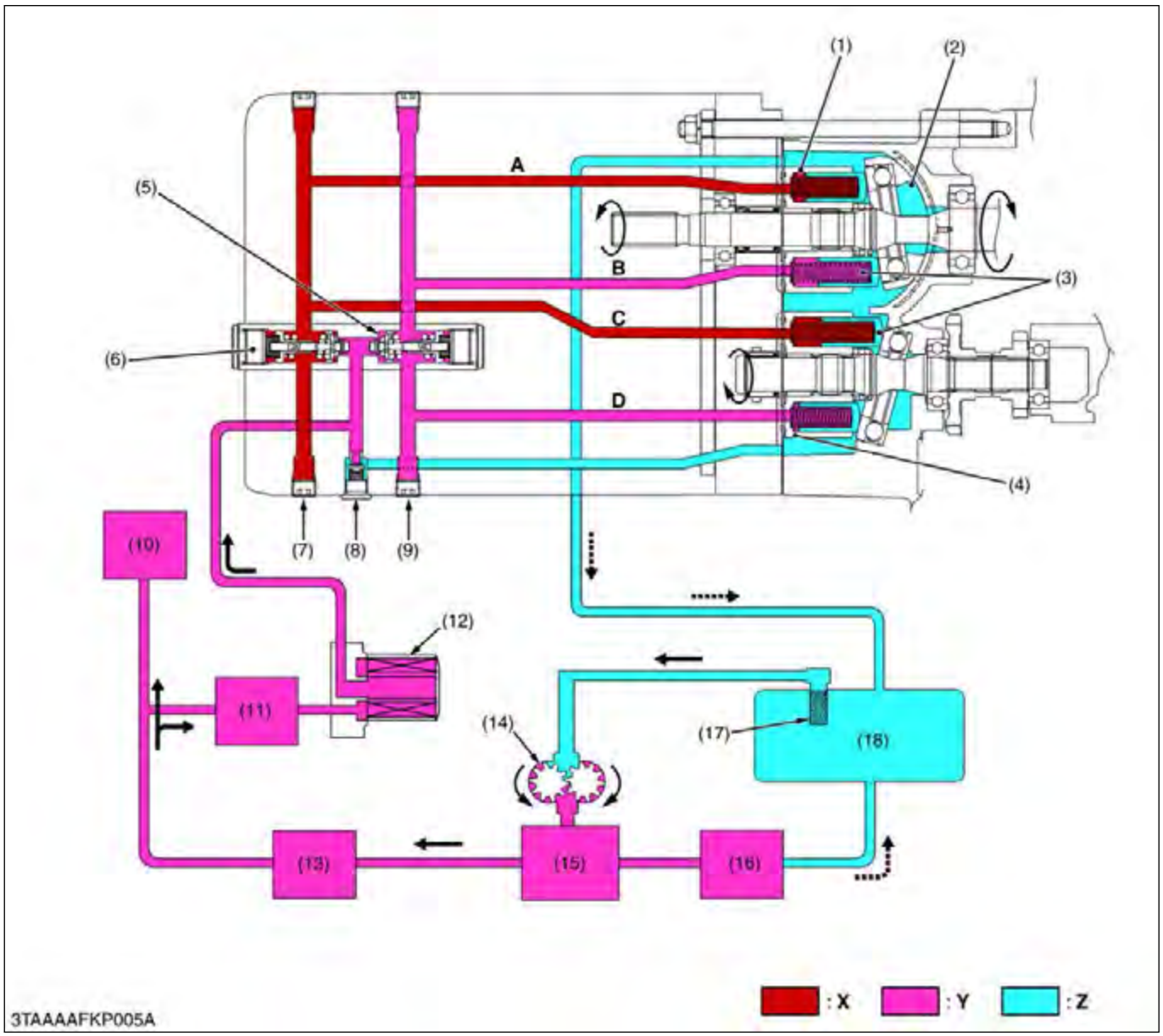

(1) Cylinder block (Pump)
(2) Swashplate
(3) Piston
(4) Cylinder block (Motor)
(5) Check and high pressure relief valve (Forward)
(6) Check and high pressure relief valve (Reverse)
(7) High pressure relief port plug (Forward)
(8) Charge relief valve
(9) High pressure relief port plug (Reverse)
(10) PTO clutch valve
(11) PTO relief valve
(12) Oil filter cartridge
(13) Power steering controller
(14) Hydraulic pump
(15) Flow priority valve (Hydraulic control valve)
(16) Position control valve
(17) Oil strainer
(18) Transmission case
A: A port
B: B port
C: C port
D: D port
X: High pressure
Y: Low pressure
Z: Free oil

2.1.2.4 Relief (reverse position)

When the speed control pedal is in reverse, the variable swashplate is tilted as shown in figure.
As the pump cylinder block rotates with the input shaft, oil is forced out of pump port A at high pressure. As pressure oil enters motor port C, the pistons, which align with port C, are pushed against the swashplate and slide down the inclined surface. Since the oil pressure in the check and high pressure relief valve (reverse) increase, the high oil pressure opens the check and high pressure relief valve (reverse) and the flows through the charge relief valve to the transmission case.
Then the output shaft rotates with the motor cylinder block. This drives the machine rearward and the angle of pump swashplate determines the output shaft speed.
As the motor cylinder block continues to rotate, oil is forced out of motor port D at low pressure and returns to the pump.

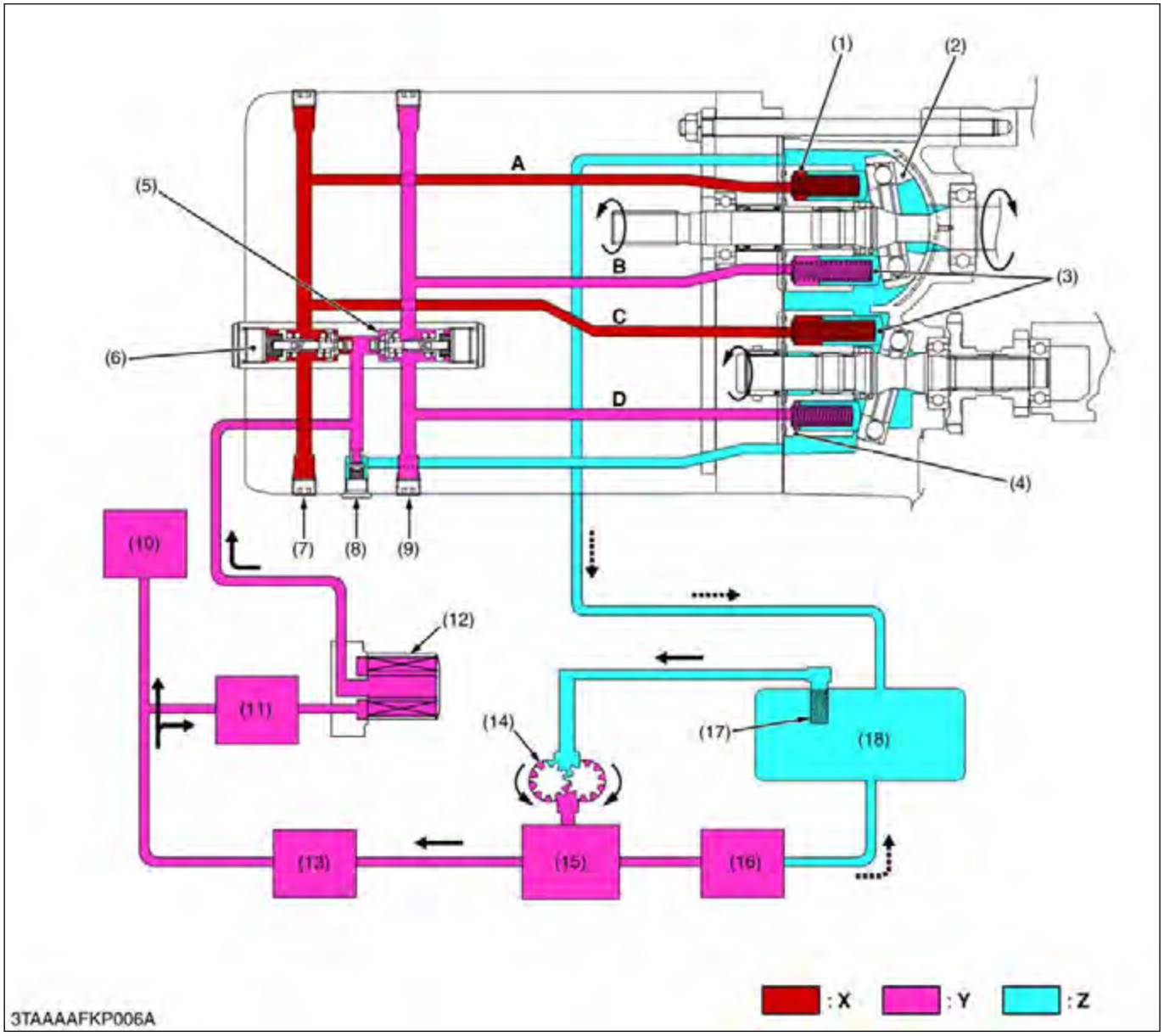

(1) Cylinder block (Pump)
(2) Swashplate
(3) Piston
(4) Cylinder block (Motor)
(5) Check and high pressure relief valve (Forward)
(6) Check and high pressure relief valve (Reverse)
(7) High pressure relief port plug (Forward)
(8) Charge relief valve
(9) High pressure relief port plug (Reverse)
(10) PTO clutch valve
(11) PTO relief valve
(12) Oil filter cartridge
(13) Power steering controller
(14) Hydraulic pump
(15) Flow priority valve (Hydraulic control valve)
(16) Position control valve
(17) Oil strainer
(18) Transmission case
A: A port
B: B port
C: C port
D: D port
X: High pressure
Y: Low pressure
Z: Free oil

2.1.3 Structure of HST control linkage

The speed control pedal (4) and the trunnion arm are linked with the HST pedal link (8) and the speed change rod (9). As the front of the pedal is depressed, the swashplate connected to the trunnion arm (2) rotates and forward travelling speed increases. Depressing the rear end increases reverse speed.
The trunnion arm (2) is returned to neutral position by the neutral arm and the tension of neutral spring. At the same time, the swashplate is returned to neutral, when the pedal is released. The damper (10) connected to the HST pedal link (8) restricts the movement of the linkage to prevent abrupt operation or reversing.
Moreover, the feeling of the dynamic braking can be adjusted by changing the arm (11) position of damper (10).

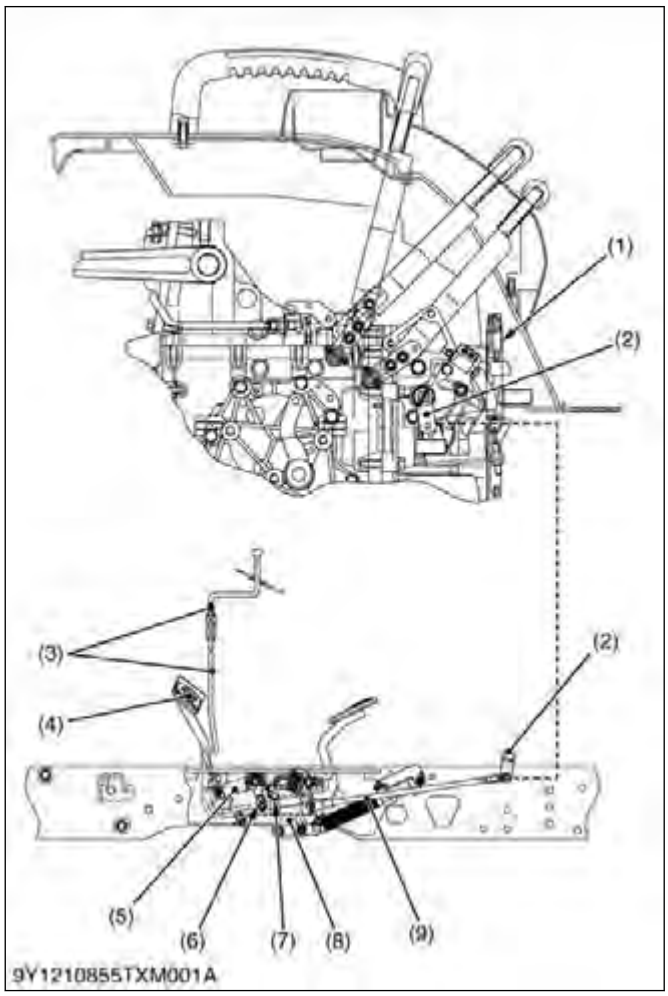

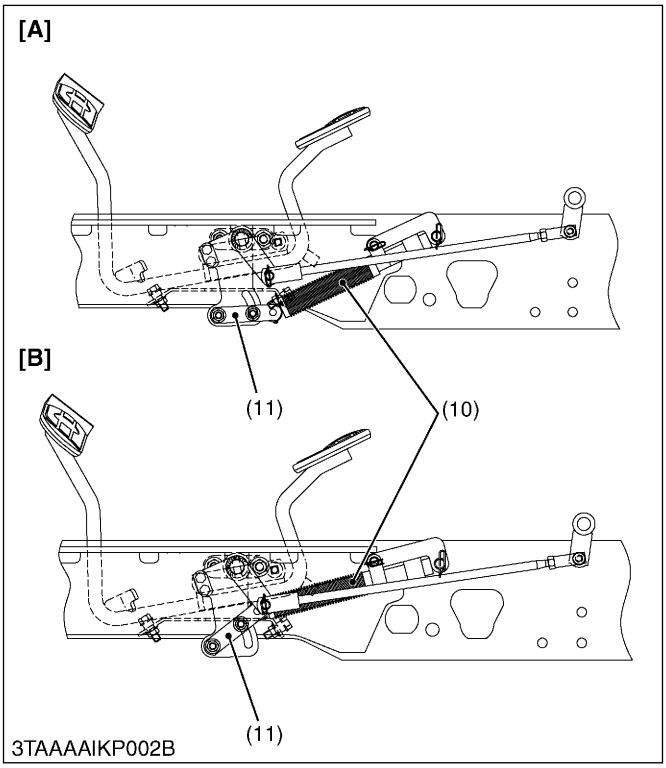

(1) Neutral spring
(2) Trunnion arm
(3) Cruise rod
(4) Speed control pedal
(5) Cruise arm
(6) Cruise lock
(7) Cruise lock
(8) HST pedal link
(9) Speed change rod
(10) Damper
(11) Arm

(Reference)

[A]
Force of the damper is large.

[B]
Force of the damper is small.

https://truckmanualshub.com/

2.1.4 Speed set linkage

2.1.4.1 Speed set

When pushing and holding the speed set rod (1) and depressing the speed control pedal (2), the desired speed is set.
When pushing the speed set rod (1), the cruise plate (5) is rotated counter clockwise.
When depressing the speed control pedal (2) forward, the HST pedal link clockwise.
Since both the cruise lock (3) of the cruise plate (5) and the cruise lock (4) of HST pedal link (6) are locked, the speed control pedal (2) is held at a selected position.

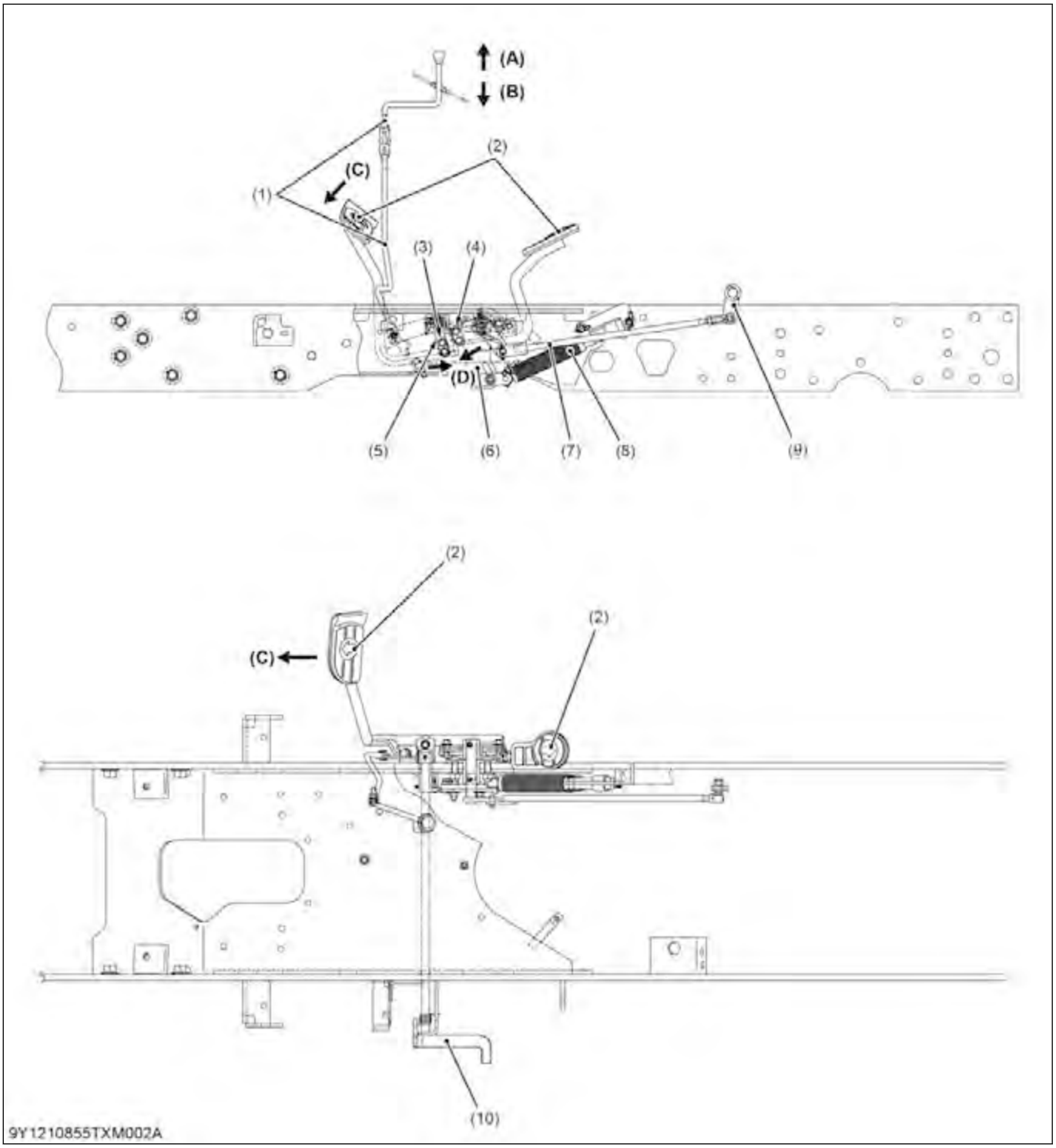
(A)
(B)
(1)
(2)
(C)
(3)
(4)
(D)
(5)
(6)
(7)
(8)
(9)
(2)
(2)
(C)
(10)
9Y1210855TXM002A

https://truckmanualshub.com/

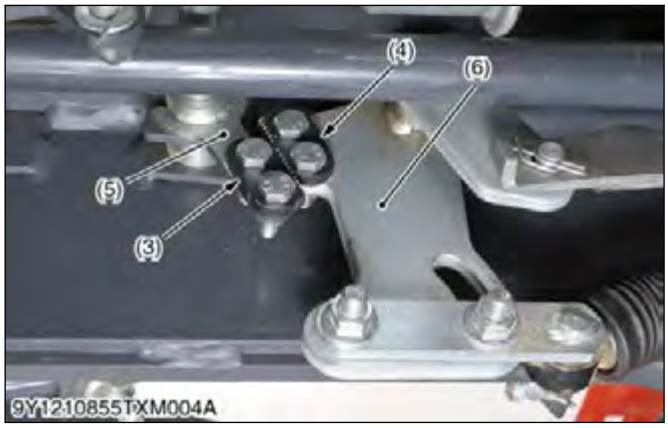

(1) Speed set rod
(2) Speed control pedal
(3) Cruise lock
(4) Cruise lock
(5) Cruise plate
(6) HST pedal link
(7) Speed change rod
(8) Damper
(9) Trunnion arm
(10) Release plate
(A) Speed set rod **OFF**
(B) Speed set rod **ON**
(C) Speed control pedal **Forward**
(D) Cruise lock **Locked**

2.1.4.2 When brake pedal is depressed

When the brake pedal (2) is depressed, the release plate (1) located under the brake pedal (2) is pushed down.
Since the cruise plate (3) rotates, the cruise lock (4) and (6) between the cruise plate (3) and the HST pedal link (5) are released.

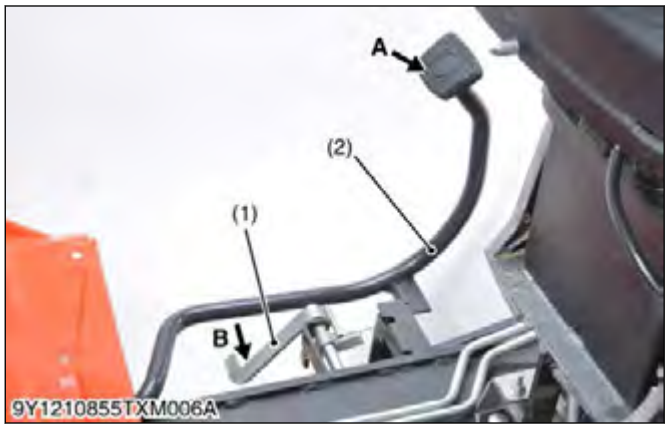

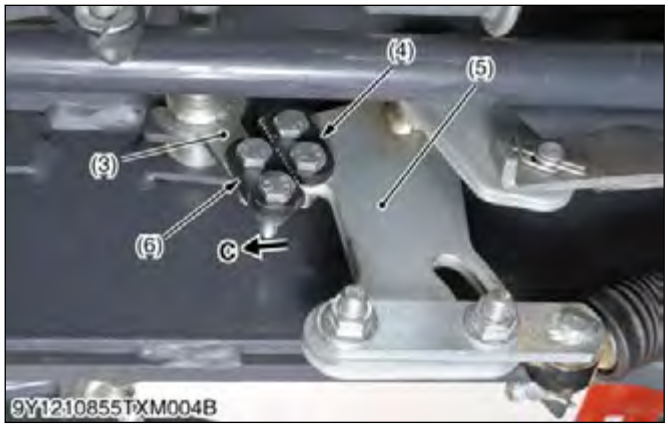

(1) Release plate
(2) Brake pedal
(3) Cruise plate
(4) Cruise lock
(5) HST pedal link
(6) Cruise lock

A: Brake pedal depressed
B: Release plate pushed down
C: Cruise plate rotates clockwise and releases the cruise lock

2.2 Range gear shift section

2.2.1 Structure of range gear shift

Two kinds of power flow are selected by operating the range gear shift lever to shift the 16T-24T shifter gear (4) on the spiral bevel pinion shaft (3).

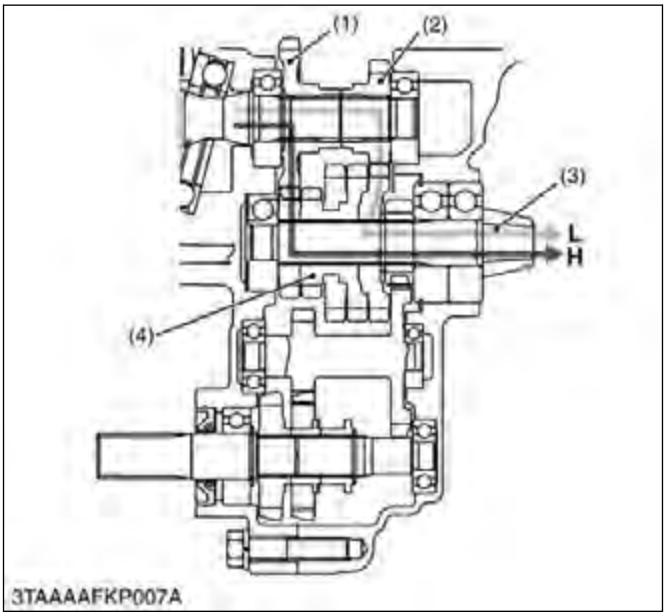

(1) 25T gear
(2) 17T gear
(3) Spiral bevel pinion shaft
(4) 16T-24T shifter gear
L: Low range
H: High range

Low range
17T gear shaft (2) → Shifter gear (24T) (4) → Spiral bevel pinion shaft (3).

High range
25T gear (1) → Shifter gear (16T) (4) → Spiral bevel pinion shaft (3).

https://truckmanualshub.com/

2.3 Front wheel drive section

2.3.1 Structure of front wheel drive

2-wheel drive or 4-wheel drive is selected by changing the position of 19T shifter gear (2) with the front wheel drive lever.

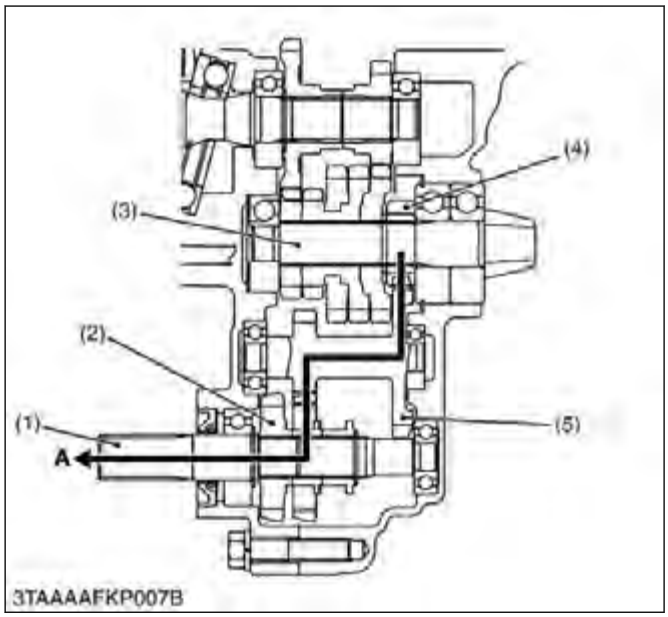

(1) Front wheel drive shaft
(2) 19T shifter gear
(3) Spiral bevel pinion shaft
(4) 12T gear
(5) 13T-25T gear shaft
A: Front wheel drive "engaged"

Front wheel drive "disengaged"
When the front wheel drive lever is set to "disengaged" position, the 19T shifter gear (2) is neutral and power is not transmitted to the front wheel drive shaft (1).

Front wheel drive "engaged"
When the front wheel drive lever is set to "engaged" position, the 19T shifter gear (2) slides to the right to engage with 13T-25T gear shaft (5). Therefore, the power from spiral bevel pinion shaft (3) is transmitted to the front wheel drive shaft (1) through the gears.

2.4 Differential gear section

2.4.1 Structure of differential gears

During straight running

Rotation of the spiral bevel pinion is transmitted to the 37T spiral bevel gear (3), 10T final gear shaft (4), 66T final gear (7) and differential case (1). When road resistance to the right and left wheels are equal, differential pinions (2), (8) and differential side gears (5), (9) all rotate as a unit. Both rear axles received equal input, and both wheels turn at the same speed, allowing the tractor to go straight ahead.
At this time, differential pinions (2), (8) do not rotate around the differential pinion shaft (6).

During turning

When the tractor turns, the road resistance to the inside tire increases. In other words, if one of tires slows down, revolution difference is generated in the differential side gears (5), (9). When rotation of one differential side gear becomes lower than the other, differential pinions (2), (8) begin rotating around differential pinion shaft (6). The other differential side gear is increased in speed by the speed increment of differential pinion shaft (6). This means that rotation of one rear axle is slowed down and that of the other rear axle is increased. Thus, the tractor turn smoothly without power loss.
The combined number of revolutions of the right and left differential side gears is always twice that of the spiral bevel gear (3). When spiral bevel gear revolution is 100 $min^{-}{}^{-1}$ (rpm), and if one of the differential side gears stops moving, the revolution of the other differential side gear becomes 200 min^{-1} (rpm) and if one rotates at 50 min^{-1} (rpm), the other rotates at 150 min^{-1} (rpm).

https://truckmanualshub.com/

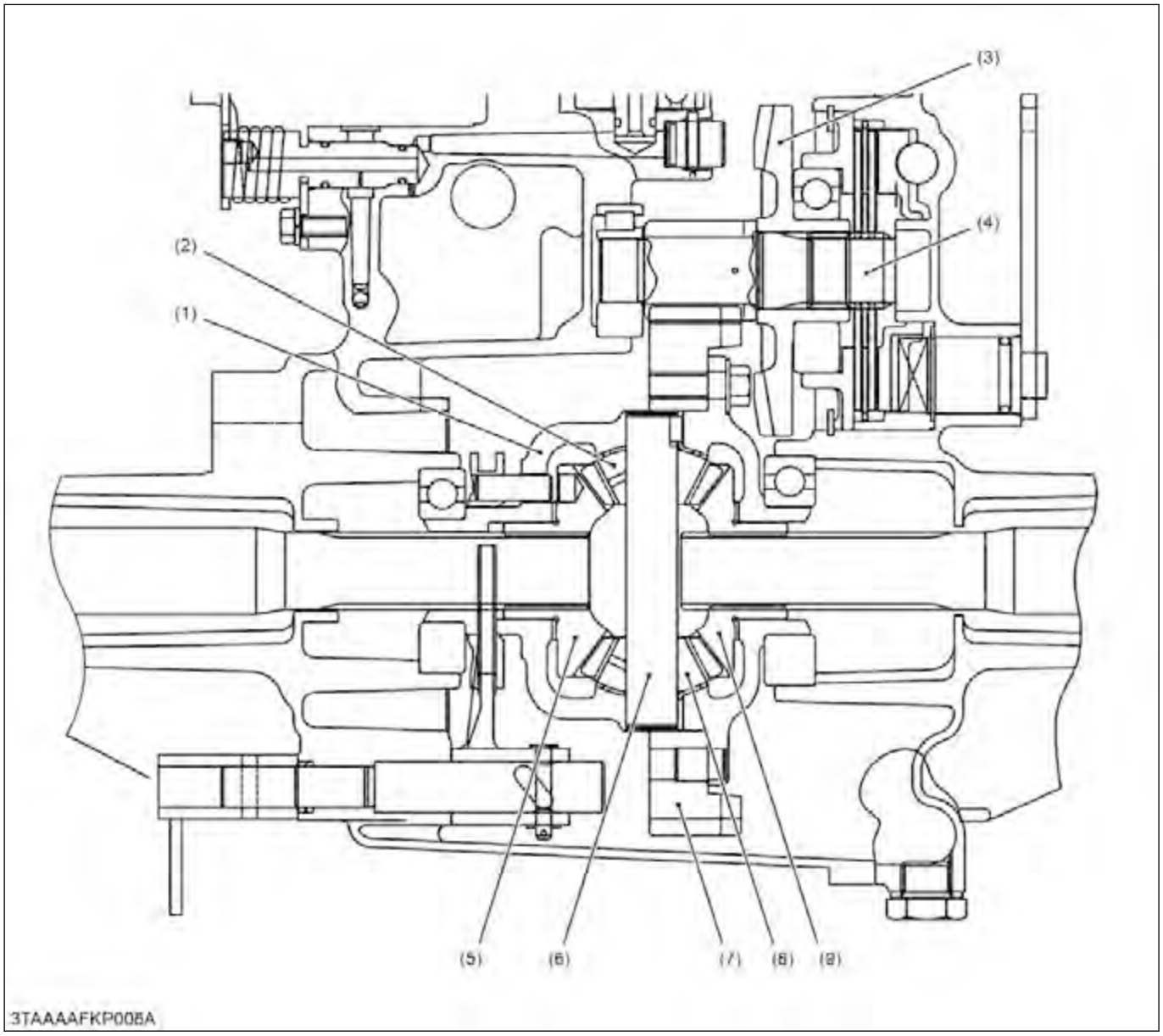

(1) Differential case
(2) Differential pinion
(3) 37T spiral bevel gear
(4) 10T final gear shaft
(5) Differential side gear
(6) Differential pinion shaft
(7) 66T final gear
(8) Differential pinion
(9) Differential side gear

2.4.2 Structure of differential lock

When resistance to the right and left tires are greatly different due to ground conditions or type of work, the tire with less resistance slips and prevents the tractor from moving ahead. To compensate for this drawback, the differential lock restricts the differential action and causes both rear axles to rotate as a unit.
When the differential lock pedal is stepped on, it causes the differential lock arm (6) and differential lock shaft (7) to rotate, which will move the differential lock shift fork (8) and the differential lock shifter (2) toward the differential side gear (9). The pins on the differential lock shifter (2) go into the holes in the differential case (3) to cause the differential case (3), differential lock shifter (2) and differential side gear (9) to rotate as a unit.
Therefore, differential pinions (4), (11) are unable to rotate around differential pinion shaft (10) and identical revolutions are transmitted to the right and left rear axle (1), (5).

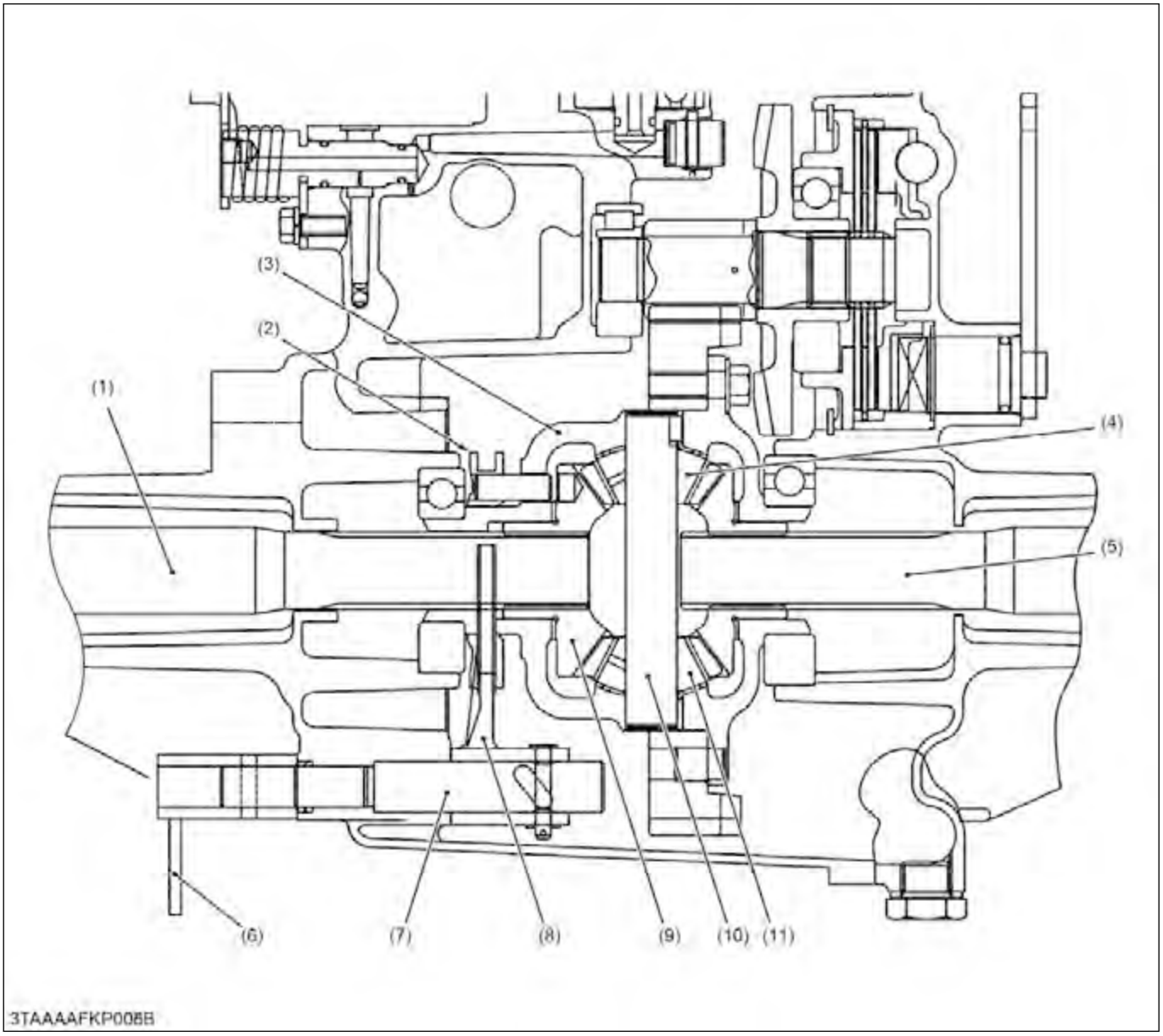

(1) Rear axle
(2) Differential lock shifter
(3) Differential case
(4) Differential pinion
(5) Rear axle
(6) Differential lock arm
(7) Differential lock shaft
(8) Differential lock shift fork
(9) Differential side gear
(10) Differential pinion shaft
(11) Differential pinion

https://truckmanualshub.com/

2.5 Brake section

2.5.1 Structure of brake system

The mechanical wet disc brakes are used for the travelling brake. The brake is operated by the brake pedal (13) through the mechanical linkages and provide stable braking and require little adjustment.
The brake body is incorporated in the transmission case and axle cover filled with transmission oil.
For greater braking force, four brake discs (11) are provided at the brake shaft, and the friction plates (5) fixed to the transmission case is arranged between the brake discs (11).

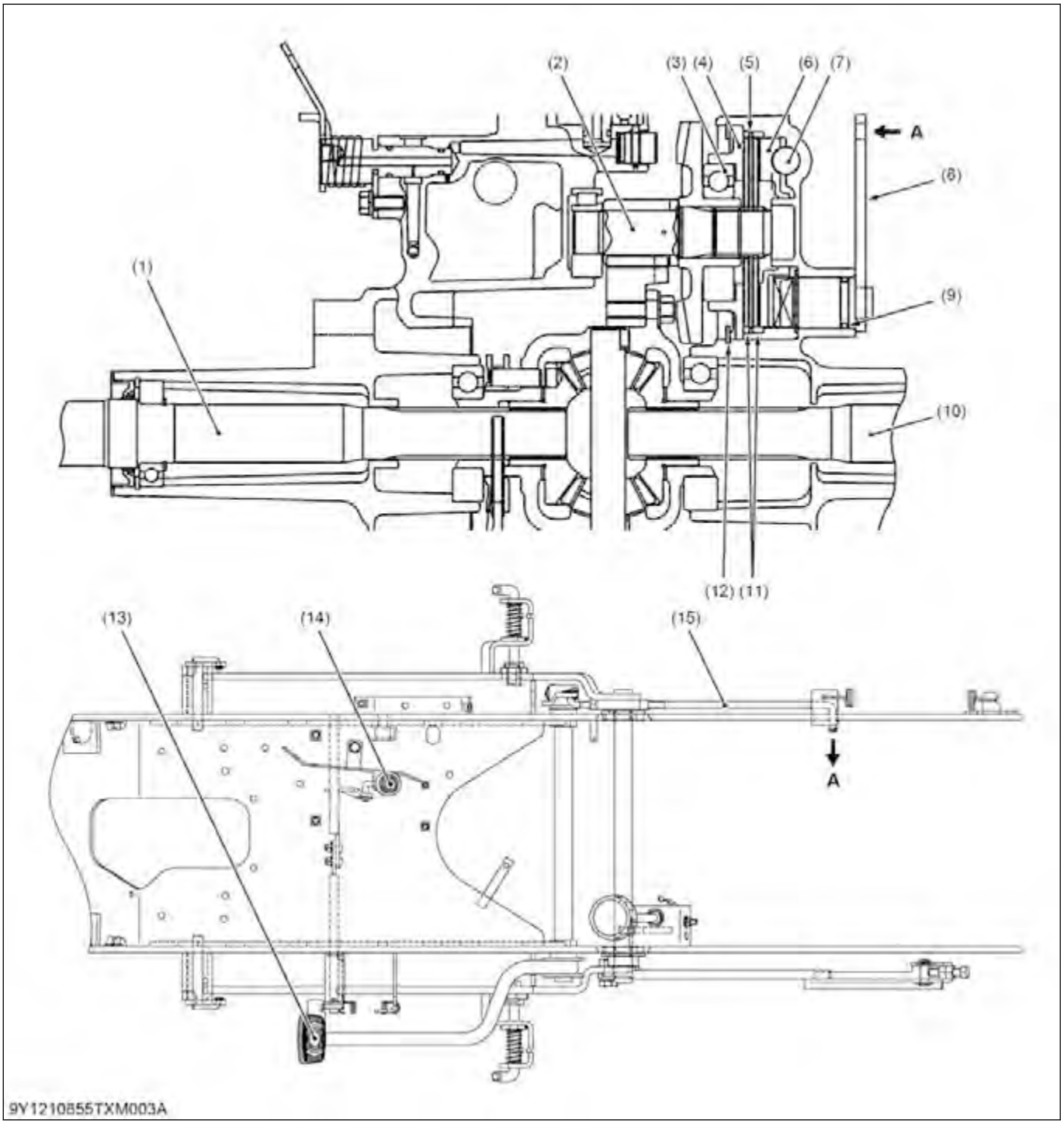

(1) Rear axle L.H.
(2) Final gear shaft
(3) Shim
(4) Bearing holder
(5) Friction plate
(6) Actuator
(7) Steel ball
(8) Cam lever
(9) O-ring
(10) Rear axle R.H.
(11) Brake disc
(12) Internal circlip
(13) Brake pedal
(14) Parking brake lock pedal
(15) Brake rod

A: Connects with brake cam lever and brake rod.

Travelling brake

When the brake pedal (13) is depressed, the brake rod (15) pulls the brake cam lever (8).
Therefore, the cam plates also move and ride on the steel balls set in the grooves of the transmission case to press the brake disc, the final gear shaft is braked by the frictional force generated by the cam plate and brake disc.

Parking brake

When the parking brake is applied, the brake pedal (13) is locked by the parking brake lock pedal (14).

https://truckmanualshub.com/

3. PTO system

3.1 Structure of PTO system

The BX 80 series equipped with hydraulic independent PTO clutch (wet multi-plates type). Therefore, the engine power engages or disengages to the PTO shafts without stopping the tractor movement.
The PTO clutch pack (2) has four clutch discs, four drive plates, pressure plate, clutch piston and so on.
The clutch piston is actuated by hydraulic oil flow from the power steering controller.
The PTO clutch valve (5) controls the hydraulic oil flow from power steering controller to the PTO clutch pack (2) by operating the PTO clutch lever through the linkage.

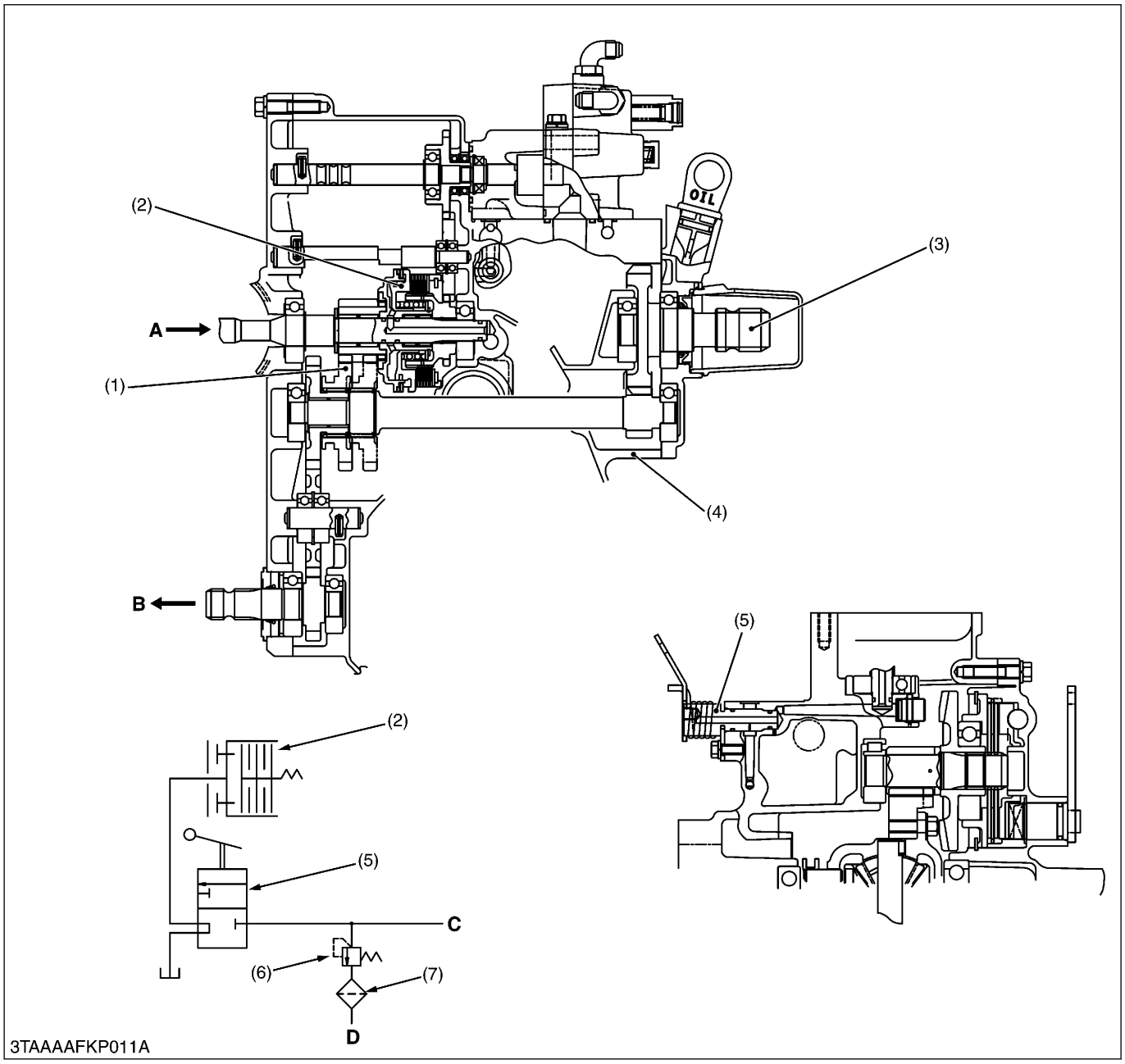

(1) PTO select gear	(4) Transmission case	(7) Oil filter cartridge	C: From power steering controller
(2) PTO clutch pack	(5) PTO clutch valve	A: From HST pump shaft	D: To hydrostatic transmission
(3) Rear PTO shaft	(6) PTO clutch relief valve	B: To mid-PTO	

3.1.1 Function of PTO clutch relief valve

The PTO clutch relief valve is provided to control the PTO operating pressure. When the oil pressure exceed the relief valve setting pressure, relief valve opens and the oil flows into PTO clutch and hydrostatic transmission.

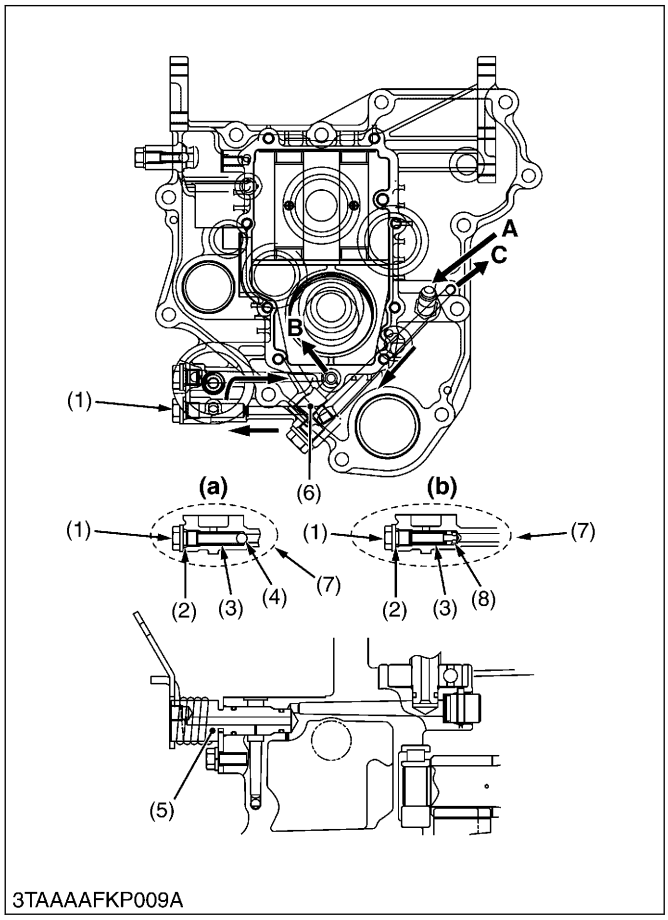

(1) Plug
(2) O-ring
(3) Spring
(4) Steel ball
(5) PTO clutch valve
(6) HST charge relief valve
(7) PTO clutch relief valve
(8) Poppet
A: From power steering controller
B: To hydrostatic transmission
C: To PTO clutch valve
(a) Old type
(b) New type

Relief valve setting pressure	Reference value	490 kPa 5.0 kgf/cm^2 71.2 psi

3.1.2 Engaged function of PTO clutch

The oil from power steering controller flows into the PTO clutch valve.
When the PTO clutch lever is set at the "engaged" position, the PTO clutch valve rotates. Oil flows from the oil line through transmission case to the PTO clutch pack.
Oil entering the clutch pack pushes the clutch piston (4) to engage the clutch pack. Power is transmitted from the HST pump shaft (1) through the PTO clutch to the clutch gear (2) and the PTO shafts.

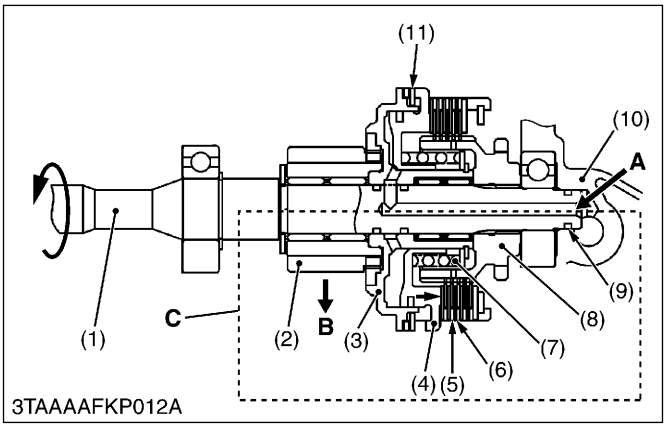

(1) HST pump shaft
(2) Clutch gear
(3) Clutch case
(4) Clutch piston
(5) Clutch plate
(6) Clutch disc
(7) Spring
(8) Spline boss
(9) O-ring
(10) Transaxle case
(11) Brake disc
A: From PTO clutch valve
B: Power to PTO shaft
C: PTO clutch "engaged"

3.1.3 Disengaged function of PTO clutch

When the PTO clutch lever is set at the "disengaged" position, the PTO clutch valve closes the oil passage to the PTO clutch pack. The oil in the PTO clutch pack drain into the transaxle case (10). Thus the clutch piston (4) is pushed back by the spring (7).
When the clutch piston (4) is pushed back by the spring (7), the brake plate (11) is also moved to contract the brake disc (12) so as to stop the rotation and drag of the PTO shafts.

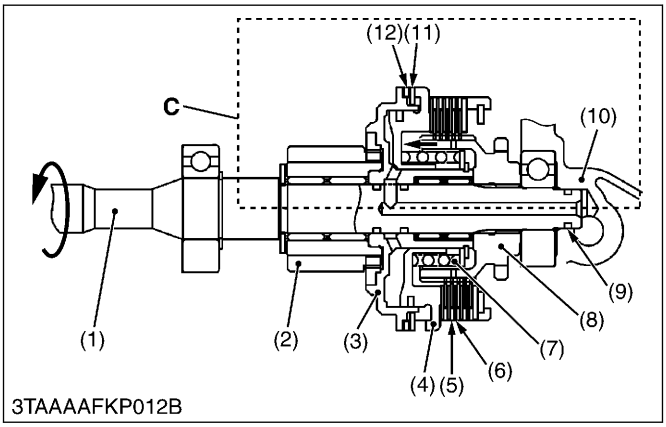

(1) HST pump shaft
(2) Clutch gear
(3) Clutch case
(4) Clutch piston
(5) Clutch plate
(6) Clutch disc
(7) Spring
(8) Spline boss
(9) O-ring
(10) Transaxle case
(11) Brake plate
(12) Brake disc
C: PTO clutch "disengaged"

https://truckmanualshub.com/

3.2 Structure of mid and rear PTO

Three kinds of power flow are selected by operating the PTO select lever to shift the 28T PTO select gear (8) on the 11T gear shaft (9).

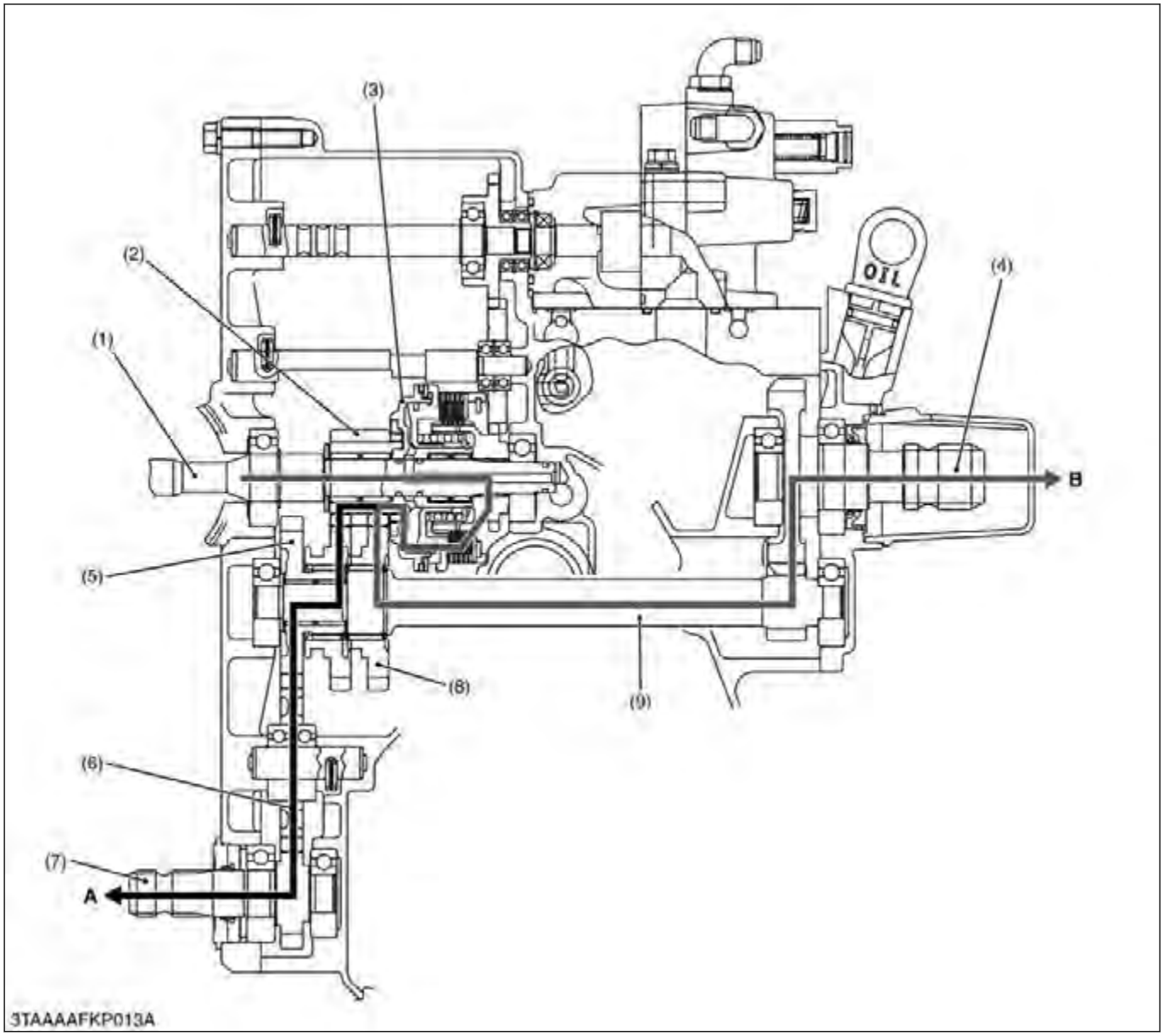

(1) HST pump shaft	(4) Rear PTO shaft	(7) Mid-PTO shaft
(2) 12T clutch gear	(5) 23T mid-PTO gear	(8) 28T PTO select gear
(3) PTO clutch pack	(6) 24T mid-PTO idle gear	(9) 11T gear shaft

Mid-PTO position "A"
PTO clutch pack (3) → 12T clutch gear (2) → 28T PTO select gear (8) → 23T mid-PTO gear (5) → 24T mid-PTO idle gear (6) → Mid-PTO shaft (7).

Rear PTO position "B"
PTO clutch pack (3) → 12T clutch gear (2) → 28T PTO select gear (8) → 11T gear shaft (9) → Rear PTO shaft (4).

Mid and rear PTO position
"A" and "B" at the same time.

4. Others

4.1 Hydraulic pump drive gear section

4.1.1 Structure of hydraulic pump drive gear

The hydraulic pump (7) is mounted to the transmission case (10) and driven by the hydraulic pump drive gear (5). The spline boss (2) mounted on the HST pump shaft drives the hydraulic pump drive gear (5) mounted on the hydraulic pump drive gear shaft (4) through the idle gear (3).

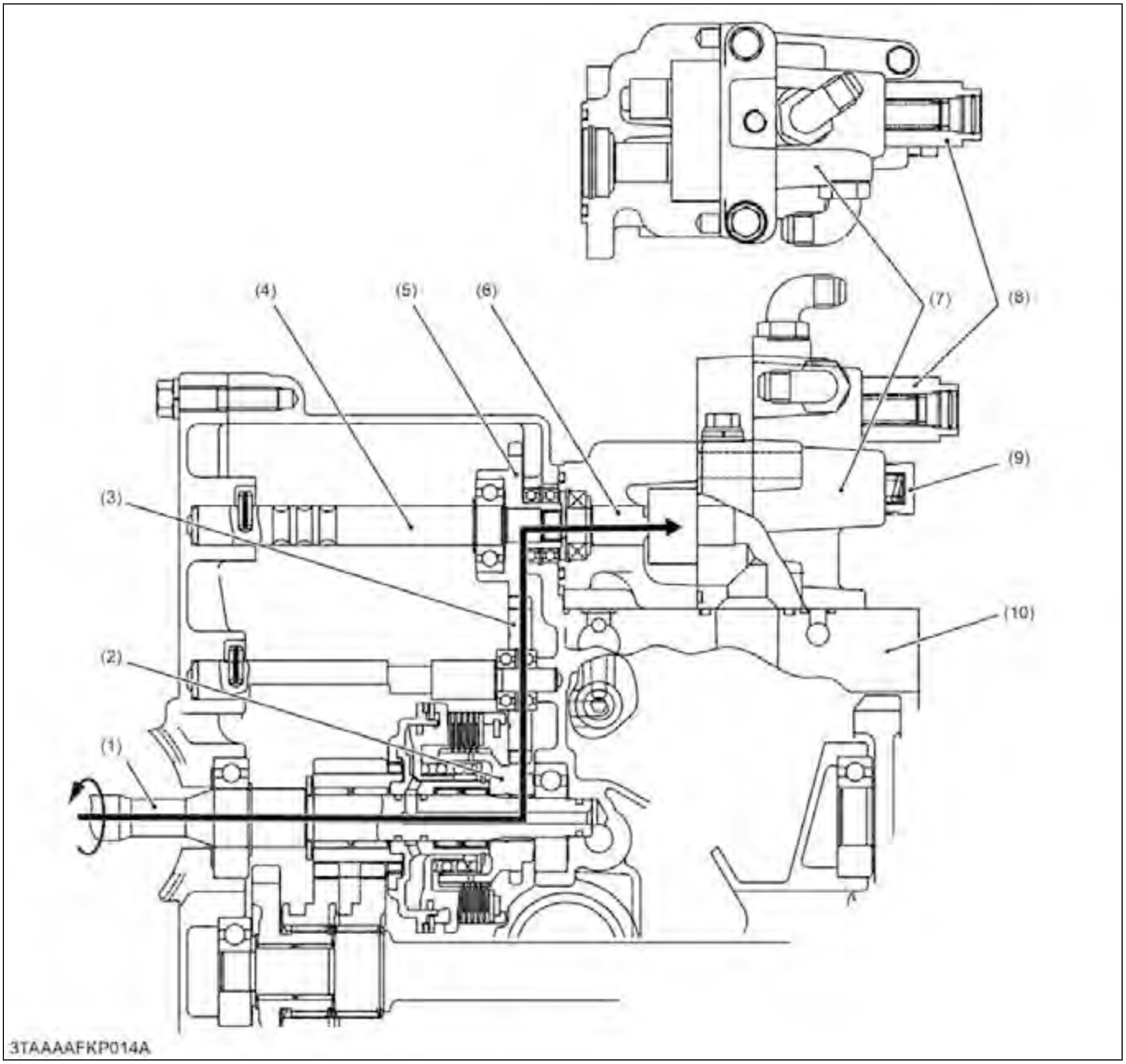

(1) HST pump shaft
(2) Spline boss
(3) Idle gear
(4) Hydraulic pump drive gear shaft
(5) Hydraulic pump drive gear
(6) Hydraulic pump drive gear shaft
(7) Hydraulic pump
(8) Flow priority valve
(9) Relief valve (3P hitch)
(10) Transmission case

https://truckmanualshub.com/

SERVICING

1. Troubleshooting for transaxle

Hydrostatic transmission

Symptom	Probable cause and checking procedure	Solution	Reference page
System will not operate in either direction	1. Oil lever is low	Check oil level or fill oil to proper level	2-26
	2. Speed control pedal linkage damaged	Repair linkage	4-42
	3. Charge pressure is too low	1. Replace oil filter cartridge	2-26
		2. Check charge pressure	4-31
		3. Inspect or flush charge relief valve	4-56
	4. Check and high pressure relief valve does not move smoothly	Inspect or replace check and high pressure relief valve	4-56
	5. Component parts damaged	Replace hydrostatic transmission assembly	4-42
Vibration and noise	1. Oil level is low	Check oil level or fill oil to proper level	2-26
	2. Speed control pedal linkage damaged	Repair linkage	4-42
	3. Charge pressure is too low	1. Replace oil filter cartridge	2-26
		2. Check charge pressure	4-31
		3. Inspect or flush charge relief valve	4-56
	4. Check and high pressure relief valve does not move smoothly	Inspect or replace check and high pressure relief valve	4-56
	5. Component parts damaged	Replace hydrostatic transmission assembly	4-42
Loss of power	1. Oil level is low	Check oil level or fill oil to proper level	2-26
	2. Speed control pedal linkage damaged	Repair linkage	4-42
	3. Charge pressure is too low	1. Replace oil filter cartridge	2-26
		2. Check charge pressure	4-31
		3. Inspect or flush charge relief valve	4-56

(Continued)

Symptom	Probable cause and checking procedure	Solution	Reference page
Loss of power	4. Check and high pressure relief valve does not move smoothly	Inspect or replace check and high pressure relief valve	4-56
	5. Component parts damaged	Replace hydrostatic transmission assembly	4-42
Transmission oil over heats	1. Low transmission oil level	Fill transmission oil level up to proper level	2-26
	2. Radiator net clogged	Clean radiator net	2-23
	3. Excessive machine load	Reduce machine load	—
	4. Improper charge pressure	1. Check high relief pressure	4-32
		2. Replace transmission oil filter cartridge	2-26
		3. Replace check and high pressure relief valve	4-56
		4. Inspect and replace charge relief valve	4-31 4-56
Machine will not stop in neutral position	1. Speed control linkage is out of adjustment or sticking	1. Repair or replace linkage	4-42
		2. Adjust neutral position	4-29
System operates in one direction only	1. Speed control linkage damaged	Repair or replace linkage	4-42
	2. Check and high pressure relief valve damaged	Replace check and high pressure relief valve	4-56 4-56

Traveling gear shift section

Symptom	Probable cause and checking procedure	Solution	Reference page
Noise from transmission	1. Transmission oil insufficient	Refill	2-26
	2. Gear worn or broken	Replace	—
	3. Bearings worn	Replace	—
Gear slip out of mesh	1. Shift fork spring tension insufficient	Replace	4-54
	2. Shift fork or shifter worn	Replace	4-54
	3. Shift fork bent	Replace	4-54

https://truckmanualshub.com/

Differential gear section

Symptom	Probable cause and checking procedure	Solution	Reference page
Excessive or unusual noise all the time	1. Improper backlash between spiral bevel pinion and bevel gear	Adjust	4-61
	2. Improper backlash between differential pinion and differential side gear	Adjust	4-60
	3. Bearing worn	Replace	—
	4. Insufficient or improper type of transmission fluid used	Fill or change	2-7 2-26
Noise while turning	1. Differential pinions or differential side gears worn or damaged	Replace	4-52
	2. Differential lock binding (does not disengaged)	Replace	4-52
	3. Bearing worn	Replace	—
Differential lock cannot be set	1. Differential lock shift fork damaged	Replace	4-52
	2. Differential lock shifter mounting pin damaged	Replace	4-52
	3. Differential lock pin damaged	Replace	4-52
Differential lock pedal does not return	1. Differential lock pedal return spring weaken or damaged	Replace	4-41
	2. Differential lock fork shaft rusted	Repair	4-52

Brake section

Symptom	Probable cause and checking procedure	Solution	Reference page
Brake drags	1. Brake pedal free travel too small	Adjust	2-34
	2. Ball holes of actuator for uneven wear	Replace	4-62
	3. Brake pedal return spring weaken or broken	Replace	4-41
	4. Brake cam rusted	Repair	4-53
Poor braking force	1. Brake pedal free travel excessive	Adjust	2-34
	2. Brake disc worn	Replace	4-53
	3. Actuator warped	Replace	4-53
	4. Brake cam or lever damaged	Replace	4-53
	5. Transmission fluid improper	Change	2-26

PTO section

Symptom	Probable cause and checking procedure	Solution	Reference page
PTO clutch slips	1. Operating pressure is low	Check	4-34
	2. PTO clutch valve malfunctioning	Repair or replace	4-43
	3. Clutch disc or drive plate excessively worn	Replace	4-54
	4. Deformation of clutch piston	Replace	4-54
PTO shaft does not rotate	1. PTO clutch malfunctioning	Repair or replace	4-54
PTO clutch operating pressure is low	1. Transmission oil improper or insufficient	Fill or change	4-35
	2. Relief valve malfunctioning	Check or replace	4-33
PTO clutch drags	1. Brake plate excessive worn	Replace	4-54
	2. Clutch spring weaken or broken	Replace	4-54
	3. Deformation of pressure plate or steel plate	Replace	4-54

https://truckmanualshub.com/

2. Servicing specifications for transaxle

Item		Factory specifications	Allowable limit
Charge relief valve [oil temperature at 50 ℃ (122 ℉)]	Setting pressure	0.55 to 0.75 MPa 5.6 to 7.7 kgf/cm^2 80 to 100 psi	—
High pressure relief valve (forward and reverse) [oil temperature at 50 ℃ (122 ℉)]	Setting pressure	20.1 to 21.1 MPa 205 to 215 kgf/cm^2 2920 to 3060 psi	—
PTO clutch	Operating pressure	1.0 to 1.3 MPa 11 to 13 kgf/cm^2 150 to 180 psi	—
PTO clutch disk	Thickness	1.50 to 1.70 mm 0.0591 to 0.0669 in.	1.35 mm 0.0531 in.
Separate plate	Thickness	0.9450 to 1.055 mm 0.03721 to 0.04153 in.	0.80 mm 0.031 in.
Back plate	Thickness	1.9 to 2.1 mm 0.075 to 0.082 in.	1.85 mm 0.0728 in.
Clutch piston	Flatness	—	0.15 mm 0.0059 in.
Pressure plate and steel plate	Flatness	—	0.20 mm 0.0079 in.
Clutch spring	Free length	38.5 mm 1.52 in.	34.5 mm 1.36 in.
PTO brake disk	Thickness	2.90 to 3.10 mm 0.115 to 0.122 in.	2.70 mm 0.11 in.
PTO brake plate	Thickness	1.9 to 2.1 mm 0.075 to 0.082 in.	1.85 mm 0.0728 in.
Differential case to differential side gear	Clearance	0.0500 to 0.151 mm 0.00197 to 0.00594 in.	0.30 mm 0.012 in.
• Differential case	I.D.	38.000 to 38.062 mm 1.4961 to 1.4985 in.	—
• Differential side gear	O.D.	37.911 to 37.950 mm 1.4926 to 1.4940 in.	—
Differential pinion shaft to differential pinion	Clearance	0.0800 to 0.122 mm 0.00315 to 0.00480 in.	0.30 mm 0.012 in.
• Differential pinion	I.D.	20.060 to 20.081 mm 0.78977 to 0.79059 in.	—
• Differential pinion shaft	O.D.	19.959 to 19.980 mm 0.78579 to 0.78661 in.	—
Differential pinion to differential side gear	Backlash	0.15 to 0.30 mm 0.0059 to 0.011 in.	0.40 mm 0.016 in.
Spiral bevel pinion shaft to spiral bevel gear	Backlash	0.10 to 0.30 mm 0.0040 to 0.011 in.	—
Actuator and bearing holder	Flatness	—	0.30 mm 0.012 in.
Cam plate and ball	Height	22.89 to 22.99 mm 0.9012 to 0.9051 in.	22.40 mm 0.8819 in.
Brake disk	Thickness	3.30 to 3.50 mm 0.130 to 0.137 in.	3.0 mm 0.12 in.
Friction plate	Thickness	1.92 to 2.08 mm 0.0756 to 0.0818 in.	1.52 mm 0.0598 in.

3. Tightening torques for transaxle

Item	Dimension × Pitch	N·m	kgf·m	lbf·ft
Charge relief valve checking plug	R 1/4	30 to 44	3.0 to 4.5	22 to 32
Hexagon socket head plug	R 1/4	30 to 44	3.0 to 4.5	22 to 32
Hexagon socket head screw	—	25 to 29	2.5 to 3.0	18 to 21
PTO clutch operating pressure plug	R 1/8	13 to 21	1.3 to 2.2	9.4 to 15
Lower ROPS mounting bolt and nut	—	48.0 to 55.9	4.90 to 5.70	35.5 to 41.2
Fuel tank stay mounting bolt and nut	—	48 to 55	4.9 to 5.7	36 to 41
Seat stopper bolt	—	123.5 to 147.0	12.6 to 15.0	91.2 to 108
Rear wheel mounting screw	—	109 to 129	11.1 to 13.2	80.3 to 95.4
Fender center stay mounting bolt and nut (M14)	—	98.0 to 125	11.0 to 12.8	79.6 to 92.5
Fender center stay mounting bolt and nut (M10)	—	39.2 to 45.1	4.00 to 4.60	29.0 to 33.2
Hitch plate mounting bolt and nut (M14)	—	124 to 147	12.6 to 15.0	91.2 to 108
Fender bracket mounting bolt and nut (M14)	—	124 to 147	12.6 to 15.0	91.2 to 108
Transaxle assembly mounting screw	M12	63 to 72	6.4 to 7.4	47 to 53
Transaxle assembly mounting screw	M14	124 to 147	12.6 to 15.0	91.2 to 108
Rear coupling mounting screw	M8	24 to 27	2.4 to 2.8	18 to 20
Front coupling mounting screw	M8	24 to 27	2.4 to 2.8	18 to 20
HST fan mounting screw	M8	9.8 to 11	1.0 to 1.2	7.3 to 8.6
Hydraulic control lever mounting bolt and nut	M8	18 to 20	1.8 to 2.1	13 to 15
HST front cover mounting bolt and nut	M10	18 to 20	1.8 to 2.1	13 to 15
Check and high pressure relief valve plug	—	59 to 78	6.0 to 8.0	44 to 57
Hydraulic cylinder mounting screw	—	40 to 44	4.0 to 4.5	29 to 32
Transaxle case front cover mounting bolt	M10	39 to 44	4.0 to 4.4	29 to 32
Hydraulic pump assembly mounting bolt	M6	7.9 to 8.8	0.80 to 0.90	5.8 to 6.5
Hydraulic pump assembly mounting bolt	M8	18 to 20	1.8 to 2.1	13 to 15
Rear PTO cover mounting bolt	M8	18 to 20	1.8 to 2.1	13 to 15
Rear axle case (R.H.) mounting bolt	M8	18 to 20	1.8 to 2.1	13 to 15
66T final gear mounting screw	—	61 to 70	6.2 to 7.2	45 to 52

RELATED PAGE

TIGHTENING TORQUES on page 2-13

4. Checking and adjusting

4.1 Adjusting maximum speed

IMPORTANT

- **Speed control pedal should contact with adjusting bolt (A) and / or (B), when depress the speed control pedal fully.**

(A) Stopper bolt length (Forward)
(B) Stopper bolt length (Reverse)

1. Lift up the rear wheels safely by the rigid jacks.
2. Shift the front wheel drive lever to **OFF** position.
3. Depress the speed control pedal to the forward all the way and lengthen the stopper bolt (for the forward) until it touches the speed control pedal.
4. Adjust the stopper bolt (for the forward) length (A) and lock it securely.

Reference

Stopper bolt length	Forward	17.0 mm 0.669 in.

5. Adjust the stopper bolt (for the reverse) length (B) and lock it securely.

Reference

Stopper bolt length	Reverse	17.5 mm 0.689 in.

6. Finally check the traveling speed or rear axle shaft rotation speed.
7. If the measurement is not within the references, check the adjusting bolt length (A), (B).

Maximum rear axle shaft speed (At engine maximum speed and low range)	Reference	52.2 min^{-1} 52.2 rpm

Maximum traveling speed (At engine maximum speed)	Reference	Forward	13.0 to 14.0 km/h 8.08 to 8.69 mph
		Reverse	10.0 to 11.0 km/h 6.22 to 6.83 mph

4.2 Adjusting HST neutral position

CAUTION

- **Park the machine on a firm and level ground.**

NOTE

- **When adjusting the HST neutral position, loosen the locking screw approximately 2 turns counterclockwise not to drop the nut inside.**

(1) Range gear shift lever
(2) Front wheel drive lever
(3) Neutral adjust lever
(4) Locking screw
(A) 4WD off position
(B) Hi position

1. Place the wooden blocks at the front and the rear side of the wheels to prevent tractor from moving.
2. Lift up the rear wheels and secure with rigid jacks.
3. Remove the R.H. rear wheel from the tractor.
4. Shift the front wheel drive lever (2) to the 4WD off position (A).
5. Start the engine.
6. Operate the engine at the maximum revolution.
7. Shift the range shift lever (1) to hi position (B).
8. Loosen the locking screw (4).

(Forward to neutral position)

9. Depress the speed control pedal to forward speed position, and release the foot from the speed control pedal. Check that the rear axle (or the wheel) stops rotating. If the rear axle (or the wheel) does not stop rotating, move the position of the locking screw (4) to the machine front side to stop rotating.

(Reverse to neutral position)

10. Depress the speed control pedal to reverse speed position, and release the foot from the speed control pedal. Check the rear axle (or the wheel) stops rotating. If the rear axle (or the wheel) does not stop rotating, adjust the locking screw (4) to stop rotating.

11. After adjusting the neutral position, tighten the locking screw (4) securely.

4.3 Checking and adjusting HST neutral spring (dynamic braking)

WARNING

- **Do not operate if tractor moves on level ground with foot off speed control pedal.**
- **If tractor moves on level ground with foot off the pedal, or, if the pedal is too slow in returning to neutral position when removing the foot from the pedal, adjust the HST neutral spring.**

The HST neutral spring located under the front right side of the fender can adjust returning speed of speed control pedal. Since the HST neutral spring tension is weakened, the HST tension should be checked and adjusted every 100 hours.

Checking the HST neutral spring tension

1. Start the engine and hold the maximum engine speeds.
2. Operate the machine on the concrete level ground.
3. Shift the range gear shift lever to hi position.
4. Depress the speed control pedal to forward.
5. Release the foot from the speed control pedal.
6. Check the distance (L) between the foot releasing point and the machine stopping point.
7. If the distance is more than shown below, strengthen the HST neutral spring tension so that the machine will stop in the specified distance after releasing the foot from the speed control pedal.

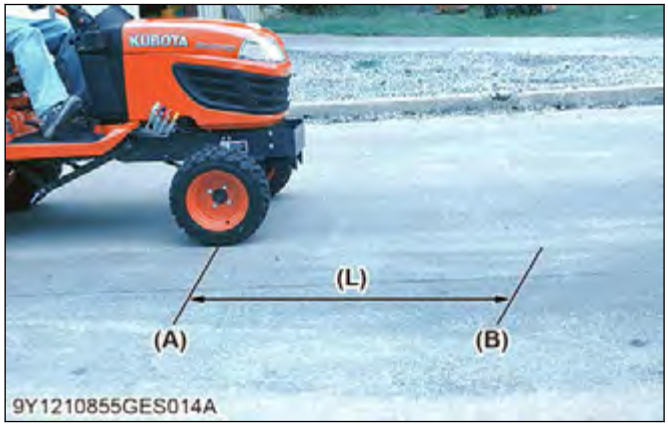

(A) Foot releasing point
(B) Machine stopping point
(L) Distance between foot releasing point and the machine stopping point

Distance (L) between the foot releasing point and the machine stopping point	Specification	3 m 10 ft.

Adjusting the HST neutral spring tension

1. Remove the step from the machine.
2. Loosen the lock nut (2).
3. Turn the adjusting nut (3) half turn to pull the HST neutral spring (1).
4. Tighten and lock the lock nut (2).
5. Start the engine and check dynamic brake as mentioned former.
6. If the machine will not stop with dynamic brake in the specified distance, adjust the neutral spring again.
   - The feeling of dynamic braking can be adjusted by changing the arm (6) position of damper (5).

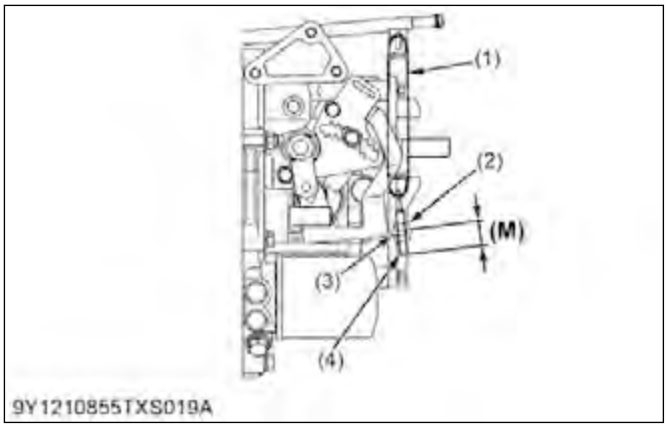

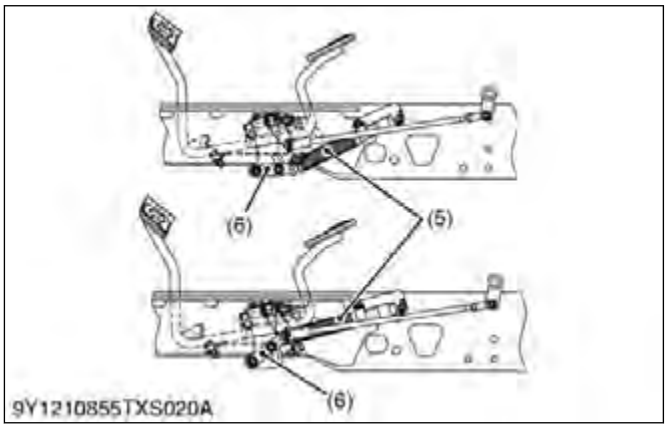

(1) HST neutral spring
(2) Lock nut
(3) Adjusting nut
(4) Adjusting rod
(5) Damper
(6) Arm
(M) Length of adjusting rod from stay

Length (M) of adjusting rod at shipping the machine from the factory	Factory specification	10 mm 0.39 in.

4.4 Checking charge relief pressure

CAUTION

- **When checking, park the tractor on flat ground, and apply the parking brake.**

1. Remove the plug (R 1/4) (1) from the front cover, then install the adaptor (R 1/4) and pressure gauge.

(1) Plug

2. Set the range gear shift lever to neutral position.
3. Start the engine and operate it at the maximum speed.
4. Read the pressure gauge to measure the charge relief pressure.
5. If the measurement is not within the factory specifications, check the charge relief valve and related hydraulic components.

Charge relief pressure	Factory specification	0.55 to 0.75 MPa 5.6 to 7.7 kgf/cm^2 80 to 100 psi
Oil temperature	Specification	50 ℃ 122 ℉

(When reassembling)

NOTE

- **When reinstalling the hexagon socket head plug, apply liquid lock (Three Bond 1324 or its equivalent) to the plug.**

Tightening torque	Charge relief valve checking plug (R 1/4)	30 to 44 N·m 3.0 to 4.5 kgf·m 22 to 32 lbf·ft

4.5 Checking high relief pressure (Forward)

CAUTION

- **When checking, park the tractor on flat ground, and apply the parking brake.**

IMPORTANT

- **Measure quickly the high relief pressure within about 10 seconds.**

(1) P1 port (Reverse) (2) P2 port (Forward)

1. Jack up the machine.
2. Remove the hexagon socket head plug (R 1/4) from P2 (2), then install the adapter, cable, and pressure gauge.
3. Start the engine and operate it at maximum speed.
4. Set the range gear shift lever to hi position.
5. Depress the speed control pedal to forward, and read the pressure gauge to measure the high relief pressure.
6. If the measurement is not the same as factory specification, check the high pressure relief valve and related hydraulic components.

High relief pressure (Forward) (Oil temperature at 50 ℃, 122 ℉)	Factory specification	20.1 to 21.1 MPa 205 to 215 kgf/cm^2 2920 to 3060 psi

(When reassembling)

NOTE

- **When reinstalling the hexagon socket head plug, apply liquid lock (Three Bond 1324 or its equivalent) to the plug.**

Tightening torque	Hexagon socket head plug (P1 and P2 port)	30 to 44 N·m 3.0 to 4.5 kgf·m 22 to 32 lbf·ft

4.6 Checking high relief pressure (Reverse)

CAUTION
- **When checking, park the tractor on flat ground, and apply the parking brake.**

IMPORTANT
- **Measure quickly the high relief pressure within about 10 seconds.**

(1) P1 port (Reverse) (2) P2 port (Forward)

1. Jack up machine.
2. Remove the hexagon socket head plug (R 1/4) from P1 (1), then install the adapter, cable and, pressure gauge.
3. Start the engine and operate it at maximum speed.
4. Set the range gear shift lever to hi position.
5. Depress the speed control pedal to reverse, and read the pressure gauge to measure the high relief pressure.
6. If the measurement is not same as factory specification, check the high pressure relief valve and related hydraulic components.

High relief pressure (Reverse) (Oil temperature at 50 ℃, 122 ℉)	Factory specification	20.1 to 21.1 MPa 205 to 215 kgf/cm^2 2920 to 3060 psi

(When reassembling)

NOTE
- **When reinstalling the hexagon socket head plug, apply liquid lock (Three Bond 1324 or its equivalent) to the plug.**

Tightening torque	Hexagon socket head plug (P1 and P2 port)	30 to 44 N·m 3.0 to 4.5 kgf·m 22 to 32 lbf·ft

4.7 Readjusting relief valve (When HST does not work due to its loose hexagon socket head screw)

IMPORTANT
- **KUBOTA does not recommend readjusting the relief valve. KUBOTA recommends replacing it with genuine parts.**
- **As the HST may be damaged if the pressure is set to high by mistake, be careful when adjusting it.**

NOTE
- **The relief pressure is set within the factory specification when shipped from the factory. But, for the purpose of after-sales services, as it is impossible to reset the pressure precisely as set in the factory, its setting range is defined as a slightly wider range within the variable specification.**

Relief pressure	Factory specification	20.1 to 21.1 MPa 205 to 215 kgf/cm^2 2920 to 3060 psi
	Variable specification	15.0 to 20.0 MPa 153 to 203 kgf/cm^2 2180 to 2900 psi

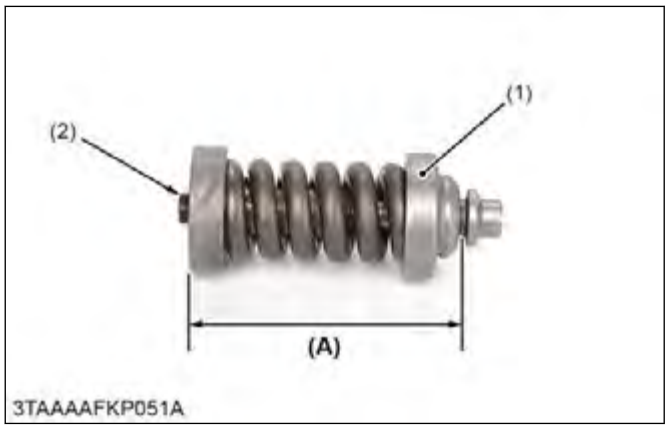

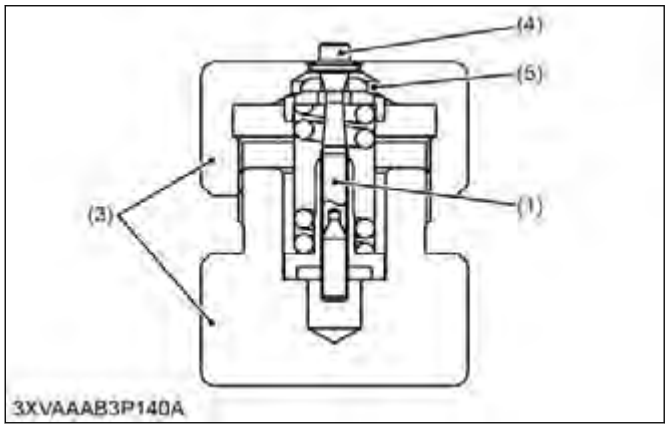

(1) Relief valve assembly
(2) Hexagon socket head screw
(3) Relief valve assembling tool
(4) Poppet
(5) Valve seat
(6) Setscrew
(A) Distance

1. Measure the pre-adjustment distance (A).
2. Compress the spring of the relief valve with a relief valve assembling tool (3).
3. Find the distance (A) by turning the poppet (4) with a screwdriver.

Distance (A) of relief valve (Forward)	Reference value	39.10 to 39.20 mm 1.540 to 1.543 in.
Distance (A) of relief valve (Reverse, ϕ1.5 mm orifice)		38.60 to 38.70 mm 1.520 to 1.523 in.

The distance (A) changes by about 0.5 mm (0.02 in.) per one turn of the poppet (4).

4. Repeat the same operation a few times to find the distance (A) as it is difficult to acquire at the first time.
5. After finding the distance (A), hold the setscrew (6) to a vice and fasten the hexagon socket head screw (2) with specified torque. On this occasion, use a copper plate, etc. for the vice jaws not to damage the setscrew (6).

Tightening torque	Hexagon socket head screw	25 to 29 N·m 2.5 to 3.0 kgf·m 18 to 21 lbf·ft

6. Install the relief valve in the HST.
7. Check the relief pressure as indicated in *"Checking high relief pressure (Forward)"* and *"Checking high relief pressure (Reverse)"*. The distance (A) is for refresh only. Make sure to check the relief pressure after readjustment.
8. If the relief pressure does not fall within the readjustment pressure range, repeat the processes of the above.

Relief valve readjusting pressure	Factory specification	15.0 to 20.0 MPa 153 to 203 kgf/cm^2 2180 to 2900 psi

The pressure changes by 1.5 MPa (15 kgf/cm^2, 210 psi) per 0.1 mm (0.004 in.) in distance (A).

4.8 Checking PTO clutch operating pressure

CAUTION

- **When checking, park the tractor on flat ground, apply the parking brake.**

IMPORTANT

- **Do not connect the universal joint of the implement to the mid and rear PTO shaft.**

1. Lift the rear of the tractor and remove the left rear wheel.
2. Remove the plug (R 1/8), then install the adapter (R 1/8), cable and pressure gauge.
3. Start the engine and set at maximum speed.

Condition

Engine speed	Oil temperature
Maximum	45 to 55 ℃ (113 to 131 ℉)

4. Move the PTO clutch lever to **Engaged** position, and measure the pressure.
5. If the measurement is not same as factory specifications, check the PTO relief valve and related hydraulic components.

PTO clutch operating pressure	Factory specification	1.0 to 1.3 MPa 11 to 13 kgf/cm^2 150 to 180 psi

(When reassembling)

NOTE

- **When reinstall the hexagon socket head plug, apply liquid lock (Three Bond 1324 or its equivalent) to the plug.**

Tightening torque	PTO clutch valve plug (R 1/8)	13 to 21 N·m 1.3 to 2.2 kgf·m 9.4 to 15 lbf·ft

4.9 Adjusting brake pedal free travel

CAUTION

- **Stop the engine, remove the key, lower the implement to the ground, and chock the wheels before checking brake pedal.**
- **Even if the brake pedal free travel is within the limitation, adjust the brake pedal following the procedure below.**

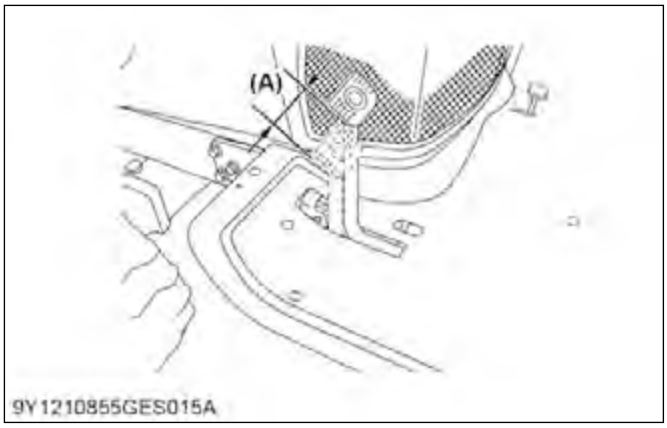

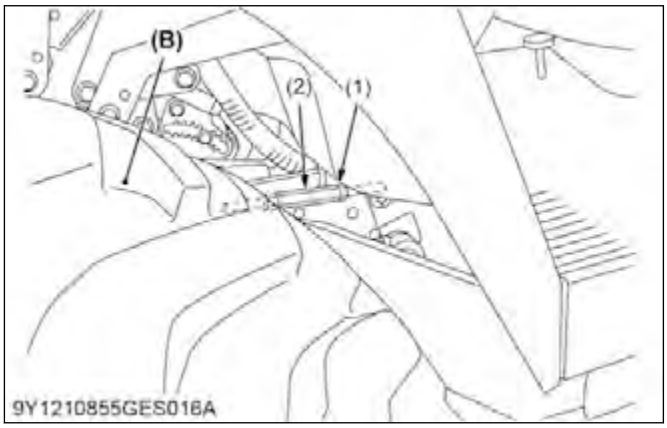

(1) Lock nut
(2) Turnbuckle
(A) Free travel
(B) Right rear tire

1. Release the parking brake.
2. Loosen the lock nut and turn the turnbuckle to adjust the rod length.
3. Extend the turnbuckle one additional turn.
4. Retighten the lock nut.
5. Depress the brake pedal several times and make sure the brake pedal free travel is correct according to specification.

Brake pedal free travel	Factory specification	25 to 35 mm 1.0 to 1.4 in.

5. Disassembling and assembling

5.1 Separating transaxle

5.1.1 Draining transmission fluid

CAUTION

- **Be sure to stop the engine before checking and changing the transmission fluid.**

1. Place oil pan under the tractor.

2. Remove the drain plug (1) at the bottom of the transmission case.

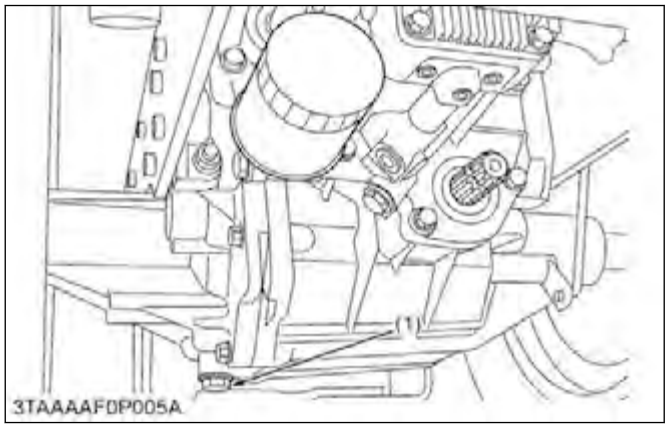

(1) Drain plug

3. Drain the transmission fluid and reinstall the drain plug.

(When refilling)

IMPORTANT

- **Do not operate the tractor immediately after changing the transmission fluid.**
- **Operate the engine at medium speed for a few minutes to prevent damage to the transmission.**
- **Do not mix different brands oil together.**

- Fill new oil from filling port after removing the filling plug (2) up to the upper notch on the dipstick (3).

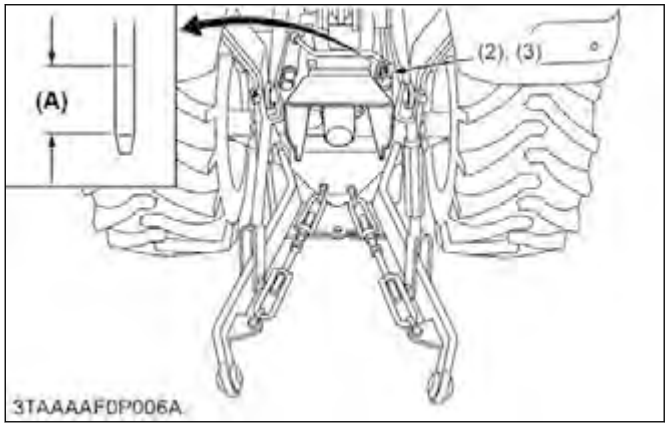

(2) Filling plug
(3) Dipstick
(A) Oil level is acceptable within this range.

- After operating the engine for few minutes, stop it and check the oil level again, if low, add oil to prescribed level.

Transmission fluid	Capacity	11.6 L 3.1 U.S.gals 2.6 Imp.gals

RELATED PAGE
LUBRICANTS, FUEL AND COOLANT on page 2-7

5.1.2 Removing battery

WARNING

To avoid serious injury or death:

- **When disconnecting the battery cables, disconnect the negative cable from the battery first.**
- **When connecting, connect the positive cable to the battery first.**

1. Remove the under panel (1).

(1) Under panel

2. Disconnect the negative cable (3) from the battery (2).
3. Disconnect the positive cable (4) from the battery (2) and remove the battery.

(2) Battery
(3) Negative cable
(4) Positive cable

5.1.3 Removing lift rod and lower link

1. Remove the top link (2).

https://truckmanualshub.com/

2. Remove the stopper pin (6) and remove the check chain plate (3).

(1) Lift rod L.H.
(2) Top link
(3) Check chain plate
(4) Lift rod R.H.
(5) Lower link R.H.
(6) Stopper pin
(7) Lower link L.H.

3. Move the bushes (8) to inside.
4. Move the shaft (9) to right side and remove the lower link as a unit.

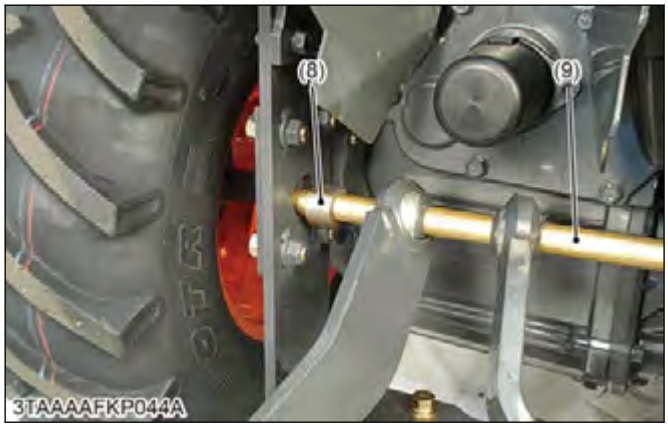

(8) Bush
(9) Shaft

5.1.4 Removing ROPS

1. Disconnect the R.H and L.H. hazard lamp/turn signals (3), (4) from the wire harness.
2. Remove the upper ROPS (1).

(1) Upper ROPS
(2) R.H. lower ROPS
(3) R.H. hazard lamp/turn signal
(4) L.H. hazard lamp/turn signal
(5) L.H. lower ROPS
(6) Bolt

3. Remove the ROPS mounting bolts (6).
4. Remove the R.H. and L.H. lower ROPS (2), (5).

(When reassembling)

Tightening torque	ROPS mounting bolt	48.0 to 55.9 N·m 4.90 to 5.70 kgf·m 35.5 to 41.2 lbf·ft

5.1.5 Removing seat

1. Disconnect the seat switch connectors.
2. Remove the snap pins (2) to remove the seat (1).

(1) Seat
(2) Snap pin

5.1.6 Removing step

1. Disconnect the upper cruise control rod (1) from the lower cruise control rod.

2. Remove the R.H. and L.H. side covers (2), (7).

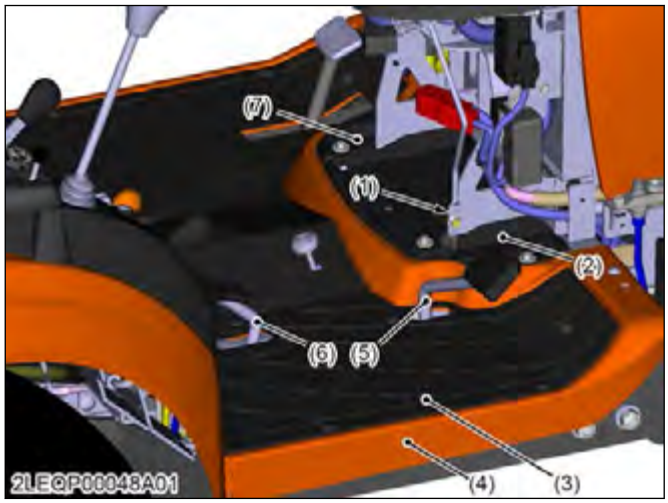

(1) Upper cruise control rod
(2) R.H. side cover
(3) Step mat
(4) Step
(5) Forward HST pedal
(6) Reverse HST pedal
(7) L.H. side cover

3. Remove the step mat (3).
4. Remove the forward and reverse HST pedals (5), (6).
5. Remove the step (4).

5.1.7 Removing fender

1. Disconnect the L.H. and R.H. tail lamps (3), (7) from the wire harness.
2. Disconnect the 12 V outlet (2) from the wire harness.

NOTE

- **12 V outlet connector is near the L.H. tail lamp connector.**

3. Remove the L.H. lever grips (3).

(1) Tail lamp
(2) 12 V outlet
(3) L.H. lever grip
(4) Differential lock pedal cover
(5) Cutting height adjusting dial knob
(6) Lowering speed adjusting knob
(7) R.H lever grip

4. Remove the differential lock pedal cover (4), cutting height adjusting dial knob (5), and lower speed adjusting knob (6).
5. Remove the R.H. lever grips (7).
6. Remove the R.H. lever guide (8) and R.H. handrail (10).
7. Remove the L.H. lever guide stay nut.

(8) R.H. lever guide
(9) Fender
(10) R.H. handrail

8. Remove the fender (9).

5.1.8 Removing fuel tank

1. Remove the and R.H. lever guide stay (1).
2. Drain the fuel from the fuel tank.
3. Disconnect the fuel sensor connectors (4) and safety switch connector (7).

(1) R.H. lever guide stay
(2) Fuel tube cover
(3) Seat stopper
(4) Fuel sensor connector
(5) Fuel tank
(6) Fuel return hose
(7) Connector
(8) Fuel supply hose

4. Remove the fuel tube cover (2).
5. Disconnect the fuel return hose (6) and fuel supply hose (8).
6. Remove the seat stopper (3).

https://truckmanualshub.com/

7. Remove the R.H. and L.H. fuel tank stays (9) and cushions (10), then remove the fuel tank (5).

(9) R.H. fuel tank stay (10) Cushion

(When reassembling)

Tightening torque	Fuel tank stay mounting bolt and nut	48 to 55 N·m 4.9 to 5.7 kgf·m 36 to 41 lbf·ft
	Seat stopper bolts	123.5 to 147.0 N·m 12.6 to 15.0 kgf·m 91.2 to 108 lbf·ft

5.1.9 Removing rear wheel

1. Remove the rear wheels (1), (2).

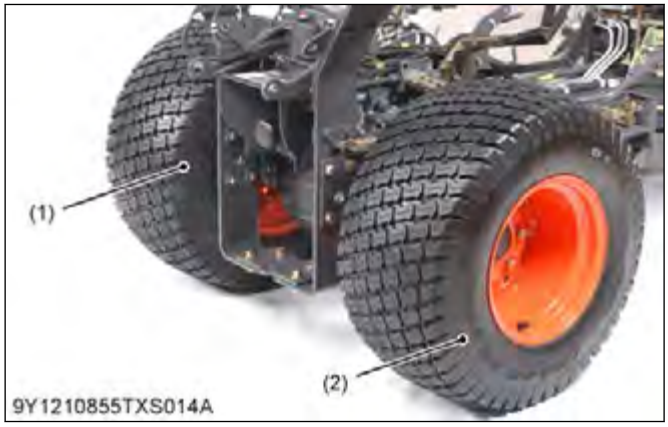

(1) L.H. rear wheel (2) R.H. rear wheel

(When reassembling)

Tightening torque	Rear wheel mounting bolt	109 to 129 N·m 11.1 to 13.2 kgf·m 80.3 to 95.4 lbf·ft

5.1.10 Removing fender center stay

1. Remove the fender center stay (1).

(1) Fender center stay

(When reassembling)

Tightening torque	Fender center stay mounting bolt and nut (M14)	98.0 to 125 N·m 11.0 to 12.8 kgf·m 79.6 to 92.5 lbf·ft
	Fender center stay mounting bolt and nut (M10)	39.2 to 45.1 N·m 4.00 to 4.60 kgf·m 29.0 to 33.2 lbf·ft

5.1.11 Removing fender bracket and hitch plate

1. Remove the hitch plate (2).
2. Remove the parking brake return spring (4) and the fender brackets (1), (3).

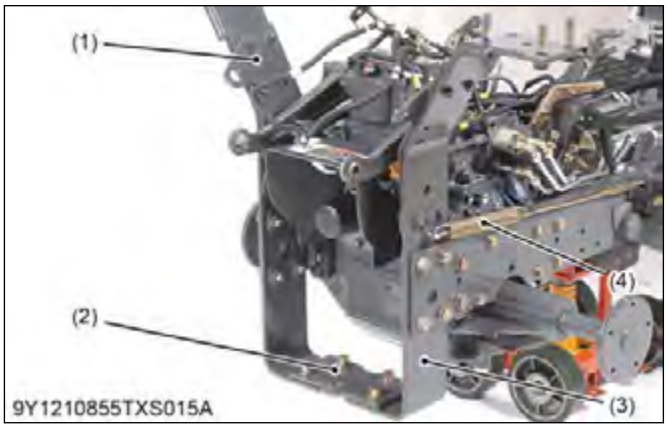

(1) Fender bracket L.H. (4) Return spring
(2) Hitch plate
(3) Fender bracket R.H.

(When reassembling)

- Do not firmly tighten all screws, bolts and nuts until most components are attached.

Tightening torque	Hitch plate mounting bolt and nut (M14)	124 to 147 N·m 12.6 to 15.0 kgf·m 91.2 to 108 lbf·ft
	Fender bracket mounting bolt and nut (M14)	124 to 147 N·m 12.6 to 15.0 kgf·m 91.2 to 108 lbf·ft

5.1.12 Removing transaxle assembly

1. Remove the differential lock rod (1) and disconnect the mower link (2).

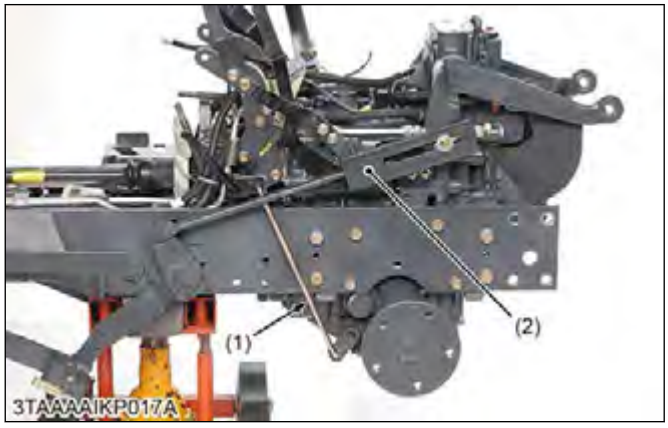

(1) Differential lock rod (2) Mower link

2. Remove the brake rod (4).
3. Disconnect the hoses (3). (If equipped.)

(3) Hoses (4) Brake rod

4. Disconnect the connectors (5).
5. Remove the rear coupling mounting bolt (8).
6. Disconnect the power steering pipes (9) from the transaxle.
7. Remove the speed control rod (7).

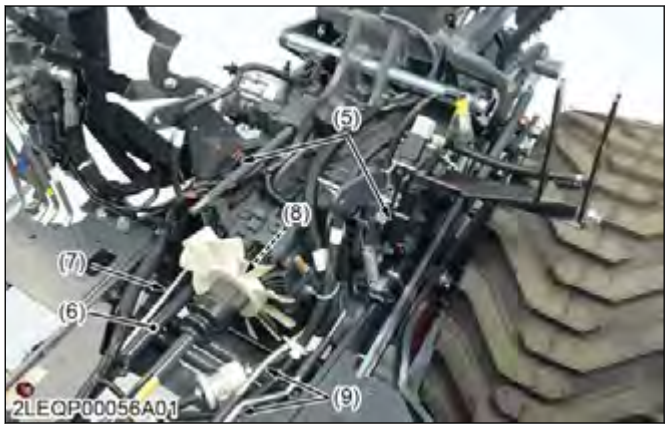

(5) Connector
(6) Front wheel drive shaft
(7) Speed control rod
(8) Rear coupling mounting bolt
(9) Power steering pipe

8. Remove the wire harness clamps.
9. Remove the frame brackets (10).

Speed control rod length (7)	Reference value	373 mm 14.7 in.

(When reassembling)

- Tighten the smaller bolt (M12) first.
- Before mounting the transaxle assembly on the tractor main frame, check the flatness of the frame brackets with a straight edge securely.

(10) Frame bracket

Tightening torque	Transaxle assembly mounting bolt (M12)	63 to 72 N·m 6.4 to 7.4 kgf·m 47 to 53 lbf·ft
	Transaxle assembly mounting bolt (M14)	124 to 147 N·m 12.6 to 15.0 kgf·m 91.2 to 108 lbf·ft
	Rear coupling mounting bolt (M8)	24 to 27 N·m 2.4 to 2.8 kgf·m 18 to 20 lbf·ft

https://truckmanualshub.com/

5.1.13 Removing brake pedal

1. Unhook the spring (2) and remove the parking lock (1).

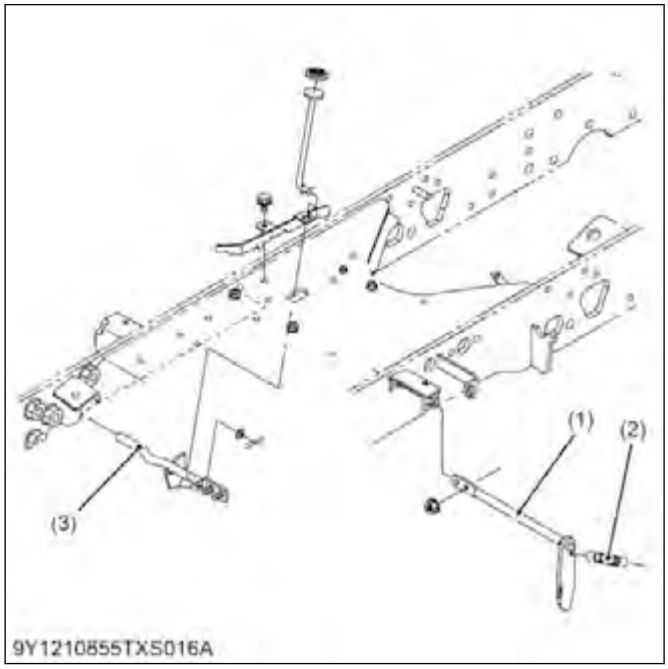

(1) Parking lock
(2) Spring
(3) Parking arm

2. Remove the split pin then remove pin (5) from the brake arm (4).
3. Remove the brake pedal (6).

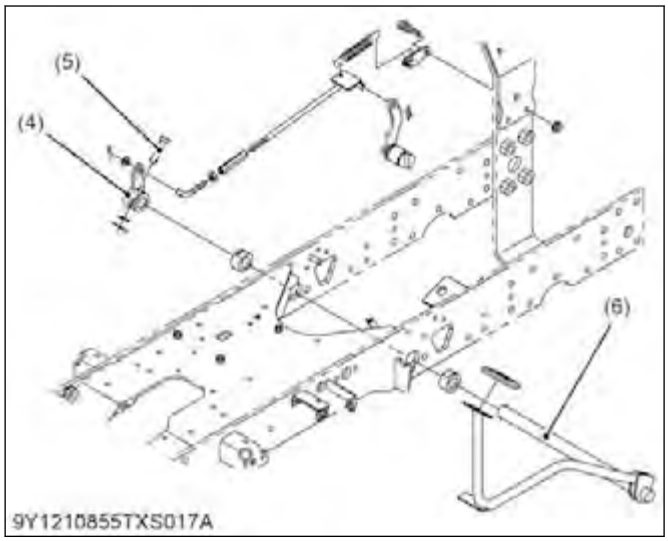

(4) Brake arm
(5) Pin
(6) Brake pedal

5.1.14 Removing propeller shaft

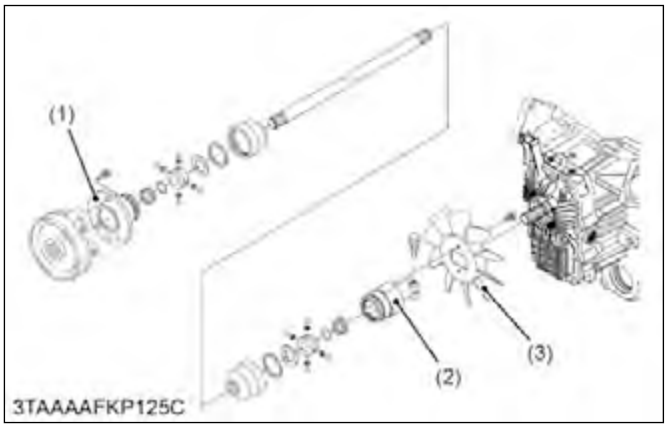

(1) Front coupling
(2) Rear coupling
(3) HST fan

1. Disconnect the front coupling (1) from the engine.
2. Remove the propeller shaft assembly.
3. Remove the HST fan (3) from the propeller shaft.

(When reassembling)

- Apply grease to inside of the front coupling and the rear coupling.

Tightening torque	Front coupling mounting bolt (M8)	24 to 27 N·m 2.4 to 2.8 kgf·m 18 to 20 lbf·ft
	HST fan mounting bolt (M8)	9.8 to 11 N·m 1.0 to 1.2 kgf·m 7.3 to 8.6 lbf·ft

5.1.15 Removing differential lock pedal

1. Remove the differential lock return spring (1).

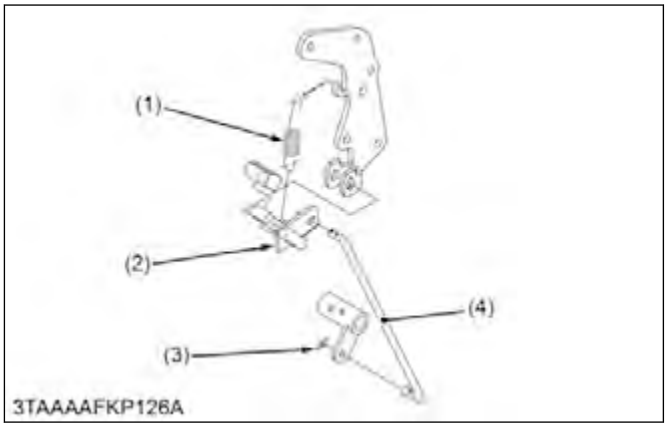

(1) Spring
(2) Differential lock pedal
(3) Rue ring cotter
(4) Differential lock rod

2. Remove the rue ring cotter (3).
3. Turn and remove the differential lock pedal (2).

5.1.16 Removing speed control pedal, HST damper, and cruise rod

1. Remove the speed control pedal (1).
2. Remove the rue ring cotter (4).
3. Remove the HST dumper (2).

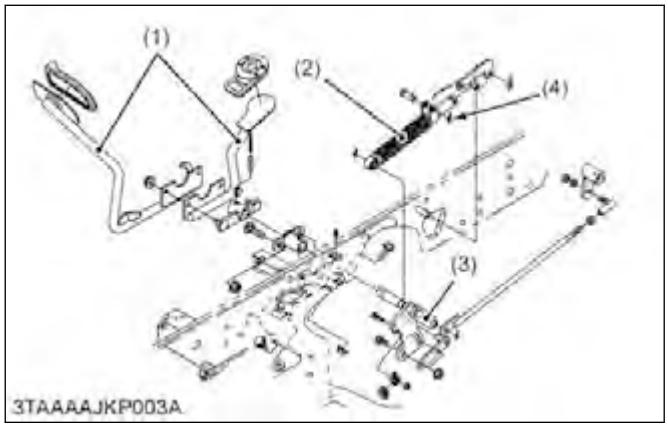

(1) Speed control pedal
(2) HST dumper
(3) HST pedal link
(4) Rue ring cotter

4. Remove the cruise arm (6).
5. Remove the cruise rod (5).
6. Remove the spring pin then remove the release arm (7) and cruise plate (9).

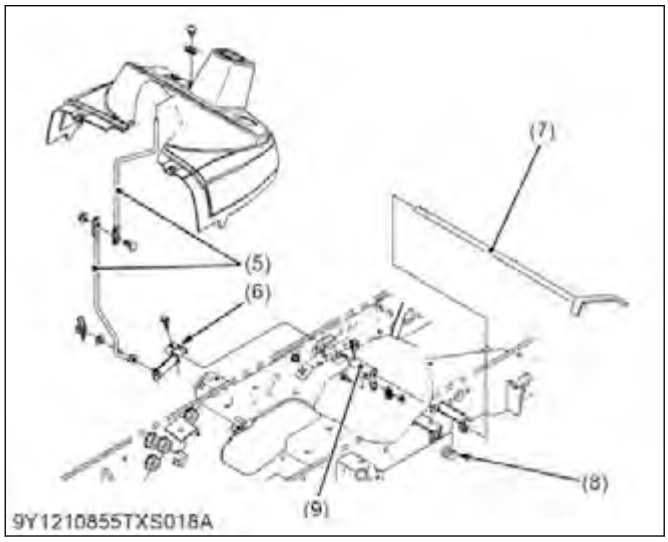

(5) Cruise rod
(6) Cruise arm
(7) Release arm
(8) Cruise spring
(9) Cruise plate

(When reassembling)

- Be sure to assemble the cruise spring (8) properly.

5.2 Hydrostatic transmission

5.2.1 Removing levers and mower lift arm

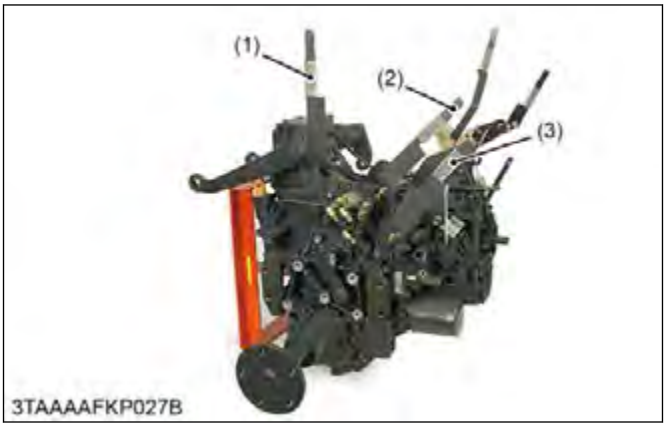

(1) Range gear shift lever
(2) Hydraulic control lever
(3) Front wheel drive lever

1. Tap out the spring pin from the range gear shift lever (1) and front wheel drive lever (3), then remove the both levers.
2. Remove the hydraulic control lever (2).
3. Remove the PTO select lever (4) and PTO clutch control lever (5).

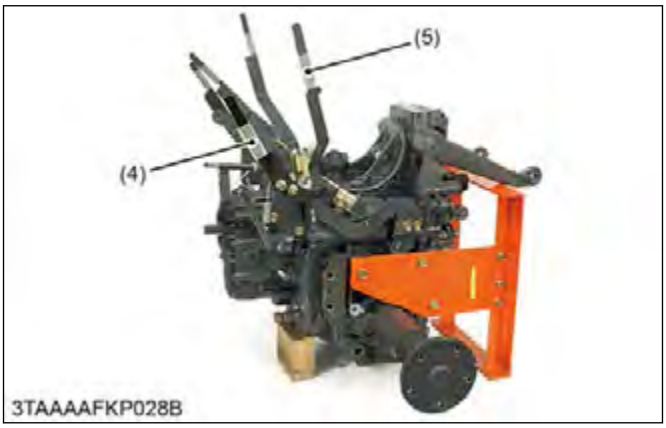

(4) PTO select lever
(5) PTO clutch control lever

(When reassembling)

- Apply grease to inside of the front coupling and rear mounting.

Tightening torque	Hydraulic control lever mounting bolt and nut	18 to 20 N·m 1.8 to 2.1 kgf·m 13 to 15 lbf·ft

5.2.2 Removing PTO clutch valve

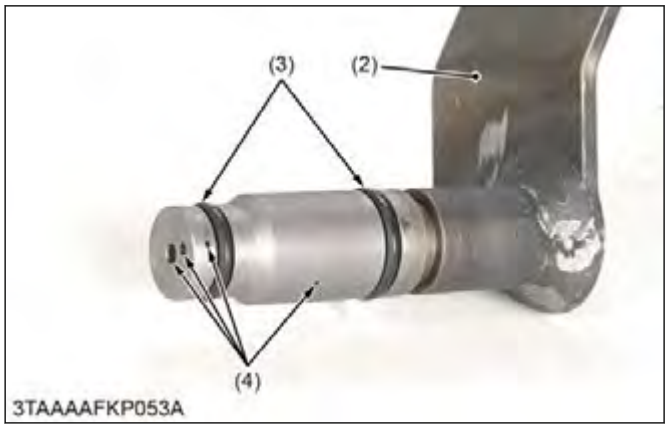

(1) Stopper
(2) PTO clutch valve
(3) O-ring
(4) Oil passage

1. Remove the stopper (1).
2. Draw out the PTO clutch valve (2) from the transaxle assembly.

(When reassembling)
1. Clean the oil passages (4).
2. Apply the transmission fluid to the O-rings (3).

5.2.3 Removing oil cooler cover

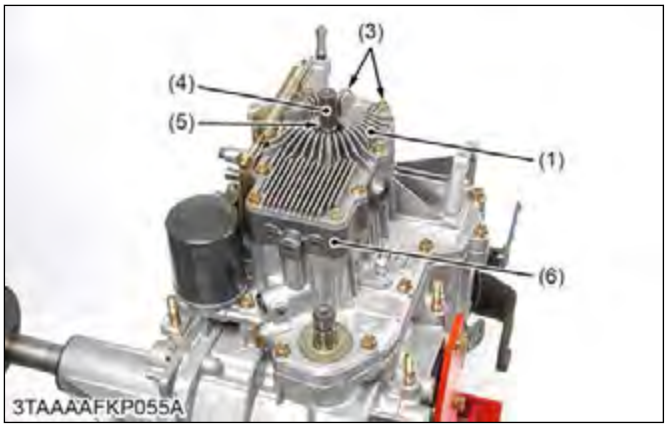

(1) HST front cover
(2) Transaxle assembly
(3) Bolt
(4) Internal circlip
(5) Oil seal
(6) Center section

1. Remove the HST front cover (1) not to damage the oil seal (5).
2. Remove the center section (6).

(When reassembling)
- Do not damage the oil seal (5).
- Tighten the HST mounting bolts and the nut to the factory specifications.

Tightening torque	Oil cooler cover mounting bolt (M8)	18 to 20 N·m 1.8 to 2.1 kgf·m 13 to 15 lbf·ft
	Oil cooler cover mounting nut (M8)	18 to 20 N·m 1.8 to 2.1 kgf·m 13 to 15 lbf·ft

5.2.4 Removing center section and valve plates

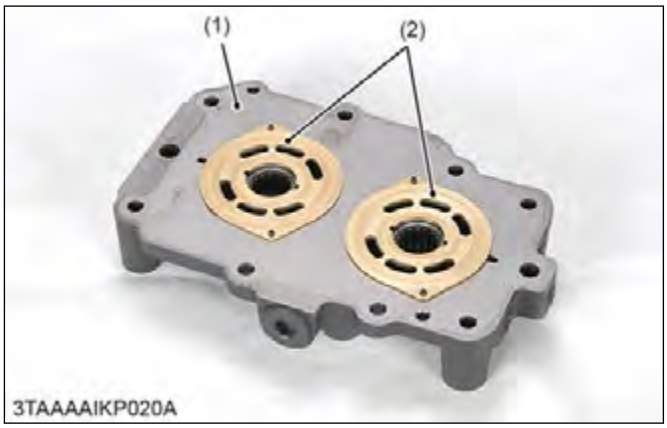

(1) Center section
(2) Valve plate

1. Remove the valve plates (2).

(When reassembling)

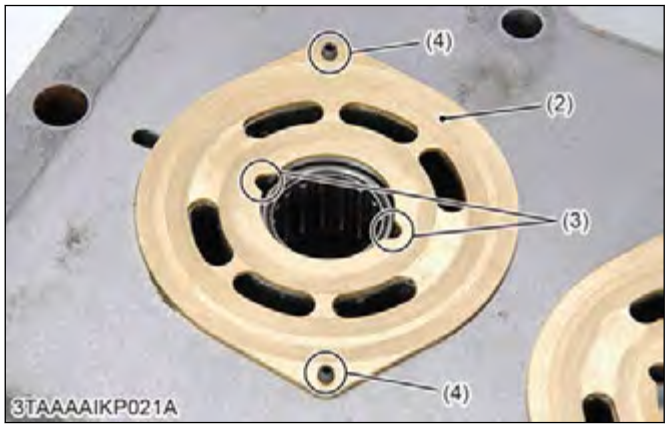

(2) Valve plate
(3) Groove
(4) Anchor pin

1. Check the direction of the groove (3).
2. Install the valve plates (2) to the anchor pins (4) securely.
3. Install the groove of the valve plate (pump plate) to the engine side.

5.2.5 Removing check and high pressure relief valve plug

1. Remove the check and high pressure relief plug (G 1/2).

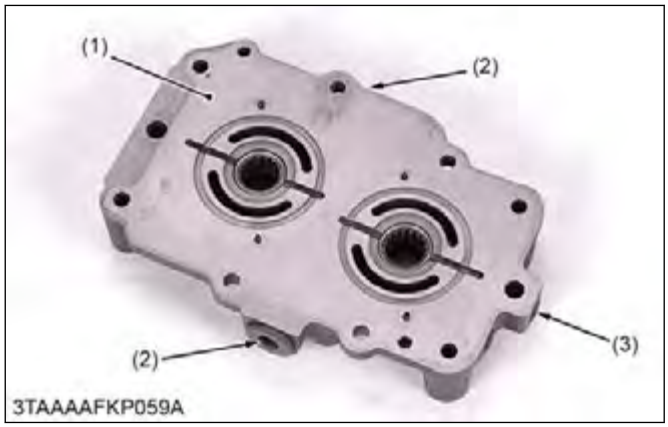

(1) Center section
(2) Plug
(3) Plug

(When reassembling)

Tightening torque	Check and high pressure relief valve plug (G 1/2)	59 to 78 N·m 6.0 to 8.0 kgf·m 44 to 57 lbf·ft

5.2.6 Checking check and high pressure relief valve

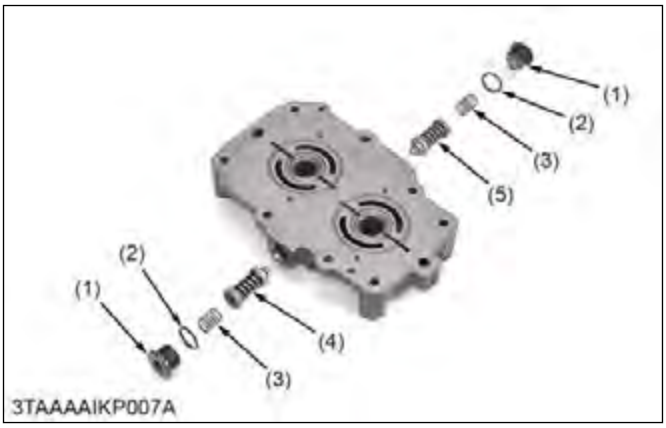

(1) Plug
(2) O-ring
(3) Spring
(4) Check and relief valve (Forward)
(5) Check and relief valve (Reverse)

1. After removing the plug (1), draw out the spring (3) and the check and high pressure relief valve assembly (4), (5).

(When reassembling)

- Be careful not to damage the O-ring (2) on the plug (1).
- Since there is an orifice in the check and relief valve body (reverse) (5), re-install the check and relief valve (4), (5) to their original positions.

Orifice	Factory specification	1.5 mm 0.059 in.

5.2.7 Removing cylinder block

(3) Pump shaft
(4) Cylinder block assembly (Pump side)
(5) Cylinder block assembly (Pump side)
(6) Cylinder block assembly (Motor side)

1. Remove the gasket (1).

(1) Gasket

2. Remove the O-ring (2).

(2) O-ring

3. Remove the cylinder block assembly (4), (5) from the transaxle.

(When reassembling)
- Turn the disassembling and the assembling stand vertically.
- Install the cylinder block assembly (4), (5) to the shafts not to drop the pistons from the cylinder block assembly (4), (5) carefully.

5.2.8 Removing cylinder block and piston

NOTE
- **Be careful not to damage the surface of the cylinder block and the piston.**

1. Remove the piston (3) and the spring (2) from the cylinder block (1).

(1) Cylinder block
(2) Spring
(3) Piston

(When reassembling)
- Apply clean transmission oil to the cylinder block and the piston.

5.2.9 Removing swashplate and trust roller bearing

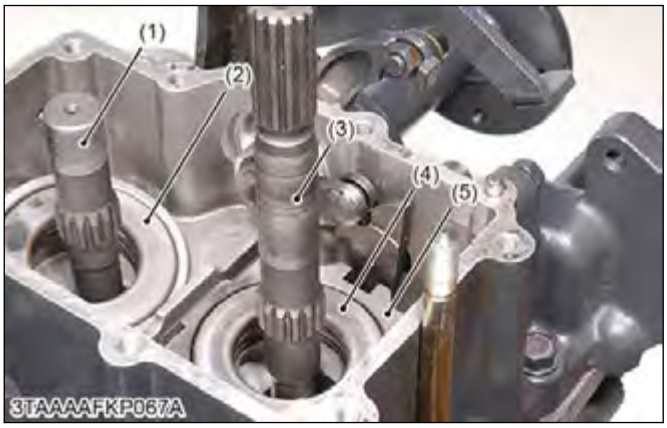

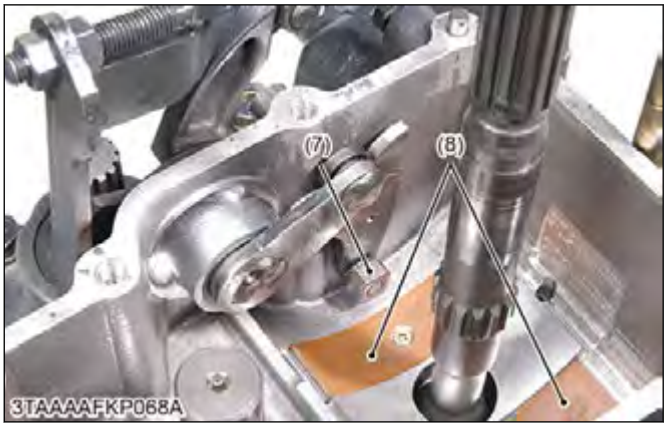

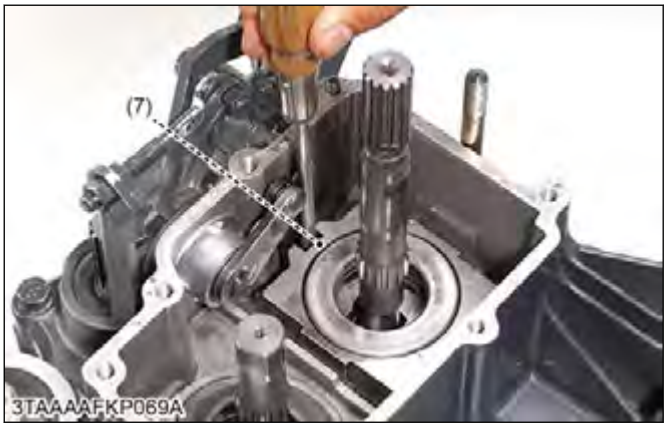

(1) Motor shaft
(2) Thrust bearing
(3) Pump shaft
(4) Thrust roller bearing
(5) Swashplate
(7) Slot guide
(8) Cradle bearing

1. Remove the circlip (6) from the pump shaft (3) and the motor shaft (1).

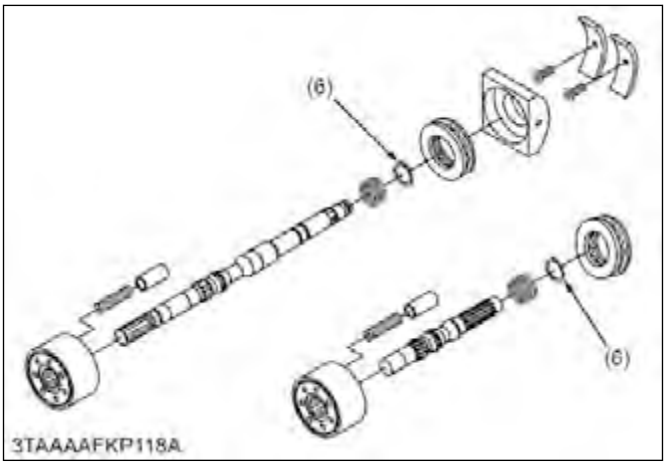

(6) Circlip

2. Remove the thrust bearing (2).
3. Remove the swashplate (5) and the thrust roller bearing (4).

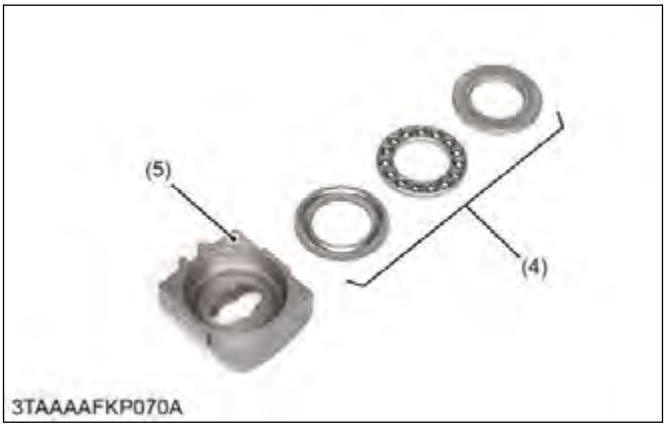

(4) Thrust roller bearing
(5) Swashplate

(When reassembling)

- Apply clean transmission oil to the cradle bearing and the trunnion arm.
- Hold the slot guide with a minus screw driver.
- Apply clean transmission oil to the thrust roller bearing.

5.2.10 Removing 4WD detent ball

1. Remove the 4WD detent bolt (1), the detent spring (2) and the detent ball (3) before removing the transaxle front case, not to drop the detent ball (3) into the transaxle case.

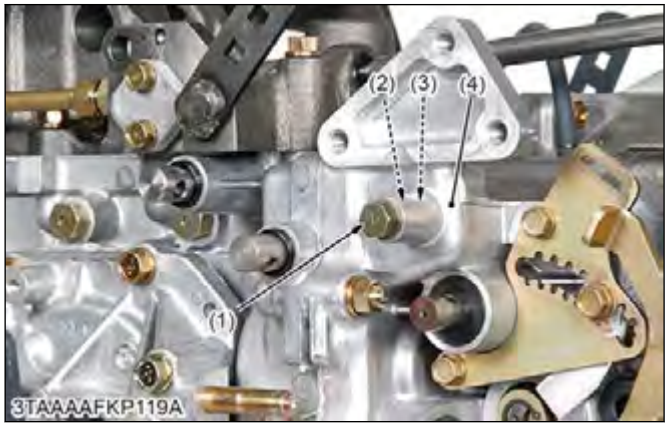

(1) 4WD detent bolt
(2) Detent spring
(3) Detent ball
(4) Transaxle front case

5.2.11 Removing neutral arm and trunnion arm

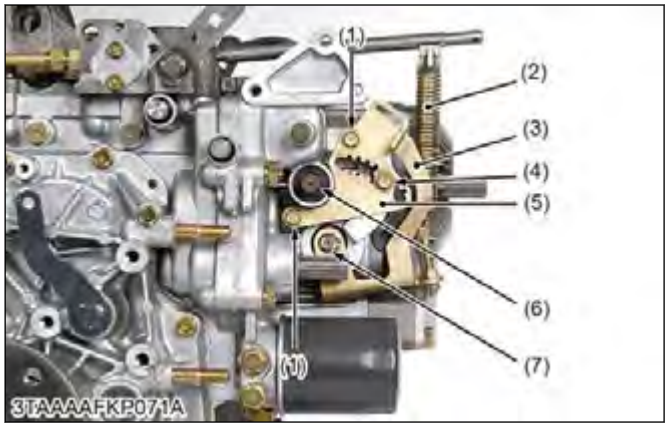

(1) Bolt
(2) Neutral spring
(3) Neutral arm
(4) Lock screw
(5) Neutral adjuster
(6) Trunnion arm
(7) External circlip

1. Disconnect the neutral spring (2) from the HST front cover.
2. Loosen the neutral adjuster (5).
3. Remove the external circlip (7).
4. Remove the bolts (1).
5. Remove the neutral adjuster (5) and the neutral arm (3).
6. Remove the trunnion arm (6).

(When reassembling)

- Adjust the HST neutral position. Refer to "Checking and adjusting" section.

5.3 Hydraulic cylinder

5.3.1 Removing hydraulic cylinder

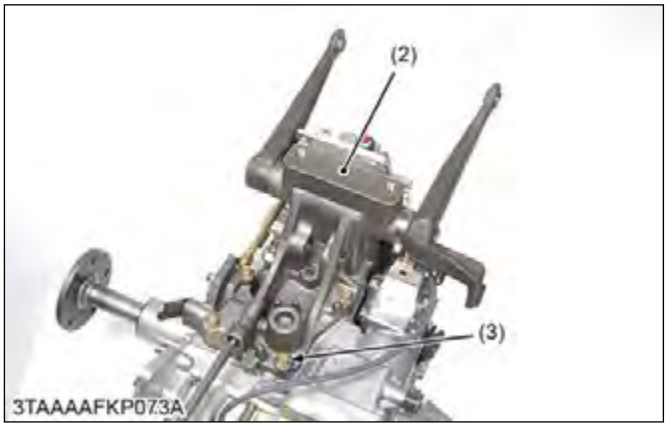

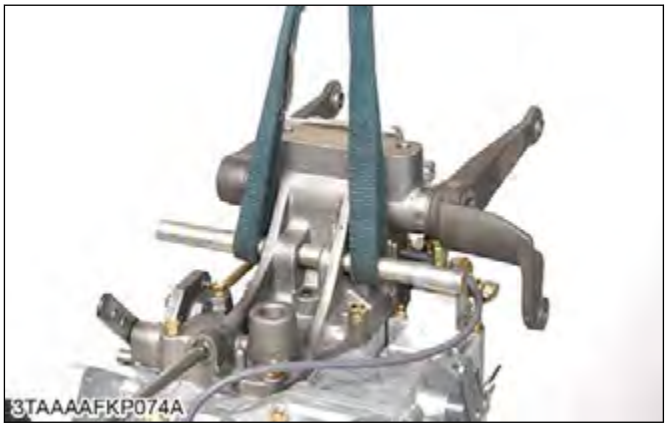

(2) Hydraulic cylinder
(3) Bolt

1. Disconnect the delivery pipe (1).

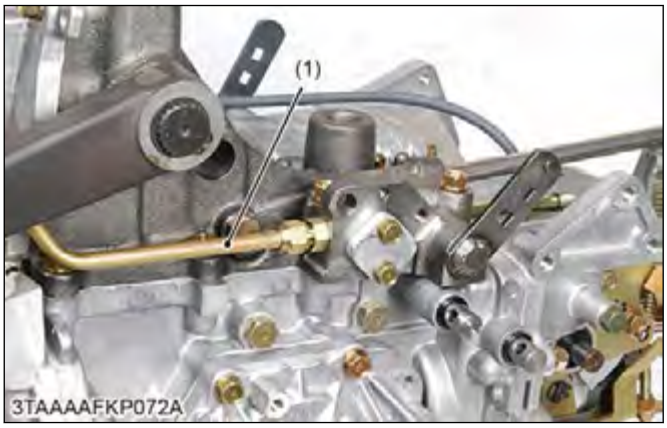

(1) Delivery pipe

2. Remove the hydraulic cylinder mounting bolts (3).
3. Remove the hydraulic cylinder (2).

(When reassembling)

- Apply liquid gasket (Three Bond 1208D or equivalent) to the joint surface of the transaxle case to the hydraulic cylinder.

Tightening torque	Hydraulic cylinder mounting bolt	40 to 44 N·m 4.0 to 4.5 kgf·m 29 to 32 lbf·ft

5.4 Transaxle shafts

5.4.1 Removing transaxle case front cover

NOTE

- **Before removing the transaxle case front cover (4), remove the 4WD detent bolt (1), the detent spring (2) and the detent ball (3) from the transaxle case front cover (4).**
- **Remove the circlip (5) from the HST pump shaft (PTO shaft) (6) and the HST motor shaft securely.**

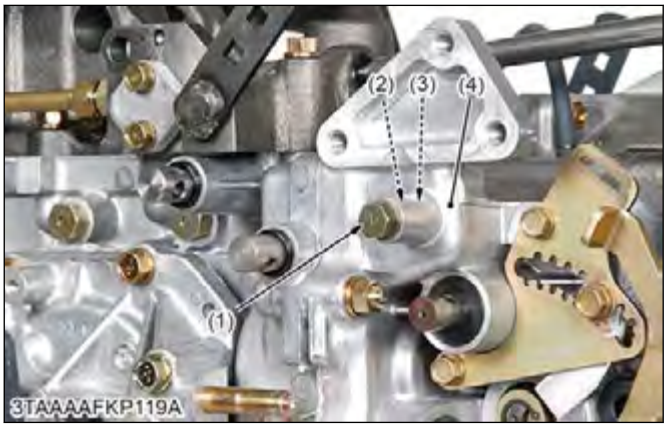

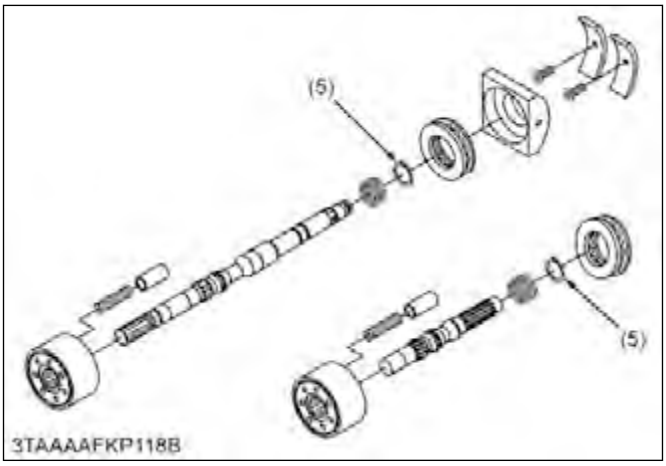

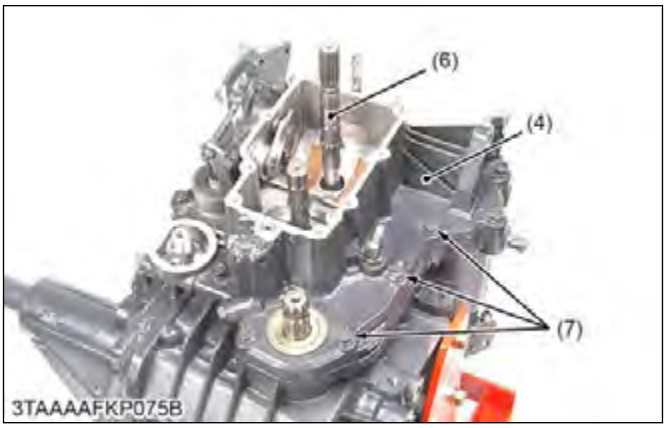

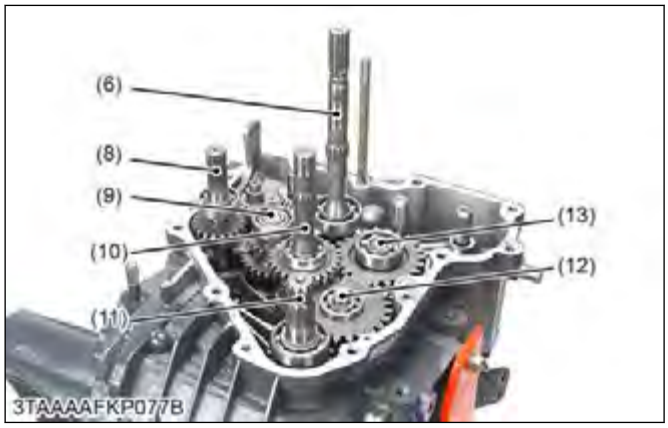

(1) 4WD detent bolt
(2) Detent spring
(3) Detent ball
(4) Transaxle case front cover
(5) Circlip
(6) HST pump shaft (PTO shaft)
(7) Front cover mounting bolt
(8) Front wheel drive shaft
(9) Spiral bevel pinion shaft
(10) HST motor shaft
(11) Mid-PTO shaft
(12) Mid-PTO idle gear shaft
(13) PTO select shaft

1. Remove the transaxle case front cover mounting bolts (7).
2. Remove the transaxle case front cover (4) as an unit.

(When reassembling)

- Apply liquid gasket (Three Bond 1208D or equivalent) to the joint surface of the transaxle case to the front cover.

Tightening torque	Transaxle case front cover mounting bolt (M10)	39 to 44 N·m 4.0 to 4.4 kgf·m 29 to 32 lbf·ft

5.4.2 Removing hydraulic pump assembly

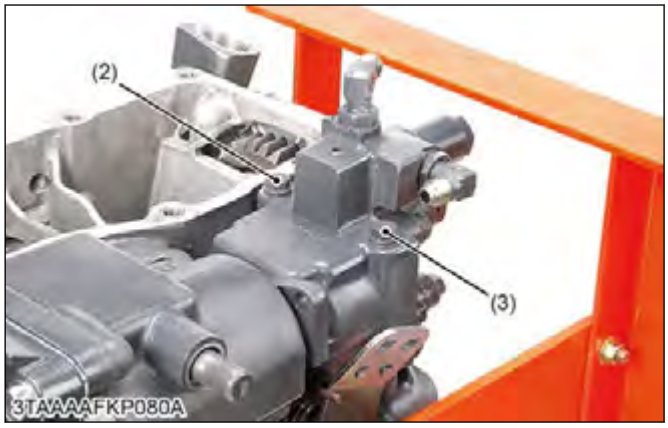

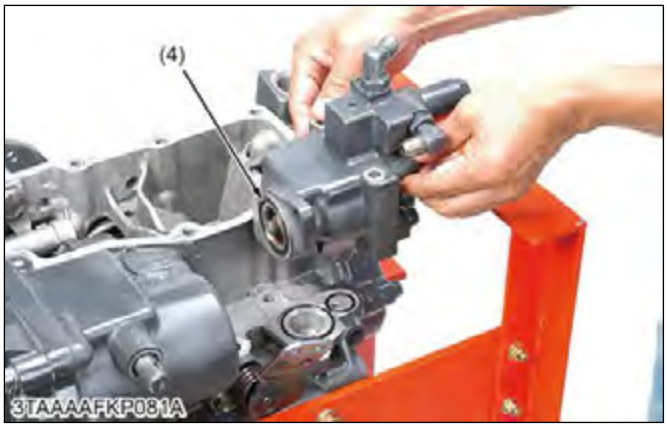

(2) Bolt (Through bolt)
(3) Bolt
(4) O-ring
(5) O-ring
(6) O-ring
(7) O-ring

1. Remove the hydraulic pump assembly mounting bolt (2), (3).
2. Remove the hydraulic pump assembly (1) as an unit from the transaxle case.

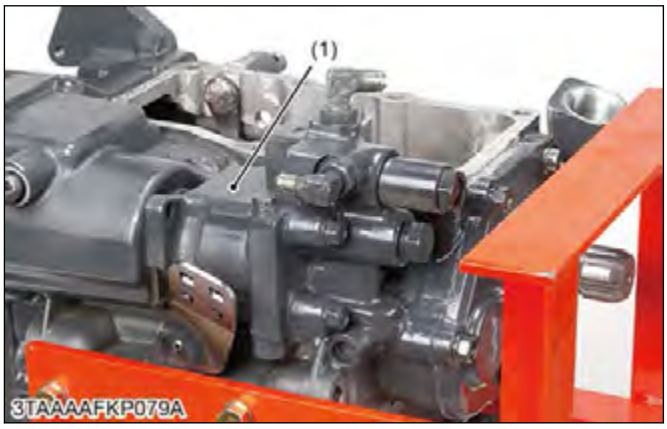

(1) Hydraulic pump assembly

(When reassembling)

- Apply transmission oil to the O-rings.
- Since the mounting bolt (2) is installed through the hydraulic pump to the transaxle case, bind the sealing tape to the mounting bolt (2) securely.

Tightening torque	Hydraulic pump assembly mounting bolt (M6)	7.9 to 8.8 N·m 0.80 to 0.90 kgf·m 5.8 to 6.5 lbf·ft
	Hydraulic pump assembly mounting bolt (M8)	18 to 20 N·m 1.8 to 2.1 kgf·m 13 to 15 lbf·ft

5.4.3 Removing rear PTO cover assembly

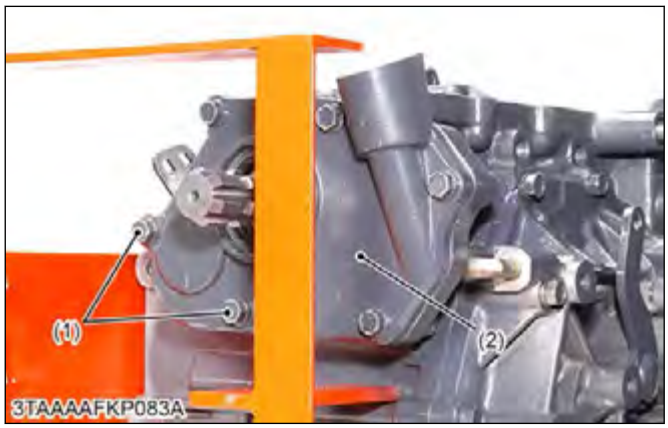

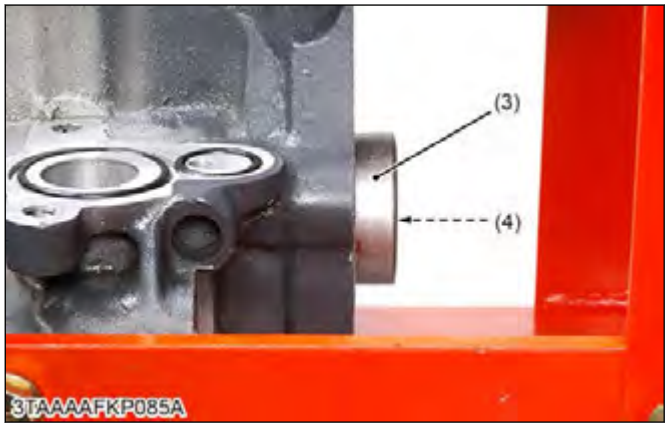

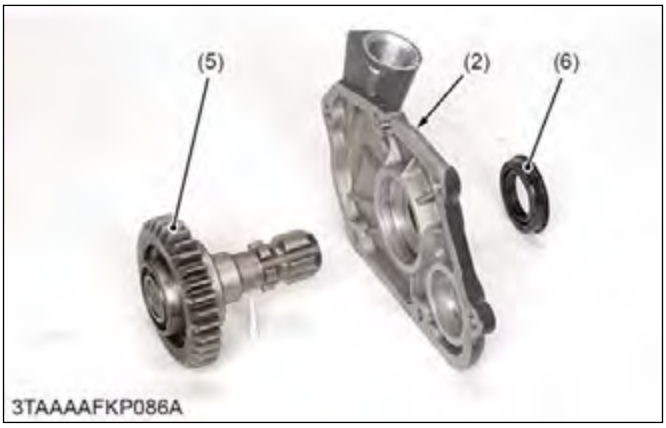

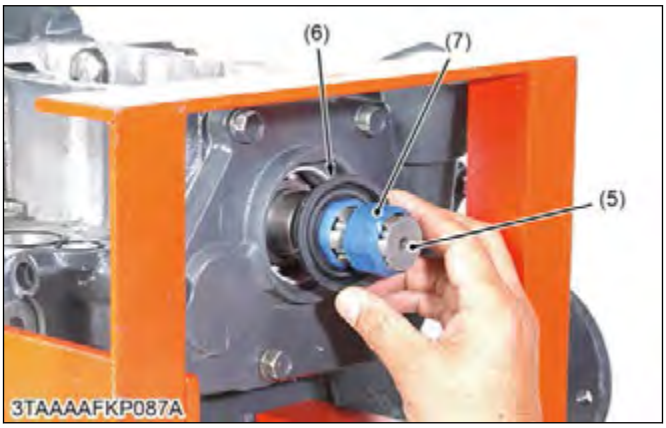

(1) Bolt
(2) Rear PTO cover
(3) Bearing
(4) 11T PTO select shaft
(5) Rear PTO shaft
(6) Oil seal
(7) Vinyl tape

1. Remove the rear PTO cover mounting bolts (1).
2. Remove the rear PTO cover (2).
3. Remove the rear PTO shaft (5) from the rear PTO cover (2).

(When reassembling)

- Pull the 11T PTO select shaft with the bearing approximately the bearing thickness.
- Apply liquid gasket (Three Bond 1208D or equivalent) to the joint surface of transaxle case to the rear PTO cover.
- Bind the vinyl tape to the rear PTO shaft not to damage the oil seal.

Tightening torque	Rear PTO cover mounting bolt (M8)	18 to 20 N·m 1.8 to 2.1 kgf·m 13 to 15 lbf·ft

5.4.4 Disassembling rear axle (L.H.)

NOTE

- **Prepare a specially bent snap ring pillar.**

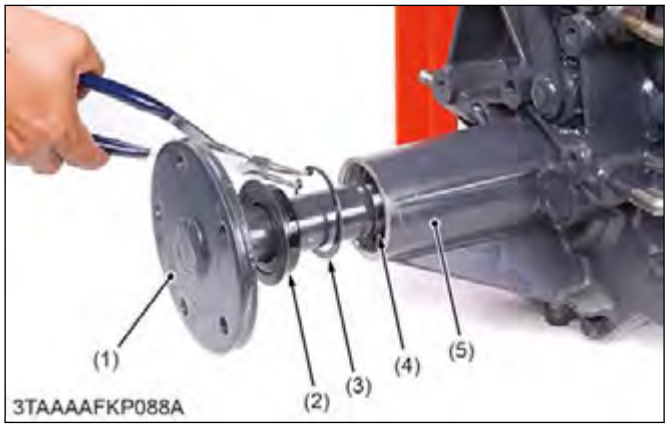

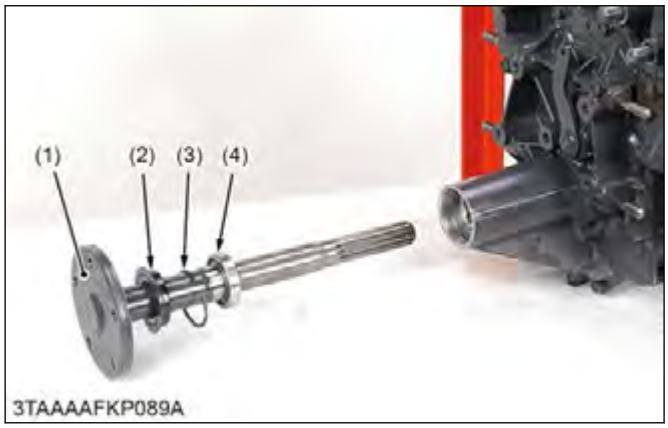

(1) Rear axle
(2) Oil seal
(3) Internal circlip
(4) Ball bearing
(5) Rear axle case

1. Draw out the oil seal with a screw driver.
2. Remove the internal circlip from the rear axle case.
3. Draw out the rear axle from the rear axle case.

(When reassembling)

- Do not damage the oil seal.

5.4.5 Removing rear axle case (R.H.)

(2) 37T spiral bevel gear
(3) 10T final gear shaft (Brake shaft)
(4) 66T final gear

1. Remove the rear axle case (R.H.) mounting bolts.

2. Remove the rear axle case (R.H.) (1) as an assembly from the transaxle case.

(1) Rear axle case (R.H.)

3. Remove the 37T spiral bevel gear (2).

NOTE
- **Since the adjusting shims are installed behind the 37T spiral bevel gear, check the shims.**

4. Remove the 10T final gear shaft (3).
5. Remove the 66T final gear with the differential lock shift fork.

(When reassembling)
- Apply liquid gasket (Three Bond 1208D or equivalent) to the joint surface of transaxle case to the rear axle case (R.H.).

Tightening torque	Rear axle case (R.H.) mounting bolt (M8)	18 to 20 N·m 1.8 to 2.1 kgf·m 13 to 15 lbf·ft

5.4.6 Removing 66T final gear

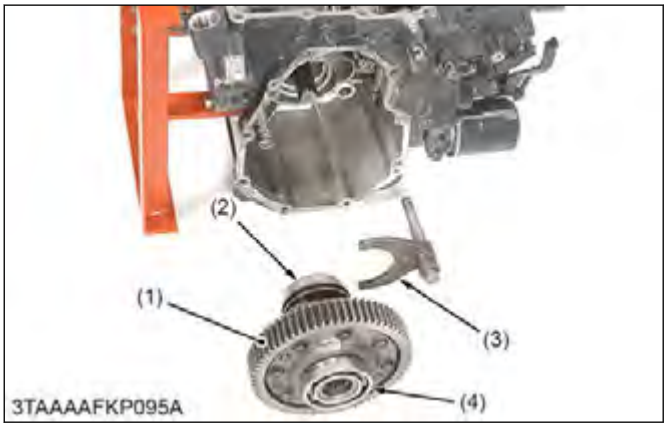

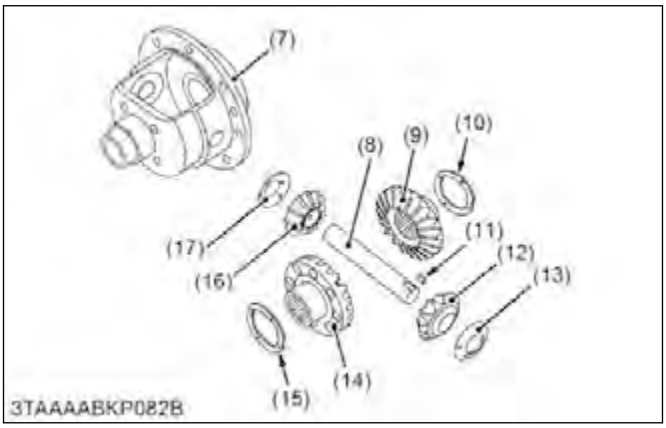

(1) 66T final gear
(2) Bearing
(3) Differential lock shift folk
(4) Bearing
(5) Differential lock shifter
(7) Differential case
(8) Differential pinion shaft
(9) Differential side gear
(10) Differential side gear washer
(11) Key
(12) Differential pinion
(13) Differential pinion washer
(14) Differential side gear
(15) Differential side gear washer
(16) Differential pinion
(17) Differential pinion washer

1. Remove the bearing (2) with a puller.
2. Remove the bearing (4) with a puller.
3. Remove the differential lock shifter (5) and 66T final gear (6).

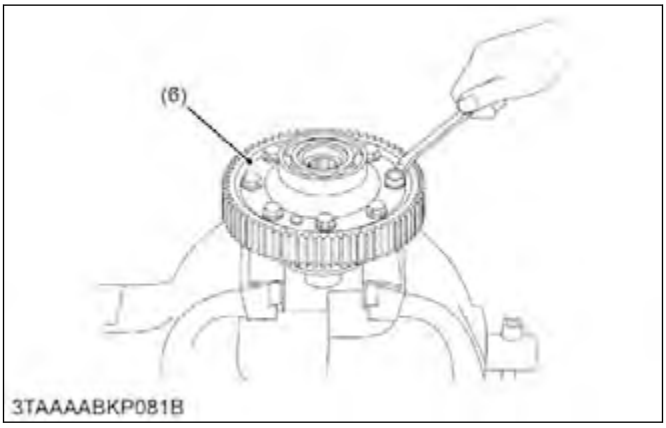

(6) 66T final gear

4. Put parting marks on the differential pinions (12), (16) and the differential side gears (9), (14).
5. Tap out the differential pinion shaft (8).

https://truckmanualshub.com/

6. Remove the differential pinions (12), (16), the differential pinion washers (13), (17), differential side gears (9), (14) and the differential side gear washers (10), (15).

(When reassembling)
- Install the differential pinion and differential gear, aligning the parting marks.
- Lock the differential pinion shaft (8) by setting the key (11).

Tightening torque	66T final gear mounting bolt	61 to 70 N·m 6.2 to 7.2 kgf·m 45 to 52 lbf·ft

5.4.7 Removing rear axle case, R.H. and brake

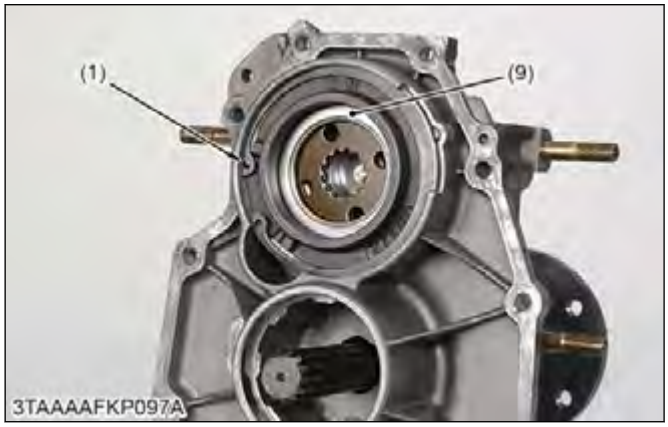

(1) Internal circlip
(2) Brake cam lever
(3) External circlip
(4) Steel ball
(5) Actuator
(6) Brake disc
(7) Friction plate
(8) Bearing holder
(9) Shim

1. Remove the internal circlip (1).
2. Remove the shim (9), the bearing holder (8) and the other brake parts from the brake case.

(When reassembling)
- Apply grease to the steel balls.
- Be careful not to damage the O-ring on the brake cam lever.
- Check that the brake cam lever moves smoothly.

5.4.8 Removing PTO clutch assembly

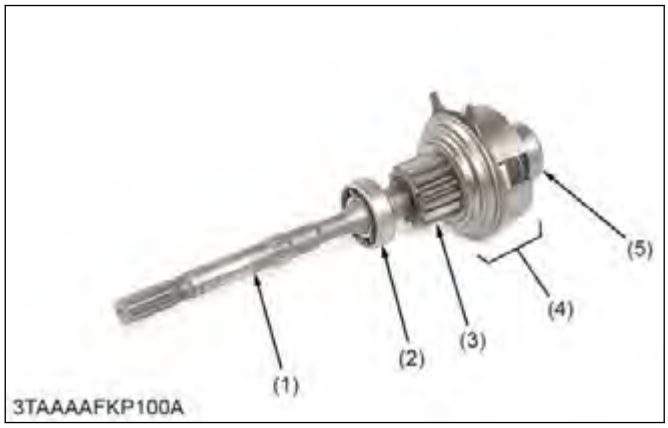

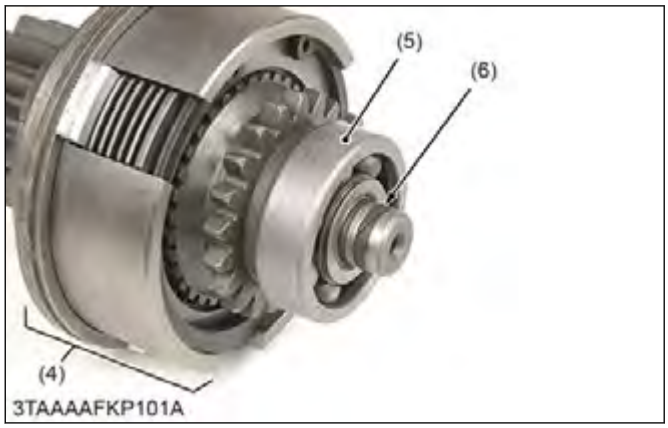

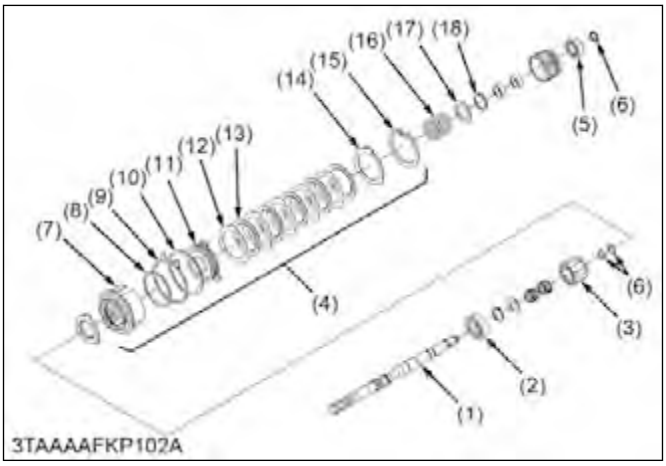

(1)	Pump shaft (PTO clutch shaft)	(10)	Brake plate
(2)	Bearing	(11)	Clutch piston
(3)	Clutch gear	(12)	Separate plate
(4)	Clutch pack	(13)	Disc plate
(5)	Bearing	(14)	Backing plate
(6)	Seal ring	(15)	Internal circlip
(7)	Clutch case	(16)	Brake spring
(8)	O-ring	(17)	Washer
(9)	Brake disc	(18)	External circlip
		(19)	Clutch spring compressor

1. Remove the bearing (2).
2. Remove the external circlip and the clutch gear (3).
3. Remove the seal rings (6).
4. Remove the bearing (5).
5. Remove the external circlip (18) using a clutch spring compressor.
6. Disassembling the clutch pack inner parts as show in the figure.

(When reassembling)

- Change the seal rings (6) with a new one.

5.5 Assembling shafts

5.5.1 Assembling select arms and HST pump shaft (PTO clutch shaft)

- Be careful not to damage the O-rings on the arms.

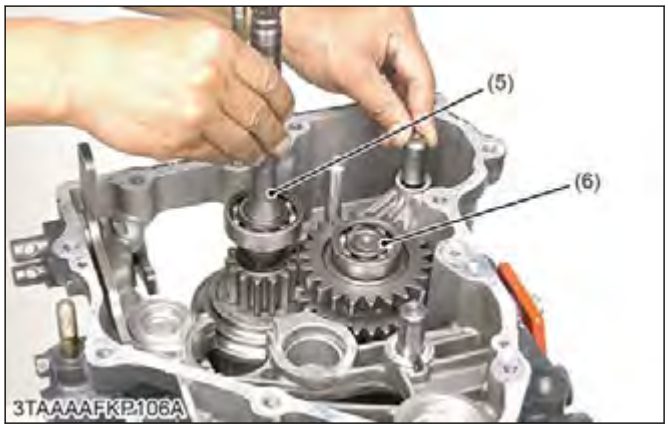

(1) PTO select arm
(2) Range shift arm
(3) Front wheel drive shift arm
(4) Mid-PTO idle gear shaft
(5) HST pump shaft (PTO clutch shaft)
(6) PTO select gear shaft

1. Install the PTO select arm (1).

(1) PTO select arm

2. Install the range shift arm (2) and the front wheel drive shift arm (3).
3. Install the idle gear shaft.

NOTE

- **Install the rear PTO cover and the PTO select gear shaft before installing HST pump shaft assembly.**

4. After installing the rear PTO cover to the transaxle case, install the PTO select gear shaft (6).
5. Install the HST pump shaft (PTO clutch shaft) (5).

5.5.2 Assembling front wheel drive shaft, shifter, spiral bevel pinion shaft and mid-PTO shaft

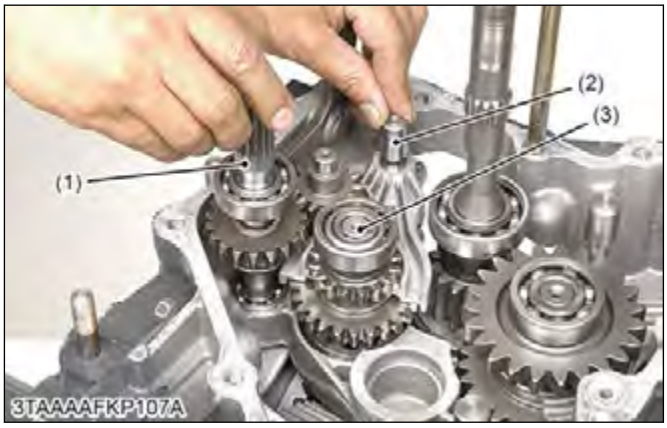

(1) Front wheel drive shaft
(2) Shifter
(3) Spiral bevel pinion shaft

1. Install the front wheel drive shaft (1).
2. Install the shifter (2) and the spiral bevel pinion shaft (3) together.

3. Install the mid-PTO idle gear shaft (5) and the mid-PTO shaft (6) and the HST motor shaft (4) together.

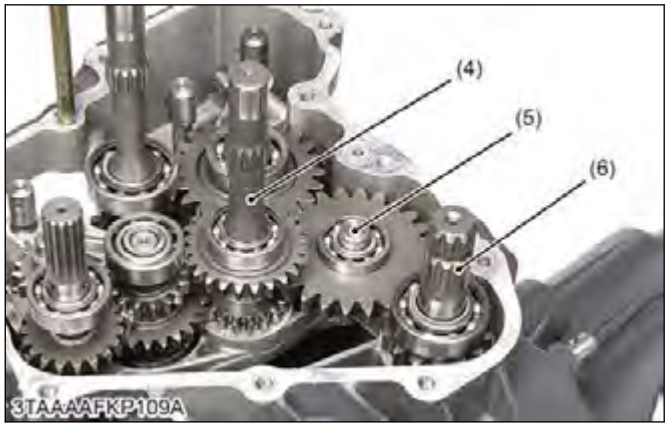

(4) HST motor shaft
(5) Mid-PTO idle gear shaft
(6) Mid-PTO shaft

6. Servicing

6.1 Hydrostatic transmission

6.1.1 Checking center section

1. Check the center section surface (1) for scratches or wear.

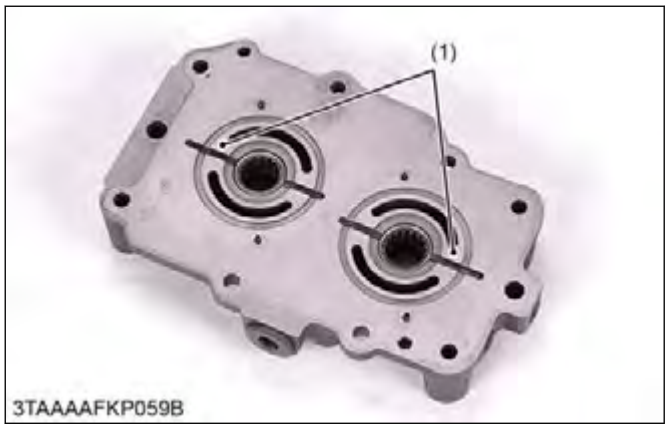

(1) Center section surface

2. If deep scratch or excessive wear is found, replace the hydrostatic transmission assembly.

6.1.2 Checking charge relief valve

(1) Charge relief valve
(2) Spring
(3) Plug

1. Check the charge relief valve (1) and the spring (2).
2. If damages are found, replace it.

6.1.3 Checking check and high pressure relief valve

NOTE

- **Check and high pressure relief valve (reverse) has a pin hole.**

Pin hole	Factory specification	1.5 mm 0.059 in.

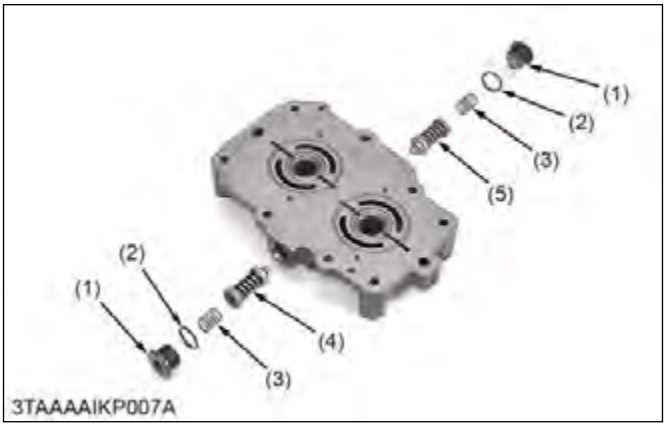

(1) Plug
(2) O-ring
(3) Spring
(4) Check and high pressure relief valve (Forward)
(5) Check and high pressure relief valve (Reverse)

1. Check the check and high pressure relief valve (4), (5) for scratches and damage.
2. Check the spring (3) for breakage and wear.
3. If anything are unusual, replace the check and high pressure relief valve as complete assembly.

6.1.4 Checking cylinder block assembly

IMPORTANT

- **Do not interchange the pistons between the pump cylinder block and the motor cylinder block. Pistons and cylinder blocks are matched.**

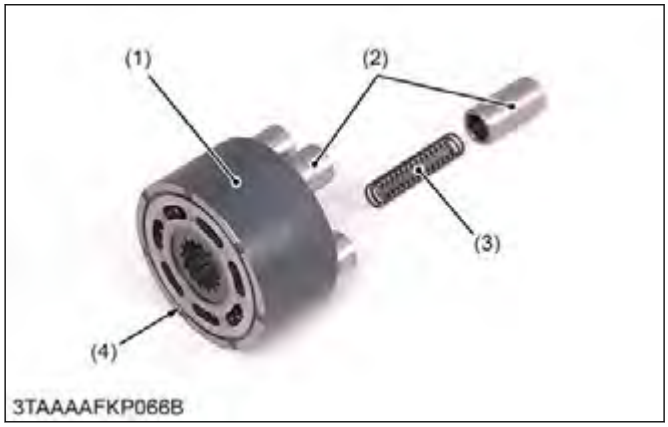

(1) Cylinder block
(2) Piston
(3) Spring
(4) Polished face

1. Check the cylinder blocks (1) and the pistons (2) for scratches and wear.
2. If there are scratch or worn, replace the cylinder block assembly.
3. Check the pistons for their free movement in the cylinder block bores.
4. If the piston or the cylinder block is scored, replace the cylinder block assembly.
5. Check the polished face (4) of the cylinder block for scoring. If it is scored, replace the cylinder block assembly.

6.1.5 Checking thrust washer, thrust roller bearing, thrust plate and cradle bearing

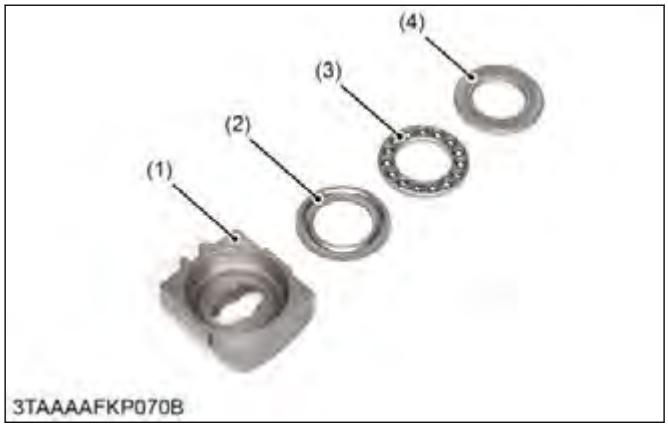

(1) Swashplate
(2) Thrust washer
(3) Thrust bearing
(4) Thrust plate

1. Check the thrust bearing (3) for scratches and excessive wear.
2. If it is worn, replace it.
3. Check the thrust plate (4) for scratches and excessive wear. If it is worn or scored, replace it.
4. Check the cradle bearing (5) for excessive wear. If it is worn, replace it.

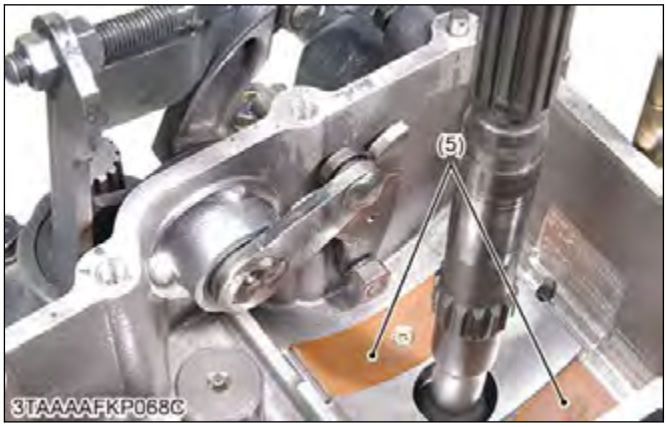

(5) Cradle bearing

6.1.6 Checking pump shaft (PTO clutch shaft)

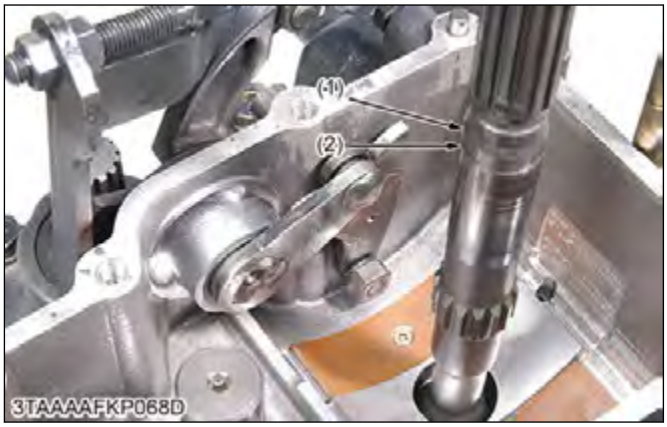

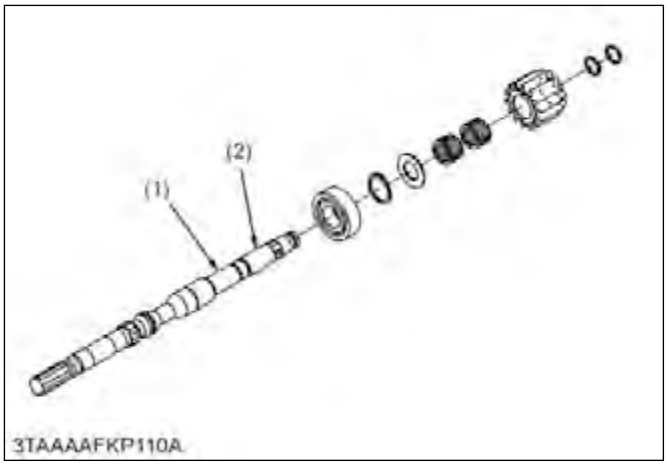

(1) Seal surface
(2) Bearing surface

1. Check the seal surface (1) and the bearing surface (2).
2. If the pump shaft is rough or grooved, replace it.
3. If the ball bearing or the needle bearing is worn, replace it.

6.1.7 Checking needle bearing

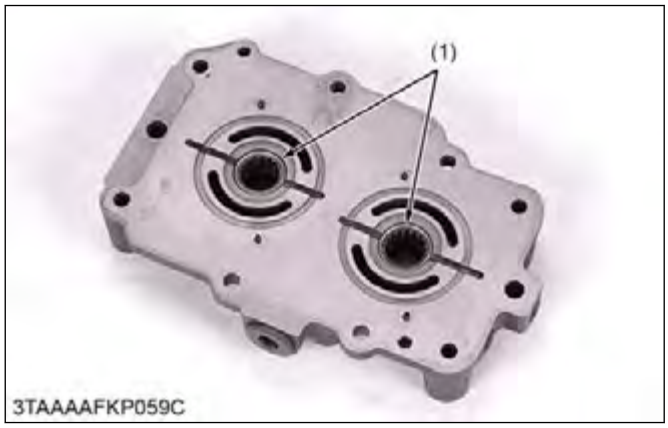

(1) Needle bearing

1. Check the needle bearing (1) for wear.
2. If the needle bearing (1) are worn, replace them.

6.2 Transaxle case

6.2.1 Checking bearing

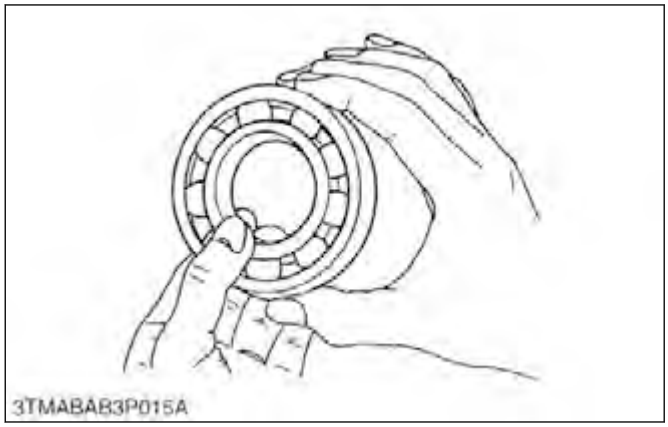

1. Hold the inner race, and push and pull the outer race in all directions to check wear and roughness.
2. Apply the transmission oil to the bearing, and hold the inner race.
3. Turn the outer race to check rotation.
4. If there are any damaged, replace the bearing.

6.2.2 Checking PTO clutch disc wear

1. Measure the thickness of PTO clutch disc with vernier calipers.

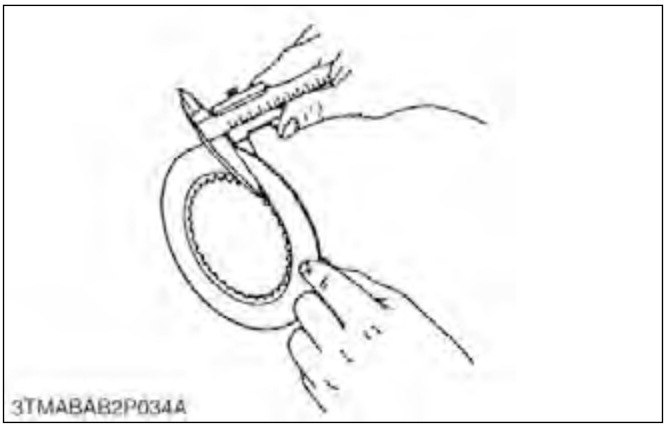

2. If the thickness is less than the allowable limit, replace it.

Thickness of PTO clutch disc	Factory specification	1.50 to 1.70 mm 0.0591 to 0.0669 in.
	Allowable limit	1.35 mm 0.0531 in.

6.2.3 Checking separate plate and back plate wear

1. Measure the thickness of pressure plate and steel back with vernier calipers.

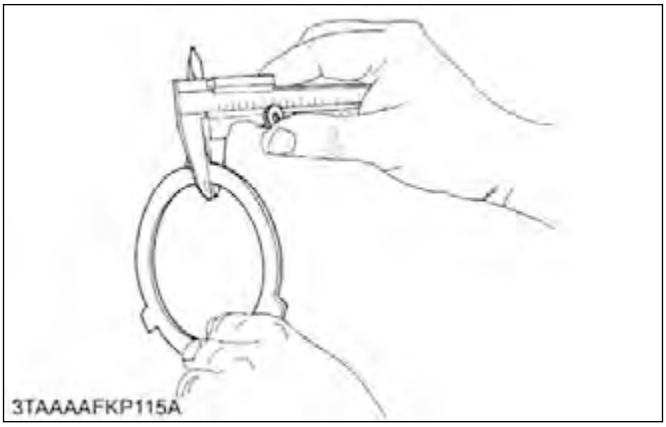

2. If the thickness is less than the allowable limit, replace it.

Thickness of separate plate	Factory specification	0.9450 to 1.055 mm 0.03721 to 0.04153 in.
	Allowable limit	0.80 mm 0.031 in.

Thickness of back plate	Factory specification	1.9 to 2.1 mm 0.075 to 0.082 in.
	Allowable limit	1.85 mm 0.0728 in.

6.2.4 Checking flatness of clutch piston, pressure plate and steel plate

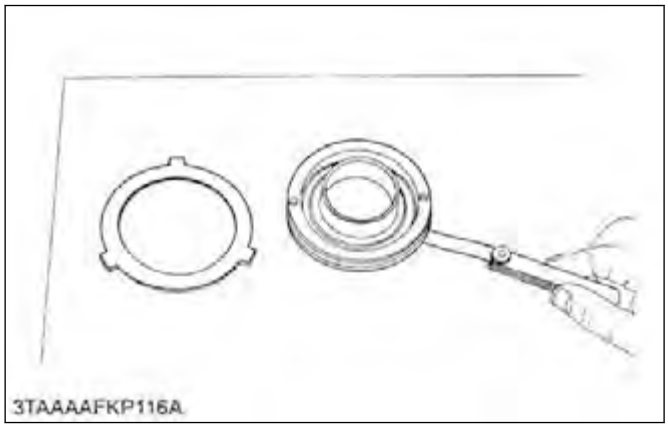

1. Place the part on a surface plate.
2. Check the flatness by inserting a feeler gauge (allowable limit size) underneath it at least four points.

Flatness of clutch piston	Allowable limit	0.15 mm 0.0059 in.
Flatness of pressure plate and steel plate		0.20 mm 0.0079 in.

3. If the gauge can be inserted, replace it.

6.2.5 Checking clutch spring free length

1. Measure the free length of spring with vernier calipers.

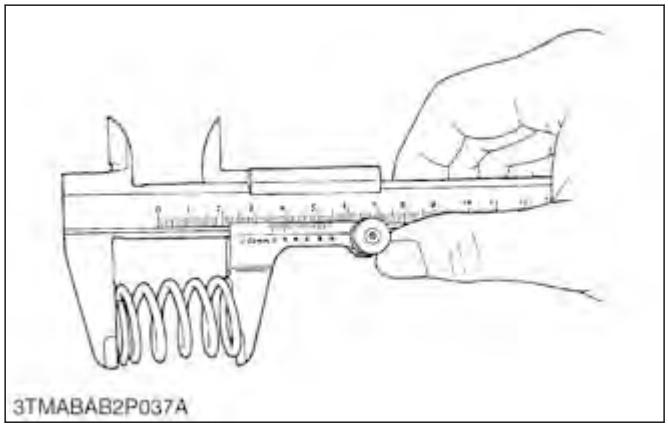

2. If the measurement is less than the allowable limit, replace it.

Clutch spring free length	Factory specification	38.5 mm 1.52 in.
	Allowable limit	34.5 mm 1.36 in.

6.2.6 Checking PTO brake disc wear

1. Measure the PTO brake disc thickness with a vernier caliper.

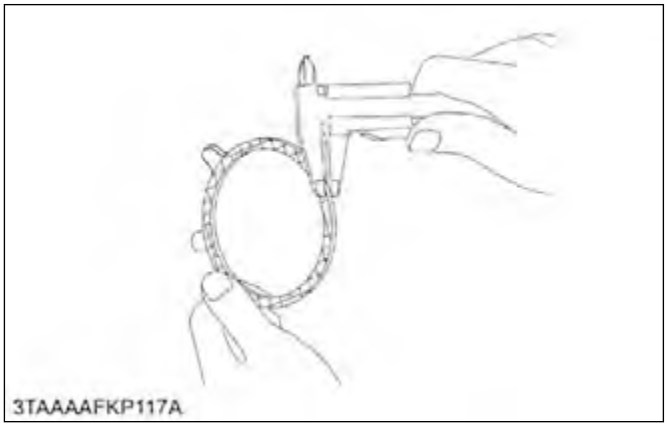

2. If the thickness is less than allowable limit, replace it.

PTO brake disc thickness	Factory specification	2.90 to 3.10 mm 0.115 to 0.122 in.
	Allowable limit	2.70 mm 0.11 in.

6.2.7 Checking PTO brake plate

1. Measure the PTO brake plate thickness with a vernier caliper.

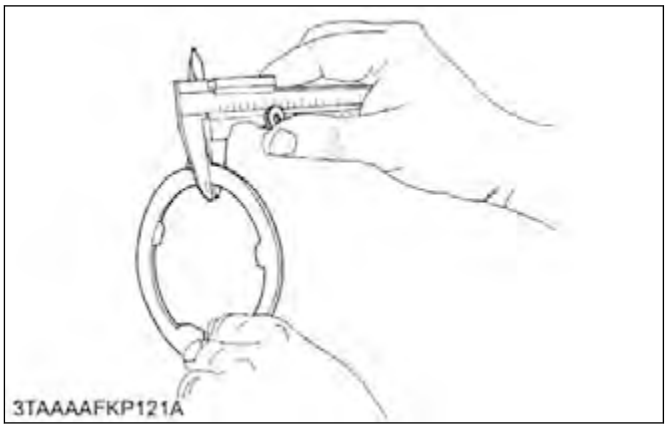

2. If the thickness is less than allowable limit, replace it.

PTO brake plate thickness	Factory specification	1.9 to 2.1 mm 0.075 to 0.082 in.
	Allowable limit	1.85 mm 0.0728 in.

6.2.8 Checking clearance between differential case and differential side gear

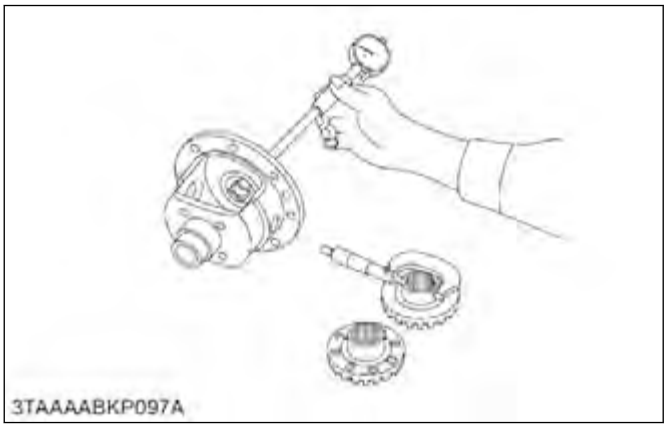

1. Measure the differential side gear boss O.D. with an outside micrometer.

Differential side gear O.D.	Factory specification	37.911 to 37.950 mm 1.4926 to 1.4940 in.

2. Measure the differential case I.D. with a cylinder gauge and calculate the clearance.

Differential case I.D.	Factory specification	38.000 to 38.062 mm 1.4961 to 1.4985 in.

3. If the clearance exceeds the allowable limit, replace damaged parts.

Clearance between differential case and differential side gear	Factory specification	0.0500 to 0.151 mm 0.00197 to 0.00594 in.
	Allowable limit	0.30 mm 0.012 in.

6.2.9 Checking clearance between differential pinion shaft and differential pinion

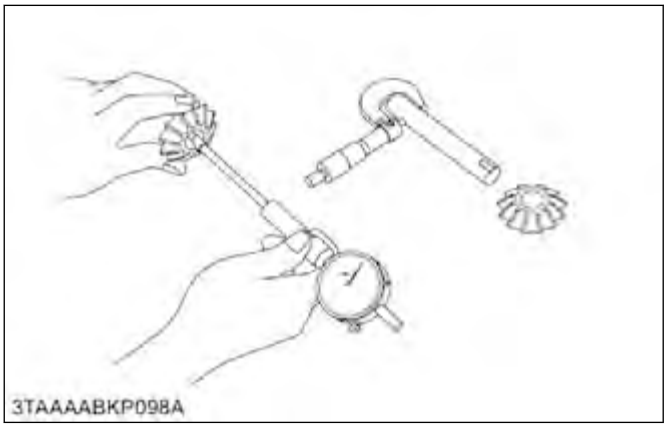

1. Measure the differential pinion shaft O.D. with an outside micrometer.

Differential pinion shaft O.D.	Factory specification	19.959 to 19.980 mm 0.78579 to 0.78661 in.

2. Measure the differential pinion I.D. with a cylinder gauge, and calculate the clearance.

Differential pinion I.D.	Factory specification	20.060 to 20.081 mm 0.78977 to 0.79059 in.

3. If the clearance exceeds the allowable limit, replace damaged parts.

Clearance between differential pinion shaft and differential pinion	Factory specification	0.0800 to 0.122 mm 0.00315 to 0.00480 in.
	Allowable limit	0.30 mm 0.012 in.

6.2.10 Checking backlash between differential pinion and differential side gear

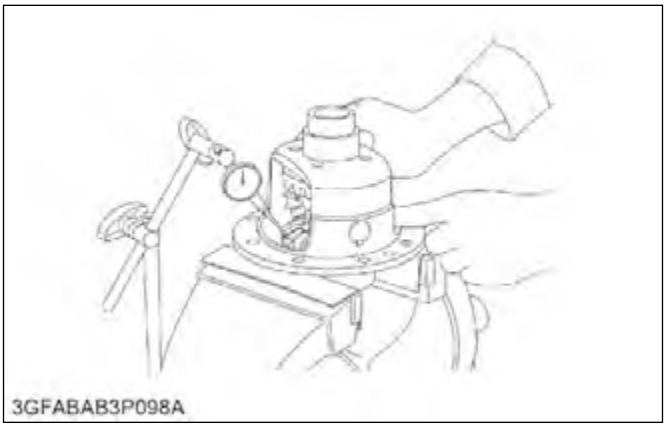

1. Secure the differential case with a vise.
2. Set the dial indicator (lever type) with its finger on the tooth of the differential side gear.
3. Press differential pinion and side gear against the differential case.
4. Hold the differential pinion and move the differential side gear to measure the backlash.
5. If the backlash exceeds the allowable limit, adjust it with differential side gear shims.

Backlash between differential pinion and differential side gear	Factory specification	0.15 to 0.30 mm 0.0059 to 0.011 in.
	Allowable limit	0.40 mm 0.016 in.

(Reference)

Thickness of shims	1.5 mm 0.059 in.
	1.6 mm 0.063 in.
	1.7 mm 0.067 in.

6.2.11 Checking backlash between spiral bevel pinion gear and bevel gear

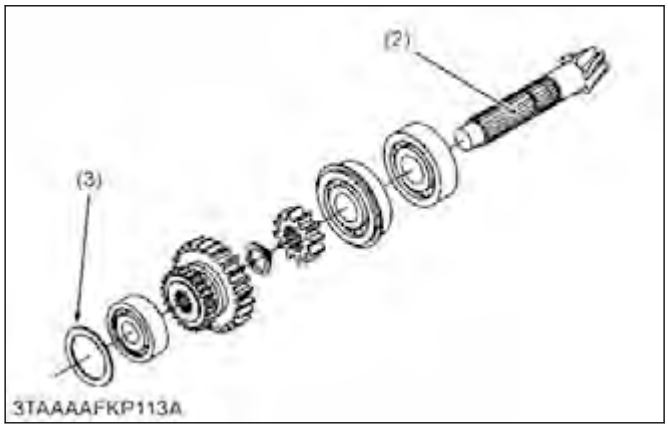

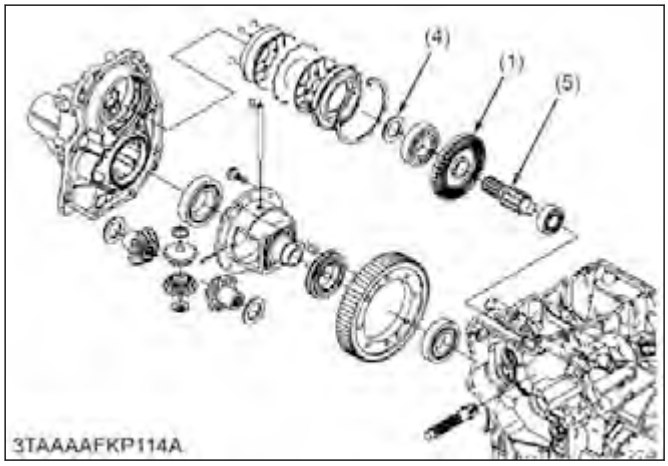

(1) Bevel gear
(2) Spiral bevel pinion gear
(3) Shim
(4) Shim
(5) Final gear shaft (Brake shaft)
(A) Bevel gear teeth upper surface

1. Temporarily assemble the spiral bevel pinion gear (2) and the bevel gear (1) in the transaxle case.
2. Hold the wire of solder or plastigauge on the bevel gear teeth upper surface (A).
3. Turn the front drive shaft one turn clockwise by hands.
4. Measure the backlash between the spiral bevel pinion gear and the bevel gear.
5. If the backlash exceeds the factory specifications, adjust the shims (3), (4).

Backlash between spiral bevel pinion and bevel gear	Factory specification	0.10 to 0.30 mm 0.0040 to 0.011 in.

6.2.12 Checking brake cam lever movement

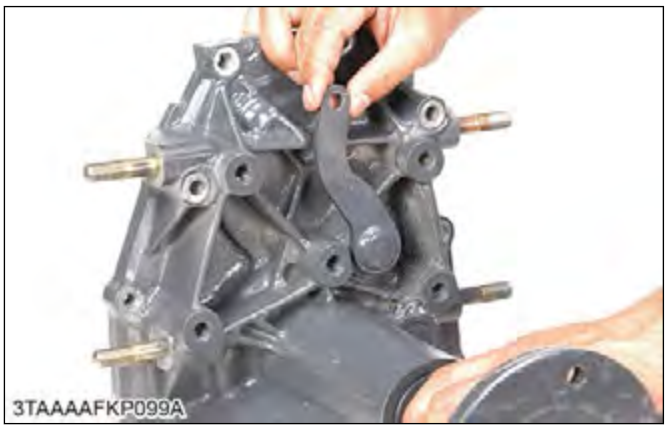

1. Move the brake cam lever by hand to check its movement.
2. If its movement is heavy, refine the brake cam with a emery paper.

6.2.13 Checking flatness of actuator and bearing holder

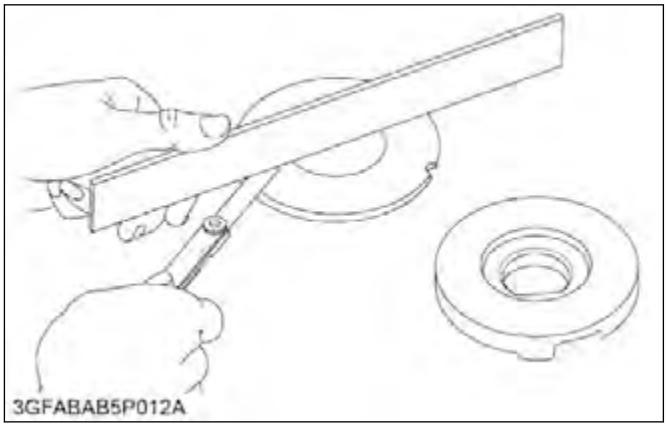

1. Place a straightedge on the contacting surface of the actuator and the bearing holder.
2. Inspect the friction surface of the actuator and the bearing holder with the straightedge, and determine if a feeler gauge will fit on the part of wear.

Flatness of actuator and bearing holder	Allowable limit	0.30 mm 0.012 in.

3. If it will fit, resurface.

6.2.14 Checking height of cam plate and ball

1. Measure the height of the cam plate with the ball installed.

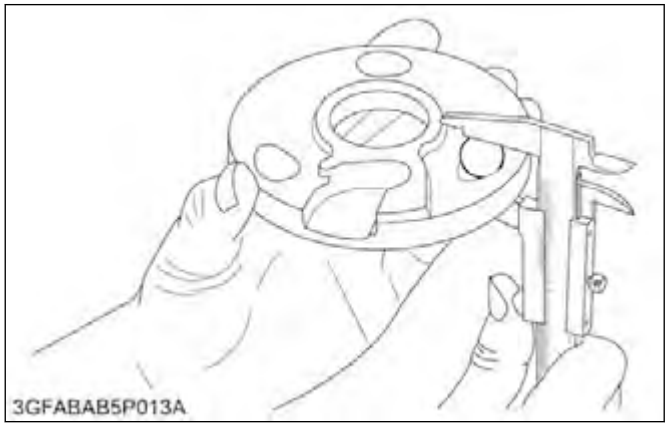

2. If the measurement is less than the allowable limit, replace the cam plate and balls.

Height of cam plate and ball	Factory specification	22.89 to 22.99 mm 0.9012 to 0.9051 in.
	Allowable limit	22.40 mm 0.8819 in.

3. Inspect the ball holes of cam plate for uneven wear.
4. If the uneven wear is found, replace it.

6.2.15 Checking brake disc and friction plate wear

1. Measure the brake disc thickness and the friction plate thickness with an outside micrometer.

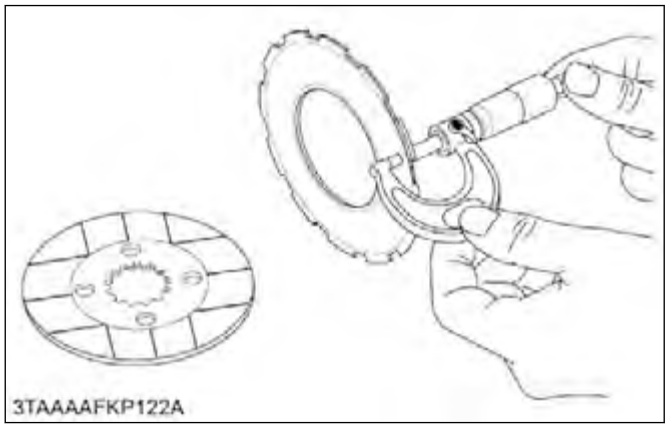

2. If the thickness is less than the allowable limit, replace it.

Brake disc thickness	Factory specification	3.30 to 3.50 mm 0.130 to 0.137 in.
	Allowable limit	3.0 mm 0.12 in.
Friction plate thickness	Factory specification	1.92 to 2.08 mm 0.0756 to 0.0818 in.
	Allowable limit	1.52 mm 0.0598 in.

https://truckmanualshub.com/

5. FRONT AXLE

https://truckmanualshub.com/

MECHANISM

1. Structure of front axle

The front axle of the 4WD is constructed as shown below. Power is transmitted from the transmission through the propeller shaft to the bevel pinion shaft (9), then to the bevel gear (15) and to the differential side gear (13).
The power through the differential side gear is transmitted to the differential yoke shaft (7), (12), and to the bevel gear shaft (16) through the bevel gears (4), (6) in the bevel gear case (5).
The revolution is greatly reduced by the bevel gears (18), (3), then the power is transmitted to the axle (1).
The differential system allows each wheel to rotate at a different speed to make turning easier.

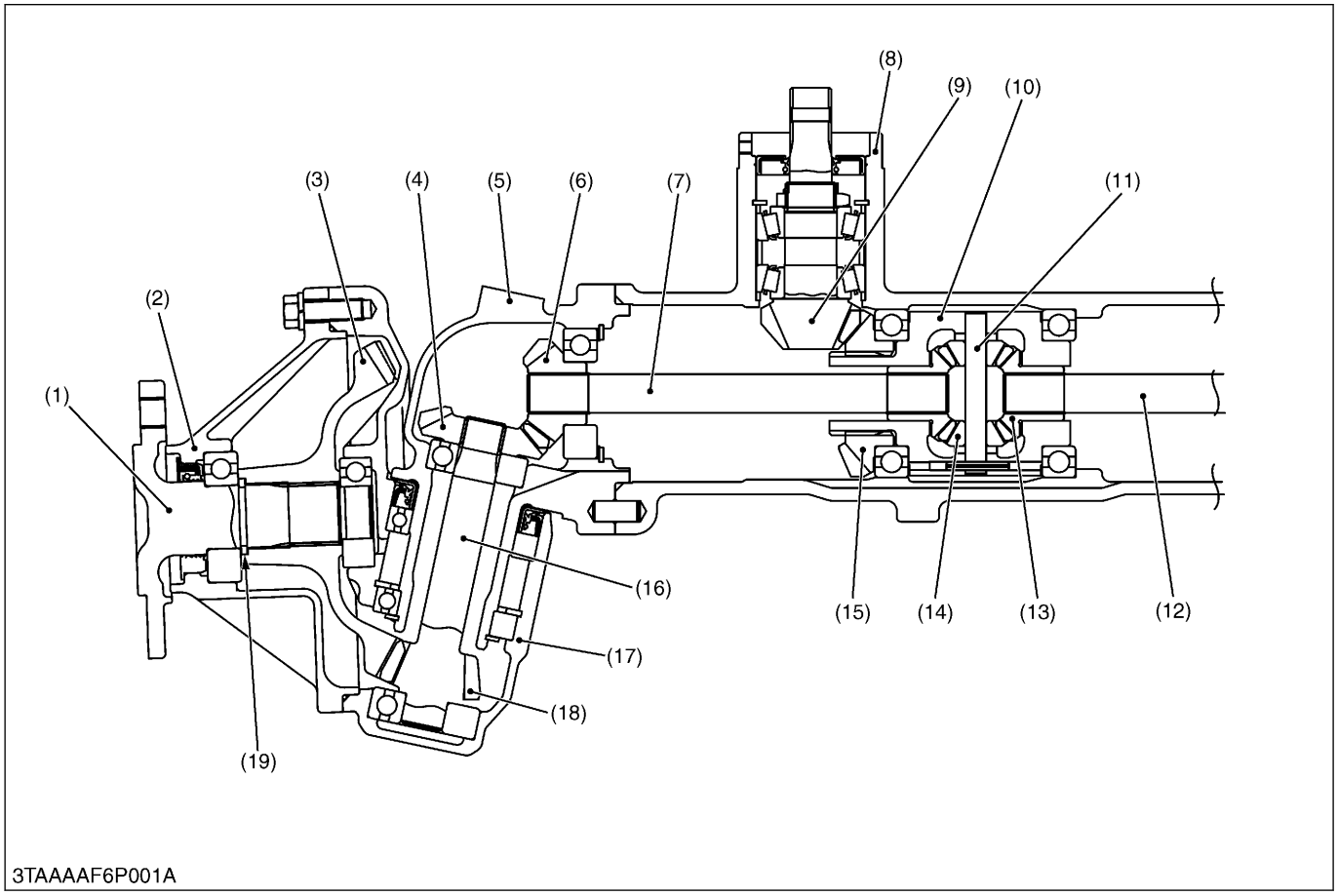

(1) Axle
(2) Axle flange
(3) Bevel gear
(4) Bevel gear
(5) Bevel gear case
(6) Bevel gear
(7) Differential yoke shaft, R.H.
(8) Front axle case
(9) Bevel pinion shaft
(10) Differential gear assembly
(11) Differential pinion shaft
(12) Differential yoke shaft, L.H.
(13) Differential side gear
(14) Differential pinion gear
(15) Bevel gear
(16) Bevel gear shaft
(17) Front gear case
(18) Bevel gear
(19) Collar

2. Front wheel alignment

To assure smooth mobility or maneuverability and enhance stable and straight running, the front wheels are mounted at an angle to the right, left and forward directions. This arrangement is referred to as the Front Wheel Alignment.

2.1 Camber of front axle

The front wheels are tilted from the vertical as viewed from the front, upper wheels are spreader than lower ones.
This inclination is called camber (a). Camber reduces bending or twisting of the front axle caused by vertical load or running resistance, and also keeps the stability in running.

Camber	0.035 rad 2°

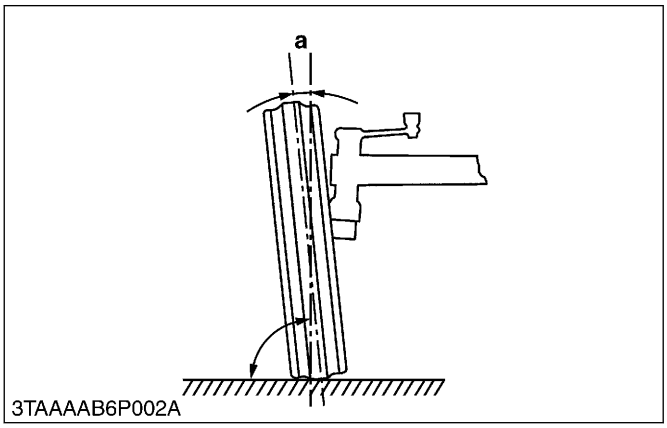

2.2 Kingpin angle of front axle

The kingpin is titled from the vertical as viewed from the front.
This angle is called kingpin angle (a). As with the camber, kingpin angle reduces rolling resistance of the wheels, and prevents any shimmy motion of the steering wheel.
It also reduces steering effort.

Kingpin angle	0.209 rad 12°

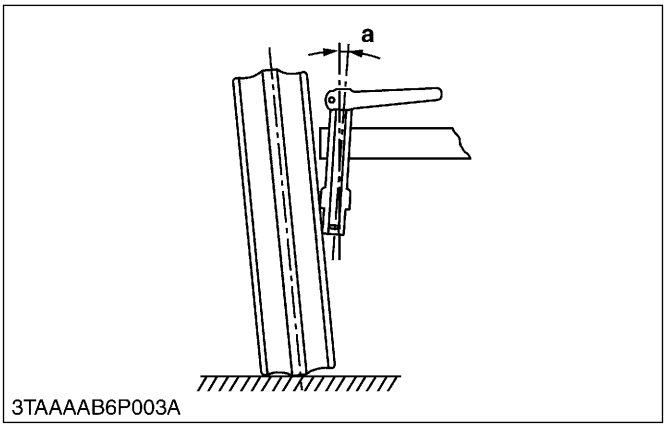

2.3 Caster of front axle

The kingpin is titled forward as viewed from the side.
The point (b) of the wheel center line is behind the point (a) of the kingpin shaft center line.
This inclination is called caster (c). Caster helps provide steering stability.
As with the kingpin inclination, caster reduces steering effort.

Caster	0 rad 0°

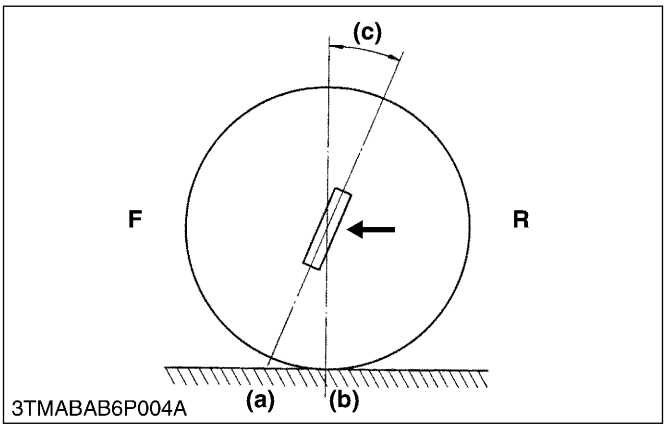

F: Front R: Rear

2.4 Toe-in of front axle

Viewing the front wheels from above reveals that the distance between the toes of the front wheels is smaller than that between the heels.
It is called toe-in. The front wheels tend to roll outward due to the camber, but toe-in offsets it and ensures parallel rolling of the front wheels. Another purpose of toe-in is to prevent excessive and uneven wear of tires.

Toe-in	0 to 5 mm 0 to 0.19 in.

https://truckmanualshub.com/

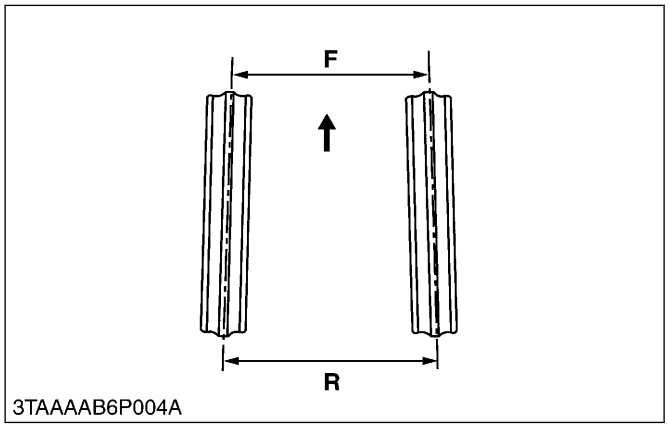

F: Front R: Rear

https://truckmanualshub.com/

SERVICING

1. Troubleshooting for front axle

Symptom	Probable cause and checking procedure	Solution	Reference page
Front wheels wander to right or left	1. Tire pressure uneven	Adjust	2-53
	2. Improper toe-in adjustment (improper alignment)	Adjust	5-8
	3. Clearance between center pin and pin support bushing excessive	Replace	5-18
	4. Front axle rocking force too small	Adjust	5-8
	5. Tie-rod end loose	Tighten	6-11
	6. Air sucked in power steering circuit	Bleed	—
Front wheels cannot be driven	1. Front wheel driving gears in front axle gear case broken	Replace	5-14
	2. Universal joint broken	Replace	5-10
	3. Front wheel drive gears in transmission broken	Replace	—
	4. Front differential gear broken	Replace	5-14
Noise	1. Gear backlash excessive	Adjust or replace	5-16 5-17
	2. Oil insufficient	Fill	5-9
	3. Bearings damaged or broken	Replace	—
	4. Gears damaged or broken	Replace	—
	5. Spiral bevel pinion shaft turning force improper	Adjust	5-16

2. Servicing specifications for front axle

Item		Factory specification	Allowable limit
Front wheel alignment	Toe-in	0 to 5 mm 0 to 0.2 in.	—
Front axle	Rocking force	49.1 to 117 N 5.00 to 12.0 kgf 11.1 to 26.4 lbs	—
Differential case to differential side gear	Clearance	0.040 to 0.082 mm 0.0016 to 0.0032 in.	0.17 mm 0.0067 in.
• Differential case	I.D.	26.000 to 26.021 mm 1.0237 to 1.0244 in.	—
• Differential side gear	O.D.	25.939 to 25.960 mm 1.0213 to 1.0220 in.	—
Differential pinion shaft to differential pinion	Clearance	0.025 to 0.055 mm 0.0009 to 0.0021 in.	0.25 mm 0.0098 in.
• Differential pinion shaft	I.D.	9.960 to 9.975 mm 0.3922 to 0.3927 in.	—
• Differential pinion	O.D.	10.000 to 10.015 mm 0.39370 to 0.39429 in.	—
Differential pinion to differential side gear	Backlash	0.1 to 0.3 mm 0.004 to 0.01 in.	—
Bevel pinion shaft	Turning torque	0.80 to 1.0 N·m 0.082 to 0.10 kgf·m 0.59 to 0.73 lbf·ft	—
Bevel pinion shaft to bevel gear	Backlash	0.1 to 0.3 mm 0.004 to 0.01 in.	—
12T bevel gear to 15T bevel gear	Backlash	0.1 to 0.3 mm 0.004 to 0.01 in.	—
Center pin to pin support bushing	Clearance	0 to 0.231 mm 0 to 0.00909 in.	0.70 mm 0.028 in.
• Center pin	I.D.	19.850 to20.000 mm 0.78150 to 0.78740 in.	—
• Bushing	O.D.	20.000 to 20.081 mm 0.78741 to 0.79059 in.	—

https://truckmanualshub.com/

3. Tightening torques for front axle

Tightening torques of screws, bolts and nuts on the table below are especially specified.

Item	N·m	kgf·m	lbf·ft
Front wheel mounting screw	149 to 179	15.2 to 18.3	110 to 132
Tie-rod slotted nut	18 to 34	1.8 to 3.5	13 to 25
Power steering cylinder mounting screw	48 to 55	4.9 to 5.7	36 to 41
Power steering hose	24 to 27	2.4 to 2.8	18 to 20
Bevel gear case mounting screw (M10)	48 to 55	4.9 to 5.7	36 to 41
Bevel gear case mounting screw (M12)	78 to 90	7.9 to 9.2	58 to 66
Front gear case cover mounting screw	48 to 55	4.9 to 5.7	36 to 41

RELATED PAGE

TIGHTENING TORQUES on page 2-13

4. Checking and adjusting

4.1 Adjusting toe-in

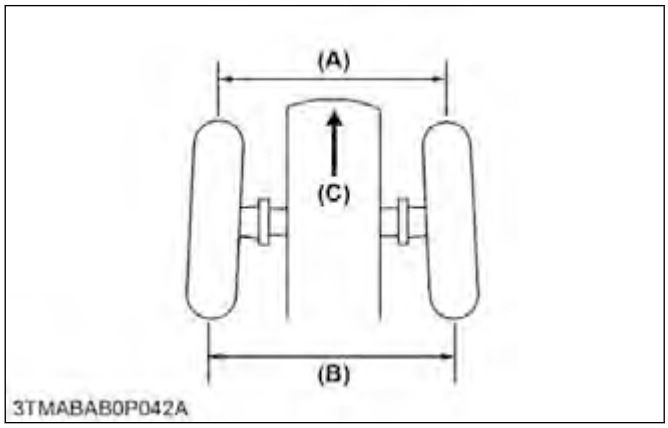

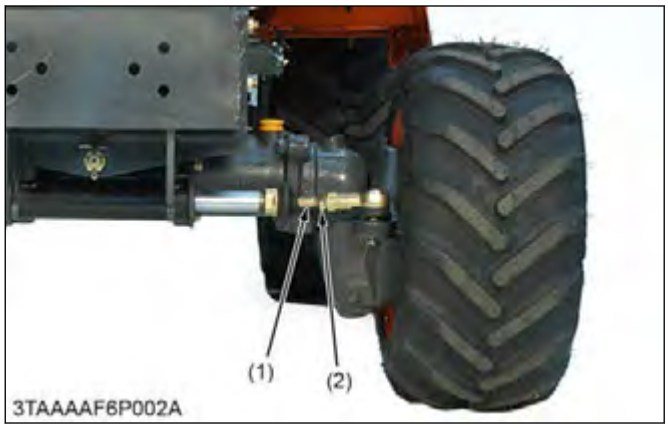

(1) Tie-rod
(2) Lock nut
(A) Wheel to wheel distance at front
(B) Wheel to wheel distance at rear
(C) Front

1. Inflate the tires to the specified pressure.
2. Turn the front wheels straight ahead.
3. Measure the toe-in ((B) - (A)).
4. If the measurement is not within the factory specifications, adjust the tie-rod length.

Toe-in ((B) - (A))	Factory specification	0 to 5 mm 0 to 0.2 in.

Adjusting procedure

1. Loosen the lock nuts and turn the tie-rod to adjust the rod length until the proper toe-in measurement is obtained.
2. Re-tighten the lock nuts.

4.2 Adjusting front axle rocking force

(1) Cotter pin
(2) Adjusting nut

1. Jack up the front side of tractor and remove the front wheel.
2. Set a spring balance to the front gear case cover.
3. Measure the front axle rocking force.
4. If the measurement is not within the factory specifications, adjust as following.

Front axle rocking force	Factory specification	49.0 to 300 N 5.00 to 30.5 kgf 11.1 to 67.4 lbf

Adjusting procedure

a. Remove the cotter pin (1).
b. Tighten or loosen the adjusting nut (2) so that the measurement of rocking force comes to factory specifications.
c. If the slot and pin hole do not meet, align the nut until they do meet within factory specifications.
d. Install the new cotter pin.

(When reassembling)

- Be sure to split the cotter pin like an anchor.

4.3 Adjusting front wheel steering angle

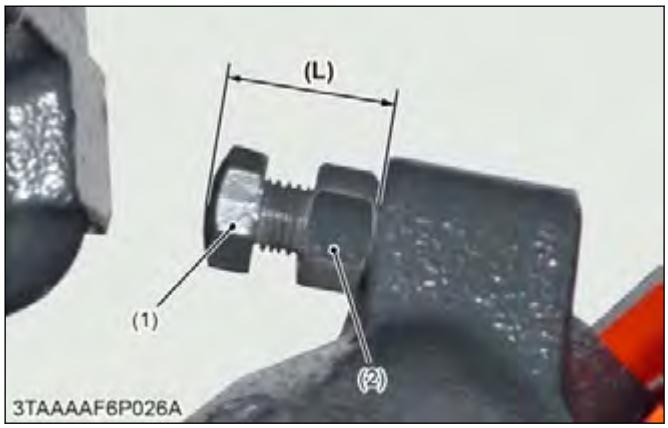

(1) Stopper bolt L.H. (2) Lock nut

(Reference)

Steering angle	Right side	0.84 to 0.87 rad 48 to 50°
	Left side	0.93 to 0.95 rad 53 to 55°

Length of adjusting bolt (L)	Right side	23 mm 0.91 in.
	Left side	16 mm 0.63 in.

1. Inflate the tires to the specified pressure.
2. Loosen the lock nut and shorten the length of stopper bolt L.H. (1).
3. Steer the wheels to the extreme left.
4. Lengthen the length of stopper bolt (1) until the stopper bolt contacts with the bevel gear case (3).

(3) Bevel gear case

5. Return the steering wheel to straight ahead and lengthen the stopper bolt 1/2 turns from above position further.
6. Lock the stopper bolt by lock nut (2).
7. For adjusting the right steering angle, perform the same procedure as mentioned in left steering angle.

5. Disassembling and assembling

5.1 Separating front axle assembly

5.1.1 Draining front axle case oil

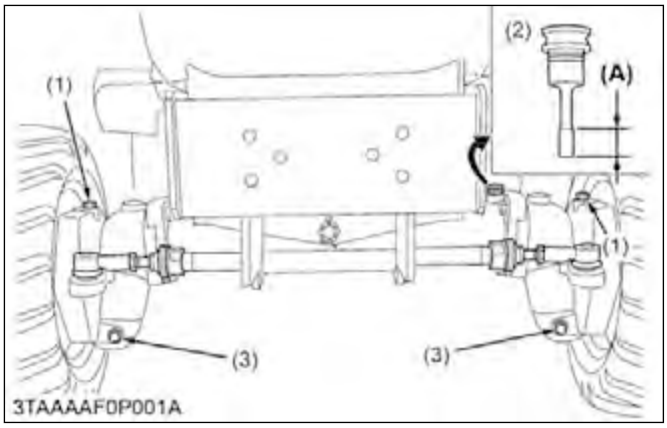

(1) Breather plug
(2) Filling plug with dipstick
(3) Drain plug
(A) Oil level is acceptable within this range.

1. Place the oil pans underneath the front axle case.
2. Remove both right and left hand side drain plugs (3) and filling plug (2) to drain the oil.
3. After draining, reinstall the drain plugs (3).

(When reassembling)

IMPORTANT

- **After a few minutes, check the oil level again, add oil to prescribed level.**
- When re-filling, remove the right and left breather plugs (1).

Front axle case oil	Capacity	4.7 L 5.0 U.S.qts 4.1 Imp.qts

RELATED PAGE
LUBRICANTS, FUEL AND COOLANT on page 2-7

5.1.2 Removing battery

WARNING

To avoid serious injury or death:

- **When disconnecting the battery cables, disconnect the negative cable from the battery first.**
- **When connecting, connect the positive cable to the battery first.**

1. Remove the under panel (1).

(1) Under panel

2. Disconnect the negative cable (3) from the battery (2).
3. Disconnect the positive cable (4) from the battery (2) and remove the battery.

(2) Battery
(3) Negative cable
(4) Positive cable

5.1.3 Removing bonnet

(1) Bonnet
(2) Bonnet bracket
(3) Front guard

1. Remove the front guard (3).
2. Open the bonnet.
3. Disconnect the headlight harness from the headlights and bonnet.
4. Disconnect the bonnet guide rod from the bonnet.
5. Disconnect the L.H. and R.H. bonnet brackets (2) from the frame.
6. Remove the bonnet (1).

5.1.4 Removing front wheel and propeller shaft cover

1. Lift up the front of tractor and place the disassembling stand under the front axle frame.
2. Remove the front wheels.
3. Remove the propeller shaft cover mounting bolt and slide the propeller shaft cover (1).

(1) Propeller shaft cover

(When reassembling)

Tightening torque	Front wheel mounting screw	149 to 179 N·m 15.2 to 18.3 kgf·m 110 to 132 lbf·ft

5.1.5 Disconnecting propeller shaft

1. Tap out the spring pins (2) and disconnect the universal joint (1) and spiral bevel pinion shaft.

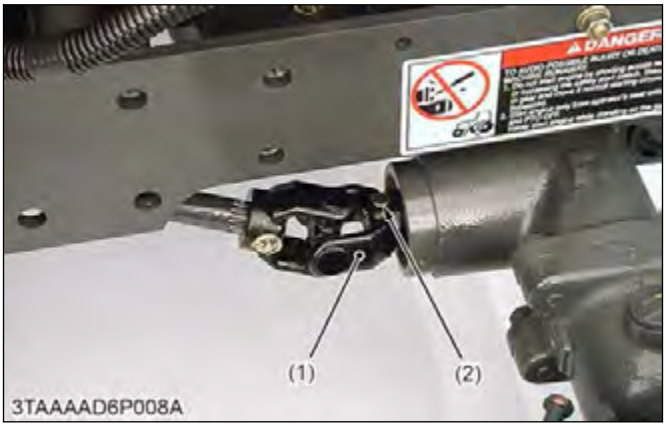

(1) Universal joint
(2) Spring pin

https://truckmanualshub.com/

(When reassembling)

- Apply grease to the splines of the propeller shaft and universal joint.

5.1.6 Removing front axle assembly

1. Remove the power steering hose clamp (1).

(1) Hose clamp

2. Place the garage jack under the front axle.
3. Remove the cotter pin (3).
4. Remove the slotted nut (2) of center pin and separate the front axle from the frame.

(2) Slotted nut (Adjusting nut for front axle rocking force)
(3) Cotter pin

5. Disconnect the power steering hoses (4).

(4) Power steering hose

(When reassembling)

- After mounting the front axle assembly to the frame, be sure to adjust the front axle rocking force.
- Installing the cotter pin, be sure to split the cotter pin like an anchor.

Tightening torque	Power steering hose	24 to 27 N·m 2.4 to 2.8 kgf·m 18 to 20 lbf·ft

5.2 Front axle assembly

5.2.1 Removing power steering cylinder

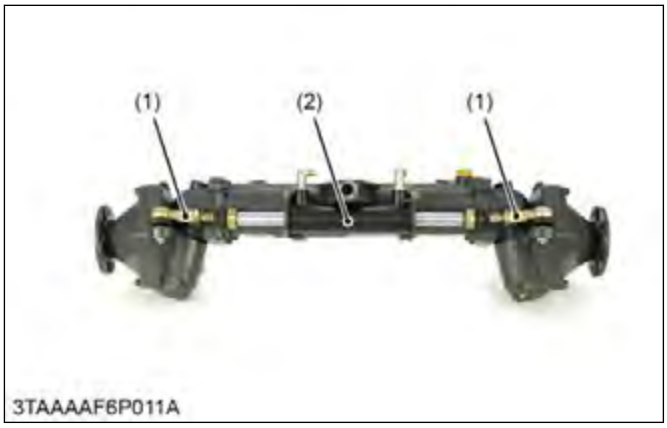

(1) Tie-rod
(2) Power steering cylinder

1. Remove the cotter pin and remove the slotted nut for tie-rod (1).
2. Remove the power steering cylinder mounting screws and remove the power steering cylinder (2) with tie-rod.

(When reassembling)

NOTE

- **Tighten the slotted nut. If the slot and pin hole do not meet, tighten the nut until they do meet, and install the cotter pin.**
- **Be sure to split the cotter pin like an anchor.**

Tightening torque	Tie-rod slotted nut	18 to 34 N·m 1.8 to 3.5 kgf·m 13 to 25 lbf·ft
	Power steering cylinder mounting screw	48 to 55 N·m 4.9 to 5.7 kgf·m 36 to 41 lbf·ft

5.2.2 Removing bevel gear case and front gear case

1. Remove the bevel gear case mounting screws.
2. Remove the bevel gear case (2) and front gear case (1) as a unit from the front axle case (3).

(1) Front gear case
(2) Bevel gear case
(3) Front axle case

(When reassembling)

- Apply grease to the O-ring and be careful not to damage it.
- Do not interchange right and left bevel gear case assemblies and right and left gear case assemblies.

Tightening torque	Bevel gear case mounting screw (M10)	48 to 55 N·m 4.9 to 5.7 kgf·m 36 to 41 lbf·ft
	Bevel gear case mounting screw (M12)	78 to 90 N·m 7.9 to 9.2 kgf·m 58 to 66 lbf·ft

5.2.3 Removing front gear case cover

(1) Front gear case cover
(2) Bevel gear
(3) Front gear case

1. Remove the front gear case mounting screws and remove the front gear case cover (1) with bevel gear (2).

(1) Front gear case cover

(When reassembling)

- Apply grease to the O-ring and be careful not to damage it.

Tightening torque	Front gear case cover mounting screw	48 to 55 N·m 4.9 to 5.7 kgf·m 36 to 41 lbf·ft

https://truckmanualshub.com/

5.2.4 Removing 36T bevel gear and front axle shaft

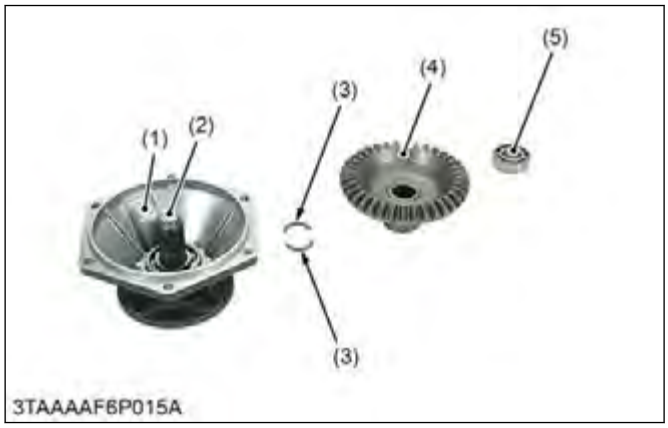

(1) Front gear case cover
(2) Axle shaft
(3) Collar
(4) 36T bevel gear
(5) Ball bearing

1. Remove the ball bearing (5).
2. Remove the 36T bevel gear (4).
3. Remove the collar (3).
4. Tap out the axle shaft (2).

(When reassembling)

- Install the oil seal (6) of front gear case cover (1), noting its direction as shown in the figure.

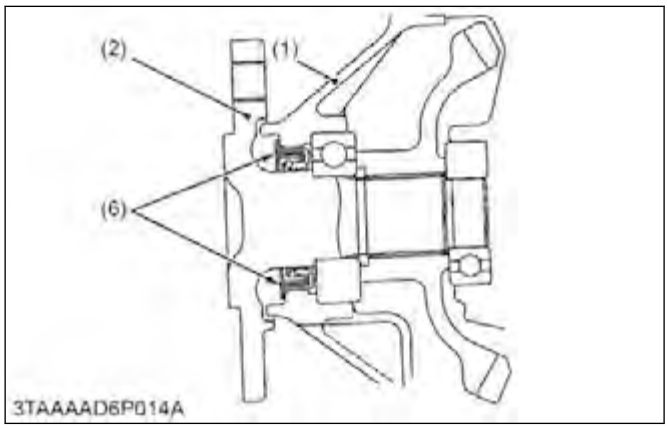

(1) Front gear case cover
(2) Axle shaft
(6) Oil seal

5.2.5 Removing front gear case and bevel gear case

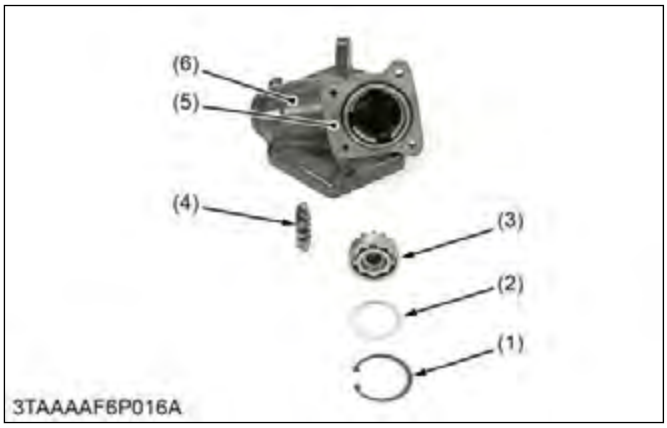

(1) Internal snap ring
(2) Shim
(3) Ball bearing
(4) Bevel gear
(5) Bevel gear case
(6) Front gear case
(7) External snap ring
(8) Bevel gear shaft
(9) Ball bearing
(10) Internal snap ring
(11) Ball bearing
(12) Oil seal
(13) Ball bearing

1. Remove the internal snap ring (1).
2. Remove the bevel gear with ball bearing (3) and shim (2).
3. Remove the bevel gear (4).
4. Remove the external snap ring (7).
5. Remove the bevel gear case (5) from front gear case (6).
6. Remove the oil seal (12) and the ball bearing (11).
7. Remove the internal snap ring (10) and remove the ball bearing (9).
8. Remove the bevel gear shaft (8) with ball bearing.

(When reassembling)

- Install the oil seal (12) of bevel gear case, noting its direction as shown in the figure.

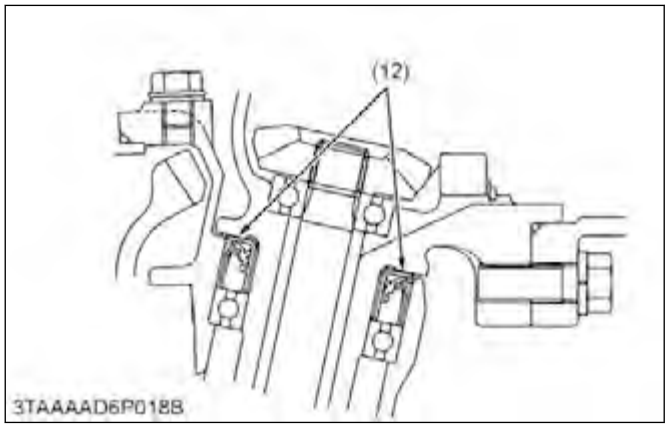

(12) Oil seal

- Install the adjusting shims (2) to their original position.

(2) Shim

5.2.6 Removing bevel pinion shaft and differential gear assembly

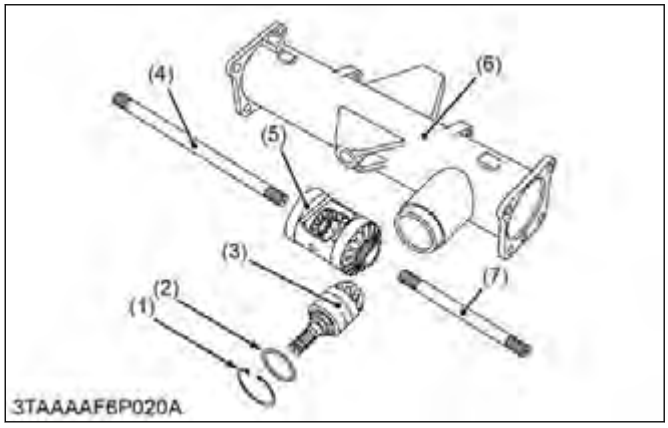

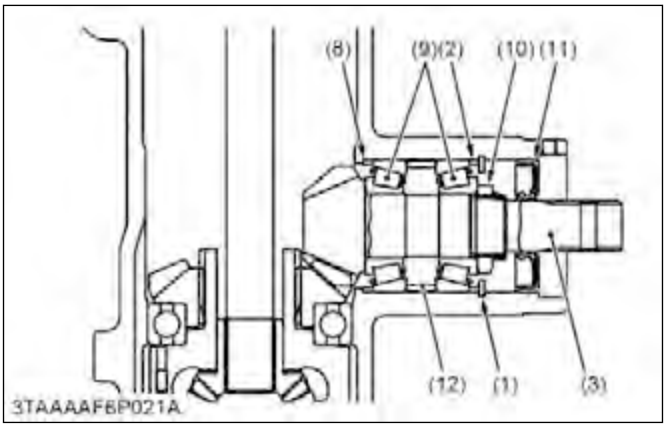

(1)	Internal snap ring	(7)	Differential yoke shaft R.H.
(2)	Adjusting collar	(8)	Adjusting collar
(3)	Bevel pinion shaft	(9)	Taper roller bearing
(4)	Differential yoke shaft L.H.	(10)	Lock nut
(5)	Differential gear assembly	(11)	Oil seal
(6)	Front axle case	(12)	Collar

1. Remove the differential yoke shaft (4), (7).
2. Remove the oil seal (11).
3. Remove the internal snap ring (1).
4. Pull out the bevel pinion shaft (3).
5. Remove the differential gear assembly (5), from right side of front axle case (6).
6. Remove the stake of lock nut (10), and then remove the lock nut (10).
7. Remove the taper roller bearing (9).

(When reassembling)

- Apply gear oil to the taper roller bearings (9) and install them correctly, noting their direction.
- Replace the lock nut (10) and oil seal (11) with new ones.
- After tighten the lock nut (10) to the specified torque, stake it firmly.
- Install the adjusting collars (2), (8) to their original position.

5.2.7 Removing differential gear

NOTE

- **Arrange the parts to know their original position.**

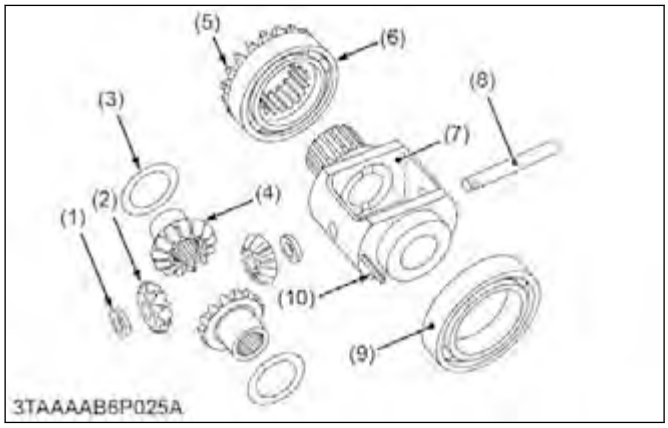

(1) Shim
(2) Differential pinion
(3) Shim
(4) Differential side gear
(5) Bevel gear
(6) Bearing
(7) Differential gear case
(8) Differential pinion shaft
(9) Ball bearing
(10) Spring pin

1. Remove the bevel gear (5) with bearing (6) and ball bearing (9) by puller.
2. Remove the spring pin (10).
3. Remove the differential pinion shaft (8).
4. Remove the differential pinions (2), differential side gears (4) and shims (1), (3).

(When reassembling)

- Apply molybdenum disulfide (Three Bond 1901 or equivalent) to the inner circumferential surface of the differential side gears, differential pinions and shims.

6. Servicing

6.1 Checking clearance between differential case and differential side gear

1. Measure the differential side gear boss O.D.

Differential side gear O.D.	Factory specification	25.939 to 25.960 mm 1.0213 to 1.0220 in.

2. Measure the differential case bore I.D., and calculate the clearance.

Differential case bore I.D.	Factory specification	26.000 to 26.021 mm 1.0237 to 1.0244 in.

3. Measure the differential case cover bore I.D., and calculate the clearance.
4. If the clearance exceeds the allowable limit, replace damaged parts.

Clearance between differential case and differential side gear	Factory specification	0.040 to 0.082 mm 0.0016 to 0.0032 in.
	Allowable limit	0.17 mm 0.0067 in.

6.2 Checking clearance between differential pinion shaft and differential pinion

1. Measure the differential pinion shaft O.D.

Differential pinion shaft O.D.	Factory specification	9.960 to 9.975 mm 0.3922 to 0.3927 in.

2. Measure the differential pinion I.D., and calculate the clearance.

Differential pinion I.D.	Factory specification	10.000 to 10.015 mm 0.39370 to 0.39429 in.

3. If the clearance exceeds the allowable limit, replace damaged parts.

Clearance between differential pinion shaft and differential pinion	Factory specification	0.025 to 0.055 mm 0.00099 to 0.0021 in.
	Allowable limit	0.25 mm 0.0098 in.

6.3 Checking backlash between differential pinion and differential side gear

1. Set a dial gauge (lever type) on a tooth of the differential pinion.
2. Fix the differential side gear, and move the differential pinion to measure the backlash.
3. If the measurement exceeds the factory specifications, adjust with the differential side gears shims.

Backlash between differential pinion and differential side gear	Factory specification	0.1 to 0.3 mm 0.004 to 0.01 in.

(Reference)

Thickness of adjusting shims	For side gear	0.80 mm 0.031 in.
		1.0 mm 0.039 in.
		1.2 mm 0.047 in.
	For pinion	3.30 mm 0.130 in.
		3.50 mm 0.138 in.
		3.70 mm 0.146 in.
		3.90 mm 0.154 in.

6.4 Checking turning torque of bevel pinion shaft

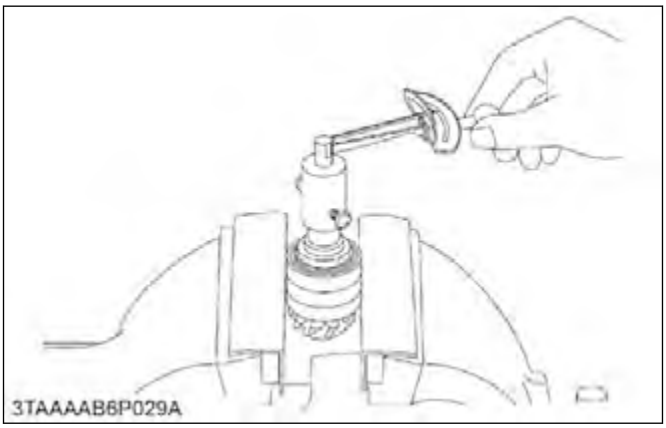

1. Clamp the spiral bevel pinion shaft assembly to the vise and tighten the staking nut.
2. Measure the turning torque of bevel pinion shaft.
3. If the turning torque is not within the factory specifications, adjust with the lock nut.

NOTE

- **After turning force adjustment, be sure to stake the lock nut.**

Turning torque	Factory specification	0.80 to 1.0 N·m 0.082 to 0.10 kgf·m 0.59 to 0.73 lbf·ft

6.5 Checking backlash between bevel pinion shaft and bevel gear

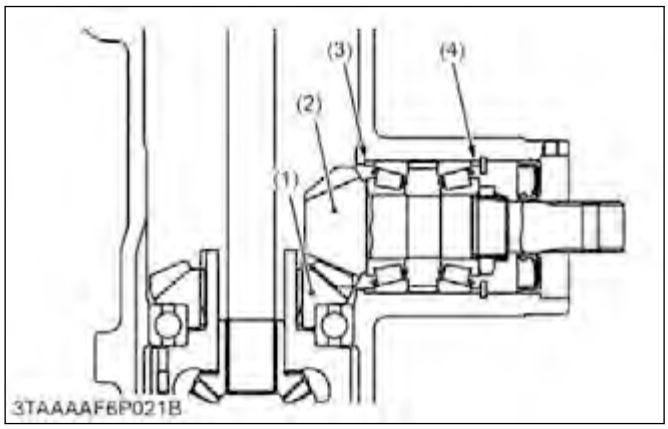

(1) Bevel gear
(2) Bevel pinion shaft
(3) Adjusting collar
(4) Adjusting collar

1. Put the wire of solder or plastigauge on the position where the tooth proper contact of bevel pinion shaft.

Wire of solder	Factory specification	Thickness 0.5 mm 0.02 in.

2. Fix the bevel gear and rotate the bevel pinon shaft carefully.
3. Measure the backlash.
4. If the backlash is not within the factory specifications, change the adjusting collar (3) and (4).

Backlash between bevel pinion shaft and bevel gear	Factory specification	0.1 to 0.3 mm 0.004 to 0.01 in.

(Reference)

Thickness of adjusting collars (3), (4)	3.40 mm 0.134 in.
	3.60 mm 0.142 in.
	3.80 mm 0.150 in.
	3.90 mm 0.154 in.
	4.00 mm 0.157 in.
	4.10 mm 0.161 in.
	4.20 mm 0.165 in.
	4.40 mm 0.173 in.
	4.50 mm 0.177 in.
	4.60 mm 0.181 in.

5. Adjust the backlash properly by repeating the above procedures.

6.6 Checking backlash between 12T bevel gear and 15T bevel gear

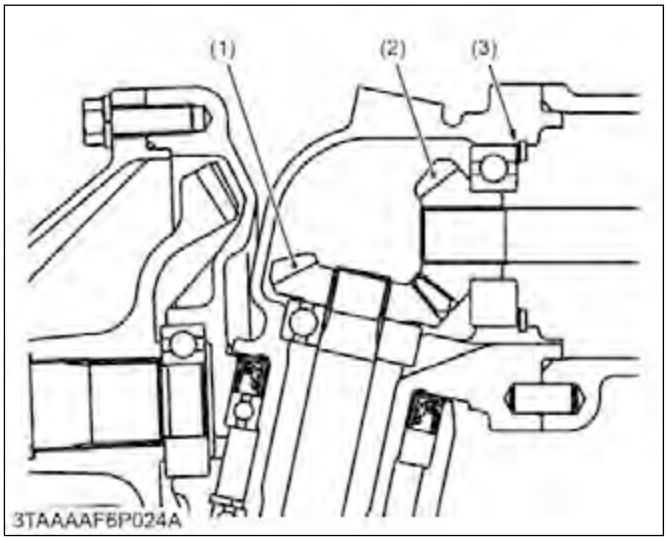

(1) 15T bevel gear
(2) 12T bevel gear
(3) Shim

1. Stick a strip of wire of solder or plastigauge to three spots on the 15T bevel gear (1) with grease.
2. Fix the front axle case, bevel gear case and front gear case.
3. Turn the axle.
4. Remove the bevel gear case from front axle case and measure the backlash.

5. If the backlash is not within the factory specifications, adjust with shim (3).

Backlash between 12T bevel gear and 15T bevel gear	Factory specification	0.1 to 0.3 mm 0.004 to 0.01 in.

(Reference)

Thickness of adjusting shims (3)	0.8 mm 0.03 in.
	1.0 mm 0.039 in.
	1.2 mm 0.047 in.
	1.4 mm 0.055 in.
Tooth contact	More than 35%

6.7 Checking clearance between center pin and pin support bushing

1. Measure the center pin O.D. with an outside micrometer.

Center pin O.D.	Factory specification	19.850 to 20.000 mm 0.78150 to 0.78740 in.

2. Measure the pin support bush I.D. of the front axle with a cylinder gauge.

Bush I.D.	Factory specification	20.000 to 20.081 mm 0.78741 to 0.79059 in.

3. If the clearance exceeds the allowable limit, replace it.

Clearance between center pin and pin support bush	Factory specification	0 to 0.231 mm 0 to 0.00909 in.
	Allowable limit	0.70 mm 0.028 in.

https://truckmanualshub.com/

6. STEERING

https://truckmanualshub.com/

MECHANISM

1. Structure of steering system

This model is provided with a full hydrostatic power steering. This steering system consists of a hydraulic pump (1), steering cylinder (2), steering controller (3), etc.
In the full hydrostatic power steering, the steering controller (3) is connected to the steering cylinder (2) with only the hydraulic hoses. This steering is actuated by oil pressure. Accordingly, it does not have mechanical transmitting parts such as steering gear, pitman arm, drag link, etc. Therefore, it is simple in construction.

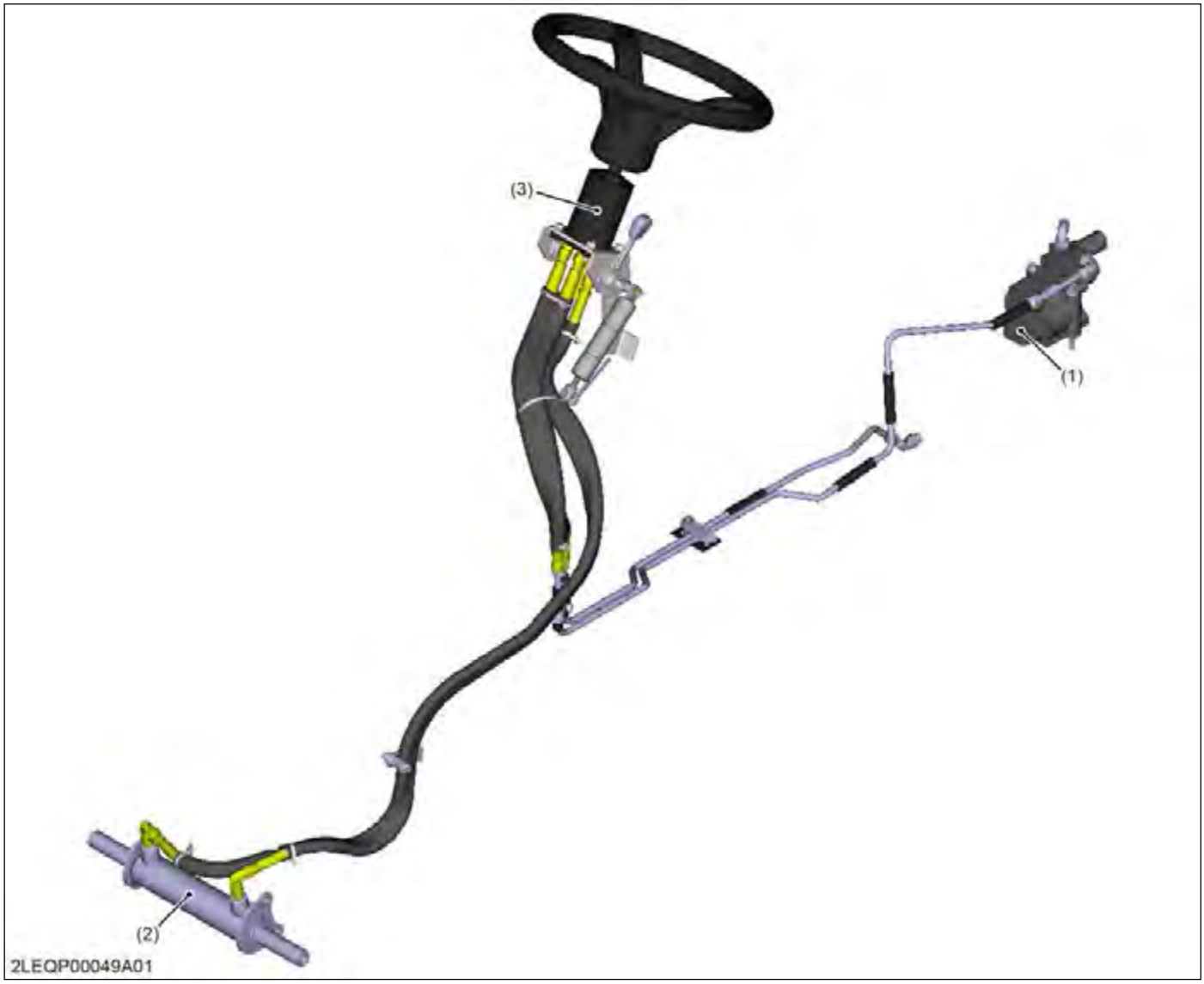

(1) Hydraulic pump (2) Steering cylinder (3) Steering controller

2. Hydraulic circuit of steering

The steering circuit consists of a steering controller (1), steering cylinder (2), flow priority valve (3), hydraulic control valve assembly (4), hydraulic pump (5), and oil strainer (6).
Oil is supplied from the oil strainer by the hydraulic pump to the flow priority valve.
The flow priority valve then divides the oil into two directions. The priority direction is to control the oil flow to the power steering at a fixed control rate. The secondary direction is excessive flow to the control valve of the implement lift circuit.
The oil that is supplied to the steering system gets transferred to the steering controller. When the steering wheel is turned, the steering controller then transfers oil to the steering cylinder.

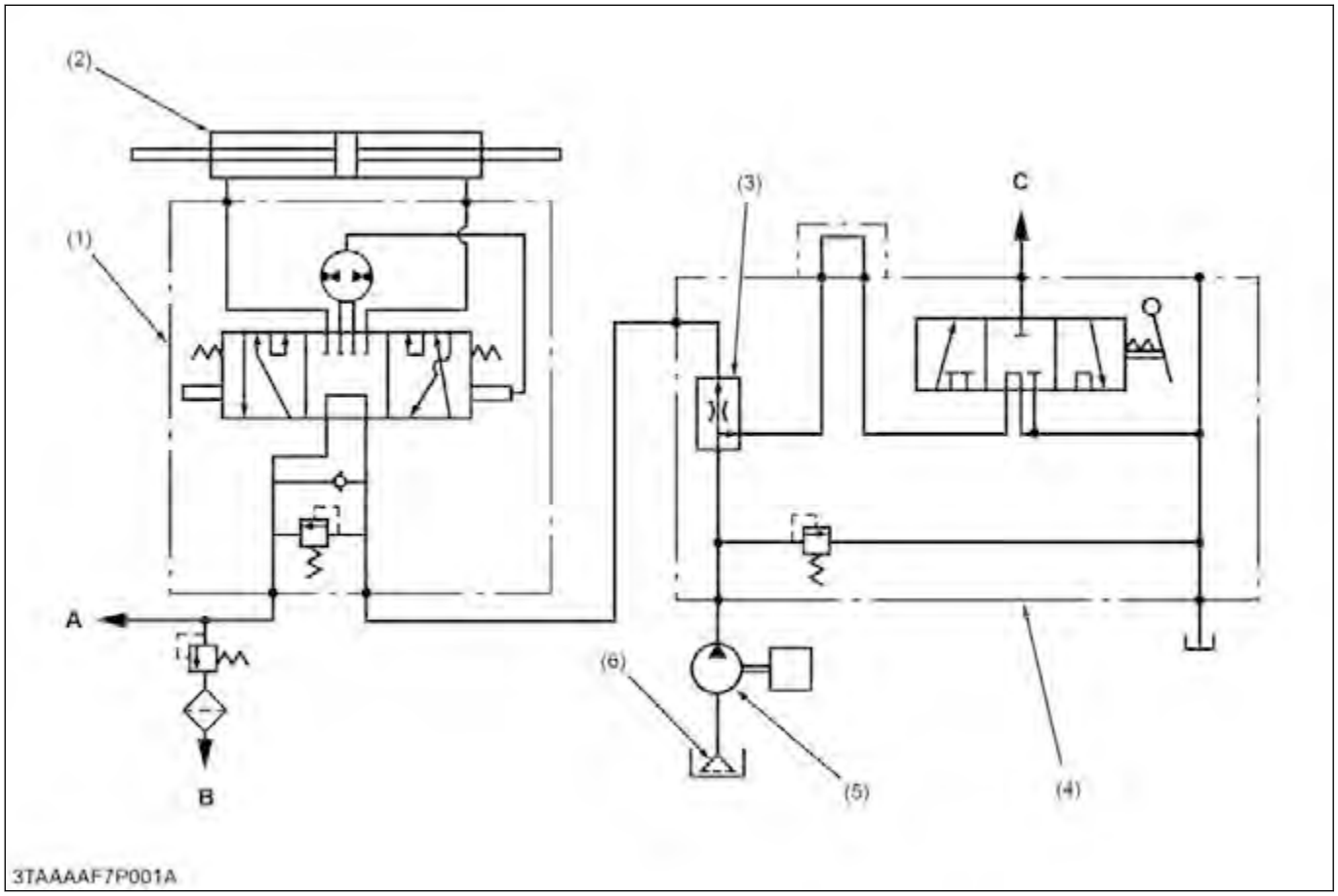

(1) Steering controller
(2) Steering cylinder
(3) Flow priority valve
(4) Hydraulic control valve assembly
(5) Hydraulic pump
(6) Oil strainer
A: To PTO clutch valve
B: To HST
C: To hydraulic cylinder

Oil flow rate	Flow priority valve	8.0 L/min. 2.1 U.S.gals/min. 1.8 Imp.gals/min.

https://truckmanualshub.com/

3. Steering controller

3.1 Structure of steering controller

The steering controller consists of a control valve (4), metering device (3), and relief valve (1).

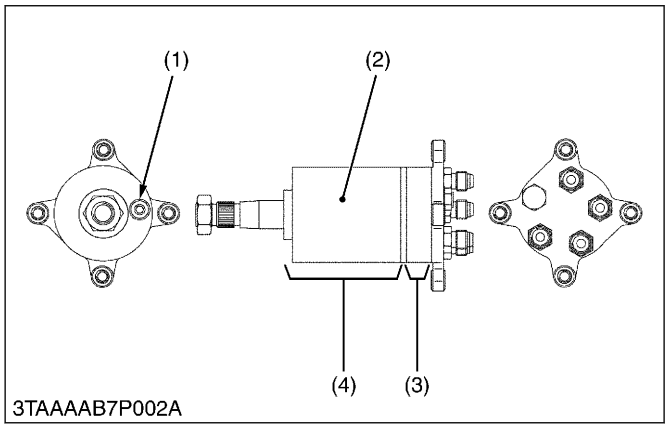

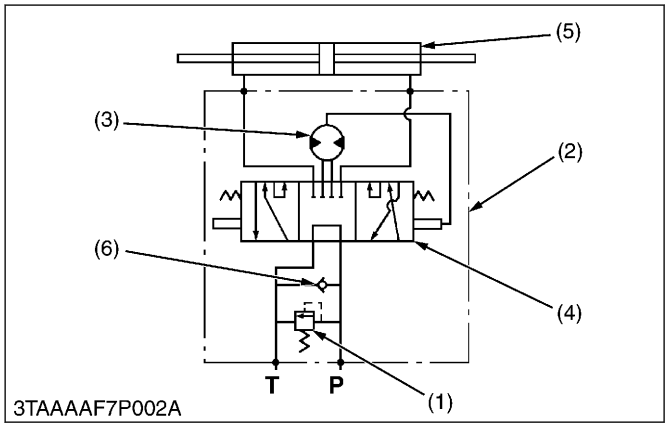

(1) Relief valve
(2) Steering controller
(3) Metering device
(4) Control valve
(5) Steering cylinder
(6) Check valve
P: P port (from flow priority valve)
T: T port (to PTO clutch valve and HST circuit)

3.1.1 Control valve

3.1.1.1 Structure of control valve

The control valve is a rotating spool type.
When the steering wheel is not turned, the position of the spool (7) and sleeve (9) is kept neutral by the centering spring (8). This causes the forming of a "neutral" oil circuit.
When the steering wheel is turned either clockwise or counterclockwise, the position of the spool and sleeve changes in relation to the centering spring. This allows the forming of a "right turning" or "left turning" oil circuit. At the same time, the gear pump (metering device) rotates with the spool and sends the oil to the cylinder corresponding to the rotation of the steering wheel.

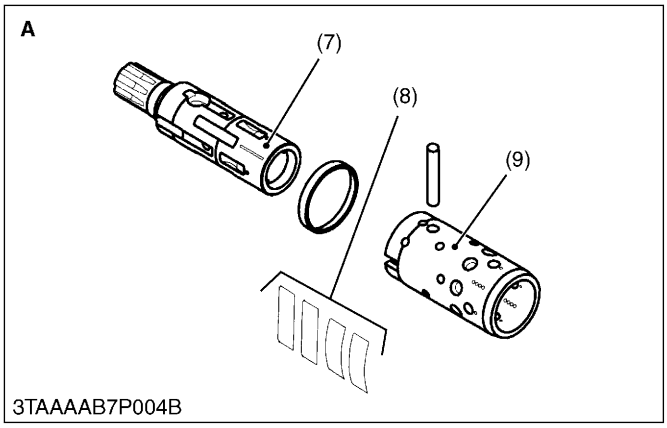

(7) Spool
(8) Centering spring
(9) Sleeve
A: Control valve

3.1.2 Metering device

3.1.2.1 Structure of metering device

Oil sent from the hydraulic pump to the steering cylinder, passes through the metering device.
Namely, when the rotor is driven, two chambers suck in oil due to volumetric change in the pump chambers formed between the rotor (12) and the stator (13), while oil is discharged from other two chambers. On the other hand, rotation of the steering wheel is directly transmitted to the rotor through the spool, drive shaft (10), etc.

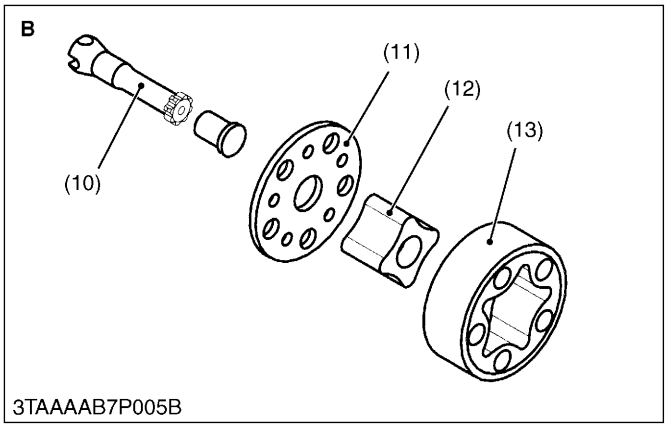

(10) Drive shaft
(11) Distributor plate
(12) Rotor
(13) Stator
B: Metering device

3.1.2.2 Function of metering device

The metering device serves to supply the steering cylinder with oil, amount of which corresponds to the rotation of the steering wheel. The wheels are thus turned by the angle corresponding to the rotation of the steering wheel.
When the engine stops or the hydraulic pump malfunctions, the metering device functions as a manual trochoid pump, which makes manual steering possible.

3.1.3 Relief valve

3.1.3.1 Function of relief valve

The relief valve is located in the steering controller.
It controls the maximum pressure of the power steering system.

3.1.3.2 Specification of relief valve

The setting pressure for the relief valve is as follows.

Relief valve	Operating pressure	8.33 to 8.83 MPa 85 to 90 kgf/cm^2 1209 to 1280 psi

https://truckmanualshub.com/

4. Steering cylinder

4.1 Structure of steering cylinder

The steering cylinder is single piston both rod double-acting type. This steering cylinder is installed parallel to the front axle and connected to tie-rods.
The tie-rods connected to both knuckle arm guarantees equal steering movement to both front wheels.
The steering cylinder provides force in both directions. Depending upon direction the steering wheel is turned pressure oil enters at one end of the cylinder to extend, or the other end to retract it, thereby turning front wheel of the tractor.

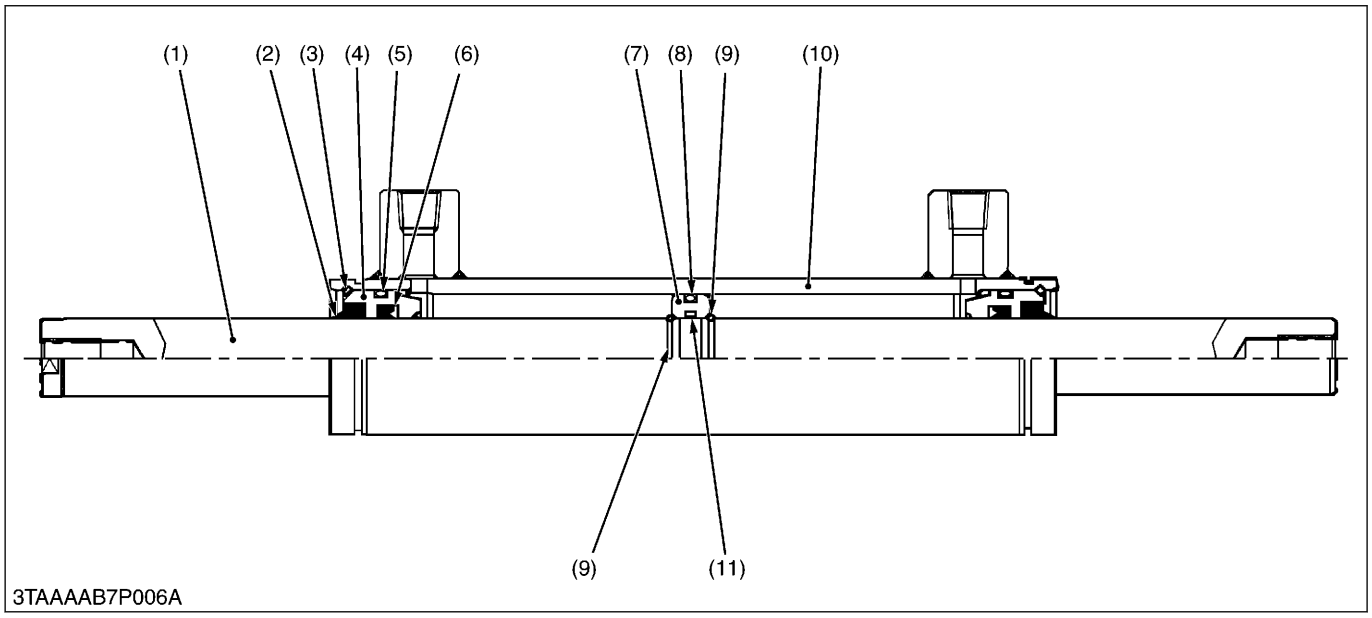

(1) Rod
(2) Wiper seal
(3) Internal snap ring
(4) Guide
(5) O-ring
(6) Seal ring
(7) Center piston
(8) Piston O-ring
(9) External snap ring
(10) Cylinder tube
(11) Rod O-ring

https://truckmanualshub.com/

SERVICING

1. Troubleshooting for steering

Symptom	Probable cause and checking procedure	Solution	Reference page
Cannot be steered	1. Steering controller malfunctioning	Replace	6-13
Hard steering	1. Power steering oil improper (Transmission fluid)	Change with specified oil	2-7
	2. Hydraulic pump malfunctioning	Replace	7-41
	3. Flow priority valve malfunctioning	Repair or replace	7-8
	4. Steering controller malfunctioning	Replace	6-13
Steering force fluctuates	1. Steering controller malfunctioning	Replace	6-13
	2. Flow priority valve malfunctioning	Repair or replace	7-8
	3. Air sucked in pump due to lack of oil	Fill	2-26
	4. Air sucked in pump from suction circuit	Repair	—
Steering wheel turns spontaneously when released	1. Steering controller malfunctioning	Replace	6-13
Front wheels wander to right or left	1. Steering controller malfunctioning	Replace	6-13
	2. Air sucked in pump due to lack of oil	Fill	2-26
	3. Air sucked in pump from suction circuit	Repair	—
	4. Insufficient bleeding	Bleed	—
	5. Cylinder malfunctioning	Repair or replace	6-12
	6. Improper toe-in adjustment	Adjust	5-8
	7. Tire pressure uneven	Inflate	2-53
Wheels are turned to a direction opposite to steering direction	1. Cylinder piping connected in reverse	Repair	6-13
Steering wheel turns idle in manual steering	1. Insufficient bleeding	Bleed	—
	2. Air sucked in due to lack of oil	Fill	2-26

(Continued)

Symptom	Probable cause and checking procedure	Solution	Reference page
Noise	1. Air sucked in pump due to lack of oil	Fill	2-26
	2. Air sucked in pump from suction circuit	Repair	—
	3. Pipe deformed	Replace	—
Oil temperature increases rapidly	1. Steering controller (relief valve) malfunctioning	Replace	6-13

https://truckmanualshub.com/

2. Servicing specifications for steering

Power steering body

Item		Factory specification	Allowable limit
Relief valve	Operating pressure	8.34 to 8.82 MPa 85.0 to 90.0 kgf/cm^2 1210 to 1280 psi	–

Steering cylinder

Item		Factory specification	Allowable limit
Steering cylinder	I.D.	40.000 to 40.062 mm 1.5748 to 1.5772 in.	40.100 mm 1.5787 in.
Piston rod to guide	Clearance	0.020 to 0.070 mm 0.00079 to 0.0027 in.	0.200 mm 0.00787 in.

3. Tightening torques for steering

Tightening torques of screws, bolts and nuts on the table below are especially specified.

Item	N·m	kgf·m	lbf·ft
Steering wheel mounting nut	20 to 25	2.0 to 2.6	15 to 18
Power steering hose	24 to 27	2.4 to 2.8	18 to 20
Power steering cylinder mounting screw	48 to 55	4.9 to 5.7	36 to 41
Tie-rod slotted nut	18 to 34	1.8 to 3.5	13 to 25
Tie-rod screw	74 to 84	7.5 to 8.6	55 to 62

RELATED PAGE

TIGHTENING TORQUES on page 2-13

4. Checking and adjusting

4.1 Checking relief valve operating pressure

NOTE

- **After setting a pressure gauge, be sure to bleed air.**
- **Note that the pressure value changes by the pump action of the power steering controller when the steering operation is continued after the steering wheel is lightly locked and accurate relief valve pressure cannot be measured.**

1. Disconnect the power steering hose L (or R) from steering controller, and set a pressure gauge and hose.

(Reference)

Hose and adapter size	9/16-18 UNF, 37° flare

2. Start the engine and set at maximum speed.
3. Fully turn the steering wheel to the left (or right) to check the feeling which the steering wheel lightly locks. Read the relief valve operating pressure when the steering wheel to the above-mentioned lock position by operation force.

Operation force (Steering wheel)	Approximate	9.8 N 1.0 kgf 2.2 lbf

Relief valve operating pressure	Factory specification	8.34 to 8.82 MPa 85.0 to 90.0 kgf/cm^2 1210 to 1280 psi

5. Disassembling and assembling

5.1 Power steering cylinder

5.1.1 Removing adapter and tie-rod

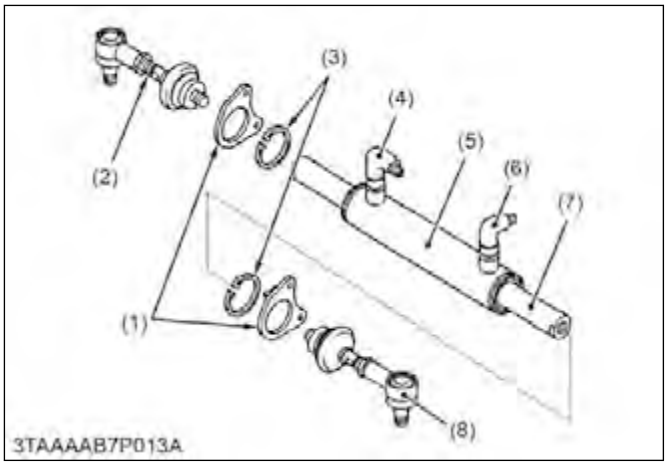

(1) Cylinder holder
(2) Tie-rod R.H.
(3) Internal snap ring
(4) Hose adapter R.H.
(5) Cylinder
(6) Hose adapter L.H.
(7) Piston rod
(8) Tie-rod L.H.

1. Remove the cylinder hose adapters (4), (6).
2. Remove the tie-rods (2), (8) from piston rod (7).
3. Remove the cylinder holder (1) and internal snap ring (3).

(When reassembling)

- Be sure to install the hose adapters (4), (6).

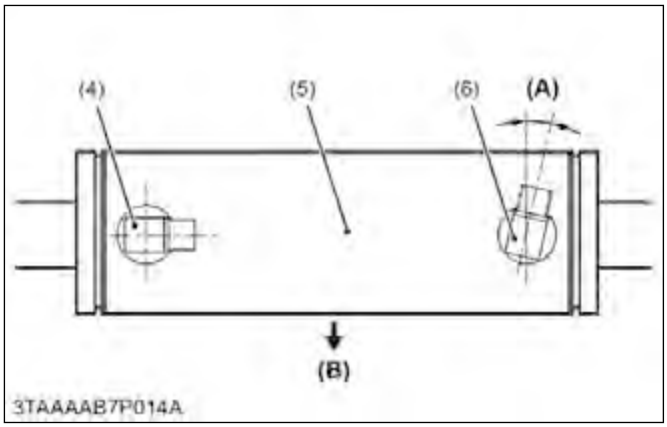

(4) Hose adapter R.H.
(5) Cylinder
(6) Hose adapter L.H.
(A) 0.26 rad (15°)
(B) Front

- After reassembling the tie-rod, be sure to adjust the toe-in.

Tightening torque	Tie-rod screw	74 to 84 N·m 7.5 to 8.6 kgf·m 55 to 62 lbf·ft

5.1.2 Disassembling steering cylinder

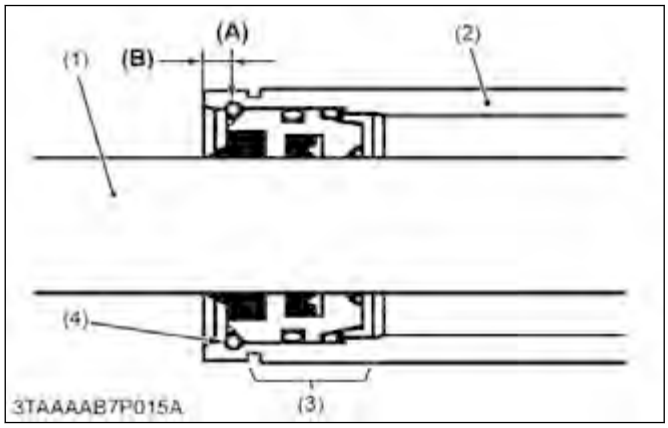

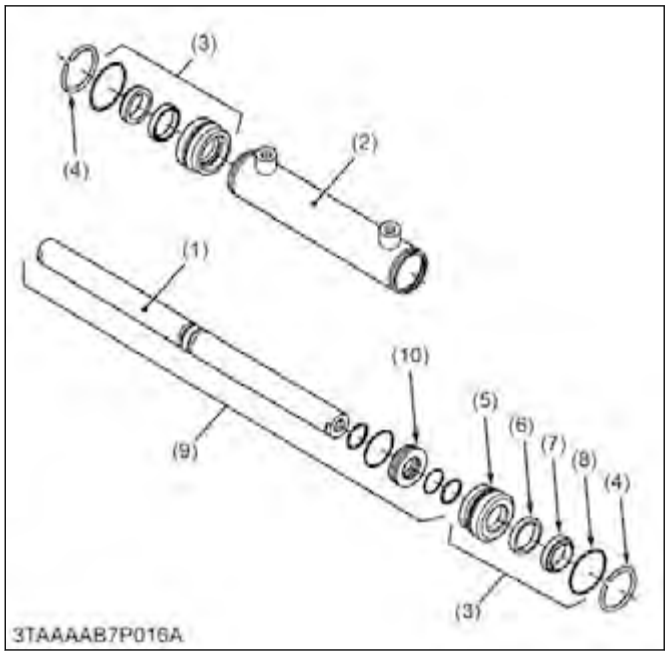

(1) Piston rod
(2) Cylinder tube
(3) Guide assembly
(4) Snap ring
(5) Guide
(6) Seal ring
(7) Wiper ring
(8) O-ring
(9) Piston rod assembly
(10) Center piston
(A) Drill a hole.
(B) 5.25 mm (0.207 in.)

1. Carefully clamp the cylinder in a vise.
2. Push one of the guide assembly (3) to inside of cylinder tube (2).
3. Drill a hole on the cylinder tube (2) just over the snap ring (4).

Hole	Factory specification	2.5 mm diameter 0.098 in. diameter

4. Take a little screwdriver and lift off the snap ring (4) from its groove. Simultaneousness support this action by pushing from the outside of the cylinder tube with another little screwdriver or another tool.
5. Push out the piston rod assembly (9) and take off the guide assembly (3).

(When reassembling)

NOTE
- **Seals must be exchanged after disassembling.**
- **Apply transmission fluid to the exchanged seals.**
- **Enter the piston rod and block the guide assemblies with the snap rings.**

5.2 Separating power steering controller

5.2.1 Removing battery

WARNING

To avoid serious injury or death:
- **When disconnecting the battery cables, disconnect the negative cable from the battery first.**
- **When connecting, connect the positive cable to the battery first.**

1. Remove the under panel (1).

(1) Under panel

2. Disconnect the negative cable (3) from the battery (2).
3. Disconnect the positive cable (4) from the battery (2) and remove the battery.

(2) Battery
(3) Negative cable
(4) Positive cable

5.2.2 Removing steering wheel

1. Remove the steering wheel cap (1).
2. Remove the steering wheel mounting nut and remove the steering wheel (2).

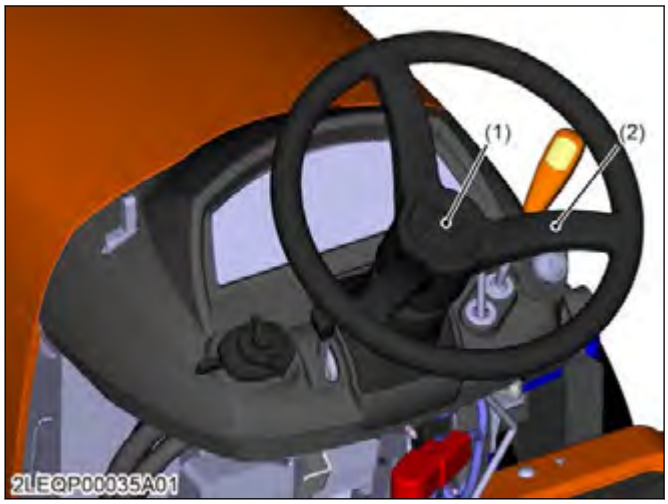

(1) Steering wheel cap (2) Steering wheel

(When reassembling)

Tightening torque	Steering wheel mounting nut	20 to 25 N·m 2.0 to 2.6 kgf·m 15 to 18 lbf·ft

5.2.3 Removing upper panel

1. Disconnect the main switch (2) and combination switch (5).
2. Remove the hand accelerator lever grip (1), cruise control lever knob (3), and tilt lever grip (4).

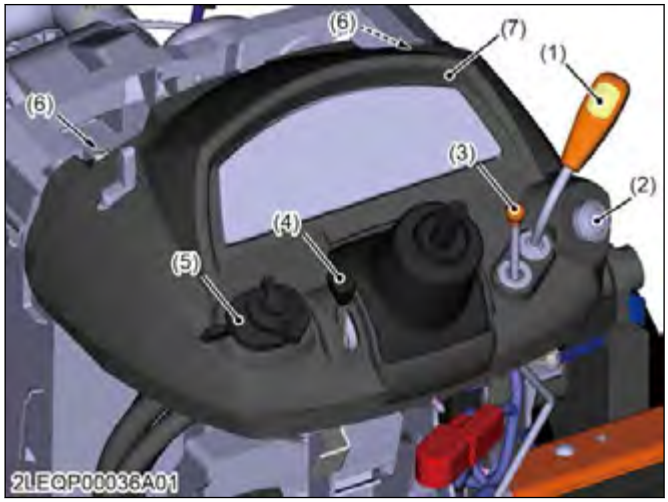

(1) Hand accelerator lever grip
(2) Main switch
(3) Cruise control lever knob
(4) Tilt lever grip
(5) Combination switch
(6) Bolt
(7) Upper panel

3. Open the bonnet, and remove the upper panel mounting bolts (6).
4. Remove the upper panel (7).

5.2.4 Removing steering controller

1. Disconnect the power steering hoses (3), (4), (5), (6) from the steering controller (1).

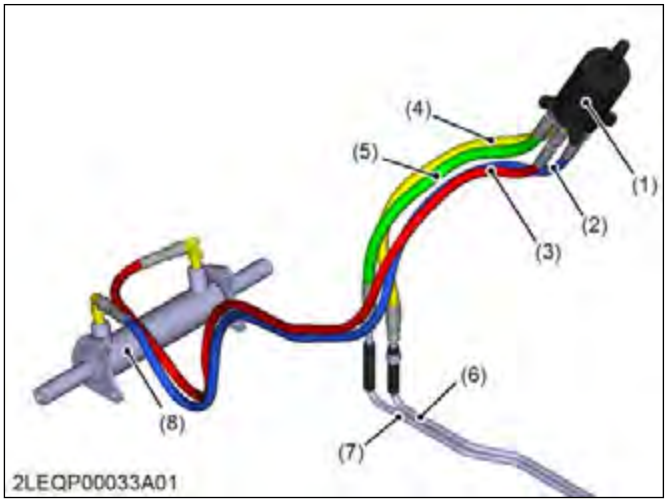

(1) Steering controller
(2) Cylinder hose L.H.
(3) Cylinder hose R.H.
(4) Return hose
(5) Delivery hose
(6) Return pipe
(7) Delivery pipe
(8) Steering cylinder

2. Remove the steering controller mounting screws (9) and remove the steering controller.

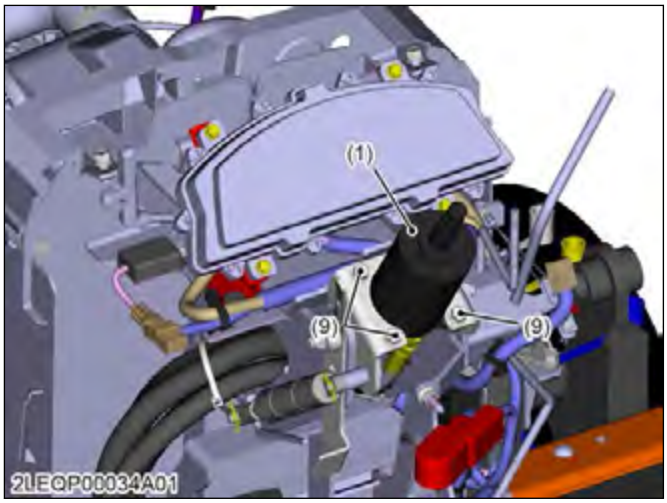

(1) Steering controller (9) Screw

(When reassembling)

- Be sure to connect the power steering hoses to their original position, and tighten them to the specified torque.

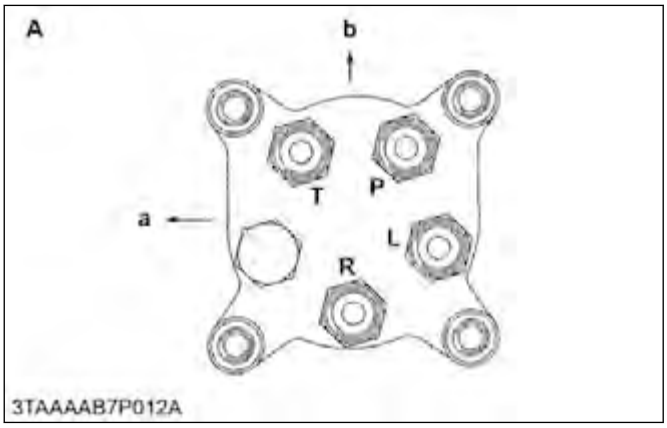

A: Bottom view
P: Pump port (Connect to delivery hose)
T: Tank port (Connect to return hose)
L: L port (Connect to cylinder L.H. hose)
R: R port (Connect to cylinder R.H. hose)
a: Right
b: Front

Tightening torque	Power steering hose	24 to 27 N·m 2.4 to 2.8 kgf·m 18 to 20 lbf·ft

5.3 Separating power steering cylinder

5.3.1 Removing bonnet

(1) Bonnet
(2) Bonnet bracket
(3) Front guard

1. Remove the front guard (3).
2. Open the bonnet.
3. Disconnect the headlight harness from the headlights and bonnet.
4. Disconnect the bonnet guide rod from the bonnet.
5. Disconnect the L.H. and R.H. bonnet brackets (2) from the frame.
6. Remove the bonnet (1).

5.3.2 Removing front axle assembly

1. Remove the power steering hose clamp (1).

(1) Hose clamp

2. Place the garage jack under the front axle.
3. Remove the cotter pin (3).
4. Remove the slotted nut (2) of center pin and separate the front axle from the frame.

(2) Slotted nut (Adjusting nut for front axle rocking force)
(3) Cotter pin

5. Disconnect the power steering hoses (4).

(4) Power steering hose

(When reassembling)

- After mounting the front axle assembly to the frame, be sure to adjust the front axle rocking force.
- Installing the cotter pin, be sure to split the cotter pin like an anchor.

https://truckmanualshub.com/

Tightening torque	Power steering hose	24 to 27 N·m 2.4 to 2.8 kgf·m 18 to 20 lbf·ft

5.3.3 Removing power steering cylinder

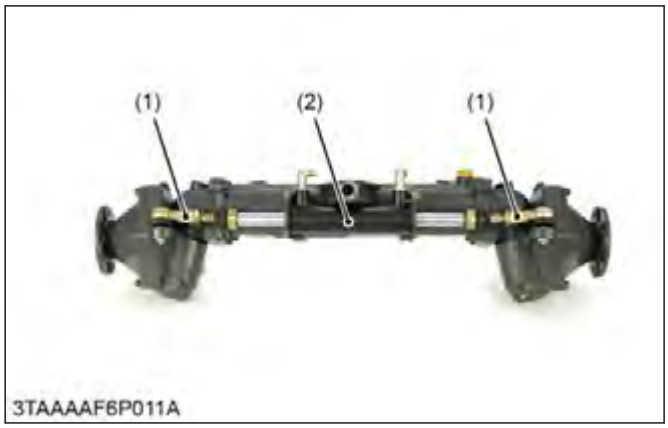

(1) Tie-rod (2) Power steering cylinder

1. Remove the cotter pin and remove the slotted nut for tie-rod (1).
2. Remove the power steering cylinder mounting screws and remove the power steering cylinder (2) with tie-rod.

(When reassembling)

NOTE

- **Tighten the slotted nut. If the slot and pin hole do not meet, tighten the nut until they do meet, and install the cotter pin.**
- **Be sure to split the cotter pin like an anchor.**

Tightening torque	Tie-rod slotted nut	18 to 34 N·m 1.8 to 3.5 kgf·m 13 to 25 lbf·ft
	Power steering cylinder mounting screw	48 to 55 N·m 4.9 to 5.7 kgf·m 36 to 41 lbf·ft

6. Servicing

6.1 Checking steering cylinder I.D.

1. Measure the steering cylinder I.D. with a cylinder gauge.

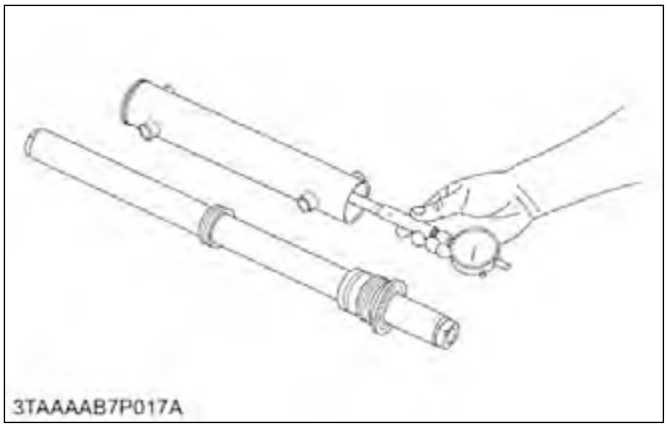

2. If the cylinder I.D. exceeds the allowable limit, replace the cylinder barrel.

Steering cylinder I.D.	Factory specification	40.000 to 40.062 mm 1.5748 to 1.5772 in.
	Allowable limit	40.100 mm 1.5787 in.

6.2 Checking clearance between rod and guide

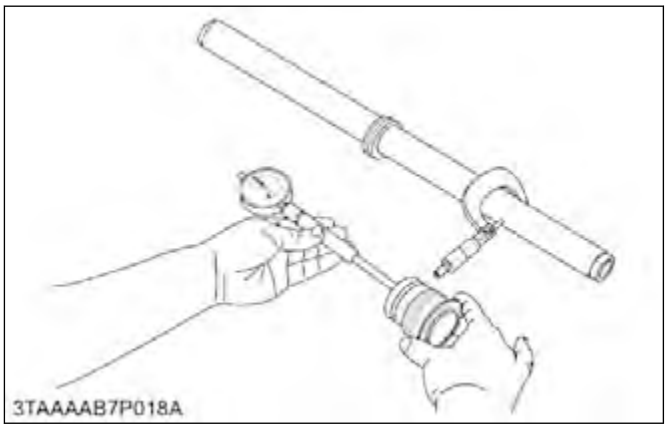

1. Measure the rod guide I.D. with a cylinder gauge.
2. Measure the rod O.D. with an outside micrometer, and calculate the clearance.
3. If the clearance exceeds the allowable limit, replace as a unit.

Clearance between rod and guide	Factory specification	0.020 to 0.070 mm 0.00079 to 0.0027 in.
	Allowable limit	0.200 mm 0.00787 in.

https://truckmanualshub.com/

7. HYDRAULIC SYSTEM

https://truckmanualshub.com/

MECHANISM

1. Structure of hydraulic system

The hydraulic system of this tractor consists of hydrostatic transmission, hydraulic pump, 3 point hitch and power steering.

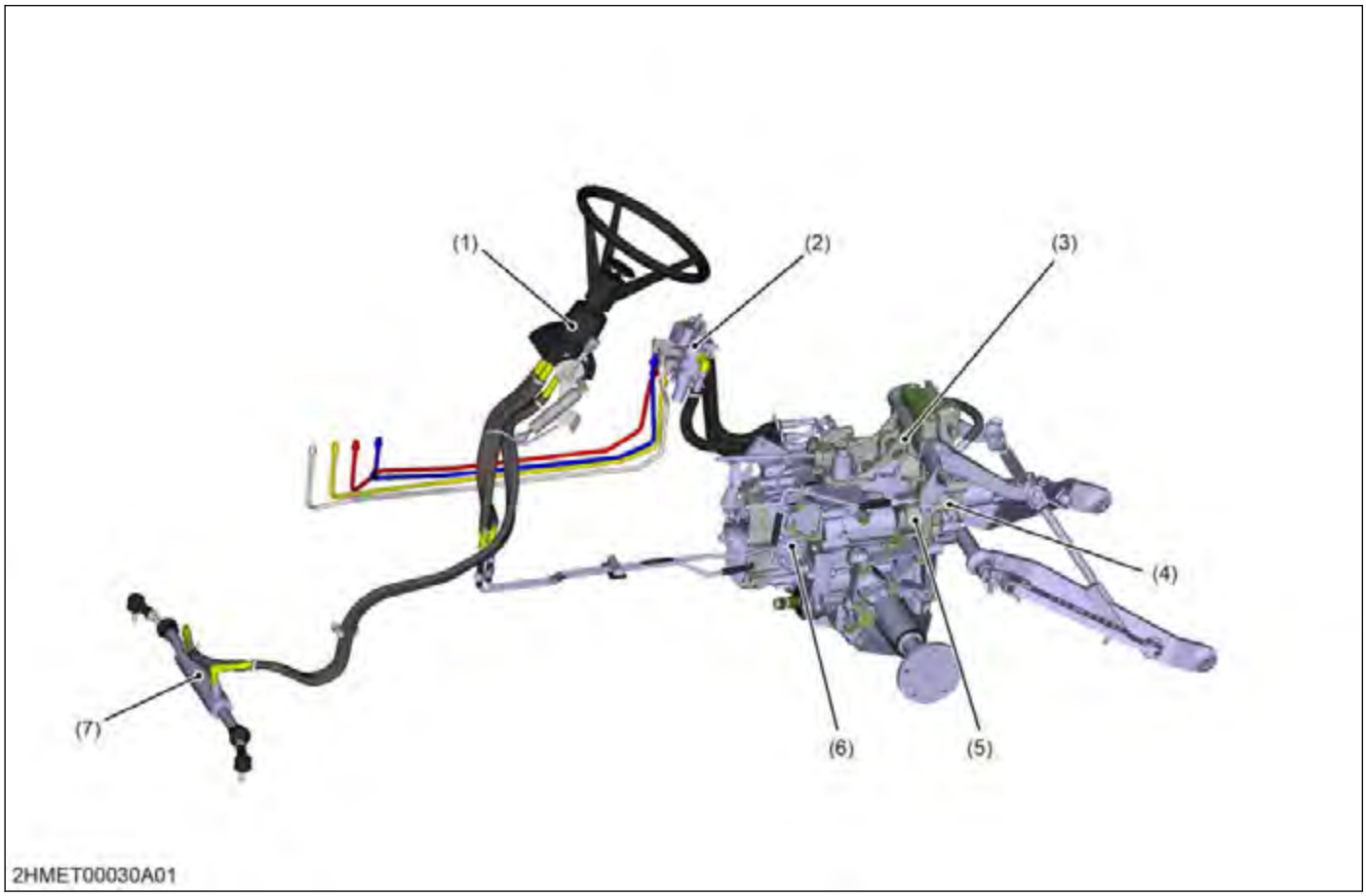

(1) Power steering controller
(2) Front loader control valve
(3) Hydraulic block
(4) Flow priority valve
(5) Hydraulic pump
(6) Hydrostatic transmission (HST)
(7) Steering cylinder

2. Hydraulic circuit

The hydraulic system of this tractor consists of a hydraulic pump, control valve for front loader, 3 point hitch system and other components.

This system has the following functions:

1. Oil is supplied by hydraulic pump which is driven by pump drive shaft in the transmission case. As the pump drive shaft is connected to the propeller shaft, hydraulic pump starts running when engine is started.
2. The hydraulic pump supplies the high pressured oil to auxiliary hydraulic control valve for front loader, control valve for 3 point hitch system, power steering controller, PTO clutch valve and hydrostatic transmission after dividing oil flow by flow priority valve.

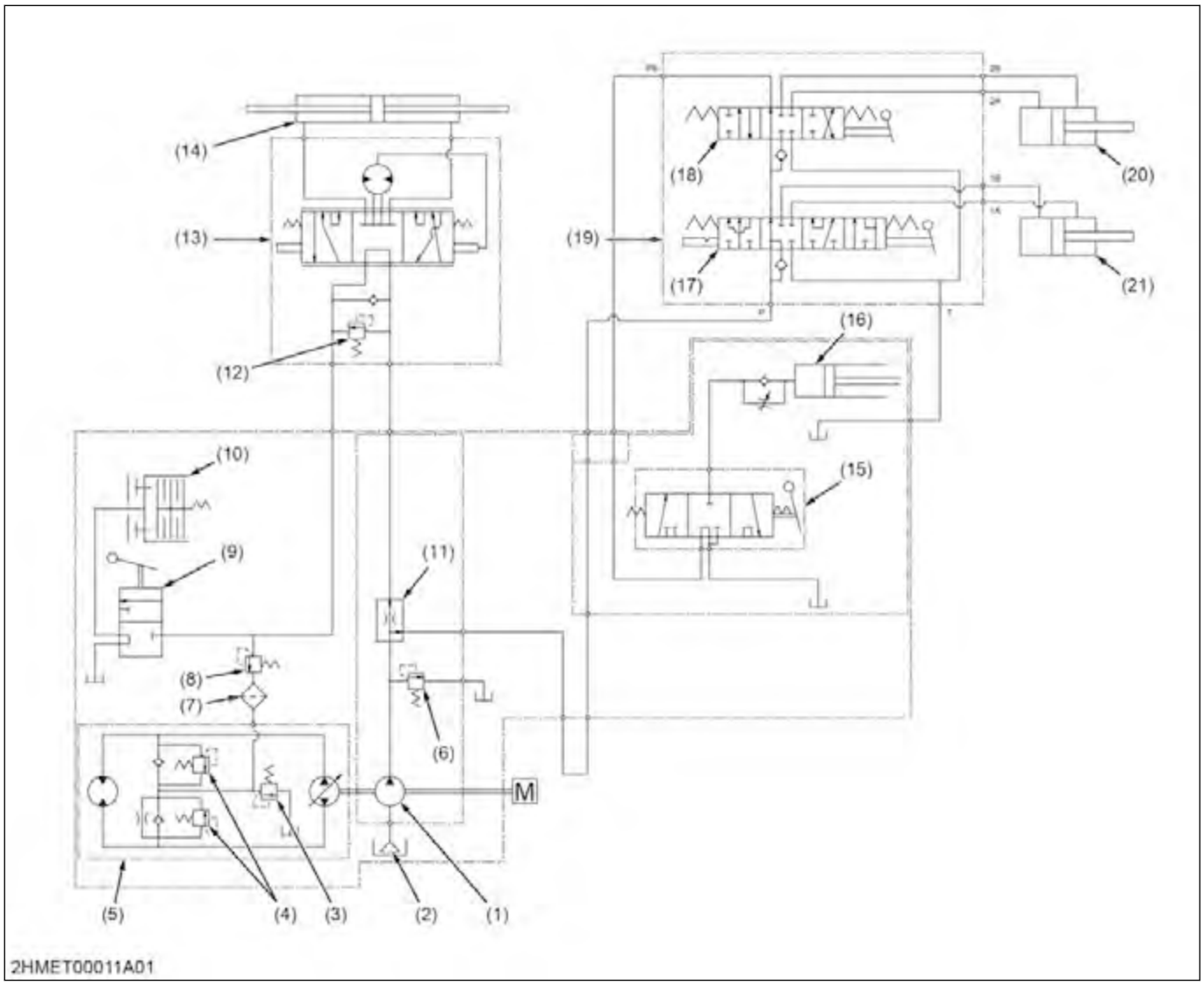

(1) Hydraulic pump
(2) Hydraulic oil filter
(3) Charge relief valve
(4) Check and high pressure relief valve
(5) Hydrostatic transmission
(6) Relief valve
(7) Hydraulic oil filter
(8) PTO clutch relief valve
(9) PTO clutch relief valve
(10) PTO clutch
(11) Flow priority valve
(12) Power steering relief valve
(13) Power steering controller
(14) Steering cylinder
(15) Control valve
(16) Hydraulic cylinder
(17) Boom control valve
(18) Bucket control valve
(19) Front loader control valve
(20) Bucket cylinder
(21) Boom cylinder

https://truckmanualshub.com/

Operating pressure and oil flow

(1)	(Factory specification) 23.5 L/min. (6.2 U.S.gals/min., 5.2 Imp.gals/min.)
(3)	0.55 to 0.75 MPa (5.6 to 7.7 kgf/cm^2, 80 to 100 psi)
(4)	20.1 to 21.1 MPa (205 to 215 kgf/cm^2, 2920 to 3060 psi)
(8)	1.0 to 1.3 MPa (11 to 13 kgf/cm^2, 150 to 180 psi)
(12)	8.34 to 8.82 MPa (85.0 to 90.0 kgf/cm^2, 1210 to 1280 psi)

3. Hydraulic pump

3.1 Outline of hydraulic pump

This hydraulic pump is located on left side of transmission.
Hydraulic pump is driven by the pump drive shaft in the transmission case.

3.2 Structure of hydraulic pump

The hydraulic pump consists of the casing (1), cover (4), side plate (3), and two spur gears (drive gear (5) and driven gear (2)) that are in mesh.

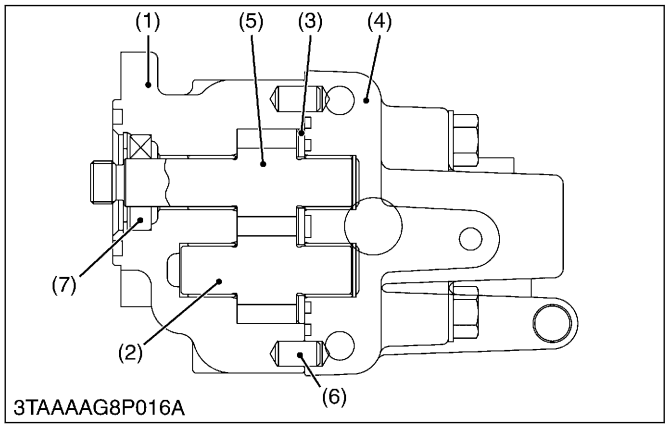

(1) Casing
(2) Driven gear
(3) Side plate
(4) Cover
(5) Drive gear
(6) Pin
(7) Oil seal

3.3 Specification of hydraulic pump

Maximum displacement of hydraulic pump is as follows.

Displacement	Engine speed	Condition
23.5 L/min. 6.2 U.S.gals/min. 5.2 Imp.gals/min.	At 3200 min^{-1} (rpm)	At no load

4. Control valve

4.1 Outline of control valve

This position control valve is located under the hydraulic cylinder.
This control valve is mechanically connected to the position control lever.
Since the feedback rod is not equipped to the lift arm, the neutral position adjustment is adjusted by controlling the position control lever.
The control valve controls the oil flow forced from the hydraulic pump and the oil returned back from the hydraulic cylinder.

https://truckmanualshub.com/

4.2 Function of control valve

4.2.1 Control valve in neutral position

When you stop the position control lever, the spool is stopped.
The spool closes the oil flow from passage between P port and C port.
Since the oil in the hydraulic cylinder is not drained to T2 port, neutral position is kept.

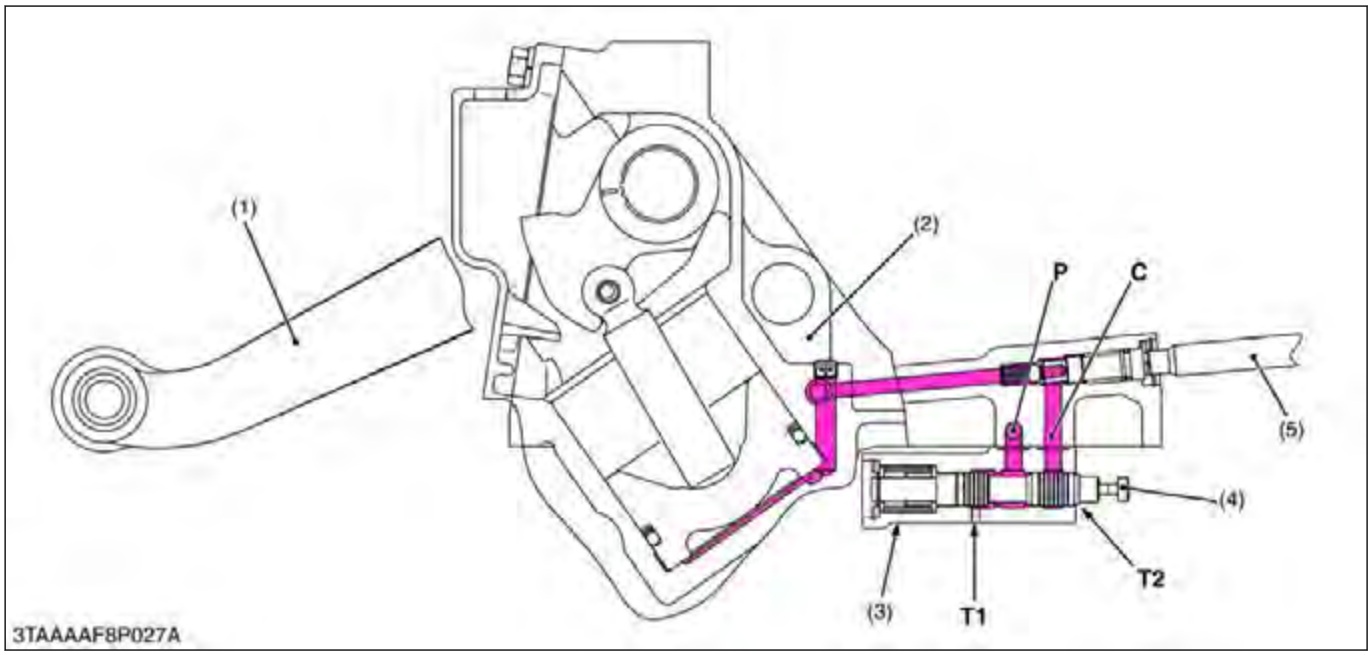

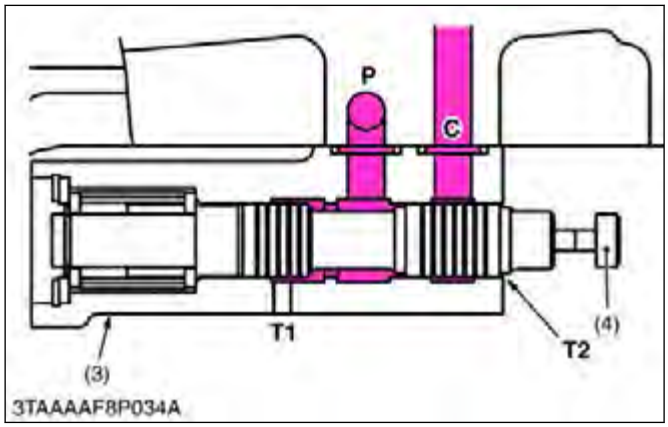

(1) Lift arm
(2) Hydraulic cylinder
(3) Control valve body
(4) Spool
(5) Lowering adjusting shaft
P: Pump port
C: Cylinder port
T1: Tank port
T2: Tank port

4.2.2 Control valve in lift position

When the control lever is set to the lift position, the spool (4) moves to the right.
The oil forced into the control valve flows through P port to C port and the hydraulic cylinder.
The oil pushes the hydraulic piston in the hydraulic cylinder to lift the implement.
Since the spool shape is step down structure, oil passes slowly through the gap between the control valve body (3) and the spool (4) to C port.
In this tractor, when you set the control lever to the slow up, implement lifts up with ease in increments of approximately 1/4 inches at lower link end.

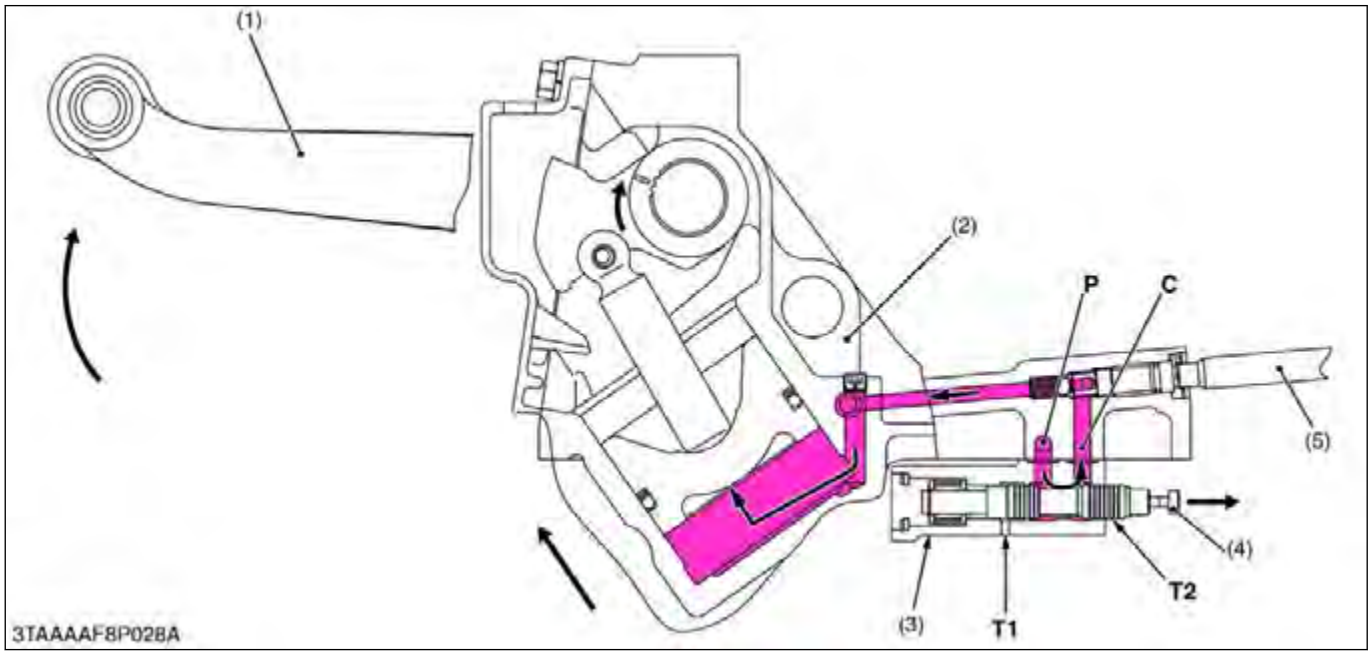

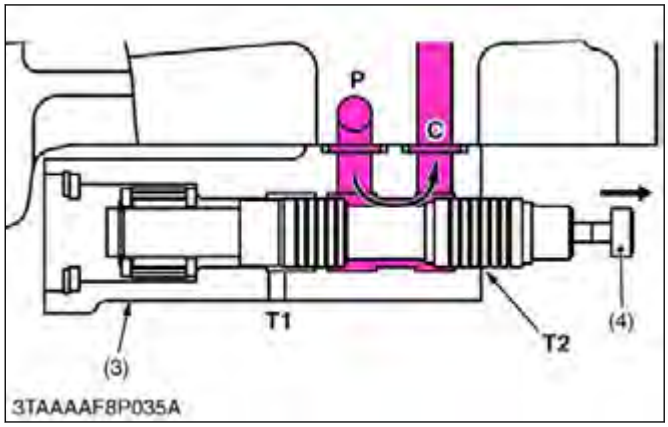

(1) Lift arm
(2) Hydraulic cylinder
(3) Control valve body
(4) Spool
(5) Lowering adjusting shaft
P: Pump port
C: Cylinder port
T1: Tank port
T2: Tank port

https://truckmanualshub.com/

4.2.3 Control valve in down position

When the control lever is set to the down position, the spool (4) moves to the left.
The oil forced from the P port flows through the gap between the control valve body and the spool to the T1 port.
The oil in the hydraulic cylinder flows through the gap between the control valve body (3) and the spool (4) to the T2 port.
Since the oil in the hydraulic cylinder drains to the transmission case, the implement lowers.
Since the spool shape is step down structure, oil pass slowly from C port through the gap between the control valve body (3) and the spool (4) to T2 port.
In this tractor, when you set the control lever to the slow down position, implement lowers down with ease in increments of approximately 1/4 inches at lower link end.

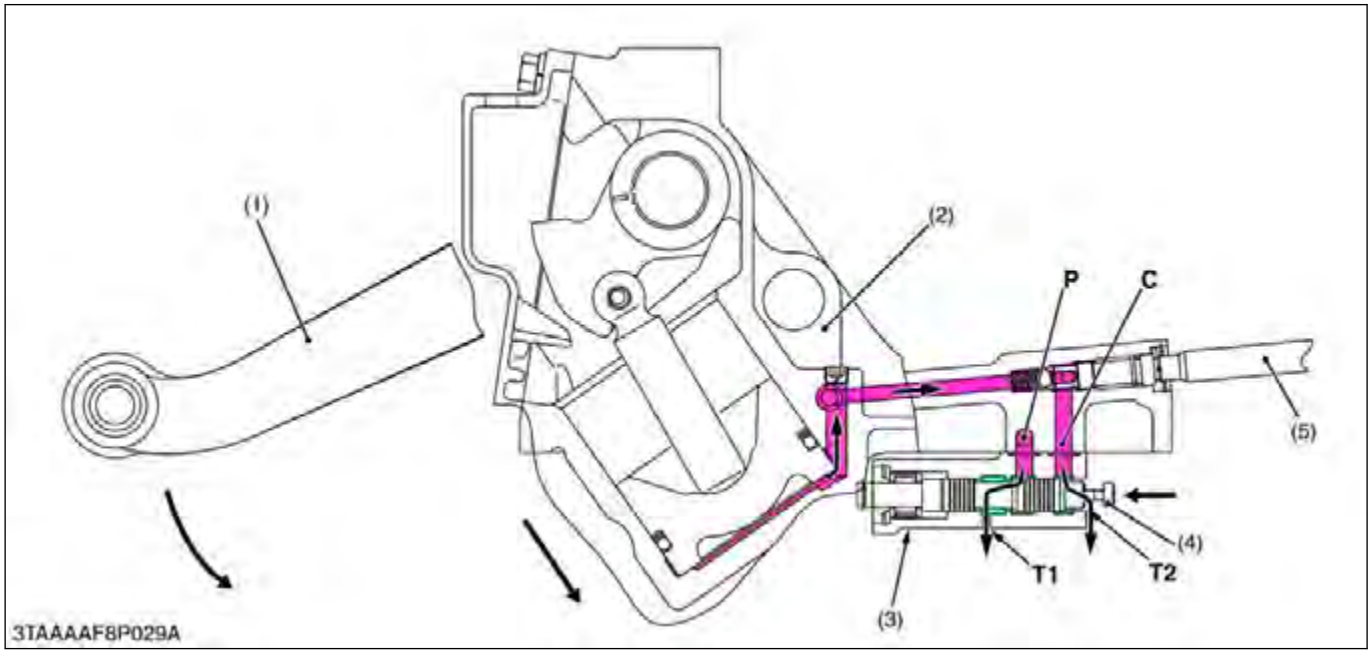

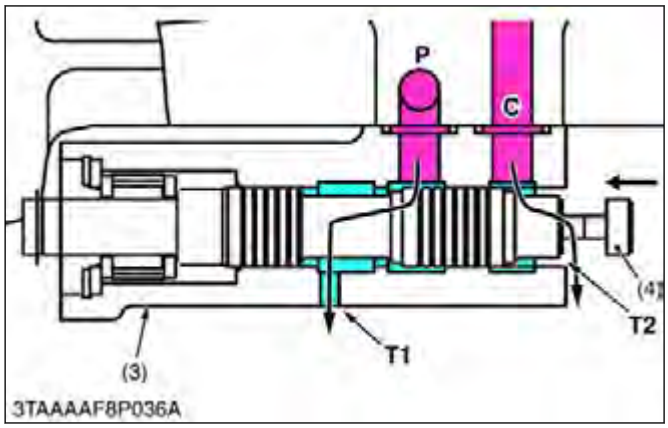

(1) Lift arm
(2) Hydraulic cylinder
(3) Control valve body
(4) Spool
(5) Lowering adjusting shaft
P: Pump port
C: Cylinder port
T1: Tank port
T2: Tank port

5. Flow priority valve

5.1 Outline of flow priority valve

This flow priority valve is located to the left side of the transmission.
The flow priority valve is a flow divider that divides a single hydraulic source (hydraulic pump) into two circuits and actuates them simultaneously.

https://truckmanualshub.com/

5.2 Structure of flow priority valve

The structure of the flow priority valve is as follows.

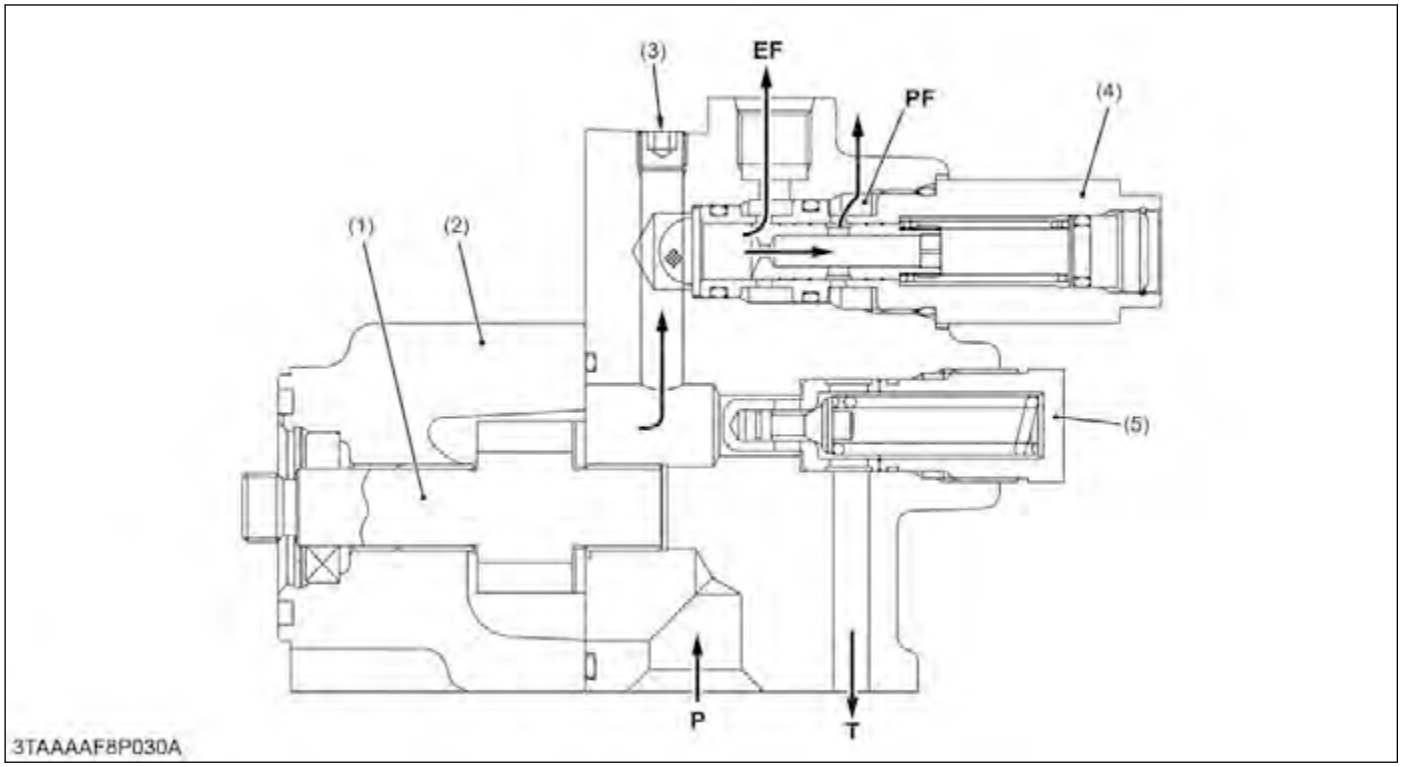

(1) Hydraulic pump gear
(2) Hydraulic pump case
(3) Plug
(4) Flow priority valve
(5) Relief valve
EF: EF port (to 3 point hitch control circuit)
PF: PF port (to power steering, PTO clutch and HST circuit)
P: Pump port (Suction)
T: Tank port

5.3 Specification of flow priority valve

The oil flow of the priority valve is as follows.

Power steering oil flow	Engine speed	Condition
Above 8.0 L/min. 2.1 U.S.gals/min. 1.8 Imp.gals/min.	At 1500 min^{-1} (rpm)	At no load

6. Relief valve

6.1 Outline of relief valve

This relief valve is located on the left side of transmission.
The implement control system circuit has a relief valve to restrict the maximum pressure in the circuit.
The relief valve is a guide piston type with damping effect.

https://truckmanualshub.com/

6.2 Structure of relief valve

Among direct acting relief valves, this type is suited to higher pressure and has large capacity. Furthermore, this type is free from unstable operation, such as chattering, which occurs often in direct acting relief valves.
As shown in the figure, the guide is attached to the poppet (7) and a valve chamber D.C. (called the damping chamber) is formed at the top of the guide piston. The inlet of the valve leads to the chamber via a clearance between the sliding portion of the guide and the seat (6), minimizing valve vibration with the damping effect of the chamber.

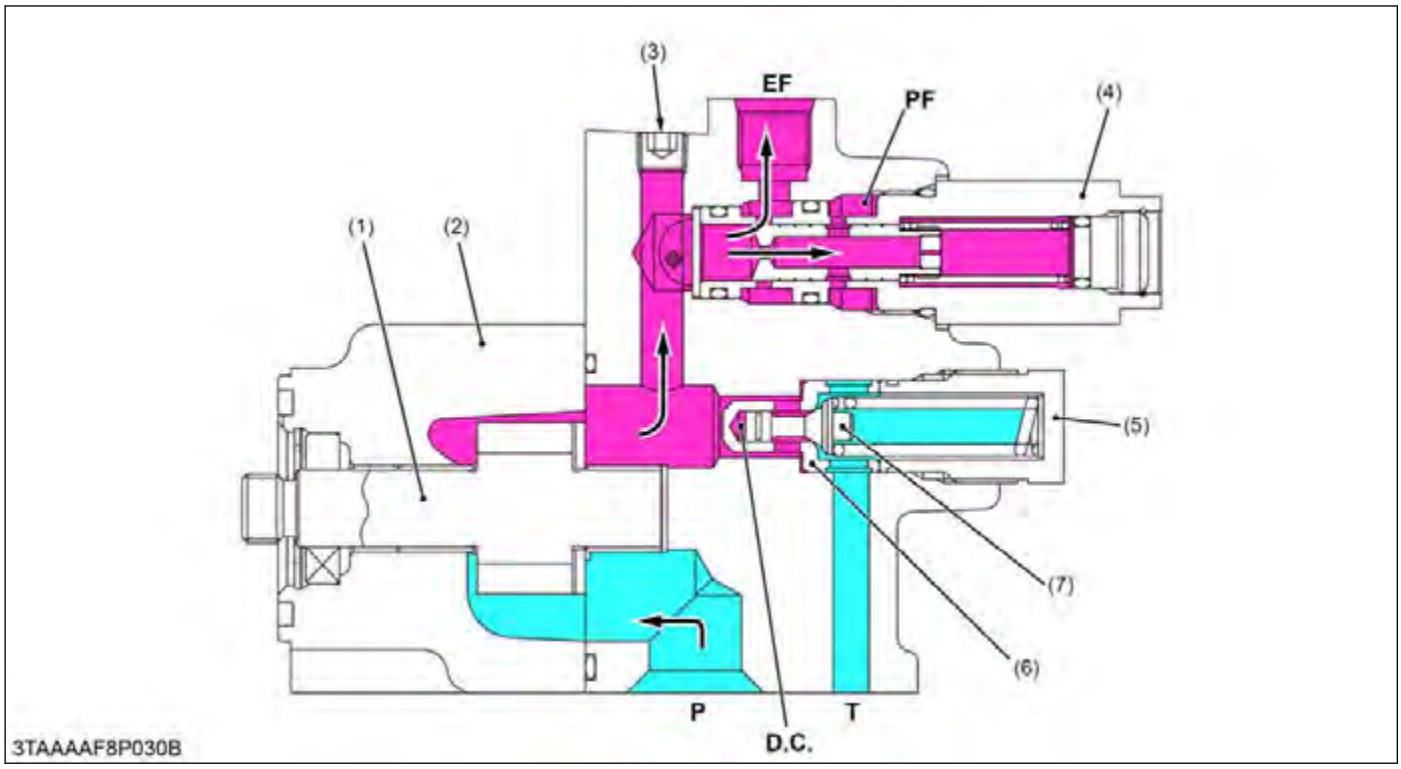

(1) Hydraulic pump gear
(2) Hydraulic pump case
(3) Plug
(4) Flow priority valve
(5) Relief valve
(6) Seat
(7) Poppet

EF: EF port (to 3 point hitch control circuit)
PF: PF port (to power steering, PTO clutch and HST circuit)
DC: Damping chamber
P: Pump port (Suction)
T: Tank port

6.3 Function of relief valve

When the oil pressure in the circuit is lower than the setting pressure of the relief valve, the relief valve is not operated and the oil fed to the relief valve from the hydraulic pump flows into the implement control valve.
As the oil pressure in the circuit increases, so does the pressure in the damping chamber D.C. When the pressure rises above the valve setting and overcomes the spring force, the valve opens. Oil then flows out to the transmission case through T port, preventing any further rise in pressure. The valve closes again when enough oil is released to drop pressure below the valve setting.

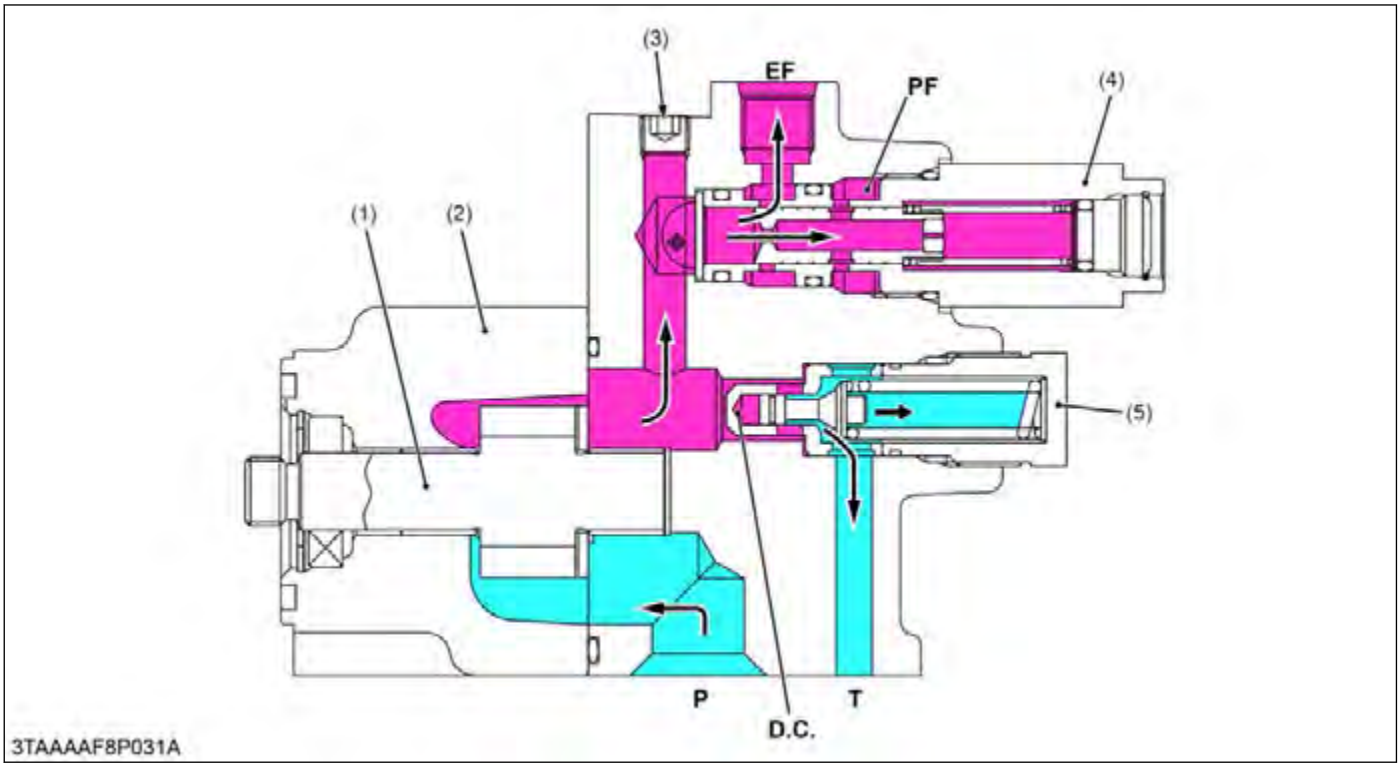

(1) Hydraulic pump gear
(2) Hydraulic pump case
(3) Plug
(4) Flow priority valve
(5) Relief valve

EF: EF port (to 3 point hitch control circuit)
PF: PF port (to power steering, PTO clutch and HST circuit)

DC: Damping chamber
P: Pump port (Suction)
T: Tank port

https://truckmanualshub.com/

6.4 Specification of relief valve

The setting pressure of the relief valve is as follows.

Relief valve setting pressure	Engine speed	Oil temperature
12.3 to 12.7 MPa 125 to 130 kgf/cm^2 1780 to 1840 psi	Maximum	40 to 50 ℃ 104 to 122 ℉

7. Hydraulic cylinder

7.1 Structure of hydraulic cylinder

While the lift arm (1) is rising, oil from the hydraulic pump flows into the hydraulic cylinder through the hydraulic control valve (12) and cylinder port C. Then oil pushes out the piston (5).
While the lift arm (1) is lowering, oil in the hydraulic cylinder is discharged to the transmission case through the hydraulic control valve by the weight of the implement. At this time, the lowering speed of the implement can be controlled by the ball (7) attached to the hydraulic cylinder (11). Turning the lowering speed adjusting knob clockwise decreases the lowering speed, and counterclockwise increases lowering speed. When the lowering speed adjusting valve is completely closed, the lift arm (1) is held at its position since oil in the hydraulic cylinder is sealed between the piston (5) and ball (7).

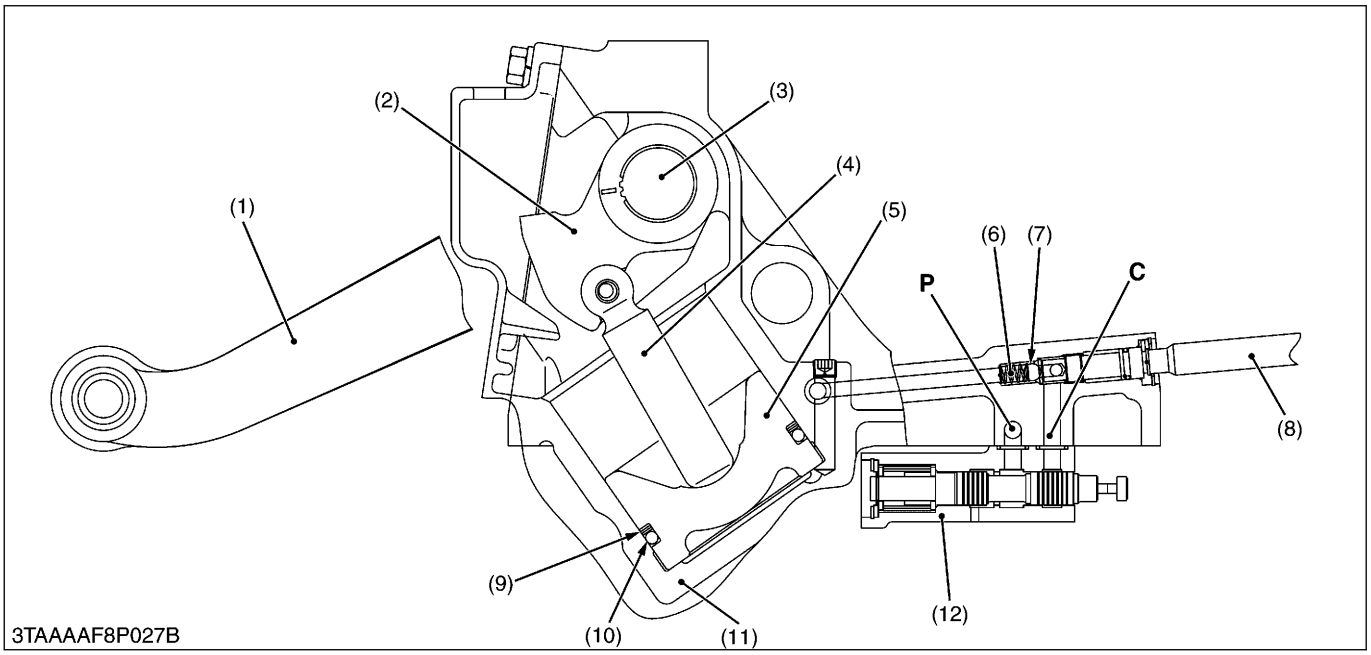

(1) Lift arm
(2) Hydraulic arm
(3) Hydraulic arm shaft
(4) Hydraulic rod
(5) Piston
(6) Spring
(7) Ball
(8) Lowering speed adjusting shaft
(9) Back-up ring
(10) O-ring
(11) Hydraulic cylinder
(12) Control valve
P: Pump port
C: Cylinder port

https://truckmanualshub.com/

8. Hydraulic block type outlet

8.1 Structure of hydraulic block type outlet

NOTE

- **This hydraulic block type outlet uses for front loader hydraulic system on standard specification.**

The hydraulic block type outlet is located on the hydraulic cylinder assembly.
This hydraulic block type outlet is provided to take power out from the tractor to operate the hydraulic cylinders on the implement, such as front end loader, front snow blade and so on.

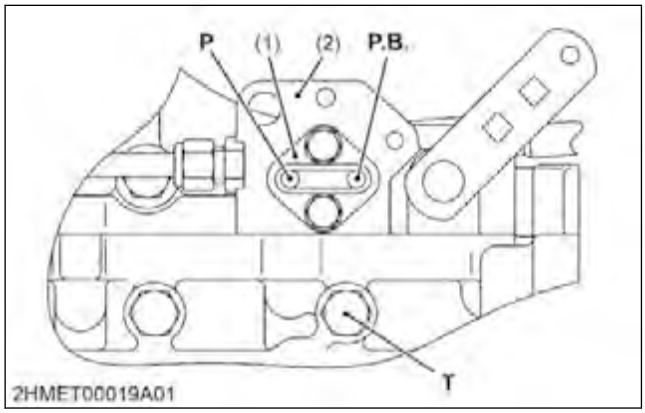

(1) Block cover
(2) Hydraulic cylinder
P: P port (Pump)
P.B.: P.B. port (Power beyond)
T: T port (Tank)

9. Mower linkage

9.1 Structure of mower linkage

The mower rear link (1) and the lift arm (5) are linked with the mower lift arm (2), the lift upper boss and the lift lower boss.
As the hydraulic control lever moves to lift position, lift arm (5) is raised and the lift bracket (4) is pulled to pull the lift links to the rearward. As a result, mower rear link (1) is lifted.
The cutting height adjusting dial (3) adjusts cutting height of mower by rotating the adjusting cam (7). The position of mower rear link (1) is adjusted by changing the length of the adjusting bolt (6).

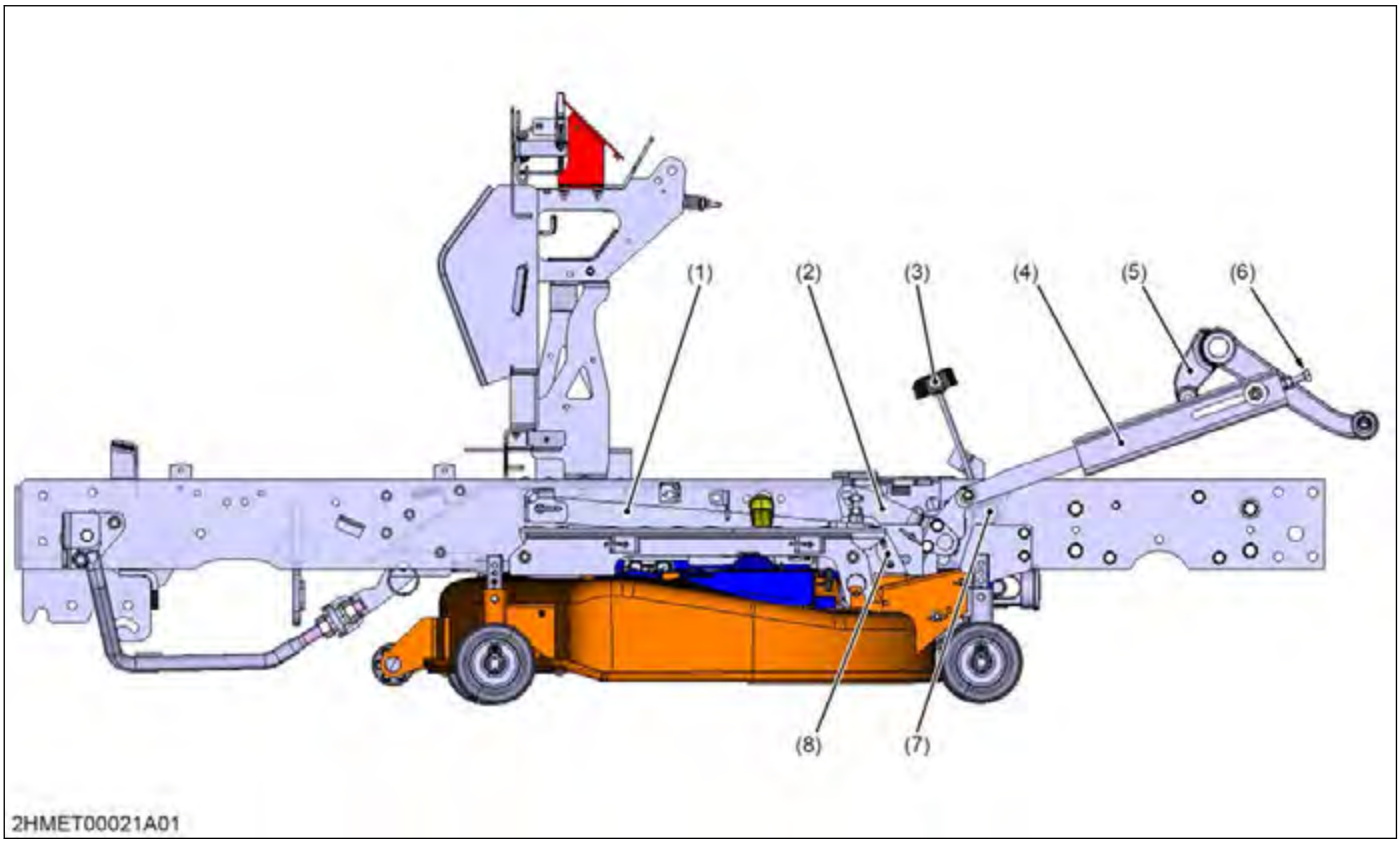

(1) Mower rear link
(2) Mower lift arm
(3) Cutting height adjusting dial
(4) Lift bracket
(5) Lift arm
(6) Adjusting bolt
(7) Cam
(8) Lift pin

https://truckmanualshub.com/

10. Front loader valve

10.1 Structure

10.1.1 Structure of front loader valve and pipe

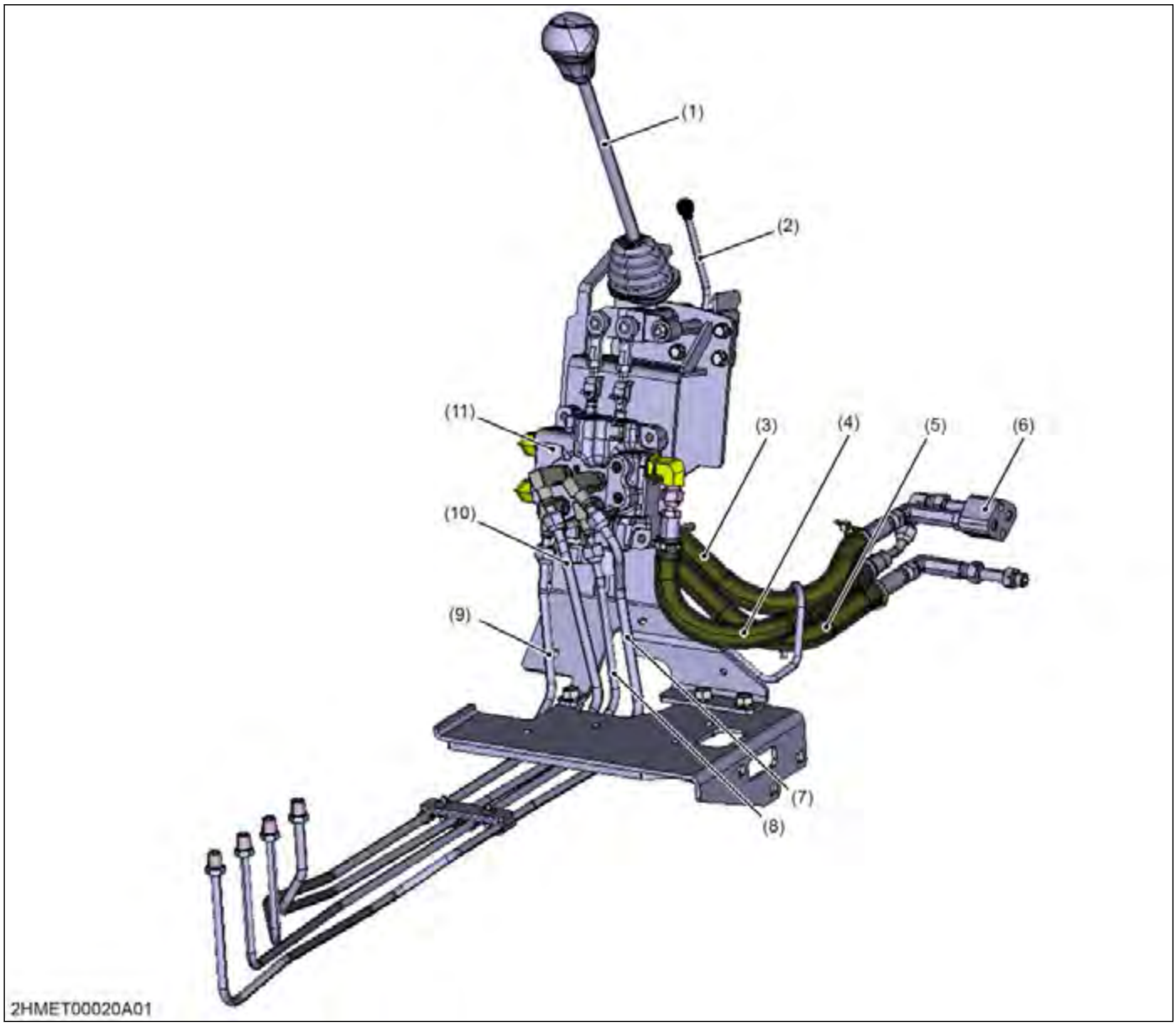

(1) Control lever
(2) Lock lever
(3) Pipe (Power beyond)
(4) Pipe (Pressure)
(5) Pipe (Return)
(6) Hydraulic outlet (Block type)
(7) Pipe (1A) for boom cylinder
(8) Pipe (1B) for boom cylinder
(9) Pipe (2B) for bucket cylinder
(10) Pipe (2A) for bucket cylinder
(11) Front loader control valve

10.1.2 Structure of front loader control valve

The control valve assembly consists of one casting block and four major sections.

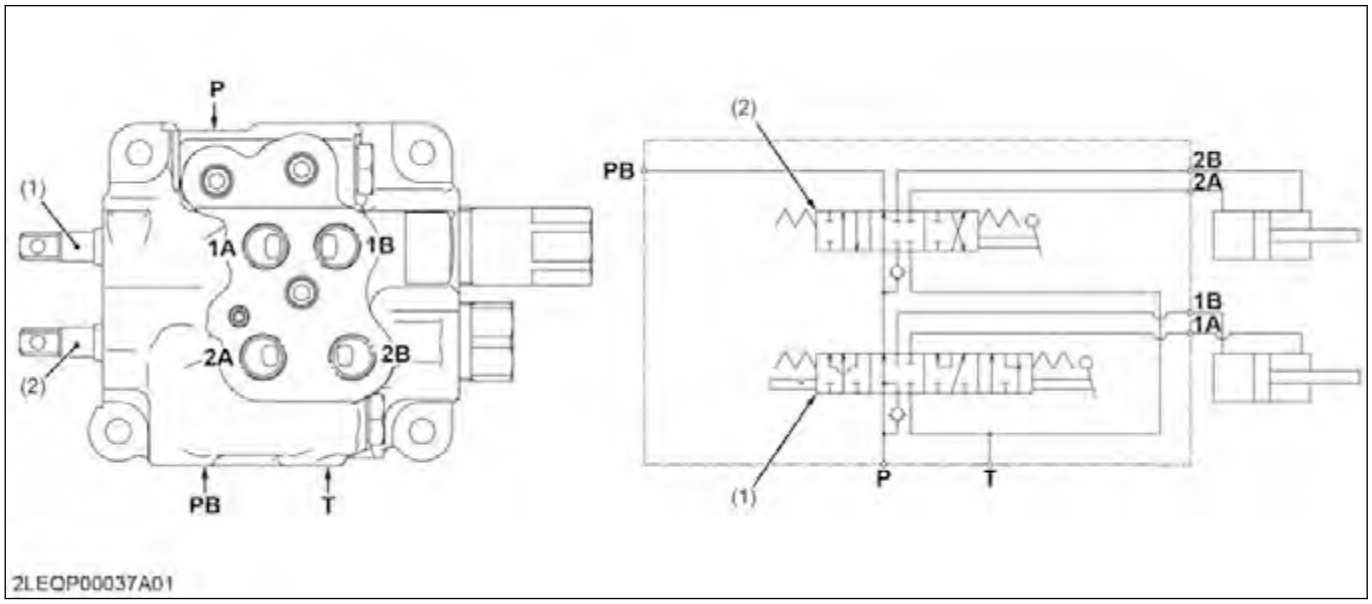

(1)	Boom control valve	1B:	1B port	P:	Pump port
(2)	Bucket control valve	2A:	2A port	PB:	Power beyond port
1A:	1A port	2B:	2B port	T:	Tank port

(1) Boom control section

The boom control valve is of 4-position, 6-connection, detent, spring center type, consisting of a mono block valve housing, spool, load check valve, etc. This valve has A1 and B1 ports and controls oil flow to the boom cylinder.

(2) Bucket control section

The bucket control valve is of 3-position, 6-connection, no detent, spring center type, consisting of a mono block valve housing, spool, load check valve, etc. This valve has A2 and B2 ports and controls oil flow to the bucket cylinder.

Inlet (P port) and outlet (T port) section

This section has P and T ports.
The P port is connected to the outlet port of hydraulic block by the hydraulic pipe.
The T port is connected to the tank port of hydraulic block by the hydraulic pipe.

Power beyond (PB port)

This section has PB port which is connected to the inlet port of hydraulic block by the hydraulic hose, and feeds oil to the three point hydraulic control valve.

https://truckmanualshub.com/

10.2 Front loader hydraulic circuit

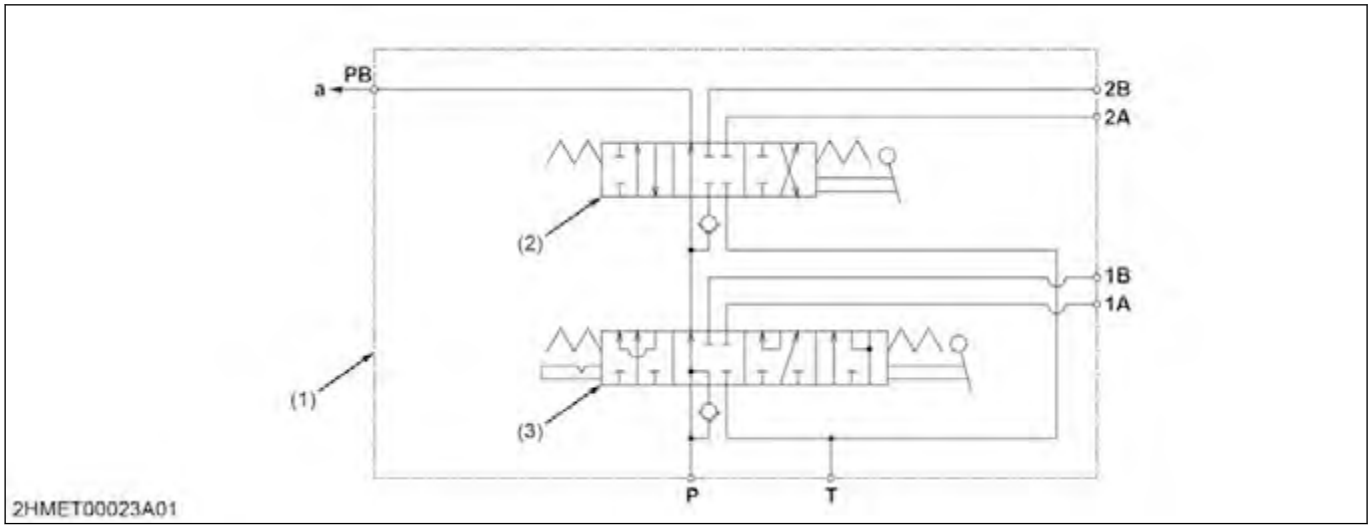

(1)	Front loader control valve	1A:	1A port	2B:	2B port	T:	Tank port
(2)	Bucket control valve	1B:	1B port	P:	Pump port	a:	To hydraulic block
(3)	Boom control valve	2A:	2A port	PB:	Power beyond port		

10.3 Function of loader control valve

10.3.1 Loader control lever in neutral position

When the loader control lever is set at neutral position, the hydraulic oil enters from P port (P), flows through the boom spool valve (3) and the bucket spool valve (2), and exits at PB port (PB).

Neutral

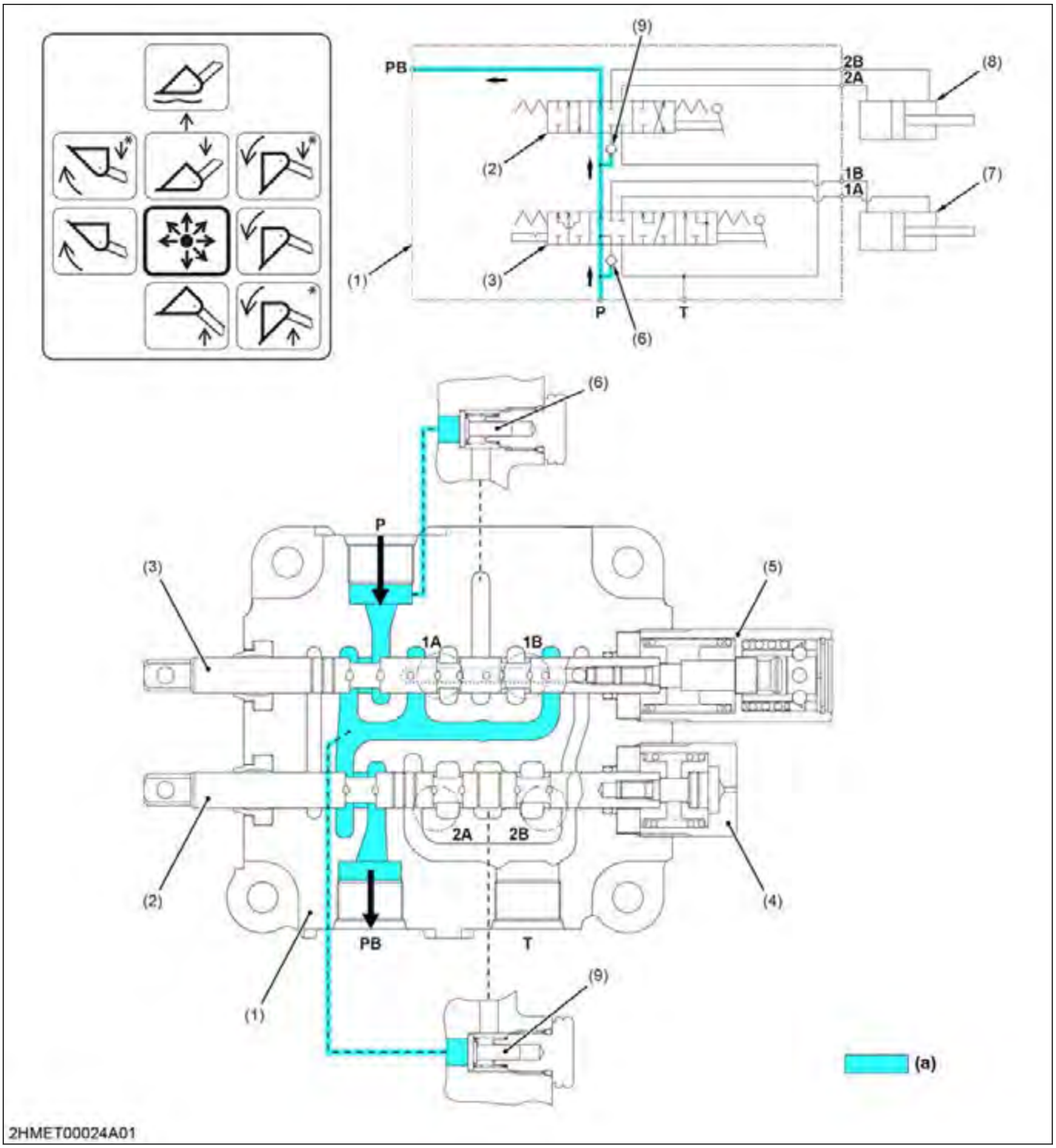

(1) Front loader control valve
(2) Bucket spool valve
(3) Boom spool valve
(4) Plug (Bucket control)
(5) Detent plug (Boom control)
(6) Check valve
(7) Boom cylinder
(8) Bucket cylinder
(9) Check valve
1A: 1A port
1B: 1B port
2A: 2A port
2B: 2B port
P: From hydraulic pump
PB: To 3-point hydraulic system
T: To tank, transmission case
a: Low pressure

https://truckmanualshub.com/

10.3.2 Loader control lever in up position

1. When the loader control lever is set at up position, the boom spool valve (3) moves outward. This creates an oil passage between the boom spool valve (3) and the front loader control valve (1). The pressured oil from the pump port (P) enters to this oil passage. The pressured oil is delivered to the boom cylinder (7) through 1B port (1B). This extends and raises the boom cylinder.
2. When the boom spool valve (3) moves outward, a passage between the boom spool valve (3) and 1A port (1A) is created. The return oil from the boom cylinder enters 1A port (1A), flows through the bucket spool valve (2) and exits to PB port (PB).

Up

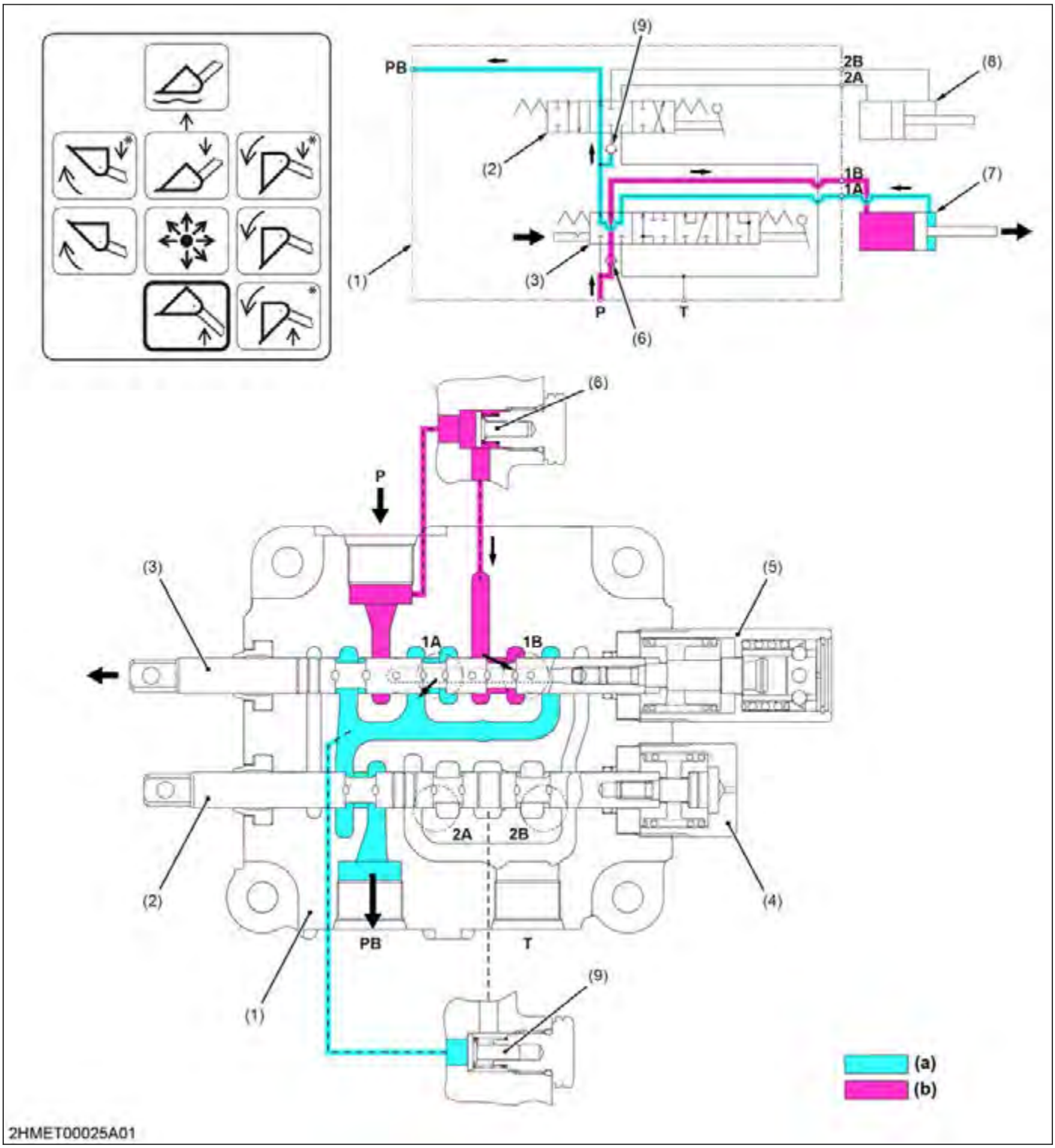

(1) Front loader control valve	(6) Check valve	1B: 1B port	T: To tank, transmission case
(2) Bucket spool valve	(7) Boom cylinder	2A: 2A port	a: Low pressure
(3) Boom spool valve	(8) Bucket cylinder	2B: 2B port	b: High pressure
(4) Detent plug (Bucket control)	(9) Check valve	P: From hydraulic pump	
(5) Detent plug (Boom control)	1A: 1A port	PB: To 3-point hydraulic system	

https://truckmanualshub.com/

10.3.3 Loader control lever in down position

1. When the loader control lever is set at down position, the boom spool valve (3) moves inward. This creates an oil passage between the boom spool valve (3) and the front loader control valve (1). The pressured oil from the pump port (P) enters to the newly opened passage. The pressured oil is delivered to the boom cylinder (7) through 1A port (1A). This retracts and lowers the boom cylinder.
2. When the boom spool valve (3) moves inward, a passage between the boom spool valve (3) and 1B port (1B) is created. The return oil in the boom cylinder enters 1B port (1B), flows to the bucket spool valve (2), and exits to the PB port (PB).

Down

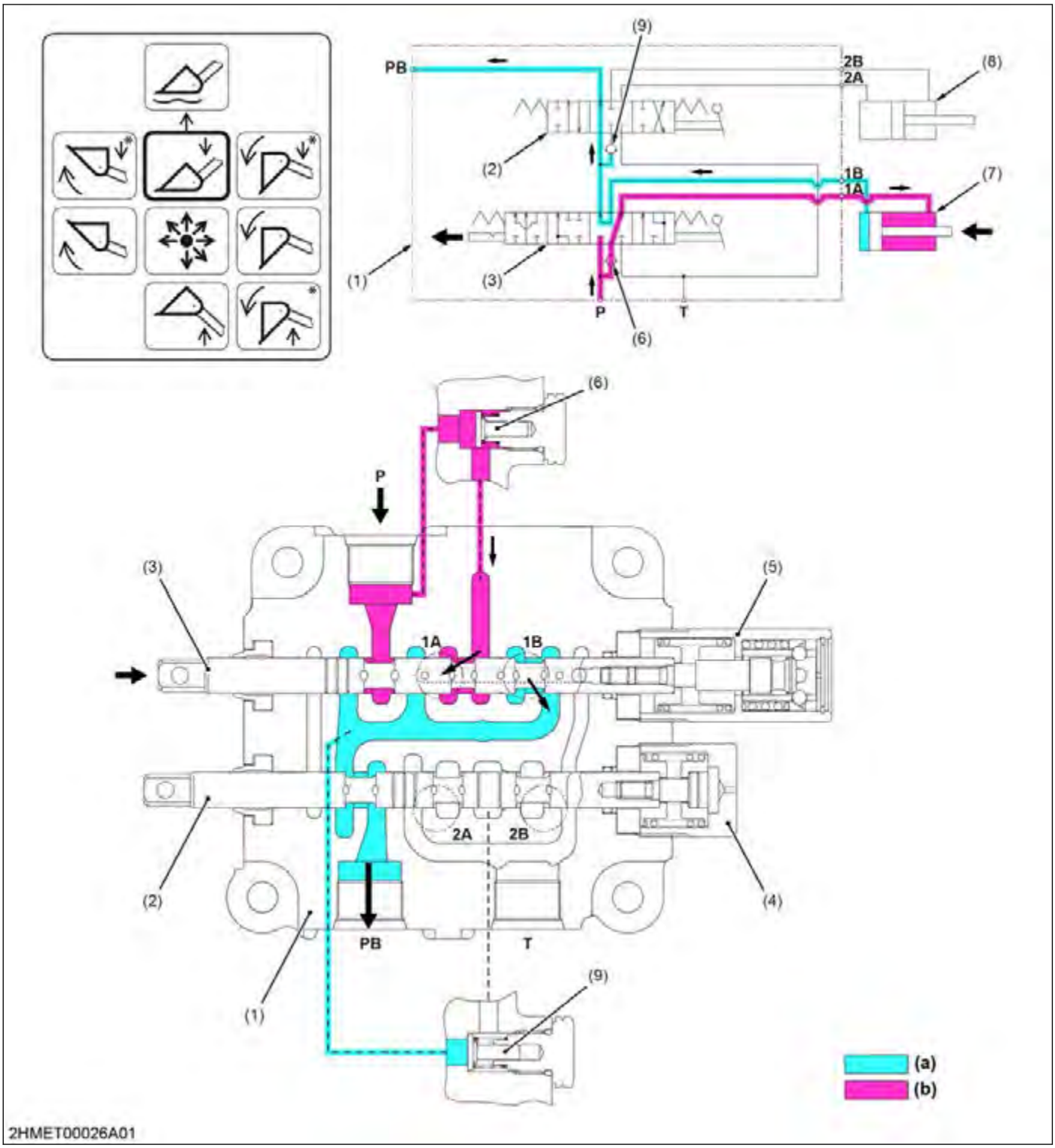

(1) Front loader control valve	(6) Check valve	1B: 1B port	T: To tank, transmission case
(2) Bucket spool valve	(7) Boom cylinder	2A: 2A port	a: Low pressure
(3) Boom spool valve	(8) Bucket cylinder	2B: 2B port	b: High pressure
(4) Detent plug (Bucket control)	(9) Check valve	P: From hydraulic pump	
(5) Detent plug (Boom control)	1A: 1A port	PB: To 3-point hydraulic system	

https://truckmanualshub.com/

10.3.4 Loader control lever in floating position

1. When the loader control lever is set to floating position, the boom spool valve (3) moves further inward. This creates oil passages at 1A port (1A) and 1B port (1B), as well as a passage between the boom spool valve (3) and the front loader control valve (1).
2. The low pressured oil from the pump port (P) flows through the bucket spool valve (2), and exits to the PB port (PB).
3. The low pressured return oil in the boom cylinder enters 1A port (1A), flows through the boom spool valve (3), and goes to the tank port (T). The other low pressured return oil in the boom cylinder enters 1B port (1B), flows through the boom spool valve (3), and goes to the tank port (T). As a result, the boom is floating.

Floating

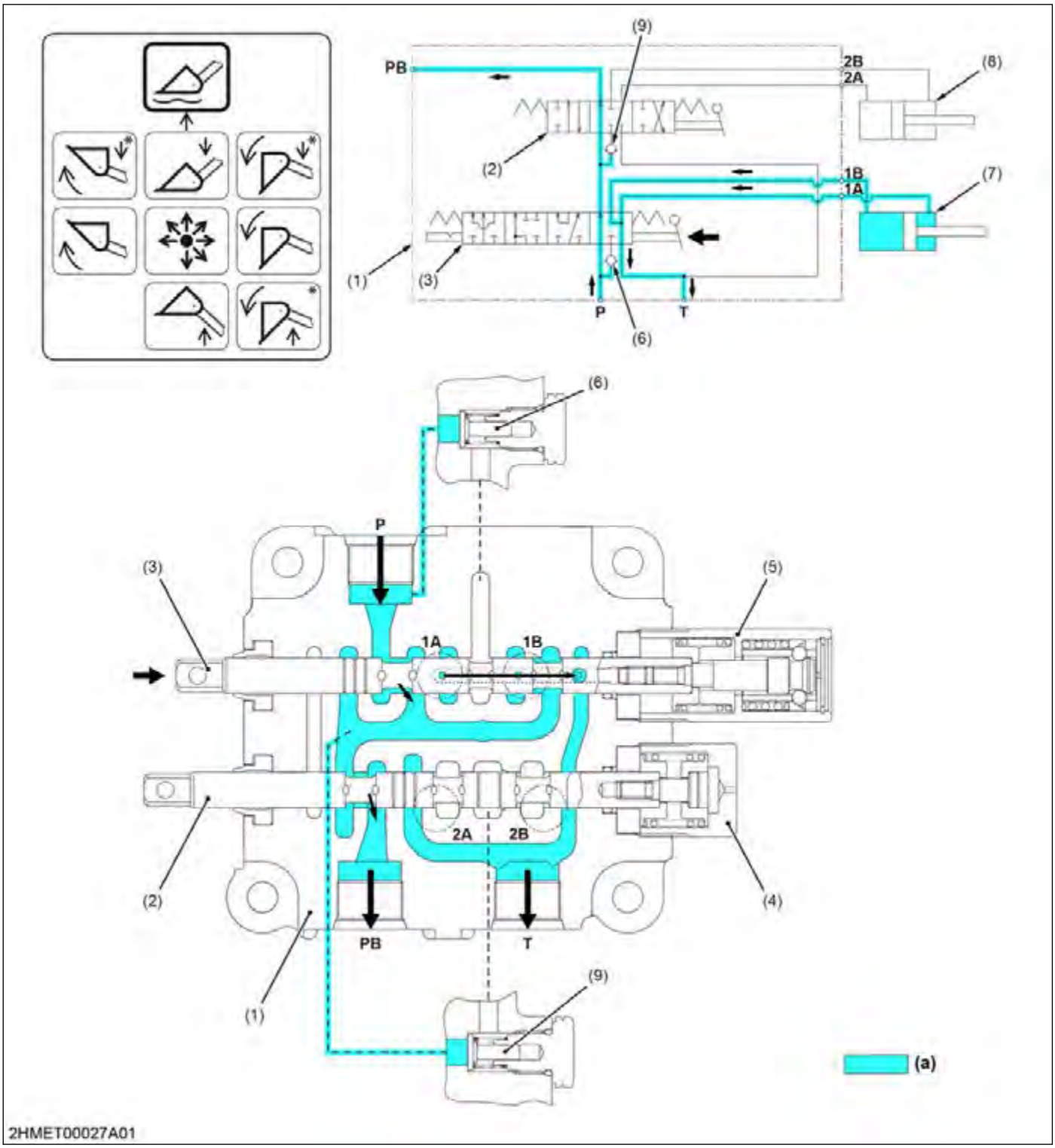

(1) Front loader control valve	(6) Check valve	1B: 1B port	T: To tank, transmission case
(2) Bucket spool valve	(7) Boom cylinder	2A: 2A port	a: Low pressure
(3) Boom spool valve	(8) Bucket cylinder	2B: 2B port	b: High pressure
(4) Detent plug (Bucket control)	(9) Check valve	P: From hydraulic pump	
(5) Detent plug (Boom control)	1A: 1A port	PB: To 3-point hydraulic system	

https://truckmanualshub.com/

10.3.5 Loader control lever in roll-back position

1. When the loader control lever is set at roll-back position, the bucket spool valve (2) moves outward. This creates oil passages at 2A port (2A) and 2B port (2B).
2. The pressured oil from the pump port (P) flows through 2B port (2B) to the bucket cylinder.
3. The low pressured return oil from the bucket cylinder enters 2A port (2A), flows through the front loader control valve (1), and goes to the tank port (T). As a result, the bucket moves to roll-back position.

Roll-back

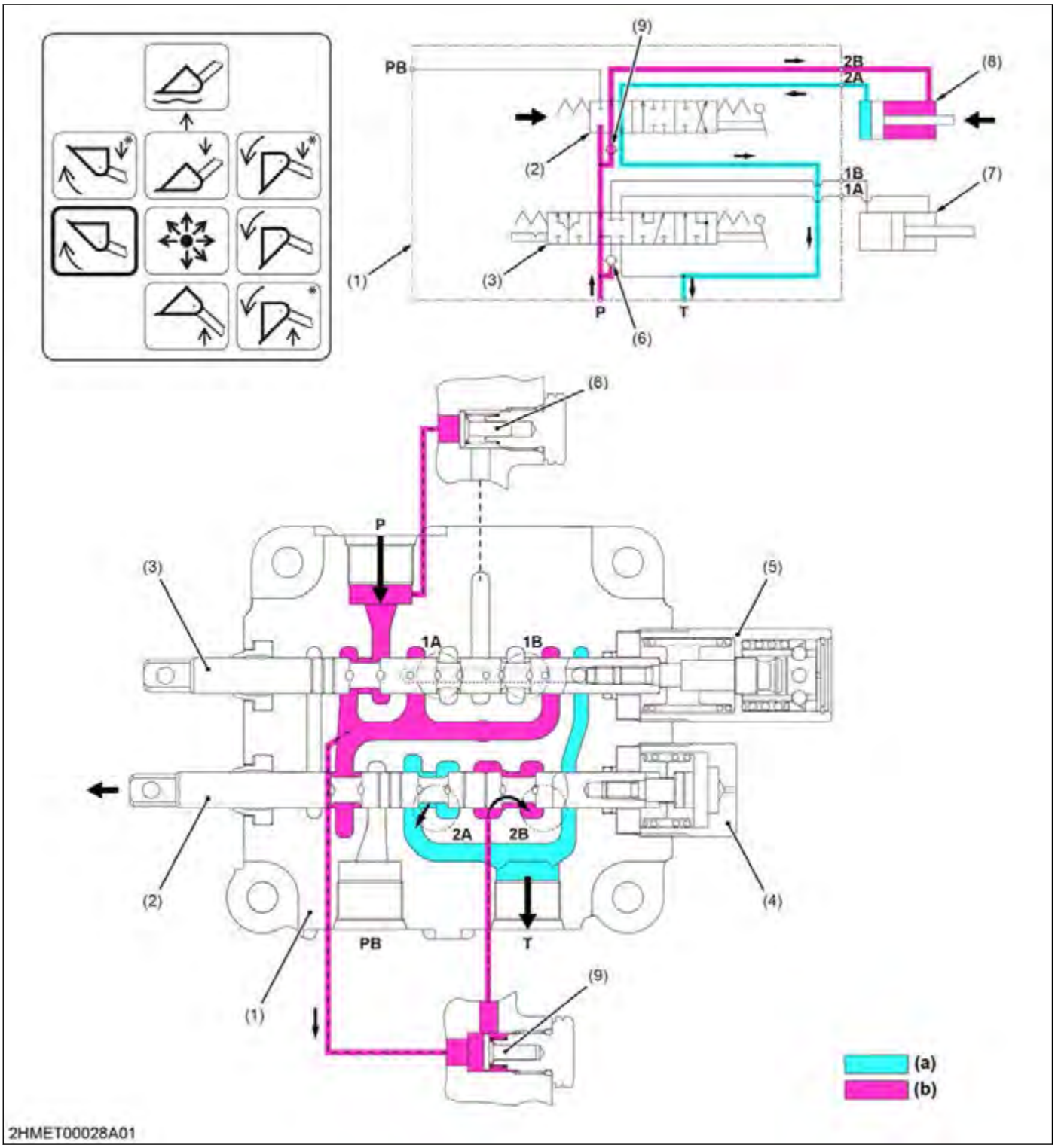
PB
(9)
2B
2A
(8)
(2)
1B
1A
(7)
(1)
(3)
P
T
(6)
(6)
P
(3)
(5)
1A
1B
2A
2B
(2)
(4)
PB
T
(9)
(1)
(a)
(b)
2HMET00028A01

https://truckmanualshub.com/

(1) Front loader control valve
(2) Bucket spool valve
(3) Boom spool valve
(4) Detent plug (Bucket control)
(5) Detent plug (Boom control)
(6) Check valve
(7) Boom cylinder
(8) Bucket cylinder
(9) Check valve
1A: 1A port
1B: 1B port
2A: 2A port
2B: 2B port
P: From hydraulic pump
PB: To 3-point hydraulic system
T: To tank, transmission case
a: Low pressure
b: High pressure

10.3.6 Loader control lever in dump position

1. When the loader control lever is set to the dump position, the bucket spool valve (2) moves to the right. This creates an oil passage at 2A port (2A). The passage between 2B port (2B) and T port (T) is also opened.
2. The pressure-fed oil from P port (P) flows to the neutral passage through the boom control section. As the passage to the PB port (PB) is closed by the bucket spool valve (2), the arriving oil opens the load check valve (9) and flows to 2A port (2A) through the notched section of the bucket spool valve (2). This extends the bucket cylinder (8).
3. Return oil from the bucket cylinder (8) enters 2B port (2B) and travels throughout the valve to go to the transmission case through T port (T).

https://truckmanualshub.com/

Dump

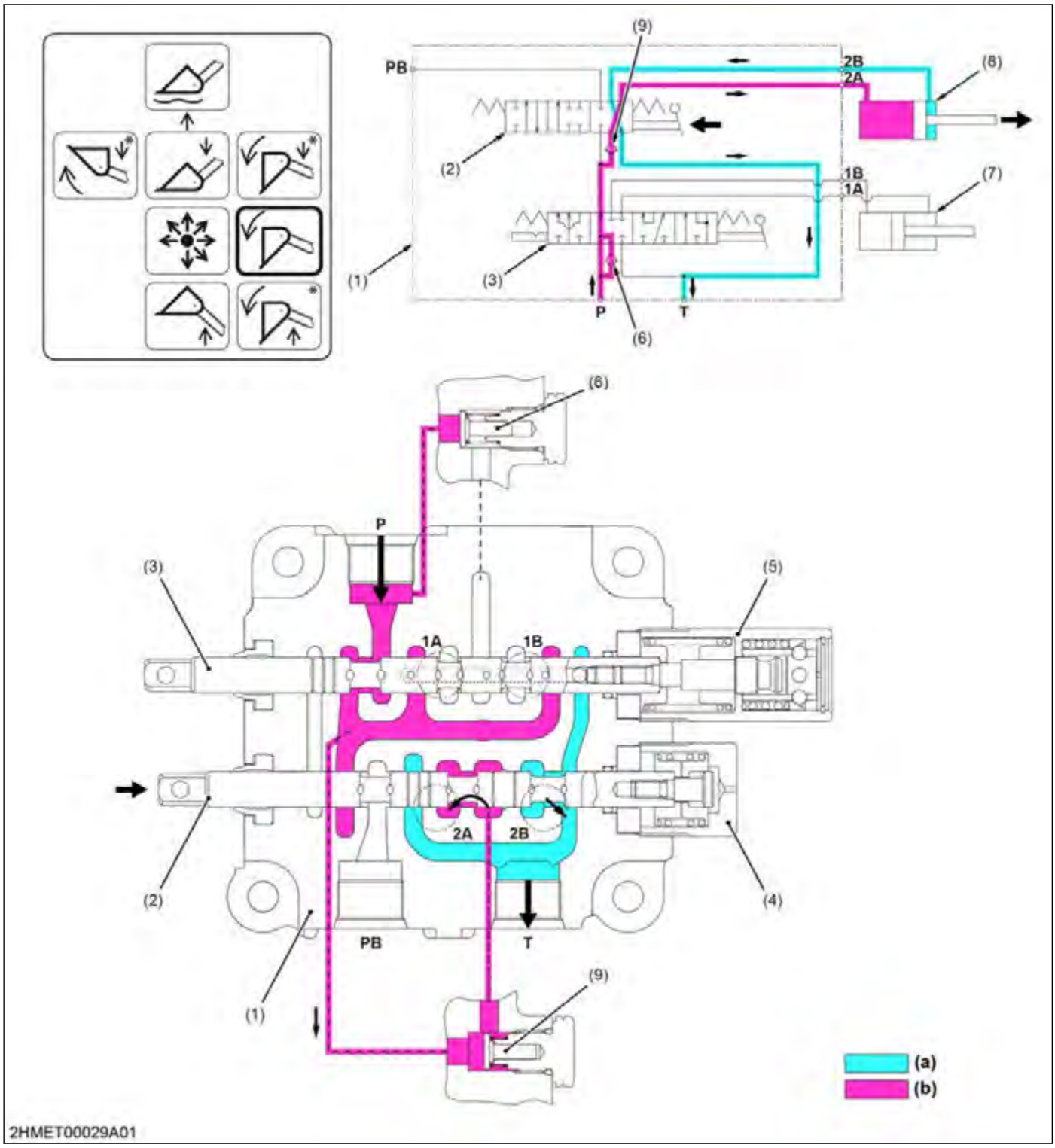

(1)	Front loader control valve	(6)	Check valve	1B:	1B port	T:	To tank, transmission case
(2)	Bucket spool valve	(7)	Boom cylinder	2A:	2A port	a:	Low pressure
(3)	Boom spool valve	(8)	Bucket cylinder	2B:	2B port	b:	High pressure
(4)	Detent plug (Bucket control)	(9)	Check valve	P:	From hydraulic pump		
(5)	Detent plug (Boom control)	1A:	1A port	PB:	To 3-point hydraulic system		

https://truckmanualshub.com/

https://truckmanualshub.com/

SERVICING

1. Troubleshooting for hydraulic system

Symptom	Probable cause and checking procedure	Solution	Reference page
Implement does not rise (no noise)	1. Control valve broken	Replace	7-46
	2. Control valve improperly assembled	Repair	7-46
	3. Relief valve spring damaged	Replace	7-36
	4. Spool sticks	Repair	7-46
	5. Piston O-ring or cylinder damaged	Replace	7-46
Implement does not rise (noise)	1. Oil filter cartridge clogged	Replace	2-26
	2. Suction pipe loosen or broken	Repair or replace	–
	3. Suction pipe connecting hose loosen or broken	Repair or replace	–
	4. Suction pipe O-ring broken	Replace	–
	5. Insufficient transmission oil	Refill	2-26
	6. Relief valve setting pressure too low	Adjust or replace	7-36
	7. Hydraulic pump broken	Replace	–
Implement does not lower	1. Control valve malfunctioning	Repair or replace	7-46
Implement drops by its weight	1. Hydraulic cylinder worn or damaged	Replace	7-53
	2. Piston O-ring worn or damaged	Replace	7-46
	3. Control valve malfunctioning	Replace	7-46

https://truckmanualshub.com/

2. Servicing specifications for hydraulic system

Item		Factory specification	Allowable limit
Relief valve (Condition) • Engine speed: maximum • Oil temperature: 45 to 55 ℃ (113 to 131 ℉)	Setting pressure	12.3 to 12.7 MPa 125 to 130 kgf/cm^2 1780 to 1840 psi	–
Hydraulic pump (Condition) • Engine Speed: 1500 min^{-1} (rpm) • Oil temperature: 45 to 55 ℃ (113 to 131 ℉)	Power steering oil flow	Above 8.0 L/min. 2.1 U.S.gals/min. 1.8 Imp.gals/min.	–
Mower linkage	Clearance "L2"	0 to 0.5 mm 0 to 0.01 in.	–
[Hydraulic pump] Gear to casing	Clearance	–	0.15 mm 0.0059 in.
• Gear	O.D.	33.520 to 33.530 mm 1.3197 to 1.3200 in.	–
• Case	I.D.	33.570 to 33.577 mm 1.3217 to 1.3219 in.	–
Gear shaft to bushing	Clearance	0.020 to 0.091 mm 0.00079 to 0.0035 in.	0.12 mm 0.0047 in.
• Gear shaft	O.D.	14.970 to 14.980 mm 0.58937 to 0.58976 in.	–
• Bushing	I.D.	15.000 to 15.061 mm 0.59056 to 0.59295 in.	–
Side plate	Thickness	2.48 to 2.50 mm 0.0977 to 0.0984 in.	2.40 mm 0.094 in.
Hydraulic cylinder	I.D.	80.05 to 80.15 mm 3.152 to 3.155 in.	80.20 mm 3.157 in.
Hydraulic arm shaft	O.D. (L.H.)	31.925 to 31.950 mm 1.2569 to 1.2578 in.	–
	O.D. (R.H.)	29.925 to 29.950 mm 1.1782 to 1.1791 in.	–

https://truckmanualshub.com/

3. Tightening torques for hydraulic system

Item	N·m	kgf·m	lbf·ft
ROPS mounting bolt	48.0 to 55.9	4.90 to 5.70	35.5 to 41.2
Fuel tank stay mounting bolt and nut	48 to 55	4.9 to 5.7	36 to 41
Seat stopper bolt	123.5 to 147.0	12.6 to 15.0	91.2 to 108
Fender center stay mounting bolt and nut (M14)	98.0 to 125	11.0 to 12.8	79.6 to 92.5
Fender center stay mounting bolt and nut (M10)	39.2 to 45.1	4.00 to 4.60	29.0 to 33.2
Hydraulic pump mounting bolt (M6)	7.9 to 9.3	0.80 to 0.95	5.8 to 6.8
Hydraulic pump mounting bolt (M8)	18 to 20	1.8 to 2.1	13 to 15
Hydraulic cylinder block mounting bolt	40 to 44	4.0 to 4.5	29 to 32

RELATED PAGE

TIGHTENING TORQUES on page 2-13

4. Checking and adjusting

4.1 Relief valve

4.1.1 Checking relief valve setting pressure

1. Disconnect the hydraulic hose (1) from the right side of the transaxle.
2. Install the hydraulic hose (6) and adaptor A (3) with pressure gauge (2).

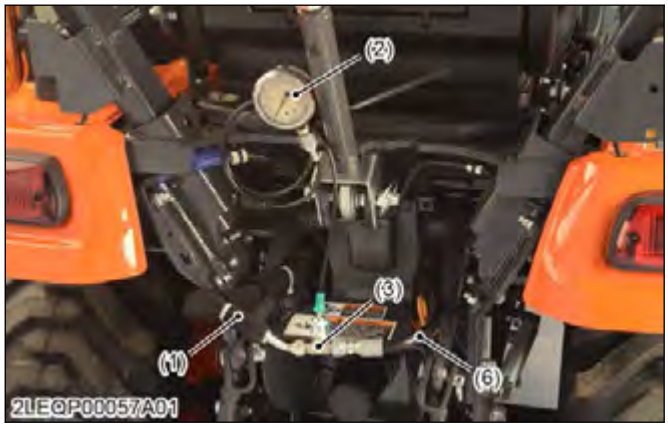

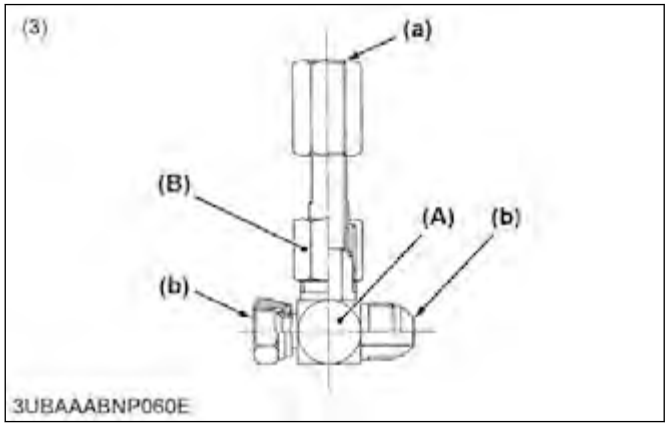

(1) Hydraulic hose
(2) Pressure gauge
(3) Adapter tee, swivel (9/16-18)
(6) Hydraulic hose
(A) Adapter tee, swivel (9/16-18)
(B) Adapter B
(a) Connect pressure gauge
(b) Connect hydraulic hose

3. Start the engine and set at maximum speed.

Condition

Engine speed	Oil temperature
Maximum	45 to 55 ℃ 113 to 131 ℉

4. Move the control lever all way up to operate the relief valve and read the gauge.
5. If the pressure is not within the factory specifications, adjust with the adjusting shim (5).

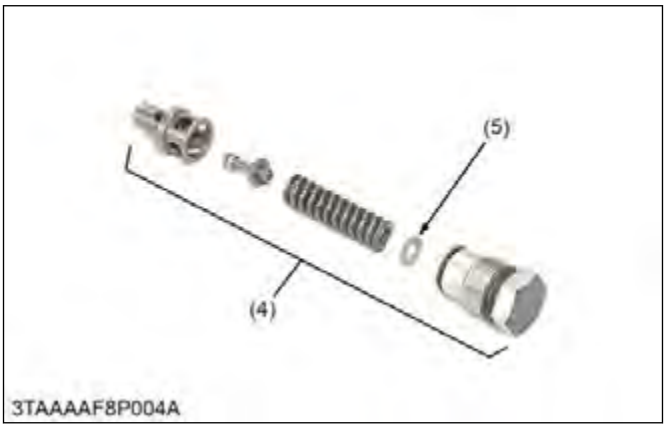

(4) Relief valve
(5) Shim

Relief valve setting pressure	Factory specification	12.3 to 12.7 MPa 125 to 130 kgf/cm^2 1780 to 1840 psi

(Reference)

Thickness of shim (5)	0.1 mm 0.004 in.
	0.2 mm 0.008 in.
	0.4 mm 0.02 in.

0.269 MPa (2.74 kgf/cm^2, 39.0 psi) pressure is increased whenever the thickness of adjusting shim is increased by 0.1 mm (0.004 in.).

4.2 Pump and priority valve

4.2.1 Checking hydraulic pump oil flow

IMPORTANT

- **Use the instruction with the flowmeter when you use the flowmeter.**
- **While testing, do not close the flowmeter loading valve completely.**
- **To measure the flow volume of pump, oil flow on the power steering system side should be stopped.**

NOTE

Plug size:
9/16-18 UNF
SAE 37° Flare

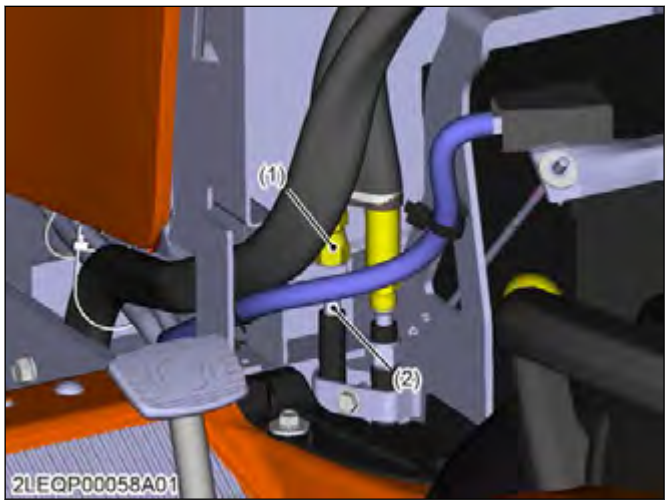

(1) Power steering controller hose (Inlet)
(2) Power steering pipe
(3) Plug

Condition

Engine speed	Oil temperature
Maximum	45 to 55 ℃ 113 to 131 ℉

1. Disconnect the power steering controller hose (inlet) (1) from the power steering pipe (2).
2. Cap the power steering pipe (2) with plug (3).
3. Remove the hydraulic pipe behind the hydraulic cylinder and fix the flow meter hose and the flow (meter) inlet as shown in the photo.
4. Remove the transmission fluid filling plug, then fix the flow meter hose and the flowmeter (outlet).
5. If the flow volume is insufficient, replace the pump.
   (Reference)

Pump oil flow

Hydraulic pump delivery at no pressure	Factory specification	Above 24.9 L/min. 6.6 U.S.gals/min. 5.5 Imp.gals/min.

6. After measuring the flow volume, remove the flow meter then reassembling the hydraulic pipe to the original position.

4.2.2 Checking power steering oil flow

IMPORTANT

- **Use the instruction with the flowmeter when you use the flowmeter.**
- **While testing, do not close the flowmeter loading valve completely.**

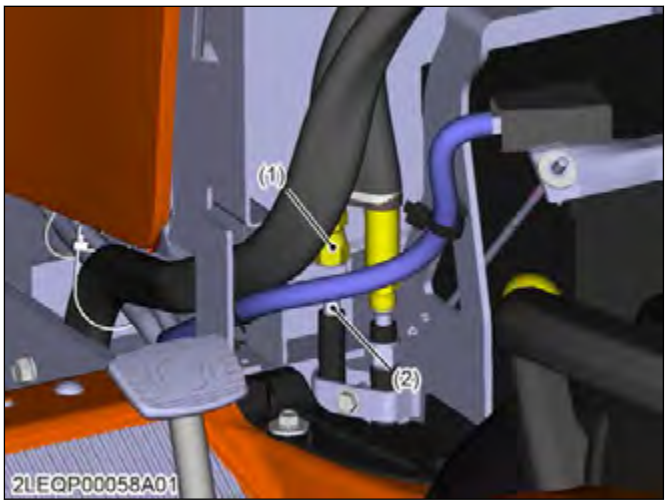

(1) Power steering controller hose (Inlet)
(2) Power steering pipe

Condition

Engine speed	Oil temperature
1500 min^{-1} (rpm)	45 to 55 ℃ 113 to 131 ℉

1. Disconnect the power steering controller hose (inlet) (1) from the power steering pipe (2).
2. Fix the inlet flow meter hose to the power steering pipe (2) and the flow meter as shown in the photo.
3. Fix the flow meter return hose to the transmission fluid filling port and the flow meter as shown in the photo.
4. Measure the flow volume of power steering.
5. If the flow volume varies from the specification, replace the priority valve then take measurement again.

Power steering oil flow	Factory specification	Above 8.0 L/min. 2.1 U.S.gals/min. 1.8 Imp.gals/min.
Engine speed	Specification	1500 min^{-1} (rpm)

6. After measuring the flow volume, remove the flow meter then reassemble the hydraulic pipe to the original position.

4.3 Mower lift linkage

4.3.1 Adjusting mower lift linkage

- After reassembling the mower lift linkage, be sure to adjust it as follows.

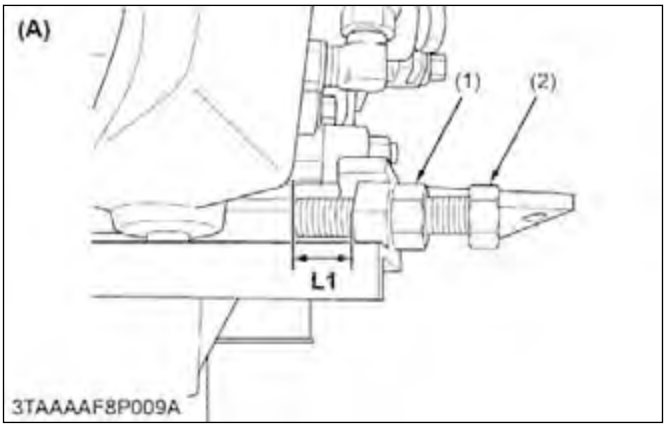

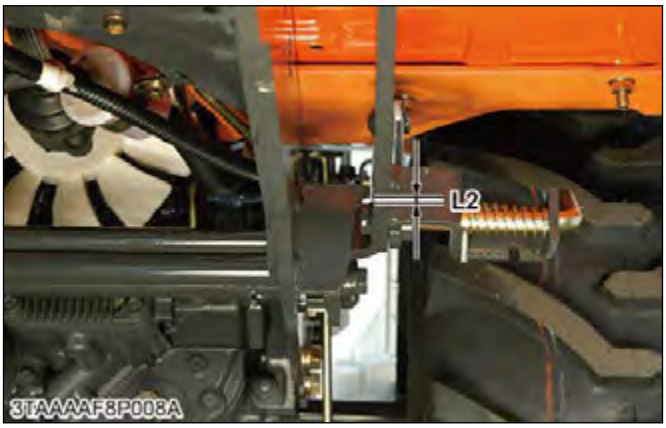

(1) Nut
(2) Bolt
(A) Upper view
L1: Length
L2: Clearance

(Reference)

Length "L1"	Factory specification	17 mm 0.67 in.

1. Check the lift arm free play.
2. Loosen the adjusting nut (1) and start the engine.
3. Move the hydraulic control lever to **Lift** position until the relief valve operating. (**Uppermost** position)
4. Adjusting bolt (2) until the clearance between stopper and mower rear link L.H.

Clearance "L2"	Factory specification	0 to 0.5 mm 0 to 0.01 in.

5. Secure the lock nut (1).

5. Disassembling and assembling

5.1 Hydraulic pump

5.1.1 Removing battery

⚠ WARNING

To avoid serious injury or death:

- **When disconnecting the battery cables, disconnect the negative cable from the battery first.**

https://truckmanualshub.com/

- **When connecting, connect the positive cable to the battery first.**

1. Remove the under panel (1).

(1) Under panel

2. Disconnect the negative cable (3) from the battery (2).
3. Disconnect the positive cable (4) from the battery (2) and remove the battery.

(2) Battery
(3) Negative cable
(4) Positive cable

5.1.2 Removing lift rod and lower link

1. Remove the top link (2).
2. Remove the stopper pin (6) and remove the check chain plate (3).

(1) Lift rod L.H.
(2) Top link
(3) Check chain plate
(4) Lift rod R.H.
(5) Lower link R.H.
(6) Stopper pin
(7) Lower link L.H.

3. Move the bushes (8) to inside.
4. Move the shaft (9) to right side and remove the lower link as a unit.

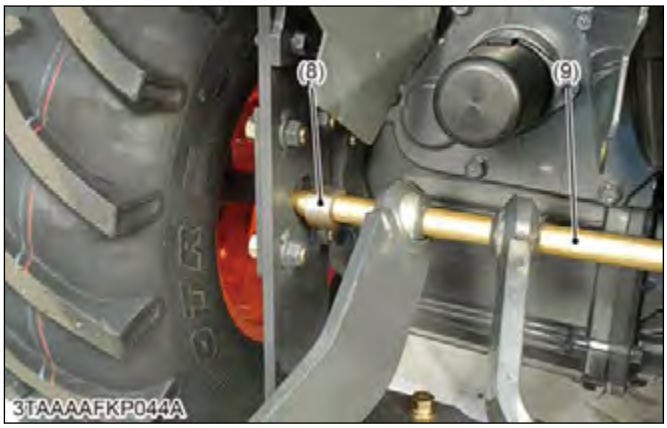

(8) Bush
(9) Shaft

5.1.3 Removing ROPS

1. Disconnect the R.H and L.H. hazard lamp/turn signals (3), (4) from the wire harness.

2. Remove the upper ROPS (1).

(1) Upper ROPS
(2) R.H. lower ROPS
(3) R.H. hazard lamp/turn signal
(4) L.H. hazard lamp/turn signal
(5) L.H. lower ROPS
(6) Bolt

3. Remove the ROPS mounting bolts (6).
4. Remove the R.H. and L.H. lower ROPS (2), (5).

(When reassembling)

Tightening torque	ROPS mounting bolt	48.0 to 55.9 N·m 4.90 to 5.70 kgf·m 35.5 to 41.2 lbf·ft

5.1.4 Removing seat

1. Disconnect the seat switch connectors.
2. Remove the snap pins (2) to remove the seat (1).

(1) Seat
(2) Snap pin

5.1.5 Removing step

1. Disconnect the upper cruise control rod (1) from the lower cruise control rod.
2. Remove the R.H. and L.H. side covers (2), (7).

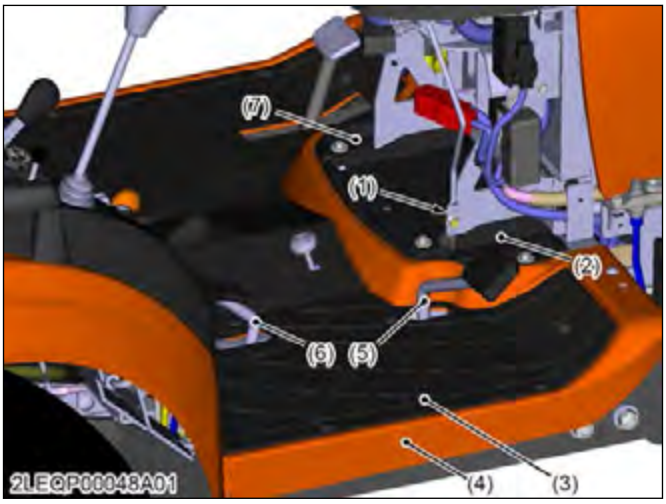

(1) Upper cruise control rod
(2) R.H. side cover
(3) Step mat
(4) Step
(5) Forward HST pedal
(6) Reverse HST pedal
(7) L.H. side cover

3. Remove the step mat (3).
4. Remove the forward and reverse HST pedals (5), (6).
5. Remove the step (4).

5.1.6 Removing fender

1. Disconnect the L.H. and R.H. tail lamps (3), (7) from the wire harness.
2. Disconnect the 12 V outlet (2) from the wire harness.

NOTE
- **12 V outlet connector is near the L.H. tail lamp connector.**

3. Remove the L.H. lever grips (3).

(1) Tail lamp
(2) 12 V outlet
(3) L.H. lever grip
(4) Differential lock pedal cover
(5) Cutting height adjusting dial knob
(6) Lowering speed adjusting knob
(7) R.H lever grip

https://truckmanualshub.com/

4. Remove the differential lock pedal cover (4), cutting height adjusting dial knob (5), and lower speed adjusting knob (6).
5. Remove the R.H. lever grips (7).
6. Remove the R.H. lever guide (8) and R.H. handrail (10).
7. Remove the L.H. lever guide stay nut.

(8) R.H. lever guide
(9) Fender
(10) R.H. handrail

8. Remove the fender (9).

5.1.7 Removing fuel tank

1. Remove the and R.H. lever guide stay (1).
2. Drain the fuel from the fuel tank.
3. Disconnect the fuel sensor connectors (4) and safety switch connector (7).

(1) R.H. lever guide stay
(2) Fuel tube cover
(3) Seat stopper
(4) Fuel sensor connector
(5) Fuel tank
(6) Fuel return hose
(7) Connector
(8) Fuel supply hose

4. Remove the fuel tube cover (2).
5. Disconnect the fuel return hose (6) and fuel supply hose (8).
6. Remove the seat stopper (3).
7. Remove the R.H. and L.H. fuel tank stays (9) and cushions (10), then remove the fuel tank (5).

(9) R.H. fuel tank stay
(10) Cushion

(When reassembling)

Tightening torque	Fuel tank stay mounting bolt and nut	48 to 55 N·m 4.9 to 5.7 kgf·m 36 to 41 lbf·ft
	Seat stopper bolts	123.5 to 147.0 N·m 12.6 to 15.0 kgf·m 91.2 to 108 lbf·ft

5.1.8 Removing fender center stay

1. Remove the fender center stay (1).

(1) Fender center stay

(When reassembling)

Tightening torque	Fender center stay mounting bolt and nut (M14)	98.0 to 125 N·m 11.0 to 12.8 kgf·m 79.6 to 92.5 lbf·ft
	Fender center stay mounting bolt and nut (M10)	39.2 to 45.1 N·m 4.00 to 4.60 kgf·m 29.0 to 33.2 lbf·ft

5.1.9 Removing hydraulic pump

1. Disconnect the mower linkage (4).

2. Remove the lift arm L.H. (2).

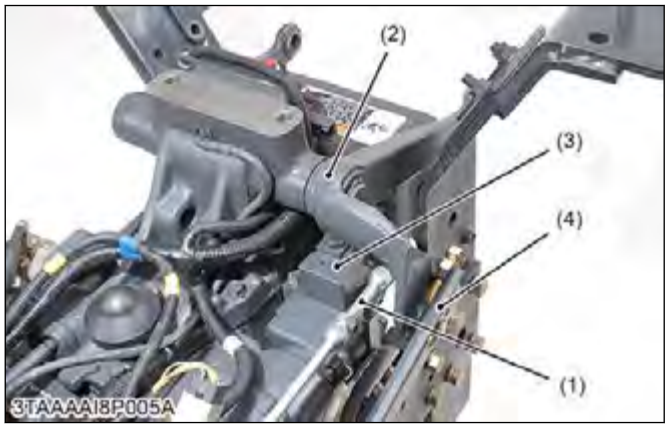

(1) Hydraulic pipe
(2) Lift arm L.H.
(3) Hydraulic pump
(4) Mower linkage

3. Remove the hydraulic pipes (1).
4. Remove the hydraulic pump (3).

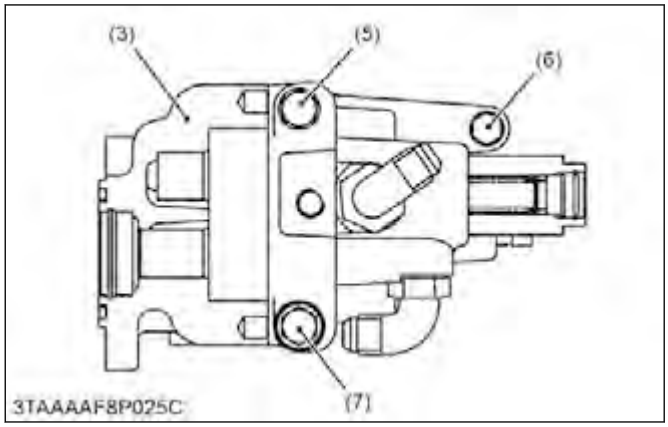

(3) Hydraulic pump
(5) Bolt (M8) (Through bolt)
(6) Bolt (M6)
(7) Bolt (M8)

(When reassembling)

- Since the mounting bolt (5) is installed through the transaxle case to the transmission oil tank, seal the sealing tape to the mounting bolt (5) securely.

Tightening torque	Hydraulic pump mounting bolt (M6)	7.9 to 9.3 N·m 0.80 to 0.95 kgf·m 5.8 to 6.8 lbf·ft
	Hydraulic pump mounting bolt (M8)	18 to 20 N·m 1.8 to 2.1 kgf·m 13 to 15 lbf·ft

5.2 Hydraulic cylinder block

5.2.1 Removing battery

WARNING

To avoid serious injury or death:

- **When disconnecting the battery cables, disconnect the negative cable from the battery first.**
- **When connecting, connect the positive cable to the battery first.**

1. Remove the under panel (1).

(1) Under panel

2. Disconnect the negative cable (3) from the battery (2).
3. Disconnect the positive cable (4) from the battery (2) and remove the battery.

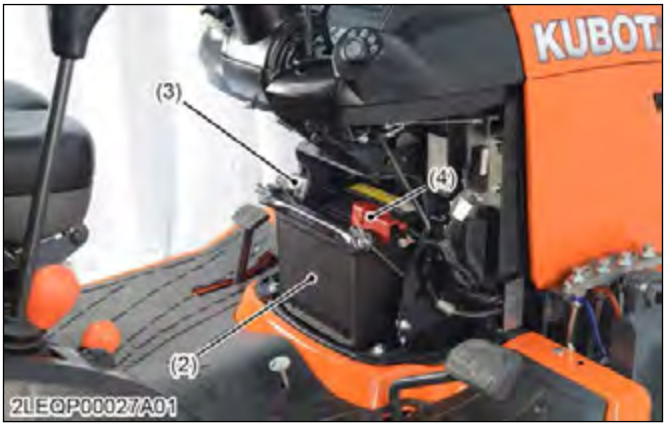

(2) Battery
(3) Negative cable
(4) Positive cable

https://truckmanualshub.com/

5.2.2 Removing lift rod and lower link

1. Remove the top link (2).
2. Remove the stopper pin (6) and remove the check chain plate (3).

(1) Lift rod L.H.
(2) Top link
(3) Check chain plate
(4) Lift rod R.H.
(5) Lower link R.H.
(6) Stopper pin
(7) Lower link L.H.

3. Move the bushes (8) to inside.
4. Move the shaft (9) to right side and remove the lower link as a unit.

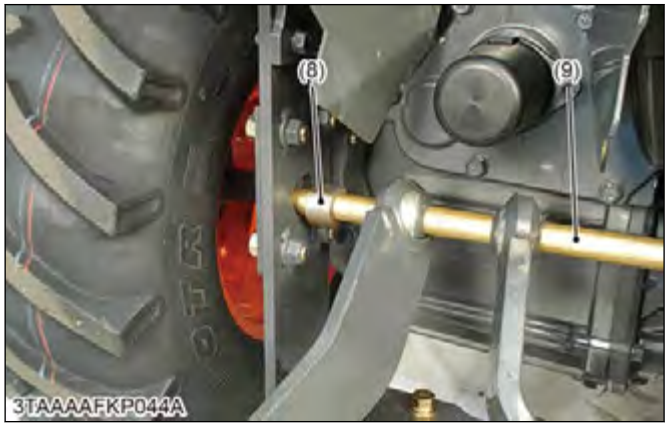

(8) Bush
(9) Shaft

5.2.3 Removing ROPS

1. Disconnect the R.H and L.H. hazard lamp/turn signals (3), (4) from the wire harness.
2. Remove the upper ROPS (1).

(1) Upper ROPS
(2) R.H. lower ROPS
(3) R.H. hazard lamp/turn signal
(4) L.H. hazard lamp/turn signal
(5) L.H. lower ROPS
(6) Bolt

3. Remove the ROPS mounting bolts (6).
4. Remove the R.H. and L.H. lower ROPS (2), (5).

(When reassembling)

Tightening torque	ROPS mounting bolt	48.0 to 55.9 N·m 4.90 to 5.70 kgf·m 35.5 to 41.2 lbf·ft

5.2.4 Removing seat

1. Disconnect the seat switch connectors.
2. Remove the snap pins (2) to remove the seat (1).

(1) Seat
(2) Snap pin

5.2.5 Removing step

1. Disconnect the upper cruise control rod (1) from the lower cruise control rod.

2. Remove the R.H. and L.H. side covers (2), (7).

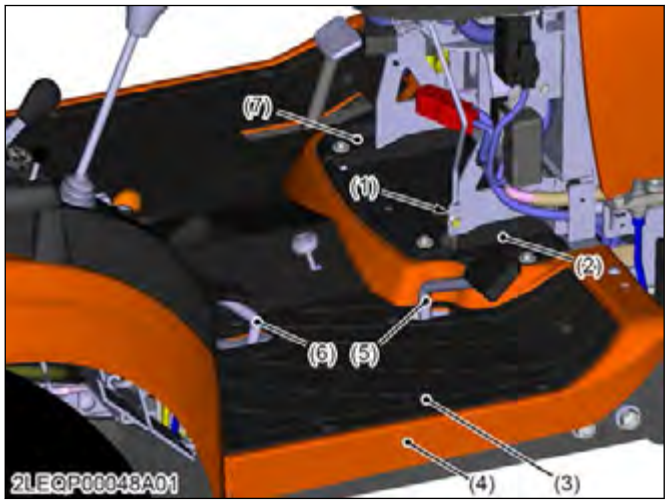

(1) Upper cruise control rod
(2) R.H. side cover
(3) Step mat
(4) Step
(5) Forward HST pedal
(6) Reverse HST pedal
(7) L.H. side cover

3. Remove the step mat (3).
4. Remove the forward and reverse HST pedals (5), (6).
5. Remove the step (4).

5.2.6 Removing fender

1. Disconnect the L.H. and R.H. tail lamps (3), (7) from the wire harness.
2. Disconnect the 12 V outlet (2) from the wire harness.

NOTE
- **12 V outlet connector is near the L.H. tail lamp connector.**

3. Remove the L.H. lever grips (3).

(1) Tail lamp
(2) 12 V outlet
(3) L.H. lever grip
(4) Differential lock pedal cover
(5) Cutting height adjusting dial knob
(6) Lowering speed adjusting knob
(7) R.H lever grip

4. Remove the differential lock pedal cover (4), cutting height adjusting dial knob (5), and lower speed adjusting knob (6).
5. Remove the R.H. lever grips (7).
6. Remove the R.H. lever guide (8) and R.H. handrail (10).
7. Remove the L.H. lever guide stay nut.

(8) R.H. lever guide
(9) Fender
(10) R.H. handrail

8. Remove the fender (9).

5.2.7 Removing fuel tank

1. Remove the and R.H. lever guide stay (1).
2. Drain the fuel from the fuel tank.
3. Disconnect the fuel sensor connectors (4) and safety switch connector (7).

(1) R.H. lever guide stay
(2) Fuel tube cover
(3) Seat stopper
(4) Fuel sensor connector
(5) Fuel tank
(6) Fuel return hose
(7) Connector
(8) Fuel supply hose

4. Remove the fuel tube cover (2).
5. Disconnect the fuel return hose (6) and fuel supply hose (8).
6. Remove the seat stopper (3).

https://truckmanualshub.com/

7. Remove the R.H. and L.H. fuel tank stays (9) and cushions (10), then remove the fuel tank (5).

(9) R.H. fuel tank stay (10) Cushion

(When reassembling)

Tightening torque	Fuel tank stay mounting bolt and nut	48 to 55 N·m 4.9 to 5.7 kgf·m 36 to 41 lbf·ft
	Seat stopper bolts	123.5 to 147.0 N·m 12.6 to 15.0 kgf·m 91.2 to 108 lbf·ft

5.2.8 Removing fender center stay

1. Remove the fender center stay (1).

(1) Fender center stay

(When reassembling)

Tightening torque	Fender center stay mounting bolt and nut (M14)	98.0 to 125 N·m 11.0 to 12.8 kgf·m 79.6 to 92.5 lbf·ft
	Fender center stay mounting bolt and nut (M10)	39.2 to 45.1 N·m 4.00 to 4.60 kgf·m 29.0 to 33.2 lbf·ft

5.2.9 Removing mower linkage and wire harness

1. Disconnect the mower linkage (2).
2. Remove the wire harness clamp and wire harness (1) from the hydraulic cylinder block.

(1) Wire harness (2) Mower linkage

5.2.10 Removing hydraulic cylinder block

1. Remove the hydraulic hose (1).

(1) Hydraulic hose

2. Remove the hydraulic cylinder block mounting bolts.
3. Remove the hydraulic cylinder block (2).

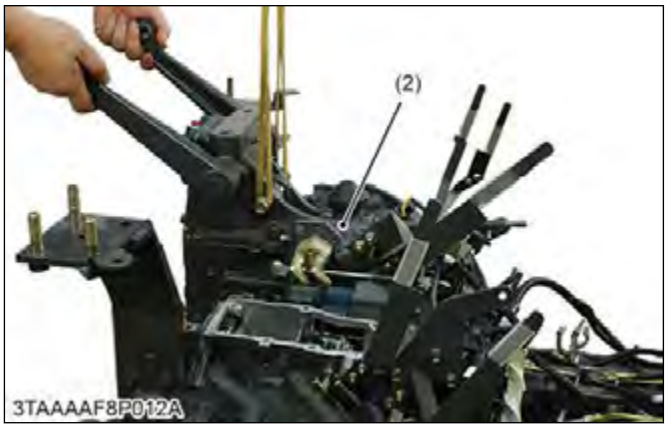

(2) Hydraulic cylinder block

(When reassembling)

Tightening torque	Hydraulic cylinder block mounting bolt	40 to 44 N·m 4.0 to 4.5 kgf·m 29 to 32 lbf·ft

5.3 Hydraulic cylinder and control valve

5.3.1 Removing control valve

(2) Spool
(3) Plain washer
(4) Internal snap ring

1. Remove the control valve (1).

(1) Control valve

2. Remove the internal snap ring (4) and draw out the spool (2).

5.3.2 Removing control valve lever

(1) Pin
(2) Arm
(3) Control valve lever

1. Pull out the pin (1).
2. Remove the control valve lever (3) and arm (2).

5.3.3 Removing lift arm, hydraulic arm shaft and hydraulic arm

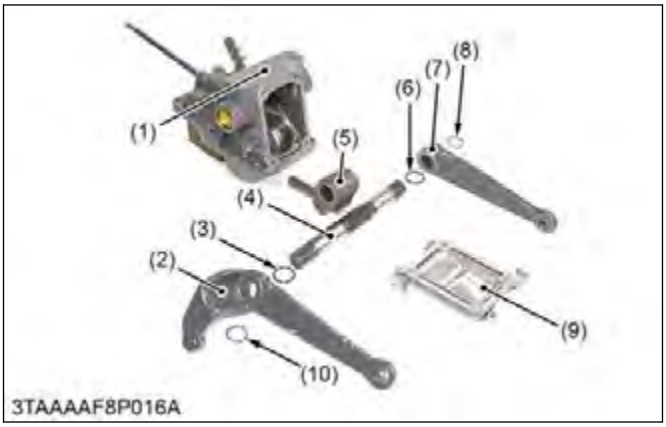

(1) Hydraulic cylinder block
(2) Lift arm L.H.
(3) O-ring
(4) Hydraulic arm shaft
(5) Hydraulic arm
(6) O-ring
(7) Lift arm R.H.
(8) External snap ring
(9) Cover
(10) External snap ring

1. Remove the external snap rings (8), (10) and remove the lift arms (2), (7).
2. Draw out the hydraulic arm shaft (4).

(When reassembling)

- Align the alignment marks of the hydraulic arm (5) and hydraulic arm shaft (4).
- Align the alignment marks of the lift arms (2), (7) and hydraulic arm shaft (4).
- Apply grease to the right and left bushings and O-rings.
- Be careful not to damage the O-ring.

https://truckmanualshub.com/

5.3.4 Removing hydraulic piston

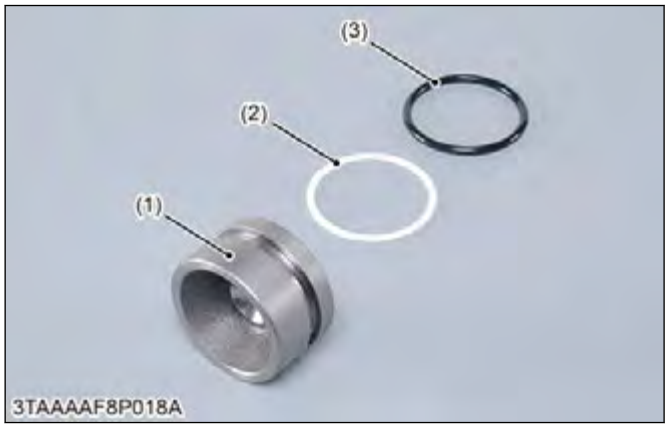

(1) Hydraulic piston
(2) Back-up ring
(3) O-ring

1. Inject the compressed air into the hydraulic cylinder, and remove the hydraulic piston (1).

(1) Hydraulic piston

(When reassembling)
- Be careful not to damage the O-ring (3) and back-up ring (2).
- Apply transmission fluid to the O-ring.
- Replace the O-ring if it is damaged, worn or scratched, which may cause oil leakage.

5.3.5 Removing lowering speed adjusting valve

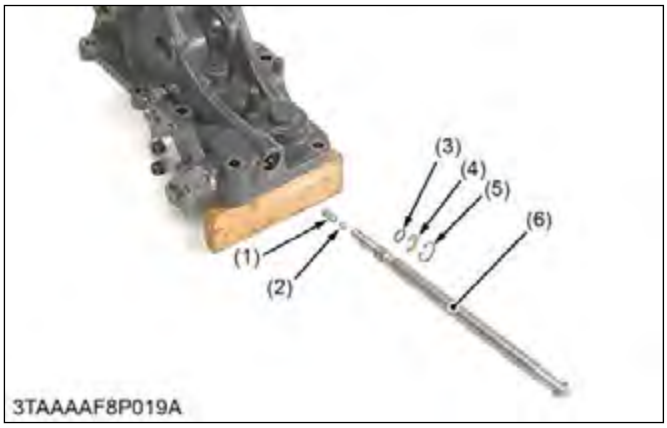

(1) Spring
(2) Ball
(3) O-ring
(4) Stopper
(5) Internal snap ring
(6) Lowering speed adjusting shaft

1. Remove the internal snap ring (5) and remove the lowering speed adjusting shaft (6).
2. Remove the ball (2) and spring (1).

(When reassembling)
- Be careful not to damage the O-rings.

5.4 Mower lift linkage

5.4.1 Disassembling mower linkage

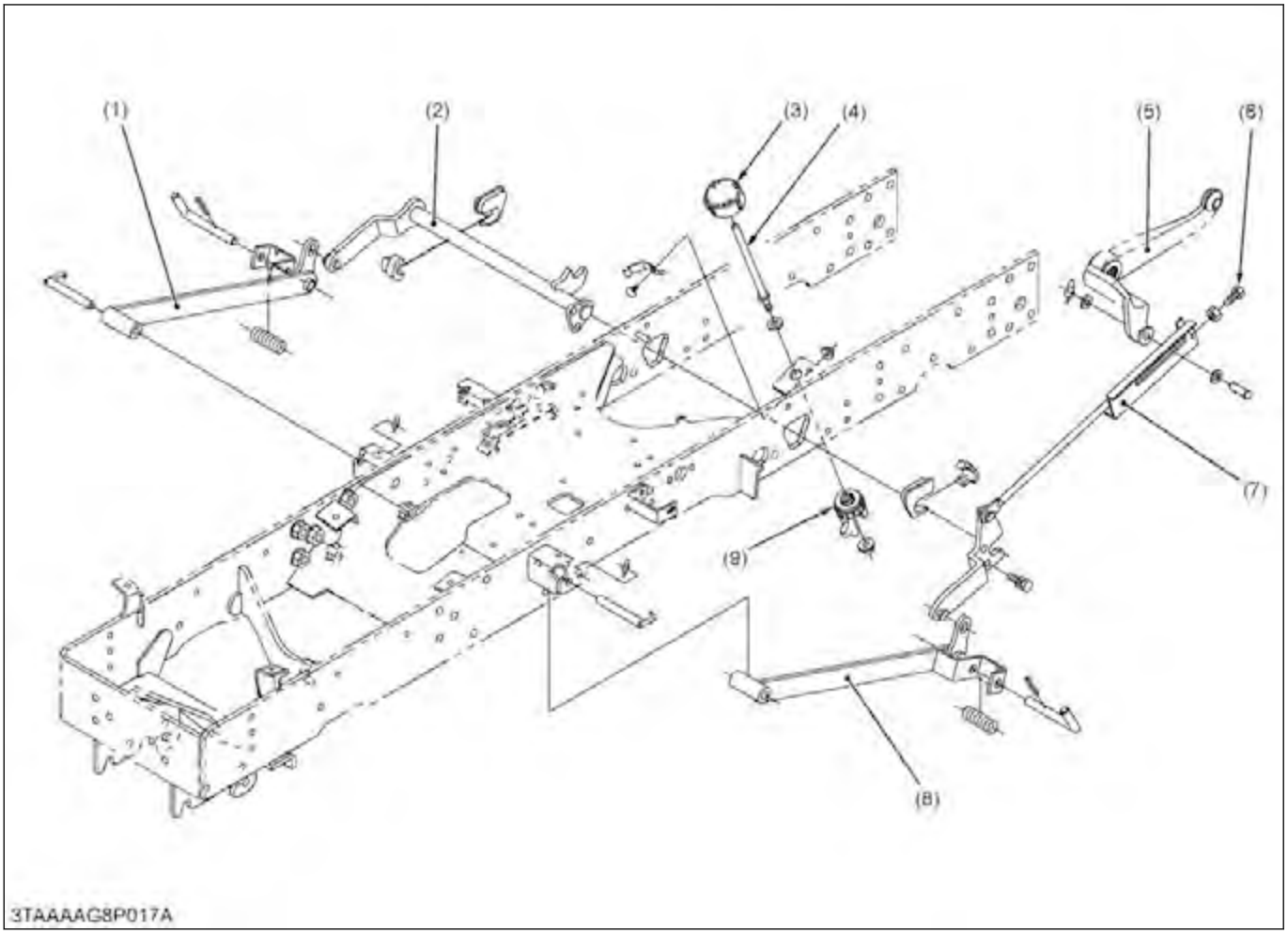

(1) Mower rear link, R.H.
(2) Lift link rear, R.H.
(3) Cutting height adjusting dial knob
(4) Cutting height adjusting rod
(5) Lift arm, L.H.
(6) Link adjusting bolt
(7) Lift link rear, L.H.
(8) Mower rear link, L.H.
(9) Adjusting cam

1. Remove the clevis pin and remove the lift link rear L.H. (7).
2. Remove the pin and remove the mower rear links (1), (8).
3. Remove both side of boss and remove the lift link rear R.H. (2).
4. Remove the cutting height adjusting dial knob (3).
5. Remove the nut and remove the adjusting cam (9) and cutting height adjusting rod (4).

(When reassembling)

- Adjust the length of the link adjusting bolt.

https://truckmanualshub.com/

5.5 Control valve (Front loader)

5.5.1 Removing battery

WARNING

To avoid serious injury or death:

- **When disconnecting the battery cables, disconnect the negative cable from the battery first.**
- **When connecting, connect the positive cable to the battery first.**

1. Remove the under panel (1).

(1) Under panel

2. Disconnect the negative cable (3) from the battery (2).
3. Disconnect the positive cable (4) from the battery (2) and remove the battery.

(2) Battery
(3) Negative cable
(4) Positive cable

5.5.2 Removing ROPS

1. Disconnect the R.H and L.H. hazard lamp/turn signals (3), (4) from the wire harness.
2. Remove the upper ROPS (1).

(1) Upper ROPS
(2) R.H. lower ROPS
(3) R.H. hazard lamp/turn signal
(4) L.H. hazard lamp/turn signal
(5) L.H. lower ROPS
(6) Bolt

3. Remove the ROPS mounting bolts (6).
4. Remove the R.H. and L.H. lower ROPS (2), (5).

(When reassembling)

Tightening torque	ROPS mounting bolt	48.0 to 55.9 N·m 4.90 to 5.70 kgf·m 35.5 to 41.2 lbf·ft

5.5.3 Removing seat

1. Disconnect the seat switch connectors.
2. Remove the snap pins (2) to remove the seat (1).

(1) Seat
(2) Snap pin

5.5.4 Removing step

1. Disconnect the upper cruise control rod (1) from the lower cruise control rod.

2. Remove the R.H. and L.H. side covers (2), (7).

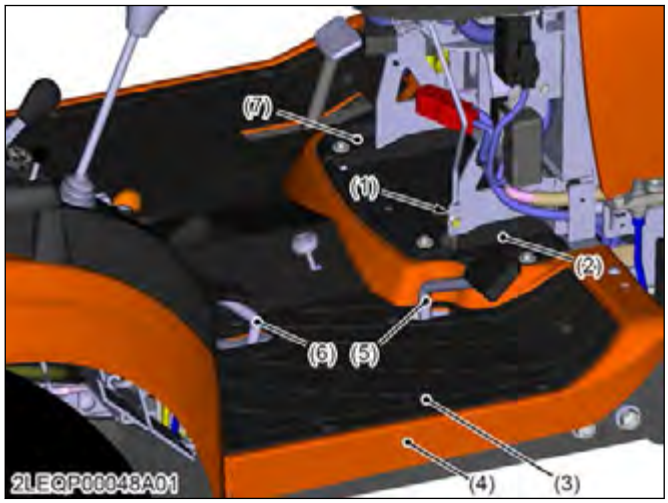

(1) Upper cruise control rod
(2) R.H. side cover
(3) Step mat
(4) Step
(5) Forward HST pedal
(6) Reverse HST pedal
(7) L.H. side cover

3. Remove the step mat (3).
4. Remove the forward and reverse HST pedals (5), (6).
5. Remove the step (4).

5.5.5 Removing fender

1. Disconnect the L.H. and R.H. tail lamps (3), (7) from the wire harness.
2. Disconnect the 12 V outlet (2) from the wire harness.

NOTE

- **12 V outlet connector is near the L.H. tail lamp connector.**

3. Remove the L.H. lever grips (3).

(1) Tail lamp
(2) 12 V outlet
(3) L.H. lever grip
(4) Differential lock pedal cover
(5) Cutting height adjusting dial knob
(6) Lowering speed adjusting knob
(7) R.H lever grip

4. Remove the differential lock pedal cover (4), cutting height adjusting dial knob (5), and lower speed adjusting knob (6).
5. Remove the R.H. lever grips (7).
6. Remove the R.H. lever guide (8) and R.H. handrail (10).
7. Remove the L.H. lever guide stay nut.

(8) R.H. lever guide
(9) Fender
(10) R.H. handrail

8. Remove the fender (9).

5.5.6 Removing control valve

1. Disconnect the hydraulic hoses (2).
2. Disconnect hydraulic pipes (4).

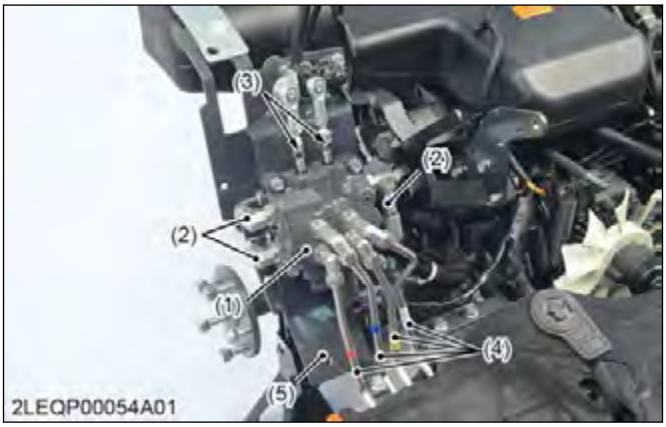

(1) Control valve
(2) Hydraulic hose
(3) Rod
(4) Hydraulic pipe
(5) Valve stay

3. Disconnect the rods (3).
4. Remove the control valve (1) from the valve stay (5).

(When reassembling)

IMPORTANT

- **After reassembling a valve, check for oil leakage by starting up engine.**

https://truckmanualshub.com/

5.5.7 Disassembling control valve

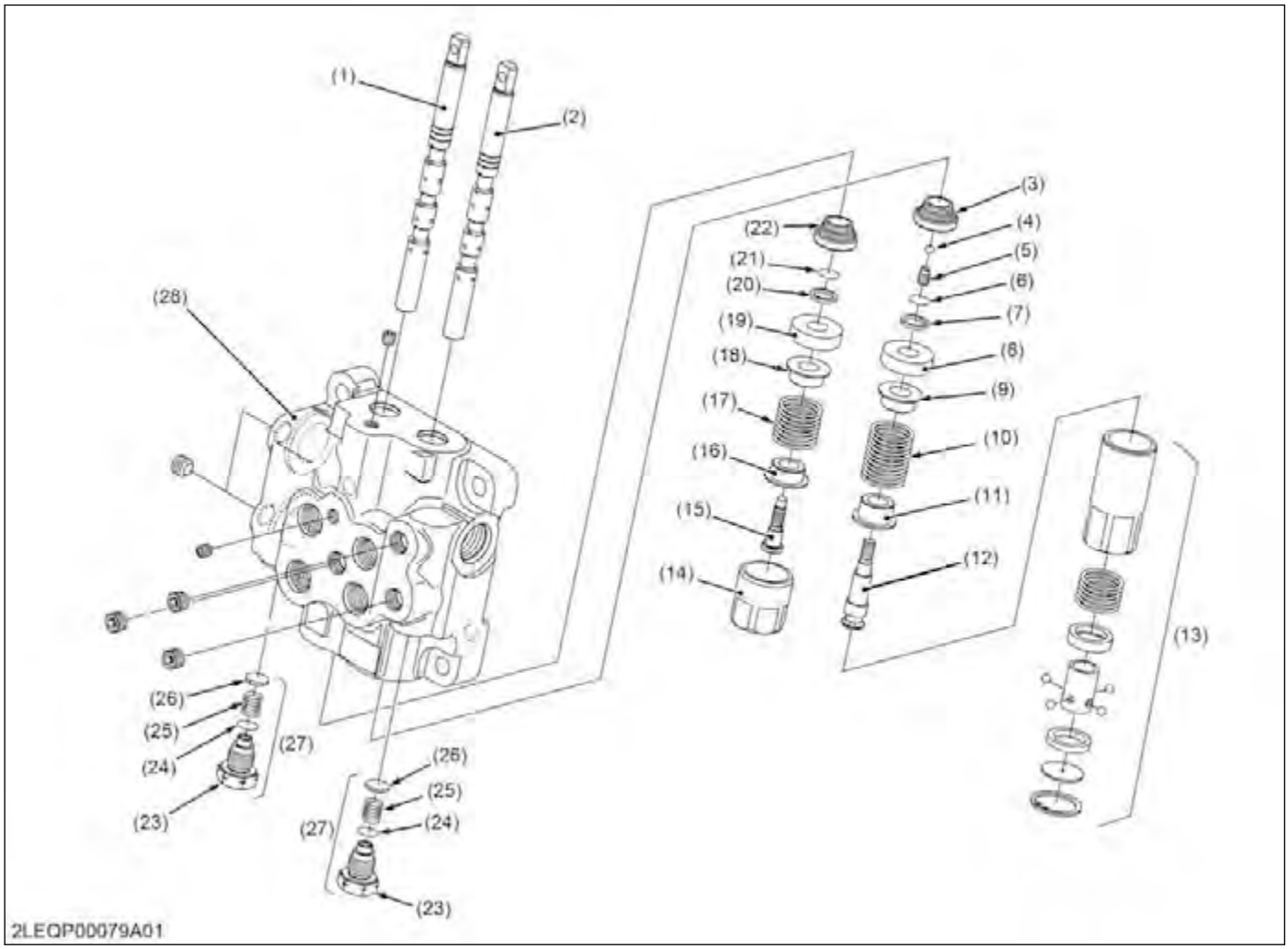

(1) Bucket spool	(8) Collar	(15) Bucket bolt	(22) Packing
(2) Boom spool	(9) Spring holder 1	(16) Spring holder 1	(23) Plug
(3) Packing	(10) Return spring	(17) Return spring 2	(24) O-ring
(4) Ball	(11) Spring holder 2	(18) Spring holder 1	(25) Load check spring
(5) Plug	(12) Detent bolt	(19) Collar	(26) Load check poppet
(6) O-ring	(13) Detent plug assembly	(20) Back up ring	(27) Load check valve assembly
(7) Back up ring	(14) Plug	(21) O-ring	(28) Valve body

1. Remove the load check valve assemblies (27).
2. Remove the detent plug assembly (13) and plug (14).
3. Remove the bucket spool (1) with parts (15) to (22) from the valve body (28).
4. Remove the boom spool (2) with parts (3) to (12) from the valve body.

(When reassembling)
- Clean all parts with a suitable solvent, and dry with a lint-free cloth or air.
- Visually inspect all parts for damage.
- When installing the spools into the valve body, be careful not to damage the O-rings.

6. Servicing

6.1 Hydraulic pump

6.1.1 Checking clearance between tip of gear tooth and casing

1. Measure the gear O.D. with an outside micrometer.

Gear O.D.	Factory specification	33.520 to 33.530 mm 1.3197 to 1.3200 in.

2. Measure the casing I.D. with a cylinder gauge and calculate the clearance.

Case I.D.	Factory specification	33.570 to 33.577 mm 1.3217 to 1.3219 in.

3. If the clearance exceeds the allowable limit, replace the assembly.

Clearance between tip of gear tooth and casing	Allowable limit	0.15 mm 0.0059 in.

6.1.2 Checking clearance between bushing and shaft

1. Measure the gear shaft O.D. with an outside micrometer.

Shaft O.D.	Factory specification	14.970 to 14.980 mm 0.58937 to 0.58976 in.

2. Measure the bushing I.D. with a cylinder gauge and calculate the clearance.

Bushing I.D.	Factory specification	15.000 to 15.061 mm 0.59056 to 0.59295 in.

3. If the clearance exceeds the allowable limit, replace it.

Clearance between bushing and shaft	Factory specification	0.020 to 0.091 mm 0.00079 to 0.0035 n.
	Allowable limit	0.12 mm 0.0047 in.

6.1.3 Checking side plate thickness

1. Measure the side plate thickness with an outside micrometer.

2. If the thickness is less than the allowable limit, replace it.

Side plate thickness	Factory specification	2.48 to 2.50 mm 0.0977 to 0.0984 in.
	Allowable limit	2.40 mm 0.094 in.

6.2 Hydraulic cylinder

6.2.1 Checking hydraulic cylinder bore

1. Check the cylinder internal surface for scoring or damage.
2. Measure the cylinder I.D. with a cylinder gauge.

3. If the measurement exceeds the allowable limit, replace the hydraulic cylinder block.

Cylinder I.D.	Factory specification	80.05 to 80.15 mm 3.152 to 3.155 in.
	Allowable limit	80.20 mm 3.157 in.

6.2.2 Checking hydraulic arm shaft bushing

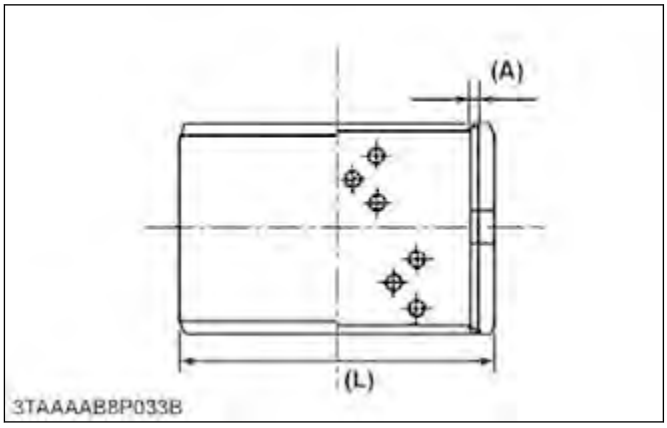

(A) Alloy thickness (L) Outside diameter

Hydraulic arm shaft O.D.	Factory specification	L.H.	31.925 to 31.950 mm 1.2569 to 1.2578 in.
		R.H.	29.925 to 29.950 mm 1.1782 to 1.1791 in.

1. Visually inspect the DX bushings for signs of wear or damage.
   The DX bushing tends to show concentrated wear.
2. If the DX bushing is worn beyond the alloy thickness (A), replace it.

(Reference)

Hydraulic arm shaft bushing	Alloy thickness (A)	0.57 mm 0.022 in.

https://truckmanualshub.com/

https://truckmanualshub.com/

8. ELECTRICAL SYSTEM

https://truckmanualshub.com/

MECHANISM

1. Wiring diagram of BX tractor

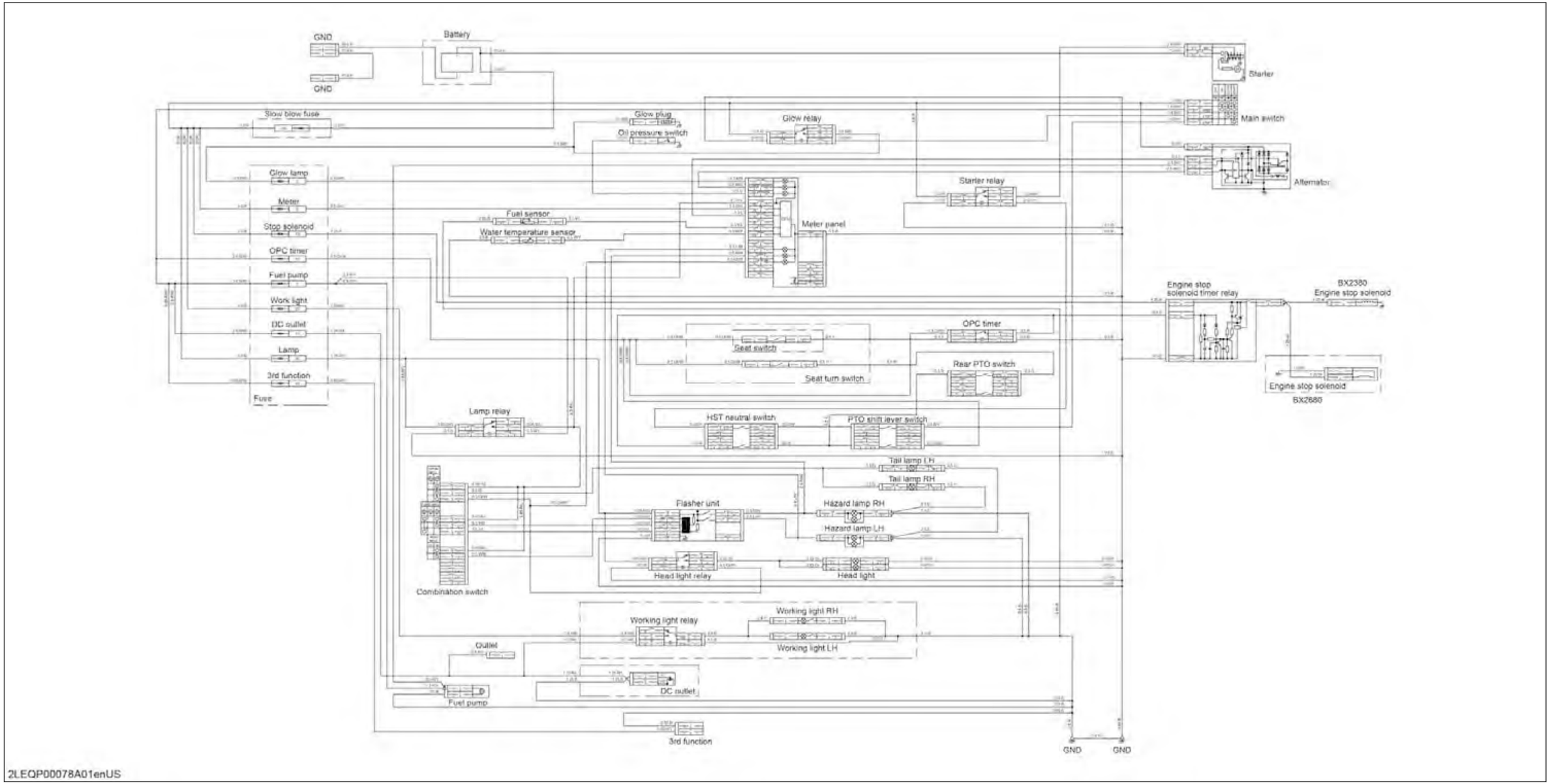

2. Electrical connector chart

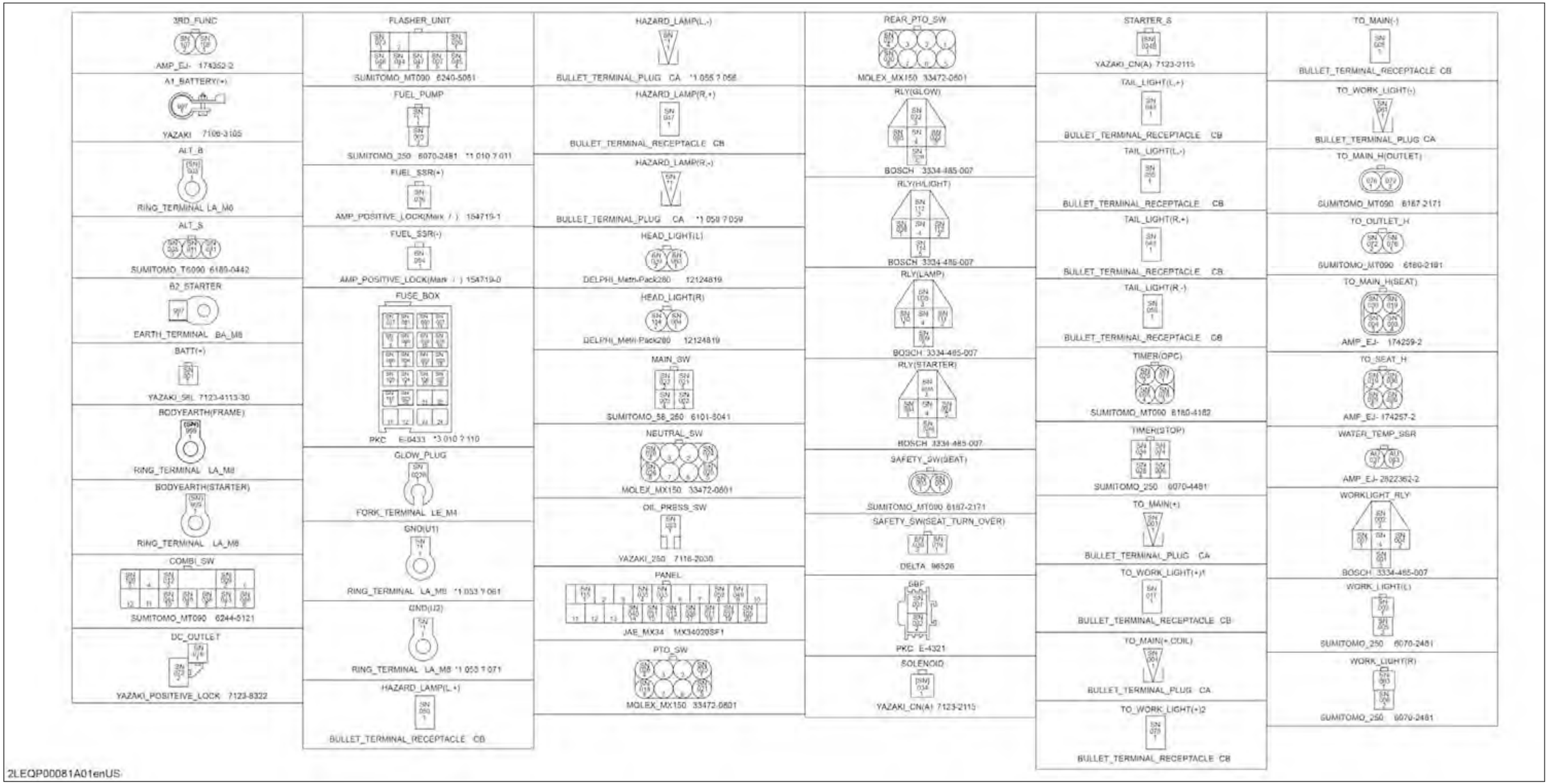

https://truckmanualshub.com/

3. Reading electrical circuit diagrams

3.1 How to read wiring diagram

Electrical wiring chart symbols for harnesses and wires

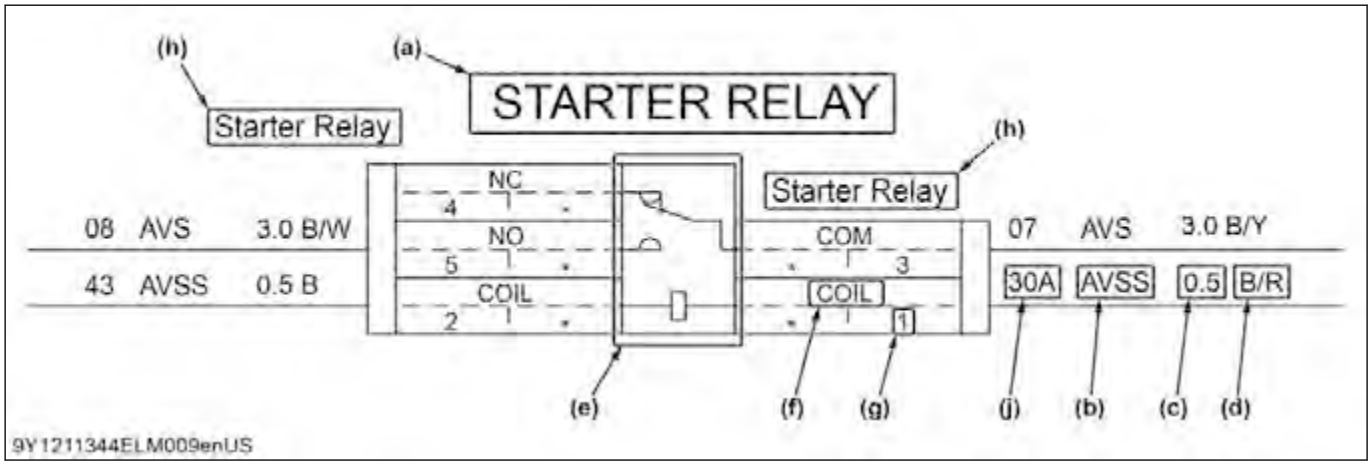

	Item	(Example) Contents of illustration	Reference
(a)	Name of part	STARTER RELAY	
(b)	Wire specification code	All use (common)	
(c)	Wire size	0.50 mm^2	
(d)	Wire color	Black/Red	Wire color page
(e)	Unit symbol	Relay	Unit symbol page
(f)	Pin name	Coil	
(g)	Pin No.	1	
(h)	Connector name	Starter relay	Connector diagram
(i)	Wire number	30 A	

Color of wiring

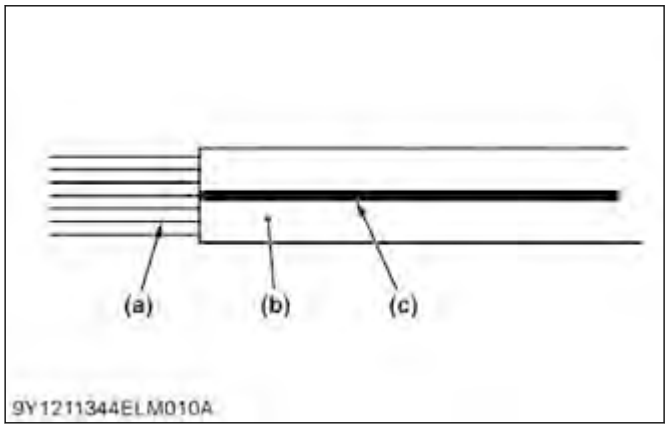

(a) Wire size (mm^2) (b) Insulation base color (c) Stripe color

(Ex.)
1.25-Y/R means :
1.25 : Wire size (mm^2)
Y : Base color (yellow)
R : Stripe color (red)

Color of wiring	Color code
Black	B
Green	G
Blue	L
Pink	P
Red	R
White	W
Yellow	Y
Brown	BR
Gray	GY
Light green	LG
Orange	OR
Sky blue	SB

https://truckmanualshub.com/

Unit symbol

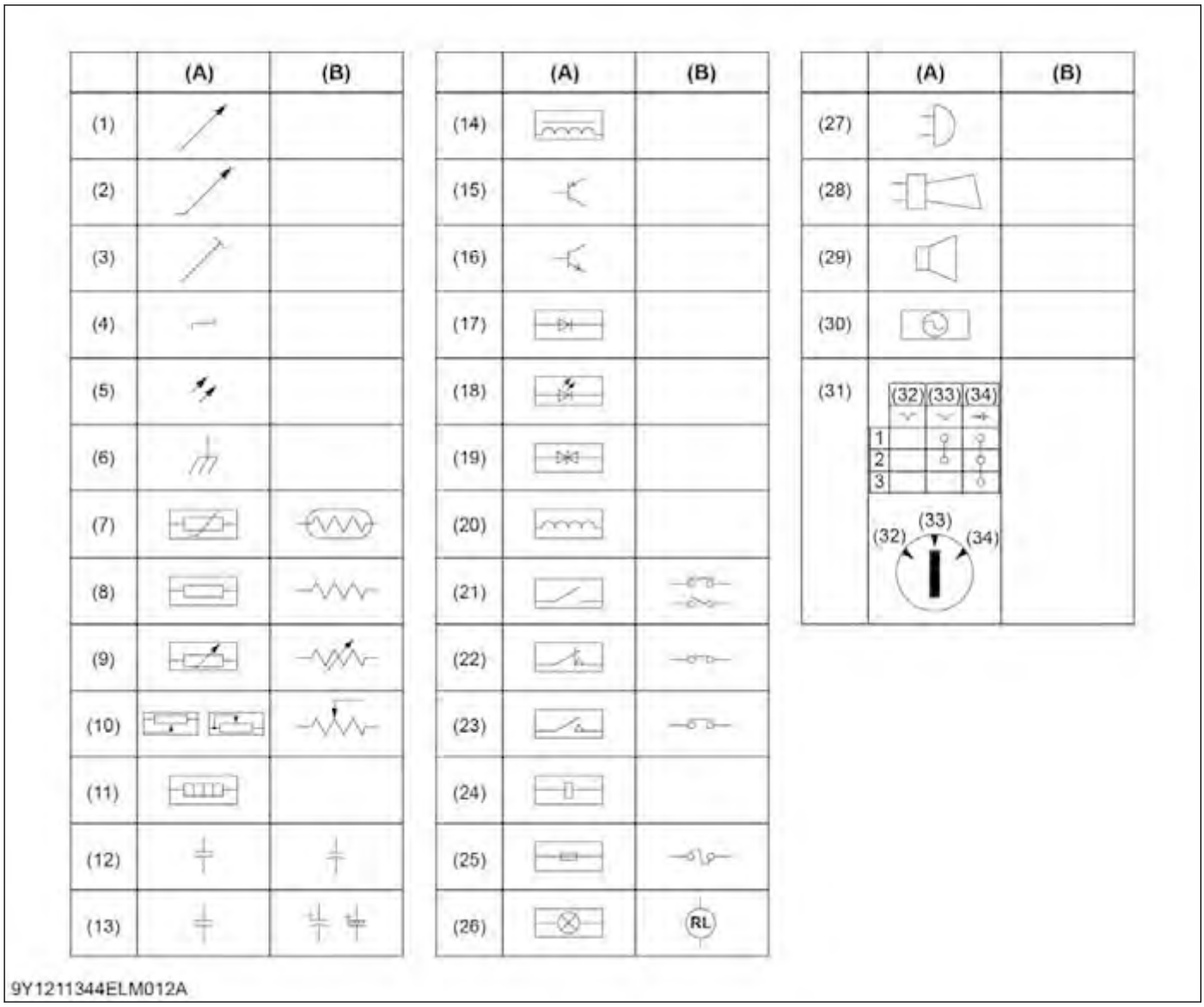

(1) Variable
(2) Non-linear variable
(3) Fixed setting
(4) Step variable
(5) Non ionizing radiation (NIR)
(6) Body GND
(7) Thermistor
(8) Resistor
(9) Variable resistor
(10) Potentiometer with sliding contact
(11) Heating element
(12) Condenser
(13) Electrolytic capacitor
(14) Magnetic core inductance
(15) PNP transistor
(16) NPN transistor
(17) Semiconductor diode
(18) Light-emitting diode (LED)
(19) Two-way breakdown diode
(20) Coil
(21) a-Contact
(22) Auto resetting b-Contact
(23) Auto-resetting a-Contact
(24) Relay coil
(25) Fuse
(26) Lamp
(27) Buzzer
(28) Horn
(29) Speaker
(30) AC voltage source
(31) Switch
(32) OFF (no auto reset)
(33) ON
(34) START (auto reset)
(A) New symbol
(B) Old symbol

3.2 Layout of connector diagrams

Connector arrangement sequence

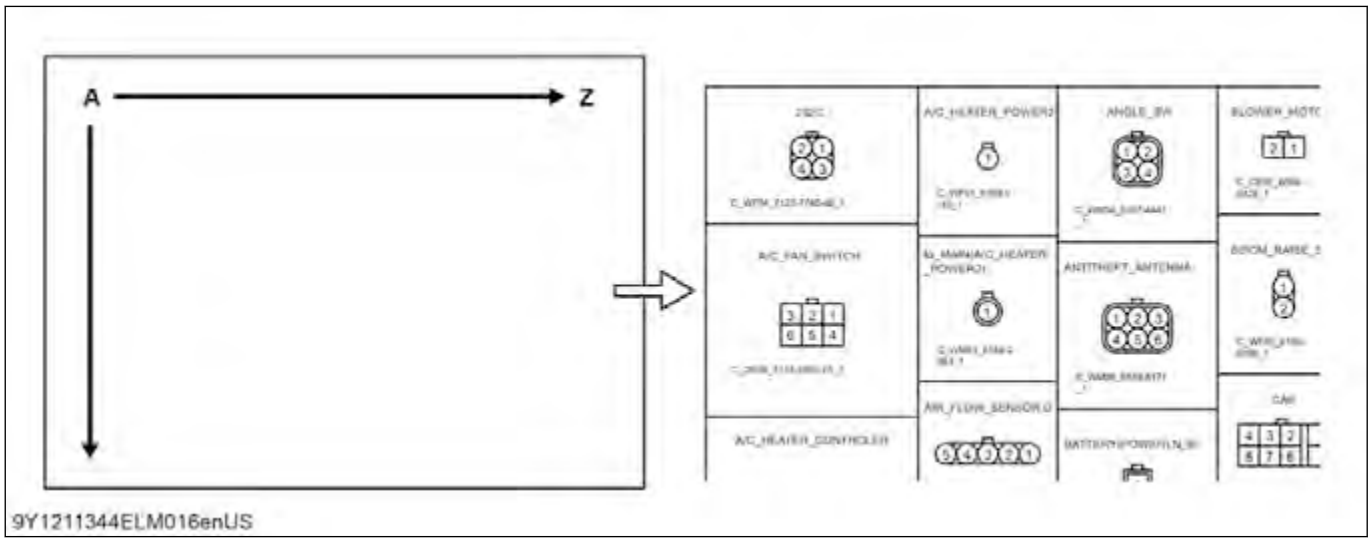

Depiction of connectors

NOTE

- **In principle, the connector locking part is shown on the top side.**
- **Female connector terminal numbers start from 1 in the top right corner, looking at the connecting face.**
- **Male connector terminal numbers start from 1 in the top left corner.**

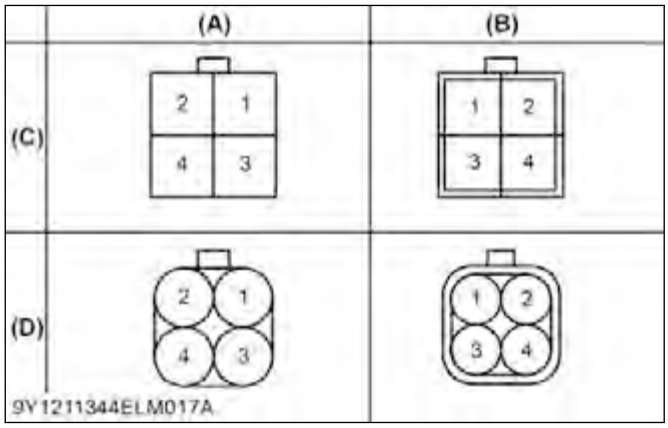

(A) Female connector terminal (B) Male connector terminal (C) Not waterproof (D) Waterproof

https://truckmanualshub.com/

3.3 Precautions on handling electrical connectors

1. When disconnecting connectors, grasp the body of the connector and pull it out; do not pull on the wiring harness. If the connector is the locking type, release the lock and then pull to disconnect.
2. When removing a connector's plastic cover (for water protection) to inspect it, be careful not to let any water get in the connector. If water does get in, dry it thoroughly before reassembling the connector and putting its plastic cover securely in place.
3. Straighten any bent connector terminals and make sure none are sticking out or missing. Also make sure there is no corrosion on the connector's terminals before connecting it.
4. When connecting a locking connector, be sure to press it in until you hear it click and then pull gently on the harness close to the connector and make sure the harness does not come out.

4. Starting system

4.1 Electrical circuit of starting system

When the main switch is turned to the **GLOW** position, the terminal BAT is connected to the terminal ON and AC. The glow plugs become red-hot, and the preheat indicator lamp also lights on while preheating.
When the main switch is then turned to the **START** position with the safety switches on, the terminal BAT is connected to the terminals GLOW and ST. Consequently, battery current flows to the starter motor and start the engine.
The main switch automatically returns to the **ON** position, the terminal BAT is connected only to the terminal GLOW, thereby causing the starting circuit to be opened, stopping the starter motor.
When the main switch turned from the **ON** position to the **OFF** position, the fuel cut-off solenoid moves the fuel injection pump control rack to the **no fuel injection** position and stops the engine.
The OPC timer equipped is the operator presence control (OPC) system which automatically stops the engine in approximately one second when operator stands from the seat while shifting the PTO clutch lever and range gear shift lever.

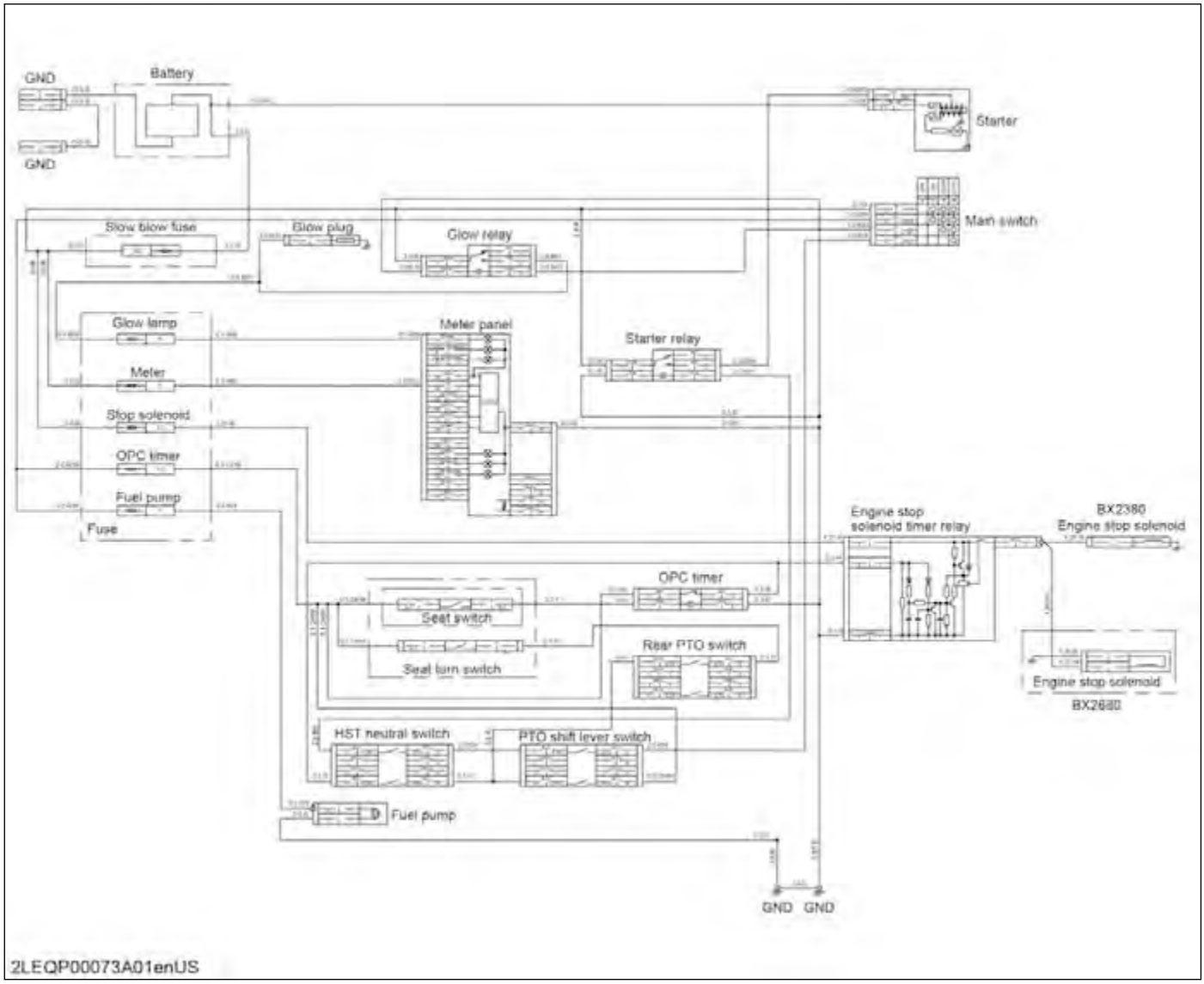

4.2 Function of relay

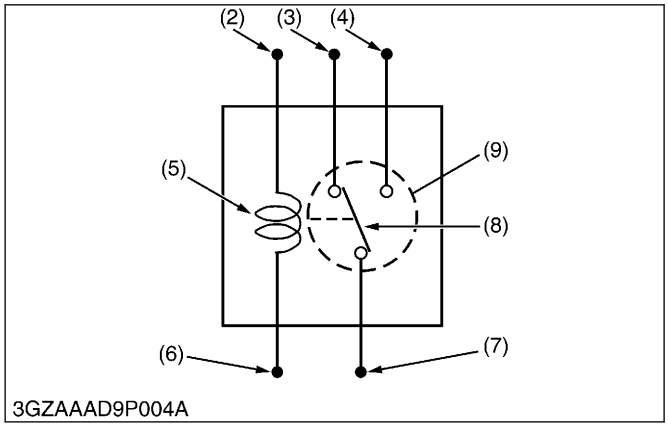

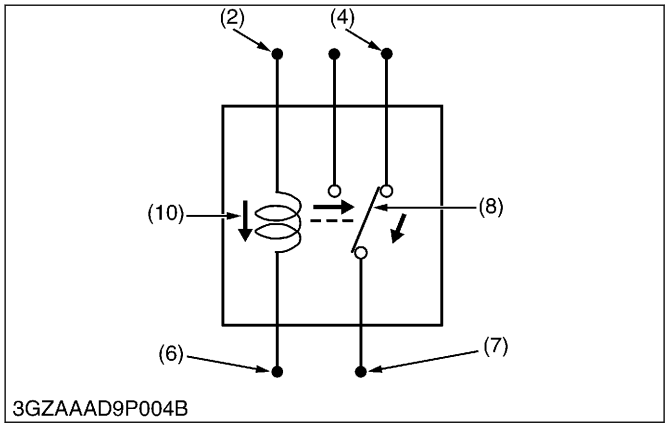

(1) Relay
(2) Terminal 2
(3) Terminal 4
(4) Terminal 5
(5) Relay winding
(6) Terminal 1
(7) Terminal 3
(8) Contact lever
(9) Mechanical contact points
(10) Winding (Energized)

A relay (1) is an electrically operated switch. Relays are used where it is necessary to control a circuit by a low-power signal (with complete electrical isolation between control and controlled circuits), or where several circuits must be controlled by one signal.
Current flowing from switch to relay winding (5) cause **ON (Close)** or **OFF (Open)** of mechanical contact points (9).
When current is applied to the winding (energized) (10), a magnetic field pushes the contact lever (8) and normally open terminal is connected.

4.3 Function of starter

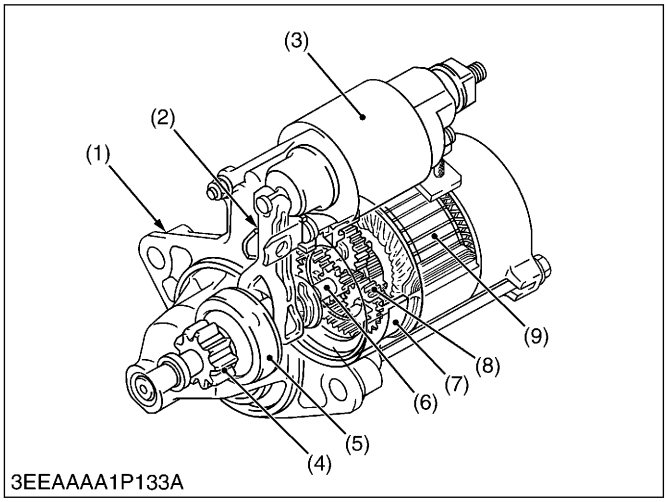

(1) Front bracket
(2) Drive lever
(3) Magnetic switch
(4) Pinion gear
(5) Overrunning clutch
(6) Gear shaft
(7) Internal gear
(8) Pinion gear
(9) Armature shaft

The reduction system is used planetary gears, and the speed of gear shaft (6) is reduced to approximately one-fifth of the armature shaft (9).
The pinion gear (4) is pushed against the ring gear with the overrunning clutch (5) by the drive lever (2).

4.4 Function of glow plug

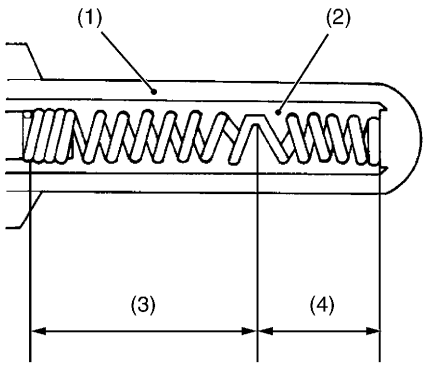

3TAAAAB9P005A

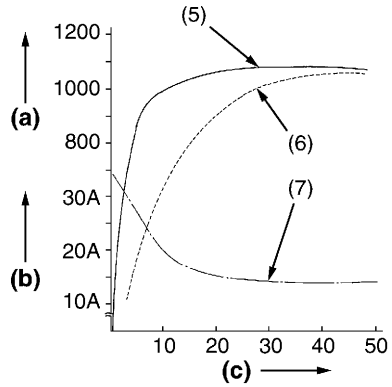

3TAAAAB9P006A

(1) Sheath tube
(2) Insulation powder
(3) Heater also functioning as a resistor
(4) Heater
(5) Super glow plug
(6) Conventional quick-heating type glow plug
(7) Glow plug current
(a) Glow plug temperature (℃)
(b) Current (A)
(c) Time (Sec.)

This plug is a two-material type QGS (Quick Glow System) for quick temperature rise, and has self-controlling function as well as excellent durability.
The heater (4) connected in series to the heater (3), which also functions as the resistor, is incorporated in the sheath tube (1) of the super glow plug.
The resistance of this heater (3) cum resistor is small when the temperature is low, while the resistance becomes large when the temperature rises.
Therefore, because sufficient current is flown to the heater (4) during the initial period of energization, the temperature rises quickly and the resistance grows with the rise in the temperature of the resistor, the flowing current is reduces to prevent the heater (4) from being heated.
The ignition point is in the area of 2 to 3 mm (0.079 to 0.118 in.) from the tip of the plug in order to reduce its projection into the combustion chamber.

4.5 Function of safety switch

The safety switch is electrically closed in normal condition (normally closed type). The switch operates as sensor detecting and transmitting the position of HST pedal, PTO lever, independent PTO lever, and seat to engine stop solenoid.

Type of switch	Safety switch name	Number of switch contact
Normal open type	Seat switch	1
	Seat turnover switch	1
	PTO shift lever switch	1
	Independent PTO lever switch (Rear PTO switch)	2
	HST pedal neutral switch	2

4.6 Function of fuel pump

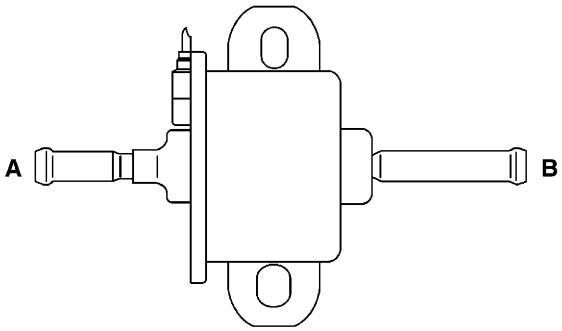

3TAAAAB9P008A

A: Inlet B: Outlet

An electromagnetic fuel pump uses a transistor that causes the pump to start pumping fuel when the main switch is turned to the **ON** position. Therefore, fuel is supplied to the fuel injection pump regardless of engine speed. This pump is driven by the battery. It can therefore be operated even with the engine being stopped.

https://truckmanualshub.com/

5. OPC (Operator Presence Control) system

5.1 Electrical circuit of OPC timer

General electrical circuit of the tractor OPC timer is shown in the figure.

1. When sitting on the operator's seat with the main switch is in the **ON** position, the battery voltage passes to the seat switch and OPC timer (4), and keep the solenoid relay (8).
2. When standing up from the operator's seat, the circuit from the seat switch to the OPC timer is cut. However, if the PTO lever (or the speed control pedal) are set at **NEUTRAL** position, the circuit from the battery to the solenoid relay (8) is formed with the PTO switch (or HST switch).
3. When standing up from the operator's seat while shifting the levers, the circuit from the battery to the solenoid relay (8) is cut, and the engine is stopped by function of the solenoid (9).

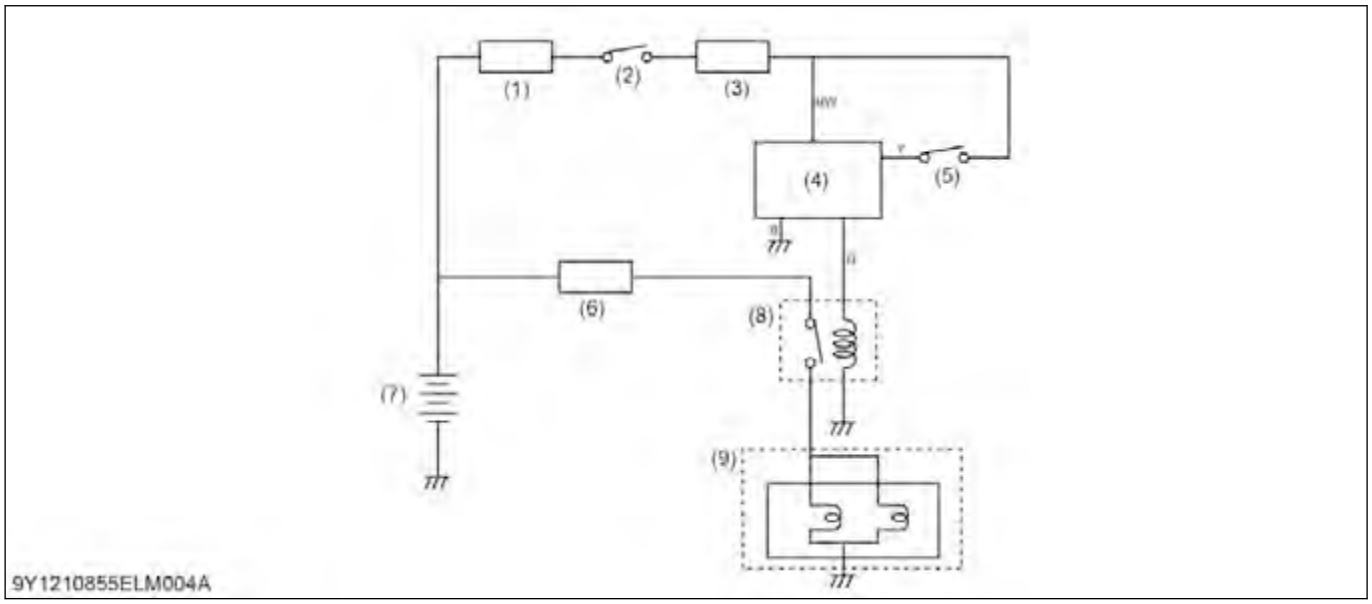

(1) Slow blow fuse
(2) Main switch
(3) Fuse (10 A)
(4) OPC timer
(5) Seat switch (from seat switch ON or OFF)
(6) Fuse (15 A)
(7) Battery
(8) Engine stop solenoid timer relay
(9) Engine stop solenoid

Seat switch

The seat switch has two positions.

When the operator's seat is occupied, the switch contact point is at **ON** position. When the operator's seat is not occupied, its contact point is at **OFF** position.

OPC timer

OPC timer is located electrically at between the seat switch (5) and the solenoid relay (8).

When the current supply from the seat switch (5) is cut, the OPC timer (4) adopted for the OPC system has kept the state of **ON** position for approximately one second.

6. Charging system

6.1 Electrical circuit for charging system

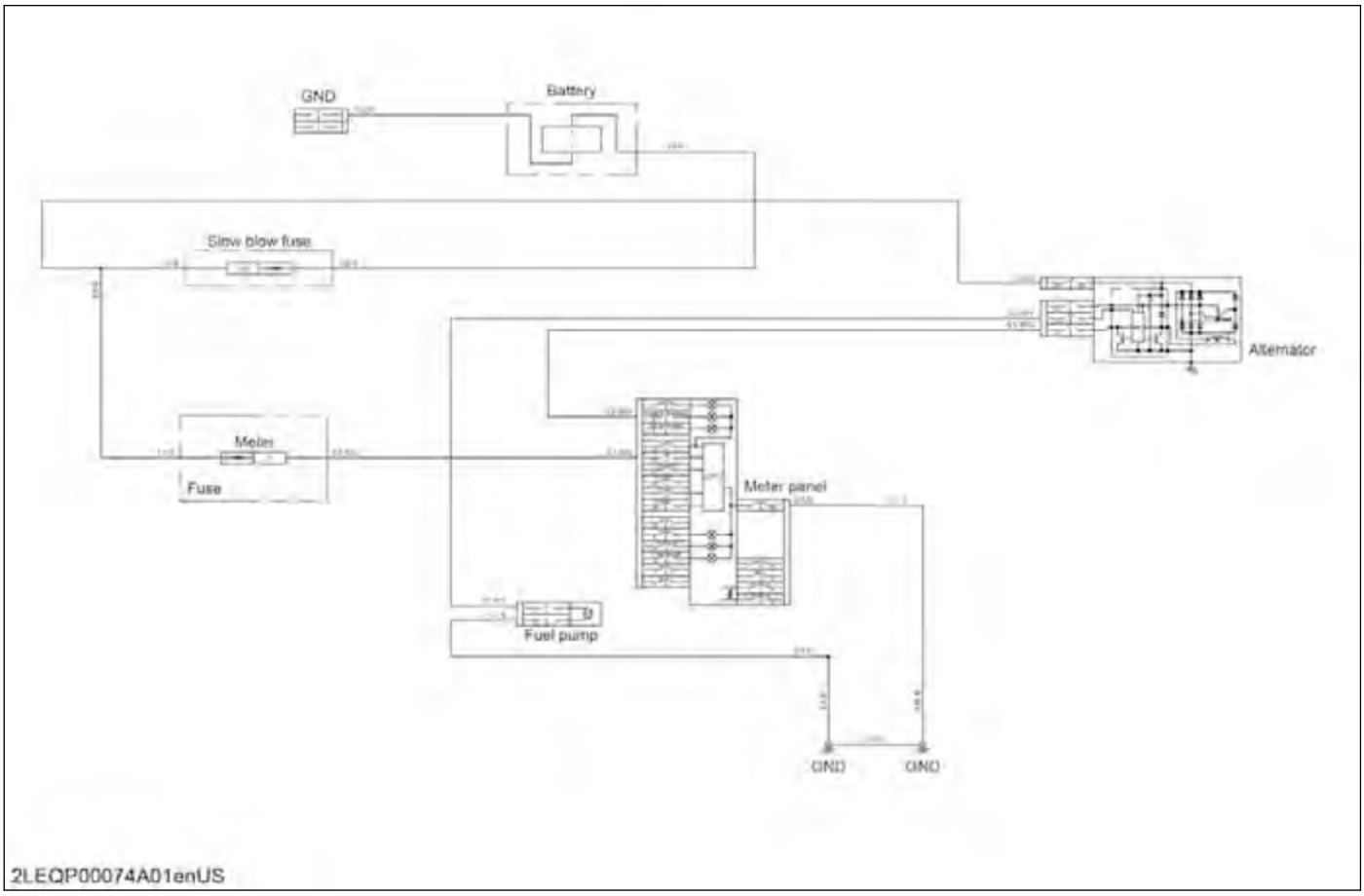

https://truckmanualshub.com/

6.2 Function of IC regulator (3P connector type)

3P connector is connected to the IC regulator. 3P connector consists of three leads, L (blue) lead (1), RY (red / yellow) lead (2), and WR (white / red) lead (3).
L (blue) lead (1) is a lead to transmit the pulse from the alternator to hour meter and tachometer. When the main switch is in the **ON** position, the hour meter indicates operated hours.
While the engine operates, the tachometer indicates the present engine revolutions.
RY (red / yellow) lead (2) is a lead to chassis.
WG (white / green) lead (3) is a lead to the charge lamp.

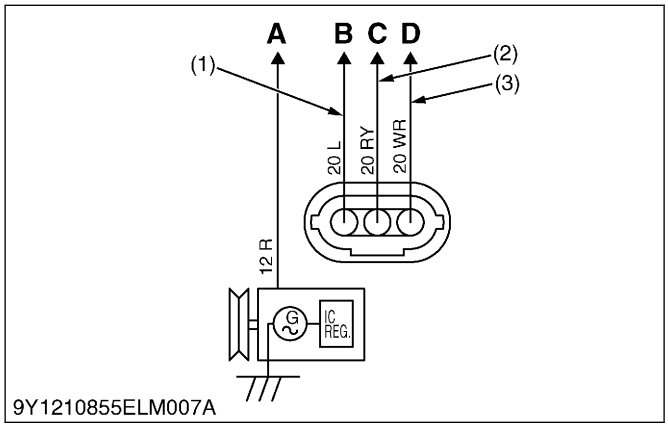

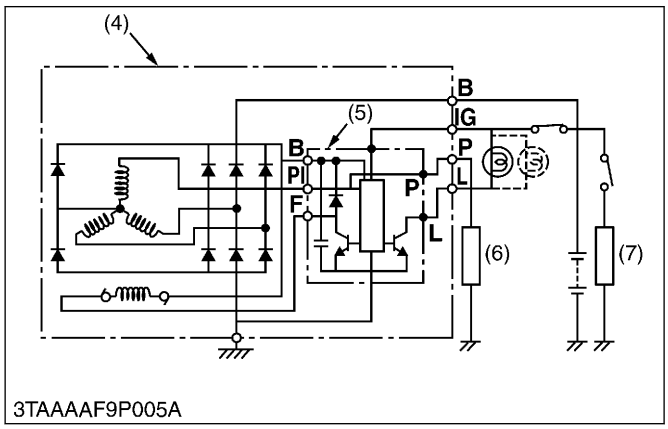

(1) L (blue) lead
(2) RY (red / yellow) lead
(3) WG (white / green) lead
(4) Alternator assembly
(5) IC regulator
(6) Load
(7) Load
A: To the battery
B: To hour meter and tachometer
C: To main switch
D: To charge indicator

7. Lighting system

7.1 Electrical circuit for lighting system

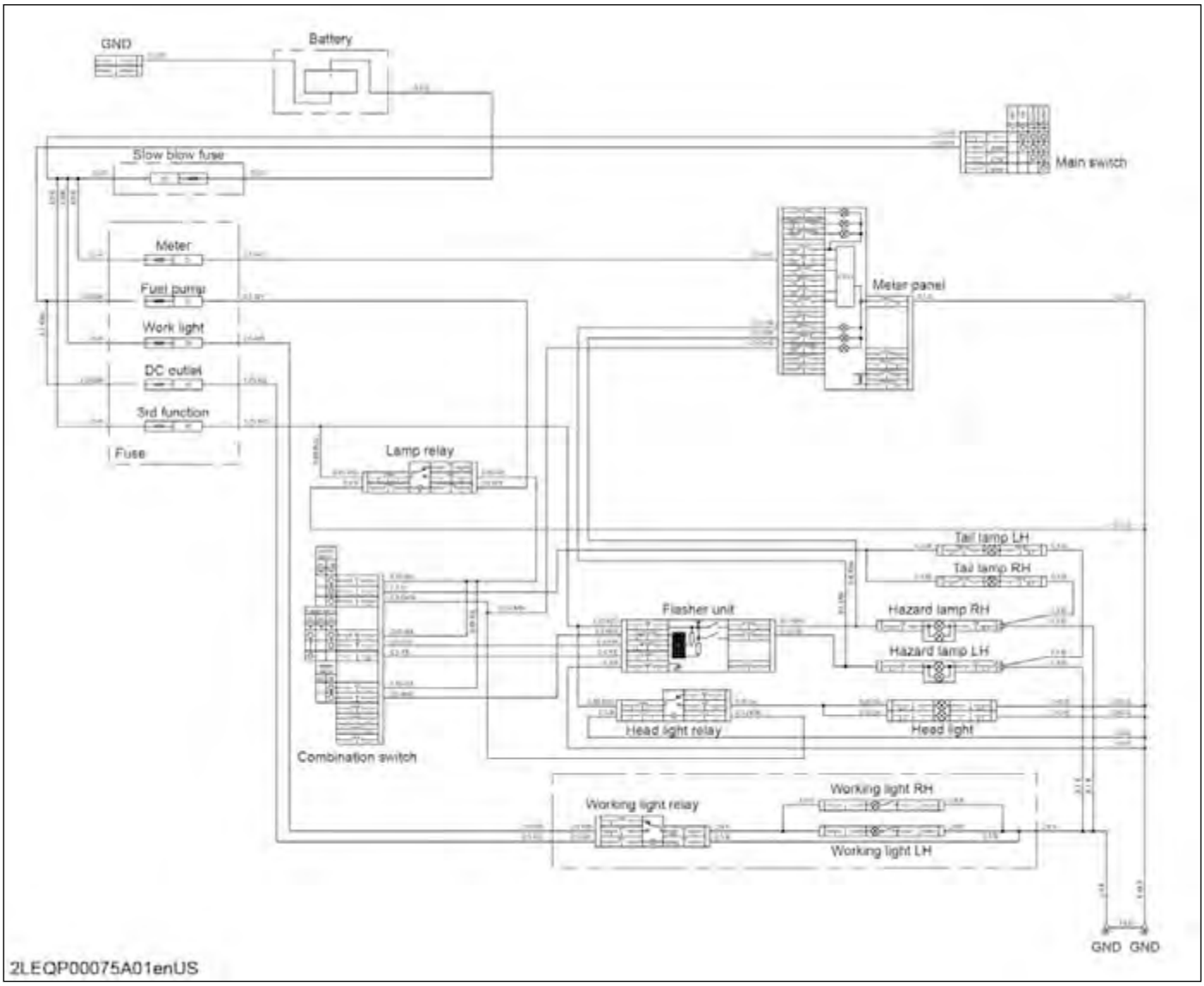

https://truckmanualshub.com/

8. Gauges

8.1 Electrical circuit of gauge system

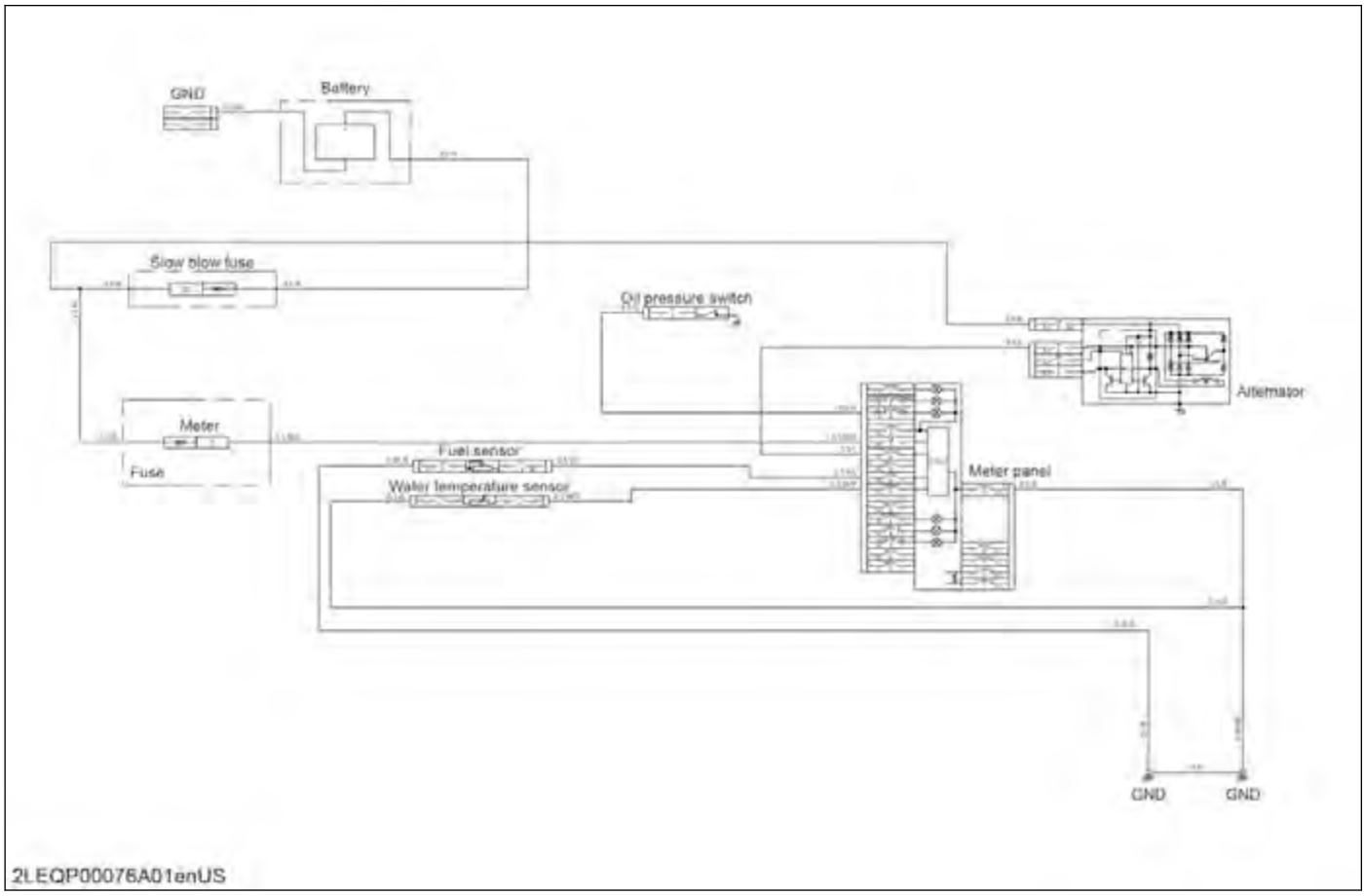

8.2 Meter panel

8.2.1 Function of hour meter

The meter panel on this machine is equipped with a digital hour meter.
The hour meter indicates in five digits the operated hours when the main switch is turned to the **ON** position.

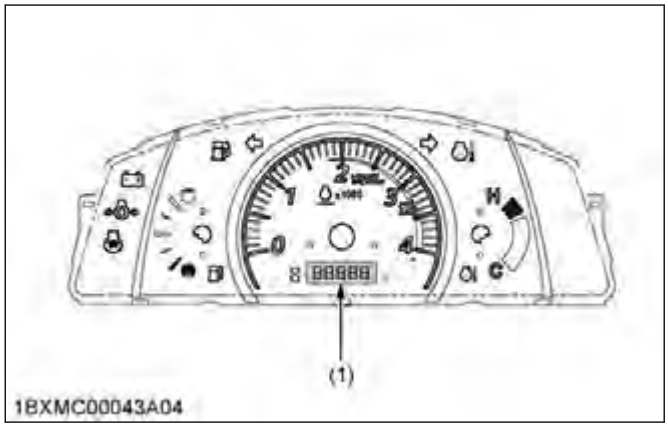

(1) Hour meter

Tractor operated hours	The step that the display operates
From 0.0 to 9999.9 Hr.	Every 0.1 Hr. step
10000 to 99999 Hr.	Every 1 Hr. step
After 99999 Hr.	99999 Hr. stays on

8.2.2 Function of tachometer

The meter panel on this machine is equipped with a tachometer.
When the key switch is in the **ON** position and the engine operates, the tachometer indicates the engine revolution per minute.
The meter picks up the voltage from the IC regulator located in the alternator.
The IC regulator sends a signal of the engine revolution to the meter.
The meter calculates the signal. It changes and indicates the signal to the engine revolution in cooperation with the voltage.

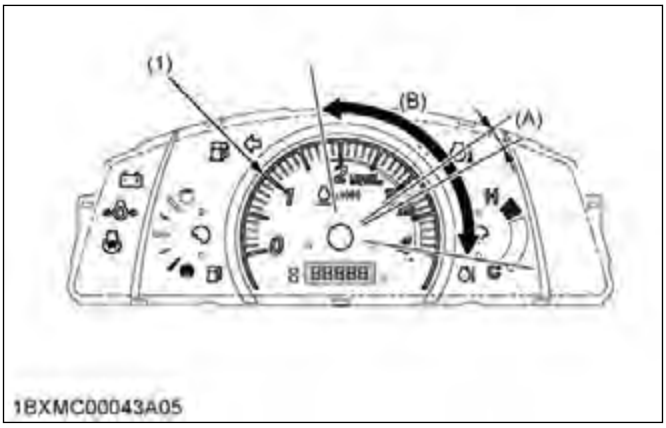

(1) Tachometer
(A) Yellow range
(B) Orange range

Implement	Recommended engine speed
PTO 540	Use within the yellow range (A)
Loader	Use within the orange range (B)

8.2.3 Function of fuel gauge

The meter panel on this machine is equipped with a fuel gauge.
The fuel level gauge and fuel level sensor are connected by the wire harness.
The fuel gauge detects the resistance from the fuel level sensor and indicates the fuel level in the fuel tank.

- When the fuel is close to empty level, the low fuel indicator lamp comes on.

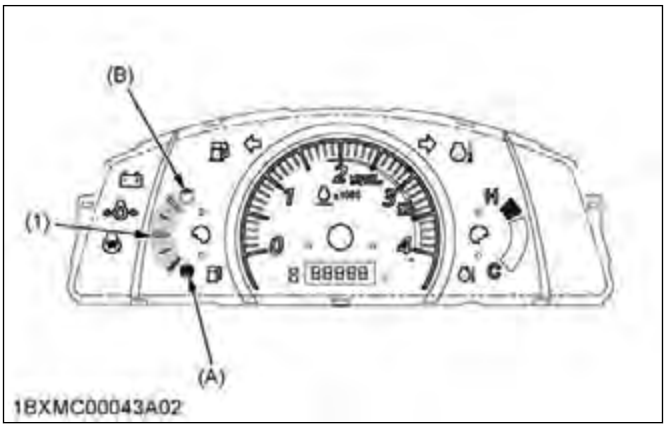

(1) Fuel gauge
(A) Empty
(B) Full

8.2.4 Function of coolant temperature gauge

The meter panel on this machine is equipped with a coolant temperature gauge.
The coolant temperature gauge and coolant temperature sensor are connected by the wiring harness.
The coolant temperature gauge detects the resistance from the coolant temperature sensor.

https://truckmanualshub.com/

The coolant temperature gauge indicates the coolant temperature in the thermostat housing.
The relationship between the resistance of coolant temperature sensor and reading on the coolant temperature gauge is as follows.

- When the coolant temperature stays at 123 ℃ (253 ℉), the coolant temperature indicator lamp comes on.
- When the coolant temperature stays below 118 ℃ (244 ℉), the coolant temperature indicator lamp turns off.

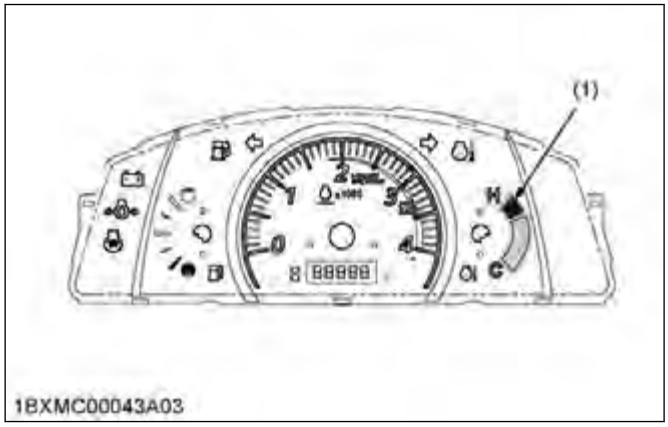

(1) Coolant temperature gauge

8.3 Function of fuel level sensor

The remaining fuel quantity is detected by the fuel level sensor installed in the fuel tank and indicated on the fuel gauge. For detection, a float and a resistor are used.
As the float lowers, the resistance of the variable resistor varies.

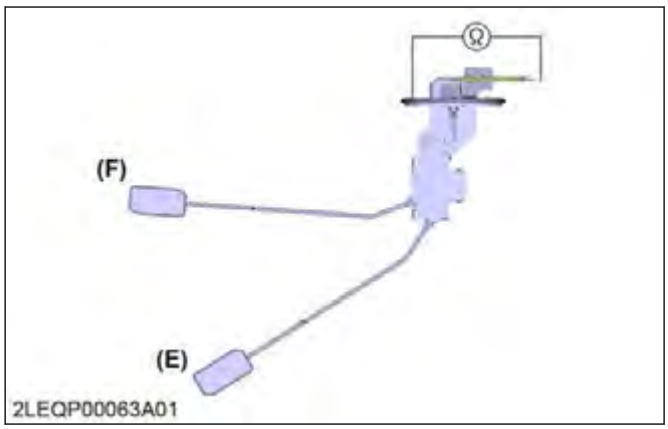

(E) Empty (F) Full

8.4 Function of coolant temperature sensor

The coolant temperature sensor is installed to the water pump housing, and its tip is in touch with the coolant. It contains a thermistor (4) whose electrical resistance decreases as the temperature increases.

Current varies with changes in the coolant temperature. When the coolant temperature is increased, the electrical resistance will become small, and when the coolant temperature is decreased, it will become large.

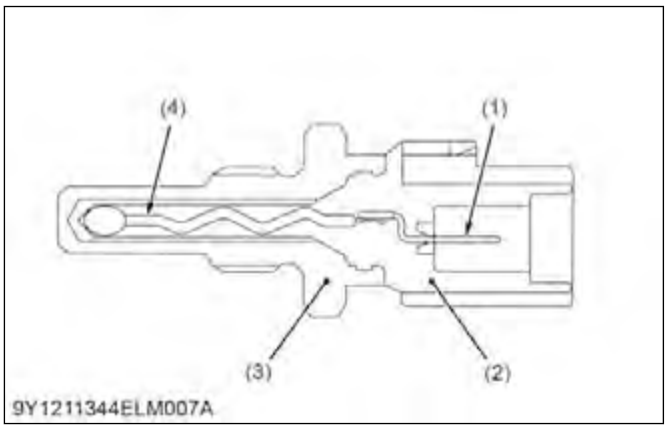

(1) Terminal (3) Body
(2) Insulator (4) Thermistor

8.5 Function of oil pressure switch

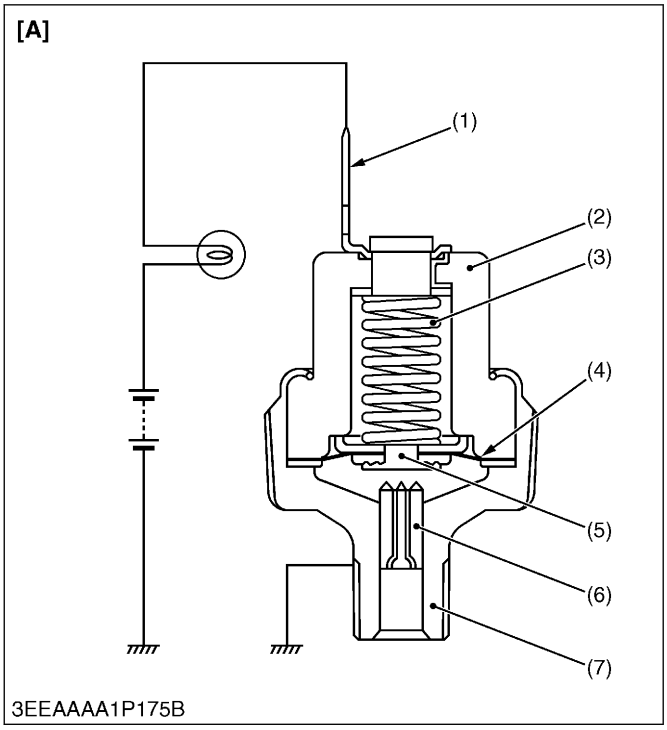

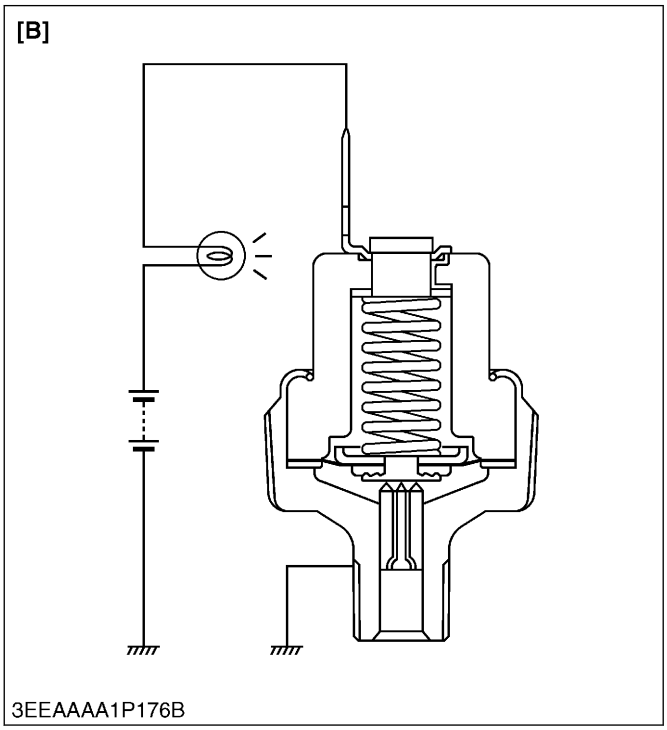

(1) Terminal
(2) Insulator
(3) Spring
(4) Diaphragm
(5) Contact rivet
(6) Contact
(7) Oil switch body
[A] At proper oil pressure
[B] At lower oil pressure

The oil pressure switch is mounted on the cylinder block and is led to the lubricating oil passage. When the oil pressure falls below the specified value, the oil pressure-warning lamp lights.

[A] At the proper oil pressure

When the engine is started and as the proper oil pressure builds, the diaphragm (4) is pushed up. This separates the contact rivet (5) and breaks the circuit, causing the lamp to go out.

[B] At lower oil pressure, 49 kPa (0.50 kgf/cm^2, 7.1 psi) or less

If the oil pressure drops, the resulting deflection of the diaphragm (4) will close the contact rivet (5) and again complete the circuit. The lighted lamp warns that the pressure of the lubricating system has dropped below the pressure setting.

https://truckmanualshub.com/

9. Others

9.1 Electrical circuit for accessory

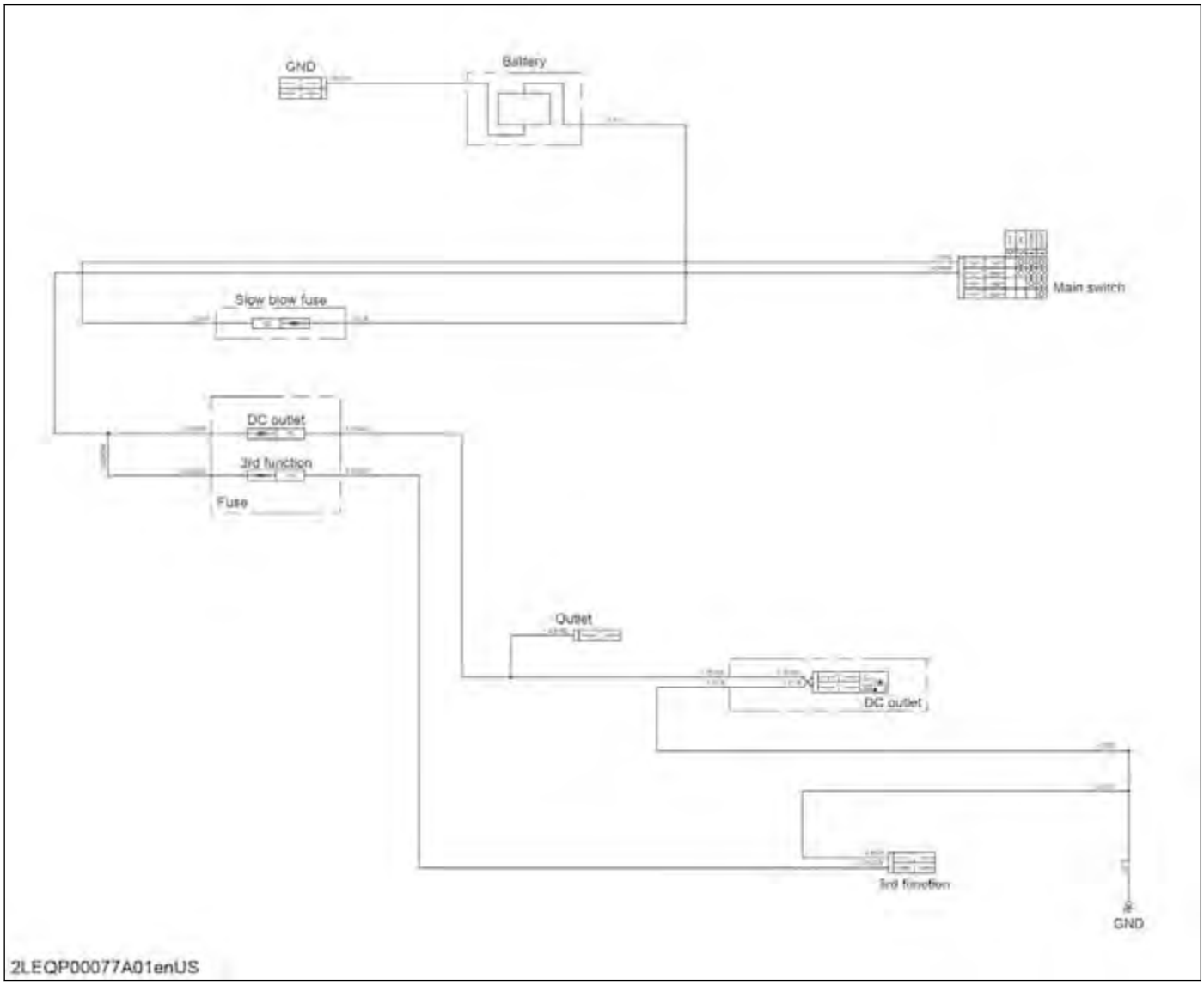

9.2 Function of DC outlet

IMPORTANT

- **Do not use as cigarette lighter.**
- **Do not use when wet.**

This machine is equipped with a DC outlet. It is located inside of the L.H. lever guide compartment.
The capacity of the outlet is 12 V / 120 W. Electrical device's such as an auxiliary light, mobile phone battery charger, or other 12 V components can be used with the outlet.

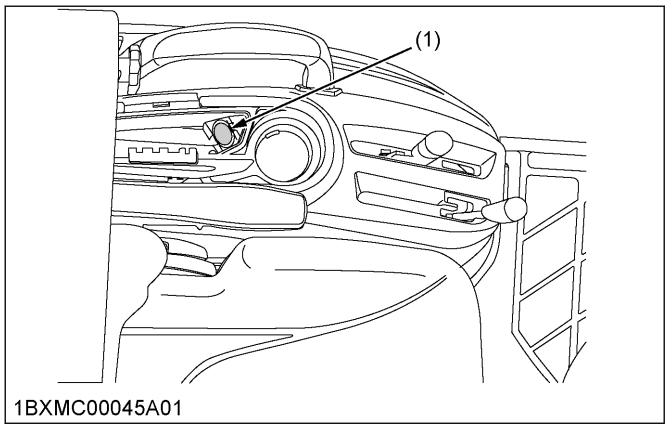

(1) DC outlet

https://truckmanualshub.com/

SERVICING

1. Troubleshooting for electrical system

Fuse and wiring

Symptom	Probable cause and checking procedure	Solution	Reference page
All electrical equipment does not operate	1. Battery discharged or damaged	Recharge or replace	2-30
	2. Battery positive cable disconnected or improperly connected	Repair or replace	—
	3. Battery negative cable disconnected or improperly connected	Repair or replace	—
	4. Slow blow fuse blown	Replace	2-43
Fuse blown frequently	1. Short-circuited	Repair or replace	—

Battery

Symptom	Probable cause and checking procedure	Solution	Reference page
Battery discharges too quickly	1. Battery damaged	Replace	8-29
	2. Alternator damaged	Repair or replace	8-48
	3. IC regulator damaged	Replace	8-49
	4. Wiring harness disconnected or improperly connected (between battery positive terminal and regulator B terminal)	Repair or replace	—
	5. Cooling fan belt slipping	Adjust tension	2-33

https://truckmanualshub.com/

Starting system

Symptom	Probable cause and checking procedure	Solution	Reference page
Starter motor does not operate	1. Battery discharged or damaged	Recharge or replace	2-30
	2. Slow blow fuse blown	Replace	2-43
	3. Safety switch improperly adjusted or damaged	Repair or replace	8-33
	4. Wiring harness disconnected or improperly connected (between main switch 50 terminal and safety switches, between safety switches and starter motor, between battery positive terminal and starter motor)	Repair or replace	—
	5. Starter motor damaged	Repair or replace	8-47
	6. Main switch damaged	Replace	8-30
Engine does not stop when main switch is turned OFF	1. Fuse blown (15 A)	Replace	2-43
	2. Wiring harness disconnected or improperly connected (between main switch AC terminal and engine stop solenoid)	Repair or replace	8-1
	3. Engine stop solenoid damaged	Replace	8-36
	4. Timer relay damaged	Replace	8-37
Engine does not start	1. Engine stop solenoid damaged	Replace	8-36
	2. Timer relay damaged	Replace	8-37

Operator presence control (OPC)

Symptom	Probable cause and checking procedure	Solution	Reference page
Engine does not stop	1. Solenoid fuse blown (15 A)	Replace	2-43
	2. Engine stop solenoid relay damaged	Replace	8-36
	3. Engine stop solenoid damaged	Replace	8-36
	4. PTO shift lever switch damaged	Adjust or replace	8-33
	5. HST pedal switch damaged	Adjust or replace	8-34
	6. Wiring harness disconnected or improperly connected (between key stop solenoid relay and engine stop solenoid, between engine stop solenoid relay and battery positive terminal)	Repair or replace	8-1
Starter motor does not operate	1. Solenoid fuse blown (15 A)	Replace	2-43
	2. Engine stop solenoid damaged	Replace	8-36
	3. Engine stop solenoid relay damaged	Replace	8-36
	4. Seat switch or seat turnover switch damaged	Adjust or replace	8-34
	5. PTO shift lever switch damaged	Adjust or replace	8-33
	6. HST pedal switch damaged	Adjust or replace	8-34
	7. Wiring harness disconnected or improperly connected (between key stop solenoid relay and engine stop solenoid, between engine stop solenoid relay and battery positive terminal)	Repair or replace	8-1
Engine stops when HST pedal is pushed in forward or in reverse	1. Wrong wiring of seat switch and seat turn over switch	Proper wiring	8-1
Engine stops suddenly	1. Seat reverse switch	Adjust the switch position	8-34

https://truckmanualshub.com/

Charging system

Symptom	Probable cause and checking procedure	Solution	Reference page
Charging lamp does not light when main switch is turned ON	1. Fuse blown (15 A)	Replace	2-43
	2. Wiring harness disconnected or improperly connected (between main switch AC terminal and panel board, between panel board and alternator)	Repair or replace	8-1
	3. Alternator damaged	Repair or replace	8-48
	4. IC regulator damaged	Replace	8-49
Charging lamp does not go off when engine operates	1. Wiring harness disconnected or improperly connected (between main switch 30 terminal and dynamo, between panel board and alternator)	Repair or replace	8-1
	2. Alternator damaged	Repair or replace	8-48
	3. IC regulator damaged	Replace	8-49

Lighting system

Symptom	Probable cause and checking procedure	Solution	Reference page
Head light does not light	1. Fuse blown (15 A)	Replace	2-43
	2. Bulb blown	Replace	2-44
	3. Wiring harness disconnected or improperly connected (between main switch AC terminal and head light switch, between head light switch and head light)	Repair or replace	8-1
Tail light does not light	1. Fuse blown (15 A)	Replace	2-43
	2. Bulb blown	Replace	2-44
	3. Wiring harness disconnected or improperly connected (between main switch AC terminal and head light switch, between head light switch and tail light)	Repair or replace	8-1
Illumination light does not light	1. Fuse blown (15 A)	Replace	2-43
	2. Wiring harness disconnected or improperly connected (between main switch AC terminal and head light switch, between head light switch and illumination light)	Repair or replace	8-1
Hazard lamp does not light	1. Fuse blown (15 A)	Replace	2-43
	2. Bulb blown	Replace	2-44
	3. Wiring harness disconnected or improperly connected	Repair or replace	8-1
	4. Flasher unit damaged	Replace	8-41
	5. Hazard switch damaged	Replace	8-38
Hazard indicator lamp does not light	1. Wiring harness disconnected or improperly connected	Repair or replace	8-1
Hazard lamp does not flicker	1. Flasher unit damaged	Replace	8-41
Turn signal light does not light	1. Fuse blown (15 A)	Replace	2-43
	2. Bulb blown	Replace	2-44
	3. Wiring harness disconnected or improperly connected	Repair or replace	8-1
	4. Flasher unit damaged	Replace	8-41
	5. Turn signal switch damaged	Replace	8-38
Turn signal light indicator lamp does not light	1. Wiring harness disconnected or improperly connected (turn signal switch and indicator lamp)	Repair or replace	8-1

(Continued)

Symptom	Probable cause and checking procedure	Solution	Reference page
Turn signal light does not flicker	1. Flasher unit damaged	Replace	8-41
	2. Turn signal switch damaged	Replace	8-38
Glow lamp does not light when main switch is in PRE-HEAT position	1. Battery discharged or damaged	Recharge or replace	8-29
	2. Slow blow fuse blown	Replace	2-43
	3. Wiring harness disconnected or improperly connected (between main switch 19 terminal and PRE-HEAT indicator, between PRE-HEAT indicator and glow plugs)	Repair or replace	8-1
	4. Main switch damaged	Replace	8-30
Oil pressure lamp lights up when engine operates	1. Engine oil pressure too low	Repair engine	—
	2. Engine oil insufficient	Fill	2-7
	3. Oil pressure switch damaged	Replace	8-44
	4. Short circuit between oil pressure switch lead and chassis	Repair	8-44
Oil pressure lamp does not light when main switch is turned ON and engine does not operate	1. Oil pressure switch damaged	Replace	8-44
	2. Wiring harness disconnected or improperly connected (between panel board and oil pressure switch)	Repair or replace	8-1

Gauges

Symptom	Probable cause and checking procedure	Solution	Reference page
Fuel warning lamp does not light	1. Fuel gauge damaged	Replace	8-46
	2. Fuel level sensor damaged	Replace	8-44
	3. Wiring harness disconnected or improperly connected (between fuel gauge and fuel level sensor)	Repair or replace	8-1
Coolant temperature gauge does not function	1. Coolant temperature gauge damaged	Replace	8-44
	2. Coolant temperature sensor damaged	Replace	8-44
	3. Wiring harness disconnected or improperly connected (between coolant temperature gauge and coolant temperature sensor)	Repair or replace	8-1

https://truckmanualshub.com/

2. Servicing specifications for electrical system

Item		Factory specification	Allowable limit
Battery	Voltage	More than 12 V	—
	Potential difference	Less than 0.1 V	—
Glow plug	Resistance	Approx. 0.9 Ω	—
Alternator	Charging current / alternator speed	14 to 15 A / 5200 min^{-1} (rpm)	—
	Charging voltage / alternator speed	14 to 15 A / 5200 min^{-1} (rpm)	—
Head light switch	Switch OFF	Infinity	—
	Switch ON	0 Ω	—
Turn signal switch	Switch OFF	Infinity	—
	Switch R	0 Ω	—
	Switch L	0 Ω	—
Hazard lamp switch	Switch OFF	Infinity	—
	Switch ON	0 Ω	—
Starter • Commutator	O.D.	30.0 mm 1.181 in.	29.0 mm 1.142 in.
	Difference of O.D.'s	Less than 0.02 mm 0.0008 in.	0.05 mm 0.0020 in.
• Mica	Undercut	0.50 to 0.80 mm 0.0197 to 0.0315 in.	0.20 mm 0.0079 in.
• Brush	Length	14.0 mm 0.551 in.	9.0 mm 0.354 in.
Alternator	No-load voltage	More than 14 V	—
• Stator	Resistance	Less than 1.0 Ω	—
• Rotor	Resistance	2.9 Ω	—
• Slip ring	O.D.	14.4 mm 0.567 in.	14.0 mm 0.551 in.
• Brush	Length	10.5 mm 0.413 in.	8.4 mm 0.331 in.
Hand throttle lever	Operating force	89.0 to 111 N 9.08 to 11.3 kgf 20 to 25 lbf	—

3. Tightening torques for electrical system

Item	N·m	kgf·m	lbf·ft
Starter B terminal nut	5.9 to 11.8	0.6 to 1.2	4.3 to 8.7
Pulley nut	58.4 to 78.9	5.95 to 80.5	43.1 to 58.2

RELATED PAGE

TIGHTENING TORQUES on page 2-13

4. Checking and adjusting

4.1 Battery

4.1.1 Checking battery voltage

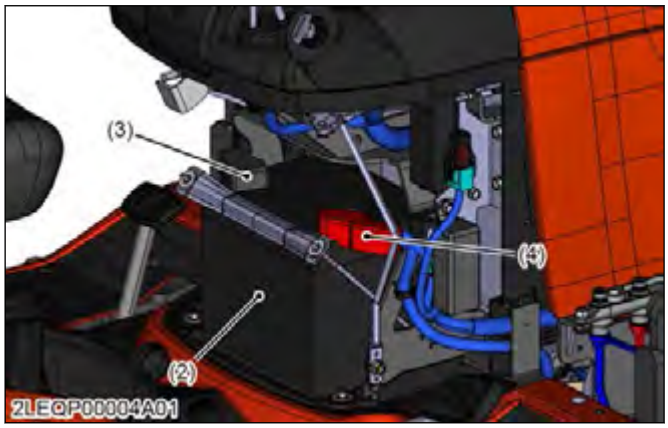

(2) Battery
(3) Negative cable
(4) Positive cable

1. Stop the engine and turn the main switch **OFF**.
2. Connect the COM (−) lead of the voltmeter to the battery's negative terminal post and the (+) lead to the positive terminal post, and measure the battery voltage.
3. If the battery voltage is less than the factory specification, check the battery specific gravity and recharge the battery.

Battery voltage	Factory specification	More than 12 V

4.1.2 Checking battery terminal connection

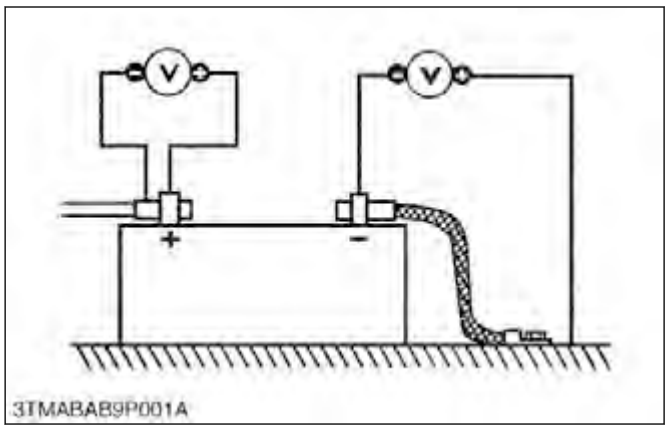

1. Turn the main switch **ON**, and turn on the head light.
2. Measure the voltage with a voltmeter across the battery's positive terminal post and the cable terminal, and the voltage across the battery's negative terminal post and the chassis.
3. If the measurement exceeds the factory specification, clean the battery terminal posts and cable clamps, and tighten them firmly.

Potential difference	Factory specification	Less than 0.1 V

4.1.3 Checking battery specific gravity

NOTE

- **Hold the hydrometer tube vertical without removing it from the electrolyte.**
- **Do not suck too much electrolyte into the tube.**
- **Allow the float to move freely and hold the hydrometer at eye level.**
- **The hydrometer reading must be taken at the highest electrolyte level.**

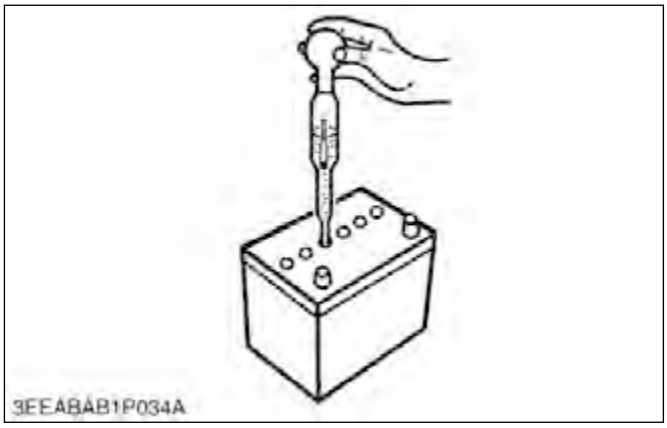

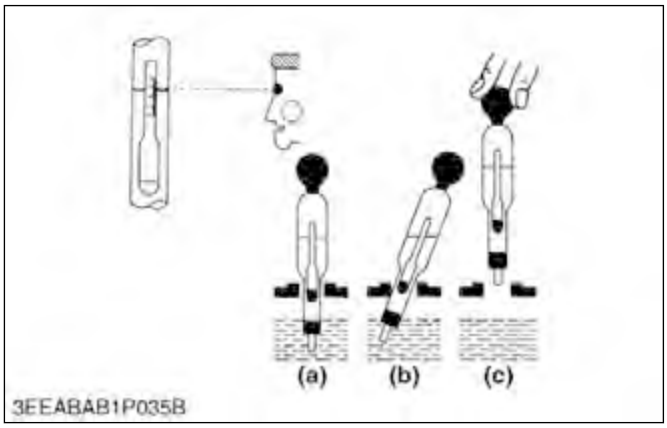

(a) Good
(b) Bad
(c) Bad

1. Check the specific gravity of the electrolyte in each cell with a hydrometer.

2. When the electrolyte temperature differs from that at which the hydrometer was calibrated, correct the specific gravity reading following the formula mentioned in (Reference).
   (Reference)
   - Specific gravity slightly varies with temperature. To be exact, the specific gravity decreases by 0.0007 with an increase of 1 ℃ (0.0004 with an increase of 1 ℉) in temperature, and increases by 0.0007 with a decreases of 1 ℃ (0.0004 with a decrease of 1 ℉).
     Therefore, using 20 ℃ (68 ℉) as a reference, the specific gravity reading must be corrected by the following formula:
     – Specific gravity at 20 ℃ = Measured value + 0.0007 × (electrolyte temperature -20 ℃)
     – Specific gravity at 68 ℉ = Measured value + 0.0004 × (electrolyte temperature −68 ℉)

Specific gravity	State of charge
1.260 Sp. Gr.	100% charged
1.230 Sp. Gr.	75% charged
1.200 Sp. Gr.	50% charged
1.170 Sp. Gr.	25% charged
1.140 Sp. Gr.	Very little useful capacity
1.110 Sp. Gr.	Discharged

At an electrolyte temperature of 20 ℃ (68 ℉)

3. If the specific gravity is less than 1.215 (after it is corrected for temperature), charge or replace the battery.
4. If the specific gravity differs between any two cells by more than 0.05, replace the battery.

4.2 Main switch

4.2.1 Checking main switch connector voltage

1. Remove the under cover panel.
2. Disconnect the 4P connector and remove the main switch (1).

(1) Main switch

3. Measure the voltage with a voltmeter across the 4P connector 3 terminal and the chassis.

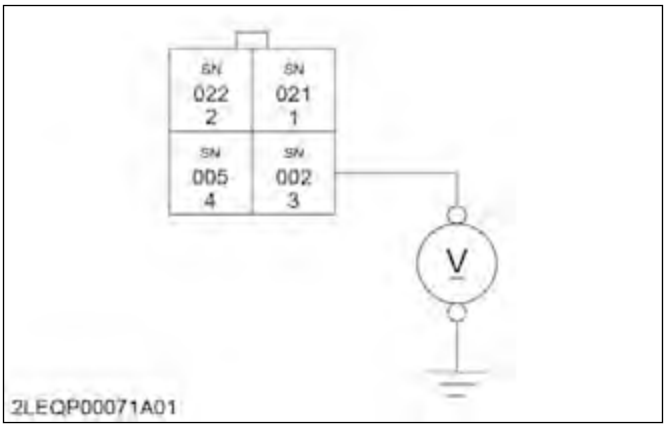

4. If the voltage differs from the battery voltage (11 to 14 V), the wiring harness is damaged.

Voltage	Connector 3 terminal – Chassis	Approx. battery voltage

4.2.2 Checking main switch continuity at off position

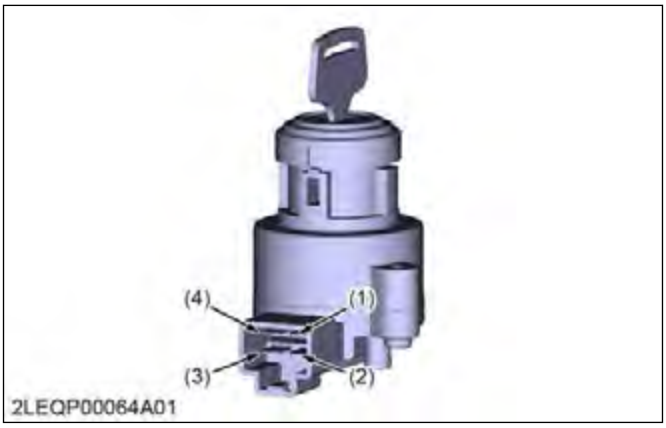

(1) B terminal
(2) ST terminal
(3) ACC terminal
(4) G terminal

1. Set the main switch to the **OFF** position.
2. Measure the resistance with an ohmmeter across the B terminal and the ACC terminal, B terminal and ST terminal, B terminal and G terminal.
3. If infinity is not indicated, the contacts of the main switch are damaged.

Resistance	B terminal – ACC terminal	Infinity
	B terminal – ST terminal	
	B terminal – G terminal	

4.2.3 Checking main switch continuity at on position

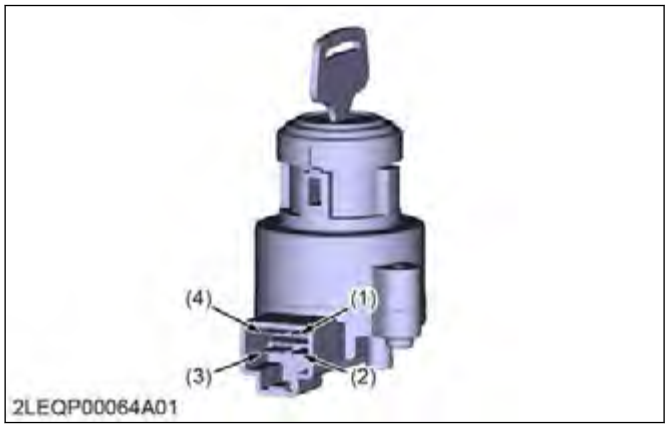

(1) B terminal
(2) ST terminal
(3) ACC terminal
(4) G terminal

1. Set the main switch to the **ON** position.
2. Measure the resistance with an ohmmeter across the B terminal and the ACC terminal.
3. If 0 ohm is not indicated, the B – ACC contact of the main switch is damaged.

Resistance	B terminal – ACC terminal	0 Ω

4.2.4 Checking main switch continuity at preheat position

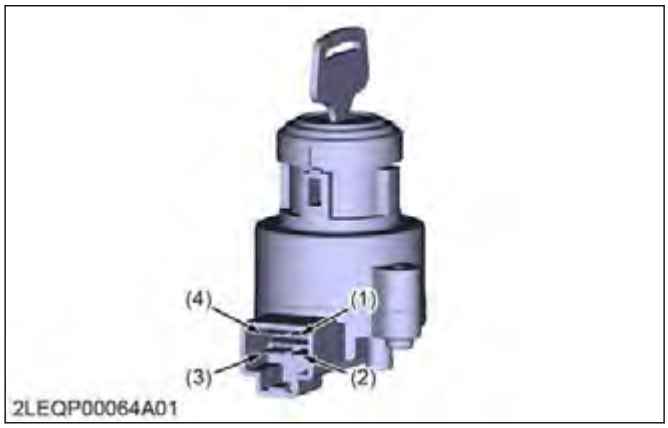

(1) B terminal
(2) ST terminal
(3) ACC terminal
(4) G terminal

1. Set and hold the main switch key at the **PREHEAT** position.
2. Measure the resistance with an ohmmeter across the B terminal and the G terminal, and measure the resistance across the B terminal and the ACC terminal.
3. If 0 ohm is not indicated, these contacts of the main switch are damaged.

Resistance	B terminal – G terminal	0 Ω
	B terminal – ACC terminal	

4.2.5 Checking main switch continuity at start position

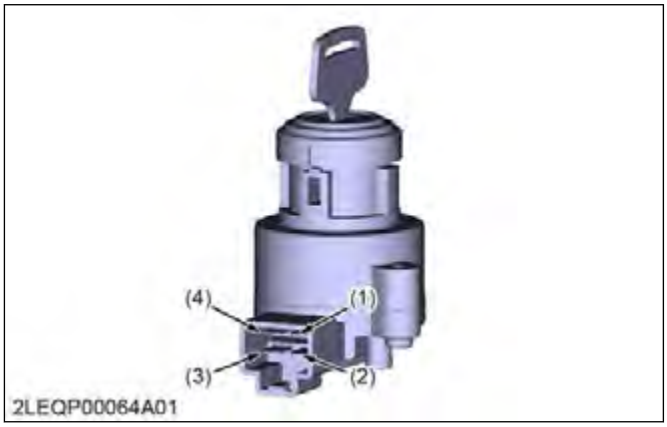

(1) B terminal
(2) ST terminal
(3) ACC terminal
(4) G terminal

1. Set and hold the main switch key at the **START** position.
2. Measure the resistance with an ohmmeter across the B terminal and the G terminal, across the B terminal and the ST terminal, and across the B terminal and the ACC terminal.
3. If 0 ohm is not indicated, these contacts of the main switch are damaged.

Resistance	B terminal – G terminal	0 Ω
	B terminal – ST terminal	
	B terminal – ACC terminal	

4.3 Starter

4.3.1 Checking motor

CAUTION

- **Secure the starter to prevent it from jumping up and down while testing the motor.**

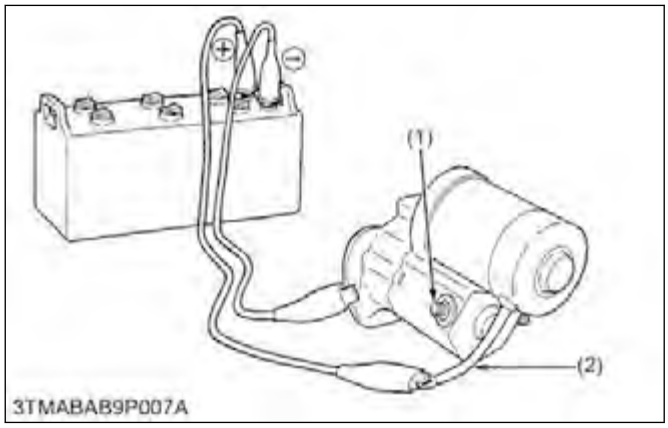

(1) C terminal (2) Connecting lead

1. Disconnect the battery negative cable from the battery.
2. Disconnect the battery positive cable and the leads from the starter.
3. Remove the starter from the engine.
4. Disconnect the connecting lead (2) from the starter C terminal (1).
5. Connect a jumper lead from the connecting lead (2) to the battery positive terminal post.
6. Connect a jumper lead momentarily between the starter motor housing and the battery negative terminal post.
7. If the motor does not operate, check the motor.

4.3.2 Testing starter magnet switch (pull-in, holding coils)

IMPORTANT

- **Testing time must be 3 to 5 sec.**

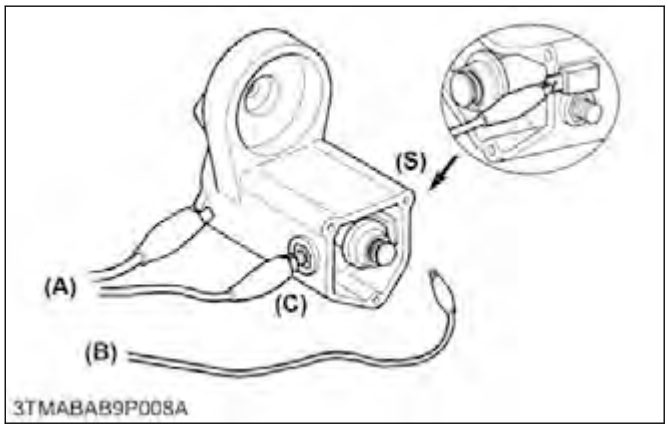

(A) To negative terminal (C) C terminal
(B) To positive terminal (S) S terminal

1. Remove the motor from the starter housing.
2. Prepare a 6 V battery for the test.
3. Connect jumper leads from the battery negative terminal to the housing and the starter C terminal. The plunger should be attracted and the pinion gear should pop out when a jumper lead is connected from the battery positive terminal to the S terminal.
4. Disconnect the jumper lead to the starter C terminal. Then the pinion gear should remain popped out.

4.4 Glow plug

4.4.1 Checking glow plug lead terminal voltage

1. Disconnect the wiring lead (2) from the glow plug (1) after turning the main switch **OFF**.

(1) Glow plug (2) Wiring lead (Positive)

2. Turn the main switch key to the **PREHEAT** position, and measure the voltage between the lead terminal and the chassis.
3. Turn the main switch key to the **START** position, and measure the voltage with a voltmeter between the lead terminal and the chassis.
4. If the voltage at either position differs from the battery voltage, the wiring harness or main switch is damaged.

Voltage (Lead terminal – Chassis)	Main switch key at **PREHEAT**	Approx. battery voltage
	Main switch key at **START**	Approx. battery voltage

4.4.2 Checking glow plug continuity

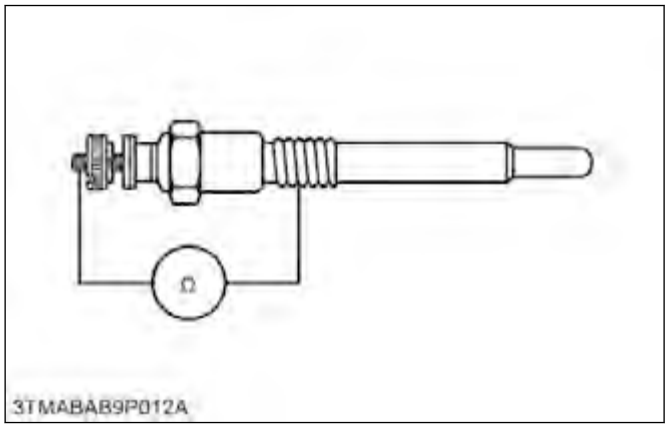

1. Disconnect the lead from the glow plugs.
2. Measure the resistance with an ohmmeter between the glow plug terminal and the chassis.
3. If 0 ohm is indicated, the screw at the tip of the glow plug and the housing are short-circuited.
4. If the factory specification is not indicated, the glow plug is damaged.

Glow plug	Factory specification	Approx. 0.9 Ω

4.5 Safety switch

4.5.1 Checking PTO shift lever switch continuity

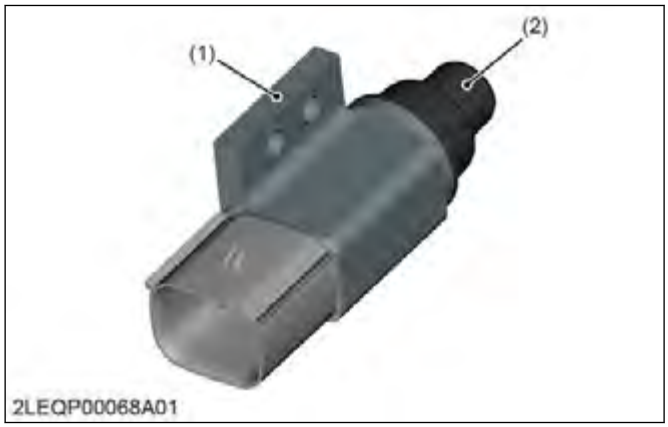

(1) PTO shift lever switch
(2) Plunger
(3) 4 terminal
(4) 8 terminal
(5) 5 terminal
(6) 1 terminal

1. Remove the left rear wheel.
2. Remove the PTO shift lever switch (1).

(1) PTO shift lever switch

3. Measure the resistance with an ohmmeter across the switch terminals.
4. If the resistance values specified below are not indicated, the safety switch is damaged.

Plunger is pushed into the switch body.

Resistance	4 terminal (3) – 8 terminal (4)	0 Ω
	5 terminal (5) – 1 terminal (6)	0 Ω

Plunger is released.

Resistance	4 terminal (3) – 8 terminal (4)	Infinity
	5 terminal (5) – 1 terminal (6)	Infinity

4.5.2 Checking HST neutral switch continuity

(1) HST neutral switch
(2) Plunger
(3) 4 terminal
(4) 8 terminal
(5) 5 terminal
(6) 1 terminal

1. Remove the right rear wheel.
2. Remove the HST neutral switch (1).

(1) HST neutral switch

3. Measure the resistance with an ohmmeter across the HST neutral switch terminals.
4. If the resistance values specified below are not indicated, the safety switch is damaged.

Plunger is pushed into the switch body.

Resistance	4 terminal (3) – 8 terminal (4)	0 Ω
	5 terminal (5) – 1 terminal (6)	0 Ω

Plunger is released.

Resistance	4 terminal (3) – 8 terminal (4)	Infinity
	5 terminal (5) – 1 terminal (6)	Infinity

4.6 Operator presence control (OPC) system

4.6.1 Checking seat switch and seat turnover switch continuity

1. Disconnect the 2P connectors (2), (3) from the seat switch and the seat turnover switch (1).

(1) Seat switch / seat turnover switch
(2) Seat turnover switch 2P connector
(3) Seat switch 2P connector
(4) Seat

2. Remove the seat switch and seat turnover switch (1).
3. Connect the circuit tester to the terminals (5).

(1) Seat switch / seat turnover switch
(5) Terminal

(When switch is not pushed / when operator leaves the seat)

1. Measure the resistance between terminals (5).
2. If continuity is not as shown below, the switch is damaged. Replace it.

Resistance	When switch is not pushed. / when operator leaves the seat.	Infinity

[A] Seat switch is not pushed.

(When switch is pushed / when operator sits on the seat)

1. Measure the resistance between terminals (5).
2. If continuity is not as shown below, the switch is damaged. Replace it.

Resistance	When switch is pushed. / when operator sits on the seat.	0 Ω

[B] Seat switch is pushed.

4.6.2 Checking OPC timer

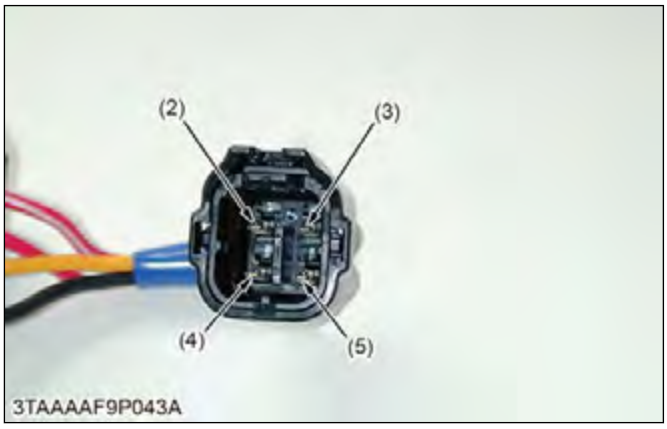

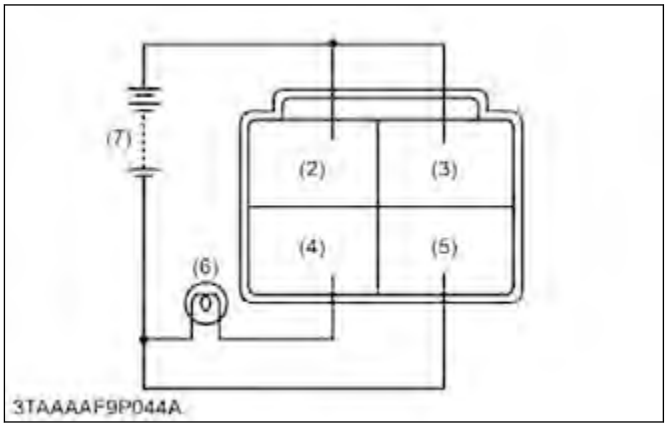

(2) Orange / white terminal (from battery)
(3) Yellow terminal (from OPC switch)
(4) Red terminal (to key stop solenoid)
(5) Black terminal (to frame earth)
(6) Bulb (Load)
(7) Battery

1. Remove the OPC timer.
   The OPC timer is located under the upper panel.

(1) OPC timer

2. Connect the jumper leads across the battery terminal and the red / white terminal (2), and across the battery positive terminal and the yellow terminal (3).
3. Connect the jumper lead across the battery negative terminal and the black terminal (5), and across the battery negative terminal and the bulb terminal.
4. Connect the jumper lead across the red terminal (4) and the bulb terminal.
5. If the bulb lights up when disconnecting the jumper lead from the red / white terminal (2), the OPC timer (1) is proper.

4.7 Fuel pump

4.7.1 Checking fuel pump connector voltage

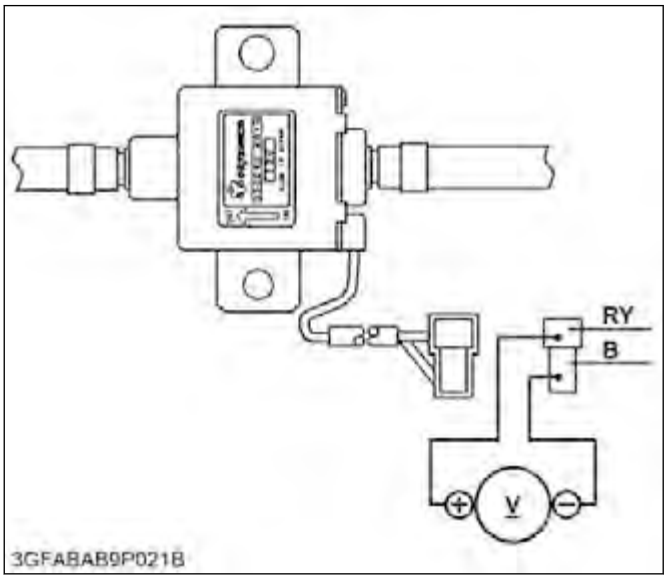

1. Disconnect the 2P connector from the fuel pump.
2. Turn the main switch key to the **ON** position, and measure the voltage with a voltmeter between the connector terminals.
3. If the voltage differs from the battery voltage, the wiring harness or main switch is damaged.

Voltage	Between connector terminals	Approx. battery voltage

4.7.2 Checking fuel pump continuity

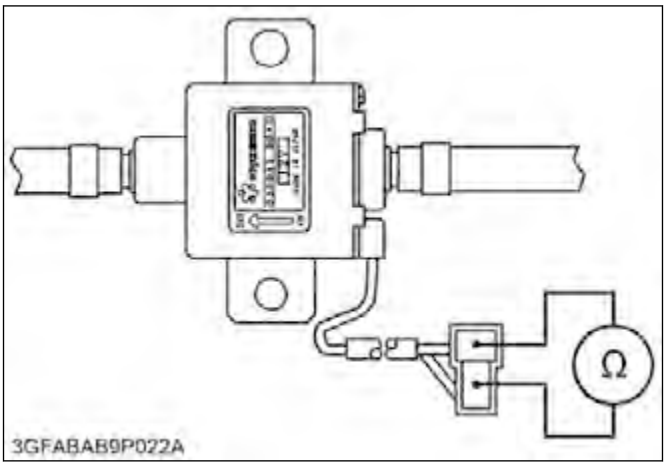

1. Disconnect the 2P connector from the fuel pump.
2. Check the continuity between the connector terminals with an ohmmeter.
3. If it does not conduct, the fuel pump is damaged.

4.8 Engine stop solenoid

4.8.1 Testing engine stop solenoid

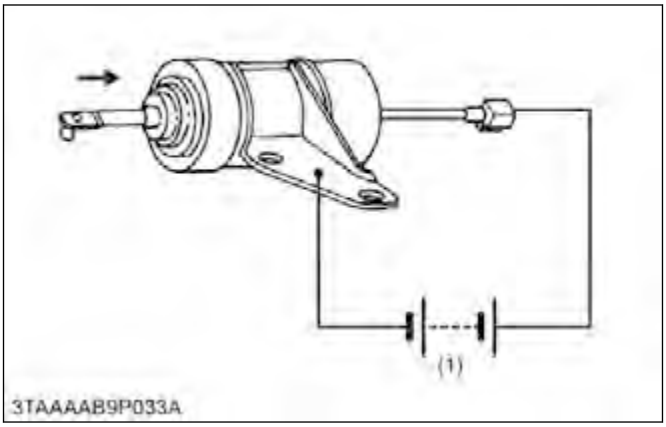

(1) Battery (12 V)

1. Disconnect the 1P connector from the engine stop solenoid.
2. Remove the engine stop solenoid from the engine.
3. Connect the jumper leads from the battery positive terminal to the 1P connector, and from the battery negative terminal to the engine stop solenoid body.

4. If the solenoid plunger is not attracted, the engine stop solenoid is damaged.

4.9 Timer relay

4.9.1 Checking timer relay connector voltage

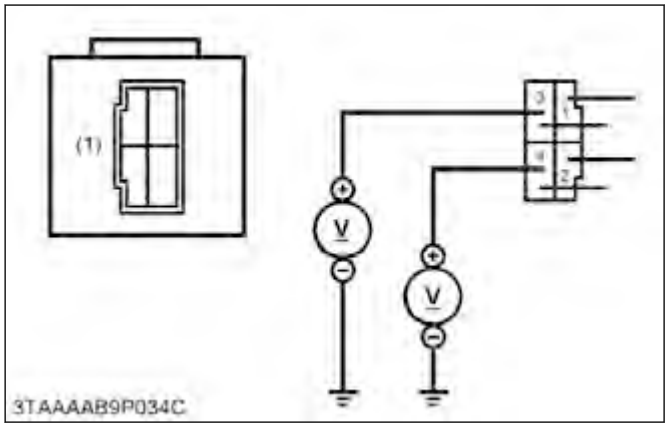

(1) Timer relay

1. Disconnect the connector from the timer relay after turning the main switch **OFF**.
2. Measure the voltage with a voltmeter across the connector terminal 4 and chassis.
3. Turn the main switch **ON**, and measure the voltage across the connector terminal 3 and chassis.
4. If these voltages differ from the battery voltage, the wiring harness or main switch is damaged.

Voltage	Connector terminal 4 – Chassis	Approx. battery voltage
	Connector terminal 3 – Chassis	Approx. battery voltage

4.9.2 Testing timer relay

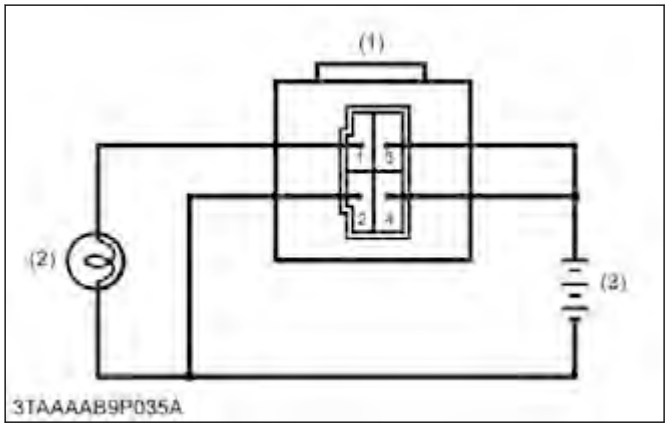

(1) Timer relay
(2) Load (Lamp)
(3) Battery (12 V)

1. Remove the timer relay (1).

(1) Timer relay

2. Connect jumper leads across the battery positive terminal and the timer relay terminal 3, and across the battery positive terminal and the timer relay terminal 4.
3. Connect jumper leads across the battery negative terminal and the timer relay terminal 2, and across the battery negative terminal and the bulb terminal.
4. Connect jumper lead across the timer relay terminal 1 and the bulb terminal.
5. If the bulb lights up when disconnecting a jumper lead from the terminal 3 and goes off 6 to 13 seconds late, the timer relay is proper.

4.10 Charging system

4.10.1 Checking battery charging current

NOTE

- **Connect an ammeter only after starting the engine.**
- **When the electrical loads is considerably low or the battery is fully charged, the specified reading may not be obtained.**

Current	Factory specification	14 to 15 A
Voltage		14 to 15 V
Alternator speed		5200 min^{-1} (rpm)

1. After starting the engine, disconnect the battery positive cord (+), and connect an ammeter and voltmeter. Then switch on all electrical loads (such as head lights) and measure the charging current.

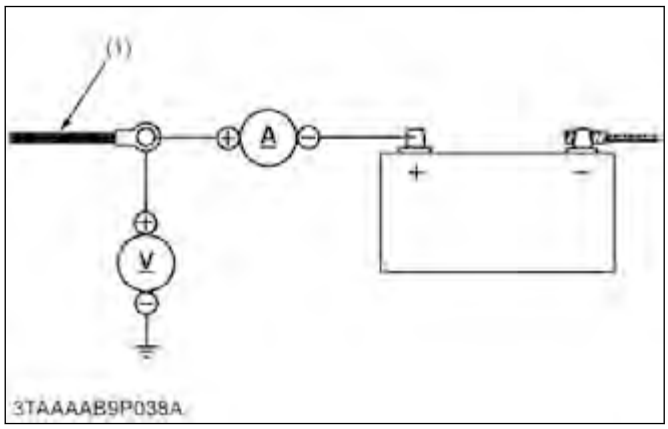

(1) Battery positive cord

4.11 Combination switch

4.11.1 Removing combination switch

(1) Combination switch

1. Remove the under panel, and disconnect the combination switch connector.
2. Remove the combination switch (1).

4.11.2 Checking combination switch connector voltage

1. Measure the voltage with a voltmeter across the connector 2 terminal and chassis when the main switch is in the **ON** position.

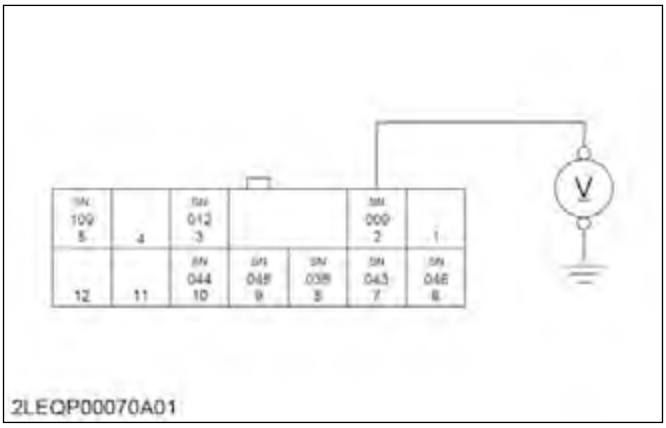

2. If the voltage differs from the battery voltage, the wiring harness and main switch is damaged.

Voltage	Main switch at on position	2 terminal – Chassis	Battery voltage

4.11.3 Checking head light switch continuity when setting switch at OFF position

(1) Red / yellow lead
(2) Blue / white lead
(3) Yellow lead
(4) Orange lead
(5) Red / white lead
(A) Head light **OFF** position

1. Set the light switch to the **OFF** position.

2. Measure the resistance with an ohmmeter across the red / yellow lead (1) to the orange lead (4), the red / yellow lead (1) to the yellow lead (3).
3. If infinity is not indicated, the head light switch is damaged.

Resistance (Switch at **OFF** position)	Red / yellow lead (1) – Orange lead (4)	Infinity
	Red / yellow lead (1) – Yellow lead (3)	

4.11.4 Checking head light switch continuity when setting switch at ON position

(1) Red / yellow lead
(2) Blue / white lead
(3) Yellow lead
(4) Orange lead
(5) Red / white lead
(A) Head light **OFF** position
(B) Head light **ON** position

1. Set the light switch to the **ON** position.
2. Measure the resistance with an ohmmeter across the red / yellow lead (1) to the orange lead (4) and the red / yellow lead (1) to the yellow lead (3).
3. If infinity is not indicated, the head light switch is damaged.

Resistance (Switch at **ON** position)	Red / yellow lead (1) – Orange lead (4)	0 Ω
	Red / yellow lead (1) – Yellow lead (3)	

4.11.5 Checking turn signal light switch continuity when setting switch knob at OFF position

(1) Green lead
(2) Red / white lead
(3) Green / white lead
(A) Turn signal light switch **OFF** position

1. Set the turn signal switch knob to the **OFF** position.
2. Measure the resistance with an ohmmeter across the green lead (1) and red / white lead (2), and across to the green lead (1) and green / white lead (3).
3. If infinity is not indicated, the combination switch is damaged.

Resistance (Switch knob at **OFF** position)	Green lead (1) – Red / white lead (2)	Infinity
	Green lead (1) – Green / white lead (3)	

4.11.6 Checking turn signal light switch continuity when setting switch knob at RIGHT position

(1) Green lead
(2) Red / white lead
(3) Green / white lead

(A) Turn signal light switch **RIGHT** position

1. Set the turn signal switch knob to the **RIGHT** position.
2. Measure the resistance with an ohmmeter across the green lead (1) and red / white lead (2), and across to the green lead (1) and green / white lead (3).
3. If 0 Ω is not indicated, the combination switch is damaged.

Resistance (Switch knob at **RIGHT** position)	Green lead (1) – Red / white lead (2)	0 Ω
	Green lead (1) – Green / white lead (3)	Infinity

4.11.7 Checking turn signal light switch continuity when setting switch knob at LEFT position

(1) Green lead
(2) Red / white lead
(3) Green / white lead

(A) Turn signal light switch **LEFT** position

1. Set the turn signal switch knob to the **LEFT** position.
2. Measure the resistance with an ohmmeter across the green lead (1) and red / white lead (2), and across to the green lead (1) and green / white lead (3).
3. If 0 Ω is not indicated, the combination switch is damaged.

Resistance (Switch knob at **LEFT** position)	Green lead (1) – Red / white lead (2)	Infinity
	Green lead (1) – Green / white lead (3)	0 Ω

4.11.8 Checking hazard switch continuity when setting switch knob at OFF position

(1) Black / blue lead
(2) Blue / white lead
(A) Hazard switch **OFF** position

1. Set the hazard switch knob to the **OFF** position.
2. Measure the resistance with an ohmmeter across the black / blue lead (1) and blue / white lead (2).
3. If infinity is not indicated, the combination switch is damaged.

Resistance (Hazard switch at **OFF** position)	Black / blue lead (1) – Blue / white lead (2)	Infinity

4.11.9 Checking hazard switch continuity when setting switch knob at ON position

(1) Black / blue lead
(2) Blue / white lead
(A) Hazard switch **ON** position

1. Set the hazard switch knob to the **ON** position.
2. Measure the resistance with an ohmmeter across the black / blue lead (1) and blue / white lead (2).
3. If 0 Ω is not indicated, the combination switch is damaged.

Resistance (Hazard switch at **ON** position)	Black / blue lead (1) – Blue / white lead (2)	0 Ω

4.11.10 Checking flasher unit connector voltage

1. Remove the under panel.

2. Disconnect the connector from the flasher unit (1).

(1) Flasher unit

3. Measure the voltage with a voltmeter across the connector terminal h and chassis.

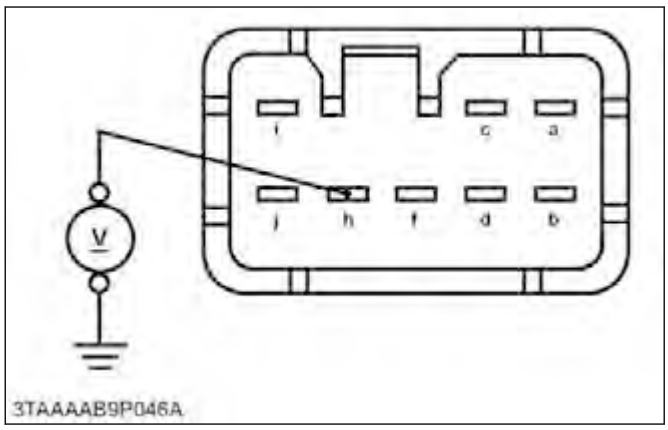

4. If the voltage differs from the battery voltage, the wiring harness is damaged.

Voltage	Terminal h – chassis	Approx. battery voltage

4.11.11 Testing flasher unit actuation

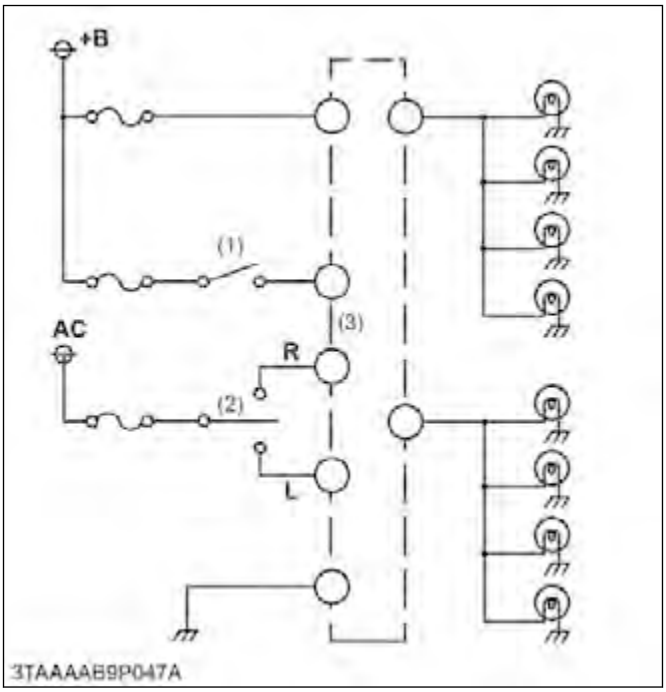

(1) Hazard lamp switch
(2) Turn signal light switch
(3) Flasher unit

1. Set the hazard switch to the **ON** position, and make sure the hazard lamp gives 60 to 85 flashes for a minute.
2. With the main switch and the hazard switch at the **ACC** and **ON** positions, respectively, move the turn signal light switch to the left. Make sure that the right-hand light stays on and the left-hand light gives flashes earlier (by about 20 flashes) than when the hazard lamp is activated. Then move the turn signal light switch to the right and make sure the corresponding actions take place.
3. Now set the main switch to the **ACC** position and move the turn signal switch alone. Make sure the same actions as above result.
4. If both the hazard switch and the turn signal light switch function but the above actions do not take place, replace the flasher unit with new one.

https://truckmanualshub.com/

4.12 Gauge

4.12.1 Checking charge lamp (charging circuit)

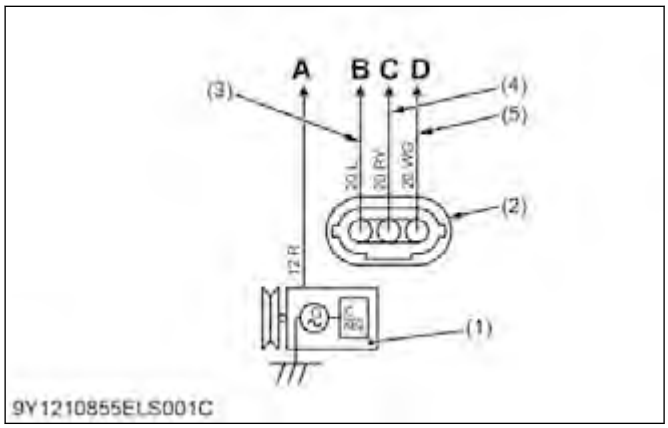

(1) Alternator
(2) 3P connector
(3) L (blue) terminal
(4) RY (red / yellow) terminal
(5) WG (white / green) terminal

A: To the battery
B: To hour meter and tachometer
C: To main switch
D: To charge indicator

1. Disconnect the 3P connector from the alternator after turning the main switch **OFF**.
2. Turn the main switch **ON** and connect a jumper lead from the wiring harness connector terminal (white / green) to the chassis.

   NOTE
   - **If you connect the jumper lead from the wiring harness connector terminal (white / green) to the chassis, 15 A fuse will be blown. Do not connect the lead to red / yellow terminal.**
3. If the charge lamp does not light, the wiring harness or fuse is damaged.

4.12.2 Checking engine oil pressure lamp

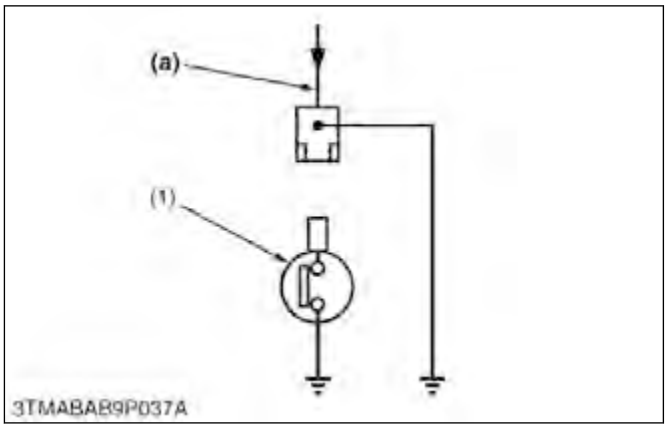

(1) Engine oil pressure switch
(2) Lead

(a) From oil pressure lamp

1. Disconnect the lead (2) from the engine oil pressure switch (1) after turning the main switch **OFF**.
2. Turn the main switch **ON** and connect a jumper lead from the lead to the chassis.
3. If the engine oil pressure indicator lamp does not light, the wiring harness is damaged.

4.12.3 Checking engine oil pressure switch continuity

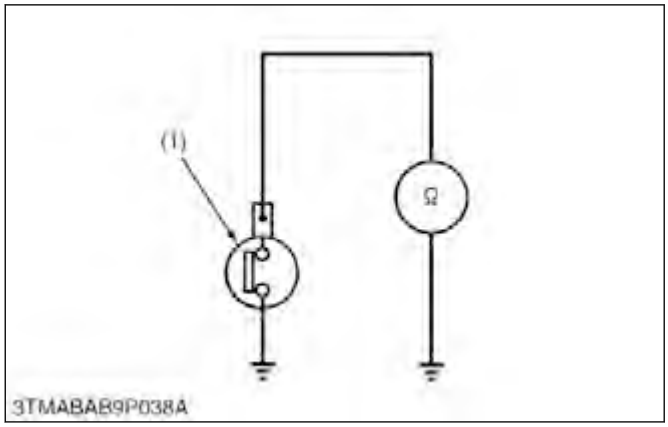

(1) Engine oil pressure switch (2) Lead

1. Disconnect the lead (2) from the engine oil pressure switch (1).
2. Measure the resistance with an ohmmeter across the switch terminal and the chassis.
3. If 0 ohm is not indicated in the normal state, the switch is damaged.

Resistance (Switch terminal – Chassis)	In normal state	0 Ω

4. If infinity is not indicated at pressure, the switch is damaged.

Resistance (Switch terminal – Chassis)	At pressure over approx. 49 kPa 0.50 kgf/cm^2 7.1 psi	Infinity

4.12.4 Checking fuel level sensor continuity

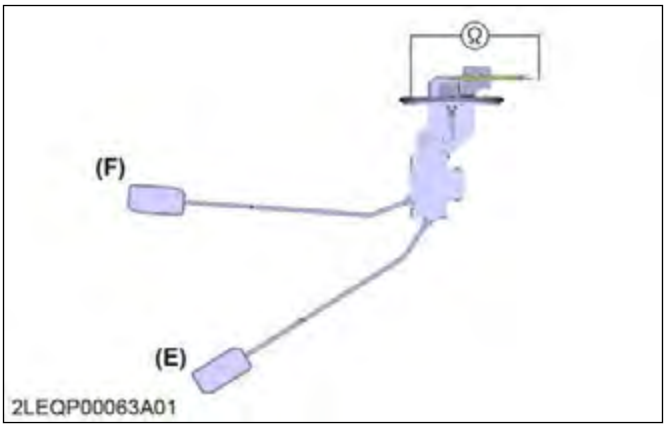

(E) Empty (F) Full

1. Remove the fuel level sensor from the fuel tank.
2. Measure the resistance with an ohmmeter across the sensor terminal and its body.
3. If the reference values are not indicated, the sensor is damaged.

Resistance (Sensor terminal – Sensor body)	Reference value	Float at upper-most position (Full)	2.75 to 3.15 Ω
		Float at lower-most position (Empty)	97 to 113 Ω

4.12.5 Checking coolant temperature sensor connector voltage

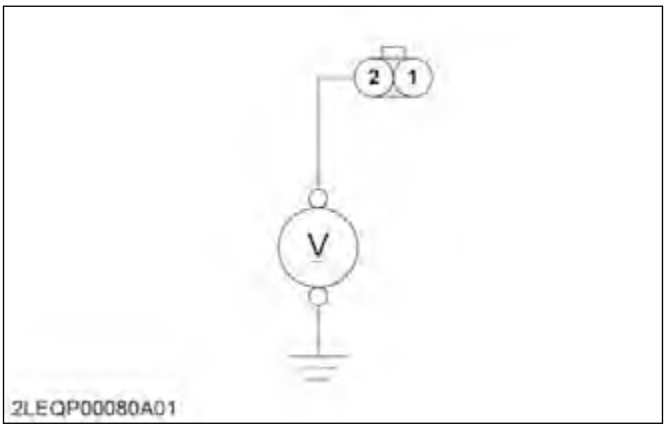

1. Disconnect the 2P connector from the coolant temperature sensor after turning the main switch **OFF**.
2. Turn the main switch **ON** and measure the voltage with a voltmeter across the 2 terminal (W/Y) and the chassis.

3. If the voltage differs from the reference voltage, the wiring harness, fuse or coolant temperature gauge is damaged.

Voltage	2 terminal (W/Y) – Chassis	4.9 to 5.1 V

4.12.6 Checking coolant temperature sensor continuity

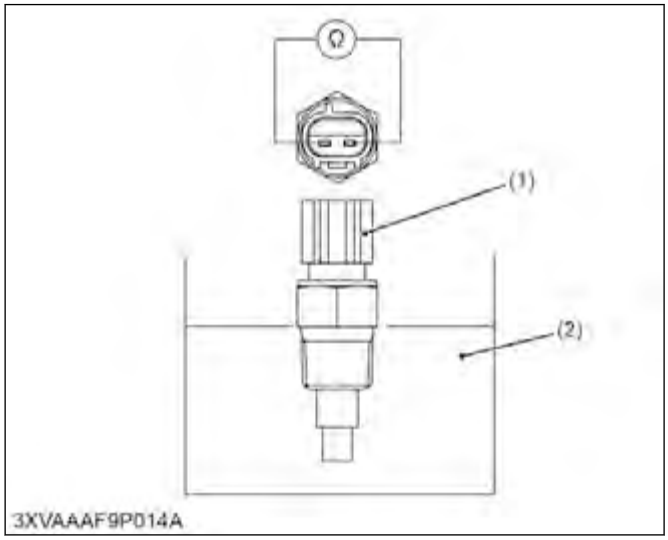

(1) Coolant temperature sensor (2) Coolant

1. Measure the resistance with an ohmmeter across the sensor 1 terminal and 2 terminal.
2. If the reference value is not indicated, the sensor is damaged.

Resistance (1 terminal – 2 terminal)	Reference value	Approx. 11.08 Ω at 120 ℃ (248 ℉)
		Approx. 18.36 Ω at 100 ℃ (212 ℉)
		Approx. 31.8 Ω at 80 ℃ (176 ℉)
		Approx. 81.1 Ω at 50 ℃ (122 ℉)

4.12.7 Checking hour meter and tachometer

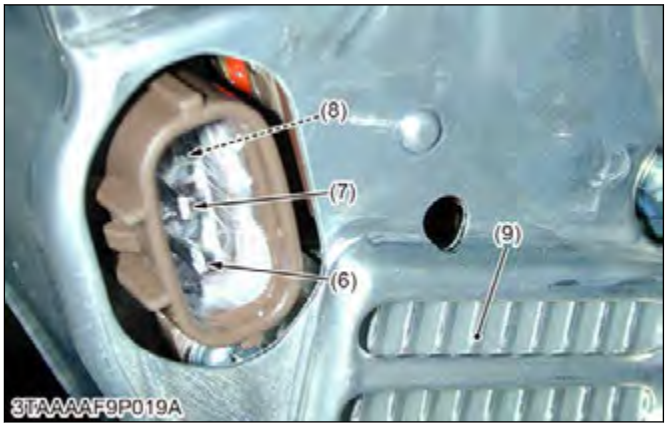

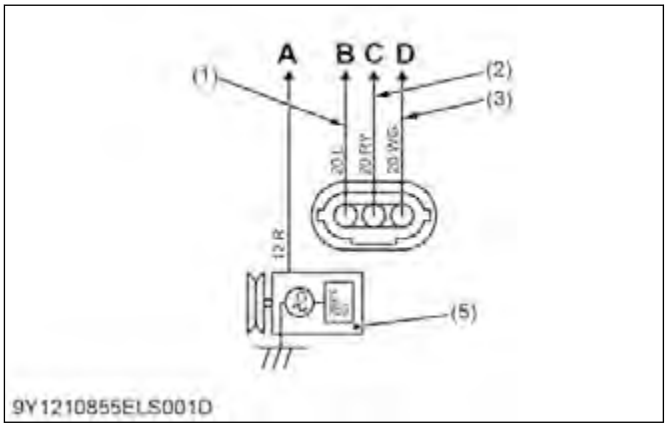

(1) L (blue) lead
(2) RY (red / yellow) lead
(3) WG (white / green) lead
(4) 3P connector
(5) Alternator
(6) Hour meter and tachometer terminal
(7) Ground terminal
(8) Charge lamp terminal
(9) IC regulator
(A) To the battery
(B) To hour meter and tachometer
(C) To main switch
(D) To charge indicator

1. Disconnect the 3P connector (4) from the IC regulator (9) located in the alternator (5) after starting the engine.
2. Measure the voltage with a voltmeter across the hour meter terminal (6) and the alternator body when the hour meter or tachometer does not indicated the proper value.

3. If the measured voltages differ from the specified voltage, the hour meter and tachometer are damaged.

Voltage while engine operates at idling speeds	Hour meter terminal – Alternator body	Approx. battery voltage

4.13 Accessory

4.13.1 Checking DC outlet connector voltage

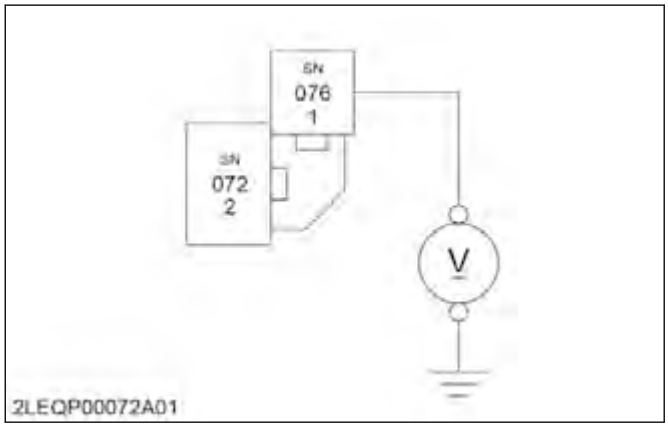

1. Disconnect the connector from the DC outlet and turn the main switch **ON**.
2. Measure the voltage with a voltmeter across the connector 1 terminal (R/L) and the chassis.
3. If the voltage differs from the battery voltage the wiring harness is damaged.

DC outlet connector voltage	1 terminal (R/L) – Chassis	Battery voltage

4.13.2 Checking DC outlet continuity

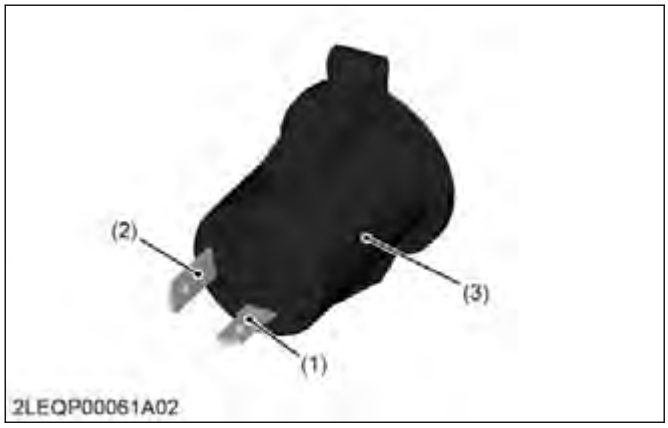

(1) 1 terminal
(2) 2 terminal
(3) DC outlet

1. Remove the DC outlet from the machine.
2. Measure the resistance with an ohmmeter across outlet 1 terminal and 2 terminal.
3. If infinity is not indicated, the outlet is damaged.

DC outlet continuity	1 terminal – 2 terminal	Infinity

4.14 Meter panel

4.14.1 Checking connector voltage, sensor resistance and switch

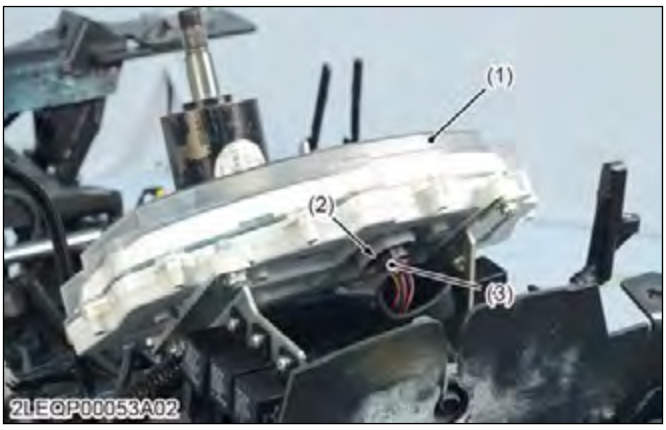

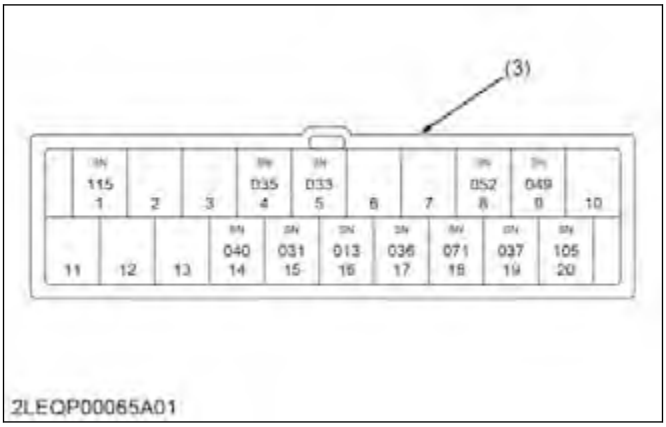

(1) Meter panel
(2) 20P connector meter panel side
(3) 20P connector wire harness side

1. Disconnect the 20P connector (3) from the meter panel (1).

https://truckmanualshub.com/

2. Check the main voltage (battery voltage) first and check the connector voltage, sensor resistance or switch continuity which related for damaged indication of meter panel as table below.

Terminal No.	Color of wiring	Terminal name (Related item)
T1	R / B	Glow plug
T2	—	—
T3	—	—
T4	W / G	Charge warning
T5	G	Oil warning
T6	—	—
T7	—	—
T8	L / W	Left turn
T9	R / W	Right turn
T10	—	—
T11	—	CAN L
T12	—	CAN H
T13	—	—
T14	Or / W	Low beam
T15	L	Tachometer
T16	R / L	Ignition
T17	Y / L	Fuel
T18	B	Ground
T19	W / Y	Temperature
T20	R / G	Battery

5. Disassembling and assembling

5.1 Starter

5.1.1 Disassembling starter motor

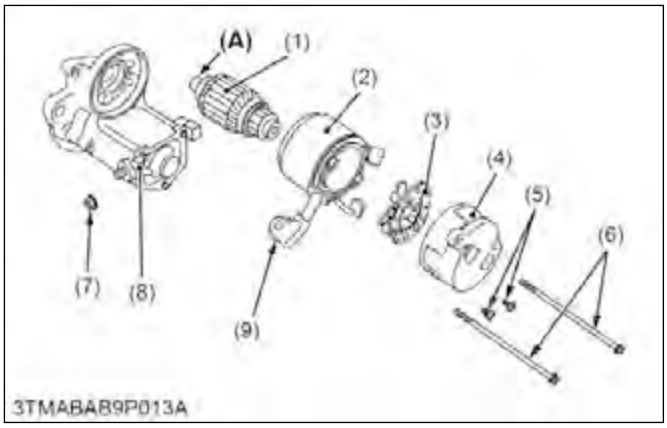

(1) Armature
(2) Yoke
(3) Brush holder
(4) End frame
(5) Screw
(6) Screw
(7) Nut
(8) Magnet switch
(9) Connecting lead
(A) Spline teeth

1. Disconnect the connecting lead (9) from the magnet switch (8).
2. Remove the screws (6), and then separate the end frame (4), yoke (2) and armature (1).
3. Remove the two screws (5), and then remove the brush holder (3) from the end frame (4).

(When reassembling)

- Apply grease to the spline teeth (A) of the armature (1).

Tightening torque	Nut (7)	5.9 to 11.8 N·m 0.6 to 1.2 kgf·m 4.3 to 8.7 lbf·ft

5.1.2 Removing magnet switch

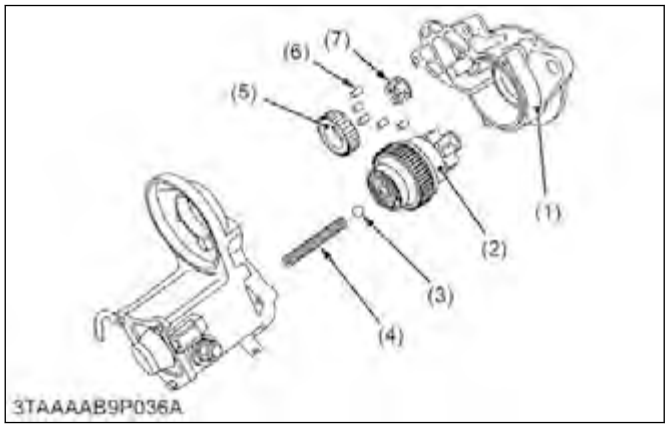

(1) Drive end frame
(2) Overrunning clutch
(3) Ball
(4) Spring
(5) Gear
(6) Roller
(7) Retainer

1. Remove the drive end frame (1) mounting screws.
2. Remove the overrunning clutch (2), ball (3), spring (4), gears (5), rollers (6) and retainer (7).

(When reassembling)

- Apply grease to the gear teeth of the gears (5) and overrunning clutch (2), and ball (3).

5.1.3 Removing plunger

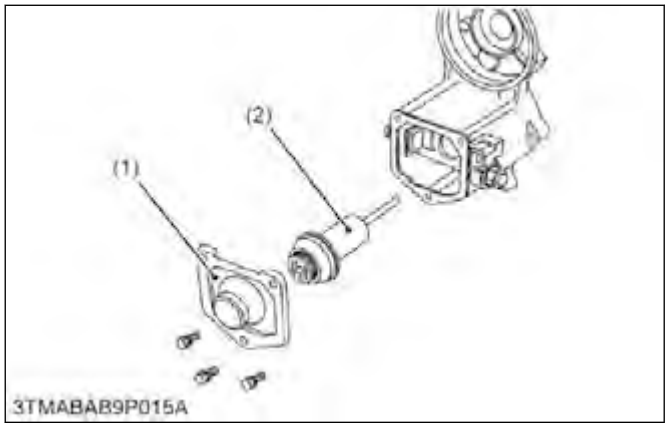

(1) End cover
(2) Plunger

1. Remove the end cover (1).
2. Remove the plunger (2).

5.2 Alternator

5.2.1 Removing pulley

1. Secure the hexagonal end of the pulley shaft with a double-ended ratchet wrench as shown in the figure, loosen the pulley nut with a socket wrench and remove it.

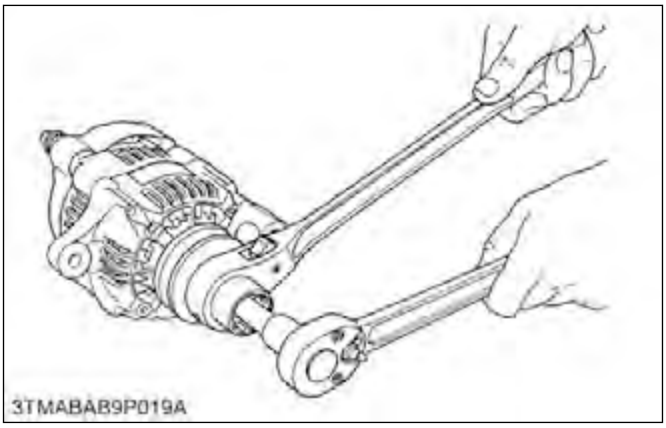

(When reassembling)

Tightening torque	Pulley nut	58.4 to 78.9 N·m 5.95 to 8.05 kgf·m 43.1 to 58.2 lbf·ft

5.2.2 Removing rear end cover

1. Remove the three rear end cover screws and the B terminal nut, and remove the rear end cover.

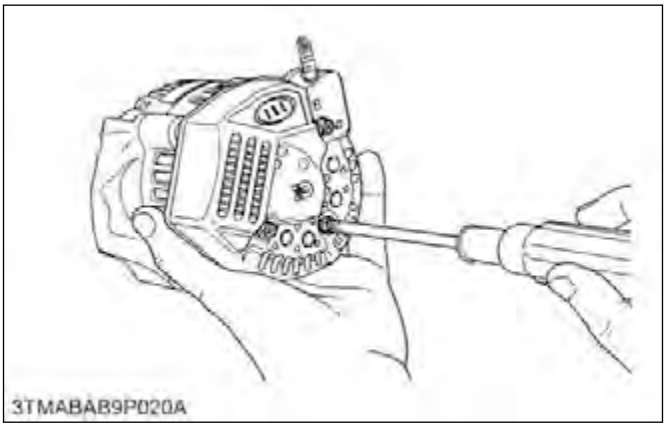

5.2.3 Removing brush holder

1. Remove the two screws holding the brush holder, and remove the brush holder (1).

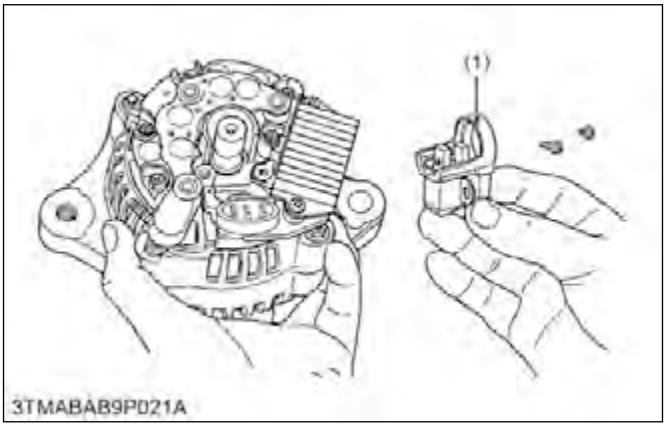

(1) Brush holder

https://truckmanualshub.com/

5.2.4 Removing IC regulator

1. Remove the three screws holding the IC regulator, and remove the IC regulator (1).

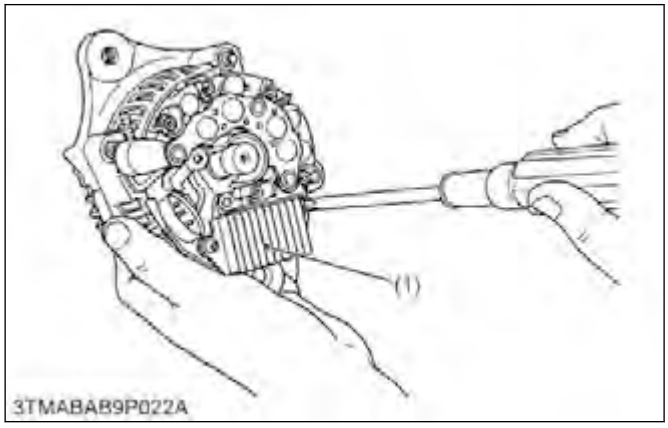

(1) IC regulator

5.2.5 Removing rectifier

1. Remove the four screws holding the rectifier and the stator lead wires.
2. Remove the rectifier (1).

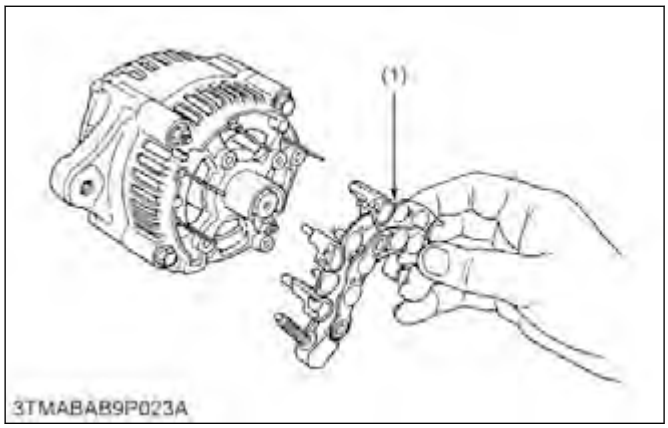

(1) Rectifier

5.2.6 Removing rear end frame

1. Remove the two nuts and two screws holding the drive end frame and the rear end frame.
2. Remove the rear end frame (1).

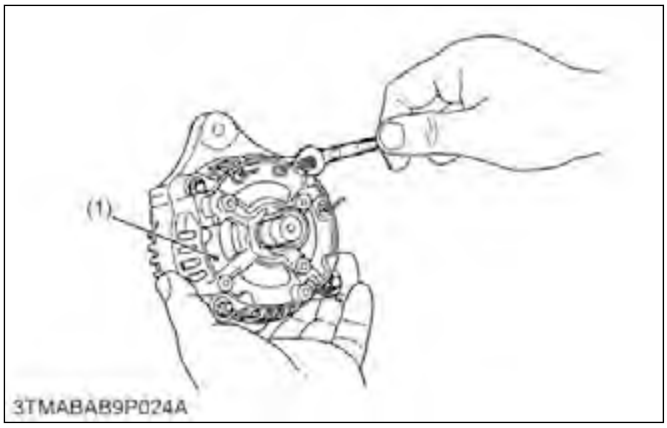

(1) Rear end frame

5.2.7 Removing rotor

IMPORTANT

- **Take special care not to drop the rotor and damage the slip ring or fan, etc.**

1. Press out the rotor (1) from drive end frame (3).

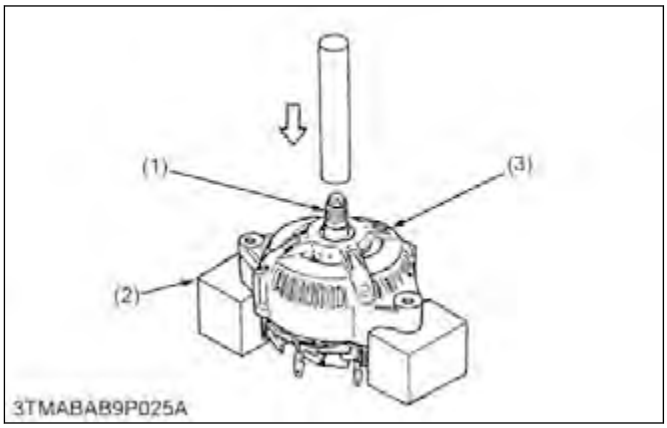

(1) Rotor
(2) Block
(3) Drive end frame

5.2.8 Removing retainer plate

1. Remove the four screws holding the retainer plate, and remove the retainer plate (1).

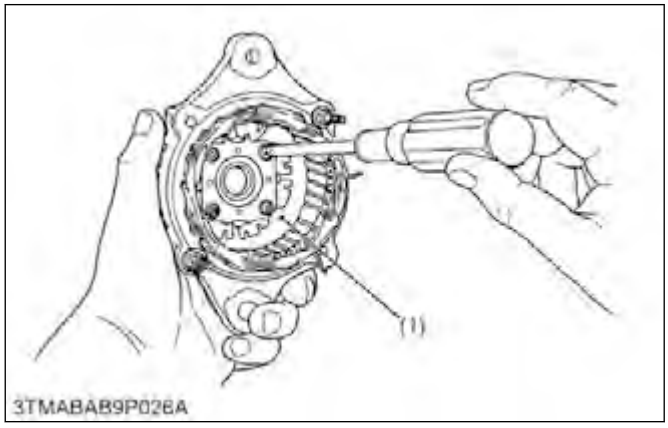

(1) Retainer plate

5.2.9 Removing bearing on drive end side

1. Press out the bearing from drive end frame (3) with a press and jig (1).

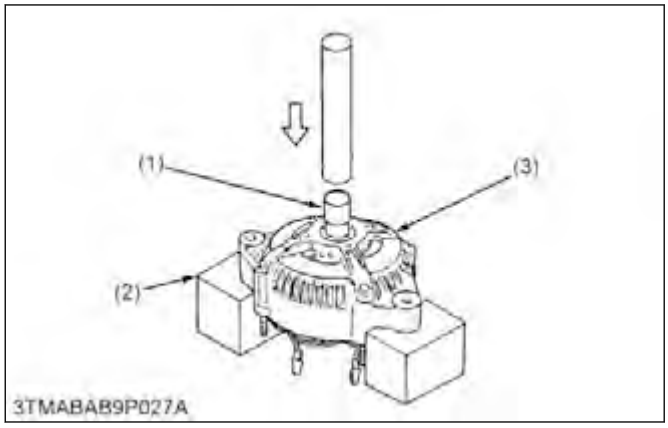

(1) Jig
(2) Block
(3) Drive end frame

5.2.10 Removing bearing at slip ring side

1. Lightly secure the rotor (1) with a vise to prevent damage, and remove the bearing (2) with a puller (3).

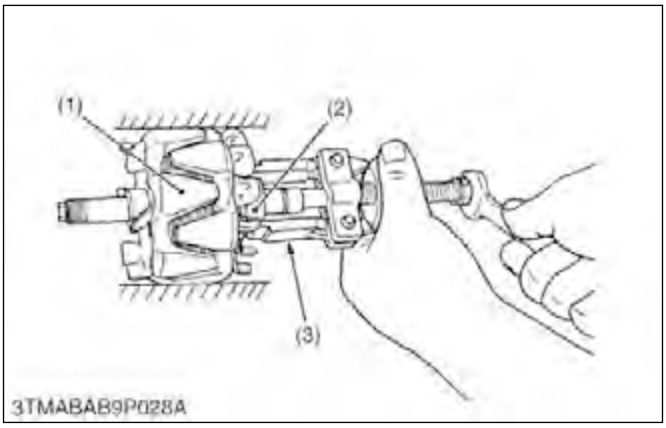

(1) Rotor
(2) Bearing
(3) Puller

6. Servicing

6.1 Starter

6.1.1 Checking overrunning clutch

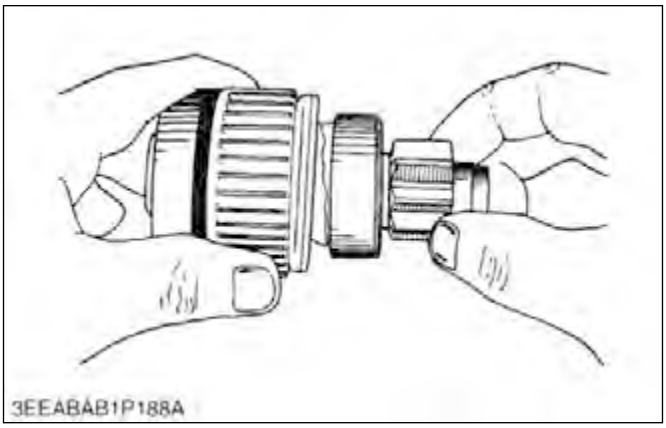

1. Inspect the pinion for wear or damage.
2. If there is any problem, replace the overrunning clutch assembly.
3. Check that the pinion turns freely and smoothly in the overrunning direction and does not slip in the cranking direction.
4. If the pinion slips or does not rotate in the both directions, replace the overrunning clutch assembly.

https://truckmanualshub.com/

6.1.2 Checking commutator and mica

1. Check the contact face of the commutator for wear, and grind the commutator with emery paper if it is slightly worn.

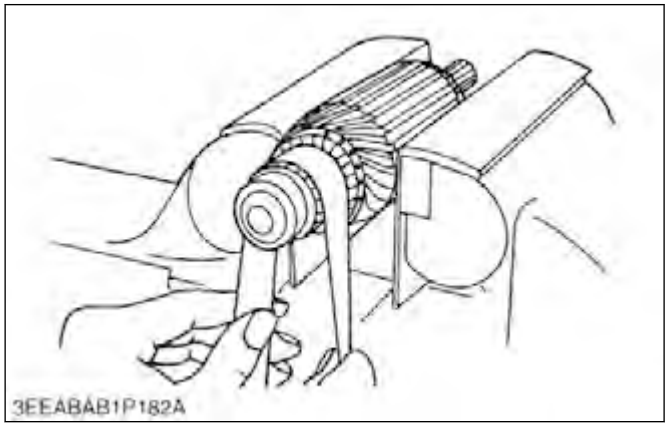

2. Measure the commutator O.D. with an outside micrometer at several points.

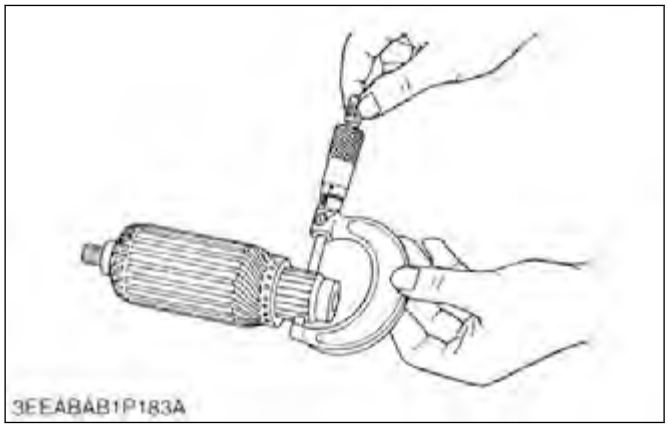

3. If the minimum O.D. is less than the allowable limit, replace the armature.

Commutator O.D.	Factory specification	30.0 mm 1.181 in.
	Allowable limit	29.0 mm 1.142 in.

4. If the difference of the O.D.'s exceeds the allowable limit, correct the commutator on a lathe to the factory specification.

Difference of O.D.'s	Factory specification	Less than 0.02 mm 0.0008 in.
	Allowable limit	0.05 mm 0.0020 in.

5. Measure the mica undercut.

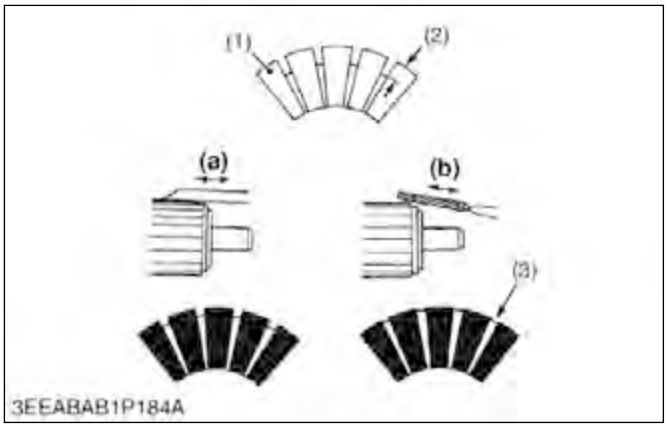

(1) Segment
(2) Undercut
(3) Mica
(a) Correct
(b) Incorrect

6. If the undercut is less than the allowable limit, correct it with a saw blade and chamfer the segment edges.

Mica undercut	Factory specification	0.50 to 0.80 mm 0.0197 to 0.0315 in.
	Allowable limit	0.20 mm 0.0079 in.

6.1.3 Checking brush wear

1. If the contact face of the brush is dirty or dusty, clean it with emery paper.
2. Measure the brush length (A) with vernier calipers.

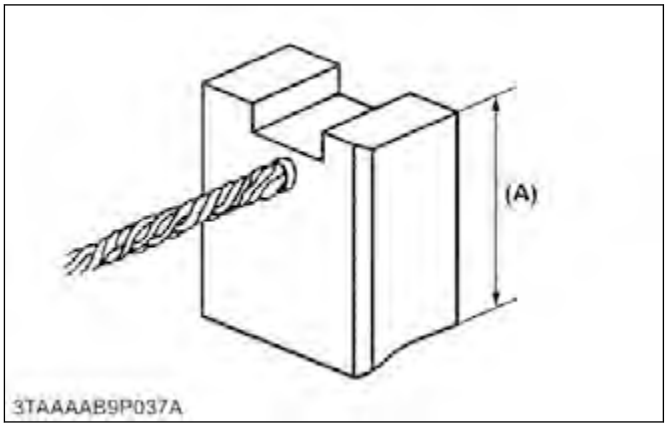

3. If the length is less than the allowable limit, replace the yoke assembly and brush holder.

Brush length (A)	Factory specification	14.0 mm 0.551 in.
	Allowable limit	9.0 mm 0.354 in.

6.1.4 Checking brush holder

1. Check the continuity across the brush holder and the holder support with an ohmmeter.

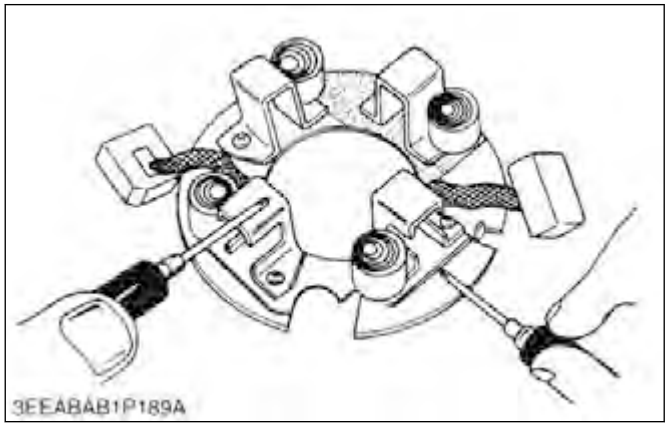

2. If it conducts, replace the brush holder.

6.1.5 Checking armature coil

1. Check the continuity across the commutator and armature coil core with an ohmmeter.

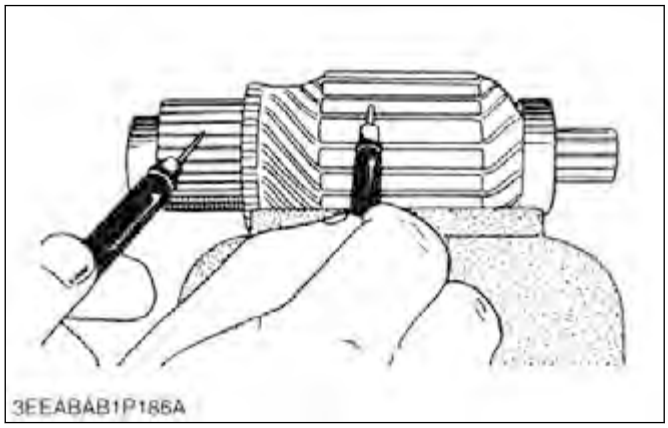

2. If it conducts, replace the armature.
3. Check the continuity across the segments of the commutator with an ohmmeter.

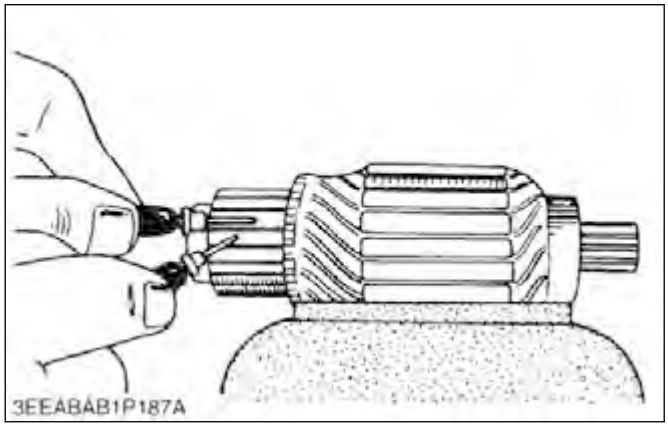

4. If it does not conduct, replace the armature.

6.1.6 Checking field coil

1. Check the continuity across the lead (1) and brush (2) with an ohmmeter.

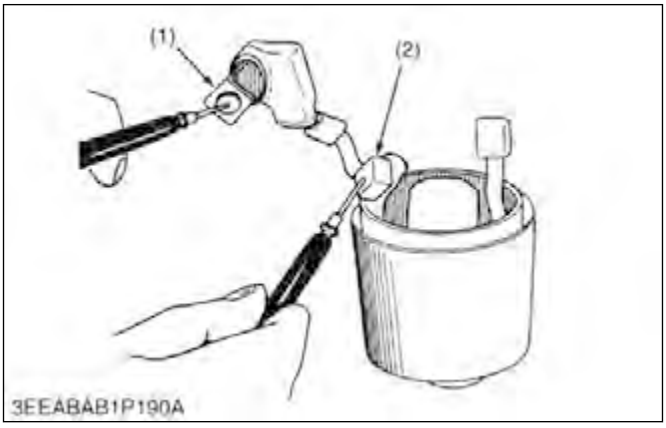

(1) Lead (2) Brush

2. If it does not conduct, replace the yoke assembly.
3. Check the continuity across the brush (2) and yoke (3) with an ohmmeter.

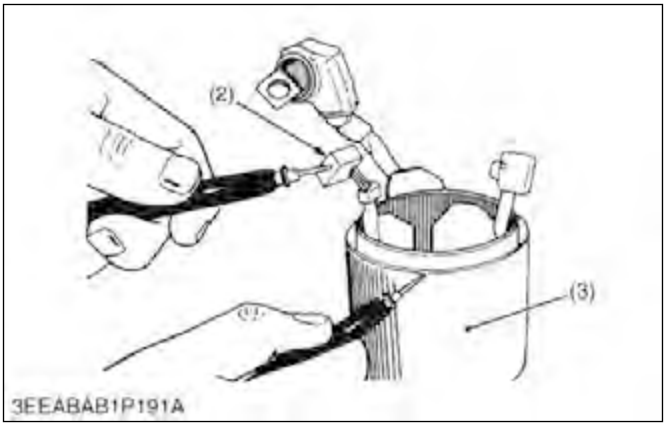

(2) Brush (3) Yoke

4. If it conducts, replace the yoke assembly.

6.2 Alternator

6.2.1 Checking bearing

1. Check the bearing for smooth rotation.

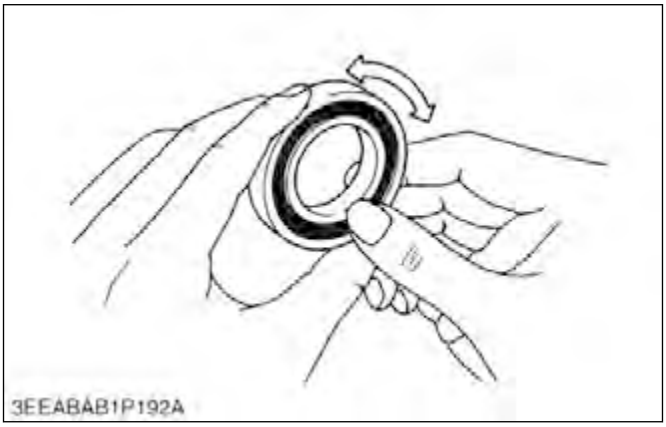

2. If it does not rotate smoothly, replace it.

6.2.2 Checking stator

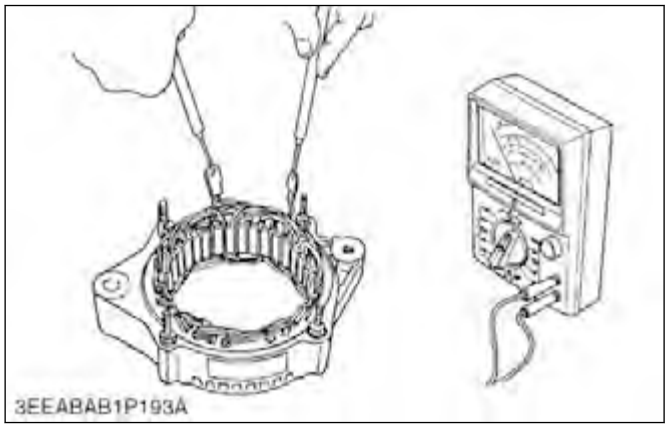

1. Measure the resistance across each lead of the stator coil with resistance range of circuit tester.
2. If the measurement is not within factory specification, replace it.

Resistance	Factory specification	Less than 1.0 Ω

3. Check the continuity across each stator coil lead and core with resistance range of circuit tester.
4. If infinity is not indicated, replace it.

6.2.3 Checking rotor

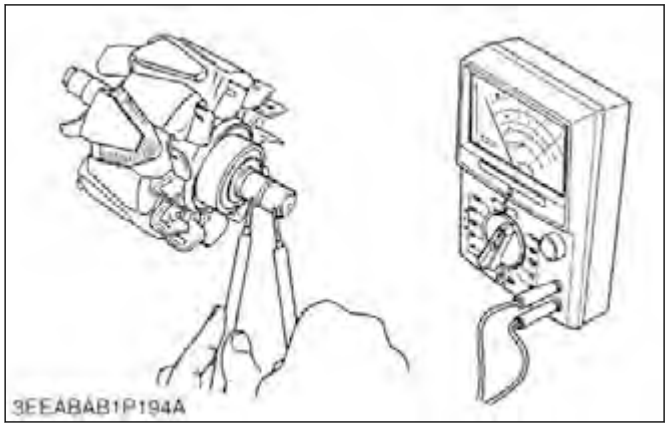

1. Measure the resistance across the slip rings.
2. If the resistance is not the factory specification, replace it.

Resistance	Factory specification	2.9 Ω

3. Check the continuity across the slip ring and core with resistance range of circuit tester.
4. If infinity is not indicated, replace it.

6.2.4 Checking slip ring

1. Check the slip ring for score.
2. If scored, correct with an emery paper or on a lathe.
3. Measure the O.D. of slip ring with vernier calipers.

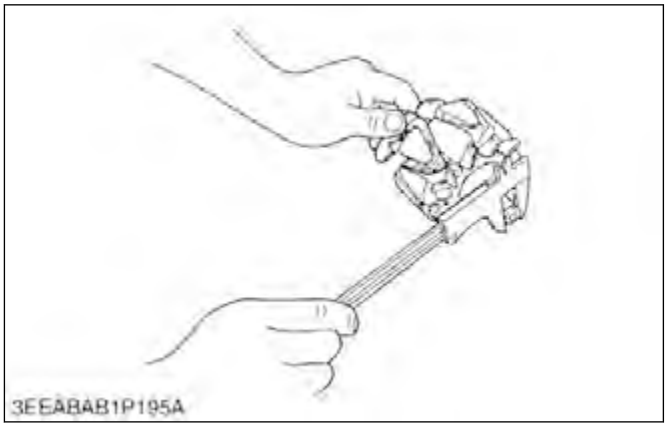

4. If the measurement is less than the allowable limit, replace it.

Slip ring O.D.	Factory specification	14.4 mm 0.567 in.
	Allowable limit	14.0 mm 0.551 in.

6.2.5 Checking brush wear

1. Measure the brush length with vernier calipers.

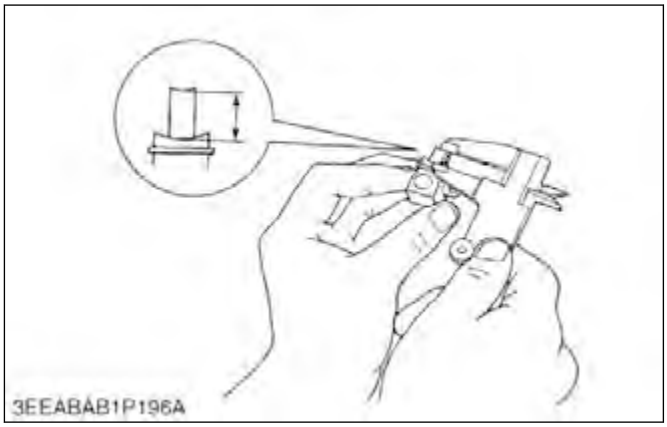

2. If the measurement is less than allowable limit, replace it.

Brush length	Factory specification	10.5 mm 0.413 in.
	Allowable limit	8.4 mm 0.331 in.

3. Make sure that the brush moves smoothly.
4. If the brush is damaged, replace it.

6.2.6 Checking rectifier

1. Check the continuity across each diode of rectifier with resistance range of circuit tester. The rectifier is normal if the diode in the rectifier conducts in one direction and does not conduct in the reverse direction.

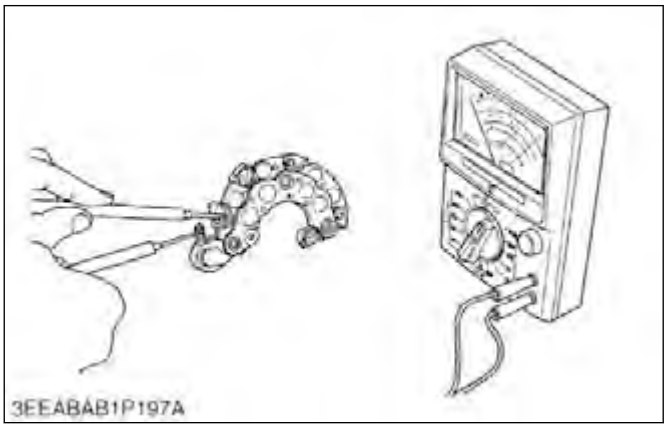

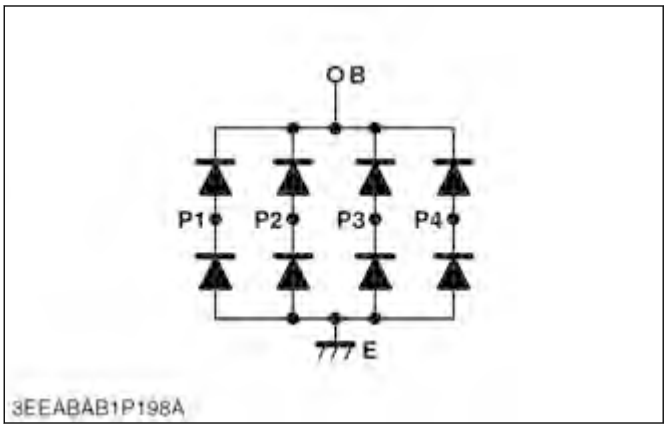

https://truckmanualshub.com/

9. MOWER

https://truckmanualshub.com/

MECHANISM

1. Structure of power transmission of mower

The power is transmitted from mid-PTO to blades as follows.

Center blade

Mid-PTO shaft (5) → Universal joint (4) → Pinion shaft (3) → Bevel gear (1) → Bevel gear (2) → Bevel gear shaft (8) → Center blade (6)

Outer blade

Mid-PTO shaft (5) → Universal joint (4) → Pinion shaft (3) → Bevel gear (1) → Bevel gear (2) → Bevel gear shaft (8) → Center pulley (7) → Mower belt (9) → Outer pulley (11) → Blade shaft (10) → Outer blade (12)

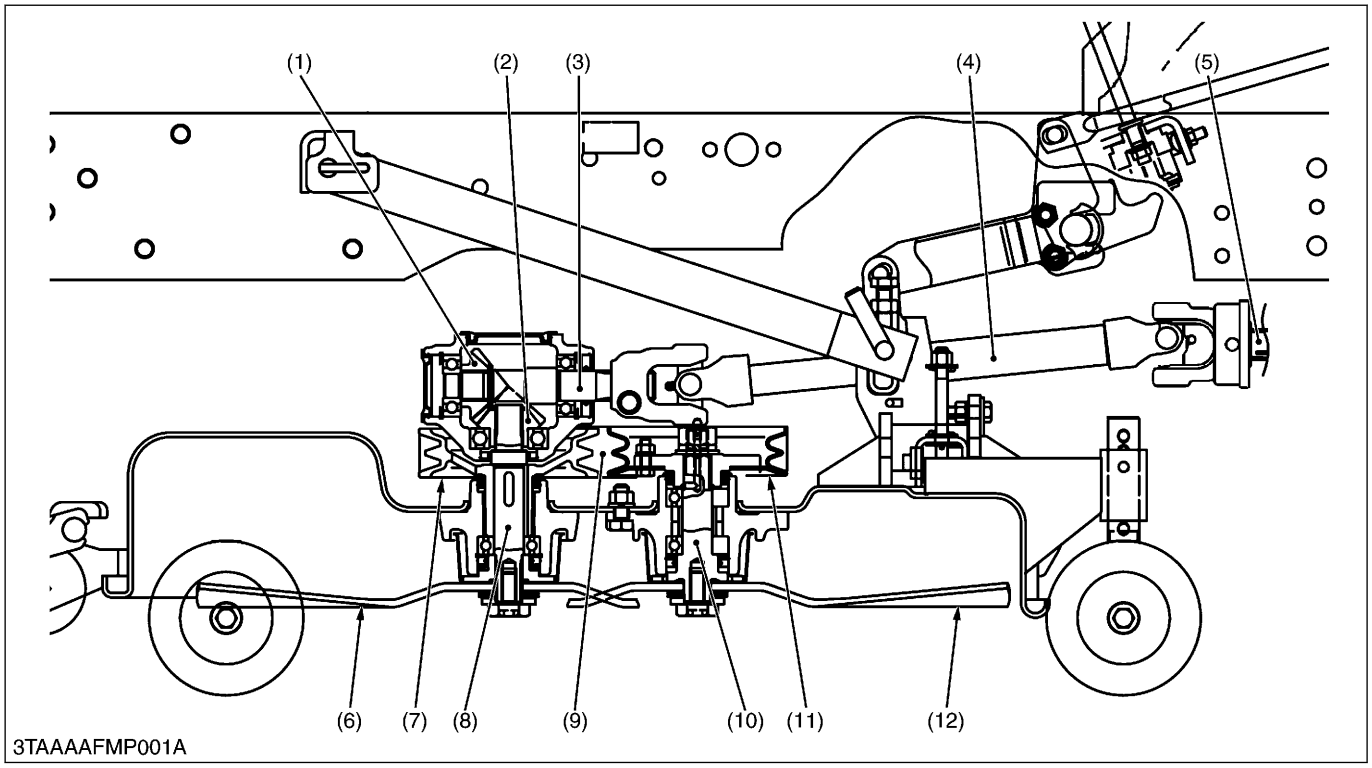

(1) Bevel gear
(2) Bevel gear
(3) Pinion shaft
(4) Universal joint
(5) Mid-PTO shaft
(6) Center blade
(7) Center pulley
(8) Bevel gear shaft
(9) Mower belt
(10) Blade shaft
(11) Outer pulley
(12) Outer blade

https://truckmanualshub.com/

2. Structure of lifting mechanism of mower

CAUTION

- **Never operate mower in transport position.**

The lifting of mower is performed by the hydraulic system installed on the tractor.
The mower should be kept lift when traveling. When the position control lever is moved to **LIFT** position, the lift arm (6) is lifted up by the oil pressure of hydraulic system, and the rear lift link (L.H.) (5) is pulled rearward.
Therefore, rear lift links (4), (5) rotate and the mower is lifted by the lift links (3) and rear links (2).
As this link system is a parallel linkage, the mower can be kept parallel at every position.

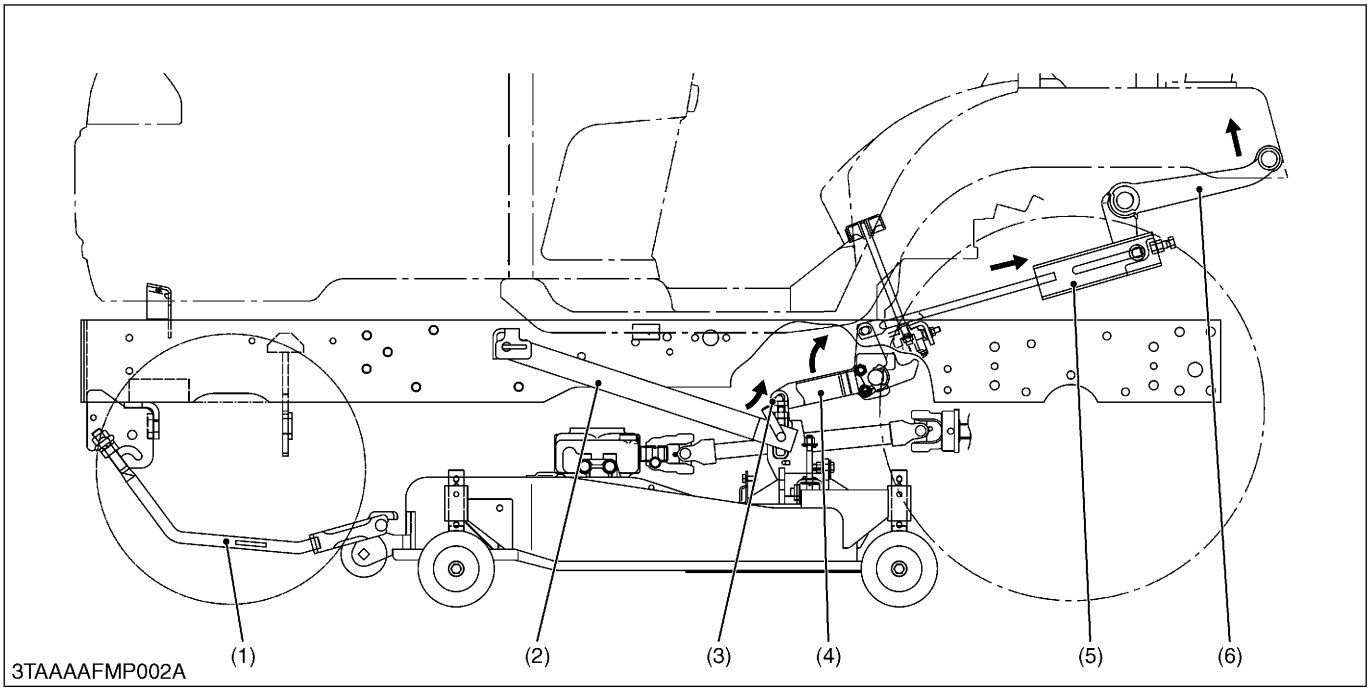

(1) Front link
(2) Rear link
(3) Lift link
(4) Rear lift link (R.H.)
(5) Rear lift link (L.H.)
(6) Lift arm

https://truckmanualshub.com/

SERVICING

1. Troubleshooting for mower

Symptom	Probable cause and checking procedure	Solution	Reference page
Blade does not turn	1. Mid-PTO system malfunctioning	Check transmission	4-55
	2. Mower belt broken	Replace belt	9-14
Blade speed is slow	1. Mower belt loose	Replace belt or tension spring	9-14
	2. Grass clogged	Remove grass	—
	3. Cup washer flattened or worn out	Replace cup washer	9-15
	4. Engine RPM too low	Mow at full throttle, check and reset engine RPM	—
Cutting is poor	1. Mower blade worn or broken	Sharpen or replace mower blade	9-15
	2. Mower blade screw loose	Retighten mower blade screw	9-15
	3. Cutting height improper	Adjust cutting height	9-10 9-11 9-12
	4. Ground speed too fast	Slow down	—
	5. Low tire pressure	Add air to correct	2-53
	6. Anti-scalp rollers not adjusted correctly	Adjust anti-scalp rollers	9-12
Mower is not lifted	1. Linkage system broken	Replace linkage system	9-12
	2. Trouble of hydraulic system	Check hydraulic system	—

2. Servicing specifications for mower

Item		Factory specification	Allowable limit
Stopper and rear link	Clearance	0 to 0.5 mm 0 to 0.01 in.	–
Front tip and rear tip of blade	Difference	0.0 to 5.0 mm 0.0 to 0.20 in.	–
Left tip and right tip of blade	Difference	Less than 3 mm 0.12 in.	–
Balancer spring	Length	55.0 mm 2.17 in.	–
Input shaft (without mower belt)	Turning torque	Less than 0.7 N·m 0.07 kgf·m 0.52 lbf·ft	–
Bevel gears in gear box	Backlash	0.10 to 0.20 mm 0.0040 to 0.0078 in.	0.40 mm 0.016 in.

https://truckmanualshub.com/

3. Tightening torques for mower

Item	N·m	kgf·m	lbf·ft
Stay link nut (RCK54D-26BX and RCK60D-26BX)	43.3 to 50.3	4.4 to 5.1	32 to 37
Front link lock nut (RCK54D-26BX and RCK60D-26BX)	60 to 70	6.2 to 7.1	45 to 51
Gear box bracket mounting bolt and nut	78 to 90	7.9 to 9.2	58 to 66
Gear box mounting screw	78 to 90	7.9 to 9.2	58 to 66
Mower blade screw	103 to 117	10.5 to 12.0	76.0 to 86.7
Center pulley holder bolt and nut	78 to 90	7.9 to 9.2	58 to 66
Outer pulley mounting nut	197 to 225	20.0 to 23.0	145 to 166
Pulley boss mounting nut	24 to 27	2.4 to 2.8	18 to 20
Outer pulley holder mounting bolt and nut	78 to 90	7.9 to 9.2	58 to 66

RELATED PAGE

TIGHTENING TORQUES on page 2-13

https://truckmanualshub.com/

4. Setting up mower [RCK54D-26BX and RCK60D-26BX]

4.1 Assembling mower

DANGER

To avoid serious injury or death:

- **Do not operate the mower without the discharge deflector properly in position.**

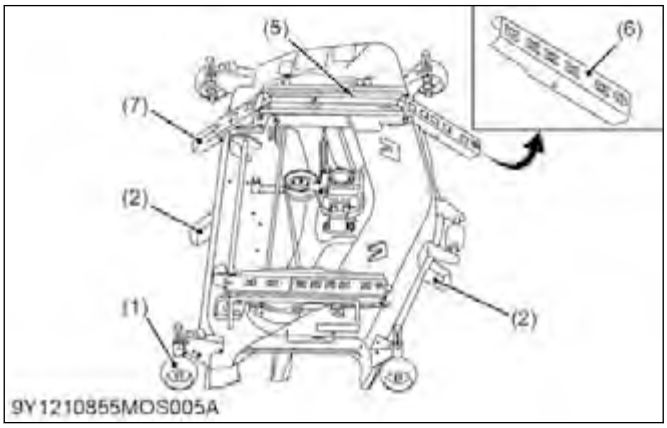

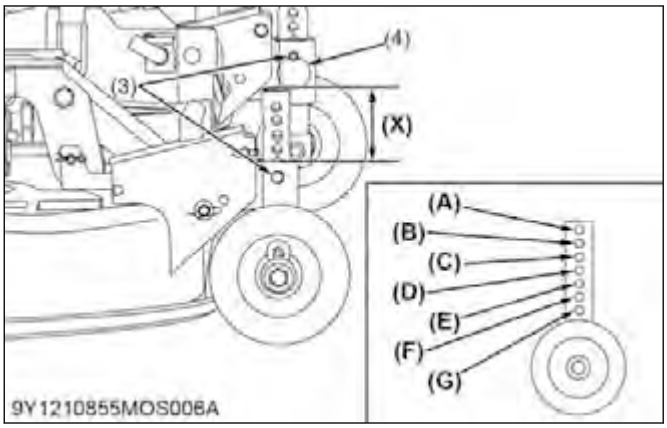

(1) Anti-scalp roller
(2) Block
(3) Clevis pin
(4) Snap ring
(5) F spring
(6) Ramp F
(7) Ramp R

1. Place the mower on blocks as illustrated.
2. Attach all the anti-scalp rollers to the arms of the deck. Put clevis pins from outside and snap rings inside in the **F** position. 4.5 holes (X) must be visible.
3. Attach the discharge deflector to the deck with the spring (9), discharge pin (10) and cotter pin (11). Secure the spring to the discharge deflector as illustrated.

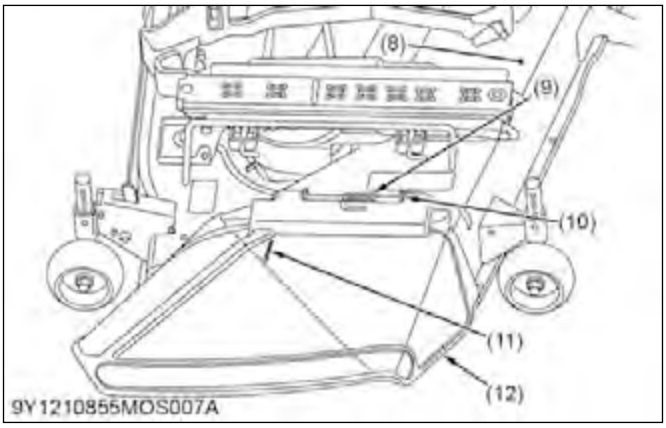

(8) Deck
(9) Spring
(10) Discharge pin
(11) Cotter pin
(12) Discharge deflector

4.2 Setting mower

WARNING

To avoid serious injury:

- **Park the tractor on a firm, flat and level surface, set the parking brake, stop the engine and remove the key.**
- **Clean up mower deck, slope and frame link. Make sure there is no debris inside the universal joint.**
  Check all functions work correctly.
- **Remove the front loader, front attachment and 3 point hitch attachment.**

1. Adjust all the anti-scalp rollers to the **F** position. 4.5 holes (X) must be visible. (See in "Assembling mower")
2. Unlock the lever (1) to lift up the rear anti-scalp roller.

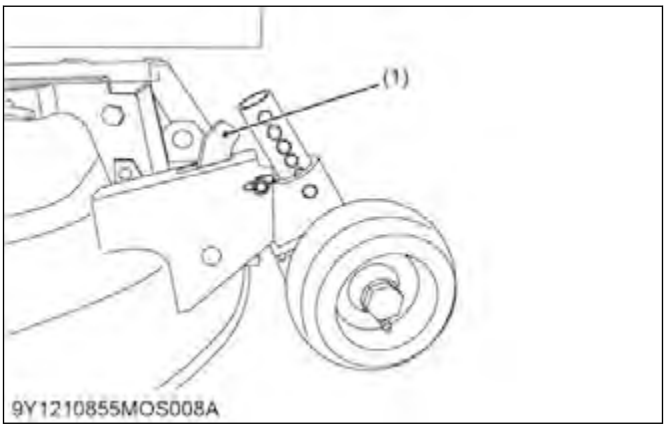

(1) Lever

https://truckmanualshub.com/

3. Pull the L-pin (2) and extend the ramp (3) to front and rear sides.

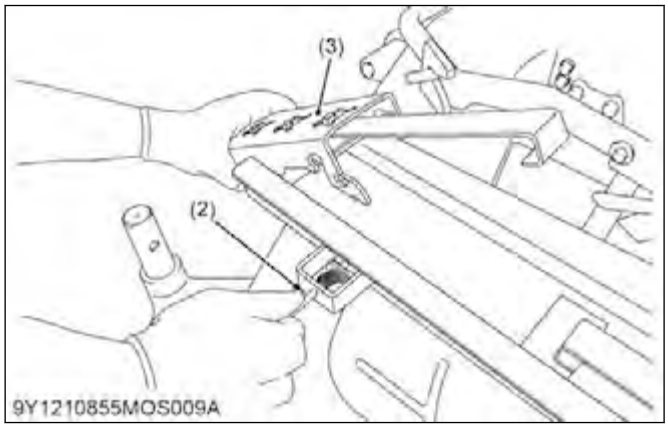

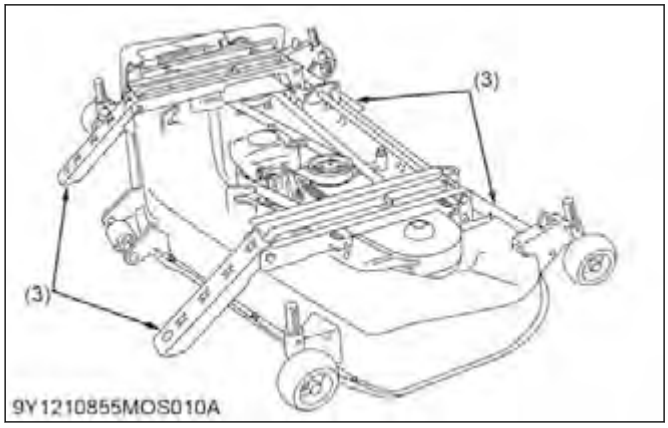

(2) L-pin (3) Ramp

4.3 Mounting front link

CAUTION

To avoid personal injury:

- **Attach the stay link left and right. Do not loosen both left and right side nuts at the same time.**

1. Place all front link and frame link under the tractor.
2. Attach the stay link (1) with the nut (2) on the tractor front frame.

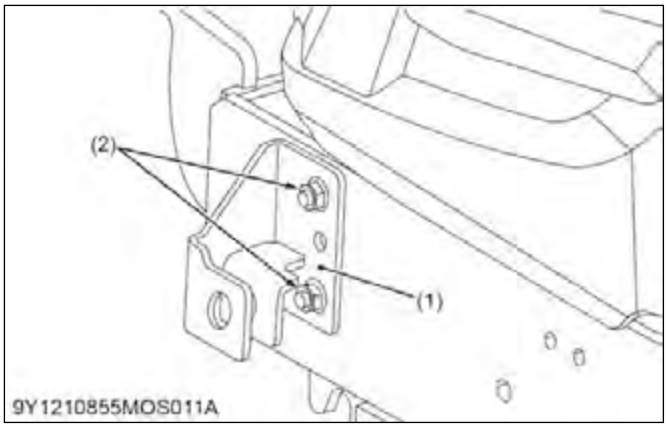

(1) Stay link (2) Nut

Tightening torque	Stay link nut	43.3 to 50.3 N·m 4.4 to 5.1 kgf·m 32 to 37 lbf·ft

3. Attach the front link (6) to the stay link (1) with joint pin (3), washer (4) and snap pin (5).

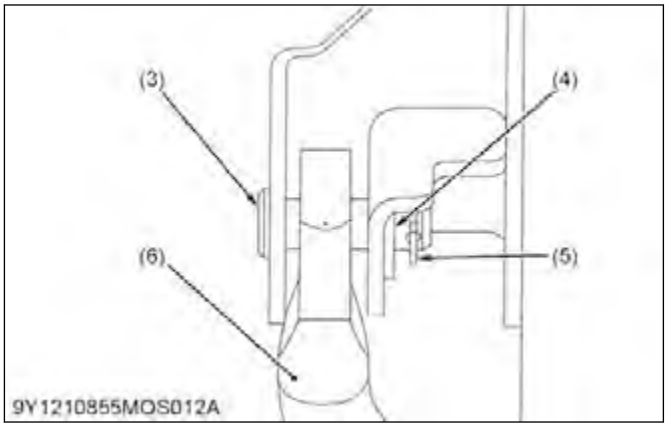

(3) Joint pin (6) Front link
(4) Washer
(5) Snap pin

4. Before attaching the mower links, adjust lengths (L1) to 22 mm.

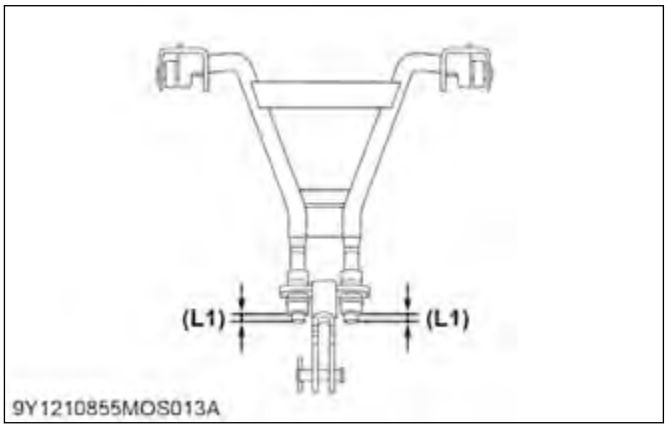

(L1) 22 mm

4.4 Mounting frame link

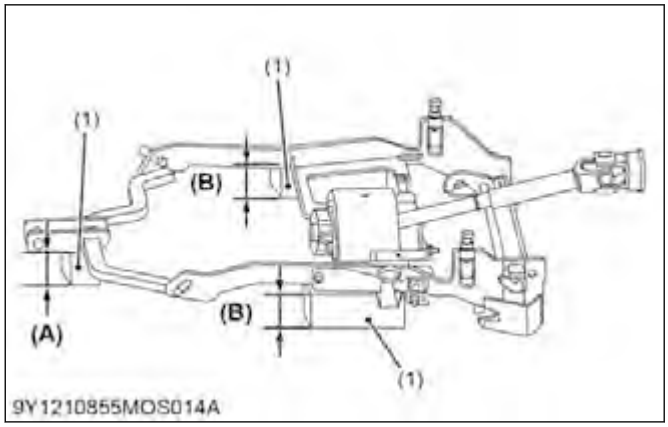

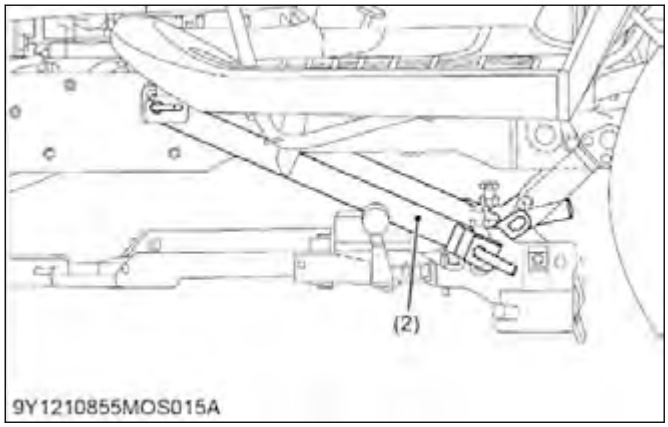

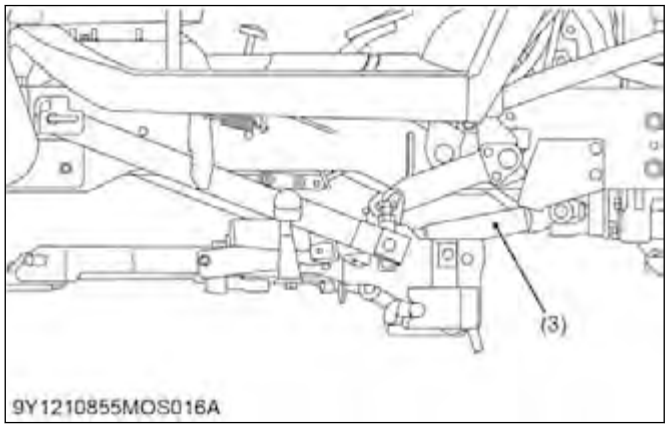

(1) Block
(2) Link arm
(3) Universal joint
(A) 160 mm (6.3 in.)
(B) 120 mm (4.7 in.)

1. Place blocks below the frame link if one person does the setting. Heights of blocks are recommended value for attaching.
2. Start engine. Set the cutting height to 0" and lower the frame link. Then stop the engine.
3. Attach the frame link to the link arm.
4. Joint the front link and frame link with joint pin and snap ring.
5. Attach the universal joint to tractor.

4.5 Setting tractor

1. Make sure that the frame link (1) is lifted up to the **TOP** position when tractor is traveling without mower. Stop the tractor behind the mower. Set the parking brake.

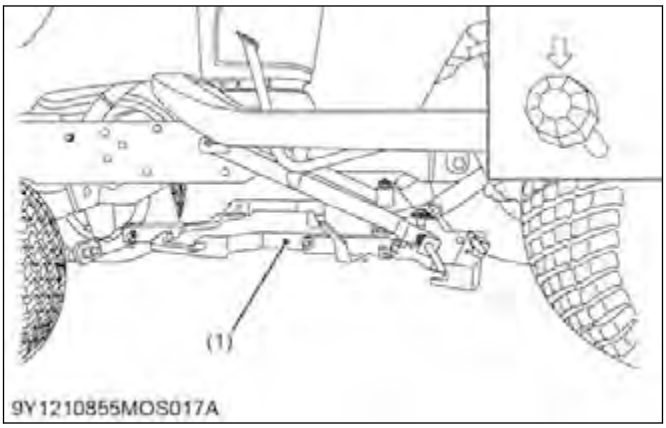

(1) Frame link

2. Set the cutting height to 0" and lower the frame link (1). Then stop the engine.
3. Make sure that the rear lock (2) is unlocked.

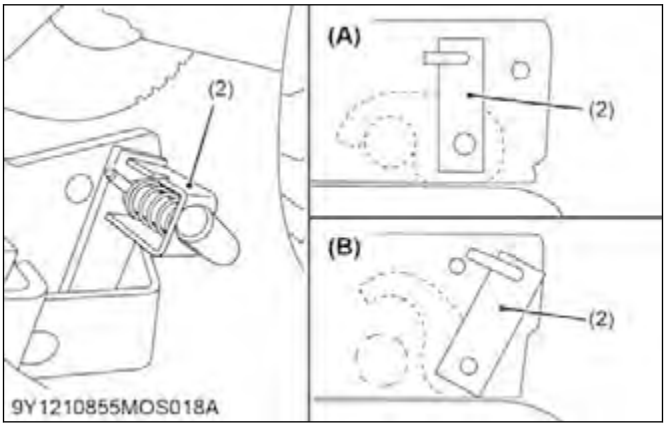

(2) Rear lock
(A) NG
(B) OK

4. Make sure that the universal joint (3) is in rear position.

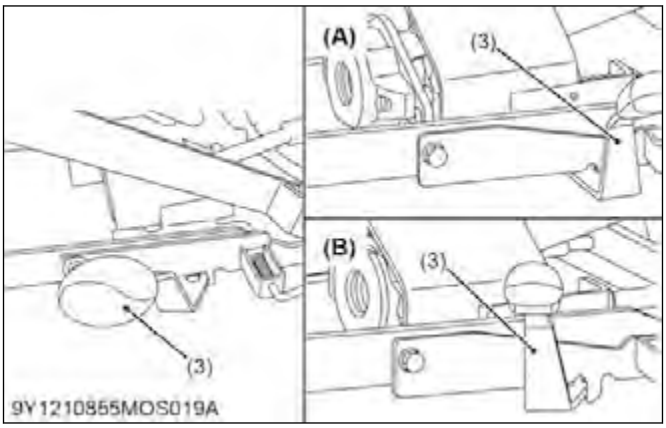

(3) Lever guide (Universal joint)
(A) NG
(B) OK

https://truckmanualshub.com/

5. Make sure that the frame link (1) is fully down.

4.6 Mounting mower

WARNING
To avoid serious injury:
- **If mower moves forward before the tractor rides on, there is less grip between the ground and mower. Change area and try again.**

1. Start the engine and engage 4WD. Set the range gear shift lever to **LOW**. Release the parking brake.
2. With the right front tire, make a driving target to the guide (1).

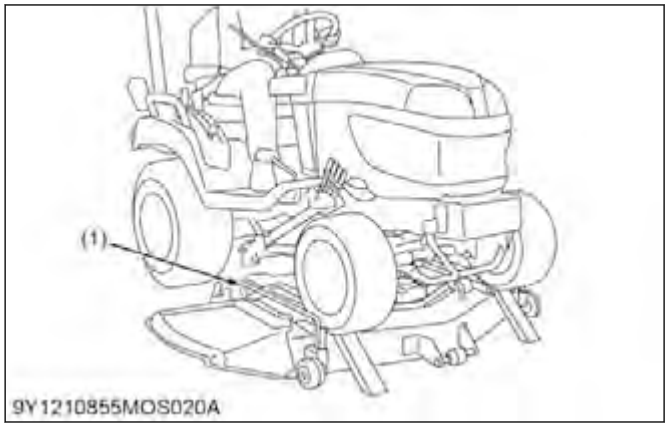

(1) Guide

3. Drive over the ramp of mower along the guide (1). Keep the front tire side touching the guide rod.
4. Just after the tractor drove over the mower, stop the engine. Make sure frame link is connected to mower. Set the parking brake.
5. Lock the rear lock (2).

WARNING
To avoid serious injury:
- **Double check that frame link is locked to mower deck.**

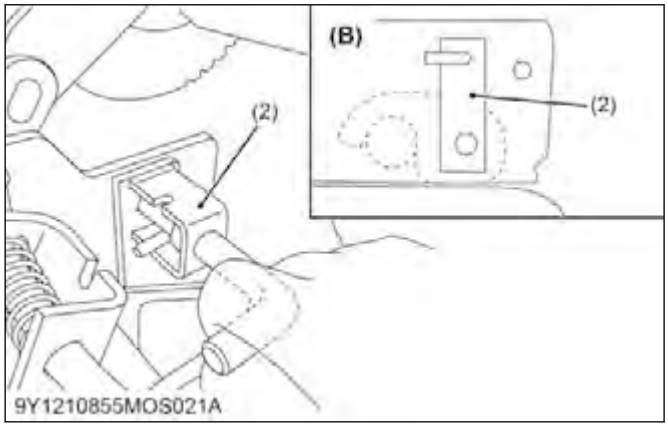

(2) Rear lock (B) OK

6. Set the PTO select lever to **Rear-PTO** position.
7. Connect the universal joint by the lever guide (3).

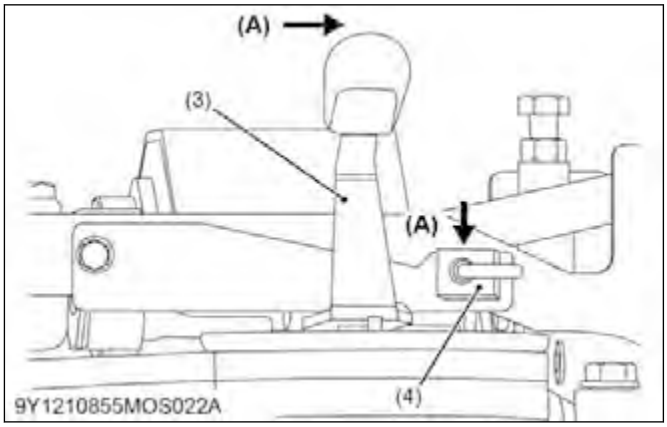

(3) Lever guide (A) Engage
(4) Lock lever

8. Lock the lever guide by the lock lever (4).

WARNING
To avoid serious injury:
- **Double check that lever guide is locked.**

9. Set the PTO select lever to **Mid-PTO** position.
10. Put front and rear ramps (5) back to the ramp bracket (6). Lock the L-pin (7).

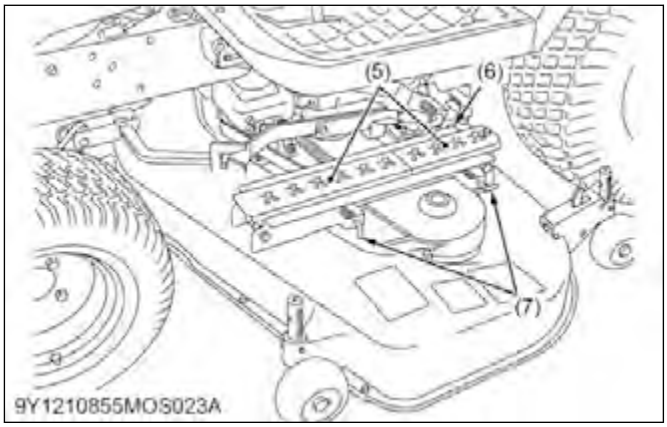

(5) Ramp (7) L-pin
(6) Ramp bracket

11. Start the engine. Lift up the mower to the **TOP** position. Lock the dial gauge and set the parking brake. And then, stop the engine.

12. Lock the rear anti-scalp roller (8).

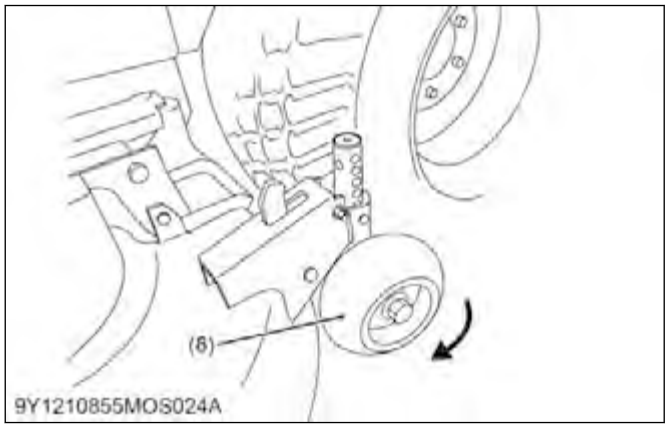

(8) Anti-scalp roller

13. Adjust the anti-scalp roller (8). See "Cutting height" in "Checking and adjusting" section for further information.

5. Checking and adjusting

5.1 Mower adjustment

CAUTION

- **Park the tractor on a firm, flat and level surface and set the parking brake.**
- **Stop the engine, remove the key, and allow the blades to stop before making adjustments.**
- **Wear heavy gloves or wrap end of blade with a rag when you handle blades.**
- **Before starting the engine, set the PTO clutch lever to off position and range gear shift lever to the neutral position.**

5.1.1 Adjusting mower link

IMPORTANT

- **Park the machine on a firm, flat and level surface and set the parking brake.**
- **Before adjusting mower deck, make sure the tire pressure is correct.**

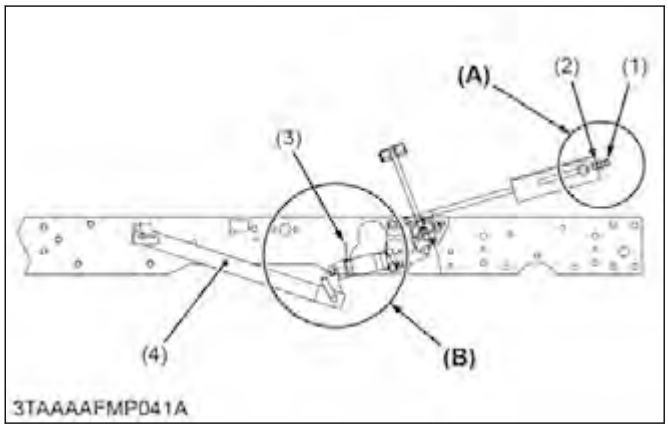

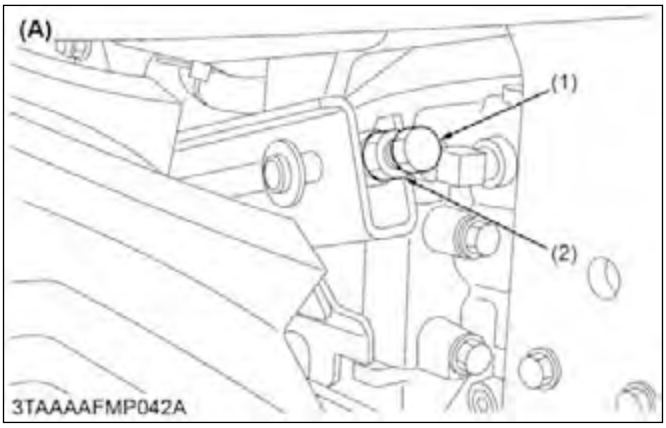

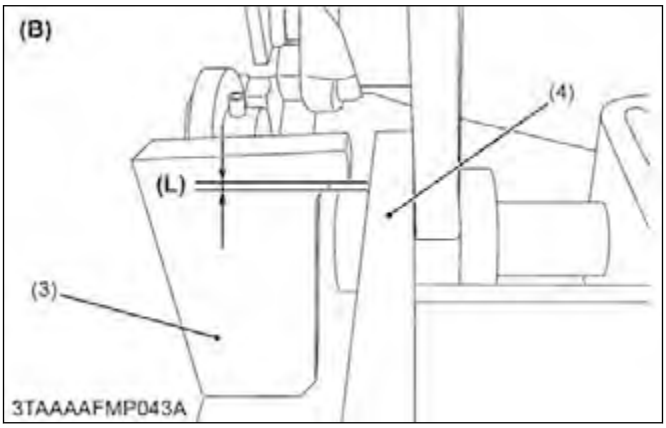

(1) Bolt
(2) Lock nut
(3) Stopper
(4) Rear link
(L) 0 to 0.5 mm (0 to 0.01 in.)
(A) Adjustment point
(B) Check point

1. Move the hydraulic control lever rearward to raise the mower to the highest position.
2. Stop the engine and remove the key.
3. Adjust the left side links with bolt so that the clearance (L) is as follows.

Clearance (L) between stopper and rear link	Factory specification	0 to 0.5 mm 0 to 0.01 in.

5.1.2 Adjusting front and rear cutting height

RCK54D-26BX and RCK60D-26BX

IMPORTANT

- **Park the machine on a firm, flat and level surface and set the parking brake.**
- **Before adjusting mower deck, make sure the tire pressure is correct.**

https://truckmanualshub.com/

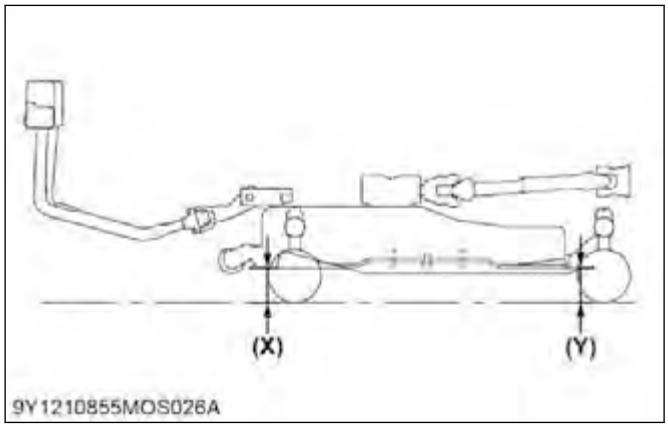

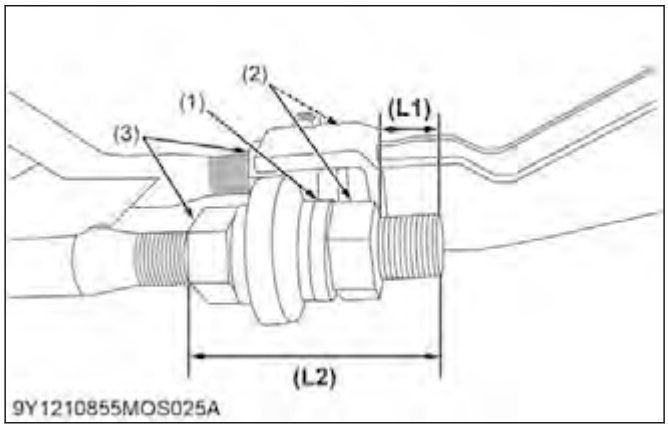

(1) Spring lock washer
(2) Lock nut
(3) Lock nut

1. Turn the cutting height control dial to **2.0** and adjust the anti-scalp roller's height to factory specified clearance between the rollers and the ground.

Clearance between rollers and ground	Factory specification	6.0 to 13 mm 0.25 to 0.50 in.

2. Align the ends of the right side blade towards the front and rear of the machine. Turn blade by hand in either direction.
3. Adjust (L1) of the front links with lock nuts (2), (3) so that (A) is within factory specification ((A) = (Y) – (X)).

Difference (Y) – (X) ((Y) ≥ (X)) between front tip and rear tip of blade	Factory specification	0.0 to 5.0 mm 0.0 to 0.20 in.

4. To adjust (L1), loosen lock nuts (2) then turn lock nuts (3). Rotate both lock nuts (3) at the same time to set L.H. and R.H. (L2) in even length.
5. Tighten lock nuts securely

Tightening torque	Front link lock nut	60 to 70 N·m 6.2 to 7.1 kgf·m 45 to 51 lbf·ft

5.1.3 Adjusting left and right cutting height

IMPORTANT

- **Park the machine on a firm, flat and level surface and set the parking brake.**
- **Before adjusting mower deck, make sure the tire pressure is correct.**

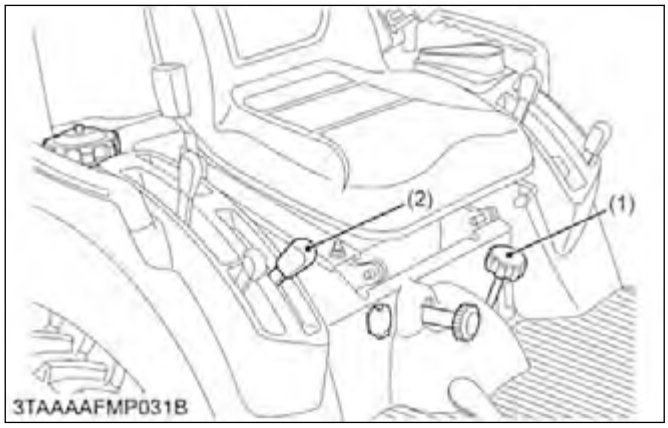

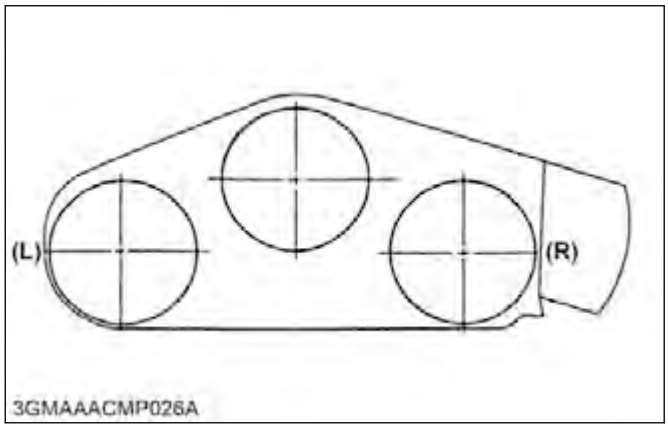

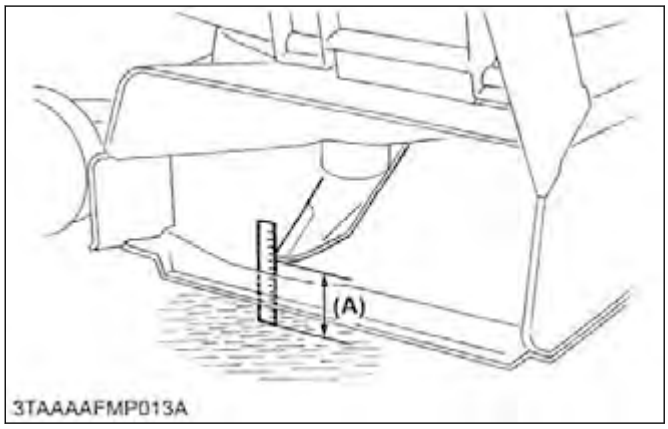

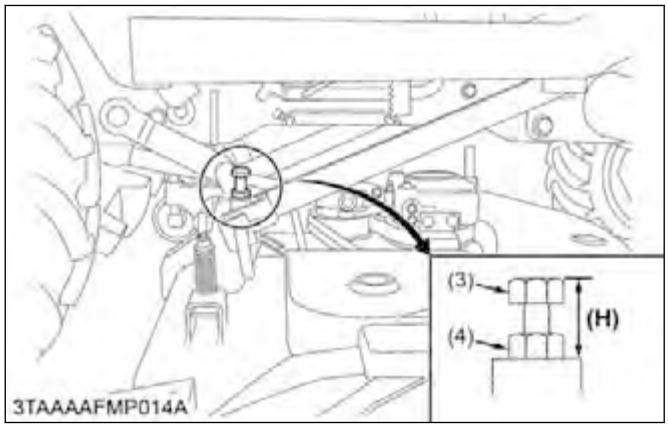

(1) Cutting height control dial
(2) Hydraulic control lever
(3) Cutting height fine turning bolt
(4) Lock nut
(L) Left blade measurement position
(R) Right blade measurement position
(A) Blade height

1. Operate the hydraulic control lever (2) rearward to raise the mower deck to the highest position.
2. Stop the engine and remove the key.
3. Turn the cutting height control dial to the desired height.
4. Set the anti-scalp roller's height to keep clearance between rollers and the ground inside specification shown below.

Clearance between rollers and ground	Specification	6 to 13 mm 0.2 to 0.5 in.

5. Lower the mower deck by moving the hydraulic control lever forward.
6. Turn left blade by hand parallel to tractor axle and turn right blade parallel to axle to measure from the outside blade tip at (L) and (R) to the level surface. The difference between measurement should be less than the factory specification.

Difference (L) – (R) between left tip and right tip of blade	Factory specification	Less than 3 mm 0.12 in.

7. If the difference between measurement is more than the factory specification, loosen the lock nut of the left side.
8. Adjust the cutting height fine turning bolts so that the difference between measurement (L) and (R) is less than the factory specification. Then lock the nut.

5.1.4 Adjusting cutting height

DANGER
- **Never operate the mower in transport position.**

IMPORTANT
- **(for self-balance suspended linkage)**
  To reduce the stepped difference in cutting height when mowing rolling terrain, follow the procedure below.

https://truckmanualshub.com/

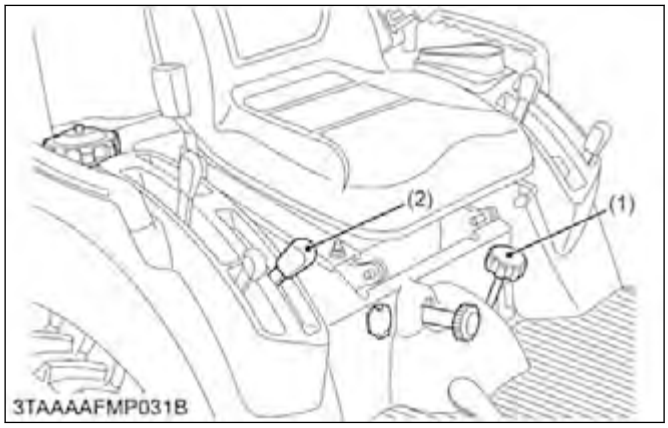

(1) Cutting height control dial (2) Hydraulic control lever

1. To set the cutting height, move the hydraulic control lever rearward to raise the mower to the highest position. Turn the cutting height control dial (1) to adjust height.
2. Set the anti-scalp roller's (3) height as shown to keep clearance between rollers and ground.

Clearance between rollers and ground	Factory specification	6.0 to 13 mm 0.25 to 0.50 in.

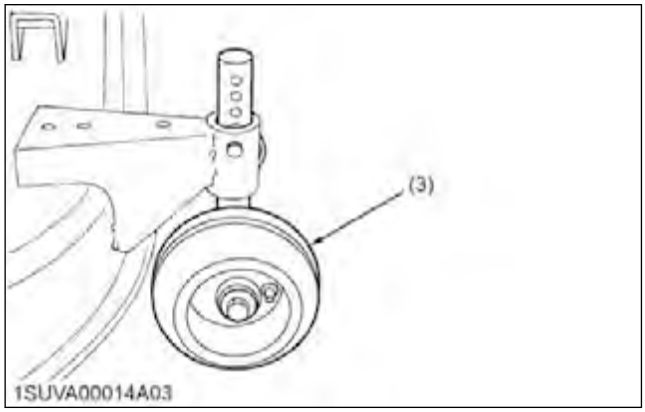

(3) Anti-scalp roller

3. Lower the mower deck by moving the hydraulic control lever (2) forward.
4. Use the higher settings for mowing in a rough area or when mowing tall grass. Lower settings should be used only for smooth lawns where short grass is desired.
5. To set the cutting height, move the hydraulic control lever (2) rearward to raise the mower to the highest position. Turn the cutting height control dial to adjust height.
6. Set the anti-scalp roller's (3) position as shown to have the same cutting height.

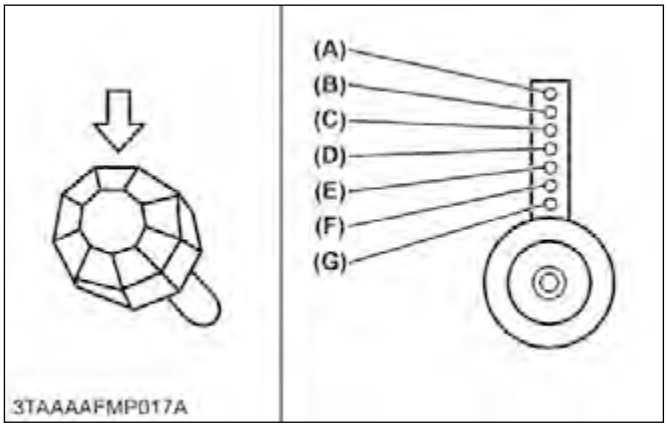

Dial (Cutting height)	Anti-scalp roller
25 mm (1.0 in.) 32 mm (1.25 in.)	(G)
38 mm (1.5 in.) 45 mm (1.75 in.)	(F)
51 mm (2.0 in.) 57 mm (2.25 in.)	(E)
64 mm (2.5 in.) 70 mm (2.75 in.)	(D)
76 mm (3.0 in.) 83 mm (3.25 in.)	(C)
89 mm (3.5 in.) 95 mm (3.75 in.)	(B)
102 mm (4.0 in.)	(A)

5.2 Checking mower blade and belt

5.2.1 Checking mower blade

1. Check the cutting edge of mower blade.

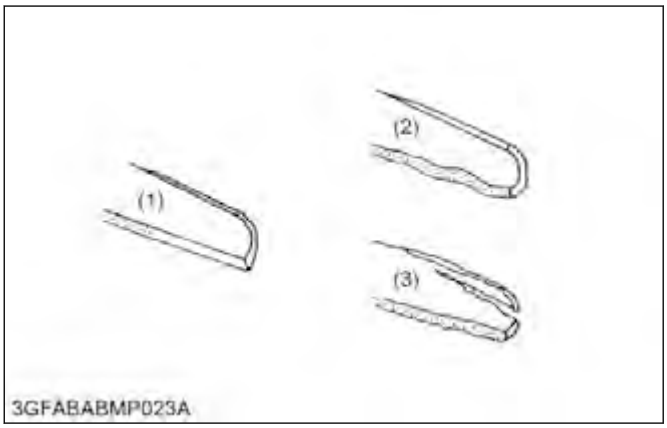

(1) New blade
(2) Worn blade
(3) Cracked blade

2. Sharpen the cutting edges, if the mower blades are as shown in figure (2).

NOTE

- **To sharpen the mower blades by yourself, clamp the mower blade securely in a vise and use a large mill file along the original bevel.**
- **To balance the mower blade, place a small rod through the center hole and check to see if the blade balance evenly. File heavy side of the blade until it balance out even.**

3. Replace the mower blades, if they are as shown in figure (3).

IMPORTANT

- **Never forget to set the dust cover, cup washer(s) and lock washer, when reassembling the mower blades. (See *"Removing mower blades"*.)**

5.2.2 Checking mower belt

1. Check to see the mower belt.

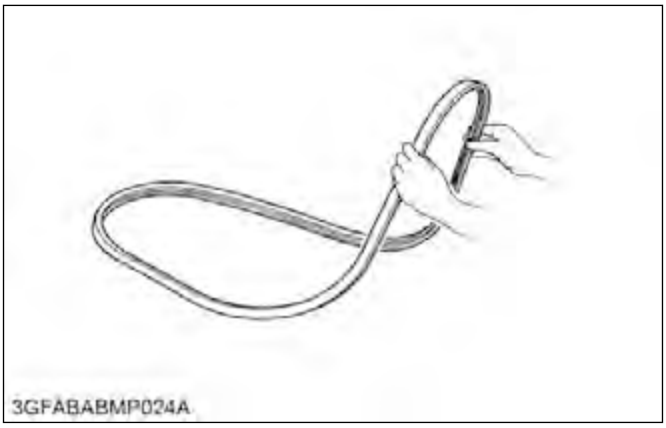

2. Replace the mower belt with a new one, if there is found surface split at more than three positions.

(When replacing mower belt)

IMPORTANT

- **After setting the gear box bracket mounting screws on the deck without tightening, then mount the other screws on the gear box. And finally tighten them.**

(1) Tension pulley
(2) Mower belt
(3) Gear box bracket (Right)

1. Dismount the mower from the tractor.
2. Remove the left and right ramp brackets.
3. Remove the left and right hand belt cover from the mower deck.
4. Clean around the gear box.
5. Remove the gear box bracket (right) (3) which mounts the gear box to the mower deck.
6. Remove the mower belt (2) from the tension pulley (1). Slip the mower belt over the top of the gear box.
7. To install a new belt, reverse the above procedure.

Tightening torque	Gear box bracket mounting bolt and nut	78 to 90 N·m 7.9 to 9.2 kgf·m 58 to 66 lbf·ft
	Gear box mounting screw	78 to 90 N·m 7.9 to 9.2 kgf·m 58 to 66 lbf·ft

https://truckmanualshub.com/

6. Disassembling and assembling

6.1 Removing ramps and belt covers

RCK54D-26BX and RCK60D-26BX

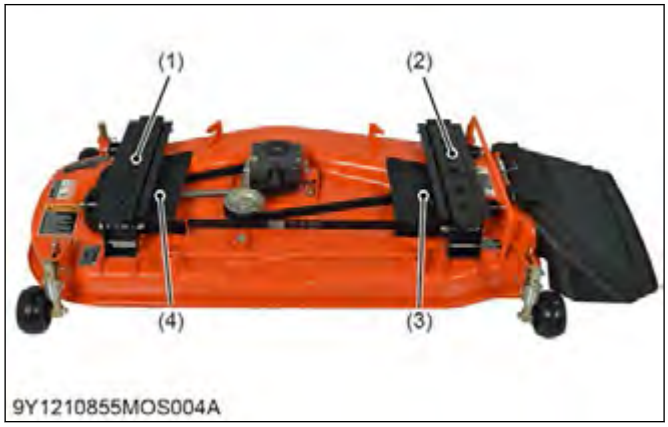

(1) Ramp (Left)
(2) Ramp (Right)
(3) Belt cover (Right)
(4) Belt cover (Left)

1. Remove left and right ramp bracket pins.
2. Remove left and right ramps (1), (2).
3. Remove the left and right belt covers (3), (4).

6.2 Removing mower blades

NOTE

- **To remove the blade securely, wedge a block of wood between one blade and the mower deck in such position that it will hold the blade safely while loosing or tightening the blade screw.**

(a) Loosen

1. Turn over the mower.
2. Remove the blade mounting bolt (6), lock washer (5), cup washers (4), mower blade (3) and spindle guard (2) from the spindle holder (1).

(When reassembling)

IMPORTANT

- **Make sure the cup washer is not flattened out or worn, causing blade to slip easily.**
  Replace cup washers if either are damaged.

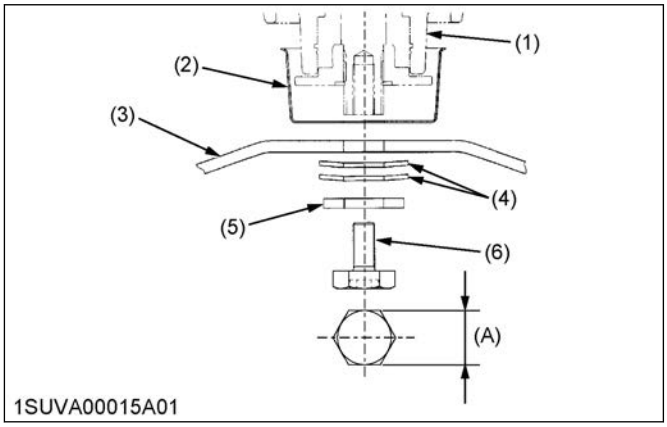

(1) Spindle holder
(2) Spindle guard
(3) Blade
(4) Cup washer
(5) Lock washer
(6) Blade mounting bolt
(A) 30.2 mm (1.19 in.)

- Install the blade in position together with the dust cover and the cup washers. Tighten them up with the bolt.

Tightening torque	Blade mounting bolt	103 to 117 N·m 10.5 to 12.0 kgf·m 76.0 to 86.7 lbf·ft

6.3 Removing blade boss

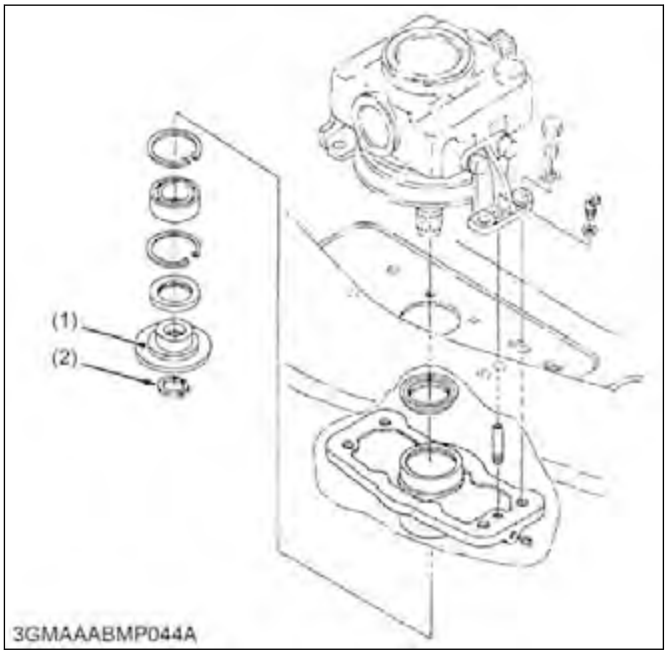

(1) Blade boss
(2) External snap ring

1. Remove the external snap ring (2).
2. Remove the blade boss (1).

6.4 Removing gear box and mower belt

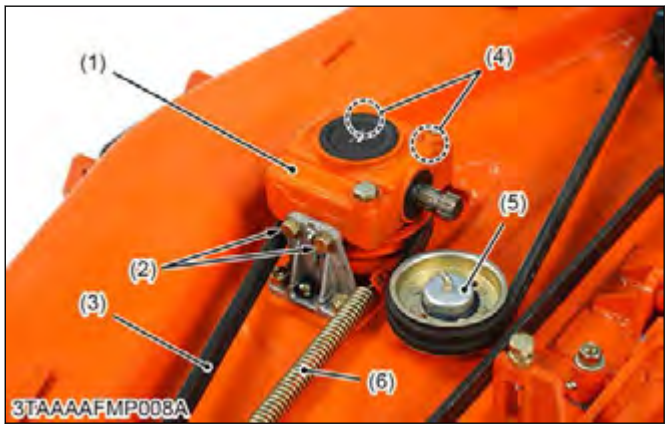

(1) Gear box
(2) Gear box mounting screw (Reamer screw)
(3) Mower belt
(4) Gear box mounting screw
(5) Tension pulley
(6) Tension spring

1. Turn over the mower.
2. Remove the mower belt (3) from the tension pulley (5).
3. Remove the left and right gear box mounting screws (2), (4) and remove the gear box (1) from the mower deck.

(When reassembling)

- Install the reamer screws (2) at their original positions as shown in the figure.

Tightening torque	Gear box mounting screw	78 to 90 N·m 7.9 to 9.2 kgf·m 58 to 66 lbf·ft

6.5 Disassembling gear box

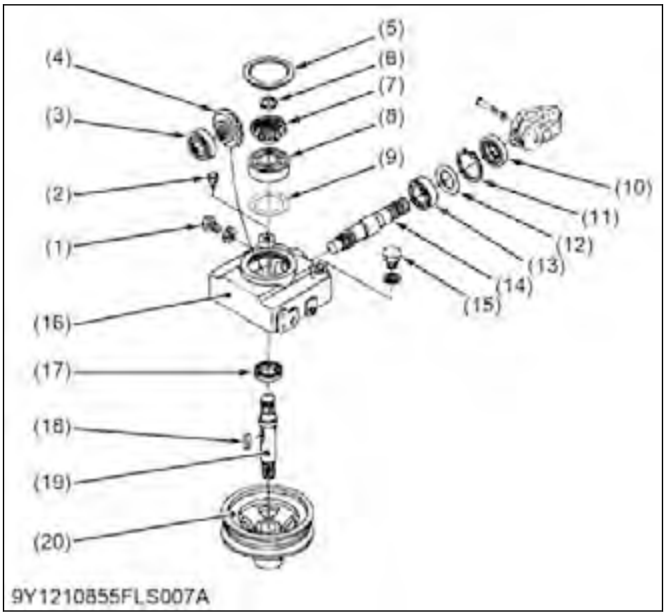

(1) Drain plug
(2) Breather
(3) Ball bearing
(4) 19T bevel gear [RCK54D-26BX]
18T bevel gear [RCK60D-26BX]
(5) Gear box cap
(6) External snap ring
(7) 16T bevel gear [RCK54D-26BX]
17T bevel gear [RCK60D-26BX]
(8) Ball bearing
(9) Shim
(10) Oil seal
(11) Internal snap ring
(12) Shim
(13) Ball bearing
(14) Pinion shaft
(15) Oil filler plug
(16) Gear box
(17) Oil seal
(18) Feather key
(19) Bevel gear shaft
(20) Center pulley

1. Remove the drain plug (1), and drain the gear box oil.
2. Remove the center pulley (20) with a puller, and remove the feather key (18) on the bevel gear shaft (19).
3. Remove the gear box cap (5).
4. Remove the oil seal (10), internal snap ring (11) and shim (12).
5. Tap out the pinion shaft (14) with the ball bearing (13), and remove the bevel gear (4).
6. Remove the ball bearing (3) and shims (if installed).
7. Remove the external snap ring (6), and draw out the bevel gear shaft (19).
8. Remove the bevel gear (7), ball bearing (8), shim (9) and oil seal (17).

(When reassembling)

- Replace the oil seals (10), (17) and gear box cap (5) with new ones.
- Check the backlash and turning torque.
  If not proper, adjust with the shims to specification.

— RELATED PAGE —

7.1 Adjusting turning torque of pinion shaft on page 9-18

https://truckmanualshub.com/

7.2 Adjusting backlash between bevel gears on page 9-18

6.6 Removing center pulley holder

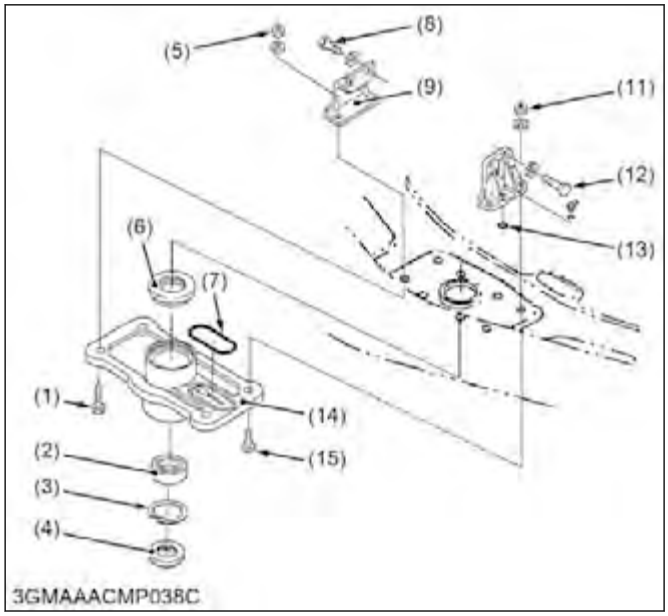

(1) Center pulley holder bolt
(2) Ball bearing
(3) Snap ring
(4) Oil seal
(5) Nut
(6) Oil seal
(7) O-ring
(8) Gear box mounting screw
(9) Gear box bracket (Right)
(10) Gear box bracket (Left)
(11) Nut
(12) Gear box reamer screw
(13) O-ring
(14) Center pulley holder
(15) Center pulley holder reamer bolt
(16) Collar

1. Remove the center pulley holder bolt (1), (15) / center pulley nut (5), (11).
2. Remove the upper oil seal (6) and lower oil seal (4).
3. Remove the internal snap ring (3) and ball bearing (2).

(When reassembling)

NOTE

- **When reassembling the center pulley holder (14), gear box and gear box bracket (9), (10), tighten the bolts and nuts in the order as below, to prevent the incline the gear box.**
- **Tighten the reamer screw (12) to the gear box first, then tighten the reamer bolts (15) and nut (11) to the center pulley holder (14) with specified torque.**
- **Tighten the gear box screws (8) to the gear box and then tighten the center pulley holder bolts (1) and nut (5) with specified torque.**

- Replace the oil seals (4), (6) with new ones.
- Install the reamer screw (12) / reamer bolt (15) at their original positions as shown in the figure.
- Be sure to fix the O-rings (7), (13) to the original position.

Tightening torque	Center pulley holder bolt and nut	78 to 90 N·m 7.9 to 9.2 kgf·m 58 to 66 lbf·ft
	Gear box mounting screw	

6.7 Removing outer pulley and blade shaft

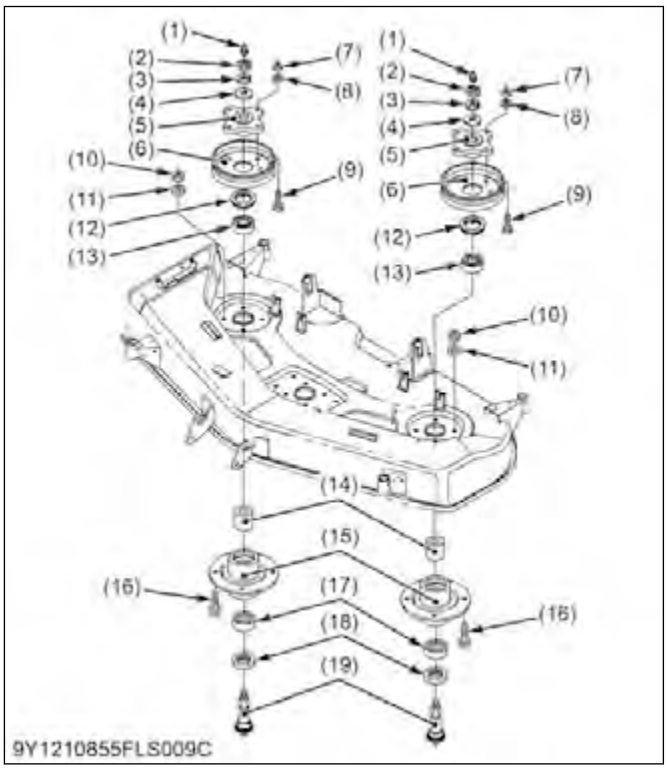

(1) Grease fitting
(2) Outer pulley mounting nut
(3) Spring washer
(4) Plain washer
(5) Outer pulley boss
(6) Outer pulley
(7) Nut
(8) Spring washer
(9) Pulley boss mounting bolt
(10) Nut
(11) Spring washer
(12) Oil seal
(13) Ball bearing
(14) Collar
(15) Outer pulley holder
(16) Outer pulley holder mounting bolt
(17) Ball bearing
(18) Oil seal
(19) Blade shaft

1. Remove the outer pulley mounting nut (2), and remove the outer pulley (6).
2. Remove the outer pulley holder mounting nut (10), and remove the outer pulley holder (15).
3. Remove the oil seal (12) and tap out the blade shaft (19) with the ball bearing (17) and (13), being careful not to damage the grease fitting (1).
4. Remove the ball bearing (13), and collar (14) from the blade shaft (19).
5. Remove the ball bearing (17), and oil seal (18).

(When reassembling)

- Replace the oil seals (12) and (18) with new ones.

Tightening torque	Outer pulley mounting nut	197 to 225 N·m 20.0 to 23.0 kgf·m 145 to 166 lbf·ft
	Pulley boss mounting nut	24 to 27 N·m 2.4 to 2.8 kgf·m 18 to 20 lbf·ft
	Outer pulley holder mounting bolt and nut	78 to 90 N·m 7.9 to 9.2 kgf·m 58 to 66 lbf·ft

7. Servicing

7.1 Adjusting turning torque of pinion shaft

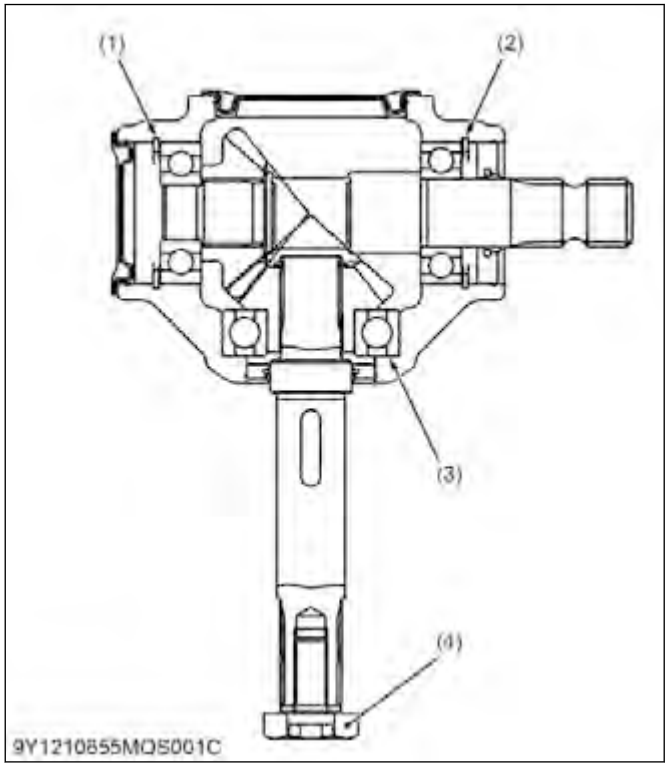

(1) Adjusting shim
(2) Adjusting shim
(3) Adjusting shim
(4) Blade screw

1. Set the blade screw (4) for the blade shaft to measure the turning torque.
2. Turn the blade screw (4) clockwise with torque wrench and measure the turning torque.

Turning torque	Factory specification	Less than 0.7 N·m 0.07 kgf·m 0.52 lbf·ft

Thickness of adjusting shims (1), (2)	0.2 mm 0.0079 in.
	0.3 mm 0.0118 in.
Thickness of adjusting shims (3)	0.2 mm 0.0079 in.
	0.3 mm 0.0118 in.

7.2 Adjusting backlash between bevel gears

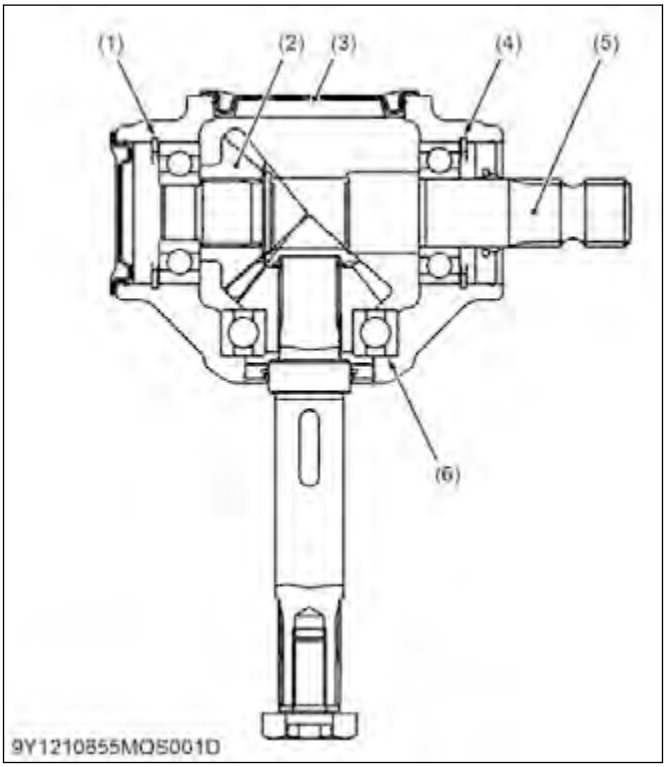

(1) Shim
(2) 19T bevel gear [RCK54D-26BX]
18T bevel gear [RCK60D-26BX]
(3) Gear box cap
(4) Shim
(5) Input shaft
(6) Shim
(7) External circlip

1. Remove the gear box cap (3).
2. Place the plastigauges or wire of solder the bevel gear (2) on the input shaft (5).
3. Turn the input shaft (5).
4. Remove the plastigauges or wire of solder, and measure the thickness with the gauge or an outside micrometer.

https://truckmanualshub.com/

5. If the backlash exceeds the allowable limit, adjust it with shims (1), (4), (6).

Backlash between bevel gears	Factory specification	0.10 to 0.20 mm 0.0040 to 0.0078 in
	Allowable limit	0.40 mm 0.016 in.

Thickness of adjusting shims (1), (4)	0.2 mm 0.0079 in.
	0.3 mm 0.0118 in.
Thickness of adjusting shims (6)	0.1 mm 0.0039 in.
	0.2 mm 0.0079 in.

https://truckmanualshub.com/

https://truckmanualshub.com/

10. FRONT LOADER

https://truckmanualshub.com/

MECHANISM

1. Hydraulic circuit

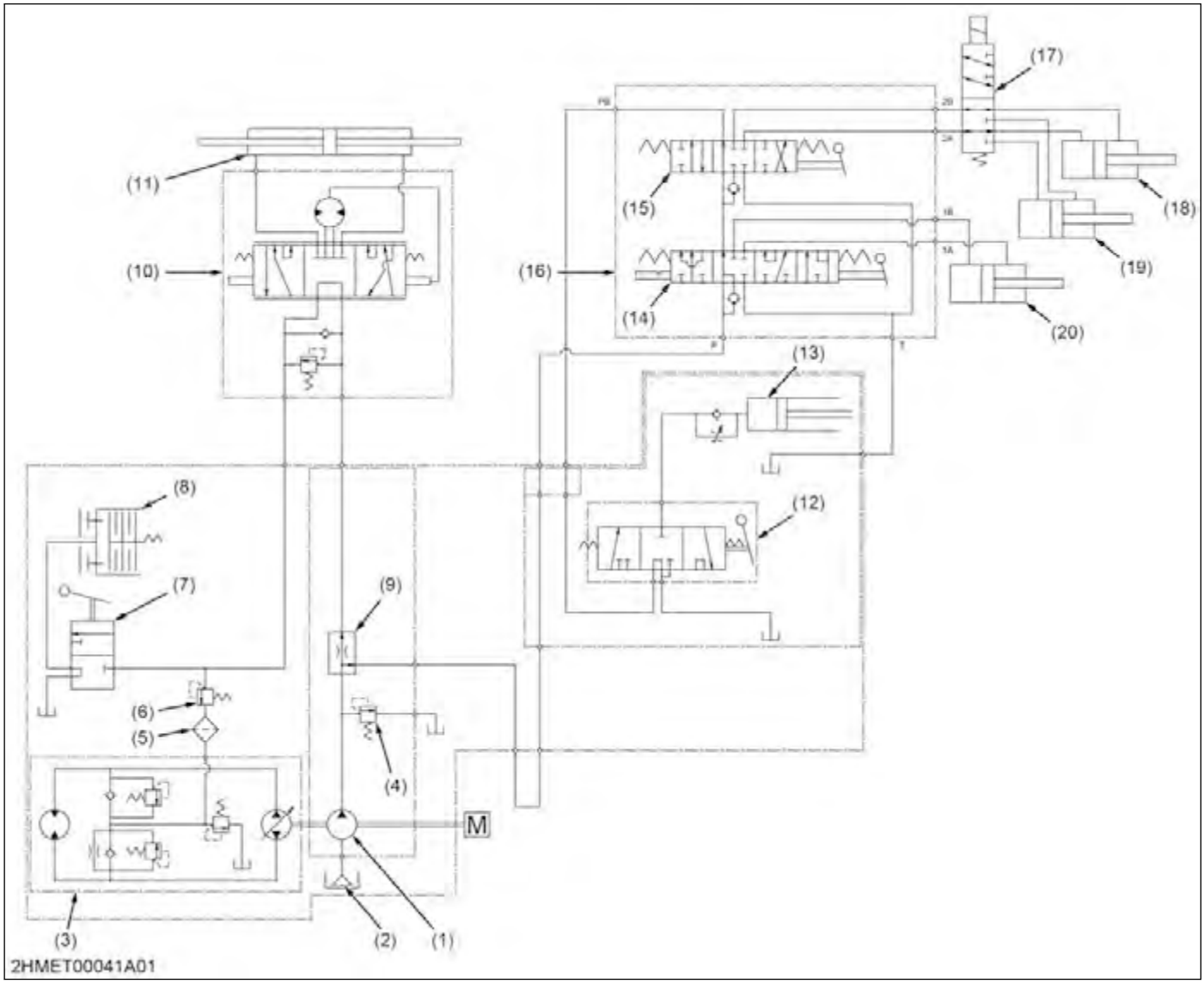

(1) Hydraulic pump
(2) Oil strainer
(3) Hydrostatic transmission
(4) Relief valve
(5) Oil filter
(6) PTO clutch relief valve
(7) PTO clutch valve
(8) PTO clutch
(9) Flow priority valve
(10) Power steering controller
(11) Power steering cylinder
(12) 3P hitch control valve
(13) Hydraulic cylinder
(14) Boom spool valve
(15) Bucket spool valve
(16) Front loader control valve
(17) 3rd function valve (If equipped)
(18) Bucket cylinder
(19) 3rd function cylinder (If equipped)
(20) Boom cylinder

The hydraulic system of this tractor and front loader has a hydraulic pump, control valve for front loader, 3 point hitch system and other components. This system has the following functions:

1. Oil is supplied by hydraulic pump which is operated by pump drive shaft in the transmission case. As the pump drive shaft is connected to the propeller shaft, hydraulic pump starts operating when engine starts.
2. The hydraulic pump supplies the high pressured oil to control valve for front loader, control valve for 3 point hitch system, power steering controller, PTO clutch valve and hydrostatic transmission after dividing oil flow by flow priority valve.

Specification of hydraulic parts

(1)	23.5 L/min. (6.2 U.S.gals/min., 5.2 Imp.gals/min.)
(4)	12.3 to 12.7 MPa (125 to 130 kgf/cm^2, 1780 to 1840 psi)
(6)	0.5 MPa (5 kgf/cm^2, 150 to 180 psi)
(9)	9.5 L/min. (2.5 U.S.gals/min., 2.1 Imp.gals/min.) to the power steering controller and excessive flow to the front loader

https://truckmanualshub.com/

2. Front remote hydraulic control system (if equipped)

You can use the front remote hydraulic control system for a front mounted hydraulic implement.
The front remote hydraulic control system provides hydraulic oil to the front outlet directly.

2.1 Operating control lever

WARNING

To avoid personal injury or death

- **Valve lock does not lock out switch-operated third-function hydraulics, which are active when the key switch and the front hydraulic valve main switch are on.**

1. Turn the front-hydraulic-valve-main-switch on.
   a. Push the front-hydraulic-valve-main-switch to engage the front-hydraulic-valve.
   The light on the front-hydraulic-valve-main-switch will illuminate to indicate that the front-hydraulic-valve is on and to enable the activation switch and operation of the lever.
2. Turn the activation switch on or off.
   - When operating the lever to left side with pressing the activation switch, hydraulic oil will come out of port 1 and return through port 2 as long as operating the lever to left side with pressing the activation switch.
   - When operating lever to right side with pressing the activation switch, hydraulic oil will come out of port 2 and return through port 1 as long as operating lever to right side with pressing the activation switch.
3. Turn the front-hydraulic-valve-main-switch off.
   a. Push the front-hydraulic-valve-main-switch again to disengage the front hydraulic valve.
   The light of the front-hydraulic-valve-main-switch will turn off.

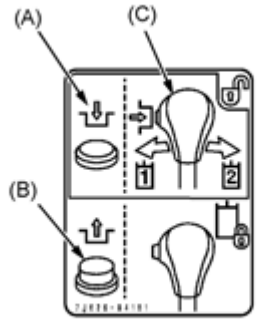

1JDJD00046A01

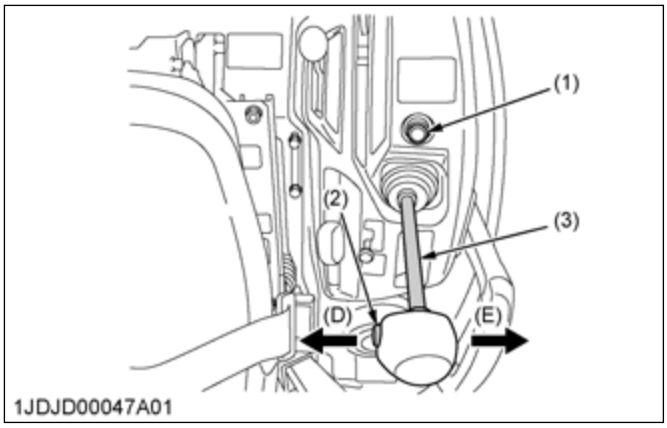

1JDJD00047A01

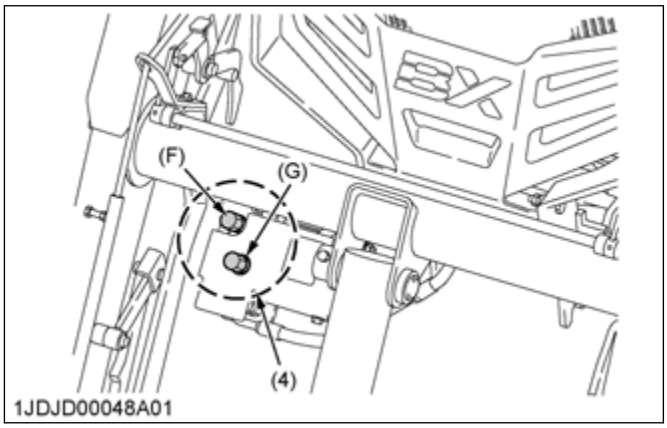

1JDJD00048A01

(1)	Front hydraulic valve main switch	(B)	Front hydraulic valve main switch is off
(2)	Activation switch	(C)	Activation switch is on
(3)	Operating lever	(D)	Left side
(4)	Front hydraulic outlet	(E)	Right side
(A)	Front hydraulic valve main switch is on	(F)	Port 1
		(G)	Port 2

IMPORTANT

- **While a front mounted hydraulic attachment is used, make sure that the hydraulic hose is routed out of contact with the left and right bucket links. Keep the hose from running over within the circled zone in the following figure.**

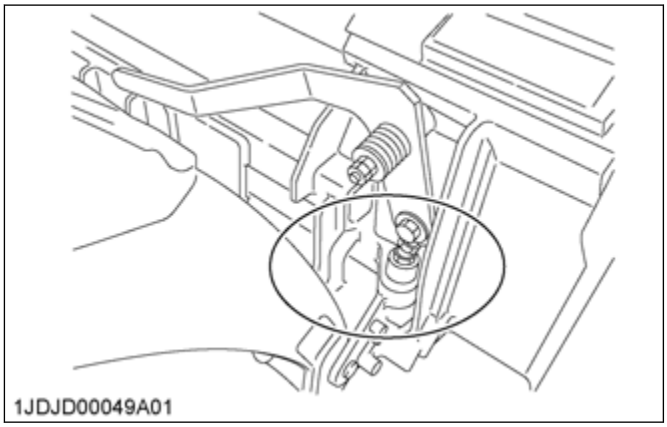
1JDJD00049A01

3. Boom cylinder and bucket cylinder

3.1 Structure of boom cylinder and bucket cylinder

Both boom cylinder and bucket cylinder consist of a head (4), cylinder tube (3), piston rod (5), piston (2), and other parts as shown in the figure below. They are single-rod double acting cylinder in which the reciprocating motion of the piston is controlled by hydraulic force applied to both of its ends.

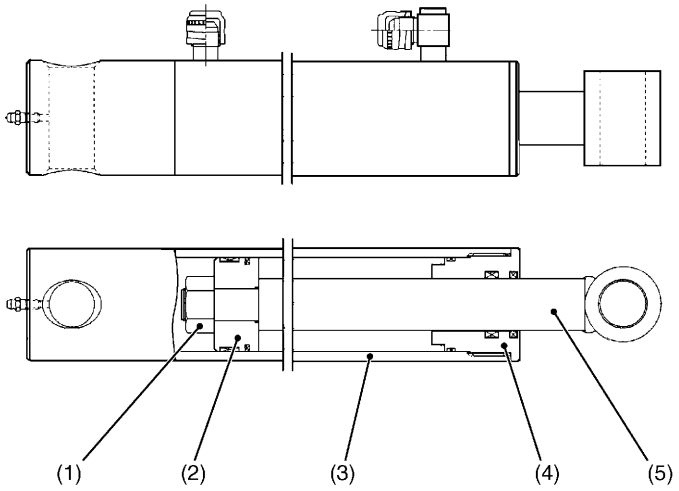

3UFAAACLP017A

(1) Nut
(2) Piston
(3) Cylinder tube
(4) Head
(5) Piston rod

Cylinder specifications

		LA344, LA344S
Boom cylinder	Cylinder I.D.	40 mm (1.57 in.)
	Rod O.D.	25 mm (0.98 in.)
	Stroke	326 mm (12.8 in.)
Bucket cylinder	Cylinder I.D.	65 mm (2.56 in.)
	Rod O.D.	30 mm (1.18 in.)
	Stroke	196 mm (7.72 in.)

https://truckmanualshub.com/

4. One touch front loader

4.1 Outline of one touch front loader

One touch front loader is adopted to BX80 series tractor. The operator can attach and disconnect the front loader quickly and safely without getting down from the tractor. The main component parts are shown in the figure.

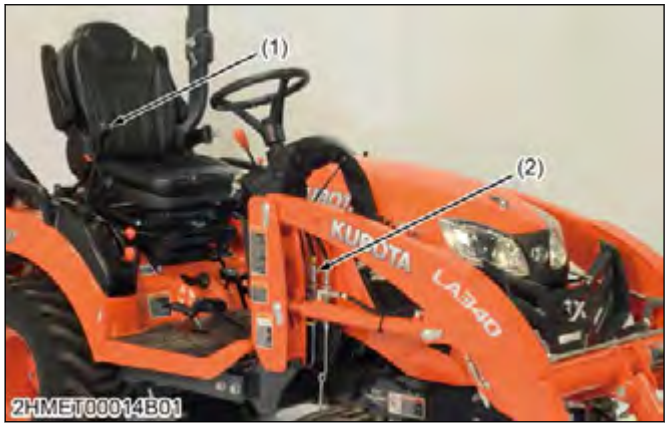

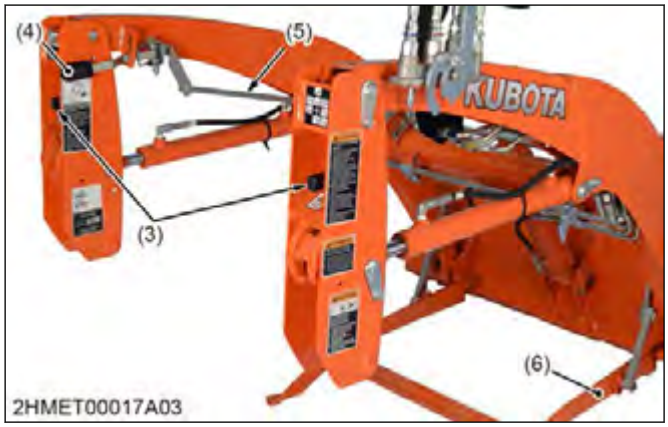

(1) Front loader control lever
(2) Quick coupler
(3) Mounting lever
(4) Stand lever
(5) Stand rod
(6) Stand

5. One lever quick touch 4 lines coupler

5.1 Structure of one lever quick touch 4 lines coupler

The quick touch coupler allows to attach and remove the quick coupler. The quick coupler is divided to the upper part and the lower part. The upper part consists of the quick coupler lever (2) and the mobile quick coupler (4) with four hydraulic hoses (3).
The lower part consists of the quick coupler base (5) with four hydraulic pipes (6). It is installed to the loader main frame (1). Non-spill structure is adopted in the couplers on the quick coupler base to protect the oil leakage from the hydraulic oil line.

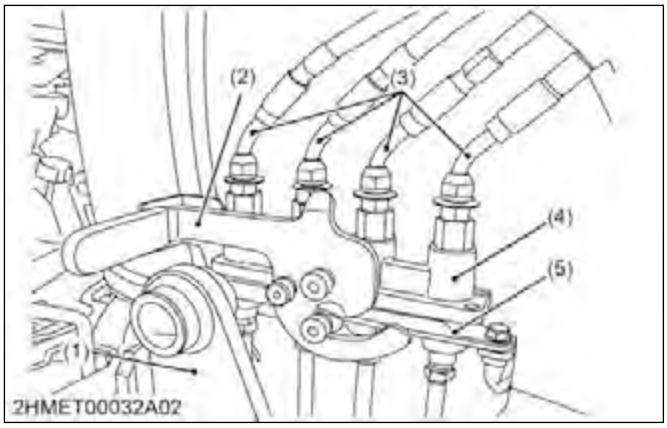

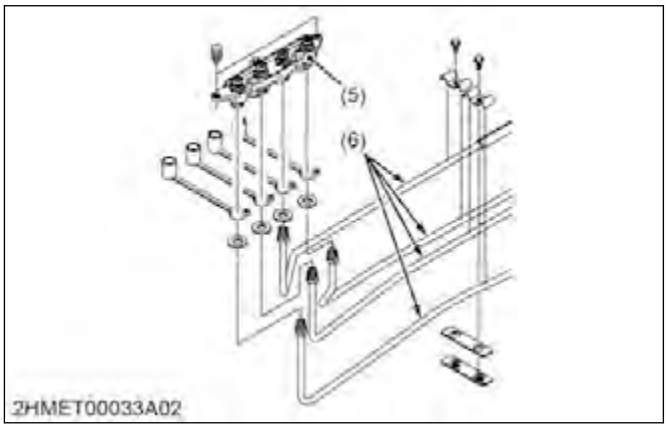

(1) Loader main frame
(2) Quick coupler lever
(3) Hydraulic hoses
(4) Mobile quick coupler
(5) Quick coupler base
(6) Hydraulic pipe

6. Auto lock attachment and detachment

6.1 Outline of auto lock attachment and detachment

The side frame (5) is mounted on the main frame (1). The side frame (5) can be locked or freed by controlling the mounting lever (3) on the lever guide (4). When the bucket is lifted up, the side frame (5) and the main frame (1) are locked. When the front wheels are lifted up by lowering the bucket to the ground, the operator can control the mounting lever (3) easily and release the hook (2) mounted on the main frame by hand.

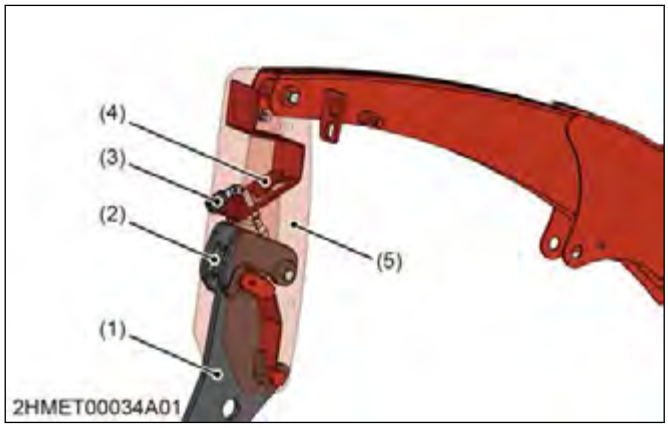

(1) Main frame
(2) Hook
(3) Mounting lever
(4) Lever guide
(5) Side frame

6.2 Function of auto lock attachment and detachment

When the mounting lever (3) is moved to the upper position of the lever guide (4), the hook (2) is unlocked from the main frame (1). As a result, the side frame (5) can be disconnected from the main frame (1).

Free position

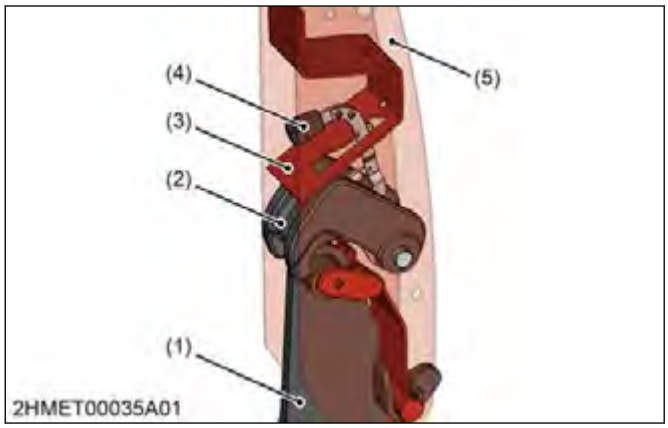

(1) Main frame
(2) Hook
(3) Mounting lever
(4) Lever guide
(5) Side frame

When the mounting lever (3) is moved to the lower position of the lever guide (4), the hook (2) is locked to the main frame (1). As a result, the side frame (5) is locked to the main frame (1).

Locked position

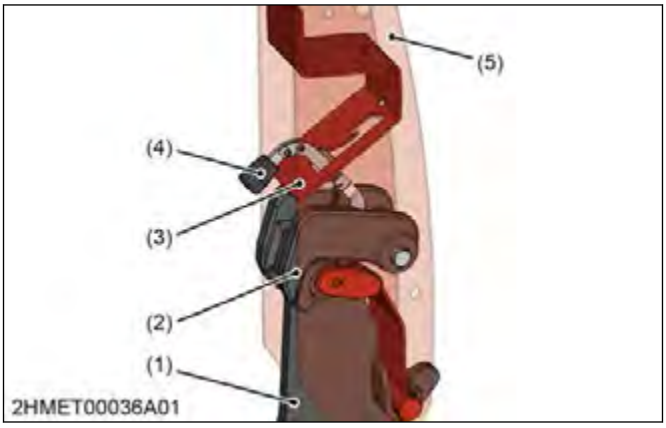

(1) Main frame
(2) Hook
(3) Mounting lever
(4) Lever guide
(5) Side frame

7. Mechanical loader frame standing mechanism

7.1 Structure of mechanical loader frame standing mechanism

The loader stand (1) is fixed to the loader arm (2) by the stand hooks (5). These stand hooks (5) can be controlled by moving the stand lever (3). The stand rod (4) is connecting the stand lever (3) and the stand hooks (5). When the stand lever (3) is moved downward, the stand hooks (5) are pulled in and free the loader stand (1) from the loader arm (2).

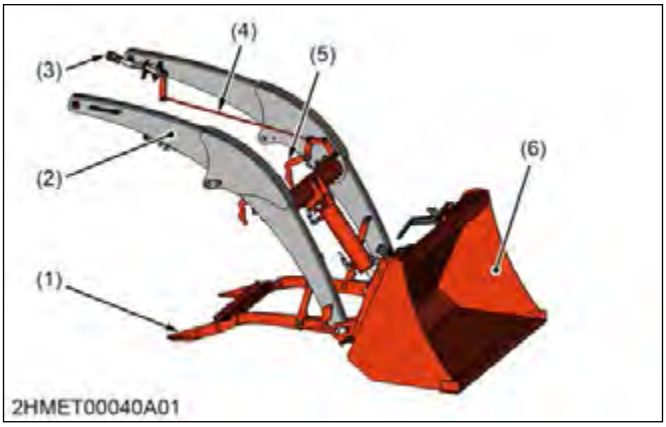

(1) Loader stand
(2) Loader arm
(3) Stand lever
(4) Stand rod
(5) Stand hook
(6) Bucket

https://truckmanualshub.com/

8. 3rd function valve (If equipped)

8.1 Structure of 3rd function valve

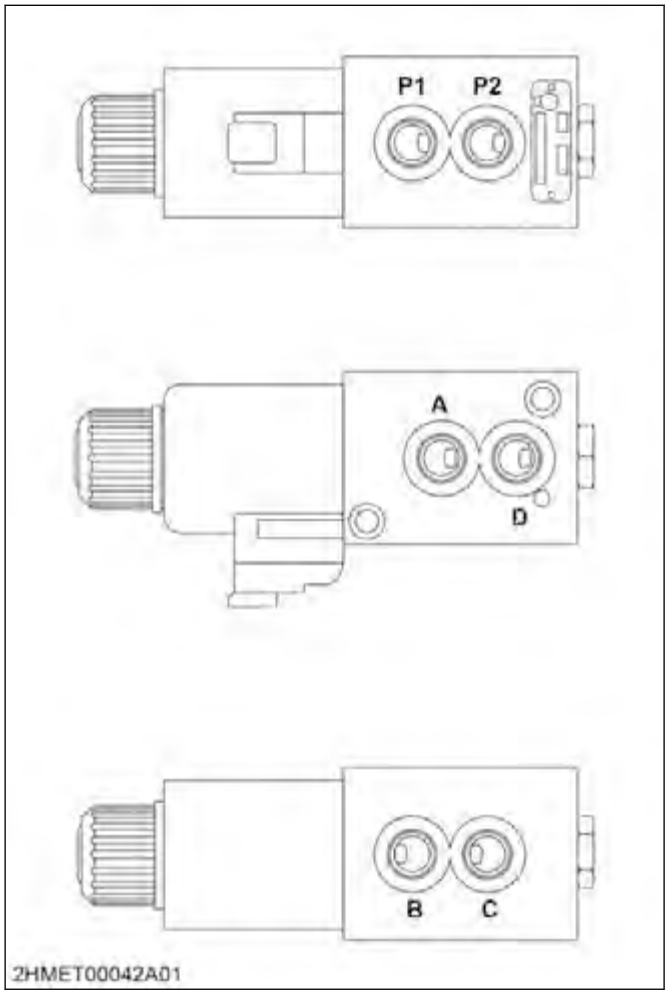

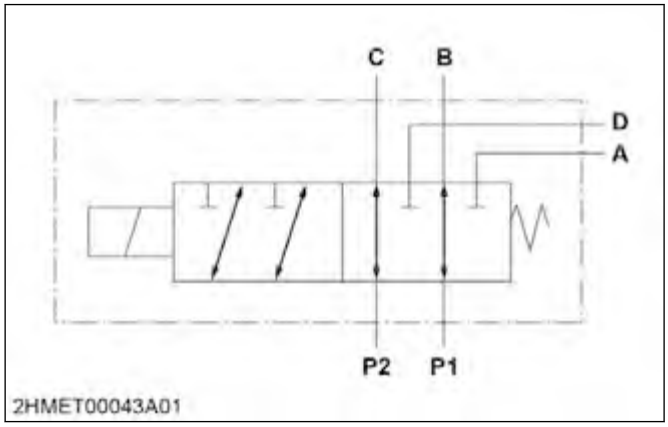

P1:	P1 port	B:	B port
P2:	P2 port	C:	C port
A:	A port	D:	D port

8.2 Function of 3rd function valve

8.2.1 Activation switch in off position

1. When the activation switch in off position, the spool of 3rd function valve doesn't move. The oil passage from P1 port to A port and the oil passage from P2 port to D port are opened.
2. When the loader control lever is set to the dump position, the hydraulic oil enters from P1 port and exits at B port. This extends the bucket cylinder.
3. Return oil from the bucket cylinder enters C port and travels throughout the valve to go to the transmission case through P2 port.

NOTE

When the loader control lever is set to the roll-back position, the hydraulic oil enters from P2 port and exits at C port. This extends the bucket cylinder. Return oil from the bucket cylinder enters B port and travels throughout the valve to go to the transmission case through P1 port.

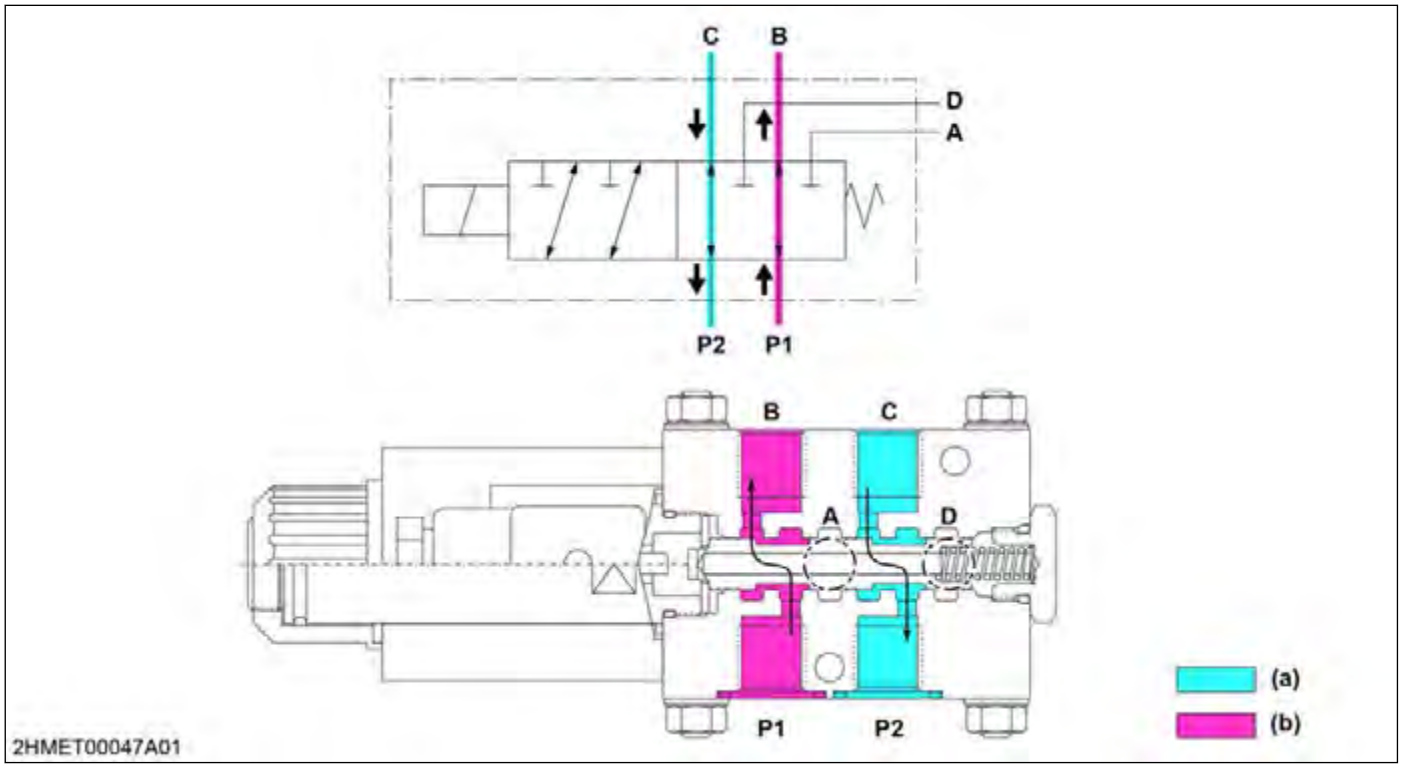

P1	P1 port	A	A port	C	C port	(a)	Low pressure
P2	P2 port	B	B port	D	D port	(b)	High pressure

https://truckmanualshub.com/

8.2.2 Activation switch in on position

1. When the activation switch in on position, the spool of 3rd function valve moves to the right. This creates an oil passage from P1 port to A port. The oil passage from P2 port to D port is also opened.
2. When the loader control lever is set to the dump position, the hydraulic oil enters from P1 port and exits at A port. This extends the 3rd function cylinder.
3. Return oil from the 3rd function cylinder enters D port and travels throughout the valve to go to the transmission case through P2 port.

NOTE

When the loader control lever is set to the roll-back position, the hydraulic oil enters from P2 port and exits at D port. This extends the 3rd function cylinder. Return oil from the 3rd function cylinder enters A port and travels throughout the valve to go to the transmission case through P1 port.

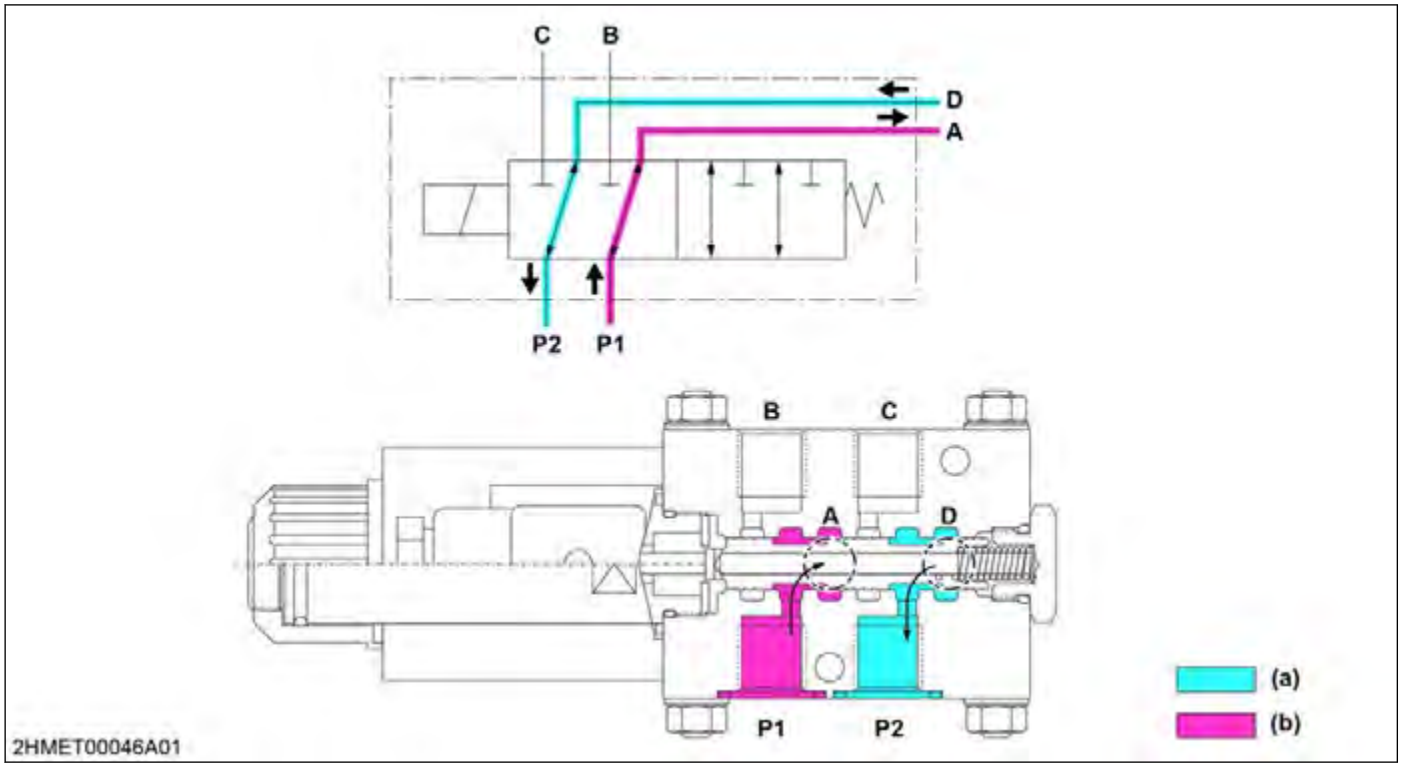

P1:	P1 port	A:	A port	C:	C port	(a)	Low pressure
P2:	P2 port	B:	B port	D:	D port	(b)	High pressure

https://truckmanualshub.com/

SERVICING

1. Troubleshooting for front loader

Symptom	Probable cause and checking procedure	Solution	Reference page
Boom does not rise.	1. Control valve is damaged.	Repair or replace control valve.	7-50
	2. Boom cylinder is damaged.	Repair or replace boom cylinder.	10-29
	3. Control lever linkage is damaged.	Repair or replace control lever linkage.	7-50
	4. Hydraulic pump is damaged.	Repair or replace hydraulic pump.	7-41
	5. Relief valve spring is damaged.	Replace relief valve spring.	7-36
	6. Relief valve is dirty.	Clean relief valve.	7-36
	7. Oil filter is clogged.	Clean or replace oil filter.	2-26
	8. Hydraulic hose is damaged.	Replace hydraulic hose.	10-29
Boom does not lower.	1. Control valve is damaged.	Repair or replace control valve.	7-50
	2. Control lever linkage is damaged.	Repair or replace control lever linkage.	7-50
Boom speed is insufficient.	1. Boom cylinder tube is worn or damaged.	Replace boom cylinder tube.	10-29
	2. Boom cylinder piston ring (piston seal and O-ring) is worn or damaged.	Replace boom cylinder piston ring (piston seal and O-ring).	10-31
	3. Oil leaks from tube joints.	Repair tube joints.	—
	4. Relief valve setting pressure is too low.	Adjust relief valve.	7-36
	5. Transmission fluid is insufficient.	Fill transmission fluid.	2-26
	6. Relief valve is dirty.	Clean relief valve.	7-36
Bucket does not move.	1. Control valve is damaged	Repair or replace control valve.	7-50
	2. Bucket cylinder is damaged.	Repair or replace bucket cylinder.	10-29
	3. Control lever linkage is damaged.	Repair or replace control lever linkage.	7-50
	4. Hydraulic pump is damaged.	Repair or replace hydraulic pump.	7-41
	5. Oil filter is clogged.	Clean or replace oil filter.	2-26

(Continued)

Symptom	Probable cause and checking procedure	Solution	Reference page
Bucket does not move.	6. Relief valve spring is damaged.	Replace relief valve spring.	7-36
	7. Hydraulic hose is damaged.	Replace hydraulic hose.	10-29
	8. Relief valve is dirty.	Clean relief valve.	7-36
Boom speed is insufficient.	1. Bucket cylinder tube is worn or damaged.	Replace bucket cylinder tube.	10-29
	2. Bucket cylinder piston ring (piston seal and O-ring) is worn or damaged.	Replace bucket cylinder piston ring (piston seal and O-ring).	10-31
	3. Relief valve setting pressure is too low.	Adjust relief valve.	7-36
	4. Relief valve is dirty.	Clean relief valve.	7-36
	5. Oil leaks from tube joints.	Repair tube joints.	10-29
	6. Transmission fluid is insufficient.	Fill transmission fluid.	2-26
Front end loader falls by its weight.	1. Boom cylinder tube is worn or damaged.	Replace boom cylinder tube.	10-29
	2. Boom cylinder piston ring (piston seal and O-ring) is worn or damaged.	Replace boom cylinder piston ring (piston seal and O-ring).	10-31
	3. Oil leaks from tube joints.	Repair tube joints.	10-29
	4. Control valve is damaged.	Repair or replace control valve.	7-50
3rd function valve does not operate correctly.	1. 3rd function valve wiring harness is damaged.	Repair or replace 3rd function valve wiring harness.	—
	2. 3rd function valve is damaged.	Repair or replace 3rd function valve.	—
	3. Battery voltage is not supplied to front hydraulic valve main switch.	Check battery supply voltage at front hydraulic valve main switch connector. Replace wiring harness.	10-18
	4. Relay is damaged.	Check or replace relay.	10-18

https://truckmanualshub.com/

2. Tightening torques for front loader

Tightening torques of screws, bolts and nuts on the table below are especially specified.

Item	N·m	kgf·m	lbf·ft
Boom cylinder piston mounting nut	150 to 180	15.3 to 18.3	111 to 132
Bucket cylinder piston mounting nut	350 to 400	35.7 to 40.7	259 to 295
Main frame mounting bolt (M14)	115	11.7	85

RELATED PAGE

TIGHTENING TORQUES on page 2-13

3. Checking and adjusting

3.1 Loader stand

3.1.1 Adjusting height of loader stand

1. Make sure that the stand lever is at its low position as shown in the following figure.

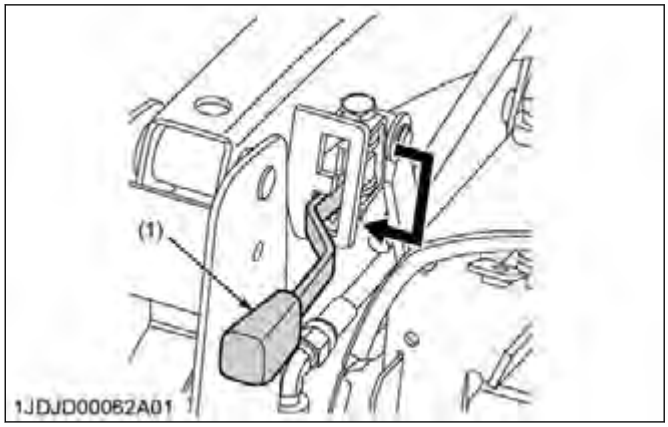

(1) Stand lever

2. Raise the boom until the bucket fulcrum pin comes up to the height of the boom fulcrum pin.
3. Roll back the bucket to maximum.

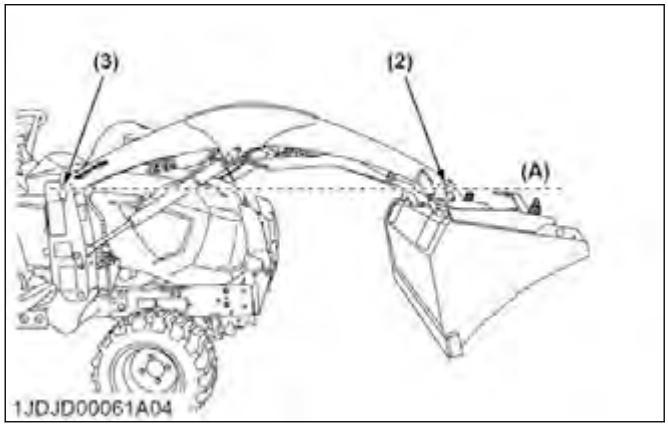

(2) Bucket fulcrum pin
(3) Boom fulcrum pin
(A) Same height

4. Stop the engine.
5. Apply the adjusting bolts to the right and left stand adjusting blocks as shown in the following figure.

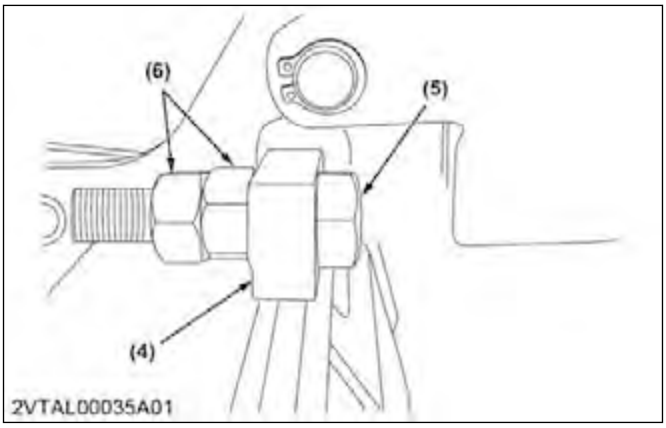

(4) Adjusting block
(5) Adjusting bolt
(6) Lock nut

IMPORTANT

- **Be sure to apply the bolts all the way to prevent the damage of the stand.**

NOTE

- **There is no need to tighten up the lock nuts.**

6. Move the hydraulic control lever to the **dump** position, and check to see if the stands are folded as specified.
7. Fasten the seat belt, and start the engine.
8. Move the hydraulic control lever to the **dump** position until the hydraulic pressure gets relieved.
9. Lower the boom to put the bucket on the ground.

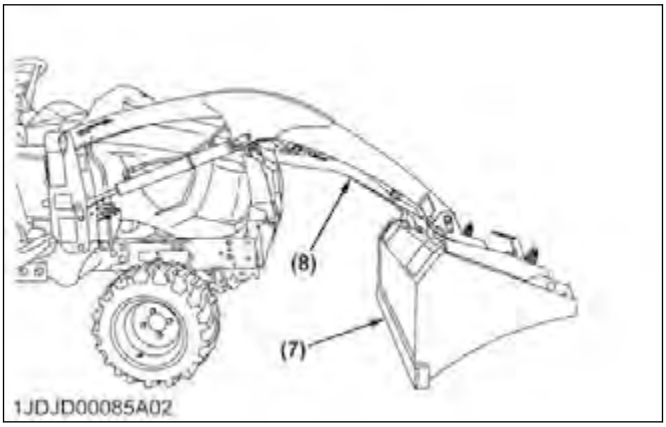

(7) Bucket
(8) Stand

10. Lift the stand on the right side of the loader up to the position shown in the following figure.

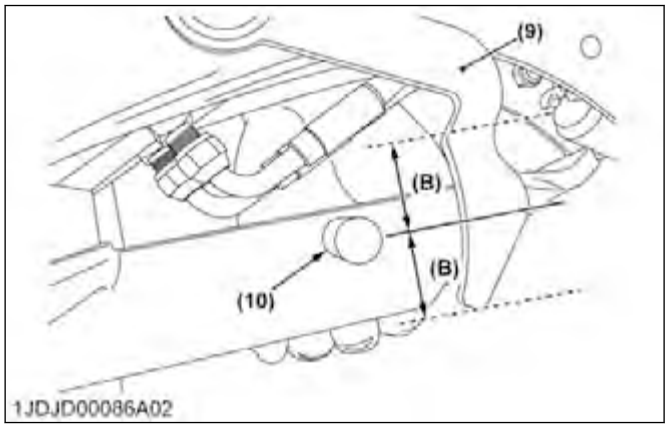

(9) Stand hook
(10) Stand pin
(B) Almost the same

11. Reposition the adjusting bolt until it touches the stand.

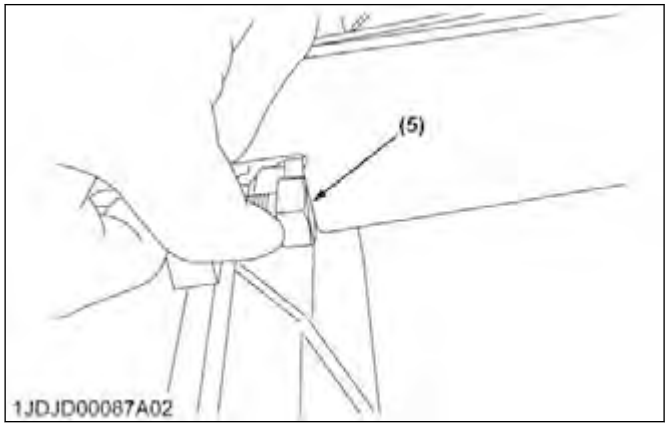

(5) Adjusting bolt

NOTE

- **The position of the bolt is provisional and may be roughly set for now.**

12. Adjust the adjusting bolt in the same way as for the stand on the left side of the loader.
13. Position the stand lever as shown in the figure.

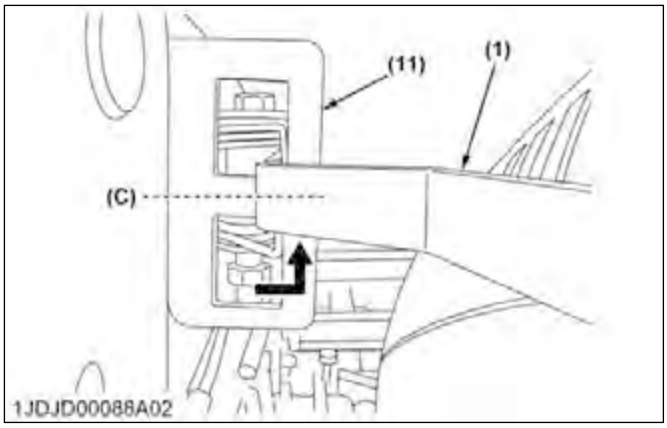

(1) Stand lever
(11) Lever guide
(C) Center

14. Turn the adjusting bolt on the right side of the loader to set the stand pin as shown as follows.

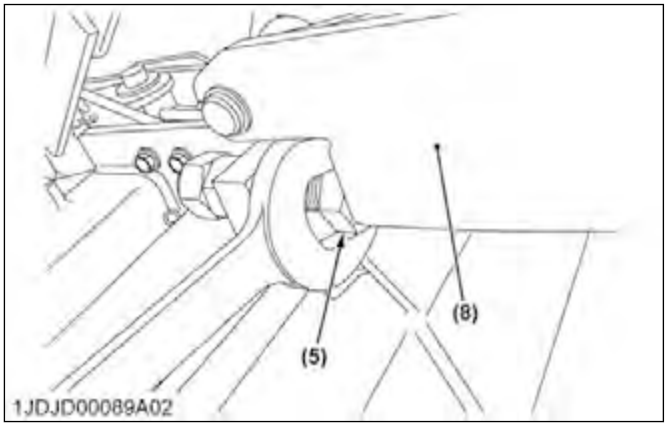

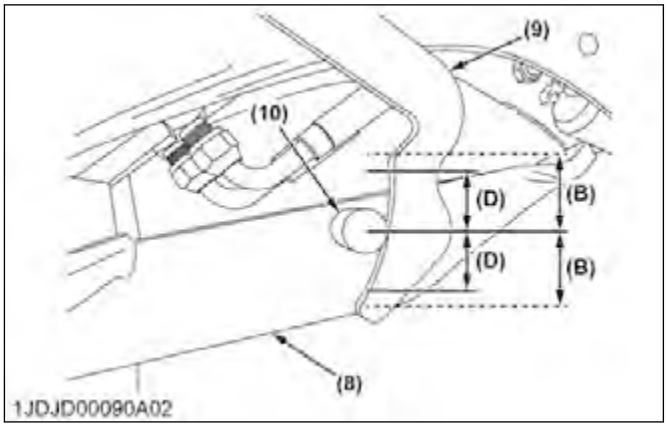

(5) Adjusting bolt
(8) Stand
(9) Stand hook
(10) Stand pin
(B) Almost the same
(D) Adjusting range

Adjusting range (B)	Factory specification	± 15 mm

IMPORTANT

- **Be careful not to allow the stands to go beyond their adjustable range. Otherwise the stands may get damaged.**

15. Lock the stand pin using the lock nut.

16. Turn the adjusting bolt and lock the stand pin on the left side of the loader in the same way as for the right side.
17. Look at the right and left stands to make sure that the heads of the adjusting bolts are pressed upon the stands.

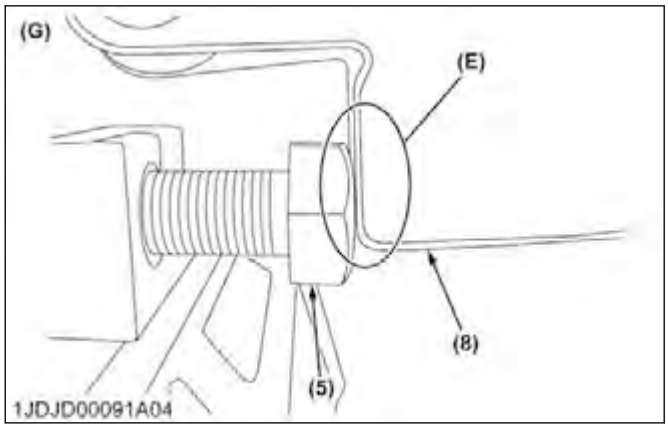

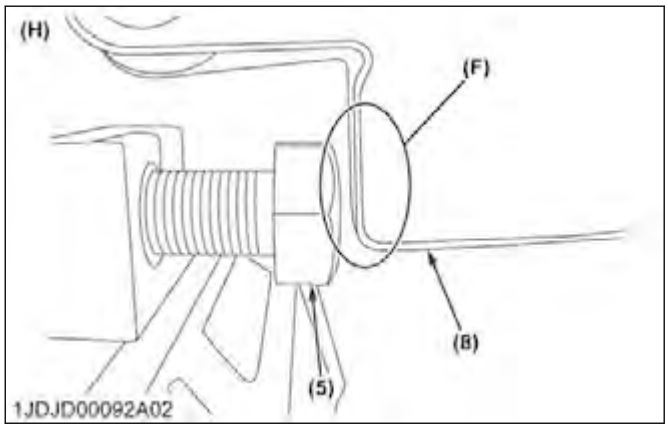

(5) Adjusting bolt
(8) Stand
(E) Touch
(F) Not touch
(G) Good
(H) No good

IMPORTANT

- **Double-check that the heads of the adjusting bolts are pressed upon the stands. Otherwise the stands may get damaged in storing them away.**

18. Be sure that the stands are parallel with the loader pipe.

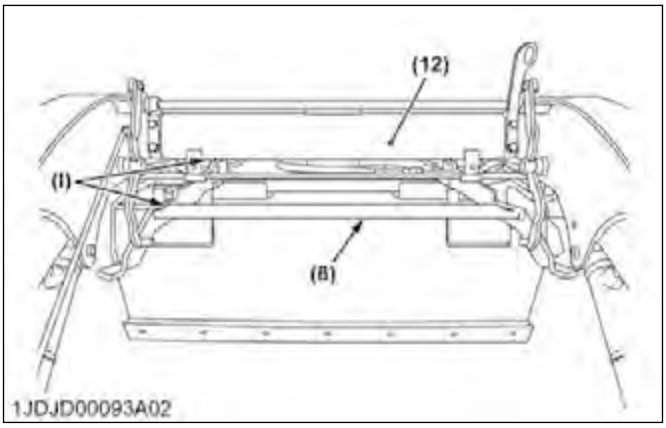

(8) Stand
(12) Loader pipe
(I) Parallel

19. Slide the stand lever in the upward direction and make sure that the stand gets locked.

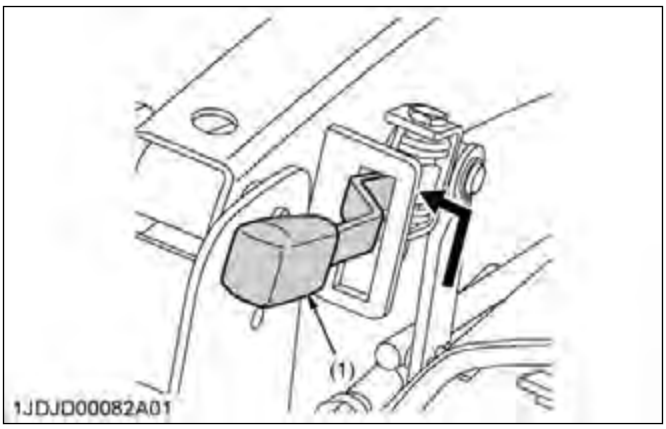

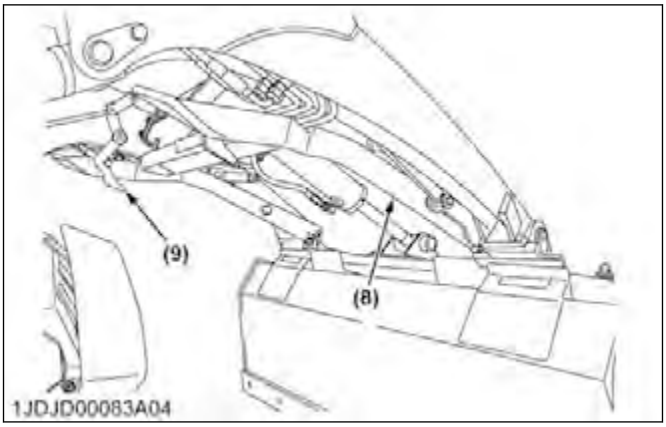

(1) Stand lever
(8) Stand
(9) Stand hook

20. Set the stand lever to the **low** position.

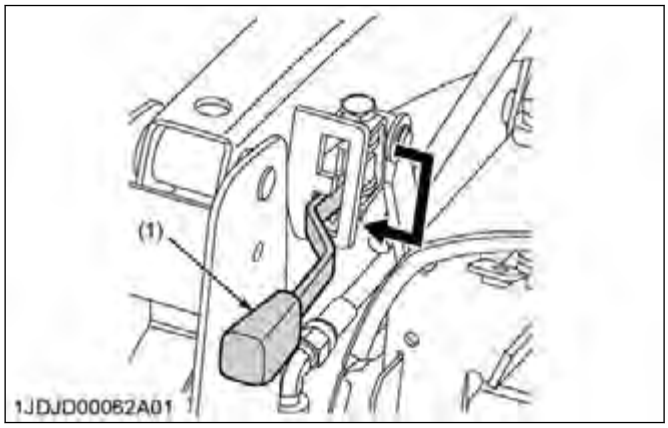

(1) Stand lever

21. Fasten the seat belt.
22. Get the engine started, roll back the bucket and move up the boom, both to maximum.
23. Stop the engine.
24. Move the hydraulic control lever to the **dump** position until the bucket comes to a complete stop.
25. Make sure that the stands are folded as specified.
26. Fasten the seat belt.
27. Get the engine started and raise the engine speed up to the following speed.

Engine speed	Factory specification	1800 rpm

28. Slowly dump the bucket until the stand touches the boom.
29. Slide the stand lever upward direction, and then slide the stand lever left side completely as shown in the following figure.

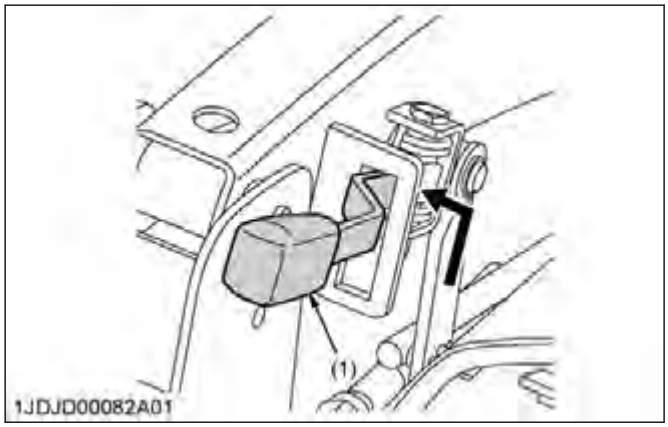

(1) Stand lever

30. Hold the stand by stand hook.

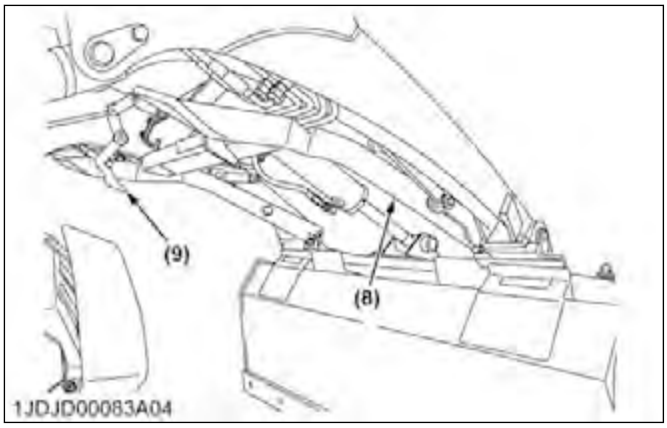

(8) Stand (9) Stand hook

3.2 Front hydraulic valve main switch and relay

3.2.1 Checking front hydraulic valve main switch continuity

1. Disconnect the front hydraulic valve main switch connector.

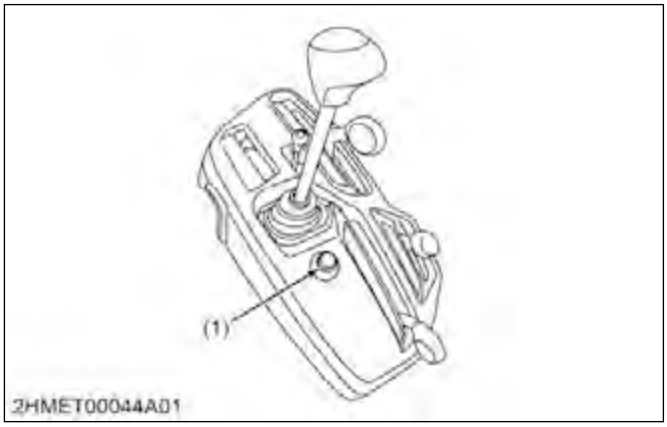

(1) Front hydraulic valve main switch

2. Measure the resistance with an ohmmeter between terminal RB and terminal B.

3. If 0 ohm is not indicated, replace the front hydraulic valve main switch.

Resistance	Terminal RB – Terminal B	On position	0 Ω
		Off position	Infinity

Switch side

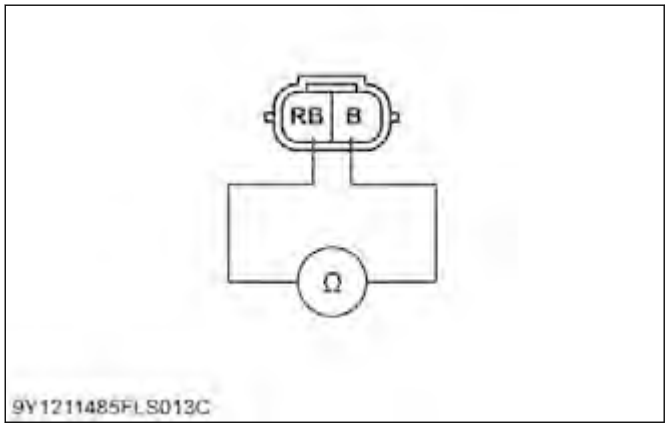

B: Black color of wiring RB: Red / Black color of wiring

3.2.2 Checking connector voltage of front hydraulic valve main switch

1. Disconnect the front hydraulic valve main switch connector.

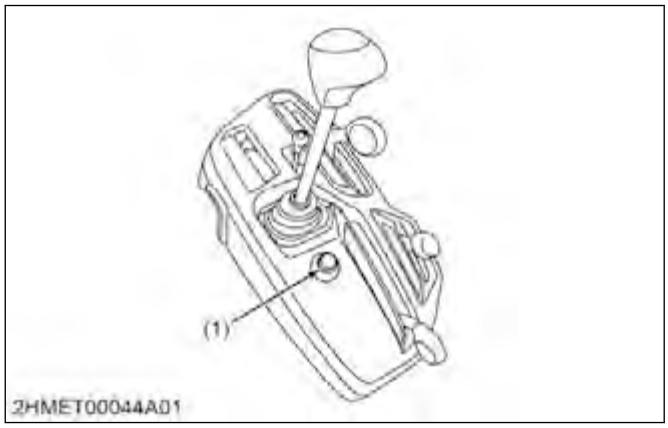

(1) Front hydraulic valve main switch

2. Turn the main switch on.
3. Measure the voltage between terminal RB and terminal B.

Wire harness side

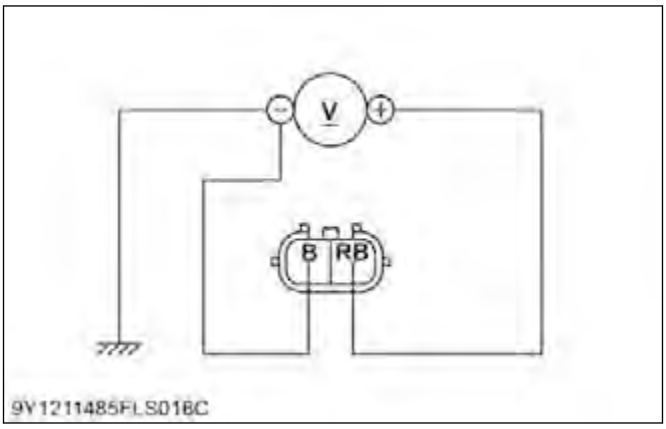

B: Black color of wiring RB: Red / Black color of wiring

4. If the measurement differs from the battery voltage, wire harness is damaged.

3.2.3 Checking relay

1. Remove the relay.
2. Apply battery voltage across terminals 3 and 4, and check for continuity across terminals 1 and 2.

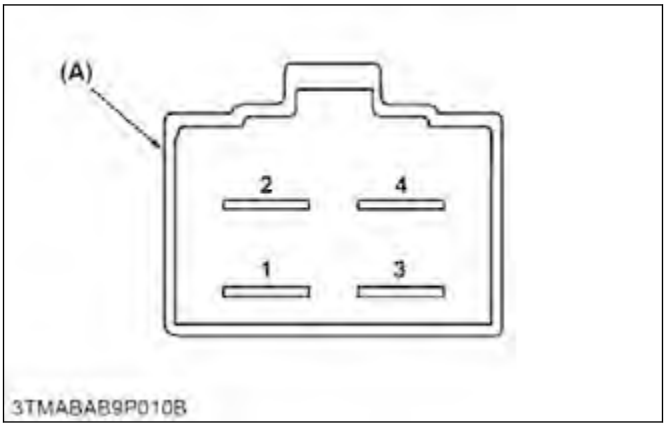

(A) Connector of relay

3. If continuity is not established, renew the relay.

https://truckmanualshub.com/

3.3 3rd function solenoid valve

3.3.1 Checking 3rd function solenoid valve continuity

1. Disconnect solenoid valve connector.

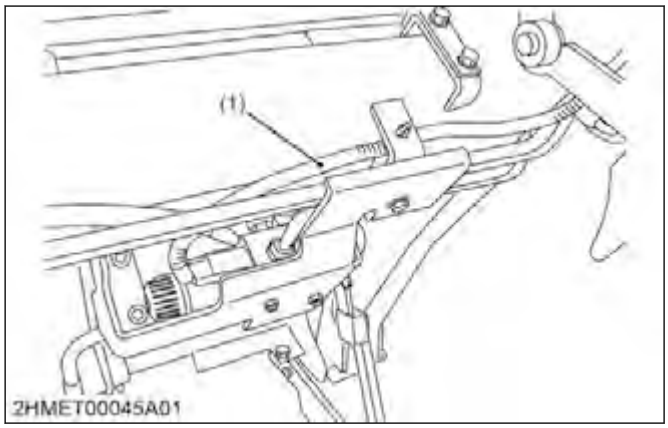

(1) Solenoid valve connector

2. Measure the resistance with an ohmmeter between terminal 1 and terminal 2.

Solenoid valve side

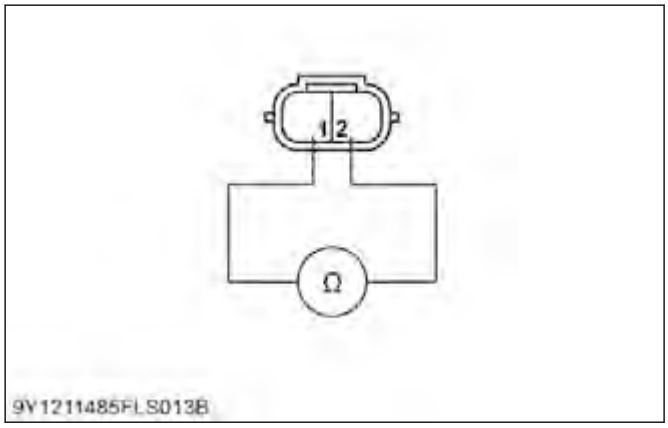

1: Terminal 1 2: Terminal 2

3. If the measurement greatly differs from specified value, replace the solenoid valve.

Resistance	Approx. 3.8 Ω

3.3.2 Checking connector voltage of 3rd function solenoid valve

1. Disconnect solenoid valve connector.

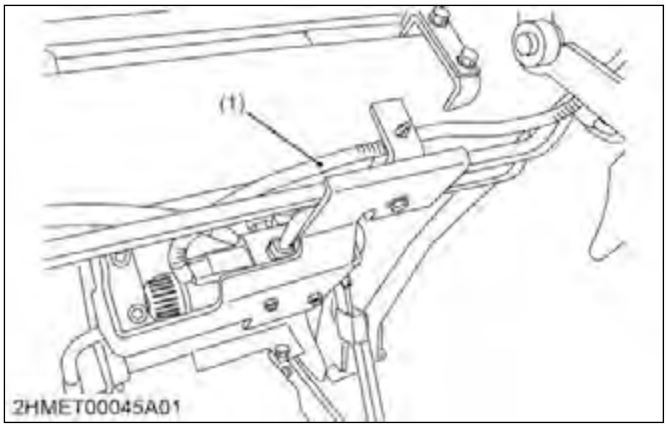

(1) Solenoid valve connector

2. Turn the main switch on and push the front hydraulic valve main switch (ON position), then push the activation switch..
3. Measure the voltage between terminal 1 and terminal 2.

Wire harness side

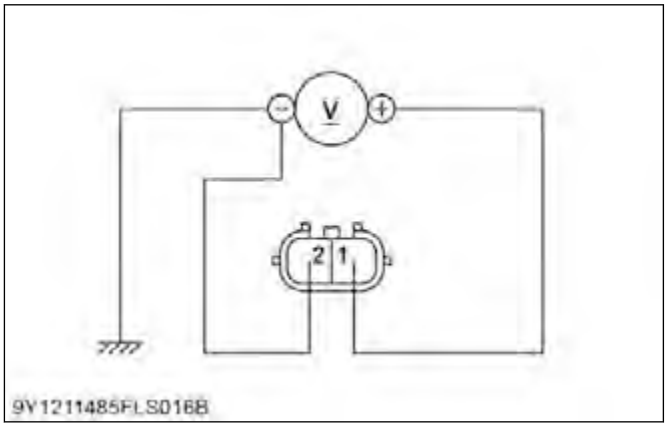

1: Terminal 1 2: Terminal 2

4. If the measurement differs from the battery voltage, wire harness is damaged.

4. Disassembling and assembling

4.1 Removing and attaching front loader

IMPORTANT

- **To remove the loader, park the tractor on flat and hard ground, apply the parking brake.**
  To start the engine or use the hydraulic control valve, always stay in the operator's seat.

4.1.1 Removing loader

CAUTION

- **Make sure an approved bucket is attached before removing the loader from the tractor.**

- **For removing the loader, choose flat and hard ground, preferably concrete.**
- **If the ground surface is soft, place suitable planks on the ground for the bucket and stands.**
- **When starting the engine or using the hydraulic control valve, always sit in the operator's seat.**
- **Make sure the bucket and stands are at ground level.**

4.1.1.1 Removing loader

WARNING

- **Make sure that an approved bucket is attached before removing the loader from the tractor.**
- **For removing the loader, choose flat and hard ground, preferably concrete.**
- **If the ground surface is soft, place suitable planks on the ground for the bucket and the stand.**
- **When starting the engine or using the hydraulic control lever, always sit in the operator's seat.**
- **Make sure that the bucket and the stand are at ground level.**

1. Set the engine speed to the following speed, and then raise the boom until the bucket pin is the height of the boom fulcrum pin.

Engine speed	Factory specification	1800 rpm

2. Dump the bucket fully.

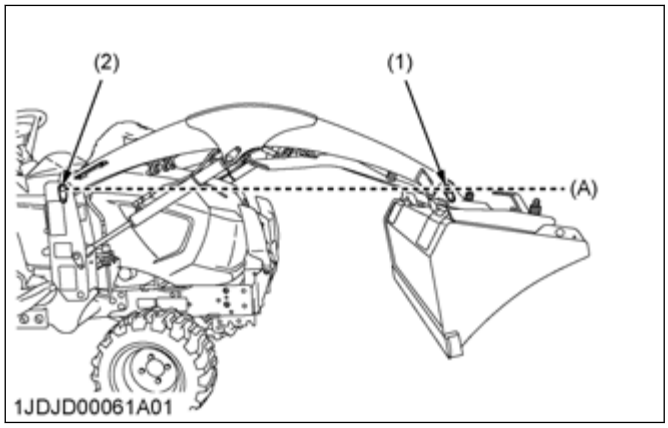

(1) Bucket pin
(2) Boom fulcrum pin
(A) Same height

3. Slide the stand lever (3) downward direction completely, and release the stand (4) from the stand hook (5).

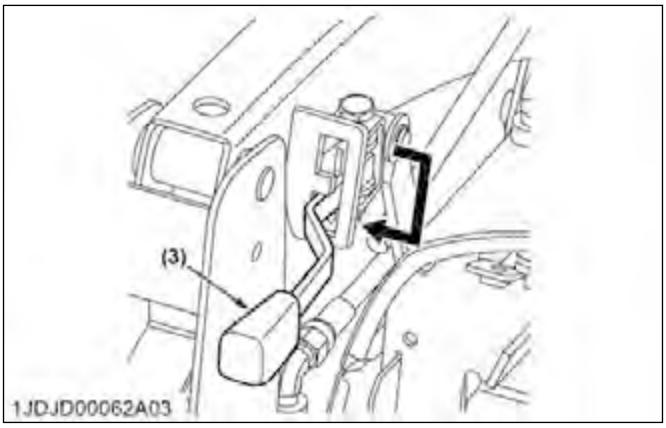

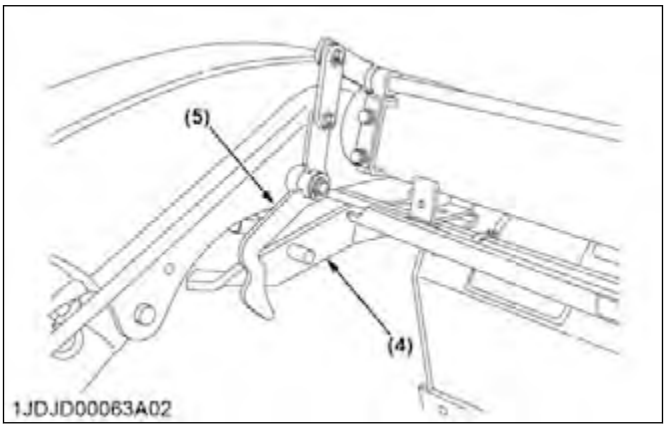

(3) Stand lever
(4) Stand
(5) Stand hook

4. Roll the bucket back until its bottom is set at the following angle (B) with respect to the ground surface.

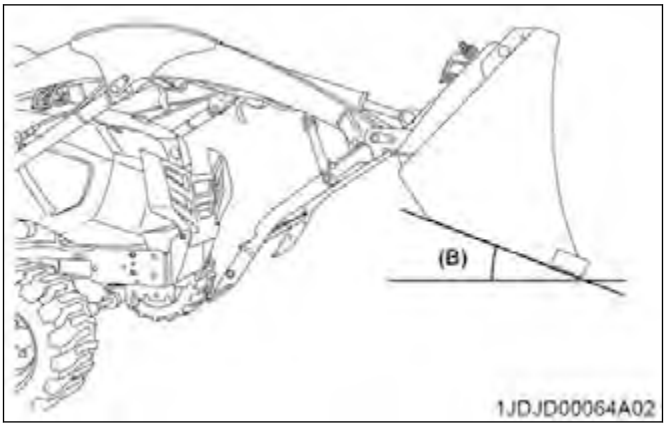

(B) Angle between ground surface and bucket bottom

Angle between ground surface and bucket bottom (B)	Factory specification	About 20°

https://truckmanualshub.com/

5. Lower the boom and raise the front wheels slightly.

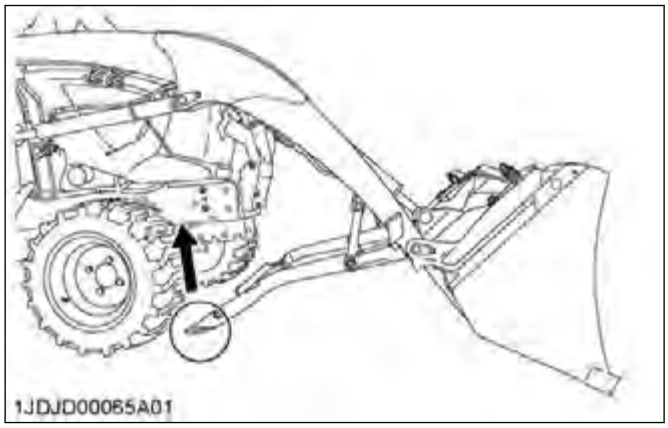

IMPORTANT

- **When raising the front wheels, the stands are not to be grounded.**

6. Slide the mounting levers (6) of both sides to the upward direction as shown in the following figure.

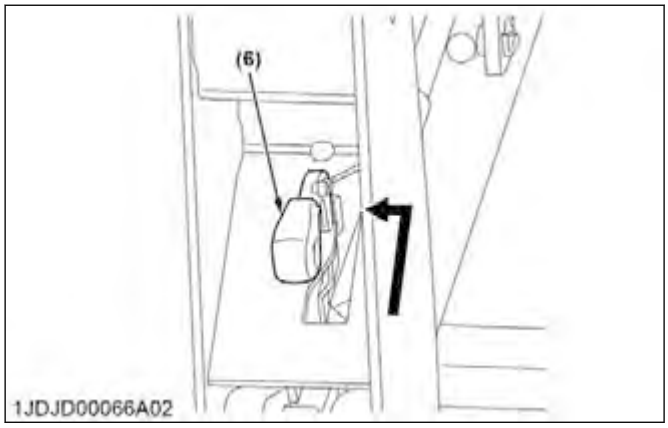

(6)
Mounting lever

7. Slowly move the hydraulic control lever (9) to the **rollback** position to raise the side frames of the loader up and out of the receivers of the main frames (7) as shown in the following figure.

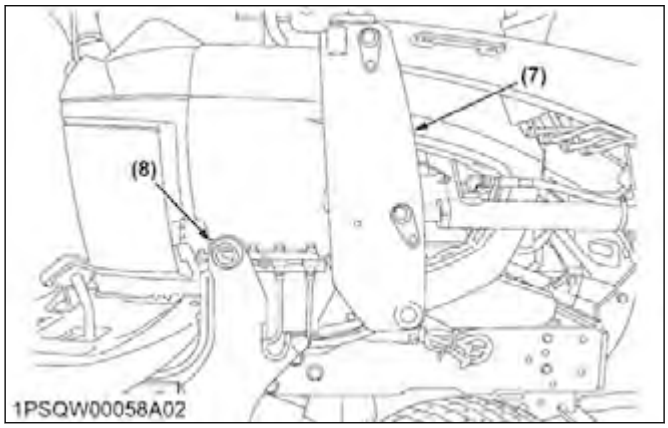

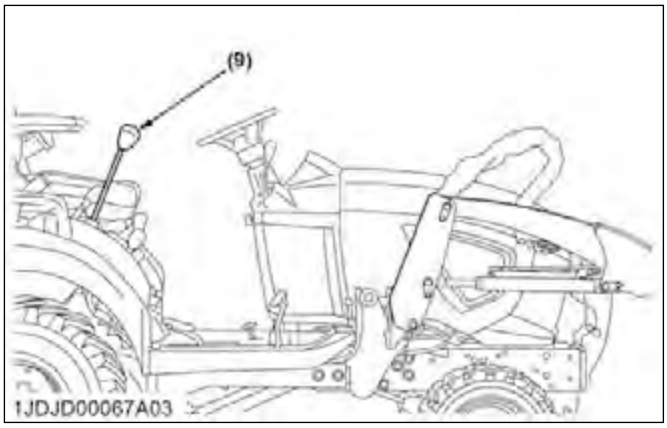

(7) Main frame
(8) Sub frame
(9) Hydraulic control lever

8. Down the mounting levers (10) of both sides as shown in the following figure.

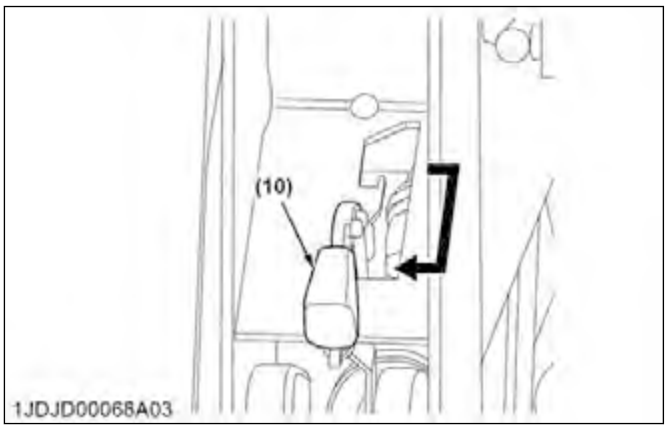

(10) Mounting lever

9. Back the tractor so that the quick coupler (11) is set at the back of side frame (12) as shown in the following figure.

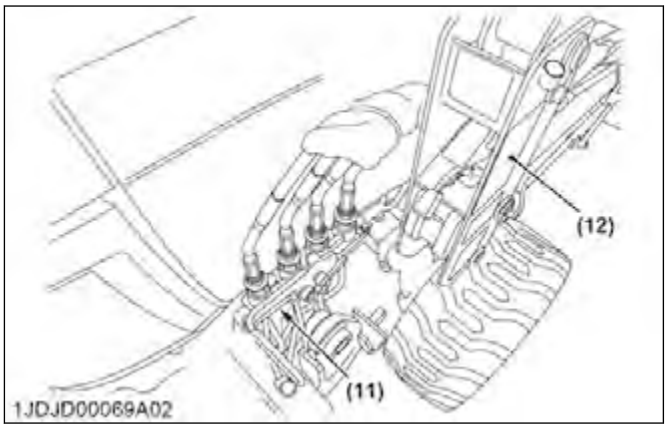

(11) Quick coupler
(12) Side frame

10. Stop the engine, and slowly release all hydraulic pressure by moving the hydraulic control lever in all directions.

11. Unfasten the seat belt, and then turn the safety lock button (13) counter-clockwise to unlock it.

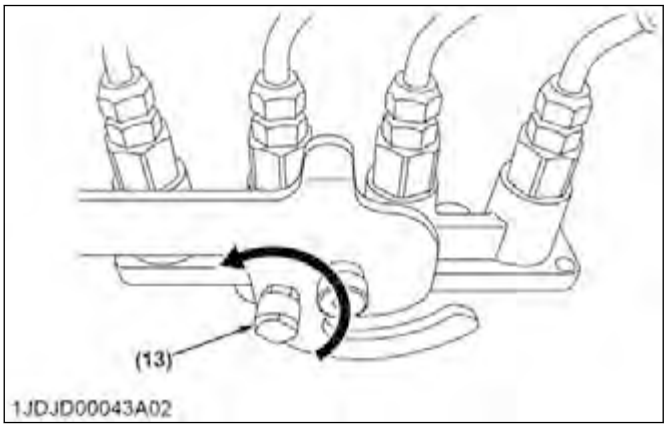

(13) Safety lock button

12. Raise the lever (14) until it stops.

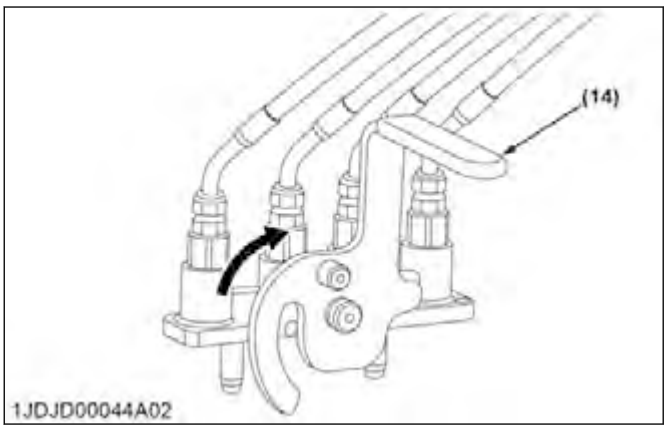

(14) Lever

13. When the third function kit is mounted, remove the connector. Connect the caps to the connectors of mobile side and tractor side.

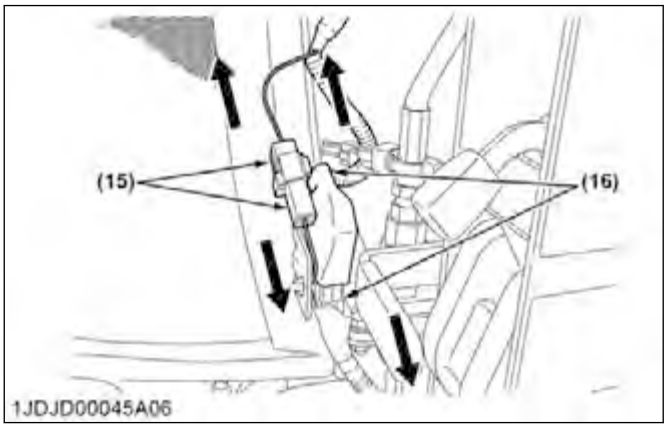

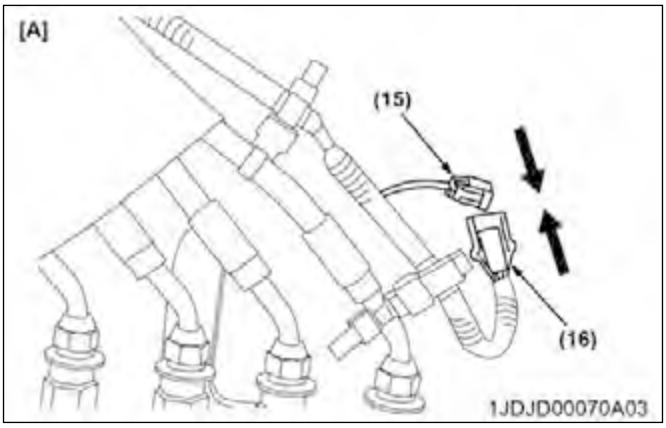

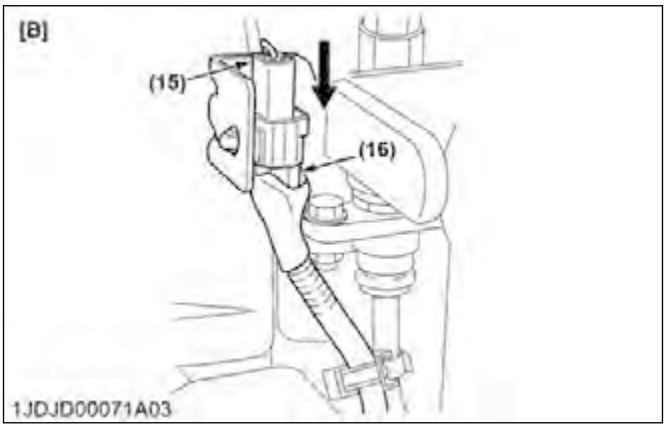

(15) Cap
(16) Connector
[A] Mobile side
[B] Tractor side

14. Put the mobile part on the coupler stay (17). Put the mobile part on the coupler stay (18) for cab model.

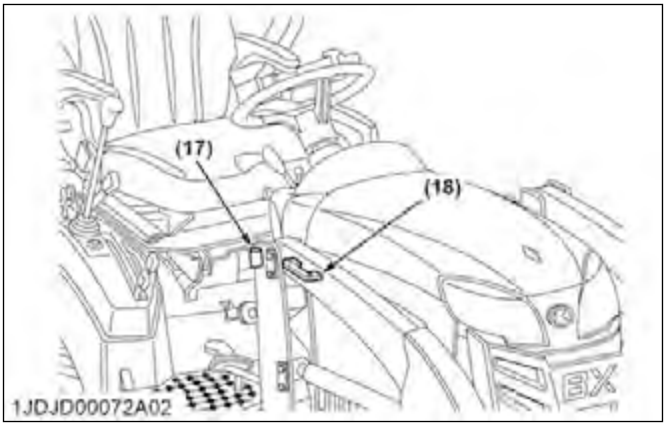

(17) Coupler stay
(18) Coupler stay for cab model

https://truckmanualshub.com/

15. Place the protective caps and plugs on the ends of the quick coupler.

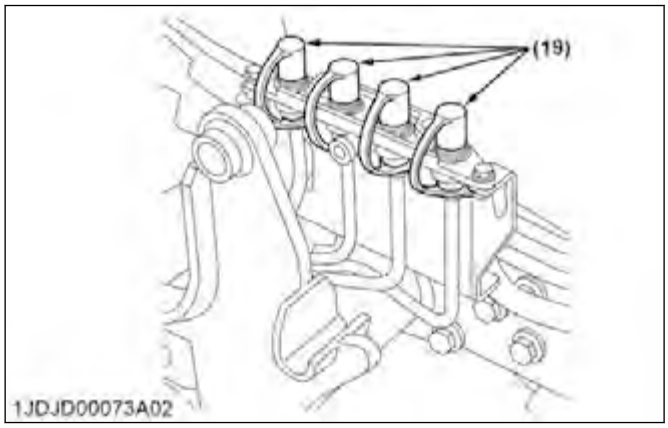

(19) Protective caps

16. Fasten the seat belt and slowly back the tractor away from the loader.

4.1.2 Reinstalling loader

CAUTION

To avoid personal injury:

- **To start the engine and operate the control valve, always stay in the operator's seat.**

4.1.2.1 Installing loader

WARNING

To avoid personal injury or death:

- **When starting the engine and operating the hydraulic control valve, always sit in the operator's seat.**

1. Slowly drive the tractor between the side frames (1) of the loader until the rear portion of both side frames touches the main frames (2) as shown in the following figures.

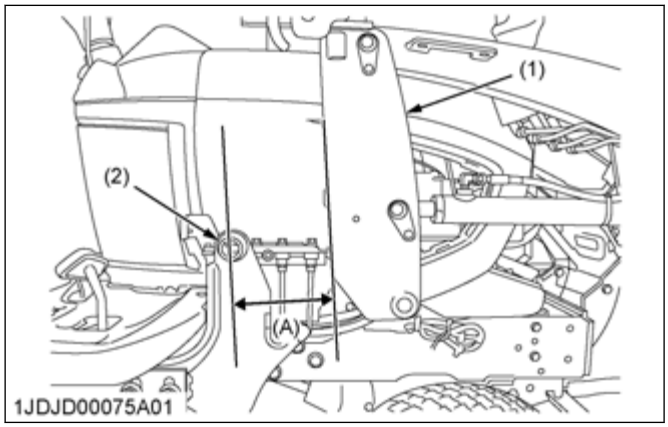

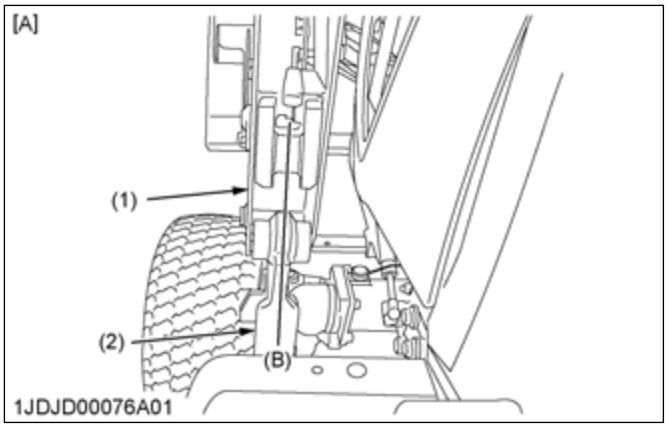

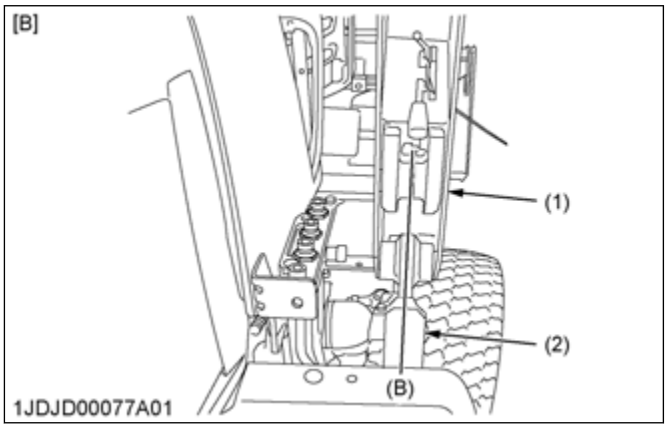

(1) Side frame
(2) Main frame
(A) 150 to 200 mm
(B) Center of side frames
[A] L.H.
[B] R.H.

2. Stop the engine and unfasten the seat belt.
3. Remove the protective caps.
4. Connect the quick coupler and lower the lever (3) until it stops, and then turn the safety lock button (4) clockwise.

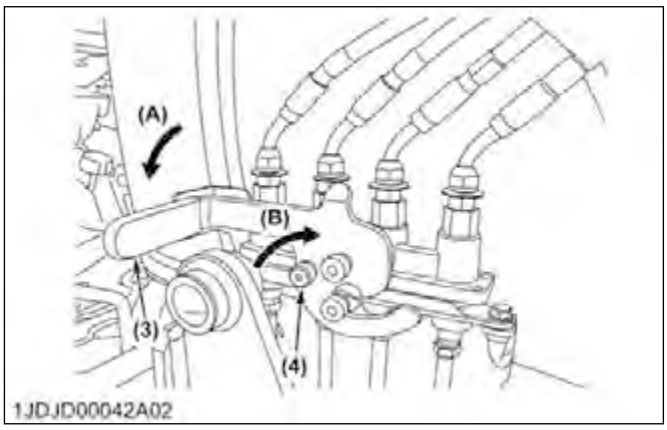

(3) Lever
(4) Safety lock button
(A) Lower
(B) Clockwise

IMPORTANT

- **Get the quick coupler locked, and move up and down the lever to make sure that the quick coupler is tightly locked.**

5. When mounting the third function kit, remove the caps (5) from the connectors of mobile side [C] and tractor side [D]. Connect the connectors (6) and the caps as shown in the follow figures.

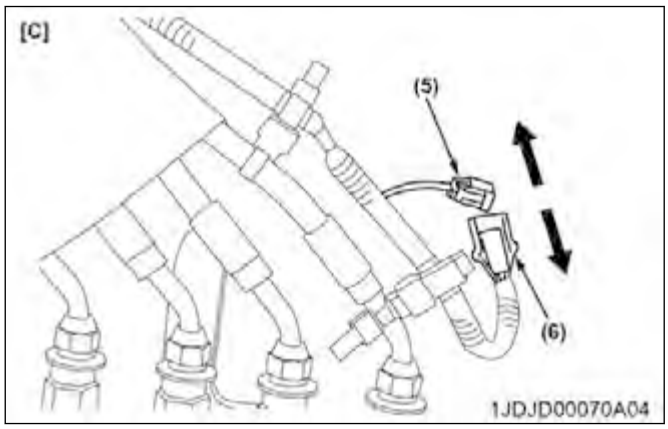

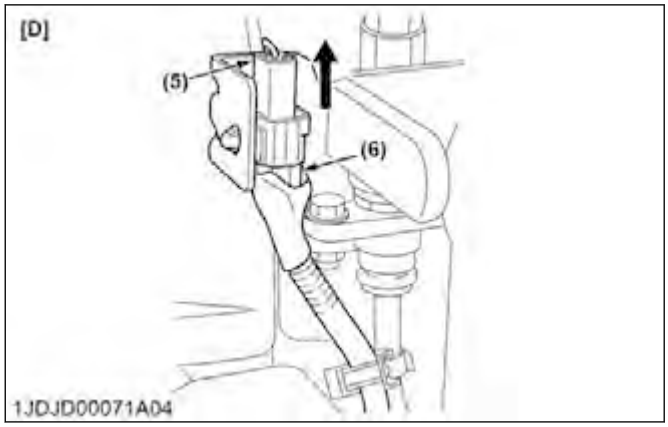

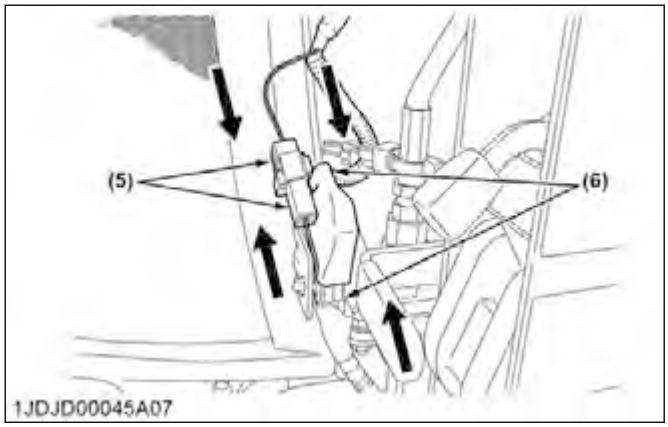

(5) Cap
(6) Connector
[C] Mobile side
[D] Tractor side

6. Make sure that the mounting levers (7) of both sides are at their **low** position as shown in the follow figures.

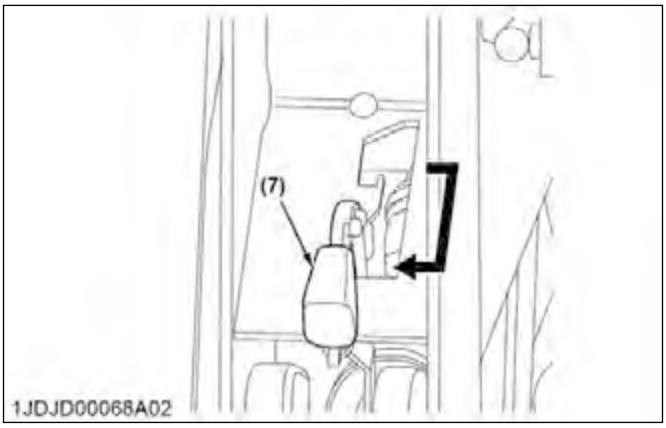

(7) Mounting lever

7. Start the engine and operate at the following speed.

Engine speed	Factory specification	1800 rpm

8. Slowly move the hydraulic control lever to the **up** position until the guide bosses of both side frames (8) touch (C) the main frames (9).

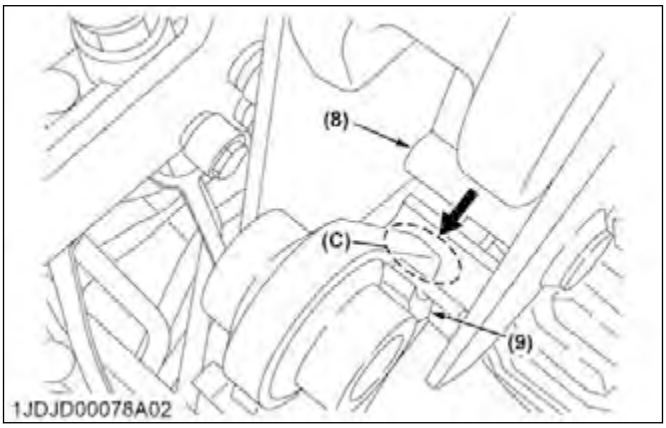

(8) Guide boss of side frame
(9) Main frame
(C) Touch

https://truckmanualshub.com/

9. Slowly move the hydraulic control lever to the **dump** position to lower the side frames into the main frames, and engage (D) the bosses of the main frames (11) to the guide bosses of the side frames (10).

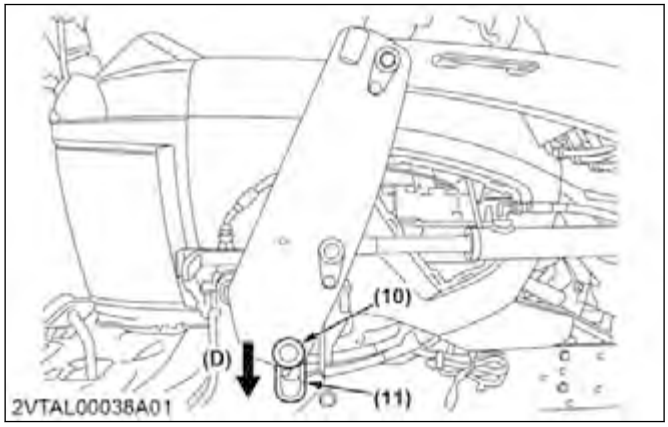

(10) Guide boss of side frame (D) Engage
(11) Boss of main frame

10. Slowly move the control lever to the **dump** position until the bucket (12) tilts down as follows.

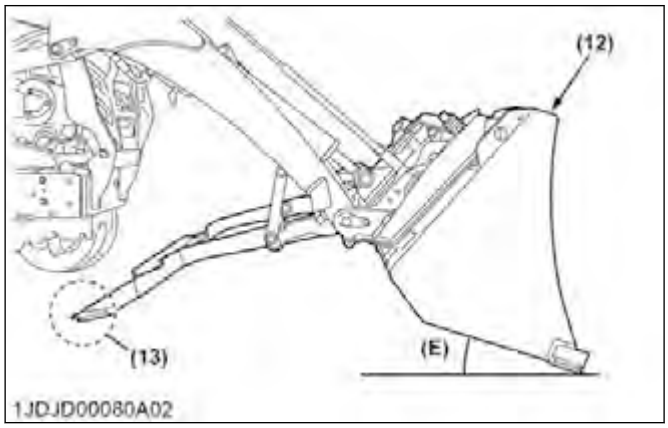

(12) Bucket (E) Angle between bucket bottom and ground
(13) Tip of stand

Angle between bucket bottom and ground (E)	Factory specification	About 20°

IMPORTANT
- **Make sure that the tips of the stands are off the ground.**

11. Slowly move the hydraulic control lever to the **down** position to lift the front wheels slightly with the loader until the mount hooks (14) are completely mounted on the main frame as shown in the following figure.

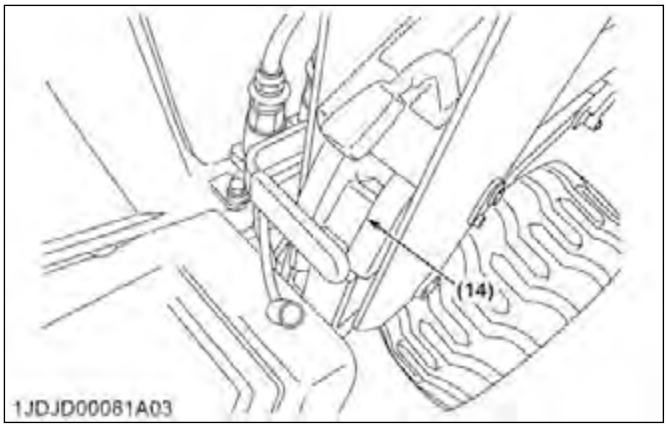

(14) Mount hook

IMPORTANT
- **Make sure that the hooks at both sides are properly mounted on the main frame.**

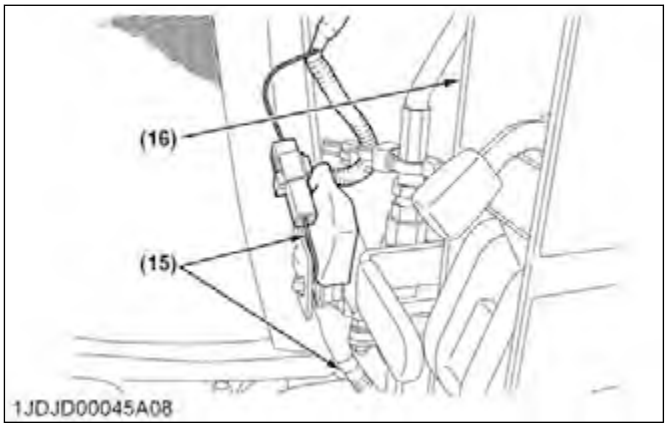

(15) Wire harness (16) Side frame

- **Make sure not to pinch the wire harness in the side frame when mounting the third function kit.**

12. Slowly move the hydraulic control lever to the **up** position until the cutting edge of the bucket comes up slightly off the ground.

13. Make sure that the right and left mounting levers (18) cannot be activated.
    Do not use the machine if the cutting edge of the bucket is off the ground but the mount hooks (17) are unlocked.

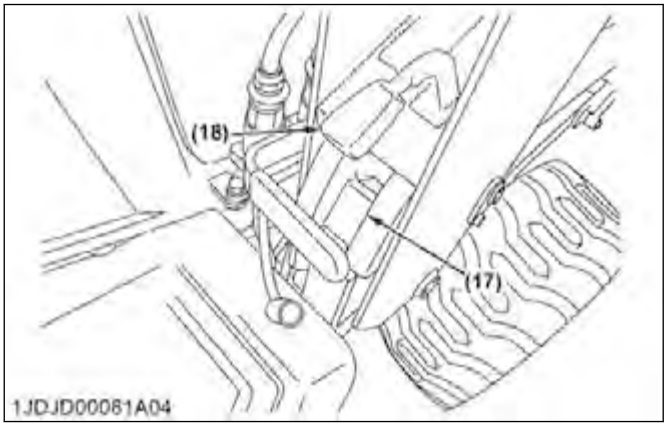

(17) Mount hook (18) Mounting lever

14. Raise the boom until the bucket fulcrum pin (19) comes up to the height of the boom fulcrum pin (20).

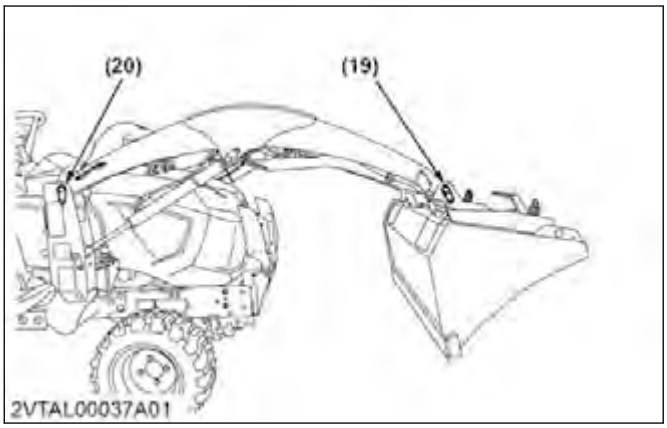

(19) Bucket fulcrum pin (20) Boom fulcrum pin

15. Make sure that the stand lever (21) is at its **low** position as shown in the following figure.

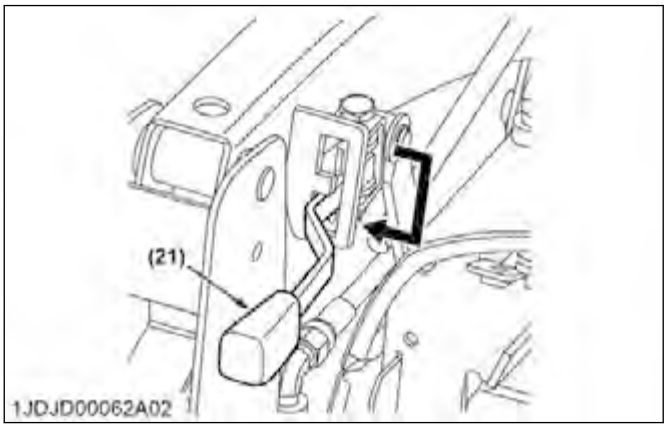

(21) Stand lever

16. Slowly dump the bucket until the stand touches the boom.

17. Slide the stand lever (21) upward direction, and then slide the stand lever left side completely as shown in the following figure.

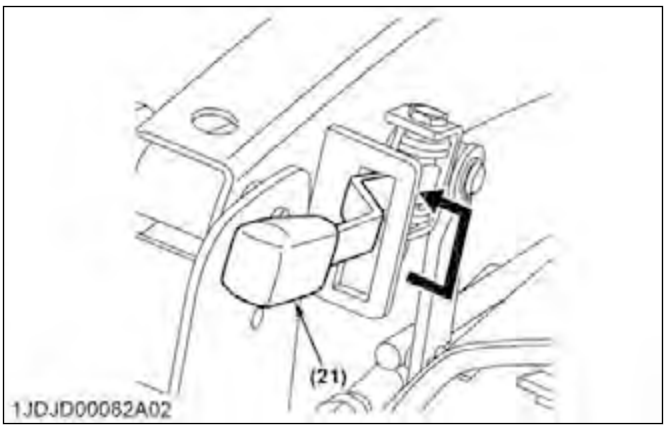

(21) Stand lever

18. Hold the stand (22) by the stand hook (23).

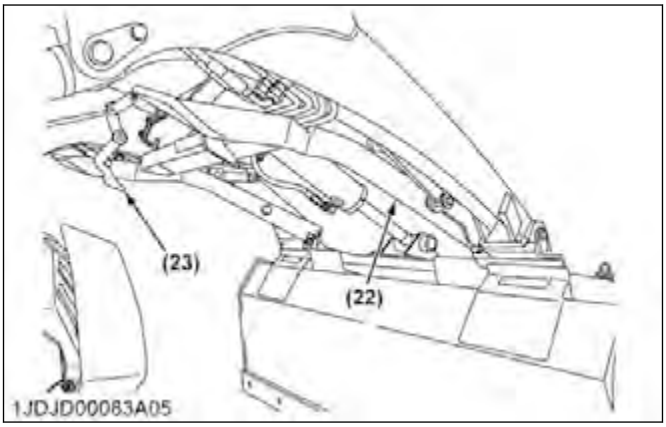

(22) Stand (23) Stand hook

4.2 Bucket, boom and hydraulic cylinders

4.2.1 Attaching attachments

⚠ DANGER

To avoid personal injury or death

- **Use of a non-KUBOTA attachment that does not comply with ISO24410 or the improper positioning of handle(s) or non-protrusion of pin(s) may result in detachment of the attachment or deformation, causing loss of performance, personal injury, or death.**

■ NOTE

- **Locate the attachments on a flat, firm surface when attaching and removing them from the quick attach coupler.**

The quick attach coupler is designed to be used with KUBOTA attachments. To use non-KUBOTA attachments, it must comply with ISO 24410, first edition 2005-04-15. The quick attach coupler allows the

https://truckmanualshub.com/

operator to change the attachments easily without the use of tools.

1. To mount an attachment, pull the quick attach coupler handles to the unlatched position to release the latching pins. Move the quick attach coupler handles all the way up to ensure that the latching pins are fully retracted.
2. Position the tractor squarely in front of the attachment and tilt the quick attach coupler forward with the bucket cylinder.

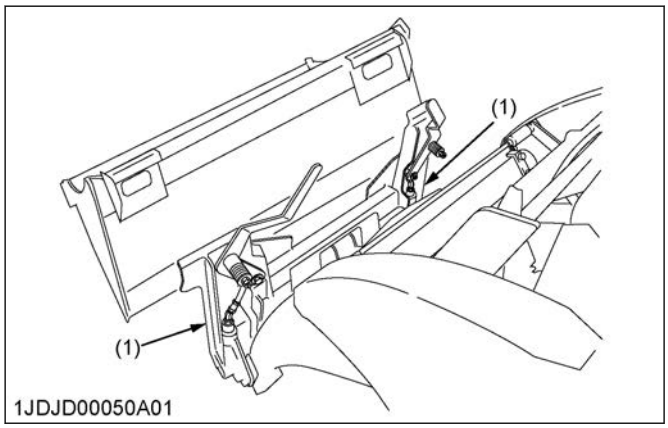

(1) Quick attach coupler

3. Ease the quick attach coupler mounting plate into the saddle of the attachment.
4. Roll the quick attach coupler back using the bucket cylinder and raise the boom slightly.
   The back of the attachment should rest against the front of the quick attach coupler mounting plate, and the weight of the attachment should be supported by the loader.

CAUTION

To avoid personal injury or machine damage:

- **Raise the boom only enough to latch the attachment.**
  The attachment could swing off the quick attach coupler.

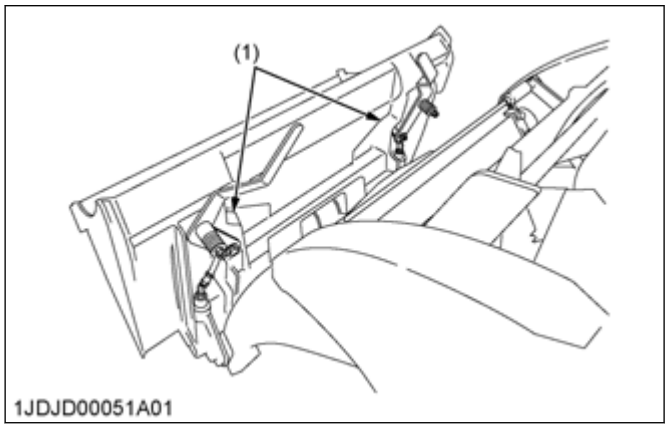

(1) Quick attach coupler

5. When the attachment is properly seated in the saddle and against the front of the quick attach coupler mounting plate, turn off the engine and set the parking brake.
6. Push the quick attach coupler handles to the fully latched position.

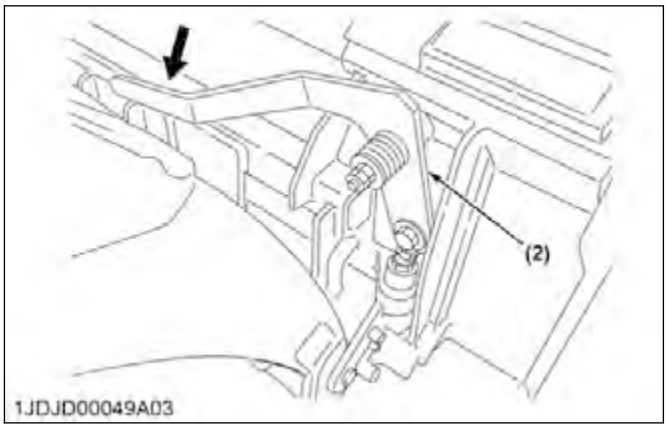

(2) Quick attach coupler handle

7. Verify that both latching pins are completely engaged in the base of the attachment.

DANGER

To avoid personal injury or death:

- **The following engagement points are critical.**
  - **The lock pins of the quick attach coupler have to protrude into and through the pin slots of the attachment on both sides.**
    It is critical that the lock pins are in good condition and without visible signs of wear or damage.
    It is critical that the operator align the quick attach coupler of the loader with the attachment to allow the lock pins to go through the pin slots.
  - **Push down both quick attach coupler handles until they contact the ear plates near the points where the pin bolt goes through the handle.**
- **Do not operate the tractor or attachment unless all of the preceding conditions are met.**

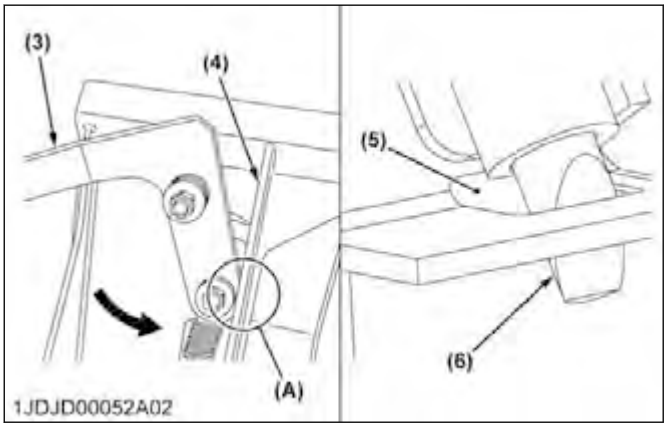

(3) Handle
(4) Ear plate
(5) Pin slot
(6) Lock pin
(A) Points where the quick attach coupler handle contacts the ear plate

8. When pushing the quick attach coupler handles into the **locked** position, visually verify that the latch pins rotate completely and are located underneath the stop of the quick attach coupler.

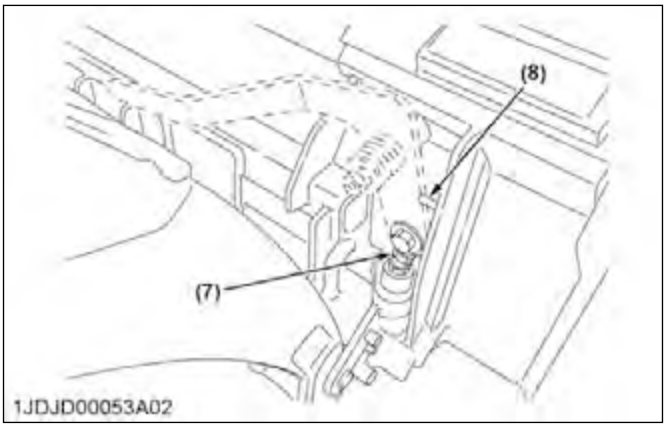

(7) Latch pins
(8) Quick attach coupler stopper

9. When attaching different attachments, visually inspect for broken or damaged pins. If broken or damaged pins are found, replace before using.
   Use of broken pins may result in detachment or deformation of the attachment, causing loss of performance, personal injury, or death.

You are now ready to use the attached attachment.

Attach and remove all compatible attachments using the same method.

WARNING

To avoid personal injury, death, or machine damage:

- **Never operate or transport the attachments which are not attached properly.**
- **Always replace damaged hardware immediately.**

4.2.2 Removing attachments

Remove the attachments in the reverse procedure of attaching the attachments.

1. Lower the attachment to ground level with the attachment slightly in the rolled back position.
2. Stop the engine and set the parking brake.
3. Pull the quick attach coupler handles to the unlatched position to release the latching pins.
4. While sitting in the operator's seat of the tractor, start the engine and slowly move the loader control lever to the dump position until the attachment is pushed away slightly from the quick attach coupler.
5. Lower the boom of the loader so that the quick attach coupler mounting plate clears the attachment saddle.
6. Back away from the attachment slowly.
7. If an attachment is not going to be attached to the quick attach coupler immediately, push the quick attach coupler handles to the locked position to prevent damage to the handle assembly.

https://truckmanualshub.com/

4.2.3 Removing bucket cylinder

CAUTION

To avoid personal injury:

- **Before you disconnect hydraulic hoses, be sure to release all pressure.**

1. Disconnect the hydraulic hoses from the bucket cylinder.
2. Remove lower pin and upper pin and remove the bucket cylinder (1).

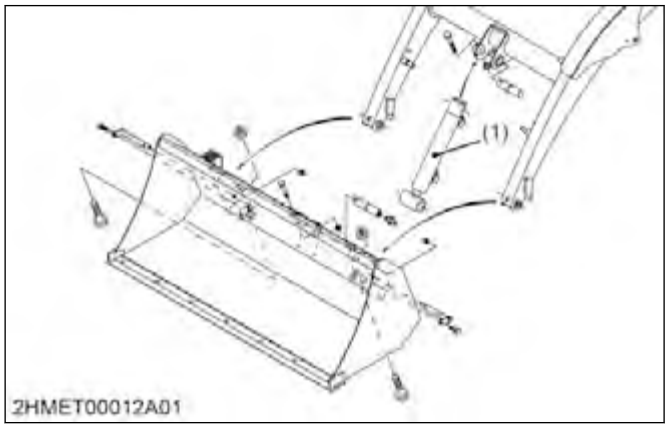

(1) Bucket cylinder

(When reassembling)

- To install the bucket cylinder (1), the hydraulic port must point inside and be careful of the direction of grease fittings.

4.2.4 Removing boom cylinder and hydraulic tubes

1. Disconnect the hydraulic hoses from the boom cylinders (4).
2. Remove the pins (2) and remove the boom cylinders (4).
3. Disconnect the hydraulic hoses (6) with quick couplers at the control valve.
4. Remove the pins (1) and remove the boom (3) from the side frame (5).
5. Remove the hydraulic tubes (7) from the boom (3).

(1) Pin
(2) Pin
(3) Boom
(4) Boom cylinder
(5) Side frame
(6) Hydraulic hose
(7) Hydraulic tube

(When reassembling)

- To install the boom cylinders (4), the hydraulic port must point inside and be careful of the direction of grease fittings.

4.2.5 Removing piston rod assembly

1. Drain hydraulic oil from the cylinder, and secure the tube end of the cylinder in a vise.
2. Remove the cylinder head (1) with the adjustable gland nut wrench (4).

3. Pull out the piston rod assembly (2) from the cylinder tube (3).

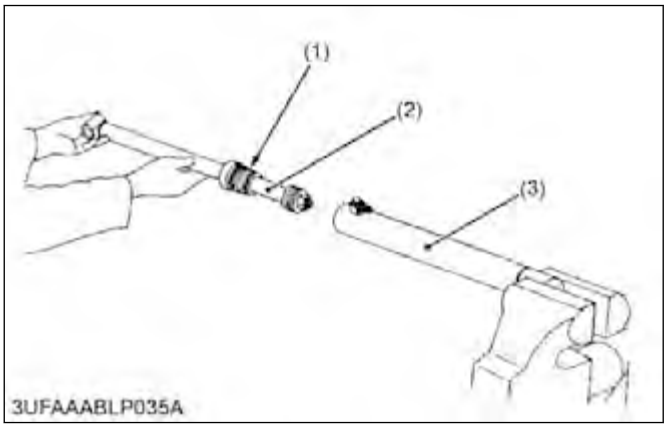

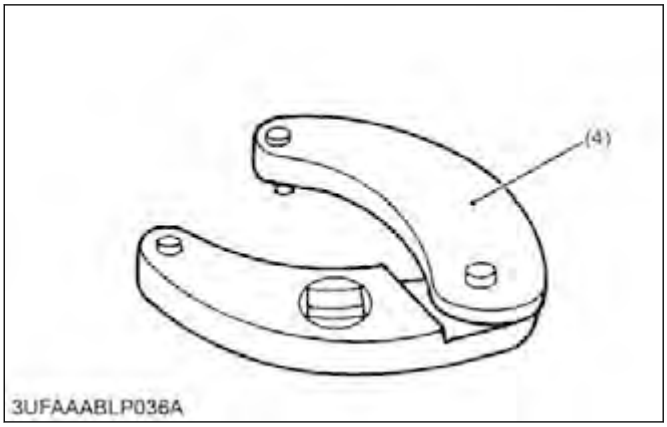

(1) Cylinder head
(2) Piston rod assembly
(3) Cylinder tube
(4) Adjustable gland nut wrench

(When reassembling)

- Visually inspect the cylinder tube for signs of scoring or damage.
- Put the piston rod assembly to the cylinder tube. Be careful not to cause damage to the piston seal on the piston.
- Install the cylinder head to the cylinder tube. Be careful not to damage the O-ring on the cylinder head.

4.2.6 Removing cylinder head, piston and nut

1. Hold the rod end in a vise.
2. Remove the nut (4), and remove the piston (3) and cylinder head (2) from the piston rod (1).

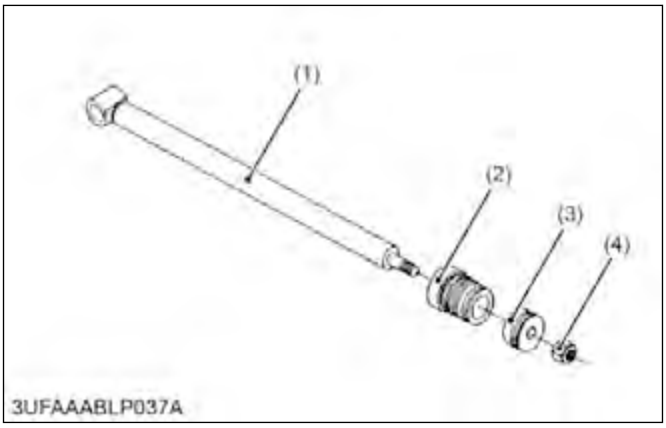

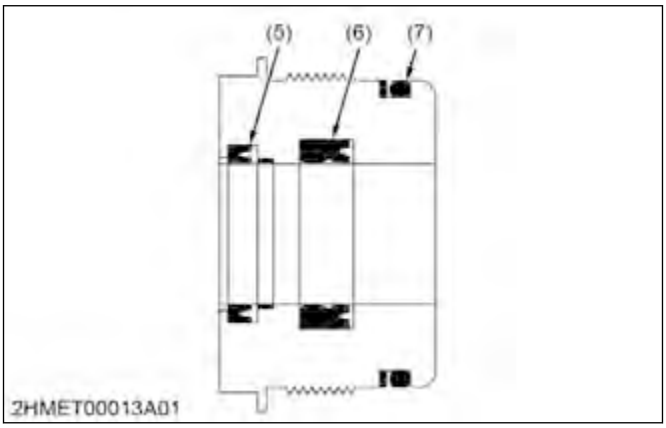

(1) Piston rod
(2) Cylinder head
(3) Piston
(4) Nut
(5) Wiper seal
(6) Oil seal
(7) O-ring

(When reassembling)

- Visually inspect all parts for signs of scoring or damage.
- Put the piston rod to the cylinder head. Be careful not to cause damage to the wiper seal (5) and oil seal (6).

Tightening torque	Boom cylinder piston mounting nut	150 to 180 N·m 15.3 to 18.3 kgf·m 111 to 132 lbf·ft
	Bucket cylinder piston mounting nut	350 to 400 N·m 35.7 to 40.7 kgf·m 259 to 295 lbf·ft

https://truckmanualshub.com/

4.2.7 Removing piston seal and O-ring

1. Remove the piston seal (2) and O-ring (3) from the piston (1).

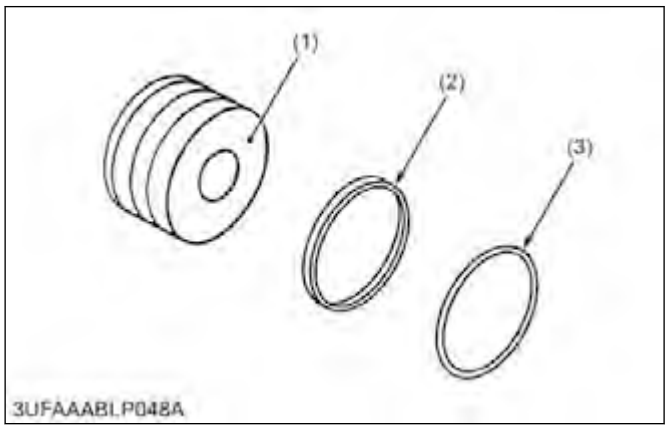

(1) Piston
(2) Piston seal
(3) O-ring

IMPORTANT

- **To install the O-ring (3) and piston seal (2) to the piston (1), use the slide jig and correcting jig as shown in special tools of GENERAL section.**

4.2.8 Installing O-ring and piston seal

1. Set the slide jig (2) on the piston (4).
2. Install the O-ring (3) to the piston using the slide jig.
3. Install the piston seal (1) over the O-ring using the slide jig.

NOTE

- **Do not turn (roll) the piston seal as you install it.**

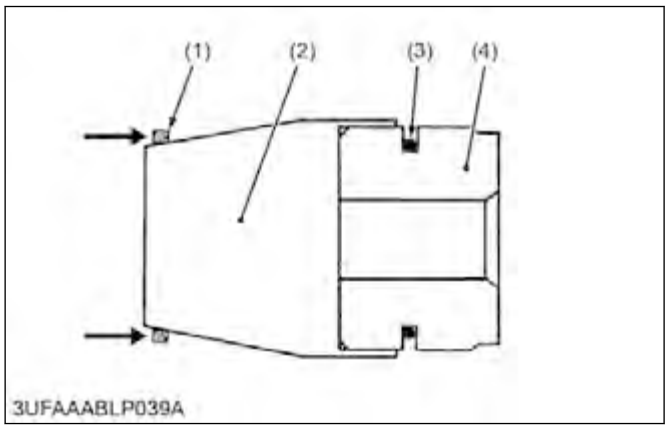

(1) Piston seal
(2) Slide jig
(3) O-ring
(4) Piston

4. Compress the piston seal to the correct size by installing the piston into the correcting jig (5).

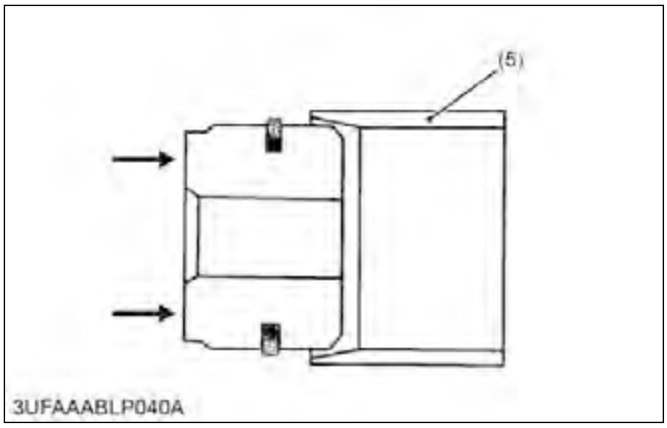

(5) Correcting jig

4.3 Side frames, front guard and main frames

4.3.1 Removing side frames

1. Remove the pins (2), (5).
2. Remove the side frames (1) from the boom assembly (3) and the boom cylinder (4).

(1) Side frame
(2) Pin
(3) Boom assembly
(4) Boom cylinder
(5) Pin

4.3.2 Removing front guard

1. Remove the front guard (1).

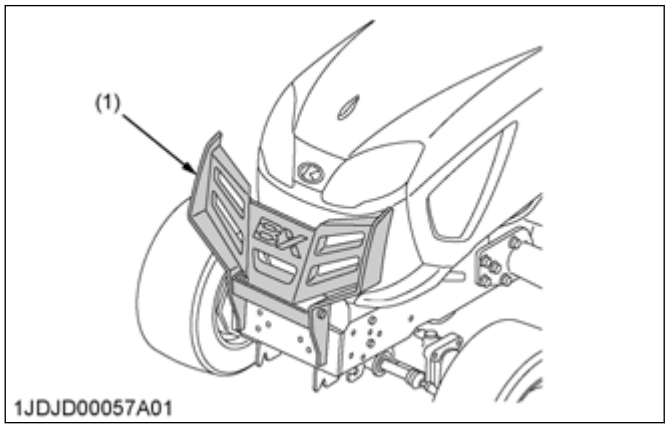

(1) Front guard

4.3.3 Removing main frames

1. Remove the main frame mounting bolts and nuts (2) from the tractor body.
2. Remove the main frame (1).

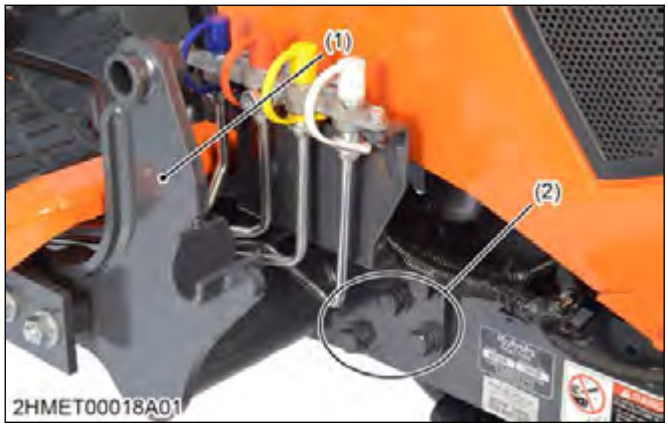

(1) Main frame (2) Main frame mounting bolt

(When reassembling)

IMPORTANT

- **Be careful not to pinch the wire harness when assembling the main frame.**
- Tighten to the specified tightening torque.

Tightening torque	Main frame mounting bolt (M14)	115 N·m 11.7 kgf·m 85 lbf·ft

4.4 3rd function valve (If equipped)

4.4.1 Removing 3rd function valve

1. Remove cover (1) by removing bolts (2).

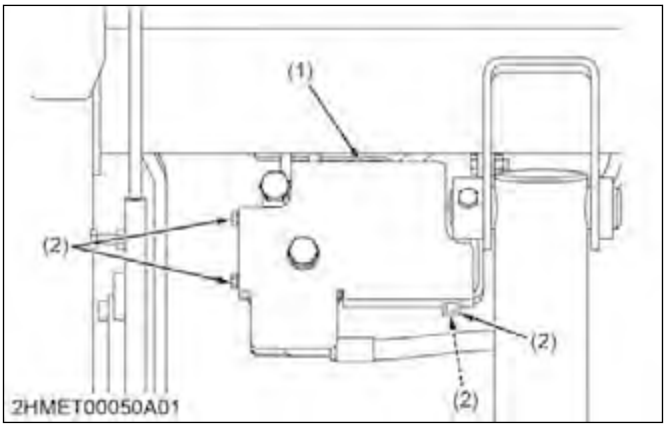

(1) Cover (2) Bolt

2. Disconnect connector (3).

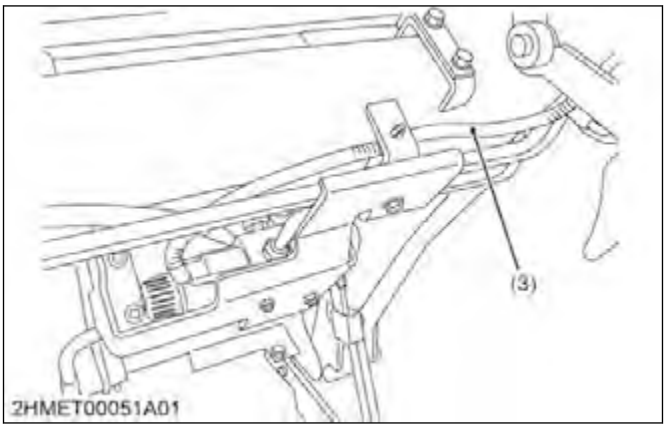

(3) Connector

3. Disconnect hydraulic hoses (4).

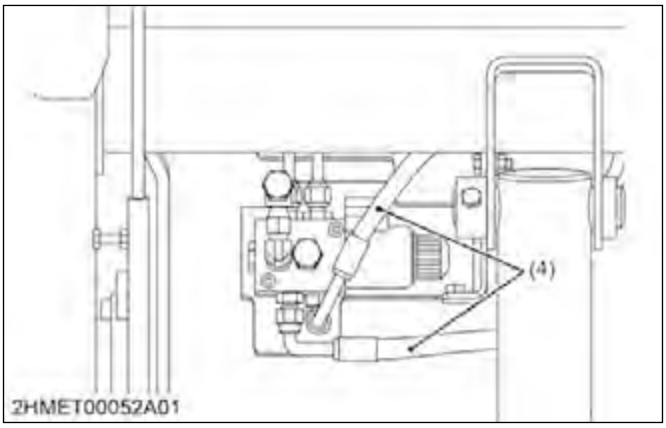

(4) Hydraulic hoses

https://truckmanualshub.com/

4. Remove valve stay (5) by removing bolts (6).

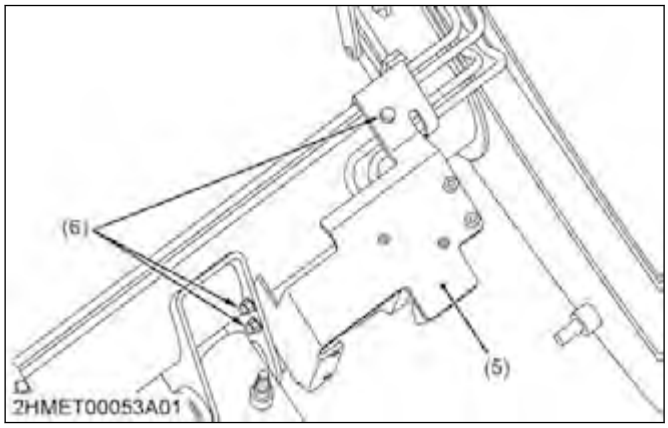

(5) Valve stay (6) Bolt

5. Remove hydraulic pipes (7).

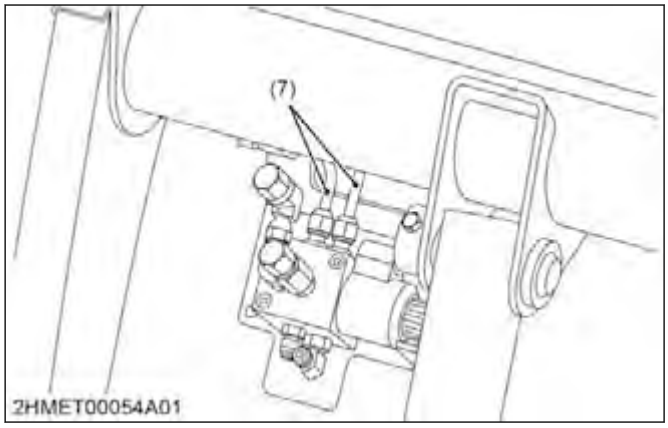

(7) Hydraulic pipes

4.4.2 Removing hydraulic tubes of 3rd function

1. Remove the hydraulic hoses (1).

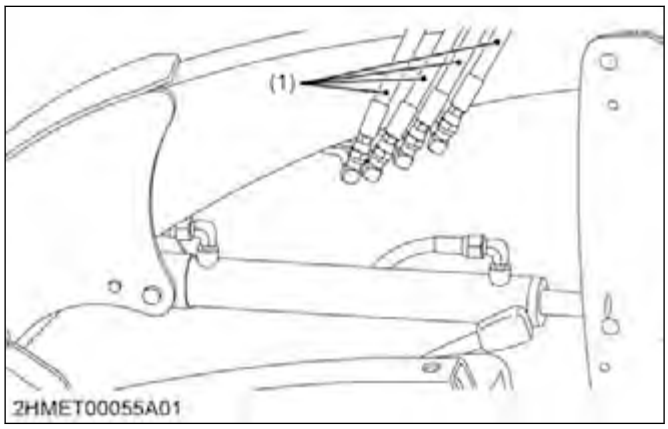

(1) Hydraulic hoses

2. Remove the boom cylinder (2).

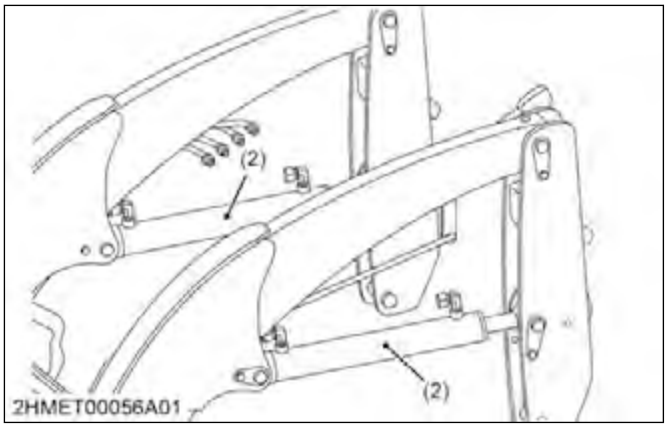

(2) Boom cylinder

3. Remove the 3rd wire harness stay (3) from the boom.

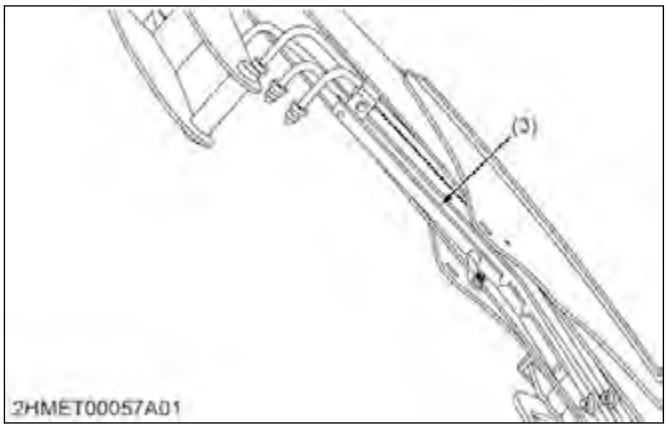

(3) 3rd wire harness stay

4. Remove the piping fixtures (4) and disconnect all the hydraulic tubes (5).

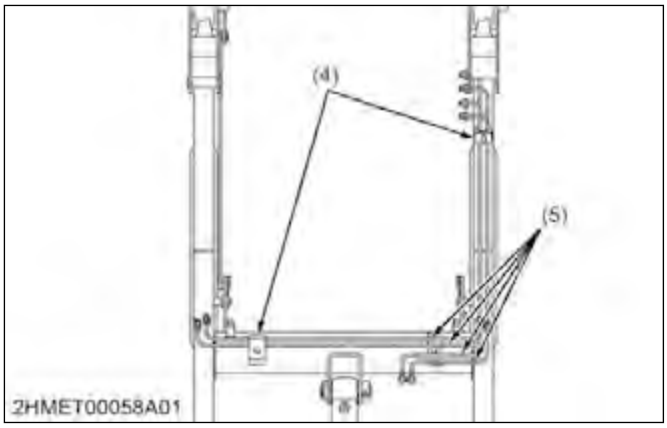

(4) Piping fixtures (5) Hydraulic tubes

5. Servicing

5.1 Piston rod

5.1.1 Checking piston rod bend

1. Set the piston rod on V blocks.
2. Set a dial indicator on the center of the rod.

3. Turn the piston rod and read the dial indicator.

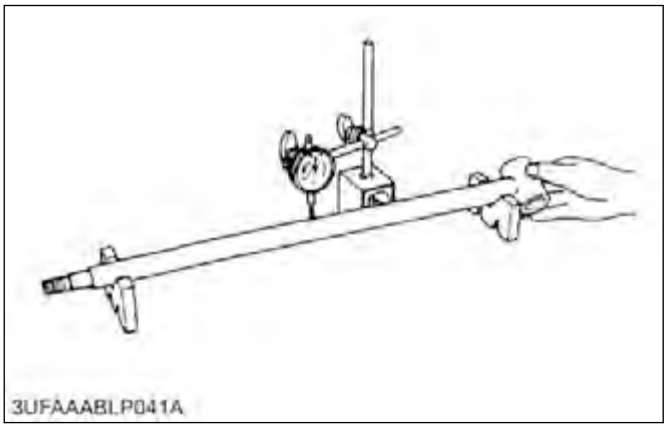

Piston rod bend	Allowable limit	0.25 mm 0.0098 in.

4. If the measurement is more than the allowable limit, replace it.

https://truckmanualshub.com/

11. BACKHOE

https://truckmanualshub.com/

MECHANISM

1. Hydraulic circuit

To operate the backhoe, the hydraulic oil is first pressurized by the hydraulic pump. Oil then flows from pump port P through six control valves (the bucket control valve, the dipperstick control valve, the stabilizer R.H. control valve, the stabilizer L.H. control valve, the boom control valve and the swing control valve) to P.B. port (to front loader control valve).
Since the relief valve is not equipped in the backhoe control valve, the main relief valve in the tractor operates.

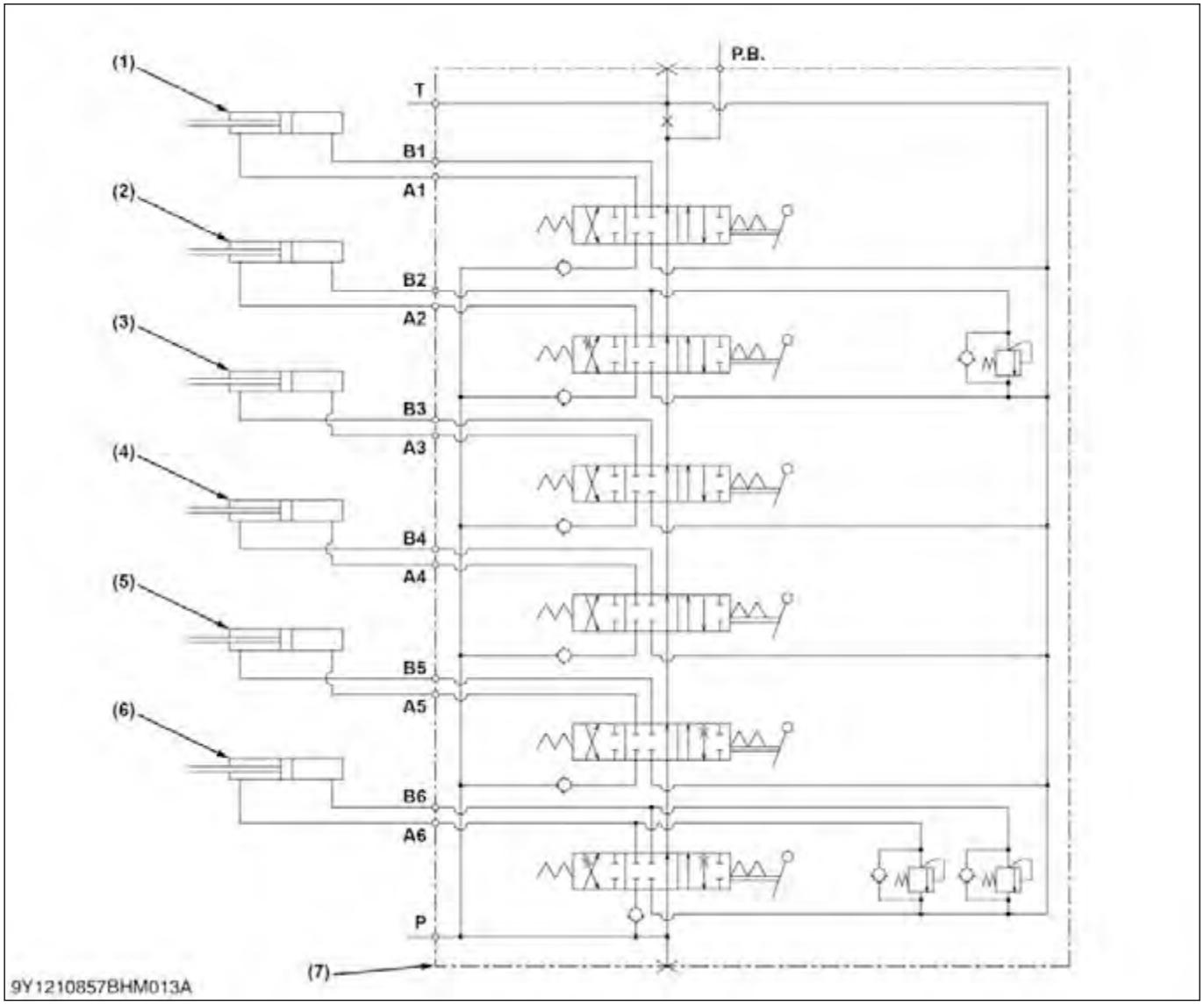

(1) Bucket cylinder	A1: A1 port	B2: B2 port	P.B.: Power beyond port
(2) Dipperstick cylinder	A2: A2 port	B3: B3 port	A: From hydraulic pump (Approx. 14 L/min., 3.7 U.S.gals/min., 3.08 Imp.gals/min.)
(3) Stabilizer cylinder R.H.	A3: A3 port	B4: B4 port	
(4) Stabilizer cylinder L.H.	A4: A4 port	B5: B5 port	
(5) Boom cylinder	A5: A5 port	B6: B6 port	
(6) Swing cylinder	A6: A6 port	P: Pump port	
(7) Backhoe control valve	B1: B1 port	T: Tank port	

2. Control valve

2.1 Structure of backhoe control valve

Inlet section

This section has P and T ports.
The P port is connected to the outlet port of tractor connected by the quick coupler.
The T port is connected to the transaxle case by the quick coupler.

Control valve section

The control valves are of three positions, six connections, no detent, spring center type. This valve has A and B ports and control oil flow to each cylinders.
The control valves consist of a valve housing, spool, load check valve, overload relief valve, etc.

Outlet section

This section has P.B. port which is connected to the inlet port of hydraulic block or front loader control valve.

https://truckmanualshub.com/

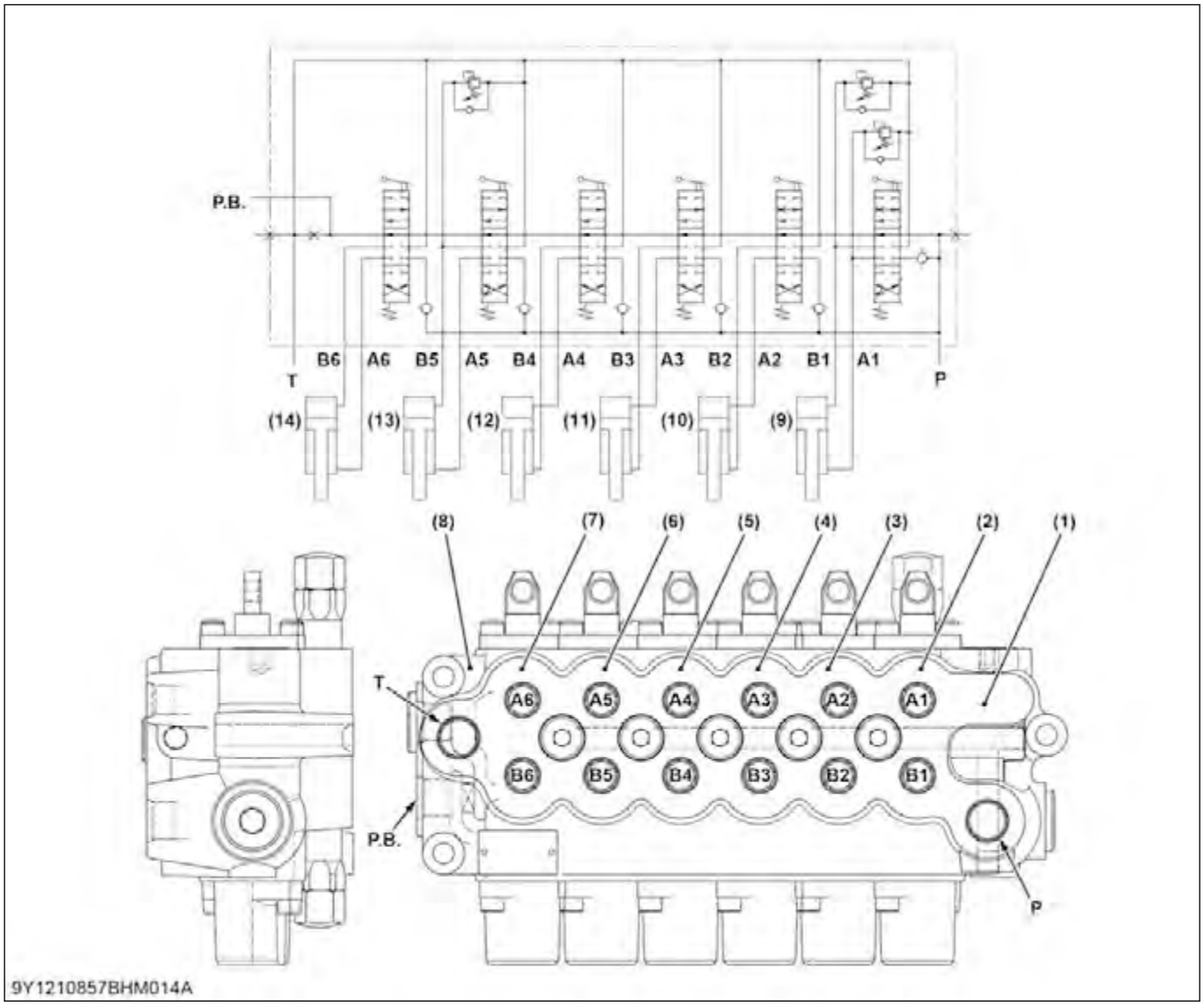

(1) Inlet section
(2) Swing control valve section
(3) Boom control valve section
(4) Stabilizer L.H. control valve section
(5) Stabilizer R.H. control valve section
(6) Dipperstick control valve section
(7) Bucket control valve section
(8) Outlet section
(9) Swing cylinder
(10) Boom cylinder
(11) Stabilizer L cylinder
(12) Stabilizer R cylinder
(13) Dipperstick cylinder
(14) Bucket cylinder
A1: A1 port
A2: A2 port
A3: A3 port
A4: A4 port
A5: A5 port
A6: A6 port
B1: B1 port
B2: B2 port
B3: B3 port
B4: B4 port
B5: B5 port
B6: B6 port
P: Pump port
T: Tank port
P.B.: Power beyond port

2.2 Function of backhoe control valve

2.2.1 Backhoe control valve in neutral position

1. Pressure-fed oil from the hydraulic pumps is delivered into the P port in the outlet section (8).
2. As the load check valves (9) are kept closed in the neutral position, oil flows along the notched section of the spools (10) to the P.B. port through the neutral passage (11).
3. Oil is then fed to the front loader valve or transaxle case and pipe from the P.B. port.

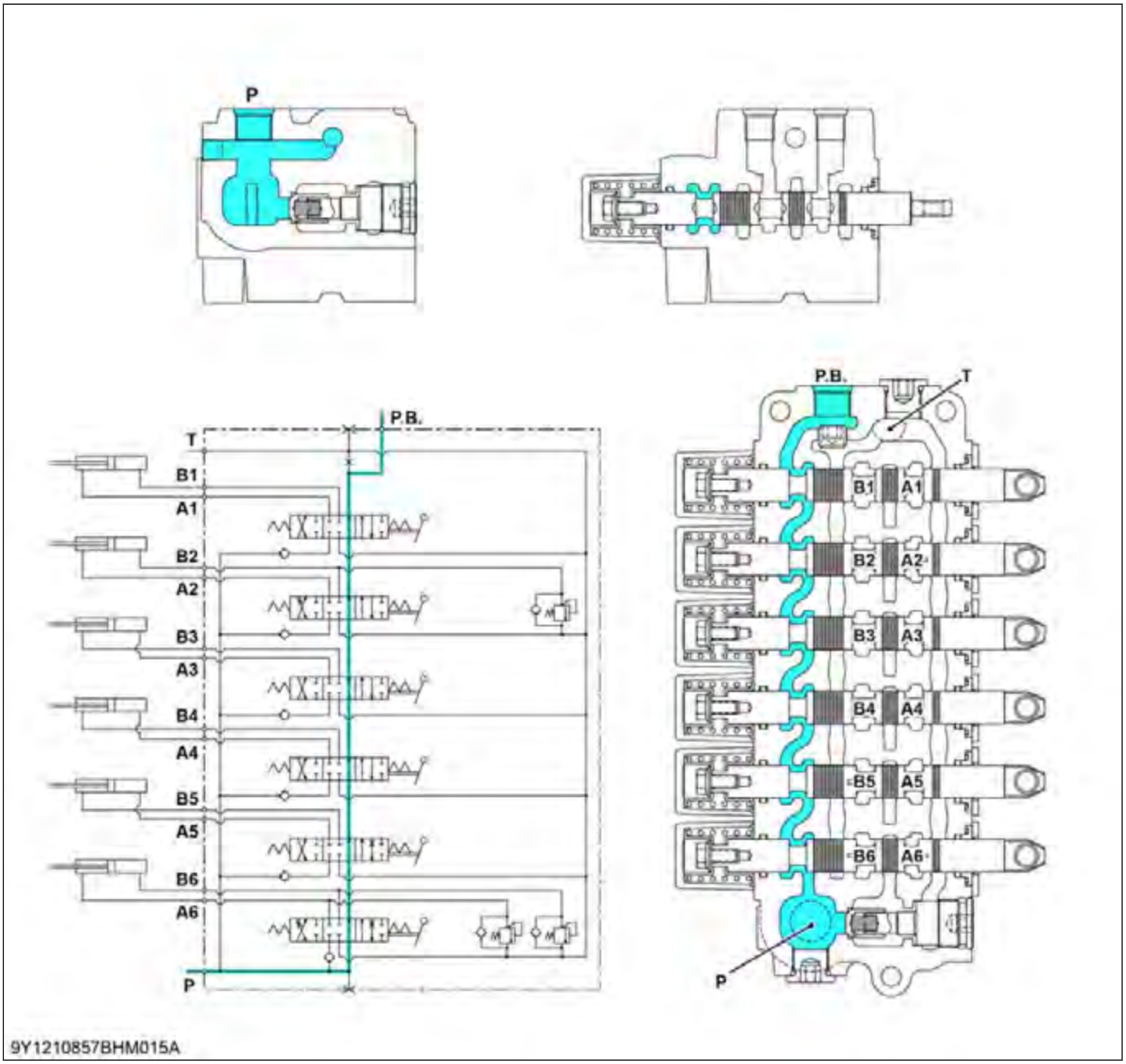

(1) Inlet section	(8) Outlet section	A4: A4 port	B5: B5 port
(2) Bucket control valve	(9) Load check valve	A5: A5 port	B6: B6 Port
(3) Dipperstick control valve	(10) Spool	A6: A6 port	P: Pump port
(4) Stabilizer R.H. control valve	(11) Neutral passage	B1: B1 port	T: Tank port
(5) Stabilizer L.H. control valve	A1: A1 port	B2: B2 port	P.B.: Power beyond port
(6) Boom control valve	A2: A2 port	B3: B3 port	a: Low pressure
(7) Swing control valve	A3: A3 port	B4: B4 port	

https://truckmanualshub.com/

2.2.2 Backhoe control valve in swing right position

1. When the boom and swing lever is moved to the right to set to the right position, the spool (4) of the swing control valve moves to the right, which forms oil passage between bridge passage (6) and A6 port, and between B6 port and T port.
2. The pressure-fed oil from the P port opens the load check valve (2) and flows to B6 port to extend the swing cylinder.
3. Return oil from the swing cylinders return to the transmission case through the A6 port, low pressure passage and T port.

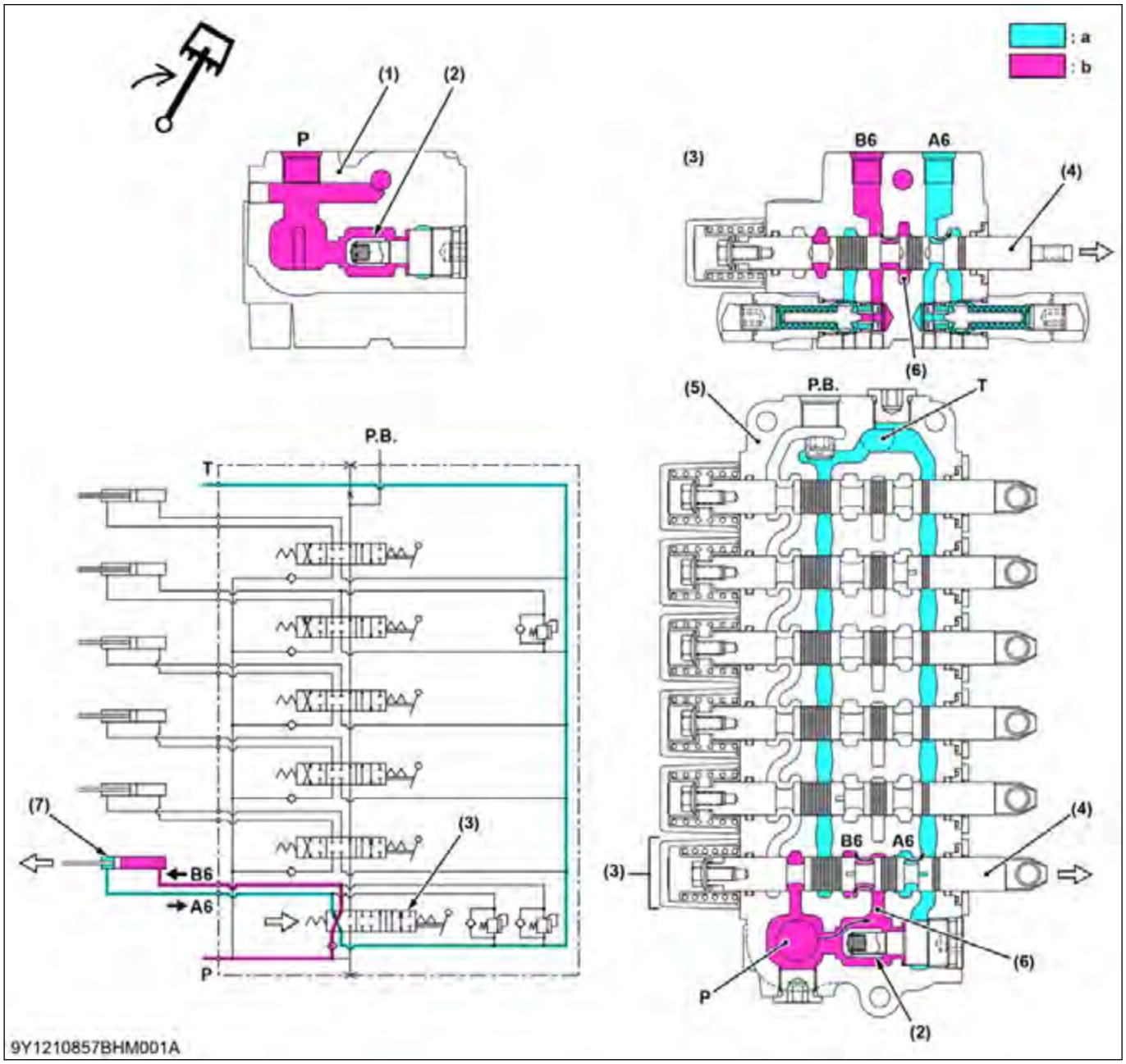

(1)	Inlet section	(5)	Outlet section	B6:	B6 port (to swing cylinder)	a:	Low pressure
(2)	Check valve	(6)	Bridge passage	P:	Pump port	b:	High pressure
(3)	Swing section	(7)	Swing cylinder	T:	Tank port		
(4)	Spool	A6:	A6 port (from swing cylinder)	P.B.:	Power beyond port		

2.2.3 Backhoe control valve in swing left position

1. When the boom and swing lever is moved to the left to set to the left position, the spool (4) of the swing control valve moves to the left, which forms oil passage between bridge passage (6) and A6 port, and between B6 port and T port.
2. The pressure-fed oil from the P port opens the load check valve (2) and flows to A6 port to shrink the swing cylinder.
3. Return oil from the swing cylinders return to the transmission case through the B6 port, low pressure passage and T port.

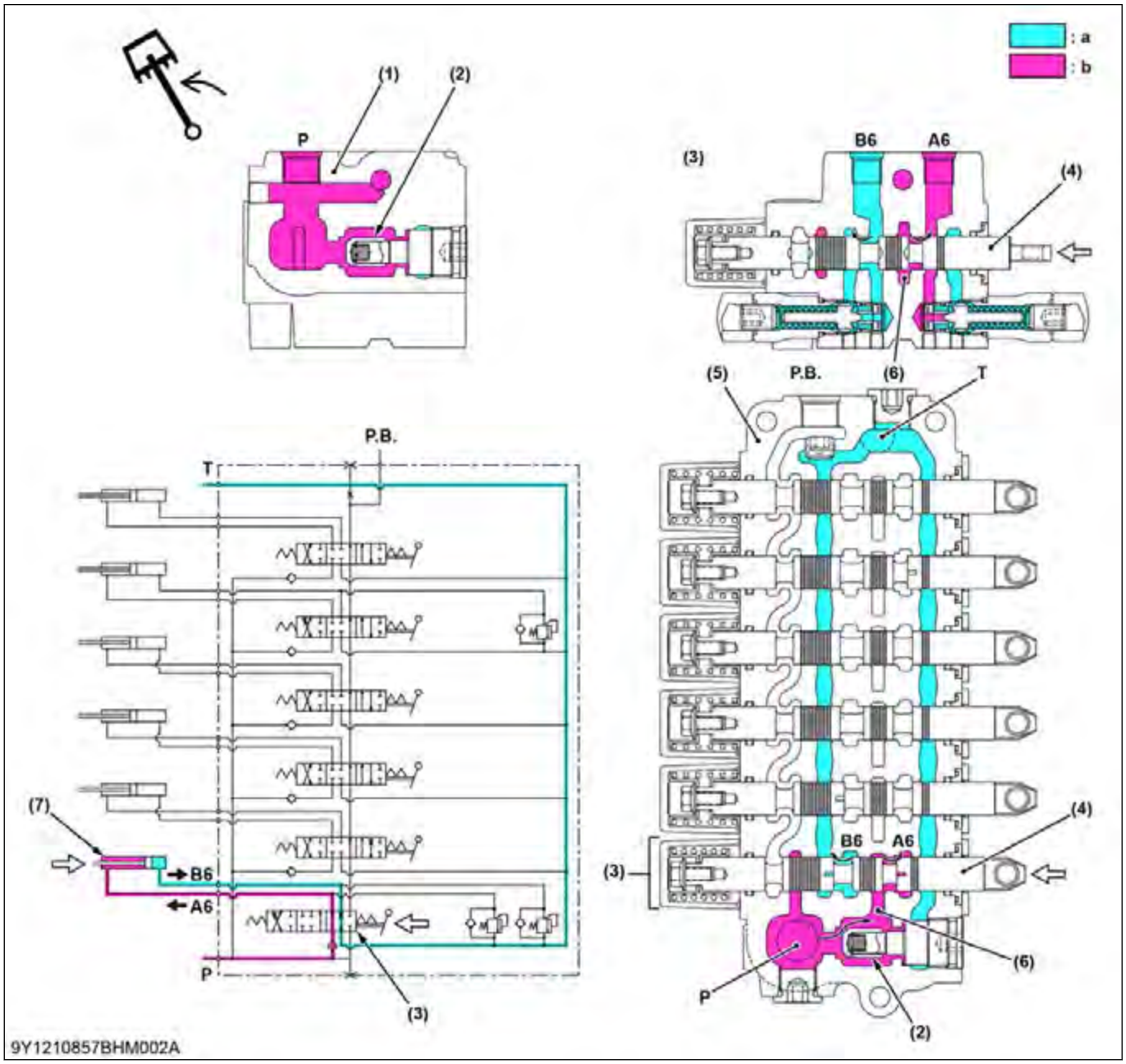

(1)	Inlet section	(5)	Outlet section	B6:	B6 port (from swing cylinder)	a:	Low pressure
(2)	Check valve	(6)	Bridge passage	P:	Pump port	b:	High pressure
(3)	Swing section	(7)	Swing cylinder	T:	Tank port		
(4)	Spool	A6:	A6 port (to swing cylinder)	P.B.:	Power beyond port		

https://truckmanualshub.com/

2.2.4 Backhoe control valve in boom up position

1. When the boom and swing lever is pulled to the backward to set to the up position, the spool (4) of the boom control valve moves to the left, which forms oil passage between bridge passage (6) and B5 port, and between A5 port and T port.
2. The pressure-fed oil from the P port opens the load check valve (2) and flows to B5 port to retract the boom cylinder.
3. Return oil from the boom cylinder returns to the transmission case through the A5 port, low pressure passage and T port.

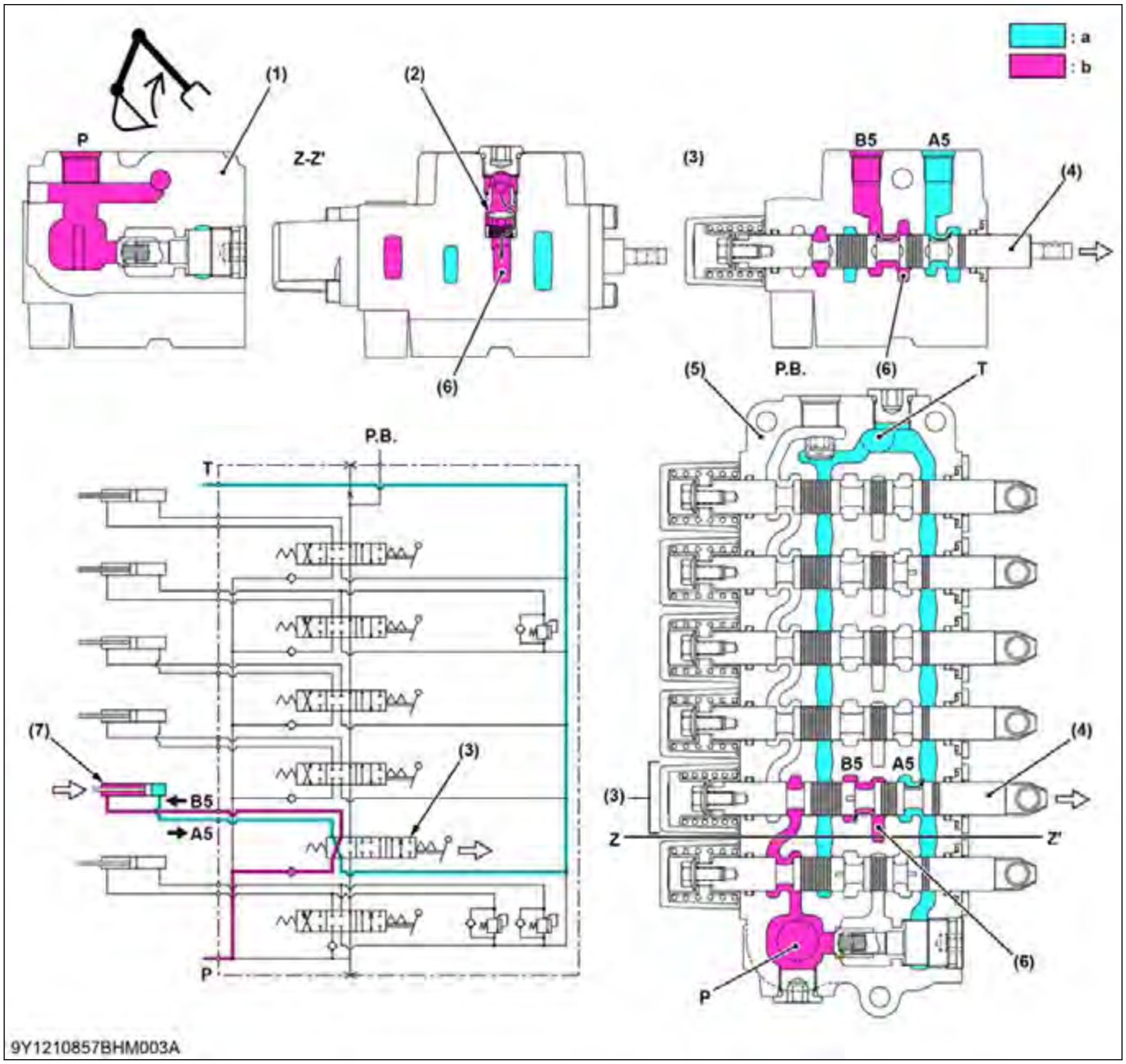

(1)	Inlet section	(5)	Outlet section	B5:	B5 port (to boom cylinder)	a:	Low pressure
(2)	Check valve	(6)	Bridge passage	P:	Pump port	b:	High pressure
(3)	Boom section	(7)	Boom cylinder	T:	Tank port		
(4)	Spool	A5:	A5 port (from boom cylinder)	P.B.:	Power beyond port		

2.2.5 Backhoe control valve in boom down position

1. When the boom and swing lever is pulled to the forward to set to the down position, the spool (4) of the boom control valve moves to the right, which forms oil passage between bridge passage (6) and A5 port, and between B5 port and T port.
2. The pressure-fed oil from the P port opens the load check valve (2) and flows to A5 port to extend the boom cylinder.
3. Return oil from the boom cylinder returns to the transmission case through the B5 port, low pressure passage and T port.

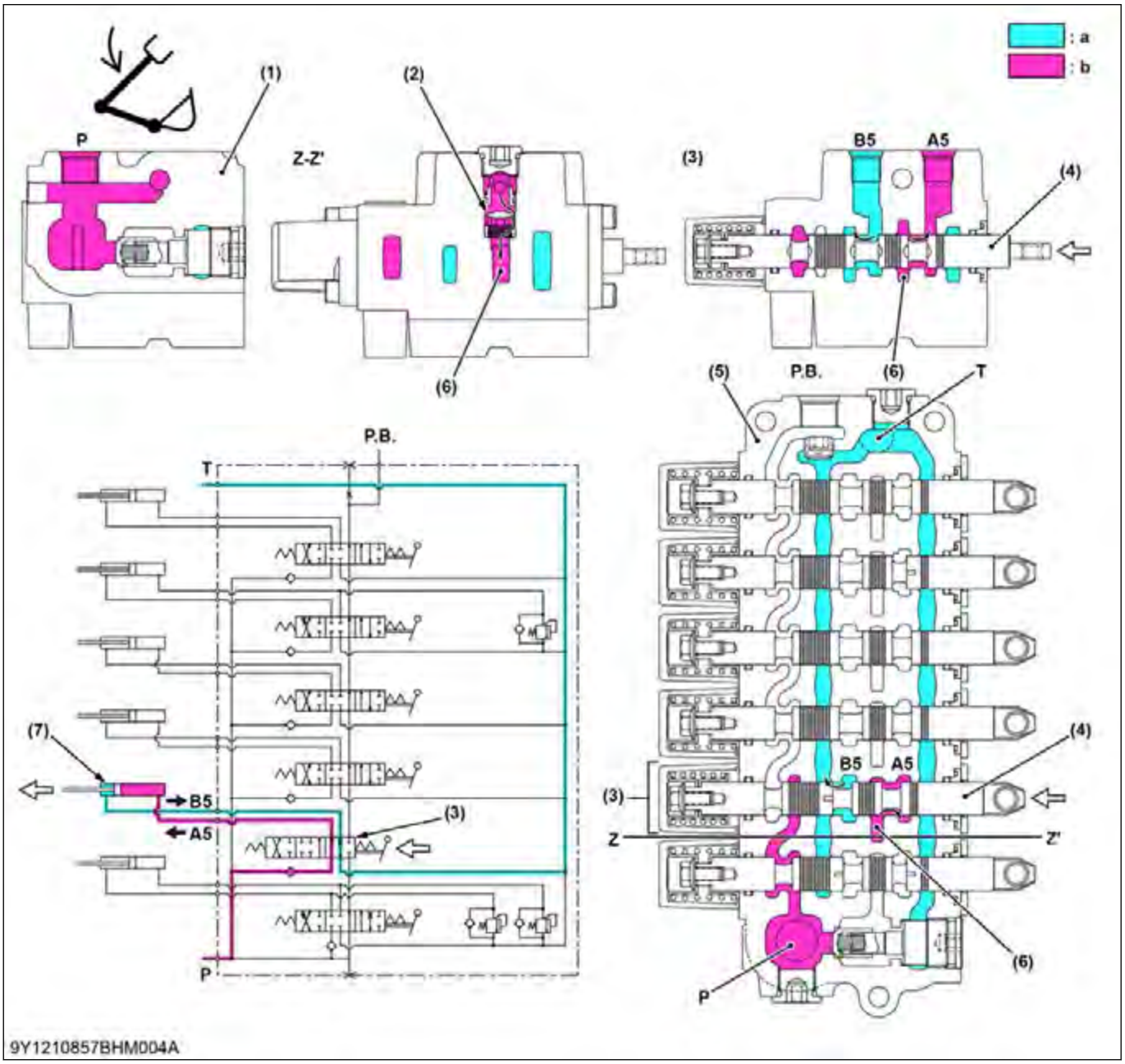

(1)	Inlet section	(5)	Outlet section	B5:	B5 port (from boom cylinder)	a:	Low pressure
(2)	Check valve	(6)	Bridge passage	P:	Pump port	b:	High pressure
(3)	Boom section	(7)	Boom cylinder	T:	Tank port		
(4)	Spool	A5:	A5 port (to boom cylinder)	P.B.:	Power beyond port		

https://truckmanualshub.com/

2.2.6 Backhoe control valve in L.H. stabilizer shrink position

1. When the right stabilizer control lever is pushed to the forward to set to the shrink position, the spool (4) of the stabilizer L.H. control valve moves to the left, which forms oil passage between bridge passage (6) and B4 port, and between A4 port and T port.
2. The pressure-fed oil from the P port opens the load check valve (2), and flows to B4 port to retract the left stabilizer cylinder.
3. Return oil from the left stabilizer cylinder returns to the transmission case through the A4 port, low pressure passage and T port.

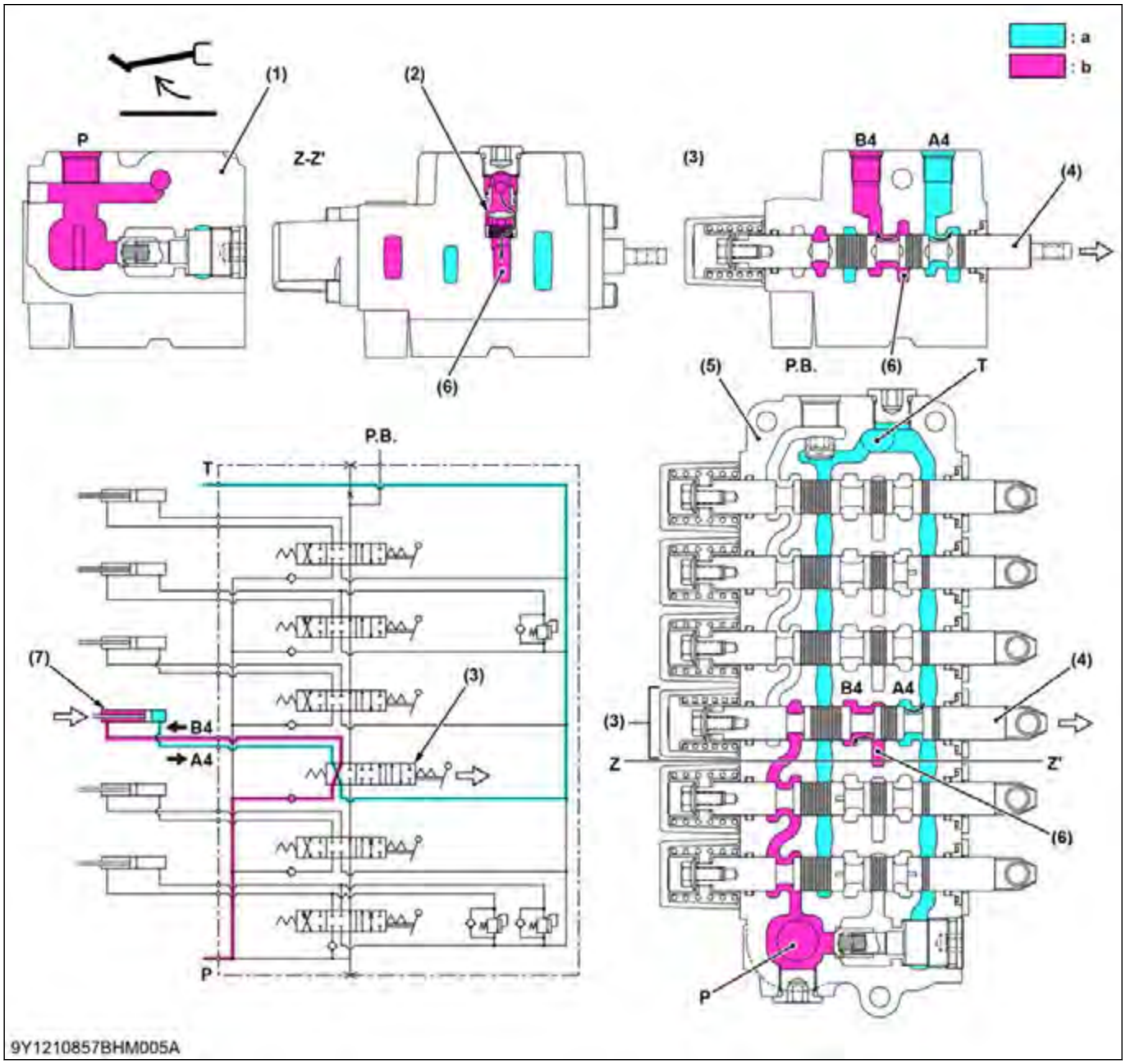

(1) Inlet section
(2) Check valve
(3) Stabilizer L.H. section
(4) Spool
(5) Outlet section
(6) Bridge passage
(7) Stabilizer cylinder
A4: A4 port (from stabilizer cylinder)
B4: B4 port (to stabilizer cylinder)
P: Pump port
T: Tank port
P.B.: Power beyond port
a: Low pressure
b: High pressure

2.2.7 Backhoe control valve in L.H. stabilizer extend position

1. When the right stabilizer control lever is pulled to the downward to set to the extend position, the spool (4) of the stabilizer L.H. control valve moves to the right, which forms oil passage between bridge passage (6) and A4 port, and between B4 port and T port.
2. The pressure-fed oil from the P port opens the load check valve (2), and flows to A4 port to retract the left stabilizer cylinder.
3. Return oil from the left stabilizer cylinder returns to the transmission case through the B4 port, low pressure passage and T port.

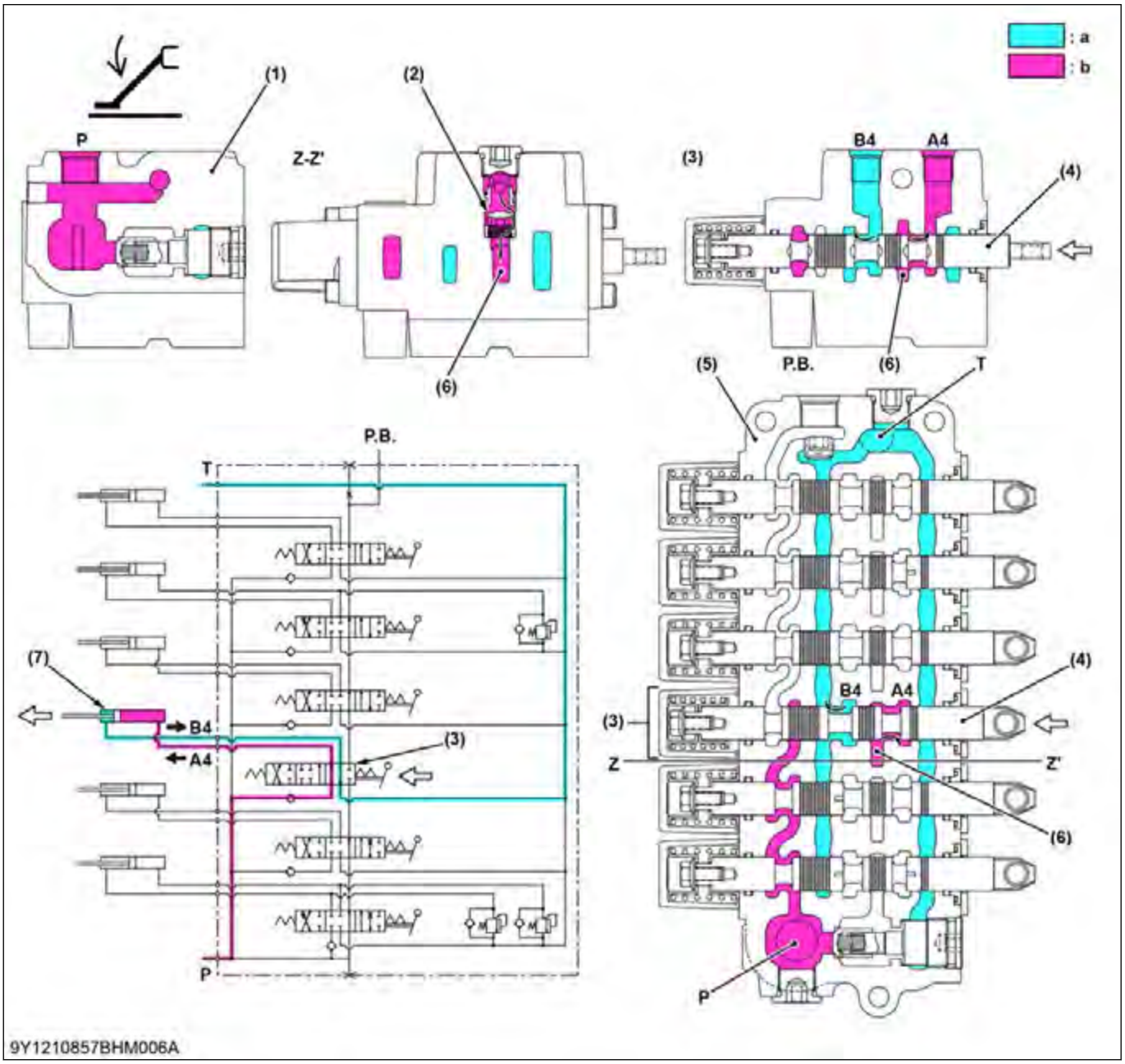

(1) Inlet section
(2) Check valve
(3) Stabilizer L.H. section
(4) Spool
(5) Outlet section
(6) Bridge passage
(7) Stabilizer cylinder
A4: A4 port (to stabilizer cylinder)
B4: B4 port (from stabilizer cylinder)
P: Pump port
T: Tank port
P.B.: Power beyond port
a: Low pressure
b: High pressure

https://truckmanualshub.com/

2.2.8 Backhoe control valve in R.H. stabilizer shrink position

1. When the right stabilizer control lever is pushed to the forward to set to the shrink position, the spool (4) of the stabilizer R.H. control valve moves to the left, which forms oil passage between bridge passage (6) and B3 port, and between A3 port and T port.
2. The pressure-fed oil from the P port opens the load check valve (2), and flows to B3 port to retract the right stabilizer cylinder.
3. Return oil from the right stabilizer cylinder returns to the transmission case through the A3 port, low pressure passage and T port.

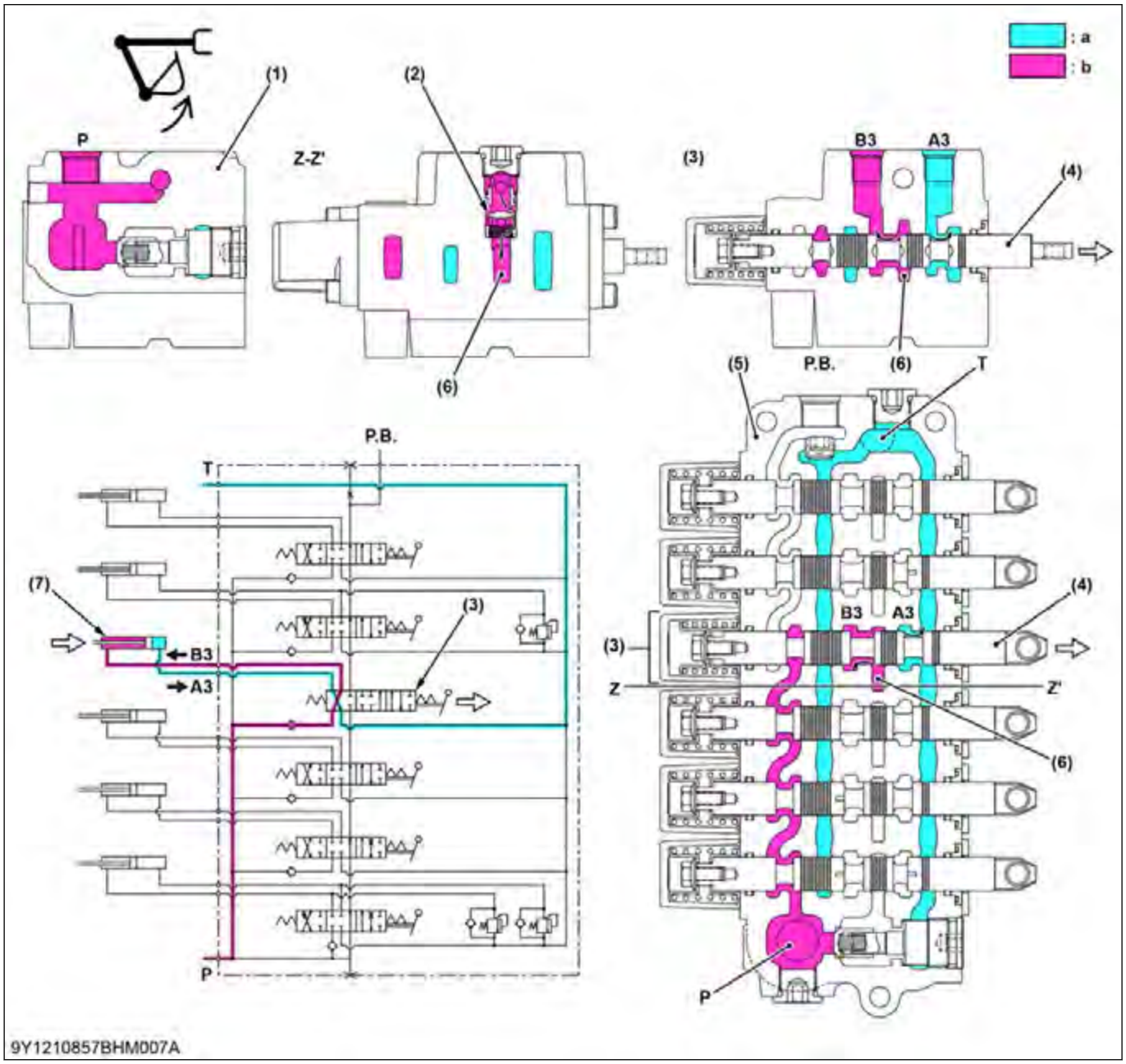

(1) Inlet section
(2) Check valve
(3) Stabilizer R.H. section
(4) Spool
(5) Outlet section
(6) Bridge passage
(7) Stabilizer cylinder
A3: A3 port (from stabilizer cylinder)
B3: B3 port (to stabilizer cylinder)
P: Pump port
T: Tank port
P.B.: Power beyond port
a: Low pressure
b: High pressure

2.2.9 Backhoe control valve in R.H. stabilizer extend position

1. When the right stabilizer control lever is pulled to the downward to set to the extend position, the spool (4) of the stabilizer R.H. control valve moves to the right, which forms oil passage between bridge passage (6) and A3 port, and between B3 port and T port.
2. The pressure-fed oil from the P port opens the load check valve (2), and flows to A3 port to extend the right stabilizer cylinder.
3. Return oil from the right stabilizer cylinder returns to the transmission case through the B3 port, low pressure passage and T port.

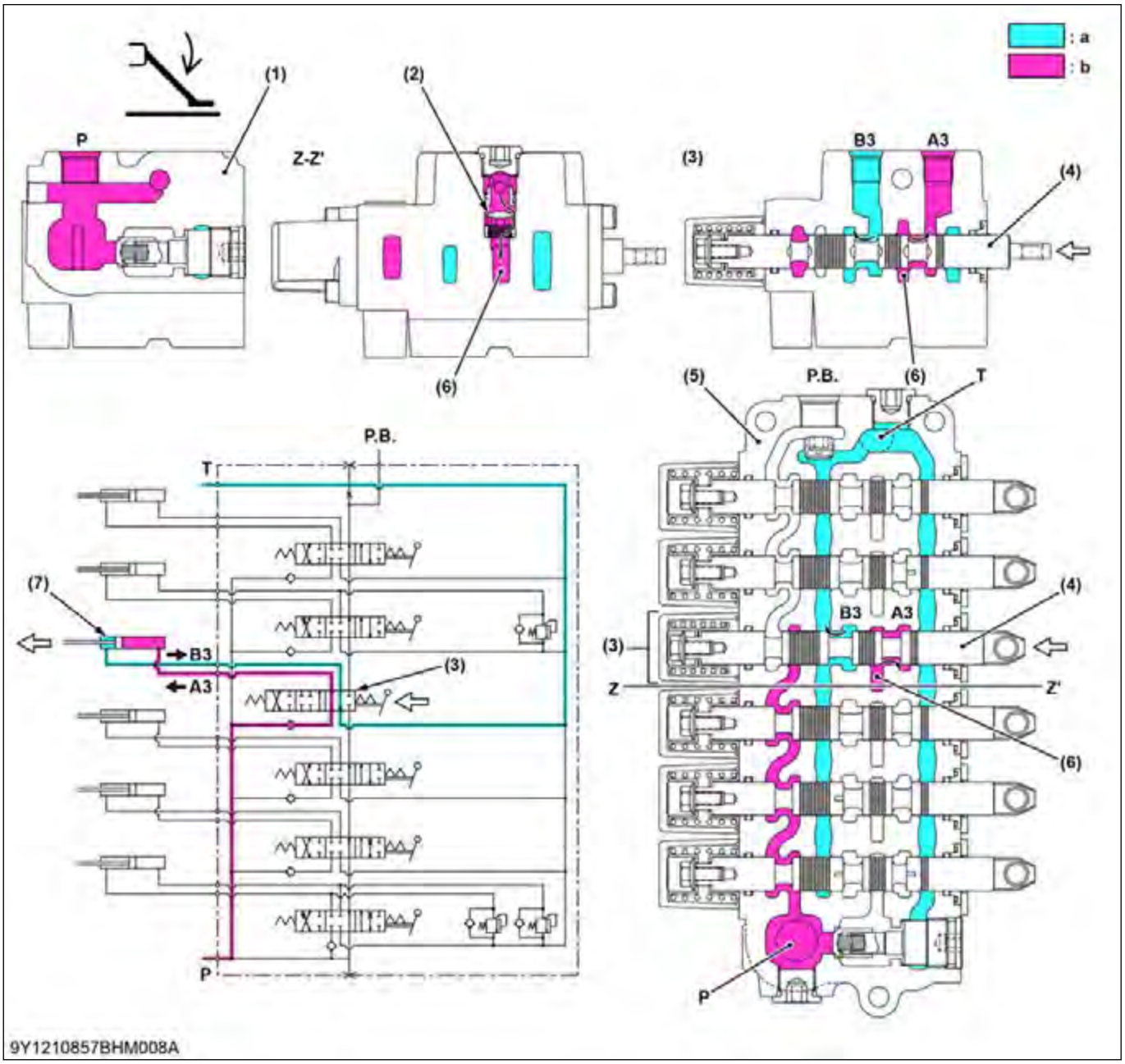

(1) Inlet section
(2) Check valve
(3) Stabilizer R.H. section
(4) Spool
(5) Outlet section
(6) Bridge passage
(7) Stabilizer cylinder
A3: A3 port (to stabilizer cylinder)
B3: B3 port (from stabilizer cylinder)
P: Pump port
T: Tank port
P.B.: Power beyond port
a: Low pressure
b: High pressure

https://truckmanualshub.com/

2.2.10 Backhoe control valve in dipperstick crowd position

1. When the dipperstick and bucket lever is pulled to the backward to set to the crowd position, the spool (4) of the dipperstick control valve moves to the left, which forms oil passage between bridge passage (6) and B2 port, and between A2 port and T port.
2. The pressure-fed oil from the P port opens the load check valve (2) and flows to B2 port to extend the dipperstick cylinder.
3. Return oil from the dipperstick cylinder returns to the transmission case through the A2 port, low pressure passage and T port.

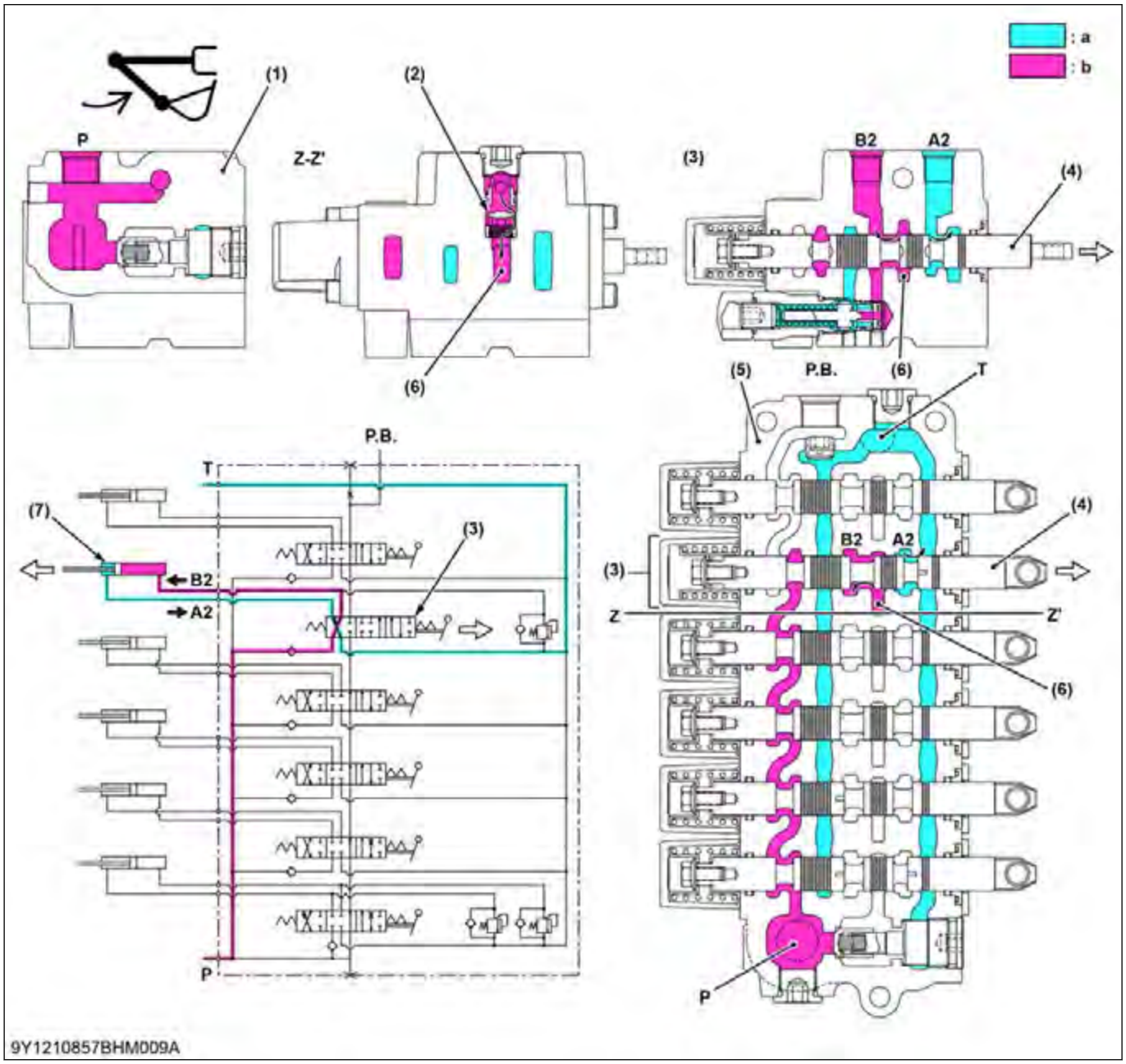

(1) Inlet section
(2) Check valve
(3) Dipperstick section
(4) Spool
(5) Outlet section
(6) Bridge passage
(7) Dipperstick cylinder

A2: A2 port (from dipperstick cylinder)
B2: B2 port (to dipperstick cylinder)
P: Pump port
T: Tank port
P.B.: Power beyond port
a: Low pressure
b: High pressure

2.2.11 Backhoe control valve in dipperstick extend position

1. When the dipperstick and bucket lever is pushed to the forward to set to the extend position, the spool (4) of the dipperstick control valve moves to the right, which forms oil passage between bridge passage (6) and A2 port, and between B2 port and T port.
2. The pressure-fed oil from the P port opens the load check valve (2) and flows to A2 port to retract the dipperstick cylinder.
3. Return oil from the dipperstick cylinder returns to the transmission case through the B2 port, low pressure passage and T port.

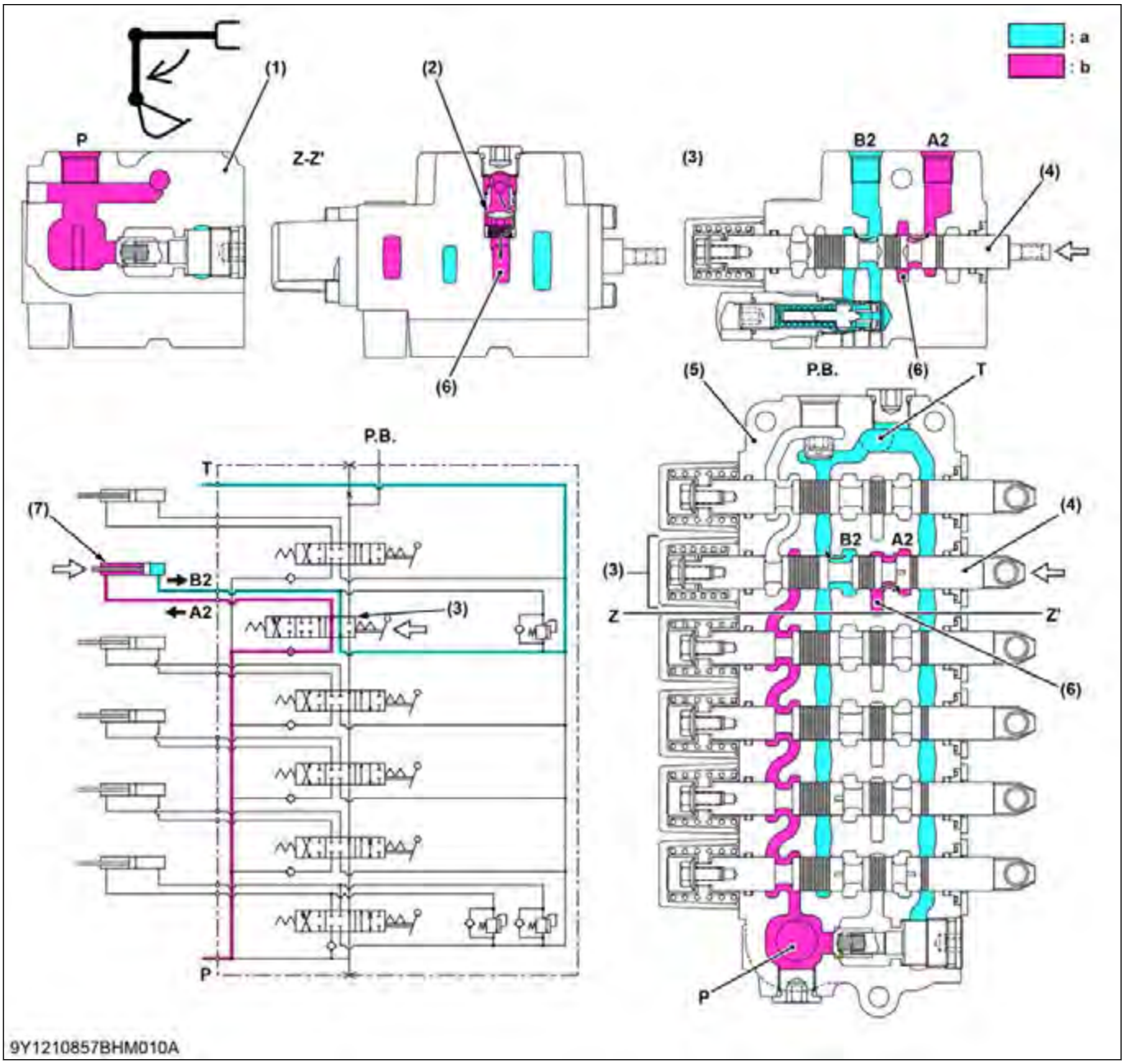

(1) Inlet section
(2) Check valve
(3) Dipperstick section
(4) Spool
(5) Outlet section
(6) Bridge passage
(7) Dipperstick cylinder

A2: A2 port (to dipperstick cylinder)
B2: B2 port (from dipperstick cylinder)
P: Pump port

T: Tank port
P.B.: Power beyond port
a: Low pressure
b: High pressure

https://truckmanualshub.com/

2.2.12 Backhoe control valve in bucket roll-back position

1. When the dipperstick and bucket lever is moved to the left to set to the roll-back position, the spool (4) of the bucket control valve moves to the right, which forms oil passage between bridge passage (6) and B1 port, and between A1 port and T port.
2. The pressure-fed oil from the P port opens the load check valve (2) and flows to B1 port to extend the bucket cylinder (7).
3. Return oil from the bucket cylinder (7) returns to the transmission case through the A1 port, low pressure passage and T port.

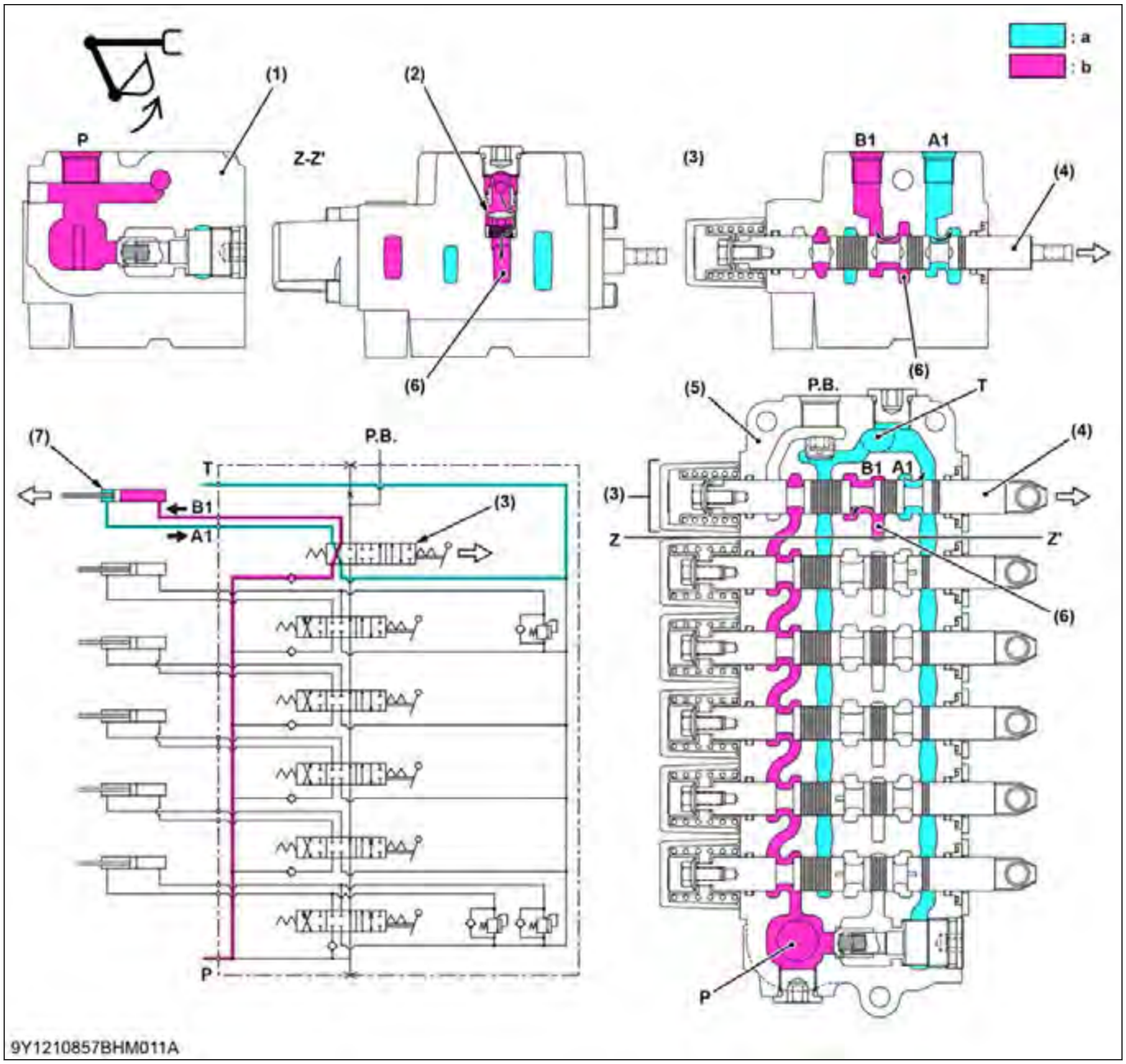

(1) Inlet section	(5) Outlet section	B1: B1 port (to bucket cylinder)	a: Low pressure
(2) Check valve	(6) Bridge passage	P: Pump port	b: High pressure
(3) Bucket section	(7) Bucket cylinder	T: Tank port	
(4) Spool	A1: A1 port (from bucket cylinder)	P.B.: Power beyond port	

2.2.13 Backhoe control valve in bucket dump position

1. When the dipperstick and bucket lever is moved to the right to set to the dump position, the spool (4) of the bucket control valve moves to the left, which forms oil passage between bridge passage (6) and A1 port, and between B1 port and T port.
2. The pressure-fed oil from the P port opens the load check valve (2) and flows to A1 port to retract the bucket cylinder.
3. Return oil from the bucket cylinder returns to the transmission case through the B1 port, low pressure passage and T port.

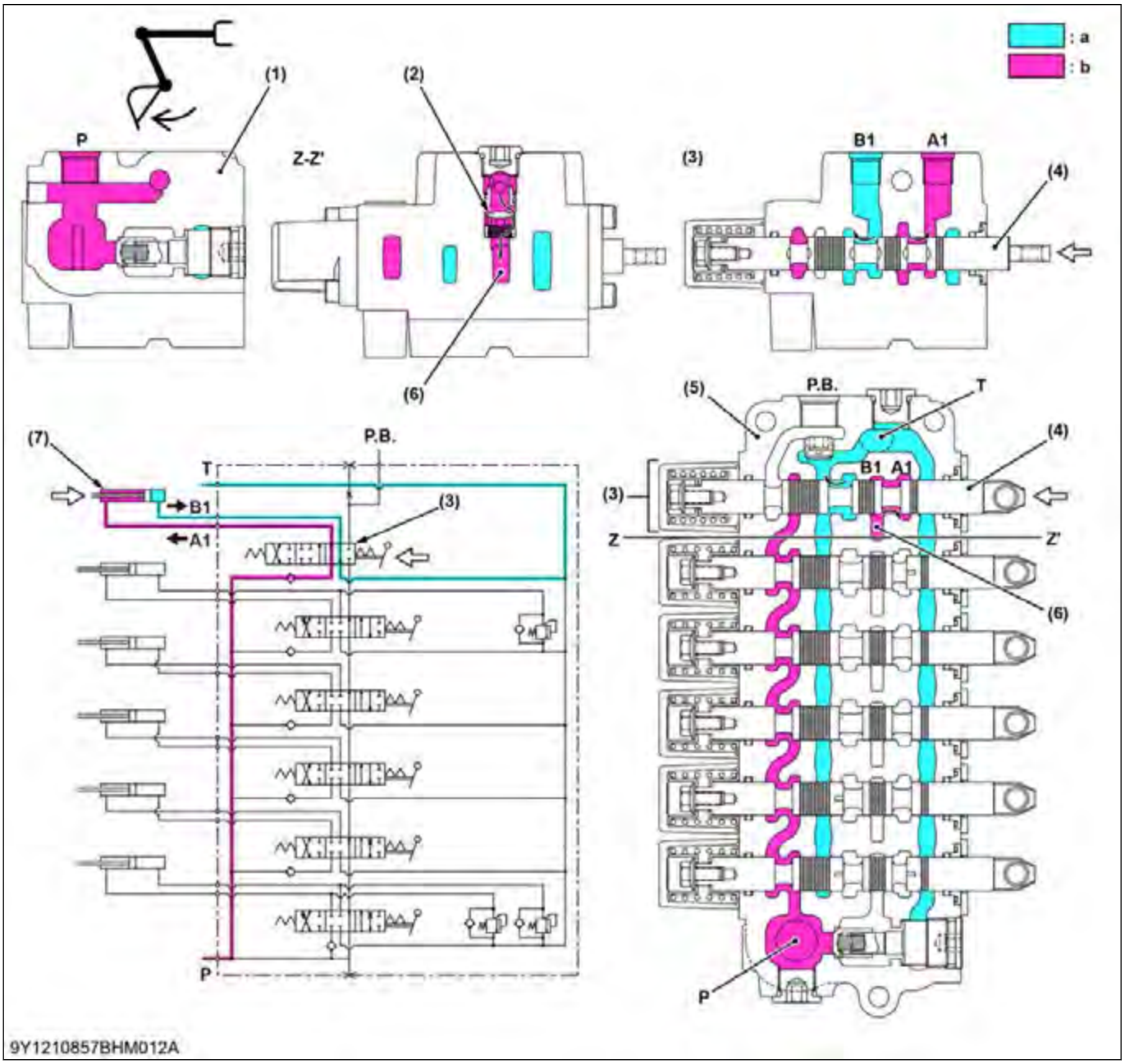

(1)	Inlet section	(5)	Outlet section	B1:	B1 port (from bucket cylinder)	a:	Low pressure
(2)	Check valve	(6)	Bridge passage	P:	Pump port	b:	High pressure
(3)	Bucket section	(7)	Bucket cylinder	T:	Tank port		
(4)	Spool	A1:	A1 port (to bucket cylinder)	P.B.:	Power beyond port		

https://truckmanualshub.com/

2.3 Structure of overload relief valve

Overload relief valve in this control valve is a combination valve combining a relief operation and anti-cavitation operation.

Relief operation

When the control valve is in the neutral position, both cylinder ports of control valve are blocked by the spool. If an external load is imposed on the cylinder, pressure builds in the circuit.

When the pressure exceeds the set level of the overload relief vale, the relief valve opens and the oil returns to tank. In this way, the hydraulic circuit and actuator are protected from excessive pressures.

Anti-cavitation operation

Overload relief valve also has anti-void function. If a negative pressure takes place in the circuit, the oil is fed from the tank to eliminate the negative pressure.

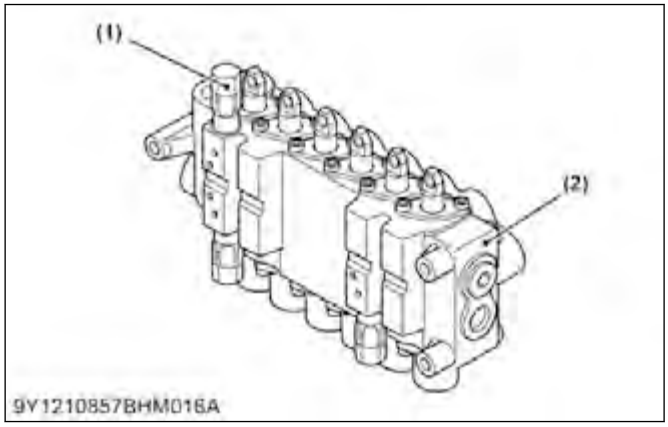

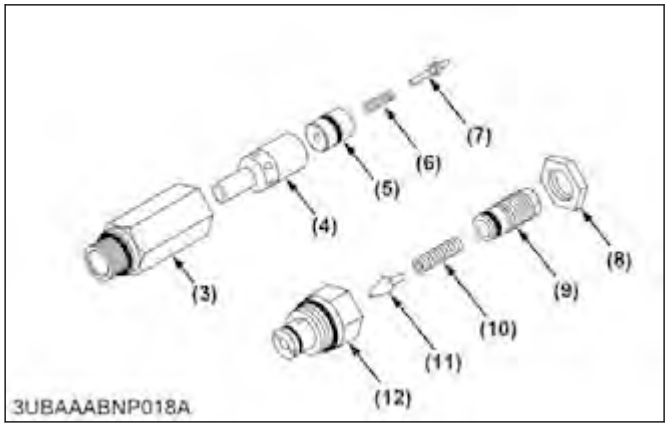

(1) Overload relief valve
(2) Control valve
(3) Housing
(4) Check valve poppet
(5) Relief valve poppet
(6) Piston spring
(7) Piston poppet
(8) Lock nut
(9) Adjusting screw
(10) Pilot spring
(11) Pilot poppet
(12) Pilot section

2.3.1 Function of relief position

When the actuator port pressure is lower than the setting

The cylinder port HP is applied to the seat B in the following route: first through the check valve poppet (1) of side, second through the chamber A, and then through the valve poppet (2). This cylinder port HP works to open the pilot poppet (3). Because the piston spring (4) has not reached the set pressure, however, the valve stays shut.

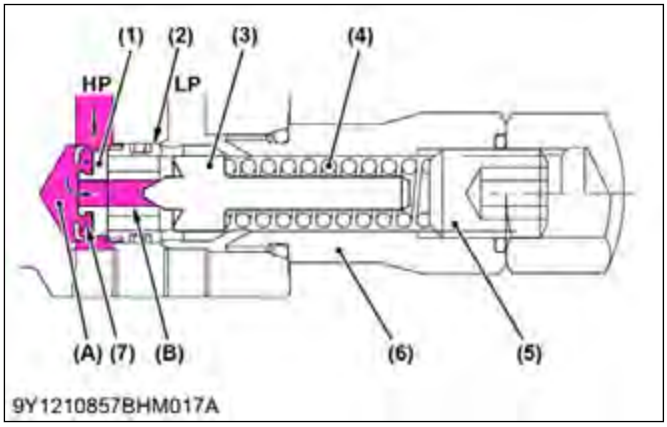

(1) Check valve poppet
(2) Valve poppet
(3) Pilot poppet
(4) Piston spring
(5) Adjusting screw
(6) Relief valve body
(7) Check valve spring
HP: High pressure
LP: Low pressure
A: Chamber
B: Seat

When the actuator port pressure is higher than the setting

When the cylinder port HP has reached the set pressure of the piston spring (4), the pressure oil in the chamber A opens the pilot poppet (3) and flows through the drain passage into the tank passage. The pressure oil flows then from this seat into the tank, and the circuit pressure is kept at the pressure level set by the overload relief valve.

	Relief valve setting pressure
Dipperstick	17.20 to 17.69 MPa 175 to 180 kgf/cm^2 2489 to 2560 psi
Swing	13.7 to 14.1 MPa 140 to 145 kgf/cm^2 1991 to 2062 psi

- Oil temperature: 45 to 55 ℃ (113 to 131 ℉)

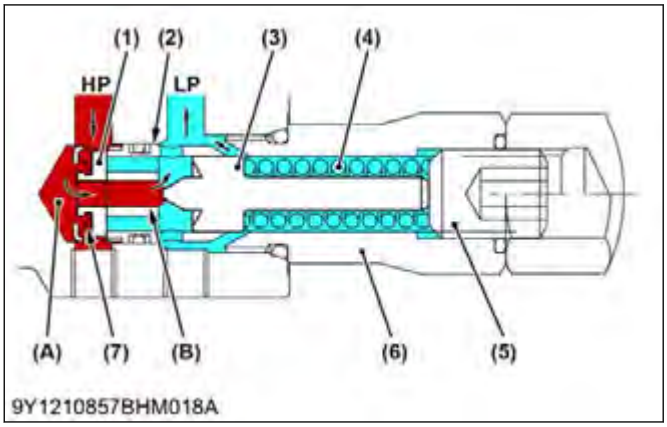

(1) Check valve poppet
(2) Valve poppet
(3) Pilot poppet
(4) Piston spring
(5) Adjusting screw
(6) Relief valve body
(7) Check valve spring
HP: High pressure
LP: Low pressure
A: Chamber
B: Seat

2.3.2 Function of anti-cavitation position

This valve, in operation, prevents a condition – so called cavitation – that arises in the cylinder port HP where fluid is not entirely filling out.

That is, this relief valve is combined an anti-cavitation functions supplying oil.

The pressure oil at the tank port L.H. opens the check valve poppet (1), allowing oil to flow through the tank port L.H. to prevent negative pressure from being generated in the cylinder.

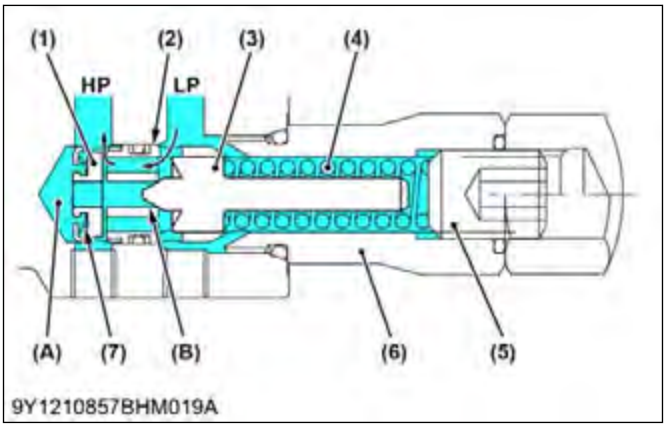

(1) Check valve poppet
(2) Valve poppet
(3) Pilot poppet
(4) Piston spring
(5) Adjusting screw
(6) Relief valve body
(7) Check valve spring
HP: High pressure
LP: Low pressure
A: Chamber
B: Seat

https://truckmanualshub.com/

3. Structure of hydraulic cylinder

The bucket, dipperstick, boom, swing, and stabilizer cylinders consist of a cylinder head (2), piston rod (1), cylinder tube (3), piston (4) and other parts.
They are single-rod double acting cylinders in which the reciprocating motion of the piston is controlled by hydraulic force applied to both of its ends.

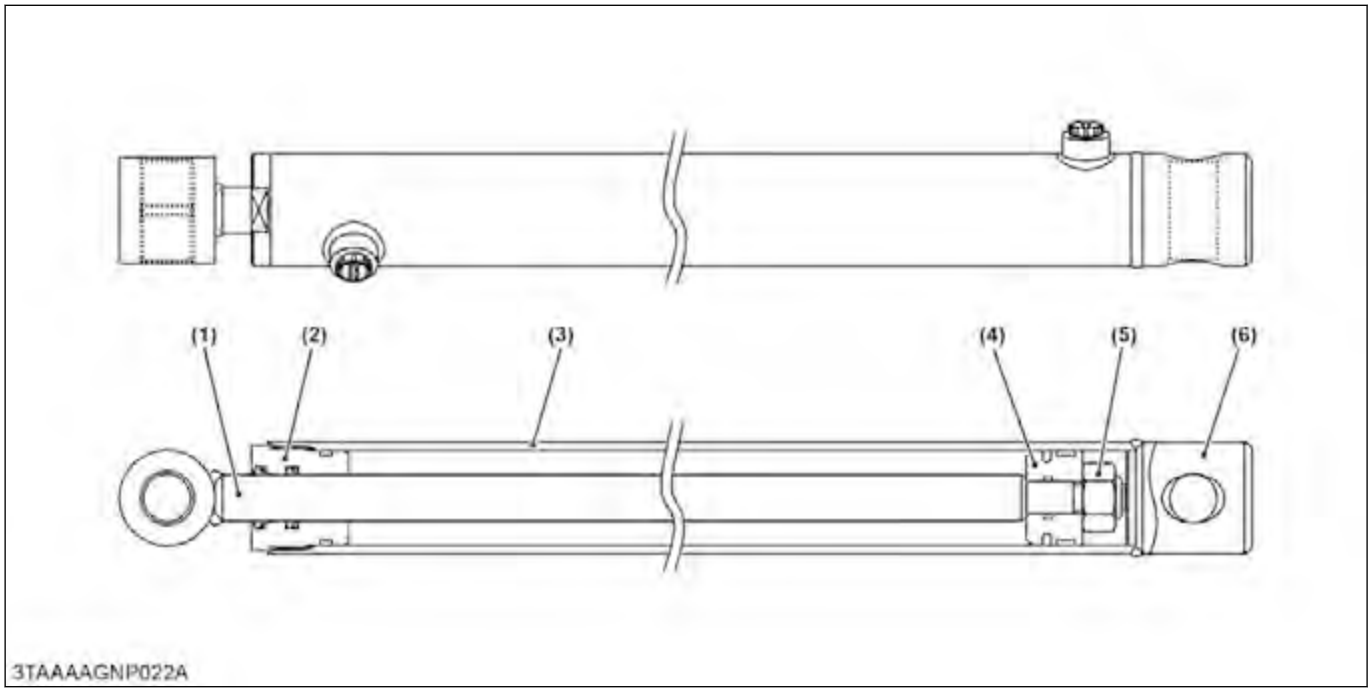

(1) Rod
(2) Head
(3) Cylinder tube
(4) Piston
(5) Nut
(6) Tube end

Cylinder specifications

	Boom cylinder	Dipperstick cylin-der	Bucket cylinder	Stabilizer cylinder	Swing cylinder
Cylinder I.D.	30.0 mm (1.18 in.)	25.0 mm (0.98 in.)	25.0 mm (0.98 in.)	25.0 mm (0.98 in.)	30.0 mm (1.18 in.)
Rod O.D.	65.0 mm (2.56 in.)	60.0 mm (2.36 in.)	50.0 mm (1.97 in.)	60.0 mm (2.36 in.)	60.0 mm (2.36 in.)
Stroke	304 mm (11.97 in.)	330 mm (12.99 in.)	356 mm (14.02 in.)	272 mm (10.71 in.)	175 mm (6.89 in.)

SERVICING

1. Troubleshooting for backhoe

Symptom	Probable cause and checking procedure	Solution	Reference page
All functions inoperative (Front loader is OK)	1. Quick coupler disconnected	Reconnect	11-29
All functions including front loader, are inoperative	1. Insufficient transmission fluid	Fill	2-26
	2. Relief valve spring damaged	Replace	7-36
	3. Hydraulic pump malfunctioning	Repair or replace	7-4
	4. Oil filter clogged	Replace	2-26
Hydraulic oil overheats	1. Continuous operation against relief	Operate properly	7-36
	2. Transmission fluid improper brand and viscosity	Use proper fluid	2-7
	3. Relief valve mis-adjusted	Readjust	7-36
	4. Insufficient transmission fluid	Fill	2-26
	5. Oil filter clogged	Replace	2-26
Individual cylinder circuit weak or inoperative (Others OK)	1. Valve spool not moving fully	Adjust linkage	3-24
	2. Valve spool stick (especially when warm)	Repair or replace	11-35
	3. Overload relief valve mis-adjusted	Readjust	11-35
	4. Piston seal ring worn or damaged	Replace	10-31
	5. Cylinder tube worn or damaged	Replace	11-35
	6. Oil leaks from joint	Repair or replace	10-31
	7. Hydraulic hose damaged	Replace	11-35
	8. Dust in overload relief valve	Flush hydraulic line	11-35
Excessive cylinder movement	1. Piston seal ring worn or damage	Replace	10-31
	2. Excessive valve spool to bore tolerance	Replace	11-35

(Continued)

Symptom	Probable cause and checking procedure	Solution	Reference page
Excessive cylinder movement	3. Hydraulic hose or fitting damaged	Replace	11-35
	4. Hydraulic hose or fitting loose	Retighten	11-34
	5. Cylinder tube worn or damaged	Replace	11-35
Insufficient cylinder speed	1. Engine rpm too low	Adjust rpm	8-16
	2. Hydraulic pump malfunctioning	Repair or replace	7-4
	3. Relief valve pressure too low	Readjust	7-36
	4. Insufficient transmission fluid	Fill	2-26

https://truckmanualshub.com/

2. Servicing specifications for backhoe

Item		Factory specification	Allowable limit
Control lever	Operating force	10 to 15 N 1.0 to 1.5 kgf 2.3 to 3.3 lbf	—
Stabilizer control lever	Operating force	20 to 25 N 2.1 to 2.5 kgf 4.5 to 5.6 lbf	—
Boom cylinder rod pin to cylinder bushing	Clearance	0.060 to 0.185 mm 0.002 to 0.007 in.	1.0 mm 0.0394 in.
• Pin	O.D.	29.970 to 30.000 mm 1.180 to 1.181 in.	—
• Bushing	I.D.	30.060 to 30.155 mm 1.183 to 1.187 in.	—
Boom support, dipperstick fulcrum pin to bushing	Clearance	0.140 to 0.180 mm 0.006 to 0.007 in.	1.0 mm 0.0394 in.
• Pin	O.D.	29.820 to 29.850 mm 1.174 to 1.175 in.	—
• Bushing	I.D.	29.990 to 30.000 mm 1.1807 to 1.1811 in.	—
Dipperstick cylinder rod pin to cylinder bushing	Clearance	0.060 to 0.185 mm 0.002 to 0.007 in.	1.0 mm 0.0394 in.
• Pin	O.D.	29.970 to 30.000 mm 1.180 to 1.181 in.	—
• Bushing	I.D.	30.060 to 30.155 mm 1.183 to 1.187 in.	—
Bucket fulcrum pin, bucket cylinder pin, bucket guide link pin to bushing	Clearance	0.204 to 0.315 mm 0.008 to 0.0012 in.	1.0 mm 0.0394 in.
• Pin	O.D.	24.816 to 24.846 mm 0.977 to 0.978 in.	—
• Bushing	I.D.	29.990 to 30.000 mm 1.1807 to 1.1811 in.	—
Boom fulcrum pin to swing frame bushing	Clearance	0.140 to 0.180 mm 0.006 to 0.007 in.	1.0 mm 0.0394 in.
• Pin	O.D.	29.820 to 29.850 mm 1.1740 to 1.1752 in.	—
• Bushing	I.D.	29.990 to 30.000 mm 1.1807 to 1.1811 in.	—
Main frame fulcrum pin to bushing	Clearance	0.070 to 0.130 mm 0.003 to 0.005 in.	0.5 mm 0.0197 in.
• Pin	O.D.	34.970 to 35.000 mm 1.377 to 1.378 in.	—
• Bushing	I.D.	35.070 to 35.100 mm 1.381 to 1.382 in.	—
Swing cylinder rod pin to cylinder bushing	Clearance	0.108 to 0.259 mm 0.004 to 0.010 in.	1.0 mm 0.0394 in.
• Pin	O.D.	24.816 to 25.000 mm 0.977 to 0.984 in.	—
• Bushing	I.D.	25.000 to 25.209 mm 0.984 to 0.992 in.	—

(Continued)

Item		Factory specification	Allowable limit
Thrust washer	Thickness	2.66 mm 0.1046 in.	1.8 mm 0.0709 in.
Piston rod	Bend	—	0.25 mm 0.0098 in.

https://truckmanualshub.com/

3. Tightening torques for backhoe

Tightening torques of screws, bolts and nuts on the table below are especially specified.

Item	N·m	kgf·m	lbf·ft
Boom cylinder head	350 to 400	35.7 to 40.7	259 to 295
Dipperstick cylinder, stabilizer cylinder head	250 to 280	25.5 to 28.5	185 to 206
Bucket cylinder head	200 to 230	20.4 to 23.4	148 to 169
Swing cylinder head	300 to 350	30.6 to 35.6	222 to 258
Boom cylinder, swing cylinder piston mounting nut	250 to 300	25.5 to 30.5	185 to 221
Dipperstick cylinder, bucket cylinder, stabilizer cylinder, piston mounting nut	150 to 180	15.3 to 18.3	111 to 132

RELATED PAGE

TIGHTENING TORQUES on page 2-13

4. Checking and adjusting

4.1 Checking relief valve setting pressure

NOTE

- **The relief valve of the tractor hydraulic system is used as a relief valve of the backhoe hydraulic system.**

1. Check the relief valve pressure.
   The pressure should be within the specification shown.

Relief valve pressure	Factory specification	12.3 to 12.7 MPa 125 to 130 kgf/cm^2 1778 to 1849 psi

4.2 Checking control lever operation force

(Reference)
L: 0 mm (0 in.)

1. Check the control lever operating force.
2. If measurement is not within the factory specification, adjust by tightening bolt and nut.

Control lever operating force	Factory specification	10 to 15 N 1.0 to 1.5 kgf 2.3 to 3.3 lbf

4.3 Checking stabilizer control lever operation force

(Reference)
L: 0 mm (0 in.)

1. Check the stabilizer control lever operating force.
2. If measurement is not within the factory specification, adjust by tightening bolt and nut.

Stabilizer control lever operating force	Factory specification	20 to 25 N 2.1 to 2.5 kgf 4.5 to 5.6 lbf

5. Disassembling and assembling

5.1 Removing backhoe

5.1.1 Preparing to remove backhoe

CAUTION

To avoid personal injury:

- **Before starting the engine, always sit in the operator's seat of the tractor.**
- **Before getting off the tractor, make sure that the PTO lever is off and the range gear shift lever is in the neutral position. Then set the parking brake.**

https://truckmanualshub.com/

- **Keep hands, feet, and body from between the tractor and the backhoe. Never allow any part of body under the machine.**
- **Before leaving the operator's seat of the backhoe, fully lower the boom to the ground.**
- **Before removing the backhoe, set the swing lock pin.**

IMPORTANT

- **Before removing the backhoe, set the engine speed as follows.**

Engine speed	Factory specification	Approximately 1800 rpm

- **For removing the backhoe, locate the tractor, the loader, and the backhoe on a flat level and hard surface, preferably concrete.**
  If the surface is soft, place a board on the ground for the bucket and stabilizers.

1. Set the swing lock pin (1) to prevent the pivoting of the boom before removing the backhoe.

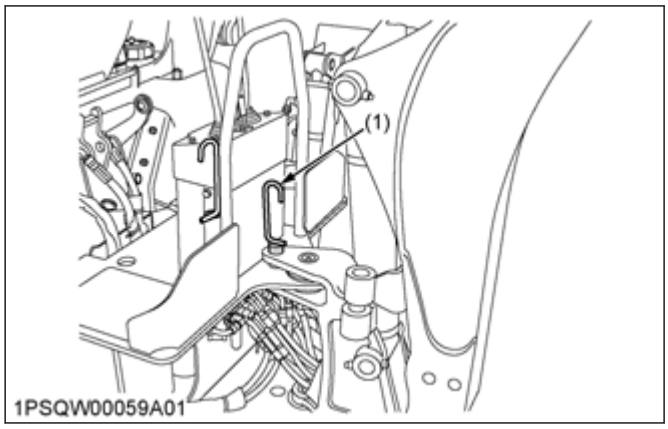

(1) Swing lock pin

2. Stand beside the rear tire, fully close the dipperstick, curl the bucket and lower the boom until the back of bucket contacts the ground.
3. Keep the stabilizer pads at height (A) of the following value.

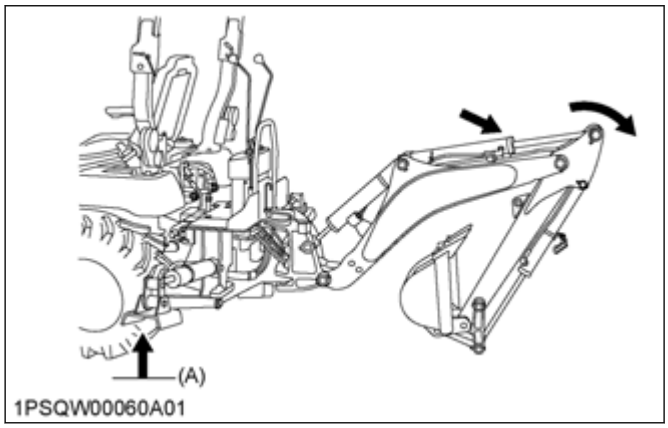

(A) Height of stabilizer pads

Height of stabilizer pads	Factory specification	About 381 mm (15.0 in.)

5.1.2 Releasing mounting pins

1. Lower the boom, and raise the rear wheels slightly off the ground.
   While the mounting levers are pulled, the mounting pins of the main frame may turn in both directions.
   When the mounting pins come to the **release** position, push the levers in the holding hole to release the mounting pins.

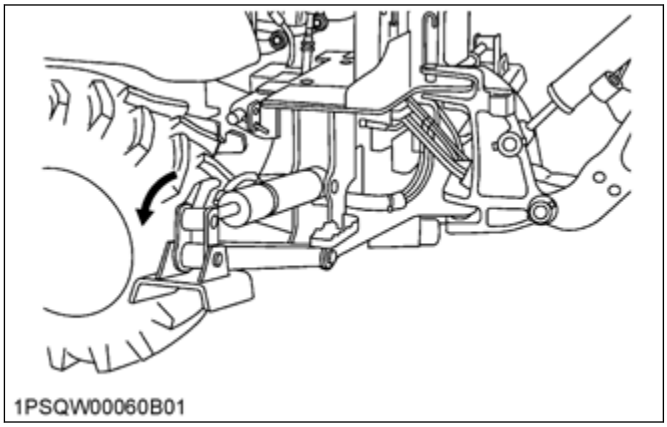

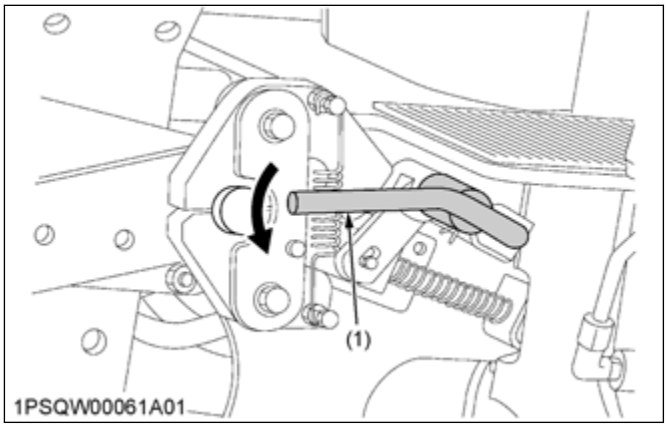

(1) Mounting lever

2. Slowly raise the boom to disengage the backhoe from the tractor.

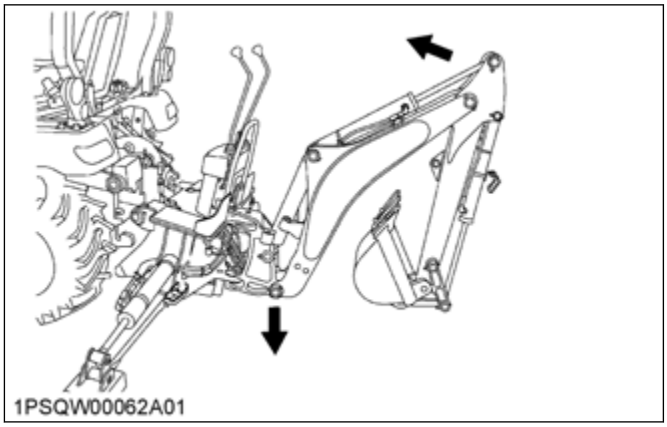

3. Raise the backhoe by operating the stabilizers to the lowering direction until the mount bars hit to the guide stopper on the support hooks.

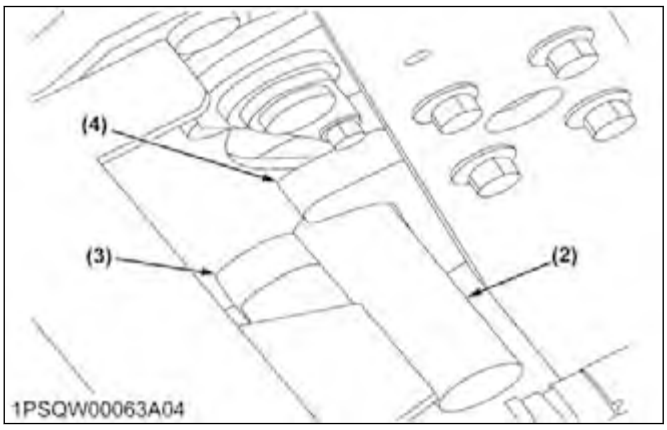

(2) Mount bar (4) Guide stopper
(3) Support hook

4. Move the tractor forward from the backhoe to the following value.

Distance between tractor and back-hoe	Factory specifi-cation	About 203 mm (8.0 in.)

IMPORTANT
- **Be careful not to damage or break the hoses when moving the tractor.**

5. Lower the main frame and the swing frame onto the ground by operating the boom and the stabilizer control levers.

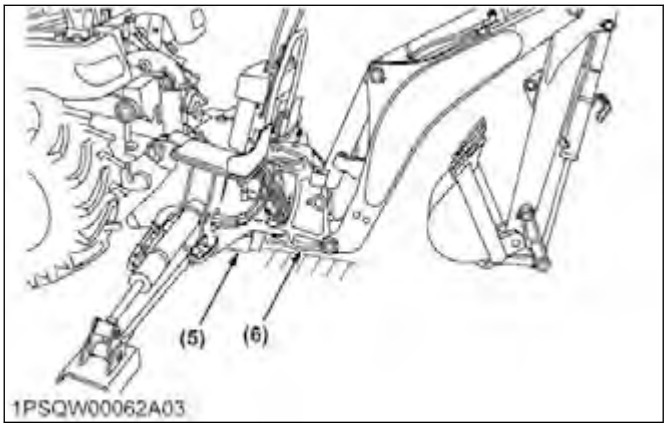

(5) Main frame (6) Swing frame

6. Stop the engine and set the parking brake.

5.1.3 Disconnecting hydraulic hoses

1. Slowly release all hydraulic pressure by moving the hydraulic control levers of the backhoe in all directions.
2. Disconnect the hydraulic hoses in the following manner.
   a. Disconnect the inlet hose, the outlet hose, and the power beyond hose from the tractor.
   b. Connect the outlet hose of the tractor to the coupler of the power beyond pipe.

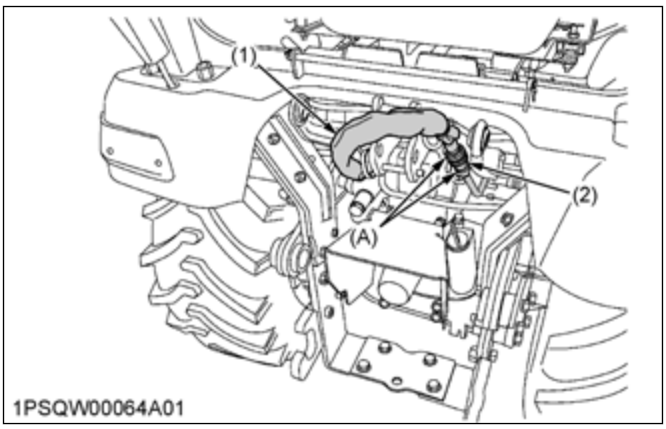

(1) Outlet hose (Tractor) (A) To be connected
(2) Power beyond pipe (Tractor)

3. Cap the couplers on the backhoe.

5.1.4 Removing backhoe

1. Start the engine and drive the tractor and loader slowly away from the backhoe.
2. Stop the engine and remove the key from the tractor. Set the parking brake.

IMPORTANT
- **The entire 3-point hitch can now be reinstalled on the tractor for use with other rear mount implements.**
- **Be sure that there is sufficient ballast in the rear tires and an implement is attached to the 3-point hitch before using the loader with the backhoe removed.**

5.2 Installing backhoe

5.2.1 Preparing to install backhoe

WARNING
To avoid personal injury or death:
- **When starting the engine, always sit in the operator's seat.**
- **When getting off the tractor, make sure that the PTO lever is off and the range gear shift lever is in the neutral position. Set the parking brake.**
- **Keep hands, feet, and body from between the tractor and the backhoe. Never allow any part of body under the machine.**

CAUTION
To avoid personal injury:

- **Make sure that the PTO of the tractor is disengaged.**

IMPORTANT
- **Before reinstalling the backhoe, set the engine speed to low-idle.**

1. Remove the 3-point hitch and / or drawbar (if equipped).
2. Disconnect the mower if attached in position.
3. Make sure that the swing lock pin is installed.
4. Slowly back the tractor and the loader, centering to the main frame of the backhoe.
5. Stop the tractor keeping at the following distance from the backhoe.

Distance between tractor and backhoe	Factory specification	254 to 304 mm (10.0 to 12.0 in.)

6. Stop the engine and set the parking brake.

5.2.2 Connecting hydraulic hoses

1. Connect the inlet hose, outlet hose, and the power beyond hose of the backhoe to the outlet hose, the power beyond pipe and the return pipe of the tractor.

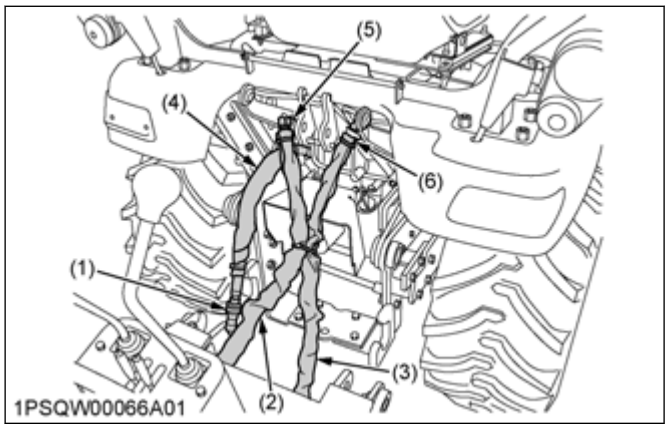

(1) Inlet hose (Backhoe)
(2) Outlet hose (Backhoe)
(3) Power beyond hose (Backhoe)
(4) Outlet hose (Tractor)
(5) Return pipe (Tractor)
(6) Power beyond pipe (Tractor)

IMPORTANT
- **Make sure that both hoses are firmly connected before starting the engine.**

5.2.3 Setting mounting pins

1. Pull the mounting levers for left and right mounting pins of the main frame of the backhoe to release mounting pins.

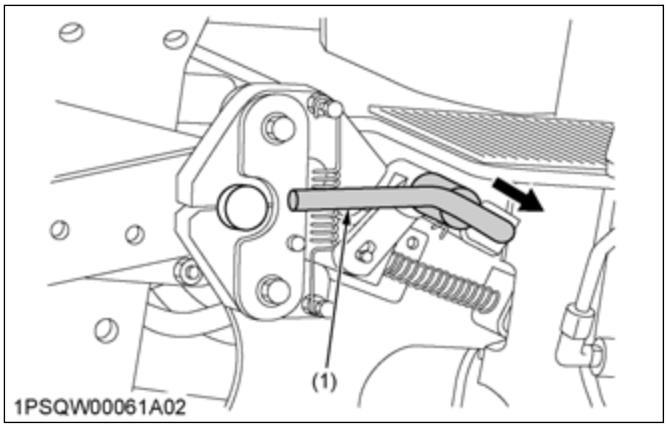

(1) Mounting lever

5.2.4 Installing backhoe

1. Start the engine.

WARNING
To avoid personal injury or death:
- **Do not move the joystick control lever to the swing position.**

2. Stand beside the rear tire. Move the boom to fully raising position and raise the backhoe by operating the stabilizers until the mount bar on the main frame of the backhoe is slightly higher than the support hooks on the main frame of the tractor.

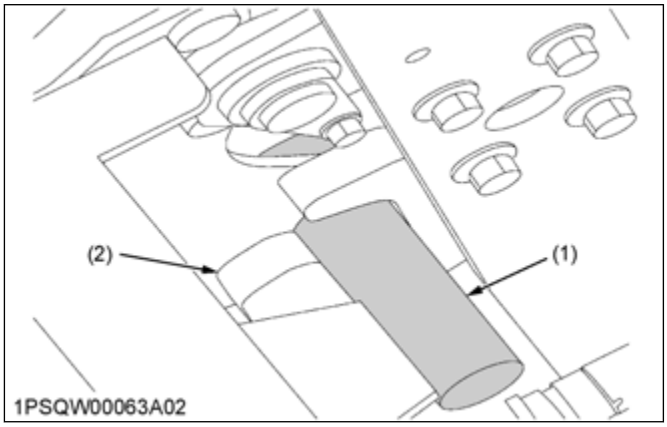

(1) Mount bar
(2) Support hook

NOTE
- **If the support hooks are not parallel to the mount bars, adjust them with the stabilizers.**

3. Move the tractor backward until the support hooks on the main frame of the tractor are just beneath the mount bars on the main frame of the backhoe.

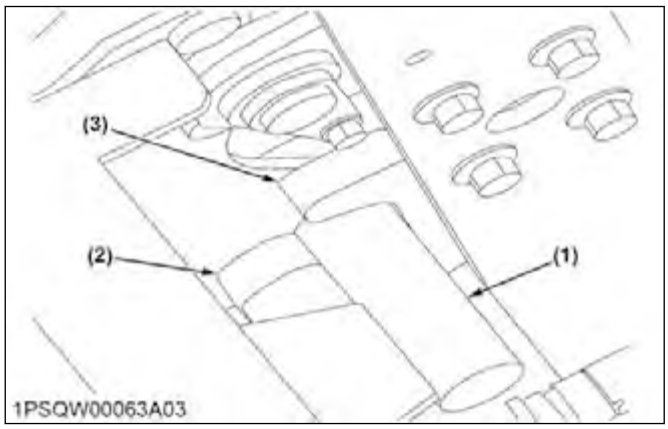

(1) Mount bar
(2) Support hook
(3) Guide stop

4. Lower the mount bars onto the support hooks by operating the stabilizer and the boom control levers.
5. Lower the boom slowly and interlock the mounting pins with the support hooks.

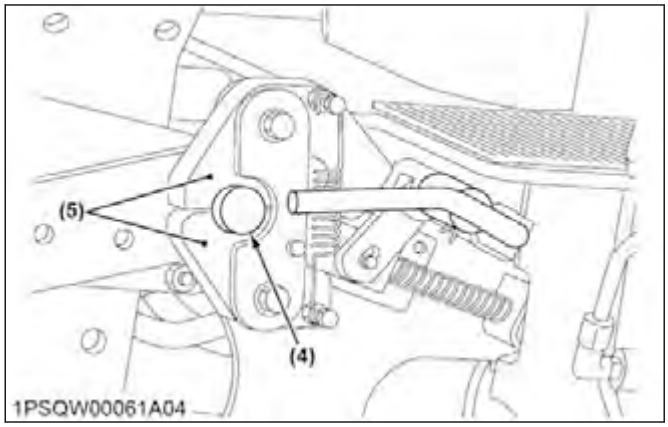

(4) Mounting pin
(5) Support hooks

6. Continue to slowly lower the boom so that the rear wheels are slightly off the ground.

WARNING

To avoid personal injury or death:

- **Make sure that the left and right mounting pins are in holding position.**
- **When mounting, check the gap between the mounting bar and the link. If there is a gap, push the link in.**

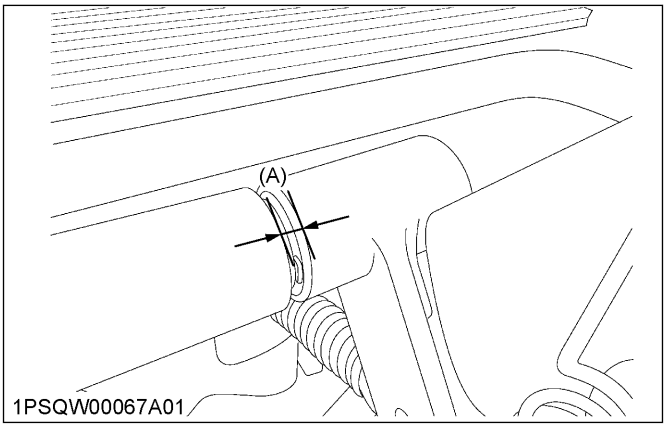

(A) Gap

The lock pins will click.

7. Operate the boom or the stabilizers to maximum lift height, and insert the lock pin of the boom.

IMPORTANT

- **If the slide bar of the mounting pins is inserted to the upper hole, the mounting pin comes off and the backhoe might come off. Therefore, please make sure to insert the slide bar to the lower hole.**

NOTE

- **Move the tractor, the loader, the backhoe to a vacant area and cycle all backhoe functions. Cycling all backhoe functions will check their operation and flow oil back through the system, filtering it, and refilling each circuit. Check the hydraulic oil level before putting the backhoe into full operation.**

5.3 Disassembling backhoe

IMPORTANT

- **When reassembling the pins, bushings and inner rings, apply slight coat of grease to them.**
- **When tightening the hydraulic hoses, tighten to specified torque.**

RELATED PAGE

TIGHTENING TORQUES on page 2-13

https://truckmanualshub.com/

5.3.1 Removing bucket

1. Remove the bucket (3) from the dipper stick (4).

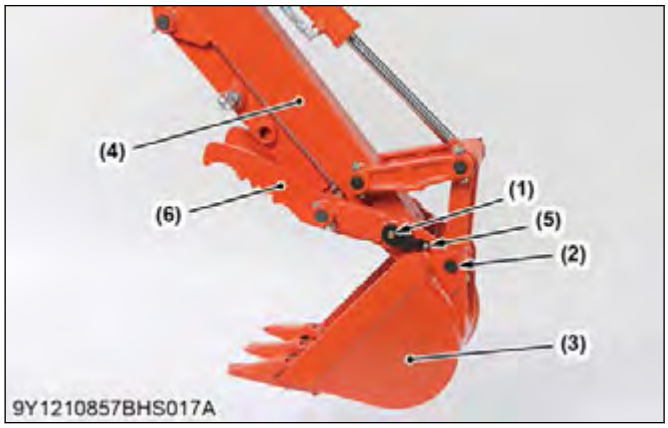

(1) Pin (25 × 129 mm)
(2) Pin (25 × 129 mm)
(3) Bucket
(4) Dipperstick
(5) Locking nut
(6) Thumb (Option)

5.3.2 Removing dipperstick and bucket cylinder

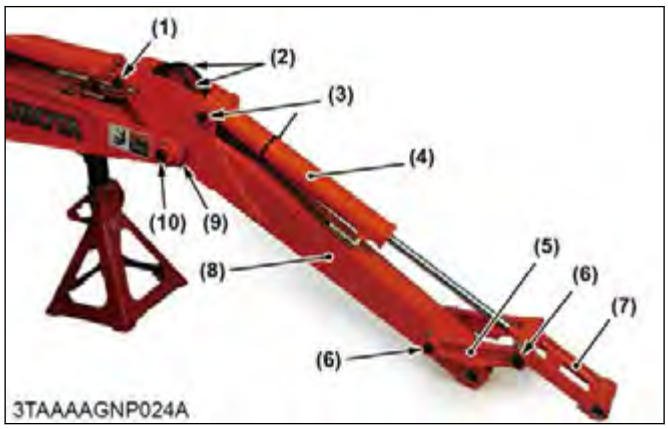

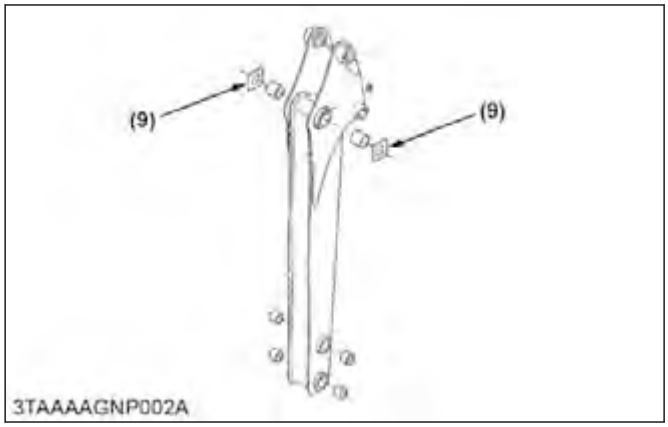

(1) Pin (30 × 142 mm)
(2) Hydraulic hose
(3) Pin (25 × 137 mm)
(4) Bucket cylinder
(5) Guide link
(6) Pin (25 × 170 mm)
(7) Bucket link
(8) Dipperstick
(9) Spacer
(10) Pin (30 × 202 mm)

1. Remove the pins (6) and remove the bucket link (7) and guide link (5).
2. Disconnect the hydraulic hoses (2) and remove the bucket cylinder (4).
3. Remove the pins (1), (10) and remove the dipperstick (8).

NOTE

- **To prevent from the damage of hydraulic hoses, set the wooden block etc. between dipperstick cylinder and boom.**

(When reassembling)

- Lock the locking nuts to setting bolts at position where the setting bolt may still be rotated.
- Replace the spacers (9) at their original position.

5.3.3 Removing dipperstick cylinder, boom, boom cylinder, and hoses

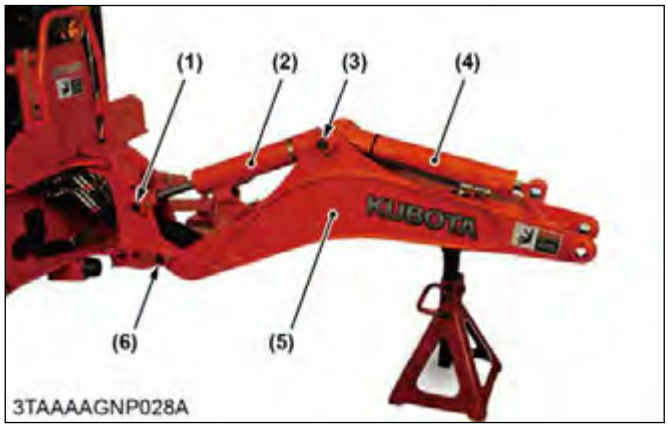

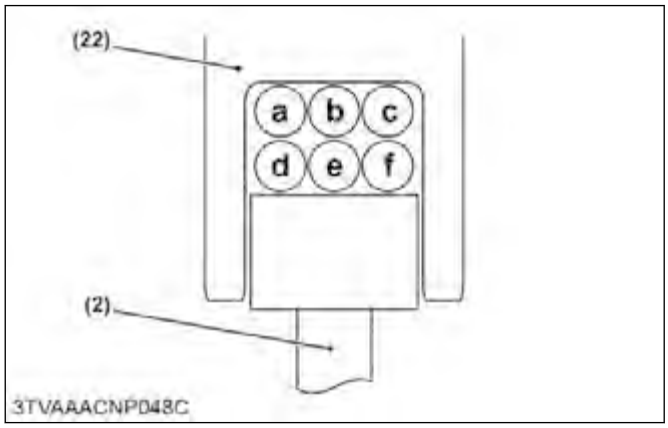

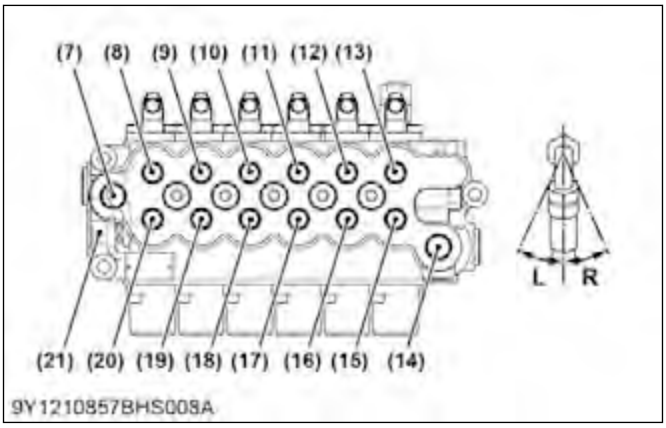

(1) Pin (30 × 142 mm)
(2) Boom cylinder
(3) Pin (30 × 169 mm)
(4) Dipperstick cylinder
(5) Boom
(6) Pin (30 × 202 mm)
(7) T port (Tank)
(8) A1 port (Rod side of bucket cylinder)
(9) A2 port (Rod side of dipperstick cylinder)
(10) A3 port (Bottom side of stabilizer cylinder R.H.)
(11) A4 port (Bottom side of stabilizer cylinder L.H.)
(12) A5 port (Bottom side of boom cylinder)
(13) A6 port (Rod side of swing cylinder)
(14) P port (Pump)
(15) B6 port (Bottom side of swing cylinder)
(16) B5 port (Rod side of boom cylinder)
(17) B4 port (Rod side of stabilizer cylinder L.H.)
(18) B3 port (Rod side of stabilizer cylinder R.H.)
(19) B2 port (Bottom side of dipperstick cylinder)
(20) B4 port (Bottom side of bucket cylinder)
(21) P.B. port (Power beyond)
(22) Swing frame
a: Bottom side of bucket cylinder
b: Bottom side of dipperstick cylinder
c: Rod side of boom cylinder
d: Rod side of bucket cylinder
e: Rod side of dipperstick cylinder
f: Bottom side of boom cylinder
L: Installation angle
R: Installation angle

1. Disconnect the hydraulic hoses and remove the dipperstick cylinder (4).
2. Remove the pins (1), (3) and remove the boom cylinder (2).
3. Remove the pin (6) and remove the boom (5).
4. Remove the hydraulic hoses from the control valve.

(When reassembling)

NOTE

- **Hoses should not touch the swing frame.**
- **Hoses should not be twisted.**

- Lock the locking nuts to setting bolts at position where the mounting bolt may still be rotated.
- Connect the hydraulic hoses at their original positions and be sure to connect the hose angle as indicated table below.

https://truckmanualshub.com/

Port	Angle of bent tube
T	L: 1.57 rad (90°)
A6, B6, P	R: 1.57 rad (90°)
A1, B1	R: 0.35 rad (20°)
A2, B2	R: 0.17 rad (10°)
A5, B5	L: 0.35 rad (20°)

(Reference)

Color of type

Port	Color
A1, B1	Red
A2, B2	Orange
A3, B3	Green
A4, B4	White
A5, B5	Yellow

5.3.4 Removing swing frame

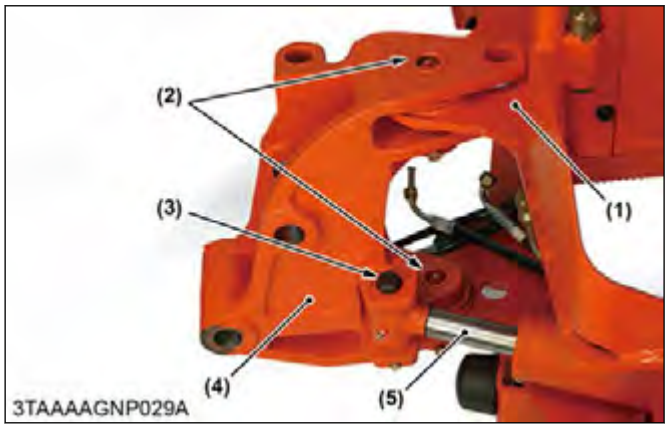

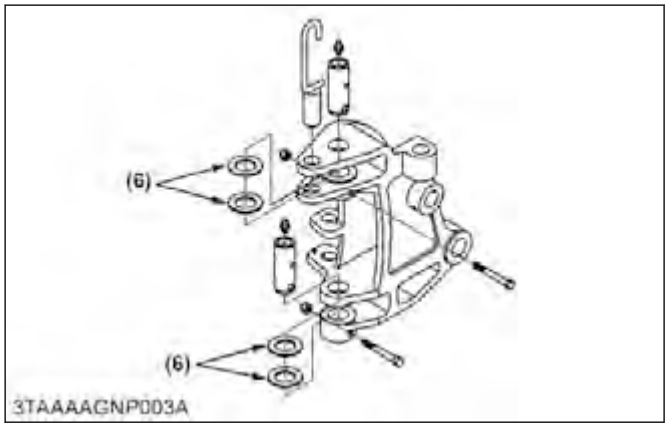

(1) Main frame
(2) Pin (35 × 98 mm)
(3) Pin (25 × 107 mm)
(4) Swing frame
(5) Swing cylinder rod
(6) Thrust washer

1. Disconnect the swing cylinder rods (5) from swing frame (4).
2. Remove the swing frame (4) from main frame (1).

(When reassembling)

- Lock the locking nuts to setting bolts at position where the setting bolt may still be rotated.
- Reinstall the thrust washers (6) at their original positions.

5.3.5 Removing swing cylinder

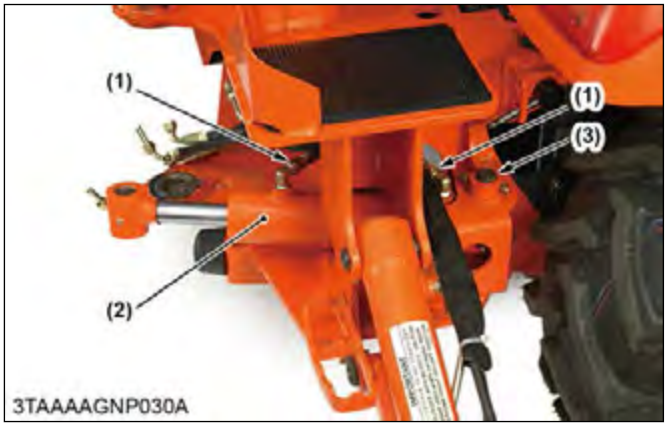

(1) Hydraulic hose
(2) Swing cylinder
(3) Pin (25 × 157 mm)

1. Remove the swing cylinder bottom pin (3).
2. Disconnect the hydraulic hoses (1).
3. Remove the swing cylinder (2).

5.3.6 Removing stabilizers and stabilizer cylinder

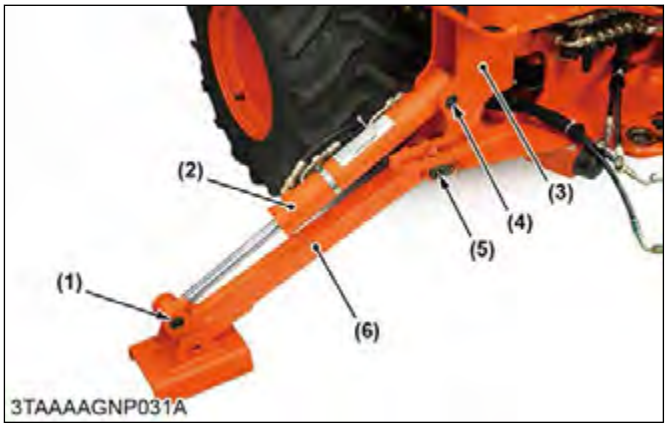

(1) Pin (25.4 × 75 mm)
(2) Stabilizer cylinder
(3) Main frame
(4) Pin (25.4 × 101 mm)
(5) Pin (25.4 × 105 mm)
(6) Stabilizer

1. Remove the pins (1) (4) and remove the stabilizer cylinder (2) with hydraulic hoses.
2. Remove the pin (5) and remove the stabilizer (6).

(When reassembling)

- Lock the locking nuts to setting bolts at position where the setting bolt may still be rotated.

5.3.7 Removing lever support and control valve

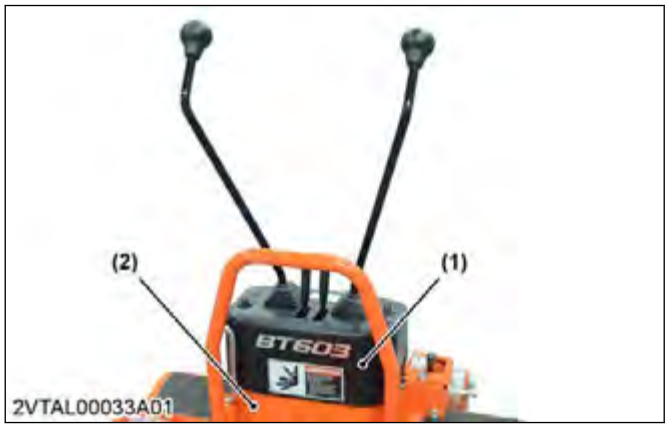

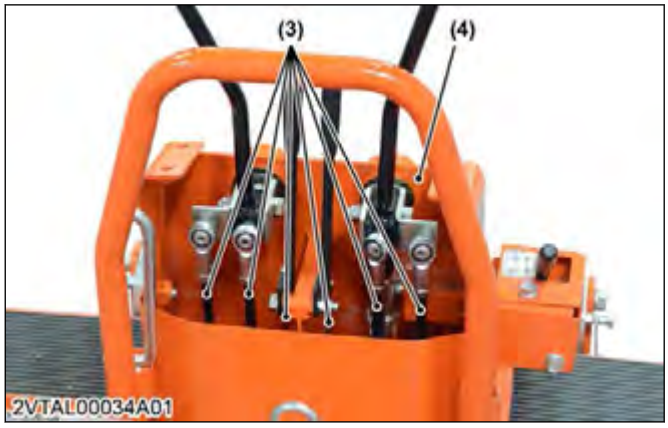

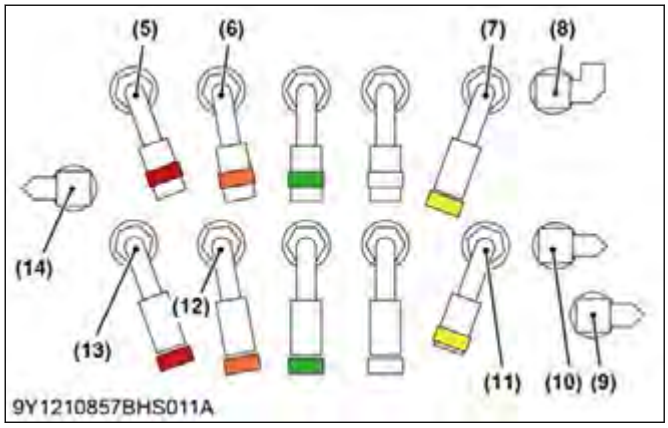

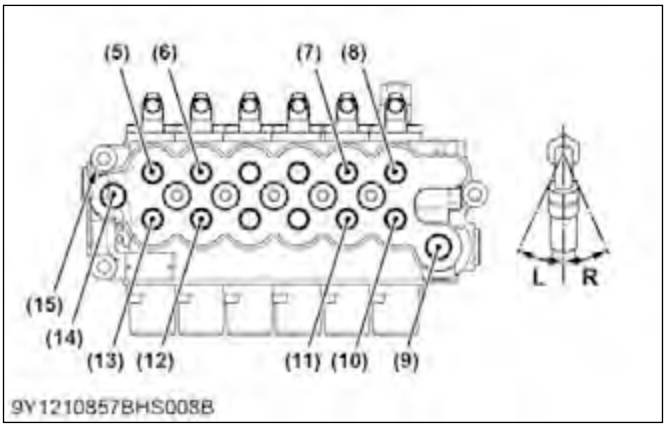

(1) Valve cover (Top)
(2) Valve cover (Front)
(3) Control lever rod
(4) Lever support
(5) A1 port (Rod side of bucket cylinder)
(6) A2 port (Rod side of dipper-stick cylinder)
(7) A5 port (Bottom side of boom cylinder)
(8) A6 port (Bottom side of swing cylinder)
(9) P port (Pump)
(10) B6 port (Bottom side of swing cylinder)
(11) B5 port (Rod side of swing cylinder)
(12) B2 port (Bottom side of dip-perstick cylinder)
(13) B1 port (Bottom side of bucket cylinder)
(14) T port (Tank)
(15) Control valve
L: Installation angle
R: Installation angle

1. Remove the valve covers (1), (2).
2. Disconnect the control lever rods (3) of valve side.
3. Remove the lever support (4) with control levers.
4. Disconnect the hydraulic hoses.
5. Remove the control valve (15).

(When reassembling)

NOTE

- **P port is short hose without sleeve.**
- **T port is long hose with sleeve.**

- Connect the hydraulic hoses at their original portions and be sure to connect the hose angle as indicated table below.

Port	Angle of bent tube
T	L: 1.57 rad (90°)
A6, B6, P	R: 1.57 rad (90°)
A1, B1	R: 0.35 rad (20°)
A2, B2	R: 0.17 rad (10°)
A5, B5	L: 0.35 rad (20°)

5.3.8 Removing backhoe main frame

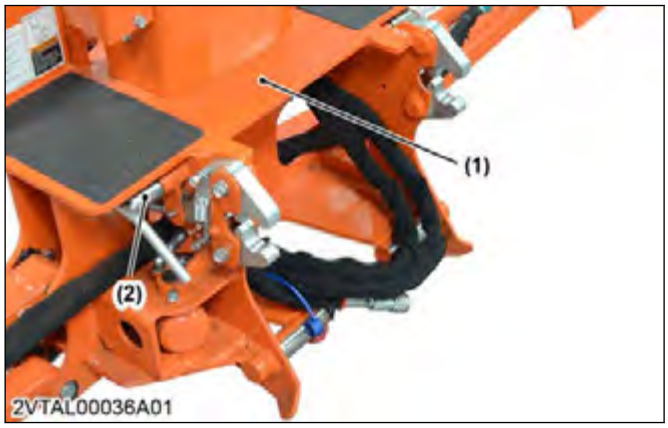

(1) Backhoe main frame (2) Mounting pin

1. Lift the backhoe main frame (1) and release the mounting pins (2).
2. Disconnect the three hydraulic hoses from the tractor.
3. Separate the main frame from the tractor frame.

5.4 Disassembling control valve

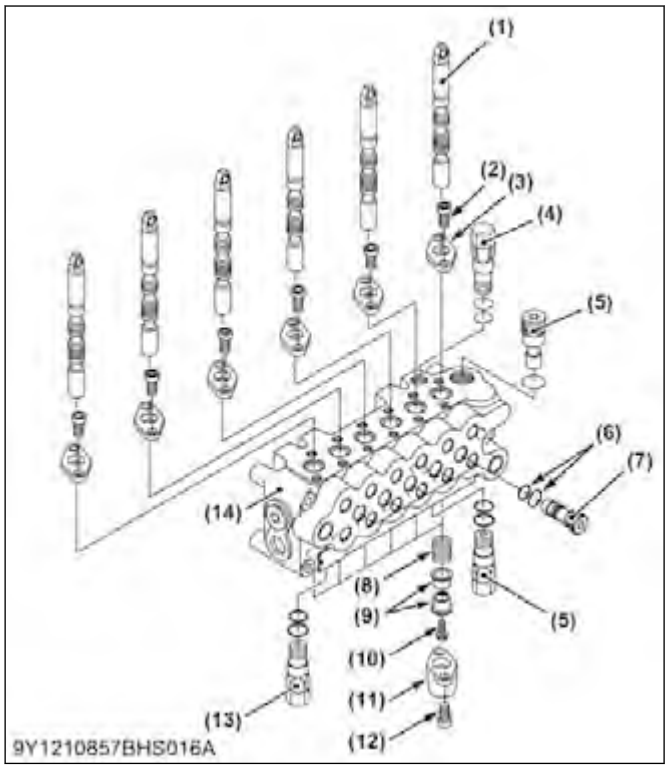

(1) Spool
(2) Bolt
(3) Plate
(4) Port relief valve (Swing)
(5) Plug
(6) O-ring
(7) Check valve
(8) Spring
(9) Spring seat
(10) Bolt
(11) Cap
(12) Cap bolt
(13) Port relief valve (Dipperstick)
(14) Control valve body

1. Remove the spring and load check valve.
2. Remove the seal plate from valve housing.
3. Remove the cap and draw out the spool from the valve housing.

(When reassembling)

- Clean all parts with a suitable solvent, and dry with a lint-free cloth or air.
- Visually inspect all parts for signs of scoring or damage.
- Install the spool and seal plate to the valve housing, being careful not to damage the O-rings.

5.5 Disassembling cylinder (Boom, dipperstick, bucket, swing, stabilizer)

5.5.1 Removing cylinder rod assembly

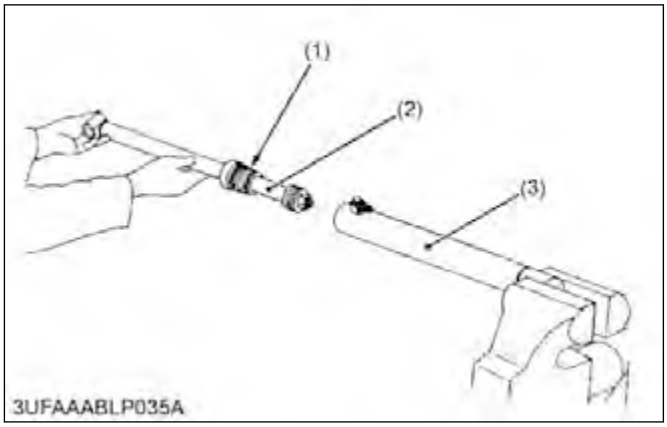

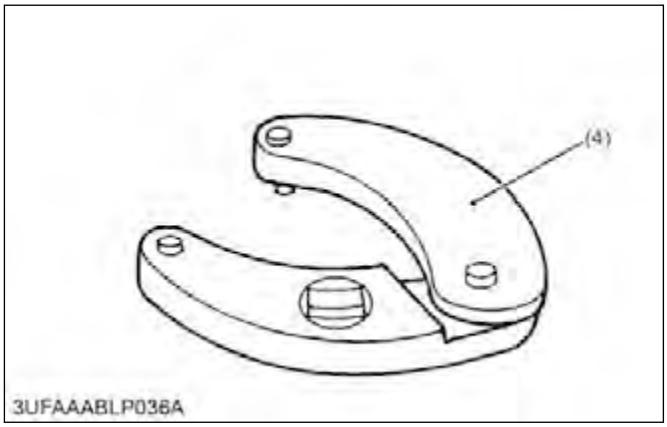

(1) Cylinder head
(2) Piston rod assembly
(3) Cylinder tube
(4) Adjustable gland nut wrench

1. Drain hydraulic oil from the cylinder, and secure the tube end of the cylinder in a vise.
2. Remove the cylinder head (1) with the adjustable gland nut wrench (4).
3. Pull out the piston rod assembly (2) from the cylinder tube (3).

(When reassembling)

- Visually inspect the cylinder tube for signs of scoring or damage.
- Insert the piston rod assembly to the cylinder tube, being careful not to damage the piston seal on the piston.

- Install the cylinder head to the cylinder tube, being careful not to damage the O-ring on the cylinder head.

Tightening torque	Boom cylinder head	350 to 400 N·m 35.7 to 40.7 kgf·m 259 to 295 lbf·ft
	Dipperstick cylinder, stabilizer cylinder head	250 to 280 N·m 25.5 to 28.5 kgf·m 185 to 206 lbf·ft
	Bucket cylinder head	200 to 230 N·m 20.4 to 23.4 kgf·m 148 to 169 lbf·ft
	Swing cylinder head	300 to 350 N·m 30.6 to 35.6 kgf·m 222 to 258 lbf·ft

5.5.2 Removing cylinder head, piston, and nut

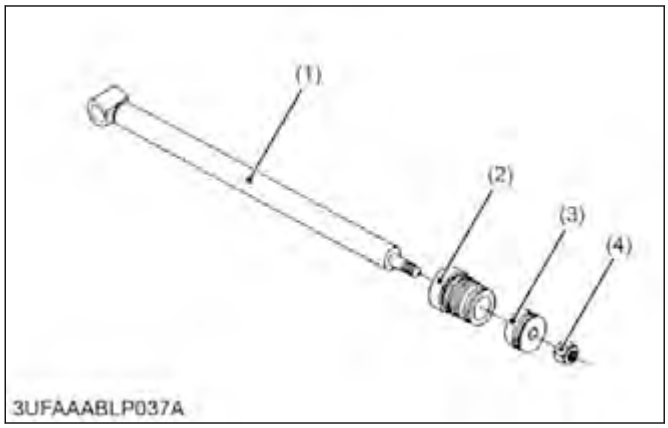

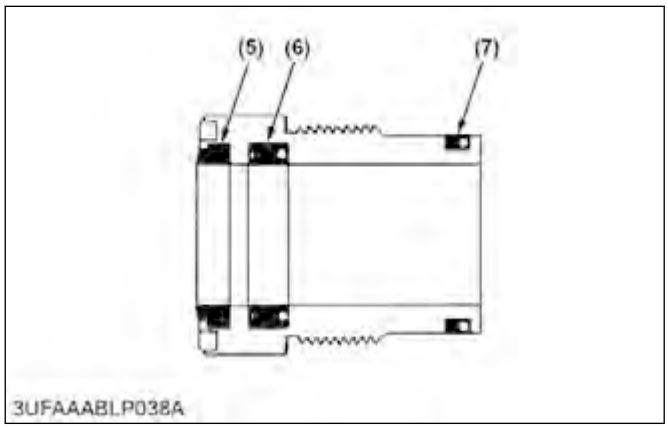

(1) Piston rod
(2) Cylinder head
(3) Piston
(4) Nut
(5) Wiper seal
(6) Oil seal
(7) O-ring

1. Secure the rod end in a vise.
2. Remove the nut (4), the piston (3) and cylinder head (2) from the piston rod (1).

(When reassembling)

- Visually inspect all parts for signs of scoring or damage.
- Insert the piston rod to the cylinder head, being careful not to damage the wiper seal (5) and oil seal (6).

Tightening torque	Boom cylinder, swing cylinder piston mounting nut	250 to 300 N·m 25.5 to 30.5 kgf·m 185 to 221 lbf·ft
	Dipperstick cylinder, bucket cylinder, stabilizer cylinder, piston mounting nut	150 to 180 N·m 15.3 to 18.3 kgf·m 111 to 132 lbf·ft

5.5.3 Checking cylinder adaptor angle

- Connect the cylinder adaptor at their original positions and be sure to connect the adaptor angle as indicated table below.

Cylinder	Rod side	Bottom side
Swing	R: $40^{\pm1°}$	R: $40^{\pm1°}$
Boom	$0^{\pm1°}$	$0^{\pm1°}$
Dipperstick	$0^{\pm1°}$	$0^{\pm1°}$
Bucket	$0^{\pm1°}$	$0^{\pm1°}$
Stabilizer (L.H.)	R: $20^{\pm1°}$	$0^{\pm1°}$
Stabilizer (R.H.)	L: $20^{\pm1°}$	$0^{\pm1°}$

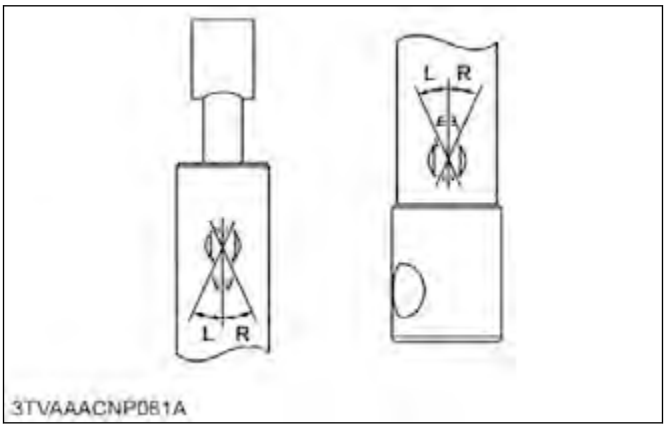

https://truckmanualshub.com/

5.5.4 Removing piston seal and O-ring

1. Remove the piston seal (2) and O-ring (3) from the piston (1).

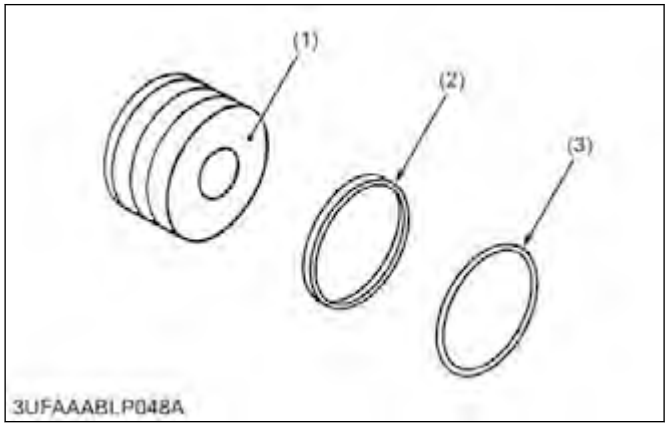

(1) Piston
(2) Piston seal
(3) O-ring

IMPORTANT

- **To install the O-ring (3) and piston seal (2) to the piston (1), use the slide jig and correcting jig as shown in special tools of GENERAL section.**

5.5.5 Installing O-ring and piston seal

1. Set the slide jig (2) on the piston (4).
2. Install the O-ring (3) to the piston using the slide jig.
3. Install the piston seal (1) over the O-ring using the slide jig.

NOTE

- **Do not turn (roll) the piston seal as you install it.**

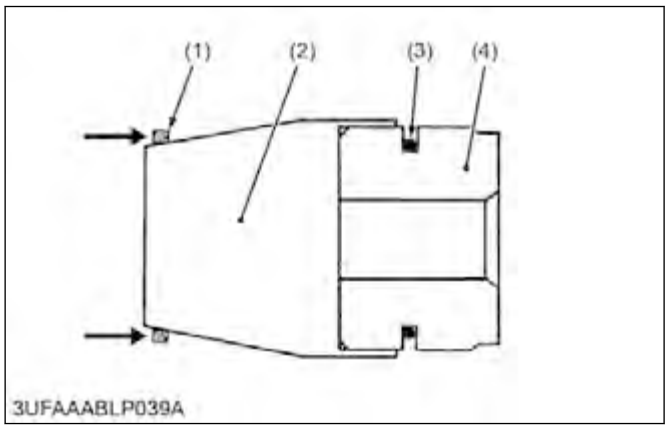

(1) Piston seal
(2) Slide jig
(3) O-ring
(4) Piston

4. Compress the piston seal to the correct size by installing the piston into the correcting jig (5).

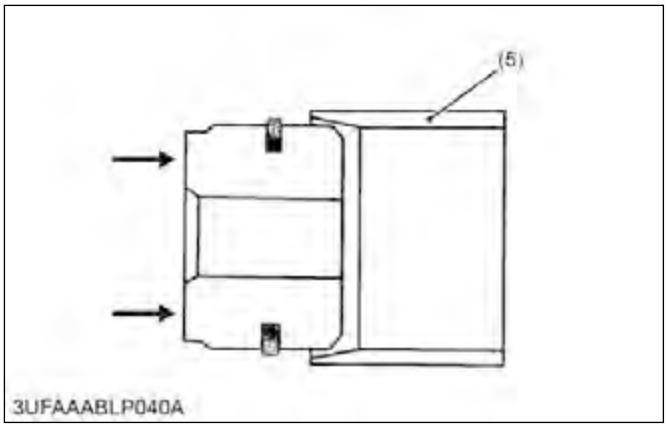

(5) Correcting jig

6. Servicing

6.1 Checking clearance between pin and bushing

1. Measure the pins O.D. with an outside micrometer.
2. Measure the bushings I.D. with a cylinder gauge.

https://truckmanualshub.com/

3. If the clearance exceeds the allowable limit, replace pin or bushing.

	Clearance	Factory specification	Allowable limit
(1)	Boom cylinder rod pin and cylinder bushing	0.060 to 0.185 mm 0.002 to 0.007 in.	1.0 mm 0.0394 in.
(2)	Dipperstick fulcrum pin and bushing	0.140 to 0.180 mm 0.006 to 0.007 in.	1.0 mm 0.0394 in.
(3)	Dipperstick cylinder rod pin and cylinder bushing	0.060 to 0.185 mm 0.002 to 0.007 in.	1.0 mm 0.0394 in.
(4)	Bucket cylinder rod pin / guide link pin / bucket fulcrum pin / bucket link pin and bushing	0.204 to 0.315 mm 0.008 to 0.012 in.	1.0 mm 0.0394 in.
(5)	Boom support pin and bushing	0.140 to 0.180 mm 0.006 to 0.007 in.	1.0 mm 0.0394 in.
(6)	Main frame fulcrum pin and bushing	0.070 to 0.130 mm 0.003 to 0.005 in.	0.5 mm 0.0197 in.
(7)	Swing cylinder rod pin and cylinder bushing	0.108 to 0.259 mm 0.004 to 0.010 in.	1.0 mm 0.0394 in.

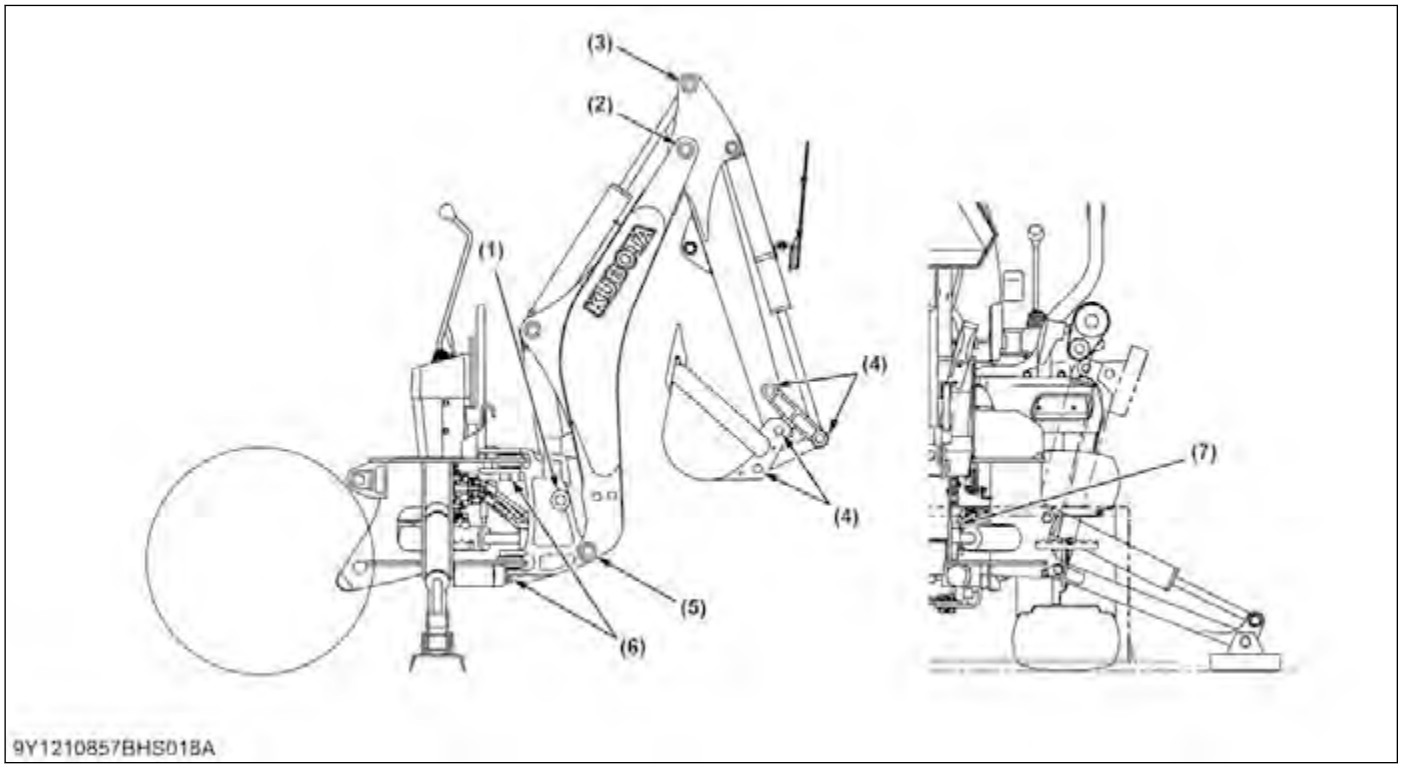

(1), (5)
3TAAAAGNP038A

(6), (7)
3TAAAAGNP039A

https://truckmanualshub.com/

6.2 Checking thrust washer wear

NOTE

- **Visually inspect the thrust washer for signs of scoring or damage not only on the thrust washer but also on the main frame and swing frame contact surface.**

1. Measure the thickness of thrust washer with an outside micrometer.
2. If the wear exceeds the allowable limit, replace it.

Thrust washer thickness	Factory specification	2.66 mm 0.1046 in.
	Allowable limit	1.8 mm 0.0709 in.

6.3 Checking piston rod bend

1. Set the piston rod on V blocks.
2. Set a dial indicator on the center of the rod.
3. Turn the piston rod and read the dial indicator.

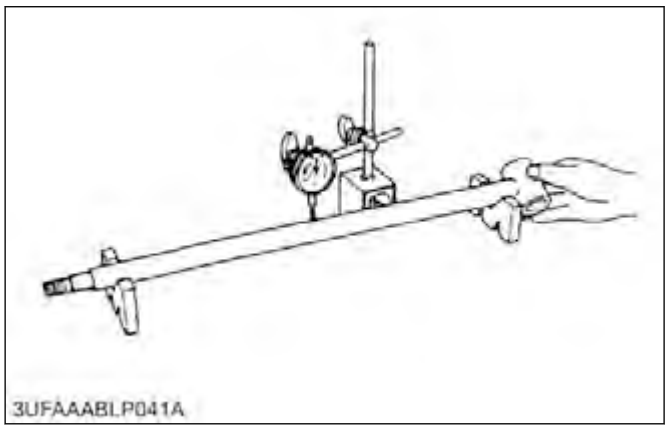

Piston rod bend	Allowable limit	0.25 mm 0.0098 in.

4. If the measurement is more than the allowable limit, replace it.

https://truckmanualshub.com/

INDEX

Symbols

12T bevel gear and 15T bevel gear
checking backlash....5-17
36T bevel gear
removing....5-13
3rd function solenoid valve
checking connector voltage....10-19
checking continuity....10-19
3rd function valve
removing....10-32,10-33
structure....10-7
4WD detent ball
removing....4-47
66T final gear
removing....4-52

A

accelerator wire
disconnecting....3-34
accessory
electrical circuit....8-19
acid burns
prevent....1-4
activation switch
off position....10-8
on position....10-9
actuator
checking flatness....4-61
adapter
removing....6-11
adapters....2-15
air cleaner
removing....3-36
air cleaner element
cleaning....2-32
replacing....2-39
alternator
removing....3-36
antifreeze....2-40
armature coil
checking....8-52
attachment
attaching....10-26
removing....10-28
auto lock attachment and detachment
function....10-6
outline....10-5
axial force....2-3

B

back plate
checking wear....4-58
backhoe
checking identification....2-2
dimensions....1-26
greasing....2-50
lift capacity....1-27
preparing to install....11-28
preparing to remove....11-26
removing....11-28
safety labels....1-15
servicing specifications....11-23
specifications....1-25
tightening torques....11-25
troubleshooting....11-21
backhoe control valve
boom down position....11-8
boom up position....11-7
bucket dump position....11-16
bucket roll-back position....11-15
dipperstick crowd position....11-13
dipperstick extend position....11-14
L.H. stabilizer extend position....11-10
L.H. stabilizer shrink position....11-9
neutral position....11-4
R.H. stabilizer extend position....11-12
R.H. stabilizer shrink position....11-11
structure....11-2
swing left position....11-6
swing right position....11-5
backhoe main frame
removing....11-35
backhoe mounting pin
checking....2-50
ballast....2-55
battery
checking charging current....8-37
checking condition....2-30
checking specific gravity....8-29
checking terminal connection....8-29
checking voltage....8-29
removing....3-32,4-36,5-9,6-12,7-38,7-42,7-49
battery cables
checking and cleaning....2-24
BDF
overview....2-9
bearing
checking....4-58,8-52
bearing at slip ring side
removing....8-50
bearing case cover
removing....3-46
bearing holder
checking flatness....4-61
bearing on drive end side
removing....8-50
before you start service....1-2

https://truckmanualshub.com/

belt cover (RCK54D-26BX)
removing....9-15
belt cover (RCK60D-26BX)
removing....9-15
belt tension pivot
greasing....2-46
bevel gear case
removing....5-12,5-13
bevel gears
adjusting backlash....9-18
bevel pinion shaft
checking turning torque....5-16
removing....5-14
bevel pinion shaft and bevel gear
checking backlash....5-17
biodiesel fuel
overview....2-9
blade boss
removing....9-15
blade shaft
removing....9-17
bolts....2-13
bonnet
opening....2-21
removing....3-33,5-10,6-14
boom
removing....11-32
boom cylinder
removing....10-29,11-32
structure....10-4
brake
removing....4-53
brake cam lever
checking movement....4-61
brake disc
checking wear....4-62
brake pedal
adjusting....2-34
adjusting free travel....4-35
checking....2-24
depressed....4-12
removing....4-41
brake system
structure....4-17
brush
checking wear....8-51,8-53
brush holder
checking....8-52
removing....8-48
bucket
removing....11-31
specifications....1-21
bucket cylinder
removing....10-29,11-31
structure....10-4
bushing and shaft
checking clearance....7-52
bushing replacing tool
D902-E4....2-63
BX tractor
coolant....2-7
dimensions....1-31
fuel....2-7
lubricant....2-7
safety labels....1-7
service intervals....2-17
specifications....1-17
wiring diagram....8-1

C

cam
checking height....3-55
cam gear
removing....3-43
cam plate and ball
checking height....4-62
camshaft
checking alignment....3-55
checking side clearance....3-54
function....3-3
camshaft journal
checking oil clearance....3-55
center pin and pin support bushing
checking clearance....5-18
center pulley holder
removing....9-17
center section
checking....4-56
removing....4-43
charge lamp
checking....8-43
charge relief valve
checking....4-56
checking charge relief pressure....4-31
charging circuit
checking....8-43
charging system
electrical circuit....8-12
check and high pressure relief valve
checking....4-44,4-56
check and high pressure relief valve assembly tool.2-70
check and high pressure relief valve plug
removing....4-44
circlip....2-3
closed breather
function....3-1
clutch piston
checking flatness....4-59
clutch spring
checking free length....4-59
color of wiring....8-3
combination switch
checking connector voltage....8-38
removing....8-38

https://truckmanualshub.com/

commutator
checking....8-51
compression pressure
checking....3-24
connecting rod
checking alignment....3-57
function....3-2
removing....3-44,3-45
control lever
checking operation force....11-26
operating....10-3
control valve....6-3
disassembling....7-51,11-35
down position....7-7
lift position....7-6
neutral position....7-5
outline....7-4
removing....7-46,7-50,11-34
structure....6-3
control valve lever
removing....7-46
coolant
changing....2-39
checking level....2-23
draining....3-36
coolant temperature gauge
function....8-16
coolant temperature sensor
checking connector voltage....8-44
checking continuity....8-45
function....8-17
cooling system
flushing....2-39
overview....3-9
cradle bearing
checking....4-57
crankpin and crankpin bearing
checking oil clearance....3-59
crankshaft
checking alignment....3-59
checking side clearance....3-58
function....3-2
crankshaft assembly
removing....3-47
crankshaft bearing 1
replacing....3-61
crankshaft bearing 1 replacing tool....2-64
crankshaft journal and crankshaft bearing 1
checking oil clearance....3-60
crankshaft journal and crankshaft bearing 2 and crankshaft bearing 3
checking oil clearance....3-62
cruise rod
removing....4-42
cylinder
checking wear....3-63
cylinder (oversize)
correcting....3-63
cylinder adaptor
checking angle....11-36
cylinder block
function....3-1
removing....4-45
cylinder block assembly
checking....4-57
cylinder head
checking flaw....3-49
checking surface flatness....3-48
checking top clearance....3-48
removing....3-38,10-30,11-36
cylinder head cover
removing....3-36
cylinder head gasket
removing....3-38
cylinder number....2-1
cylinder rod assembly
removing....11-35

D

daily check....2-21
DC outlet
checking connector voltage....8-46
checking continuity....8-46
function....8-20
delivery valve
checking fuel tightness....3-29
diesel engine compression tester (for injection nozzle)..
....2-61
differential case and differential side gear
checking clearance....4-60,5-15
differential gear
removing....5-14
structure....4-14
differential gear assembly
removing....5-14
differential lock
structure....4-16
differential lock pedal
removing....4-41
differential pinion and differential side gear
checking backlash....4-60,5-16
differential pinion shaft and differential pinion
checking clearance....4-60,5-15
dimensional specifications
loader....1-22
dipperstick
removing....11-31
dipperstick cylinder
removing....11-32
disassembling and assembling stand
(1/2)....2-66
(2/2)....2-68
dual tires....2-53

https://truckmanualshub.com/

E

Easy Checker ™
checking....2-24
elbows....2-15
electrical connector
chart....8-2
electrical connectors
handling precautions....8-7
layout diagram....8-6
electrical part
handling precaution....2-5
electrical system
servicing specifications....8-27
tightening torques....8-28
troubleshooting....8-21
electrical wiring
checking and cleaning....2-24
electrical wiring chart symbols....8-3
emergencies
preparation....1-5
engine
separating....3-35
servicing specifications....3-19
tightening torques....3-23
troubleshooting....3-15
engine breather hose
checking....2-42
replacing....2-43
engine oil....2-8
changing....2-25,2-35
checking level....2-22
checking pressure....3-25
draining....3-31
engine oil filter
replacing....2-25,2-34
engine oil pressure lamp
checking....8-43
engine oil pressure switch
checking continuity....8-44
engine start system
checking....2-29
engine stop solenoid
testing....8-36
engine valve
adjusting clearance....2-39
exhaust filter....1-3

F

fan belt
adjusting tension....2-33
checking damage....3-26
checking tension....3-26
checking wear....3-26
fan drive pulley
removing....3-40
fender
removing....4-38,7-40,7-44,7-50
fender bracket
removing....4-39
fender center stay
removing....4-39,7-41,7-45
field coil
checking....8-52
fire....1-4
flasher unit
checking connector voltage....8-41
testing actuation....8-42
flow priority valve
outline....7-8
specification....7-10
structure....7-9
fluids correctly
discarding....1-4
flywheel
function....3-3
removing....3-46
flywheel stopper....2-64
force....2-3
frame link
mounting....9-8
friction plate
checking wear....4-62
front anti-scalp rollers
greasing....2-46
front axle
adjusting pivot....2-36
adjusting rocking force....5-8
camber....5-2
caster....5-2
servicing specifications....5-6
structure....5-1
tightening torques....5-7
toe-in....5-2
troubleshooting....5-5
kingpin angle....5-2
front axle assembly
removing....5-11,6-14
front axle case oil
changing....2-38
draining....5-9
front axle shaft
removing....5-13
front ballast....2-55
front gear case
removing....5-12,5-13
front gear case cover
removing....5-12
front guard
removing....10-32
front hydraulic valve main switch
checking connector voltage....10-18
checking continuity....10-17
front link
mounting....9-7

https://truckmanualshub.com/

front loader
hydraulic circuit.....7-19
tightening torques.....10-13
troubleshooting.....10-11
front loader control valve
structure.....7-18
front loader pipe
structure.....7-17
front loader valve
structure.....7-17
front remote hydraulic control system.....10-3
front wheel.....2-54
adjusting steering angle.....5-9
checking bolt torque.....2-30
removing.....5-10
front wheel drive
structure.....4-13
front wheel drive lever
removing.....4-42
front wheel drive shaft
assembling.....4-55
fuel.....2-8
fuel feed pump
function.....3-12
fuel filter
checking.....2-32
function.....3-12
fuel filter element
replacing.....2-38
fuel gauge
checking.....2-21
function.....8-16
fuel hose
disconnecting.....3-34
replacing.....2-43
fuel injection nozzle
checking injection pressure.....2-39
fuel injection pressure
checking.....3-30
fuel level sensor
checking continuity.....8-44
function.....8-17
fuel line
checking.....2-42
fuel pump
checking connector voltage.....8-36
checking continuity.....8-36
function.....8-10
fuel system
bleeding.....2-43
overview.....3-12
fuel tank
removing.....4-38,7-41,7-44
fuse
replacing.....2-43

G

gauge
checking.....2-24
gauge system
electrical circuit.....8-15
gear box
disassembling.....9-16
removing.....9-16
gear box oil
changing.....2-47
checking level.....2-45
gear box oil seal
checking.....2-47
replacing.....2-48
gear case
removing.....3-41
gear tooth and casing
checking clearance.....7-52
glow plug
checking continuity.....8-33
checking lead terminal voltage.....8-32
function.....8-10
removing.....3-37
governor gear
removing.....3-43
grease.....2-3
greasing.....2-27
ground cable
disconnecting.....3-33

H

half-floating head cover
function.....3-1
hazard light
checking.....2-24
hazard switch
checking continuity when setting switch knob at OFF position.....8-41
checking continuity when setting switch knob at ON position.....8-41
head light
checking.....2-24
head light switch
checking continuity when setting switch at OFF position.....8-38
checking continuity when setting switch at ON position.....8-39
high pressure spray.....1-3
high relief pressure (forward)
checking.....4-32
high relief pressure (reverse)
checking.....4-33
hitch plate
removing.....4-39
hose
removing.....11-32

https://truckmanualshub.com/

hose clamp
checking....2-41
hot exhaust.... 1-3
hour meter
checking....2-1,8-45
function.... 8-16
HST
adjusting neutral position.... 4-29
HST control linkage
structure....4-8
HST damper
removing.... 4-42
HST neutral spring
adjusting.... 2-33,4-30
checking....4-30
HST neutral switch
checking continuity....8-34
HST pedal neutral switch
function.... 8-10
HST pump shaft
assembling....4-54
hydraulic arm
removing.... 7-46
hydraulic arm shaft
removing.... 7-46
hydraulic arm shaft bushing
checking....7-53
hydraulic block type outlet
structure....7-15
hydraulic circuit.... 7-2,10-1,11-1
steering.... 6-2
hydraulic control lever
removing.... 4-42
hydraulic cylinder
checking bore....7-53
removing.... 4-47
structure....7-14,11-19
hydraulic cylinder block
removing.... 7-45
hydraulic hose
checking....2-48,2-49
hydraulic piston
removing.... 7-47
hydraulic pump
checking oil flow....7-36
outline.... 7-4
removing.... 7-41
specification.... 7-4
structure....7-4
hydraulic pump assembly
removing.... 4-49
hydraulic pump drive gear
structure....4-22
hydraulic system
servicing specifications.... 7-34
structure....7-1
tightening torques.... 7-35
troubleshooting.... 7-33
hydraulic tube
removing.... 10-29
hydrostatic transmission
forward position....4-5
neutral position....4-4
oil flow....4-3
relief (reverse position).... 4-7
reverse position....4-6
structure....4-2

I

IC regulator
function.... 8-13
removing.... 8-49
idle gear 1
checking side clearance....3-54
removing.... 3-43
idle gear 1 shaft and idle gear bushing
checking oil clearance....3-56
idle gear 2
removing.... 3-43
idle gear bushing
replacing.... 3-56
implement limitation
table.... 2-57
independent PTO clutch spring compression tool....2-65
independent PTO lever switch
function.... 8-10
injection nozzle
function.... 3-12
injection pipe
removing.... 3-37
injection pump
checking....2-41
removing.... 3-42
injection pump pressure tester....2-61
injection timing
checking....3-28
inlet hose (backhoe)
connecting....11-29
inlet hose (tractor)
disconnecting.... 11-28
intake air line
checking....2-41
replacing.... 2-43

L

lever
checking....2-25
lever support
removing.... 11-34
lift arm
removing.... 7-46
lift rod
removing....4-36,7-39,7-43
light bulb
replacing.... 2-44

https://truckmanualshub.com/

lighting system
electrical circuit..... 8-14
loader
checking identification.....2-2
greasing.....2-49
installing.....10-23
operational specifications.....1-23
removing.....10-20
safety labels.....1-13
specifications..... 1-20
loader control lever
down position.....7-23
dump position.....7-30
floating position.....7-25
neutral position.....7-20
roll-back position.....7-27
up position.....7-21
loader stand
adjusting height.....10-14
lock lever shaft
cleaning.....2-30
lower link
removing.....4-36,7-39,7-43
lowering speed adjusting valve
removing.....7-47
lubricating system
overview.....3-5

M

magnet switch
removing.....8-48
main bearing case assembly
removing.....3-47
main frame
removing.....10-32
main frame bolt
checking torque.....2-49
main frame nut
checking torque.....2-49
main switch
checking connector voltage..... 8-30
checking continuity at off position..... 8-30
checking continuity at on position..... 8-31
checking continuity at preheat position..... 8-31
checking continuity at start position..... 8-31
maximum speed
adjusting.....4-29
mechanical loader frame
structure (standing mechanism).....10-6
meter
checking.....2-24
meter panel
checking connector voltage..... 8-46
checking sensor resistance.....8-46
checking switch continuity.....8-46
metering device
function..... 6-3
structure.....6-3
mica
checking.....8-51
mid and rear PTO
structure.....4-21
mid-PTO shaft
assembling.....4-55
motor
checking.....8-31
mounting pin
releasing.....11-27
setting.....11-29
mower
adjusting cutting height..... 9-12
adjusting left and right cutting height.....9-11
assembling.....9-6
checking identification.....2-2
lubricants.....2-11
mounting..... 9-9
safety labels..... 1-12
service intervals..... 2-19
servicing specifications..... 9-4
setting..... 9-6
specifications..... 1-19
tightening torques..... 9-5
troubleshooting..... 9-3
mower (RCK54D-26BX)
adjusting front and rear cutting height.....9-10
mower (RCK60D-26BX)
adjusting front and rear cutting height.....9-10
mower belt
checking.....2-45,9-14
removing..... 9-16
mower blade
checking.....2-45,9-14
removing..... 9-15
mower blade screw
retightening..... 2-44
mower lift arm
removing..... 4-42
mower lift linkage
adjusting.....7-38
mower lifting mechanism
structure.....9-2
mower link
adjusting.....9-10
mower linkage
disassembling..... 7-48
removing..... 7-45
structure.....7-16
mower power transmission
structure.....9-1
muffler
removing..... 3-36

https://truckmanualshub.com/

N

needle bearing
checking....4-58
neutral arm
removing....4-47
nozzle
checking spraying condition....3-29
nozzle heat seal
removing....3-37
nozzle holder
checking....3-31
nozzle holder assembly
removing....3-37
nozzle tester....2-61
nut
removing....10-30,11-36
nuts....2-13

O

O-ring
installing....10-31,11-37
removing....10-31,11-37
oil cooler cover
removing....4-43
oil filter....3-7
oil pan
removing....3-40
oil pressure switch
function....3-8,8-18
oil pump
function....3-7
oil strainer
function....3-7
removing....3-40
one lever quick touch 4 lines coupler
structure....10-5
one touch front loader
outline....10-5
OPC system
checking....2-29
OPC timer
checking....8-35
electrical circuit....8-11
operate safely....1-2
operator presence control system
checking....2-29
outer pulley
removing....9-17
outer rotor and pump body
checking clearance....3-64
outlet hose (backhoe)
connecting....11-29
outlet hose (tractor)
connecting....11-29
disconnecting....11-28
overload relief valve
anti-cavitation position function....11-18
relief position function....11-17
structure....11-17
overrunning clutch
checking....8-50

P

panel
cleaning....2-23
pedal
checking....2-25
pin and bushing
checking clearance....11-38
pinion shaft
adjusting turning torque....9-18
piston
function....3-2
removing....3-44,4-45,10-30,10-31,11-36,11-37
piston pin
checking bore I.D....3-56
piston pin and small end bushing
checking oil clearance....3-56
piston ring
checking gap....3-57
function....3-2
removing....3-45
piston ring and piston ring groove
checking clearance....3-58
piston rod assembly
removing....10-29
piston rod bend
checking....10-33,11-41
piston seal
installing....10-31,11-37
plunger
removing....8-48
power beyond hose (backhoe)
connecting....11-29
power beyond pipe (tractor)
connecting....11-29
disconnecting....11-28
power steering
checking oil flow....7-37
power steering cylinder
removing....5-11,6-15
power steering hose
replacing....2-43
power steering line
checking....2-41
pressure plate
checking flatness....4-59
propeller shaft
disconnecting....5-10
removing....4-41
propeller shaft assembly
disconnecting....3-35
propeller shaft cover
removing....5-10

https://truckmanualshub.com/

PTO brake disc
checking wear....4-59
PTO brake plate
checking....4-59
PTO clutch
checking operating pressure....4-34
disengaged function....4-20
engaged function....4-20
PTO clutch assembly
removing....4-54
PTO clutch control lever
removing....4-42
PTO clutch disc
checking wear....4-58
PTO clutch relief valve
function....4-20
PTO clutch shaft
assembling....4-54
checking....4-57
PTO clutch valve
removing....4-43
PTO select arm
assembling....4-54
PTO select lever
removing....4-42
PTO shift lever switch
checking continuity....8-33
function....8-10
PTO system
structure....4-19
pulley
removing....8-48
pump element
checking fuel tightness....3-29
pump shaft
checking....4-57
push rod
checking alignment....3-53
removing....3-38

R

radiator
checking water leakage....3-27
function....3-11
removing....3-36
radiator cap
checking air leakage....3-26
function....3-11
radiator hose
checking....2-41
replacing....2-43
radiator screen
cleaning....2-23
ramp (RCK54D-26BX)
removing....9-15
ramp (RCK60D-26BX)
removing....9-15
range gear shift
structure....4-12
range gear shift lever
removing....4-42
rear anti-scalp rollers
greasing....2-46
rear axle (L.H.)
disassembling....4-50
rear axle case (R.H.)
removing....4-51,4-53
rear ballast....2-55
rear end cover
removing....8-48
rear end frame
removing....8-49
rear PTO cover assembly
removing....4-50
rear PTO switch
function....8-10
rear wheel....2-54
checking bolt torque....2-30
removing....4-39
rectifier
checking....8-54
removing....8-49
refueling....2-21
relay
checking....10-18
function....8-9
relief valve
checking....3-65
checking operating pressure....6-11
checking setting pressure....7-36,11-26
function....3-8,6-4,7-12
outline....7-10
readjusting....4-33
specification....6-4,7-13
structure....7-11
retainer plate
removing....8-50
return pipe (tractor)
connecting....11-29
rocker arm....3-3
removing....3-38
rocker arm and rocker arm shaft
checking oil clearance....3-53
rod and guide
checking clearance....6-15
ROPS
checking....2-24
removing....4-37,7-39,7-43,7-49
rotating movement....2-3
rotor
checking....8-53
removing....8-49
rotor and cover
checking clearance....3-64

https://truckmanualshub.com/

rotor lobe
checking clearance..... 3-64

S

safety first.....1-1
safety switch
function..... 8-10
screws.....2-13
seat
removing.....4-37,7-40,7-43,7-49
seat belt
checking.....2-24
seat switch
checking continuity.....8-34
function..... 8-10
seat turnover switch
checking continuity.....8-34
function..... 8-10
separate plate
checking wear.....4-58
serial number
checking.....2-1
sharp edge..... 2-3
shifter
assembling.....4-55
side frame
removing..... 10-31
side plate
checking thickness.....7-53
slip ring
checking.....8-53
small end bushing
replacing..... 3-57
special use puller set..... 2-61
speed control pedal
removing..... 4-42
speed control plate
removing..... 3-41
speed set..... 4-9
spindle shaft
greasing..... 2-46
spiral bevel pinion gear and bevel gear
checking backlash.....4-61
spiral bevel pinion shaft
assembling.....4-55
stabilizer
removing..... 11-33
stabilizer control lever
checking operation force..... 11-26
stabilizer cylinder
removing..... 11-33
start safely.....1-2
starter
disassembling motor.....8-47
function..... 8-9
removing..... 3-36
starter magnet switch
testing..... 8-32
starting system
electrical circuit..... 8-8
stator
checking.....8-53
steel plate
checking flatness..... 4-59
steering
servicing specifications..... 6-9
tightening torque..... 6-10
troubleshooting..... 6-7
steering controller
removing..... 6-13
structure.....6-3
steering cylinder
checking I.D..... 6-15
disassembling..... 6-12
structure.....6-5
steering system
structure.....6-1
steering wheel
removing..... 6-13
step
removing.....4-37,7-40,7-43,7-49
sub frame bolt
checking torque.....2-51
sub frame nut
checking torque.....2-51
swashplate
removing..... 4-46
swing cylinder
removing..... 11-33
swing frame
removing..... 11-33

T

tachometer
checking.....8-45
function..... 8-16
tail light
checking.....2-24
tappet
removing..... 3-39
tappet and tappet guide bore
checking oil clearance.....3-53
tension pulley
greasing..... 2-46
thermostat assembly
removing..... 3-40
thermostat valve
checking opening temperature.....3-27
thrust plate
checking.....4-57
thrust roller
checking.....4-57

https://truckmanualshub.com/

thrust washer
checking....4-57
checking wear.... 11-41
tie-rod
removing.... 6-11
tie-rod end lifter....2-65
timer relay
checking connector voltage.... 8-37
testing.... 8-37
timing gear
checking backlash....3-54
timing gears
function.... 3-4
tires.... 2-53
inflation pressure....2-53
toe-in
adjusting.... 2-36,5-8
tractor
setting.... 9-8
transaxle
servicing specifications....4-27
structure....4-1
tightening torque....4-28
troubleshooting.... 4-23
transaxle assembly
removing....4-40
transaxle case front cover
removing....4-48
transmission fluid
changing....2-26,2-37
checking level....2-22,2-48,2-49
draining....4-35
transmission oil.... 2-8
transmission oil filter
replacing.... 2-26,2-35
transmission strainer
cleaning.... 2-27,2-38
traveling speeds....1-29
trunnion arm
removing....4-47
trust roller bearing
removing....4-46
turn signal light switch
checking continuity when setting switch knob at LEFT position....8-40
checking continuity when setting switch knob at OFF position.... 8-39
checking continuity when setting switch knob at RIGHT position.... 8-40

U

universal joint
greasing....2-46
upper panel
removing.... 6-13

V

valve
checking clearance.... 3-24
checking recessing.... 3-49
checking seating.... 3-51
correcting.... 3-51
lapping.... 3-52
removing.... 3-39
valve guide
replacing.... 3-50
valve guide replacing tool.... 2-62
valve plate
removing....4-43
valve seat
checking tightness.... 3-30
correcting.... 3-51
valve spring
checking free length....3-52
checking setting load.... 3-52
checking tilt....3-52
valve stem and valve guide
checking clearance.... 3-49

W

walk around inspection.... 2-21
water pump
function....3-11
wheel tread.... 2-53
wire harness
removing....7-45
wiring
handling precaution....2-5
wiring harness
disconnecting....3-33

https://truckmanualshub.com/

Editor : Farm Machinery International Service Department
Address : 64, Ishizu-Kitamachi, Sakai-Ku, Sakai-City, Osaka, 590-0823, Japan
Phone : +81-72-241-1129
Fax : +81-72-245-2484
E-mail : ks_g.ksos-pub@kubota.com

KUBOTA Corporation

Printed in Japan 2017. 03, S, EI, EI, engusa Code No.9Y111-16500