https://truckmanualshub.com/

GRADALL®

Operator & Safety Manual

Keep this manual with machine at all times.

XL3100V - XL4100V - XL5100V
XL4130V

(4x2) S/N 3120000375 & After
(4x4) S/N 3140000378 & After

(6x4) S/N 4140000100 & After
(Railgear) S/N 4140R00100 & After
(Railgear) S/N 4130R00100 & After
(6x6) S/N 4160000088 & After

(6x4) S/N 5140000100 & After
(6x6) S/N 5160000100 & After

80884013

Revised
December 7th, 2018

This manual, and all manuals for the Gradall Hydraulic Excavator product line, can be viewed or downloaded, free-of-charge, at www.mygradall.com

https://tractormanualz.com/

https://truckmanualshub.com/

IMPORTANT! *- If printed, or downloaded in electronic format, this is an uncontrolled copy of the manual.*
The current version can be viewed/downloaded at www.mygradall.com

Gradall is a registered trademark for hydraulic excavators, industrial maintenance machines, attachments and other components manufactured and marketed by Gradall Industries, Inc.

https://tractormanualz.com/

https://truckmanualshub.com/

REVISION LOG

February 12th, 2016 - A - Original Issue of Manual
April 14th, 2016 - B - Added battery shutdown warning
January 6th, 2017 - C - Added description to chassis lube points in Section 5. Revised Upper Cab Heater Spec. Added XL4100V & XL5100V Weight & Dimension Specs.
December 7th, 2018 - D - Op Manual Revision Log

https://tractormanualz.com/

https://truckmanualshub.com/

This manual is a very important tool! Keep it with the machine at all times.

The purpose of this manual is to provide owners, users, operators, lessors, and lessees with the precautions and operating procedures essential for the safe and proper machine operation for its intended purpose.

Due to continuous product improvements, Gradall Industries, Inc. reserves the right to make specification changes without prior notification. Contact Gradall Industries, Inc. for updated information, or access the most recent version of this manual at www.mygradall.com.

Operator Qualifications

The operator of the machine must not operate or drive the machine until this manual has been read, training is accomplished and operation of the machine has been completed under the supervision of an experienced and qualified instructor.

Operators of this equipment must possess a valid, applicable driver's license, be in good physical and mental condition. Operator must not be using medication which could impair abilities nor be under the influence of alcohol or any other intoxicant during the work shift.

In addition, the operator must read, understand and comply with instructions contained in the following material furnished with the hydraulic excavator:

- This Operator & Safety Manual
- AEM Off-Highway Dump Truck Manual
- AEM Hydraulic Excavator Safety Manual
- All instructional decals and plates
- Any optional equipment instructions furnished

The operator must also read, understand and comply with all applicable Employer, Industry and Governmental rules, standards and regulations.

If any manual is missing or illegible, get a replacement from your employer, distributor, or from Gradall Industries.

Modifications

Any modification to Gradall products must be approved by Gradall.

https://tractormanualz.com/

https://truckmanualshub.com/

This product must comply with all safety related bulletins. Contact Gradall Industries, Inc. or the local authorized Gradall representative for information regarding safety-related bulletins which may have been issued for this product.

Gradall Industries, Inc. sends safety related bulletins to the owner of record of this machine. Contact Gradall Industries, Inc. to ensure that the current owner records are updated and accurate.

Gradall Industries, Inc. must be notified immediately in all instances where Gradall products have been involved in an accident involving bodily injury or death of personnel or when damage has occurred to personal property or the Gradall product.

FOR:

- Accident Reporting and Product Safety Publications
- Current Owner Updates
- Questions Regarding Product Applications and Safety
- Standards and Regulations Compliance Information
- Questions Regarding Product Modifications

CONTACT:

Product Safety and Reliability Department
Gradall Industries, Inc.
406 Mill Avenue
New Philadelphia, OH 44663
Phone: 330-339-2211
Toll-Free: 1-800-445-4752

Other Publications Available

Illustrated Parts Manual.....80884012

Service Manual 80884014

https://tractormanualz.com/

https://truckmanualshub.com/

NOTES:

https://tractormanualz.com/

https://truckmanualshub.com/

TABLE OF CONTENTS

Revision Log

Read This First

Operator Qualifications....b
Modifications....b
Other Publications Available....c

Table of Contents

Section 1 - General Safety Practices

1.1 Hazard Classification System....1-1
Safety Alert System and Safety Signal Words....1-1
1.2 General Precautions....1-1
1.3 Operation Safety....1-2
Electrical Hazards....1-2
Swing Hazards....1-3
Slip and Fall Hazard....1-5
Crush Hazards....1-6
Travel Hazards - Remote and Driving....1-8
Tip Over Hazard....1-9
Chemical Hazards....1-10
Dust Hazard....1-12
1.4 Personal Protection Equipment....1-13

Section 2 - Pre-Operation and Controls

2.1 Pre-Operation Checks & Inspection....2-1
2.2 Walk-Around Inspection....2-2
2.3 Safety Decals....2-5
Upperstructure Decal Locations....2-5
Undercarriage Decal Locations....2-7
2.4 Undercarriage Cab Components....2-10
2.5 Transmission Shift Selector....2-12
Prognostic Features....2-13
Accessing Prognostics....2-14
Resetting Prognostics....2-15
Checking Fluid Levels....2-16
Diagnostic Codes....2-18
Diagnostic Transmission Codes....2-19
2.6 Undercarriage Cab Controls & Indicators....2-22
Dash Panel....2-22
Right Hand Dash Panel....2-23
Travel/Remote Display Area....2-24
Information Display Area....2-25
Ignition....2-27

https://tractormanualz.com/

https://truckmanualshub.com/

Turn Signal/High Beam/Hazards Lever 2-28
2.7 Upperstructure Cab Components 2-30
2.8 Upperstructure Cab Controls & Indicators 2-32
Electronic Monitoring Unit 2-32
Right Hand Arm Pod 2-34
Left Hand Arm Pod 2-36
Joystick Control Pattern Selection 2-38
Joystick Controls 2-39
Operator Seat Adjustments 2-43
Ignition 2-44
Intermittent Wiper/Washer 2-45
Park Brake Switch 2-46

Section 3 - Operation

3.1 Travel Mode Engine Operation 3-1
Starting Engine from Undercarriage Cab 3-1
Normal Engine Operation 3-1
Cold Weather Starting Aids 3-2
3.2 Checks Before Undercarriage Operation 3-3
3.3 Travel Mode Brake System 3-4
Service Brake 3-5
Emergency Brake 3-6
Parking Brake 3-8
3.4 Travel Mode Power Train 3-10
Shifting Gears 3-10
3.5 Travel Mode Engine Shutdown 3-14
3.6 Remote Control Preparation 3-15
Preparing Undercarriage for Remote Control Operation 3-15
Preparing Upperstructure for Remote Control Operation 3-15
3.7 Checks Before Remote Control Operation 3-16
3.8 Remote Mode Brake System 3-17
Remote Control Braking 3-17
Digging Brake 3-18
3.9 Remote Mode Power Train 3-19
Driving Undercarriage from Upperstructure Cab 3-19
Shifting Gears While in Remote Control 3-20
3.10 Steering System 3-21
3.11 Typical Dig Cycle 3-22
Standard SAE Boom and Attachment Functions 3-22
3.12 Lifting & Placing a Load 3-28
Precautions 3-28
General 3-29
Positioning Machine For A Lift 3-29
Planning A Lift 3-30

https://tractormanualz.com/

https://truckmanualshub.com/

3.13 Lift Capacity 3-31
3.14 Remote Mode Engine Shutdown 3-33
3.15 Return to Travel Mode 3-34
Preparing Upperstructure for Undercarriage Operation.....3-34
Preparing Undercarriage for Conventional Operation 3-34
Boom Stow Procedure.....3-35
Securing Unit for Driving.....3-35
3.16 Parking the Excavator 3-36
Precaution 3-36
Parking Procedure.....3-36
3.17 Preservation & Storage 3-37
Maintenance 3-37

Section 4 - Attachments

4.1 Approved Attachments.....4-1
4.2 Unapproved Attachments.....4-1
4.3 Attachment Operation 4-1
Excavating Buckets 4-2
Ditching Buckets.....4-2
Trenching Buckets.....4-3
Pavement Removal Bucket 4-3
Dredging Bucket 4-4
Grading Blade.....4-4
4.4 Adapter Attachment Installation 4-5

Section 5 - Lubrication & Maintenance

5.1 Introduction 5-1
Clothing and Safety Gear 5-1
5.2 General Maintenance Instructions 5-2
Tire Service 5-2
5.3 Service & Maintenance Schedules 5-3
Daily or Shift (10 Hour Maximum) Maintenance Schedule.....5-3
Weekly (50 Hour Maximum) Maintenance Schedule.....5-4
Monthly (125 Hour Maximum) Maintenance Schedule.....5-5
1st 30 Days (250 hrs Max) & 250 Hour Maintenance Schedule.5-6
500 Hour Maintenance Schedule 5-7
Semi-Annual (750 Hour Maximum) Maintenance Schedule.....5-8
Annual (1500 Hour Maximum) Maintenance Schedule 5-9
5.4 Undercarriage Lubrication Schedules 5-10
Monthly (125 Hour Maximum) Lubrication Schedule - XL3100V.....
5-10
Monthly (125 Hour Maximum) Lubrication Schedule -
XL4100V & XL5100V 5-12
Semi-Annual (750 Hour Maximum) Lubrication Schedule -
XL3100V 5-14

https://tractormanualz.com/

https://truckmanualshub.com/

Semi-Annual (750 Hour Maximum) Lubrication Schedule - XL4100V & XL5100V 5-16
5.5 Upperstructure Lubrication Schedules 5-18
Daily or Shift (10 Hour Maximum) Lubrication Schedule 5-18
Annual (1500 Hour Maximum) Lubrication Schedule 5-19
5.6 Operator Maintenance Instructions 5-20
10 Hours 5-20
50 Hours 5-25
100 Hours 5-27
750 Hours 5-29

Section 6 - Emergency Procedures

6.1 Loss Of Power 6-1
Stowing the boom without engine power 6-1
To extend the boom without engine power 6-1
To raise the boom without engine power 6-1
Towing 6-2
If You Get Stuck 6-2

Section 7 - Specifications

7.1 Product Specifications 7-1
Lubrication & Fluid Capacities 7-1
Tires 7-3
Battery 7-3
Weight 7-4
Dimensions 7-4
7.2 Torque Chart 7-6
7.3 Fuses 7-9
Upperstructure 7-9
Undercarriage 7-9

Index

https://tractormanualz.com/

https://truckmanualshub.com/

SECTION 1 - GENERAL SAFETY PRACTICES

1.1 HAZARD CLASSIFICATION SYSTEM

Safety Alert System and Safety Signal Words

DANGER

OW0010

DANGER indicates an imminently hazardous situation which, if not avoided, will result in death or serious injury.

WARNING

OW0021

WARNING indicates a potentially hazardous situation which, if not avoided, could result in death or serious injury.

CAUTION

OW0031

CAUTION indicates a potentially hazardous situation which, if not avoided, may result in minor or moderate injury.

1.2 GENERAL PRECAUTIONS

WARNING

OW0021

Before operation, read & understand this manual. Failure to comply with the information in this manual could result in machine damage, property damage, personal injury or death.

https://tractormanualz.com/

https://truckmanualshub.com/

1.3 OPERATION SAFETY

Electrical Hazards

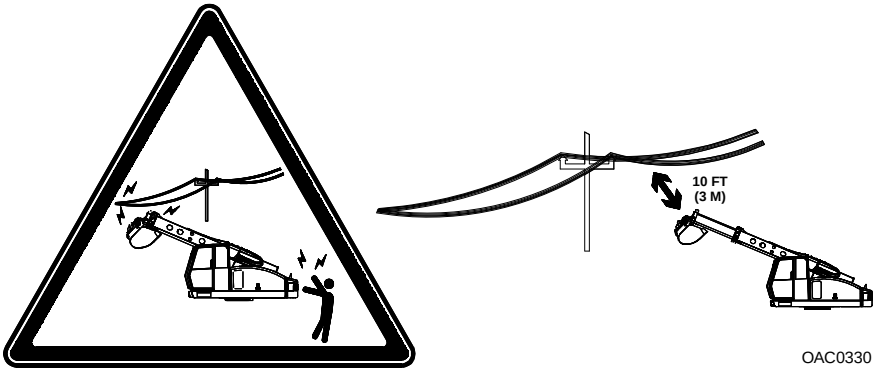

OAC0330

- This machine is not insulated and does not provide protection from contact or being near electrical current.
- **NEVER** operate the excavator in an area where overhead power lines, overhead or underground cables, or other power sources may exist without ensuring the appropriate power or utility company de-energizes the lines.
- Always check for power lines before raising boom.

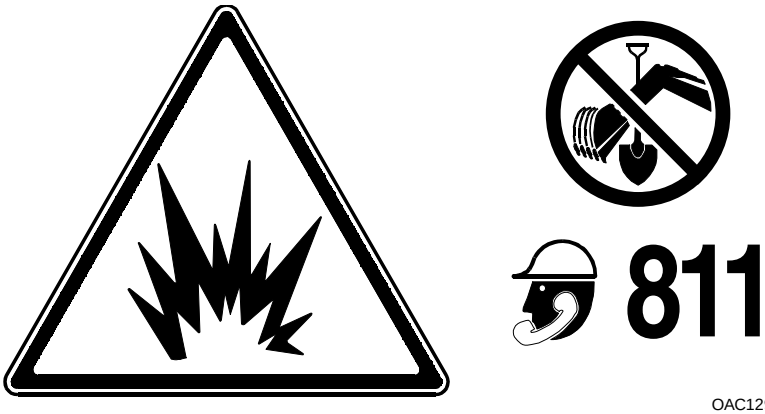

OAC1290

Always **"Call Before You Dig"**. Contact your local One-Call (811 in USA) or the One-Call referral number (888-258-0808 in USA and Canada) to have underground utilities located before digging.

https://tractormanualz.com/

https://truckmanualshub.com/

Swing Hazards

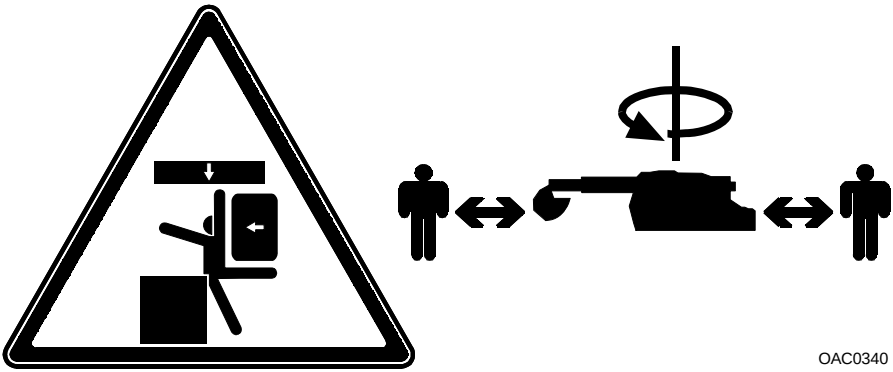

- Keep others away from machine while in operation. Ensure others are clear of the swing radius prior to swinging upperstructure.
- Never carry a water can, equipment, or other worker's tools or personal items on the machine.
- Never permit anyone close enough to machine to become trapped between undercarriage and upperstructure.
- Position machine to prevent possibility of a person being crushed between counterweight and another object.
- Do not allow anyone inside the cab(s) (other than the operator) while in operation.
- Always be careful when using mirrors; distances are distorted and field of view is limited, especially when swinging. Always use a signal person when working in tight quarters.
- Be aware of undercarriage cab, if equipped, and undercarriage components when swinging upperstructure or digging. Position unit so that it won't be necessary to swing boom close to cab or undercarriage components.

https://tractormanualz.com/

https://truckmanualshub.com/

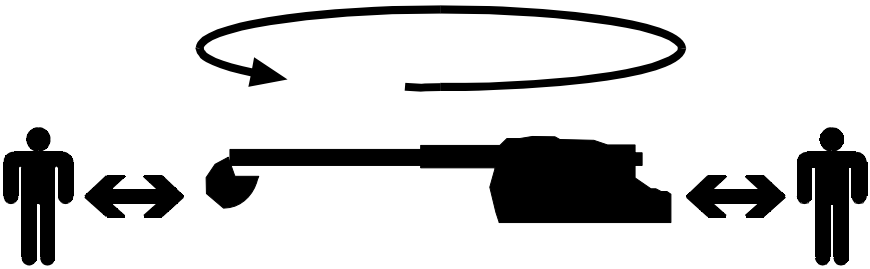

- The circle of safety is a circle around the excavator with the boom at full extension.
- Establish and inform others of the circle of safety. Keep others from entering into the circle of safety.

https://tractormanualz.com/

https://truckmanualshub.com/

Slip and Fall Hazard

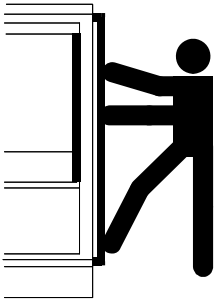

OAC0350

- Always maintain 3-point contact using proper hand holds and steps provided when mounting or dismounting. Never grab control levers or steering wheel when mounting or dismounting machine.
- Repair or replace damaged steps and grab handles.
- Keep grab handles, steps, and walkways free of mud, oil, grease and other foreign material. Replace non-skid surface material as required.
- Do not get off machine until shutdown procedure has been performed.
- Align upperstructure with undercarriage before dismounting.

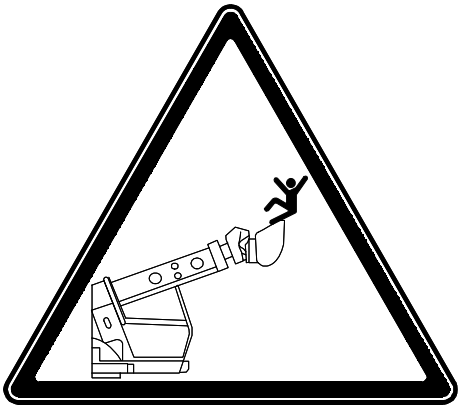

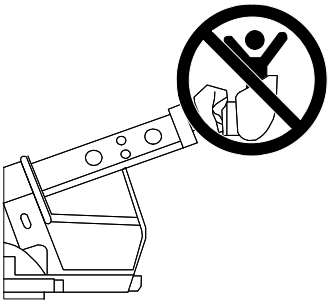

OAC0360

- **Keep others off machine** while in operation.
- **Do not lift personnel with this machine.**

https://tractormanualz.com/

https://truckmanualshub.com/

Crush Hazards

OAC1250

- Do not lean on boom or reach into boom holes, bucket linkage or boom rollers until the attachment or boom is resting on the ground and the engine is stopped.
- Be sure all access covers are in the fully open position before performing any procedures inside compartments.

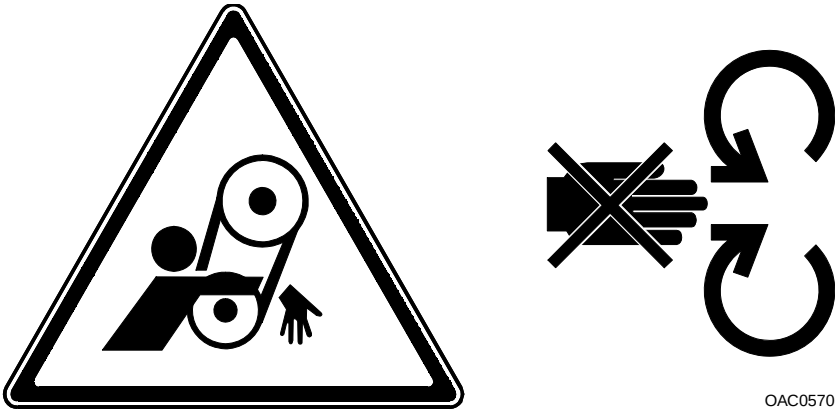

OAC0570

- Stay clear of moving parts while engine is running.
- Rotation of undercarriage cab steering wheel will occur during remote steering operation. Do not occupy undercarriage cab during remote operation.

https://tractormanualz.com/

https://truckmanualshub.com/

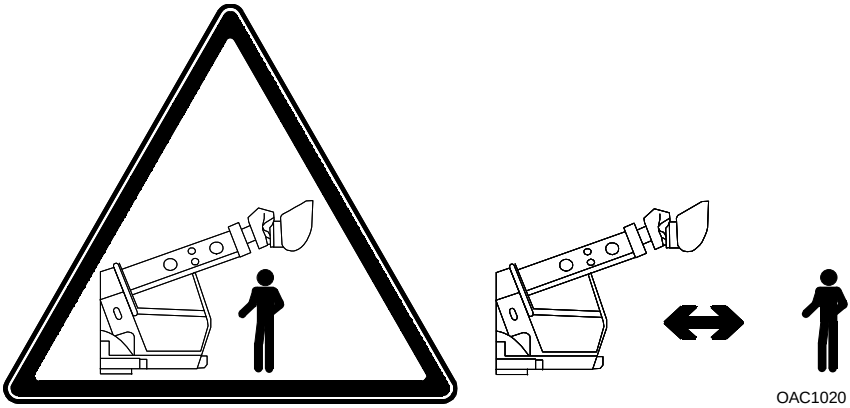

- Never permit anyone under boom, attachment or load. Rest boom or attachment on ground and stop engine before permitting anyone to work beneath boom or behind cradle.

https://tractormanualz.com/

https://truckmanualshub.com/

Travel Hazards - Remote and Driving

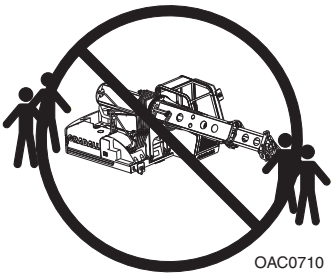

- Look out for and avoid other personnel, machinery and vehicles in the area. Use a spotter if you **do not** have a clear view.
- **Before moving** be sure of a clear path for undercarriage, boom and counterweight and **sound horn.**
- **Always** look in the direction of travel.
- **Before remote travel, check to be sure you are aware of orientation of upperstructure with regard to undercarriage.** Confusion could cause travel in the opposite direction you may expect.

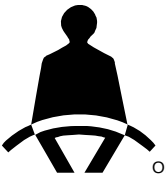

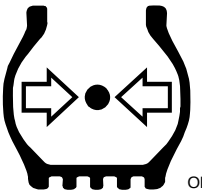

- Always wear seat belt.
- Keep head, arms and other body parts inside cab at all times.
- **Maintain proper tire pressure** at all times.
- Inspect brakes before driving undercarriage after digging. See page 3-34 for details.
- When machine is operating or driving on public roadways, **comply with all local, state and federal restrictions.**
- **When driving**, ensure boom and attachment are properly secured and positioned for maximum visibility and adequate clearances. Know the overall height of the machine.
- **Always check overhead and side boom clearances** carefully before driving. Position attachment/load to clear obstacles.
- Never drag boom or attachment while moving unit.

https://tractormanualz.com/

https://truckmanualshub.com/

Tip Over Hazard

- Understand how to properly use the capacity chart located in cab. **Do not exceed rated lift capacity**. Plan the lift to be sure it can be performed safely.
- Maintain proper tire pressure at all times.
- Do not depend on machine tipping as a warning of overload. Some load ratings are based on hydraulic lift capacity, not stability.
- Do not increase hydraulic relief settings to lift a load.
- Sudden swing braking can cause unexpected movement of the load and tip the machine.
- Tether suspended loads to restrict movement.

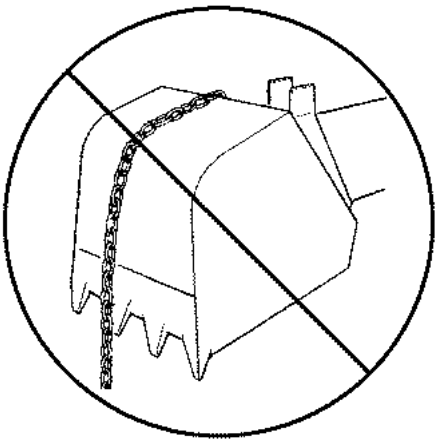
OAC0370

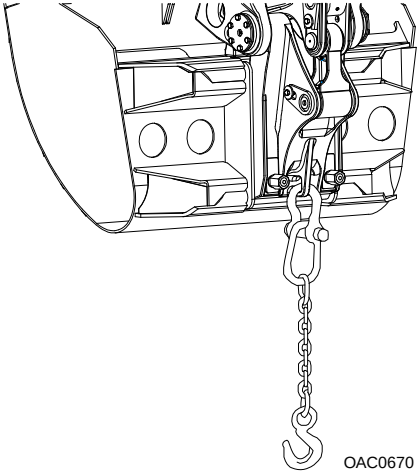
OAC0670

- Never pass load line over open bucket. Relief valves in bucket circuit could cause unexpected, dangerous movement of the load. Bucket linkage could also be damaged.
- Be sure the surface excavator is on is firm enough to support unit and allows for adequate traction.
- Select low travel speed for off-highway grade travel. See *“Right Hand Arm Pod”* on page 2-34.
- Do not travel over excessively steep slopes or excessively rough terrain.
- No load in bucket, attached to boom or any other part of machine during off-highway grade travel.
- Front axle lock cylinders automatically unlock during travel. Do not travel with load over side.
- Shutting off engine will cause front axle lock cylinders to unlock. Place load on ground before shutting off engine.

https://tractormanualz.com/

https://truckmanualshub.com/

Chemical Hazards

Exhaust Fumes

- **DO NOT** operate machine in an enclosed area without proper ventilation.
- **DO NOT** operate the machine in hazardous environments unless approved for that purpose by Gradall and site owner. Sparks from the electrical system and the engine exhaust can cause an explosion.
- If spark arrestors are required, be sure they are in place and in good working order.

Flammable Fuel

OW0300

- **DO NOT** fill the fuel tank or service the fuel system near an open flame, sparks or smoking materials. Engine fuel is flammable and can cause a fire and/or explosion.

WARNING

OW0021

Operating, servicing and maintaining this equipment can expose you to chemicals including gasoline, diesel fuel, lubricants, petroleum products, engine exhaust, carbon monoxide, and phthalates, which are known to the State of California to cause cancer and birth defects or other reproductive harm. To minimize exposure, avoid breathing exhaust, do not idle the engine except as necessary, service your vehicle in a well-ventilated area and wear gloves or wash your hands frequently when servicing your vehicle. Battery posts, terminals and related accessories contain lead and lead compounds, chemicals known to the state of California to cause cancer, birth defects or other reproductive harm. For more information go to www.P65Warnings.ca.gov. This website, operated by California's Office of Environmental Health Hazard Assessment, provides information about these chemicals and how individuals may be exposed to them.

https://tractormanualz.com/

https://truckmanualshub.com/

Hydraulic Fluid

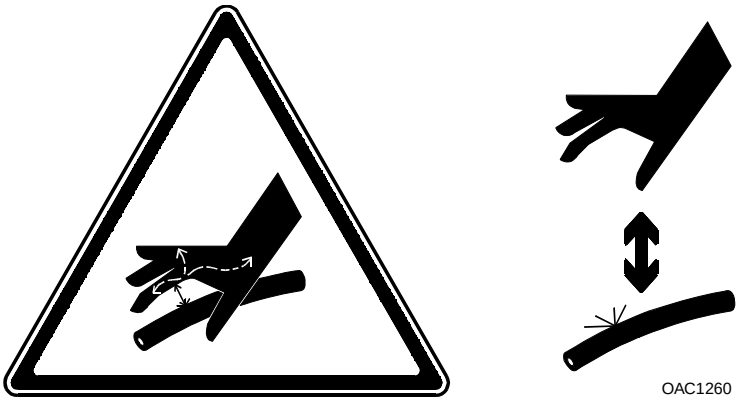

- **DO NOT use your hand to check for leaks**. Use a piece of cardboard or paper to search for leaks. Wear appropriate equipment to protect yourself from spraying fluid. If fluid is injected into the skin seek medical attention immediately.
- Stop engine and relieve trapped pressure before loosening any hydraulic fitting. Hydraulic oil is under enough pressure that it can penetrate the skin.
- **DO NOT** attempt to repair or tighten any hydraulic hoses or fittings while the engine is running or when the hydraulic system is pressurized.

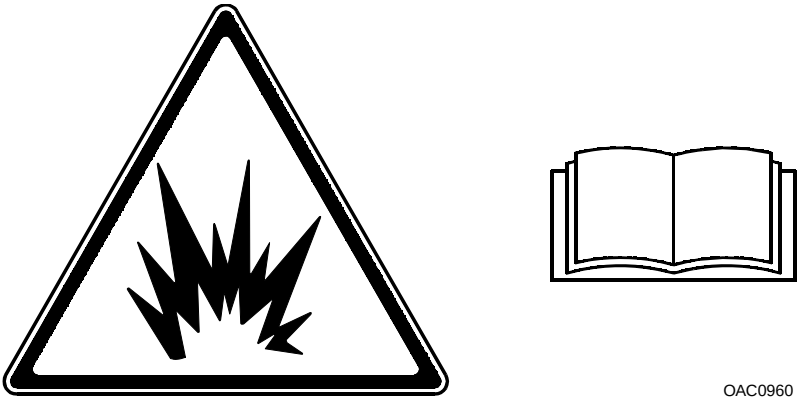

- Relieve pressure from the hydraulic reservoir using the vent valve near the reservoir breather before loosening the filter lid or cover.

https://tractormanualz.com/

https://truckmanualshub.com/

Battery

- Keep sparks, flames and lighted material away from batteries. Explosive gases could cause death or serious injury.

Dust Hazard

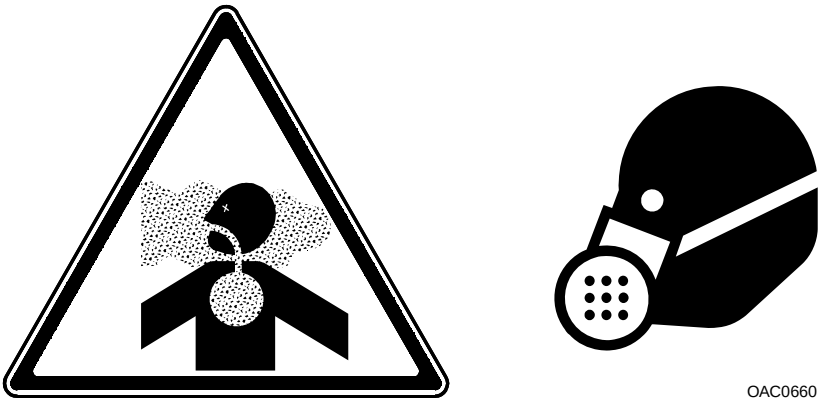

- Repeated or substantial breathing of hazardous dusts, including crystalline silica, could cause fatal or serious respiratory disease including silicosis. Concrete, masonry, many types of rock, and various other materials contain silica sand. California lists respirable crystalline silica as a substance known to cause cancer. Operation of this equipment under certain conditions may generate airborne dust particles that could contain crystalline silica. In those conditions personal protective equipment including an appropriate respirator must be used. If excessive dust is generated, a dust collection or suppression system should also be used during operation.

https://tractormanualz.com/

https://truckmanualshub.com/

1.4 PERSONAL PROTECTION EQUIPMENT

Wear all the protective clothing and personal safety devices issues to you or called for by job conditions. You may need:

- Hard hat
- Safety shoes
- Safety glasses, goggles or face shield
- Heavy gloves
- Hearing protection
- Reflective clothing
- Wet weather gear
- Respirator or filter mask

Wear adequate clothing for the job conditions.

Always know where to get assistance in the case of an emergency. Know where to find and how to use a first aid kit and fire extinguisher/fire suppression system.

https://tractormanualz.com/

https://truckmanualshub.com/

NOTES:

https://tractormanualz.com/

https://truckmanualshub.com/

SECTION 2 - PRE-OPERATION AND CONTROLS

2.1 PRE-OPERATION CHECKS & INSPECTION

Note: *Complete all required maintenance before operating unit.*

WARNING

OW0021

FALL HAZARD. Use extreme caution when checking items beyond your normal reach. Use an approved ladder. Failure to comply could result in death or serious injury.

Walk around inspection must be performed at beginning of each work shift or at each change of operator.

Ensure all Safety decals are legible and in place. Clean or replace as required. Refer to pages 2-5 through 2-7.

Before removing filler caps or fill plugs, wipe all dirt and grease away from the ports. If dirt enters these ports, it can severely reduce component life.

When adding fluids, refer to *"Product Specifications"* on page 7-1 to determine proper fluid type, and *"Service & Maintenance Schedules"* on page 5-3 for intervals.

https://tractormanualz.com/

https://truckmanualshub.com/

2.2 WALK-AROUND INSPECTION

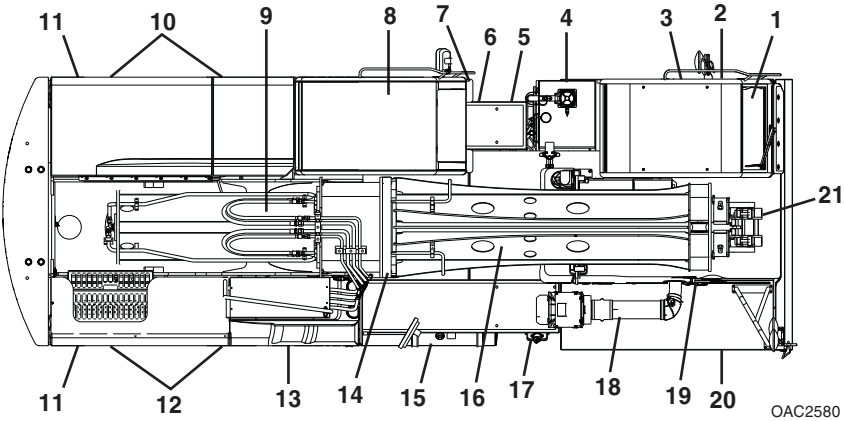

Begin your walk-around inspection at item 1, as noted below. Continue to your right, checking each item in sequence.

INSPECTION NOTE: In addition to any other criteria mentioned, on all components:

- Ensure there are no loose or missing parts and that all parts are securely fastened.
- Check for visible leaks and excessive wear.
- Inspect all structural members including attachment for cracks, excessive corrosion and other damage.

1. Undercarriage Cab -

- General appearance; no visible damage; Operator & Safety manual located in manual drawer.
- Grab handles and steps secure and clean.
- Window glass and mirrors clean and unobstructed. Adjust mirrors for maximum visibility, before and during operation. Be sure windows and doors are securely latched in open or closed position when operating. Replace damaged latches immediately.
- Check seat belt for working condition damage, replace belt if frayed or cut webbing, damaged buckles or loose mounting hardware.

2. Front Axle - Drag link undamaged; steer cylinder and oscillation lock cylinders undamaged, not leaking; hydraulic hoses undamaged, not leaking; brakes undamaged.

3. Wheel/Tire Assembly - No loose or missing lug nuts; proper inflation (see page 5-26 for details). No damage to rims or tires; axle bolts torqued.

https://tractormanualz.com/

https://truckmanualshub.com/

4. Hydraulic Reservoir - Recommended fluid level on sight gauge (see page 5-21 for instructions); filler/breather cap secure and working; oil is clear.
5. Air Tanks - Check for damage/leaks; open petcocks to eliminate condensation. See page 5-25 for instructions.
6. Battery Box - Battery cables tight, no visible damage or corrosion. Battery box cover properly latched. See page 5-28 for details.
7. Worklights- Clean, undamaged and aligned properly.
8. Upperstructure Cab -
   - General appearance; no visible damage; Operator & Safety manual located in manual drawer.
   - Grab handles and steps secure and clean.
   - Window glass and mirrors clean and unobstructed. Adjust mirrors for maximum visibility, before and during operation. Be sure windows and doors securely latch in open and closed position. Replace damaged latches immediately.
   - Check seat belt (if equipped) for damage, replace belt if frayed or cut webbing, damaged buckles or loose mounting hardware.
9. Center Pin - See Inspection Note.
10. Wheel/Tire Assemblies - No loose or missing lug nuts; proper inflation (see page 5-26 for details). No damage to rims or tires; axle bolts torqued.
11. Rear Axle(s)/Fenders - Check mud flaps for proper position and condition for highway operation; brakes undamaged.
12. Wheel/Tire Assemblies - No loose or missing lug nuts; proper inflation (see page 5-26 for details). No damage to rims or tires; axle bolts torqued.
13. Main Control Valve and Cover - See Inspection Note. Replace damaged latch and weak access cover support strut immediately.
14. Tilt Gear - Properly lubricated.
15. Fuel Tank - Check fuel level, refill as required (see page 5-20 for instructions); filler cap securely fastened.
16. Boom -
    - Rollers properly adjusted; no visible damage to boom hoses
    - Boom secure if machine is to be driven on highway.
17. DEF (Diesel Exhaust Fluid) Tank - Check DEF level, refill as required.
18. Air Cleaner - Air cleaner element condition indicator, check for clogged condition. Replace element as required.

https://tractormanualz.com/

https://truckmanualshub.com/

19. Engine Compartment -

- Engine crankcase, check oil level & refill as required.
- Check engine coolant level at overflow bottle and refill as required.Do not remove the radiator cap. Be sure antifreeze solution is adequate for expected temperatures. Be sure radiator and oil cooler fins are clean.
- Drive belt, check condition & replace as required.
- Engine cover properly latched and secured.
- Power steering fluid at proper level.
- Transmission fluid - no leaks.

20. Wheel/Tire Assembly - No loose or missing lug nuts; proper inflation (see page 5-26 for details). No damage to rims or tires; axle bolts torqued.

21. Attachment - Properly installed.

https://tractormanualz.com/

https://truckmanualshub.com/

2.3 SAFETY DECALS

Ensure all **DANGER**, **WARNING**, **CAUTION** and instructional decals and proper capacity charts are legible and in place. Clean and replace as required.

Upperstructure Decal Locations

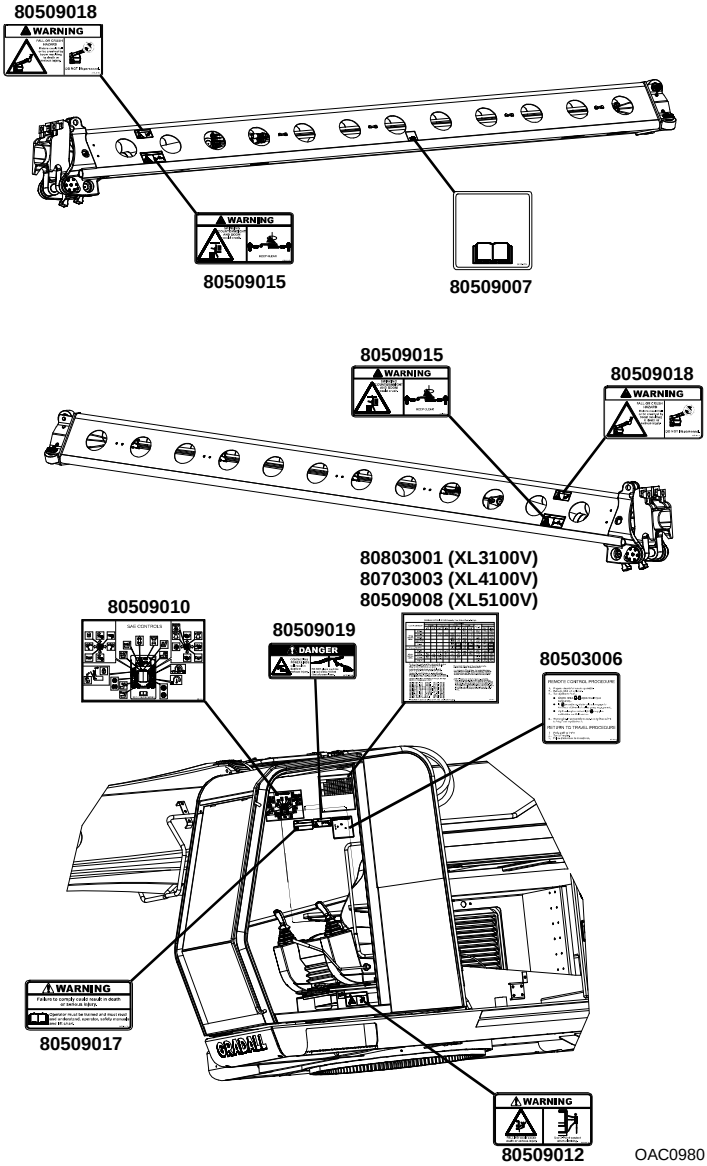

https://tractormanualz.com/

https://truckmanualshub.com/

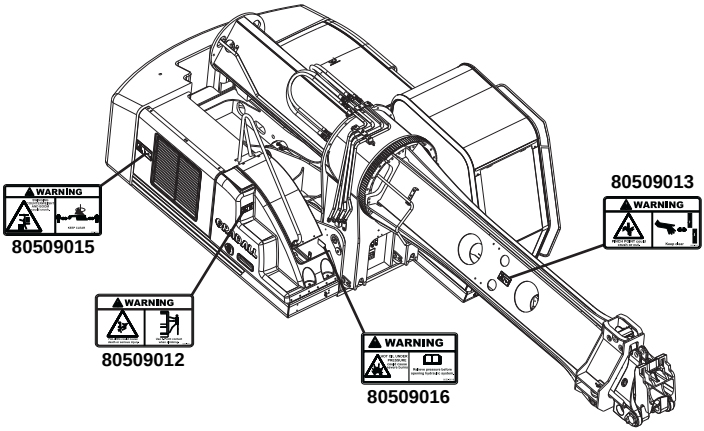

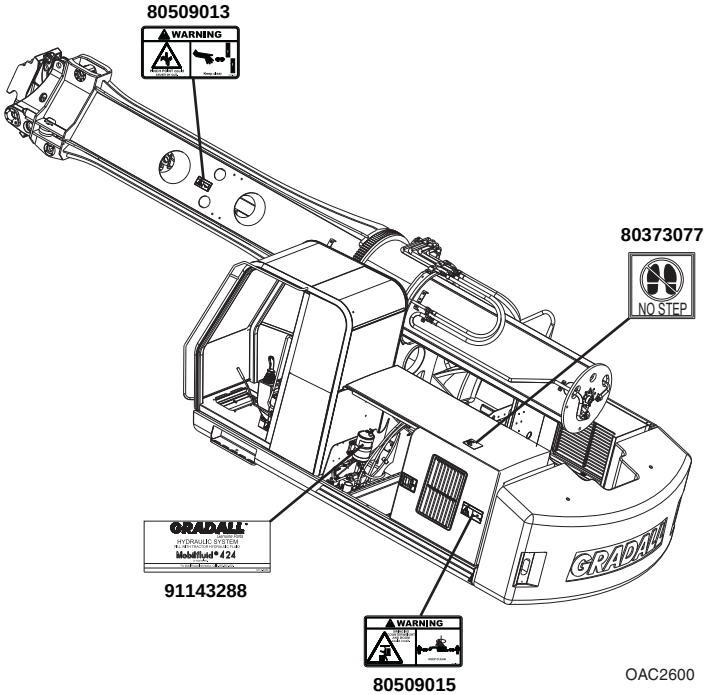

https://tractormanualz.com/

https://truckmanualshub.com/

Undercarriage Decal Locations

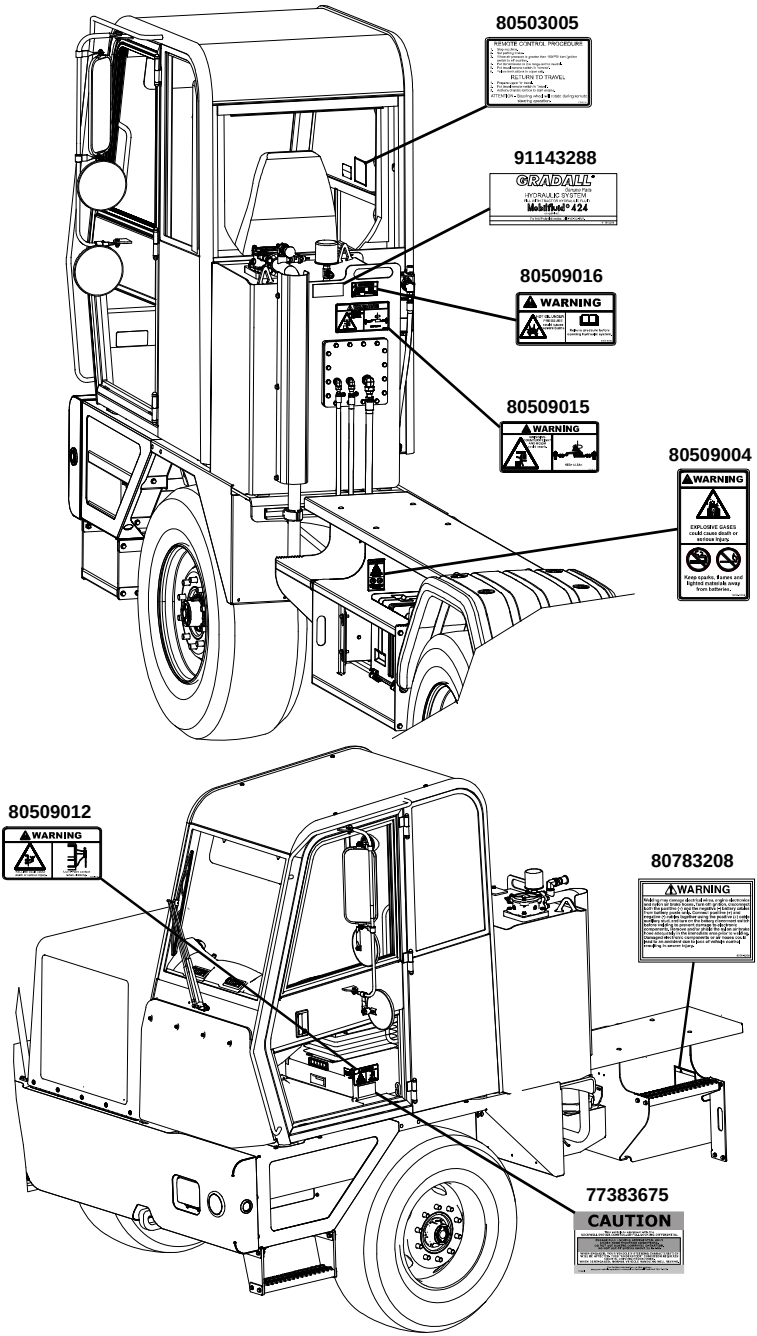

OAC1590

https://tractormanualz.com/

https://truckmanualshub.com/

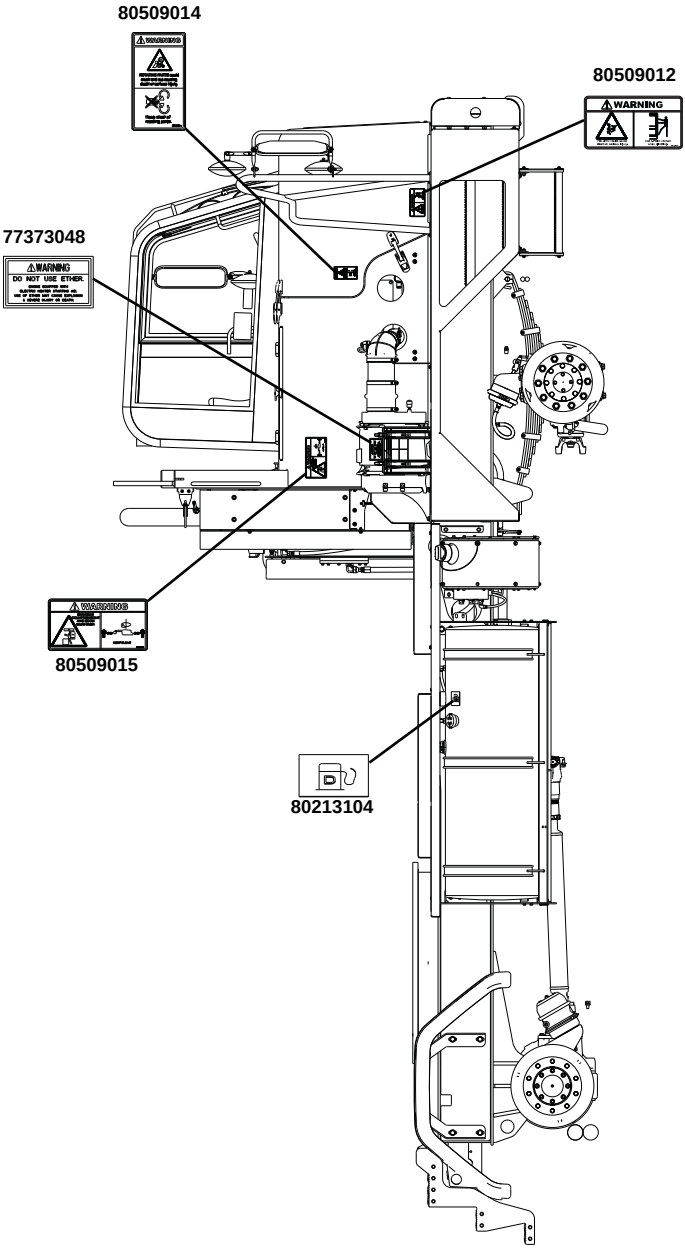

https://tractormanualz.com/

https://truckmanualshub.com/

NOTES:

https://tractormanualz.com/

https://truckmanualshub.com/

2.4 UNDERCARRIAGE CAB COMPONENTS

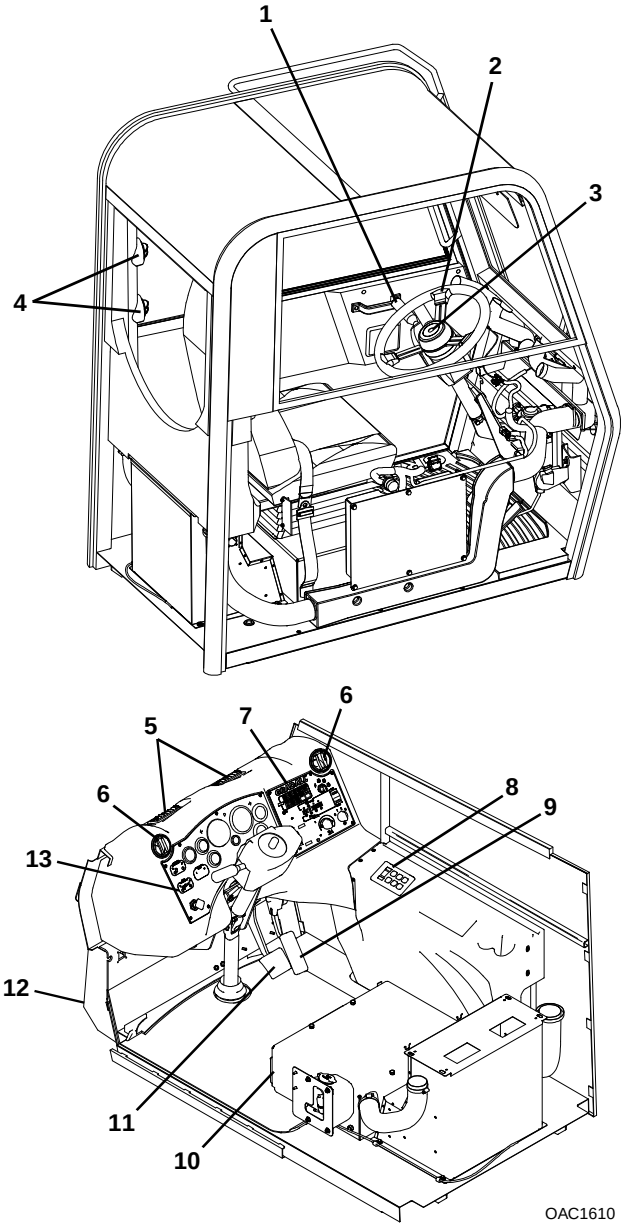

https://tractormanualz.com/

https://truckmanualshub.com/

1. Turn Signal/High Beam/Hazards Lever: See page 2-28 for details.
2. Steering Wheel: Turn steering wheel to left or right to steer the machine in the corresponding direction.
3. Horn Button: Depress button to sound horn.
4. Air Diffuser Vents
5. Defroster Vents
6. Air Vents
7. Right Hand Dash Panel: See page 2-23 for details.
8. Transmission Shift Selector: See "*Shifting Gears*" on page 3-10 for detailed operating instructions.
9. Accelerator Pedal: Pressing the pedal down increases engine speed.
10. Manual Drawer: Keep Operator & Safety manual with machine at all times.
11. Brake Pedal: Depress to slow or stop machine.
12. Circuit Board and Fuse Box: See *"Fuses"* on page 7-9.
13. Dash Panel: See page 2-22 for details.

https://tractormanualz.com/

https://truckmanualshub.com/

2.5 TRANSMISSION SHIFT SELECTOR

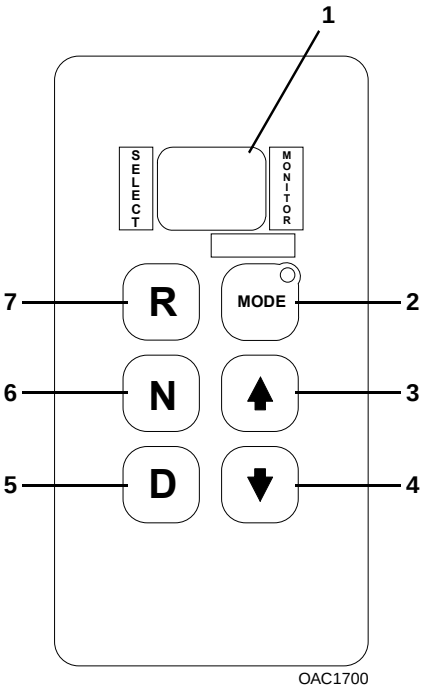

1. Digital Display
2. Mode Button: Pushbutton used to access/navigate prognostics/diagnostics.
3. Up Arrow: Pushbutton upshifts transmission when pressed. Also used to access/navigate prognostics/diagnostics.
4. Down Arrow: Pushbutton downshifts transmission when pressed. Also used to access/navigate prognostics/diagnostics.
5. Drive: Pushbutton shifts transmission to “Drive” when pressed.
6. Neutral: Pushbutton shifts transmission to “Neutral” when pressed.
7. Reverse: Pushbutton shifts transmission to “Reverse” when pressed.

https://tractormanualz.com/

https://truckmanualshub.com/

Prognostic Features

If the wrench icon **(1)** illuminates briefly in the digital display **(2)** after ignition is turned to the “RUN” position, then prognostics are enabled.

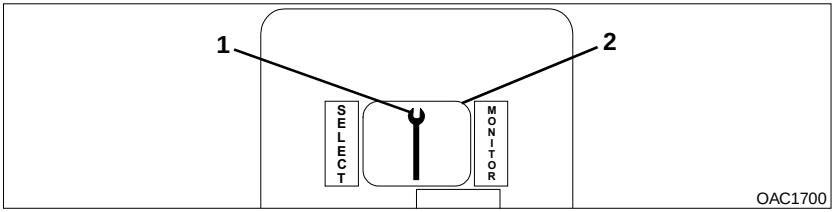

Oil Life Monitor

When fluid is due for a change, the wrench icon **(1)** is illuminated and remains solid for two minutes after “Drive” is selected.

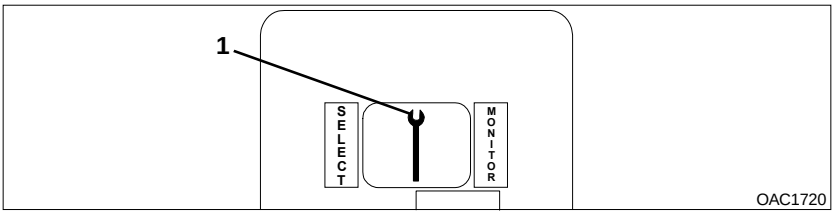

Filter Life Monitor

When the filter(s) is due for a change, the wrench icon **(1)** flashes on and off for two minutes after “Drive” is selected.

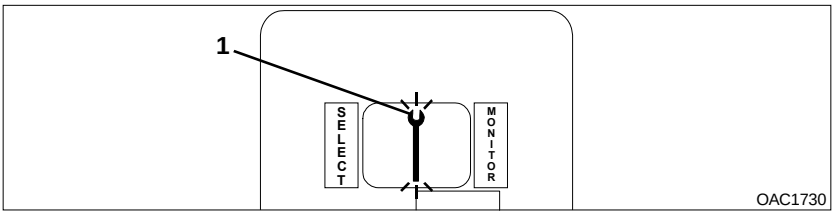

Transmission Health Monitor

When clutch maintenance is due, the wrench icon **(1)** comes on and remains solid during entire operational time of vehicle.

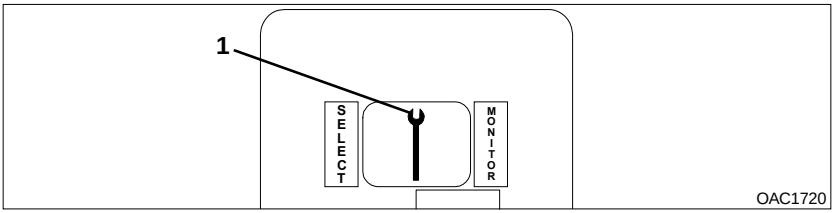

https://tractormanualz.com/

https://truckmanualshub.com/

Accessing Prognostics

When you are alerted via the wrench icon on the transmission shift selector that service is due, you can check the status by toggling through the shift selector display as follows. **Be sure to park the vehicle on a level surface, shift to N (Neutral) and apply park brake before accessing prognostics through the shift selector**

Oil Life Monitor

Simultaneously press the Up and Down arrows **(1)** two times. “oM” appears followed by a number from 99 to 0, which represents the percentage of oil life remaining before a fluid change is required.

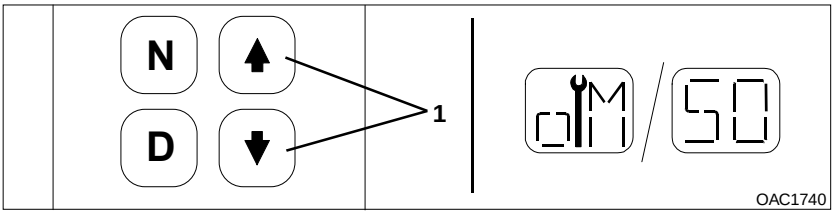

Filter Life Monitor

Simultaneously press the Up and Down arrows **(1)** three times. “FM” appears followed by either “oK” or “Lo”. “oK” means filter(s) do not need changed and “Lo” means filter(s) need changed.

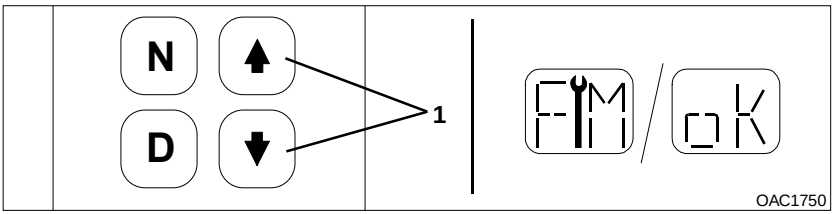

Transmission Health Monitor

Simultaneously press the Up and Down arrows **(1)** four times. “TM” appears followed by either “oK” or “Lo”. “oK” means no clutch maintenance is required, and “Lo” means clutch maintenance is required.

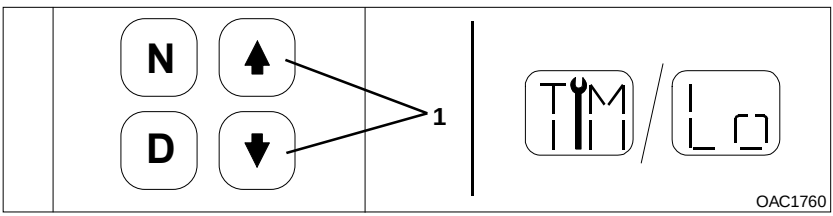

https://tractormanualz.com/

https://truckmanualshub.com/

Resetting Prognostics

Oil Life Monitor

Press and hold Mode button **(1)** for approximately 10 seconds while in Oil Life Monitor mode.
-Or-
Perform the following shift sequence **with the ignition on but the engine off**. Do not stop the sequence for more than three seconds once you have started:
N-D-N-D-N-R-N.

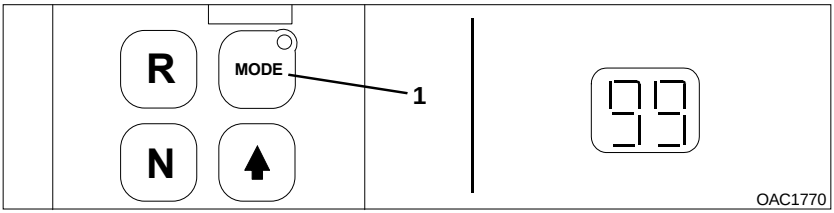

Note: *A "99" will display verifying that Oil Life Monitor has been reset.*

Filter Life Monitor

Press and hold Mode button **(1)** for approximately 10 seconds while in Filter Life Monitor mode.
-Or-
Perform the following shift sequence **with the ignition on but the engine off**. Do not stop the sequence for more than three seconds once you have started:
N-R-N-R-N-D-N.

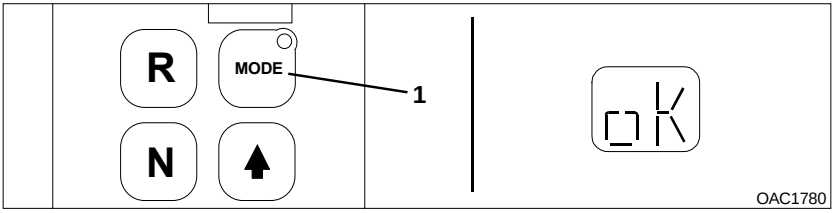

Note: *The wrench icon will illuminate briefly and "oK" will display verifying Filter Life Monitor has been reset.*

Transmission Health Monitor

The wrench icon clears automatically when appropriate conditions are detected. Transmission Health Monitor must be reset manually using Allison DOC™ after correcting a clutch system issue.

https://tractormanualz.com/

https://truckmanualshub.com/

Checking Fluid Levels

Use the following procedure to display oil level information.

To enter the oil level function:

1. Park vehicle on a level surface, shift to N (Neutral) and apply the parking brake.
2. Simultaneously press the Up and Down arrows **(1)** one time.

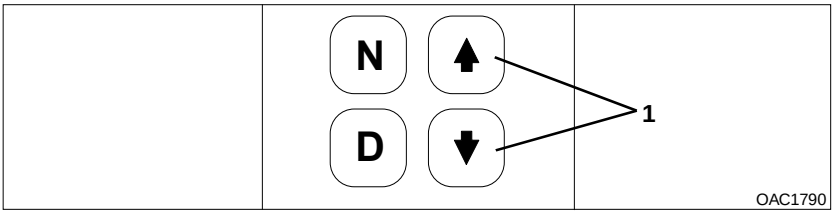

3. The fluid level reading may be delayed until the following conditions are met:
   Note: *The indication of a delayed fluid level check is a flashing display and a numerical countdown.*
   - Engine is at idle.
   - The fluid temperature is between 60°C (140°F) and 104°C (220°F).
   - Transmission is in N (Neutral)
   - The vehicle has been stationary for approximately two minutes to allow the fluid to settle.
   - The engine is at idle (below 1000 rpm - not “fast” idle).
4. The shift selector displays the oil level data as follows:

- **Correct Fluid Level** - “oL” is displayed (“oL” represents “Fluid (Oil) Level Check”) followed by “oK”. The “oK” display indicates the fluid is within the correct fluid level zone. The sensor display and the transmission dipstick may not agree exactly because the oil level sensor compensates for fluid temperature.

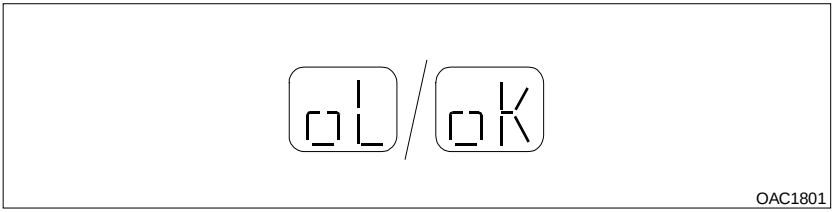

https://tractormanualz.com/

https://truckmanualshub.com/

- **Low Fluid Level** - “oL” is displayed (“oL” represents “Fluid (Oil) Level Check”) followed by “Lo” (“Lo” represents “Low Oil Level”) and the number of quarts the transmission fluid is low.

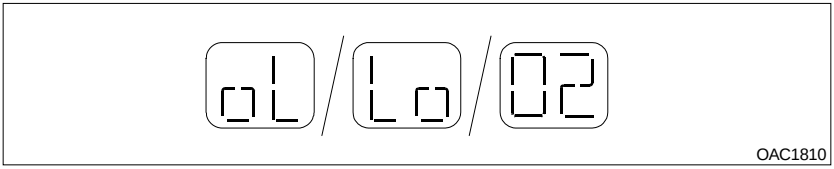

Example: “oL Lo 02” indicates that 2 additional quarts of fluid will bring the fluid level within the middle of the “oK” zone.

- **High Fluid Level** - “oL” is displayed (“oL” represents “Fluid (Oil) Level Check”) followed by “HI” (“HI” represents “High Oil Level”) and the number of quarts the transmission fluid is overfilled.

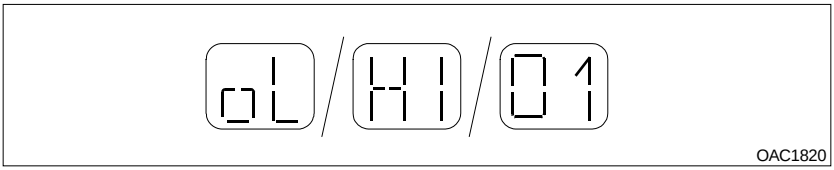

Example: “oL HI 01” indicates 1 quart of fluid above the full transmission level.

- **Invalid For Display** - If any of the previous conditions are not met, the shift selector will display “oL” (“oL” represents “Fluid (Oil) Level Check”) followed by **“--”** and a numberical display. The numerical display is a fault code and indicates conditions are not proper to recieve the fluid level information or there is a system malfunction. The fault codes that may be encountered are shown below:

DISPLAY FAULT CODE	FLUID LEVEL FAULT CODE DESCRIPTION
oL, - -, OX*	Setting time too short
oL, - -, 50 or, EL	Engine speed too low
oL, - -, 59 or, EH	Engine speed too high
oL, - -, 65 or, SN	Neutral must be selected
oL, - -, 70 or, TL	Sump fluid temperature too low
oL, - -, 79 or, TH	Sump fluid temperature too high
oL, - -, 89 or, SH	Output speed high
oL, - -, 95 or, FL	Oil level sensor failed**

OAC1830

*A number between 8 and 1 that flashes during countdown period.
**Report sensor failure display to a distributor or dealer in your area.

TRANSMISSION DAMAGE. A low or high fluid level can cause overheating and irregular shift patterns. Incorrect fluid level can damage the transmission.

CAUTION
OW0031

- **To exit Oil Level Function, press any range button (R, N, D).**

https://tractormanualz.com/

https://truckmanualshub.com/

Diagnostic Codes

To enter the diagnostic code function:

1. Bring the vehicle to a complete stop and apply the parking brake.
2. Simultaneously press the Up and Down arrows **(1)** five times.

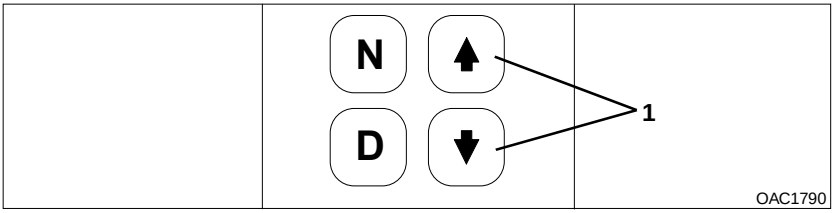

To read diagnostic codes in the digital display:

Diagnostic codes will appear two characters at a time. When the diagnostic function is entered, the first code (position “d1”) is displayed as follows:

Example Code: **P 07 22** *Displayed as:* **d1, P, 07, 22**

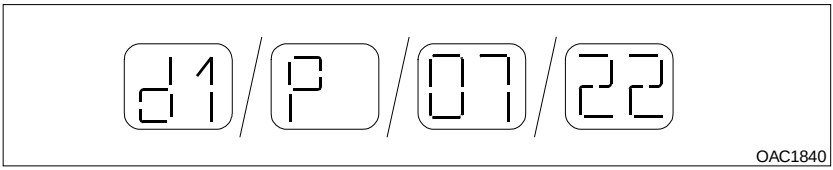

The Code Position (d1) is the first item displayed, followed by the Diagnostic Trouble Code (DTC),** P, 07, 22. Each item is displayed for about one second. The display cycles continuously until the next code list position is accessed by pressing the “MODE” button.

For a detailed list of Diagnostic Transmission Codes, see page 2-19.

***Diagnostic Trouble Code (DTC) - The diagnostic trouble code number referring to the general condition or area of fault detected by the TCM.*

To clear diagnostic codes:

Press and hold the “MODE” button **(1)** for 10 seconds to clear both active and inactive codes.

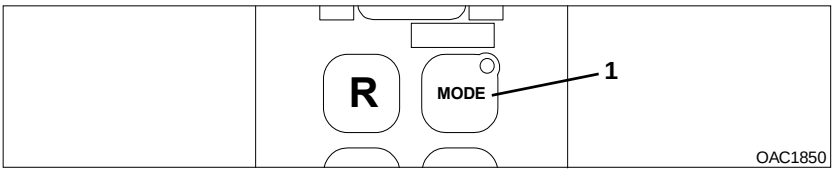

Note: *Be sure to record all codes displayed before they are cleared. This is essential for troubleshooting. Begin operating as normal.*

https://tractormanualz.com/

https://truckmanualshub.com/

Diagnostic Transmission Codes

DIAGNOSTIC CODE	CODE DESCRIPTION
C1312	RETARDER REQUEST SENSOR, FAILED LOW
C1313	RETARDER REQUEST SENSOR, FAILED HIGH
P0122	PEDAL POSITION SENSOR, LOW VOLTAGE
P0123	PEDAL POSITION SENSOR, HIGH VOLTAGE
P0218	TRANSMISSION FLUID OVER TEMPERATURE
P0602	TCM NOT PROGRAMMED
P0610	TCM VEHICLE OPTIONS (TRANSID) ERROR
P0613	TCM PROCESSOR
P0614	TORQUE CONTROL DATA MISMATCH - ECM/TCM
P0634	TCM INTERNAL TEMPERATURE TOO HIGH
P063E	AUTO CONFIGURATION THROTTLE INPUT NOT PRESENT
P063F	AUTO CONFIGURATION ENGINE COOLANT TEMP INPUT NOT PRESENT
P0658	ACTUATOR SUPPLY VOLTAGE1 (HSD1), LOW
P0659	ACTUATOR SUPPLY VOLTAGE1 (HSD1), HIGH
P0701	TRANSMISSION CONTROL SYSTEM PERFORMANCE
P0702	TRANSMISSION CONTROL SYSTEM ELECTRICAL (TRANSID)
P0703	BRAKE SWITCH CIRCUIT MALFUNCTION
P0708	TRANSMISSION RANGE SENSOR, HIGH
P070C	TRANSMISSION FLUID SENSOR, LOW
P070D	TRANSMISSION FLUID SENSOR, HIGH
P0711	TRANSMISSION FLUID TEMPERATURE SENSOR PERFORMANCE
P0712	TRANSMISSION FLUID TEMPERATURE SENSOR, LOW
P0713	TRANSMISSION FLUID TEMPERATURE SENSOR, HIGH
P0716	TURBINE SPEED SENSOR PERFORMANCE
P0717	TURBINE SPEED SENSOR, NO SIGNAL
P0719	BRAKE SWITCH ABS, INPUT LOW
P071A	RELS INPUT, FAILED ON
P071D	GENERAL PURPOSE FAULT
P0721	OUTPUT SPEED SENSOR PERFORMANCE
P0722	OUTPUT SPEED SENSOR, NO SIGNAL
P0726	ENGINE SPEED SENSOR PERFORMANCE
P0727	ENGINE SPEED SENSOR, NO SIGNAL
P0729	INCORRECT 6TH GEAR RATIO
P0731	INCORRECT 1ST GEAR RATIO
P0733	INCORRECT 2ND GEAR RATIO
P0734	INCORRECT 3RD GEAR RATIO
P0735	INCORRECT 4TH GEAR RATIO
P0736	INCORRECT 5TH GEAR RATIO

OAC1860

https://tractormanualz.com/

https://truckmanualshub.com/

Diagnostic Transmission Codes, (cont'd)

P0741	TORQUE CONVERTER CLUTCH SYSTEM, STUCK OFF
P0776	PRESSURE CONTROL SOLENOID 2, STUCK OFF
P0777	PRESSURE CONTROL SOLENOID 2, STUCK ON
P0796	PRESSURE CONTROL SOLENOID 3, STUCK OFF
P0797	PRESSURE CONTROL SOLENOID 3, STUCK ON
P0842	TRANSMISSION PRESSURE SWITCH 1, LOW
P0843	TRANSMISSION PRESSURE SWITCH 1, HIGH
P088A	DETERIORATED FILTER
P088B	VERY DETERIORATED FILTER
P0880	TCM POWER INPUT SIGNAL
P0881	TCM POWER INPUT SIGNAL PERFORMANCE
P0882	TCM POWER INPUT SIGNAL, LOW
P0883	TCM POWER INPUT SIGNAL, HIGH
P0884	TRANSMISSION COMPONENT SLIPPING
P0897	TRANSMISSION FLUID AT LIMIT
P0960	PRESSURE CONTROL SOLENOID MAIN MOD CONTROL, OPEN
P0962	PRESSURE CONTROL SOLENOID MAIN MOD CONTROL, LOW
P0963	PRESSURE CONTROL SOLENOID MAIN MOD CONTROL, HIGH
P0964	PRESSURE CONTROL SOLENOID 2 CONTROL, OPEN
P0966	PRESSURE CONTROL SOLENOID 2 CONTROL, LOW
P0967	PRESSURE CONTROL SOLENOID 2 CONTROL, HIGH
P0968	PRESSURE CONTROL SOLENOID 3 CONTROL, OPEN
P0970	PRESSURE CONTROL SOLENOID 3 CONTROL, LOW
P0971	PRESSURE CONTROL SOLENOID 3 CONTROL, HIGH
P0973	SHIFT SOLENOID 1 CONTROL, LOW
P0974	SHIFT SOLENOID 1 CONTROL, HIGH
P0975	SHIFT SOLENOID 2 CONTROL, OPEN
P0976	SHIFT SOLENOID 2 CONTROL, LOW
P0977	SHIFT SOLENOID 2 CONTROL, HIGH
P0989	RETARDER PRESSURE SENSOR, FAILED LOW
P0990	RETARDER PRESSURE SENSOR, FAILED HIGH
P1739	INCORRECT LOW GEAR RATIO
P1891	THROTTLE POSITION SENSOR PWM SIGNAL, LOW
P1892	THROTTLE POSITION SENSOR PWM SIGNAL, HIGH
P2184	ENGINE COOLANT TEMPERATURE SENSOR, LOW
P2185	ENGINE COOLANT TEMPERATURE SENSOR, HIGH
P2637	TORQUE MANAGEMENT FEEDBACK SIGNAL (SEM)
P2641	TORQUE MANAGEMENT FEEDBACK SIGNAL (LRTP)
P2670	ACTUATOR SUPPLY VOLTAGE 2 (HSD2), LOW
P2671	ACTUATOR SUPPLY VOLTAGE 2 (HSD2), HIGH
P2685	ACTUATOR SUPPLY VOLTAGE 3 (HSD3), LOW
P2686	ACTUATOR SUPPLY VOLTAGE 3 (HSD3), HIGH

OAC1870

https://tractormanualz.com/

https://truckmanualshub.com/

P2714	PRESSURE CONTROL SOLENOID 4, STUCK OFF
P2715	PRESSURE CONTROL SOLENOID 4, STUCK ON
P2718	PRESSURE CONTROL SOLENOID 4, STUCK OPEN
P2720	PRESSURE CONTROL SOLENOID 4 CONTROL, LOW
P2721	PRESSURE CONTROL SOLENOID 4 CONTROL, HIGH
P2723	PRESSURE CONTROL SOLENOID 1, STUCK OFF
P2724	PRESSURE CONTROL SOLENOID 1, STUCK ON
P2727	PRESSURE CONTROL SOLENOID 1 CONTROL, OPEN
P2729	PRESSURE CONTROL SOLENOID 1 CONTROL, LOW
P2730	PRESSURE CONTROL SOLENOID 1 CONTROL, HIGH
P2736	PRESSURE CONTROL SOLENOID 5 CONTROL, OPEN
P2738	PRESSURE CONTROL SOLENOID 5 CONTROL, LOW
P2739	PRESSURE CONTROL SOLENOID 5 CONTROL, HIGH
P2740	RETARDER OIL TEMPERATURE, HOT
P2742	RETARDER OIL TEMPERATURE SENSOR, LOW
P2743	RETARDER OIL TEMPERATURE SENSOR, HIGH
P2761	TCC PCS CONTROL, OPEN
P2763	TCC PCS CONTROL, HIGH
P2764	TCC PCS CONTROL, LOW
P278A	KICKDOWN INPUT, FAILED ON
P2789	CLUTCH ADAPTIVE LEARNING AT LIMIT
P2793	GEAR SHIFT DIRECTION
P2808	PRESSURE CONTROL SOLENOID 6, STUCK OFF
P2809	PRESSURE CONTROL SOLENOID 6, STUCK ON
P2812	PRESSURE CONTROL SOLENOID 6 CONTROL, OPEN
P2814	PRESSURE CONTROL SOLENOID 6 CONTROL, LOW
P2815	PRESSURE CONTROL SOLENOID 6 CONTROL, HIGH
U0001	HIGH SPEED CAN BUS RESET COUNTER OVERRUN (IESCAN)
U0010	CAN BUS RESET COUNTER OVERRUN
U0100	LOST COMMUNICATION WITH ECM/PCM (J1587)
U0103	LOST COMMUNICATION WITH GEAR SHIFT MODULE (SHIFT SELECTOR) 1
U0115	LOST COMMUNICATION WITH ECM
U0291	LOST COMMUNICATION WITH GEAR SHIFT MODULE (SHIFT SELECTOR) 2
U0304	INCOMPATIBLE GEAR SHIFT MODULE 1 (SHIFT SELECTOR ID)
U0333	INCOMPATIBLE GEAR SHIFT MODULE 2 (SHIFT SELECTOR ID)
U0404	INVALID DATA RECIEVED FROM GEAR SHIFT MODULE (SHIFT SELECTOR) 1
U0592	INVALID DATA RECIEVED FROM GEAR SHIFT MODULE (SHIFT SELECTOR) 2

OAC1880

https://tractormanualz.com/

https://truckmanualshub.com/

2.6 UNDERCARRIAGE CAB CONTROLS & INDICATORS

Dash Panel

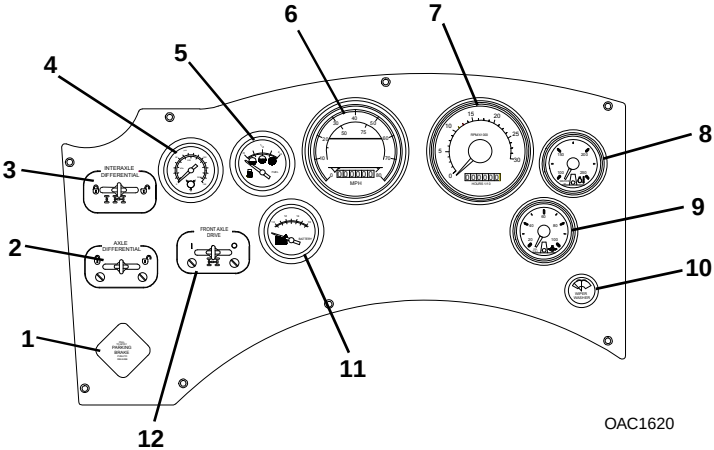

1. Parking Brake: See page 3-8 for details.
2. Differential Lock Switch: See page 3-11 for details.
3. Interaxle Differential Lock Switch (XL4100V & XL5100V only): See page 3-11 for details.
4. Dual Air Pressure Gauge: See *"Service Brake"* on page 3-5.
5. Fuel Gauge/DEF Level Indicator: Gauge for the fuel tank. LED indicator for Diesel Exhaust Fluid (DEF) level. A low DEF warning light will illuminate red and a pulsing alarm is activated to indicate Diesel Exhaust Fluid (DEF) level is less than 14%. Light will begin to blink 30 minutes after DEF level reaches less than 10% and engine torque will begin to derate.
6. Speedometer: Indicates undercarriage speed in miles per hour (mph).
7. Tachometer w/Engine Hourmeter: Tachometer indicates engine speed in revolutions per minute (rpm). Hourmeter indicates total time of engine operation in hours and tenths of hours.
8. Engine Coolant Temperature Gauge: Gauge for engine coolant temperature.
9. Engine Oil Pressure Gauge: Gauge for engine oil pressure.
10. Wiper/Washer Switch: Rotate switch clockwise to activate wiper. Press and hold switch to activate washer. Rotate switch counterclockwise to turn off wiper.
11. Voltmeter: Gauge indicating battery voltage.
12. Front Axle Drive Switch (if equipped): See page 3-13 for details.

https://tractormanualz.com/

https://truckmanualshub.com/

Right Hand Dash Panel

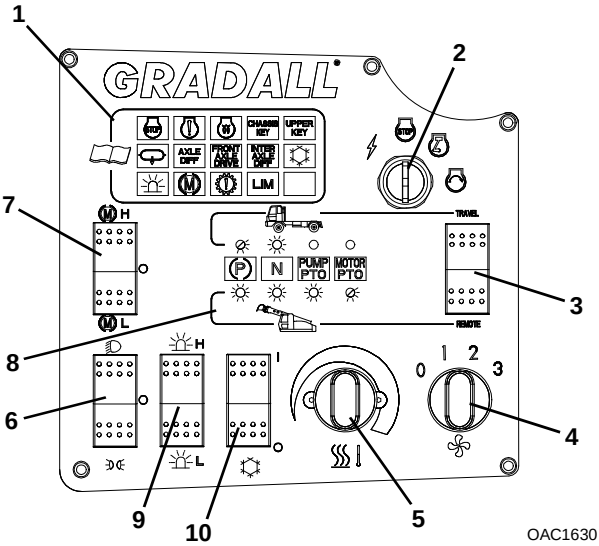

1. Information Display Area: See page 2-25 for details.
2. Ignition: Key Activated. See page 2-27 for details.
3. Travel/Remote Switch: See *"Travel/Remote Display Area"* on page 2-24.
4. Fan Speed: Rotary switch for heater and air conditioner (if equipped).
5. Temperature Control: Adjustable rotary switch.
6. Light Switch: 3-position rocker switch. Depress top of switch to activate headlights; depress bottom of switch to activate marker lights. Middle position is 'OFF'.
7. Engine Brake Switch (if equipped): 3-position rocker switch. Depress top of switch to activate compression brake; depress bottom of switch to activate compression/exhaust brake. Middle position is 'OFF'.
8. Travel/Remote Display Area: See page 2-24 for details.
9. Rotating Beacon Switch (if equipped): 3-position rocker switch. Depress top of switch to activate high-pulse strobe; depress bottom of switch to activate low-pulse strobe. Middle position is 'OFF'.
10. A/C Switch (if equipped): On/Off switch.

https://tractormanualz.com/

https://truckmanualshub.com/

Travel/Remote Display Area

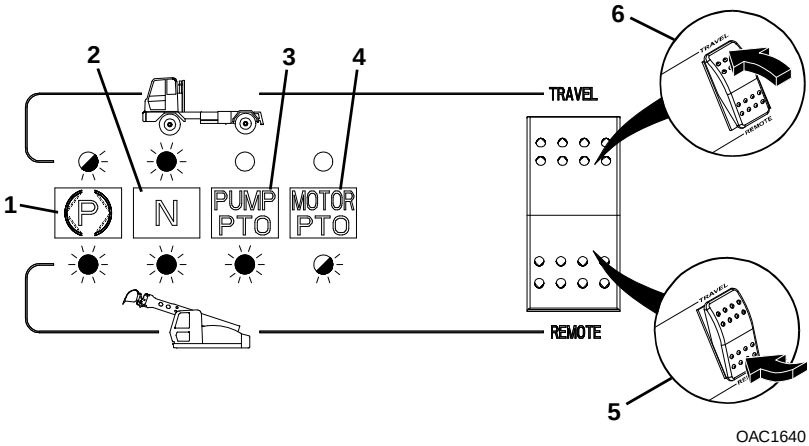

1. Parking Brake Indicator: Illuminates red to indicate parking brake is activated (See page 3-8). Parking brake must be applied to start engine while in remote control mode.
2. Neutral Gear Indicator: Illuminates green to indicate unit is in neutral gear. Transmission must be in neutral gear to start engine in either remote control mode or travel mode.
3. Pump PTO Indicator: Illuminates green to indicate main PTO (pump) is engaged. PTO (pump) must be off to start engine in travel mode. PTO (pump) must be engaged to start engine in remote control mode.
4. Motor PTO Indicator: Illuminates green to indicate PTO travel motor is engaged. PTO must be engaged to propel machine in remote control mode.
5. Remote Control Active: Depress bottom of switch for remote (upperstructure) operation.
6. Travel Mode Active: Depress top of switch for travel (undercarriage) operation.

https://tractormanualz.com/

https://truckmanualshub.com/

Information Display Area

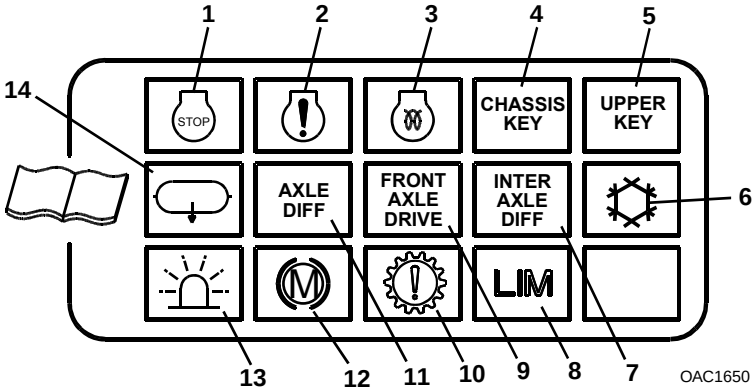

Note: *When ignition is turned to the "RUN" position (see page 2-27 for details), the engine stop, check engine, and optional engine preheat displays illuminate for approximately two seconds and then go off. At lower temperatures, the optional engine preheat light may continue to illuminate until the intake manifold warms to proper temperature.*

1. Engine Stop Indicator: Illuminates red and a pulsing alarm is activated to indicate excessive engine temperature or low engine oil pressure. Stop engine immediately and repair before continued use.
2. Check Engine Indicator: Illuminates yellow to indicate an engine malfunction. Stop engine and repair before continued use.
3. Engine Preheat Indicator (if equipped): Illuminates yellow to indicate grid heaters are warming intake manifold to proper starting temperature.
4. Undercarriage Key Indicator: Illuminates green to indicate undercarriage ignition key is in the "RUN" position (see page 2-27 for details).
5. Upperstructure Key Indicator: Illuminates green to indicate upperstructure ignition key is in the "RUN" position (see page 2-44 for details).
6. Air Conditioning Indicator (if equipped): Illuminates green to indicate air conditioner is activated.
7. Interaxle Differential Indicator (XL4100V & XL5100V only): Illuminates green to indicate interaxle differential lock is engaged.
8. Torque Limiter Indicator: Illuminates yellow and an alarm is activated to indicate Diesel Exhaust Fluid (DEF) level is low enough to begin engine torque deration. If light is solid, engine torque is greater than 50%. If light is blinking, engine torque is less than 50%.
9. Front Axle Drive Indicator (if equipped): Illuminates green if front axle drive is activated.

https://tractormanualz.com/

https://truckmanualshub.com/

10. Check Transmission Indicator: Illuminates yellow to indicate a problem has been detected in the transmission and shifting may be restricted.

11. Axle Differential Lock Indicator: Illuminates green to indicate rear axle differential lock is engaged (XL3100V). Illuminates green to indicate front rear tandem axle differential lock is engaged (XL4100V & XL5100V).

12. Engine Brake Indicator (if equipped): Illuminates green if engine brake is activated.

13. Rotating Beacon Indicator (if equipped): Illuminates green if beacon is activated.

14. Low Air Indicator: Illuminates red to indicate air system pressure is below minimum operating pressure. An audible alarm is also activated. Do not move undercarriage while illuminated.

https://tractormanualz.com/

https://truckmanualshub.com/

Ignition

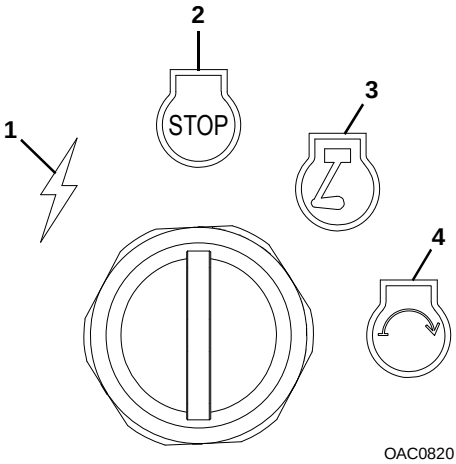

1. ACC: Voltage is available for all electrical functions.
2. OFF: Engine off.
3. RUN: Prohibits rotating key switch to position 4 in the event the engine does not start. Rotate the key to position 2 then back to position 4 to re-engage the starter.
4. START: Engine start.

https://tractormanualz.com/

https://truckmanualshub.com/

Turn Signal/High Beam/Hazards Lever

The turn signal/high beam/hazards lever **(1)** operates the turn signals, hazards and low beam/high beam function for the headlights.

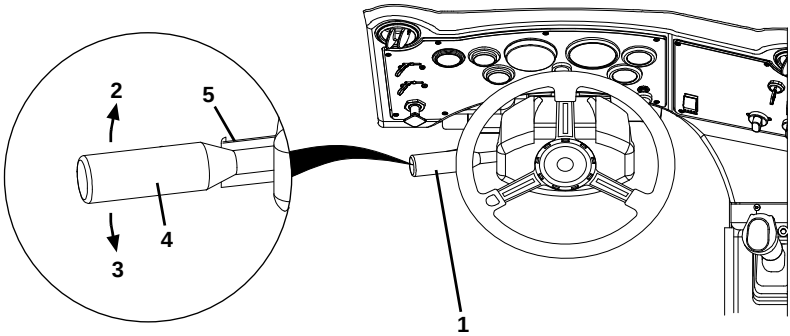

OAC0830

Turn Signal/Hazards

- Push the lever forward **(2)** to activate the right turn signal.
- Pull the lever back **(3)** to activate the left turn signal.
- Pull hazard switch **(5)** to activate hazards. Push lever **(1)** forward or back to deactivate hazards.

Low Beam/High Beam

- Raise/lower the lever **(1)** to switch between low beam and high beam.

https://tractormanualz.com/

https://truckmanualshub.com/

NOTES:

https://tractormanualz.com/

https://truckmanualshub.com/

2.7 UPPERSTRUCTURE CAB COMPONENTS

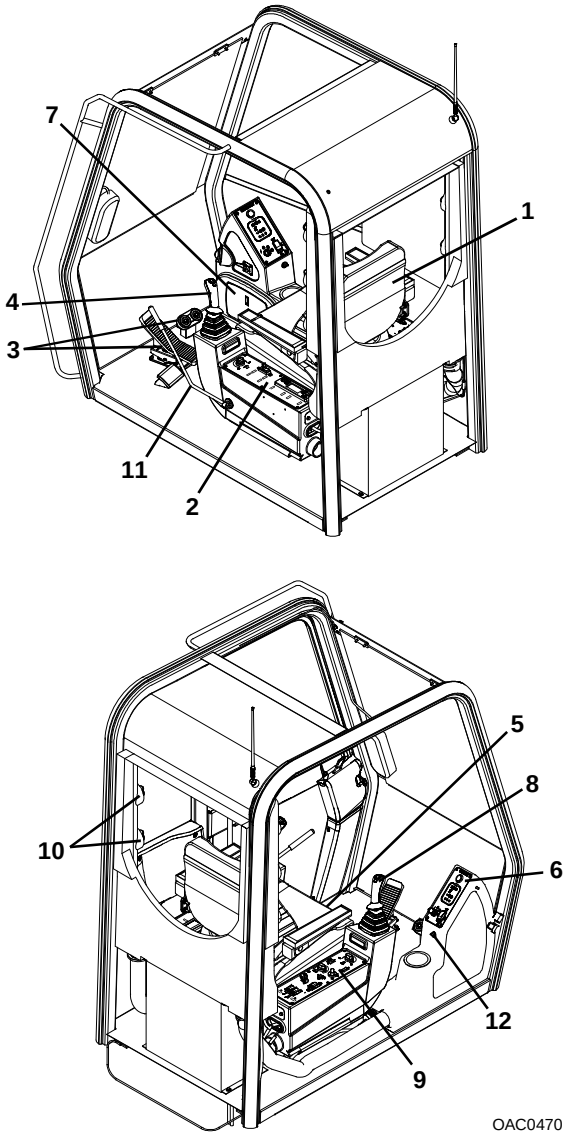

https://tractormanualz.com/

https://truckmanualshub.com/

1. Operator Seat: See *"Operator Seat Adjustments"* on page 2-43.
2. Left Hand Arm Pod: See page 2-36 for details.
3. Foot Pedals: See *"Driving Undercarriage from Upperstructure Cab"* on page 3-19.
4. Left Hand Joystick: See *"Joystick Controls"* on page 2-39.
5. Manual Drawer (located under operator seat): Keep Operator & Safety manual with machine at all times.
6. Electronic Monitoring Unit: See page 2-32 for details.
7. Circuit Board and Fuse Box: See *"Fuses"* on page 7-9.
8. Right Hand Joystick: See *"Joystick Controls"* on page 2-39.
9. Right Hand Arm Pod: See page 2-34 for details.
10. Air Vents
11. Control Cut Out Lever: See *"Activating the Joysticks"* on page 2-39.
12. 12-Volt Accessory Outlet: A cigarette lighter is provided. The receptacle can be used to power an auxiliary 12 VDC device equipped with the appropriate adapter.

https://tractormanualz.com/

https://truckmanualshub.com/

2.8 UPPERSTRUCTURE CAB CONTROLS & INDICATORS

Electronic Monitoring Unit

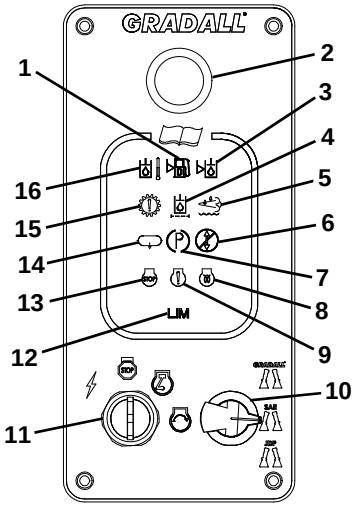

OAC1660

Note: *When key is turned to the "RUN" position (see page 2-44 for details), the engine stop, check engine, and optional engine preheat displays illuminate for approximately two seconds and then go off. Depending on the temperature, the optional engine preheat light may continue to illuminate until the intake manifold warms to proper temperature.*

1. Fuel Level Indicator: Illuminates red if fuel level falls below 25% of capacity.
2. Mini Siren: Pulsing sound indicates engine shutdown has been initiated - Steady sound indicates low air system pressure or a travel lockout condition.
3. Hydraulic Oil Level Indicator: Illuminates red if oil level falls below acceptable operating level.
4. Hydraulic Filter Indicator: Illuminates red to indicate hydraulic reservoir filter needs replaced. See page 5-23 for details.
5. DEF Level Indicator: Illuminates red to indicate Diesel Exhaust Fluid (DEF) level is less than 14%. Light will begin to blink 30 minutes after DEF level reaches less than 10% and engine torque will begin to derate.
6. Travel Lockout Indicator: Illuminates yellow if travel motor or range gear is not engaged. An audible alarm is also activated.
7. Parking Brake Indicator: Illuminates red to indicate the parking brake is applied.
8. Engine Preheat Indicator (if equipped): Illuminates yellow to indicate grid heaters are warming intake manifold to proper starting temperature.

https://tractormanualz.com/

https://truckmanualshub.com/

9. Check Engine Indicator: Illuminates yellow to indicate a malfunction. Stop engine and repair before continued use.

10. Joystick Control Pattern Selection Switch: See *"Joystick Control Pattern Selection"* on page 2-38.

11. Ignition: Key Activated. See page 2-44 for details.

12. Torque Limiter Indicator: Illuminates yellow to indicate Diesel Exhaust Fluid (DEF) level is low enough to begin engine torque deration. If light is solid, engine torque is greater than 50%. If light is blinking, engine torque is less than 50%.

13. Engine Stop Indicator: Illuminates red and a pulsing alarm is activated to indicate excessive engine temperature or low engine oil pressure. Stop engine immediately and repair before continued use.

14. Low Air Indicator: Illuminates red to indicate air system pressure is below minimum operating pressure. An audible alarm is also activated. Do not move undercarriage while illuminated.

15. Check Transmission Indicator: Illuminates red to indicate a problem has been detected in the transmission and shifting may be restricted.

16. Hydraulic Oil Temperature Indicator:

    - Flashes red to indicate below normal hydraulic oil operating temperature. Operate machine at reduced engine rpm & pump flow until display no longer flashes.
    - Illuminates red if hydraulic oil temperature is above safe operating temperature.

https://tractormanualz.com/

https://truckmanualshub.com/

Right Hand Arm Pod

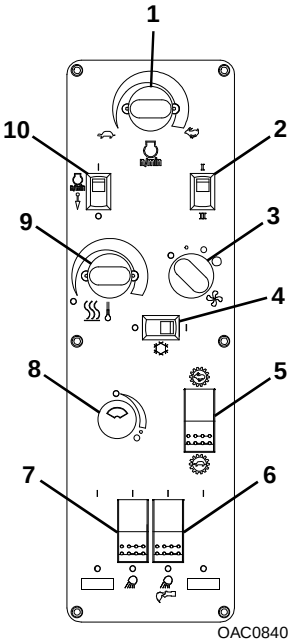

1. Engine Speed: Rotary switch. Rotate switch clockwise to increase engine rpm; rotate counterclockwise to decrease engine rpm.
2. Mode Select Switch: Depress front of switch (I) for fine grade mode. Depress back of switch (II) for dig mode.
3. Fan Speed: Rotary switch for heater and air conditioner fan.
4. Air Conditioning Switch: On/Off switch.
5. Travel Speed Switch: Depress front of switch for high travel speed. Depress back of switch for low (creeper) travel speed.

Note: *If travel speed is switched while unit is in motion, the machine will not shift to selected travel speed until the travel pedal is released and digging brake is set.*

6. Boom Lights Switch: On/Off switch.
7. Work Lights Switch: On/Off switch.
8. Intermittent Wiper/Washer Switch: See *"Intermittent Wiper/Washer"* on page 2-45.
9. Temperature Control: Adjustable rotary switch.

https://tractormanualz.com/

https://truckmanualshub.com/

10. Auto Idle Override Switch: Depress front of switch (I) to activate auto idle. Depress back of switch (II) to deactivate auto idle.

- With auto idle activated, engine speed will return to low idle after 7 seconds of hydraulic control inactivity. Once controls are activated, engine resumes speed set by the operator.
- With auto idle deactivated, engine speed remains as set by the operator.

https://tractormanualz.com/

https://truckmanualshub.com/

Left Hand Arm Pod

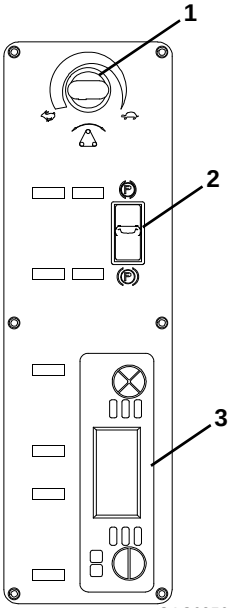

OAC0850

1. Boom Tilt Speed Switch: Rotary switch. Rotate switch clockwise to decrease boom tilt speed; rotate counterclockwise to increase boom tilt speed.
2. Park Brake Switch: See page 2-46 for details.
3. AM/FM Radio

https://tractormanualz.com/

https://truckmanualshub.com/

NOTES:

https://tractormanualz.com/

https://truckmanualshub.com/

Joystick Control Pattern Selection

The control pattern selection switch allows the operator to select from three joystick control patterns; GRADALL, SAE and JOHN DEERE. The pattern must be selected with the ignition key in the “OFF” position. If a new pattern is selected while the engine is running, it will not change until the engine is turned off then restarted.

When a control pattern is changed, the corresponding control decal must be displayed in the cab.

GRADALL Control Pattern

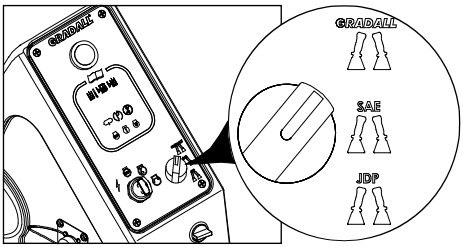

GRADALL CONTROL DECAL OVERLAY 80509021

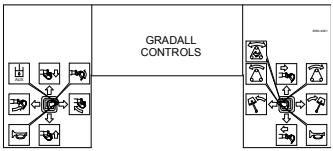

OAC1670

SAE Control Pattern

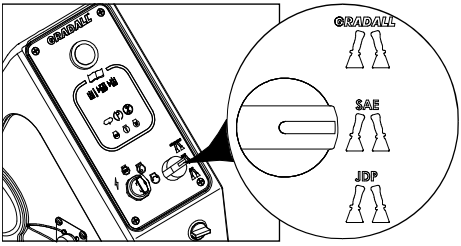

SAE CONTROL DECAL 80509010

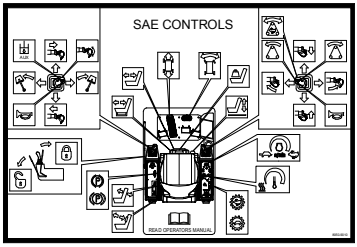

OAC1680

JOHN DEERE Control Pattern

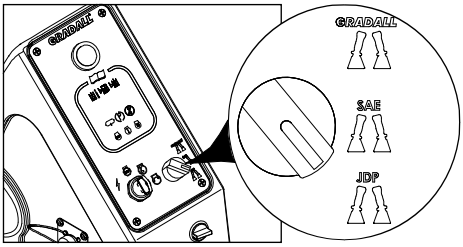

JOHN DEERE CONTROL DECAL OVERLAY 80509022

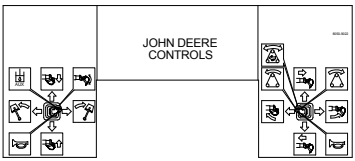

OAC1690

https://tractormanualz.com/

https://truckmanualshub.com/

Joystick Controls

Activating the Joysticks

The joysticks will remain locked/inactive until the control cut out lever **(1)** located on the left hand arm pod **(2)** is moved to the unlocked/active position.

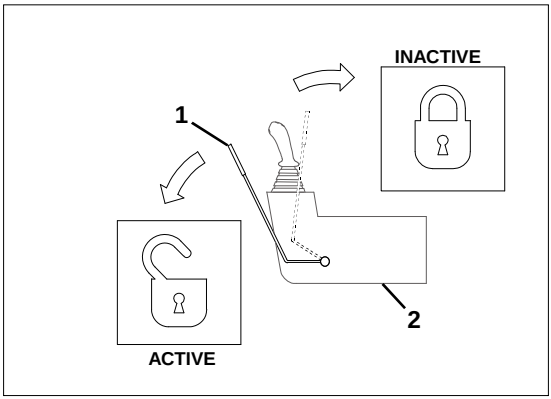

OAC0920

Joystick Control Patterns

Before operating, refer to the position of the joystick control pattern switch located on the electronic monitoring unit to verify control pattern setting. Ensure the joystick decal matches the machine controls before operating.

https://tractormanualz.com/

https://truckmanualshub.com/

SAE Joystick Controls

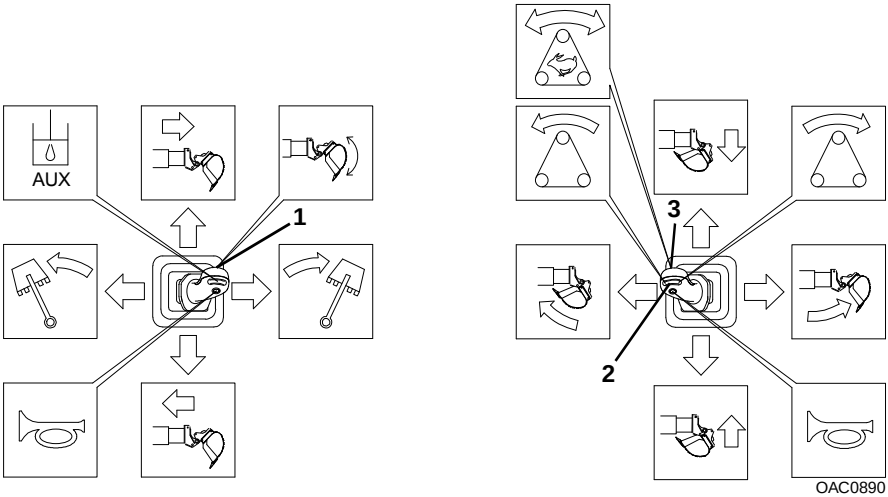

Left Hand Joystick Functions

- Move the joystick back to retract boom; move joystick forward to extend boom. Move joystick right to swing boom right; move joystick left to swing boom left.
- Attachment shake button **(1)** allows excess dirt or debris to be removed from the boom attachment.
- For two simultaneous boom functions, move the joystick between quadrants. For example, moving the joystick forward and to the left will extend and swing the boom left simultaneously.

Right Hand Joystick Functions

- Move the joystick back to raise boom; move joystick forward to lower boom. Move joystick right to open tool; move joystick left to close tool.
- Left-click boom tilt button **(2)** to tilt boom counterclockwise; right-click boom tilt button **(2)** to tilt boom clockwise.
- Use fast tilt button **(3)** simultaneously with boom tilt button **(2)** to momentarily increase boom tilt speed.
- For two simultaneous boom functions, move the joystick between quadrants. For example, moving the joystick forward and to the left will lower the boom and close the tool simultaneously.

https://tractormanualz.com/

https://truckmanualshub.com/

GRADALL Joystick Controls

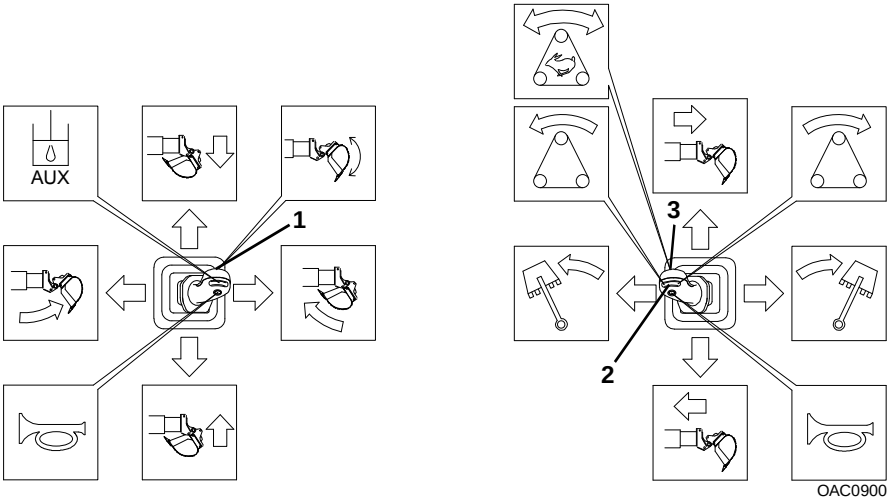

Left Hand Joystick Functions

- Move the joystick back to raise boom; move joystick forward to lower boom. Move joystick right to close tool; move joystick left to open tool.
- Attachment shake button **(1)** allows excess dirt or debris to be removed from the boom attachment.
- For two simultaneous boom functions, move the joystick between quadrants. For example, moving the joystick forward and to the left will lower boom and open tool simultaneously.

Right Hand Joystick Functions

- Move the joystick back to retract boom; move joystick forward to extend boom. Move joystick right to swing boom right; move joystick left to swing boom left.
- Left-click boom tilt button **(2)** to tilt boom counterclockwise; right-click boom tilt button **(2)** to tilt boom clockwise.
- Use fast tilt button **(3)** simultaneously with boom tilt button **(2)** to momentarily increase boom tilt speed.
- For two simultaneous boom functions, move the joystick between quadrants. For example, moving the joystick forward and to the left will extend and swing the boom left simultaneously.

https://tractormanualz.com/

https://truckmanualshub.com/

JOHN DEERE Joystick Controls

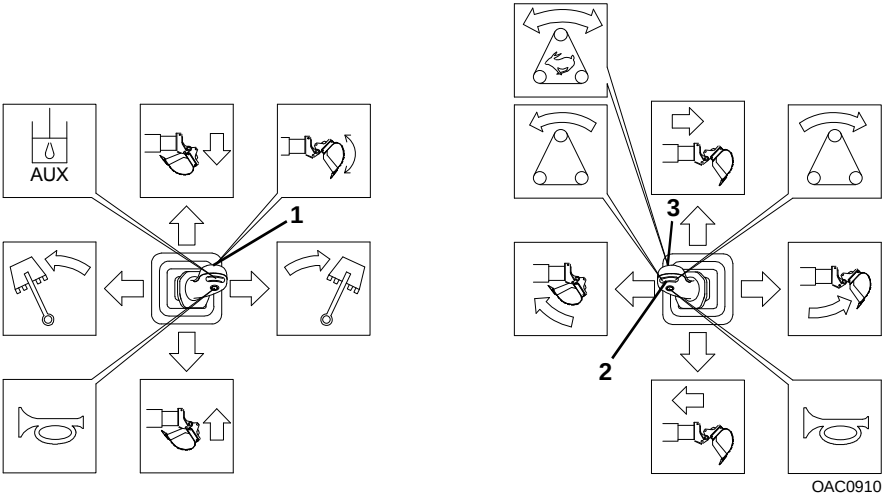

Left Hand Joystick Functions

- Move the joystick back to raise boom; move joystick forward to lower boom. Move joystick right to swing boom right; move joystick left to swing boom left.
- Attachment shake button **(1)** allows excess dirt or debris to be removed from the boom attachment.
- For two simultaneous boom functions, move the joystick between quadrants. For example, moving the joystick forward and to the left will lower and swing boom left simultaneously.

Right Hand Joystick Functions

- Move the joystick back to retract boom; move joystick forward to extend boom. Move joystick right to open tool; move joystick left to close tool.
- Left-click boom tilt button **(2)** to tilt boom counterclockwise; right-click boom tilt button **(2)** to tilt boom clockwise.
- Use fast tilt button **(3)** simultaneously with boom tilt button **(2)** to momentarily increase boom tilt speed.
- For two simultaneous boom functions, move the joystick between quadrants. For example, moving the joystick forward and to the left will extend boom and close the tool simultaneously.

https://tractormanualz.com/

https://truckmanualshub.com/

Operator Seat Adjustments

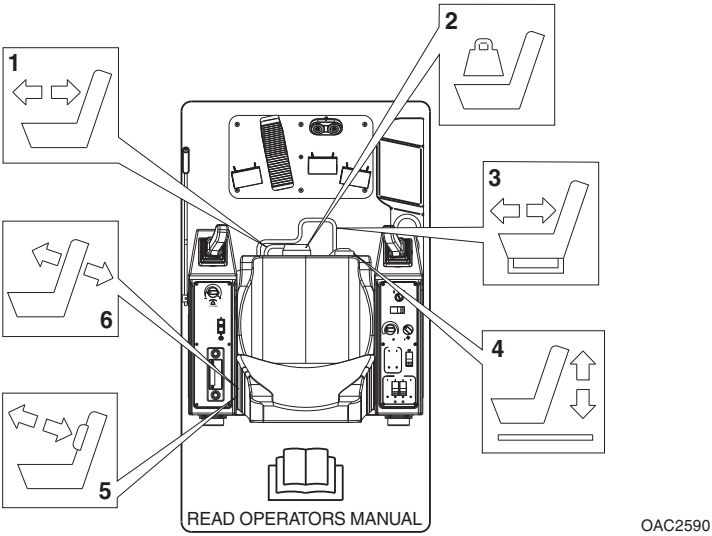

Prior to starting engine adjust seat for position and comfort.

1. Upper Seat Fore and Aft Adjustment Control
2. Weight Adjustment Control
3. Lower Seat Fore and Aft Adjustment Control
4. Height Adjustment Control
5. Lumbar Adjustment Control
6. Seat Back Adjustment

https://tractormanualz.com/

https://truckmanualshub.com/

Ignition

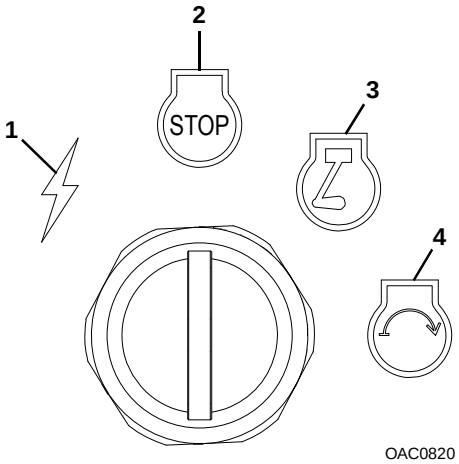

1. ACC: Voltage is available for all electrical functions.
2. OFF: Engine off.
3. RUN: Prohibits rotating key switch to position 4 in the event the engine does not start. Rotate the key to position 2 then back to position 4 to re-engage the starter.
4. START: Engine start.

https://tractormanualz.com/

https://truckmanualshub.com/

Intermittent Wiper/Washer

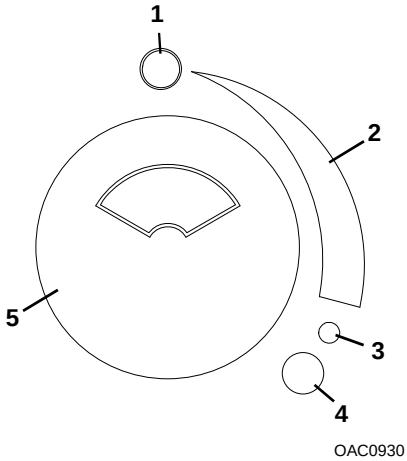

1. OFF
2. DELAY: Rotating knob clockwise decreases delay.
3. LOW: Low wiper speed. No delay.
4. HIGH: High wiper speed. No delay.
5. WASHER: Press and hold switch to activate washer.

https://tractormanualz.com/

https://truckmanualshub.com/

Park Brake Switch

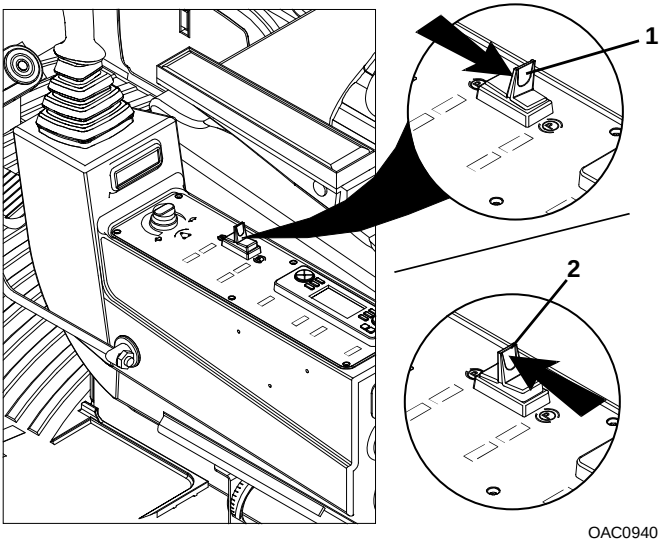

OAC0940

- Park Brake Switch: This switch controls the application and release of the park brake. Indicator light on electronic monitoring unit illuminates to indicate brake is applied.
- With the engine running and the park brake switch in “OFF” position **(1)**, park brakes are disengaged. With switch in “ON” position **(2)**, park brake is engaged and transmission will not engage forward or reverse.

https://tractormanualz.com/

https://truckmanualshub.com/

SECTION 3 - OPERATION

3.1 TRAVEL MODE ENGINE OPERATION

Starting Engine from Undercarriage Cab

1. Perform walk-around inspection on page 2-2
2. Apply the parking brake. Put transmission in neutral. Using the travel/remote switch, select the travel position.
3. With throttle pedal in idle position, turn ignition to “ON” position. The Engine Stop, Check Engine, and optional Preheat lights will illuminate for approximately two seconds and go out.
4. Disengage interaxle differential lock (XL4100V & XL5100V only) and differential lock for highway travel (refer to page 3-11 for procedure).
5. Verify PTO lights are not illuminated (drive motor disengaged).
6. When Optional Preheat light goes out, turn ignition switch clockwise to “START” position. **Notice!:** The engine must not start or crank with the transmission in gear. Release key immediately when engine starts. If engine does not start after three attempts, check fuel supply system.
7. After engine starts, observe oil pressure gauge. If gauge remains on zero for more than 15 seconds, stop engine and determine cause. Correct before restarting engine.
8. Operate engine at idle speed for three to five minutes before operating with a load. Increase engine speed slowly.

Normal Engine Operation

- Observe gauges frequently to be sure all engine systems are functioning properly.
- **Be alert for unusual noises or vibration.** When an unusual condition is noticed, park machine in a safe position and perform shut-down procedure. See *“Travel Mode Engine Shutdown”* on page 3-14 or *“Remote Mode Engine Shutdown”* on page 3-33. Report condition to your supervisor or maintenance personnel.
- **Avoid prolonged idling.** If the engine is not being used, turn it off.

https://tractormanualz.com/

https://truckmanualshub.com/

Cold Weather Starting Aids

- It is the **owners responsibility** to determine proper use of starting aid with regard to engine and starting aid manufacturer's instruction.
- An ether starting aid may be used with this engine **only** if it **does not** have the optional **grid heater**.

CAUTION

OW0031

ENGINE EXPLOSION. If your excavator is equipped with a cold start aid, do not spray additional ether into air cleaner. If machine is not equipped with cold start aid, follow instructions listed in the engine manual **supplied** with the excavator. Failure to comply may result in death or serious injury.

https://tractormanualz.com/

https://truckmanualshub.com/

3.2 CHECKS BEFORE UNDERCARRIAGE OPERATION

This section outlines the checks to be performed at the beginning of each work shift or at each change of operator. Refer to page 3-34 for procedure to check brakes after remote control operation and digging. Repair any deficiencies before driving or operating the equipment.

1. Check all lights and turn signals, defroster, windshield wiper and washer for proper operation.
2. Check park brake and service brakes to ensure they are working properly.
3. Check operation of steering while moving slowly in first gear. Be alert for any increase in effort needed to turn wheels and any unusual steering response to normal steering effort.
4. Check operation of horn, back-up alarm, and any other signal devices. Must be audible from inside operator's cab with the engine running.
5. Observe oil pressure gauge with engine running at operating temperature and speed.
6. Observe voltmeter indication of alternator output. Proper output is approximately 24 V. with engine running at 2000 RPM (without optional grid heaters active).
7. Observe water temperature gauge. Proper operating temperature is approximately 160-210°F (71-104°C).
8. Observe low air warning light. Light should continue to illuminate and an audible alarm will sound until brake system pressure reaches approximately 60 psi. Proper brake system pressure is 60-125 psi. Do not release parking brake or move undercarriage while low air warning light is illuminating.

https://tractormanualz.com/

https://truckmanualshub.com/

3.3 TRAVEL MODE BRAKE SYSTEM

The air brake system includes service brakes, emergency brakes, parking brakes and digging brakes.

CAUTION

OW0031

NEW BRAKES. New brakes need increased stopping distance. Brake capability will improve after several stops. Failure to stop may result in death or serious injury.

WARNING

OW0021

BRAKING HAZARDS. Always wear seat belt to avoid being thrown from driver's seat during braking emergency.

Do not "fan" the brake valve pedal. A long series of rapid brake applications could reduce system pressure to a point where effective service braking will be lost until brake pressure is restored.

Do not operate undercarriage or upperstructure while low air indicator is illuminated. If light comes on while undercarriage is moving, stop in a safe area as soon as possible. If undercarriage will not maintain the proper brake pressure, notify maintenance personnel immediately for repair of condition.

https://tractormanualz.com/

https://truckmanualshub.com/

Service Brake

- The operating pressure range for service brakes is 60-125 psi (414/862 kpa).
- A dual air pressure gauge **(1)** is furnished to indicate pressure in front and rear portions of the system.

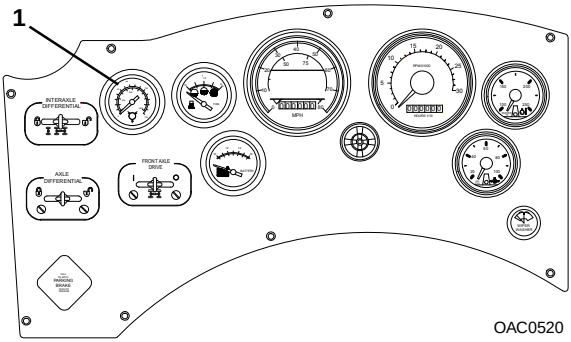

- The red needle indicates pressure in tank #1 which supplies the front axle brakes.
- The white needle indicates pressure in tank #2 which supplies the rear axle brakes.
- If pressure in either portion of the system falls below safe operating range, the low air indicator light will illuminate and an audible alarm will sound.

https://tractormanualz.com/

https://truckmanualshub.com/

Emergency Brake

The emergency brake functions only when air pressure has been lost from the brake system.

WARNING

OW0021

EMERGENCY BRAKE. Emergency brake will not stop undercarriage in as short a distance as the service brakes.

XL3100V

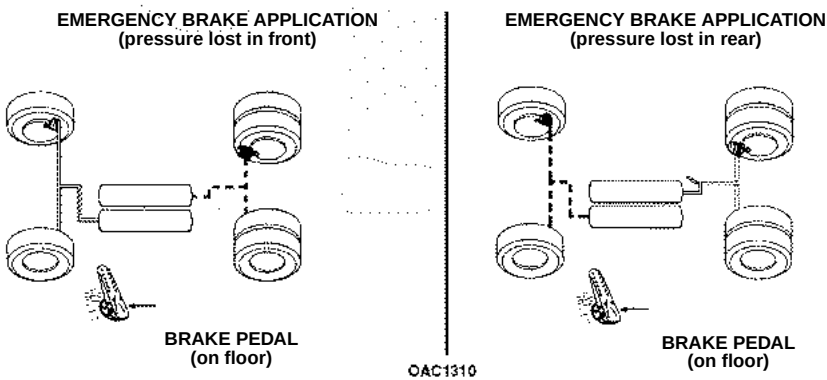

XL4100V & XL5100V

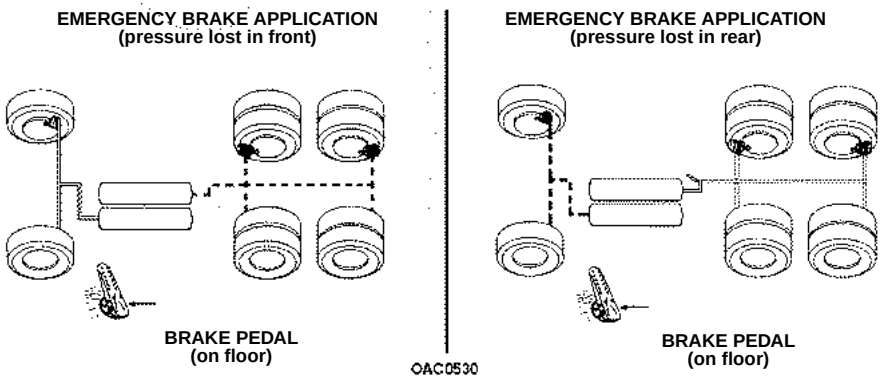

- If air pressure is lost from the front portion of the dual brake system, normal actuation of the brake pedal will apply service brakes to the wheels of rear axle. There will be no braking of the wheels of the front axle.
- If air pressure is lost from the rear portion of the dual brake system, normal actuation of the brake pedal will apply service brakes to the wheels of the front axle and apply the spring brakes to the wheels of the rear axle.

https://tractormanualz.com/

https://truckmanualshub.com/

XL3100V

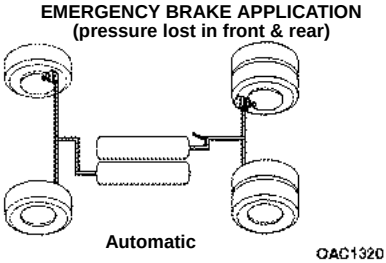

XL4100V & XL5100V

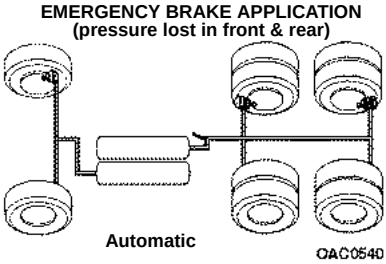

- In the event air pressure is lost from the system, the spring brakes will begin to apply as pressure drops to 60 psi (414 kpa) and there will be a complete application when pressure decreases to 40 psi (276 kpa).
- Air pressure is required to release the spring brakes, therefore they will remain ON until pressure can be restored.

https://tractormanualz.com/

https://truckmanualshub.com/

Parking Brake

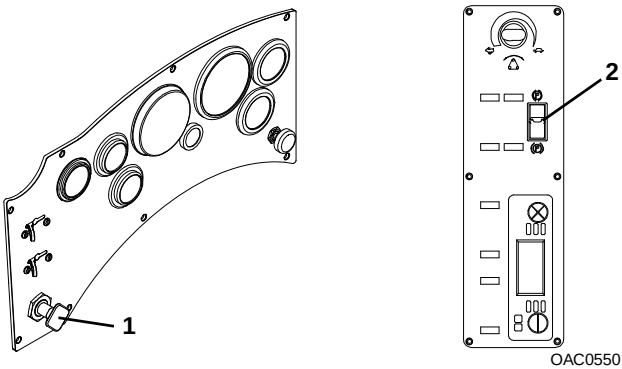

- Two parking brake controls are provided; one on undercarriage dashboard **(1)** and another on left hand pod panel in the upperstructure **(2)**. The switch in the upperstructure cab is inoperative when in travel mode. Undercarriage park brake must remain applied when in remote mode.
- Apply parking brake in undercarriage cab by raising parking brake control knob. Knob will raise automatically if air pressure is lost from the system.
- Release parking brake by depressing parking brake control knob (system must be pressurized to release parking brake).

https://tractormanualz.com/

https://truckmanualshub.com/

NOTES:

https://tractormanualz.com/

https://truckmanualshub.com/

3.4 TRAVEL MODE POWER TRAIN

Shifting Gears

The transmission is automatically shifted with 6 forward speeds plus reverse. Ranges are selected by pressing and releasing the button for the desired range on the Transmission Shift Selector. For example, press and release the “N” button to select Neutral, the “D” button to select Drive, and the “R” button to select Reverse. As vehicle speed increases, the transmission upshifts automatically through each range. As the vehicle speed decreases, the transmission automatically downshifts to the correct range.

You may also manually select a lower forward gear below the “D” position by pushing the Down Arrow after selecting the Drive gear. The first number displayed in the digital display is the highest forward range available and second number is range attained in selected position.

Manual shifting can also be done by pressing the up and down arrow pushbuttons on Transmission Shift Selector.

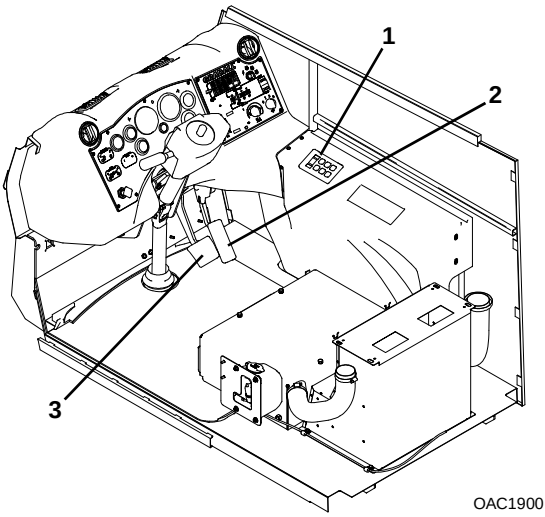

1. Transmission Shift Selector

2. Accelerator Pedal

3. Brake Pedal

https://tractormanualz.com/

https://truckmanualshub.com/

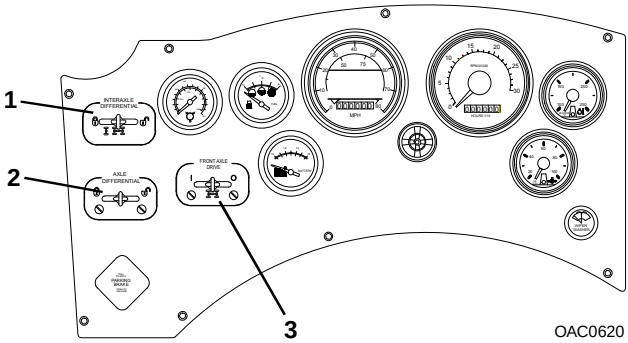

OAC0620

1. Interaxle Differential Lock Switch (XL4100V & XL5100V only): The interaxle differential is controlled by a toggle lever mounted on the dashboard in the undercarriage cab.
   - With toggle in unlocked position, the front and rear tandem axles are permitted to rotate at different speeds.
   - Keep toggle in unlocked position when driving on good tractive conditions.
   - With toggle in locked position, there is positive drive to the front and rear tandem axles.
   - Keep toggle in locked position when driving in poor tractive conditions (mud, ice, snow or off-road travel). Use lock position for remote control travel.
   - The interaxle differential may be locked when traveling but NEVER when the wheels have lost traction and are spinning.
   - If shifting interaxle differential while traveling, release accelerator first.

.

DIFFERENTIAL DAMAGE. Serious damage will occur if interaxle differential is shifted while wheels are spinning.

CAUTION

OW0031

2. Differential Lock Switch: The differential lock can be engaged (locked) ONLY when the interaxle differential has been engaged.

https://tractormanualz.com/

https://truckmanualshub.com/

Differential Lock

Normally, differential lock will engage and disengage immediately in response to lock/unlock toggle; however, differential “wind-up”, or misalignment can delay engagement/disengagement. In this event, reversing direction of travel and/or operation of steering while traveling may relieve differential “wind-up”. Indicator light shows actual state of lock engagement/disengagement.

- The differential can be locked or unlocked when the vehicle is standing still or at a constant low speed when wheels are not slipping. **Notice!:** Engaging the differential lock while the wheels are slipping may cause damage to the differential.
- Lock the differential and operate the vehicle only at low speeds on poor road or highway surfaces or when digging over the side.
- When differential is locked, the turning radius will increase.
- Unlock the differential when need for maximum traction has passed or when traveling on good surface.
- Do not lock differential when the vehicle is traveling down steep grades and traction is minimal. Potential loss of stability can result.

Locking the Differential: When encountering poor traction conditions, perform the following:

1. While stopped or traveling straight at a constant speed and no wheels slipping, move differential lock toggle to locked position.
2. Let up momentarily on accelerator allowing differential to fully lock.
3. When differential is fully engaged, the indicator light will illuminate.

Unlocking the Differential: After poor conditions have passed, perform the following:

1. Move differential toggle to unlock position.
2. Let up momentarily on accelerator allowing the differential to fully unlock.
3. When differential lock is fully disengaged, the indicator light will no longer illuminate.

https://tractormanualz.com/

https://truckmanualshub.com/

3. Front Axle Drive Switch (if equipped):

To Engage:

- Stop machine.
- Move toggle lever on dash to the “I” position.

Notice!: Engaging front axle drive while undercarriage is moving will damage transfer case. Stop undercarriage before engaging front axle drive.

To Disengage:

- Stop machine
- Move toggle lever on dash to the “O” position.

Notice!: Do not drive on improved/hard surfaces with front axle engaged. Drive line damage may occur.

https://tractormanualz.com/

https://truckmanualshub.com/

3.5 TRAVEL MODE ENGINE SHUTDOWN

MACHINE ROLL-AWAY HAZARD. Always move park brake switch to "ON" position and stop engine before leaving cab.

WARNING

OW0021

When parking the excavator, park in a safe location on flat level ground and away from other equipment and/or traffic lanes.

From Undercarriage Cab:

1. Apply the park brake.
2. Shift transmission to neutral.
3. Operate engine at low idle for 3 to 5 minutes. **DO NOT** rev engine.
4. Turn key to “OFF” position and remove.
5. Exit excavator maintaining 3-point contact.
6. Chock wheels (if necessary).

https://tractormanualz.com/

https://truckmanualshub.com/

3.6 REMOTE CONTROL PREPARATION

Preparing Undercarriage for Remote Control Operation

Remote travel is to be used for positioning unit at job site, not for over-the-road driving. After reaching job site, perform the following to prepare undercarriage for remote control operation:

1. Stop the machine in a safe level area.
2. Apply the parking brake.
3. Engage axle and interaxle differential lock (refer to page 3-11 for procedure; interaxle differential lock applies to XL4100V & XL5100V only). Front axle drive may be selected (if equipped).
4. Put transmission in neutral.
5. When both sections of air system reach at least 100 psi, stop engine. Key must be in “OFF” position for remote operation.
6. Depress remote portion of travel/remote switch.
7. Proceed to upperstructure cab.

Preparing Upperstructure for Remote Control Operation

All instructions on undercarriage cab remote control decal must be followed before starting machine in remote operation.

1. Place control cut out lever in locked/inactive position (refer to page 2-39).
2. Turn ignition switch to “RUN” position.

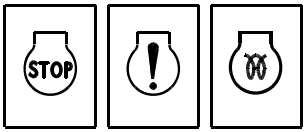

OAC0700

3. The three monitor lights shown above should illuminate and then go out.
4. Turn ignition switch to “START” position to start engine and/or engage hydraulic pump. If engine fails to start, turn ignition switch to “OFF” position and repeat steps 2 through 4. If starter will not engage to crank engine, check for proper park brake and gearshift positions in the undercarriage cab and verify that the joystick activation lever is in the locked/inactive position.
5. Operate engine at full throttle for upperstructure operation.
6. Position control cut out lever in the unlocked/active position to activate and engage joystick controls and pedals in remote operation.

https://tractormanualz.com/

https://truckmanualshub.com/

3.7 CHECKS BEFORE REMOTE CONTROL OPERATION

This section outlines the checks to be performed at the beginning of each work shift or at each change of operator. Repair any deficiencies before driving or operating the equipment. During warm-up period, check the following:

- Ensure digging brakes and park brake function properly before moving undercarriage in remote control.
- Be sure travel alarm and horn function properly. Both must be audible from the cab with engine running.
- Check to ensure control pattern decal matches joystick controls.
- Make sure all boom and attachment functions operate smoothly and correctly.
- Forward and reverse travel, digging brakes, and steering operate correctly.
- Swing the upperstructure left and right and ensure the swing brake functions properly.
- Make sure the engine does not start with the control cut out lever in the lowered position.
- Check to ensure the engine functions properly and the lights and indicators located in the upperstructure cab are functioning.

https://tractormanualz.com/

https://truckmanualshub.com/

3.8 REMOTE MODE BRAKE SYSTEM

Remote Control Braking

REMOTE CONTROL BRAKING. Allow sufficient time for full brake system pressure 125 psi (862 kpa) to develop before operating unit in remote control. Low air light indicator will turn off when pressure reaches 60 psi.

WARNING
OW0021

Always apply upperstructure parking brake before leaving upperstructure cab.

- With the travel/remote switch in remote position, the digging brake will set and release as travel pedal in upperstructure is actuated and released.
- Under certain circumstances the upperstructure park brake switch doubles as an emergency brake. If the automatic digging brake fails to apply when travel pedal is released, move upperstructure park brake switch to apply brakes. Notify maintenance personnel immediately for repair of digging brakes before continued operation.

https://tractormanualz.com/

https://truckmanualshub.com/

Digging Brake

When in remote mode, the digging brakes are automatically applied upon releasing the travel pedal.

- When activated, the digging brake is applied to all wheels to hold the undercarriage stationary while the excavator is digging.
- Apply digging brake by moving travel/remote switch to remote position and turning on upperstructure ignition key.
- Release digging brake by moving travel/remote switch to travel position and turning undercarriage ignition key to “ON” position.

https://tractormanualz.com/

https://truckmanualshub.com/

3.9 REMOTE MODE POWER TRAIN

Driving Undercarriage from Upperstructure Cab

Remote travel is possible at all times except when indicated by an audible alarm and the travel lockout symbol being illuminated on the monitor. When this condition exists, the directional travel pedal must be slowly and carefully activated in both directions until the light and alarm turn off. This allows proper gear mesh within the transmission. The dig brakes will not release while this light is on.

Note: *Abrupt engagement of the remote travel pedal while this light is on will damage the transmission!*

Never tow a load using remote control drive.

Operate the engine at full throttle. Undercarriage speed is controlled by travel speed switch position and amount of travel pedal actuation.

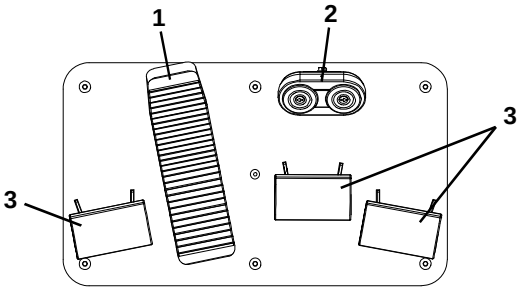

OAC0630

1. Travel Pedal: The travel pedal **(1)** controls undercarriage travel; with boom positioned over front of machine, depress front of pedal to travel forward or rear of pedal to travel in reverse. Undercarriage travel alarms and back-up lights will activate when travel pedal is depressed. The digging brake is automatically released when the pedal is depressed and applied when the pedal is released. Release pedal gently for a smooth stop. Pedal returns to a neutral position when released. Keep in mind the position of upperstructure in relation to undercarriage.

https://tractormanualz.com/

https://truckmanualshub.com/

WARNING

OW0021

UNEXPECTED DIRECTION OF TRAVEL. Before remote travel, check to be sure you are aware of orientation of upperstructure with regard to undercarriage. Confusion could cause travel in the opposite direction you are expecting.

Note: *Engage park brake to stop undercarriage if automatic digging brake fails.*

2. Steering Pedal: The steering pedal **(2)** controls right and left turns; with boom positioned over front of machine, depress left side of pedal to turn left or right side of pedal to turn right. Pedal returns to neutral position when released. Keep in mind the position of upperstructure in relation to undercarriage.
   Undercarriage travel alarms and back-up lights will activate when steer pedal is depressed. **NOTE:** Due to varying conditions of front axle load and ground conditions, steering may be restricted until unit is in motion.
3. Foot Rests: The foot rests **(3)** are located in the cab as shown in illustration.

Shifting Gears While in Remote Control

Using the travel speed switch on the right hand pod panel (see page 2-34 for location), it is possible to shift between low and high range from the upperstructure cab. If travel speed is switched while unit is in motion, the machine will not shift to selected travel speed until the travel pedal is released and digging brake is set.

To Shift Gears:

- Stop Machine
- Toggle the travel speed switch to the desired gear range. Refer to page 3-19 if an audible alarm sounds and the travel lockout symbol illuminates.

https://tractormanualz.com/

https://truckmanualshub.com/

3.10 STEERING SYSTEM

Notice!: Use of power steering while undercarriage is stopped causes unnecessary stress on system components and may cause serious damage to system. Holding steering wheel or remote steering pedal in full turn position will cause system to overheat. This may cause steering pump to fail.

POWER STEERING FAILURE. In the event power steering fails, stop as soon as possible. Do not drive unit until problem has been corrected.

WARNING

OW0021

When differential lock is engaged (rear axle shafts locked together), the turning radius will become greater.

https://tractormanualz.com/

https://truckmanualshub.com/

3.11 TYPICAL DIG CYCLE

Standard SAE Boom and Attachment Functions

Prepare for boom and attachment function:

1. Position unit for efficient attachment usage. **Notice!:** While digging, pay close attention to boom position in relation to undercarriage components. In certain instances it is possible for the boom to come into contact with the undercarriage.
2. Stop engine and secure door and windows in desired position for ventilation. Remove boom tie down chain from boom.
3. Perform checks before remote control operation located on page 3-16. Set engine to full throttle position.
4. Be certain control cut out lever is in down position to energize joysticks and foot pedals.

UNEXPECTED MOVEMENT. Test your controls before operating. If controls have been changed to another pattern, be sure you are familiar with the functions and ensure that the diagram in the cab shows the actual pattern in use. Alternate patterns are located in the operator cab in the manual compartment. If you do not have the proper control decal, do not change the control pattern.

WARNING

OW0021

https://tractormanualz.com/

https://truckmanualshub.com/

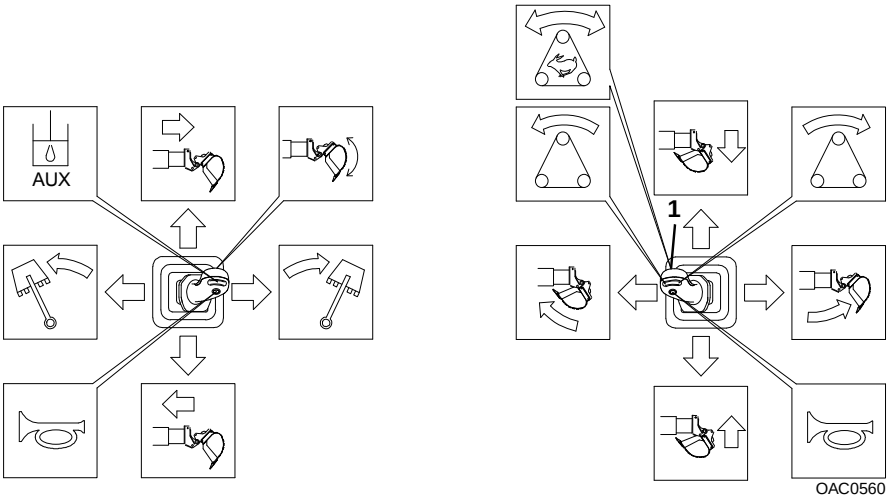

Joystick controls standard SAE control pattern. If tilt speed has been reduced for conditions, speed can be temporarily increased by depressing fast tilt button **(1)**.

Note: *Practice with controls in a safe, open area. Joysticks and pedals return to neutral position when released.*

1. Pull back on right joystick **(A)** to raise boom far enough to clear all obstructions.

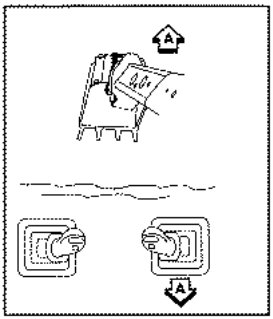

https://tractormanualz.com/

https://truckmanualshub.com/

2. Move left joystick to left **(G)** to swing left or to right **(H)** to swing right.

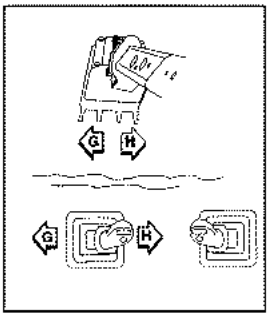

3. While pushing left joystick forward **(F)** to extend boom, push right joystick forward **(B)** to lower boom into position for start of cut.

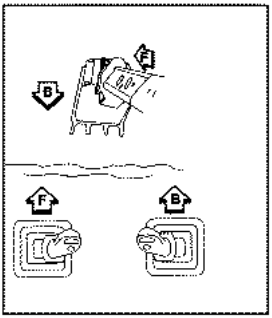

4. Move right joystick to right **(C)** to open bucket or to left **(D)** to close bucket for correct penetration. Teeth should angle downward slightly (about 5 degrees). Angle may be greater for soft digging.

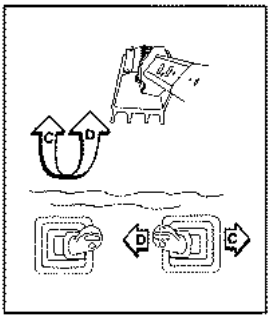

https://tractormanualz.com/

https://truckmanualshub.com/

5. If required, press left side of tilt switch **(I)** to tilt counterclockwise or right side of switch **(J)** to tilt clockwise. If necessary, use fast tilt button to return to fast tilt.

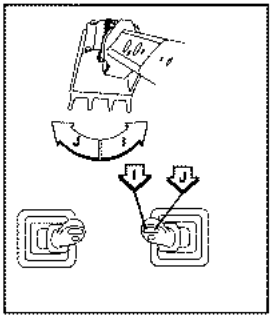

6. While pushing forward on right joystick **(B)** to lower boom and force bucket into ground, pull back on left joystick **(E)** to retract boom and fill bucket.

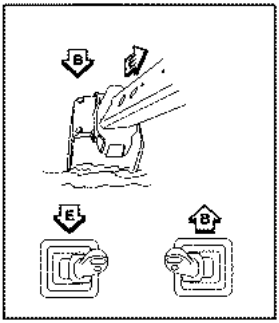

7. As bucket is filling, jog right joystick forward **(B)** to lower boom and maintain depth of cut. At same time jog right joystick to right **(C)** to open bucket and maintain proper bucket angle.

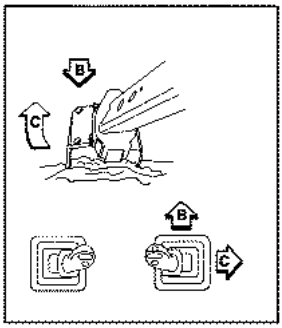

https://tractormanualz.com/

https://truckmanualshub.com/

8. When bucket is full, or when boom is fully retracted, move right joystick to left **(D)** to close bucket. At same time pull right joystick back **(A)** to raise boom far enough to clear obstructions.

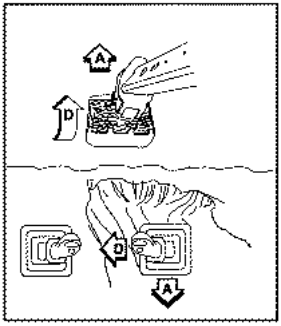

9. Move left joystick to right **(H)** to swing right or to left **(G)** to swing left to dump site. If necessary, extend boom by pushing left joystick forward **(F)**.

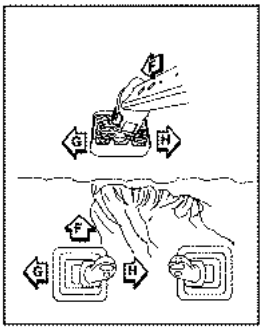

10. Move right joystick to right **(C)** to open bucket and dump load.

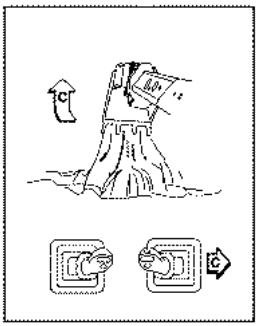

https://tractormanualz.com/

https://truckmanualshub.com/

11. Move left joystick to left **(G)** or right **(H)** to align boom for next cut. Repeat steps 3 through 11.

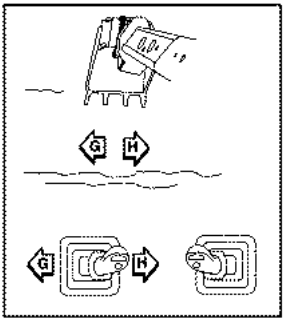

https://tractormanualz.com/

https://truckmanualshub.com/

3.12 LIFTING & PLACING A LOAD

LIFTING & POSITIONING LOADS. Failure to plan a lift properly could result in death or serious injury.

WARNING

OW0021

The automatic boom tilt brake will not prevent boom from tilting in response to an external load. Load must be centered under bucket adapter with boom level from side to side.

Precautions

- Use the lift capacity chart to calculate maximum load. Keep in mind, the attachment weight and rigging must be added to the load, then compared to the value on the lift capacity chart.
- If it becomes necessary to shut the engine off while positioning a load, place load on the ground prior to shutting off engine.
- Be thoroughly familiar with excavator hand signals shown at the end of the manual.
- Operate machine at full throttle and do not shut off engine with suspended load.
- Do not travel with suspended load positioned over the side of the machine.

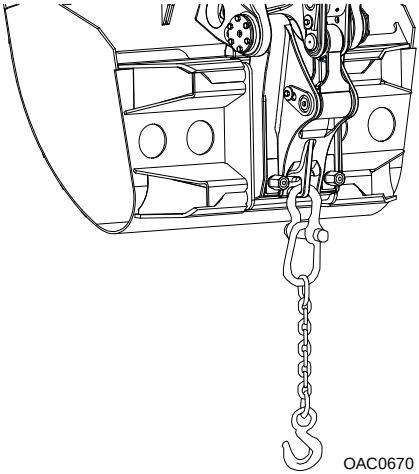

OAC0670

- Suspend loads only as shown above. Passing load line over open bucket can cause uncontrolled movement of load.
- To lift loads, level boom from side to side and close adapter fully against stops. Pass through adapter as shown and be certain chain is locked on itself.

https://tractormanualz.com/

https://truckmanualshub.com/

General

There is a lift capacity difference between the excavator's best and worst lift positions. Just because it can lift a load from one point does not mean it can safely deliver the load to any other point.

Prior to lifting and placing a load, map out the lift, swing, and lower path to ensure that capacity, both hydraulic and stability tipping limits, are not exceeded. The best lifting position is over the rear with the excavator level and the boom fully retracted.

You must plan the lift based on the worst condition of the lift and delivery, not the best. The worst condition can only be determined by performing an UNLOADED TEST AND DELIVERY of the load.

Loads shown on chart in cab are hydraulic lift capacities with those in shaded area indicating tipping limits. Exceeding these capacities can cause a relief valve to open allowing the load to fall or in some cases, the machine to tip over.

Positioning Machine For A Lift

The machine must be on a firm, level surface when making a lift.

The shorter the load radius, the greater the lift capacity. Position the unit to minimize boom extension and swing while keeping adequate distance from obstructions and excavations.

Position machine to gain maximum visibility of load and delivery point. If conditions do not permit a clear view, use a signal person.

https://tractormanualz.com/

https://truckmanualshub.com/

Planning A Lift

Note: *Lift capacities are based on machine being on a firm, level surface and also no load being suspended beneath bucket adapter.*

1. Determine the weight of the load including weight of slings, chains, bucket/attachment (tool), and auxiliary lifting devices. Refer to lift capacity chart for weight adjustment required for bucket.
2. Move the machine to the best position for making the lift.
3. Perform an unloaded trial run of lift to determine maximum boom height/depth and load radius required to complete the lift.
4. Measure boom height/depth from hole in adapter to ground level (same level as bottom of tire). Be sure to allow for length of chain and height of load.

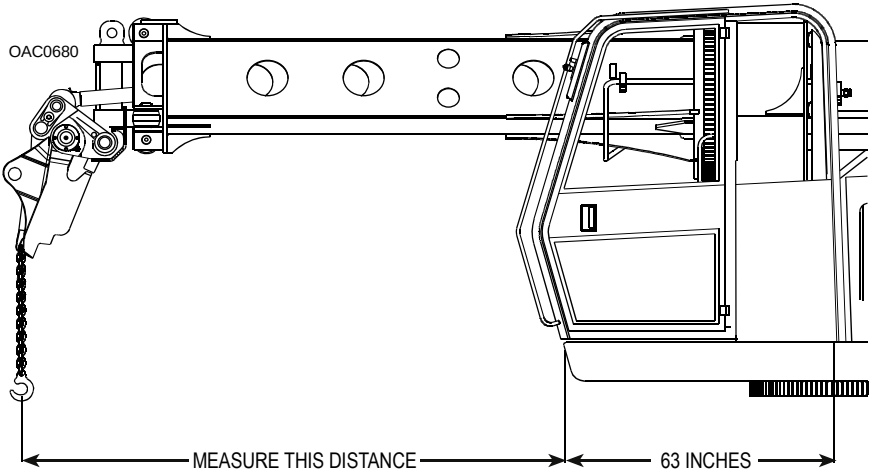

5. Measure load radius from inner corner of frame at front of cab to vertical load line (as shown above) and add distance to center of rotation (63 inches).
6. Refer to lift capacity chart column for required load radius. If required radius is between columns, use column for next larger radius.
7. Check the appropriate capacities for required boom height/depth. The smaller of these capacities is the maximum load permitted for lift conditions.

Note: *To determine working load limits the operator must also consider wind, hazardous conditions, experience of personnel and proper load handling.*

https://tractormanualz.com/

https://truckmanualshub.com/

3.13 LIFT CAPACITY

LOAD POINT HEIGHT		LOAD RADIUS										
		10' (3.0m)		15' (4.6m)		20' (6.1m)		25' (7.6m)		MAXIMUM RADIUS		
		OVER END	OVER SIDE	OVER END	OVER SIDE	OVER END	OVER SIDE	OVER END	OVER SIDE		OVER END	OVER SIDE
ABOVE GROUND LEVEL	20' (6.1m)							5715 (2590)	5715 (2590)	27' 4" (8.3m)	5070 (2300)	5070 (2300)
	15' (4.6m)			12425 (5635)	12425 (5635)	8795 (3990)	8795 (3990)	6515 (2955)	6515 (2955)	29' 5" (9m)	5120 (2320)	5120 (2320)
	10' (3.0m)					9880 (4480)	9880 (4480)	7140 (3240)	7140 (3240)	30' 6" (9.3m)	5230 (2370)	5230 (2370)
	BOOM LEVEL 8' 7" (2.4m)					10080 (4570)	10080 (4570)	7255 (3290)	7255 (3290)	30' 7" (9.3m)	5265 (2390)	5265 (2390)
	5' (1.5m)					10290 (4665)	10030 (4550)	7415 (3365)	7175 (3255)	30' 7" (9.3m)	5375 (2440)	5195 (2355)
AT GROUND LEVEL						9815 (4450)	9800 (4445)	7265 (3295)	7035 (3190)	29' 11" (9.1m)	5550 (2515)	5310 (2410)
BELOW GROUND LEVEL	5' (1.5m)			11090 (5030)	11090 (5030)	8705 (3950)	8705 (3950)	6745 (3060)	6745 (3060)	28' 3" (8.6m)	5740 (2605)	5725 (2595)
	10' (3.0m)	8500 (3855)	8500 (3855)	8630 (3915)	8630 (3915)	7365 (3340)	7365 (3340)	6010 (2725)	6010 (2725)	25' 5" (7.7m)	5910 (2680)	5910 (2680)
	15' (4.6m)	5840 (2650)	5840 (2650)	6640 (3010)	6640 (3010)	6075 (2755)	6075 (2755)			20' 11" (6.4m)	5930 (2690)	5930 (2690)
	20' (6.1m)									12' 10" (3.9m)	4875 (2210)	4875 (2210)

The above loads are in compliance with the SAE standard J1097 DEC2005. They do not exceed 87% of hydraulic lifting capacity or 75% of tipping capacity.

Loads shown in shaded areas indicate the load is limited by tipping rather than hydraulic lift capacity.

The rated lift capacity is based on the machine being equipped with 15,500 lb (7030 kg) counterweight, standard boom, standard tires, no auxiliary hydraulics, and no bucket.

Adjust the listed rated capacities by subtracting the value listed for bucket/attachment used:

8065-6007 60" (1.5 m)	Ditching -	807	lbs.	(366 kg)
8065-6006 66" (1.7 m)	Ditching -	892	lbs.	(405 kg)
8065-6002 72" (1.8 m)	Ditching -	944	lbs.	(428 kg)
8045-6020 24" (610 mm)	Excavating -	603	lbs.	(274 kg)
8045-6021 30" (762 mm)	Excavating -	660	lbs.	(300 kg)
8045-6022 36" (914 mm)	Excavating -	741	lbs.	(336 kg)
8045-6023 42" (1.1 m)	Excavating -	841	lbs.	(382 kg)
8045-6024 48" (1.2 m)	Excavating -	957	lbs.	(434 kg)
8065-6013 72" (1.8 m)	Dredging -	1114	lbs.	(505 kg)
8065-6102 40" (1.0 m)	Pavement -	1262	lbs.	(573 kg)
8065-6024 8' (2.4 m)	Blade -	630	lbs.	(285 kg)
8065-6009 Single Tooth Ripper	-	557	lbs.	(253 kg)

- **Note: Bucket adjustment values are 87% of the actual bucket weights.**

The load point is located on the bucket pivot point, including loads listed for maximum radius.

Do not attempt to lift or hold any load greater than these rated values at specified load radii and heights. The weight of slings and any auxiliary devices must be deducted from the rated load to determine the net load that may be lifted.

ATTENTION: All rated loads are based on the machine being stationary and level on a firm supporting surface. The user must make allowance for particular job conditions such as soft or uneven ground, out of level conditions, side loads, hazardous conditions, experience of personnel, etc. The operator and other personnel must read and understand the operator manual before operating this machine. Rules for safe operation of equipment must be adhered to at all times.

OAC0690

Note: *This is a sample capacity chart* ***only! DO NOT*** *use this chart, use the one located in your operator cab.*

https://tractormanualz.com/

https://truckmanualshub.com/

The rated lift capacity is based on the machine being on flat, level ground and equipped with standard boom and no bucket. Adjust the listed rated capacities on capacity chart located in operator cab according to each bucket as shown:

Part Number	Size	Description	Weight Adjustment
80656007	60"	(1.5m) Ditching	-807lbs. (366kg)
80656006	66"	(1.7m) Ditching	-892lbs. (405kg)
80656002	72"	(1.8m) Ditching	-943lbs. (428kg)
80456020	24"	(610mm) Excavating	-560lbs. (255kg)
80456021	30"	(762mm) Excavating	-660lbs. (300kg)
80456022	36"	(914mm) Excavating	-741lbs. (336kg)
80456023	42"	(1.1m) Excavating	-841lbs. (382kg)
80456024	48"	(1.2m) Excavating	-957lbs. (434kg)
80656013	72"	(1.8m) Dredging	-1114lbs. (505kg)
80656102	40"	(1.0m) Pavement	-1262lbs. (573kg)
80656024	8’	(2.4m) Blade	-630lbs. (285kg)
80656009	24"	Single Tooth Ripper	-557lbs. (253kg)

Note: *Bucket adjustment values are 87% of the actual bucket weights. Any weight adjustment for Gradall buckets not shown can be calculated by multiplying actual bucket weight by .87.*

- The load point is located on the bucket pivot point, including load listed for maximum radius.
- Do not attempt to lift or hold any load greater than the rated values at specified load radii and heights. The weight of slings and any auxiliary devices must be deducted from the rated load to determine the net load that may be lifted.

ATTENTION: All rated loads are based on the machine being stationary and level on a firm supporting surface. The user must make allowance for particular job conditions such as soft or uneven ground, out of level conditions, side loads, hazardous conditions, experience of personnel, etc. The operator and other personnel must be fully trained and understand this Operator Manual and Safety Manuals furnished by the manufacturer before operating this machine. Rules for safe operation of equipment must be adhered to at all times.

https://tractormanualz.com/

https://truckmanualshub.com/

3.14 REMOTE MODE ENGINE SHUTDOWN

To shutdown the excavator, park in a safe location on flat level ground and away from other equipment and/or traffic lanes.

From Upperstructure Cab:

1. Stop machine by removing pressure from foot pedals.
2. Swing the machine to align upperstructure with undercarriage
3. Lower attachment/boom to ground or stow boom in boom rest. See *“Boom Stow Procedure”* on page 3-35.
4. Operate engine at low idle for 3 to 5 minutes. **DO NOT** rev engine.
5. Turn key to “OFF” position and remove key.
6. Exit excavator maintaining 3-point contact.
7. Chock wheels (if necessary).

MACHINE ROLL-AWAY HAZARD. Lower boom to ground or boom rest and stop engine before leaving cab.

WARNING

OW0021

https://tractormanualz.com/

https://truckmanualshub.com/

3.15 RETURN TO TRAVEL MODE

Preparing Upperstructure for Undercarriage Operation

1. Check operation of brakes after remote operation and digging.
2. Position unit on level surface, apply digging brake and stop engine. Check the following for damage; brake actuator chambers and rods, brake actuator brackets, and slack adjusters. With brake applied, actuator rod should form an approximate right angle with slack adjuster. Do not drive unit until any damage or malfunction has been repaired. Check for proper slack adjuster operation in accordance with the procedure shown on page 5-30.
3. Position boom over rear of undercarriage and embed bucket in ground or against a solid object.
4. Apply down pressure with boom and pull and push with boom while a helper watches for rotation of each wheel.
5. Rotation of any wheel during step 3 indicates brake failure on that wheel. Have any failure corrected before driving the unit.
6. Position boom in rest, allowing clearance for attachment. See *"Boom Stow Procedure"* on page 3-35. Secure boom using boom hold-down device. See *"Securing Unit for Driving"* on page 3-35.
7. Idle engine to remove heat from critical areas.
8. Shut down engine from upperstructure cab.
9. Proceed to undercarriage cab.

Preparing Undercarriage for Conventional Operation

- See *"Starting Engine from Undercarriage Cab"* on page 3-1.

https://tractormanualz.com/

https://truckmanualshub.com/

Boom Stow Procedure

1. With teleboom extended, stow boom in boom rest.
2. Retract telescope boom until the boom position decal is visible in the bottom smaller hole in the main boom, as illustrated:

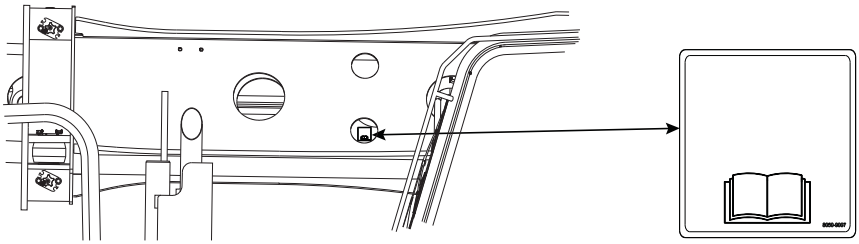

OAC2690

Securing Unit for Driving

Drive to and from job site only under the following conditions:

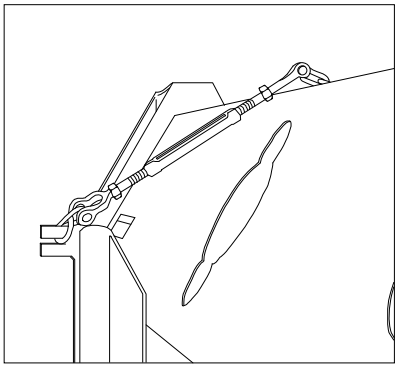

OAC0640

- Position boom in boom rest and secure boom as shown above.
- Mirrors are clean and properly adjusted for visibility.
- Doors and upperstructure windows secured in closed position.
- No load attached to any part of machine.
- Tires inflated to proper pressure.
- Seat belt buckled across lap.
- Drive in accordance with Federal, State, and Local requirements.
- Plan your route.

https://tractormanualz.com/

https://truckmanualshub.com/

3.16 PARKING THE EXCAVATOR

Precaution

If the machine is in remote and must be shut down for an extended period of time, return the machine to conventional undercarriage operation.

Avoid parking on roads or highways. If it cannot be avoided, or in case of emergency, display warning flags, flares or flashing lights.

Parking Procedure

1. Perform *"Travel Mode Engine Shutdown"* on page 3-14 or *"Remote Mode Engine Shutdown"* on page 3-33.
2. Fill fuel tank to minimize condensation.

ATTENTION!: Prior to step 3, wait a MINIMUM of five minutes after shutting off engine before disconnecting battery. Failure to do so can cause severe damage to the engine after-treatment system.

3. Disconnect battery.
4. Lock all doors and covers and install protective window covers if available.

https://tractormanualz.com/

https://truckmanualshub.com/

3.17 PRESERVATION & STORAGE

- Park the machine following the procedure on page 3-36.
- If it is impractical to activate functions regularly, and if freezing temperatures are expected, remove batteries and store in a warm location.
- Tape a note inside cab window indicating the person to be called in an emergency.
- If machine is on an unpaved surface, be sure tires are resting on sturdy boards to prevent them from being frozen in soft ground.
- Periodically cycle hydraulic functions until normal operating temperature is reached, then apply Boeshield *T9 (part number 1440-4645) to exposed cylinder rods.

Maintenance

- Take a sample of hydraulic fluid for analysis. ***Note****: Not all analysis methods are compatible with all hydraulic fluids (e.g., laser particle counters do not record accurate cleanliness levels in Mobil 424 due to some of the oil additives being interpreted as contaminants). Consult with your analysis lab as to oil type and test method.*
- Thoroughly clean all mud and debris from the machine to help protect surfaces from corrosion.
- Lubricate all grease fittings until fresh lube is expelled from the lube point.
- Check the hourmeter and the lubrication and maintenance schedule. If you are close to any lubricant change period, make the change before storage.
- Check level of anti-freeze protection, drain and refill if necessary to obtain proper protection.

https://tractormanualz.com/

https://truckmanualshub.com/

This Page Intentionally Left Blank

https://tractormanualz.com/

https://truckmanualshub.com/

SECTION 4 - ATTACHMENTS

4.1 APPROVED ATTACHMENTS

To determine if an attachment is approved for use on the hydraulic excavator you are using, perform the following prior to installation.

- Use only Gradall approved attachments.
- Before selecting specific attachments for specific models, consult the load chart on the model literature and consult either an authorized Gradall distributor or Gradall.

If any of the above conditions are not met, do not use the attachment.

4.2 UNAPPROVED ATTACHMENTS

WARNING

OW0021

Use only approved attachments. Attachments which have not been approved for use with your excavator could cause machine damage or an accident resulting in death or serious injury.

Do not use unapproved attachments for the following reasons:

- Gradall cannot establish range and capacity limitations for “will fit,” homemade, altered, or other non-approved attachments.
- An overextended or overloaded excavator can tip over with little or no warning and cause death or serious injury to the operator and/or those working nearby.
- Gradall cannot assure the ability of a non-approved attachment to perform its intended function safely.

4.3 ATTACHMENT OPERATION

- Capacities and range limits for the excavator change depending on the attachment being used.
- Separate attachment instructions (if applicable) must be kept in Manual Holder in cab with this Operator & Safety Manual. An additional copy must be kept with the attachment if it is equipped with a manual holder.
- Window guards must be in place when using powered attachments such as hammers, augers or mowers capable of producing flying debris.

https://tractormanualz.com/

https://truckmanualshub.com/

Excavating Buckets

Size	Cu. Yd.	m3
24" (610mm)	3/8	.31
30" (762mm)	1/2	.41
36" (914mm)	5/8	.54
42" (1.07m)	3/4	.64
48" (1.22m)	1	.76

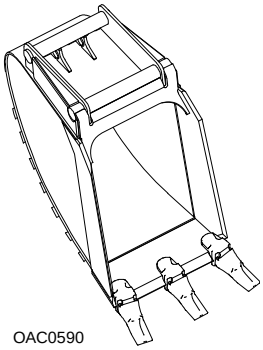
OAC0590

Installation Procedure

- Refer to *"Adapter Attachment Installation"* beginning on page 4-4.

Ditching Buckets

Size	Cu. Yd.	m3
30" (.80m)	1/4	.20
60" (1.52m)	7/8	.73
66" (1.68m)	1	.76
72" (1.83m)	1-1/8	.87

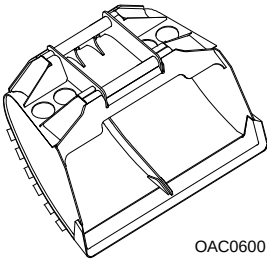
OAC0600

Installation Procedure

- Refer to *"Adapter Attachment Installation"* beginning on page 4-4.

https://tractormanualz.com/

https://truckmanualshub.com/

Trenching Buckets

Size	Cu. Yd.	m3
15" (381mm)	1/5	.15
21" (533mm)	1/4	.19

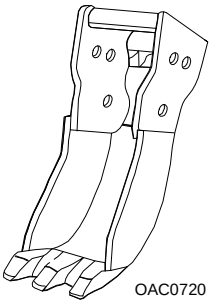

Installation Procedure

- Refer to *"Adapter Attachment Installation"* beginning on page 4-4.

Pavement Removal Bucket

Size	Cu. Yd.	m3
18" (.50m)	N/A	N/A
24" (.60m)	N/A	N/A
28" (.70m)	N/A	N/A
40" (1.02m)	N/A	N/A

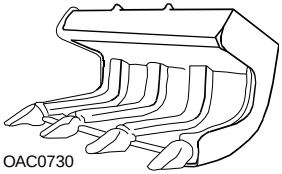

Installation Procedure

- Refer to *"Adapter Attachment Installation"* beginning on page 4-4.

https://tractormanualz.com/

https://truckmanualshub.com/

Dredging Bucket

Size	Cu. Yd.	m3
72" (1.83m)	1-1/8	.87

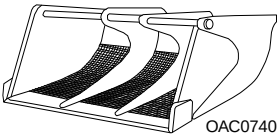
OAC0740

Installation Procedure

- Refer to *"Adapter Attachment Installation"* beginning on page 4-4.

Grading Blade

Size	Cu. Yd.	m3
8' (2.4m)	N/A	N/A

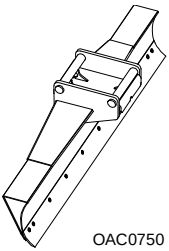
OAC0750

Installation Procedure

- Refer to *"Adapter Attachment Installation"* beginning on page 4-4.

https://tractormanualz.com/

https://truckmanualshub.com/

4.4 ADAPTER ATTACHMENT INSTALLATION

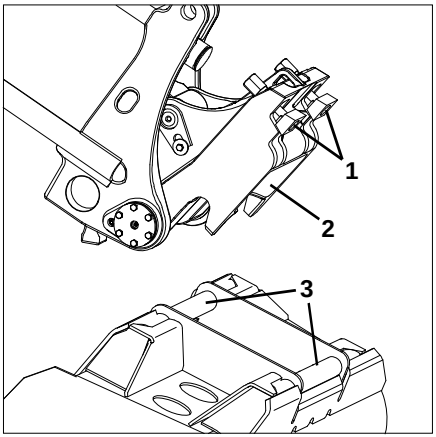

OAC0760

1. Wedge Bolts

2. Bucket Adapter

3. Bucket Bars

Installation Procedure:

1. Be sure wedge bolts **(1)** are secured in storage position (toward rear) and position bucket adapter **(2)** above bucket bar **(3)** as shown.

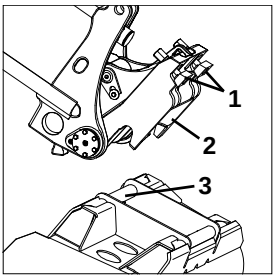

OAC0770

2. Lower boom until concave section of adapter contacts bucket bar.

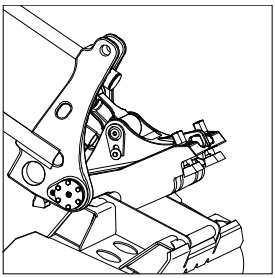
OAC0780

https://tractormanualz.com/

https://truckmanualshub.com/

3. Move adapter toward "bucket close" position until outer end of adapter contacts bucket. Ensure proper alignment and continue to close until adapter contacts stops **(1)**.

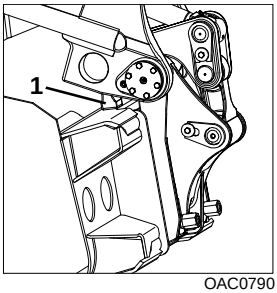

OAC0790

4. Only use the nuts to move wedge bolts forward to position wedge between adapter and bucket bar. Do not use fingers to slide wedges forward or to keep wedges from turning when tightening nuts. Be certain wedge surfaces are flush between adapter and bar and tighten fully. Jog tool control a few times and re-tighten. Check often to be sure bolts remain tight.

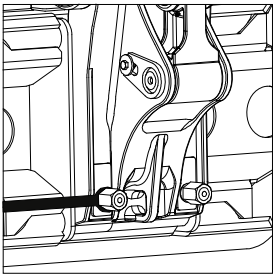
OAC0800

WARNING

OW0021

CRUSH HAZARD. Keep boom in fully extended position while installing bucket. Stay clear until bucket adapter has been fitted to bucket as shown in step 3.

Digging with a loose or improperly fitted bucket may cause excessive wear, shear adapter bolts or cause loss of bucket.

https://tractormanualz.com/

https://truckmanualshub.com/

SECTION 5 - LUBRICATION & MAINTENANCE

5.1 INTRODUCTION

Service the product in accordance with the maintenance schedule on the following pages. Complete all required maintenance before operating unit.

Service intervals are based on machine usage of 1500 hours annually. Use of your product may vary significantly and you must adjust service frequency for your usage to obtain maximum service life.

Always check hourmeter and date at beginning of shift to be certain services are performed at proper intervals. Perform service at whichever interval comes first.

Note: *Failure To Use Gradall Hydraulic Filter Elements Could Void Warranty.*

WARNING
OW0021

FALL HAZARD. Use extreme caution when checking items beyond your normal reach. Use an approved ladder. Failure to comply could result in death or serious injury.

If guards are removed for service, replace them before operating machine.

Do not step or stand on engine cover or upperstructure heater cover when performing checks and services in the area of the main boom and cradle.

Before removing filler caps or fill plugs, wipe all dirt and grease away from the ports. If dirt is allowed to enter ports, it can shorten the life of major hydraulic components along with o-rings, seals, packing and bearings.

CAUTION
OW0031

ELECTRICAL COMPONENT DAMAGE. Do not pressure wash or steam clean under the valve cover on the upperstructure or behind the front external cover on the undercarriage cab.

When adding fluids, refer to *"Product Specifications"* on page 7-1 to determine proper fluid type, and *"Service & Maintenance Schedules"* on page 5-3 for intervals.

Clothing and Safety Gear

Wear all the protective clothing and personal safety devices issued to you or called for by job conditions. **DO NOT** wear loose clothing or jewelry that can get caught on controls or moving parts. Refer to page 1-13 for more detail.

https://tractormanualz.com/

https://truckmanualshub.com/

5.2 GENERAL MAINTENANCE INSTRUCTIONS

Prior to performing any service or maintenance on the excavator, follow the shutdown procedure on page 3-14 or page 3-33 unless otherwise instructed and place "Do Not Operate" tag on steering wheel in associated cab.

WARNING
OW0021

CUT/CRUSH/BURN HAZARD. Do not perform service or maintenance on the machine with the engine running. Failure to comply could cause death or serious injury.

- Ensure excavator is level for proper fluid readings.
- For boom service, extend boom, close bucket and lower onto flat ground.
- Clean lubrication fittings before lubricating.
- After greasing excavator, cycle all functions several times to distribute lubricants.
- Apply a light coating of engine oil to all linkage pivot points.
- Drain engine and gear cases after operating when oil is hot.
- Check all lubricant and coolant levels when cool.

WARNING
OW0021

MACHINE DAMAGE. Contact Gradall before welding on machine. Welding could damage wires, electronic processors, hoses, and tubes. Prior to welding, turn off ignition, unplug all electronic processors and disconnect positive (+) and
negative (-) battery cables from battery posts only. Do not disconnect cable leads from studs on battery box panel. Connect positive (+) and negative (-) cables together. Remove or adequately shield all components, hoses, tubes, and wires in the area. Component damage could cause an accident resulting in death or serious injury.

Tire Service

Tire service must be performed by a qualified tire service center or an authorized person that is properly trained in procedures and use of safety equipment designed for tire service.

https://tractormanualz.com/

https://truckmanualshub.com/

5.3 SERVICE & MAINTENANCE SCHEDULES

Daily or Shift (10 Hour Maximum) Maintenance Schedule

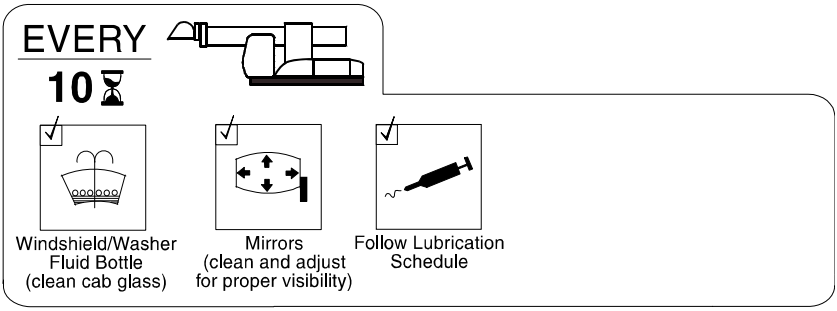

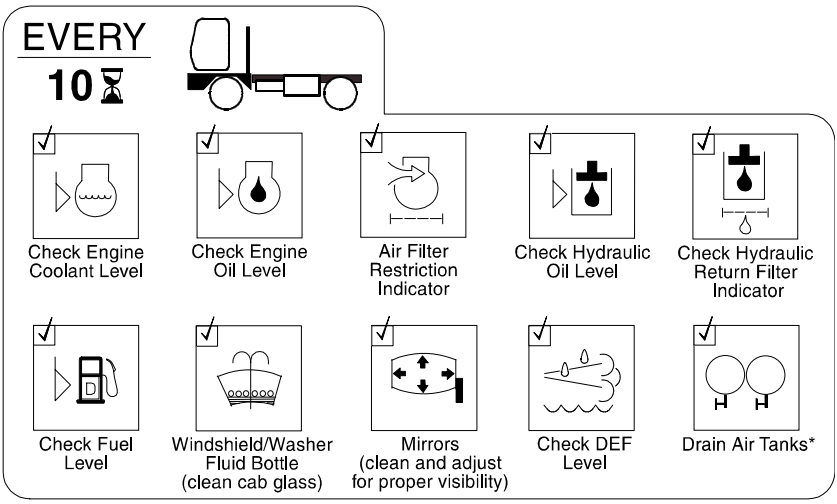

OAC1991

** Drain air tanks daily. To prevent possible damage to emission controls components, wait a **minimum** of 10 minutes after shutting off engine before draining air tanks.*

https://tractormanualz.com/

https://truckmanualshub.com/

Weekly (50 Hour Maximum) Maintenance Schedule

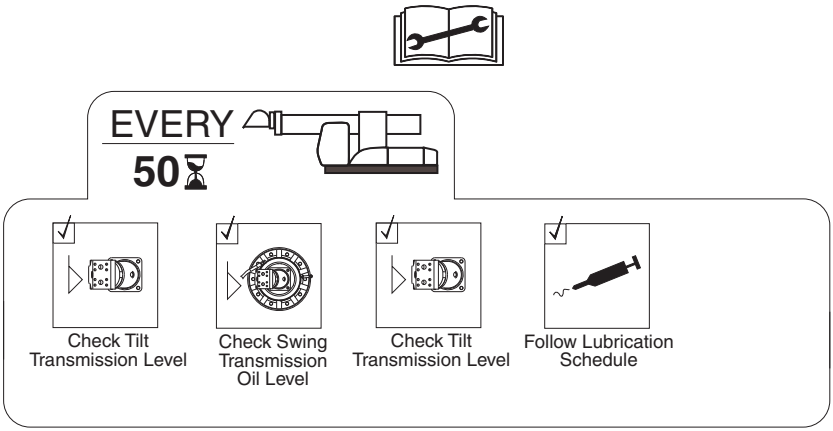

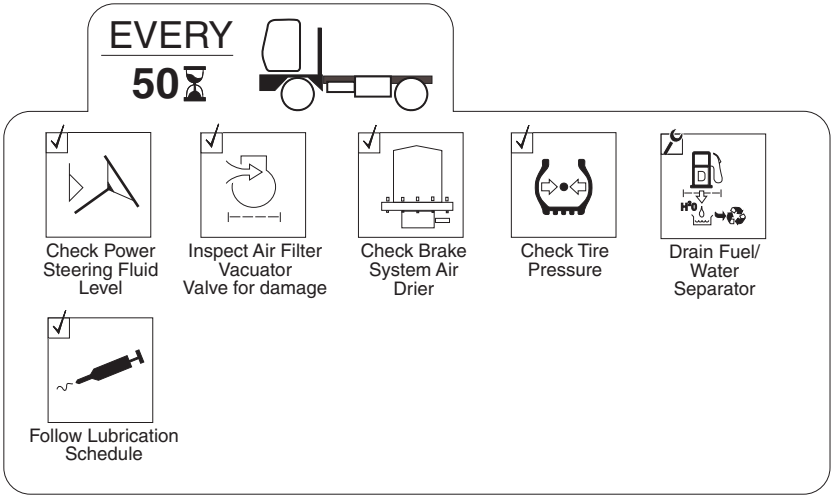

OAC2431

https://tractormanualz.com/

https://truckmanualshub.com/

Monthly (125 Hour Maximum) Maintenance Schedule

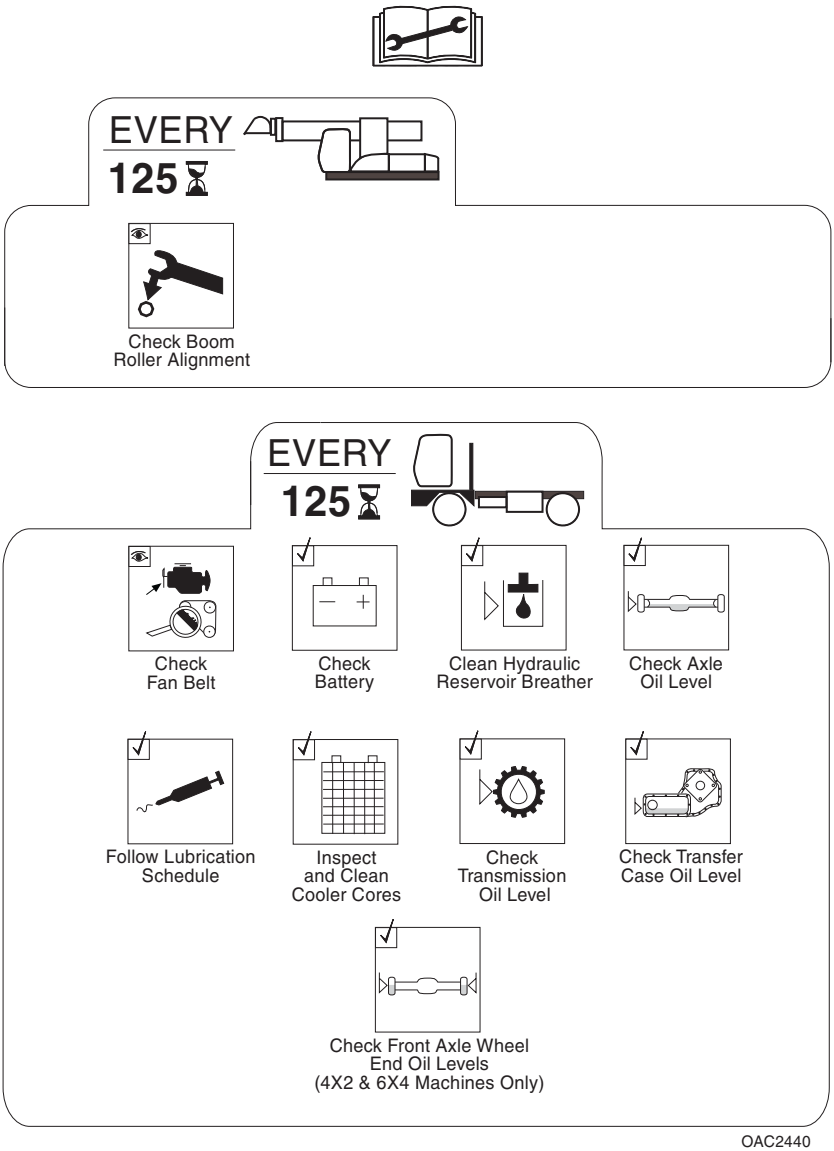

https://tractormanualz.com/

https://truckmanualshub.com/

1st 30 Days (250 hrs Max) & 250 Hour Maintenance Schedule

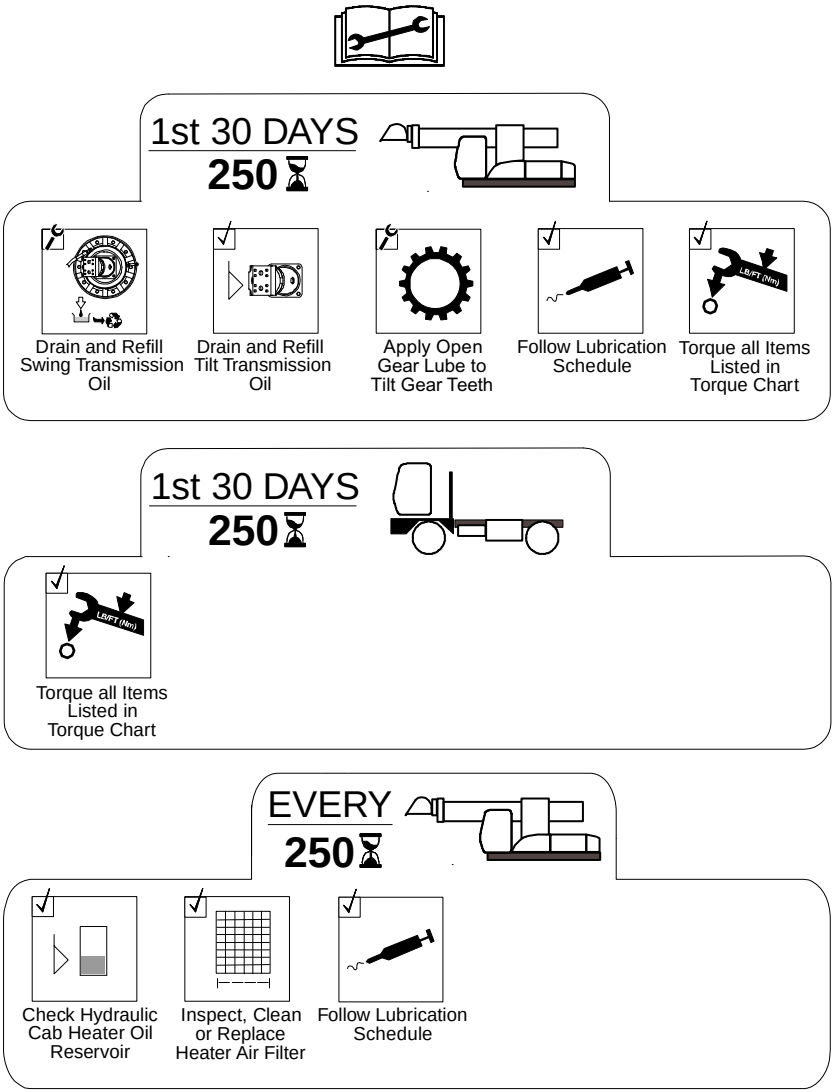

OAC2021

https://tractormanualz.com/

https://truckmanualshub.com/

500 Hour Maintenance Schedule

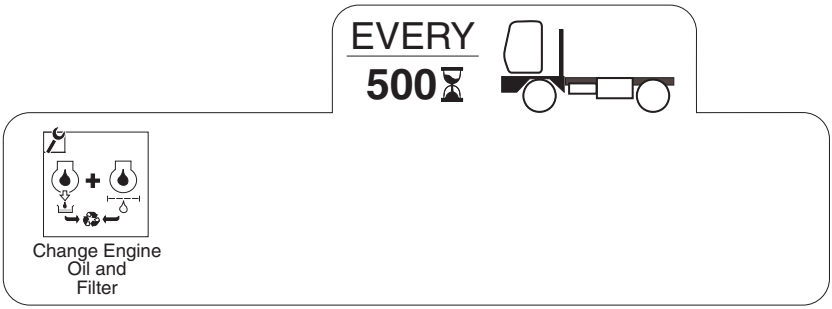

OAC2451

https://tractormanualz.com/

https://truckmanualshub.com/

Semi-Annual (750 Hour Maximum) Maintenance Schedule

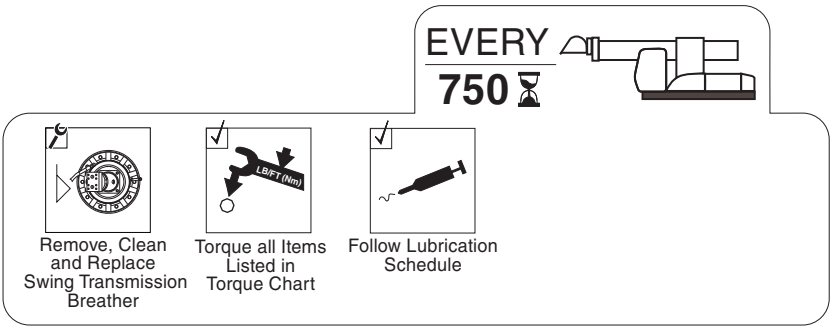

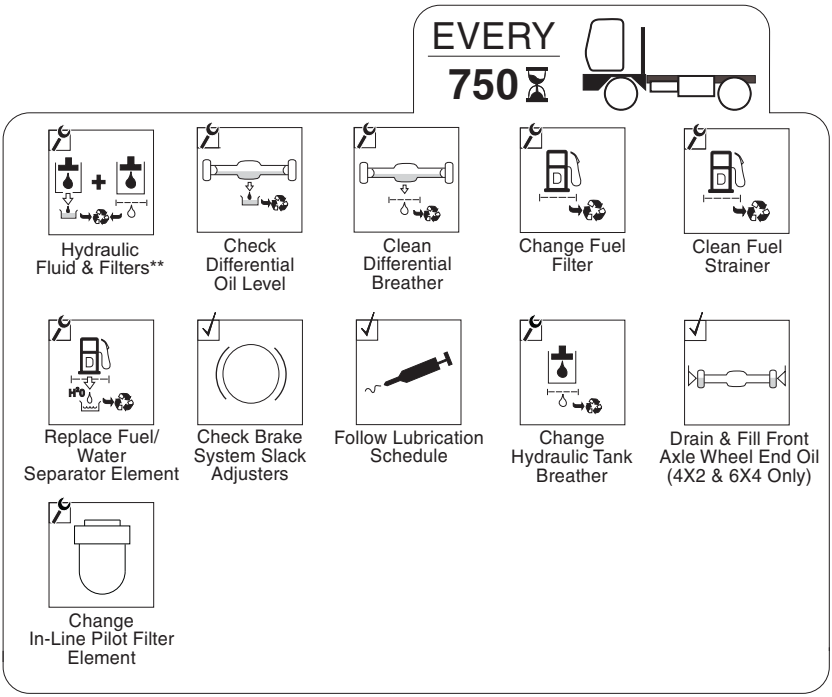

** - Have hydraulic fluid analyzed to determine condition.
Use test port mini-check in pump line to obtain sample.
Drain, flush and replenish system if required.

https://tractormanualz.com/

https://truckmanualshub.com/

Annual (1500 Hour Maximum) Maintenance Schedule

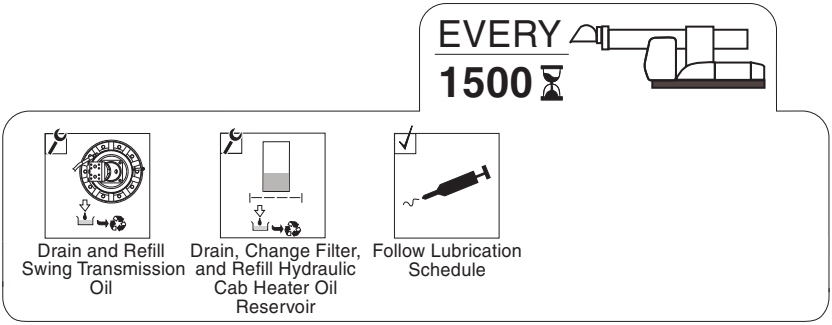

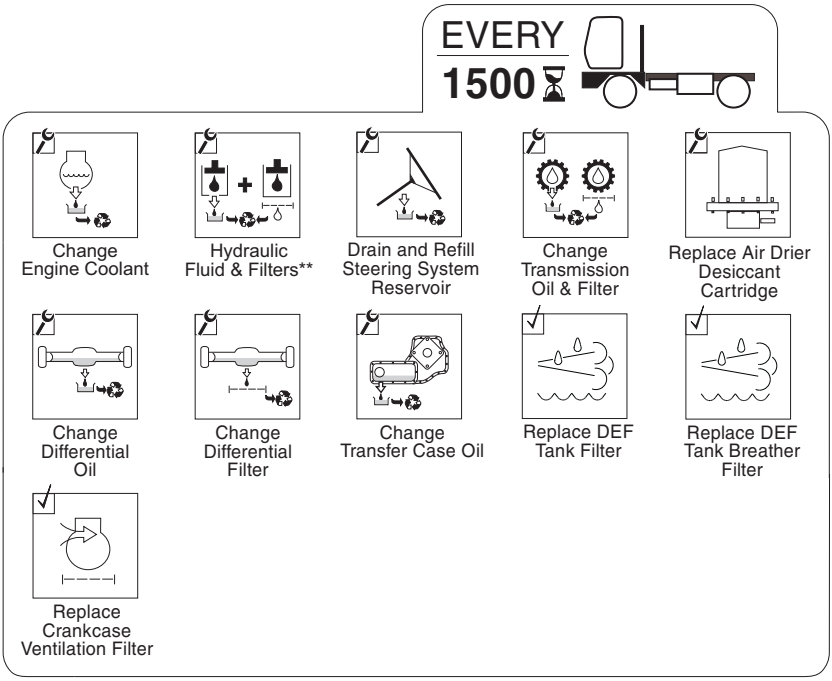

OAC2470

** - Unless hydraulic fluid is analyzed semi-annually to determine level of contamination, system must drained, flushed and replenished on an annual basis.

https://tractormanualz.com/

https://truckmanualshub.com/

5.4 UNDERCARRIAGE LUBRICATION SCHEDULES

Monthly (125 Hour Maximum) Lubrication Schedule - XL3100V

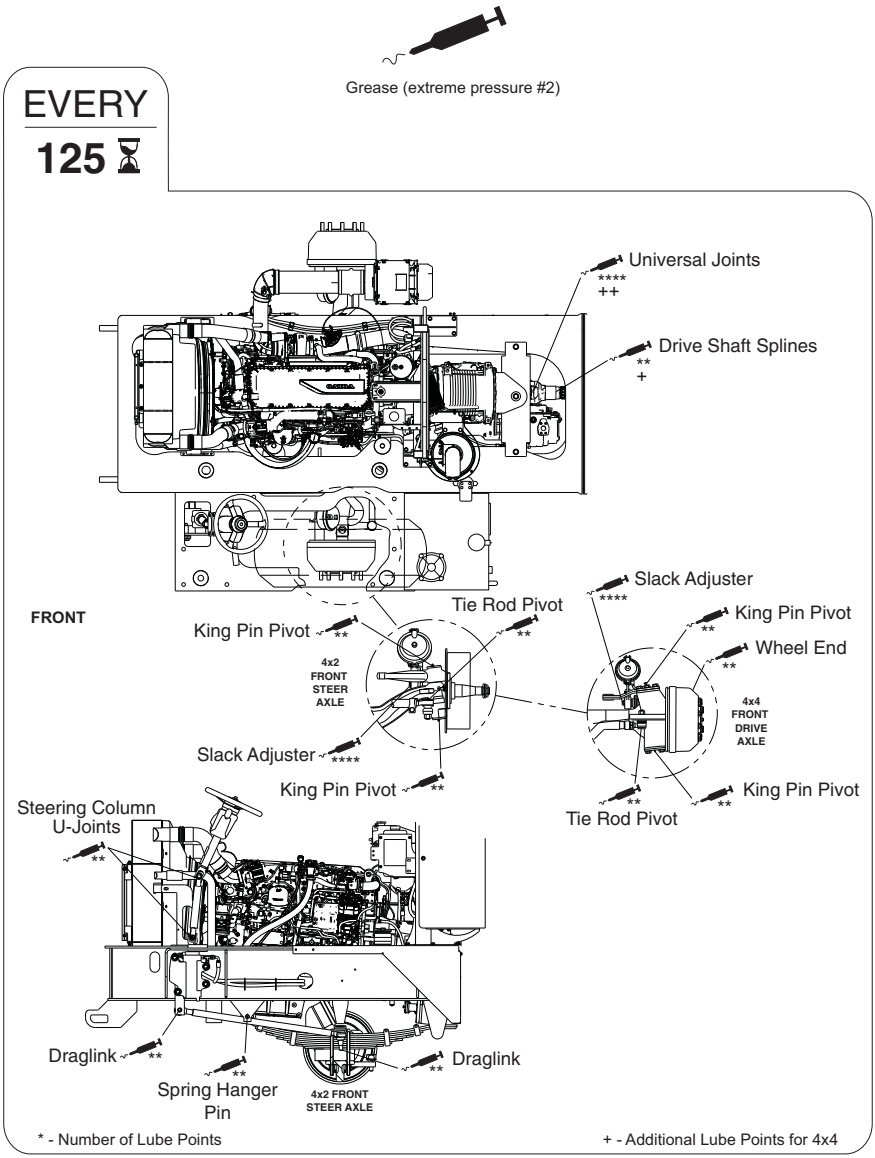

OAC2501

https://tractormanualz.com/

https://truckmanualshub.com/

Grease (extreme pressure #2)

EVERY
125

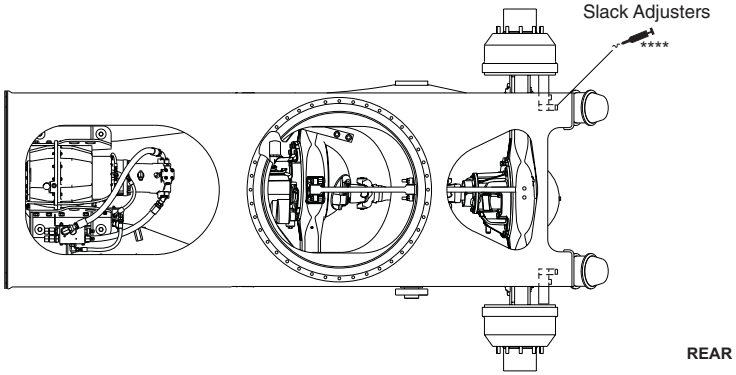

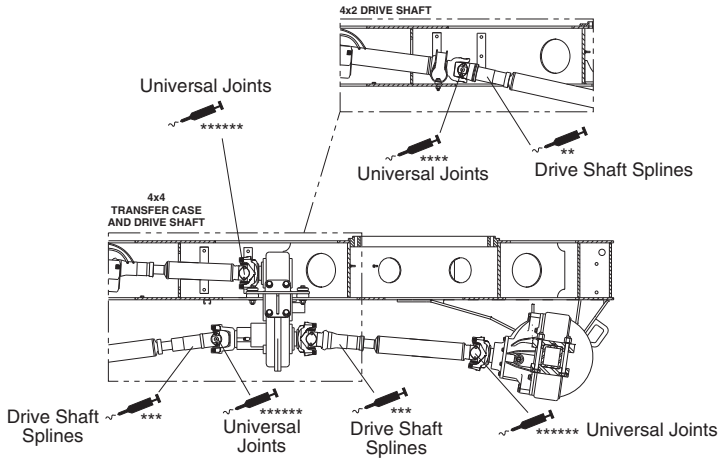

* - Number of Lube Points

\+ - Additional Lube Points for 4x4

OAC2561

https://tractormanualz.com/

https://truckmanualshub.com/

Monthly (125 Hour Maximum) Lubrication Schedule - XL4100V & XL5100V

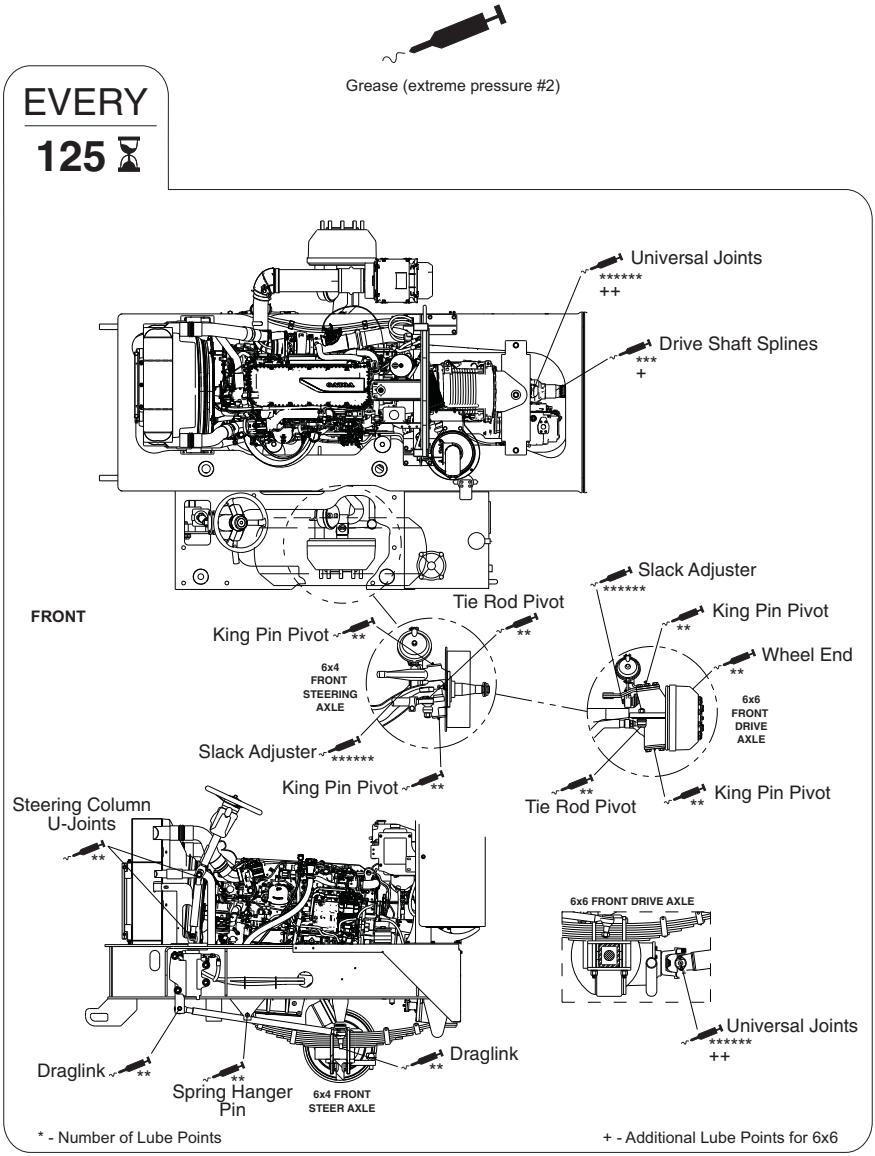

https://tractormanualz.com/

https://truckmanualshub.com/

Grease (extreme pressure #2)

EVERY

125

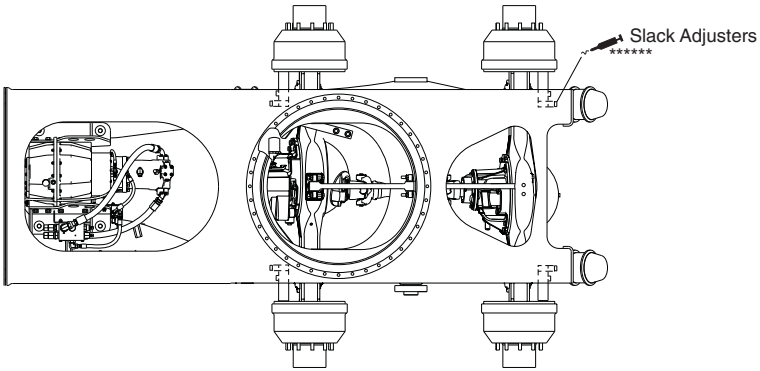

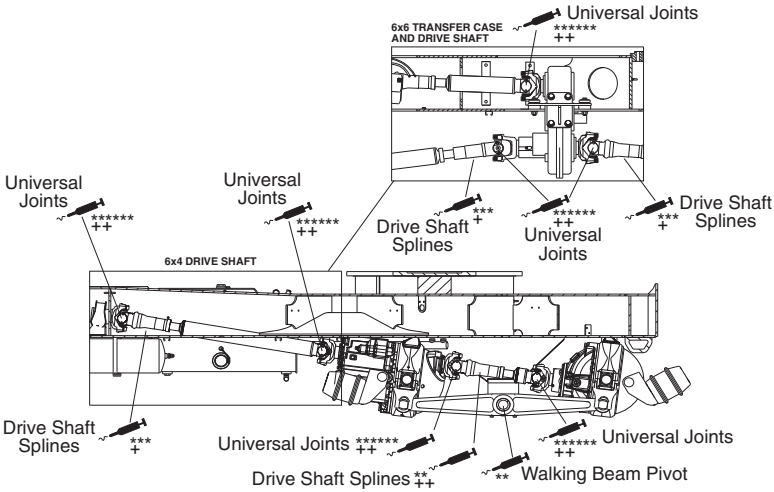

* - Number of Lube Points

\+ - Additional Lube Points for 6x6

OAC2571

https://tractormanualz.com/

https://truckmanualshub.com/

Semi-Annual (750 Hour Maximum) Lubrication Schedule - XL3100V

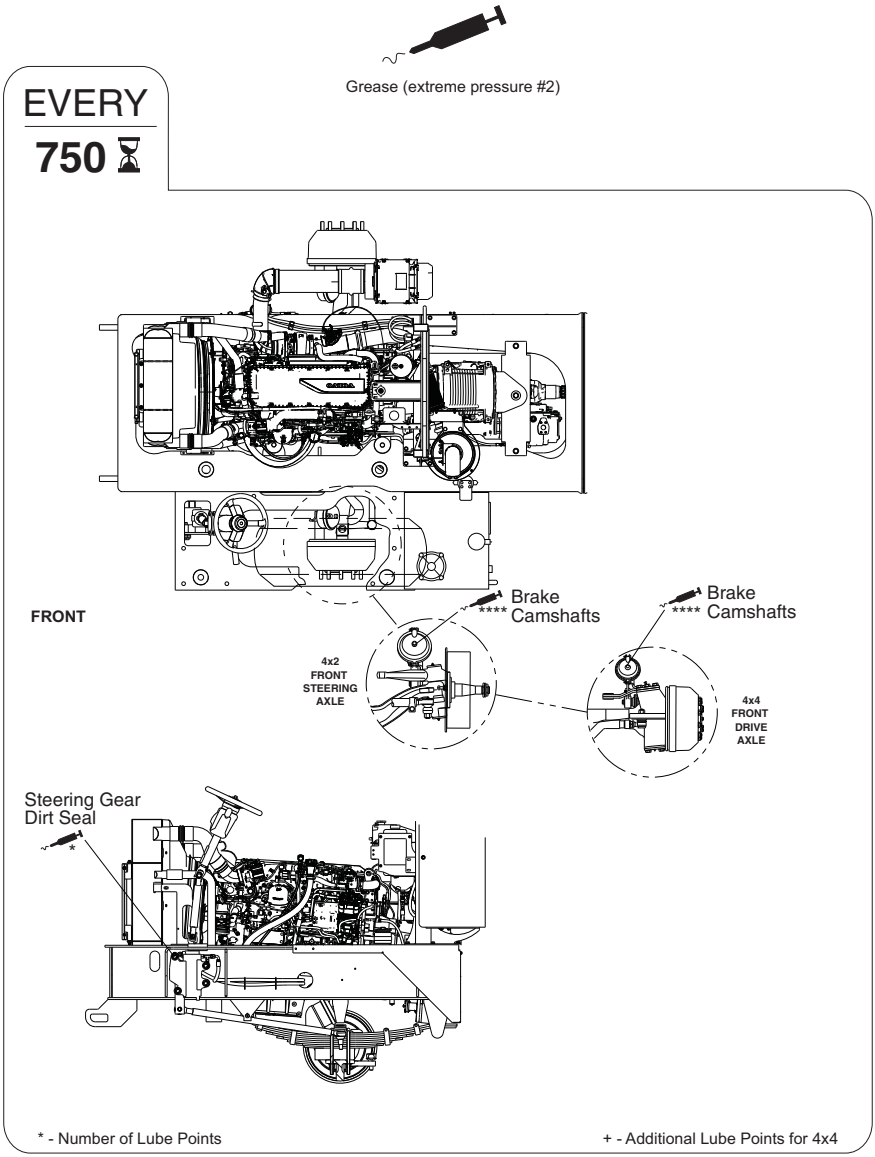

OAC2521

https://tractormanualz.com/

https://truckmanualshub.com/

Grease (extreme pressure #2)

EVERY
750

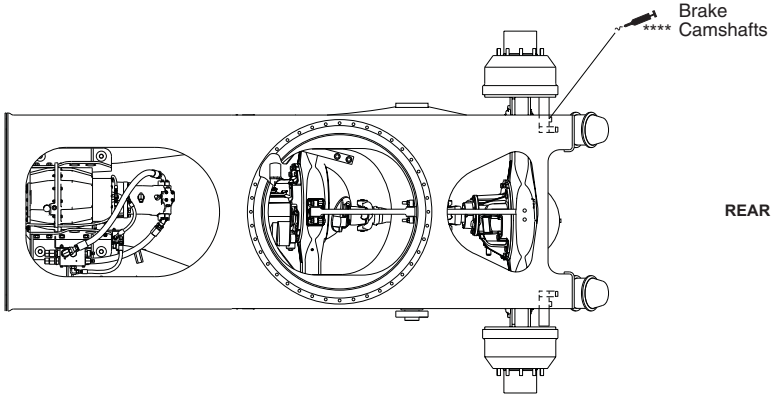

* - Number of Lube Points

\+ - Additional Lube Points for 4x4

OAC2531

https://tractormanualz.com/

https://truckmanualshub.com/

Semi-Annual (750 Hour Maximum) Lubrication Schedule - XL4100V & XL5100V

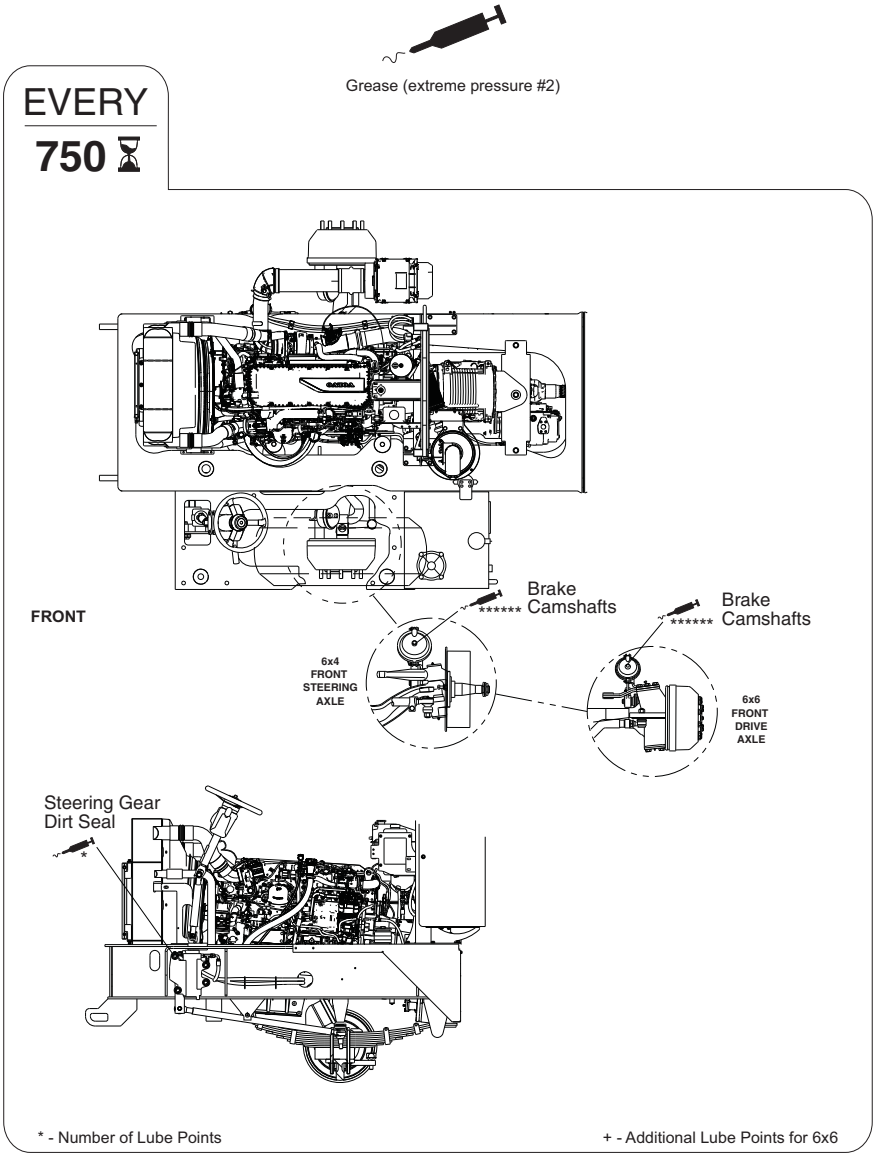

https://tractormanualz.com/

https://truckmanualshub.com/

Grease (extreme pressure #2)

EVERY

750

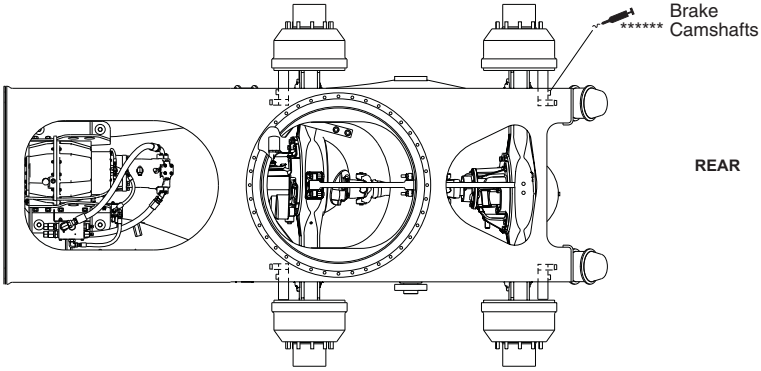

* - Number of Lube Points

\+ - Additional Lube Points for 6x6

OAC2551

https://tractormanualz.com/

https://truckmanualshub.com/

5.5 UPPERSTRUCTURE LUBRICATION SCHEDULES

Daily or Shift (10 Hour Maximum) Lubrication Schedule

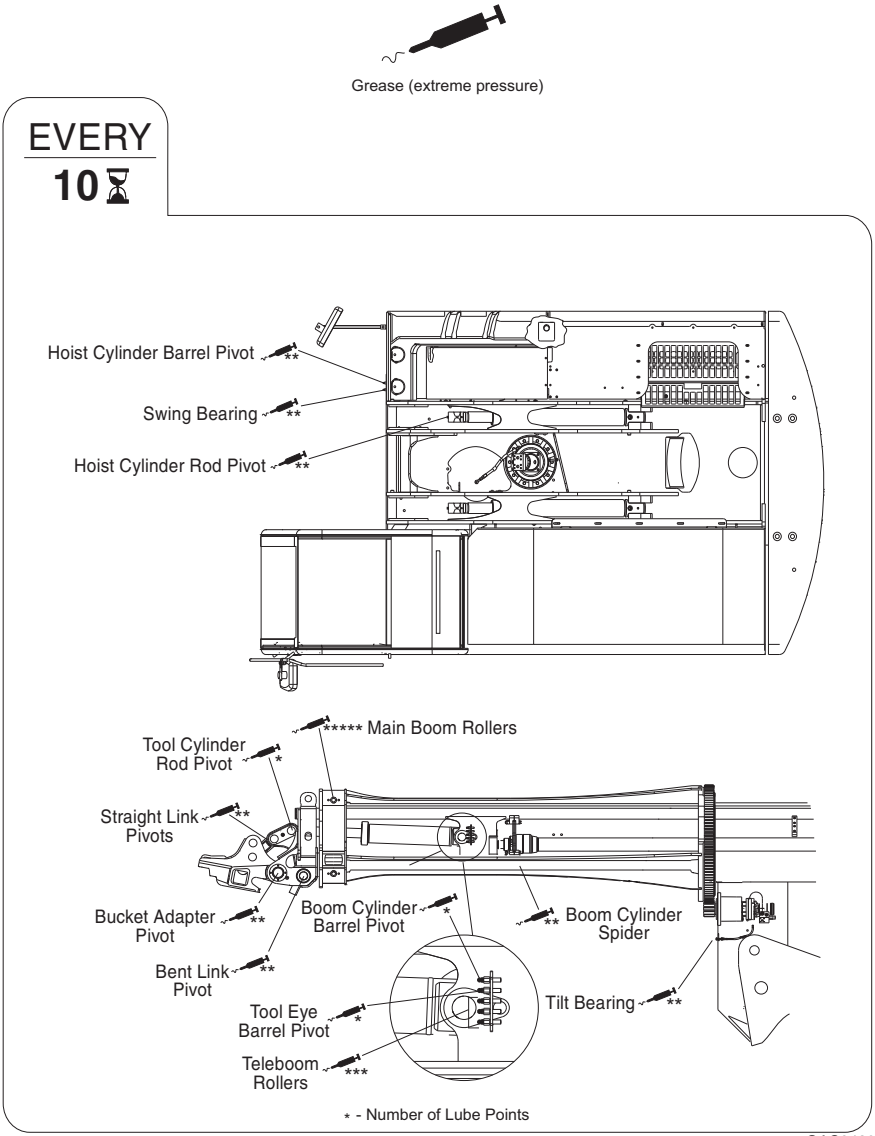

https://tractormanualz.com/

https://truckmanualshub.com/

Annual (1500 Hour Maximum) Lubrication Schedule

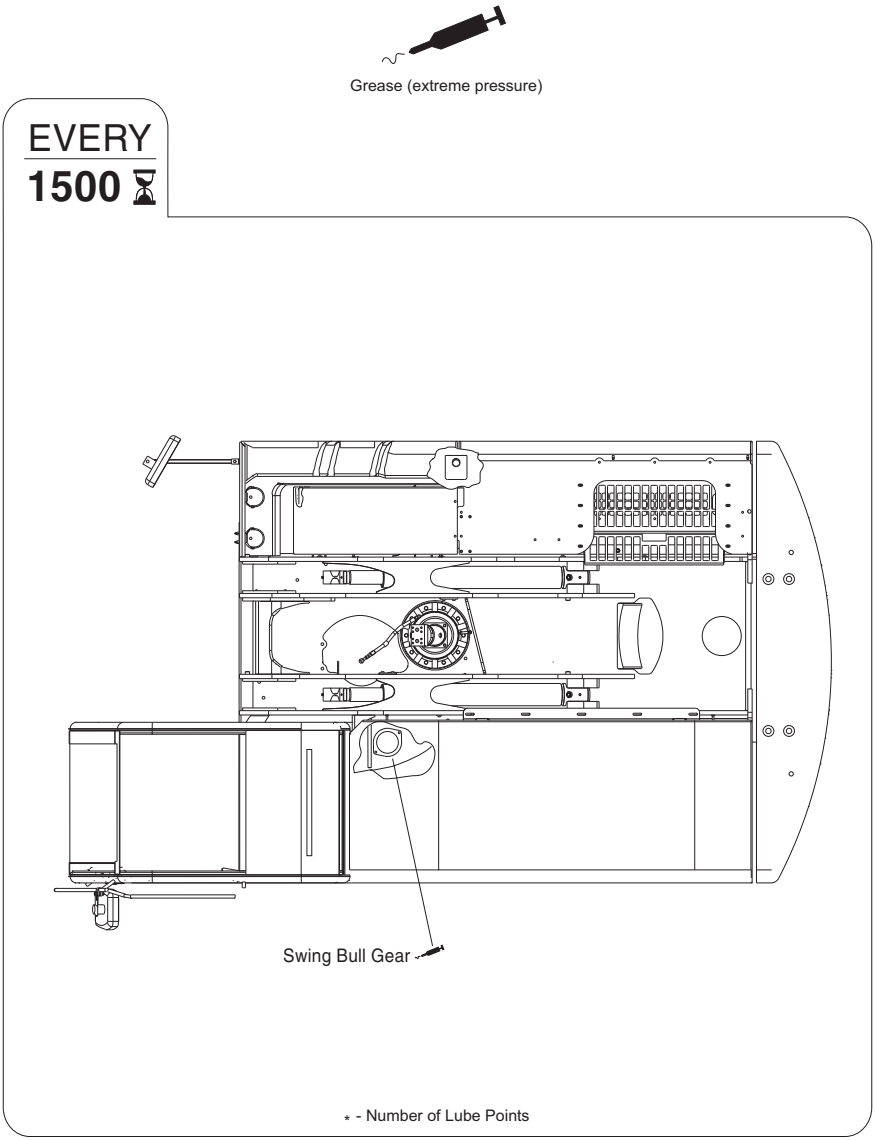

https://tractormanualz.com/

https://truckmanualshub.com/

5.6 OPERATOR MAINTENANCE INSTRUCTIONS

10 Hours

Fuel Level Check

10 OAC1030 OW0990

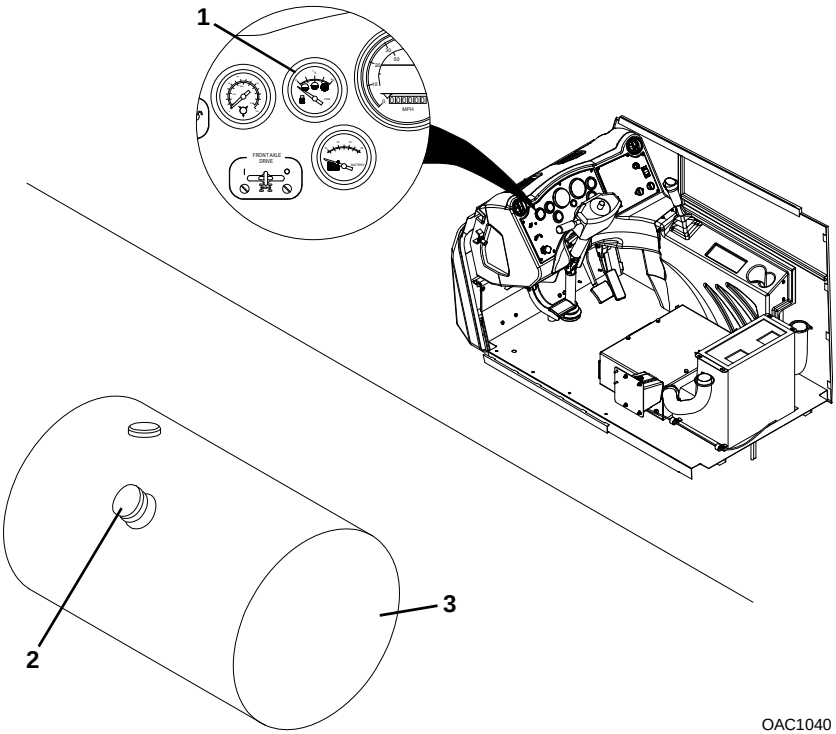

OAC1040

1. Check fuel gauge **(1)** located on dash panel in undercarriage cab.
2. If fuel is low, perform shutdown procedure on page 3-14 or page 3-33 and proceed to fuel tank **(3)**.
3. Turn fuel tank cap **(2)** and remove from fuel tank **(3)**. Add diesel fuel as needed. Replace fuel tank cap.

Replenish diesel fuel at end of each work shift to minimize condensation.

https://tractormanualz.com/

https://truckmanualshub.com/

Hydraulic Oil Level Check

10 OAC1030

OW1030

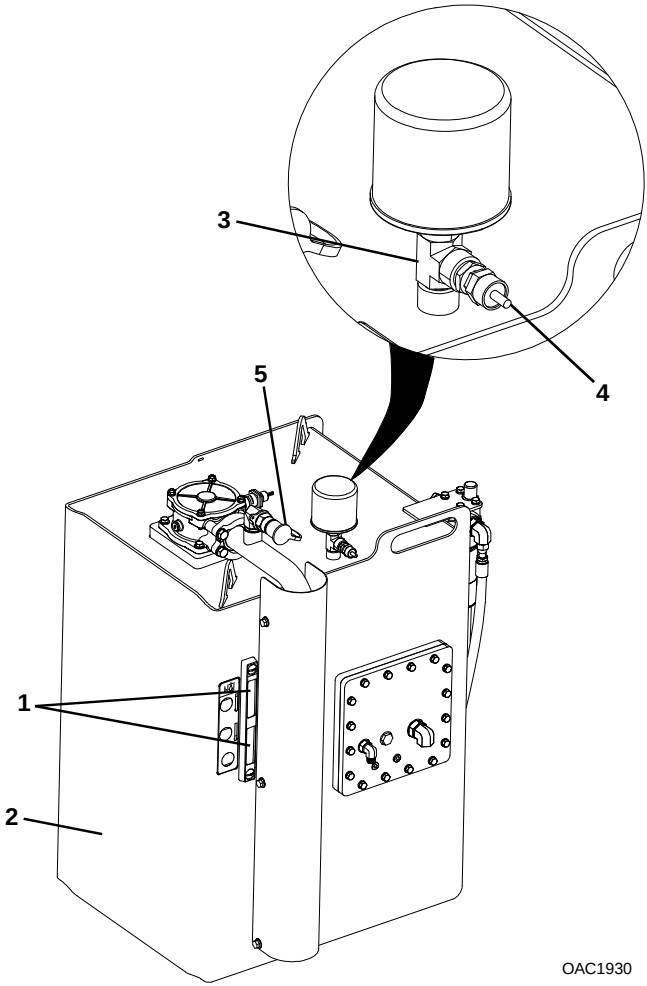

1. Be sure machine is level, boom is level and retracted and bucket is open.
2. Perform shutdown procedure on page 3-14 or page 3-33.
3. Check level of hydraulic oil at the sight gauge **(1)** on the hydraulic tank **(2)**. The oil level should be visible in the upper gauge window.
4. If hydraulic oil is low, locate reservoir breather **(3)** mounted on tank. Depress breather plunger **(4)** to relieve all hydraulic reservoir pressure.

https://tractormanualz.com/

https://truckmanualshub.com/

5. Remove dust cap from pressure fill port **(5)**. Locate female coupling from tool kit and attach to pressure fill port. Add hydraulic fluid to level where oil is visible in upper gauge window.
6. Remove female coupling from fill port and replace dust cap.

https://tractormanualz.com/

https://truckmanualshub.com/

Hydraulic Tank Element Change (as filter indicator light indicates)

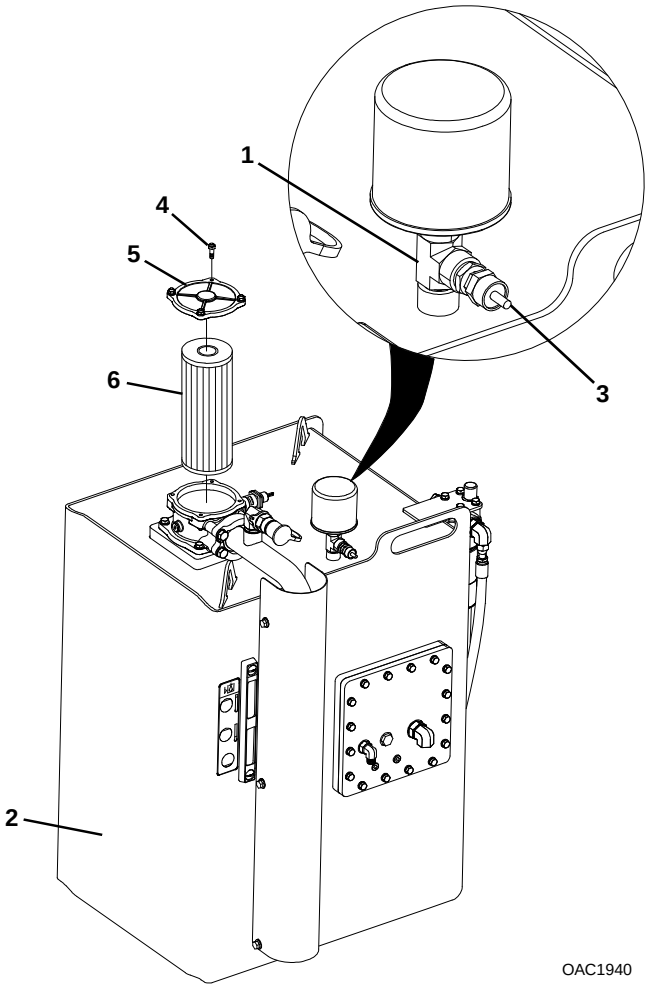

1. Perform shutdown procedure on page 3-14 or page 3-33.
2. Locate reservoir breather **(1)** mounted on hydraulic tank **(2)**.
3. Depress breather plunger **(3)** to relieve all hydraulic reservoir pressure.

https://tractormanualz.com/

https://truckmanualshub.com/

4. Remove bolts **(4)** on return filter to allow removal of filter cover **(5)**.
5. Remove old filter element **(6)** and replace with new element.
6. Replace filter cover **(5)** and bolts **(4)**. (Torque bolts to 200-225 lb-in).

https://tractormanualz.com/

https://truckmanualshub.com/

50 Hours

50 OAC1070 OAC1150

Check & Drain Air Tanks

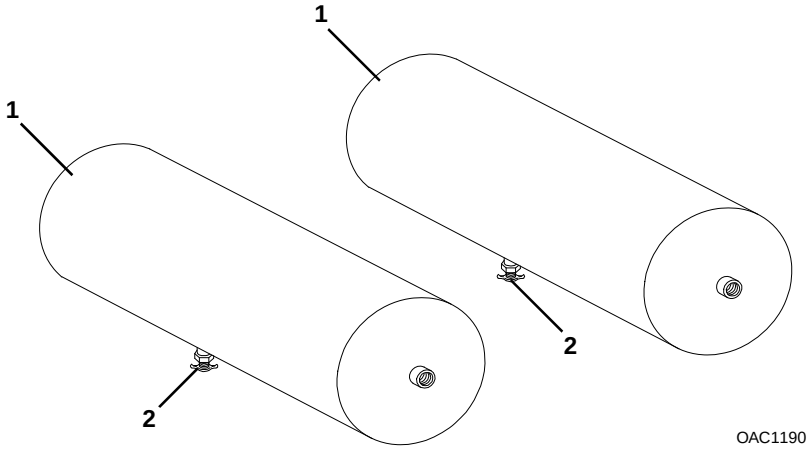

1. Perform shutdown procedure on page 3-14 or page 3-33.
2. Locate air tanks **(1)**.
3. Loosen drain cocks **(2)** to drain any moisture from air tanks. If significant moisture is found, check operation of air drier.
4. Tighten drain cocks.

https://tractormanualz.com/

https://truckmanualshub.com/

Tire Air Pressure Check

50 OAC1070 OW1040

1. Perform shutdown procedure on page 3-14 or page 3-33.
2. Remove valve stem cap.
3. Check tire pressure using a good quality gauge.
4. Add air if required (inflate tires to air pressure located on sidewall of equipped tire).
5. Replace valve stem cap.

https://tractormanualz.com/

https://truckmanualshub.com/

100 Hours

Replace Hydraulic Reservoir Breather

100 OAC2050 OW1030

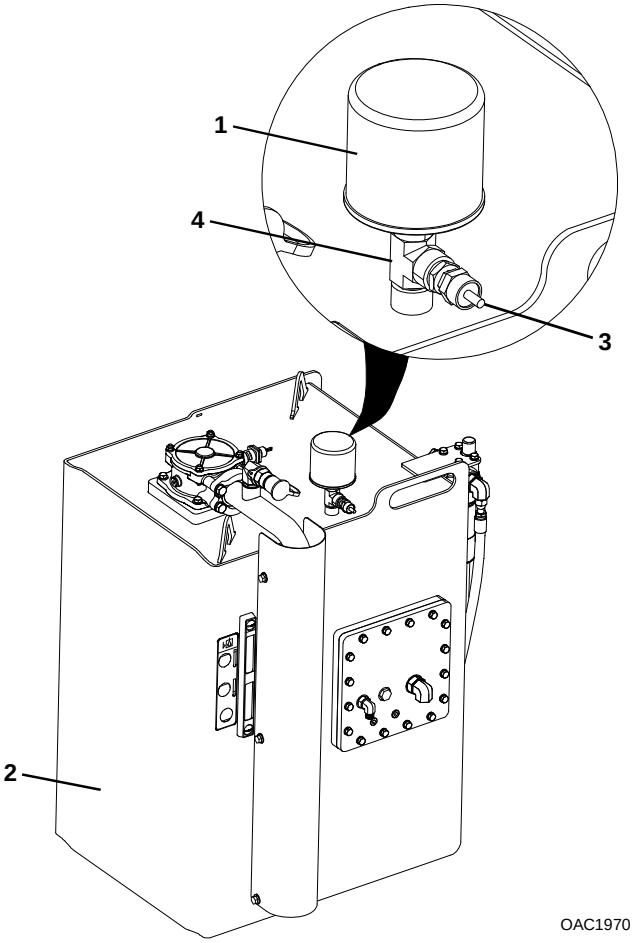

1. Perform shutdown procedure on page 3-14 or page 3-33.
2. Locate reservoir breather **(1)** mounted on hydraulic tank **(2)**.
3. Depress breather plunger **(3)** to relieve hydraulic reservoir pressure.
4. Spin reservoir breather counter-clockwise to remove from tee **(4)**.
5. Spin replacement reservoir breather clockwise to attach to tee.

https://tractormanualz.com/

https://truckmanualshub.com/

Battery Check

100 OAC2050 OW1080

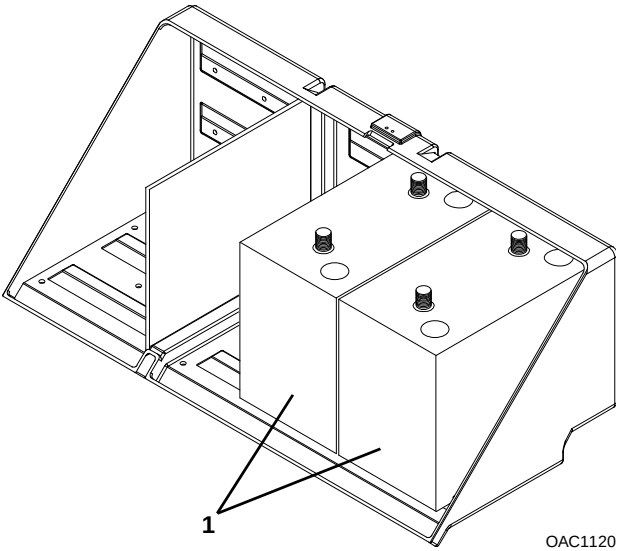

1. Perform shutdown procedure on page 3-14 or page 3-33.
2. Open the battery box cover.
3. Wearing eye protection, visually inspect the batteries **(1)**. Check terminals for corrosion. Replace battery if it has a cracked, melted or damaged case.
4. Close and secure the battery box cover.

https://tractormanualz.com/

https://truckmanualshub.com/

750 Hours

Replace In-Line Pilot Filter

750 OAC1090

OW1180

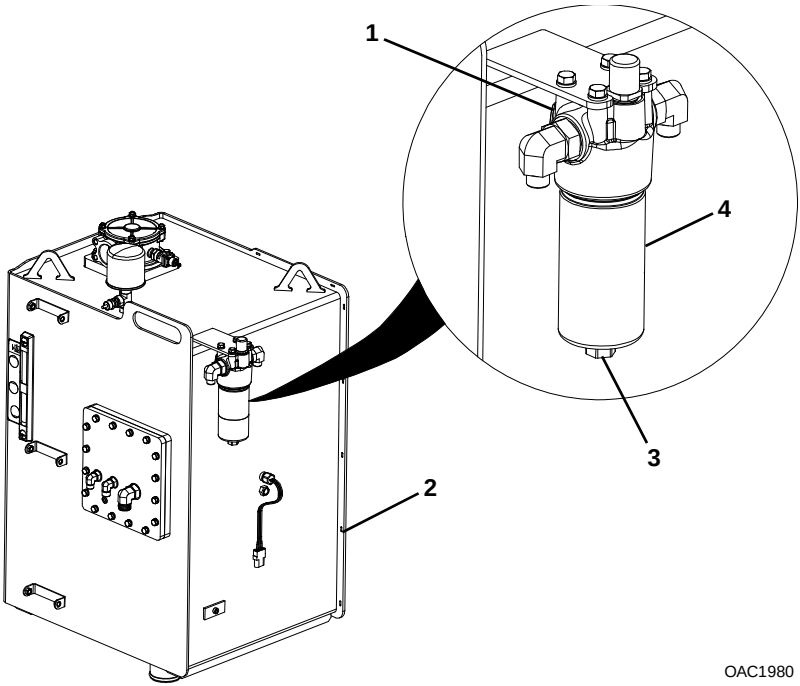

In-Line Pilot Filter Element

1. Perform shutdown procedure on page 3-14 or page 3-33.
2. Locate in-line pilot filter **(1)** located on hydraulic tank **(2)**.
3. Remove oil drain plug **(3)**. Drain oil into a suitable container.
4. Unscrew bowl **(4)** and remove filter element from element location spigot in the filter head.
5. Replace the filter element. Verify that the designation corresponds to that of the old element and place filter element carefully into the element location spigot in the filter head.
6. Screw in bowl fully, then unscrew by one quarter-turn. Replace oil drain plug.

https://tractormanualz.com/

https://truckmanualshub.com/

Automatic Slack Adjuster Check

750 OAC1090 OAC1100

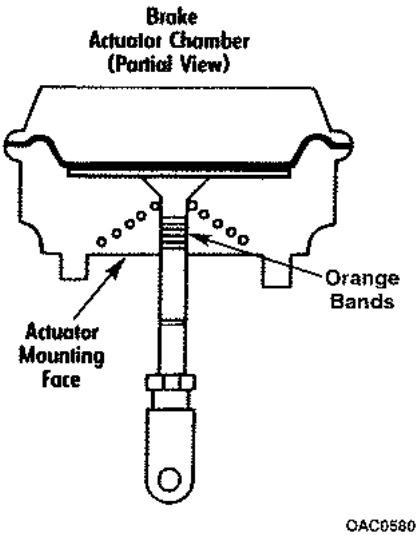

Note: *Brake actuator chamber is shown with digging brake applied and with brake worn to a point just before automatic adjustment. If orange band is visible, notify maintenance personnel for adjustment or repair.*

1. Position unit in a safe, level area.
2. With brake system fully charged (125 psi), apply digging brake, stop engine and remove key.
3. Install wheel chocks.
4. If one or more orange bands located on the push rods are visible at mounting face of any actuator, immediately notify your supervisor and/or maintenance personnel for inspection and/or repair.

https://tractormanualz.com/

https://truckmanualshub.com/

SECTION 6 - EMERGENCY PROCEDURES

6.1 LOSS OF POWER

The engine will de-rate if a problem develops. If this occurs, place the boom in the boom rest as soon as possible. Make all necessary repairs before continued operation.

If the machine loses power before the boom is place in the boom rest, follow the procedures below:

Stowing the boom without engine power

Be sure there is enough clearance for the attachment when the boom is in the boom rest by measuring the length from the roller bracket on the main boom to the attachment pivot point. If the distance is less than 6 feet, it will be necessary to extend the boom with another machine by performing the following procedure:

To extend the boom without engine power

1. Attach a test hose to the test fitting for the retract side of the boom circuit.
2. Direct the rod side oil into a waste container as the boom is SLOWLY pulled out.
3. Once the boom is at the proper extension, secure the telescoping boom to the main boom using a chain or strap to keep the boom from further movement.

To raise the boom without engine power

1. If the boom needs to be raised to place in the boom rest, it will be necessary to release the swing brake.
2. Secure the end of the boom to keep the upperstructure from swinging once the swing brake has been released.
3. Release the swing brake using a port-a-power to pressurize the swing brake to a maximum of 500 psi.
4. Attach a chain to the end of the telescoping boom to a machine having sufficient lift capacity and lift height to raise the boom.
5. Be certain that the boom will not contact any obstructions while raising it.
6. Attach a test hose on the rod side of the hoist cylinders to bleed oil into a waste container.
7. Lift the boom SLOWLY, directing the hoist cylinder rod side oil into a container.

https://tractormanualz.com/

https://truckmanualshub.com/

8. Once the boom is raised high enough to clear the cab and boom rest, swing into position over the boom rest.
9. While still supporting the boom with another machine, remove the test hose from the hoist up side of the circuit.
10. Attach test hose to the hoist down test fitting, directing oil into a waste container.
11. SLOWLY lower the boom into place squarely on the boom rest.
12. Once the boom is in the rest, use the boom tie-down to secure it.
13. Remove test hoses used for the procedure.
14. Secure the telescope boom to keep it from extending and retracting.
15. Follow the procedure on page 3-34 for shifting the machine into travel mode.
16. Make sure that the machine air pressure is such that it will allow the shift back to travel mode.

Towing

When transporting the vehicle with one or all axles on the road, it is possible to damage the axles if the wrong procedure is used before transporting begins.

Before towing the vehicle, apply the park brake, block the wheels, and put the transmission in neutral.

The front axle drive shaft (if equipped) and rear axle drive shafts must be removed prior to towing.

All repairs must be made and the machine verified for correct operation before allowing it back into service.

If You Get Stuck

If unit becomes stuck, you can use the boom to help free it.

- Position undercarriage and upperstructure controls for remote control operation.
- Position boom over rear of undercarriage (centered over rear to prevent tipping) and imbed bucket or attachment in ground.

While actuating travel pedal in appropriate direction, extend or retract boom as required to help push or pull unit to solid ground. Keep wheels in contact with ground.

https://tractormanualz.com/

https://truckmanualshub.com/

SECTION 7 - SPECIFICATIONS

7.1 PRODUCT SPECIFICATIONS

Lubrication & Fluid Capacities

Note: *Lubricants described in this table are used in standard machines when they are shipped from Gradall Industries, Inc.*

Engine Crankcase Oil

Capacity with Filter Change (4-cylinder) .....17.2 quarts (16.3 liters)

Capactiy with Filter Change (6-cylinder) .....28.0 quarts (26.5 liters)

Type of Oil ..... 15W-40 (Volvo VDS-4 rated oil)

Cooling System

System Capacity .....11 gallons (41.6 liters)

Type of Coolant ..... OAT Coolant (p/n 80533046)

Hydraulic System

System Capacity
XL3100V.....65 gallons (246 liters)

System Capacity
XL4100V, XL4130 & XL5100V.....70 gallons (265 liters)

Type of Oil ..... Mobilfluid® 424 Tractor Hydraulic Fluid (ISO 46)**

Upperstructure Cab Heater

Capacity .....1.3 gallons (4,9 liters)

Type of Fluid..... Conoco Heat Transfer 32 Hydraulic Fluid (p/n 80533049)

Steering System

System Capacity .....2 gallons (7,6 liters)

Type of Fluid..... Super ATF (8053-3026)

Transmission

Capacity ..... 29 Quarts (27 liters)

Type of Fluid..... Synthetic ATF (Allison TES-295) (8053-3040)

https://tractormanualz.com/

https://truckmanualshub.com/

Transfer Case

Capacity..... 21 pints (9,9 liters)

Type of Fluid .....Mobilfluid® 424 Tractor Hydraulic Fluid (ISO 46)**

DEF (Diesel Exhaust Fluid) Tank

Capacity..... 10 gallons (37,8 liters)

Type of Fluid ..... Clear DEF (8053-3041)

Rear Axle (XL3100V)

Capacity..... 31 pints (14,6 liters)

Type of Fluid 80w90 (8053-3027)

Rear Tandem Axle (forward) (XL4100V & XL5100V)

Capacity..... 34 pints (16 liters)

Type of Fluid 80w90 (8053-3027)

Rear Tandem Axle (rear) (XL4100V & XL5100V)

Capacity..... 31 pints (14,7 liters)

Type of Fluid 80w90 (8053-3027)

Front Axle (XL3100V 4x4)

Capacity..... 27 pints (12,8 liters)

Type of Fluid 80w90 (8053-3027)

Front Axle Wheel Ends (XL3100V 4x2; XL4100V 6x4 & XL5100V 6x4; XL4130V)

Capacity..... 4 ounces (0,1 liters) (per wheel)

Type of Fluid 80w90 (8053-3027)

Front Axle (XL4100V 6x6 & XL5100V 6x6)

Capacity..... 27 pints (12,8 liters)

Type of Fluid 80w90 (8053-3027)

Fuel Tank

Capacity..... 100 gallons (378 liters)

Type of Fuel ..... #2 Diesel (8053-3028)

https://tractormanualz.com/

https://truckmanualshub.com/

Swing Transmission

Capacity ..... 4.75 quarts (4,5 liters)

Type of Fluid 80w90 (8053-3027)

Swing Bull Gear

Capacity ..... as required

Type of Fluid ..... Extreme Pressure Lube #2

Tilt Transmission

Capacity ..... 32-34 ounces (0,9-1,0 liters)

Type of Fluid 80w90 (8053-3040)

Tilt Bull Gear

Capacity ..... as required

Type of Fluid ..... Open Gear Lube (8053-3027)

Grease Fittings

Capacity ..... as required

Type of Lube ..... Extreme Pressure Lube #2

***** Capacities are approximate - Check level to be sure
****** Hydraulic Fluid Specifications; Pour Point -46°F., SSU @ 100° F. 275; Flash Point 442° F. Approved Supplier & Type: Mobil Mobilfluid 424

Tires

Air Pressure

Inflate tires to air pressure located on sidewall of equipped tire.

Battery

TROJAN C31
BCI Group 31
Maintenance Free CLAC/CALC w/handles
1000 Cold Cranking AMPS @ 0°F (-17°C)
200 Minutes Minimum Reserve Capacity @ 25 AMPS
Top Studs: 3/8-16
Trojan Type C31-1000S
Dimensions (LxWxH):
12.970” x 8.685” x 6.750” (329.4 mm x 220.59 mm x 171.45 mm)

https://tractormanualz.com/

https://truckmanualshub.com/

Weight

XL3100V

Gross Vehicle Axle Weight Rating (4x2).....41,250 lb (18,711 kg)

Gross Vehicle Axle Weight Rating (4x4).....44,250 lb (20,071 kg)

XL4100V

Gross Vehicle Axle Weight Rating (6x4).....66,000 lb (29,937 kg)

Gross Vehicle Axle Weight Rating (6x6).....69,000 lb (31,928 kg)

XL4130V

Gross Vehicle Axle Weight Rating (6x4).....68,700 lb (31,162 kg)

XL5100V

Gross Vehicle Axle Weight Rating (6x4).....66,000 lb (29,937 kg)

Gross Vehicle Axle Weight Rating (6x6).....69,000 lb (31,928 kg)

Note: *Refer to detailed specification sheet for additional machine weight information. Specification sheets can be viewed/downloaded at www.gradall.com*

Dimensions

XL3100V

Wheelbase..... 13.4 ft (4,1 m)

Ground Clearance .....10 in (254 mm)

Transport Length (without bucket) ..... 23.3 ft (7,1 m)

Transport Height (without bucket) (4x2)..... 11.1 ft (3,4 m)

Transport Height (without bucket) (4x4)..... 11.5 ft (3,5 m)

Transport Width ..... 8.6 ft (2,6 m)

XL4100V & XL4130V

Wheelbase..... 14.2 ft (4,3 m)

Ground Clearance .....10 in (254 mm)

Transport Length (without bucket) ..... 25.1 ft (7,6 m)

Transport Height (without bucket) (6x4)..... 10.11 ft (3,3 m)

Transport Height (without bucket) (6x6)..... 11.3 ft (3,4 m)

Transport Width ..... 8.6 ft (2,6 m)

https://tractormanualz.com/

https://truckmanualshub.com/

XL5100V

Wheelbase .....14.3 ft (4,4 m)

Ground Clearance .....10 in (254 mm)

Transport Length (without bucket) .....25.6 ft (7,8 m)

Transport Height (without bucket) (6x4) .....11.2 ft (3,4 m)

Transport Height (without bucket) (6x6) .....11.5 ft (3,5 m)

Transport Width .....8.6 ft (2,6 m)

Note: *Refer to detailed specification sheet for additional machine dimension information. Specification sheets can be viewed/downloaded at www.gradall.com*

https://tractormanualz.com/

https://truckmanualshub.com/

7.2 TORQUE CHART

To check **Gradall** torque values, set the torque wrench at 95% of the rated torque values and check fastener. If the torque wrench releases before the fastener moves, assume fastener torque is correct. When setting **Gradall** torque values, use the values given on the following chart. DO NOT EXCEED allowances.

Boom Cylinder Rod Retainer

Quantity 6

Thread Size (grade) 5/8-11 (8)

Torque (lubricated) ..... 200-215 lb-ft (272-292 Nm)

Swing Bearing

Quantity 72

Thread Size (grade) 5/8-11 (8)

Torque (lubricated) ..... 200-215 lb-ft (272-292 Nm)

Swing Motor

Quantity 4

Thread Size (grade) 1/2-13 (5)

Torque (lubricated) ..... 68-78 lb-ft (92-105 Nm)

Swing Transmission

Quantity 10

Thread Size (grade) 3/4-10 (8)

Torque (lubricated) ..... 340-365 lb-ft (461-496 Nm)

Tilt Bearing

Quantity 63

Thread Size (grade) 3/4-10 (8)

Torque (lubricated) ..... 340-365 lb-ft (461-496 Nm)

Tilt Motor

Quantity 2

Thread Size (grade) 1/2-13 (8)

Torque (lubricated) ..... 68-78 lb-ft (92-105 Nm)

https://tractormanualz.com/

https://truckmanualshub.com/

Tilt Transmission

Quantity ..... 31 pints (14,7 liters)

Thread Size (grade) 80w90 (1440-3126)

Torque (lubricated) ..... 200-215 lb-ft (272-292 Nm)

Wheel Lug Nuts

Quantity ..... ALL

Thread Size (grade) 3/4-10 (8)

Torque (lubricated) ..... 450-500 lb-ft (610-678 Nm)

Front Axle U-Bolt Nuts

Quantity ..... ALL

Thread Size (grade) 3/4-10 (8)

Torque ..... 300-310 lb-ft (406-420 Nm)

Undercarriage Cab Steering Wheel Retaining Nut

Quantity 1

Torque ..... 40-45 lb-ft (54-61 Nm)

https://tractormanualz.com/

https://truckmanualshub.com/

Rear Axle Mounting Bolts (XL3100V)

Quantity 8

Thread Size (grade) 7/8-14 (8)

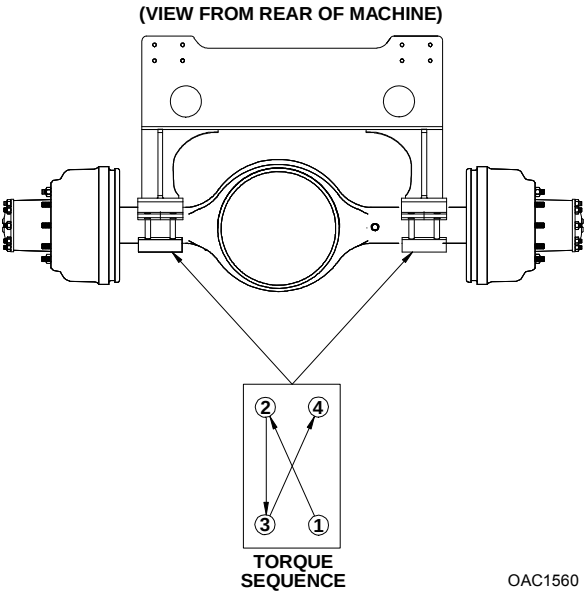

Torque bolts in a 4 stage, criss-cross pattern:

Torque (Stage 1) ..... 150-185 lb-ft (203-251 Nm)

Torque (Stage 2) ..... 280-315 lb-ft (380-427 Nm)

Torque (Stage 3) ..... 470-505 lb-ft (637-685 Nm)

Torque (Stage 4) ..... 560-595 lb-ft (759-807 Nm)

https://tractormanualz.com/

https://truckmanualshub.com/

7.3 FUSES

Fuse location and size designations are identified with the decals shown below.

Upperstructure

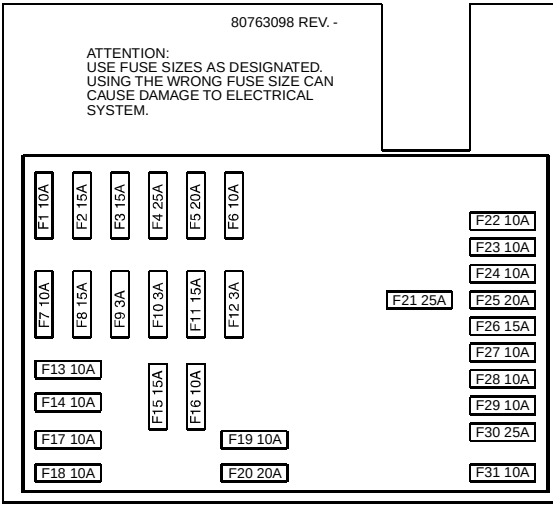

F1 SPARE BATTERY POWER
F2 SPARE BAT POWER #1
F3 SPARE BAT POWER #2
F4 AC FAN POWER
F5 BOOM LIGHT POWER
F6 OPTION #1 POWER
F7 SPARE IGNITION POWER
F8 RC POWER
F9 JOYSTICK POWER
F10 RC POWER
F11 RC/TRVL/STR POWER
F12 HYD PILOT POWER
F13 AC CLUTCH/VALVE POWER
F14 WASHER POWER
F15 HORN POWER
F16 BATTERY POWER
F17 SP-3 (SPARE 3)
F18 SP-2 (SPARE 2)
F19 WORK LIGHT PWR
F20 CAB LIGHT PWR
F21 SPARE ACC RELAY PWR
F22 TILT/AUXILIARY POWER
F23 SPARE ACCY-B POWER
F24 POWER OUTLET #2
F25 WIPER POWER
F26 D.C. CONVERTER POWER
F27 SPARE ACCY-A POWER
F28 SWITCH POWER
F29 POWER OUTLET #1
F30 HEATER POWER
F31 SP-1 (SPARE 1)

OAC1910

Undercarriage

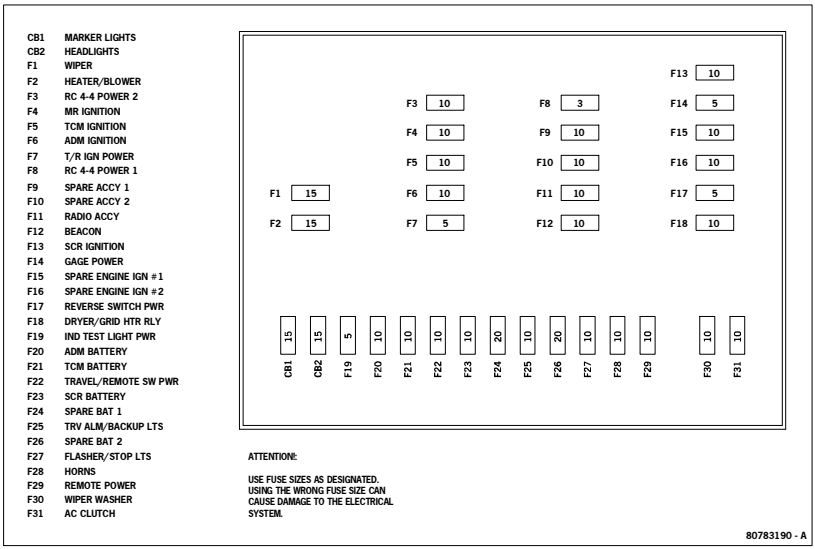

OAC1920

https://tractormanualz.com/

https://truckmanualshub.com/

This Page Intentionally Left Blank

https://tractormanualz.com/

Gradall Series V Highway Speed Excavator Pre-Operation Inspection Checklist

ID/Serial Number: _____ Shift: _____ Date: _____

WARNING **Before conducting the walk around inspection, make sure the engine is off and the transmission is in neutral with the park brake engaged. The boom and attachment must be resting on the ground, securely blocked, or retained in the transport position with all hydraulic pressure relieved.**

Item	•	Comments if not O.K.
Operator and Safety Manuals – located in each cab		
Warning Decals – in place and legible		
Chassis Cab Windows and Door – not broken and clean, door closes properly		
Chassis Cab Seat Belt – undamaged; working condition		
Front Axle – steering linkage - good condition; no cylinder or hose leaks		
Wheels – check lug nut torque; no damage or cracks		
Tires – proper inflation; no damage; adequate tread		
Air tanks – open petcocks to drain water; no damage; hoses in good condition		
Work lights – Clean and undamaged		
Upperstructure cab – windows not broken and clean, door latches in open and closed position		
Fuel/DEF Tank(s) – no leaks; filler cap securely fastened		
Mud Flaps – positioned for driving or digging operations		
Rear axle(s) – no axle leaks; axle bolts torqued		
Hydraulic Oil Reservoir – oil is clear and at proper level		
Boom Tilt Bearing – properly lubricated, undamaged		
Main control valve and cover – no damage or leaks; cover support gas strut and latch working properly		
Battery Box – cables tight; cover properly secured		

Item	•	Comments if not O.K.
Air Cleaner – check element condition indicator		
Engine – oil and coolant at proper level.		
Power Steering Fluid – at proper level		
Radiator – free of debris, no leaks		
Transmission – no leaks, undamaged		
Brakes – no damage; in good condition		
Grab Handles and Steps – secure and clean		
Horn – clean and undamaged		
Headlights, Marker Lights, and Turn Signals – clean and undamaged		
Boom – rollers adjusted, no damage; secure for driving		
Boom Attachment – securely installed		
Hydraulic Hoses – no leaks or damage		
Fuel/DEF Level(s) – adequate		
Windshield Washer Fluid – level adequate in each cab		
Mirrors – good condition, clean, and properly adjusted		
Maintenance – up to date with schedule in manual		
Lubrication – Reference lubrication chart in manual		
Overall Machine Condition – No cracks on boom, upperstructure frame, chassis frame, or fiberglass		

Comments:

DO NOT OPERATE UNSAFE EQUIPMENT

Repair any deficiencies before driving or operating the equipment

Operators Signature: _____ **Date:** _____

https://tractormanualz.com/

https://truckmanualshub.com/

Gradall Series V Highway Speed Excavator Pre-Operation Inspection Checklist

ID/Serial Number: _____ Shift: _____ Date: _____

WARNING **Before conducting the operational check of the excavator perform a walk around inspection. Do not operate the excavator until any discrepancies noted during the walk around inspection have been repaired. Make sure others are clear of the machine before starting the engine and during operation.**

Item (Chassis Operation)	•	Comments if not O.K.
Park Brake – functions properly		
Transmission – Neutral start switch functions properly		
Engine – operates properly		
Dash Lights, Indicators, and Gages – function properly		
Low Air Warning Buzzer – sounds with less than 60 PSI		
Air Pressure – reaches minimum of 100 PSI		
Service Brakes – functions properly		
Windshield Wiper – functions properly		
Steering – functions properly		
Backup Alarm – functions properly		
Horn – functions properly		
Head Lights, Marker Lights, Turn Signals – clean and function properly		

Item (Upperstructure Operation)	•	Comments if not O.K.
Control Cut Out Lever – engine only starts with the lever raised.		
Engine – operates properly		
Upperstructure Lights, Indicators, and Gages – function properly		
Control Cut Out Lever – controls do not operate while in the raised position.		
Control Pattern Decal – matches control pattern		
Boom Functions (Boom - Up, Down, In, Out, Tilt Left, Tilt Right, Bucket Open, Bucket Closed) – function properly		
Swing Function – swing left, right, and swing brake functions properly		
Swing Lights – function properly		
Dig Brakes – function properly		
Park Brake – functions properly		
Remote Steering – functions correctly		
Remote Travel – forward and reverse functions correctly		
Travel Alarm – functions properly		
Horn – functions properly		

Comments:

DO NOT OPERATE UNSAFE EQUIPMENT
Repair any deficiencies before driving or operating the equipment

Operators Signature: _____ **Date:** _____

https://truckmanualshub.com/

https://tractormanualz.com/

Gradall Series V Highway Speed Excavator Pre-Operation Inspection Checklist

ID/Serial Number: _____ Shift: _____ Date: _____

WARNING **Before conducting the walk around inspection, make sure the engine is off and the transmission is in neutral with the park brake engaged. The boom and attachment must be resting on the ground, securely blocked, or retained in the transport position with all hydraulic pressure relieved.**

Item	•	Comments if not O.K.
Operator and Safety Manuals – located in each cab		
Warning Decals – in place and legible		
Chassis Cab Windows and Door – not broken and clean, door closes properly		
Chassis Cab Seat Belt – undamaged; working condition		
Front Axle – steering linkage - good condition; no cylinder or hose leaks		
Wheels – check lug nut torque; no damage or cracks		
Tires – proper inflation; no damage; adequate tread		
Air tanks – open petcocks to drain water; no damage; hoses in good condition		
Work lights – Clean and undamaged		
Upperstructure cab – windows not broken and clean, door latches in open and closed position		
Fuel/DEF Tank(s) – no leaks; filler cap securely fastened		
Mud Flaps – positioned for driving or digging operations		
Rear axle(s) – no axle leaks; axle bolts torqued		
Hydraulic Oil Reservoir – oil is clear and at proper level		
Boom Tilt Bearing – properly lubricated, undamaged		
Main control valve and cover – no damage or leaks; cover support gas strut and latch working properly		
Battery Box – cables tight; cover properly secured		

Item	•	Comments if not O.K.
Air Cleaner – check element condition indicator		
Engine – oil and coolant at proper level.		
Power Steering Fluid – at proper level		
Radiator – free of debris, no leaks		
Transmission – no leaks, undamaged		
Brakes – no damage; in good condition		
Grab Handles and Steps – secure and clean		
Horn – clean and undamaged		
Headlights, Marker Lights, and Turn Signals – clean and undamaged		
Boom – rollers adjusted, no damage; secure for driving		
Boom Attachment – securely installed		
Hydraulic Hoses – no leaks or damage		
Fuel/DEF Level(s) – adequate		
Windshield Washer Fluid – level adequate in each cab		
Mirrors – good condition, clean, and properly adjusted		
Maintenance – up to date with schedule in manual		
Lubrication – Reference lubrication chart in manual		
Overall Machine Condition – No cracks on boom, upperstructure frame, chassis frame, or fiberglass		

Comments:

DO NOT OPERATE UNSAFE EQUIPMENT

Repair any deficiencies before driving or operating the equipment

Operators Signature: _____ **Date:** _____

https://tractormanualz.com/

https://truckmanualshub.com/

Gradall Series V Highway Speed Excavator Pre-Operation Inspection Checklist

ID/Serial Number: _____ Shift: _____ Date: _____

WARNING **Before conducting the operational check of the excavator perform a walk around inspection. Do not operate the excavator until any discrepancies noted during the walk around inspection have been repaired. Make sure others are clear of the machine before starting the engine and during operation.**

Item (Chassis Operation)	•	Comments if not O.K.
Park Brake – functions properly		
Transmission – Neutral start switch functions properly		
Engine – operates properly		
Dash Lights, Indicators, and Gages – function properly		
Low Air Warning Buzzer – sounds with less than 60 PSI		
Air Pressure – reaches minimum of 100 PSI		
Service Brakes – functions properly		
Windshield Wiper – functions properly		
Steering – functions properly		
Backup Alarm – functions properly		
Horn – functions properly		
Head Lights, Marker Lights, Turn Signals – clean and function properly		

Item (Upperstructure Operation)	•	Comments if not O.K.
Control Cut Out Lever – engine only starts with the lever raised.		
Engine – operates properly		
Upperstructure Lights, Indicators, and Gages – function properly		
Control Cut Out Lever – controls do not operate while in the raised position.		
Control Pattern Decal – matches control pattern		
Boom Functions (Boom - Up, Down, In, Out, Tilt Left, Tilt Right, Bucket Open, Bucket Closed) – function properly		
Swing Function – swing left, right, and swing brake functions properly		
Swing Lights – function properly		
Dig Brakes – function properly		
Park Brake – functions properly		
Remote Steering – functions correctly		
Remote Travel – forward and reverse functions correctly		
Travel Alarm – functions properly		
Horn – functions properly		

Comments:

DO NOT OPERATE UNSAFE EQUIPMENT
Repair any deficiencies before driving or operating the equipment

Operators Signature: _____ **Date:** _____

https://truckmanualshub.com/

https://tractormanualz.com/

https://truckmanualshub.com/

A

Adapter Attachment Installation 4-5–4-6
Air Tanks 5-25
Approved Attachments 4-1
Attachment Operation 4-1
Attachments 4-1
Axles..... 7-2

B

Battery 5-28, 7-3
Boom Stow Procedure 3-35
Brake System, Remote Mode 3-17
Brake System, Travel Mode 3-4

C

Capacities..... 7-1
Chemical Hazards 1-10
Cooling System 7-1
Crush Hazards 1-6

D

Dash Panel..... 2-12, 2-22
Decals 2-6
Dig Cycle 3-22
Ditching Buckets..... 4-2
Dredging Bucket..... 4-4

E

Electrical Hazards 1-2
Electronic Monitoring Unit 2-32
Emergency Procedures..... 6-1
Engine Crankcase Oil..... 7-1
Engine Shutdown, Remote Mode... 3-33
Engine Shutdown, Travel Mode 3-14
Excavating Buckets 4-2

F

Fuel Level..... 5-20
Fuel Tank 7-2
Fuse Panel 7-9

G

Grading Blade 4-4

H

Hazards Lever..... 2-28
High Beam Lever 2-28
Hydraulic Oil Level 5-21
Hydraulic Reservoir Breather 5-27
Hydraulic Return Filter Element 5-23
Hydraulic System 7-1

I

Ignition, Undercarriage..... 2-27
Ignition, Upperstructure..... 2-44
Information Display 2-25
In-Line Pilot Filter 5-29
Intermittent Wiper/Washer, Upperstructure..... 2-45

J

Joystick Control Pattern Selection .. 2-38
Joystick Controls 2-39

L

Left Hand Arm Pod 2-36
Lift Capacity 3-31
Lifting a Load 3-28
Load Falling Hazard..... 1-9
Lubrication & Maintenance 5-1
Lubrication Schedule, Undercarriage..... 5-10
- Monthly (125 Hour Max) 5-10
- Semi-Annual (750 Hour Max) 5-14

Lubrication Schedule, Upperstructure.... 5-18
- Annual (1500 Hour Max) 5-19
- Daily/Shift (10 Hour Max) 5-18

O

Operation, Remote Control 3-15
Operation, Travel Mode 3-1
Operator Maintenance Instructions . 5-20

https://tractormanualz.com/

https://truckmanualshub.com/

Operator Seat 2-43

P

Park Brake Switch, Upperstructure 2-46

Parking Procedure 3-36

Pavement Removal Bucket 4-3

Personal Protection Equipment 1-13

Placing a Load 3-28

Pre-Operation and Controls 2-1

Pre-Operation Checks 2-1

R

Right Hand Arm Pod 2-34

Right Hand Dash Panel 2-13, 2-14, 2-15, 2-16, 2-17, 2-18, 2-23

S

Safety Practices 1-1

Safety Signal Words 1-1

Service & Maintenance Schedule 5-3
- 1st 30 Days 5-6
- 250 Hour 5-6
- 500 Hour 5-7
- Annual (1500 Hour Max) 5-9
- Daily/Shift (10 Hour Max) 5-3
- Monthly (125 Hour Max) 5-5
- Semi-Annual (750 Hour Max) 5-8
- Weekly (50 Hour Max) 5-4

Shifting Gears 3-10

Slack Adjuster Check 5-30

Slip and Fall Hazard 1-5

Specifications 7-1

Swing Hazards 1-3

T

Tip Over Hazard 1-9

Tire Pressure 5-26, 7-3

Tires 7-3

Transfer Case 7-2

Transmission 7-1

Travel Hazard 1-8

Travel/Remote Display 2-24

Trenching Buckets 4-3

Turn Signal Lever 2-28

U

Undercarriage Cab 2-10

Undercarriage Cab Controls & Indicators 2-22

Upperstructure Cab 2-30

Upperstructure Cab Controls & Indicators 2-32

W

Wheel Lug Nut 7-7

https://tractormanualz.com/

https://truckmanualshub.com/

Hand Signals

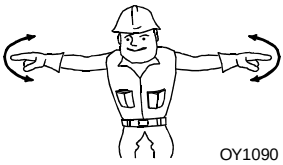 OY1090 EMERGENCY STOP - With both arms extended laterally, hands open downward, move arms back and forth.	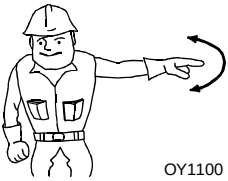 OY1100 STOP - With either arm extended laterally, hand open downward, move arm back and forth.	OY1110 STOP ENGINE - Draw thumb or forefinger across throat.
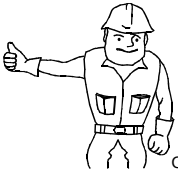 OY1120 RAISE BOOM - With either arm extended horizontally, fingers closed, point thumb upward.	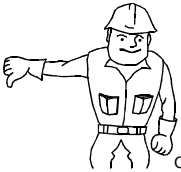 OY1130 LOWER BOOM - With either arm extended horizontally, fingers closed, point thumb downward.	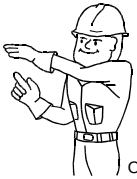 OY1140 MOVE SLOWLY - Place one hand motionless in front of hand giving motion signal. (Raise load slowly shown)
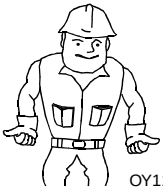 OY1150 EXTEND BOOM - With both hands clenched, point thumbs outward.	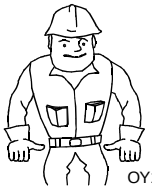 OY1160 RETRACT BOOM - With both hands clenched, point thumbs inward.	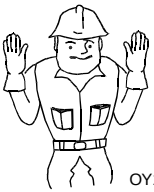 OY1170 THIS FAR TO GO - With hands raised and open inward, move hands laterally, indicating distance to go.
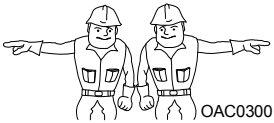 OAC0300 SWING- With either arm extended horizontally, point with forefinger to direction of swing rotation.	OAC0310 OPEN BUCKET- Hold one hand open and stationary. Rotate other hand in small vertical circle with forefinger pointing horizontally at open hand.	OAC0320 CLOSE BUCKET- Hold one hand closed and stationary. Rotate other hand in small vertical circle with forefinger pointing horizontally at closed hand.

Special Signals - When signals for auxiliary equipment functions or conditions not covered are required, they shall be agreed upon in advance by the operator and signalman.

https://tractormanualz.com/

https://truckmanualshub.com/

GRADALL®

Gradall Industries, Inc.
406 Mill Ave SW
New Philadelphia OH. 44663
USA
Phone: (330) 339-2211
Customer Support Toll Free: (800) 445-4752
Fax: (330) 339-3579
www.gradall.com

Gradall Europe
Division of Tieluiska
Harkkokatu 6
FI-05800 Hyvinkää, Finland
Tel. +358 (0)20 759 0400
Fax. +358 (0)19 485 278
VAT:FI05973039
www.gradalleurope.com

https://tractormanualz.com/