https://truckmanualshub.com/

WSM

WORKSHOP MANUAL
FRONT LOADER

LA344,LA344S

Kubota

KiSC issued 02, 2017 A

https://truckmanualshub.com/

TO THE READER

This Workshop Manual tells the servicing personnel about the mechanism, servicing and maintenance of KUBOTA Front Loader *LA344 and LA344S*. It contains 4 parts: "Information", "General", "Mechanism" and "Servicing".

INFORMATION

This section primarily contains information below.

- Safety First
- Safety Decal
- Specification
- Dimensions

GENERAL

This section primarily contains information below.

- Loader Identification
- General Precautions
- Maintenance Check List
- Check and Maintenance

MECHANISM

This section contains information on the structure and the function of the unit. Before you continue with the subsequent sections, make sure that you read this section.

SERVICING

This section primarily contains information below.

- Troubleshooting
- Servicing Specifications
- Tightening Torques
- Checking, Disassembling and Servicing

All illustrations, photographs and specifications contained in this manual are of the newest information available at the time of publication.
KUBOTA reserves the right to change all information at any time without notice.
Since this manual includes many models, information or illustrations and photographs can show more than one model.

February, 2017

© KUBOTA Corporation

https://truckmanualshub.com/

CONTENTS

1. INFORMATION

SAFETY FIRST 1-1
1. Before you start service 1-1
2. Start safely 1-1
3. Operate safely 1-2
4. Prevent a fire 1-2
5. Keep a good airflow in the work area 1-3
6. Discard fluids correctly 1-3
7. Prevent acid burns 1-3
8. Prepare for emergencies 1-3
SAFETY DECALS 1-5
1. Safety decals 1-5
2. Care of danger, warning, and caution labels 1-8
TERMINOLOGY 1-9
1. Loader terminology 1-9
SPECIFICATIONS 1-11
1. Specifications for loader 1-11
2. Specifications for bucket 1-11
3. Dimensional specifications 1-12
4. Operational specifications 1-13

2. GENERAL

IDENTIFICATION 2-1
1. Loader identification 2-1
GENERAL PRECAUTIONS 2-3
LUBRICATING SYSTEM 2-5
1. Lubricants 2-5
TIGHTENING TORQUES 2-7
1. General use screws, bolts, and nuts 2-7
2. Stud bolts 2-7
3. American standard screws, bolts and nuts with UNC or UNF threads 2-8
4. Plugs and grease fittings 2-8
5. Hydraulic fittings 2-9
5.1 Adapters, elbows and others 2-9
MAINTENANCE CHECK LIST 2-11
1. Loader service intervals 2-11
CHECK AND MAINTENANCE 2-13
1. Lubricating loader 2-13
2. Re-tightening main frame bolt and nut 2-13
3. Daily checking the loader 2-13
4. Check points of every 50 hours 2-14
4.1 Precautions for checking torque of bolt and nut of main frame 2-14
SPECIAL TOOLS 2-15
1. Special tools for loader 2-15
1.1 Sliding jig and correcting jig 2-15

3. FRONT LOADER

MECHANISM 3-1
1. Hydraulic circuit 3-1
2. Front remote hydraulic control system (if equipped) 3-3
2.1 Operating control lever 3-3
3. Boom cylinder and bucket cylinder 3-4
3.1 Structure of boom cylinder and bucket cylinder 3-4
4. One touch front loader 3-5
4.1 Outline of one touch front loader 3-5

https://truckmanualshub.com/

5. One lever quick touch 4 lines coupler 3-5
5.1 Structure of one lever quick touch 4 lines coupler 3-5
6. Auto lock attachment and detachment 3-5
6.1 Outline of auto lock attachment and detachment 3-5
6.2 Function of auto lock attachment and detachment 3-6
7. Mechanical loader frame standing mechanism 3-6
7.1 Structure of mechanical loader frame standing mechanism 3-6
8. 3rd function valve (If equipped) 3-7
8.1 Structure of 3rd function valve 3-7
8.2 Function of 3rd function valve 3-8
8.2.1 Activation switch in off position 3-8
8.2.2 Activation switch in on position 3-9
SERVICING 3-11
1. Troubleshooting for front loader 3-11
2. Tightening torques for front loader 3-13
3. Checking and adjusting 3-14
3.1 Loader stand 3-14
3.1.1 Adjusting height of loader stand 3-14
3.2 Front hydraulic valve main switch and relay 3-17
3.2.1 Checking front hydraulic valve main switch continuity 3-17
3.2.2 Checking connector voltage of front hydraulic valve main switch 3-18
3.2.3 Checking relay 3-18
3.3 3rd function solenoid valve 3-19
3.3.1 Checking 3rd function solenoid valve continuity 3-19
3.3.2 Checking connector voltage of 3rd function solenoid valve 3-19
4. Disassembling and assembling 3-19
4.1 Removing and attaching front loader 3-19
4.1.1 Removing loader 3-19
4.1.2 Reinstalling loader 3-22
4.2 Bucket, boom and hydraulic cylinders 3-26
4.2.1 Attaching attachments 3-26
4.2.2 Detaching attachments 3-28
4.2.3 Removing bucket cylinder 3-28
4.2.4 Removing boom cylinder and hydraulic tubes 3-28
4.2.5 Removing piston rod assembly 3-29
4.2.6 Removing cylinder head, piston and nut 3-29
4.2.7 Removing piston seal and O-ring 3-30
4.2.8 Installing O-ring and piston seal 3-30
4.3 Side frames, front guard and main frames 3-31
4.3.1 Removing side frames 3-31
4.3.2 Removing front guard 3-31
4.3.3 Removing main frames 3-31
4.4 3rd function valve (If equipped) 3-32
4.4.1 Removing 3rd function valve 3-32
4.4.2 Removing hydraulic tubes of 3rd function 3-32
5. Servicing 3-33
5.1 Piston rod 3-33
5.1.1 Checking piston rod bend 3-33

https://truckmanualshub.com/

1. INFORMATION

https://truckmanualshub.com/

SAFETY FIRST

SAFETY FIRST

- **This symbol, the industry's "Safety Alert Symbol", is used throughout this manual and on labels on the machine itself to warn of the possibility of personal injury. Read these instructions carefully.**
- **It is essential that you read the instructions and safety regulations before you try to repair or use this unit.**

DANGER

- **Indicates an imminently hazardous situation which, if not avoided, will result in death or serious injury.**

WARNING

- **Indicates a potentially hazardous situation which, if not avoided, could result in death or serious injury.**

CAUTION

- **Indicates a potentially hazardous situation which, if not avoided, may result in minor or moderate injury.**

IMPORTANT

- **Indicates that equipment or property damage could result if instructions are not followed.**

NOTE

- **Gives helpful information.**

1. Before you start service

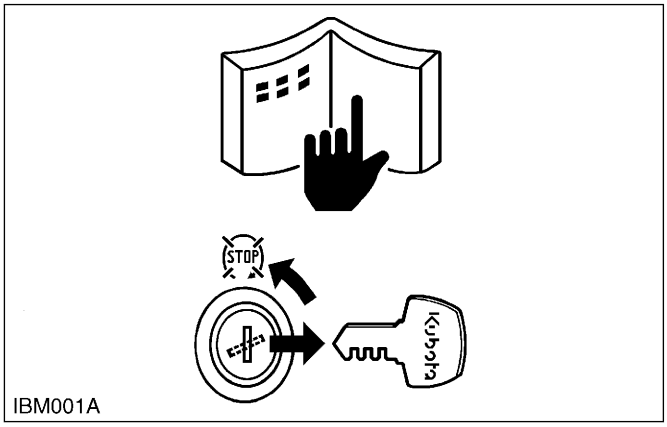

IBM001A

- Read all instructions and safety instructions in this manual and on your machine safety decals.
- Clean the work area and machine.
- Park the machine on a stable and level ground, and set the parking brake.
- Lower the implement to the ground.
- Stop the engine, then remove the key.
- Disconnect the battery negative cable.
- Hang a “**DO NOT OPERATE**” tag in the operator station.

2. Start safely

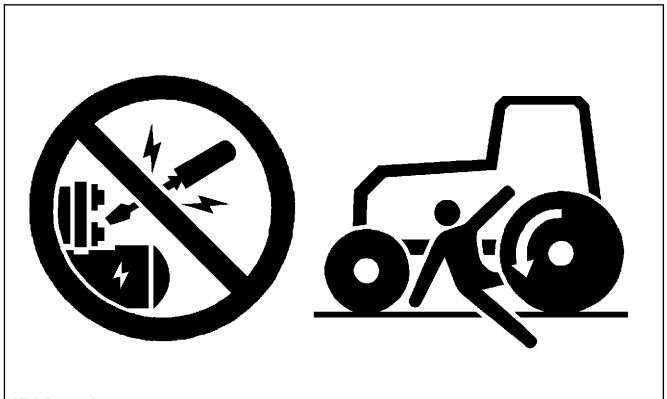
IBM002A

- Do not do the procedures below when you start the engine.
  1. Short across starter terminals.
  2. Bypass the safety start switch.
- Do not alter or remove any part of machine safety system.
- Before you start the engine, make sure that all shift levers are in neutral positions or in disengaged positions.

- Do not start the engine when you stay on the ground. Start the engine only from operator's seat.

3. Operate safely

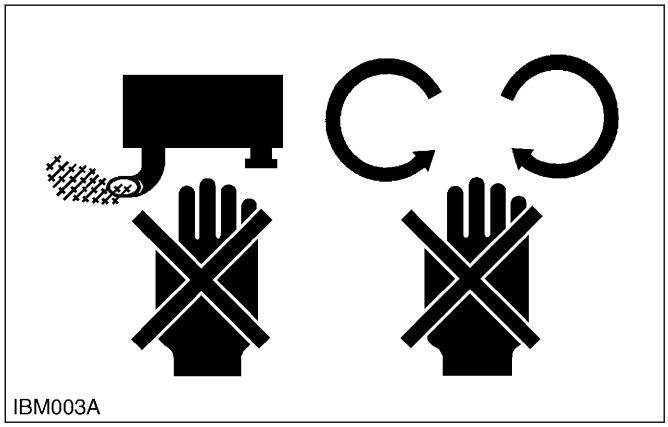
IBM003A

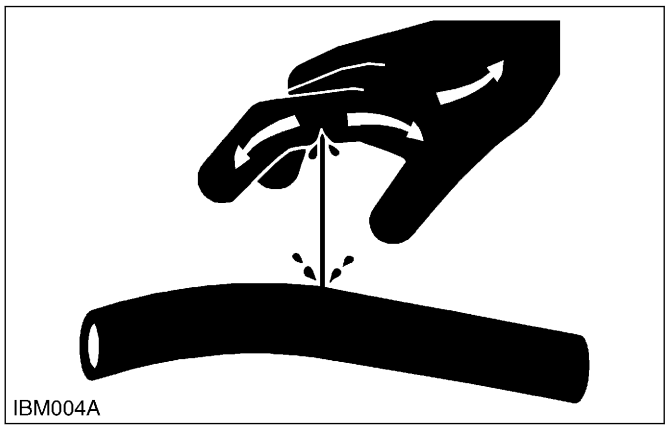
IBM004A

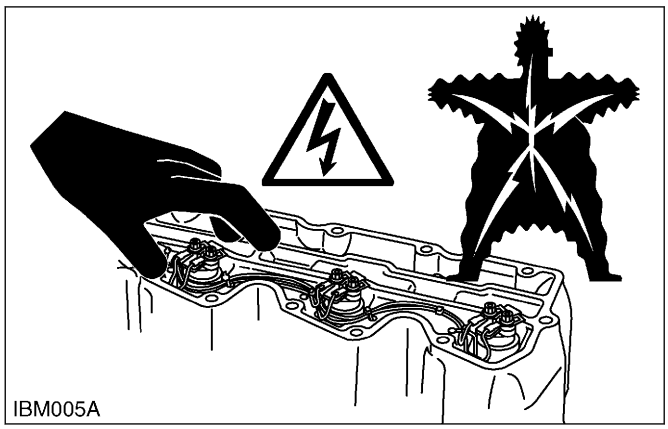
IBM005A

- Do not use the machine after you consume alcohol or medication or when you are tired.
- Put on applicable clothing and safety equipment.
- Use applicable tools only. Do not use alternative tools or parts.
- When 2 or more persons do servicing, make sure that you do it safely.
- Do not touch the hot parts or parts that turn when the engine operates.
- Do not remove the radiator cap when the engine operates, or immediately after it stops. If not, hot water can spout out from the radiator. Only remove the radiator cap when it is at a sufficiently low temperature to touch with bare hands. Slowly loosen the cap to release the pressure before you remove it fully.
- Released fluid (fuel or hydraulic oil) under pressure can cause damage to the skin and cause serious injury. Release the pressure before you disconnect hydraulic or fuel lines. Tighten all connections before you apply the pressure.
- Do not open a fuel system under high pressure. The fluid under high pressure that stays in fuel lines can cause serious injury. Do not disconnect or repair the fuel lines, sensors, or any other components between the fuel pump and injectors on engines with a common rail fuel system under high pressure.
- Put on an applicable ear protective device (earmuffs or earplugs) to prevent injury against loud noises.
- Be careful about electric shock. The engine generates a high voltage of more than DC100 V in the ECU and is applied to the injector.

4. Prevent a fire

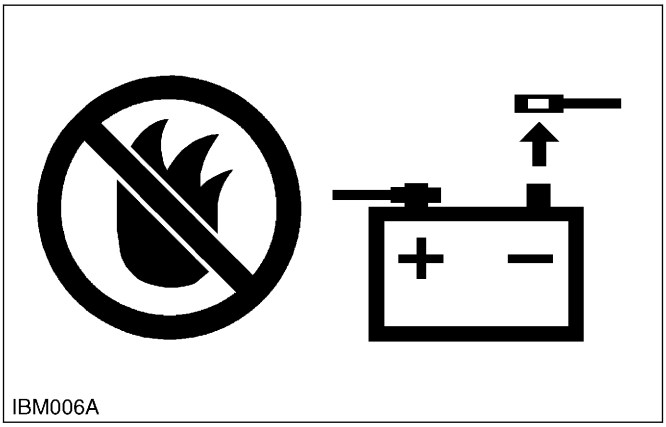

IBM006A

- Fuel is very flammable and explosive under some conditions. Do not smoke or let flames or sparks in your work area.
- To prevent sparks from an accidental short circuit, always disconnect the battery negative cable first and connect it last.
- The battery gas can cause an explosion. Keep the sparks and open flame away from the top of battery, especially when you charge the battery.
- Make sure that you do not spill fuel on the engine.

https://truckmanualshub.com/

5. Keep a good airflow in the work area

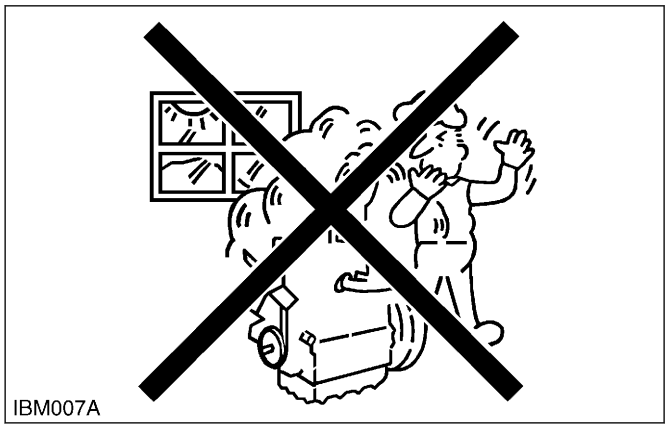
IBM007A

- If the engine is in operation, make sure that the area has good airflow. Do not operate the engine in a closed area. The exhaust gas contains poisonous carbon monoxide.

6. Discard fluids correctly

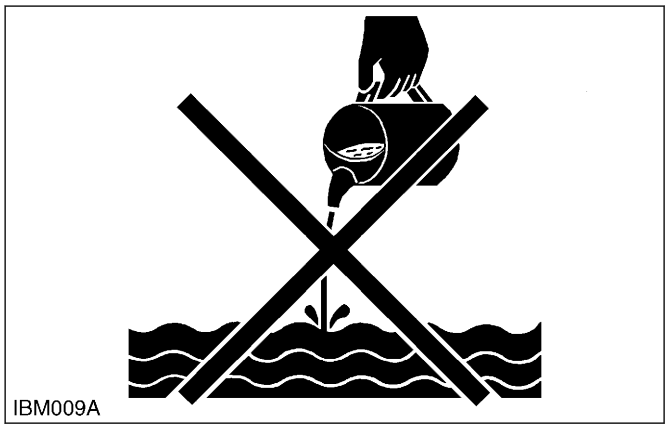
IBM009A

- Do not discard fluids on the ground, down the drain, into a stream, pond, or lake. Obey related environmental protection regulations when you discard oil, fuel, coolant, electrolyte and other dangerous waste.

7. Prevent acid burns

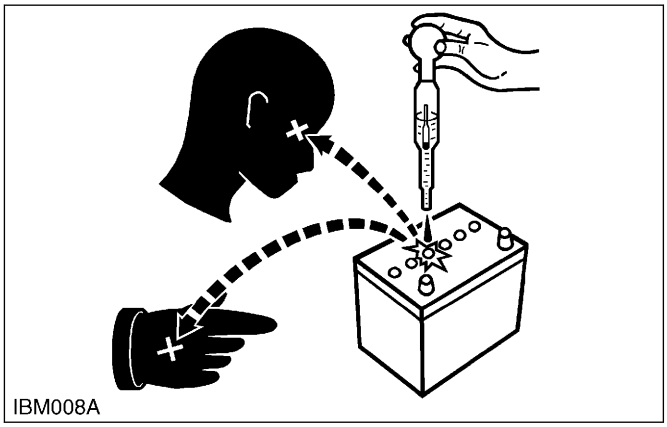
IBM008A

- Keep electrolyte away from your eyes, hands and clothing. Sulfuric acid in battery electrolyte is poisonous and it can burn your skin and clothing and cause blindness. If you spill electrolyte on yourself, clean yourself with water, and get medical aid immediately.

8. Prepare for emergencies

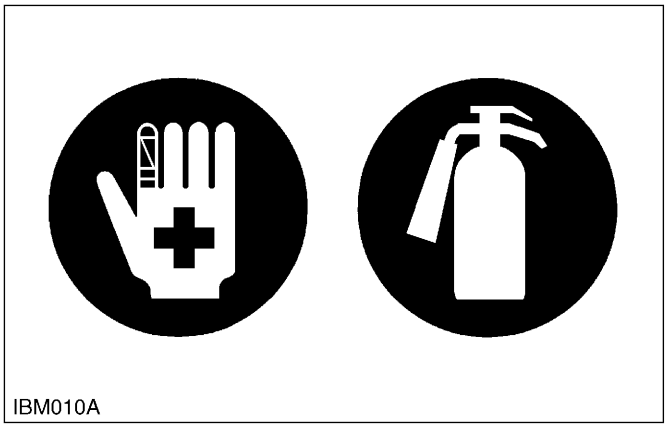
IBM010A

- Keep a first aid kit and fire extinguisher ready at all times.
- Keep the emergency contact telephone numbers near your telephone at all times.

https://truckmanualshub.com/

https://truckmanualshub.com/

SAFETY DECALS

1. Safety decals

The following safety decals (pictorial safety labels) are installed on the machine. If a decal becomes damaged, illegible or is not on the machine, replace it. The decal part number is listed in the parts list.

(1) Part No. 7J061-5645-1

1AIABAHAP019G

(2) Part No. 7J246-5641-1

1AIABAHAP017A

(3) Part No. 7J246-5643-1

1AIABAHAP016A

(4) Part No. 7J246-5642-1

1AIABAHAP018A

(5) Part No. 7J246-5644-2

1AIABAHAP020A

(6) Part No. 7J061-5649-1

1AIABACAP084A

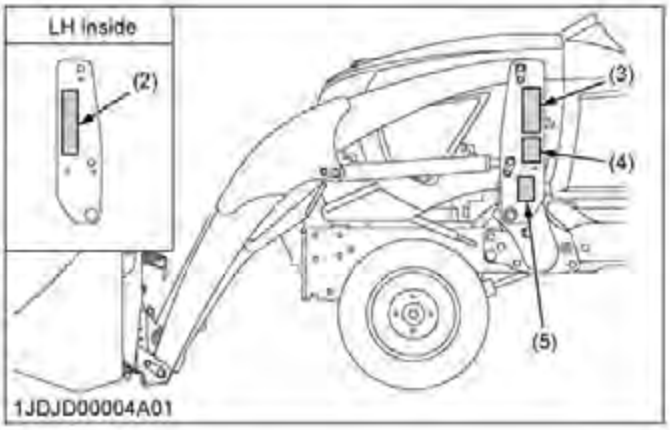

1JDJD00004A01

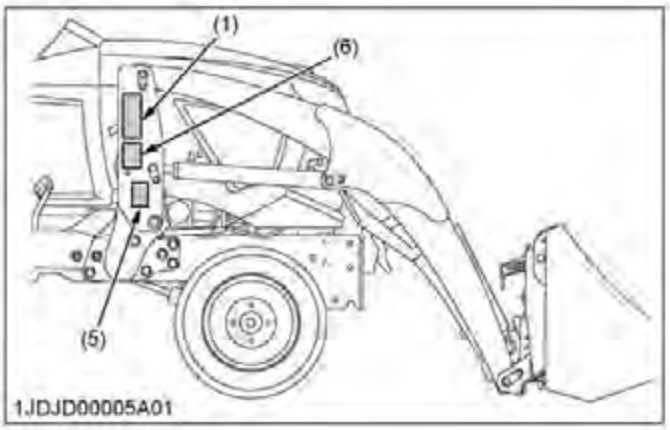

1JDJD00005A01

1JDJD00002A01

https://truckmanualshub.com/

(1) Part No. 7J626-3648-1

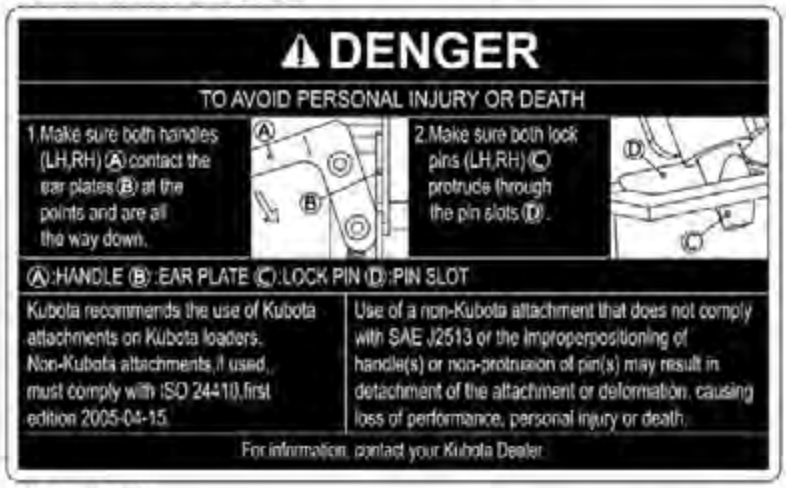

1AIABELAP0440

(2) Part No. 7J048-3923-4

1AIABELAP0380

(3) Part No. 7J246-5643-1

1AIABACAP075A

[BX2415 Pallet Fork]

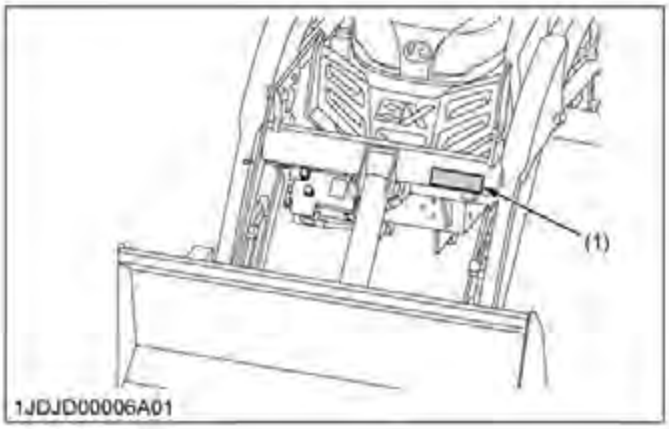

1JDJD00006A01

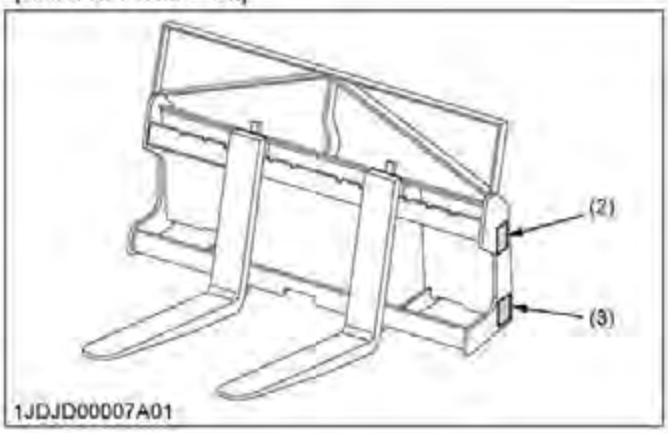

1JDJD00007A01

1JDJD00003A01

https://truckmanualshub.com/

2. Care of danger, warning, and caution labels

- Keep danger, warning and caution labels clean and free from obstructing material.
- Clean danger, warning and caution labels with soap and water, and dry with a soft cloth.
- Replace damaged or missing danger, warning and caution labels with new labels from your local Kubota dealer.
- If a component with danger, warning and caution label(s) affixed is replaced with a new part, make sure the new label(s) is (are) attached to the same location(s) as the replaced component.
- Mount new danger, warning and caution labels by applying on a clean dry surface and pressing any bubbles to the outside edge.

https://truckmanualshub.com/

TERMINOLOGY

1. Loader terminology

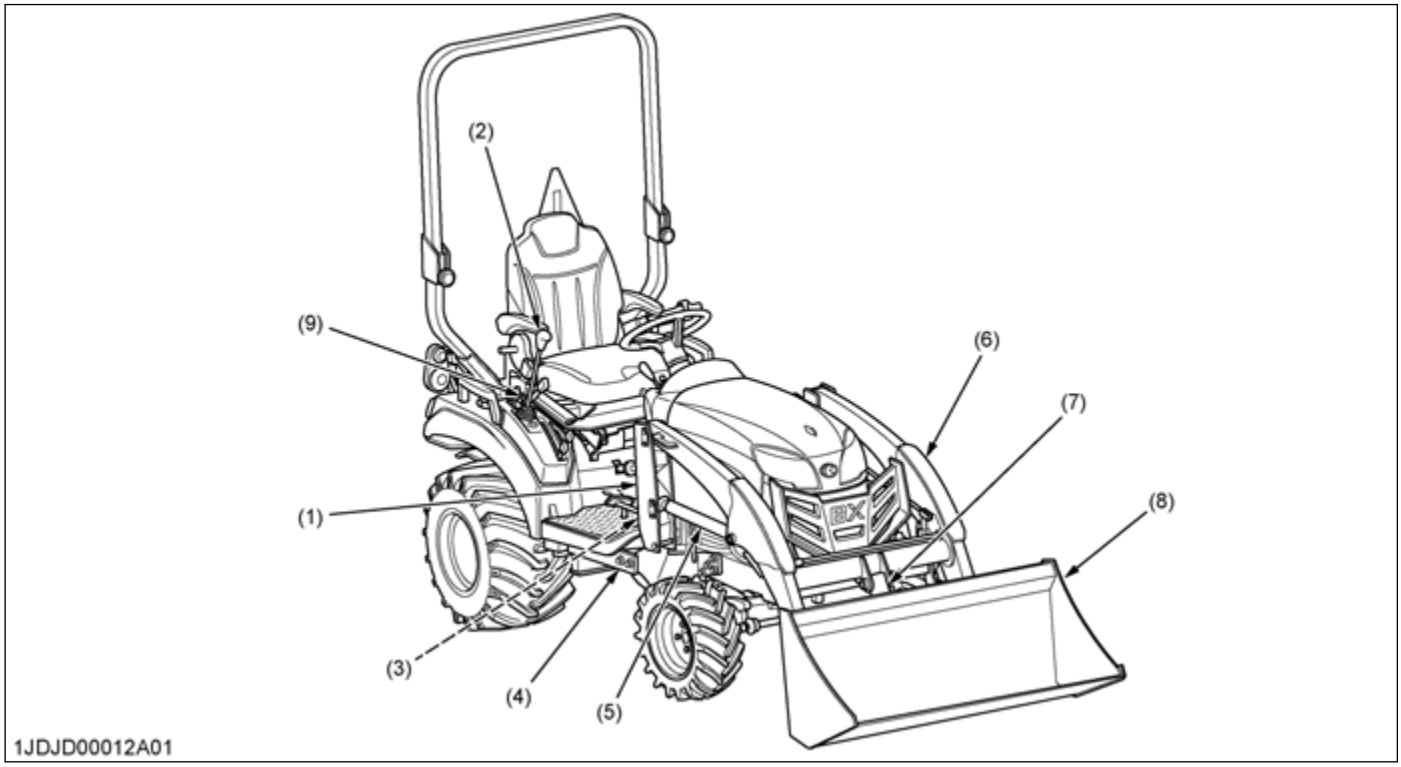

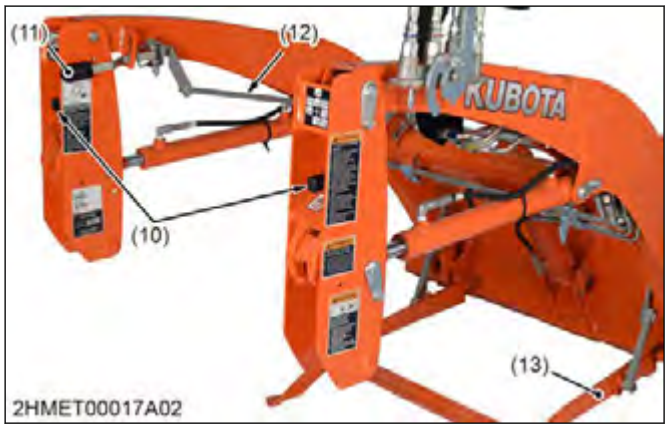

(1) Side frame
(2) Hydraulic control lever
(3) Mounting hook
(4) Main frame
(5) Boom cylinder
(6) Boom
(7) Bucket cylinder
(8) Bucket
(9) Lock lever
(10) Mounting lever
(11) Stand lever
(12) Stand rod
(13) Stand

https://truckmanualshub.com/

SPECIFICATIONS

1. Specifications for loader

Loader model		LA344		LA344S	
Tractor model		BX1880	BX2380, BX2680, and BX23S	BX1880	BX2380, BX2680, and BX23S
Wheel base (WB)		1400 mm (55.1 in.)			
Front tires		16 × 7.5-8	18 × 8.5-10	16 × 7.5-8	18 × 8.5-10
Rear tires		24 × 12-12	26 × 12-12	24 × 12-12	26 × 12-12
Boom cylinder	Bore	40 mm (1.57 in.)			
	Stroke	326 mm (12.8 in.)			
Bucket cylinder	Bore	65 mm (2.56 in.)			
	Stroke	196 mm (7.7 in.)			
Control valve		One detent float position, single bucket dump, power beyond circuit			
Rated flow		14 L/m (3.7 GPM)			
Maximum pressure		12.8 MPa (130 kg/cm^2, 1850 psi)			
Net weight (approximate)		*217 kg (478 lbs)			

* Include the quick bucket 48 in.

2. Specifications for bucket

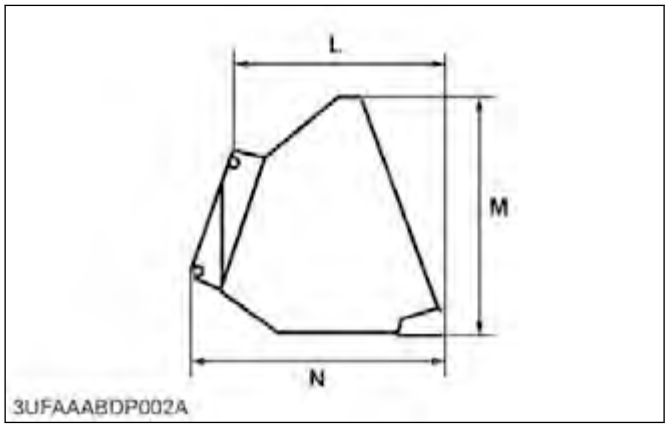

Loader model	LA344	LA344S
Model	Square 48 in.	
Type	Rigid	Quick attach
Width	1219 mm (48.0 in.)	
Depth (L)	491 mm (19.3 in.)	470 mm (18.5 in.)
Height (M)	465 mm (18.3 in.)	523 mm (20.6 in.)
Length (N)	538 mm (21.2 in.)	586 mm (23.1 in.)

(Continued)

Loader model		LA344	LA344S
Capacity	Struck	0.14 m^3 (4.9 cu.ft.)	0.13 m^3 (4.6 cu.ft.)
	Heaped	0.17 m^3 (6.0 cu.ft.)	0.17 m^3 (6.0 cu.ft.)
Weight		60 kg (132 lbs)	56 kg (123 lbs)

3. Dimensional specifications

Loader model		LA344		LA344S	
Tractor model		BX1880	BX2380, BX2680, and BX23S	BX1880	BX2380, BX2680, and BX23S
A	Maximum lift height (to bucket pivot pin)	1795 mm (70.7 in.)	1804 mm (71.0 in.)	1795 mm (70.7 in.)	1804 mm (71.0 in.)
B	Maximum. lift height under level bucket	1652 mm (65.0 in.)	1662 mm (65.4 in.)	1654 mm (65.1 in.)	1664 mm (65.5 in.)
C	Clearance with bucket dumped	1316 mm (51.8 in.)	1323 mm (52.1 in.)	1281 mm (50.4 in.)	1288 mm (50.7 in.)
D	Reach at max. lift height (dumping reach)	642 mm (25.3 in.)	646 mm (25.4 in.)	673 mm (26.5 in.)	677 mm (26.5 in.)
E	Maximum dump angle	0.79 rad (45°)			
F	Reach with bucket on ground	1398 mm (55.0 in.)	1392 mm (54.8 in.)	1445 mm (56.9 in.)	1438 mm (56.6 in.)
G	Bucket roll-back angle	0.52 rad (30°)	0.51 rad (29°)	0.52 rad (30°)	0.51 rad (29°)
H	Digging depth	134 mm (5.3 in.)	125 mm (4.9 in.)	132 mm (38.6 in.)	122 mm (4.8 in.)
J	Overall height in carrying position	981 mm (38.6 in.)	990 mm (39.0 in.)	981 mm (38.6 in.)	990 mm (39.0 in.)

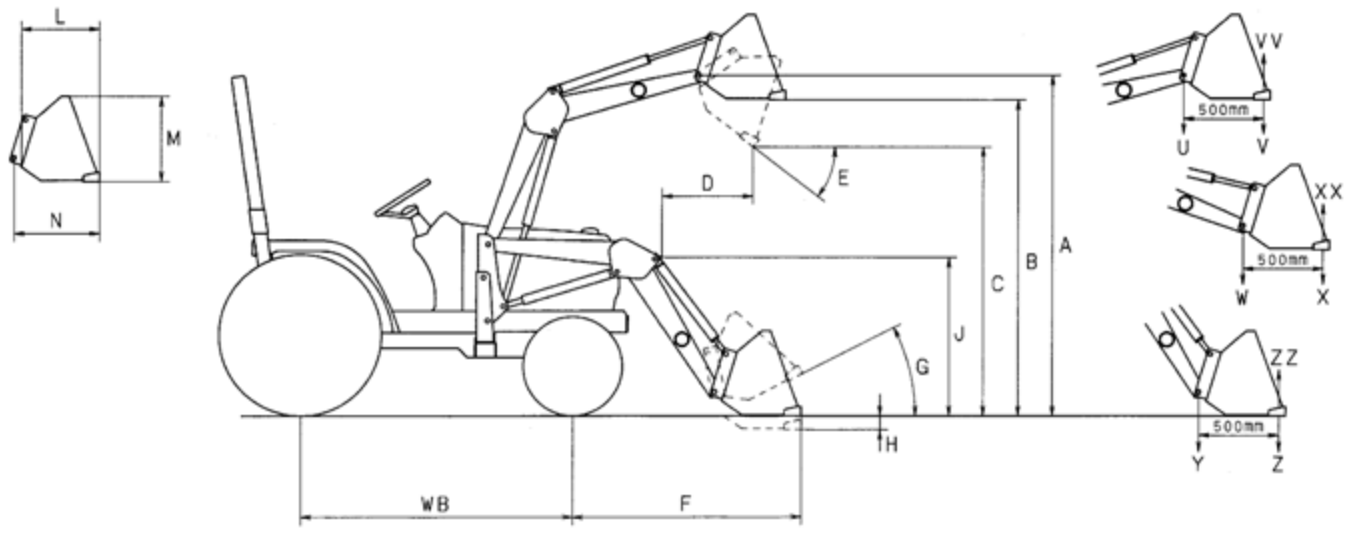

1JDJD00009A01

https://truckmanualshub.com/

4. Operational specifications

Loader model		LA344		LA344S	
Tractor model		BX1880	BX2380, BX2680, and BX23S	BX1880	BX2380, BX2680, and BX23S
U	Lift capacity (Bucket pivot pin, max. height)	335 kg (739 lbs)		278 kg (613 lbs)	
V	Lift capacity (500 mm forward, max. height)	231 kg (509 lbs)		192 kg (423 lbs)	
W	Lift capacity (Bucket pivot pin, 1500 mm height)	372 kg (820 lbs)		317 kg (699 lbs)	
X	Lift capacity (500 mm forward, 1500 mm height)	268 kg (591 lbs)		229 kg (505 lbs)	
Y	Breakout force (Bucket pivot pin)	6258 N (1407 lbf)		5719 N (1286 lbf)	
Z	Breakout force (500 mm forward)	4389 N (987 lbf)		4008 N (901 lbf)	
VV	Bucket roll-back force at max. height	4731 N (1064 lbf)		4431 N (996 lbf)	
XX	Bucket roll-back force at 1500 mm height	5557 N (1249 lbf)		5264 N (1183 lbf)	
ZZ	Bucket roll-back force at ground level	5456 N (1227 lbf)		5195 N (1168 lbf)	
Raising time		3.3 sec.			
Lowering time		2.5 sec.			
Bucket dumping time		2.7 sec.			
Bucket rollback time		2.3 sec.			

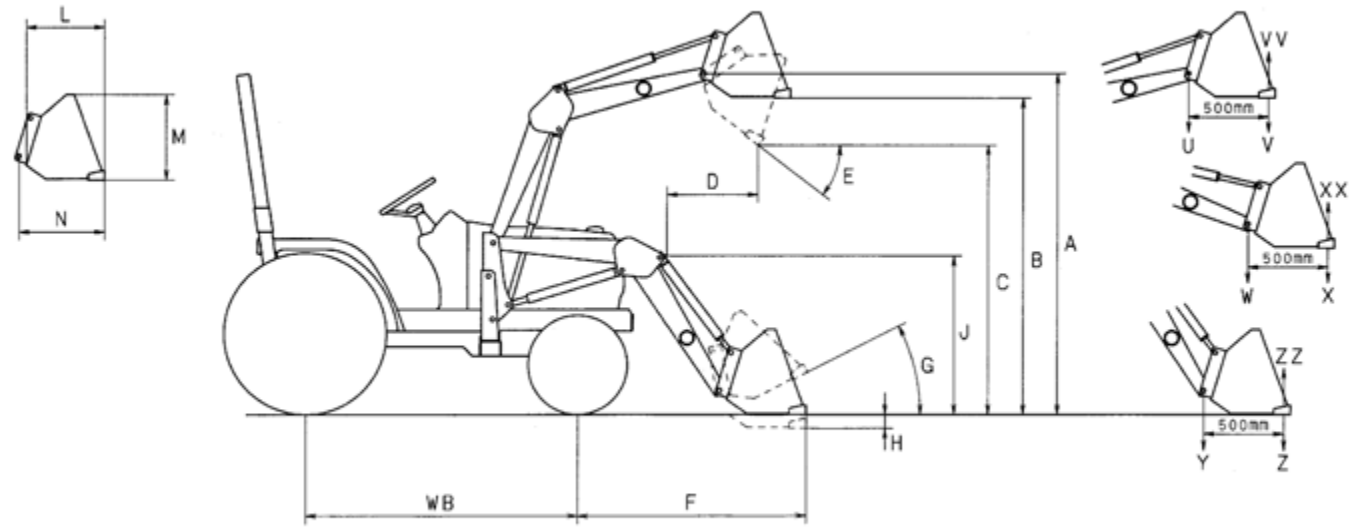

1JDJD00009A01

LA344

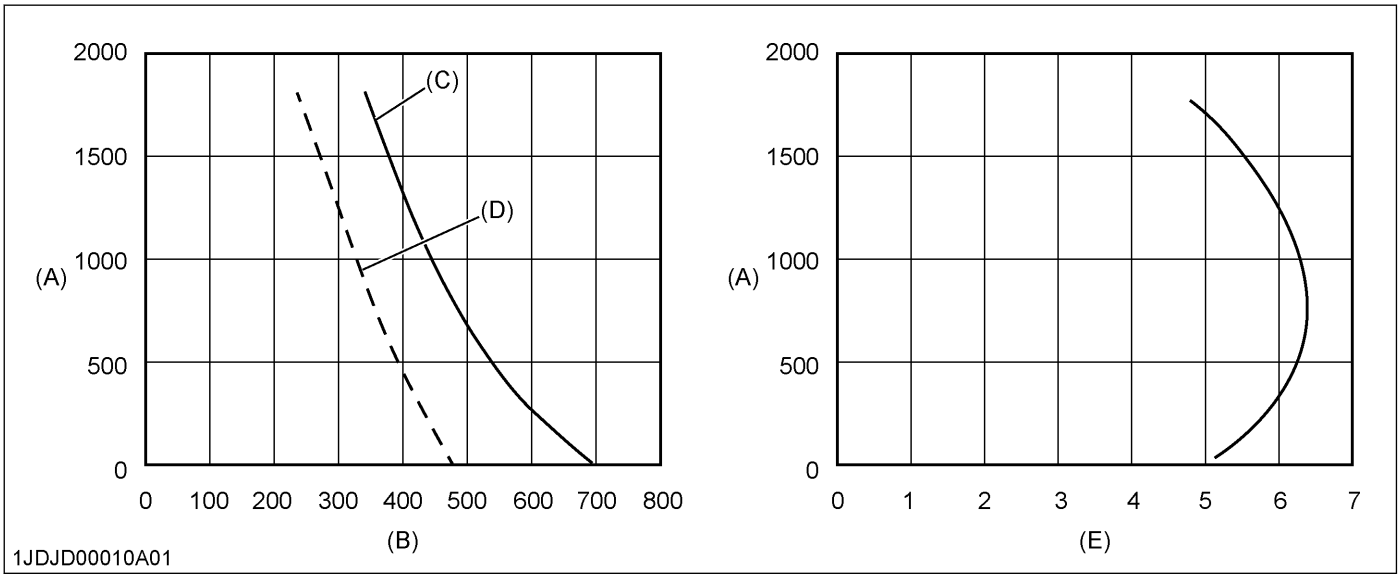

LA344S

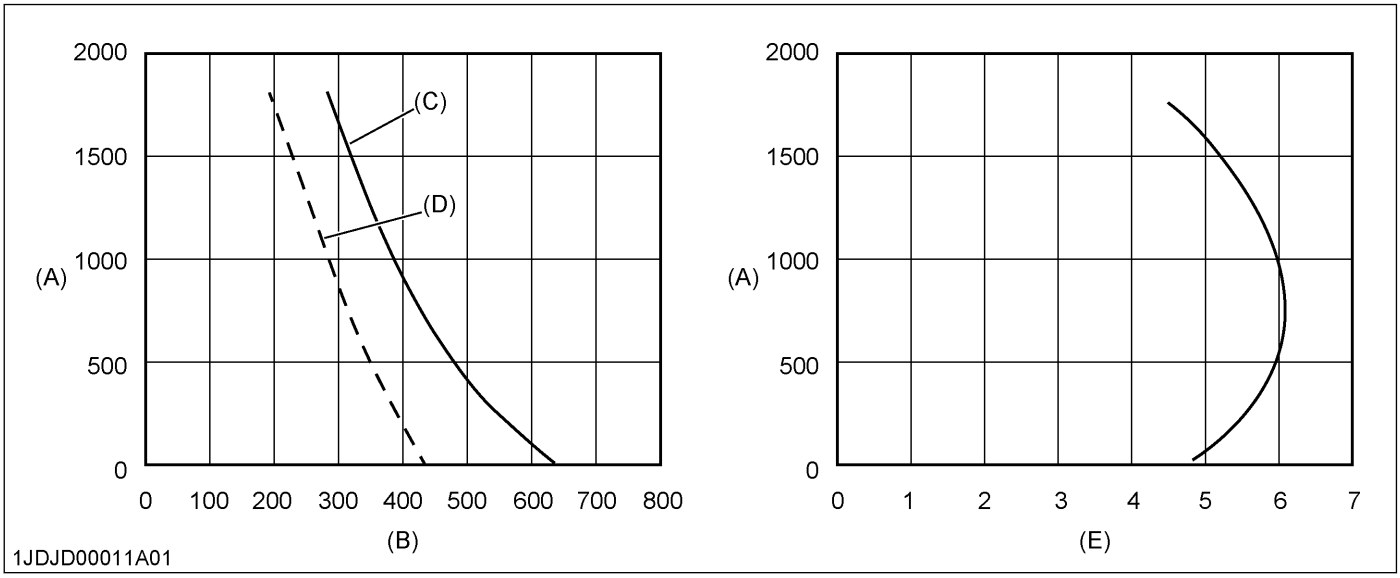

(A) Height (mm)
(B) Lift capacity (kg)
(C) At pivot pin
(D) 500 mm forward of pivot pin
(E) Rollback force (kN)

https://truckmanualshub.com/

2. GENERAL

https://truckmanualshub.com/

IDENTIFICATION

1. Loader identification

When contacting your local KUBOTA distributor, always specify front loader serial number (1).

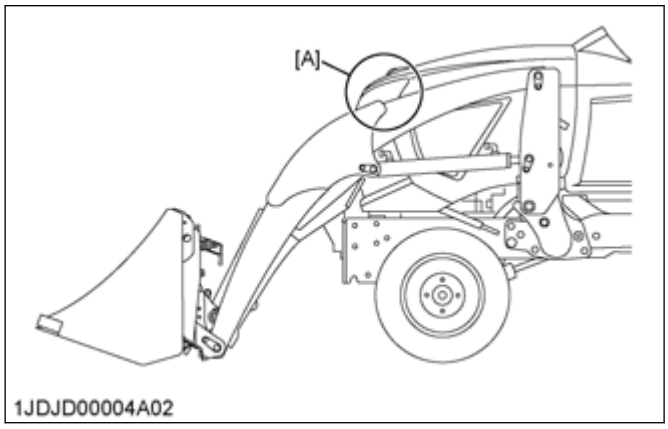

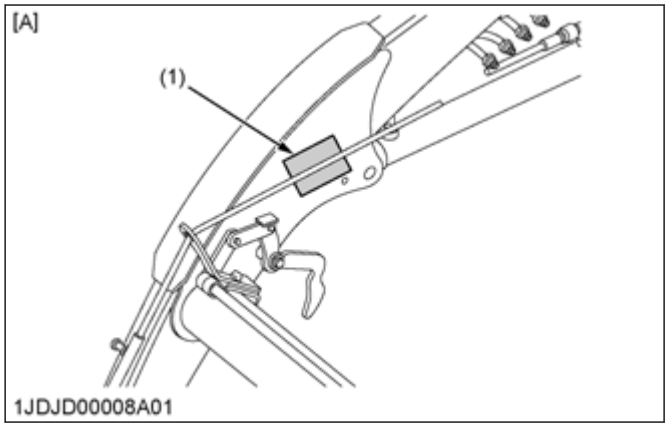

(1) Serial number [A] Boom RH inside

https://truckmanualshub.com/

GENERAL PRECAUTIONS

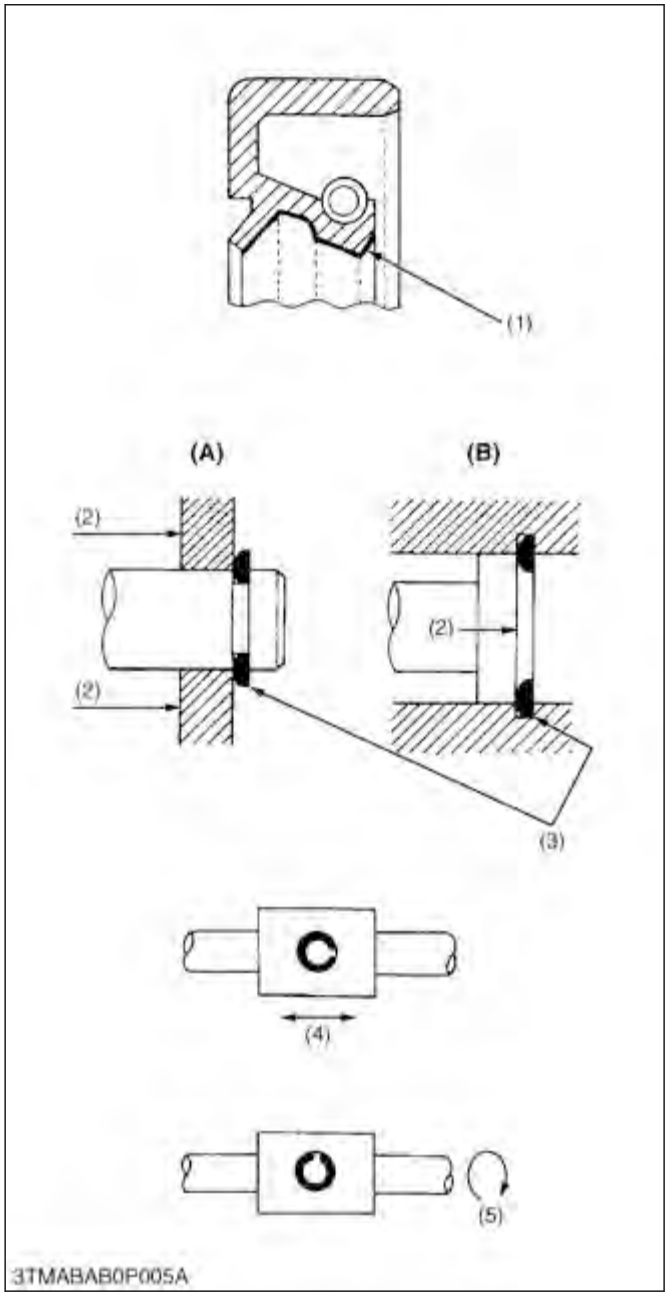

(1) Grease
(2) Force
(3) Sharp edge
(4) Axial force
(5) Rotating movement
(A) External circlip
(B) Internal circlip

- When you disassemble, carefully put the parts in a clean area to make it easy to find the parts. You must install the screws, bolts and nuts in their initial position to prevent the reassembly errors.
- When it is necessary to use special tools, use KUBOTA special tools. Refer to the drawings when you make special tools that you do not use frequently.
- Before you disassemble or repair machine, make sure that you always disconnect the ground cable from the battery first.
- Remove oil and dirt from parts before you measure.
- Use KUBOTA genuine parts for replacement to keep the machine performance and to make sure of safety.
- You must replace the gaskets and O-rings when you assemble again. Apply grease (1) to new O-rings or oil seals before you assemble.
- When you assemble the external or internal snap rings, make sure that the sharp edge (3) faces against the direction from which force (2) is applied.
- When inserting spring pins, their splits must face the direction from which a force is applied.
- To prevent damage to the hydraulic system, use specified fluid or equivalent.
- Clean the parts before you measure them.
- Tighten the fittings to the specified torque. Too much torque can cause damage to the hydraulic units or the fittings. Not sufficient torque can cause oil leakage.
- When you use a new hose or pipe, tighten the nuts to the specified torque. Then loosen (approx. by 45°) and let them be stable before you tighten to the specified torque (This is not applied to the parts with seal tape.).
- When you remove the two ends of a pipe, remove the lower end first.
- Use two pliers in removal and installation. One to hold the stable side, and the other to turn the side you remove to prevent twists.
- Make sure that the sleeves of flared connectors and tapers of hoses are free of dust and scratches.
- After you tighten the fittings, clean the joint and apply the maximum operation pressure 2 to 3 times to check oil leakage.

https://truckmanualshub.com/

https://truckmanualshub.com/

LUBRICATING SYSTEM

1. Lubricants

To prevent serious damage to hydraulic systems, use only specified fluid or its equivalent.

Place	Capacity	Lubricants, type of grease
Transmission case	11.3 L 2.99 U.S.qts 2.5 Imp.qts	KUBOTA SUPER UDT fluid*
Grease fitting	Until grease overflows.	Moly Ep type grease**

* KUBOTA original transmission hydraulic fluid

** "Extreme pressure" and containing Molybdenum disulfide is recommended. This grease may specify "Moly Ep" on it's label.

TIGHTENING TORQUES

1. General use screws, bolts, and nuts

Tighten screws, bolts, and nuts whose tightening torques are not specified in the Workshop Manual according to the table below.

Indication on top of bolt	4 No-grade or 4T						7 7T						9 9T		
Indication on top of nut	04 No-grade or 4T												6 6T		
Material of opponent part	Ordinariness			Aluminum			Ordinariness			Aluminum			Ordinariness		
Unit	N·m	kgf·m	lbf·ft	N·m	kgf·m	lbf·ft	N·m	kgf·m	lbf·ft	N·m	kgf·m	lbf·ft	N·m	kgf·m	lbf·ft
M6	7.9 to 9.3	0.80 to 0.95	5.8 to 6.8	7.9 to 8.8	0.80 to 0.90	5.8 to 6.5	9.81 to 11.2	1.00 to 1.15	7.24 to 8.31	7.9 to 8.8	0.80 to 0.90	5.8 to 6.5	12.3 to 14.2	1.25 to 1.45	9.05 to 10.4
M8	18 to 20	1.8 to 2.1	13 to 15	17 to 19	1.7 to 2.0	13 to 14	24 to 27	2.4 to 2.8	18 to 20	18 to 20	1.8 to 2.1	13 to 15	30 to 34	3.0 to 3.5	22 to 25
M10	40 to 45	4.0 to 4.6	29 to 33	32 to 34	3.2 to 3.5	24 to 25	48 to 55	4.9 to 5.7	36 to 41	40 to 44	4.0 to 4.5	29 to 32	61 to 70	6.2 to 7.2	45 to 52
M12	63 to 72	6.4 to 7.4	47 to 53	—	—	—	78 to 90	7.9 to 9.2	58 to 66	63 to 72	6.4 to 7.4	47 to 53	103 to 117	10.5 to 12.0	76.0 to 86.7
M14	108 to 125	11.0 to 12.8	79.6 to 92.5	—	—	—	124 to 147	12.6 to 15.0	91.2 to 108	—	—	—	167 to 196	17.0 to 20.0	123 to 144
M16	167 to 191	17.0 to 19.5	123 to 141	—	—	—	197 to 225	20.0 to 23.0	145 to 166	—	—	—	260 to 304	26.5 to 31.0	192 to 224
M18	246 to 284	25.0 to 29.0	181 to 209	—	—	—	275 to 318	28.0 to 32.5	203 to 235	—	—	—	344 to 402	35.0 to 41.0	254 to 296
M20	334 to 392	34.0 to 40.0	246 to 289	—	—	—	368 to 431	37.5 to 44.0	272 to 318	—	—	—	491 to 568	50.0 to 58.0	362 to 419

2. Stud bolts

Material of opponent part	Ordinariness			Aluminum		
Unit	N·m	kgf·m	lbf·ft	N·m	kgf·m	lbf·ft
M8	12 to 15	1.2 to 1.6	8.7 to 11	8.9 to 11	0.90 to 1.2	6.5 to 8.6
M10	25 to 31	2.5 to 3.2	18 to 23	20 to 25	2.0 to 2.6	15 to 18
M12	30 to 49	3.0 to 5.0	22 to 36	31	3.2	23
M14	62 to 73	6.3 to 7.5	46 to 54	—	—	—
M16	98.1 to 112	10.0 to 11.5	72.4 to 83.1	—	—	—
M18	172 to 201	17.5 to 20.5	127 to 148	—	—	—

https://truckmanualshub.com/

3. American standard screws, bolts and nuts with UNC or UNF threads

Grade	SAE GR.5			SAE GR.8		
Unit	N·m	kgf·m	lbf·ft	N·m	kgf·m	lbf·ft
1/4	11.7 to 15.7	1.20 to 1.60	8.63 to 11.5	16.3 to 19.7	1.67 to 2.00	12.0 to 14.6
5/16	23.1 to 27.7	2.36 to 2.82	17.0 to 20.5	33 to 39	3.4 to 3.9	25 to 28
3/8	48 to 56	4.9 to 5.7	36 to 41	61 to 73	6.3 to 7.4	45 to 53
1/2	110 to 130	11.3 to 13.2	81.2 to 95.8	150 to 178	15.3 to 18.1	111 to 131
9/16	150 to 178	15.3 to 18.1	111 to 131	217 to 260	22.2 to 26.5	160 to 191
5/8	204 to 244	20.8 to 24.8	151 to 179	299 to 357	30.5 to 36.4	221 to 263

4. Plugs and grease fittings

Shape	Size	Material of opponent part					
		Ordinariness			Aluminum		
		N·m	kgf·m	lbf·ft	N·m	kgf·m	lbf·ft
Tapered screw 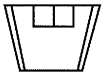	R1/8	13 to 21	1.3 to 2.2	9.4 to 15	13 to 19	1.3 to 2.0	9.4 to 14
	R1/4	25 to 44	2.5 to 4.5	18 to 32	25 to 34	2.5 to 3.5	18 to 25
	R3/8	49 to 88	5.0 to 9.0	37 to 65	49 to 58	5.0 to 6.0	37 to 43
	R1/2	58.9 to 107	6.00 to 11.0	43.4 to 79.5	59 to 78	6.0 to 8.0	44 to 57
Straight screw 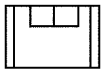	G1/4	25 to 34	2.5 to 3.5	18 to 25	—	—	—
	G3/8	62 to 82	6.3 to 8.4	46 to 60	—	—	—
	G1/2	49 to 88	5.0 to 9.0	37 to 65	—	—	—

https://truckmanualshub.com/

5. Hydraulic fittings

5.1 Adapters, elbows and others

Item	Thread size	Tightening torque		
Adjustable elbow, adapter (O-ring port) (UNF)	9/16	37 to 44 N·m	3.8 to 4.4 kgf·m	28 to 32 lbf·ft
	3/4	48 to 54 N·m	4.9 to 5.5 kgf·m	36 to 39 lbf·ft
	7/8	77 to 85 N·m	7.9 to 8.6 kgf·m	57 to 62 lbf·ft
Hose fitting, flare nut (UNF)	9/16	25 to 28 N·m	2.6 to 2.8 kgf·m	19 to 20 lbf·ft
	3/4	36 to 40 N·m	3.7 to 4.0 kgf·m	27 to 29 lbf·ft
	7/8	43 to 50 N·m	4.4 to 5.0 kgf·m	32 to 36 lbf·ft
Adapter (NPT)	1/4	30 to 50 N·m	3.1 to 5.0 kgf·m	23 to 36 lbf·ft
	3/8	39 to 60 N·m	4.0 to 6.1 kgf·m	29 to 44 lbf·ft
	1/2	49 to 58 N·m	5.0 to 5.9 kgf·m	37 to 42 lbf·ft
Grease fitting	1/8-27	4.1 to 6.7 N·m	0.42 to 0.69 kgf·m	3.0 to 5.0 lbf·ft
	1/4-18	4.1 to 6.7 N·m	0.42 to 0.69 kgf·m	3.0 to 5.0 lbf·ft

NOTE

- **When connecting a hose with flare nut, after tightening the nut with specified torque, return it at approximately 45 degrees (0.79 rad) and re-tighten it to specified torque.**

https://truckmanualshub.com/

MAINTENANCE CHECK LIST

1. Loader service intervals

To keep the machine working in good condition as well as to avoid any accident and trouble, carry out periodic inspection and maintenance. Check the following points before use.

Service intervals	Check points	Reference page
Daily (Each use)	Check hydraulic hoses.	2-13
Every 10 hours	Apply all grease fittings.	2-13
Every 50 hours	Check the main frame mounting bolts.	2-14

https://truckmanualshub.com/

CHECK AND MAINTENANCE

1. Lubricating loader

KUBOTA recommends the high quality grease designated as the extreme pressure and containing the Molybdenum disulfide. Recommended grease may specify "**Moly EP**" on its label.

1. Lubricate all grease fittings every 10 hours of operation. Also, lubricate the joints of the control-lever-linkage every 10 hours.

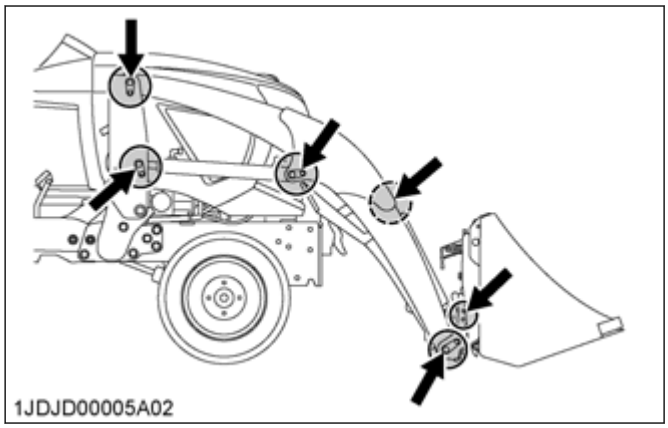

2. Daily before operation, check the hydraulic fluid level of the tractor. If the hydraulic fluid level is low, add the hydraulic fluid as described in the *tractor operator's manual*. Also change the filter element and the hydraulic fluid as recommended in the *tractor operator's manual*.

2. Re-tightening main frame bolt and nut

NOTE

- **Before finally tightening all mounting hardware of the loader, start the engine and apply down pressure to the bucket until the loader raises the front wheels slightly. Make sure that you can rotate the mounting pins easily, and then tighten all bolts and nuts.**

After 20 to 30 hours of initial loader operation, re-tighten all mounting bolts and nuts to the required torque value as follows.

Tightening torque table

Location	Bolt or nut	Required torque
Main frame	M14 bolts or nuts	147 N·m 15.0 kgf·m 108 lbf·ft

3. Daily checking the loader

WARNING

To avoid personal injury or death:

- **When removing the engine-side-covers, be careful not to touch hot loader cylinders. Allow all surfaces to cool before performing maintenance.**
- **Before servicing the loader or the tractor, be sure to place the boom of the loader in contact with the ground. When raising the lboom of the loader during service or maintenance, support the boom as shown in the figure.**

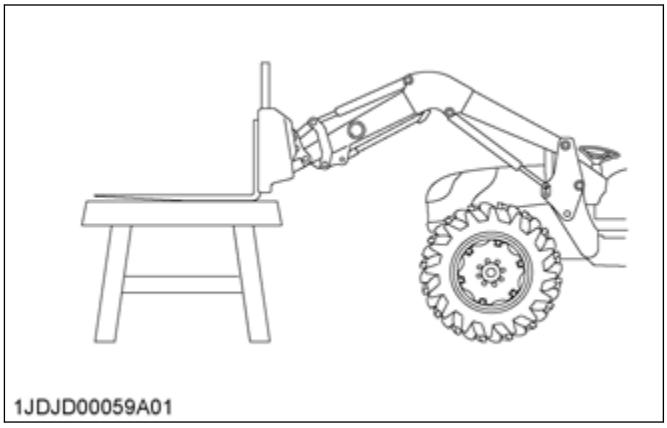

1. Check all hardware of the loader daily before operation.
   Tighten the hardware of the loader to torque values as specified in the general torque specification.

2. With the engine off and the bucket on the ground, inspect all hoses for cuts or wear. Check for signs of leaks and make sure all fittings are tight.

WARNING

To avoid personal injury or death:

- **Escaping the hydraulic fluid under pressure can obtain sufficient force to penetrate skin, causing serious personal injury.**
  Before disconnecting lines, be sure to relieve all pressure. Before applying pressure to the loader system, be sure that all connections are tight and that lines, tubes, and hoses are not damaged. Fluid escaping from a very small hole can be almost invisible. Use a piece of cardboard or wood, rather than your hands, to search for suspected leaks.
  If you are injured by escaping fluid, see a doctor at once. Serious infection or allergic reaction will develop if proper medical treatment is not administered immediately.

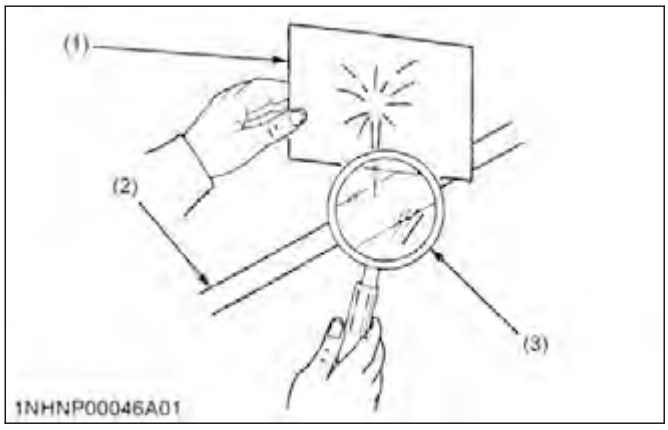

(1) Cardboard
(2) Hydraulic line
(3) Magnifying glass

4. Check points of every 50 hours

4.1 Precautions for checking torque of bolt and nut of main frame

WARNING

To avoid personal injury or death:

- **Never operate the front loader with a loose main frame.**
- **Any time bolts and nuts are loosened, retighten to specified torque.**
- **Check all bolts and nuts frequently and keep them tight.**
- **Check the bolts and nuts of the main frame regularly especially when they are new. If the bolts and nuts of the main frame are loose, tighten them as follows.**

LA344 and LA344S

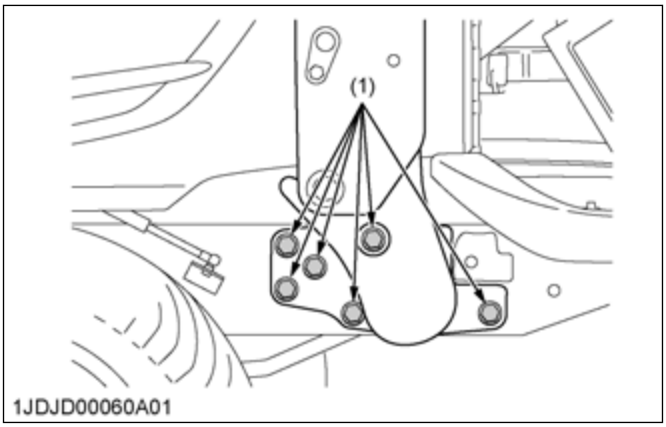

(1) Bolt and nut of the main frame

Bolt and nut of the main frame	Tightening torque	147 N·m (15.0 kgf·m) [108 lbf·ft]

https://truckmanualshub.com/

SPECIAL TOOLS

1. Special tools for loader

1.1 Sliding jig and correcting jig

Use to install the O-ring and the piston seal.

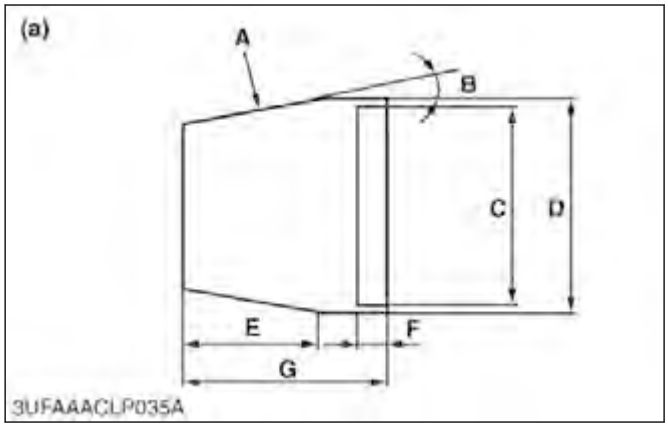

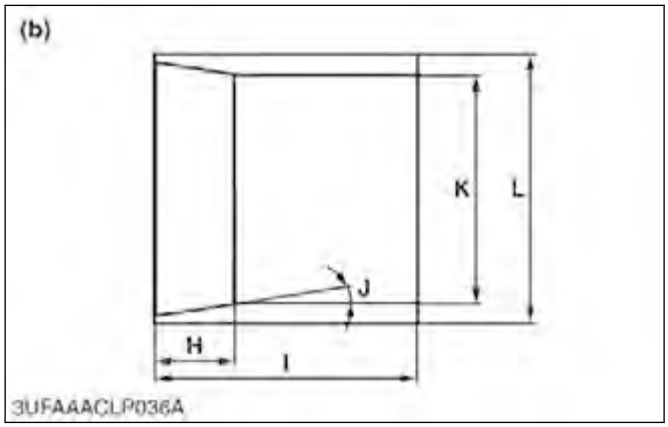

(a) Sliding jig (b) Correcting jig

Boom cylinder (40 mm (1.57 in.))

A	80√
B	0.157 rad (9.0°)
C	40.18 mm dia. (1.582 in. dia.)
D	41.18 mm dia. (1.621 in. dia.)
E	42.0 mm (1.65 in.)
F	10.0 mm (0.4 in.)
G	58.5 mm (2.30 in.)
H	14 mm (0.55 in.)
I	35.0 mm (1.38 in.)
J	0.122 rad (7°)
K	40.2 mm dia. (1.583 in. dia.)
L	48.9 mm dia. (1.925 in. dia.)

Bucket cylinder (65 mm (2.56 in.))

A	80√
B	0.157 rad (9.0°)
C	65.18 mm dia. (2.566 in. dia.)
D	66.18 mm dia. (2.606 in. dia.)
E	42.0 mm (1.65 in.)
F	10.0 mm (0.4 in.)
G	58.5 mm (2.30 in.)
H	14 mm (0.55 in.)
I	35.0 mm (1.38 in.)
J	0.122 rad (7°)
K	65.2 mm dia. (2.567 in. dia.)
L	73.9 mm dia. (2.909 in. dia.)

https://truckmanualshub.com/

3. FRONT LOADER

https://truckmanualshub.com/

MECHANISM

1. Hydraulic circuit

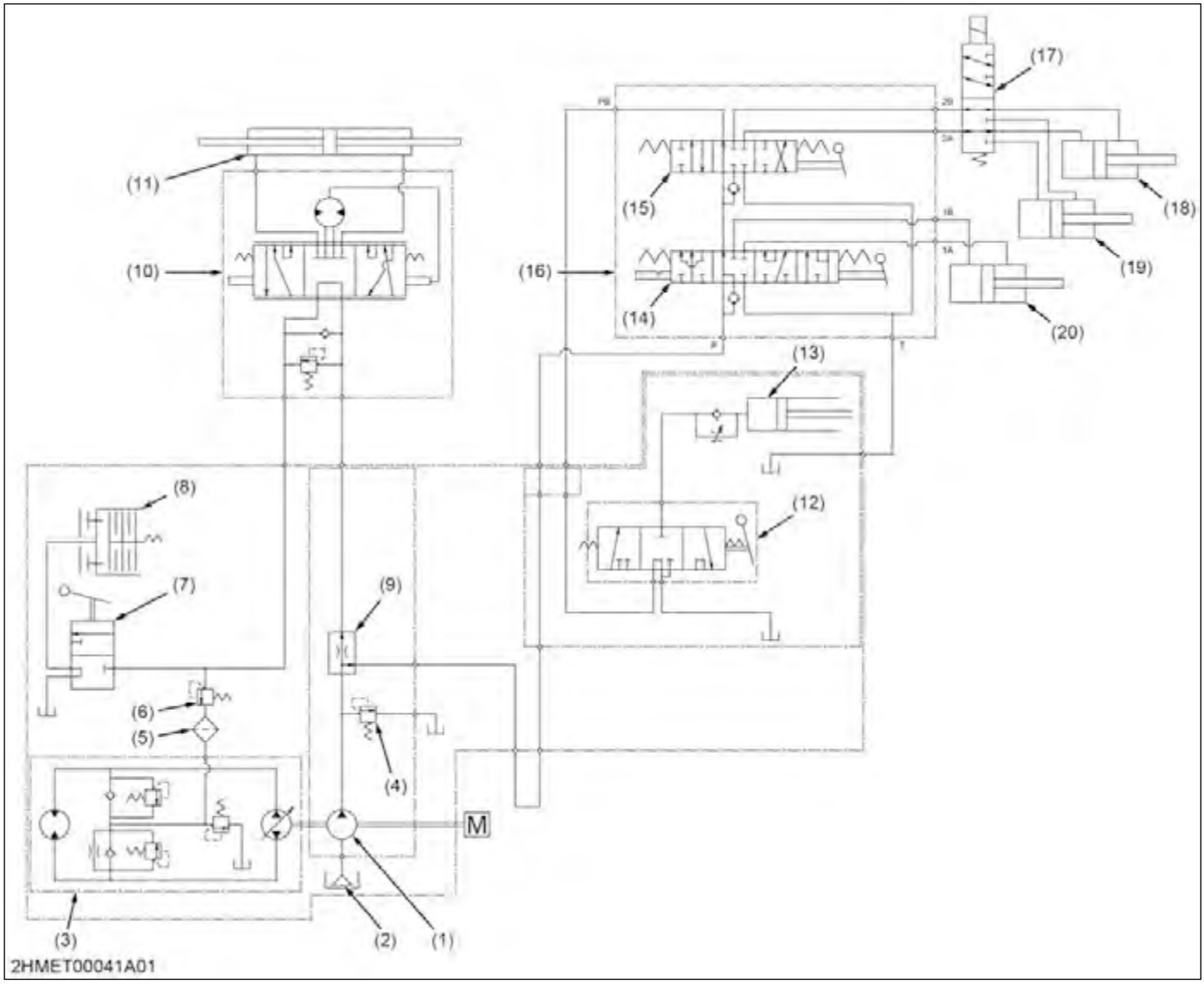

(1) Hydraulic pump
(2) Oil strainer
(3) Hydrostatic transmission
(4) Relief valve
(5) Oil filter
(6) PTO clutch relief valve
(7) PTO clutch valve
(8) PTO clutch
(9) Flow priority valve
(10) Power steering controller
(11) Power steering cylinder
(12) 3P hitch control valve
(13) Hydraulic cylinder
(14) Boom spool valve
(15) Bucket spool valve
(16) Front loader control valve
(17) 3rd function valve (If equipped)
(18) Bucket cylinder
(19) 3rd function cylinder (If equipped)
(20) Boom cylinder

The hydraulic system of this tractor and front loader has a hydraulic pump, control valve for front loader, 3 point hitch system and other components. This system has the following functions:

1. Oil is supplied by hydraulic pump which is operated by pump drive shaft in the transmission case. As the pump drive shaft is connected to the propeller shaft, hydraulic pump starts operating when engine starts.
2. The hydraulic pump supplies the high pressured oil to control valve for front loader, control valve for 3 point hitch system, power steering controller, PTO clutch valve and hydrostatic transmission after dividing oil flow by flow priority valve.

https://truckmanualshub.com/

Specification of hydraulic parts

(1)	23.5 L/min. (6.2 U.S.gals/min., 5.2 Imp.gals/min.)
(4)	12.3 to 12.7 MPa (125 to 130 kgf/cm^2, 1780 to 1840 psi)
(6)	0.5 MPa (5 kgf/cm^2, 150 to 180 psi)
(9)	9.5 L/min. (2.5 U.S.gals/min., 2.1 Imp.gals/min.) to the power steering controller and excessive flow to the front loader

https://truckmanualshub.com/

2. Front remote hydraulic control system (if equipped)

You can use the front remote hydraulic control system for a front mounted hydraulic implement.
The front remote hydraulic control system provides hydraulic oil to the front outlet directly.

2.1 Operating control lever

WARNING

To avoid personal injury or death

- **Valve lock does not lock out switch-operated third-function hydraulics, which are active when the key switch and the front hydraulic valve main switch are on.**

1. Turn the front-hydraulic-valve-main-switch on.
   a. Push the front-hydraulic-valve-main-switch to engage the front-hydraulic-valve.
   The light on the front-hydraulic-valve-main-switch will illuminate to indicate that the front-hydraulic-valve is on and to enable the activation switch and operation of the lever.
2. Turn the activation switch on or off.
   - When operating the lever to left side with pressing the activation switch, hydraulic oil will come out of port 1 and return through port 2 as long as operating the lever to left side with pressing the activation switch.
   - When operating lever to right side with pressing the activation switch, hydraulic oil will come out of port 2 and return through port 1 as long as operating lever to right side with pressing the activation switch.
3. Turn the front-hydraulic-valve-main-switch off.
   a. Push the front-hydraulic-valve-main-switch again to disengage the front hydraulic valve.
   The light of the front-hydraulic-valve-main-switch will turn off.

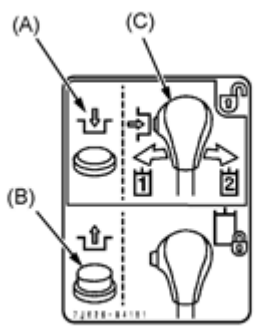

1JDJD00046A01

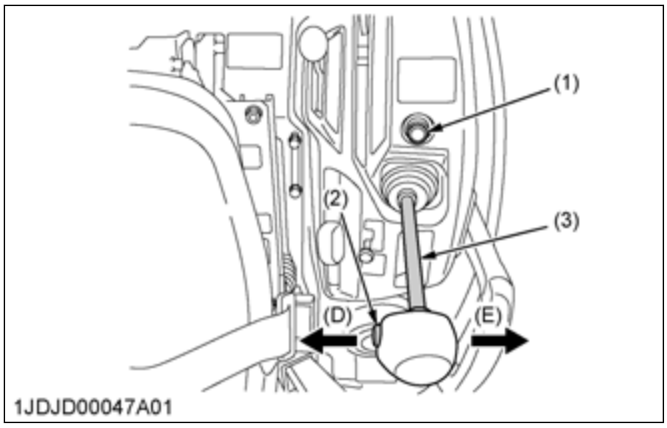

1JDJD00047A01

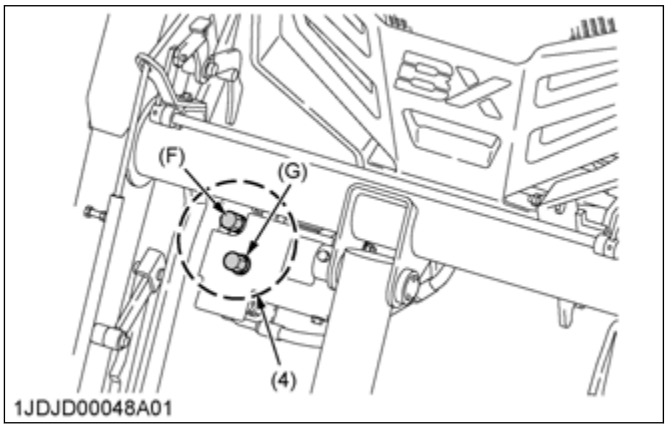

1JDJD00048A01

(1)	Front hydraulic valve main switch	(B)	Front hydraulic valve main switch is off
(2)	Activation switch	(C)	Activation switch is on
(3)	Operating lever	(D)	Left side
(4)	Front hydraulic outlet	(E)	Right side
(A)	Front hydraulic valve main switch is on	(F)	Port 1
		(G)	Port 2

IMPORTANT

- **While a front mounted hydraulic attachment is used, make sure that the hydraulic hose is routed out of contact with the left and right bucket links. Keep the hose from running over within the circled zone in the following figure.**

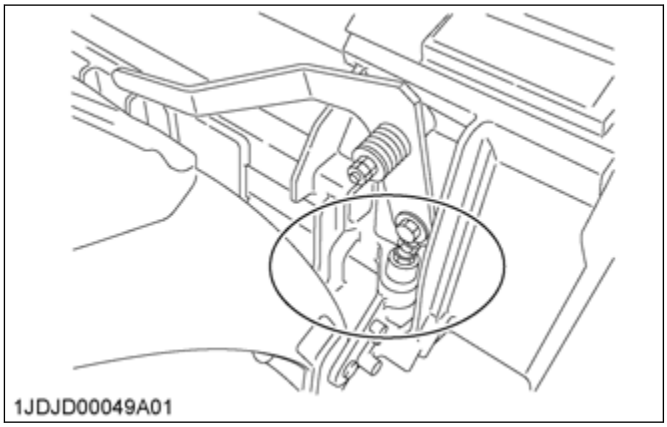
1JDJD00049A01

3. Boom cylinder and bucket cylinder

3.1 Structure of boom cylinder and bucket cylinder

Both boom cylinder and bucket cylinder consist of a head (4), cylinder tube (3), piston rod (5), piston (2), and other parts as shown in the figure below. They are single-rod double acting cylinder in which the reciprocating motion of the piston is controlled by hydraulic force applied to both of its ends.

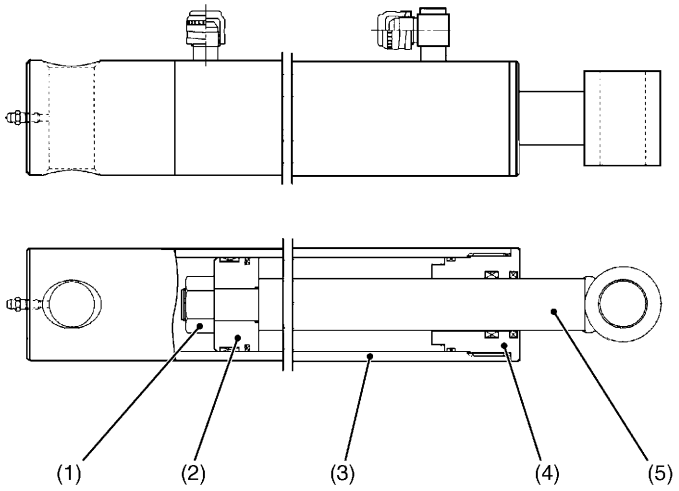

3UFAAACLP017A

(1) Nut
(2) Piston
(3) Cylinder tube
(4) Head
(5) Piston rod

Cylinder specifications

		LA344, LA344S
Boom cylinder	Cylinder I.D.	40 mm (1.57 in.)
	Rod O.D.	25 mm (0.98 in.)
	Stroke	326 mm (12.8 in.)
Bucket cylinder	Cylinder I.D.	65 mm (2.56 in.)
	Rod O.D.	30 mm (1.18 in.)
	Stroke	196 mm (7.72 in.)

https://truckmanualshub.com/

4. One touch front loader

4.1 Outline of one touch front loader

One touch front loader is adopted to BX80 series tractor. The operator can attach and disconnect the front loader quickly and safely without getting down from the tractor. The main component parts are shown in the figure.

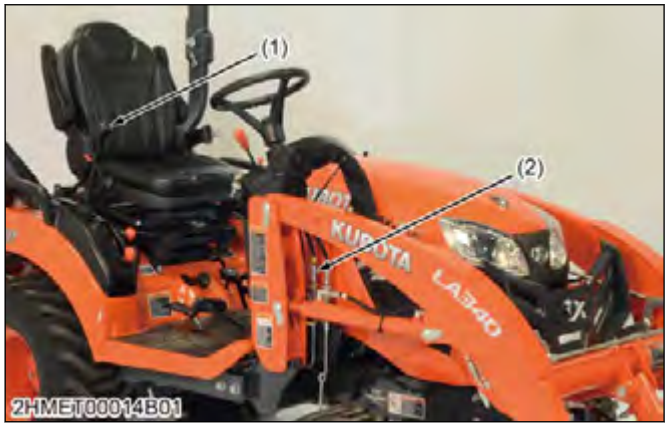

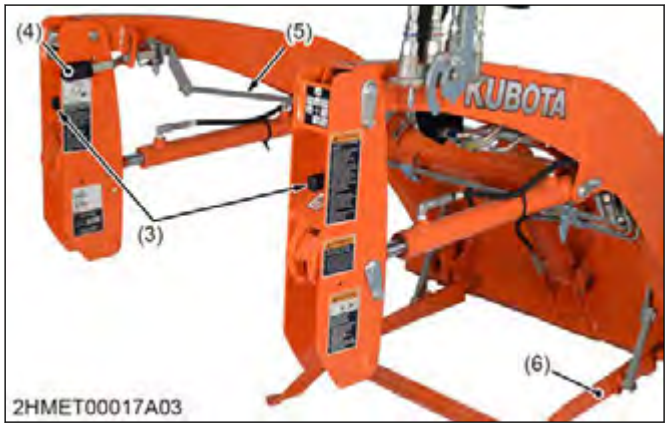

(1) Front loader control lever
(2) Quick coupler
(3) Mounting lever
(4) Stand lever
(5) Stand rod
(6) Stand

5. One lever quick touch 4 lines coupler

5.1 Structure of one lever quick touch 4 lines coupler

The quick touch coupler allows to attach and remove the quick coupler. The quick coupler is divided to the upper part and the lower part. The upper part consists of the quick coupler lever (2) and the mobile quick coupler (4) with four hydraulic hoses (3).
The lower part consists of the quick coupler base (5) with four hydraulic pipes (6). It is installed to the loader main frame (1). Non-spill structure is adopted in the couplers on the quick coupler base to protect the oil leakage from the hydraulic oil line.

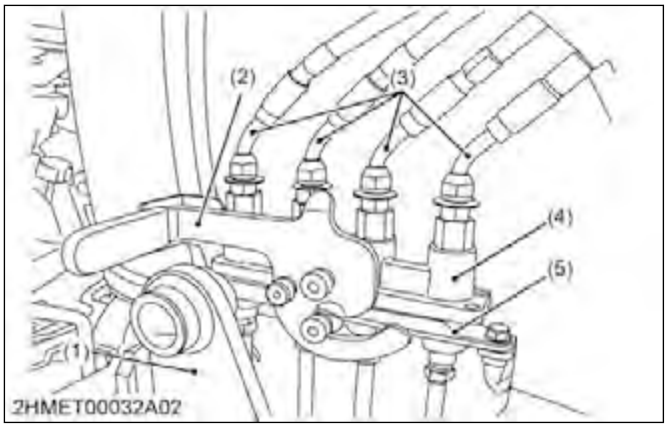

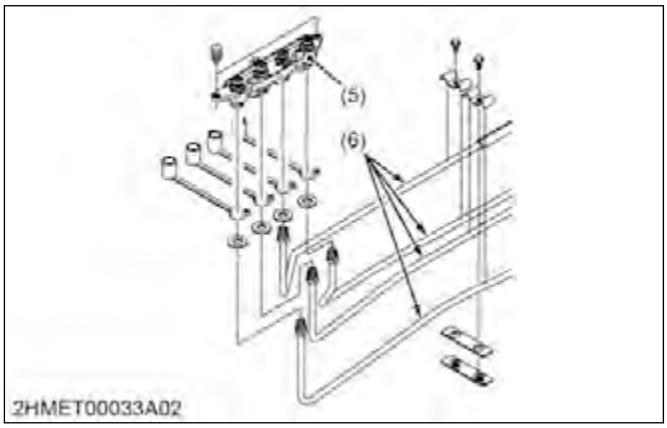

(1) Loader main frame
(2) Quick coupler lever
(3) Hydraulic hoses
(4) Mobile quick coupler
(5) Quick coupler base
(6) Hydraulic pipe

6. Auto lock attachment and detachment

6.1 Outline of auto lock attachment and detachment

The side frame (5) is mounted on the main frame (1). The side frame (5) can be locked or freed by controlling the mounting lever (3) on the lever guide (4). When the bucket is lifted up, the side frame (5) and the main frame (1) are locked. When the front wheels are lifted up by lowering the bucket to the ground, the operator can control the mounting lever (3) easily and release the hook (2) mounted on the main frame by hand.

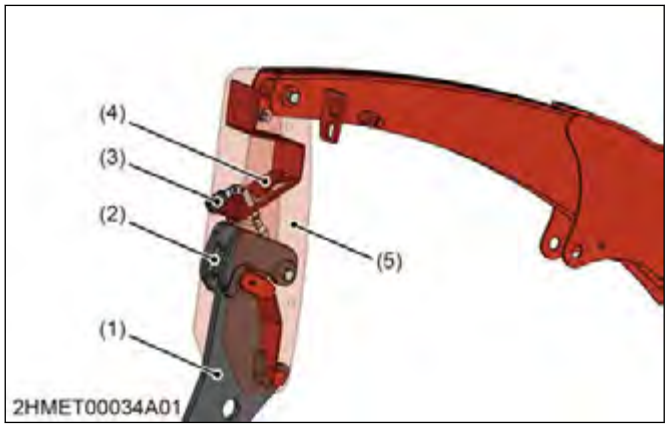

(1) Main frame
(2) Hook
(3) Mounting lever
(4) Lever guide
(5) Side frame

6.2 Function of auto lock attachment and detachment

When the mounting lever (3) is moved to the upper position of the lever guide (4), the hook (2) is unlocked from the main frame (1). As a result, the side frame (5) can be disconnected from the main frame (1).

Free position

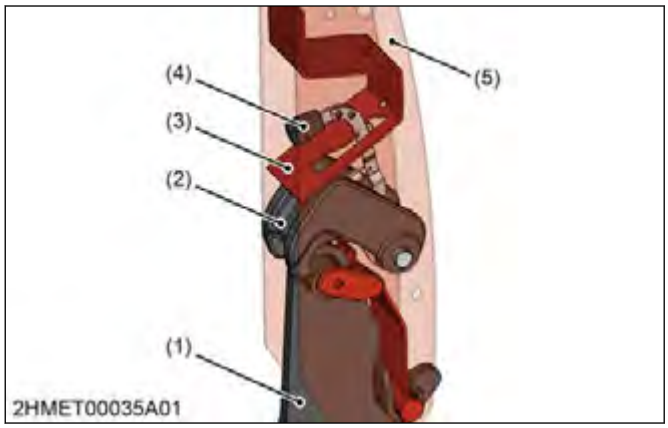

(1) Main frame
(2) Hook
(3) Mounting lever
(4) Lever guide
(5) Side frame

When the mounting lever (3) is moved to the lower position of the lever guide (4), the hook (2) is locked to the main frame (1). As a result, the side frame (5) is locked to the main frame (1).

Locked position

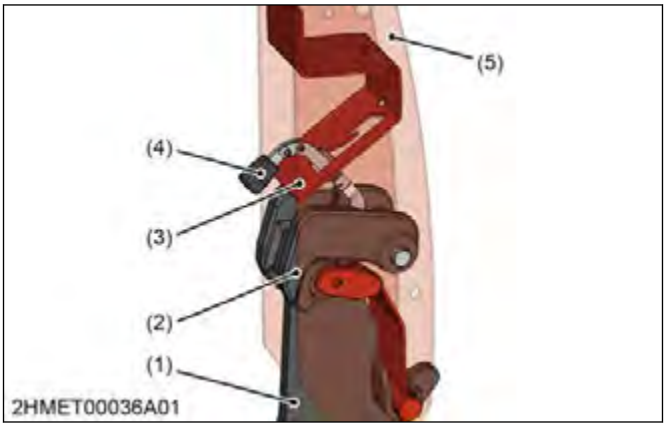

(1) Main frame
(2) Hook
(3) Mounting lever
(4) Lever guide
(5) Side frame

7. Mechanical loader frame standing mechanism

7.1 Structure of mechanical loader frame standing mechanism

The loader stand (1) is fixed to the loader arm (2) by the stand hooks (5). These stand hooks (5) can be controlled by moving the stand lever (3). The stand rod (4) is connecting the stand lever (3) and the stand hooks (5). When the stand lever (3) is moved downward, the stand hooks (5) are pulled in and free the loader stand (1) from the loader arm (2).

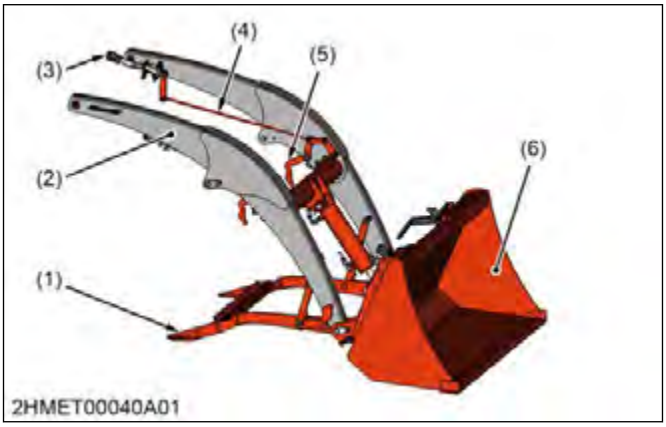

(1) Loader stand
(2) Loader arm
(3) Stand lever
(4) Stand rod
(5) Stand hook
(6) Bucket

https://truckmanualshub.com/

8. 3rd function valve (If equipped)

8.1 Structure of 3rd function valve

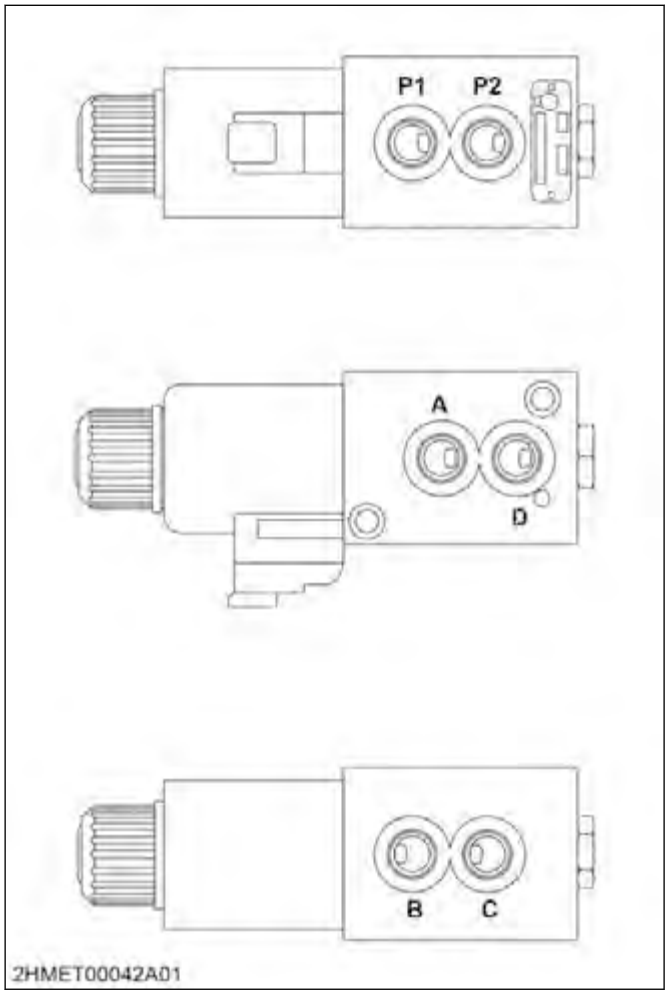

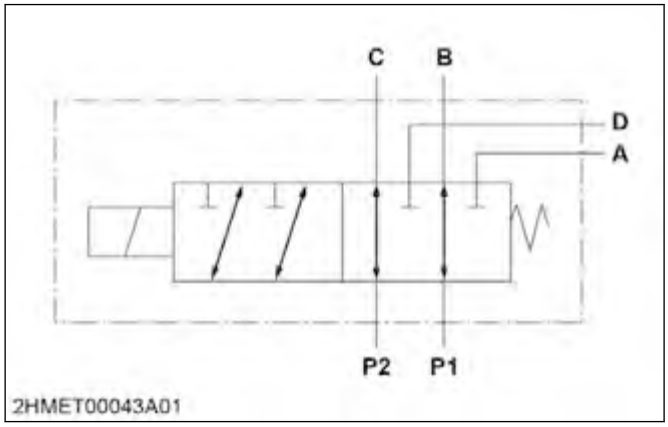

P1:	P1 port	B:	B port
P2:	P2 port	C:	C port
A:	A port	D:	D port

8.2 Function of 3rd function valve

8.2.1 Activation switch in off position

1. When the activation switch in off position, the spool of 3rd function valve doesn't move. The oil passage from P1 port to A port and the oil passage from P2 port to D port are opened.
2. When the loader control lever is set to the dump position, the hydraulic oil enters from P1 port and exits at B port. This extends the bucket cylinder.
3. Return oil from the bucket cylinder enters C port and travels throughout the valve to go to the transmission case through P2 port.

NOTE

When the loader control lever is set to the roll-back position, the hydraulic oil enters from P2 port and exits at C port. This extends the bucket cylinder. Return oil from the bucket cylinder enters B port and travels throughout the valve to go to the transmission case through P1 port.

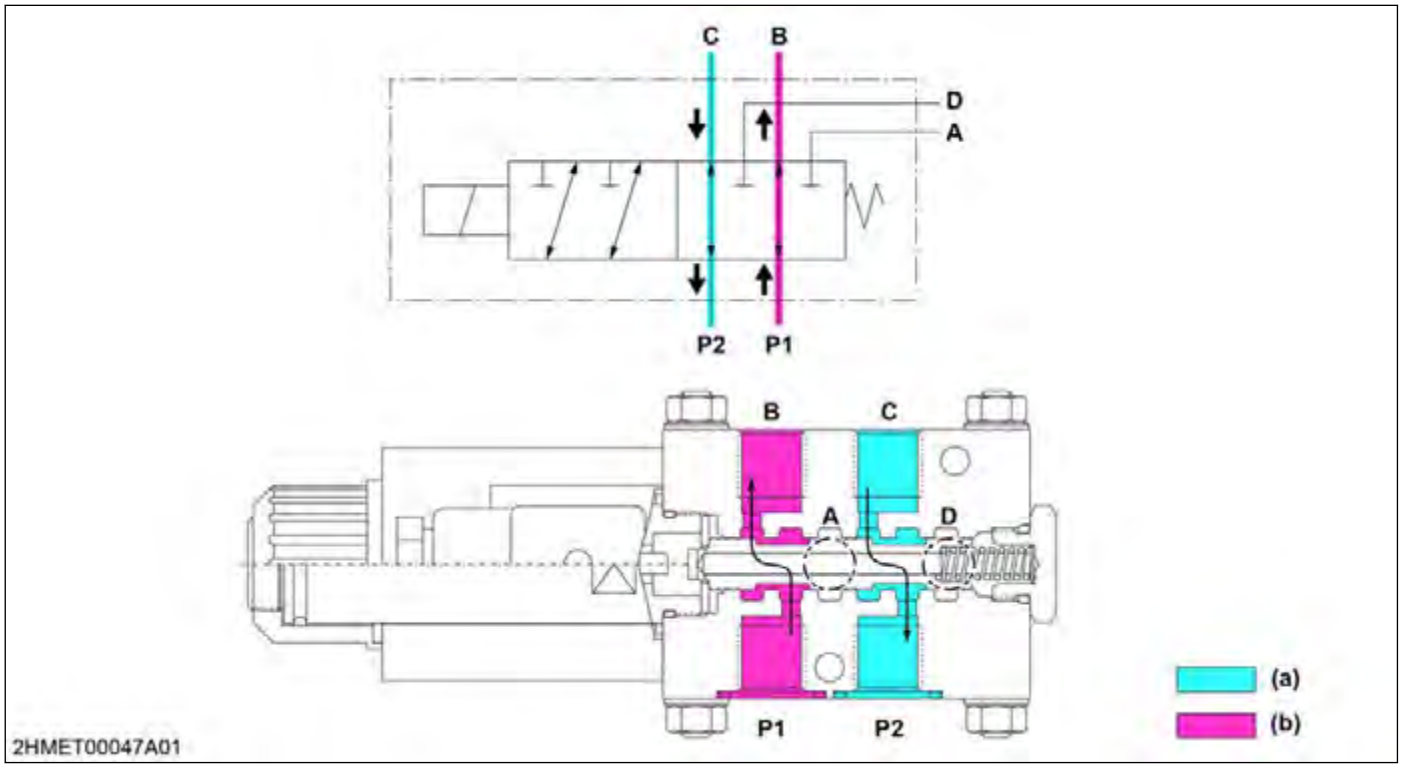

P1	P1 port	A	A port	C	C port	(a)	Low pressure
P2	P2 port	B	B port	D	D port	(b)	High pressure

https://truckmanualshub.com/

8.2.2 Activation switch in on position

1. When the activation switch in on position, the spool of 3rd function valve moves to the right. This creates an oil passage from P1 port to A port. The oil passage from P2 port to D port is also opened.
2. When the loader control lever is set to the dump position, the hydraulic oil enters from P1 port and exits at A port. This extends the 3rd function cylinder.
3. Return oil from the 3rd function cylinder enters D port and travels throughout the valve to go to the transmission case through P2 port.

NOTE

When the loader control lever is set to the roll-back position, the hydraulic oil enters from P2 port and exits at D port. This extends the 3rd function cylinder. Return oil from the 3rd function cylinder enters A port and travels throughout the valve to go to the transmission case through P1 port.

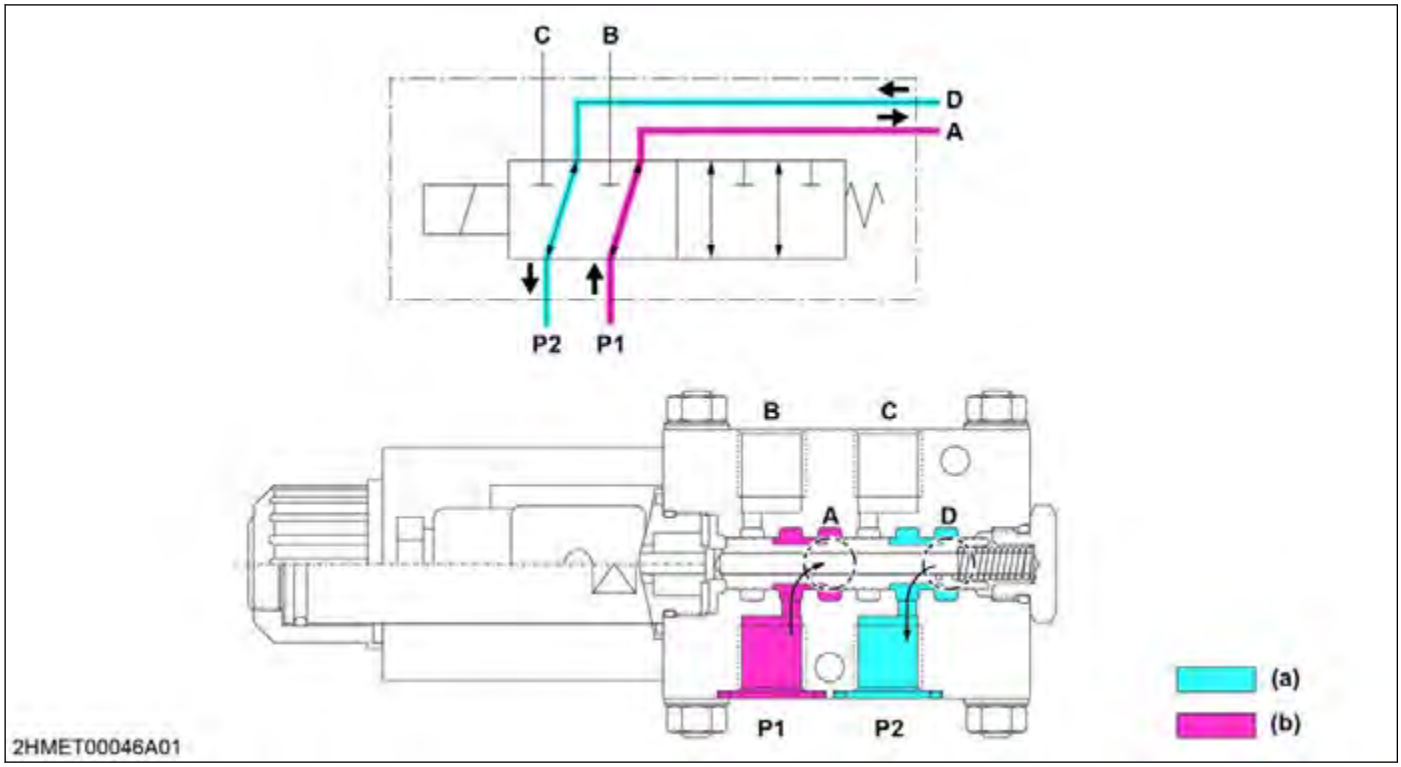

P1: P1 port	A: A port	C: C port	(a) Low pressure
P2: P2 port	B: B port	D: D port	(b) High pressure

https://truckmanualshub.com/

SERVICING

1. Troubleshooting for front loader

Symptom	Probable cause and checking procedure	Solution	Reference page
Boom does not rise.	1. Control valve is damaged.	Repair or replace control valve.	Tractor WSM
	2. Boom cylinder is damaged.	Repair or replace boom cylinder.	3-28
	3. Control lever linkage is damaged.	Repair or replace control lever linkage.	Tractor WSM
	4. Hydraulic pump is damaged.	Repair or replace hydraulic pump.	Tractor WSM
	5. Relief valve spring is damaged.	Replace relief valve spring.	Tractor WSM
	6. Relief valve is dirty.	Clean relief valve.	Tractor WSM
	7. Oil filter is clogged.	Clean or replace oil filter.	—
	8. Hydraulic hose is damaged.	Replace hydraulic hose.	3-28
Boom does not lower.	1. Control valve is damaged.	Repair or replace control valve.	Tractor WSM
	2. Control lever linkage is damaged.	Repair or replace control lever linkage.	Tractor WSM
Boom speed is insufficient.	1. Boom cylinder tube is worn or damaged.	Replace boom cylinder tube.	3-28
	2. Boom cylinder piston ring (piston seal and O-ring) is worn or damaged.	Replace boom cylinder piston ring (piston seal and O-ring).	3-30
	3. Oil leaks from tube joints.	Repair tube joints.	—
	4. Relief valve setting pressure is too low.	Adjust relief valve.	Tractor WSM
	5. Transmission fluid is insufficient.	Fill transmission fluid.	Tractor WSM
	6. Relief valve is dirty.	Clean relief valve.	Tractor WSM
Bucket does not move.	1. Control valve is damaged	Repair or replace control valve.	Tractor WSM
	2. Bucket cylinder is damaged.	Repair or replace bucket cylinder.	3-28

(Continued)

Symptom	Probable cause and checking procedure	Solution	Reference page
Bucket does not move.	3. Control lever linkage is damaged.	Repair or replace control lever linkage.	Tractor WSM
	4. Hydraulic pump is damaged.	Repair or replace hydraulic pump.	Tractor WSM
	5. Oil filter is clogged.	Clean or replace oil filter.	—
	6. Relief valve spring is damaged.	Replace relief valve spring.	Tractor WSM
	7. Hydraulic hose is damaged.	Replace hydraulic hose.	3-28
	8. Relief valve is dirty.	Clean relief valve.	Tractor WSM
Boom speed is insufficient.	1. Bucket cylinder tube is worn or damaged.	Replace bucket cylinder tube.	3-28
	2. Bucket cylinder piston ring (piston seal and O-ring) is worn or damaged.	Replace bucket cylinder piston ring (piston seal and O-ring).	3-30
	3. Relief valve setting pressure is too low.	Adjust relief valve.	Tractor WSM
	4. Relief valve is dirty.	Clean relief valve.	Tractor WSM
	5. Oil leaks from tube joints.	Repair tube joints.	3-28
	6. Transmission fluid is insufficient.	Fill transmission fluid.	Tractor WSM
Front end loader falls by its weight.	1. Boom cylinder tube is worn or damaged.	Replace boom cylinder tube.	3-29
	2. Boom cylinder piston ring (piston seal and O-ring) is worn or damaged.	Replace boom cylinder piston ring (piston seal and O-ring).	3-30
	3. Oil leaks from tube joints.	Repair tube joints.	3-28
	4. Control valve is damaged.	Repair or replace control valve.	Tractor WSM
3rd function valve does not operate correctly.	1. 3rd function valve wiring harness is damaged.	Repair or replace 3rd function valve wiring harness.	—
	2. 3rd function valve is damaged.	Repair or replace 3rd function valve.	—
	3. Battery voltage is not supplied to front hydraulic valve main switch.	Check battery supply voltage at front hydraulic valve main switch connector. Replace wiring harness.	3-18
	4. Relay is damaged.	Check or replace relay.	3-18

https://truckmanualshub.com/

2. Tightening torques for front loader

Tightening torques of screws, bolts and nuts on the table below are especially specified.

Item	N·m	kgf·m	lbf·ft
Boom cylinder piston mounting nut	150 to 180	15.3 to 18.3	111 to 132
Bucket cylinder piston mounting nut	350 to 400	35.7 to 40.7	259 to 295
Main frame mounting bolt (M14)	115	11.7	85

RELATED PAGE

1. General use screws, bolts, and nuts on page 2-7

3. Checking and adjusting

3.1 Loader stand

3.1.1 Adjusting height of loader stand

1. Make sure that the stand lever is at its low position as shown in the following figure.

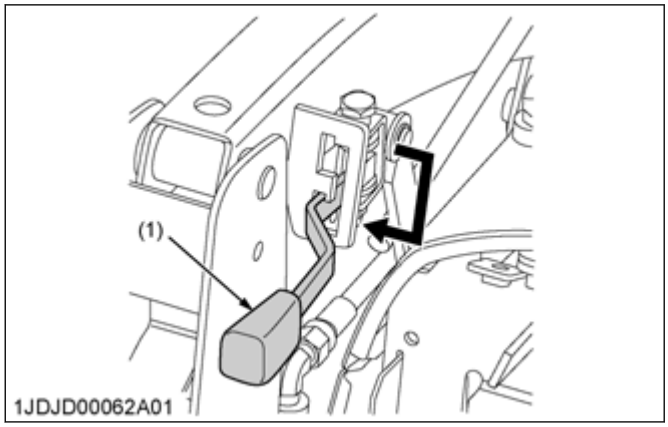

(1) Stand lever

2. Raise the boom until the bucket-fulcrum-pin comes up to the height of the boom-fulcrum-pin.
3. Roll back the bucket to maximum.

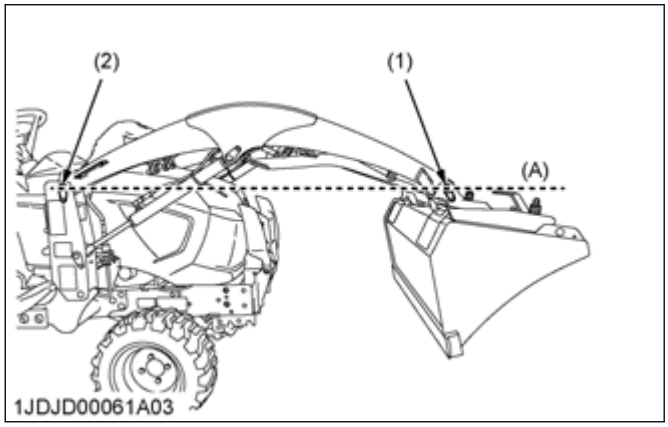

(1) Bucket fulcrum pin
(2) Boom fulcrum pin
(A) Same height

4. Stop the engine.
5. Apply the adjusting bolts to the right and left stand adjusting blocks as shown in the following figure.

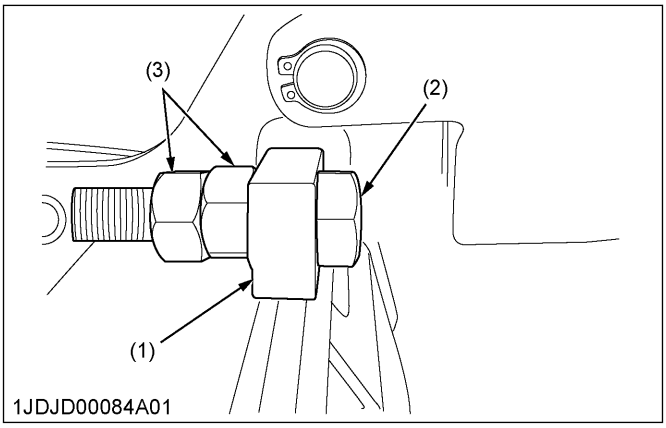

(1) Adjusting block
(2) Adjusting bolt
(3) Lock nut

IMPORTANT

- **Be sure to apply the bolts all the way to prevent the damage of the stand.**

NOTE

- **There is no need to tighten up the lock nuts.**

6. Move the hydraulic-control-lever to the **dump** position, and check to see if the stands are folded as specified.
7. Fasten the seat belt, and start the engine.
8. Move the hydraulic control lever to the **dump** position until the hydraulic pressure gets relieved.
9. Lower the boom to put the bucket on the ground.

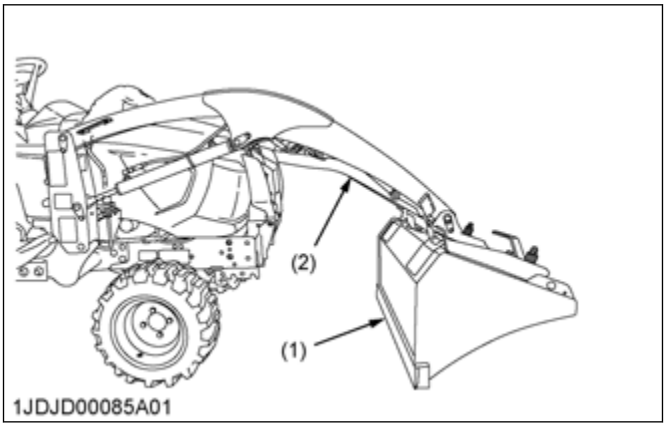

(1) Bucket
(2) Stand

10. Lift the stand on the right side of the loader up to the position shown in the following figure.

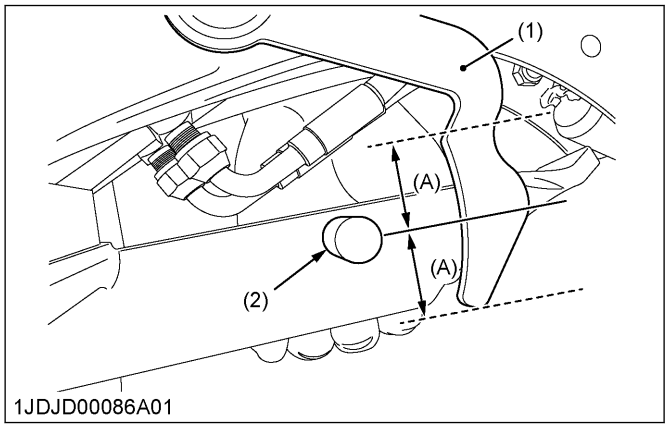

(1) Stand hook
(2) Stand pin
(A) Almost the same

11. Reposition the adjusting bolt until it touches the stand.

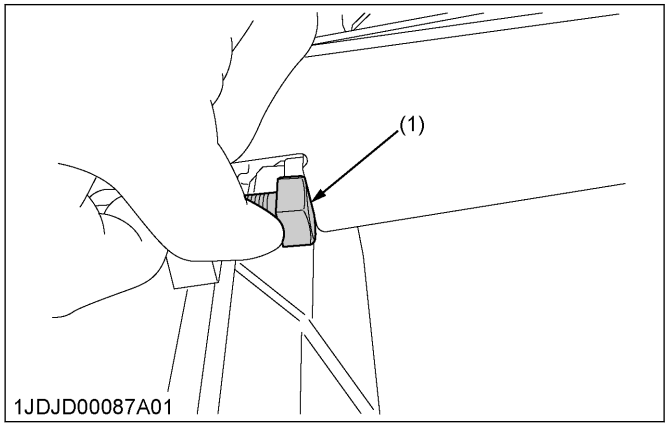

(1) Adjusting bolt

■ **NOTE**

- **The position of the bolt is provisional and may be roughly set for now.**

12. Adjust the adjusting bolt in the same way as for the stand on the left side of the loader.
13. Position the stand lever as shown in the figure.

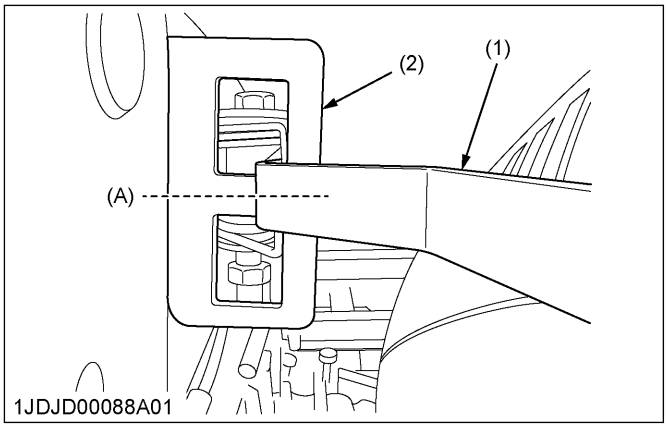

(1) Stand lever
(2) Lever guide
(A) Center

14. Turn the adjusting bolt on the right side of the loader to set the stand pin as shown as follows.

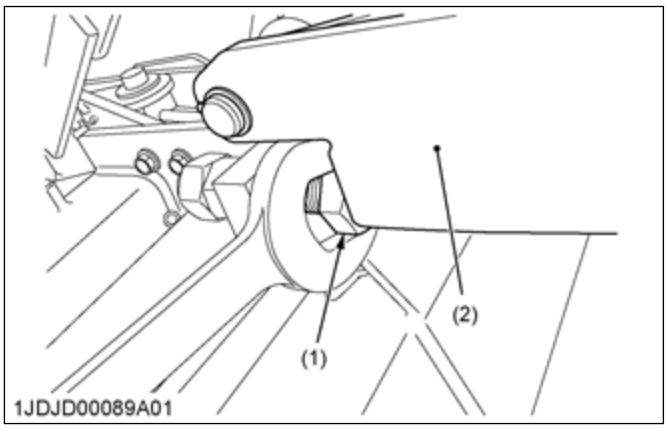

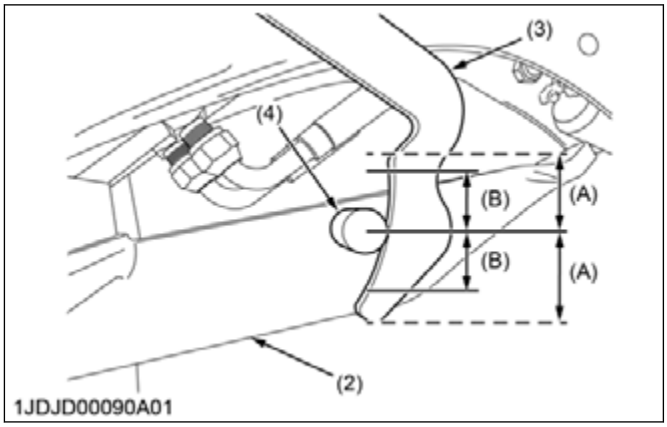

(1) Adjusting bolt
(2) Stand
(3) Stand hook
(4) Stand pin
(A) Almost the same
(B) Adjusting range

Adjusting range (B)	± 15 mm

■ **IMPORTANT**

- **Be careful not to allow the stands to go beyond their adjustable range. Otherwise the stands may get damaged.**

15. Lock the stand pin using the lock nut.

16. Turn the adjusting bolt and lock the stand pin on the left side of the loader in the same way as for the right side.
17. Look at the right and left stands to make sure that the heads of the adjusting bolts are pressed upon the stands.

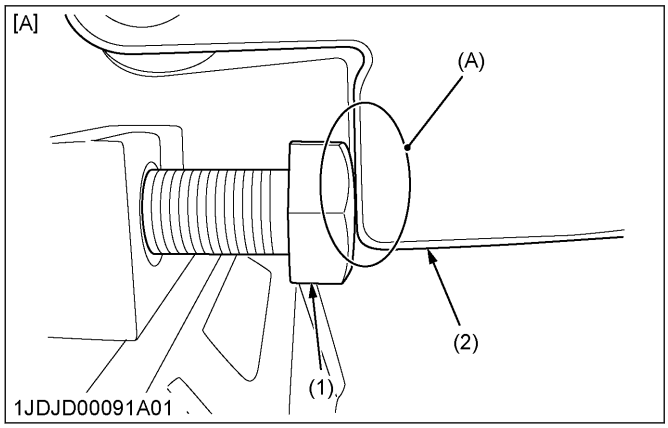

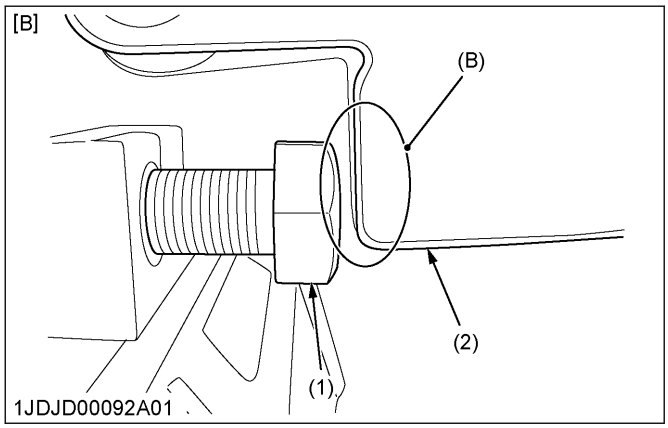

(1) Adjusting bolt
(2) Stand
[A] Good
[B] No good
(A) Touch
(B) Not touch

IMPORTANT

- **Double-check that the heads of the adjusting bolts are pressed upon the stands. Otherwise the stands may get damaged in storing them away.**

18. Be sure that the stands run parallel with the loader pipe.

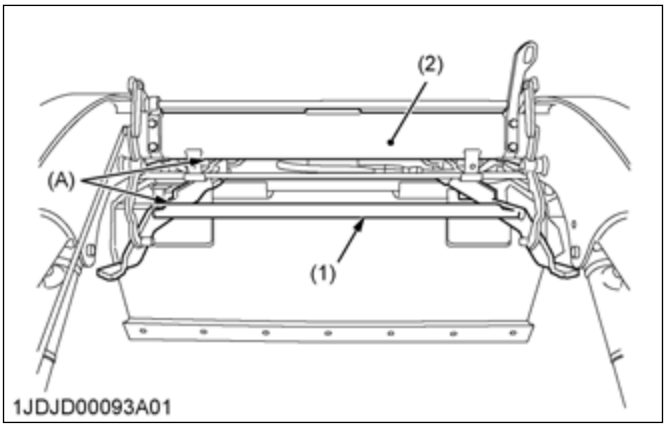

(1) Stand
(2) Loader pipe
(A) Parallel

19. Slide the stand lever in the upward direction and make sure that the stand gets locked.

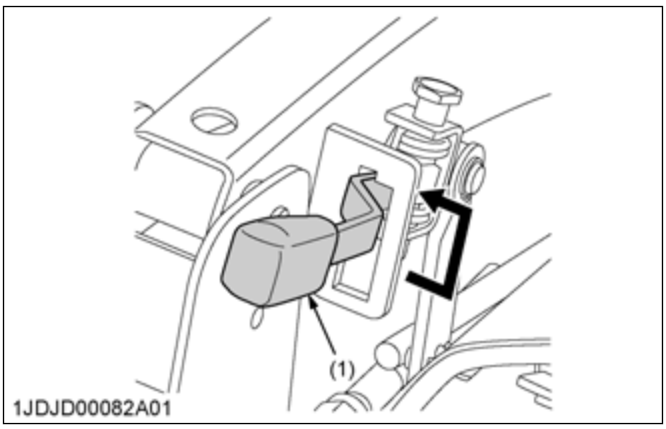

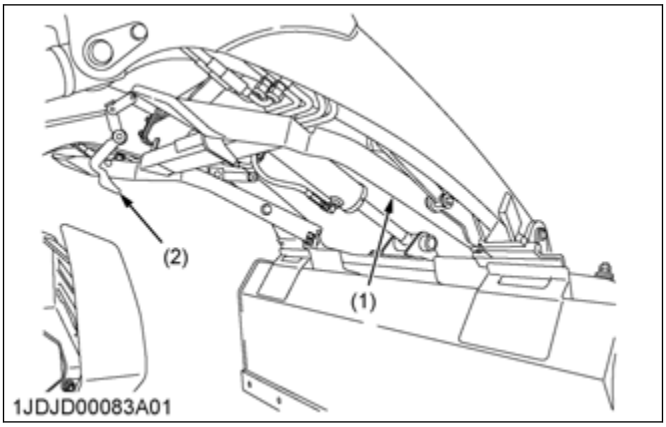

(1) Stand lever
(2) Stand
(3) Stand hook

https://truckmanualshub.com/

20. Set the stand lever to the **low** position.

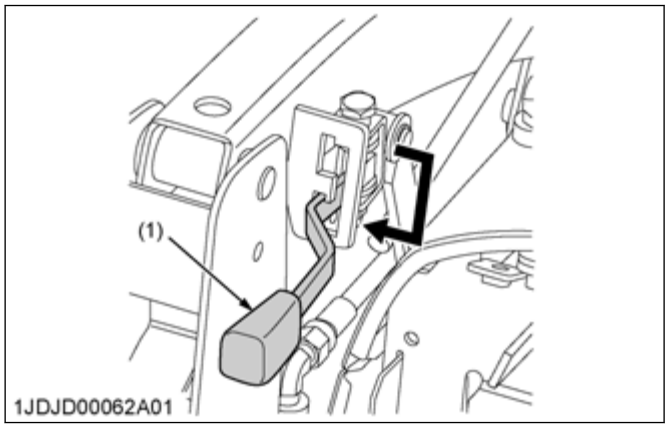

(1) Stand lever

21. Fasten the seat belt.
22. Get the engine started, roll back the bucket and move up the boom, both to maximum.
23. Stop the engine.
24. Move the hydraulic-control-lever to the **dump** position until the bucket comes to a complete stop.
25. Make sure that the stands are folded as specified.
26. Fasten the seat belt.
27. Get the engine started and raise the engine speed up to the following speed.

Engine speed	1800 rpm

28. Slowly dump the bucket until the stand touches the boom.
29. Slide the stand lever upward direction, and then slide the stand lever left side completely as shown in the following figure.

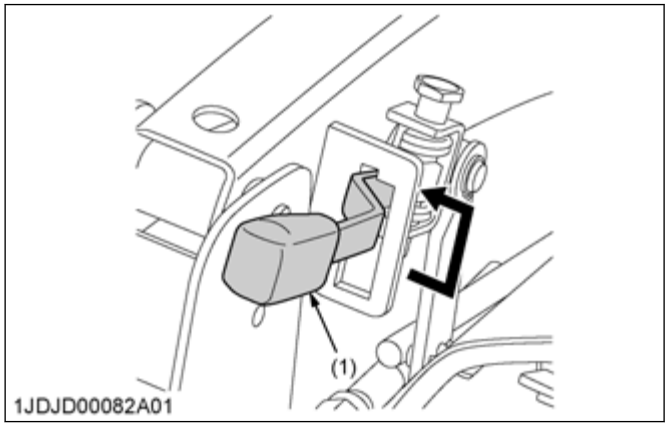

(1) Stand lever

30. Hold the stand by stand hook.

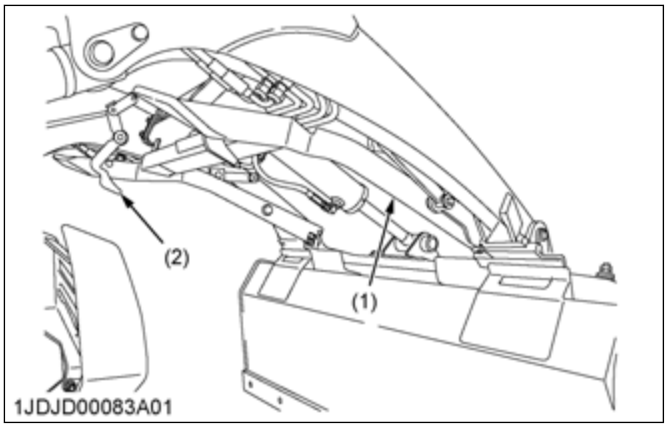

(1) Stand (2) Stand hook

3.2 Front hydraulic valve main switch and relay

3.2.1 Checking front hydraulic valve main switch continuity

1. Disconnect the front hydraulic valve main switch connector.

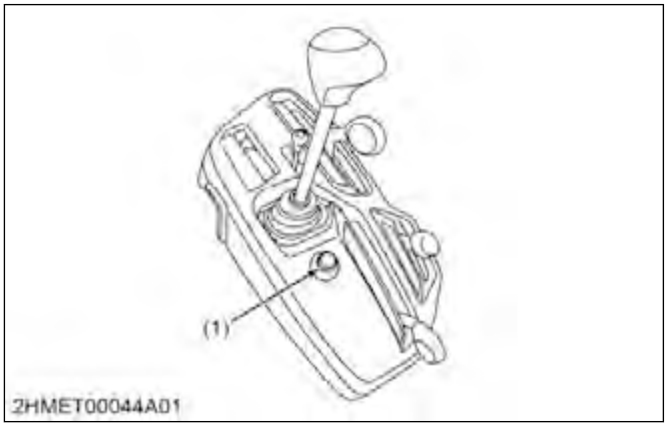

(1) Front hydraulic valve main switch

2. Measure the resistance with an ohmmeter between terminal RB and terminal B.

3. If 0 ohm is not indicated, replace the front hydraulic valve main switch.

Resistance	Terminal RB – Terminal B	On position	0 Ω
		Off position	Infinity

Switch side

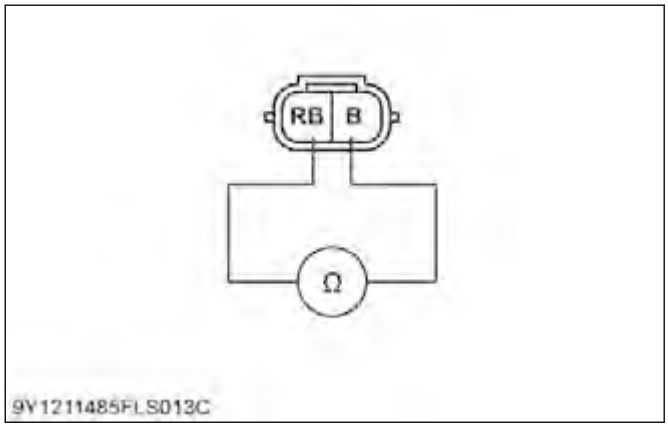

B: Black color of wiring RB: Red / Black color of wiring

3.2.2 Checking connector voltage of front hydraulic valve main switch

1. Disconnect the front hydraulic valve main switch connector.

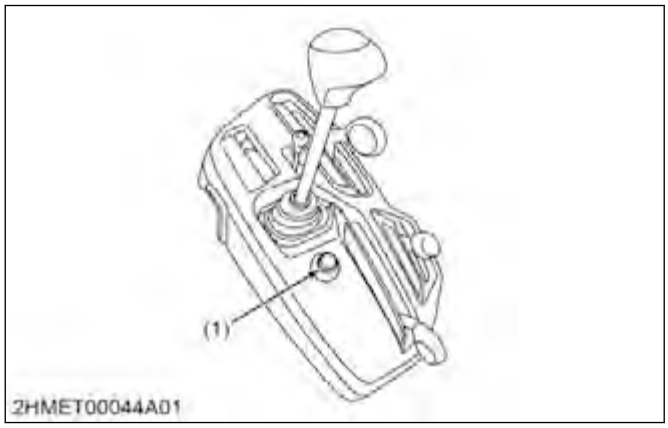

(1) Front hydraulic valve main switch

2. Turn the main switch on.
3. Measure the voltage between terminal RB and terminal B.

Wire harness side

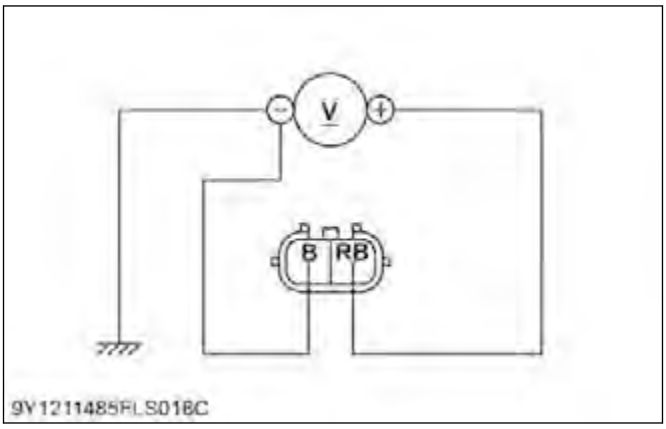

B: Black color of wiring RB: Red / Black color of wiring

4. If the measurement differs from the battery voltage, wire harness is damaged.

3.2.3 Checking relay

1. Remove the relay.
2. Apply battery voltage across terminals 3 and 4, and check for continuity across terminals 1 and 2.

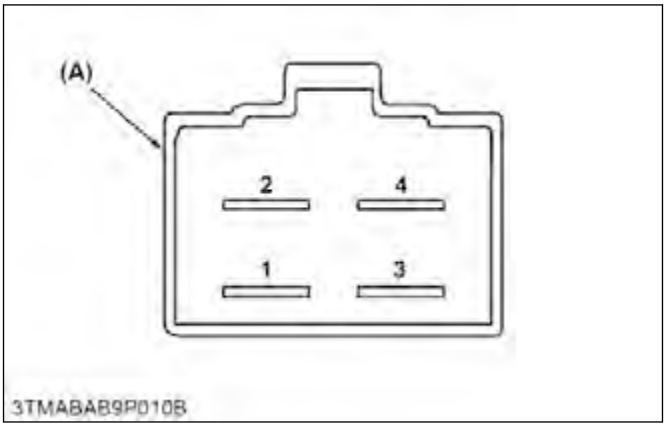

(A) Connector of relay

3. If continuity is not established, renew the relay.

https://truckmanualshub.com/

3.3 3rd function solenoid valve

3.3.1 Checking 3rd function solenoid valve continuity

1. Disconnect solenoid valve connector.

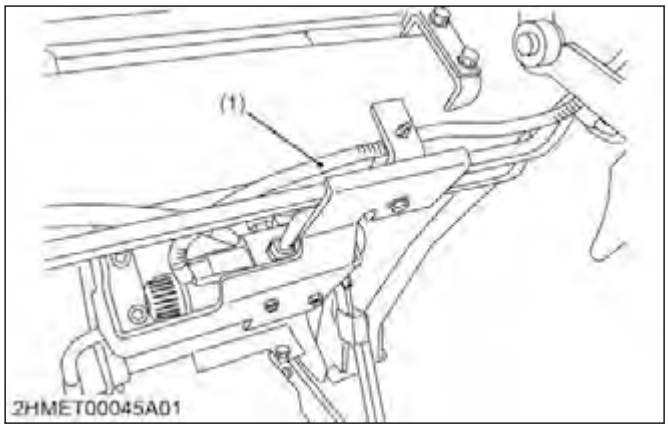

(1) Solenoid valve connector

2. Measure the resistance with an ohmmeter between terminal 1 and terminal 2.

Solenoid valve side

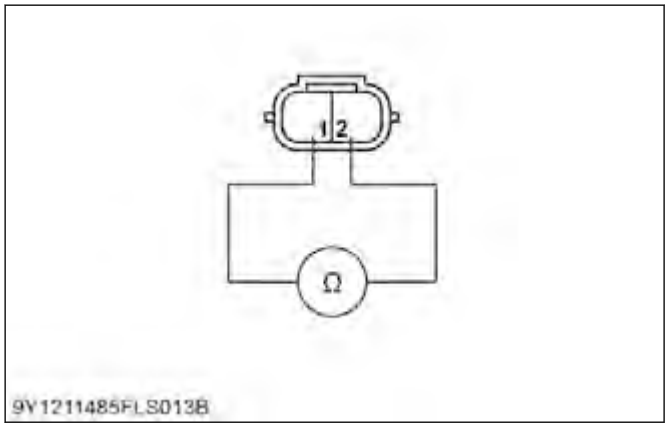

1: Terminal 1 2: Terminal 2

3. If the measurement greatly differs from specified value, replace the solenoid valve.

Resistance	Approx. 3.8 Ω

3.3.2 Checking connector voltage of 3rd function solenoid valve

1. Disconnect solenoid valve connector.

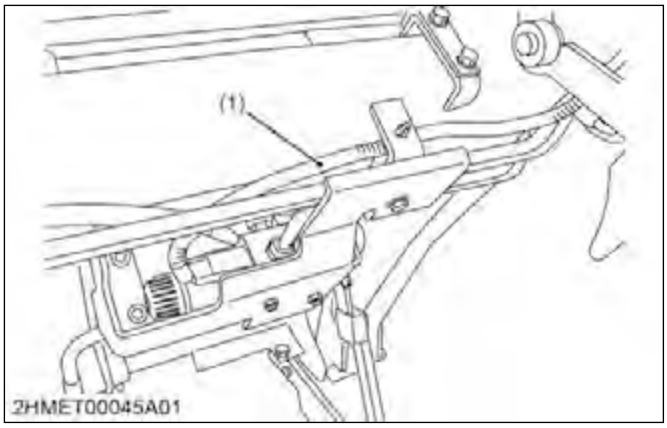

(1) Solenoid valve connector

2. Turn the main switch on and push the front hydraulic valve main switch (ON position), then push the activation switch..
3. Measure the voltage between terminal 1 and terminal 2.

Wire harness side

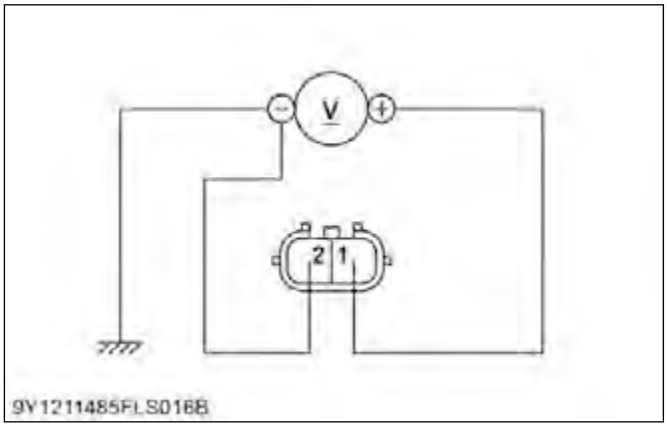

1: Terminal 1 2: Terminal 2

4. If the measurement differs from the battery voltage, wire harness is damaged.

4. Disassembling and assembling

4.1 Removing and attaching front loader

IMPORTANT

- **To remove the loader, park the tractor on flat and hard ground, apply the parking brake.**
  To start the engine or use the hydraulic control valve, always stay in the operator's seat.

4.1.1 Removing loader

CAUTION

- **Make sure an approved bucket is attached before removing the loader from the tractor.**

- **For removing the loader, choose flat and hard ground, preferably concrete.**
- **If the ground surface is soft, place suitable planks on the ground for the bucket and stands.**
- **When starting the engine or using the hydraulic control valve, always sit in the operator's seat.**
- **Make sure the bucket and stands are at ground level.**

4.1.1.1 How to remove the loader

WARNING

- **Make sure that an approved bucket is attached before removing the loader from the tractor.**
- **For removing the loader, choose flat and hard ground, preferably concrete.**
- **If the ground surface is soft, place suitable planks on the ground for the bucket and the stand.**
- **When starting the engine or using the hydraulic-control-lever, always sit in the operator's seat.**
- **Make sure that the bucket and the stand are at ground level.**

1. Set the engine speed to the following speed, and then raise the boom until the bucket pin is the height of the boom fulcrum pin.

Engine speed	1800 rpm

2. Dump the bucket fully.

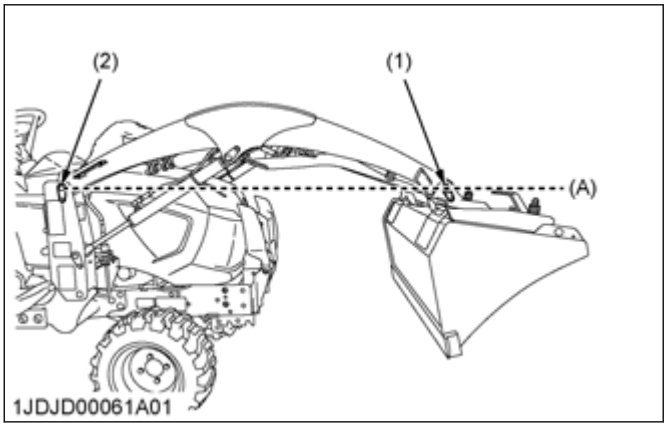

(1) Bucket pin
(2) Boom fulcrum pin
(A) Same height

3. Slide the stand lever downward direction completely, and release the stand from the stand hook.

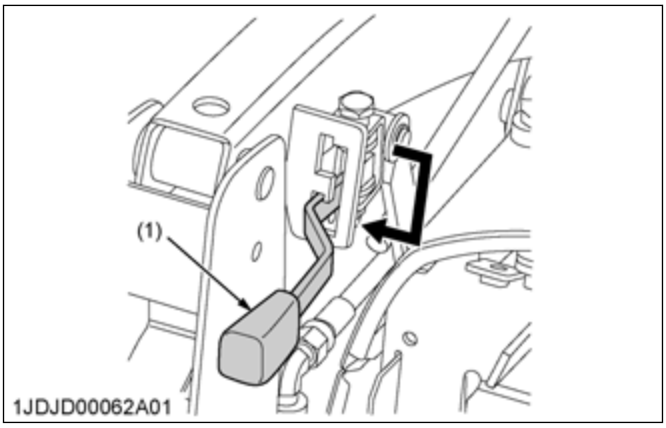

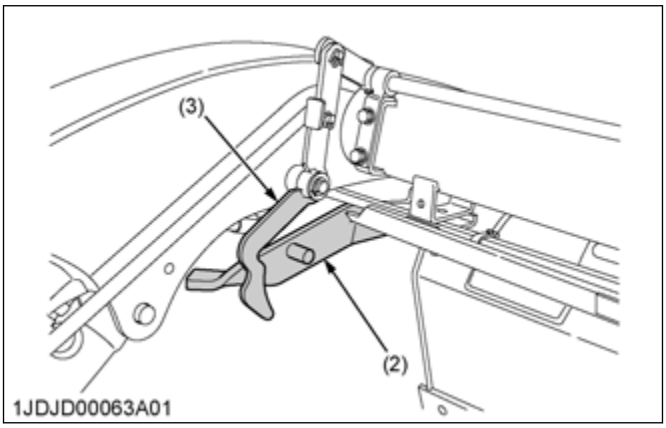

(1) Stand lever
(2) Stand
(3) Stand hook

4. Get the bucket rolled back until its bottom is positioned the following angle with respect to the ground surface.

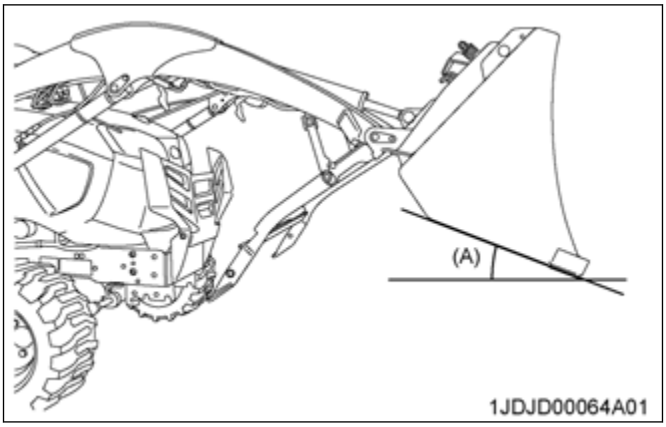

(A) Angle between ground surface and bucket bottom

Angle between ground surface and bucket bottom (A)	About 20 degrees

https://truckmanualshub.com/

5. Lower the boom and raise the front wheels slightly.

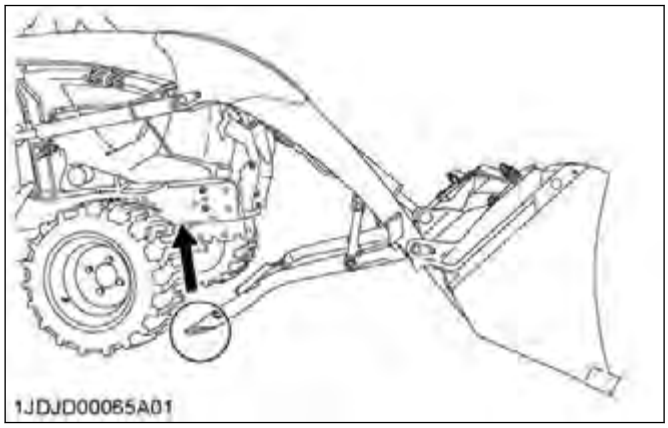

IMPORTANT
- **When raising the front wheels, the stands are not to be grounded.**

6. Slide the mounting levers of both sides to the upward direction as shown in the following figure.

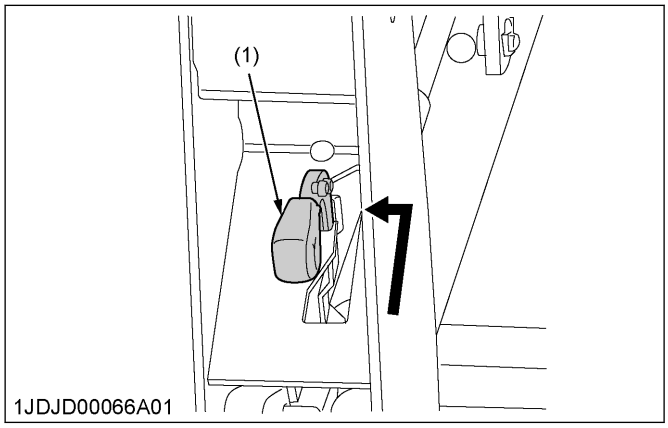

(1) Mounting lever

7. Slowly move the hydraulic-control-lever to the **rollback** position to raise the side frames of the loader up and out of the receivers of the main frames as shown in the following figure.

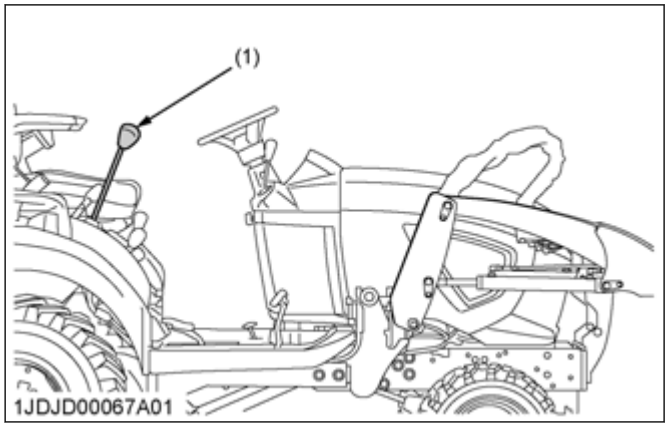

(1) Hydraulic control lever

8. Down the mounting levers of both sides as shown in the following figure.

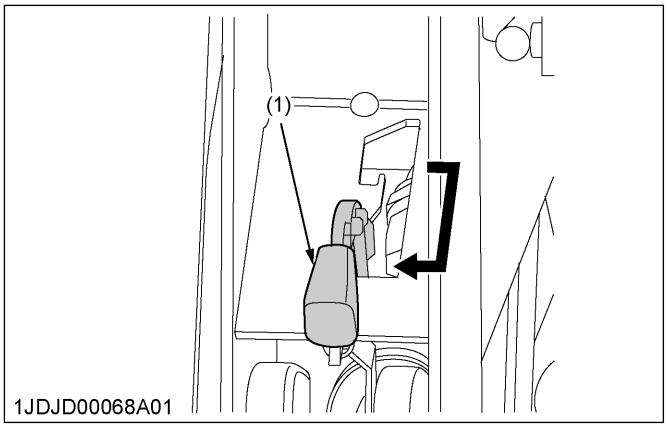

(1) Mounting lever

9. Back the tractor so that the quick coupler is positioned at the back of side frame as shown in the following figure.

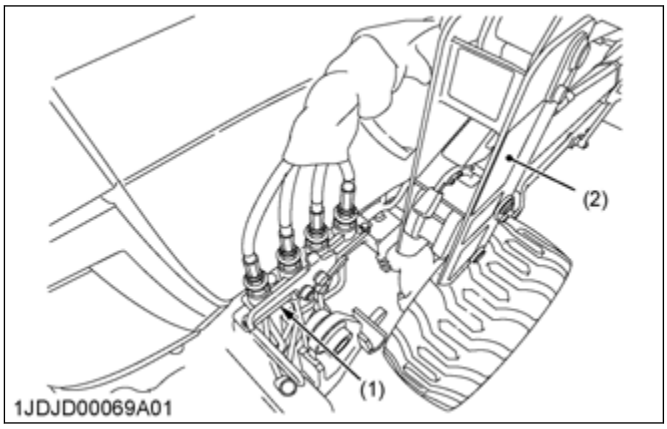

(1) Quick coupler (2) Side frame

10. Stop the engine, and slowly release all hydraulic pressure by moving the hydraulic-control-lever in all directions.
11. Unfasten the seat belt, and then turn the safety-lock-button counterclockwise to unlock it.

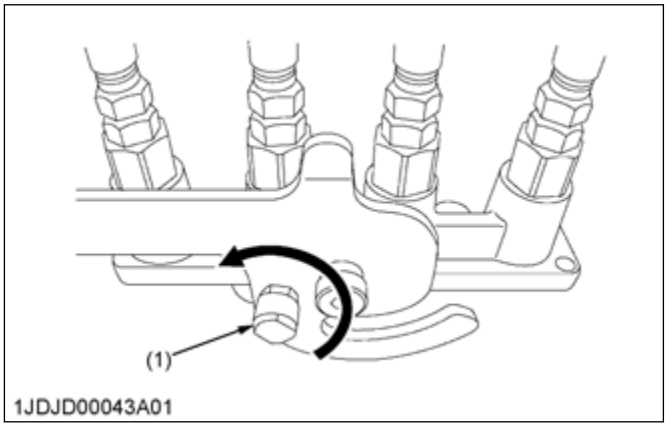

(1) Safety lock button

12. Raise the lever until it stops.

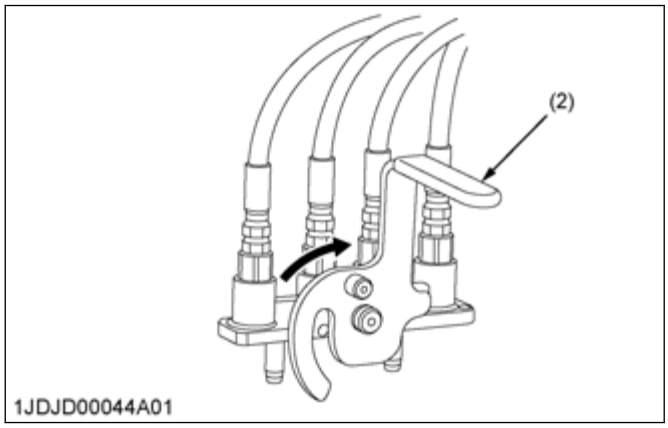

(2) Lever

13. When the third-function-kit is mounted, remove the connector. Connect the caps to the connectors of mobile side and tractor side.

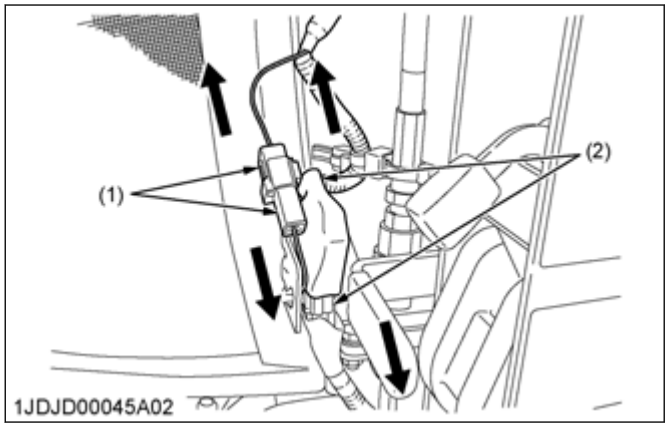

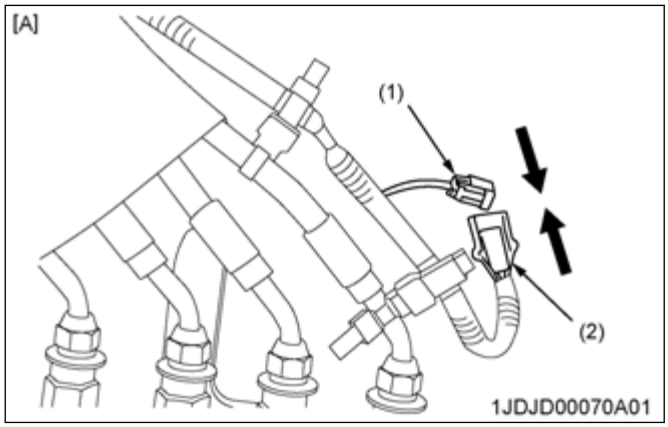

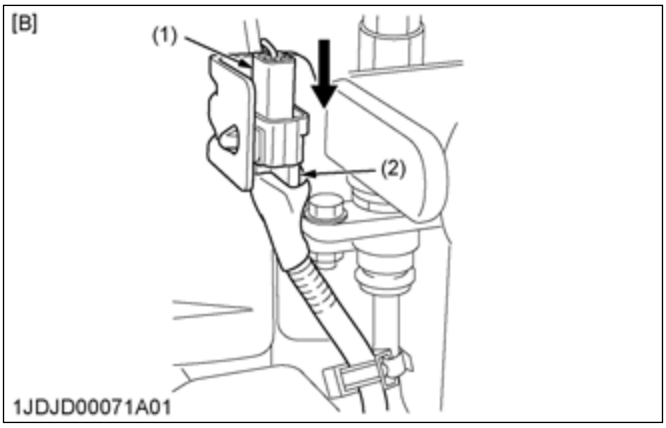

(1) Cap
(2) Connector
[A] Mobile side
[B] Tractor side

14. Put the mobile part on the coupler stay (1). Put the mobile part on the coupler stay (2) for cab model .

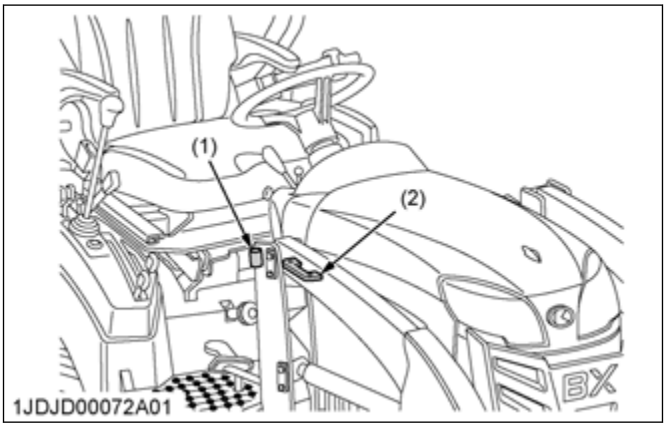

(1) Coupler stay
(2) Coupler stay for cab model

15. Place the protective caps and plugs on the ends of the quick coupler.

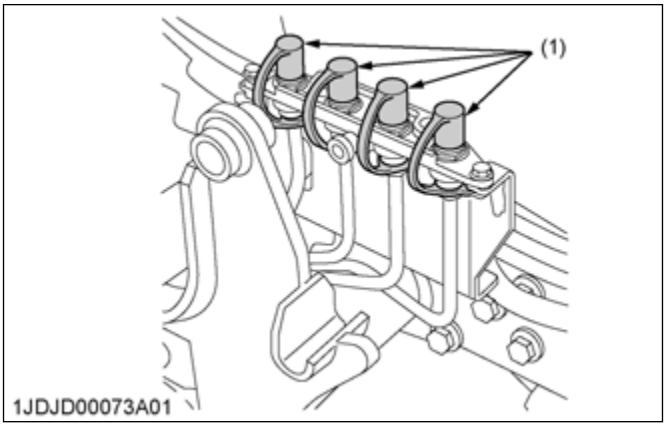

(1) Protective caps

16. Wear the seat belt and slowly back the tractor away from the loader.

4.1.2 Reinstalling loader

⚠ CAUTION
To avoid personal injury:

https://truckmanualshub.com/

- **To start the engine and operate the control valve, always stay in the operator's seat.**

4.1.2.1 How to reinstall the loader

WARNING

To avoid personal injury or death:

- **When starting the engine and operating the hydraulic-control-valve, always sit in the operator's seat.**

1. Slowly drive the tractor between the side frames of the loader until the rear portion of both side frames touches the main frames as shown in the following figures.

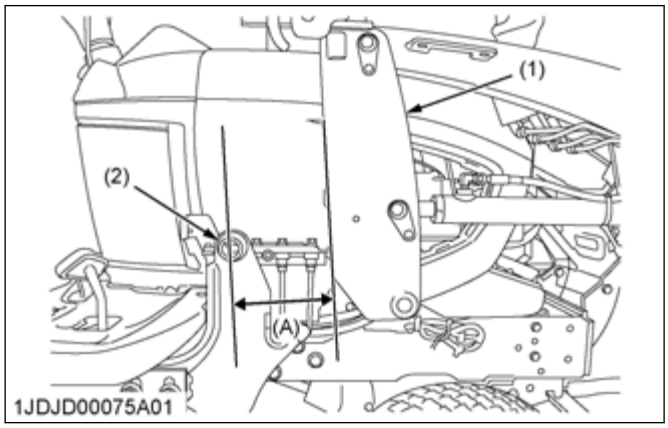

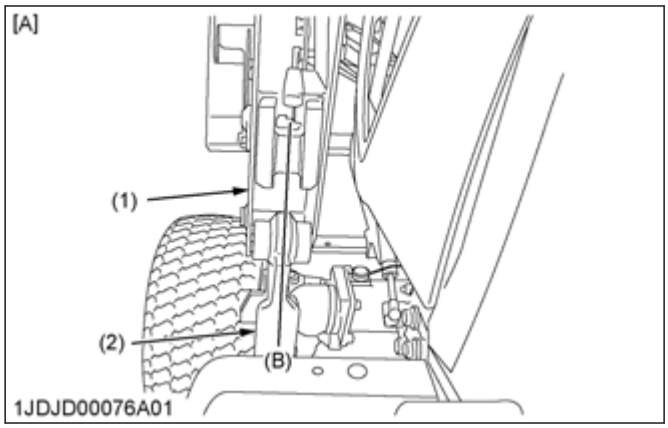

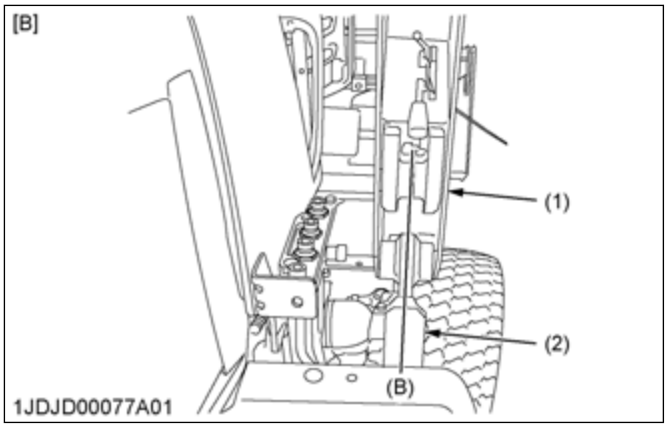

(1) Side frame
(2) Main frame
[A] LH
[B] RH
(A) 150 mm to 200 mm
(B) Center of side frames

2. Stop the engine and unfasten the seat belt.
3. Remove the protective caps.
4. Connect the quick coupler and lower the lever until it stops, and then turn the safety-lock-button clockwise.

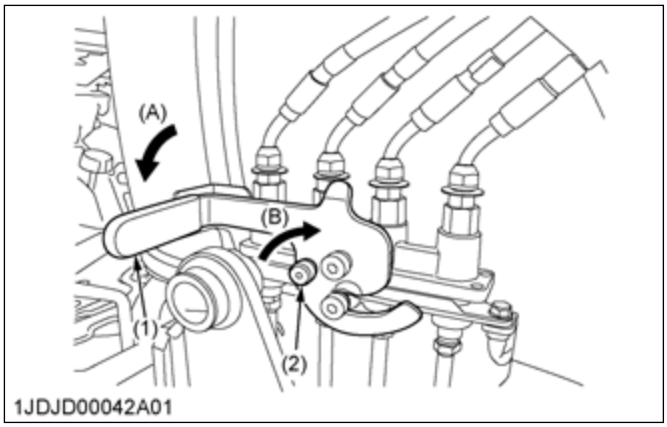

(1) Lever
(2) Safety lock button
(A) Lower
(B) Clockwise

IMPORTANT

- **Get the quick coupler locked, and move up and down the lever to make sure that the quick coupler is tightly locked.**

5. When mounting the third-function-kit, remove the caps from the connectors of mobile side and tractor side. Connect the connectors and the caps as shown in the follow figures.

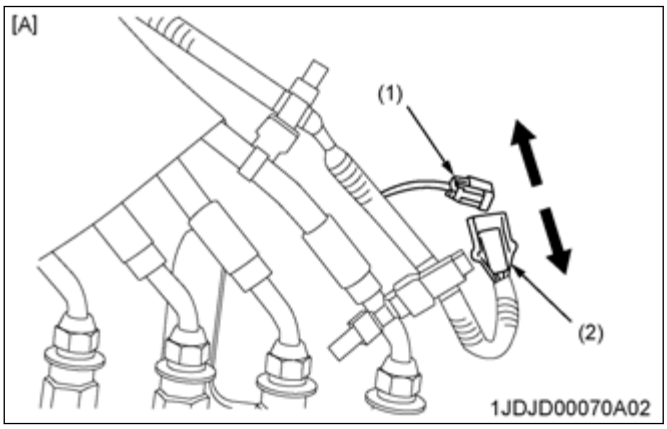

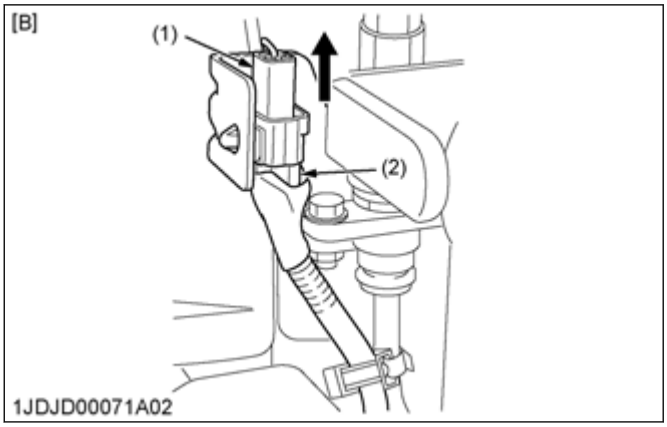

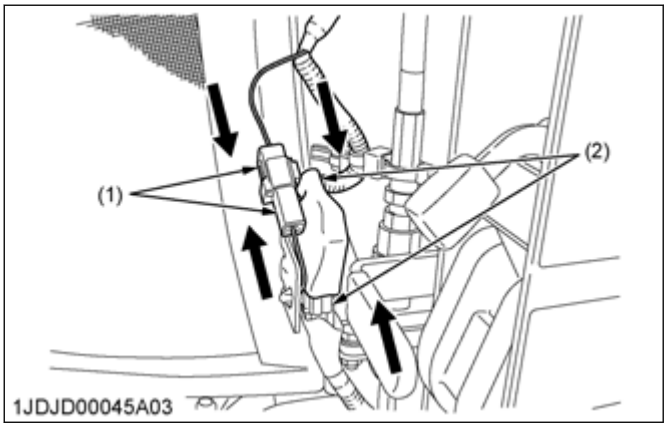

(1) Cap
(2) Connector
[A] Mobile side
[B] Tractor side

6. Make sure that the mounting levers of both sides are at their **low** position as shown in the follow figures.

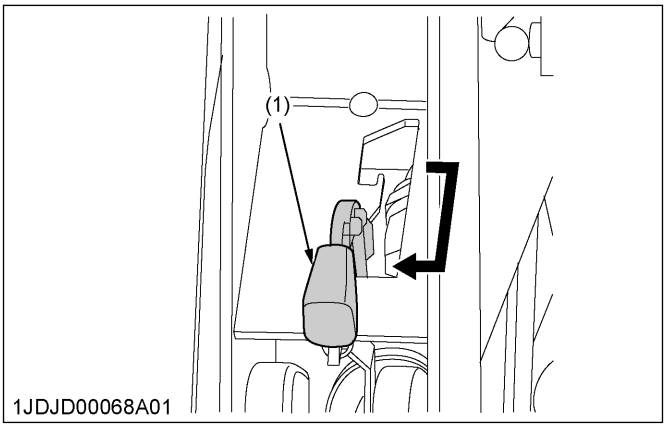

(1) Mounting lever

7. Start the engine and run at the following speed.

Engine speed	1800 rpm

8. Slowly move the hydraulic-control-lever to the **up** position until the guide bosses of both side frames touch the main frames.

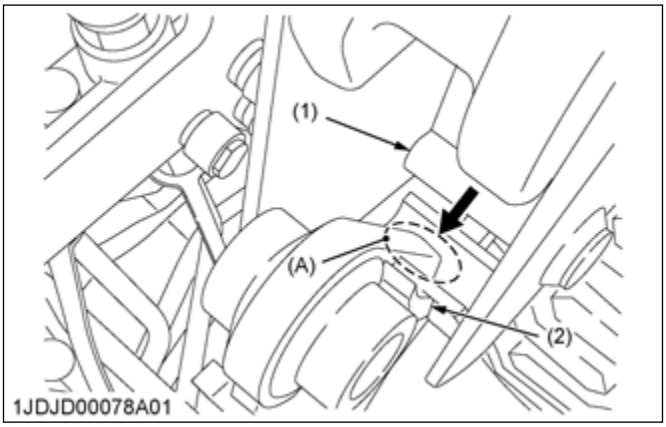

(1) Guide boss of side frame
(2) Main frame
(A) Touch

9. Slowly move the hydraulic-control-lever to the **dump** position to lower the side frames into the main frames, and engage the bosses of the main frames to the guide bosses of the side frames.

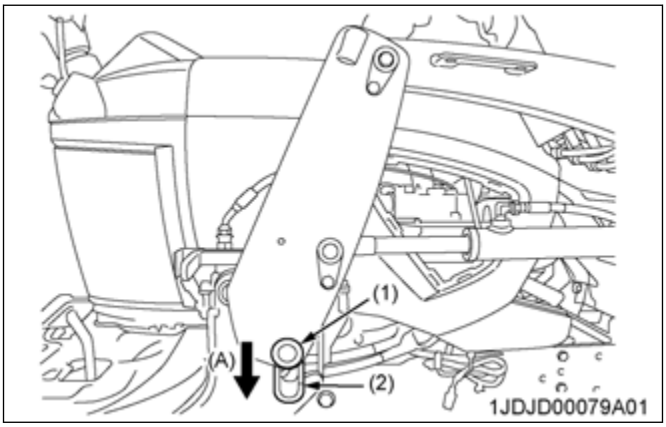

(1) Guide boss of side frame
(2) Boss of main frame
(A) Engage

https://truckmanualshub.com/

10. Slowly move the control lever to the **dump** position until the bucket tilts down as follows.

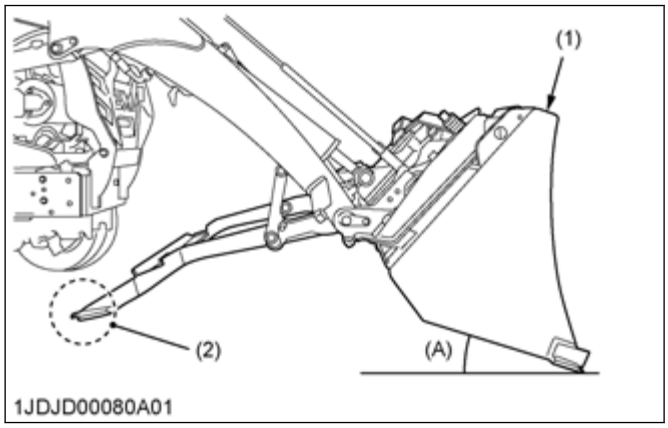

(1) Bucket
(2) Tip of the stand
(A) Angle between bucket bottom and ground

Angle between bucket bottom and ground (A)	About 20 degrees

IMPORTANT
- **Make sure that the tips of the stands are off the ground.**

11. Slowly move the hydraulic-control-lever to the **down** position to lift the front wheels slightly with the loader until the mount hooks are completely mounted on the main frame as shown in the following figure.

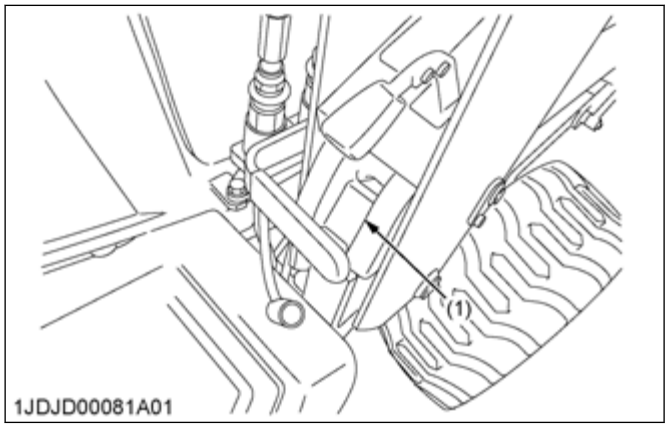

(1) Mount hook

IMPORTANT
- **Make sure that the hooks at both sides are properly mounted on the main frame.**

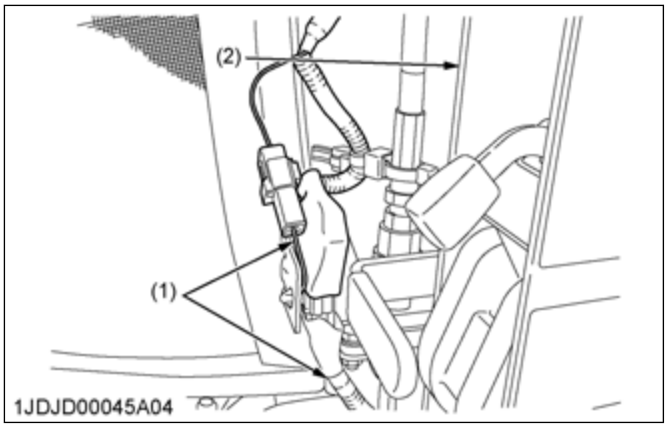

(1) Wire harness
(2) Side frame

- **Make sure not to pinch the wire harness in the side frame when mounting the third-function-kit.**

12. Slowly move the hydraulic-control-lever to the **up** position until the cutting edge of the bucket comes up slightly off the ground.
13. Make sure that the right and left mounting levers can not be activated.
    Do not use the machine if the cutting edge of the bucket is off the ground but the mount hooks are unlocked.

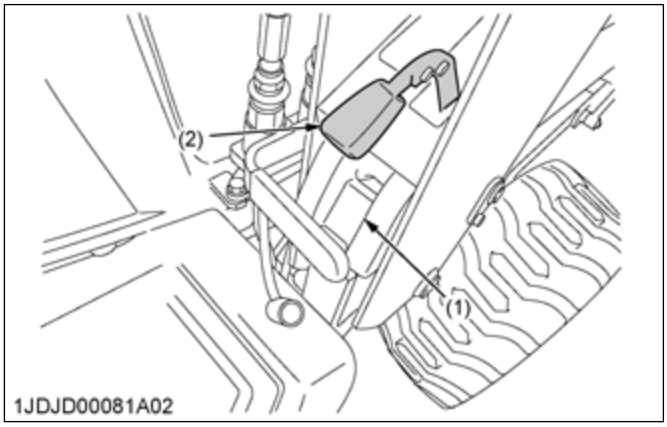

(1) Mount hook
(2) Mounting lever

14. Raise the boom until the bucket-fulcrum-pin comes up to the height of the boom-fulcrum-pin.

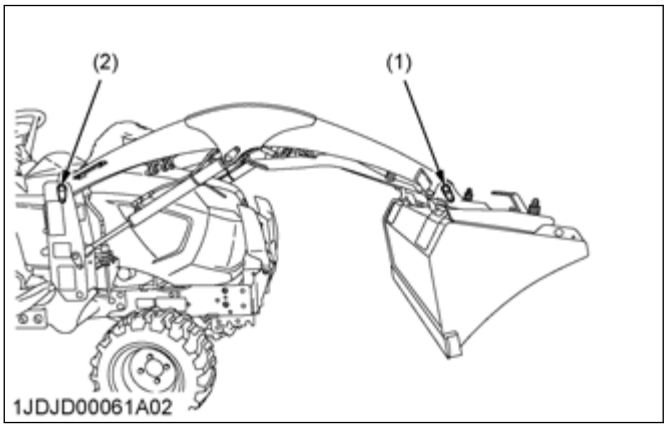

(1) Bucket fulcrum pin (2) Boom fulcrum pin

15. Make sure that the stand lever is at its **low** position as shown in the following figure.

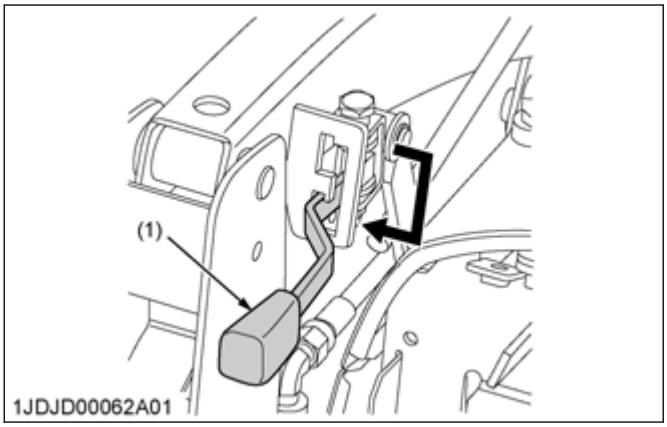

(1) Stand lever

16. Slowly dump the bucket until the stand touches the boom.
17. Slide the stand lever upward direction, and then slide the stand lever left side completely as shown in the following figure.

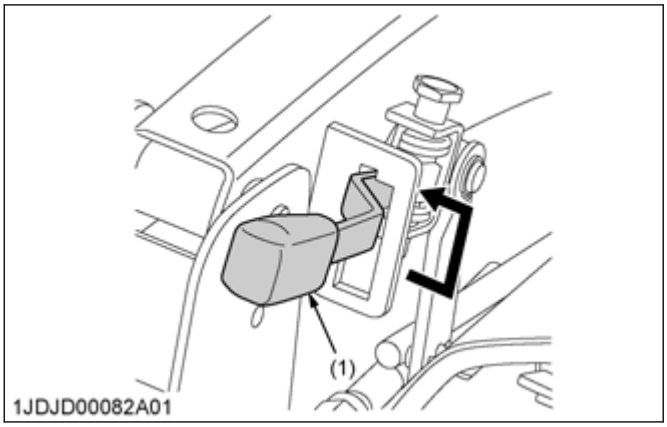

(1) Stand lever

18. Hold the stand by stand hook.

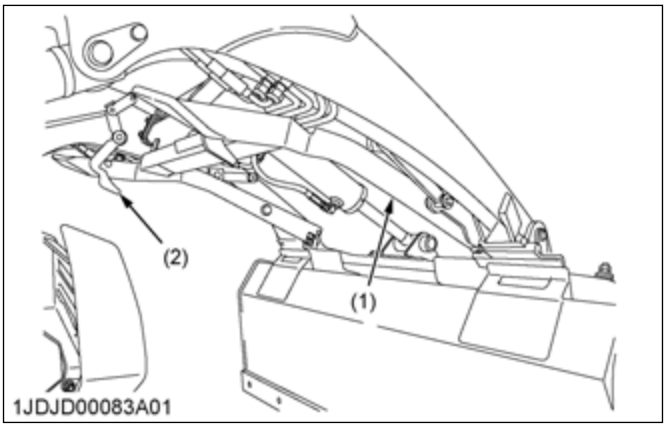

(1) Stand (2) Stand hook

4.2 Bucket, boom and hydraulic cylinders

4.2.1 Attaching attachments

DANGER

To avoid personal injury or death

- **Use of a non-KUBOTA attachment that does not comply with ISO24410 or the improper positioning of handle(s) or non-protrusion of pin(s) may result in detachment of the attachment or deformation, causing loss of performance, personal injury, or death.**

NOTE

- **Locate the attachments on a flat, firm surface when attaching and removing them from the quick-attach-coupler.**

The quick-attach-coupler is designed to be used with KUBOTA attachments. To use non-KUBOTA attachments, it must comply with ISO 24410, first edition 2005-04-15. The quick-attach-coupler allows the operator to change the attachments easily without the use of tools.

1. To mount an attachment, pull the quick-attach-coupler-handles to the unlatched position to release the latching pins. Move the quick-attach-coupler-handles all the way up to ensure that the latching pins are fully retracted.

https://truckmanualshub.com/

2. Position the tractor squarely in front of the attachment and tilt the quick-attach-coupler forward with the bucket cylinder.

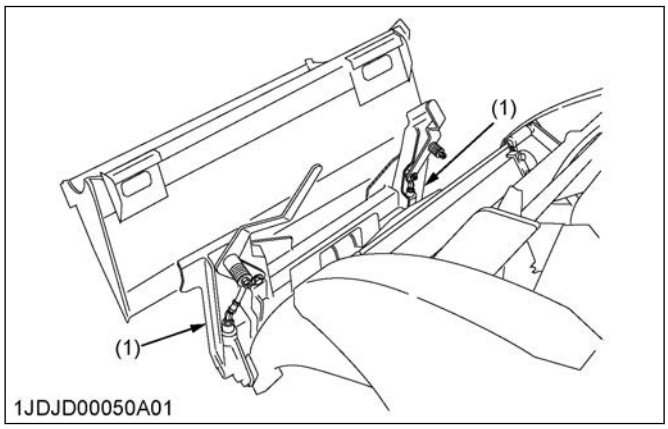

(1) Quick attach coupler

3. Ease the quick-attach-coupler-mounting-plate into the saddle of the attachment.
4. Roll the quick-attach-coupler back using the bucket cylinder and raise the boom slightly.
   The back of the attachment should rest against the front of the quick-attach-coupler-mounting-plate, and the weight of the attachment should be supported by the loader.

CAUTION

To avoid personal injury or machine damage:

- **Raise the boom only enough to latch the attachment.**
  The attachment could swing off the quick-attach-coupler.

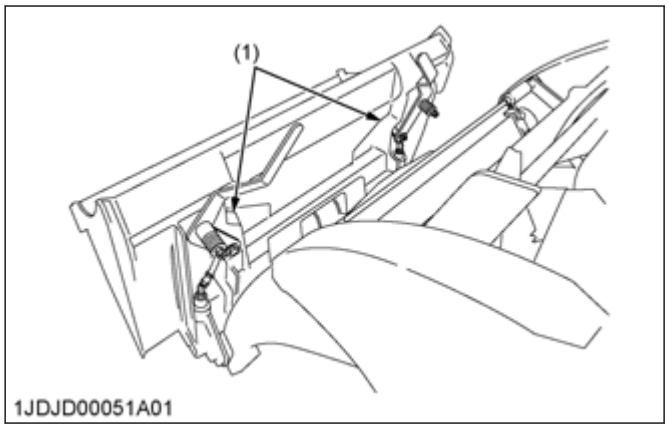

(1) Quick attach coupler

5. When the attachment is properly seated in the saddle and against the front of the quick-attach-coupler-mounting-plate, turn off the engine and set the parking brake.
6. Push the quick-attach-coupler-handles to the fully latched position.

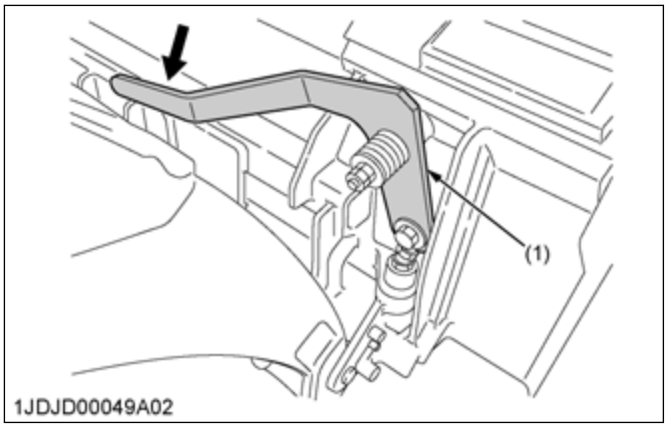

(1) Quick attach coupler handle

7. Verify that both latching pins are completely engaged in the base of the attachment.

DANGER

To avoid personal injury or death

- **The following engagement points are critical.**
  - **The lock pins of the quick-attach-coupler have to protrude into and through the pin slots of the attachment on both sides.**
    It is critical that the lock pins are in good condition and without visible signs of wear or damage.
    It is critical that the operator align the quick-attach-coupler of the loader with the attachment to allow the lock pins to go through the pin slots.
  - **Push down both quick-attach-coupler-handles until the they contact the ear plates near the points where the pin bolt goes through the handle.**
- **Do not operate the tractor or attachment unless all of the preceding conditions are met.**

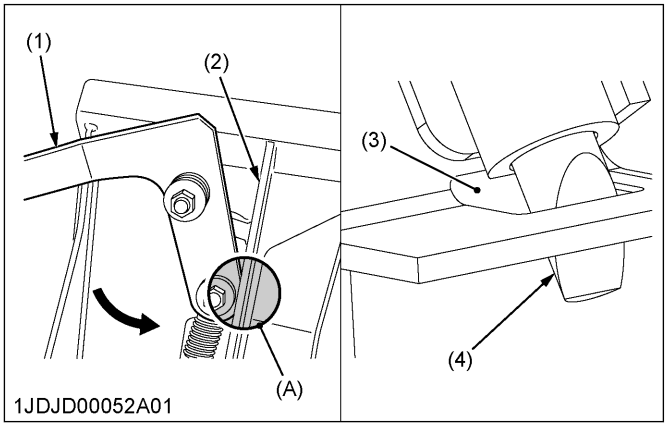

(1) Handle
(2) Ear plate
(3) Pin slot
(4) Lock pin
(A) Points where the quick attach coupler handle contacts the ear plate

8. When pushing the quick-attach-coupler-handles into the **locked** position, visually verify that the latch pins rotate completely and are located underneath the stop of the quick attach coupler.

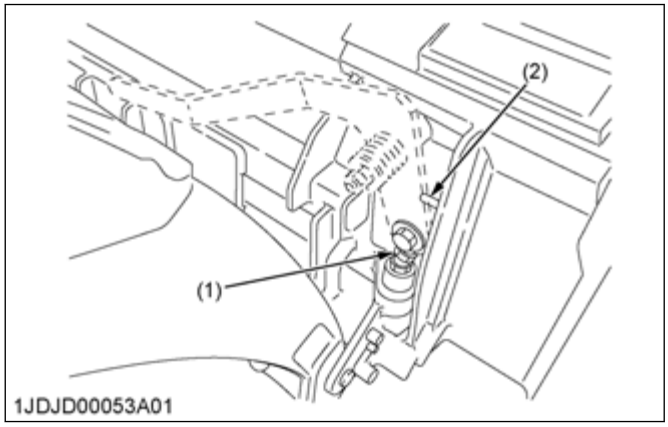

(1) Latch pins (2) Quick attach coupler stopper

9. When attaching different attachments, visually inspect for broken or damaged pins. If broken or damaged pins are found, replace before using.
   Use of broken pins may result in detachment or deformation of the attachment, causing loss of performance, personal injury, or death.

You are now ready to use the attached attachment.

Attach and remove all compatible attachments using the same method.

WARNING

To avoid personal injury, death, or machine damage

- **Never operate or transport the attachments which are not attached properly.**
- **Always replace damaged hardware immediately.**

4.2.2 Detaching attachments

Detach the attachments in the reverse procedure of attaching the attachments.

1. Lower the attachment to ground level with the attachment slightly in the rolled back position.
2. Stop the engine and set the parking brake.
3. Pull the quick-attach-coupler-handles to the unlatched position to release the latching pins.
4. While sitting in the operator's seat of the tractor, start the engine and slowly move the loader-control-lever to the dump position until the attachment is pushed away slightly from the quick-attach-coupler.
5. Lower the boom of the loader so that the quick-attach-coupler-mounting-plate clears the attachment saddle.
6. Back away from the attachment slowly.
7. If an attachment is not going to be attached to the quick-attach-coupler immediately, push the quick-attach-coupler-handles to the locked position to prevent damage to the handle assembly.

4.2.3 Removing bucket cylinder

CAUTION

To avoid personal injury:

- **Before you disconnect hydraulic hoses, be sure to release all pressure.**

1. Disconnect the hydraulic hoses from the bucket cylinder.
2. Remove lower pin and upper pin and remove the bucket cylinder (1).

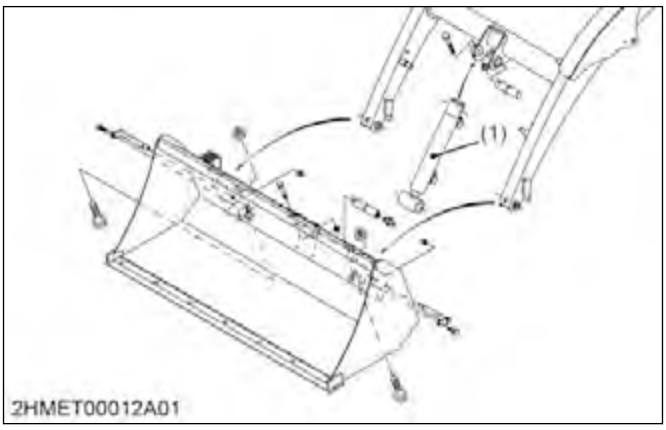

(1) Bucket cylinder

(When reassembling)

- To install the bucket cylinder (1), the hydraulic port must point inside and be careful of the direction of grease fittings.

4.2.4 Removing boom cylinder and hydraulic tubes

1. Disconnect the hydraulic hoses from the boom cylinders (4).
2. Remove the pins (2) and remove the boom cylinders (4).
3. Disconnect the hydraulic hoses (6) with quick couplers at the control valve.
4. Remove the pins (1) and remove the boom (3) from the side frame (5).

https://truckmanualshub.com/

5. Remove the hydraulic tubes (7) from the boom (3).

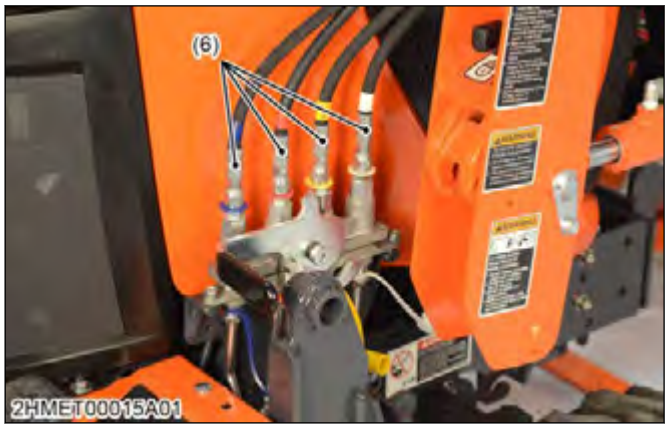

(1) Pin
(2) Pin
(3) Boom
(4) Boom cylinder
(5) Side frame
(6) Hydraulic hose
(7) Hydraulic tube

(When reassembling)

- To install the boom cylinders (4), the hydraulic port must point inside and be careful of the direction of grease fittings.

4.2.5 Removing piston rod assembly

1. Drain hydraulic oil from the cylinder, and secure the tube end of the cylinder in a vise.
2. Remove the cylinder head (1) with the adjustable gland nut wrench (4).
3. Pull out the piston rod assembly (2) from the cylinder tube (3).

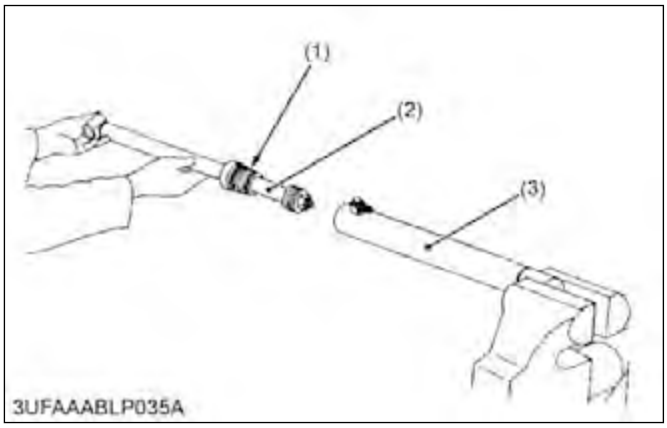

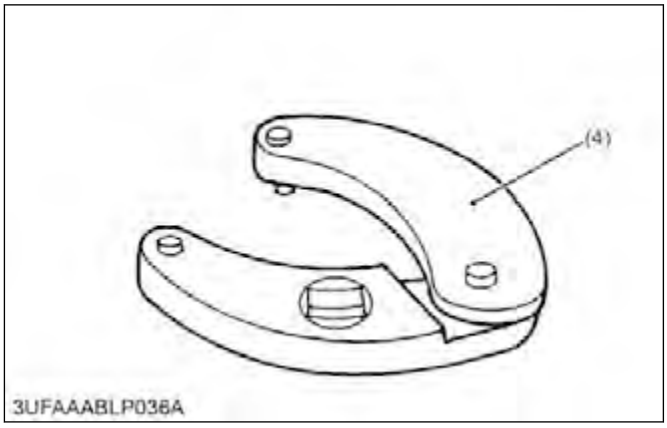

(1) Cylinder head
(2) Piston rod assembly
(3) Cylinder tube
(4) Adjustable gland nut wrench

(When reassembling)

- Visually inspect the cylinder tube for signs of scoring or damage.
- Put the piston rod assembly to the cylinder tube. Be careful not to cause damage to the piston seal on the piston.
- Install the cylinder head to the cylinder tube. Be careful not to damage the O-ring on the cylinder head.

4.2.6 Removing cylinder head, piston and nut

1. Hold the rod end in a vise.

2. Remove the nut (4), and remove the piston (3) and cylinder head (2) from the piston rod (1).

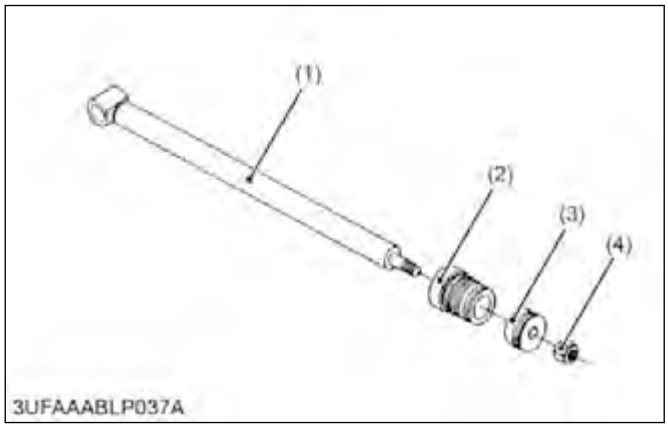

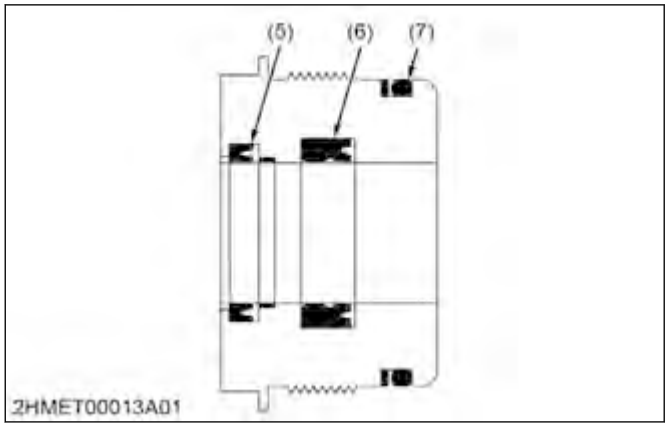

(1) Piston rod
(2) Cylinder head
(3) Piston
(4) Nut
(5) Wiper seal
(6) Oil seal
(7) O-ring

(When reassembling)

- Visually inspect all parts for signs of scoring or damage.
- Put the piston rod to the cylinder head. Be careful not to cause damage to the wiper seal (5) and oil seal (6).

Tightening torque	Boom cylinder piston mounting nut	150 to 180 N·m 15.3 to 18.3 kgf·m 111 to 132 lbf·ft
	Bucket cylinder piston mounting nut	350 to 400 N·m 35.7 to 40.7 kgf·m 259 to 295 lbf·ft

4.2.7 Removing piston seal and O-ring

1. Remove the piston seal (2) and O-ring (3) from the piston (1).

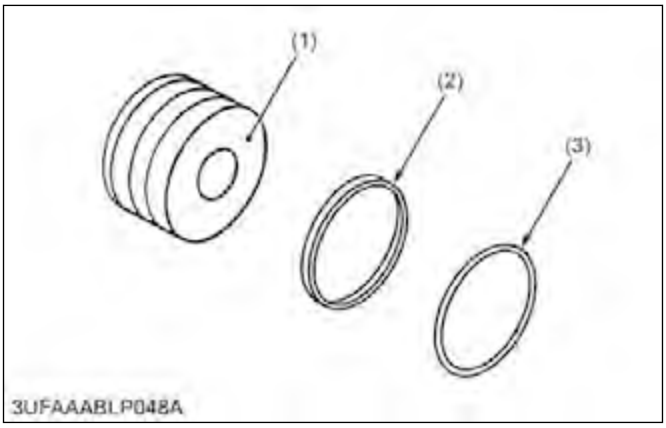

(1) Piston
(2) Piston seal
(3) O-ring

IMPORTANT

- **To install the O-ring (3) and piston seal (2) to the piston (1), use the slide jig and correcting jig as shown in special tools of GENERAL section.**

RELATED PAGE

1.1 Sliding jig and correcting jig on page 2-15

4.2.8 Installing O-ring and piston seal

1. Set the slide jig (2) on the piston (4).
2. Install the O-ring (3) to the piston using the slide jig.
3. Install the piston seal (1) over the O-ring using the slide jig.

NOTE

- **Do not turn (roll) the piston seal as you install it.**

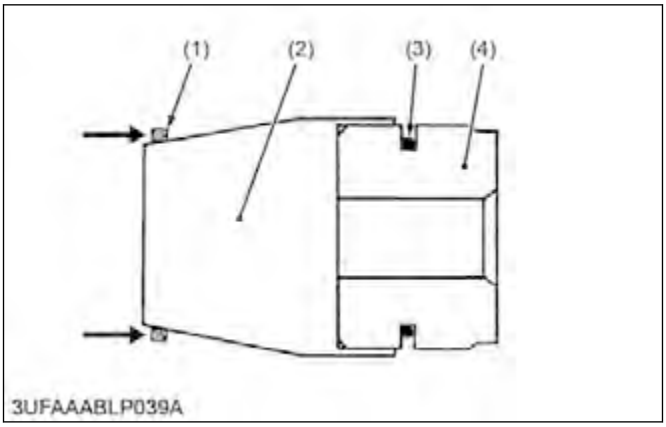

(1) Piston seal
(2) Slide jig
(3) O-ring
(4) Piston

https://truckmanualshub.com/

4. Compress the piston seal to the correct size by installing the piston into the correcting jig (5).

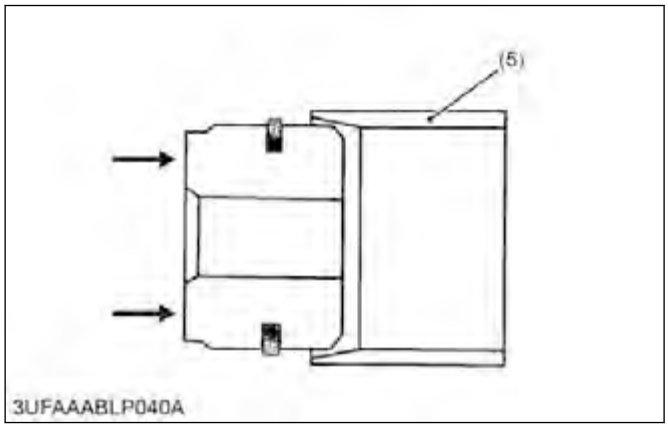

(5) Correcting jig

4.3 Side frames, front guard and main frames

4.3.1 Removing side frames

1. Remove the pins (2), (5).
2. Remove the side frames (1) from the boom assembly (3) and the boom cylinder (4).

(1) Side frame
(2) Pin
(3) Boom assembly
(4) Boom cylinder
(5) Pin

4.3.2 Removing front guard

1. Remove the front guard (1).

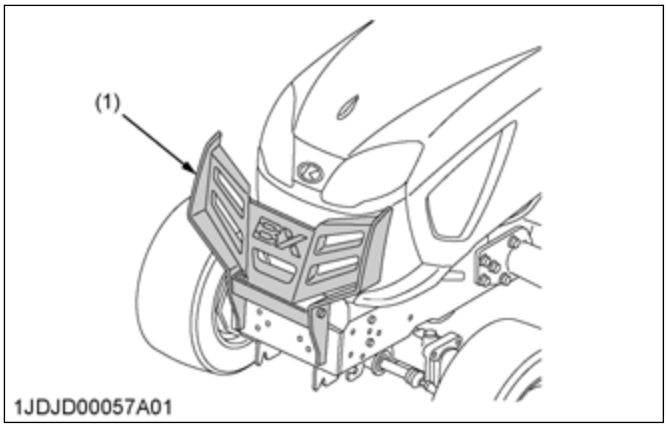

(1) Front guard

4.3.3 Removing main frames

1. Remove the main frame mounting bolts and nuts (2) from the tractor body.
2. Remove the main frame (1).

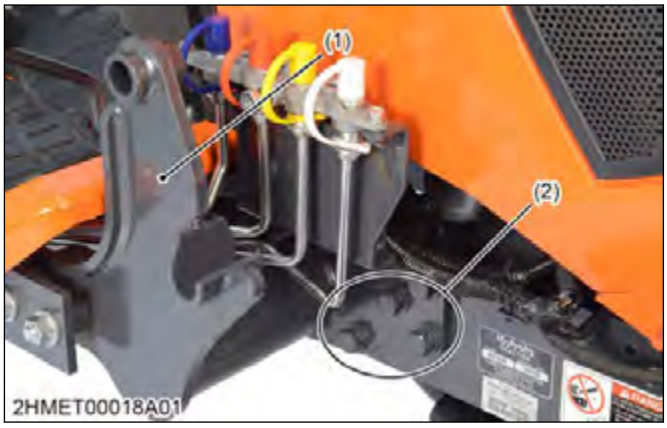

(1) Main frame
(2) Main frame mounting bolt

(When reassembling)

IMPORTANT

- **Be careful not to pinch the wire harness when assembling the main frame.**
- Tighten to the specified tightening torque.

Tightening torque	Main frame mounting bolt (M14)	115 N·m 11.7 kgf·m 85 lbf·ft

4.4 3rd function valve (If equipped)

4.4.1 Removing 3rd function valve

1. Remove cover (1) by removing bolts (2).

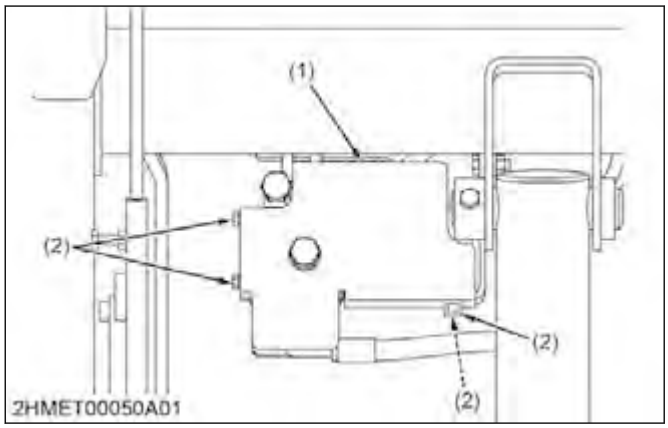

(1) Cover (2) Bolt

2. Disconnect connector (3).

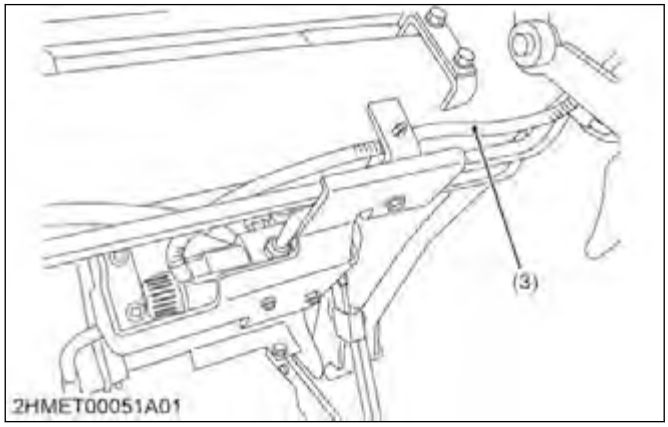

(3) Connector

3. Disconnect hydraulic hoses (4).

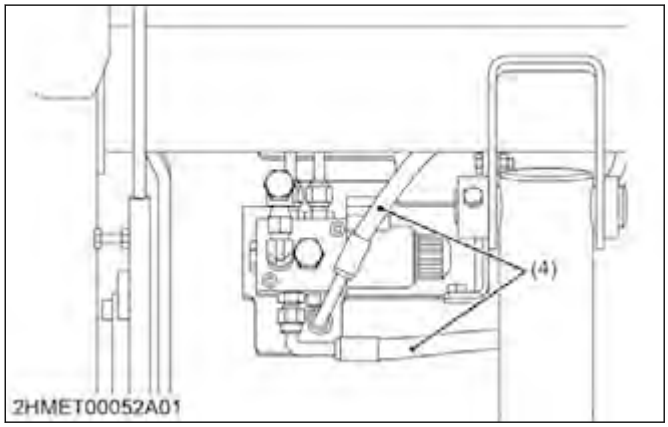

(4) Hydraulic hoses

4. Remove valve stay (5) by removing bolts (6).

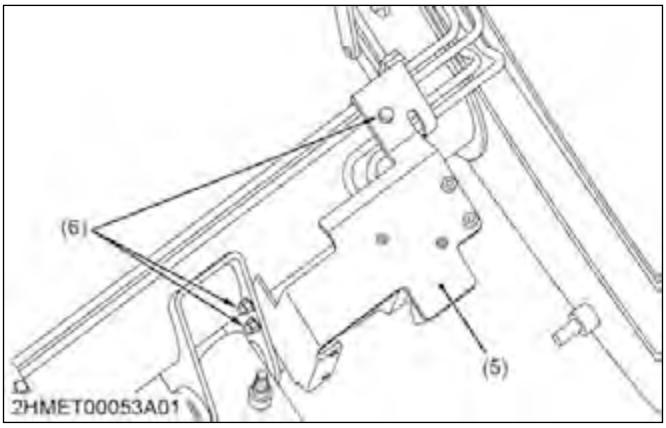

(5) Valve stay (6) Bolt

5. Remove hydraulic pipes (7).

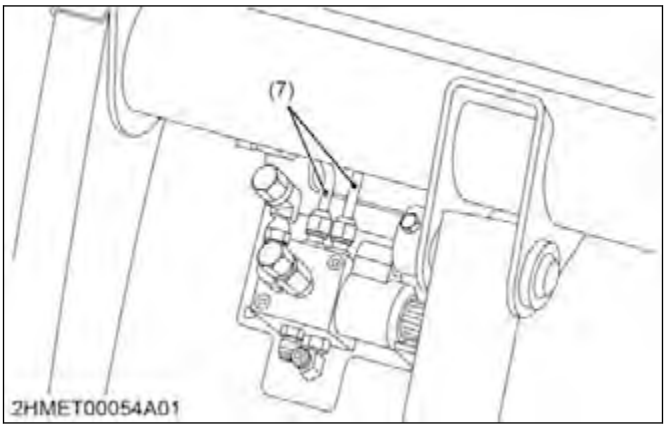

(7) Hydraulic pipes

4.4.2 Removing hydraulic tubes of 3rd function

1. Remove the hydraulic hoses (1).

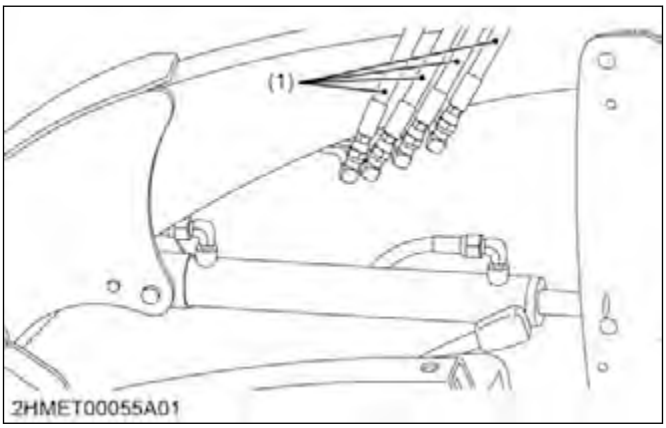

(1) Hydraulic hoses

2. Remove the boom cylinder (2).

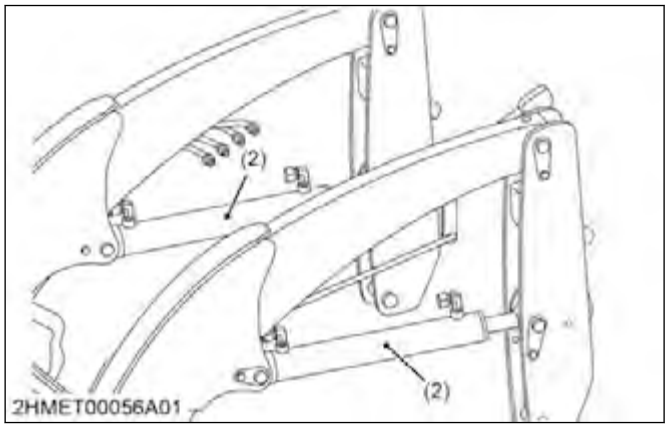

(2) Boom cylinder

3. Remove the 3rd wire harness stay (3) from the boom.

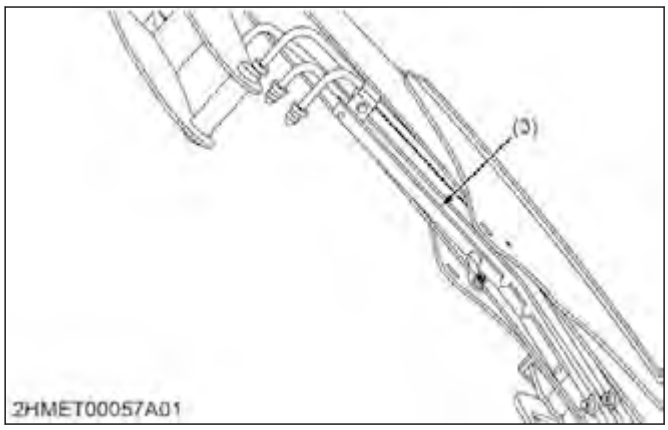

(3) 3rd wire harness stay

4. Remove the piping fixtures (4) and disconnect all the hydraulic tubes (5).

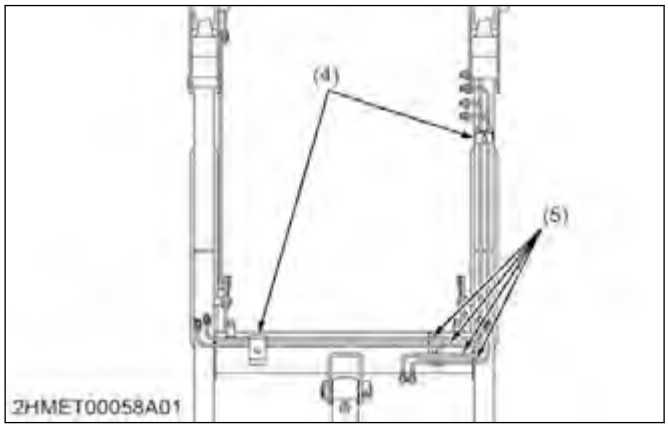

(4) Piping fixtures (5) Hydraulic tubes

5. Servicing

5.1 Piston rod

5.1.1 Checking piston rod bend

1. Set the piston rod on V blocks.
2. Set a dial indicator on the center of the rod.
3. Turn the piston rod and read the dial indicator.

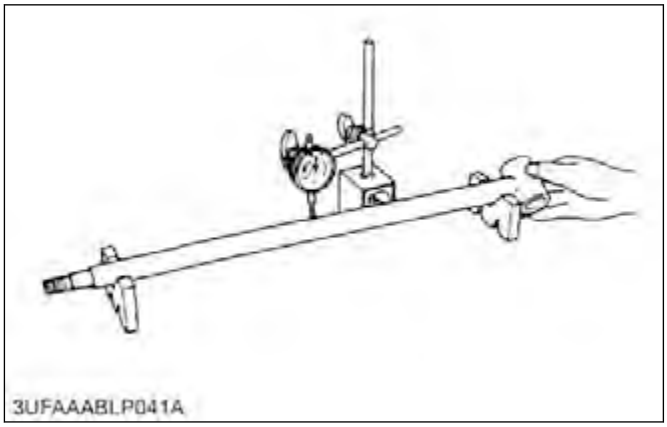

Piston rod bend	Allowable limit	0.25 mm 0.0098 in.

4. If the measurement is more than the allowable limit, replace it.

https://truckmanualshub.com/

INDEX

Symbols

3rd function solenoid valve
checking connector voltage..... 3-19
checking continuity.....3-19
3rd function valve
removing..... 3-32
structure.....3-7

A

acid burns
prevent..... 1-3
activation switch
off position.....3-8
on position.....3-9
adapters.....2-9
attachment
attaching..... 3-26
detaching..... 3-28
auto lock attachment and detachment
function..... 3-6
outline..... 3-5
axial force.....2-3

B

before you start service.....1-1
bolts..... 2-7
boom cylinder
removing..... 3-28
structure.....3-4
bucket
specifications.....1-11
bucket cylinder
removing..... 3-28
structure.....3-4

C

circlip.....2-3
control lever
operating.....3-3
correcting jig.....2-15
cylinder head
removing..... 3-29

D

daily checking
loader.....2-13
danger, warning, and caution labels..... 1-8
dimensional specification..... 1-12

E

elbows.....2-9
emergencies
preparation.....1-3

F

fire..... 1-2
fluids correctly
discarding.....1-3
force..... 2-3
front guard
removing..... 3-31
front hydraulic valve main switch
checking connector voltage..... 3-18
checking continuity.....3-17
front loader
tightening torques..... 3-13
troubleshooting.....3-11
front remote hydraulic control system..... 3-3

G

grease..... 2-3
grease fittings.....2-8

H

height of loader stand
adjusting.....3-14
hydraulic circuit..... 3-1
hydraulic tube
removing..... 3-28

L

loader
identification.....2-1
lubricating.....2-13
reinstall.....3-23
remove.....3-20
specifications.....1-11
terminology..... 1-9

M

main frame
removing..... 3-31
main frame bolt
checking torque.....2-14
re-tightening.....2-13
main frame nut
checking torque.....2-14
re-tightening.....2-13
mechanical loader frame
structure (standing mechanism).....3-6

https://truckmanualshub.com/

N

nut
removing..... 3-29
nuts..... 2-7

O

O-ring
installing.....3-30
removing..... 3-30
one lever quick touch 4 lines coupler
structure.....3-5
one touch front loader
outline..... 3-5
operate safely..... 1-2
operational specifications.....1-13

P

piston
removing.....3-29,3-30
piston rod assembly
removing..... 3-29
piston rod bend
checking.....3-33
piston seal
installing.....3-30
plugs..... 2-8

R

relay
checking.....3-18
rotating movement..... 2-3

S

safety decals..... 1-5
safety labels..... 1-8
screws.....2-7
service intervals.....2-11
sharp edge.....2-3
side frame
removing..... 3-31
sliding jig..... 2-15
start safely.....1-1

https://truckmanualshub.com/

Editor : Farm Machinery International Service Department
Address : 64, Ishizu-Kitamachi, Sakai-Ku, Sakai-City, Osaka, 590-0823, Japan
Phone : +81-72-241-1129
Fax : +81-72-245-2484
E-mail : ks_g.ksos-pub@kubota.com

KUBOTA Corporation

Printed in Japan 2017. 02, S, EI, EI, engusa Code No.9Y111-17180