https://truckmanualshub.com/

E-series 6x6

Articulated Dump Trucks

B40E | B45E | B50E

Tier 4 final/Stage V Certified

BELL

https://truckmanualshub.com/

E is for evolution

Your business is our business. Bell Articulated Dump Trucks haul more, for longer at the lowest cost-per-ton to deliver more on your profit margins.

As a global leader in Articulated Dump Trucks, Bell Equipment brings you the world class E-series range. The evolutionary E-series is packed with class leading features that deliver production boosting payloads, lower daily operating costs, superior ride quality and uncompromised safety standards. Bell E-series ADTs will give your business the competitive edge you need.

- Extensive use of high-strength, lightweight materials give our trucks the best payload-to-mass ratios and hauling efficiencies in each class.
- With their oscillating frame and high-flotation tires, Bell trucks won't leave you stuck in muddy, rutted or hilly terrain.
- The redesigned, sound-suppressed cab features fatigue-beating controls, an advanced diagnostic monitor with B-drive and a sealed switch module for convenient, fingertip operation of machine functions.
- Fuel-efficient emission-certified engines deliver clean power without compromise in all conditions. Leading-edge emissions technology ensures rapid engine response and dependable cold-start performance.

The E-series range takes ADT functionality to new industry standards, with customer-focused enhancements delivering the highest level of automated operator and machine protection available.

Through substantial investments in research and development and employing industry-leading technology, advancements in the key areas of performance and fuel efficiency help you to move more material at lower operating costs with even less impact on the environment.

https://truckmanualshub.com/

Specifications	B40E	B45E	B50E
Gross power	380 kW (510 hp)	390 kW (523 hp)	430 kW (577 hp)
Operating mass			
Empty	32,233 kg (71,062 lb)	32,326 kg (71,267 lb)	35,675 kg (78,650 lb)
Loaded	71,233 kg (157,042 lb)	73,326 kg (161,656 lb)	81,075 kg (178,740 lb)
Rated payload	39,000 kg (85,980 lb)	41,000 kg (90,390 lb)	45,400 kg (100,090 lb)
2:1 heaped capacity	24 m^3 (31 yd^3)	25 m^3 (33 yd^3)	27.5 m^3 (36 yd^3)

https://truckmanualshub.com/

Building on pedigree

Building on from the proven D-series platform, Bell Equipment's evolutionary approach to design delivers optimized power-to-weight ratios and legendary fuel efficiency.

- High-travel suspension keeps all tires in constant contact with the ground, for optimum traction.
- Automatic Traction Control (ATC) is achieved with speed sensors providing feedback to the truck's on-board computer, which controls the differential lock activation as required. Coupled with, best in class rear suspension travel, this results in unparalleled off-road ability.
- Optimized payload-to-weight ratios decrease your cost-per-ton meaning more of your fuel cost is spent moving the material rather than running the machine.
- An industry leading, fully automatic seven-speed planetary transmission with torque converter lock-up maximizes fuel efficiency.
- Automatic retardation slows the truck when the operator backs off the accelerator pedal providing more confidence on steep grades.
- Electronic common rail fuel system provides high injection pressures even at low engine speed for improved cold-starting ability, low-speed response and reduced emissions.
- Bell ADTs have the best approach angle to attack steep terrain owing to careful engine packaging and the front chairs design.
- Improved payloads, faster haul cycles and industry leading fuel economy all help you move more material at a lower-cost-per-ton than the competitors.

Planetary powershift transmission optimizes shift points to match conditions and vehicle weight while protecting the transmission from operator error and abuse. Allison FuelSense® calibration optimizes production and fuel burn.

The transfer case inter-axle differential delivers equal torque to each axle when traction is favorable. When conditions deteriorate, the diff-lock automatically engages to deliver torque to the tires that can best use it.

High-strength steel and widely spaced taper roller bearings in the articulation area enhance long-term durability.

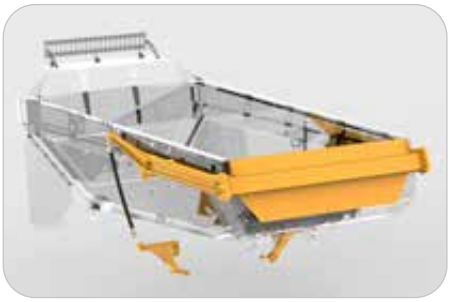

A tailgate is available as an option for better material retention. The tailgate opens as the bin is raised for dumping. Unlike chains, the spring steel straps in a Bell ADT bin maintain a positive seal throughout the haul ensuring minimal material is lost.

https://truckmanualshub.com/

Our innovative front and rear comfort ride suspension options are offered to even further enhance ride quality and ensure minimal whole body vibration exposure.

Productivity increases through reduced cycle times, and reduced haul road maintenance are even further benefits of these extremely successful systems. Experienced ADT operators who have driven trucks installed with these systems have come away amazed by the comfort of the machine, as well as the confidence that the adaptive front suspension engenders.

https://truckmanualshub.com/

Uncompromised durability

Built smarter, to work harder. Bell ADTs offer optimized machine weights so you spend more time and money on moving material than on running the machine.

With decades of ADT experience, the Bell E-series articulated hauler is designed and manufactured using purpose built, reliable Bell components best suited for the toughest of conditions. The central oscillation joint, high suspension travel on all axles, and balanced weight distribution provide the agility and ability to navigate hostile terrain.

The high-strength steel chassis delivers strength and rigidity without excess weight.

- Fully enclosed, flooded, dual circuit wet disc brakes offer superior braking performance and extended service life essential for wet and muddy conditions. Oil-immersed wet-disc brakes are virtually maintenance-free and feature a high flow circulation system with cooling and filtration.

- Viscous, electronically controlled, direct-drive engine fans provide effective cooling and the best efficiency.

- Class leading engine braking, coupled with automated brake retardation, provides superior braking power whilst brake retardation occurs at pressures low enough to ensure no contact between wet brake plates resulting in zero wear.

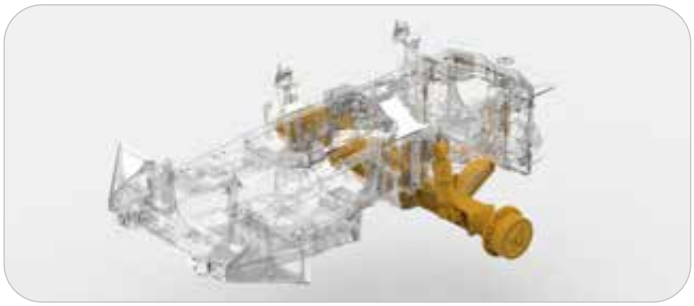

For comfortable productivity, the A-frame suspension system coupled with hydropneumatic suspension struts reduce the discomfort of lateral vibration often experienced with off-road conditions. A superior suspension seat provides additional isolation for the operator.

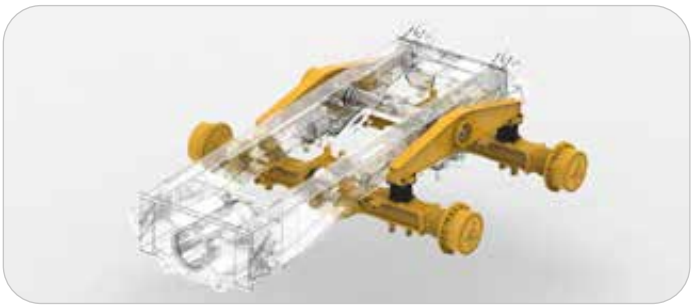

Rough terrain demands tough suspensions. Heavy-duty components absorb shocks and come back for more. You get best-in-class suspension travel and ground clearance, too.

https://truckmanualshub.com/

Other uptime-boosting features include world class on-board diagnostics with live stream functionality, solid-state sealed switches and satellite fleet management system.

High-strength welded-alloy steel chassis and reinforced articulation joints, offer superior strength and durability with optimized weight for class leading power-to-weight ratio. Lower machine mass reduces powertrain and structural stress.

https://truckmanualshub.com/

Run leaner and cleaner

A combination of an optimally tuned engine and weight optimized complete machine package ensure that Bell ADTs have a minimal carbon footprint.

SCR uses AdBlue®/DEF which

- is non-toxic, odorless, low cost and simple to refill.
- is injected into the flow of the exhaust gases and reacts with the NOx gases in the catalytic convertor to form harmless nitrogen and water.
- is consumed at approximately 3-5% of your fuel usage.

EGR

- recirculates burnt exhaust gas back into the combustion chamber, lowering combustion temperatures and NOx production.

DPF

- Our DPF technology has been used in Mercedes-Benz road trucks for over 10 years.
- Regeneration is done during normal operation as much as possible.
- In light applications stationary active regeneration may be necessary.

- Reduced emissions
- Improved engine efficiency
- Lower fuel consumption
- Improved power
- Improved torque
- Improved engine response

https://truckmanualshub.com/

• Tier 4 final/Stage 5 emissions control coupled with the lowest fuel burn ensures the lowest environmental impact.

Our E-series truck platform easily accommodates current engine and related emissions control technology and reflects our strategy of continuous improvement.

Bell Equipment's evolutionary E-series runs SCR-technology (Selective Catalytic Reduction) in combination with EGR to give an industry leading standard in fuel-efficient emission control, designed specifically for the off-highway market to be compliant to Tier 4 final/Stage V. Engine power and fuel consumption have been further optimized through event dependent software that controls retardation, cooling and charging of accumulators.

https://truckmanualshub.com/

Operate with ease

Using the latest in automotive technology and state-of-the-art tooling, the E-series takes operator experience to new heights.

Climb into the cab of a Bell ADT and you will feel right at home. Its quiet, spacious interior, ergonomically positioned operator station and climate-controlled cabin is loaded with productivity boosting comfort and convenience features that minimize operator fatigue and enhance the operator's experience. Modern flowing lines, in keeping with current styling trends on road vehicles, offer unsurpassed levels of visibility.

From the state-of-the-art 10" full color screen, automotive mouse interface and sealed switch module with centrally located sealed display unit to air suspension seat, tilt/telescoping steering wheel and optional CD player with high-output speakers, the E-series provides everything your operators need to perform at their best.

- The standard sound-suppression package significantly reduces noise levels and operator fatigue.
- A fully adjustable air-suspension seat with variable damping, auto height adjust according to operator weight, pneumatic lumbar support and multipoint harness for class-leading comfort and safety.
- New machine styling and cabin design improvements, which include full glass access door and high visibility mirror package, provide exceptional all-round visibility.

- The adaptive transmission control adjusts clutch engagement to ensure smooth, consistent shifts throughout the life of the truck.
- A purpose designed unparalleled climate-control system with automotive-style louvers keeps the glass clear and the cab comfortable.

You won't find retarder pedals or levers in a Bell truck. Retarder aggressiveness is simply set on the switch pad. Or Hill Descent Control can set it for you automatically.

Easy-to-understand instruments and intuitive controls wrap around the operator so they're easier to view and operate.

A user friendly, multi-language, 10" color display unit offers vital operating information, safety warnings, detailed diagnostic readings and dump body function settings.

The Bell automotive sealed display controller, B-drive, enables easy navigation of the CDU for access of machine information and adjustment of machine settings.

Convenient sealed switch module provides fingertip control of numerous productivity enhancing functions including: **Keyless Start, I-Tip, Dump Body Upper Limit, Soft Stop/Hard Stop Selection, Retarder Aggressiveness and Speed Control.**

https://truckmanualshub.com/

https://truckmanualshub.com/

Safety, our business too

By listening to users and delivering on expectations in an ever changing workplace, we provide a truck that leads in application safety with numerous groundbreaking innovations.

Independent features such as Keyless Start, Hill Assist, Bin Tip Prevention, Auto Park Application (APA), Standard Turbo Spin Protection and On-Board Weighing (OBW) are still standard on the E-series.

For improved safety and productivity, the E-series has Automatic Traction Control (ATC).

- Full handrails (to ISO 2876) installed for improved safety when performing engine checks.
- The park brake automatically applies when neutral is selected and it is not possible to engage neutral at speed. Torque dependent park brake release (Hill Assist) ensures no roll back on slopes.
- All trucks can be set up to automatically sound the horn when starting or switching between forward and reverse.

- Multiple geofencing in challenging site conditions ensures safe machine operation, such as downhill speed control, geofence speed limits and bin restrictions.
- Best-in-class retarder and engine braking automatically applies when the operator lifts his foot off the accelerator. Retarder aggressiveness can be simply adjusted on the sealed switch module ensuring maximum descent control for all conditions.

Our quiet operator cabins are ROPS/FOPS certified with an air suspension operator seat. The trainer seat has a retractable lap belt while the operator seat has a standard 3 point seat belt. Both have automatically locking retractors.

A standard integrated reverse camera and high visibility mirrors ensure superior all round visibility.

Keyless start, driver identity and access codes ensure no unauthorized operation of your equipment.

The exclusive on-board weighing presents the operator with real time information on the payload while the machine is being loaded. A 'speed restriction' mode can also be activated if the machine is significantly overloaded.

https://truckmanualshub.com/

The incorporation of a pitch and roll sensor in the vehicle prevents bin operation if the truck is in an unsafe position.

Both operator or site selectable maximum speed control allows the vehicle to automatically decelerate and apply the retarder to prevent onsite speeding.

https://truckmanualshub.com/

Maximize your uptime

The E-series is loaded with features that make it as easy to maintain as it is to operate. Spend less time and expense getting ready for work and more time getting work done.

Grouped service points make quick work of the daily routine. Quick-change filters, extended engine and hydraulic oil-service intervals lower daily operating costs and provide superior machine uptime.

The industry leading, 10" color monitor offers on-board machine diagnostics as well as automated daily service functionality, coupled with diagnostic test ports, assisting with ease of troubleshooting and informing maintenance decisions on site.

If something goes wrong, the diagnostic monitor provides service codes and supporting info to help diagnose the problem.

The cab can be tilted in minutes without special tools, for convenient service access to drivetrain components.

An in-cab load center simplifies fuse replacement. Fewer relays, connectors and harnesses mean higher reliability.

The remote transmission filter option makes transmission filter replacement an even faster and cleaner task.

https://truckmanualshub.com/

Through the comprehensive installation of level gauges and sensors, a large number of daily checks can be done from the convenience of the operator station.

Easily accessible test ports allow technicians to troubleshoot problems more quickly.

The centralized lube bank places difficult-to-reach grease points within reach.

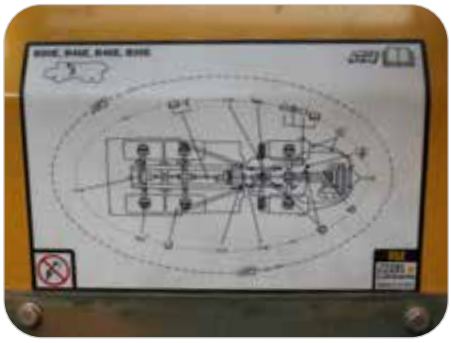

The convenient and easy to understand RSG decal details daily checks and actions (eg: greasing).

- Automated daily service checks can be done with ease and comfort from inside the operator station using the 10" color LCD monitor and sealed display controller.

- The load-sensing hydraulic system was designed with simplicity in mind, while maintaining efficiency. Fewer components for improved reliability and serviceability.

- Extended engine transmission and hydraulic oil-change for increased uptime and lower operating cost.

- Available environmental drains allow quick, no-spill changes.

- Your Bell Service Center has the parts and backup you need to stay productive and offers a wide variety of preventative maintenance and support programs to help you control costs.

https://truckmanualshub.com/

Welcome to the ... BELL Family

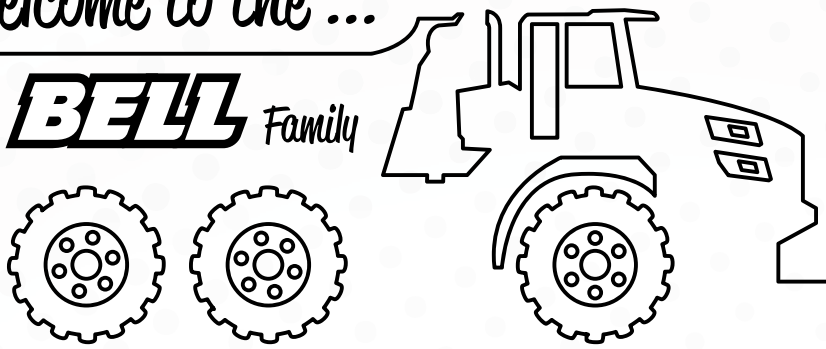

"Power up and plug in to our end-to-end customer solutions!"

START

Through our living motto **'Strong Reliable Machines, Strong Reliable Support'**, we offer both exceptional equipment and aftermarket support products because we want your Bell ownership experience to be a happy one.

SETTING YOU UP FOR SUCCESS

- TRAINING

PROTECTING YOUR ASSETS

- LUBECHECK
- MAINTENANCE CONTRACT
- EXTENDED WARRANTY
- FLEETM@TIC®

KEEPING YOUR MACHINE RUNNING

- LUBRICANTS
- TECHNICAL SUPPORT
- SPECIAL TOOLS
- PARTS
- BELL OUTLETS
- SERVICE KITS

GIVING YOU EXTRA VALUE, LONGER LIFE

- REMAN COMPONENTS
- PRE-OWNED EQUIPMENT

SUPPORTING YOU EVERY STEP OF YOUR BELL OWNERSHIP EXPERIENCE

https://truckmanualshub.com/

Smarter fleet management

Cutting edge technology, helping you run your fleet smarter. Providing accurate, up-to-date operational data, production data and diagnostic data.

The key to a productive and profitable fleet, lies in the ability to monitor and manage your machines and operators efficiently. Machine operational data is processed and compiled into useful production and performance statistics, accessible via the Bell Fleetm@tic® website. These reports are also automated and emailed directly to you. The two monitoring packages that we have available, are:

• **The Classic Package** supplies you with good enough information for you to have a very good understanding of how your machine is operating for each shift that it runs. This package comes standard with the machine for 5 years.

• **The Premium Package** is focused on customers who need to have extremely detailed information of the machine's operation. For this package we offer similar information to that of the Classic Package but for each individual laden - unladen cycle. In addition, live tracking is available on the Fleetm@tic® website on a per minute basis.

Fleetm@tic®:

- Maximize productivity
- Generate machine utilization reports
- Identify operator training requirements
- Pro-active maintenance planning
- Implement safety features
- Receive machine fault codes as well as suggested trouble shooting procedures
- Protect investments
- Receive real time geospatial data

https://truckmanualshub.com/

B40E Articulated Dump Truck

ENGINE
Manufacturer
Mercedes Benz (MTU)

Model
OM471LA (MTU 6R 1300)

Configuration
Inline 6, turbocharged and intercooled

Gross Power
380 kW (510 hp) @ 1,700 rpm

Net Power
359 kW (481 hp) @ 1,700 rpm

Gross Torque
2,380 Nm (1,755 lbft) @ 1,300 rpm

Displacement
12.8 liters (781 cu.in)

Auxiliary Brake
Jacobs Engine Brake®

Fuel Tank Capacity
442 liters (117 US gal)

AdBlue® Tank Capacity
40 liters (11 US gal)

Certification
OM471LA (MTU 6R 1300) meets EPA Tier 4 final/Stage V emissions regulations

TRANSMISSION
Manufacturer
Allison

Model
4700 ORS

Configuration
Fully automatic planetary transmission

Layout
Engine mounted

Gear Layout
Constant meshing planetary gears, clutch operated

Gears
7 Forward, 1 reverse

Clutch Type
Hydraulically operated multi-disc

Control Type
Electronic

Torque Control
Hydrodynamic with lock-up in all gears

TRANSFER CASE
Manufacturer
Kessler

Series
W2400

Layout
Remote mounted

Gear Layout
Three in-line helical gears

Output Differential
Interaxle 29/71 proportional differential. Automatic inter-axle differential lock.

AXLES
Manufacturer
Bell

Model
30T

Differential
High input controlled traction differential with spiral bevel gears

Final Drive
Outboard heavy duty planetary on all axles

BRAKING SYSTEM
Service Brake
Dual circuit, full hydraulic actuation wet disc brakes on front and middle axles. Wet brake oil is circulated through a filtration and cooling system.

Maximum brake force:
327 kN (73,513 lbf)

Park & Emergency
Spring applied, air released driveline mounted disc

Maximum brake force:
218 kN (49,008 lbf)

Auxiliary Brake
Automatic Jacobs Engine Brake®. Automatic retardation through electronic activation of wet brake system.

Total Retardation Power
Continuous: 442 kW (593 hp)
Maximum: 854 kW (1,145 hp)

WHEELS
Type
Radial Earthmover

Tire
29.5 R 25 (875/65 R 29 optional)

FRONT SUSPENSION
Semi-independent, leading A-frame supported by hydro-pneumatic suspension struts

Option: Electronically controlled adaptive suspension with ride height adjustment

REAR SUSPENSION
Pivoting walking beams with laminated rubber suspension blocks

Option: Comfort Ride suspension walking beams, with two-stage sandwich block

HYDRAULIC SYSTEM
Full load sensing system serving the prioritized steering, body tipping and brake functions. A ground-driven, load sensing emergency steering pump is integrated into the main system.

Pump Type
Variable displacement load sensing piston

Flow
330 L/min (87 gal/min)

Pressure
315 bar (4,569 psi)

Filter
5 microns

STEERING SYSTEM
Double acting cylinders, with ground-driven emergency steering pump

Lock to lock turns
5

Steering Angle
42°

DUMPING SYSTEM
Two double-acting, single stage, dump cylinders

Raise Time
11 seconds

Lowering Time
6 seconds

Tipping Angle
70 deg standard, or any lower angle programmable

PNEUMATIC SYSTEM
Air drier with heater and integral unloader valve, serving park brake and auxiliary functions

System Pressure
810 kPa (117 psi)

ELECTRICAL SYSTEM
Voltage
24 V

Battery Type
Two AGM (Absorption Glass Mat) type

Battery Capacity
2 X 75 Ah

Alternator Rating
28V 80A

MAX. VEHICLE SPEED

1st	4 km/h	2.5 mph
2nd	9 km/h	6 mph
3rd	17 km/h	11 mph
4th	23 km/h	14 mph
5th	33 km/h	21 mph
6th	44 km/h	27.3 mph
7th	51 km/h	32 mph
R	7 km/h	4 mph

CAB
ROPS/FOPS certified 76 dBA internal sound level measured according to ISO 6396

Load Capacity & Ground Pressure

OPERATING WEIGHTS		GROUND PRESSURE*		LOAD CAPACITY		OPTION WEIGHTS	
UNLADEN	kg (lb)	LADEN		BODY	m³ (yd³)		kg (lb)
Front	16,972 (37,417)	(No sinkage/Total Contact Area Method)		Struck Capacity	19 (25)	Bin liner	1,369 (3,018)
Middle	7,737 (17,057)	29.5 R 25	kPa (Psi)	SAE 2:1 Capacity	24 (31)	Tailgate	984 (2,169)
Rear	7,524 (16,588)	Front	310 (45)	SAE 1:1 Capacity	28.5 (37)	875/65 R29	
Total	32,233 (71,062)	Mid & Rear	341 (50)	SAE 2:1 Capacity		(per vehicle) Add	1,182 (2,606)
LADEN				with Tailgate	24.5 (32)		
Front	21,847 (48,164)	875/65 R29	kPa (Psi)			EXTRA WHEELSET	
Middle	24,800 (54,675)	Front	293 (43)	Rated Payload	39,000 kg	29.5 R 25	800 (1,764)
Rear	24,586 (54,203)	Mid & Rear	329 (48)		(85,980 lb)	875/65 R29	1,024 (2,258)
Total	71,233 (157,042)						

* 29.5R25 Groundpressures calculated with Michelin XADN+ Tire. 875/65R29 Groundpressures calculated with Michelin XAD65-1 Tire.

https://truckmanualshub.com/

Dimensions

B40E

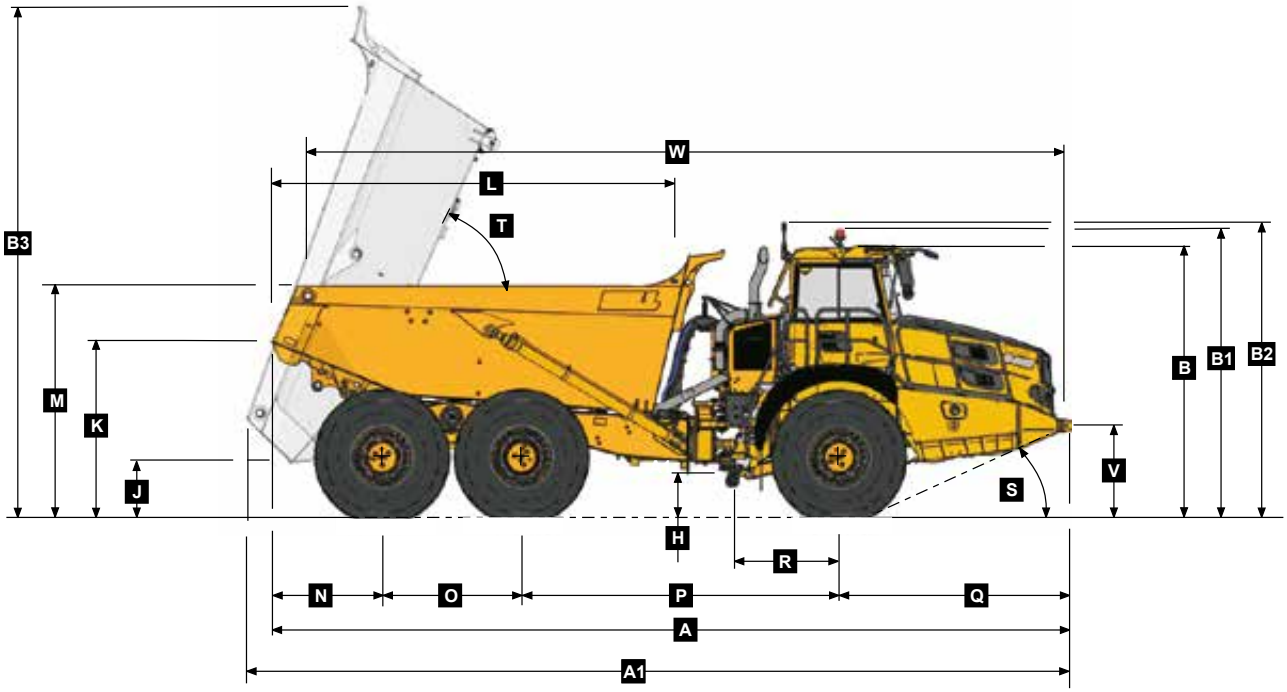

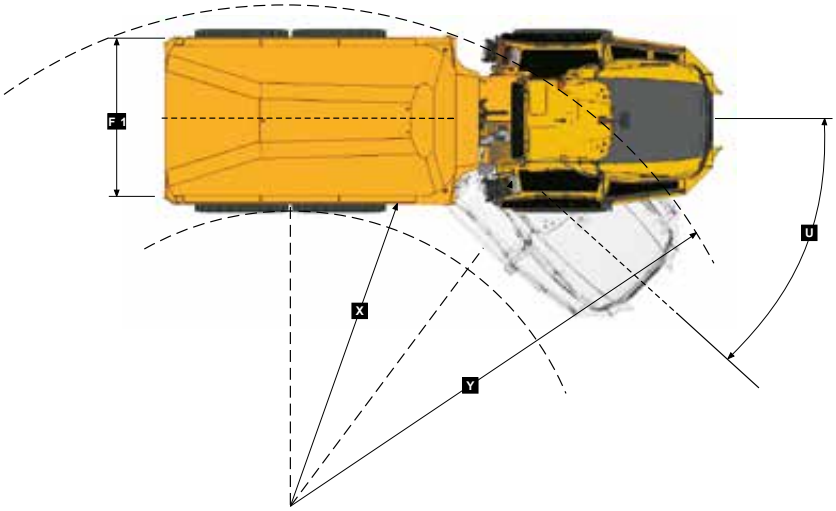

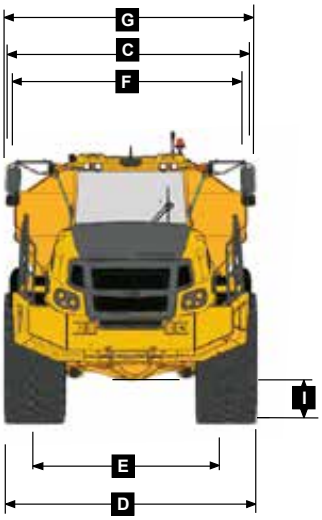

Machine Dimensions

A	Length - Transport Position with Tailgate	11,197 mm	(36 ft. 9 in.)
A	Length - Transport position w/o Tailgate	11,186 mm	(36 ft. 8 in.)
A1	Length - Bin Fully Tipped	11,742 mm	(38 ft. 6 in.)
B	Height - Transport Position	3,804 mm	(12 ft. 6 in.)
B1	Height - Rotating Beacon	4,040 mm	(13 ft. 3 in.)
B2	Height - Load Light	4,129 mm	(13 ft. 7 in.)
B3	Bin Height - Fully Tipped	7,316 mm	(24 ft.)
C	Width over Mudguards	3,495 mm	(11 ft. 6 in.)
D	Width over Tires - 875/65 R29	3,656 mm	(12 ft.)
D	Width over Tires - 29.5R25	3,487 mm	(11 ft. 5 in.)
E	Tire Track Width - 875/65 R29	2,773 mm	(9 ft. 1 in.)
E	Tire Track Width - 29.5R25	2,725 mm	(8 ft. 11 in.)
F	Width over Bin	3,372 mm	(11 ft.)
F1	Width over Tailgate	3,662 mm	(12 ft.)
G	Width over Mirrors - Operating Position	3,614 mm	(11 ft. 10 in.)
H	Ground Clearance - Artic	545 mm	(21.5 in.)
I	Ground Clearance - Front Axle	545 mm	(21.5 in.)
J	Ground Clearance - Bin Fully Tipped	876 mm	(34.5 in.)
K	Bin Lip Height - Transport Position	2,519 mm	(8 ft. 3 in.)
L	Bin Length	5,742 mm	(18 ft. 10 in.)
M	Load over Height	3,271 mm	(10 ft. 9 in.)
N	Rear Axle Center to Bin Rear	1,543 mm	(5 ft.)
O	Mid Axle Center to Rear Axle Center	1,950 mm	(6 ft. 5 in.)
P	Mid Axle Center to Front Axle Center	4,438 mm	(14 ft. 7 in.)
Q	Front Axle Center to Machine Front	3,255 mm	(10 ft. 8 in.)
R	Front Axle Center to Artic Center	1,558 mm	(5 ft. 1 in.)
S	Approach Angle	24 °	
T	Maximum Bin Tip Angle	70 °	
U	Maximum Articulation Angle	42 °	
V	Front Tie Down Height	1,265 mm	(4 ft. 2 in.)
W	Machine Lifting Centers	10,594 mm	(34 ft. 9 in.)
X	Inner Turning Circle Radius - 875/65R29	4,782 mm	(15 ft. 8 in.)
X	Inner Turning Circle Radius - 29.5R25	4,866 mm	(16 ft.)
Y	Outer Turning Circle Radius - 875/65R29	9,320 mm	(30 ft. 7 in.)
Y	Outer Turning Circle Radius - 29.5R25	9,235 mm	(30 ft. 4 in.)

https://truckmanualshub.com/

Gradeability/Rimpull

1. Determine tractive resistance by finding intersection of vehicle mass line and grade line. NOTE: 2% typical rolling resistance is already assumed in chart and grade line.
2. From this intersection, move straight right across charts until line intersects rimpull curve.
3. Read down from this point to determine maximum speed attained at that tractive resistance.

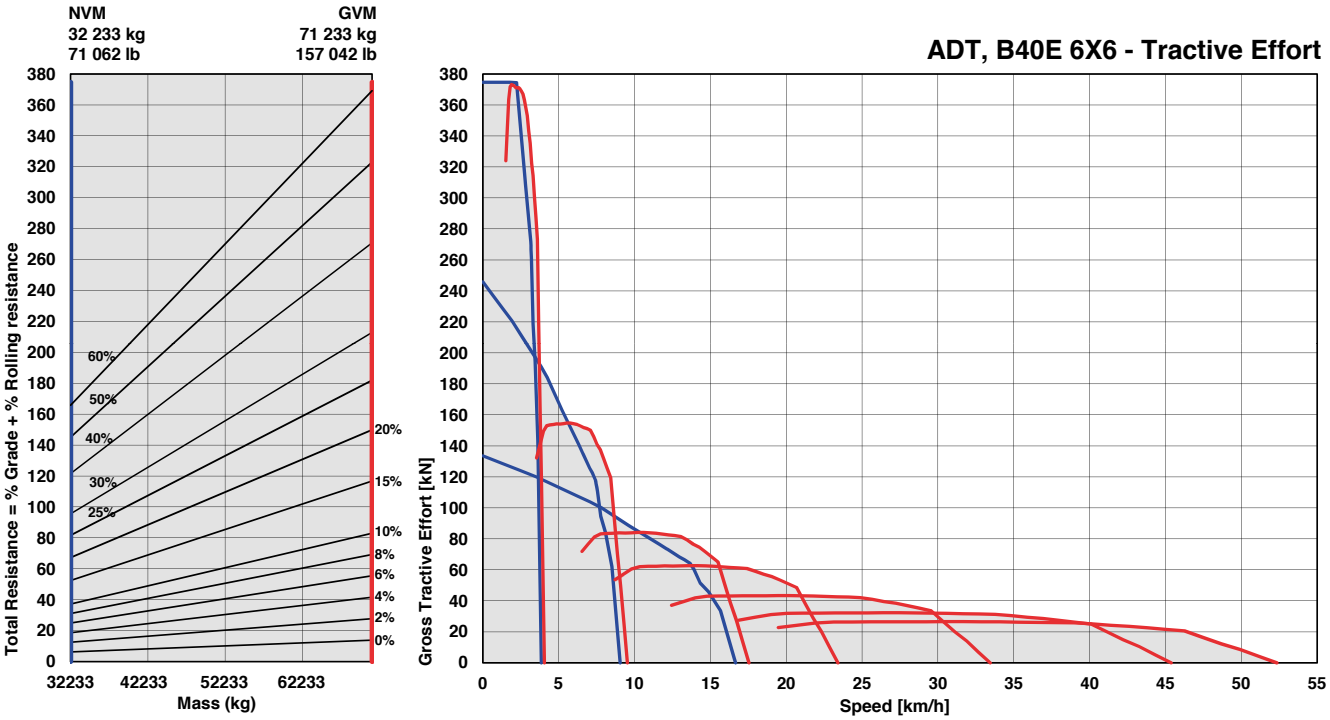

Retardation

1. Determine retardation force required by finding intersection of vehicle mass line.
2. From this intersection, move straight right across charts until line intersects the curve. NOTE: 2% typical rolling resistance is already assumed in chart.
3. Read down from this point to determine maximum speed.

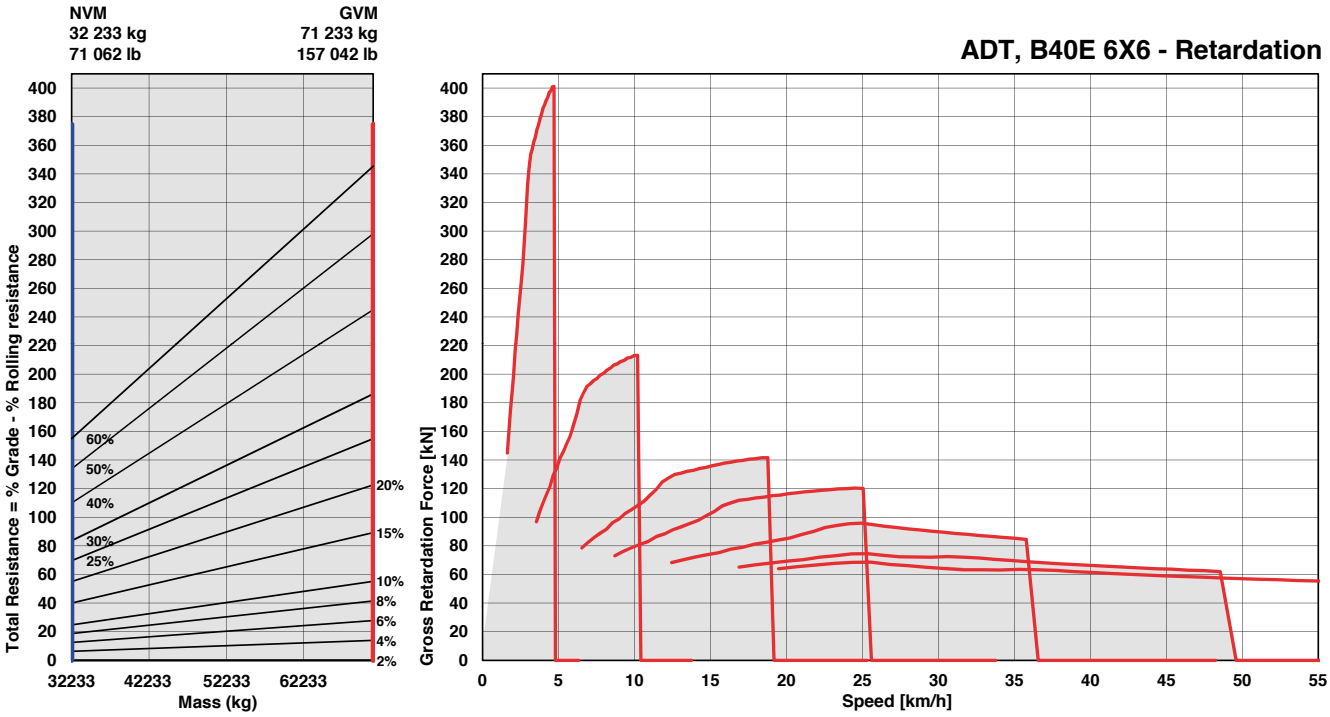

https://truckmanualshub.com/

B45E Articulated Dump Truck

ENGINE
Manufacturer
Mercedes Benz (MTU)

Model
OM471LA (MTU 6R 1300)

Configuration
Inline 6, turbocharged and intercooled

Gross Power
390 kW (523 hp) @ 1,700 rpm

Net Power
369 kW (495 hp) @ 1,700 rpm

Gross Torque
2,460 Nm (1,814 lbft) @ 1,300 rpm

Displacement
12.8 liters (781 cu.in)

Auxiliary Brake
Jacobs Engine Brake®

Fuel Tank Capacity
442 liters (117 US gal)

AdBlue® Tank Capacity
40 liters (11 US gal)

Certification
OM471LA (MTU 6R 1300) meets EPA Tier 4 final/Stage V emissions regulations

TRANSMISSION
Manufacturer
Allison

Model
4700 ORS

Configuration
Fully automatic planetary transmission

Layout
Engine mounted

Gear Layout
Constant meshing planetary gears, clutch operated

Gears
7 Forward, 1 reverse

Clutch Type
Hydraulically operated multi-disc

Control Type
Electronic

Torque Control
Hydrodynamic with lock-up in all gears

TRANSFER CASE
Manufacturer
Kessler

Series
W2400

Layout
Remote mounted

Gear Layout
Three in-line helical gears

Output Differential
Interaxle 29/71 proportional differential. Automatic inter-axle differential lock.

AXLES
Manufacturer
Bell

Model
30T

Differential
High input controlled traction differential with spiral bevel gears

Final Drive
Outboard heavy duty planetary on all axles

BRAKING SYSTEM
Service Brake
Dual circuit, full hydraulic actuation wet disc brakes on front and middle axles. Wet brake oil is circulated through a filtration and cooling system.

Maximum brake force:
327 kN (73,513 lbf)

Park & Emergency
Spring applied, air released driveline mounted disc

Maximum brake force:
218 kN (49,008 lbf)

Auxiliary Brake
Automatic Jacobs Engine Brake®. Automatic retardation through electronic activation of wet brake system.

Total Retardation Power
Continuous: 442 kW (593 hp)
Maximum: 854 kW (1,145 hp)

WHEELS
Type
Radial Earthmover

Tire
29.5 R 25 (875/65 R 29 optional)

FRONT SUSPENSION
Semi-independent, leading A-frame supported by hydro-pneumatic suspension struts

Option: Electronically controlled adaptive suspension with ride height adjustment

REAR SUSPENSION
Pivoting walking beams with laminated rubber suspension blocks

Option: Comfort Ride suspension walking beams, with two-stage sandwich block

HYDRAULIC SYSTEM
Full load sensing system serving the prioritized steering, body tipping and brake functions. A ground-driven, load sensing emergency steering pump is integrated into the main system.

Pump Type
Variable displacement load sensing piston

Flow
330 L/min (87 gal/min)

Pressure
315 bar (4,569 psi)

Filter
5 microns

STEERING SYSTEM
Double acting cylinders, with ground-driven emergency steering pump

Lock to lock turns
5

Steering Angle
42°

DUMPING SYSTEM
Two double-acting, single stage, dump cylinders

Raise Time
11 seconds

Lowering Time
6 seconds

Tipping Angle
70 deg standard, or any lower angle programmable

PNEUMATIC SYSTEM
Air drier with heater and integral unloader valve, serving park brake and auxiliary functions

System Pressure
810 kPa (117 psi)

ELECTRICAL SYSTEM
Voltage
24 V

Battery Type
Two AGM (Absorption Glass Mat) type

Battery Capacity
2 X 75 Ah

Alternator Rating
28V 80A

MAX. VEHICLE SPEED

1st	4 km/h	2.5 mph
2nd	9 km/h	6 mph
3rd	17 km/h	11 mph
4th	23 km/h	14 mph
5th	33 km/h	21 mph
6th	44 km/h	27.3 mph
7th	51 km/h	32 mph
R	7 km/h	4 mph

CAB
ROPS/FOPS certified 76 dBA internal sound level measured according to ISO 6396

Load Capacity & Ground Pressure

OPERATING WEIGHTS		GROUND PRESSURE*		LOAD CAPACITY		OPTION WEIGHTS	
UNLADEN	kg (lb)	LADEN		BODY	m^3 (yd^3)		kg (lb)
Front	16,984 (37,443)	(No sinkage/Total Contact Area Method)		Struck Capacity	19.5 (25.5)	Bin liner	1,404 (3,095)
Middle	7,778 (17,148)	29.5 R 25	kPa (Psi)	SAE 2:1 Capacity	25 (33)	Tailgate	1,013 (2,233)
Rear	7,564 (16,676)	Front	321 (47)	SAE 1:1 Capacity	29.5 (38)	875/65 R29	
Total	32,326 (71,267)	Mid & Rear	370 (54)	SAE 2:1 Capacity		(per vehicle) Add	1,182 (2,606)
LADEN				with Tailgate	26 (34)		
Front	22,109 (48,742)	875/65 R29	kPa (Psi)			EXTRA WHEELSET	
Middle	25,715 (56,692)	Front	294 (43)	Rated Payload	41,000 kg	29.5 R 25	800 (1,764)
Rear	25,502 (56,222)	Mid & Rear	331 (48)		(90,390 lb)	875/65 R29	1,024 (2,258)
Total	73,326 (161,656)						

* 29.5R25 Groundpressures calculated with Michelin XADN+ Tire. 875/65R29 Groundpressures calculated with Michelin XAD65-1 Tire.

https://truckmanualshub.com/

Dimensions

B45E

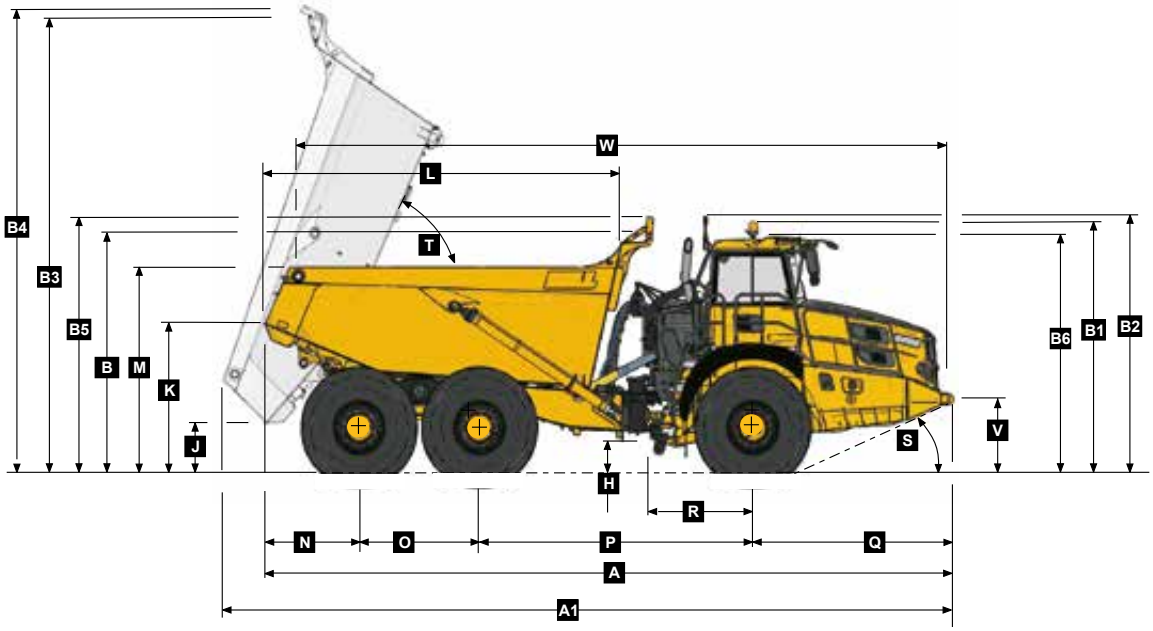

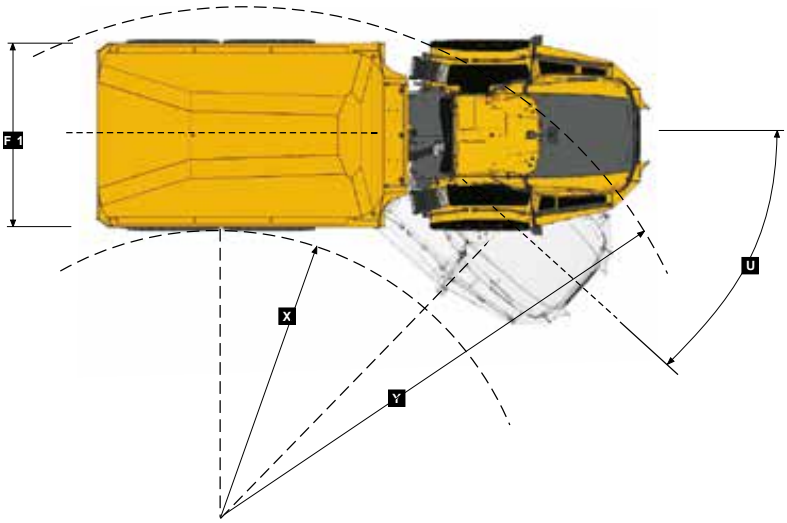

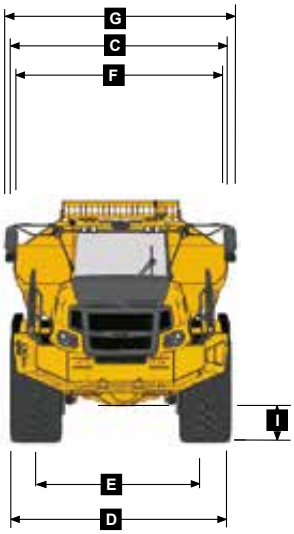

Machine Dimensions

A	Length - Transport Position with Tailgate	11,184 mm	(36 ft. 8 in.)
A	Length - Transport Position w/o Tailgate	11,184 mm	(36 ft. 8 in.)
A1	Length - Bin Fully Tipped	11,778 mm	(38 ft. 8 in.)
B	Height - Transport Position w/o Rock Guard	3,802 mm	(12 ft. 6 in.)
B	Height - Transport Position with Rock Guard	3,844 mm	(12 ft. 7 in.)
B1	Height - Rotating Beacon	4,038 mm	(13 ft. 3 in.)
B2	Height - Load Light	4,127 mm	(13 ft. 6 in.)
B3	Bin Height - Fully Tipped w/o Rock Guard	7,340 mm	(24 ft. 1 in.)
B4	Bin Height - Fully Tipped with Rock Guard	7,448 mm	(24 ft. 5 in.)
B5	Height - Rock Guard Operating Position	4,123 mm	(13 ft. 6 in.)
B6	Height - Cab	3,802 mm	(12 ft. 6 in.)
C	Width over Mudguards	3,495 mm	(11 ft. 6 in.)
D	Width over Tires - 875/65 R29	3,656 mm	(12 ft.)
D	Width over Tires - 29.5R25	3,487 mm	(11 ft. 5 in.)
E	Tire Track Width - 875/65 R29	2,773 mm	(9 ft. 1 in.)
E	Tire Track Width - 29.5R25	2,725 mm	(8 ft. 11 in.)
F	Width over Bin	3,448 mm	(11 ft. 4 in.)
F1	Width over Tailgate	3,738 mm	(12 ft. 3 in.)
G	Width over Mirrors - Operating Position	3,614 mm	(11 ft. 10 in.)
H	Ground Clearance - Artic	545 mm	(21.5 in.)

I	Ground Clearance - Front Axle	543 mm	(21.3 in.)
J	Ground Clearance - Bin Fully Tipped	880 mm	(34.7 in.)
K	Bin Lip Height - Transport Position	2,521 mm	(8 ft. 3 in.)
L	Bin Length	5,753 mm	(18 ft. 10in.)
M	Load over Height	3,316 mm	(10 ft. 11 in.)
N	Rear Axle Center to Bin Rear	1,540 mm	(5 ft.)
O	Mid Axle Center to Rear Axle Center	1,950 mm	(6 ft. 5 in.)
P	Mid Axle Center to Front Axle Center	4,438 mm	(14 ft. 7 in.)
Q	Front Axle Center to Machine Front	3,256 mm	(10 ft. 8 in.)
R	Front Axle Center to Artic Center	1,558 mm	(ft. 1 in.)
S	Approach Angle	24 °	
T	Maximum Bin Tip Angle	70 °	
U	Maximum Articulation Angle	42 °	
V	Front Tie Down Height	1,262 mm	(4 ft. 2 in.)
W	Machine Lifting Centers	10,569 mm	(34 ft. 8 in.)
X	Inner Turning Circle Radius - 875/65R29	4,782 mm	(15 ft. 8 in.)
X	Inner Turning Circle Radius - 29.5R25	4,866 mm	(16 ft.)
Y	Outer Turning Circle Radius - 875/65R29	9,320 mm	(30 ft. 7 in.)
Y	Outer Turning Circle Radius - 29.5R25	9,235 mm	(30 ft. 4 in.)

https://truckmanualshub.com/

Gradeability/Rimpull

1. Determine tractive resistance by finding intersection of vehicle mass line and grade line. NOTE: 2% typical rolling resistance is already assumed in chart and grade line.
2. From this intersection, move straight right across charts until line intersects rimpull curve.
3. Read down from this point to determine maximum speed attained at that tractive resistance.

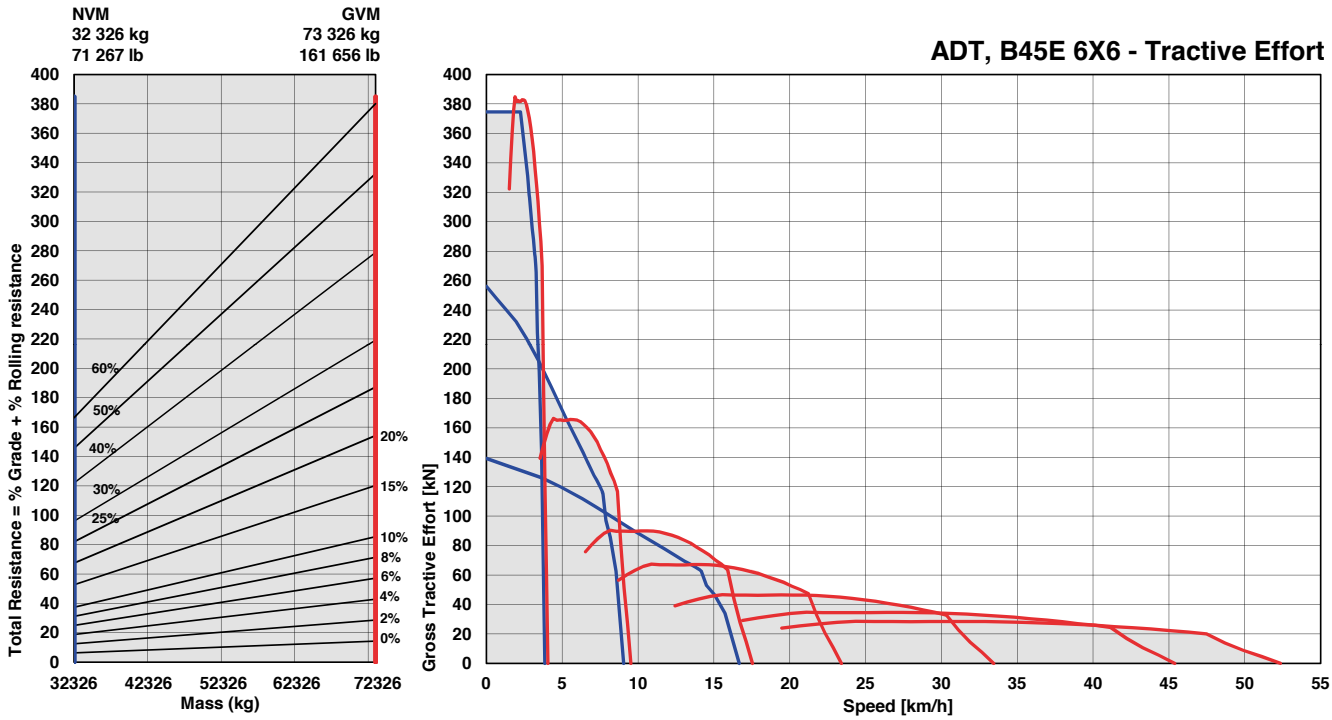

Retardation

1. Determine retardation force required by finding intersection of vehicle mass line.
2. From this intersection, move straight right across charts until line intersects the curve. NOTE: 2% typical rolling resistance is already assumed in chart.
3. Read down from this point to determine maximum speed.

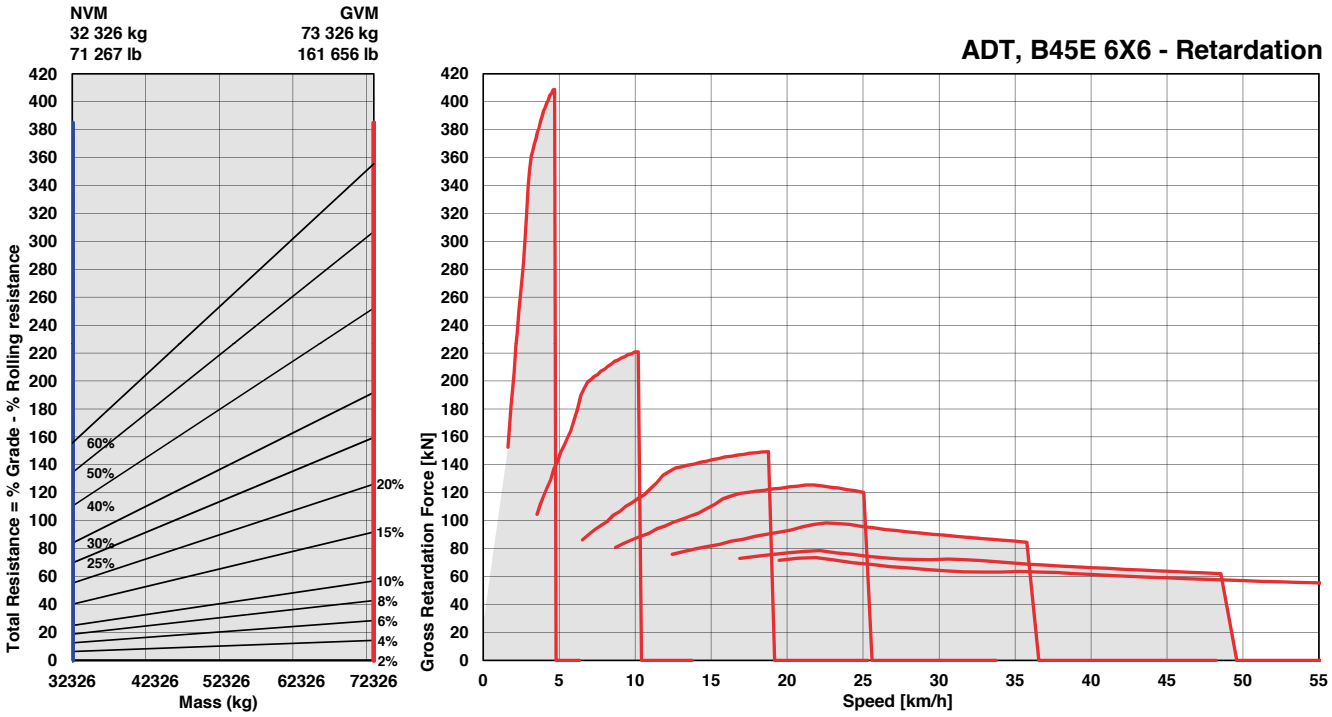

https://truckmanualshub.com/

B50E Articulated Dump Truck

ENGINE
Manufacturer
Mercedes Benz (MTU)

Model
OM473LA (MTU 6R 1500)

Configuration
Inline 6, turbocharged and intercooled

Gross Power
430 kW (577 hp) @ 1,700 rpm

Net Power
405 kW (543 hp) @ 1,700 rpm

Gross Torque
2,750 Nm (2,028 lbft) @ 1,300 rpm

Displacement
15.6 liters (952 cu.in)

Auxiliary Brake
Jacobs Engine Brake®

Fuel Tank Capacity
494 liters (130 US gal)

AdBlue® Tank Capacity
40 liters (11 US gal)

Certification
OM473LA (MTU 6R 1500) meets EPA Tier 4 final/Stage V emissions regulations

TRANSMISSION
Manufacturer
Allison

Model
4800 ORS

Configuration
Fully automatic planetary transmission

Layout
Engine mounted

Gear Layout
Constant meshing planetary gears, clutch operated

Gears
7 Forward, 1 reverse

Clutch Type
Hydraulically operated multi-disc

Control Type
Electronic

Torque Control
Hydrodynamic with lock-up in all gears

TRANSFER CASE
Manufacturer
Kessler

Series
W2400

Layout
Remote mounted

Gear Layout
Three in-line helical gears

Output Differential
Interaxle 29/71 proportional differential. Automatic inter-axle differential lock.

AXLES
Manufacturer
Bell

Model
30T

Differential
High input controlled traction differential with spiral bevel gears

Final Drive
Outboard heavy duty planetary on all axles

BRAKING SYSTEM
Service Brake
Dual circuit, full hydraulic actuation wet disc brakes on front, middle and rear axles. Wet brake oil is circulated through a filtration and cooling system.

Maximum brake force:
488 kN (109,707 lbf)

Park & Emergency
Spring applied, air released driveline mounted disc

Maximum brake force:
215.5 kN (48,446 lbf)

Auxiliary Brake
Automatic Jacobs Engine Brake®. Automatic retardation through electronic activation of wet brake system.

Total Retardation Power
Continuous: 546 kW (732 hp)
Maximum: 963 kW (1,291 hp)

WHEELS
Type
Radial Earthmover

Tire
875/65 R 29 (29.5 R 25 optional)

FRONT SUSPENSION
Semi-independent, leading A-frame supported by hydro-pneumatic suspension struts. Suspension is electronically controlled adaptive suspension with ride height adjustment.

REAR SUSPENSION
Pivoting walking beams with laminated rubber suspension blocks

Option: Comfort Ride suspension walking beams, with two-stage sandwich block

HYDRAULIC SYSTEM
Full load sensing system serving the prioritized steering, body tipping, suspension and brake functions. A ground-driven, load sensing emergency steering pump is integrated into the main system.

Pump Type
Variable displacement load sensing piston

Flow
330 L/min (87 gal/min)

Pressure
315 bar (4,569 psi)

Filter
5 microns

STEERING SYSTEM
Double acting cylinders, with ground-driven emergency steering pump

Lock to lock turns
4.9

Steering Angle
42°

DUMPING SYSTEM
Two double-acting, single stage, dump cylinders

Raise Time
11.5 seconds

Lowering Time
6 seconds

Tipping Angle
70 deg standard, or any lower angle programmable

PNEUMATIC SYSTEM
Air drier with heater and integral unloader valve, serving park brake and auxiliary functions

System Pressure
810 kPa (117 psi)

ELECTRICAL SYSTEM
Voltage
24 V

Battery Type
Two AGM (Absorption Glass Mat) type

Battery Capacity
2 X 75 Ah

Alternator Rating
28V 80A

MAX. VEHICLE SPEED

1st	4 km/h	2.5 mph
2nd	9 km/h	6 mph
3rd	17 km/h	11 mph
4th	23 km/h	14 mph
5th	33 km/h	21 mph
6th	44 km/h	27.3 mph
7th	51 km/h	32 mph
R	7 km/h	4 mph

CAB
ROPS/FOPS certified 77 dBA internal sound level measured according to ISO 6396

Load Capacity & Ground Pressure

OPERATING WEIGHTS		GROUND PRESSURE*		LOAD CAPACITY		OPTION WEIGHTS	
UNLADEN	kg (lb)	LADEN		BODY	m³ (yd³)		kg (lb)
Front	18,484 (40,750)	(No sinkage/Total Contact Area Method)		Struck Capacity	21.5 (28)	Bin liner	1,495 (3,296)
Middle	8,648 (19,066)	875/65 R29	kPa (Psi)	SAE 2:1 Capacity	27.5 (36)	Tailgate	1,117 (2,463)
Rear	8,543 (18,834)	Front	296 (43)	SAE 1:1 Capacity	33 (43)	29.5 R 25	
Total	35,675 (78,650)	Mid & Rear	366 (53)	SAE 2:1 Capacity		(per vehicle) Minus	1,182 (2,606)
LADEN				with Tailgate	29 (38)		
Front	24,204 (53,361)	29.5 R 25	kPa (Psi)			EXTRA WHEELSET	
Middle	28,488 (62,805)	Front	326 (47)	Rated Payload	45,400 kg	29.5 R 25	800 (1,764)
Rear	28,383 (62,574)	Mid & Rear	395 (57)		(100,090 lb)	875/65 R29	1,024 (2,258)
Total	81,075 (178,740)						

* 29.5R25 Groundpressures calculated with Michelin XADN+ Tire. 875/65 R29 Groundpressures calculated with Michelin XAD65-1 Tire.

https://truckmanualshub.com/

Dimensions

B50E

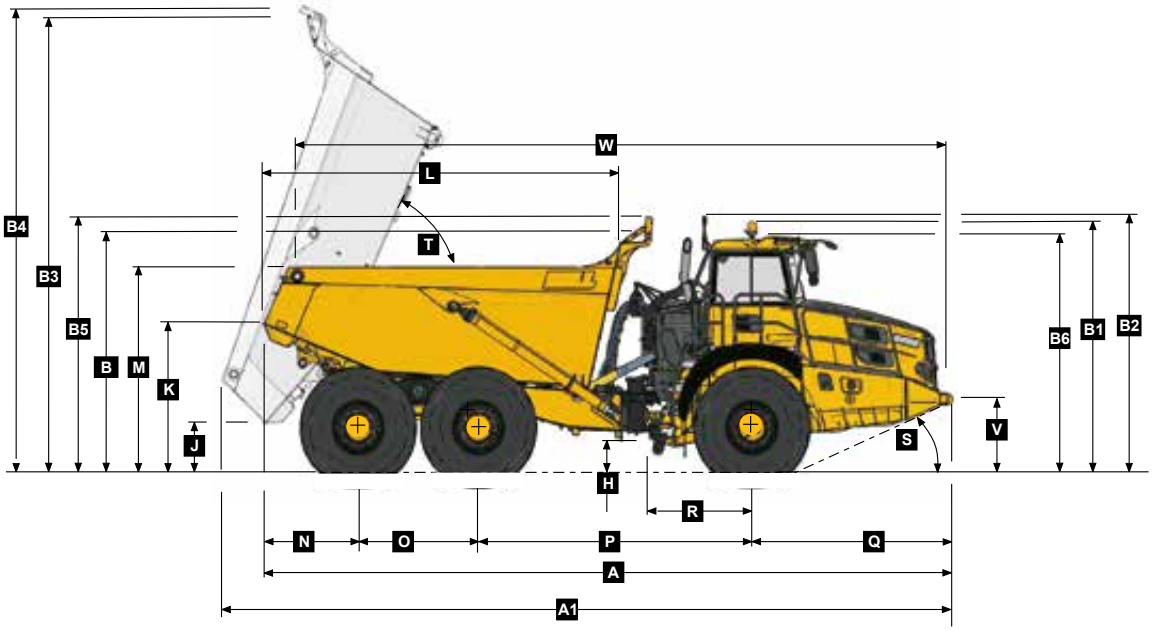

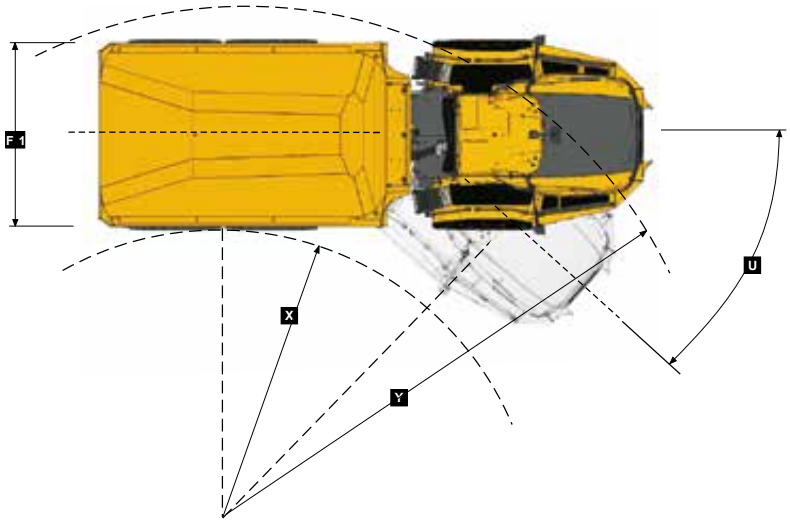

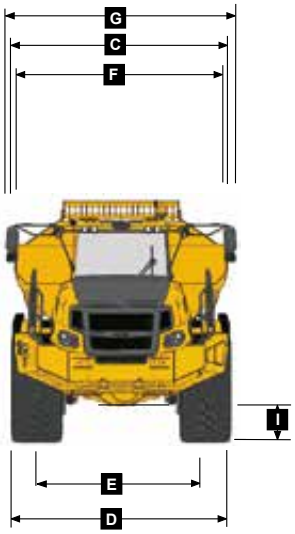

Machine Dimensions

A	Length - Transport Position with Tailgate	11,272 mm	(37 ft.)
A	Length - Transport Position w/o Tailgate	11,272 mm	(37 ft.)
A1	Length - Bin Fully Tipped	11,916 mm	(39 ft. 1 in.)
B	Height - Transport Position w/o Rock Guard	3,822 mm	(12 ft. 6 in.)
B	Height - Transport Position with Rock Guard	3,870 mm	(12 ft. 8 in.)
B1	Height - Rotating Beacon	4,050 mm	(13 ft. 3 in.)
B2	Height - Load Light	4,141 mm	(13 ft. 7 in.)
B3	Bin Height - Fully Tipped w/o Rock Guard	7,325 mm	(24 ft.)
B4	Bin Height - Fully Tipped with Rock Guard	7,430 mm	(24 ft. 5 in.)
B5	Height - Rock Guard Operating Position	4,148 mm	(13 ft. 7 in.)
B6	Height - Cab	3,813 mm	(12 ft. 6 in.)
C	Width over Mudguards	3,790 mm	(12 ft. 5 in.)
D	Width over Tires - 875/65 R29	3,832 mm	(12 ft. 7 in.)
D	Width over Tires - 29.5R25	3,714 mm	(12 ft. 2 in.)
E	Tire Track Width - 875/65 R29	2,949 mm	(9 ft. 8 in.)
E	Tire Track Width - 29.5R25	2,952 mm	(9 ft. 8 in.)
F	Width over Bin	3,735 mm	(12 ft. 3 in.)
F1	Width over Tailgate	4,057 mm	(13 ft. 4 in.)
G	Width over Mirrors - Operating Position	4,027 mm	(13 ft. 3 in.)
H	Ground Clearance - Artic	558 mm	(22 in.)

I	Ground Clearance - Front Axle	555 mm	(21.9 in.)
J	Ground Clearance - Bin Fully Tipped	907 mm	(35.7 in.)
K	Bin Lip Height - Transport Position	2,542 mm	(8 ft. 4 in.)
L	Bin Length	5,714 mm	(18 ft. 9 in.)
M	Load over Height	3,390 mm	(11 ft. 1 in.)
N	Rear Axle Center to Bin Rear	1,533 mm	(5 ft.)
O	Mid Axle Center to Rear Axle Center	1,950 mm	(6 ft. 5 in.)
P	Mid Axle Center to Front Axle Center	4,438 mm	(14 ft. 7 in.)
Q	Front Axle Center to Machine Front	3,351 mm	(11 ft.)
R	Front Axle Center to Artic Center	1,558 mm	(5 ft. 1 in.)
S	Approach Angle	23 °	
T	Maximum Bin Tip Angle	70 °	
U	Maximum Articulation Angle	42 °	
V	Front Tie Down Height	1,269 mm	(4 ft. 2 in.)
W	Machine Lifting Centers	10,632 mm	(34 ft. 11 in.)
X	Inner Turning Circle Radius - 875/65R29	4,694 mm	(15 ft. 5 in.)
X	Inner Turning Circle Radius - 29.5R25	4,753 mm	(15 ft. 7 in.)
Y	Outer Turning Circle Radius - 875/65R29	9,408 mm	(30 ft. 10 in.)
Y	Outer Turning Circle Radius - 29.5R25	9,349 mm	(30 ft. 8 in.)

https://truckmanualshub.com/

Gradeability/Rimpull

1. Determine tractive resistance by finding intersection of vehicle mass line and grade line. NOTE: 2% typical rolling resistance is already assumed in chart and grade line.
2. From this intersection, move straight right across charts until line intersects rimpull curve.
3. Read down from this point to determine maximum speed attained at that tractive resistance.

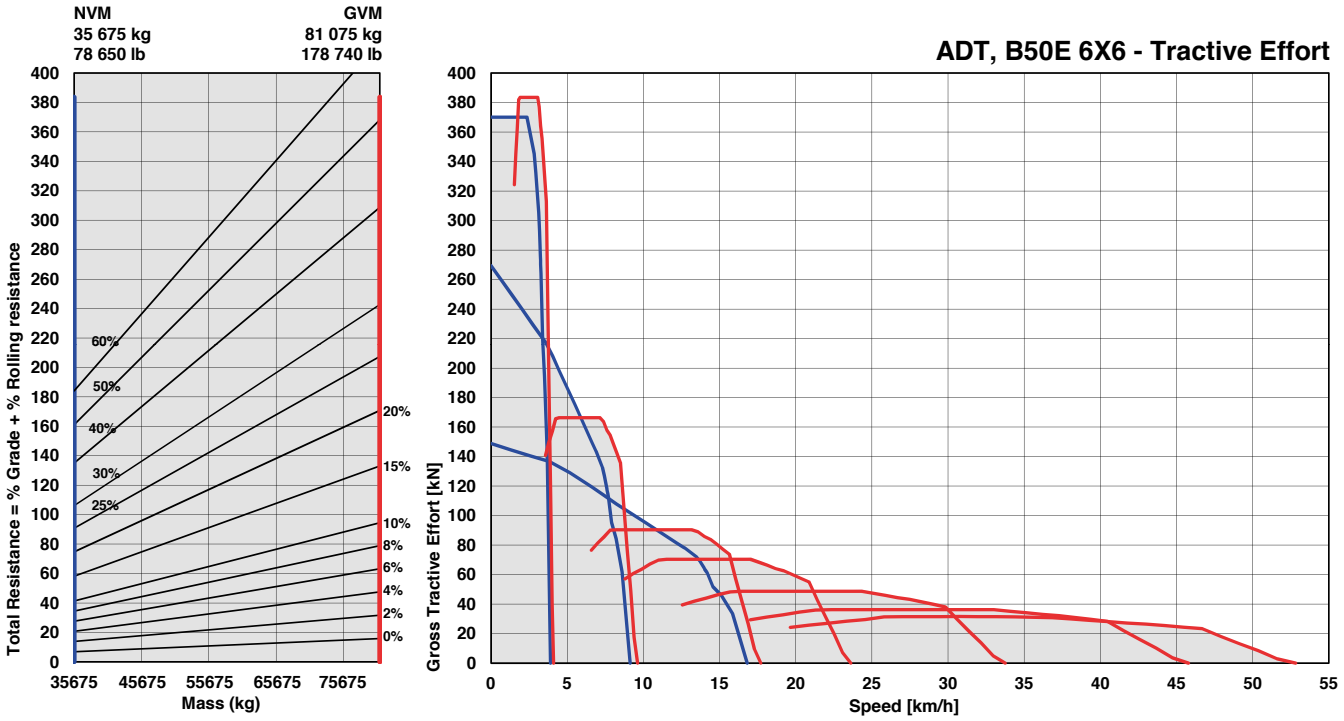

Retardation

1. Determine retardation force required by finding intersection of vehicle mass line.
2. From this intersection, move straight right across charts until line intersects the curve. NOTE: 2% typical rolling resistance is already assumed in chart.
3. Read down from this point to determine maximum speed.

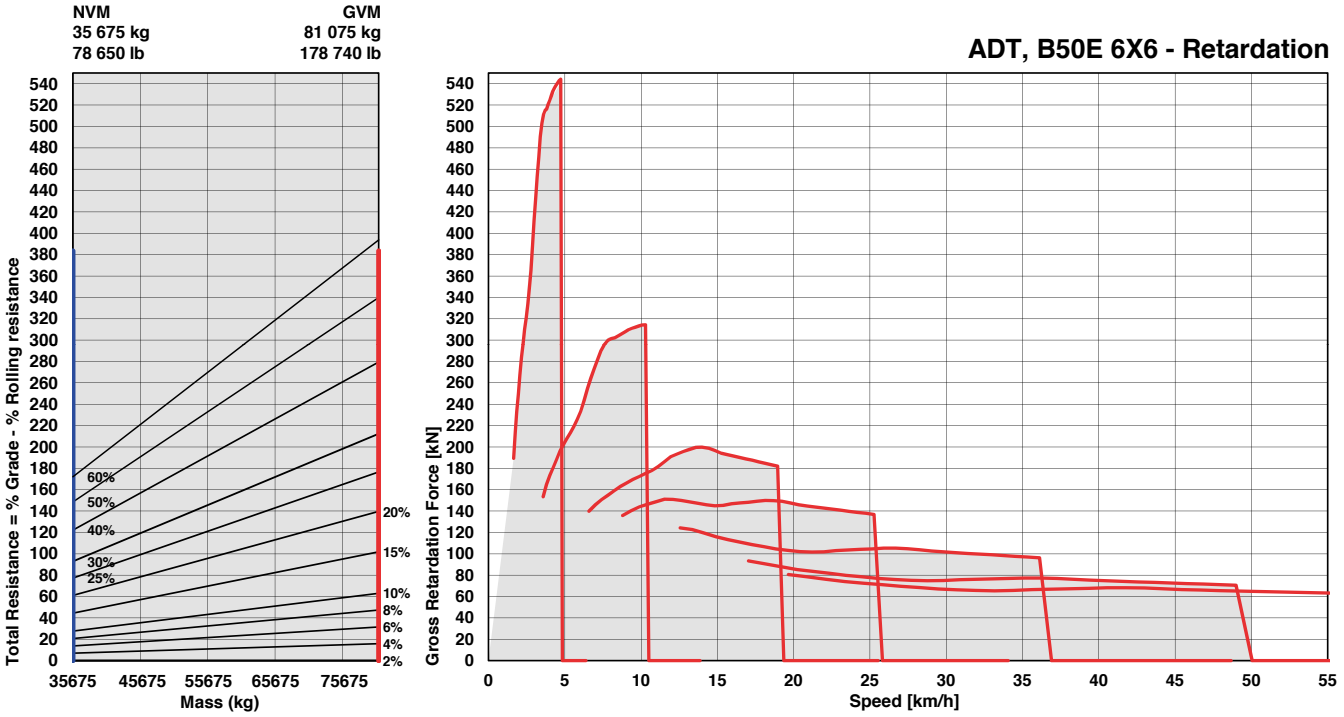

https://truckmanualshub.com/

Features and Options

● STANDARD ▲ OPTION

B40E	B45E	B50E	
			ENGINE
●	●	●	Jacobs Engine Brake®
●	●	●	Dual element air cleaner with dust ejector valve
●	●	●	Precleaner with automatic dust scavenging
●	●	●	Water separator
●	●	●	Serpentine drive belt with automatic tensioner
●	●	●	Provision for fast fill
●	●	●	Wet-sleeve cylinder liners
			COOLING
●	●	●	Crankshaft mounted electronically controlled viscous fan drive
●	●	●	Fan guard
			PNEUMATIC SYSTEM
●	●	●	Engine-mounted compressor
●	●	●	Air drier with heater
●	●	●	Integral unloader valve
			ELECTRICAL SYSTEM
●	●	●	Battery disconnect
●	●	●	Halogen drive lights
▲	▲	▲	LED drive lights
●	●	●	Air horn
●	●	●	Reverse alarm
▲	▲	▲	White noise reverse alarm
●	●	●	Rotating beacon
●	●	●	Rear flashing lights
●	●	●	Pitch Roll Sensor
●	●	●	Halogen Artic reverse light
▲	▲	▲	LED Artic reverse light
●	●	●	LED reverse lights
			STEERING SYSTEM
●	●	●	Bi-directional ground-driven secondary steering pump
			CAB
●	●	●	ROPS/FOPS certification
●	●	●	Tilt cab
●	●	●	Gas strut-supported door
●	●	●	I-Tip programmable dump-body tip settings
●	●	●	HVAC Climate control system
●	●	●	AM/FM radio with Aux + USB
●	●	●	Rear window guard
●	●	●	Wiper/washer with intermittent control
●	●	●	Tilt and telescoping steering wheel
●	●	●	Centre-mount air-suspension seat
●	●	●	Halogen work lights
▲	▲	▲	LED work lights
▲	▲	▲	Rotating beacon: seat belt installation
▲	▲	▲	Remote engine and machine isolation
●	●	●	Remote battery jump start
●	●	●	Retractable 3-point seat belt
●	●	●	Heated seat
●	●	●	Foldaway trainer seat with retractable seat belt
●	●	●	12-volt power outlet
●	●	●	Cab utility bin (removable)
●	●	●	Cup holder

B40E	B45E	B50E	
			CAB (continued)
●	●	●	Cooled/heated lunch box
			Manually adjusted mirrors
			Heated mirrors
●	●	●	Electrically adjusted and heated mirrors
●	●	●	Deluxe 10" color LCD: Speedometer / Fuel gauge / Transmission oil temperature gauge / Engine coolant temperature gauge / LED function/warning indicators and audible alarm / Transmission gear selection / Tachometer / Battery voltage / Hour meter / Odometer / Fuel consumption / Tip counter / Trip timer / Trip distance / Metric/English units / Service codes/diagnostics
●	●	●	Backlit sealed switch module functions with: Wiper control / Lights / Heated mirrors / Retarding aggressiveness / Transfer case differential lock / Transmission gear hold / Dump-body tip limit / Automatic dump-body tip settings / Airconditioner/ Heater controls / Preselected Speed Control
			DUMP BODY
●	●	●	Dump body mechanical locks (x2). Partially up and fully up
▲	▲	▲	Body liner
▲	▲	▲	Tailgate
▲	▲	▲	Body heater
▲	▲	▲	Less dump body and cylinders
▲	▲	▲	Bin extensions
▲	▲	▲	Bin pole lockout
			OTHER
●	●	●	Automatic Traction Control (ATC)
●	●	●	Wet disc brakes
●	●	▲	29.5 R 25 Radial Earthmover tires
▲	▲	●	875/65 R 29 Radial Earthmover tires
●	●		Remote grease banks
●	●	●	Automatic greasing
●	●	●	Onboard weighing
▲	▲	▲	Load lights: stack
▲	▲	●	Comfort ride suspension (front)
▲	▲	▲	Comfort ride suspension (rear)
●	●	●	Reverse camera
●	●	●	Hand rails
●	●	●	Cab peak
▲	▲	▲	High pressure hydraulic filter
▲	▲	▲	Fuel heater
●	●	●	Belly cover
▲	▲	▲	Remote transmission filters
●	●	●	Engine and transmission remote drain-gravity
▲	▲	▲	Engine and transmission remote drain-scavenge
▲	▲	▲	Window smash button
●	●	●	High visibility mirrors
●	●	●	Fleetm@tic® Classic package for 5 years
●	●	●	Electronic hood opening

The compilation of standard and optional equipment may vary by market region. Please check with your local distributor.

https://truckmanualshub.com/

All dimensions are shown in millimeters, unless otherwise stated between brackets. Under our policy of continuous improvement, we reserve the right to change technical data and design without prior notice. Photographs featured in this brochure may include optional equipment. Blu@dvantage™ is a trademark of Bell Equipment Co. (PTY) Ltd AdBlue® is a registered trademark of VDA

BELL INTERNATIONAL: Tel: +27 (0)35-907 9431
E-mail: marketing@bellequipment.com Web: www.bellequipment.com

Tel: +61 (0)8-9355-2442
Tel: +49 (0)6631 / 91-13-0
Tel: +27 (0)11-928-9700
Tel: +44 (0)1283-712862
Tel: +33 (0)5-55-89-23-56
Tel: +7-495-287-80-02
Tel: (704) 655-2802

Strong Reliable Machines
Strong Reliable Support

BELL

• A340E30 • A345E30 • A350E30

1537-ADT Pin 3, Tier 4i/Stage V (B40E-B50E) Broch2435120, US-English