https://truckmanualshub.com/

SHIBAURA DIESEL ENGINE

MODELS: S773L, N843, N843L

WORKSHOP MANUAL

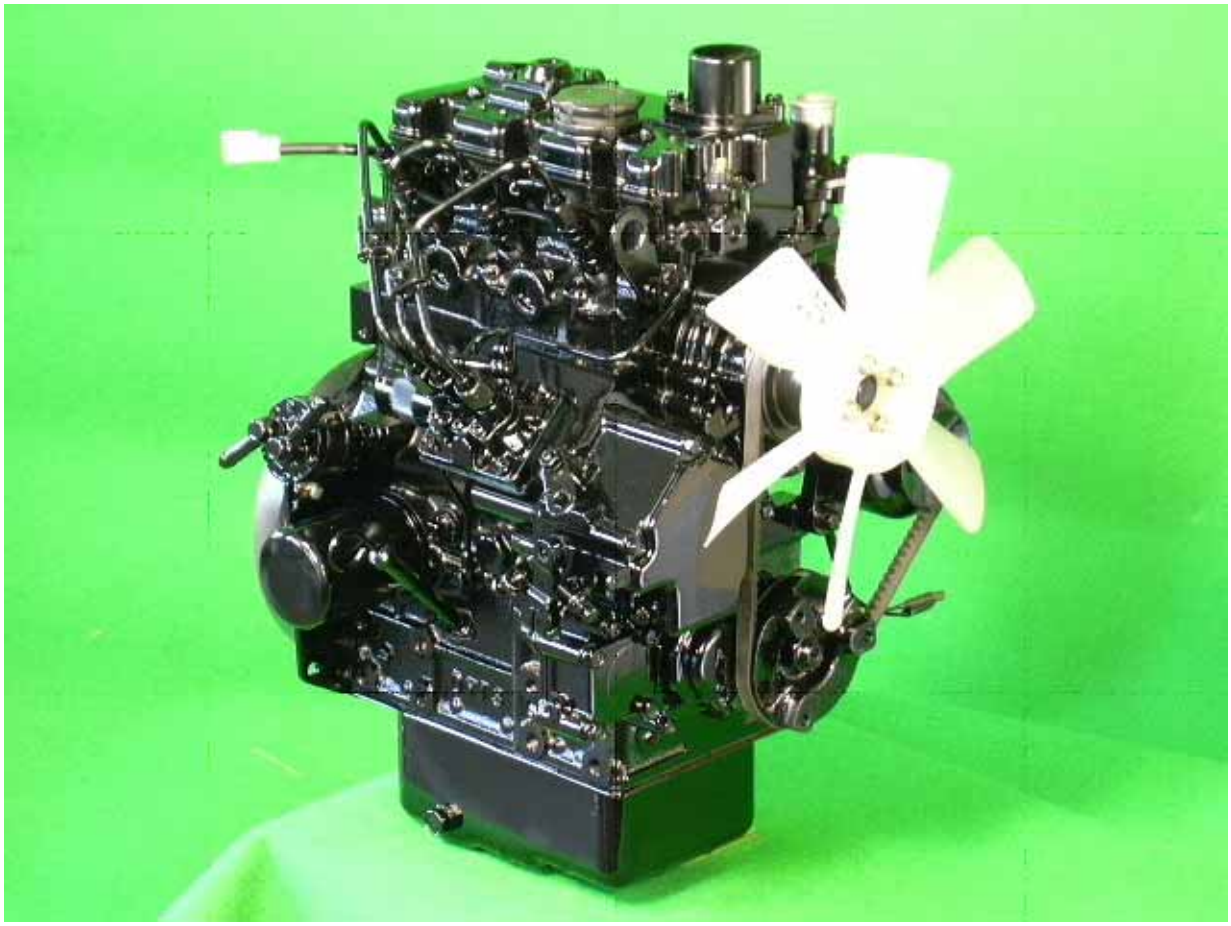

SUPPORTED BY HUSTLER TURF EQUIPMENT AND EXCEL INDUSTRIES, INC.

https://truckmanualshub.com/

FOREWORD

This workshop Manual includes repair and adjustment procedures required for the diesel engine models S773L, N843, and N843L.
When servicing to keep the engine in the best condition, you will find this Manual very useful as a guidebook.
This Workshop Manual was prepared in Jul. 2008. Specifications contained in this Manual are subject to change without notice for subsequent engineering changes.

https://truckmanualshub.com/

Table of Contents

FOREWORD c-2

Section 1: Safety 1-1

Before beginning service or repair 1-1
Avoid Fire Hazards 1-1
Prepare For Emergencies 1-1
Engine Starting Safety 1-1
Prevent Battery Explosions 1-1
Avoid Acid Burns 1-2
Avoid High-pressure Fluids 1-2
Understand Correct Service 1-2
General Maintenance Precautions 1-2
Fuel Handling 1-3
Wear Protective Clothing 1-3

Section 2: General 2-1

General Notes Before Service 2-1
Fundamental Instructions On Service 2-1
Torque Specifications 2-2
Engine Sectional Drawing 2-3
Specifications 2-4
Engine Removal 2-5
Parts and Descriptions 2-6

Section 3: Disassembly And Inspection Of Engine 3-1

Rocker arm assembly 3-1
Cylinder head assembly 3-2
Cylinder block 3-4
Piston and piston ring 3-5
Connecting rod 3-7
Connecting rod bearing 3-7
Disassembly, inspection and reassembly of bearing holder 3-9
Crankshaft bearing (bushing) 3-9
Crankshaft 3-10
Flywheel and ring gear 3-11
Cam shaft assembly 3-12
Timing gear 3-12
Oil flow 3-13
Oil pump 3-14
Oil filter 3-14
Water pump assembly and thermostat 3-15
Radiator 3-15
Fuel filter 3-16
Governor 3-16
Injection pump 3-16
Nozzle and holder 3-17

Section 4: Engine Re-assembly 4-1

Relief valve assembly with O-Ring 4-1
Crank shaft and bearing holder assembly 4-1
Measure the end play of crankshaft 4-1
Oil seal 4-2
Rear plate 4-2

https://truckmanualshub.com/

Flywheel 4-2
Piston and connecting rod assembly 4-3
Suction pipe · Suction filter 4-3
Oil pan. 4-4
Oil dipstick · Dipstick guide 4-4
Front plate. 4-4
Camshaft assembly · Tachometer shaft plate. 4-4
Idle gear · Oil pump assembly. 4-5
Timing gear case · Cover 4-5
Crankshaft pulley 4-6
Injection pump assembly. 4-6
‘Oil filter 4-6
Engine stop solenoid. 4-6
Cylinder head assembly 4-7
Cap · Push rod · Rocker arm assembly 4-8
Valve clearance adjustment 4-8
Oil pressure switch 4-9
Oil pipe 4-9
Water pump assembly · Bypass hose. 4-9
Valve cover 4-9
Glow plug, Connector 4-9

Section 5: Electrical Systems. 5-1

Fuel Shutoff Solenoid 5-1
Engine Glow Plugs 5-2
Engine Oil Pressure Switch. 5-3
Alternator (40 amp version) (No. 185046320). 5-4
Alternator diagnostic procedures 5-5
Maintenance 5-11
Trouble Shooting. 5-12
Starter Motor (M001T66081) (No. 185086551). 5-13
Maintenance 5-18
Trouble shooting 5-19

Section 6: Trouble-Shooting 6-1

Section 7: Servicing Specifications 7-1

Index i-1

https://truckmanualshub.com/

SECTION 1: SAFETY

This safety alert symbol is used to call attention to a message intended to provide a reasonable degree of PERSONAL SAFETY for operators and other persons during the normal operation and servicing of this equipment.

BEFORE BEGINNING SERVICE OR REPAIR

1. Read and understand all instructions and safety warnings in this manual and on any decals on the equipment.
2. Make sure engine and work area are clean.
3. Place engine or machine on stable, level work area and/or use an approved engine stand.
4. Stop engine and remove ignition key.
5. Allow engine to cool before preforming service.
6. Disconnect negative (-) battery cable before pre-forming service or repair.

DANGER—denotes immediate hazards which WILL result in severe personal injury or death.

WARNING—denotes a hazard or unsafe practice which COULD result in severe personal injury or death.

NOTE:—emphasizes general information worthy of special attention.

All operators and mechanics should read this manual, and be instructed about safe operating and maintenance procedures. If the operators or mechanics cannot read and understand English, it is the owner's responsibility to explain this material to them.
To reduce the potential for injury, comply with these safety instructions and always pay attention to the safety alert ▲ symbol, which means **DANGER** or **WARNING**—"personal safety instructions." Failure to comply with the instructions may result in personal injury or death.

AVOID FIRE HAZARDS

▲ Be prepared if an accident or fire should occur. Know where the first aid kit and the fire extinguishers are located and how to use them.

▲ Provide adequate ventilation when charging batteries.
▲ Do not smoke near battery.
▲ Never check fuel level with an open flame.
▲ Never use an open flame to look for leaks anywhere on the equipment.
▲ Never use an open flame as light anywhere on or around the equipment.
▲ When preparing engine for storage, remember that inhibitor is volatile and therefore dangerous. Seal and tape openings after adding the inhibitor. Keep container tightly closed when not in use.
▲ Inspect electrical wiring for worn or frayed insulation. Install new wiring if wires are damaged.

PREPARE FOR EMERGENCIES

▲ Be prepared if a fire starts.
▲ Keep a first aid kit and fire extinguishers available.
▲ Keep emergency numbers for doctor, ambulance service, hospital, and fire department near the telephone.

ENGINE STARTING SAFETY

▲ Do not start engine by shorting across starter terminals.

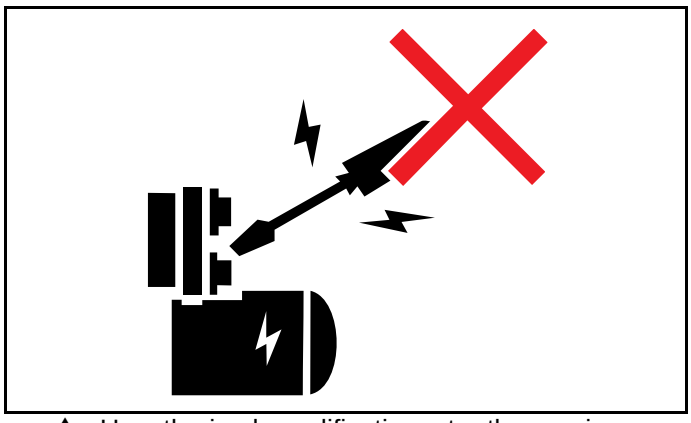

▲ Unauthorized modifications to the engine may impair the function and/or safety and affect engine life.

PREVENT BATTERY EXPLOSIONS

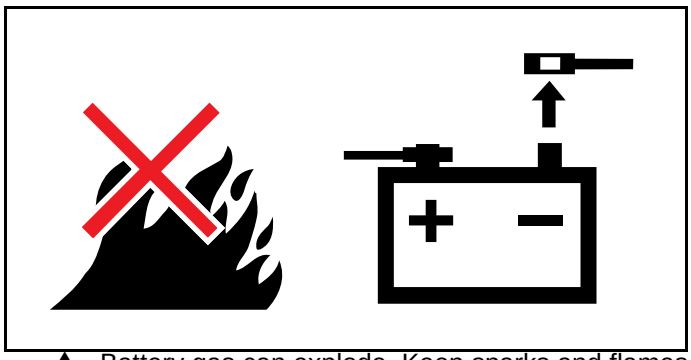

▲ Battery gas can explode. Keep sparks and flames away from batteries. Use a flashlight to check battery electrolyte level.

https://truckmanualshub.com/

- ▲ Never check battery charge by placing a metal object across the posts. Use a voltmeter or hydrometer.
- ▲ Always remove grounded (-) battery cable first and replace it last.

AVOID ACID BURNS

- ▲ Sulfuric acid in battery electrolyte is poisonous. It is strong enough to burn skin, eat holes in clothing and cause blindness if splashed in eyes.

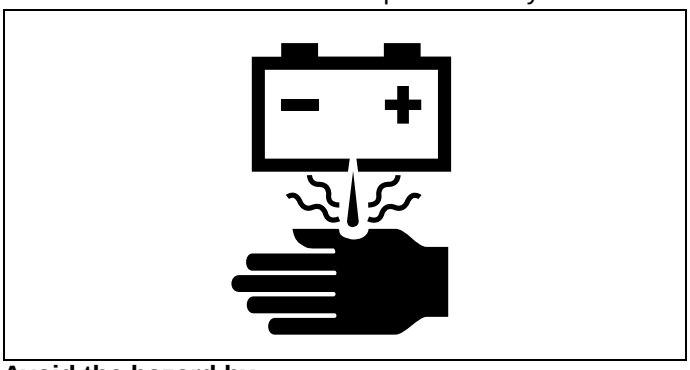

Avoid the hazard by:

1. Filling batteries in a well-ventilated area.
2. Wearing eye protection and rubber gloves.
3. Avoiding breathing fumes when electrolyte is added.
4. Avoiding spilling or dripped electrolyte.

If you spill acid on yourself:

1. Flush your skin with water.
2. Apply baking soda or lime to help neutralize the acid.
3. Flush your eyes with water for 10-15 minutes. Get medical attention immediately.

If acid is swallowed:

1. Drink large amounts of water or milk.
2. Then drink milk of magnesia, beaten eggs or vegetable oil.
3. Get medical attention immediately.

AVOID HIGH-PRESSURE FLUIDS

- ▲ Escaping fluid (fuel or hydraulic oil) under pressure can penetrate skin causing serious injury. Hydraulic oil may cause infection in a minor cut or opening in the skin. If exposed to hydraulic fluid, see a doctor at once.

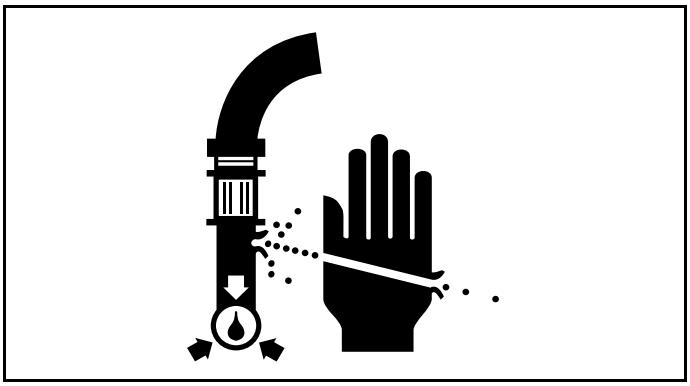

- ▲ Before applying pressure to fuel or hydraulic system, make sure all connections are tight and all hoses and lines are in good condition. To find a leak under pressure, use a piece of cardboard or wood—**never** use your hands. Relieve all pressure in the system before disconnecting or working on hydraulic lines. To relieve pressure, lower all attachments and shut off engine.

UNDERSTAND CORRECT SERVICE

- ▲ Be sure you understand a service procedure before you work on the machine.
- ▲ Unauthorized modifications to the machine may impair the function and/or safety and affect machine life.
- ▲ If it is necessary to make checks with the engine running, always use two people - with the operator at the controls, able to see the person doing the checking. Use extra safety precautions.
- ▲ Use caution when running engines to avoid moving and hot parts.

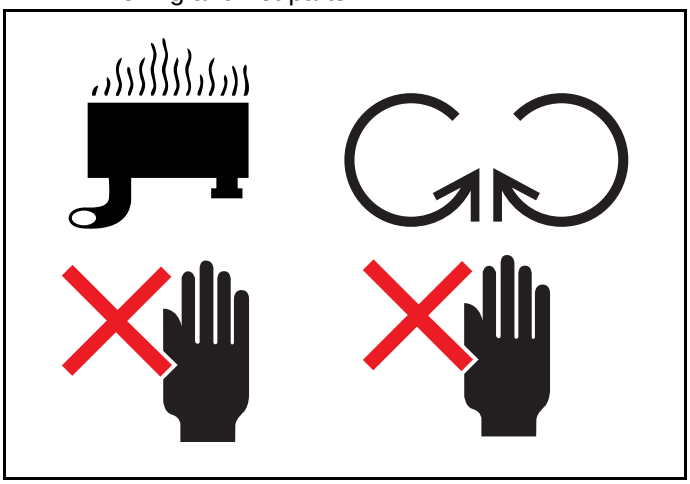

- ▲ Use the correct tool for the work. Do not use makeshift tools or substitute parts.

GENERAL MAINTENANCE PRECAUTIONS

- ▲ Do not perform work or service while under the influence of alcohol, medication, or other substances, or when fatigued.
- ▲ Never run the engine in an enclosed area unless exhaust is vented to the outside. Exhaust gases contain carbon monoxide which is odorless and deadly poison.

- ▲ Never remove radiator cap while the engine is running. Allow engine to cool and remove cap slowly to relieve pressure.
- ▲ Never attempt to make any adjustments or repairs to the tractor drive system, mower deck or any

https://truckmanualshub.com/

attachment while the tractor engine is running or deck clutch is engaged.

- ▲ Repairs or maintenance requiring engine power should be performed by trained personnel only.
- ▲ Never work under the machine or attachment unless it is safely supported with stands, blocks or a hoist.
- ▲ Always transport machine in a safe manner.

FUEL HANDLING

- ▲ Fuel is extremely flammable and explosive under certain conditions Do not smoke while you fill the fuel tank, service fuel system or handle highly flammable material.
- ▲ Do not remove fuel cap or add fuel to tank when engine is hot or running. Allow engine to cool for several minutes.
- ▲ Do not use open pans of gasoline or diesel fuel for cleaning parts. Use good commercial, nonflammable solvents.
- ▲ Never refuel tractor while engine is running; never refuel near an open flame or near devices which can create a spark. Refuel outdoors preferably or in well ventilated areas.
- ▲ Immediately clean up any spilled fuel.
- ▲ dispose of all fluids properly, and in an environmently correct maner.

WEAR PROTECTIVE CLOTHING

- ▲ Wear fairly tight fitting clothing and safety equipment.
- ▲ Always wear adequate eye protection when servicing the hydraulic system and battery, or when grinding mower blades and removing accumulated debris.
- ▲ Prolonged exposure to loud noise can cause impairment or loss of hearing. Always wear adequate ear protection, such as earplugs, when operating this equipment as prolonged exposure to uncomfortable or loud noises can cause impairment or loss of hearing. Do not wear radios or music headphones while operating the machinery. Safe operation requires your full attention.

https://truckmanualshub.com/

https://truckmanualshub.com/

SECTION 2: GENERAL

General Notes Before Service

1. **Clean the exterior of the engine, drain oil, fuel and cooling water as necessary before disassembly.**
2. **Keep the service shop clean, free from dust, and with adequate lighting.**
3. **Remove oil and grease from disassembled parts, and place them in groups on a clean table.**
4. **Be safety conscience; check equipment, tools and wear appropriate clothing.**
5. **Measurements are in the following format:**

Type of measurement	Units
Length	in(mm)
Torque	lbf•ft(Nm){kgfm}
Weight	oz(g)
Temperature	°F(°C)
Pressure	PSI(MPa){kgf/cm^2}

Fundamental Instructions On Service

1. **Keep the engine clean, disassemble only those components that need to be disassembled. The engine is built to close tolerances and clearances.**
2. **Retain replaced parts for the customer.**
3. **Always use machine model, serial number, part number and parts name when ordering service parts.**
4. **Prelube all moving parts during reassembly.**
5. **Tighten bolts and nuts to specified torque with proper tools, unless otherwise instructed.**

https://truckmanualshub.com/

Torque Specifications

Bolt Size	Grade No.	Coarse Thread			Fine Thread		
		Pitch (mm)	Tightening torque		Pitch (mm)	Tightening torque	
			lbf•ft	N•m		lbf•ft	N•m
M5	4T, 4.8	0.8	18.6-35.4 in•lb_f	2.8-4.0	-----		-----
	7T, 8T, 8.8		43.4-61.1 in•lb_f	4.9-6.9			
	10T, 11T		59.3-83.2 in•lb_f	6.7-9.4			
M6	4T, 4.8	1.0	43.4-61.1 in•lb_f	4.9-6.9			
	7T, 8T, 8.8		73.5-100.0 in•lb_f	8.3-11.3			
	10T, 11T		106.2-141.6 in•lb_f	12-16			
M8	4T, 4.8	1.25	115.1-150.5 in•lb_f	13-17	1.0	11.1-14.8	15-20
	7T, 8T, 8.8		17.0-20.7	23-28		19.2-25.1	26-34
	10T, 11T		20.7-26.6	28-36		22.1-29.5	30-40
M10	4T, 4.8	1.5	18.4-24.3	25-33	1.25	20.7-26.6	28-36
	7T, 8T, 8.8		32.5-41.3	44-56		36.1-46.5	49-63
	10T, 11T		39.8-51.6	54-70		42.8-54.6	58-74
M12	4T, 4.8	1.75	27.3-34.7	37-47	1.25	31.7-40.6	43-55
	7T, 8T, 8.8		48.7-61.2	66-83		55.3-69.3	75-94
	10T, 11T		67.9-85.6	92-116		73.0-93.7	99-127
M14	4T, 4.8	2.0	46.5-59.0	63-80	1.5	51.6-64.2	70-87
	7T, 8T, 8.8		76.7-97.4	104-132		86.3-109.2	117-148
	10T, 11T		102.5-129.1	139-175		109.9-135.7	149-184
M16	4T, 4.8	2.0	63.4-81.1	86-110	1.5	67.1-84.1	91-114
	7T, 8T, 8.8		109.9-136.4	149-185		115.8-141.6	157-192
	10T, 11T		151.2-188.1	205-255		163.0-198.4	221-269
M18	4T, 4.8	2.0	83.3-104.0-5.1	113-141	1.5	97.4-119.5	132-162
	7T, 8T, 8.8		144.6-174.1	196-236		170.4-205.8	231-279
	10T, 11T		202.8-245.6	275-333		219.8-270.7	298-367
M20	4T, 4.8	2.5	106.2-132.8	144-180	1.5	126.9-154.9	172-210
	7T, 8T, 8.8		177.0-213.9	240-290		202.8-245.6	275-333
	10T, 11T		267.7-325.3	363-441			

https://truckmanualshub.com/

Engine Sectional Drawing

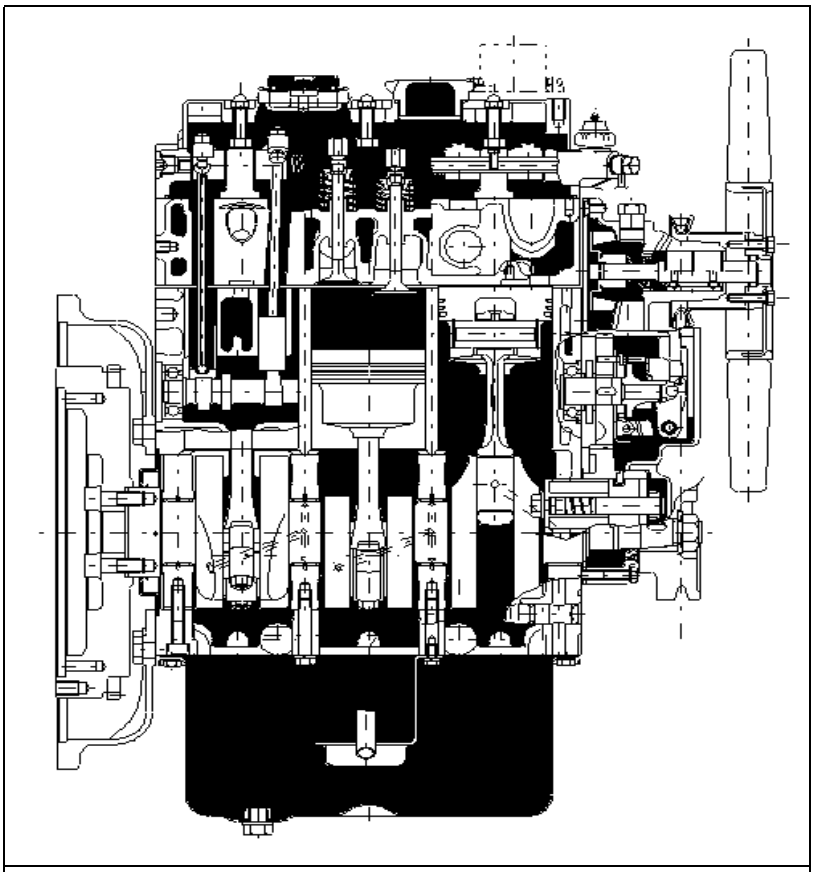

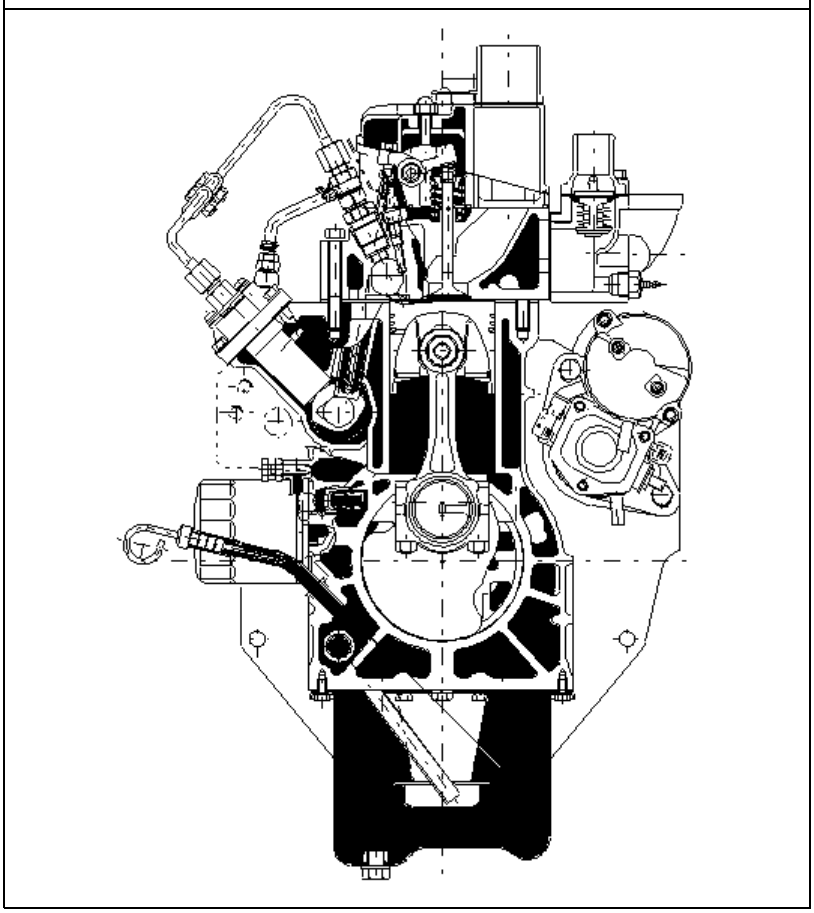

https://truckmanualshub.com/

Specifications

Items		Specifications		
Engine model		S773L	N843	N843L
Engine type		4-cycle water cooled in-line overhead valve	4-cycle water cooled in-line overhead valve	4-cycle water cooled in-line overhead valve
No. of cylinders-bore × stroke in(mm)		3-3.031(77) × 3.189(81)	3 - 3.307(84) x 3.54(90)	3 - 3.307(84) x 3.94(100)
Piston displacement cc		1131	1496	1662
Compression ratio		23.5 to 1	22.5 to 1	22.5 to 1
Combustion chamber type		Special swirl chamber	Special swirl chamber	Special swirl chamber
*Rated output (Gross) HP(kW)/rpm		25(18.3)/2800	30(22.6)/2800	34(25.1)/2800
Fuel used		SAE No.2–D, DIN 51601, BS class A-1	SAE No.2–D, DIN 51601, BS class A-1	SAE No.2–D, DIN 51601, BS class A-1
Injection pump		Bosch, PFR type	Bosch, PFR type	Bosch, PFR type
Injection nozzle		Throttle type	Throttle type	Throttle type
Injection governor		Centrifugal all–speed control	Centrifugal all–speed control	Centrifugal all–speed control
*Alternator, voltage. Output		12V–40A	12V–40A	12V–40A
*Starter, Voltage. Output		12V–1.2kW	12V–2.0kW	12V–2.0kW
Lubrication method		Pressurized circulation by trochoid pump	Pressurized circulation by trochoid pump	Pressurized circulation by trochoid pump
Engine oil used		API grade CD	API grade CD	API grade CD
*Lubrication oil volume US Qts(L)		5.2(4.9)	6.3(6)	6.3(6)
Cooling water volume (Engine only) US Qts(L)		2.0(1.9)	2.9(2.7)	3.0(2.8)
*Engine dry weight lbs(Kg)		207(94)	331(150)	353(160)
Engine dimensions	*Overall length in(mm)	19.69(500)	21.0(534)	21.0(534)
	*Overall width in(mm)	15.28(388)	18.1(459)	18.1(459)
	*Overall height in(mm)	23.31(592)	25.9(657)	27.1(689)
Air cleaner		Dry type		

Notes: 1. The specifications above are subject to change without notice.

https://truckmanualshub.com/

Engine Removal

Note: Asterisks (*). Items may vary depending on the type of equipment in which the engine is Installed.

1. **If necessary, remove engine cover or hood.**
2. **Remove the muffler and mounting brackets from the engine.**
3. **Disconnect the wiring from the air cleaner clogging sensor if so equipped.**
4. **Disconnect the wiring from the water temperature sensor and water temperature switch.**
5. **Remove the radiator hoses from the engine.**
6. **Disconnect the wiring from the alternator.**
7. **Disconnect the wiring from the starting motor.**
8. **Remove the ground wire and bolt from the cylinder head.**
9. **Disconnect the fuel return hose from the fuel return line.**
10. **Disconnect the wiring from the engine oil pressure switch.**
11. **Disconnect the wiring from the glow plug connector.**
12. **Disconnect the wiring from the engine stop solenoid.**
13. **Disconnect the fuel line from the injection pump.**
14. **Remove the throttle cable from the engine**
15. **Disconnect the drain hose from the drain cock.**
16. **Disconnect the oil hoses from the hydraulic oil pump.**
17. **Remove the engine mounting hardware and hoist the engine from the frame.**

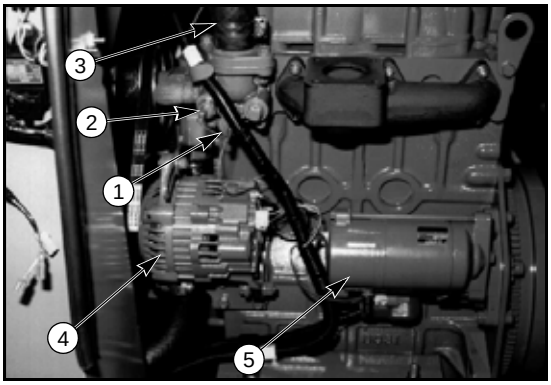

Fig. 2-1

1. Water temperature switch 2. Water temperature sensor 3. Radiator hose	4. Alternator 5. Starting motor

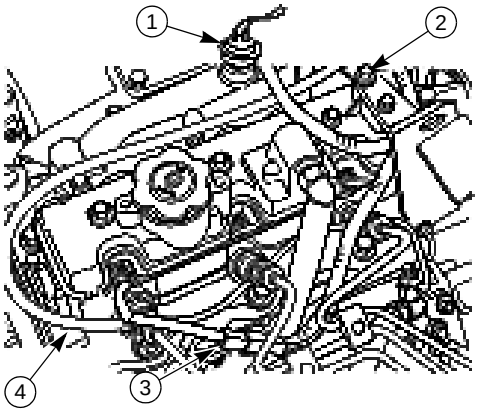

Fig. 2-2

1. Air cleaner clogging sensor 2. Ground wire	3. Glow plug connector 4. Fuel return hose

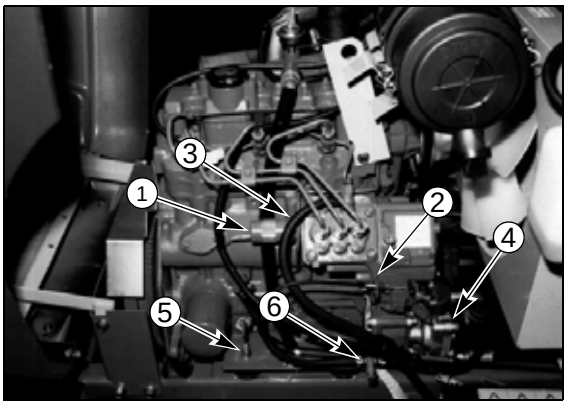

Fig. 2-3

1. Engine stop solenoid 2. Throttle cable 3. Fuel hose	4. Hydraulic oil pump 5. Engine mounting hardware 6. Drain cock

https://truckmanualshub.com/

Parts and Descriptions

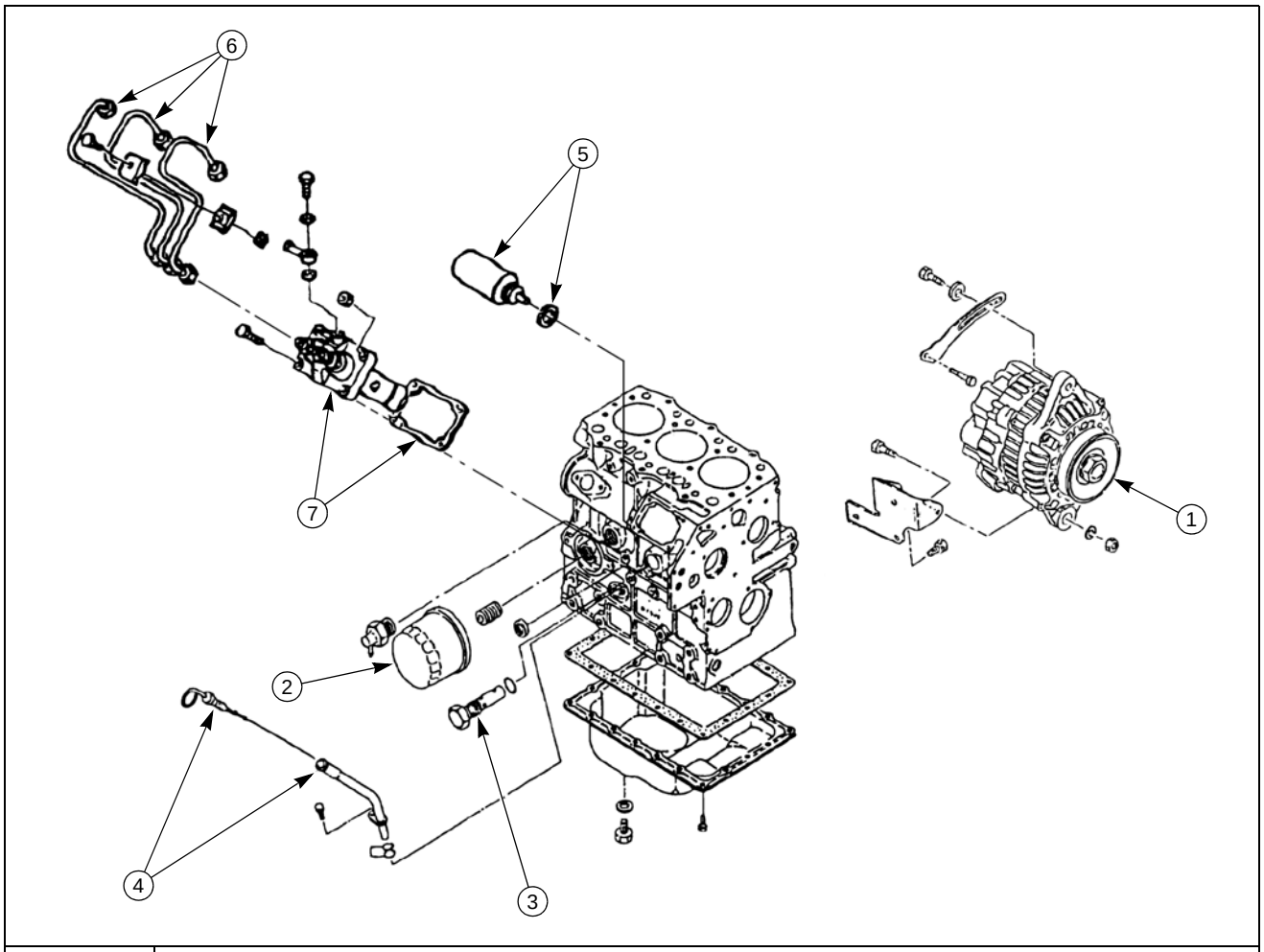

Index	Description
1	Alternator
2	Oil filter
3	Relief valve
4	Oil level gauge•Gauge guide
5	Engine stop solenoid•Seal washer
6	Fuel injection lines
7	Injection pump assembly and shim
	Note: **1. Remove the injection fuel lines and engine stop solenoid before removing the injection pump.** **2. Raise the injection pump and disconnect the governor link from the control rack by removing the snap pin.** **3. Injection timing is set by the shims between injection pump and block. Note thickness and number when removing the injection pump.** **4. Visually inspect the shim to determine if it is reusable or needs to be replaced**

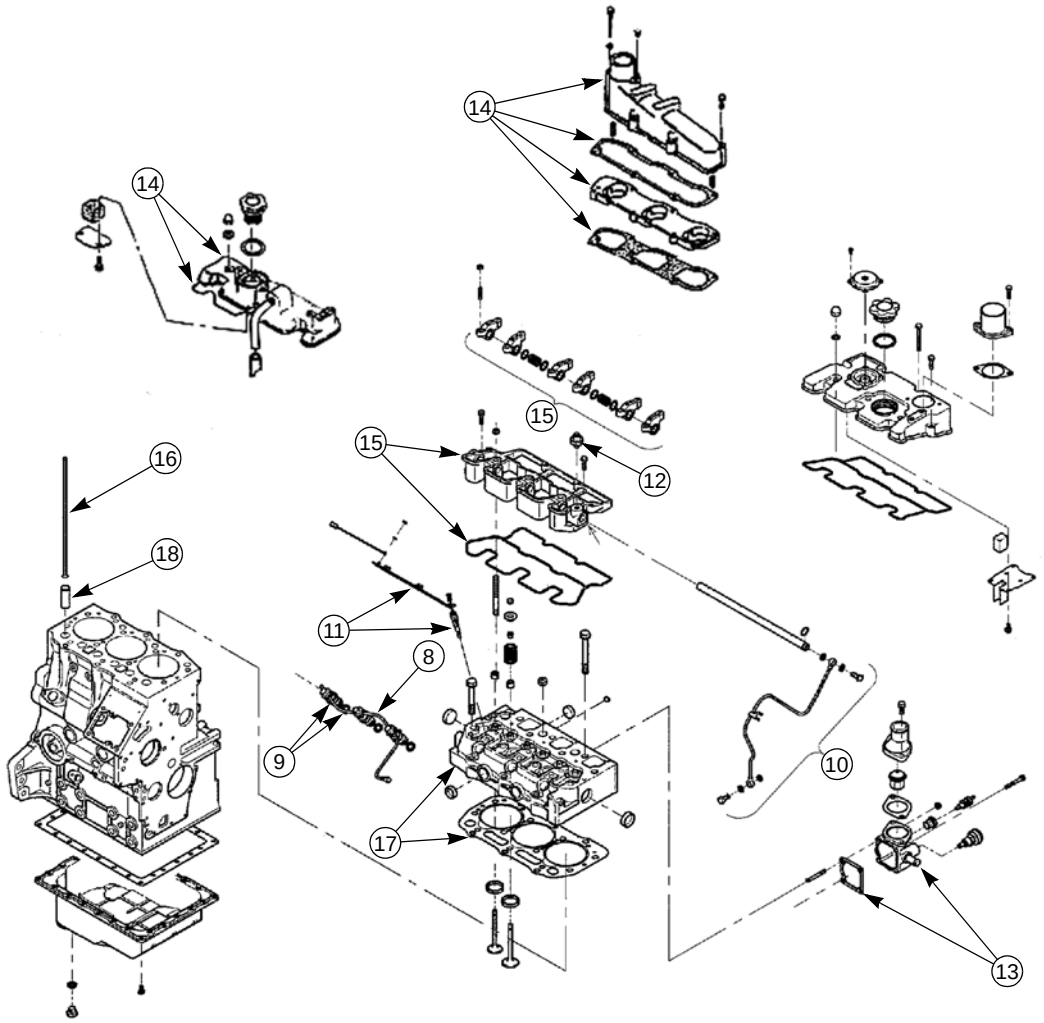

Index	Description
8	Fuel return line
9	Injection nozzle•Gasket
10	Oil transfer pipe•Eye bolt •Seal washer
11	Connector•Glow plug
12	Oil pressure switch
13	Thermostat housing•Gasket
14	Valve cover•O-ring•Intake manifold•Spacer
15	Rocker arm assembly•O-ring•Cap **NOTE: Remove the caps from intake valves and exhaust valves.**
16	Push rod
17	Cylinder head assembly•Head gasket **NOTE: Loosen the cylinder head bolts in several steps and remove the cylinder head assembly.**
18	Tappet

https://truckmanualshub.com/

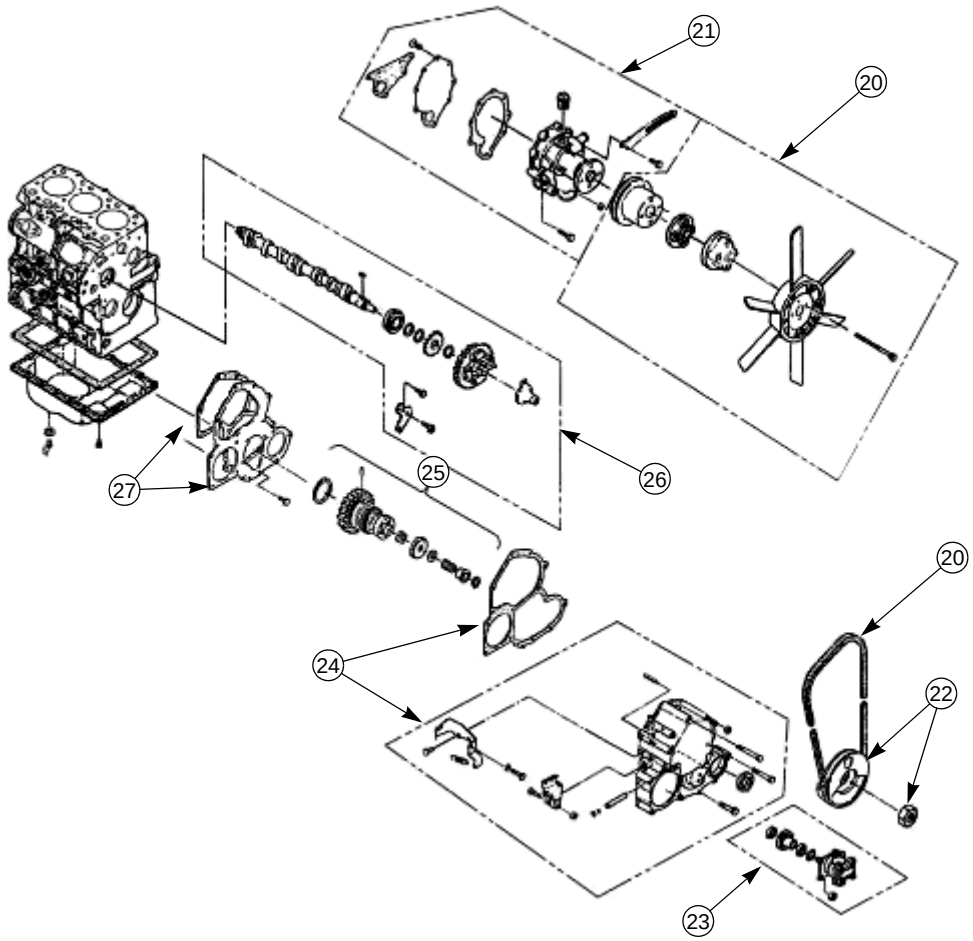

Index	Description
20	V-belt•Cooling fan•Fan holder•Fan pulley
21	Water pump assembly•Gasket
22	Crankshaft pulley and nut
23	Not available
24	Timing gear case assembly•Gasket **Note: Remove the engine stop solenoid and injection pump assembly first.**
25	Idle gear•Oil pump assembly
26	Cam shaft assembly•Plate **Note: Remove the bolts and plate before pulling the camshaft assembly.**
27	Front plate•Gasket

https://truckmanualshub.com/

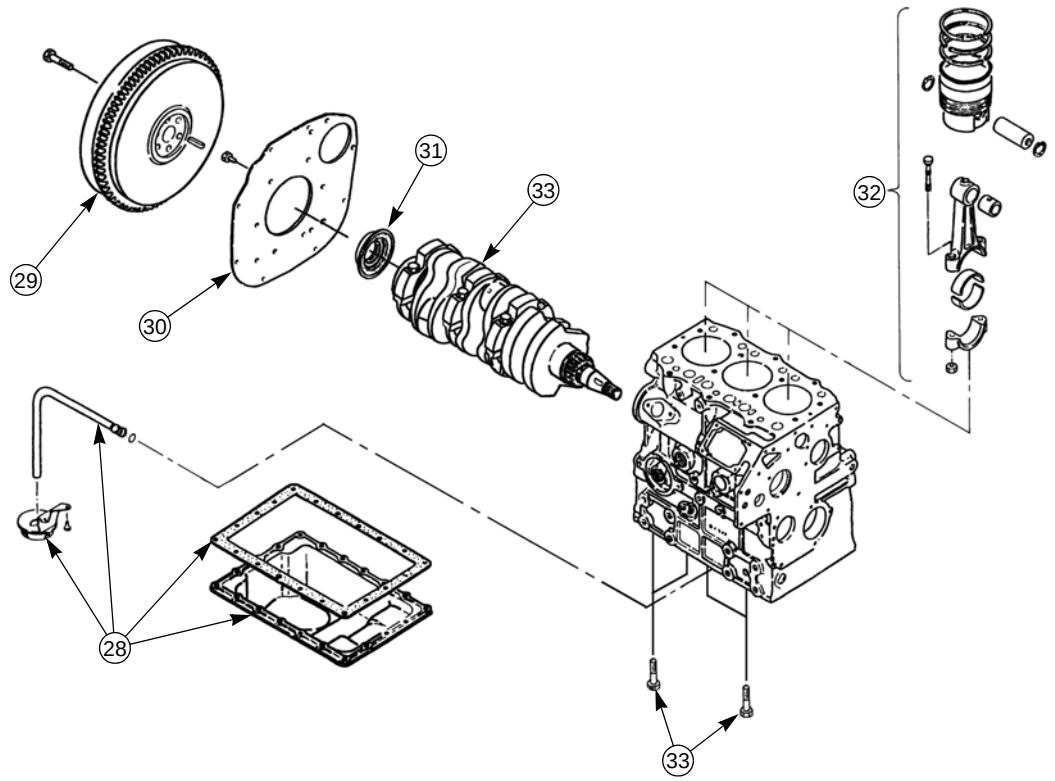

Index	Description
28	Oil pan•Gasket•Suction filter•Suction pipe
29	Fly wheel
30	Rear plate or Flywheel cover
31	Oil seal
32	Piston and connecting rod assembly **NOTE:** **1. Before extracting piston, remove the carbon deposit from the top of the cylinder.** **2. Keep pistons, connecting rods, caps and bearings grouped by cylinder number and reassemble to their original locations.**
33	Crank shaft and bearing holder assembly **Note: Remove the bolts for bearing holders, and remove the crankshaft and bearing holder assembly as an assembly.**

https://truckmanualshub.com/

https://truckmanualshub.com/

SECTION 3: DISASSEMBLY AND INSPECTION OF ENGINE

Caution: before starting disassembly

1. **Check the cylinder block and cylinder head for wear, leakage or damage.**
2. **Clean oil passages with compressed air and check for clogging.**
3. **Thoroughly clean parts to remove dust, contaminated oil, carbon, and other foreign material.**
4. **Remove carbon deposits on the piston, cylinder head, valves, etc. being careful not to damage parts. (Especially for aluminum alloy parts.)**
5. **Valves, pistons, connecting rods, bearings and other parts, should be marked indicating cylinder number and reassembled to the original cylinder location.**

Rocker arm assembly

Disassembly

1. Screw in an M8 bolt at the front end of the rocker arm shaft and extract the rocker arm shaft.

2. Take out the spring, shim and rocker arm from the rocker arm bracket.

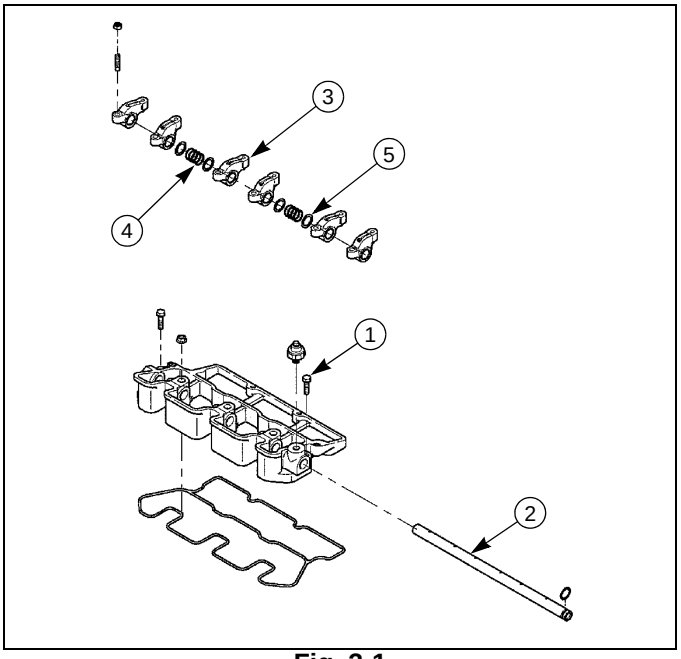

Fig. 3-1

1. Screw 2. Rocker arm shaft 3. Rocker arm	4. Spring 5. Shim

Inspection and service

1. Using a micrometer, check outside diameter of the rocker arm shaft. If the shaft is worn beyond the service limit, replace the part.

Wear of rocker arm shaft ø in(mm)	
Standard assembling value	Service limit
0.4587-0.4594(11.65-11.67)	Less than 0.4555(11.57)

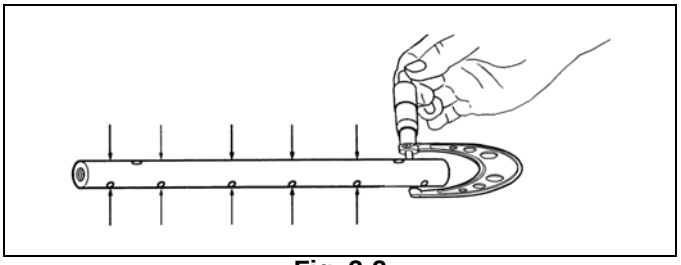

Fig. 3-2

2. Measure the inside diameter of the rocker arm. Check the clearance between the rocker arm and rocker arm shaft. If the clearance is beyond the service limit, replace the part.

Clearance between rocker arm and rocker arm shaft in(mm)	
Standard assembling value	Service limit
0.0013-0.0027(0.032–0.068)	More than .008(0.2)

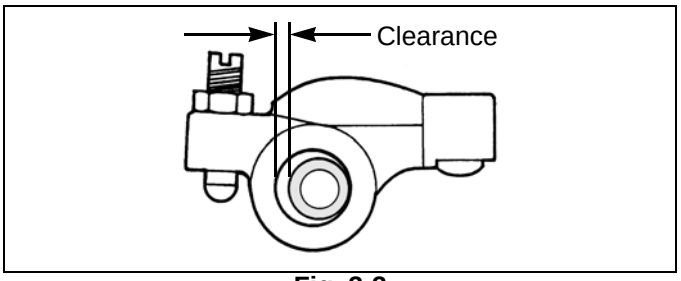

Fig. 3-3

https://truckmanualshub.com/

3. Check the valve cap-contact surface for uneven wear and streaks. If wear is insignificant, grind flat with oilstone or grinder, otherwise, replace.

Cylinder head assembly

Disassembly

1. Using a valve spring compressor, compress the valve spring to remove the valve cotter, retainer, spring and valve.
2. Remove the valve guide seal.

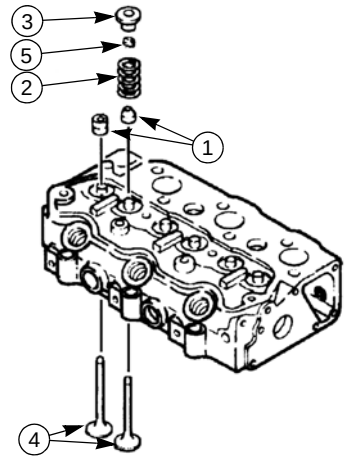

Fig. 3-4

1. Valve guide seal 2. Spring 3. Retainer	4. Valve 5. Valve cotter

Inspection and service

1. Check for distortion of cylinder head bottom surface by using a straight edge. Using Fig. 3-5 as a guide, and a feeler gage, check for distortion at the six positions—A through F. If distortion exceeds the repair value, correct using a surface grinder.

Distortion at cylinder head bottom surface in(mm)	
Standard assembling value	Repair value
Less than 0.0020(0.05)	More than 0.0047(0.12)

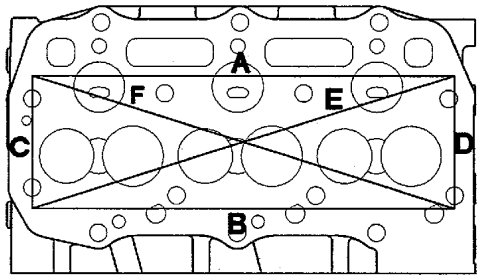

Fig. 3-5

2. Valve guide and valve stem
   a. Check the head and stem of each valve and replace if burned, worn, or deformation is excessive.
   b. Measure the outside diameter at positions I, II, and III on the valve stem with a micrometer and replace if less than the service limit.

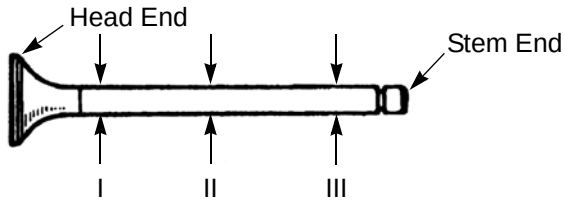

Fig. 3-6

Wear of valve stem ø in(mm)			
Intake valve		Exhaust valve	
Standard assembling value	Service limit	Standard assembling value	Service limit
0.274-0.2744 (6.955–6.97)	Less than 0.2712(6.89)	0.273-0.274 (6.94–6.955)	Less than 0.269(6.84)

   c. Replace a valve if its head thickness is less than service limit.

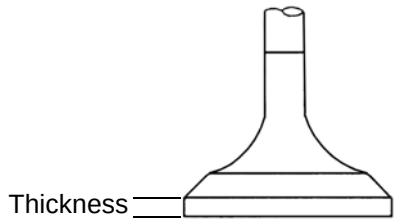

Fig. 3-7

Valve head thickness in(mm)	
Standard assembling value	Service limit
0.0305-0.0423(0.775–1.075)	Less than 0.0197(0.5)

https://truckmanualshub.com/

d. Replace the valve if the clearance between the stem and guide exceeds the service limit.

Clearance between valve stem and valve guide in(mm)			
Intake valve		Exhaust valve	
Standard assembling value	Service limit	Standard assembling value	Service limit
0.0012-0.0024 (0.03–0.06)	More than 0.0079(0.2)	0.0016-0.0030 (0.04-0.075)	More than 0.0100 (0.25)

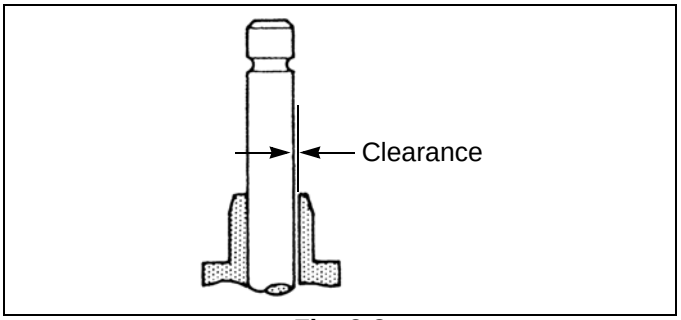

Fig. 3-8

3. Valve seat

a. Since the valve seat is corrected according to the valve guide, be sure to check the valve guide for wear condition first before correcting the seat.

Valve seat contact width in(mm)		
Standard assembling value		Repair value
In	0.059-0.083 (1.50-2.10)	More than 0.098(2.5)
Exhaust	0.063-0.071 (1.59-1.80)	More than 0.098(2.5)

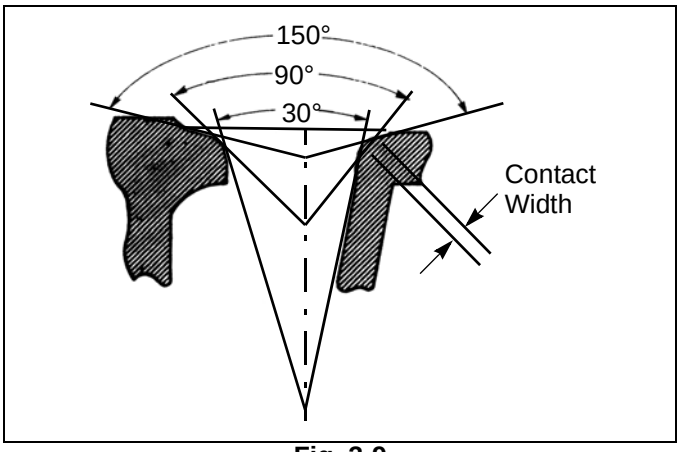

Fig. 3-9

b. Correct the seat to the standard assembling values of the contact width and recess using seat cutters of 15°, 45° and 75°.

c. When the seat recess exceeds the service limit, replace the cylinder head.

Valve seat recess in(mm)		
Standard assembling value		Service limit
In,Ex	0.0335-0.0453 (0.85–1.15)	More than 0.0709(1.8)

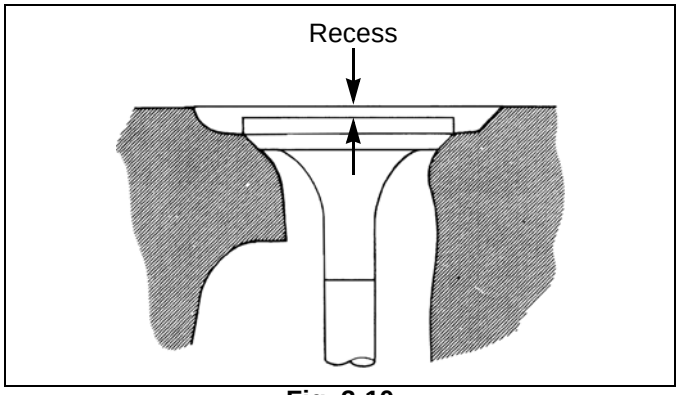

Fig. 3-10

d. Coat the valve seat surface with compound and lap the contact surface turning the valve.

e. Check that the valve contact surface is within the standard value and the contact position is even.

f. When the cylinder head is replaced with a new head, adjust the seat contact width and seat recess to the specified values with a seat cutter before lapping.

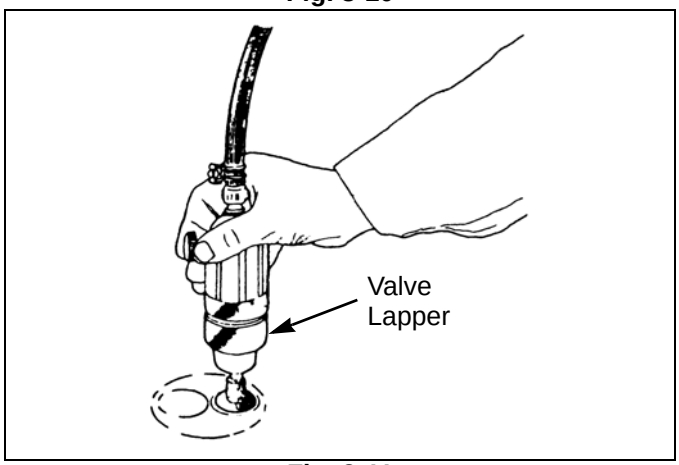

Fig. 3-11

https://truckmanualshub.com/

4. Valve spring
- **a.** Check the valve spring visually for damage.
- **b.** Measure the squareness of the spring using a square on a surface plate and replace if the service limit is exceeded.
- **c.** Check the free length and spring force with a spring tester and replace if the service limit is exceeded.

	Standard assembling value	Service limit
Squareness in(mm)	0.047(1.2)	More than 0.079(2)
Free length in(mm)	1.38(35)	Less than 1.3(33.5)
Spring force (when compressed to 1.20(30.4) in(mm))	17.9 lb_f (79.8 N){8.1 kgfp}	Less than 15.4 lb_f (68.6 N){7 kgf}

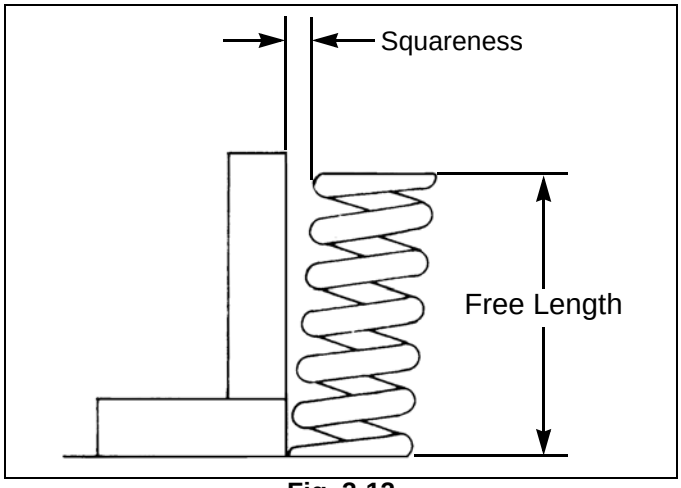

Fig. 3-12

Reassembly

Reassemble components in the reverse order of disassembly. When assembling the valve spring, retainer and cotter, be especially careful not to damage the valve guide seal. Tighten the glow plug to the proper torque—5.6-10.5 lb_f •ft(8-15 Nm) {0.8~1.5 kgf•m}.

Cylinder block

Inspection and service

1. Check for cracks, damage and distortion on the top of the block in the same way as the cylinder head.
2. Measurement of cylinder bore
   - **a.** There should be no scratches, rust, corrosion, etc. on the cylinder bore when checked visually.
   - **b.** Measure the cylinder bore at the top, center and bottom respectively in the crankshaft direction (A) and the direction at right angle to it (B). If the repair value is exceeded, replace engine with long block.

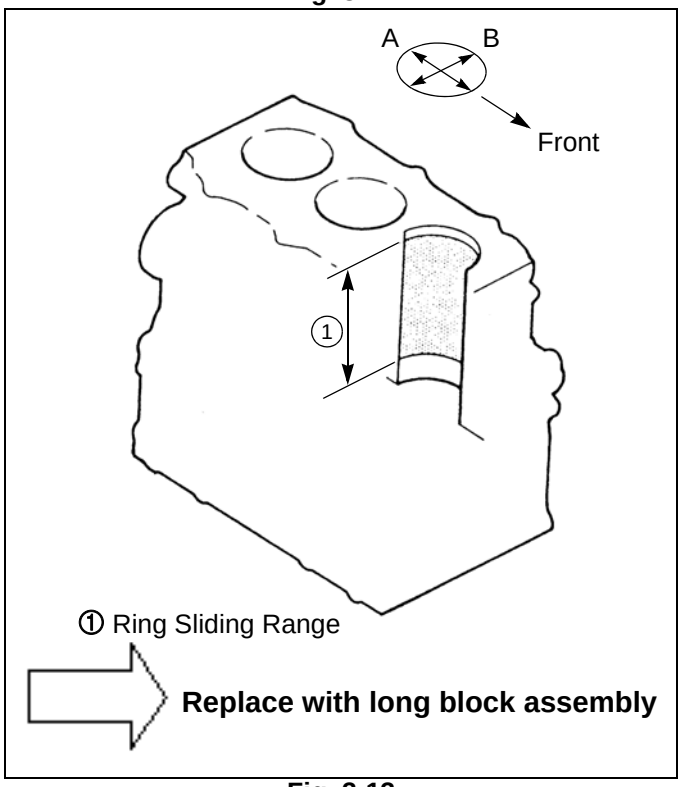

Fig. 3-13

Distortion on cylinder block top surface in(mm)	
Standard assembling value	Repair value
Less than 0.0020(0.05)	More than 0.0047(0.12)

Cylinder bore dia. ø in(mm)	
3.0315-3.0322 (77-77.019)	More than 3.0394(77.2)

https://truckmanualshub.com/

Piston and piston ring

Disassembly

1. Remove the piston ring using a piston ring tool.
2. Remove the snap ring and extract the piston pin.

Inspection

1. Piston
   a. Check the piston for cracks, streaking and burnout on the outside surface and replace if excessive.
   b. Measure the longer diameter at 0.39in.(10 mm) above the lower end of the piston skirt and bore of the cylinder in the thrust direction, calculate the clearance, and replace if the repair value is exceeded.

Piston skirt bottom longer dia .ø in(mm)	
Standard assembling value	Service limit
3.0288-3.0298 (76.9325-76.9575)	Less than 3.0197(76.7)

Clearance between cylinder and piston in(mm)	
Standard assembling value	Service limit
0.0023-0.0034 (0.0575–0.0865)	More than 0.0098(0.25)

   c. Measure the piston pin hole diameter and piston pin outside diameter and replace if the clearance exceeds the service limit.

Clearance between piston pin hole and piston pin in(mm)	
Standard assembling value	Service limit
-0.0000~+0.0003 (-0.000~+0.008)	More than 0.0008(0.02)

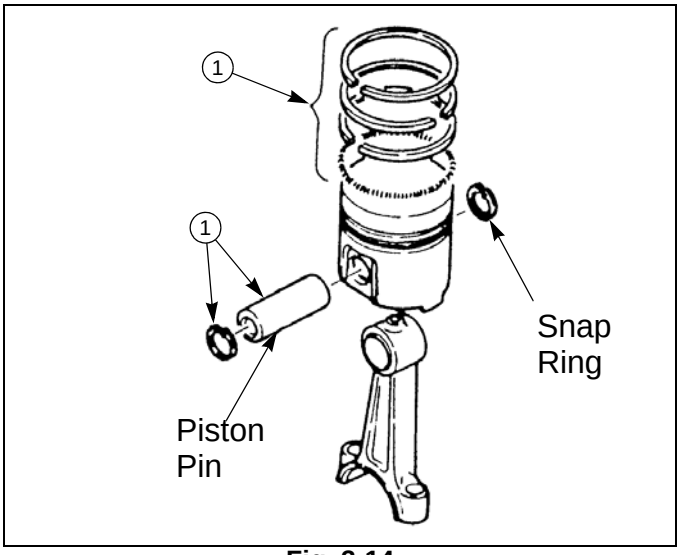

Fig. 3-14

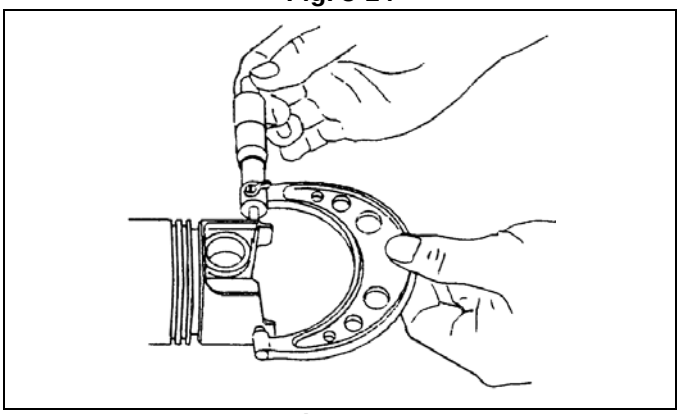

Fig. 3-15

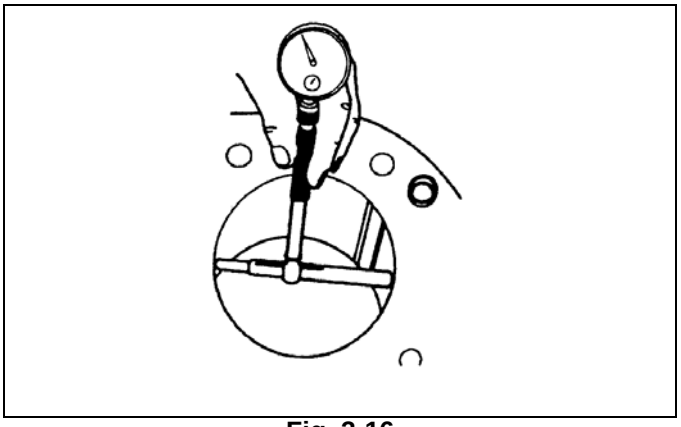

Fig. 3-16

https://truckmanualshub.com/

2. Piston ring

a. Replace worn out or damaged piston rings, if any.

b. Insert a ring at a right angle to the least worn out skirt of a cylinder, measure the clearance of ring end gap with a thickness gauge and replace if the end gap exceeds the service limit.

Piston ring end gap in(mm)		
	Standard assembling value	Service limit
Top ring	0.0079–0.0138 (0.20–0.35)	More than 0.0393(1.0)
Second ring	0.0079–0.0138 (0.20–0.35)	More than 0.0393(1.0)
Oil ring	0.0059–0.0138 (0.15–0.35)	More than 0.0393(1.0)

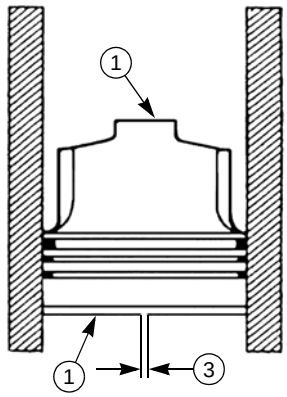

Fig. 3-17

1. Piston Ring
2. Piston
3. Ring End Gap

c. Measure the clearance between the piston ring groove and ring and replace if the service limit is exceeded.

Clearance between piston ring groove and ring in(mm)		
	Standard assembling value	Service limit
Top ring	0.0031-0.0047(0.08–0.12)	More than 0.0098(0.25)
Second ring	0.0020-0.0035(0.05–0.09)	More than 0.0098(0.25)
Oil ring	0.0008-0.0024(0.02–0.06)	More than 0.0059(0.15)

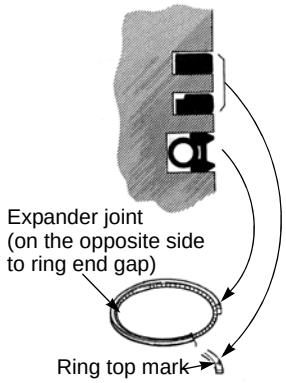

Fig. 3-18

d. Piston kit consisting of piston and piston rings are available.

Piston kit		
	Size	Part No.
S773L	STD	115017610
N843	STD	115017541
N843L	STD	115017491

Piston ring kit	
	Part No.
S773L	115107240
N843 & N843L	115107960

e. Piston ring installing procedure: Install the piston ring to the piston as shown in Fig. 3-18.

3. Piston pin

Measure the outside diameter of the piston pin and replace if the service limit is exceeded.

Piston pin outside dia. ø in(mm)	
Standard assembling value	Service limit
0.8266-0.8268 (20.996-21.002)	Less than 0.8260(20.98)

https://truckmanualshub.com/

Connecting rod

Inspection

1. Check for torsion, parallelism and damage.

Measure the torsion and parallelism using a connecting rod aligner and correct or replace if the repair value is exceeded.

Torsion and parallelism of connecting rod in(mm)		
	Standard assembling value	Repair value
Torsion (per 3.93(100)	Less than 0.0031(0.08)	More than 0.0079(0.20)
Parallelism 3.93(100)	Less than 0.0020(0.05)	More than 0.0059(0.15)

2. Measure the bore of the connecting rod small end bushing and replace if the clearance to the piston pin exceeds the service limit.

3. Install the connecting rod to the crankshaft, measure the axial play and replace the connecting rod if the service limit is exceeded.

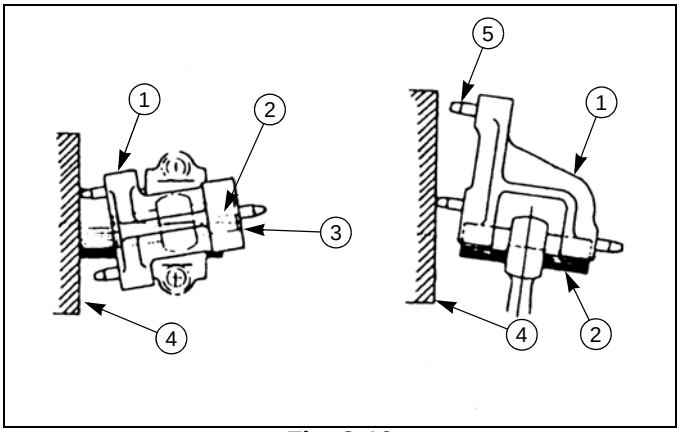

Fig. 3-19

1. Gauge 2. Piston pin 3. Torsion	4. Flat part of aligner 5. Pin
Clearance between bushing and piston pin in(mm)	
Standard assembling value	Service limit
0.00031-0.00010 (0.008–0.025)	More than 0.0031(0.08)
Axial play of connecting rod and crank pin in(mm)	
Standard assembling value	Service limit
0.0039-0.0118 (0.1–0.3)	More than 0.028(0.7)

Connecting rod bearing

Inspection

1. Check the bearing for peeling, melting, uneven wear, improper contact or other damage is noticed, replace the bearing.

2. Measure the oil clearance between the crank pin and bearing using plasti-gauge.

3. Remove oil, dust or other foreign matter stuck to the bearing and crank pin.

4. Cut plasti-gauge to a length equal to the bearing width and place it on the crank pin parallel to the crankshaft axis, avoiding the oil hole.

5. Install the connecting rod bearing and connecting rod cap and tighten to the specified torque.

Tightening torque	20.3-23.8 lb_f •ft(29–34 Nm) {3.0–3.5 kgfm}

Note: Never turn the connecting rod at this time.

6. Remove the connecting rod cap and measure the plasti-gauge width with the scale printed on the gauge envelope.

Note: Measure the widest part of the plasti-gauge.

7. If the oil clearance exceeds the service limit, replace the bearing.

Clearance between crank pin and connecting rod bearing (Oil clearance) in(mm)	
Standard assembling value	Service limit
0.0014-0.0033 (0.035–0.085)	0.079(0.2)
Set a plasti-gauge	Measure the oil clearance

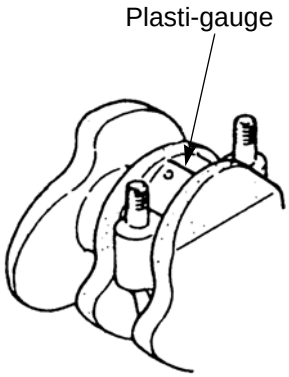

Fig. 3-20

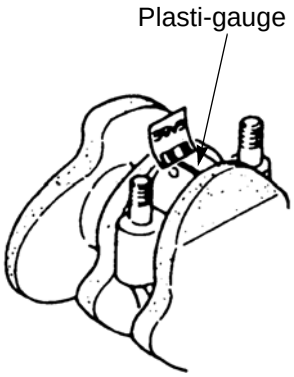

Fig. 3-21

https://truckmanualshub.com/

Reassembly (piston and connecting rod)

1. Heat the piston to about 212°F(100°C) with a piston heater or equivalent and install it aligning the "SHIBAURA" mark in the piston and match mark at (A) of the connecting rod.
2. Assemble the connecting rod cap such that the match mark (A) on the cap is oriented to the same side as the match mark (A) on the connecting rod.
3. When installing piston rings to the piston, the indicator mark on the end surface of the ring is to be pointing toward the top of the piston.
4. Install the piston rings to the piston facing the stamped 'T' mark upward.
5. When the connecting rod or piston and piston pin are replaced, weight variation among cylinders with the rod, piston and piston ring installed should be within 0.35 oz. (10 g).

Bearing code No.	Crankshaft pin outside dia. Finishing dimension ø in(mm)
198517602	1.6128-1.6132 (40.964-40.975)

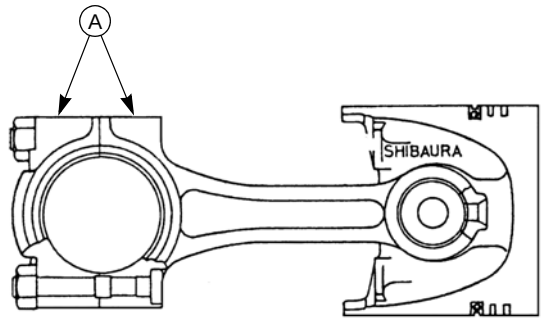

Fig. 3-22

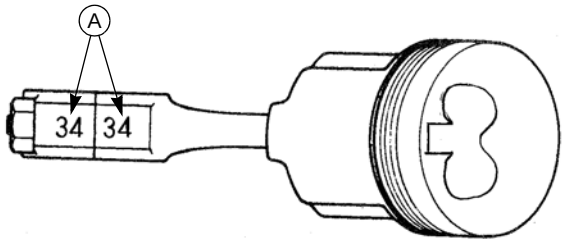

Fig. 3-23

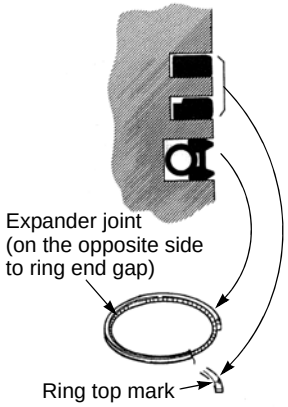

Fig. 3-24

https://truckmanualshub.com/

Disassembly, inspection and reassembly of bearing holder

Disassembly and inspection

Center bearing

1. Remove the bearing holder, and replace the bearing if peeling, melting, uneven wear, or improper contact is noticed.
2. Measure the oil clearance of the crankshaft center journal and bearing using a plasti-gauge.
3. If the oil clearance exceeds the service limit according to the result of the measurement, replace the bearing and/or crank shaft.

Bearing size	Bearing part No.	Crankshaft center journal finishing dia ø in(mm)
STD	198517572 (upper) 198517582 (lower)	1.8883-1.8888 (47.964– 47.975)

Clearance between crankshaft center journal and bearing (Oil clearance) in(mm)	
Standard assembling value	Service limit
0.0012-0.0036 (0.03-0.092)	More than 0.008(0.2)

Reassembly

Bearing holder, Center bearing

1. Install the bearing holder with identification cutting mark at the center and the aluminum bearing holder on the flywheel side, facing the stepped side to the front side.
2. Install the bearing with oil groove to the upper side and the one without oil groove to the lower side.

Note: Be sure that the oil holes of the bearing holder and cylinder block are aligned.

Bearing holder tightening torque	14-17.5 lb_f •ft(20–25 Nm) {2.0–2.5 kgfm}

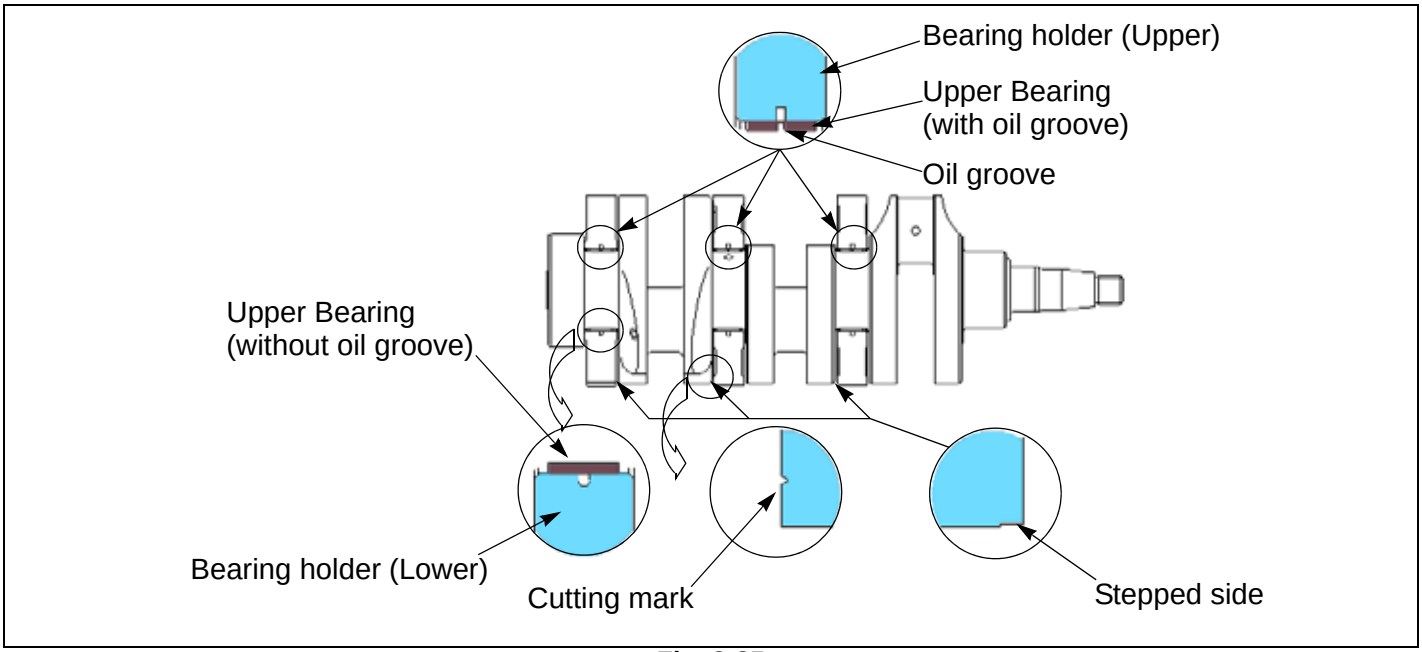

Fig. 3-25

Crankshaft bearing (bushing)

https://truckmanualshub.com/

Inspection

1. Check the bearing and replace if peeling, melting, uneven wear, improper contact, or other damage is noticed.
2. Measure the oil clearance of the bearing and crankshaft journal using a cylinder gauge and micrometer.
3. If out of specification, replace the bearing and/or crankshaft.

Clearance between crankshaft journal and bearing (Oil clearance) in(mm)	
Standard assembling value	Service limit
0.0015-0.0042 (0.039-0.106)	More than 0.008(0.2)

Bearing size	Bearing part No.	Crankshaft journal outside dia. Finishing dimension ø in(mm)
STD.	198517592	1.8883-1.8888 (47.964-47.975)

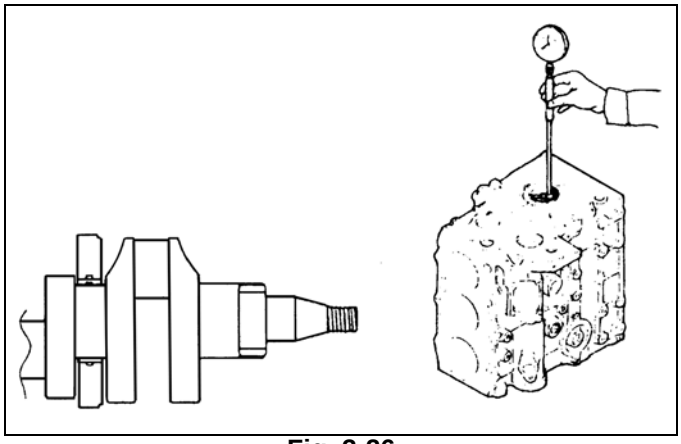

Fig. 3-26

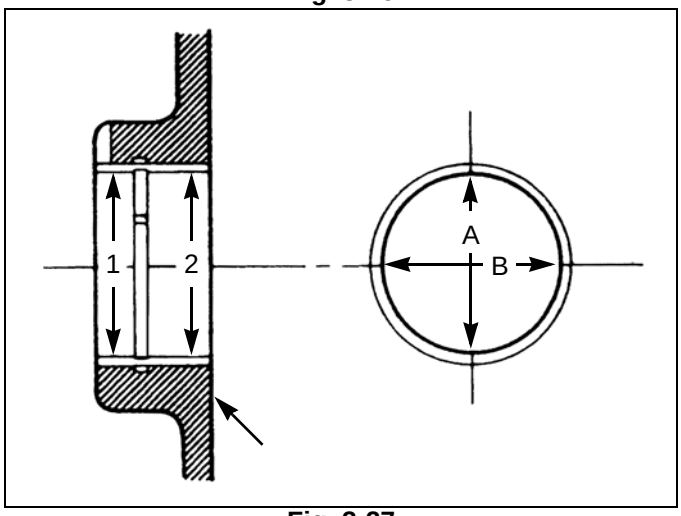

Fig. 3-27

NOTE:

1. **Measure the dimensions in the A and B directions at positions 1 and 2 in Fig. 3-27 avoiding the oil hole in the bearing. Calculate the difference between that measurement and the maximum diameter of the crankshaft journal (oil clearance).**
2. **When replacing the bushing, push it up using a press or similar method. At this time, align the oil holes and push it up until the bushing end surface becomes flush with the outside machined surface of the cylinder block (see the arrow mark in the figure at right).**
3. **If the crankshaft journal has been ground, check the oil clearance before reinstalling it.**

Crankshaft

https://truckmanualshub.com/

Inspection

1. To measure run-out of the crankshaft, support the crankshaft using a V block as shown inFig. 3-28. Using a dial indicator as shown, measure the run-out of the center to the crankshaft center journal, by slowly rotating the shaft through one revolution. If the service limit is exceeded, correct or replace.
2. Check the crankshaft oil seal for damage or wear on the contact surface and oil hole for clogging.
3. Check the crankshaft journal and pin for damage, irregular wear (ellipticity, conicalness), and shaft diameter. If service limit is exceeded replace the bearing (bushing) and/or crankshaft. Measure the dimensions of the journal and pin in the AA and BB directions at positions 1 and 2 (Fig. 3-29) avoiding the oil holes.

Crankshaft run-out in(mm)	
Standard assembling value	Service limit
Less than 0.0012(0.03)	More than 0.0024(0.06)

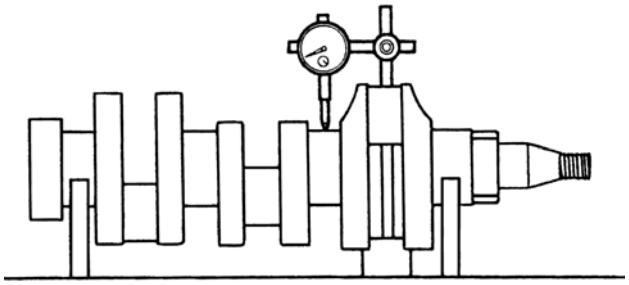

Fig. 3-28

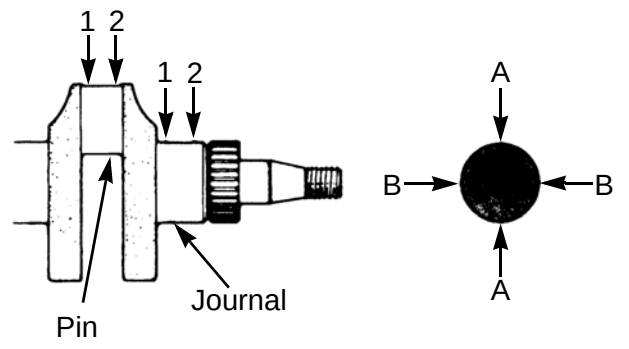

Fig. 3-29

Irregular wear limit of crankshaft journal and pin ø in(mm)		
More than 0.0020(0.05)		
Shaft dia. At crankshaft journal ø in(mm)		
Size	Outside dia. Finished dimension	Repair value
STD.	1.8883-1.8888 (47.964-47.975)	Less than 1.886(47.9)
Shaft dia. At crankshaft pin ø in(mm)		
Size	Outside dia. Finished dimension	Repair value
STD.	1.6128-1.6132 (40.964-40.975)	Less than 1.6102(40.90)

Flywheel and ring gear

https://truckmanualshub.com/

Inspection

Check the ring gear and replace if damaged or excessive wear is noticed.

When the wear is limited to a small area, remove the, ring gear, turn it about 90 degrees and shrinkage-fit to reuse it. To shrinkage-fit the ring gear, heat it to 248-302°F(120–150°C) to allow it to expand.

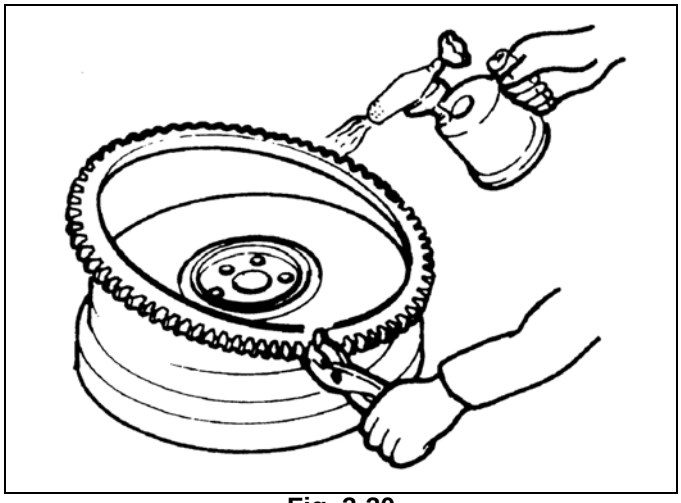

Fig. 3-30

Cam shaft assembly

Inspection

1. Check the journal and cam for wear and damage and replace if the service limit is exceeded.
2. Correct insignificant uneven wear or scars on the cam surface using oil stone or equivalent.

A. Height of intake/exhaust valve cams in(mm)	
Standard assembling value	Service limit
1.0459-1.0480 (26.565-26.62)	Less than 1.032(26.2)
B. Height of injection pump cams in(mm)	
Standard assembling value	Service limit
1.5701-1.5764 (39.88-40.04)	Less than 1.563(39.7)

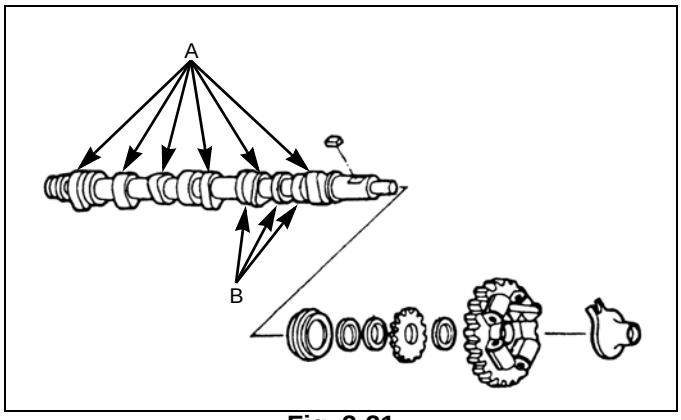

Fig. 3-31

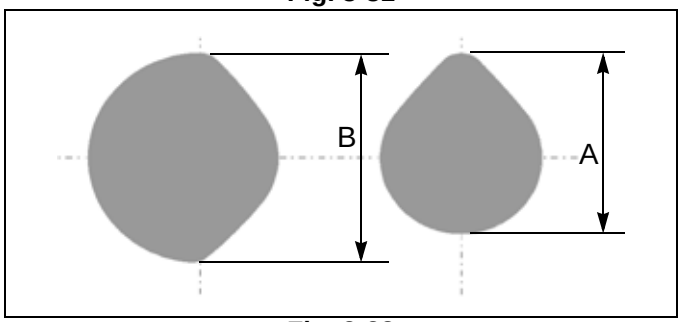

Fig. 3-32

Timing gear

Inspection

1. If pitting or excessive wear is observed on the tooth face of gears, replace the gear.
2. Measure the backlash of gears and replace if the service limit is exceeded.

Timing gear backlash in(mm)	
Standard assembling value	Service limit
0.0031(0.08)	More than 0.0098(0.25)

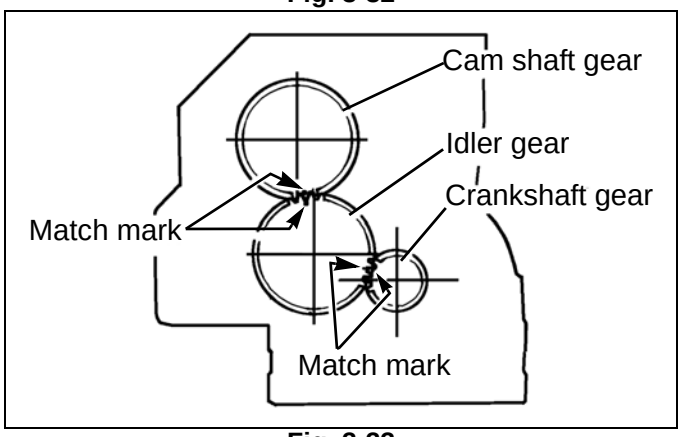

Fig. 3-33

https://truckmanualshub.com/

Oil flow

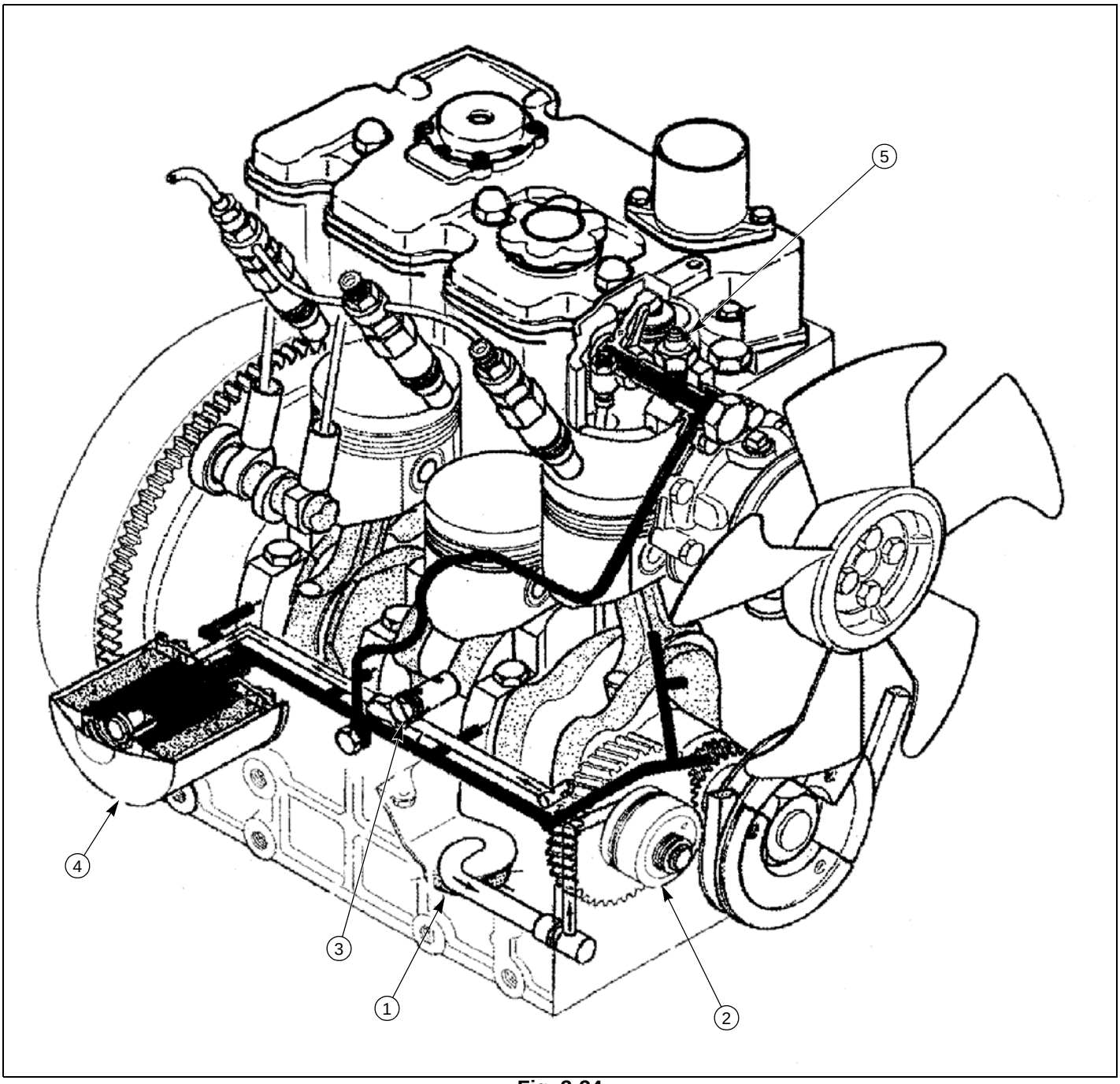

Fig. 3-34

1. Suction filter 2. Oil pump 3. Relief valve	4. Oil filter 5. Oil Pressure switch

https://truckmanualshub.com/

Oil pump

Disassembly

Removal from engine

1. Remove the snap ring.
2. Remove the collar, spring and shim.
3. Remove the idle gear, vane, and oil pump cover together.
4. Extract the rotor and thrust washer.
5. Extract the oil pump cover from the idle gear.

Inspection and reassembly

1. Check the oil pump cover, rotor and vane and replace if worn out or excessively damaged.
2. Check the clearance between the rotor and vane and replace if the service limit 0.0098 in(0.25 mm) is exceeded.
3. Reassemble in the reverse order of disassembly.
   a. Install the crankshaft gear and idle gear aligning the match mark.
   b. Adjust the side clearance of the rotor and vane to 0.0039-0.0059 in(0.1–0.15 mm). (See Fig. 3-36)

Oil filter

Structure and Functions

1. The oil filter is a full flow cartridge type.
2. When (if) the filter is clogged the safety valve opens and allows oil to flow, preventing seizures and other engine related problems.
3. Oil, fed under pressure from the oil pump, enters at point (A), is filtered by the element, and supplied to the lubrication system from point (B). When the element is clogged, the oil bypasses the filter element.

Replacement

1. Replace the oil filter after first 50 hours and every 100 hours of operation thereafter.
2. Coat the filter mounting surface with oil and tighten the filter by hand.
3. For engines with remote mounted oil filters, fill filter with oil prior to installation.
4. Do not reuse the filter.

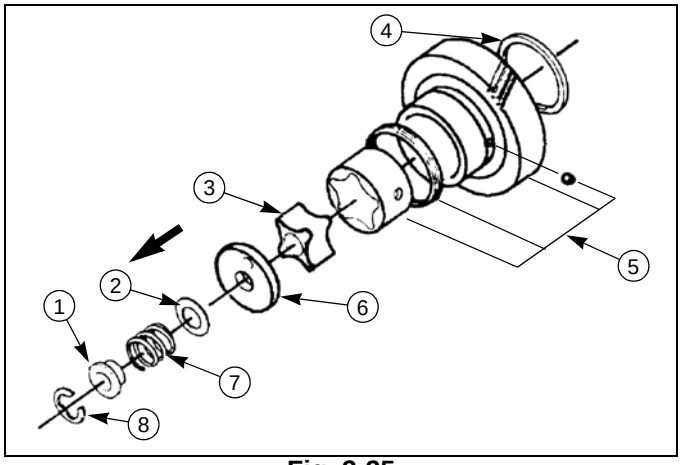

Fig. 3-35

1. Collar	5. Idle gear assembly
2. Shim	6. Oil pump cover
3. Rotor	7. Spring
4. Thrust washer	8. Snap ring

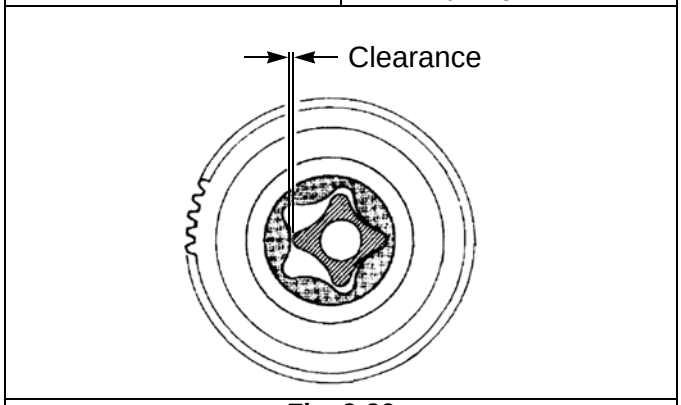

Fig. 3-36

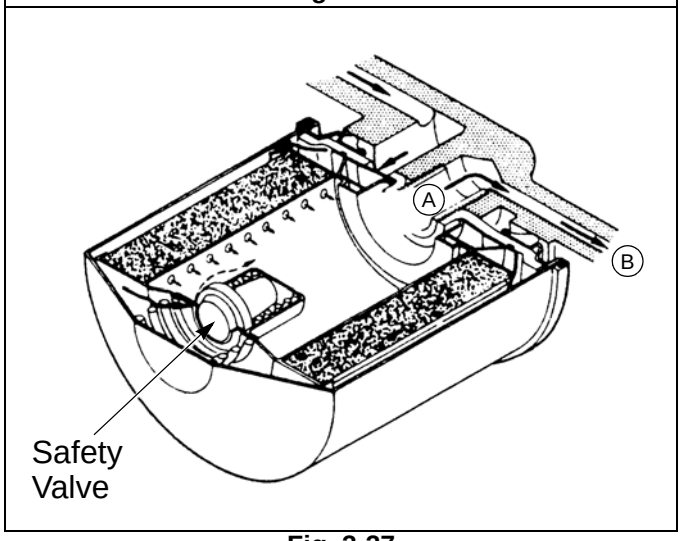

Fig. 3-37

https://truckmanualshub.com/

Water pump assembly and thermostat

Disassembly and inspection

1. Remove the set plate and gasket.
2. Inspect the water pump and replace if cracked, worn, or damaged.

Note: The pump main body is aluminum die cast and should be replaced as an assembly if there are leaks or other problems.

Specification and inspection

Thermostat

1. Replace if the valve is opened slightly at room temperature.
2. Immerse the thermostat in water, increase the water temperature gradually and check the valve opening temperature and valve lift. (See Fig. 3-38)

Note: 3 to 5 minutes are required for the valve to open.

Reassembly

Reassemble the components in the reverse order of disassembly.

Type	Wax pellet
Opening temperature	163.4-170.6°F (73° - 77°C)
Full-opening temperature	188.6°F(87°C)
Valve lift	0.24 in.(6.0 mm)

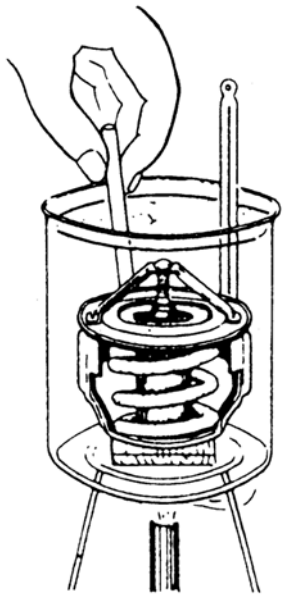

Fig. 3-38

Radiator

Inspection

1. Check the radiator, hose, and reservoir tank for water leakage. Repair any damage found.
2. Check the radiator fins and remove dust, mud, or other foreign material clogging the air passage.
3. Check the pressure valve and negative pressure valve of the radiator cap for valve opening pressure and sealing condition. Replace if defective.
4. Check the radiator hose and replace if damaged or aged.
5. If the screen is clogged, remove and clean.
6. The cooling water level in the reserve tank should be always between FULL and LOW.

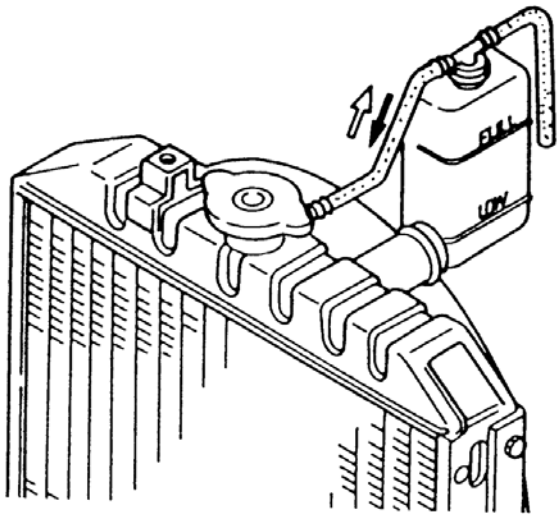

Fig. 3-39

https://truckmanualshub.com/

Fuel filter

Note: N843 and N843L engines (used in the Hustler 3500 and 3700) have an electric fuel pump.

Fuel flow

The fuel flows as shown in Fig. 3-40, from the tank, pressurized by the injection pump to high pressure, and fed to the nozzle and injected to the combustion chamber.
The fuel, after lubricating the nozzle needle, is returned to the tank through the overflow pipe.

Note: S773L engine (used in the Hustler Diesel Z) has a marine type squeeze ball located between tank and Mechanical pump. Squeeze ball us used for fuel priming purposes

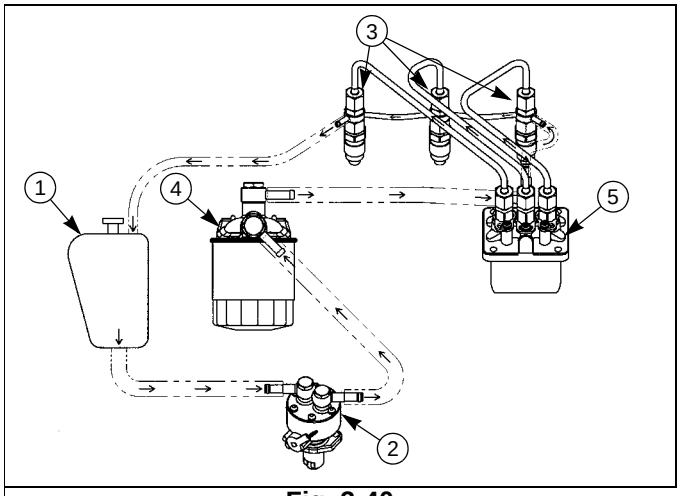

Fig. 3-40

1. Fuel Tank 2. Mechanical fuel pump 3. Nozzle and holder	4. Fuel filter 5. Injection pump

Inspection

If water, dust, or other foreign matter is observed in the sediment bowl, clean and replace the filter if necessary.

Disassembly and reassembly

1. Remove the filter turning by the filter ring nut counterclockwise.

Note: Be careful not to damage the O-ring between the ring nut and main body, coat with grease before tightening.

2. Coat the area of the element to be mounted to the main body with grease and install the element by hand.

Governor

Structure and functions

1. Governor:

This governor is a mechanical all-speed governor. It is installed in the gear case. The flyweight assembly is installed to the camshaft and its movement is transmitted to the control rack of the injection pump through the slider control lever link. The spring which controls the movement of the flyweight is connected to the arm COMPL and tension lever. The spring tension is changed by changing the governor lever to control the engine speed.

2. Maximum speed set bolt:

A bolt is mounted on the cylinder block. This bolt limits the movement of the arm COMPL (unloaded maximum rpm). This bolt has been adjusted and sealed at the factory.

3. Smoke set, start spring:

These are built into the cylinder block to regulate the fuel injection amount at high-speed range. Regulation of the fuel injection amount at middle speed range is made with a torque control spring to obtain higher torque.
A start spring is placed between the gear case and link. This spring automatically functions to increase the amount of fuel injected when the engine is started. The smoke set has been adjusted at the factory.

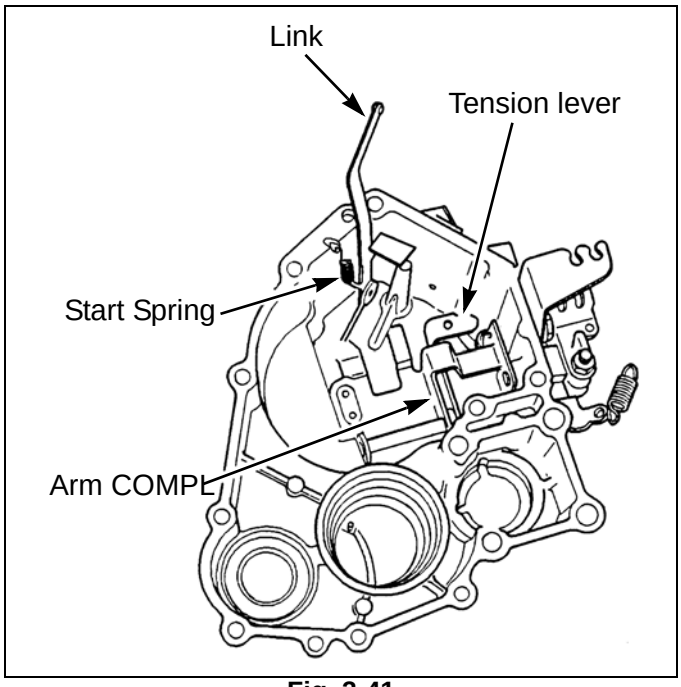

Fig. 3-41

Injection pump

Disassembly, Inspection and Reassembly

Disassembly, inspection, and reassembly of injection pump:

Note: Service of fuel injection pump is to be done

https://truckmanualshub.com/

by authorized service personnel, only. Any service done by unauthorized personnel, will void the injection pump warranty.

Note: No service parts are available for the fuel injection pump.

Trouble-shooting

Symptom	Possible Cause	Check or Remedy
1. Engine does not start.	1. Empty fuel tank or air mixed in fuel. 2. Defective engine stop solenoid.	1. Fill fuel tank, check for air entering system, bleed air. 2. Check and replace the electric system.
2. Engine starts but will not stop at once.	1. Filter or lines clogged. 2. Air mixed in fuel. 3. Fuel tank filter cap air breather clogged. 4. Short-circuit or disconnected wire in wiring harness to engine stop solenoid.	1. Replace or clean out. 2. Check fuel lines and connections. 3. Wash 4. Inspect and repair.
3. Engine output unstable	1. Air mixed in fuel. 2. Water mixed in fuel.	1. Check fuel lines and connections. 2. Replace fuel, replace filter.
For additional trouble-shooting, refer to Section 6: Trouble-Shooting		

Nozzle and holder

Specifications

Part No.	131406440	Pintle dia.	ø 0.0394 in(1 mm)
Assembly No.	105148-1210	Valve opening	185.65-1778.16 PSI (1.28–12.26 MPa) {115–125 kgf/cm^2}
Nozzle holder	105078-0100		
Nozzle	105007-1170 (NP-DN4PDN117)	Injection angle	4°
Needle valve dia.	ø 0.0866 in(2.2 mm)	Nozzle type	Throttle type

Structure and functions

The nozzle is a precision assembly used to inject the fuel, which is fed from the injection pump under pressure, to the combustion chamber. It consists of the components as shown in Fig. 3-42 on page 3-18. The fuel is fed under pressure, from the oil hole of the nozzle holder main body to the nozzle body. When the pressure exceeds the specified value, the spring is compressed opening the valve, allowing the fuel to be injected into the combustion chamber. At the same time, the fuel lubricates and cools the nozzle and nozzle body. Excess fuel is returned to the tank by the return line.

https://truckmanualshub.com/

Disassembly and inspection

1. Place the nozzle holder (body) in a vise and disassemble turning the nozzle nut.

   Note: Be careful not to drop the needle valve when removing the nozzle.

2. Wash the nozzle and needle valve and check for seizure and sticking in the nozzle, and fuel leakage on the seat surface. Correct fuel leakage by lapping the seat.
3. Check the nozzle spacer for defects; it must seal against the nozzle body holder and the nozzle body.
4. Check the push rod for wear on the nozzle needle valve contact surface and check the spring seat for cracks.

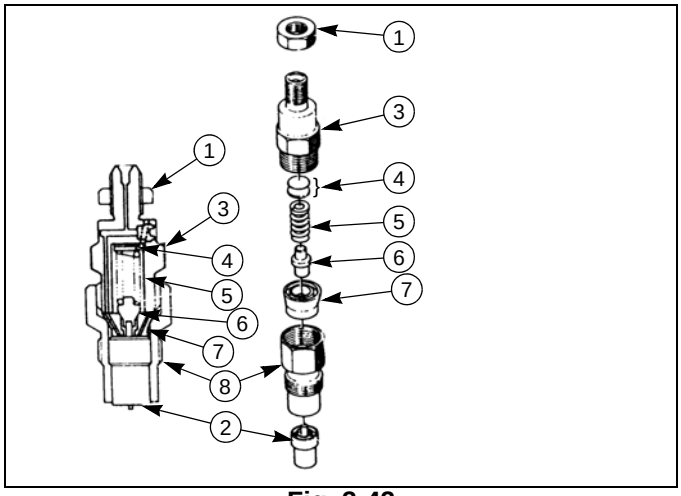

Fig. 3-42

1. Nut 2. Nozzle 3. Nozzle body 4. Shim	5. Spring 6. Needle valve 7. Spacer 8. Nozzle nut

Reassembly and adjustment

1. When assembling a new nozzle assembly, heat light oil to 122-140°F(50–60°C) and remove the rust preventative from it for use in a nozzle tester.
2. Slide the needle valve into the nozzle body without the spring and shims, to ensure that they slide easily.
3. Invert the nozzle body; place the shim(s), spring, needle valve, spacer and nozzle on the nozzle body in this order. Install nozzle nut and tighten.
4. After assembly, check nozzle injection pressure.
   a. Adjust by the adjusting shims so that the injection is started at 1707.1 PSI (11.77 MPa) {120 kgf/cm^2} on all models.

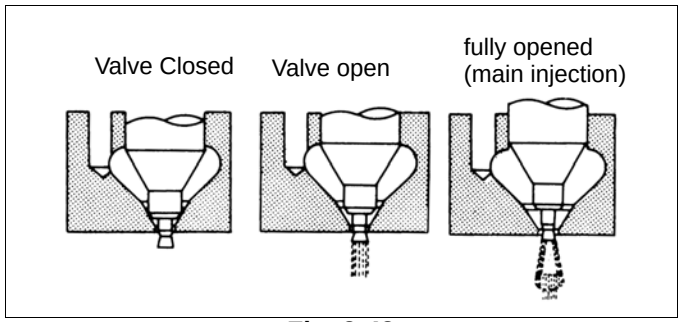

Fig. 3-43

   b. The pressure increases or decreases about 142.1 PSI (0.98 MPa) {10 kgf/cm2} for shims of 0.00340 in(0.1 mm) thickness.
5. Injection condition
   a. Small drops should not be mixed in the spray.
   b. The injection pattern should be conical in shape.
   c. Place white paper at about 11.8 in.(30 cm) from the nozzle and confirm that the spray is approximately circular when injected.
   d. Lower the pressure 284.3 PSI (1.96 MPa) {20 kgf/cm2} from the specified value of 1707.1 PSI (11.77 Mpa) {120 kgf/cm2} and check that the test oil does not drip from the nozzle end.

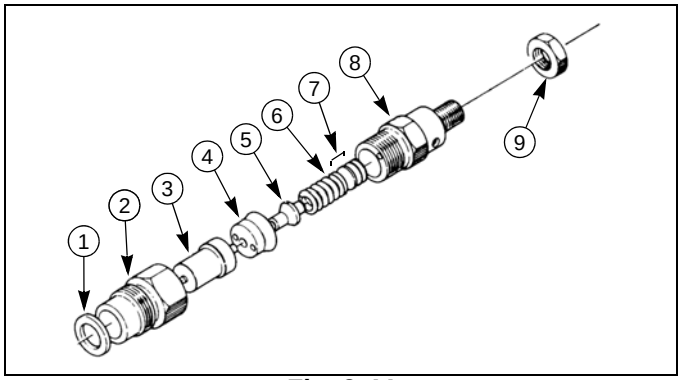

Fig. 3-44

1. Gasket 2. Nozzle nut; Torque: 21.7-36.2 lb_f •ft (3-5 kgf•m) 3. Nozzle 4. Nozzle spacer 5. Needle valve	6. Spring 7. Shim 8. Nozzle body 9. Nut; Torque: 21.7-29.3 lb_f •ft (3-4 kgf•m)

https://truckmanualshub.com/

SECTION 4: ENGINE RE-ASSEMBLY

Caution: before assembling engine;

1. **Clean parts to be installed. (Especially oil passages, bearings, pistons, and cylinder bores carefully.)**
2. **Coat the sliding and rotating parts of the cylinder bore, piston, bearing and other parts with new oil before installing.**
3. **Use new gaskets. If necessary, use gasket sealants to prevent oil leakage.**
4. **Do not tighten bolts and nuts for aluminum alloy parts excessively. Tighten them to specified torque.**

Relief valve assembly with O-Ring.

Relief valve, torque to:

Relief valve torque
43.5-50.9 lb_f•ft (59-69 N·m) {6.0-7.0 kgf·m}

41.3-48.3 lb_f •ft (59–69 N·m) {6.0–7.0 kgf·m}

Crank shaft and bearing holder assembly

Cylinder block to bearing holder torque

Bearing holder bolts		
A	Hexagon socket head bolt	17.5-20.3 lb_f•ft (25–29 N·m) {2.5–3.0 kgf·m}
B	Hexagon bolt	17.5-20.3 lb_f•ft (25–29 N·m) {2.5–3.0 kgf·m}

Notes: 1. Be careful not to damage the bushing in the cylinder block by the crankshaft gear when install the crankshaft and bearing holder assembly.

2. Install the two hexagon socket head bolts for the flywheel side bearing holder.

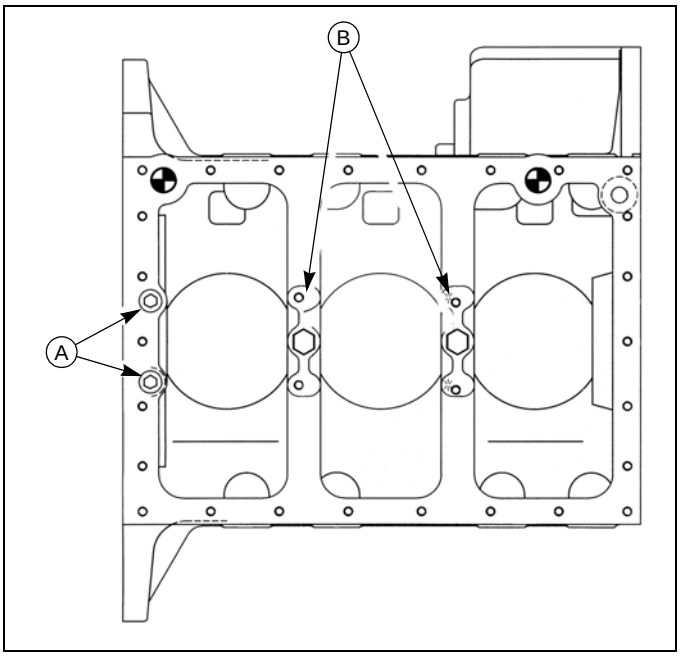

Fig. 4-1

Measure the end play of crankshaft.

Crankshaft end play	
Standard value	0.004-0.012 (0.1–0.3)
Service limit	More than 0.020(0.5)

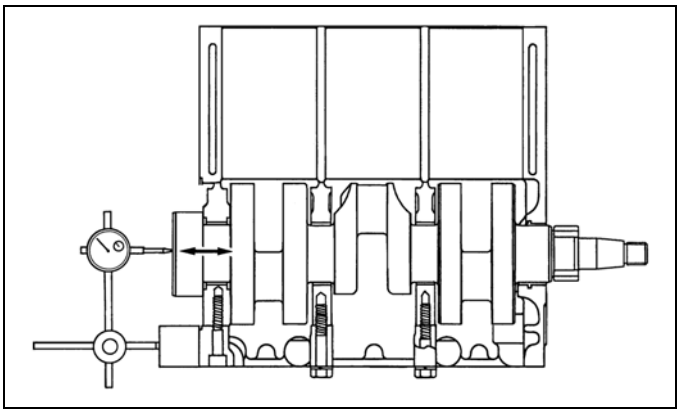

Fig. 4-2

https://truckmanualshub.com/

Oil seal

Coat the seal lip of the oil seal prior to installing the seal in the block.

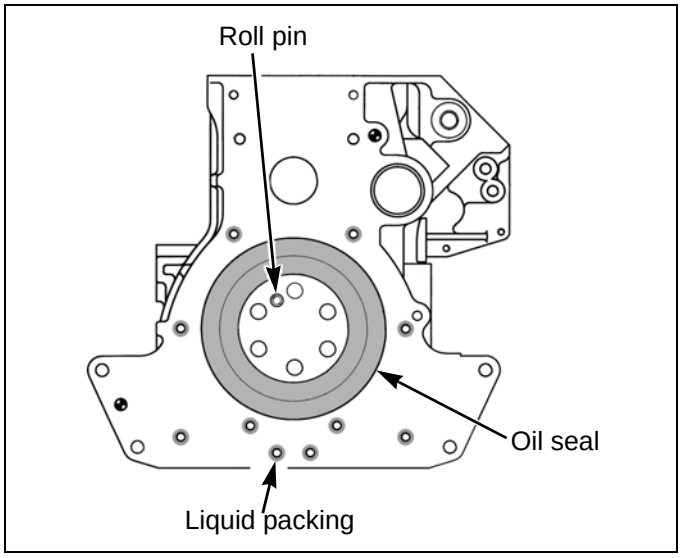

Fig. 4-3

Rear plate

Note: Apply the liquid gasket around the M8 screw holes on the rear plate

Rear plate torque:
16.8-20.3 lb_f•ft (24–29 N·m) {2.4–3.0 kgf·m}

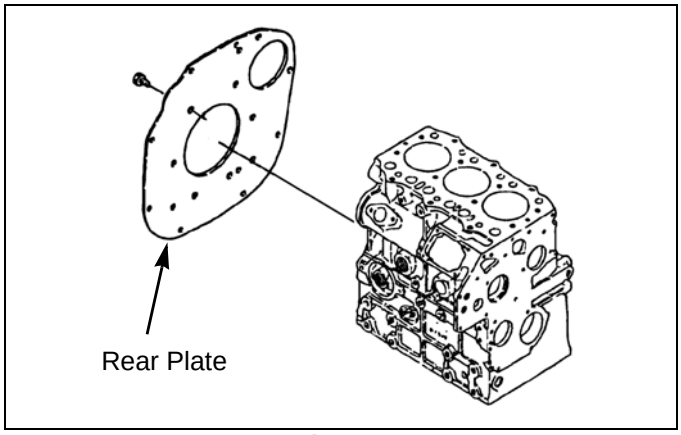

Fig. 4-4

Flywheel

Align the hole to the roll pin on the crankshaft.

Fly wheel torque
49.7-54.6 lb_f•ft (71–78 N·m) {7.2–8.0 kgf·m}

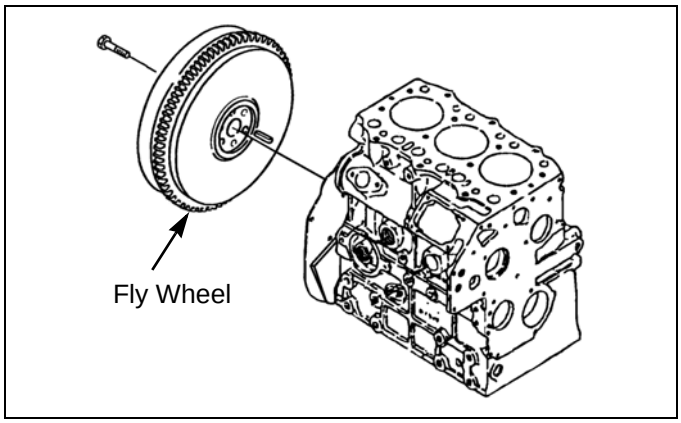

Fig. 4-5

https://truckmanualshub.com/

Piston and connecting rod assembly

1. Coat the metal surface, piston and piston ring with engine oil.
2. Turn the ring to distribute the oil in the ring groove, and set the ring end gaps at 90° respectively avoiding piston pin direction and the direction at a right angle to the piston pin.
3. Insert the ring facing the connecting rod figure match mark toward the injection pump side, using ring pliers.

   Note: Place the smallest connecting rod figure match mark to the front cylinder position so that the figures increase toward the rear of the engine.

4. Tighten the connecting rod cap with the specified torque and check for the axial play.

Connecting rod torque
20.3-23.8 lb_f•ft (29–34 N·m) {3.0–3.5 kgf·m}

Notes: 1. After tightening, verify that the crankshaft moves easily.
2. The connecting rod should move 0.004-.012 in (0.1–0.3 mm) in the axial direction.

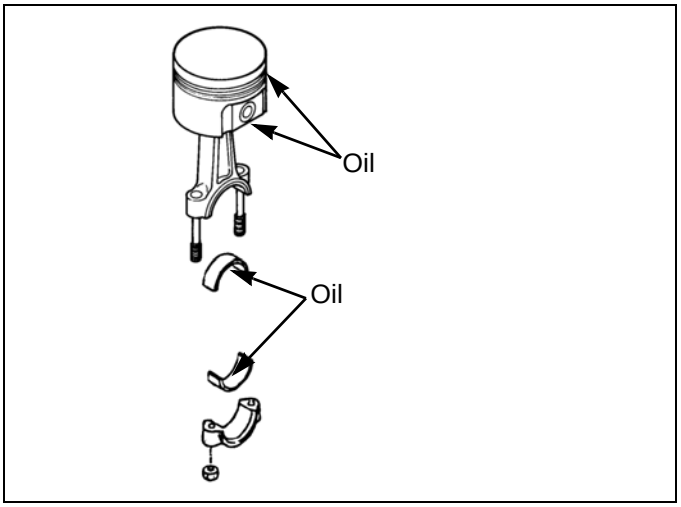

Fig. 4-6

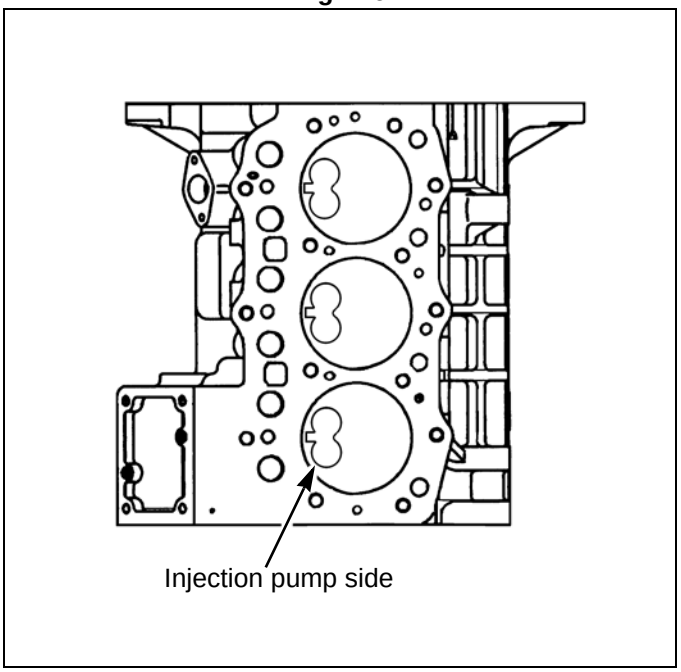

Fig. 4-7

Suction pipe · Suction filter

1. Install an O-Ring on the suction pipe and insert the suction pipe into the cylinder block.
2. Place the suction pipe end into the suction filter and fasten the suction filter.

Suction filter torque
79.7-115.1 lb_f•in (9–13 N·m) {0.9–1.3 kgf·m}

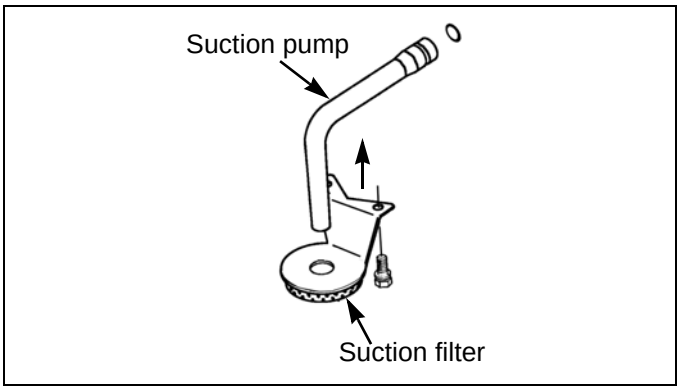

Fig. 4-8

https://truckmanualshub.com/

Oil pan

Start tightening the bolts of the oil pan from the center, then tighten the opposing bolt on opposite side on the diagonal and to specified torque. (See Fig. 4-9).

Bolt torque
7.4-9.6 lb_f•ft (10–13 N·m) {1.0–1.3kgf·m}

Oil dipstick · Dipstick guide

Install the oil level gauge and gauge guide using two O-Rings.

Front plate

Install the front plate together with the gasket.

Camshaft assembly · Tachometer shaft plate

1. Install the tachometer shaft.
2. Install the cam shaft assembly (be careful with the bearing).
3. Fix the tachometer shaft and cam shaft assembly with the plate.

Plate torque
79.7-115.1 lb_f•in (9–13 N·m) {0.9-1.3 kgf·m}

Note: When installing the timing gear case, align the notch in the slider with the guide pin.

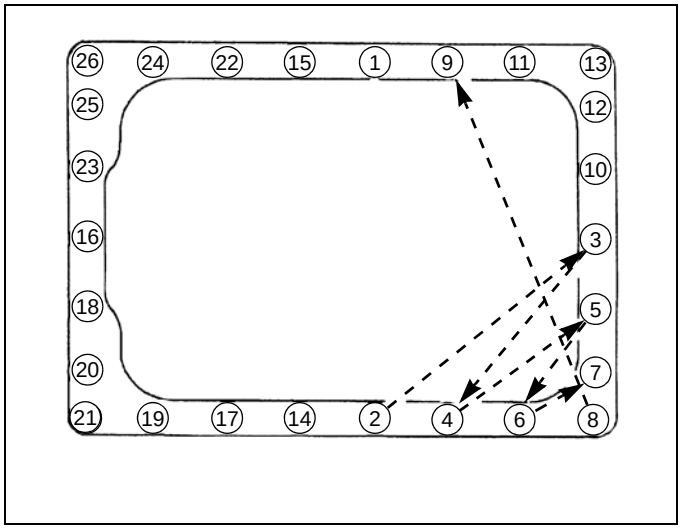

Fig. 4-9

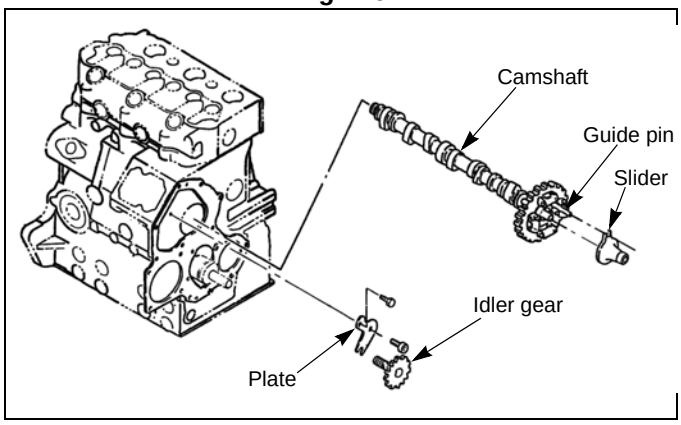

Fig. 4-10

https://truckmanualshub.com/

Idle gear · Oil pump assembly

1. Install a thrust washer to the idle gear shaft.
2. Install the idle gear assembly.
3. Align the match marks of the idle gear, crankshaft gear and camshaft gear and install it to the idle gear shaft.
4. Install the rotor.
5. Install the oil pump cover, shim, spring and collar and fix with a snap ring.

Notes:
1. **Coat both sides of the rotor and vane with grease before installing them.**
2. **Do not turn the crankshaft until the timing gear case is installed.**
3. **By turning the oil pump cover either direction, set the spring pin insert hole to the middle position and fit the gear case.**

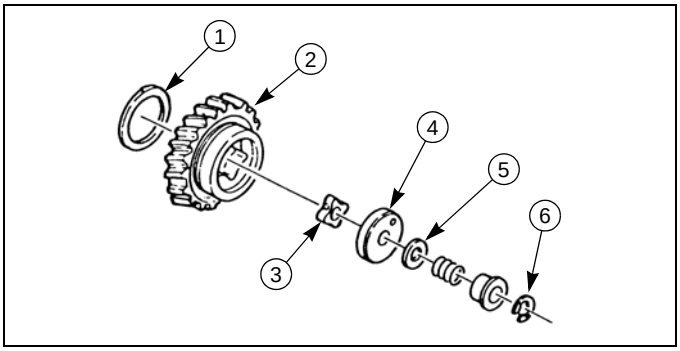

Fig. 4-11

1. Thrust washer 2. Idle gear ass'y 3. Rotor	4. Oil pump cover 5. Shim 6. Snap ring

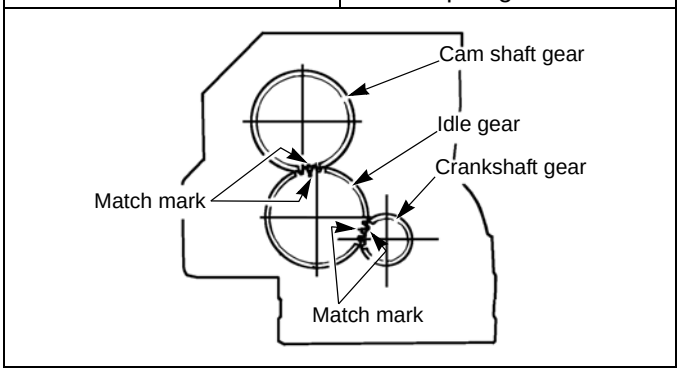

Fig. 4-12

6. Adjust the shims so that the oil pump, rotor and vane side clearance is 0.004-0.006 in (0.1–0.15 mm).

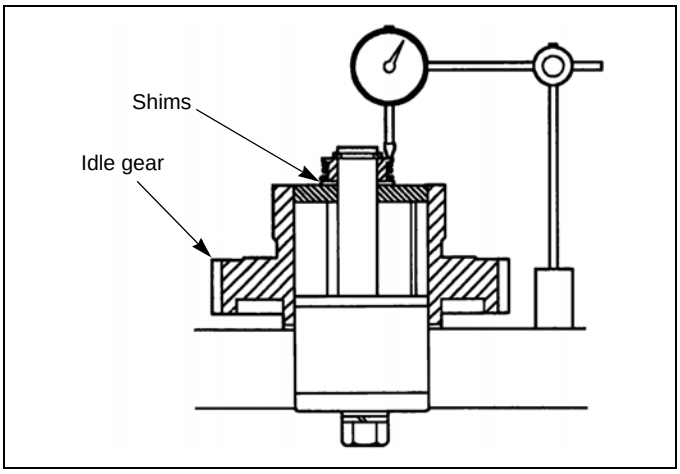

Fig. 4-13

Timing gear case · Cover

1. Loosen the lock nut and remove the low idle set bolt. Install the start spring between the timing gear case and governor link.
2. Insert the link into the cylinder block hole while turning the governor lever to clockwise and hold it, and then install the timing gear case.
3. Reinstall the low idle set bolt and secure the lock nut.
4. Install the covers.

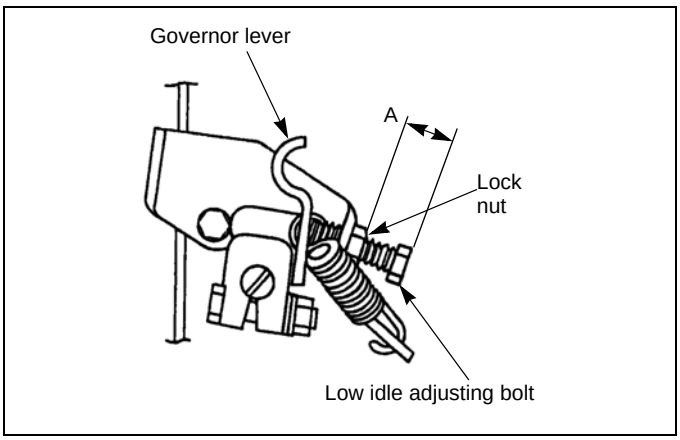

Fig. 4-14

https://truckmanualshub.com/

Crankshaft pulley

Install the key into the crankshaft, and install the crankshaft pulley and tighten with the nut.

Crankshaft pulley torque
82.6-88.9 lbf•ft (118–127 N·m) {12–13 kgf·m}

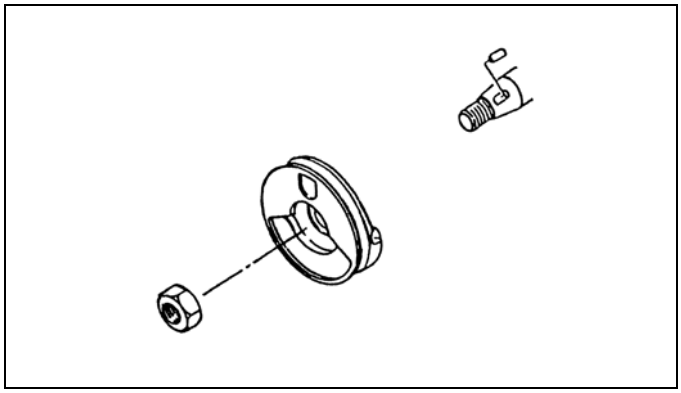

Fig. 4-15

Injection pump assembly

1. Install the shim, which was removed during disassembly, connect the control rack of the injection pump and link, and install the snap pin.
2. Tighten the injection pump bolts and nuts.

Injection pump torque
73.47-100.0 in•lb_f (8.3–11.3 N·m) {0.85–11.5 kgf·m}

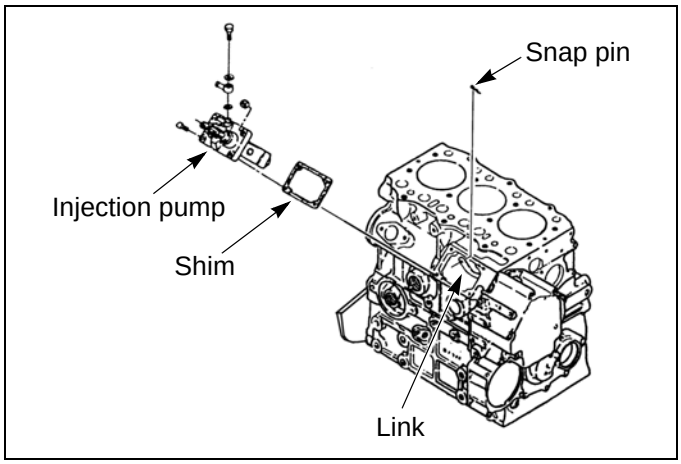

Fig. 4-16

Injection timing adjusting shim	
Thickness in(mm)	Part code
0.008 (0.2)	131437590
0.012 (0.3)	131437600
0.016 (0.4)	131437610
0.020 (0.5)	131437620
0.020 (0.5)	*131437630
* Without beading	

Notes: 1. When shim is not required, use a light coat of silicone before installing.

2. The injection timing varies about 2º with 0.012in (0.3 mm) of shims.

3. Use a combination of shims (0.020 in (0.5 mm)) with beading and a shim (0.020 in (0.5 mm)) without beading when you need adjusting shims more than 0.0394 in (1.0 mm).

‘Oil filter

Coat the mounting surface with a small quantity of oil and tighten by hand.

Engine stop solenoid

Tighten the engine stop solenoid lightly with pliers.

https://truckmanualshub.com/

Cylinder head assembly

1. Set the piston at top dead center (TDC) and measure the projection or depression from the face of the cylinder block with a depth gauge or dial indicator.

Notes: 1. Measure, holding the piston lightly by hand.
2. Use the largest projection value to determine head gasket usage.

2. Select a head gasket according to the measured value.

Note: The last four digits of the part number are stamped on the top surface of the head gasket.

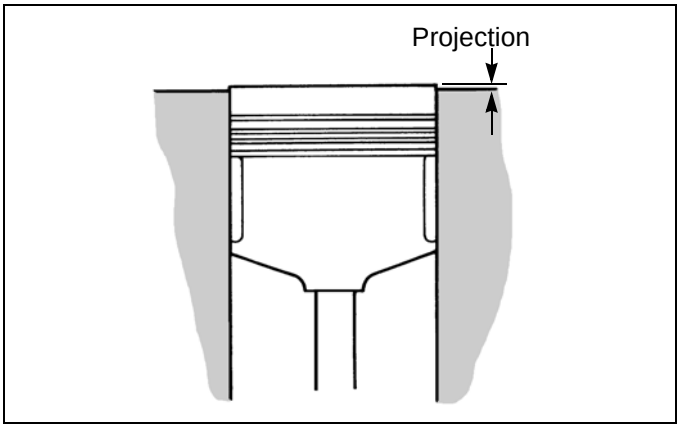

Fig. 4-17

Measured value in(mm)	Head gasket part code No.	Thickness when tightened
0.0217-0.0256 (0.55–0.65)	111147560	t=0.047(1.2)
0.0256-0.0295 (0.65–0.75)	111147570	t=0.051(1.3)

3. Tighten the cylinder head in several steps in the order as shown in Fig. 4-18 and tighten to the specified final torque

Cylinder head tightening torque
34.3-34.6 lb_f•ft (49– 52 N·m) {5.0–5.3 kgf·m}

Notes: 1. Be careful not to damage the spring pin, which positions the cylinder head assembly.
2. Coat the cylinder head bolt threads with grease containing disulfide molybdenum.

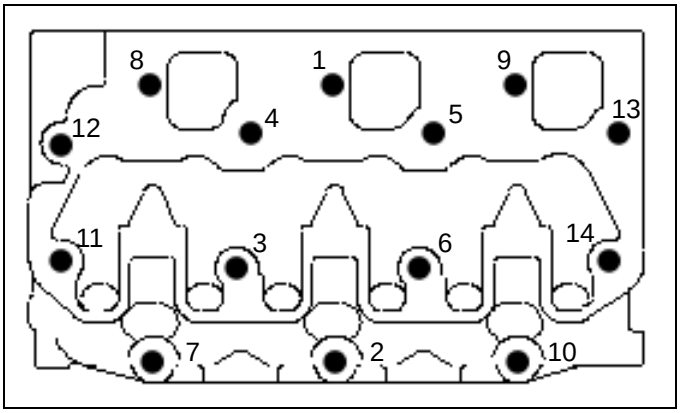

Fig. 4-18

https://truckmanualshub.com/

Cap · Push rod · Rocker arm assembly

1. Install the cap to the valve stem end.
2. Install the push rod and rocker arm assembly.

Rocker arm assembly tightening torque
177.0-221.3. lb_f•in (20–25 N·m) {2.0–2.5 kgf·m}

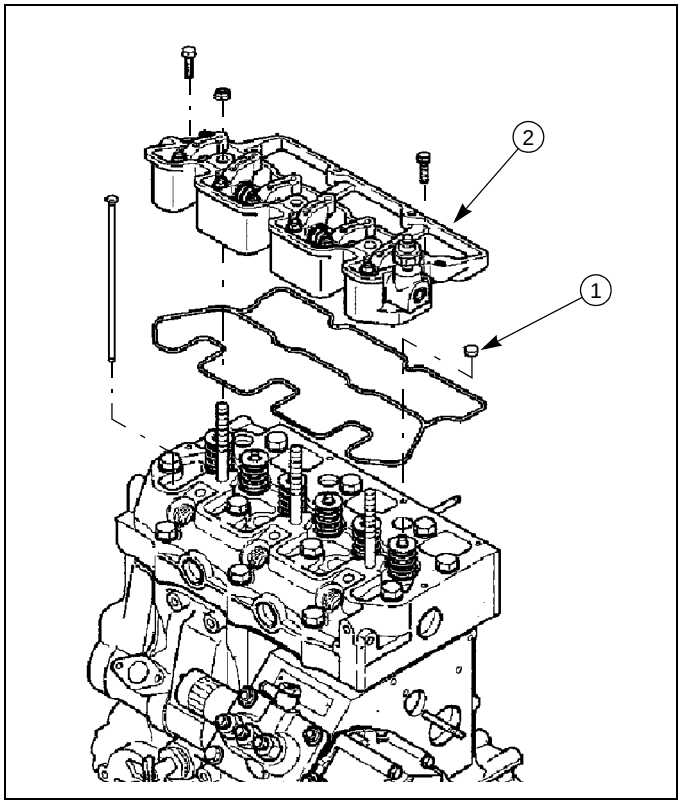

Fig. 4-19

Valve clearance adjustment

Loosen the locking nut of the intake and exhaust valve rocker arm and adjust the valve clearance to 0.008 in (0.2 mm) by turning the adjust screws.

Notes: 1. Adjust the valve clearance while cold.
2. Be sure the tappet is in its lowest position before making adjustment. To be sure the tappet is in its lowest position, bring the piston to top dead center on the compression stroke. (both valves closed)

Lock nut tightening torque
106.2-141.6 lb_f•in (12–16 N·m) {1.2–1.6 kgf·m}

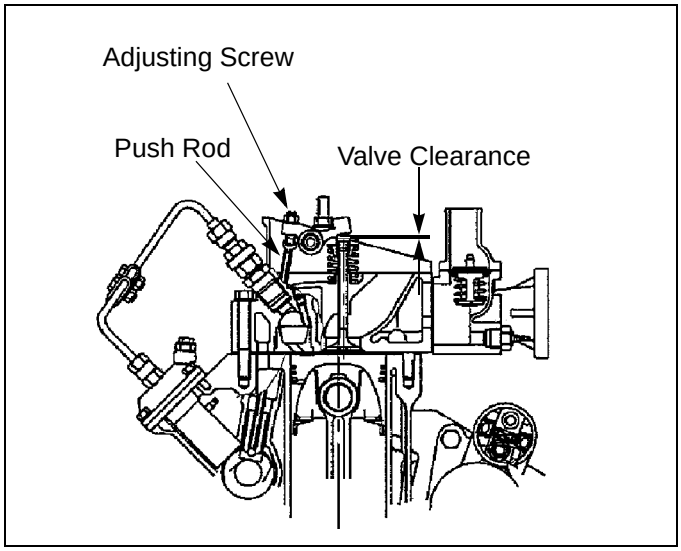

Fig. 4-20

https://truckmanualshub.com/

Oil pressure switch

Oil pressure switch tightening torque
88.5-106.2 lb_f•in (10–12 N·m) {1.0–1.2 kgf·m}

Oil pipe

Eye bolt torque	
M8	88.5-115.1 lb_f•in (10–13 N·m) {1.0–1.3 kgf·m}

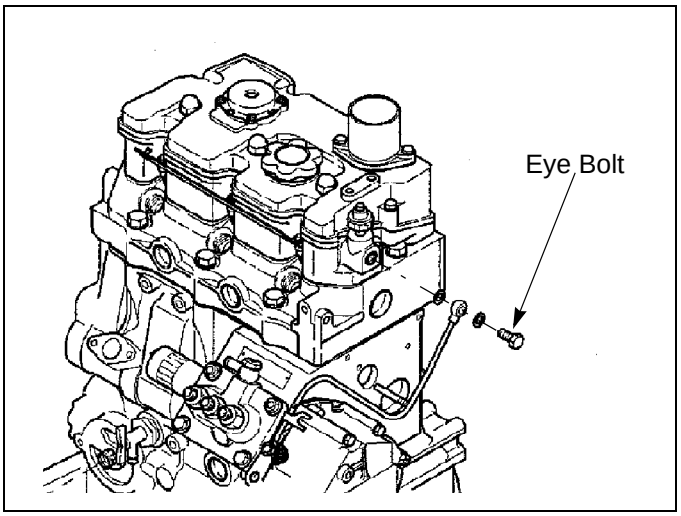

Fig. 4-21

Water pump assembly · Bypass hose

1. Install and tighten the gasket and water pump assembly ①.
2. Connect the thermostat case and water pump case with bypass hose ②.
3. Install the radiator hose ③.

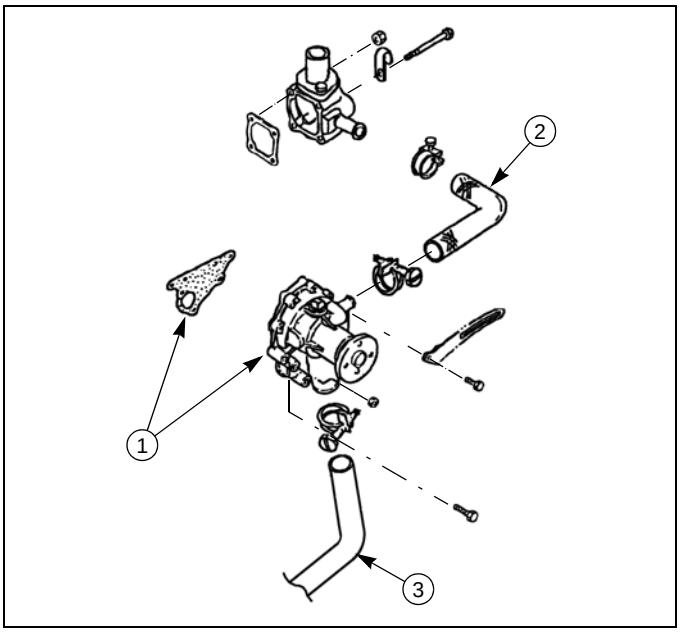

Fig. 4-22

Valve cover

Tighten the valve cover evenly being careful not to damage the O-ring.

Head cover torque
88.5-106.2 lb_f•in (10–12 N·m) {1.0–1.2 kgf·m}

Glow plug, Connector

Glow plug nut torque
8.9-13.3 lb_f•in (1–1.5 N·m) {0.1–0.15 kgf·m}

https://truckmanualshub.com/

https://truckmanualshub.com/

SECTION 5: ELECTRICAL SYSTEMS

WARNING: Before working on any component of the electrical system, the negative (-) battery cable should be disconnected from the battery, as electrical shock or damage to system components may occur. Some testing requires 12 - volt power; care should be taken in cases where power is needed.

Fuel Shutoff Solenoid

Description and Location

The fuel shutoff solenoid, ①, is located on the right side of the engine, and is threaded into the rear of the fuel injection pump, ②. The fuel shutoff solenoid contains a spring-loaded plunger that pushes the injection pump control rack to the closed (shut-off) position when the solenoid is not energized. When the key switch is turned to the “ON” or “START” position, the safety stop relay closes completing the circuit that energizes the solenoid. This retracts the plunger from the injection pump, and the injection pump control rack moves into the position that allows the engine to start.

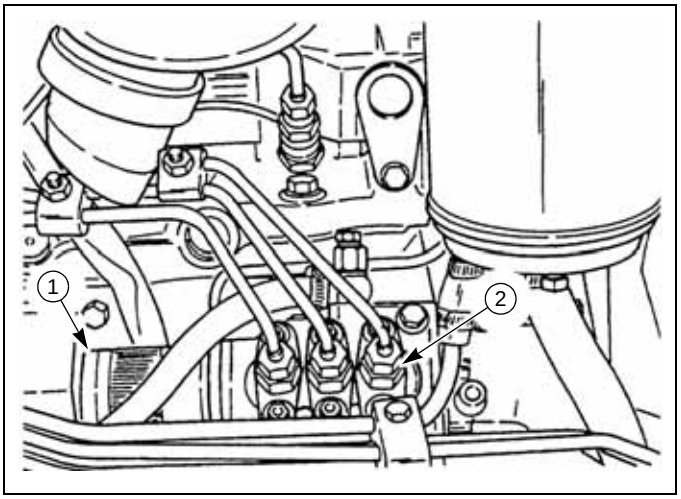

Fig. 5-1

Removal

1. Disconnect the negative (–) battery cable from the battery.
2. Disconnect the wiring harness lead, from the fuel shutoff solenoid.
3. Using a pair of pliers, carefully remove the fuel shutoff solenoid, ① (page 5-1, Fig. 5-1), from the engine.
4. Remove and discard the sealing washer, ① (page 5-1, Fig. 5-2), which seals the solenoid, ② (page 5-1, Fig. 5-2), to the fuel injection pump.

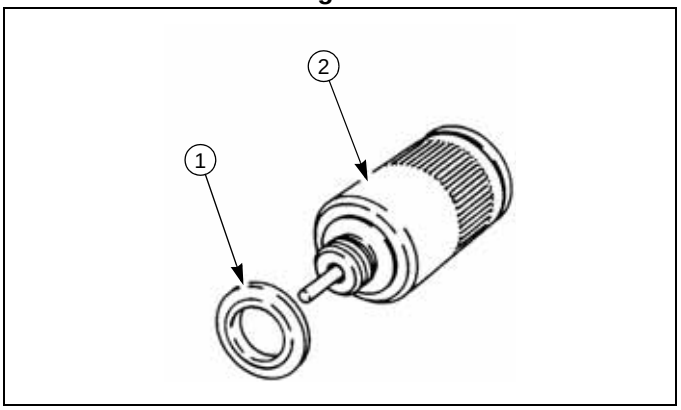

Fig. 5-2

https://truckmanualshub.com/

Testing

1. Using a suitable measuring device, measure the protrusion distance, “A” (page 5-2, Fig. 5-3), on the solenoid. The distance should measure between 1.00–1.04 in.(25.5 - 26.4 mm). If the distance is not within these specifications, the solenoid is defective and needs replaced.

   Note: When connecting the 12-volt power supply to the solenoid body, be sure paint is removed from the body. Otherwise, the power will not be transferred to the solenoid.

2. Use jumper wires to connect the positive (+) terminal of a 12-volt power supply to the solenoid lead, ① (page 5-2, Fig. 5-4). Connect the negative terminal of the 12-volt power supply to the solenoid body, ② (page 5-2, Fig. 5-4). The plunger, ③ (page 5-2, Fig. 5-4), should retract into the solenoid body.
3. Using a suitable measuring device, measure the protrusion distance, “B” on the solenoid. The distance should measure between 0.45–0.57 in. (11.5 - 14.5 mm). If the distance is not within these specifications or the plunger does not retract, the solenoid is defective and needs replaced.

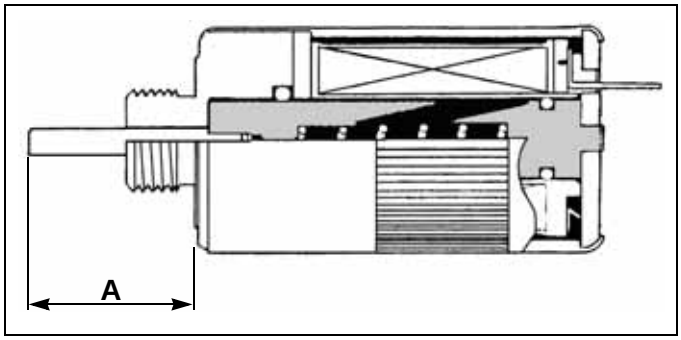

Fig. 5-3

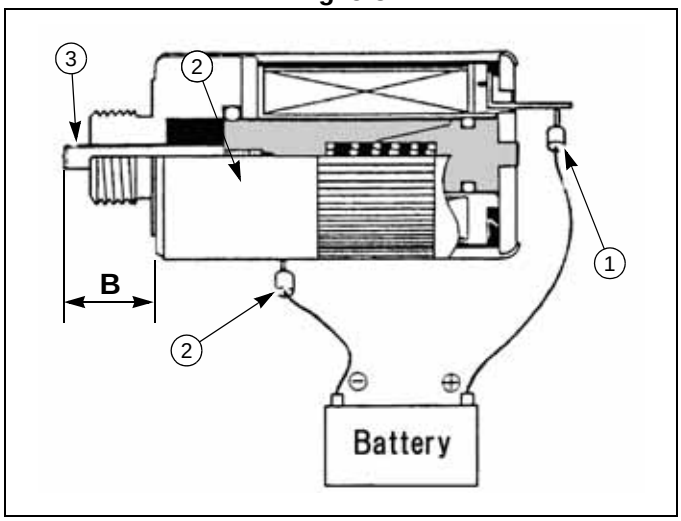

Fig. 5-4

Installation

1. Assembly of the engine stop solenoid generally follows the disassembly in reverse, using a new sealing washer, ① (page 5-1, Fig. 5-2), on the solenoid, ② (page 5-1, Fig. 5-2).

Engine Glow Plugs

Description

The engine glow plugs ① are located on the right side of the engine cylinder head, near the fuel injectors.

The glow plugs are used to preheat the air in the pre-combustion chamber. This aids in the starting of the engine when cold.

Removal

1. Disconnect the negative (–) battery cable from the battery.
2. Remove the three (3) nuts, ① (page 5-3, Fig. 5-6), and washers securing the electrode bar, ② (page 5-3, Fig. 5-6), from the glow plugs.
3. Remove the glow plugs from the engine cylinder head.

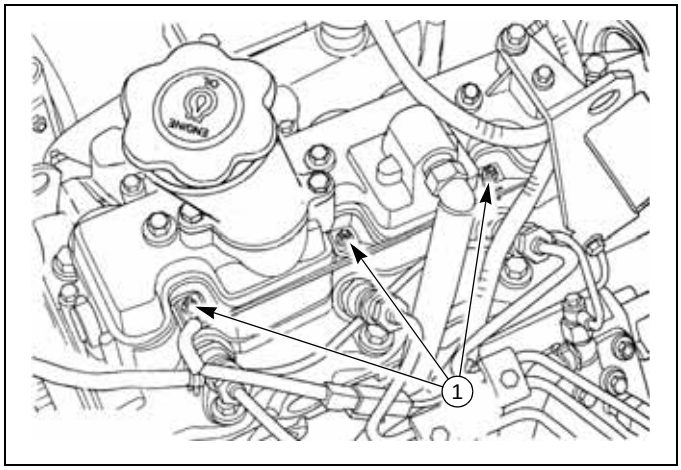

Fig. 5-5

Engine Glow Plug Testing

1. Clean carbon from the sheath end of the glow plug.

   Note: Do not test resistance using the glow plug sheath.

https://truckmanualshub.com/

2. Using an ohmmeter, touch one test probe to the glow plug electrode. Touch the other test probe to the glow plug body (see page 5-3, Fig. 5-7).
3. Observe the ohmmeter. A resistance reading of 1.0 ohm is maximum for the standard glow plug. If the resistance is higher than 1.0, the glow plug is defective and needs replaced.

Installation

1. Thread the glow plugs into the engine cylinder head. Torque each glow plug to 11.1–14.8 lb_f•ft (15-20 N•m) {1.5–2.0 kg_f•m}.
2. Install the electrode bar, ②, and the washers onto the glow plugs. Secure with the three (3) nuts, ①.
3. Connect the negative (–) battery cable to the battery.

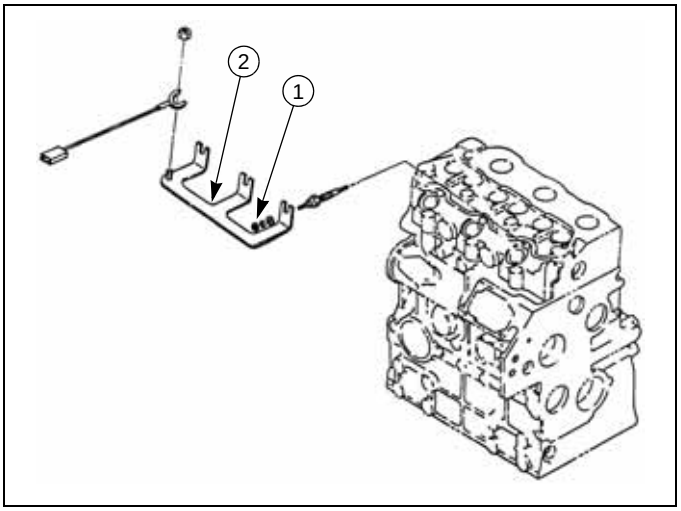

Fig. 5-6

Engine Oil Pressure Switch

Description and Location

The engine oil pressure switch, ① (page 5-3, Fig. 5-8), is located in the front of the engine cylinder head.

The engine oil pressure switch closes (circuit completed) when engine oil pressure is less than 4.25 psi (29.4 kPa). This illuminates an indicator light on the instrument panel.

The closed engine oil pressure switch will be opened after the engine is started. If the switch does not work after started, the oil level inside the engine may be low or there may be a problem with the oil pump.

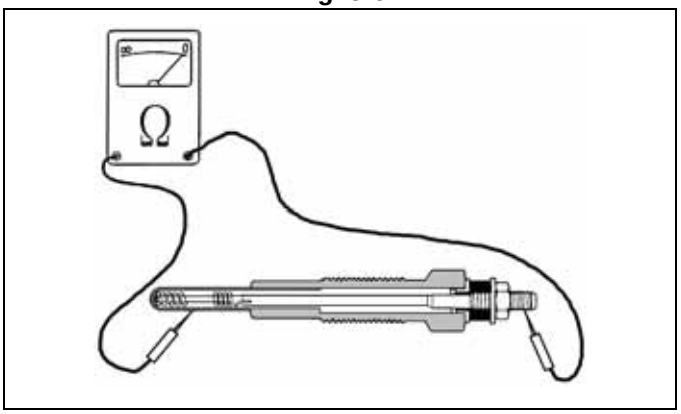

Fig. 5-7

Engine Oil Pressure Switch Testing

1. Using an ohmmeter, touch one test lead to the pressure switch terminal, ① (page 5-3, Fig. 5-9), and the other test lead to the threads of the switch body, ② (page 5-3, Fig. 5-9).
2. Observe the ohmmeter. There should be little or no resistance, indicating continuity in the switch. If there is no continuity, the switch is defective and needs replaced.

Caution: Do not use high-pressure compressed air for the following test, otherwise damage may occur to the oil pressure switch.

Note: The following test is not a calibrated test. The purpose of the test is to see if the switch contacts open at pressure.

3. While the test leads are connected to the switch, pressurize the switch oil pressure port ③ (page 5-3, Fig. 5-9), with low pressure 10.0–20.0 psi(69–138 kPa) {0.7–1.4 kgf/c^2} compressed air.
4. Observe the ohmmeter. While air pressure is being supplied to the oil pressure port, the ohmmeter should indicate high resistance, or no continuity. If there is continuity, the switch is defective and needs replaced.

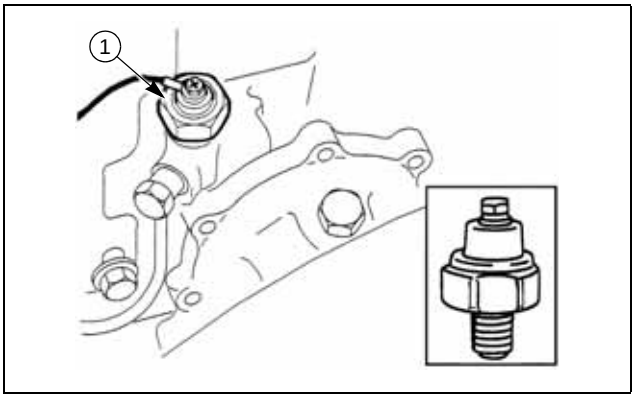

Fig. 5-8

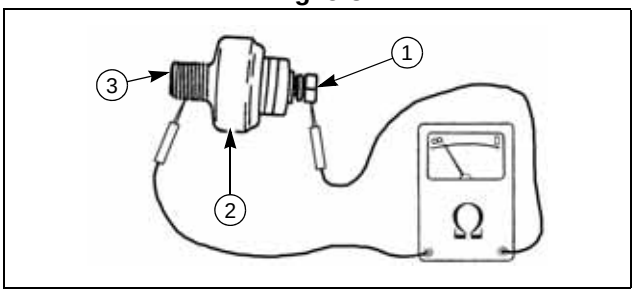

Fig. 5-9

Installation

https://truckmanualshub.com/

1. Install the oil pressure switch into the engine cylinder head and tighten to 10.8–14.4 lb_f•ft(14.7–19.6 N•m) (1.5–2.0 kgf•m).
2. Install the ring terminal onto the oil pressure switch, and secure the terminal with the retaining screw, ①, (page 5-3, Fig. 5-9).

Alternator (40 amp version) (No. 185046320)

Charging circuit

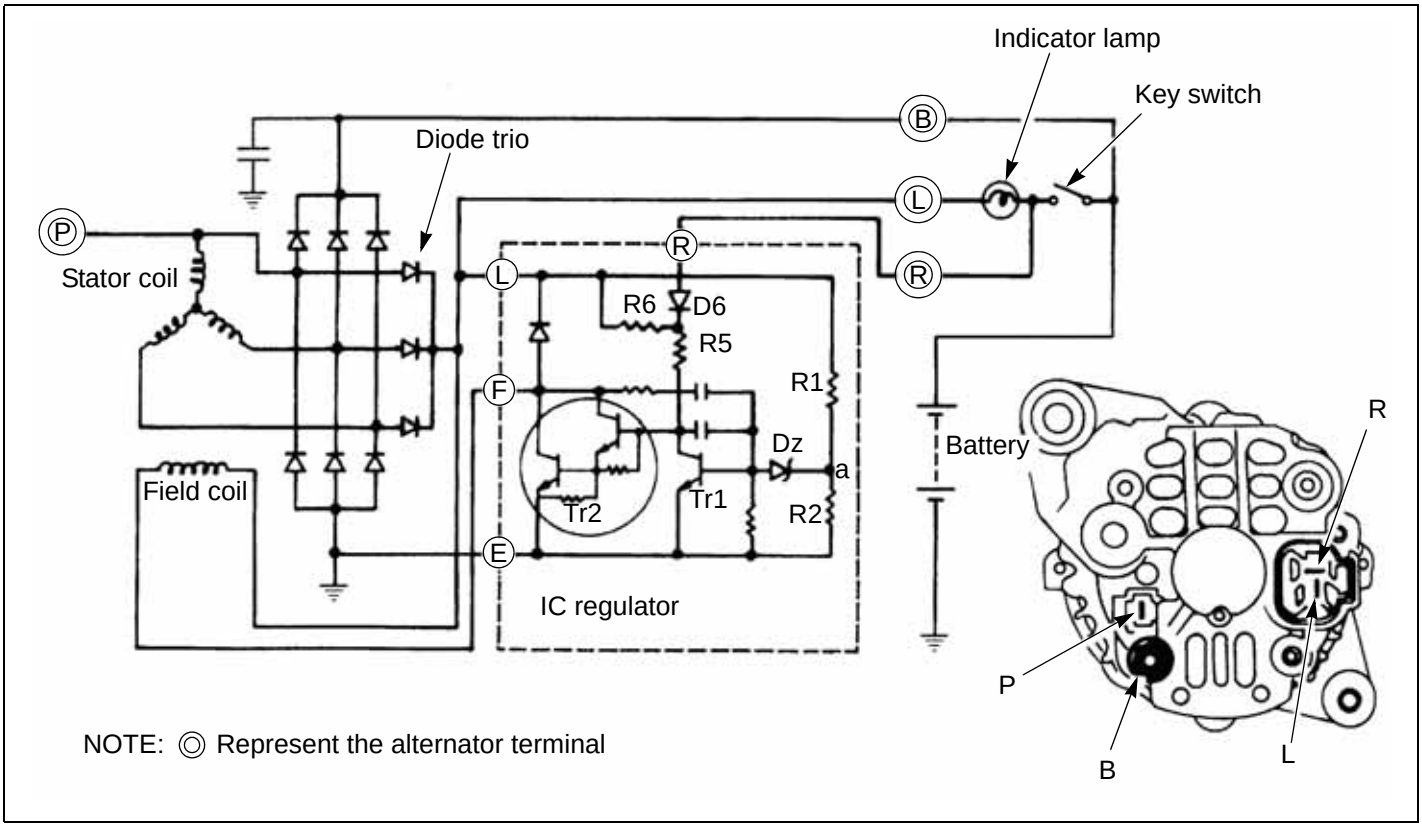

Fig. 5-10

Description

1. The charging circuit and internal connection are shown in page 5-4, Fig. 5-10. The charging system consists of an IC (integrated circuit) regulator built in alternator, a battery and connecting wires. Because of the use of an IC, the voltage regulator is very compact and is built into the alternator.
2. The field current flows directly from the diode trio to the field coil without passing through the external circuit. But to help the initial voltage built up when the engine is started, the field current is supplied through the indicator lamp from the battery.
3. Since the frequency pulse output of 1/10 the alternator speed develops on P terminal, this terminal is used for speed detection.

https://truckmanualshub.com/

Construction

The principal components of the IC alternator are the stator, the rotor, the rectifier assembly, the IC voltage regulator, the front bracket, the rear bracket and the pulley.

The rectifier assembly consists of two heatsinks, one positive and one negative, and diode trio.

The diode trio is used as field supply diode and is connected to the field coil and the terminal L on the alternator.

The built-in IC regulator is a solid-state unit so that it can only be serviced as an assembly.

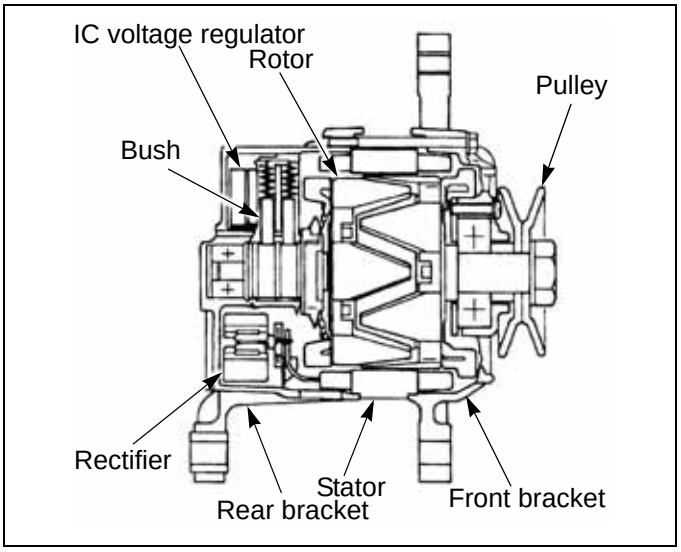

Fig. 5-11

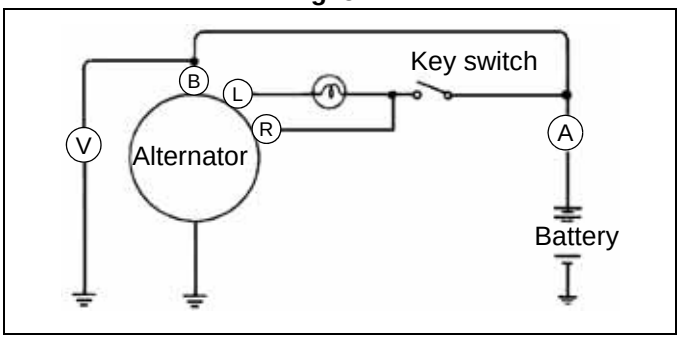

Fig. 5-12

Alternator diagnostic procedures

Checking the regulator adjusting voltage.

1. In equipment without an ammeter, connect a ammeter (50A capacity) at the position shown in page 5-5, Fig. 5-12. In equipment with an ammeter, make use of the ammeter on the equipment.
2. Connect a voltmeter between the terminal B of the alternator and the ground. The reading on the voltmeter should indicate the battery voltage. If the voltmeter reading is zero, the wiring between the terminal B and the battery is faulty.
3. With the test ammeter terminals short-circuited, start the engine.

   Caution: If the test ammeter is connected at the position shown in page 5-5, Fig. 5-12, make sure that no starting current is applied to the ammeter when the engine is started.

4. Remove the short circuit across the test ammeter terminals and increase the engine speed immediately to approx. 2000 rpm. Note the ammeter reading.
5. If the ammeter reading is 5A or less, note the voltmeter reading without changing the engine speed (approx. 2000 rpm). The reading is the adjusting voltage.
6. If the ammeter reading is more than 5A, continue to charge the battery until the reading falls to less than 5A or replace the battery with one that is fully charged.
7. An alternative method is to limit the charging current by connecting a 1/4 ohm (25W) resistor in series with the battery.

Checking output

If the results of the of the regulator adjusting voltage are within specification, check alternator output:

1. Turn ignition switch to off position, disconnect the terminal B of the alternator and connect an ammeter (50A capacity) at the position shown in page 5-5, Fig. 5-12.
2. Connect the voltmeter between the terminal B of the alternator and the ground. Confirm that the voltmeter indicates the battery voltage.
3. Turn ignition switch to on position.
4. Start the engine and turn on all the lamps. Immediately accelerate the engine to 2000 rpm or more and note the maximum value indicated on the ammeter.
5. If this value is more than 70% of the nominal output (refer to page 7-1, Section 7:Servicing Specifications), the alternator can be considered as working satisfactorily.

Note: To make the above judgment more accurate, remove the alternator from the engine and check it on a test bench.

https://truckmanualshub.com/

Disassembly

1. Mark both brackets and the stator with a scribe mark for assembly.
2. Remove the four (4) through bolts. Pry between the stator and front bracket with blade of a screwdriver. Carefully separate the front bracket④, pulley② and rotor assembly⑨ from the stator and rear bracket assembly.
3. Place the rotor⑨ in a vise with soft jaws and remove the pulley nut①, washer, pulley spacer⑧ and front bracket④ from the rotor⑨.
4. Unsolder three stator leads and remove the stator.
5. Remove the voltage regulator assembly and rectifier assembly as a set.

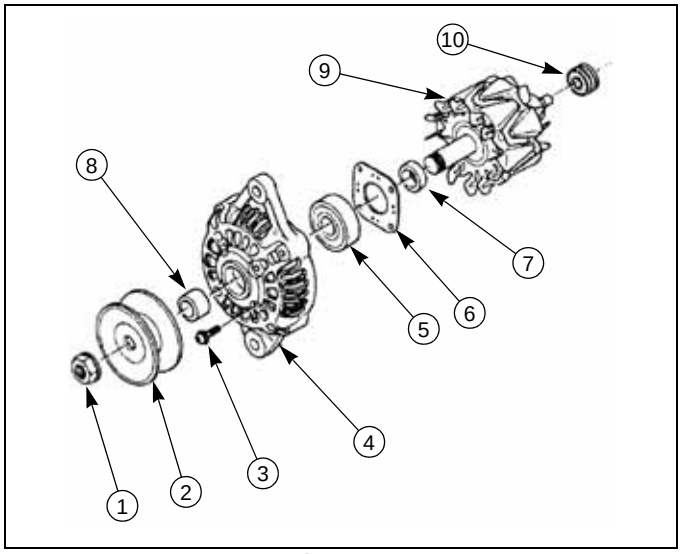

Fig. 5-13

1. Pulley nut	6. Bearing holder
2. Pulley	7. Collar
3. Screw	8. Pulley spacer
4. Front bracket	9. Rotor
5. Bearing	10. Bearing

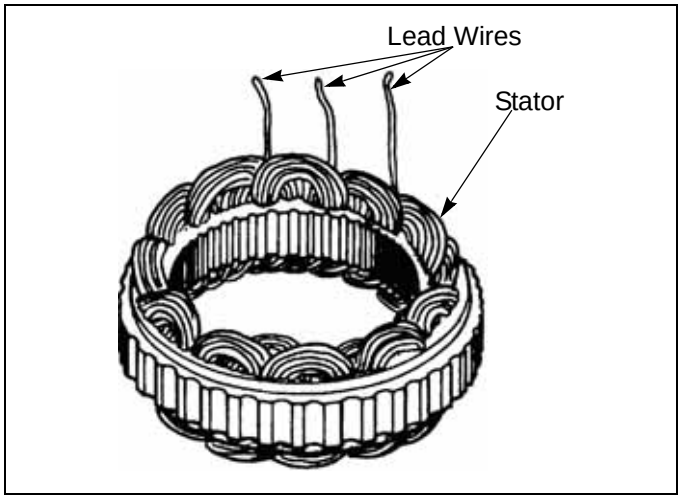

Fig. 5-14

Inspection of parts

1. **Rotor**
   a. Slip ring surface inspection: Remove discoloration or scratches on the slip ring surface with 400-600 grit sand paper. A badly roughened slip ring or a slip ring worn beyond the service limit should be replaced.

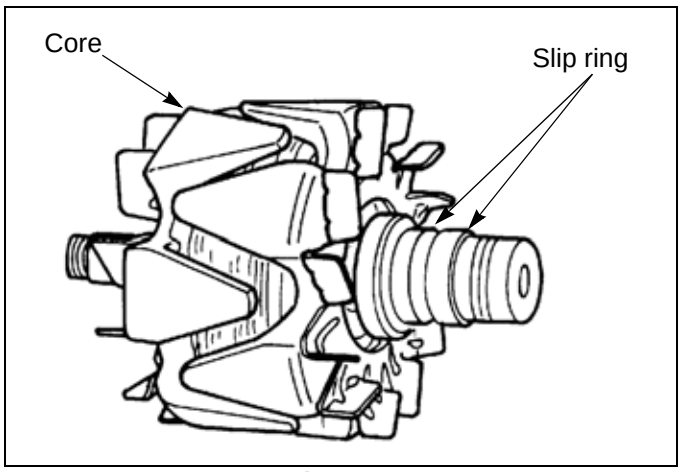

Fig. 5-15

https://truckmanualshub.com/

b. Check for continuity between both the slip rings, page 5-7, Fig. 5-16. If there is no continuity, the field coil is defective. Replace the rotor assembly.

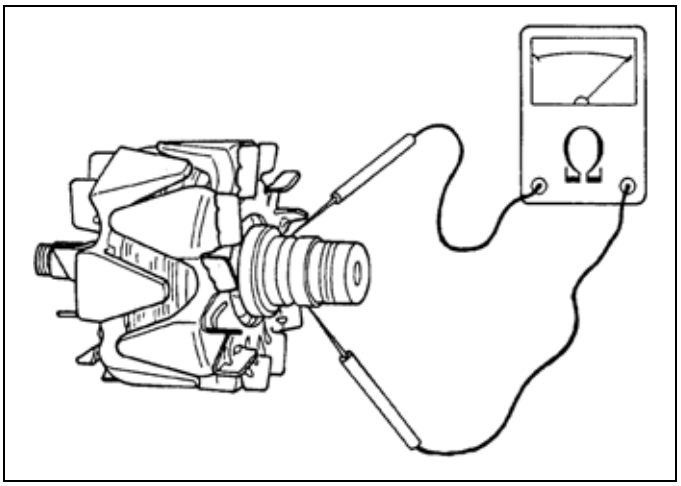

Fig. 5-16

c. Check for continuity between the slip ring and shaft (or core), page 5-7, Fig. 5-17. If there is continuity, the coil or slip ring is grounded. Replace the rotor assembly.

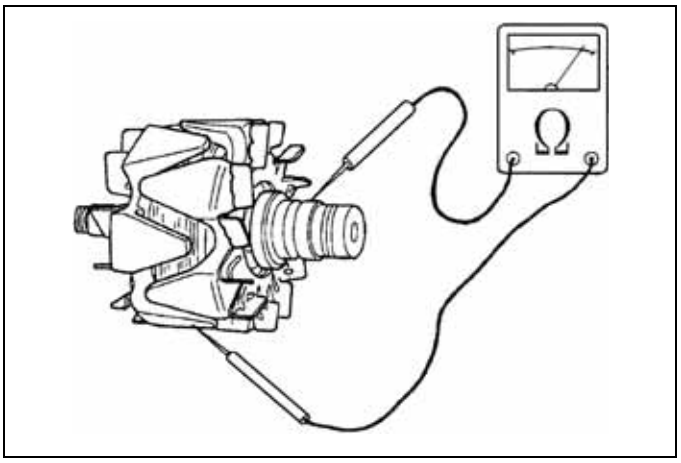

Fig. 5-17

2. Stator

a. Check for continuity between the leads of the stator coil, page 5-7, Fig. 5-18. If there is no continuity, the stator coil is defective. Replace the stator assembly.

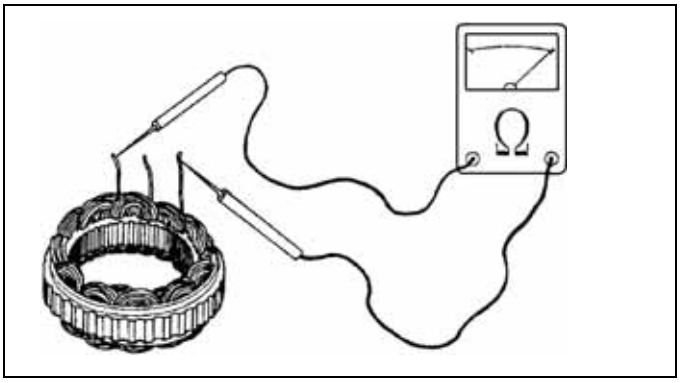

Fig. 5-18

https://truckmanualshub.com/

b. Check for continuity between any stator lead and stator core, page 5-8, Fig. 5-19. If there is continuity, the coil is grounded. Replace the stator assembly

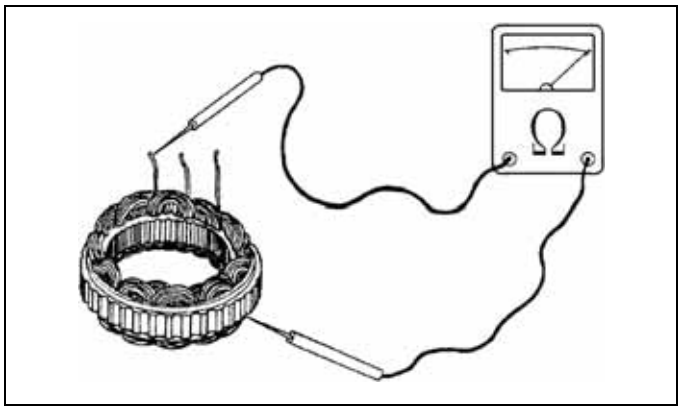

Fig. 5-19

3. Rectifier Assembly

a. Positive heatsink: Check for continuity between the positive (+) heatsink and stator coil lead connection terminal with a circuit tester. If there is continuity in both directions, the diode is short-circuited. Replace the rectifier assembly.

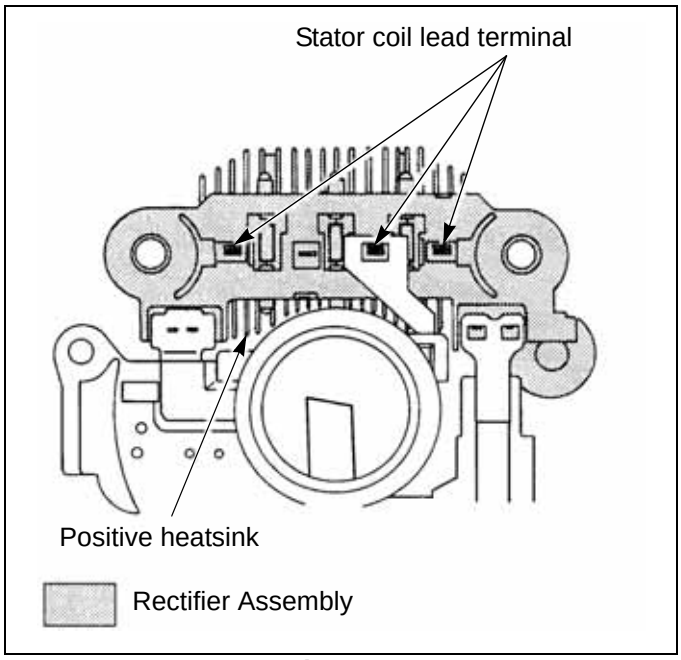

Fig. 5-20

b. Negative Heatsink: Check for continuity between the negative (–) heatsink and stator coil lead connection terminal with a circuit tester. If there is continuity in both directions, the diode is short-circuited. Replace the rectifier assembly.

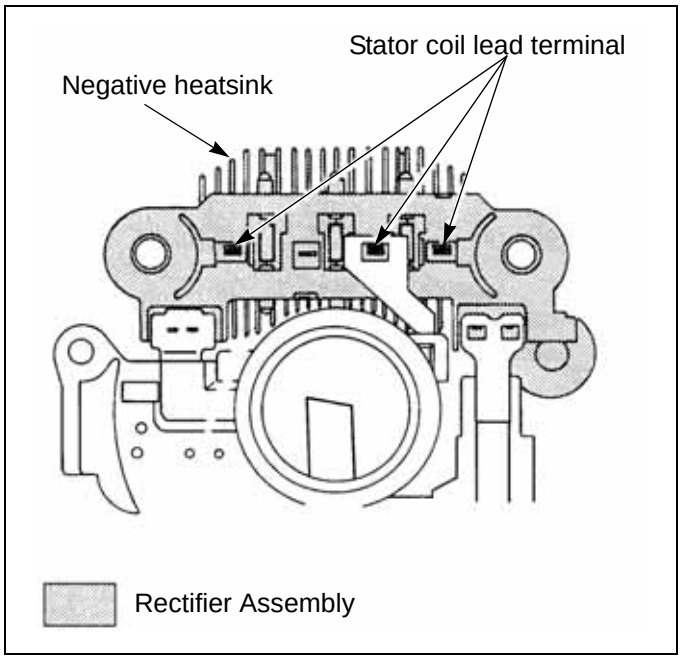

Fig. 5-21

https://truckmanualshub.com/

c. Diode Trio: Using a circuit tester, check the three (3) small diodes for continuity in both directions. If there is either continuity or an open circuit in both directions, the diode is defective. Replace the rectifier assembly.

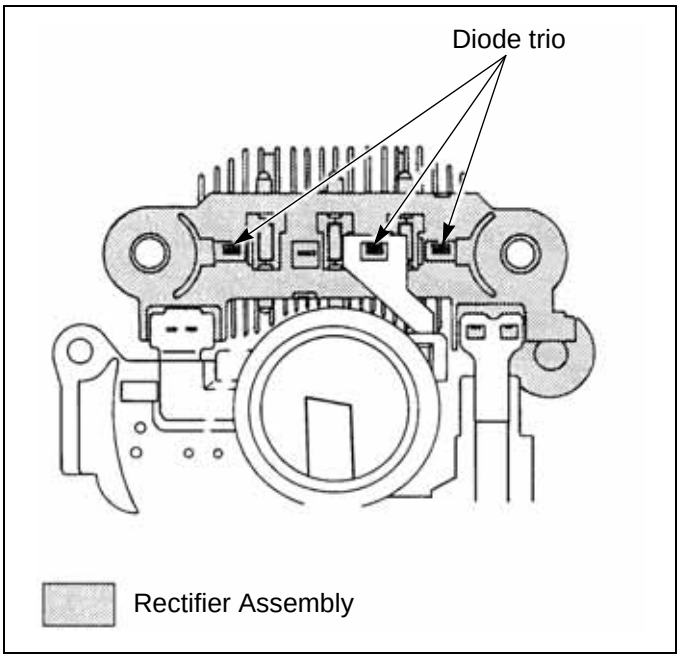

Fig. 5-22

4. Brush and Brush Spring

a. Check the length of the brush. A brush worn down to the wear limit line should be replaced.

b. Check the brush spring pressure and verify the brush moves smoothly in the brush holder.

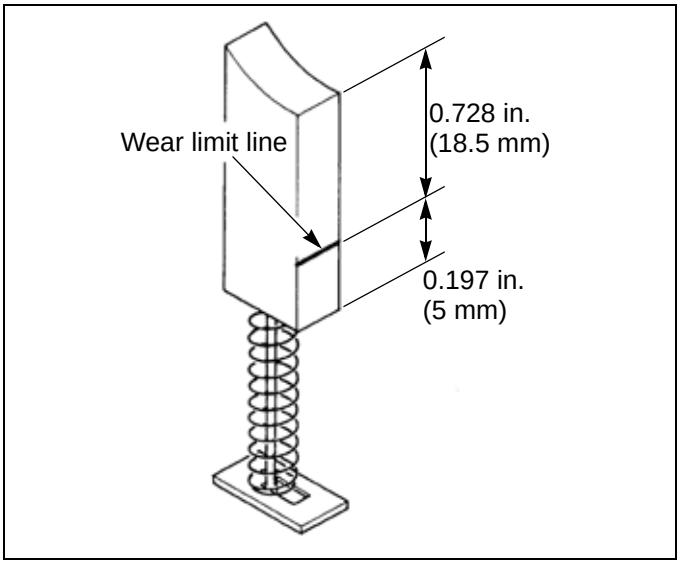

Fig. 5-23

Reassembly

Reverse the disassembly procedure except for the following:

1. Installing rotor.

a. Push brushes into brush holder, and insert a wire to hold them in raised position before installing the rectifier and regulator assembly.

b. Install rotor and remove wire.

Note: Since rear bearing and rear bracket fit is tight, heat the bearing box in the rear bracket to 122°–140°F (50°–60°C) before installing rotor.

Note: Do not apply lubrication to bearing box for bearing with resin band. Completely remove any oil from the bearing box in the rear bracket.

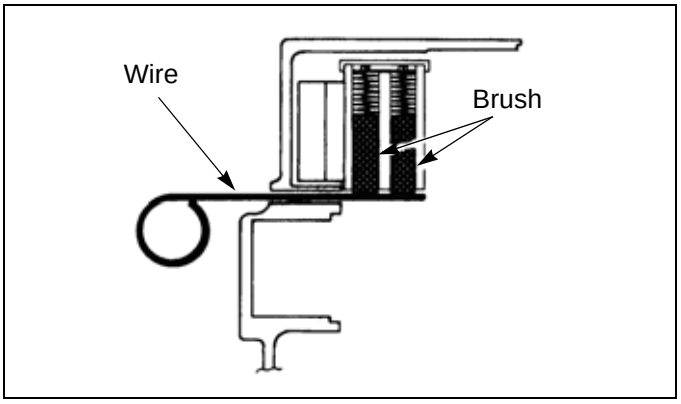

Fig. 5-24

Bench Check

To check the alternator on a test bench, proceed as follows:

1. Make connection as shown in the page 5-10, Fig. 5-25, except leave the load resistor disconnected.
2. Slowly increase the alternator speed and observe the voltage.
3. If the voltage is uncontrolled with speed and increases above 15.5V, check the alternator.
4. If voltage is below 15.5V, connect the load resistor as shown in page 5-10, Fig. 5-257.
5. Operate the alternator at 2500 rpm and adjust the load resistor as required to obtain maximum output.
6. Measure the output current. The output must be within the limits shown in the section on “Service Specifications”.

If the output is less than specified value the alternator should be disassembled and checked.

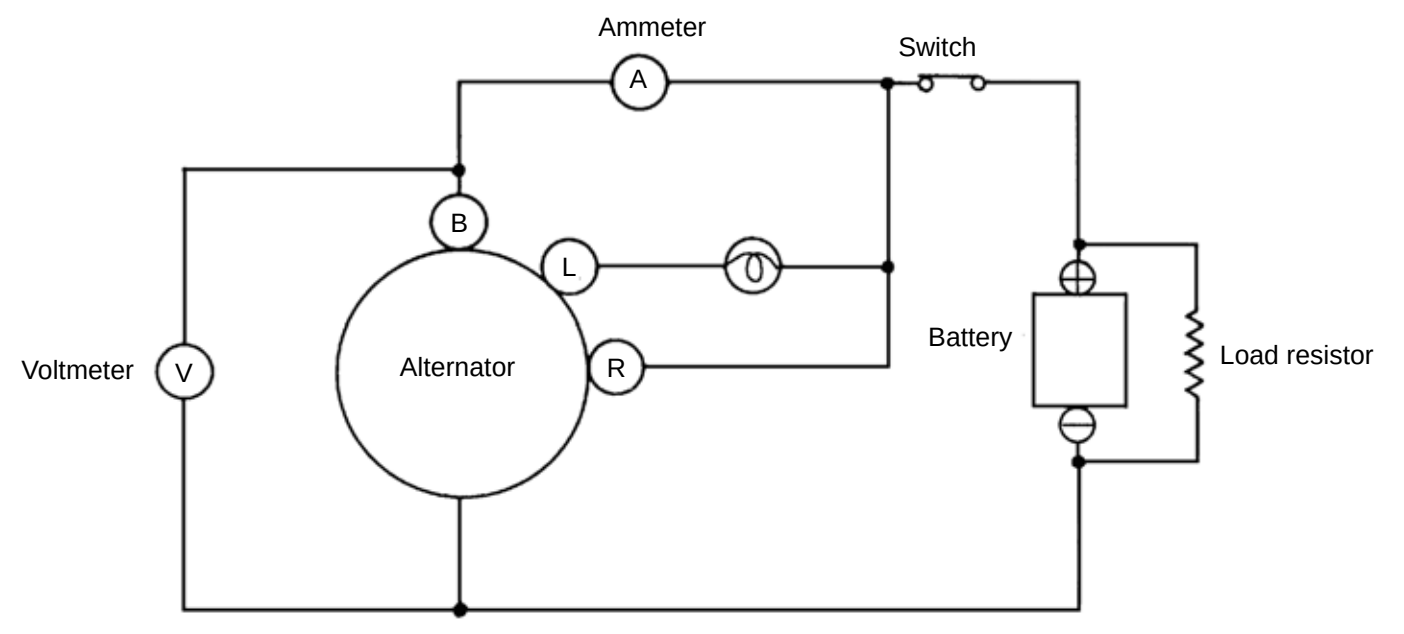

Fig. 5-25

Precautions

1. Reversed battery connections will damage the alternator and/or wiring.
2. When connecting a booster battery, make certain to connect negative battery terminals together and positive battery terminals together.
3. When a fast charger is used to charge the battery, the equipment battery cables should be disconnected.
4. Grounding of the alternator output terminal will damage the alternator and/or circuit.
5. Do not connect a load of over 1A to the terminal “L”.
6. If the alternator is operated with the terminal L and B short-circuited, if may damage the diode trio

https://truckmanualshub.com/

Maintenance

Item/Model Name		A007T03877(MITSUBISHI)
Nominal output (V-A)		12–40
Polarity		Negative ground
Weight lb. (kg)		Approx. 8.2(3.7)
Rotational Direction (Viewed from the pulley)		Clockwise
Load characteristic (cold)	Terminal Voltage (V)	13.5
	Current (A)	Min. 30
	Rotational Speed (RPM)	2500
Brush length	Original in(mm)	0.728(18.5)
	Limit in(mm)	2.0(50)
Brush spring tension	Original lb(g)	1.04–1.30(470–590)
	Limit lb(g)	0.600(270)
Bearing	Rear side	ECS8
	Front	6303DDG
Slip ring diameter eccentric wear	To be repaired in(mm)	0.002(0.05)
	Allowable limit in(mm)	0.008(0.2)
Slip rings surface condition		If dirty or damaged polish with emery cloth
Rotor shaft bending	To be repaired in(mm)	0.0028(0.07)
Field coil resistance (Ohms@5000rpm)		2.8
Adjusting voltage (Volts @5000rpm)		14.4–15.0

Trouble Shooting

Symptom	Part	Cause	Remedy
No charging	Wiring, ammeter	Open or short circuit Loose connection	Correct
	Alternator	Defective coils, short to ground	Replace
		Defective rectifier	Replace
		Defective RF resistor	Replace
	Regulator	Defective regulator	Replace
Insufficient charging	Wiring	Open or short circuit Loose connection	Correct
	Alternator	Loose alternator drive belt	Correct
		Short circuit in rotor coil	Replace
		Short circuit in stator coil	Replace
		Defective rectifier	Replace
		Insufficient brush contact, stained slip ring	Correct
	Regulator	Defective regulator	Replace
	Battery	Defective battery	Replace
Over charge	Battery	Internal short	Replace
	Regulator	Defective regulator	Replace
Unstable charging current	Wiring	Open circuit (broken wire)	Replace
	Alternator	Loose or worn alternator drive belt	Correct or Replace
		Short circuit or broken wire in rotor	Replace
		Short circuit or broken wire in stator coil	Replace
		Insufficient brush contact, stained slip ring	Correct
		Broken brush or brush spring	Replace
		Loose terminal connections	Correct
	Regulator	Defective regulator	Replace
Abnormal noise from alternator	Alternator	Incorrect installation of alternator	Correct
		Defective bearing	Replace
		Rotor core and stator coil in contact	Correct
		Defective diode	Replace
		Short in stator coil	Replace

https://truckmanualshub.com/

Starter Motor (M001T66081) (No. 185086551)

Description

This starter features a reduction mechanism consisting of a planetary gearing system and permanent magnets for magnetic field induction. Its reduction mechanism is comprised of an internal gear, three planetary gears, gear shafts (with overrunning clutch fitted by spline) and armature shaft gear. The structure is different from that of direct drive type, but the electrical wiring is the same between two types. The magnetic field is produced by six permanent magnets. The magnets are mounted in the yoke and positioned according to polarity. They are permanently attached to the yoke and, are not removable.

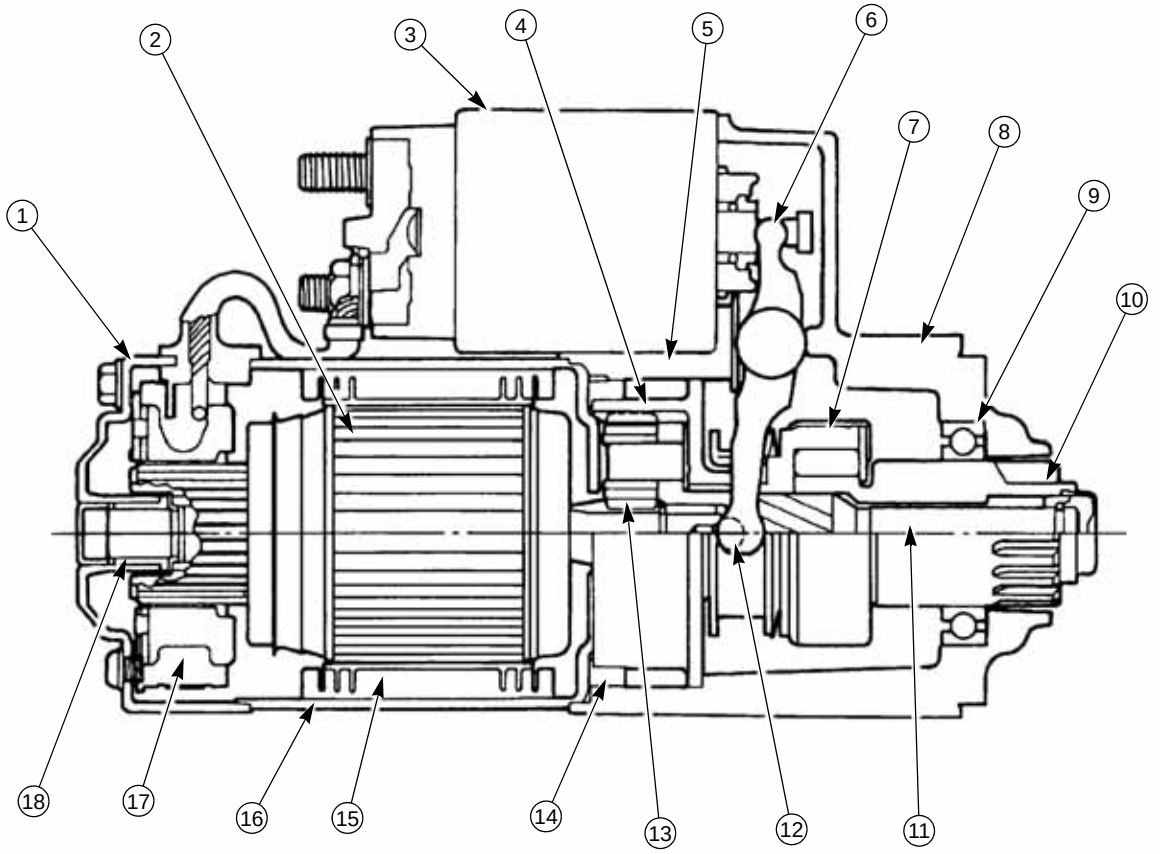

Fig. 5-26

1. Rear Bracket	7. Overrunning Clutch	13. Planetary Gears
2. Armature	8. Front Bracket	14. Rubber Cover
3. Switch	9. Bearing	15. Magnets
4. Internal Gear	10. Pinion	16. Yoke
5. Lever Packing	11. Gear Shaft	17. Brushes
6. Lever	12. Ball	18. Sleeve Bearing

https://truckmanualshub.com/

Disassembly

Reference page 5-14, Fig. 5-28.

Notes: 1. Before disassembling starter, put alignment marks on the switch and yoke, To aid in correct reassembly.

2. Do not clamp yoke in a vise or strike it with a hammer during repair operations. Permanent magnets attached to yoke could be broken and yoke dented or deformed if mishandled.

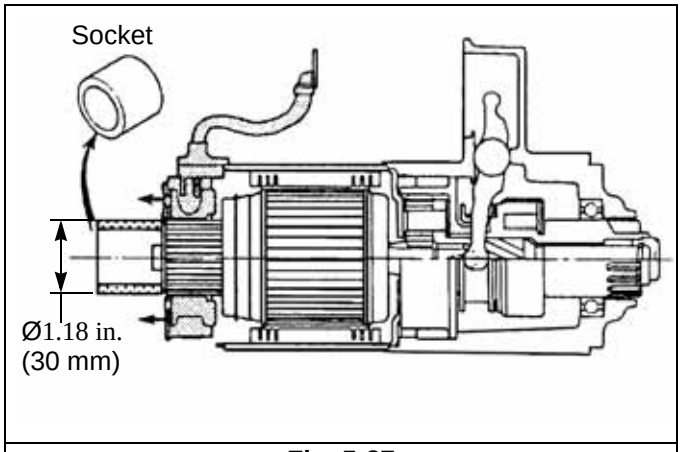

Fig. 5-27

1. Remove switch terminal nut ① and disconnect connecting wire ②. Remove screws ③ securing switch and remove switch and plunger ④.

2. Remove brush holder securing screws ⑤ and through bolts ⑥. Remove rear bracket ⑦ but do not remove brush holder ⑧.

3. Install a socket (outer diameter 1.18 in.(30mm)) on the armature commutator, see page 5-14, Fig. 5-27. Then slide the brush holder ⑧ onto the socket. Leave the socket in position in the brush holder for inspection and reassembly.

4. Slide yoke ⑨ away from front bracket ⑩.

5. Remove armature ⑪ and ball ⑫. Do not lose ball when removing the armature.

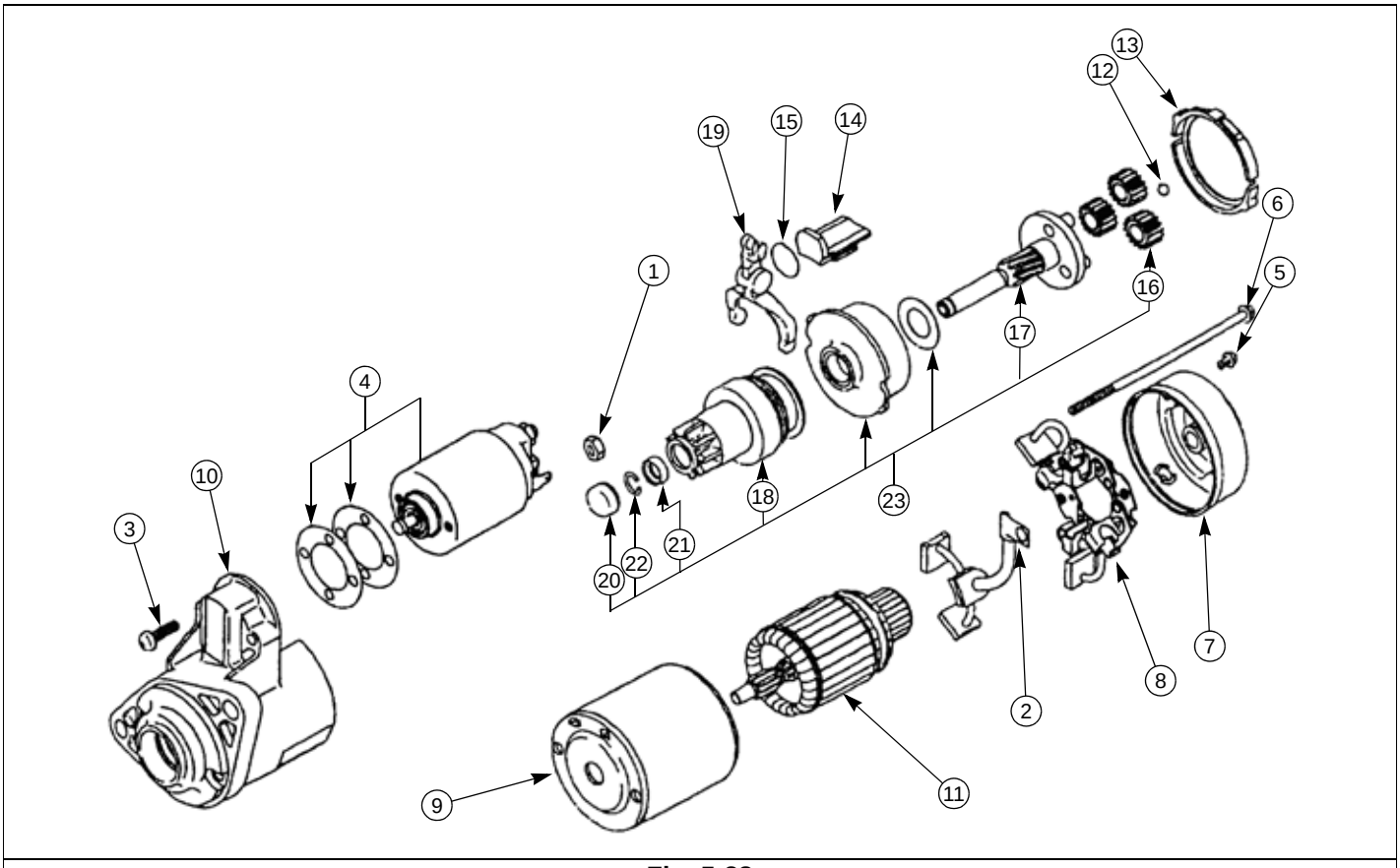

Fig. 5-28

6. Remove rubber cover ⑬ from planetary gear assembly ㉓ and remove lever packing ⑭ and plate ⑮.

7. Remove planetary gears ⑯. Remove gear shaft/overrunning clutch assembly ⑱ and lever ⑲ as a unit from front bracket ⑩.

8. To remove overrunning clutch ⑱:

a. Remove plastic cap ⑳. If the cap is too badly distorted or cracked, replace.

https://truckmanualshub.com/

b. Slide a piece of tubing of suitable size over shaft against stop ring ㉑) (see page 5-14, Fig. 5-28 and page 5-15, Fig. 5-29).

c. Then tap the tubing with a hammer to remove the stop ring and expose snap ring ㉒ (see page 5-14, Fig. 5-28 and page 5-15, Fig. 5-29). Remove the tubing from the shaft.

d. Remove the snap ring and the stop ring and separate the overrunning clutch ⑱ (see page 5-14, Fig. 5-28 and page 5-15, Fig. 5-29) from the gear shaft ⑰ (see page 5-14, Fig. 5-28 and page 5-15, Fig. 5-29). If the snap ring is distorted, it will be necessary to use a new one on reassembly.

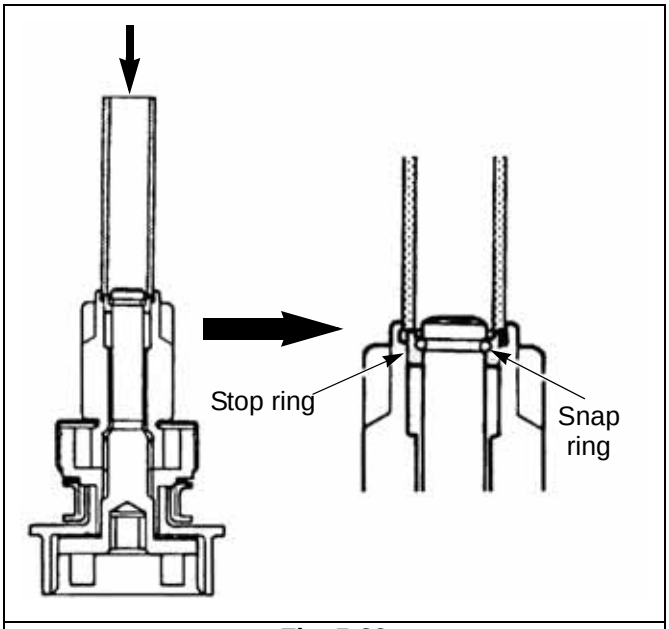

Fig. 5-29

Inspection

1. Armature

a. Inspect the armature coil for short-circuit with a growler armature tester. Replace armature if shorted.

b. Inspect armature coil for ground with a circuit tester (page 5-15, Fig. 5-30). Replace grounded armature.

c. Inspect commutator for wear. If below the limit, replace armature.

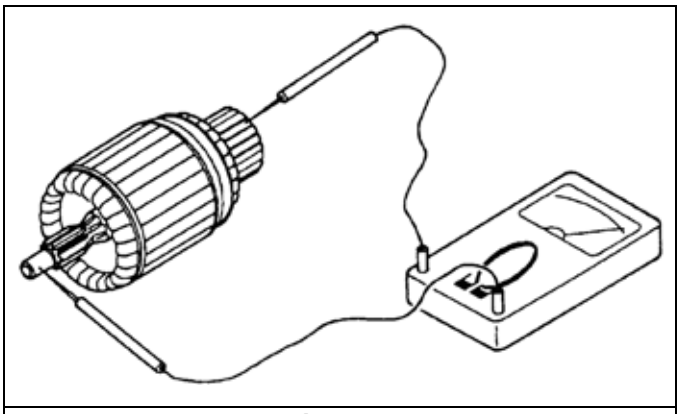

Fig. 5-30

d. Inspect commutator for insulator depth. Correct if below the limit.

e. Check gear teeth for wear or damage, and replace armature as necessary.

2. Permanent magnets

a. Check permanent magnets for cracks, damage and looseness, replace yoke assembly as necessary.

3. Brushes

a. Check brushes for wear. Replace brushes if below the limit.

b. Check brush spring pressure to make sure brush moves smoothly in brush holder.

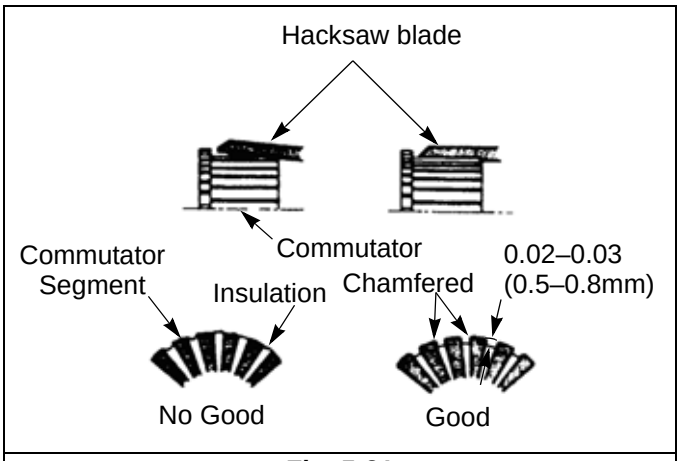

Fig. 5-31

https://truckmanualshub.com/

c. To check brush holder assembly for grounds, touch one probe of a circuit tester to holder plate and the other probe to each of insulated holders. Replace brush holder assembly if any continuity is noted.

d. Overrunning clutch and pinion gear. While holding clutch housing, rotate pinion. Pinion should rotate smoothly in one direction (not necessarily easily), but should not rotate in opposite direction. If the clutch does not function properly, replace it. If pinion gear is worn or burred, replace it.

Note: Overrunning clutch should not be cleaned with grease dissolving solvents, since these would dissolve the lubricant in the clutch mechanism.

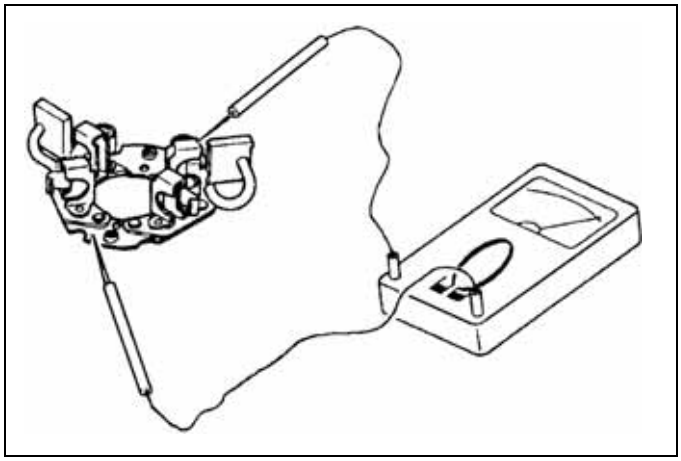

Fig. 5-32

Reassembly and adjustment

To reassemble the starter, follow the reverse of disassembling procedure.

1. Apply grease to the following parts during assembly: (see page 5-16, Fig. 5-33)

a. Sleeve bearing and ball.
b. Sleeve bearing in internal gear.
c. Sleeve bearing in rear bracket.
d. Gear shaft
e. Sliding surface of lever and overrunning clutch.
f. Armature shaft gear, internal gear and planetary gears.
g. Sliding surfaces of pinion and front bearing.

2.) Armature shaft end play: no adjustment.

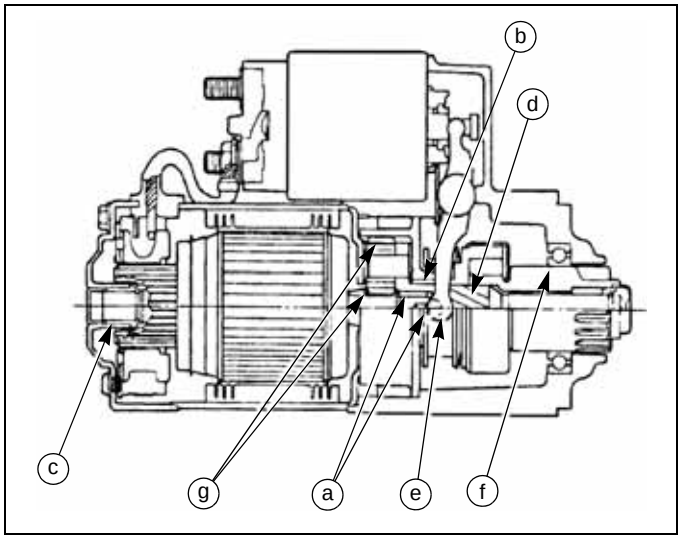

Fig. 5-33

3. Pinion position adjustment.

After completing reassembly, check pinion position to be sure that it is between 0.020 and 0.079 (0.5 and 2.0mm). To adjust, proceed as follows:

a. Connect the starter to a battery, as shown in page 5-16, Fig. 5-34. Close switch. This will shift pinion into cranking position.

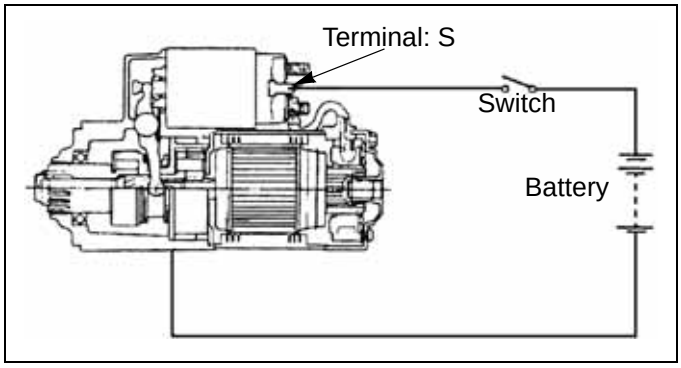

Fig. 5-34

https://truckmanualshub.com/

b. Push pinion back by hand and measure the amount of the pinion movement as shown in page 5-17, Fig. 5-35. If the amount does not fall within limit, adjust it by adding or removing shims which are located between switch and front bracket. Adding shims decreases the amount of the movement.

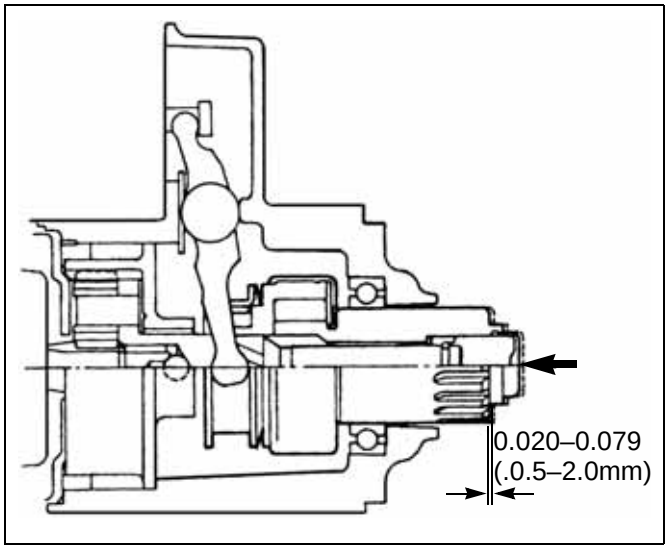

Fig. 5-35

Non-load test

1. After adjusting pinion position, from a test circuit with a voltmeter and an ammeter, as shown in page 5-17, Fig. 5-36.

   Note: Use wires as thick as possible and tighten each terminal.

2. Close the switch and compare the R.P.M. current and voltage readings with the specifications in page 7-1, Section 7:Servicing Specifications.
3. If any abnormality is noted, check it according to the procedures on page 5-15, Inspection.

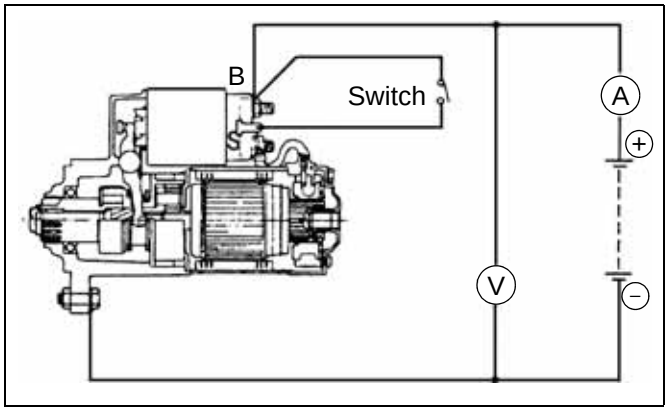

Fig. 5-36

https://truckmanualshub.com/

Maintenance

Item		Standard Value or Service Limit
No-load Characteristic	Volts	11
	Amps	110 Max
	R.P.M.	2400 Min.
Commutator	Outer Dia.	1.16in.(29.4mm)
	Service Limit	1.14in.(28.8mm)
Brush	Length	0.69in.(17.5mm)
	Service Limit)	0.40in.(10mm)
Brush spring	Tension	5.1–7.3 lb_f(22.5–32.5 N)
	Service Limit	2.3 lb_f (10 N)
Pinion Movement (Pinion Gap)		0.020–0.079 (0.5–2.0mm)

https://truckmanualshub.com/

Trouble shooting

Symptom	Part	Cause	Remedy
Pinion does not advance even though the key switch is turned ON.	Wiring	Open circuit: loose battery connection, loose connection at ignition switch or at starter terminals.	Tighten connections.
	Key switch	Defective ignition switch	Replace
	Starting motor	Helical spline on pinion shaft is scored and prevents the pinion from moving	Replace or correct
	Magnet switch	Improper movement of the plunger of the magnet switch or disconnected wire or short circuit of the coil.	Replace or correct
Pinion is engaged, the motor rotates, but rotation is not transmitted to the engine.	Starting motor	Defective clutch or broken reduction gear.	Replace
Pinion is engaged with the ring gear, starting motor does not turn.	Wiring	Wire from batter to magnet switch disconnected. Loose connection between magnet switch and motor.	Repair, retightening, or replace the wire.
	Starting motor	Locked ball bearing.	Replace
		Improper installation.	Replace
		Worn out brush, improper contact of brush spring.	Correct
		Stained commutator.	Replace
		Defective armature or field coil.	Replace
		Insufficient tightening of connections of the field coil and brush	Replace
	Magnet switch	Broken holding coil	Replace
		Improper contact of contact	Replace
		Roughened contact surface of contact	Replace
	Battery	Discharged	Charge
Motor starts rotating before the pinion is engaged with the ring gear.	Starting motor	Improper sliding of pinion shaft	Replace
		Worn out pinion tooth top	Correct
		Improper pinion pushing position	Replace
	Engine	Worn out ring gear	Replace
	Magnet switch	Defective magnet switch	Replace

https://truckmanualshub.com/

https://truckmanualshub.com/

SECTION 6: TROUBLE-SHOOTING

Symptom	Cause	Remedy
Engine does not start	Defective key switch	Check electrical connection and contacts.
	Insufficient charging or completely discharged battery.	Charge.
	No fuel.	Check and refill fuel tank.
	Air mixed in the fuel system.	Tighten all fuel system connections.
	Clogged fuel filter.	Replace the fuel filter.
	Irregular of improper fuel supply.	Injection pump malfunction. Repair by Bosch qualified repair shop.
	Defective glow plug.	Replace.
	Improper viscosity of lubricating oil.	Check and change.
	Clogged air cleaner.	Clean the air cleaner.
	Low compression.	Check and correct each part.
	Defective engine stop solenoid.	Check or replace wiring.
Irregular engine speed	Air mixed in the fuel system.	Discharge air from the fuel.
	Uneven fuel injection.	Injection pump problem. Have corrected in a Bosch qualified repair shop or replaced.
	Clogged fuel filter.	Replace the fuel filter.
	Governor malfunction.	Check and adjust.
	Improper function of engine main body.	Overhaul, check and correct each part.
Engine stops during operation	No fuel in fuel tank.	Refill fuel tank.
	Clogged fuel filter.	Replace the filter.
	Air mixed in the fuel system.	Tighten all fuel system connections.
	Worn engine.	Overhaul, repair or replace worn parts.
Engine overheats	Insufficient coolant.	Refill with coolant, and check for leaks and repair.
	Loose or slipping fan belt.	Clean oil dust, etc. and retighten.
	Fan belt failure.	Replace.
	Clogged radiator.	Clean the radiator.
	Clogged radiator fins.	Clean.
	Cooling water passage clogged with dust, etc.	Flush cooling system.
	Thermostat malfunction.	Check and replace.
	Insufficient lubricating oil.	Check and fill as necessary.
	Overload.	Decrease the load.
Improper engine exhaust color	Too much engine oil.	Check and adjust the quantity.
	Too low viscosity of engine oil.	Check and change.
	Improper injection timing.	
Improper engine exhaust (black or dark gray)	Improper fuel.	Check and change.
	Excessive fuel injection.	
	Improper function of engine main body.	Check a correct each part.
	Overload.	Reduce the load.
	Clogged air cleaner.	Clean the element.
Improper charging	Loose fan belt.	Correct belt tension.
	Wiring problem.	Check and repair.
	Defective battery.	Replace.
	Defective alternator.	Replace.
	Loose or disconnected wires.	Check and install or tighten.

https://truckmanualshub.com/

Starting motor does not operate.	Dropped battery voltage. Defective safety switch. Trouble in starting motor. Disconnected wire of fusible link.	Charge the battery. Replace. Check and correct the starting motor. Replace.
Oil pressure lamp does not go out.	Insufficient engine oil. Trouble in oil pressure switch. Leak in lubricating system. Clogged oil filter. Short circuit to ground in wiring between oil pressure lamp and oil pressure sensor.	Replenish to specified gauge level. Replace the switch. Check and retighten. Replace with new one. Repair.
Oil pressure lamp does not light up with the key switch turned ON. (Engine stopped.)	Burnt out lamp. Disconnected wire between battery and oil pressure lamp.	Replace the lamp. Repair.

https://truckmanualshub.com/

SECTION 7: SERVICING SPECIFICATIONS

* Unit for values without unit in the column of inspection item is in(mm).

Unit	Part	Inspection Items		Standard Dimension		Standard Value		To be Repaired	Allowable Limit		
				S773L	N843(L)	S773L	N843(L)		S773L	N843(L)	Remarks
Engine	Cylinder Head	Cylinder compression PSI (MPa) {kgf/cm2}				More than 426.4 (2.94) {30}	More than 426.4 (2.94) {30}	Less than 361.1 (2.45){25}			Engine 250 rpm
		Cylinder head bolt torque lb_f•ft (N•m) {kgf•m}				36.1-38.4 (49–52) {5.0–5.3}	36.1-38.4 (49–52) {5.0–5.3}				Coat threads with engine oil.
		Distortion of cylinder head bottom surface				Less than 0.002(0.05)	Less than 0.002(0.05)	.005(0.12)			
		Valve seat (Intake/exhaust) 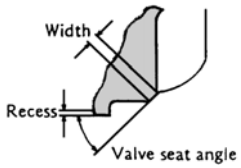				IN 0.0335-0.0453 (0.85–1.15) Ex 0.0335-0.0453 (0.85–1.15)	IN 0.0335-0.0453 (0.85–1.15) Ex 0.0335-0.0453 (0.85–1.15)	0.71(1.8)			Valve sheet angle 45°
		Width of valve seat	Intake			0.059-0.083 (1.50–2.10)	0.059-0.083 (1.50–2.10)	0.098(2.5)			
			Exhaust			0.063-0.071 (1.59–1.80)	0.063-0.071 (1.59–1.80)	0.098(2.5)			
Rotating Assembly	Cylinder Block	Cylinder bore dia. in(mm)		3.0315(77)	3.307(84)	3.307-3.308 (84-84.019)	3.307–3.308 (84–84.019)		3.0394 (77.2)	3.315 (84.2)	
		Distortion of cylinder block upper face				Less than 0.0020(0.05)	Less than 0.0020(0.05)	0.0047(0.12)			
	Piston	Piston skirt bottom longer dia		3.0291(76.94)	3.3053(83.955)	3.0288–3.0294 (76.9325–76.9475)	3.3050–3.3056 (83.948–83.963)		3.020 (76.7)	3.295 (83.7)	
		Clearance between cylinder and piston				0.0001–0.0030 (0.00265–0.075)	0.0015–0.0028 (0.038–0.072)		0.0010 (0.25)	0.0010 (0.25)	At 68°F(20°C)
		Clearance between piston pin hole and piston pin				-0.0000±0.0003 (-0.000±0.008)	-0.0000±0.0001 (-0.001±0.0027)		0.0008 (0.02)	0.0008 (0.02)	

https://truckmanualshub.com/

Unit	Part	Inspection Items		Standard Dimension		Standard Value		To be Repaired	Allowable Limit		
				S773L	N843(L)	S773L	N843(L)		S773L	N843(L)	Remarks
Rotating Assembly	Piston Pin	Piston pin outside dia.				.8266–0.8568 (20.996–21.002)	1.1021–1.1024 (27.994–28.0)		0.8260 (20.98)	1.1012 (27.97)	
		Clearance between small end bush and piston pin				0.0003–0.0010 (0.008–0.025)	0.0004–0.0011 (0.010–0.027)		0.0003 (0.08)	0.0003 (0.08)	Oil clearance
	Piston Ring	Piston ring end gap:	Top ring			.0079–0.0138 (0.20–0.35)	0.0079–0.0138 (0.20–0.35)		0.0394 (1.0)	0.0394 (1.0)	
			2nd ring			0.0079–0.0138 (0.20–0.35)	0.0079–0.0157 (0.20–0.40)		0.0394 (1.0)		
			Oil ring			0.0059–0.0138 (0.15–0.35)	0.0098–0.0197 (0.25–0.50)		0.0394 (1.0)	0.0472 (1.2)	
		Clearance between piston ring groove and ring	Top ring			0.0031–0.0047 (0.08–0.12)	0.0028–0.0043 (0.07–0.11)		0.0010 (0.25)	0.010 (0.25)	
			2nd ring			0.0020–0.0040 (0.05–0.09)	0.0016–0.0031 (0.04–0.08)				
			Oil ring			0.0008–0.0024 (0.02–0.06)	0.0008–0.0024 (0.02–0.06)		0.0060 (0.15)		
		Ring width	Top ring	0.079(2)	0.079(2)						
			2nd ring	0.059(1.5)	0.059(1.5)						
			Oil ring	0.118(3)	0.157(4)						
	Connecting Rods	Torsion between small and large end holes (per 3.937 in (100 mm))				Less than 0.003(0.08)	Less than 0.003(0.08)	More than 0.0080(0.2)			
		Parallelism between small and large end hole (per 3.937 in (100 mm))				Less than 0.0020(0.05)	Less than 0.0020(0.05)	More than 0.0059(0.15)			
		Axial play of connecting rod and crank pin				0.0039–0.0118 (0.1–0.3)	0.0039–0.0118 (0.1–0.3)		0.0276 (0.7)	0.0276 (0.7)	
		Clearance between crank pin and connecting rod metal				0.0014–0.0033 (0.035–0.085)	0.0014–0.0033 (0.035–0.085)		0.008 (0.2)	0.008 (0.2)	Oil clearance
		Connecting rod tightening torque lb_f•ft(N•m) {kgf•m}				21.4–25.1(29–34) {3.0–3.5}	36.1–39.8(49–54) {5.0–5.5}				

https://truckmanualshub.com/

Unit	Part	Inspection Items		Standard Dimension		Standard Value		To be Repaired	Allowable Limit		
				S773L	N843(L)	S773L	N843(L)		S773L	N843(L)	Remarks
Rotating Assembly	Crankshaft	Diameter of journal		1.890(48)	2.677(68)	1.8883–1.88888 (47.964–47.975)	2.6755–2.6760 (67.957–67.970)		1.8858 (47.9)	2.6535 (67.4)	
		Diameter of crank pin		1.614(41)	2.0472(52)	1.6128–1.3132 (40.964–40.975)	2.0458–2.0463 (51.964–51.975)		Ø1.6102 (40.9)	2.024 (51.4)	
		Roughness, main journal and crank pin		1.6Z	1.6Z						
		Crankshaft run out				Less than 0.0012(0.03)	Less than 0.0012(0.03)	More than 0.0024(0.06)			
		Axial play of crankshaft				0.0039–0.0118 (0.1–0.3)	0.0039–0.0118 (0.1–0.3)		0.0197 (0.5)	0.0197 (0.5)	
		Thickness of thrust washer			0.118(3.0)		0.116–0.118 (2.95–3.00)			0.110 (2.8)	
		O.D. X. I.D. of journal bearing		2.008 x 1.890 (51 x 48)	2.677 x 2.835 (68 × 72)						
		Clearance between crank-shaft journal and bearing				0.0015–0.0042 (0.039–0.106)	0.0015–0.0042 (0.039–0.106)		0.008 (0.2)	0.008 (0.2)	Oil clearance
		I.D. X O.D. of center bearing		1.890 x 2.047 (48 x 52)	2.677 x 2.835 (68 x 72)						
		Clearance between crank-shaft journal and center bear-ing				0.0015–0.0036 (0.039–0.092)	0.0017–0.0040 (0.044 - 0.102)		0.008 (0.2)	0.008 (0.2)	
Valve System	Camshaft	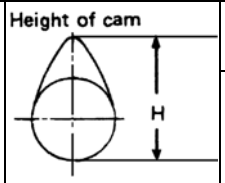	For intake/ exhaust			1.0459–1.0480 (26.565–26.62)	1.3564–1.3586 (34.453–34.508)		1.0315 (26.2)	1.3425 (34.1)	
			For injec-tion pump			1.5701–1.5764 (39.88 - 40.04)	1.691–1.695 (42.94–43.06)		1.563 (39.7)	1.685 (42.8)	
		Cam shaft run out		Less than 0.0012(0.03)	Less than 0.0012(0.03)	More than 0.004(0.1)	More than 0.004(0.1)				
		Cam gear back-lash				0.0031(0.08)	0.0031(0.08)		0.010 (0.25)		

https://truckmanualshub.com/

Unit	Part	Inspection Items		Standard Dimension		Standard Value		To be Repaired	Allowable Limit		
				S773L	N843(L)	S773L	N843(L)		S773L	N843(L)	Remarks
Valve System	Valve	Diameter of intake valve stem		0.2744 (6.97)	0.2744 (6.97)	0.2738–0.2744 (6.955–6.97)	0.2738–0.2744 (6.955–6.97)		0.2713 (6.89)	0.2713 (6.89)	
		Diameter of exhaust valve stem		0.2738 (6.955)	0.2738 (6.955)	0.2732–0.2738 (6.94–6.955)	0.2732–0.2738 (6.94–6.955)		0.2693 (6.84)	0.2693 (6.84)	
		Clearance between valve stem and valve guide	Intake			0.0012–0.0024 (0.03 – 0.06)	0.0012–0.0024 (0.03 – 0.06)		More than 0.0079 (0.2)	More than 0.0079 (0.2)	
			Exhaust			0.0018–0.0030 (0.045–0.075)	0.0018–0.0030 (0.045–0.075)		More than 0.0100 (0.25)	More than 0.0100 (0.25)	
		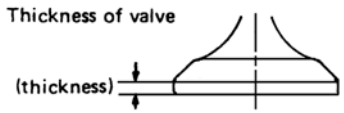		0.039(1.0)	0.039(1.0)	0.0305–0.0423 (0.775–1.075)	0.0315–0.0433 (0.8- 1.1)		0.02 (0.5)	0.02 (0.5)	
		Valve clearance (Intake/exhaust)				0.008(0.2)	0.008(0.2)	0.02(0.5)			
		Valve spring	Spring force lb_f(N){kgf} (Com-pressed to 1.20(30.4) mounting length)			17.9(79.8){8.1}	17.9(79.8){8.1}		15.4(68.6) {7}	15.4(68.6) {7}	
			Free length			1.4(35)	1.4(35)		1.32 (33.5)	1.32 (33.5)	
		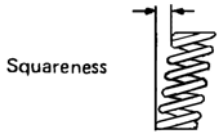				Less than 0.047(1.2)	Less than 0.047(1.2)		0.08 (2.0)	0.08 (2.0)	
	Push Rod	Overall length		6.86(174.3)	7.00(177.8)	6.85–6.87 (174.1–174.5)	6.99–7.01 (177.6–178.0)				
		Outer diameter		0.25(6.3)	0.25(6.3)						
	Rocker Arm	Wear, rocker arm shaft		0.46(11.7)	0.589(14.96)	0.4587–0.4594 (11.650–11.668)	0.5886–0.5894 (14.95–14.97)		0.4555 (11.57)	0.5854 (14.87)	
		Clearance between rocker arm and shaft				0.0013–.00268 (0.032–0.068)	0.00126–.0027 (0.032–0.068)		0.0079 (0.2)	0.0079 (0.2)	Oil clearance

https://truckmanualshub.com/

Unit	Part	Inspection Items	Standard Dimension		Standard Value		To be Repaired	Allowable Limit		
			S773L	N843(L)	S773L	N843(L)		S773L	N843(L)	Remarks
Lubrication System	Oil Pump	Discharge rate: gal/min(L/min) Engine speed: 2500rpm Discharge pressure: 42.6–71.1 PSI (294–490 kPa) {3–5 kgf/cm³} Oil temperature: 122°F–176°F (50°C–80°C)(SAE30)			4.28(16.2)	4.28(16.2)				
		Oil pressure switch operating pressure PSI(kPa){kgf/cm2}	7.11(49.0){0.5}	4.26(29.4){0.3}	5.69–8.53(39.2–58.8){0.4–0.6}	2.84–5.69(19.6 - 39.2){0.2–0.4}				
		Relief pressure PSI(kPa){kgf/cm²}			49.75–63.96 (343–441) {3.5–4.5}	35.53–49.75 (245–343) {2.5–3.5}				
		Lubrication oil capacity US Qt(L)	4.86(4.6) With filter(+0.32 Qt.)(+ 0.3 L)	6.34(6)With filter(+0.53 Qt.)(+ 0.5 L)						
		Tip clearance (rotor-to-vane)			0.004–0.006 (0.1–0.15)	0.004–0.006 (0.1–0.15)		0.0100 (0.25)	0.0100 (0.25)	
		Side clearance (rotor-to-cover)			0.004–0.006 (0.1–0.15)	0.004–0.006 (0.1–0.15)		.008(0.2)	.008(0.2)	
Fuel System	Injection Pump	Type			Bosch, PFR Type					
		Injection timing — Before T.D.C.			25–27°	18–20°				
		Injection timing — Piston displacement before T.D.C.			0.27-.31in^3 (4.411–5.123ml)	N843: 0.16-0.19in^3 (2.594–3.187ml) N843L: 0.19-0.24 in^3(3.195–3.923ml)	0.22-.26in^3 (3.529-4.217ml)			
	Injection Nozzle	Type	S773L—131406440, N843(L)—(Nozzle) 105007-1170 (NP DN4PDN117)							
		Injection pressure PSI(MPa){kgf/cm2}			1711.4(11.8){120}	2175.6–2349 (15.2–16.2) {155–165}	1636–1778 (11.28-12.26) {115-125}			
		Angle of injection direction	4°	4°						
		Nozzle and holder tightening torque lbf•ft(N•m){kgf•m}	43.5–50.9 (59.0–69.0) {6–7}	36.1–37.3 (49.0–50.6) {5–7}				With cylinder head installed		

https://truckmanualshub.com/

Unit	Part	Inspection Items	Standard Dimension		Standard Value		To be Repaired	Allowable Limit		
			S773L	N843(L)	S773L	N843(L)		S773L	N843(L)	Remarks
Cooling System	Cooling	Cooling method	Forced circulation water cooling							
		Coolant water volume US Qt(L)	2.0(1.9)	5.3(5)						
		Type	145206061							
		Thermostat open temperature F°(°C)			167(75)	180(82)				
		Thermostat full-open Temperature F°(°C)			189(87)	203(95)				
		V belt (fan) looseness (load at center 11lb(5kg))			0.19–0.39(5–10)	0.19–0.39(5–10)				
Electrical System	Starter Motor	Type			185086670	M001T66081				
		No. of teeth of pinion gear	9	11						
		Shifting method of pinion	Magnetic shifting							
		Wear of commutator diameter	1.16(29.4)	1.16(29.4)			1.13 (28.8)			
		Stepped wear of commutator			0.002(0.05)	0.002(0.05)		0.0079 (0.2)	0.0079 (0.2)	
		Bending allowance of armature shaft			0.002(0.05)	0.002(0.05)	More than 0.003(0.08)			
		Length of brush	0.69(17.5)	0.69(17.5)				0.35(9)	0.35(9)	
		Spring force of brush lb_f(N){kgf}			5.06–7.31 (22.5–32.5) {2.3–3.3}	5.06–7.31 (22.5–32.5) {2.3–3.3}		Less than 1.98(8.8) {0.9}	Less than 1.98(8.8) {0.9	
	Alternator	Type			185046440	A007T03877				12V–40A
		Outside diameter of slip ring			0.89(22.7)	0.89(22.7)		0.87 (22.1)		
		Length of brush			0.73(18.5)	0.73(18.5)		0.197(5.0)		
		Pulley tightening torque lb_f•ft(N•m){kgf•m}			42.8–58.3(58–79) {5.95–8.05}	42.8–58.3(58–79) {5.95–8.05}				

https://truckmanualshub.com/

Index

A

Alternator (40 amp version) 5-4
Alternator Maintenance 5-11
Alternator Trouble shooting 5-12

C

Cam shaft assembly. 3-12
Camshaft · Tachometer assembly 4-4
Connecting rod 3-7
Connecting rod bearing 3-7
Crank shaft and bearing holder assembly . . 4-1
Crankshaft 3-10
Crankshaft bearing holder. 3-9
Crankshaft bearings 3-9
Crankshaft end play 4-1
Crankshaft pulley installation 4-6
Cylinder block 3-4
Cylinder head assembly 3-2, 4-7

E

Electrical Systems 5-1
Engine glow plugs 5-2
Engine oil pressure switch 5-3
Engine Removal 2-5
Engine Sectional Drawing 2-3
Engine stop solenoid 4-6

F

Flywheel and ring gear 3-11
Flywheel installation. 4-2
Front plate installation 4-4
Fuel filter 3-16
Fuel shutoff solenoid 5-1
Fundamental Instructions On Service 2-1

G

General Notes Before Service 2-1
Glow plug, Connector 4-9
Governor 3-16

I

Idle gear · Oil pump assembly 4-5
Injection pump. 3-16
Injection pump assembly. 4-6

N

Nozzle and holder 3-17

O

Oil dipstick · Dipstick guide installation 4-4
Oil filter 3-14
Oil filter installation 4-6
Oil flow 3-13
Oil pan installation 4-4
Oil pipe. 4-9
Oil pressure switch. 4-9
Oil pump. 3-14
Oil seal installation. 4-2

P

Parts and Descriptions 2-6
Piston and connecting rod assembly. 4-3
Piston and piston ring 3-5

R

Radiator 3-15
Rear plate installation 4-2
Relief valve assembly with O-Ring 4-1
Rocker arm assembly 3-1
Rocker arm assembly, Cap · Push rod · 4-8

S

Sectional Drawing 2-3
Servicing Specifications 7-1
Specifications 2-4
Starter Maintenance. 5-18
Starter motor (M001T66081) 5-13
Starter Trouble shooting 5-19
Suction pipe · Suction filter installation 4-3

T

Tachometer 4-4
Timing gear 3-12
Timing gear case · Cover installation 4-5
Torque 2-2
Torque Specifications 2-2
Trouble Shooting 6-1

V

Valve clearance adjustment 4-8
Valve cover installation 4-9

W

Water pump assembly · Bypass hose 4-9
Water pump assembly and thermostat 3-15