https://truckmanualshub.com/

Page Title	Page Number
Engine And Equipment	010-0005
Alternator And Bracket	010-0010
Alternator - Valeo	010-0015
Starter - Magneti Marelli	010-0020
Cylinder Block	010-0025
Timing Gear Housing	010-0030
Flywheel Housing	010-0035
Crankshaft, Pistons And Connecting Rods	010-0040
Valve Mechanism And Camshaft	010-0045
Cylinder Head	010-0050
Cylinder Head Cover	010-0055
Thermostat	010-0060
Lubricating Oil Sump - Up to Serial or Engine Number - J14443	010-0065
Lubricating Oil Sump - From Serial or Engine Number - J14444	010-0070
Lubricating Oil Pump	010-0075
Lubricating Oil Cooler And Filter	010-0080
Water Pump	010-0085
Fuel Injection Equipment (Diesel)	010-0090
Fuel Injection Equipment (Diesel)	010-0095
Feed Pump	010-0100
Stop Magnet	010-0105
Low Pressure Fuel System	010-0110
Air Induction And Exhaust System	010-0115
Turbocharger - Pipes	010-0120
Cold Starting Device	010-0125
Belt Tensioner	010-0130
Engine Repair Kits - Piston- Cylinder Head With Valves	010-0135
Engine Gaskets Sets	010-0140
Heater Engine Block	010-0145
Heater Engine Block	010-0150
Battery & Cables - Without Battery Cut-Off W/O Positive Connection	010-0155
Battery & Cables - With Battery Cut-Off	010-0160
Battery & Cables - Without Battery Cut-Off With Positive Connection	010-0165
Cooling System - Air Conditioned Installation	010-0170
Sanden Compresser	010-0175
Cooling System - Engine	010-0180
Cab Heating System - Engine Part	010-0185
Fuel System - Fuel Tank And Attachments	010-0190
Fuel System - Fuel Tank And Attachments - With Additional Tank	010-0195
Fuel System - Fuel Tank And Attachments	010-0200
Fuel System - Fuel Filters And Pipes - WITH FUEL COOLER	010-0205
Fuel System - Fuel Filters And Pipes - WITH FLOW METER AND FUEL COOLER	010-0210
Sedimenter	010-0215
Air Filter - Dry - Dual Element	010-0220
Air Filter - Dry - Dual Element	010-0225
Air Cooler	010-0230
Vertical Exhaust On The Side	010-0235
Throttle Controls	010-0240
Throttle Controls	010-0245
Throttle Controls	010-0250

https://truckmanualshub.com/

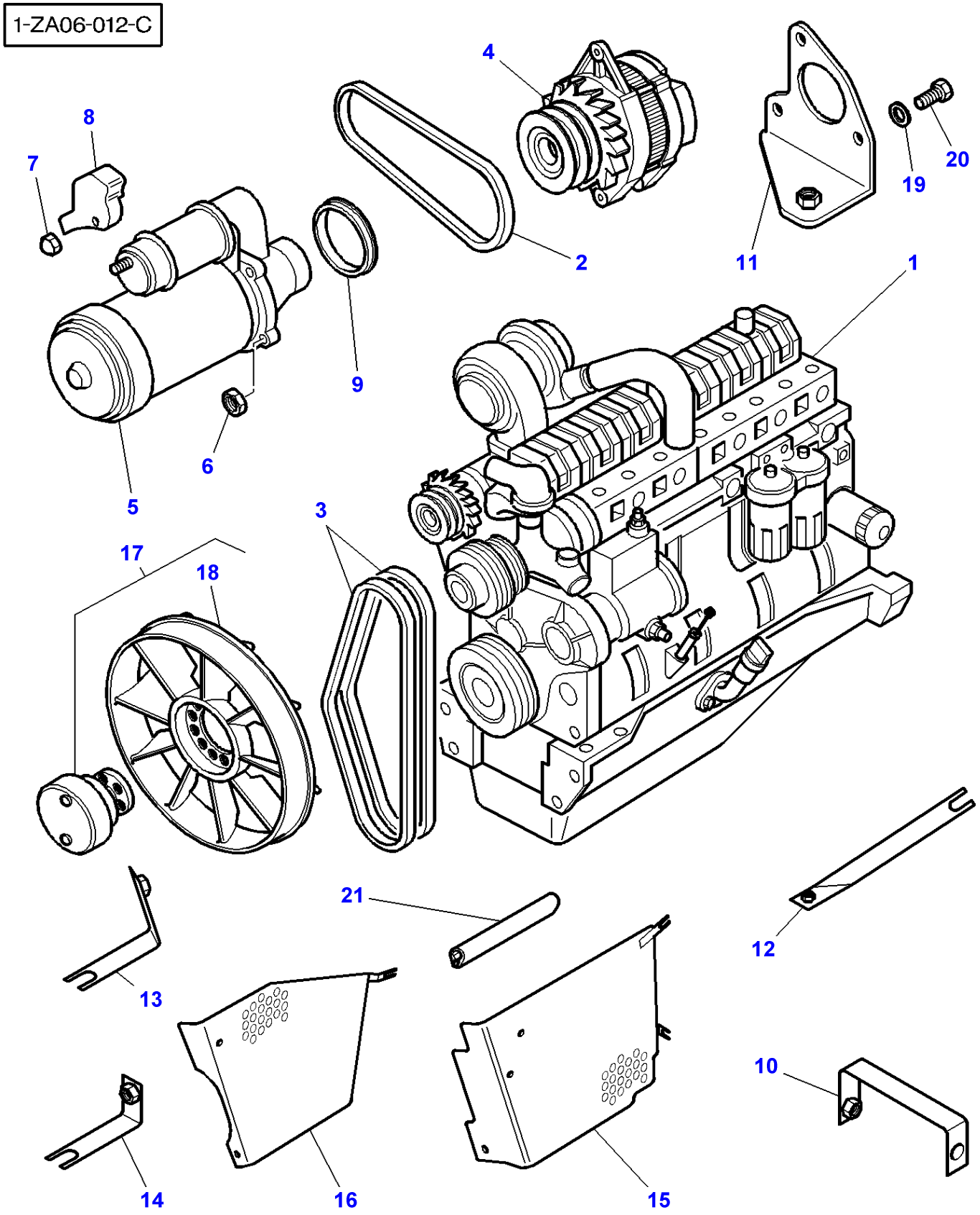

https://truckmanualshub.com/

Item	Part Number	Qty	Description	Comments
1	3782741M91	1	Engine	634 DSBAE
2	**5016260M1**	1	Belt	
3	**3617180M91**	1	Kit, Belt	
4	3780634M1	1	Alternator	120 AMP.
				See Page - Reference Number 010-0015/1
5	3581576M3	1	Startermotor	
6	3009693X1	3	Nut Metric	M10
7	3611638M1	1	Nut	M8
8	3611662M1	1	Cover	
9	3778469M1	1	Spacer	
10	3782045M1	1	Strap	
11	3781103M1	1	Support	
12	3783247M1	1	Strap	
13	3783245M1	1	Support	
14	3783246M1	1	Strap	
15	3783248M4	1	Cowl	
16	3783249M2	1	Cowl	
17	3782778M91	1	Fan	
18	3777244M1	1	Fan	(17)
19	385361X1	3	Washer Metric	
20	339368X1	3	Bolt Metric	M8X60
21	3778990M1	1	Gasket	Length 165MM

https://truckmanualshub.com/

1-ZA10-003-A

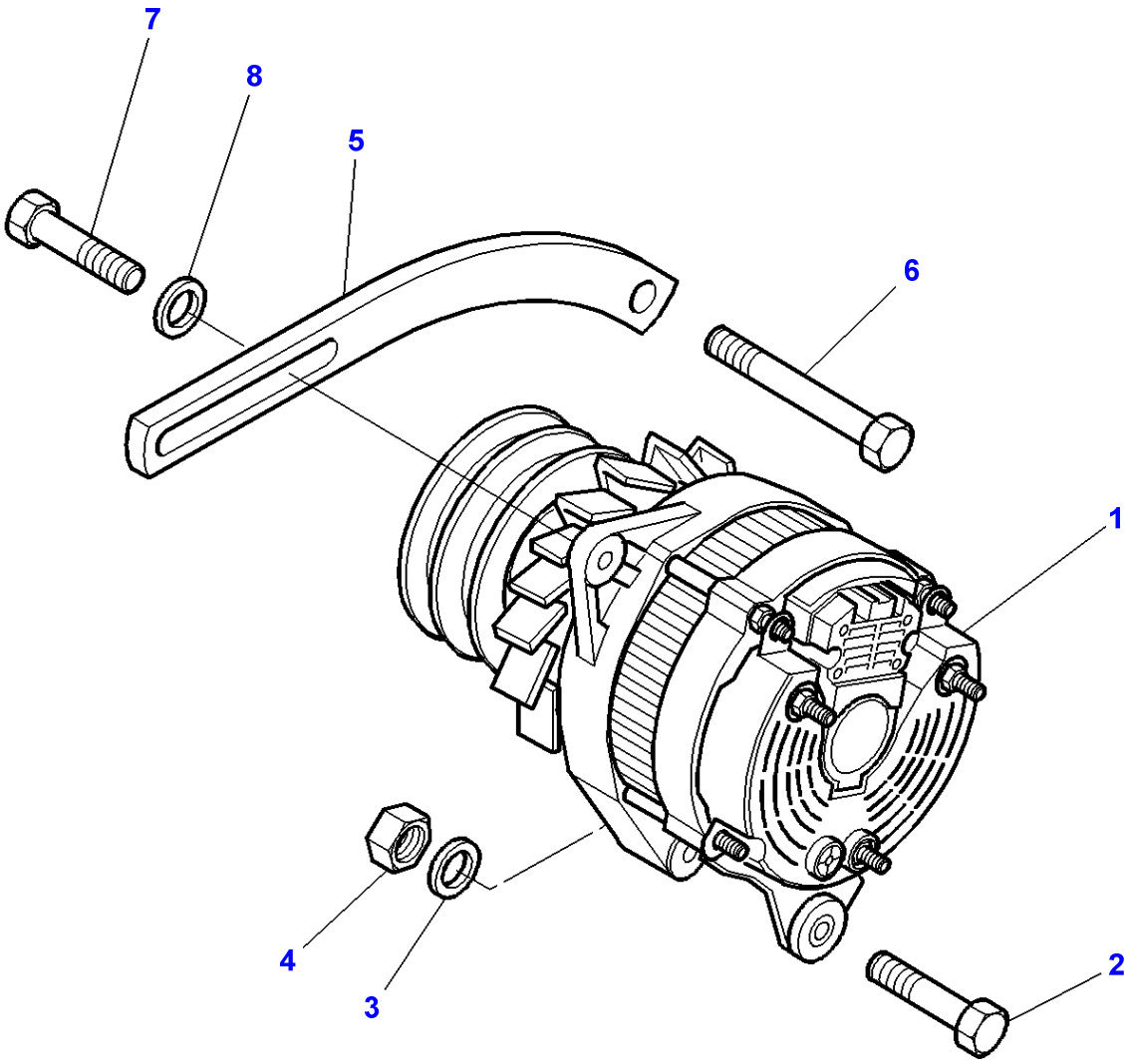

https://truckmanualshub.com/

Item	Part Number	Qty	Description	Comments
1	3780634M1	1	Alternator	120 AMP.
				See Page - Reference Number 010-0015/1
2	1442487X1	1	Bolt Metric	M10X130
3	390734X1	1	Washer	
4	3009693X1	1	Nut Metric	M10
5	3780945M1	1	Tensioner	
6	3009491X1	1	Hex. Sock. Screw	M10X20
7	339168X1	1	Hex. Sock. Screw	M8X50
8	390972X1	1	Washer Metric	

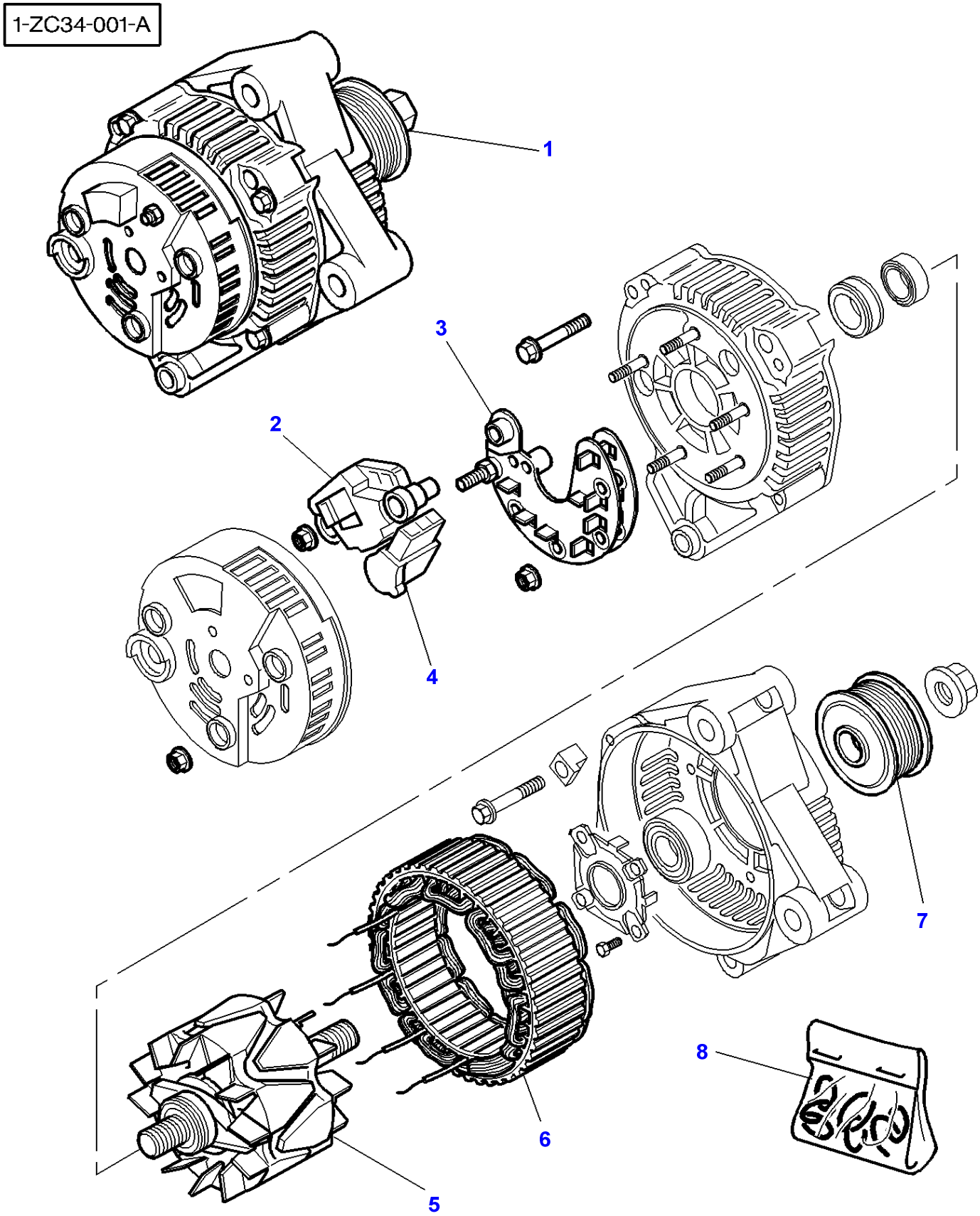
1-ZC34-001-A
1
2
3
4
5
6
7
8

https://truckmanualshub.com/

Item	Part Number	Qty	Description	Comments
1	3780634M1	1	Alternator	120 AMP
2	3903324M91	1	Support	(1)
3	3903321M91	1	Bridge	(1)
4	3903318M91	1	Regulator	(1)
5	3903319M91	1	Rotor	(1)
6	3903320M91	1	Stator	(1)
7	3903322M1	1	Pulley	(1)
8	3903323M91	1	Parts Pack	

1-ZC50-002-B

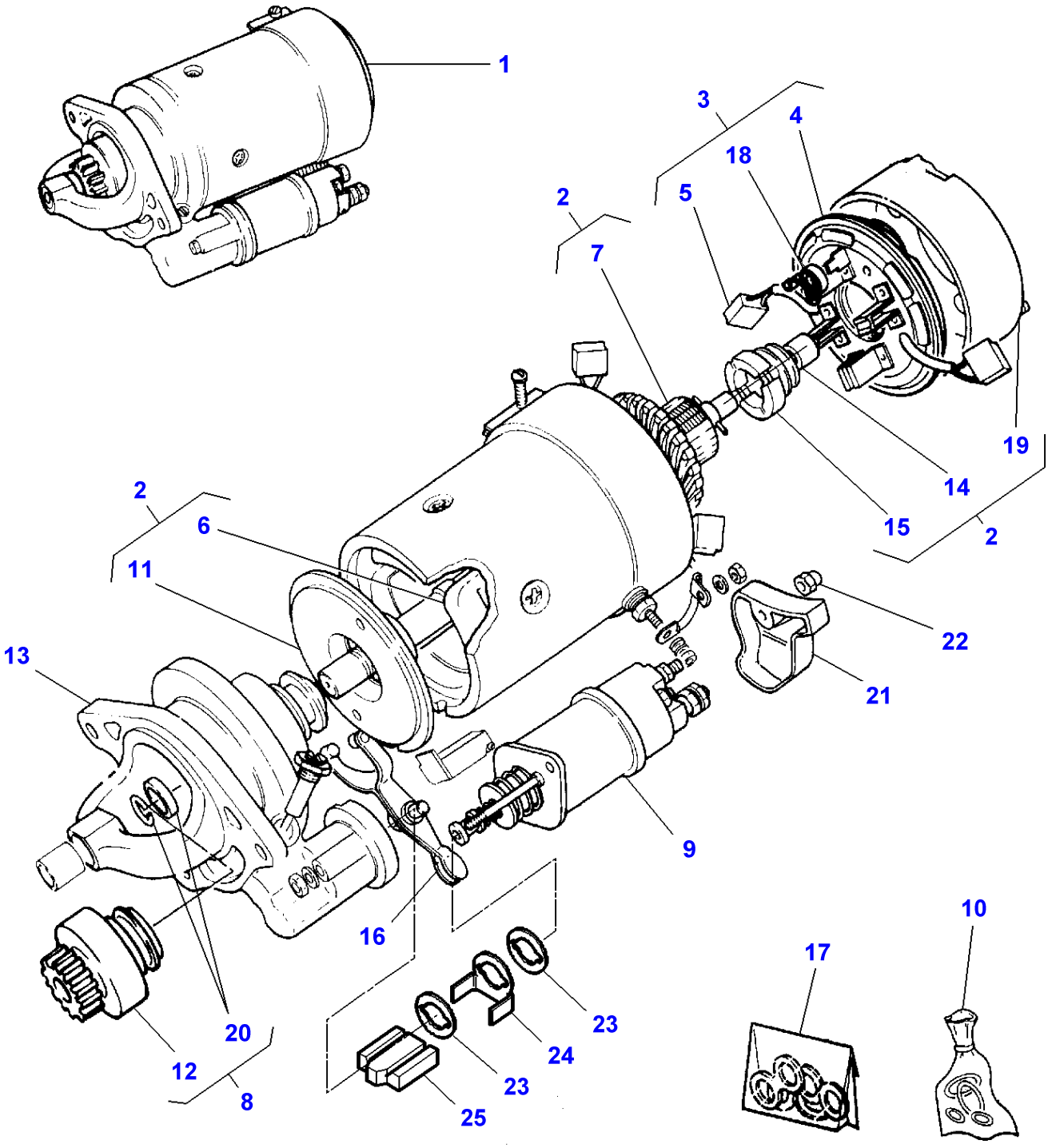

https://truckmanualshub.com/

Item	Part Number	Qty	Description	Comments
1	3581576M3	1	Startermotor	[A] M127/2.8
2	3902392M91	1	Parts Pack	(1)
3	3902391M91	1	Parts Pack	(1)
4		1	Kit, Spring	(3) Not serviced, order REF NO 3
5		1	Kit, Brush	(3) Not serviced, order REF NO 3
6		1	Coil	(2) Not serviced, order REF NO 2
7		1	Armature	(2) Not serviced, order REF NO 2
8	3902390M91	1	Parts Pack	(1)
9	3901191M1	1	Solenoid	(1)
10	1887967M91	1	Kit	(1)
11		1	Bearing Plate	(2) Not serviced, order REF NO 2
12		1	Drive	(8) Not serviced, order REF NO 8
13	3904181M91	1	Bracket	(1)
14		1	Bush	(2) Not serviced, order REF NO 2
15		1	Kit, Brake	(2) Not serviced, order REF NO 2
16	1897317M92	1	Kit, Lever	(1)
17	1806002M1	1	Kit, Seal	(1)
18		1	Kit, Brush Plate	(3) Not serviced, order REF NO 3
19		1	Housing	(2) Not serviced, order REF NO 2
20		1	Kit, Retainer	(8) Not serviced, order REF NO 8
21	3611662M1	1	Cover	
22	3611638M1	1	Nut	
23	3904186M1	2	Gasket	(1)
24	3904185M1	1	Carrier	(1)
25	3904184M1	1	Grommet	(1)

FOOTNOTE [A] THE APPROPRIATE SAFETY DECALS MUST BE ORDERED AND FITTED TO THIS PART

1-ZH01-004-A

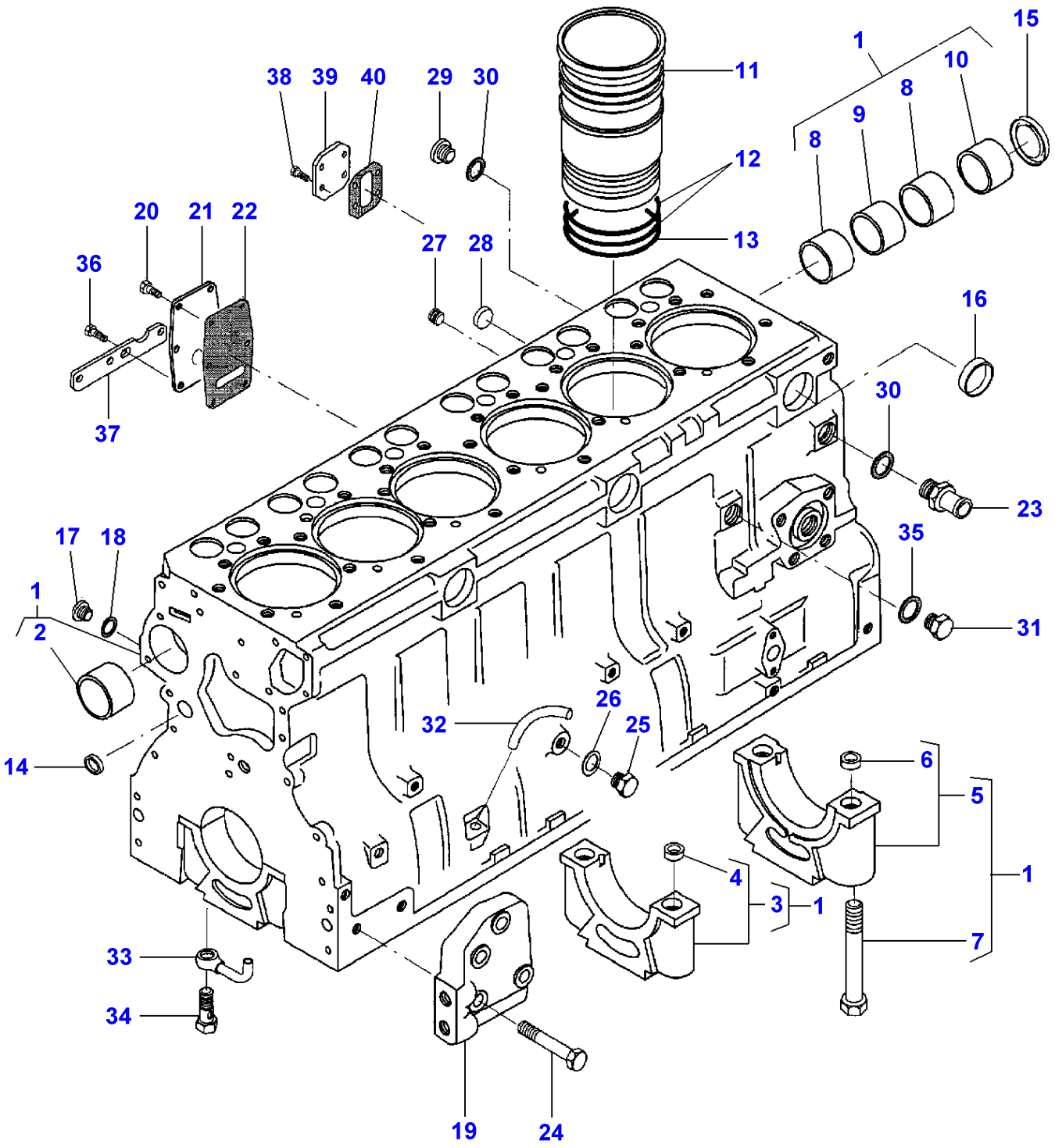
38
39
40
29
30
11
1
15
10
8
9
8
12
13
20
21
22
27
28
36
16
37
30
23
17
18
35
1
2
31
26
32
25
14
6
5
4
1
3
1
7
33
34
19
24

https://truckmanualshub.com/

Item	Part Number	Qty	Description	Comments
1	V836847275	1	Cylinder Block	
2	V836322610	1	Bush	(1)
3		6	Bearing Carrier	(1)
4	V836214478	2	Bush	(3)
5		1	Bearing Carrier	(1)
6	V836214478	2	Bush	(5)
7	V529903180	14	Screw	(1)
8	V836852460	2	Bush	(1)
9	V836852459	1	Bush	(1)
10	V836852461	1	Bush	(1)
11	V836647420	6	Liner	
	V836647933	X	Liner	Thickness 9,08MM
	V836647934	X	Liner	Thickness 9,13MM
	V836647935	X	Liner	Thickness 9,23MM
12	V836647502	12	O Ring	
13	V836647503	6	O Ring	
14	V640016016	4	Plug	
15	V836852744	1	Plug	
16	V640016040	3	Plug	
17	V640325110	3	Plug	
18	V615571014	4	Seal	
19	V836852656	1	Support	Left Hand
	V836852657	1	Support	Right Hand
20	V528801380	4	Screw	M8X20
21	V836847994	1	Cover	
22	V836322852	1	Gasket	
23	V836119837	1	Union	
24	V529802682	8	Screw	M14X65
25	V640305012	1	Plug	
26	V615881216	1	Gasket	
27	V640025010	1	Plug	
28	V640016018	3	Plug	
29	V640325018	1	Plug	
30	V615881822	2	Seal	
31	V836019756	1	Plug	
32	V836855997	1	Pipe	
33	V836855093	6	Pipe	
34	V836338601	6	Valve	
35	V615881824	1	Seal	
36	V528801400	2	Screw	M8X25
37	V836859571	1	Support	
38	V528801362	4	Screw	M8X16
39	V836659543	1	Cover	
40	V836659544	1	Gasket	

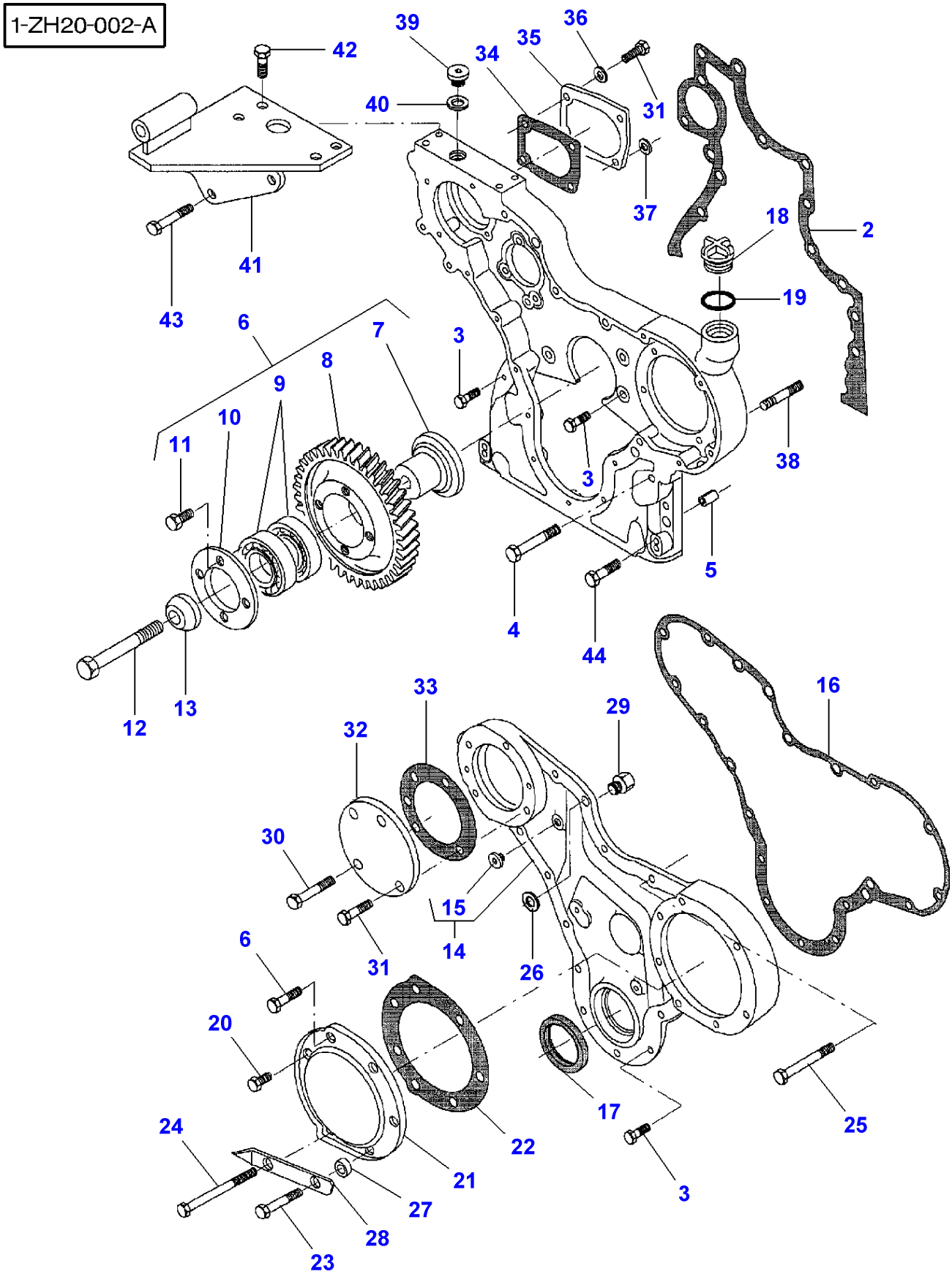
1-ZH20-002-A
42
39
34
35
36
40
31
37
18
2
41
43
19
6
7
3
8
9
10
11
38
3
5
4
44
12
13
33
29
16
32
30
15
14
31
26
6
20
17
25
24
22
21
3
27
28
23

https://truckmanualshub.com/

Item	Part Number	Qty	Description	Comments
1	V836859491	1	Timing Gear Case	
2	V836647419	1	Gasket	
3	V528801400	17	Screw	M8X25
4	V529801470	1	Screw	M8X60
5	V598359850	4	Pin	
6	V836647946	1	Gear	
7	V836647937	1	Shaft	
8	V836122756	1	Gear	(6)
9	V610071079	2	Bearing	(6)
10	V836122759	1	Flange	(6)
11	V528801360	4	Screw	(6) M8X16
12	V529902720	1	Screw	M14X85
13	V836122758	1	Flange	
14	V836117328	1	Cover	
15	V588204963	1	Plug	
16	V836117329	1	Gasket	
17	V614105880	1	Seal	
18	V836017927	1	Plug	
19	V614603540	1	O Ring	
20	V528801360	2	Screw	M8X16
21	V836120144	1	Cover	
22	V836112272	1	Gasket	
23	V529801460	1	Screw	M8X55
24	V529801560	1	Screw	M8X105
25	V529801500	4	Screw	M8X75
26	V836120989	1	Washer	
27	V836019695	2	Sleeve	
28	V836352823	1	Plate	
29	V836647774	1	Screw	
30	V529801440	1	Screw	M8X45
31	V528801380	5	Screw	M8X20
32	V836117337	1	Cover	
33	V836117338	1	Gasket	
34	V836022077	1	Gasket	
35	V836122076	1	Cover	
36	V500950800	3	Washer	
37	V836015967	1	Seal	
38	V546801860	3	Stud	M10X55
39	V640325018	1	Plug	
40	V615881822	1	Seal	
41	V836859319	1	Support	
42	V528801780	4	Screw	M10X20
43	V529801550	2	Screw	M8X50
44	V529801440	4	Screw	M8X45

1-ZH21-005-A

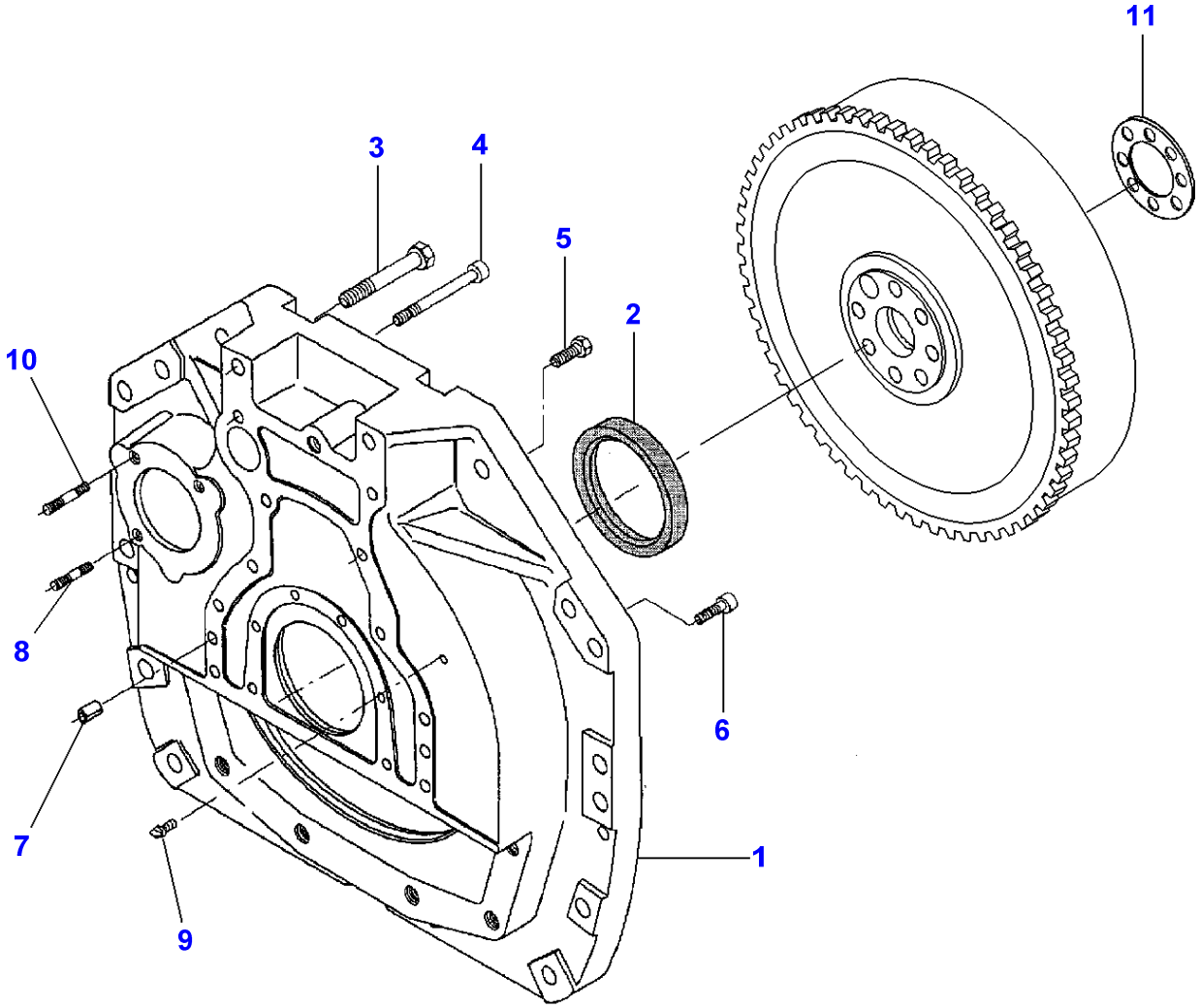

https://truckmanualshub.com/

Item	Part Number	Qty	Description	Comments
1	V836855925	1	Cover	
2	V614500002	1	Seal	
3	V529803160	2	Screw	M16X110
4	V581705580	2	Screw	M12X110
5	V528902230	8	Screw	M12X40
6	V581705030	6	Screw	M10X30
7	V598359850	2	Pin	
8	V546801800	2	Stud	M10X25
9	V836859311	1	Plug	
10	V836659869	1	Stud	
11	V836355864	1	Ring	

https://truckmanualshub.com/

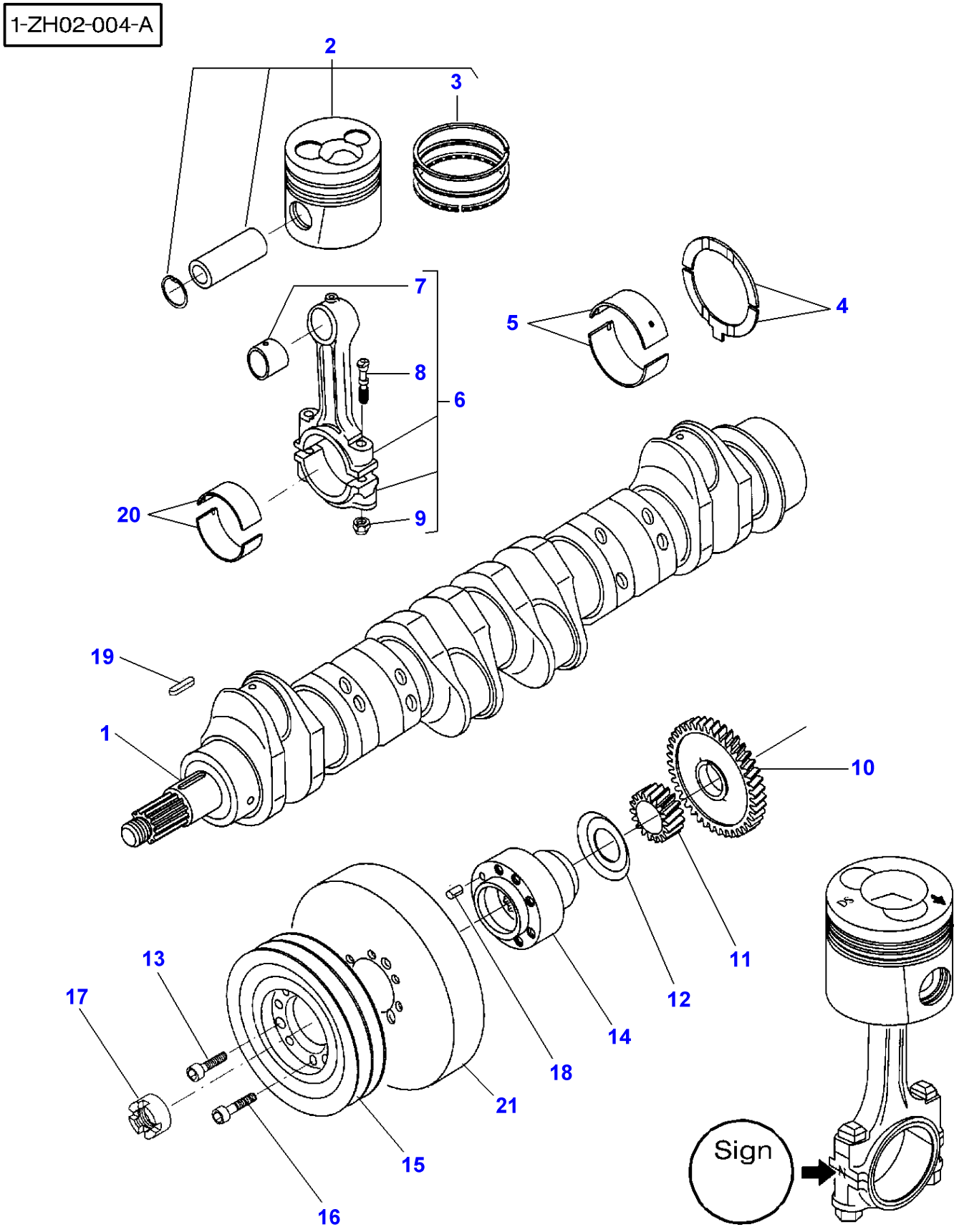

https://truckmanualshub.com/

Item	Part Number	Qty	Description	Comments
1	V836852281	1	Crankshaft	
2	V836840596	6	Piston	
3	V836640078	1	Kit, Piston Ring	(2)
4	V836119459	2	Chock	STANDARD
	V836120332	X	Thrust Washer	0,1MM
	V836120333	X	Thrust Washer	0,2MM
5	V836655514	7	Bearing	STANDARD Diameter 84,985MM 85,020MM
	V836655536	X	Bearing	Diameter 84,735MM 84,770MM
	V836655537	X	Bearing	Diameter 84,485MM 84,520MM
	V836655538	X	Bearing	Diameter 83,985MM 84,020MM
	V836655539	X	Bearing	Diameter 83,485MM 83,520MM
6	3638612M1	6	Conrod	2150-2169g X
	V836652104	X	Conrod	2170-2189g A
	V836652105	X	Conrod	2190-2209g B
	V836652106	X	Conrod	2210-2229g C
	V836652107	X	Conrod	2230-2249g D
	V836652108	X	Conrod	2250-2269g E
	V836652109	X	Conrod	2270-2289g H
	V836652110	X	Conrod	2290-2309g I
	V836652111	X	Conrod	2310-2329g J
	V836652112	X	Conrod	2330-2349g K
	V836652113	X	Conrod	2350-2369g L
	V836652114	X	Conrod	2370-2389g M
	V836652115	X	Conrod	2390-2409g N
	V836652116	X	Conrod	2410-2429g O
	V836652117	X	Conrod	2430-2449g P
	V836652118	X	Conrod	2450-2469g R
	V836652119	X	Conrod	2470-2489g S
	V836652120	X	Conrod	2490-2509g T
	V836652121	X	Conrod	2510-2529g U
7	V836646271	1	Bush	(6)
8	V836646204	2	Screw	(6)
9	V836646205	2	Nut	(6)
10	V836119550	1	Pinion	
11	V836122840	1	Pinion	
12	V836122732	1	Ring	
13	V581804620	3	Screw	M8X25
14	V836322586	1	Hub	
15	V836355026	1	Pulley	
16	V581804640	6	Screw	M8X35
17	V836847641	1	Nut	
18	V595954600	1	Pin	
19	V603345110	1	Key	
20	V836110552	6	Bearing	STANDARD Diameter 67,981MM 68,000MM
	V836112762	X	Bearing	Diameter 67,731MM 67,750MM
	V836112763	X	Bearing	Diameter 67,481MM 67,500MM
	V836112765	X	Bearing	Diameter 66,981MM 67,000MM
	V836112767	X	Bearing	Diameter 66,481MM 66,500MM
21	V836340689	1	Damper	

1-ZH22-001-A

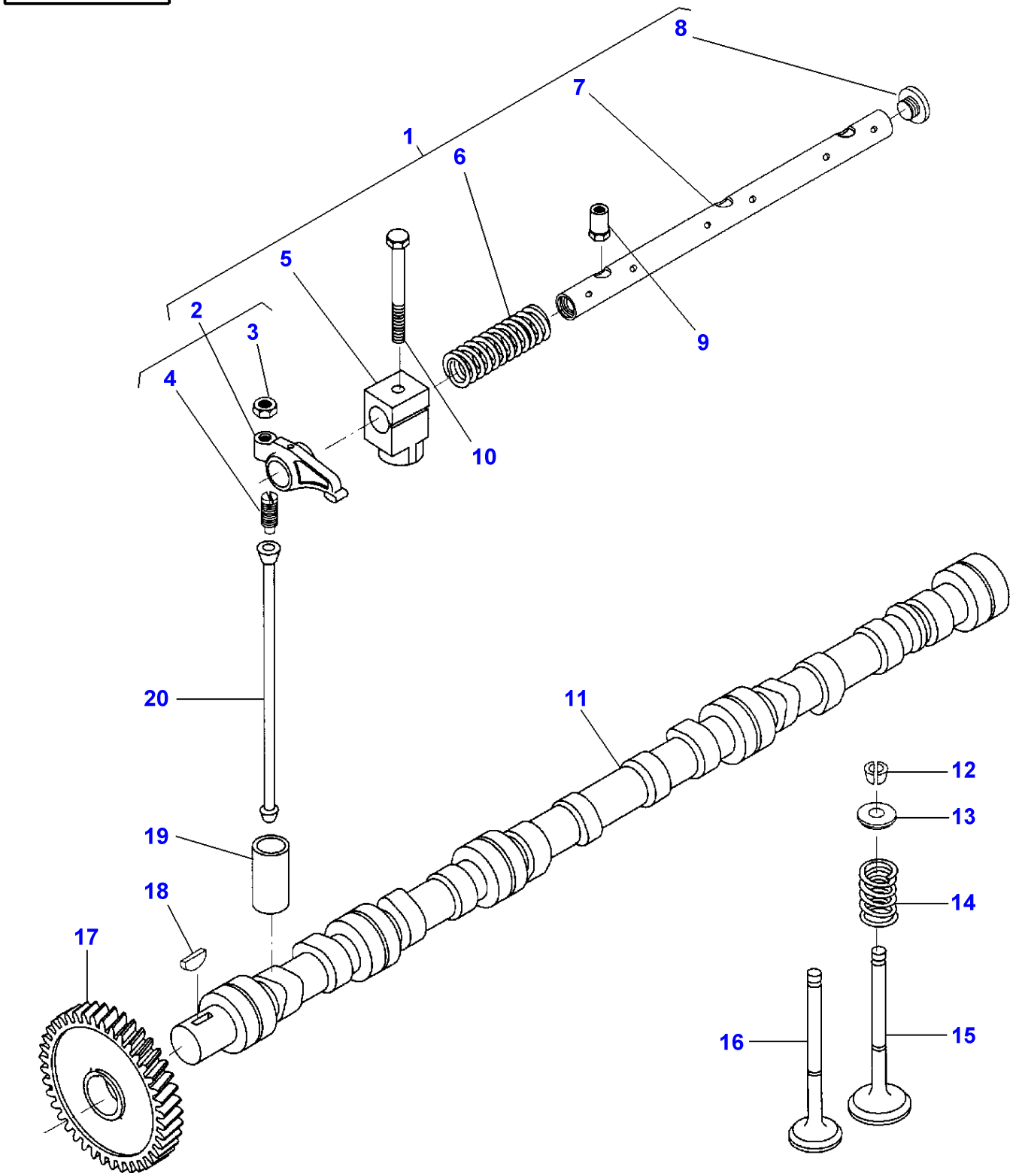

https://truckmanualshub.com/

Item	Part Number	Qty	Description	Comments
1	V836655911	2	Rocker Shaft	
2	V836655873	6	Rocker	(1)
3	V512861000	6	Nut	(2)
4	V836655866	6	Screw	(2)
5	V836655869	3	Bracket	(1)
6	V836655884	2	Spring	(1)
7	V836655870	1	Shaft	(1)
8	V836655899	2	Plug	(1)
9	V836655406	4	Nut	
10	V529801910	2	Screw	M10X80
11	V836846376	1	Camshaft	
12	V836646382	24	Cotter	
13	V836646381	12	Cup	
14	V836646380	12	Spring	
15	V836646356	6	Valve Inlet	
16	V836646357	6	Valve Exhaust	
17	V836647920	1	Gear	
18	V603305760	1	Key	
19	V836014264	12	Tappet	
20	V836655867	12	Rod	

1-ZH03-004-A

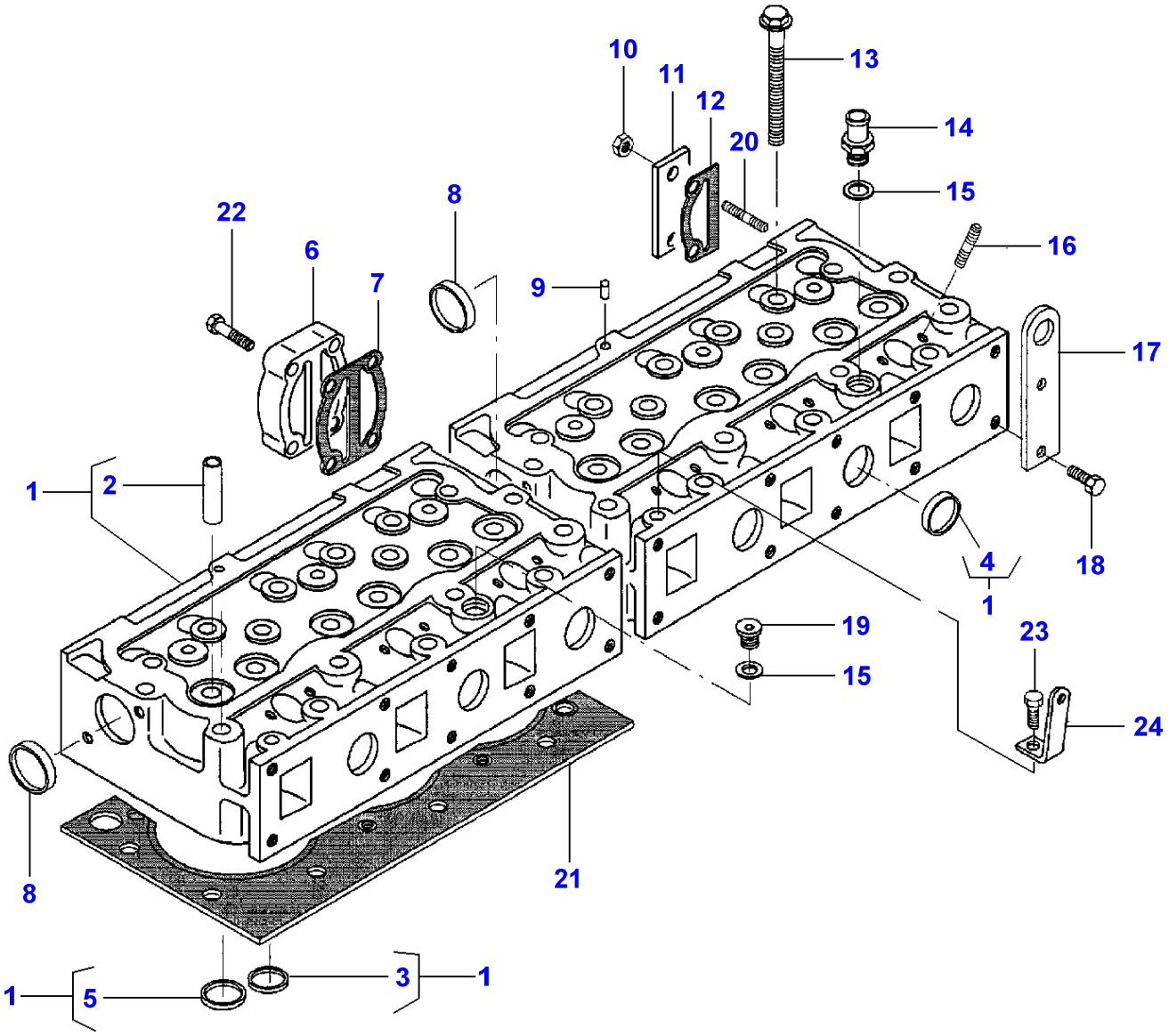

https://truckmanualshub.com/

Item	Part Number	Qty	Description	Comments
1	V836855381	2	Cylinder Head	
2	V836647601	6	Guide	(1)
3	V836647600	3	Pressure Valve	(1)
4	V836647942	5	Plug	(1)
5	V836647936	3	Pressure Valve	(1)
6	V836855348	1	Spacer	
7	V836855418	1	Gasket	
8	V640016045	2	Plug	
9	V595959140	2	Pin	M10
10	V504801002	2	Nut	
11	V836855350	1	Plate	
12	V836855417	1	Gasket	
13	V836859104	32	Screw	
14	V836119837	1	Union	
15	V615881822	2	Seal	
16	V546901435	12	Stud	M8X40
17	V836859722	1	Plate	
18	V528801800	2	Screw	M10X25
19	V640325018	1	Plug	
20	V836659785	2	Stud	
21	V836664155	2	Head Gasket	
22	V528801830	4	Screw	M10X40
23	V528801362	1	Screw	M8X16
24	V836859726	1	Support	

1-ZH23-002-B

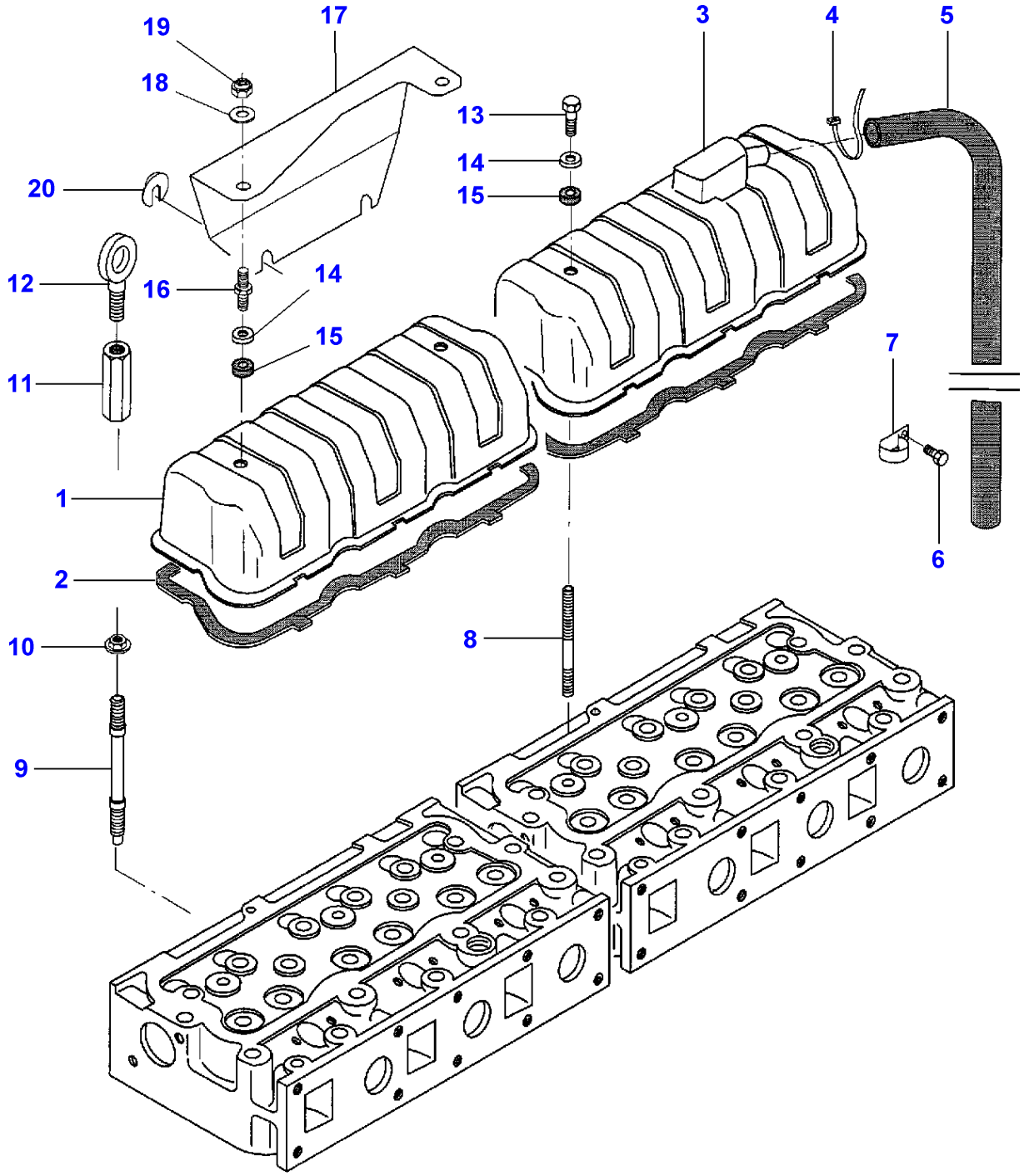

https://truckmanualshub.com/

Item	Part Number	Qty	Description	Comments
1	V836846448	1	Valve Cover	
2	V836646360	2	Gasket	
3	V836859501	1	Valve Cover	
4	V651754720	1	Clamp	
5	V836659529	1	Pipe	
6	V528801760	1	Screw	M10X16
7	V836659539	1	Clamp	
8	V546801900	4	Stud	M10X75
9	V836859109	2	Stud	
10	V836859110	2	Nut	
11	V836647835	2	Nut Special	
12	V836640252	1	Shackle	
13	V528801780	2	Screw	M10X20
14	V836119855	4	Washer	
15	V836012841	2	Gasket	
16	V836659175	2	Bolt	
17	V836859843	1	Fence	
18	V500151050	2	Washer	
19	V510601002	2	Nut	
20	V836864223	4	Clip	

1-ZH27-001-A

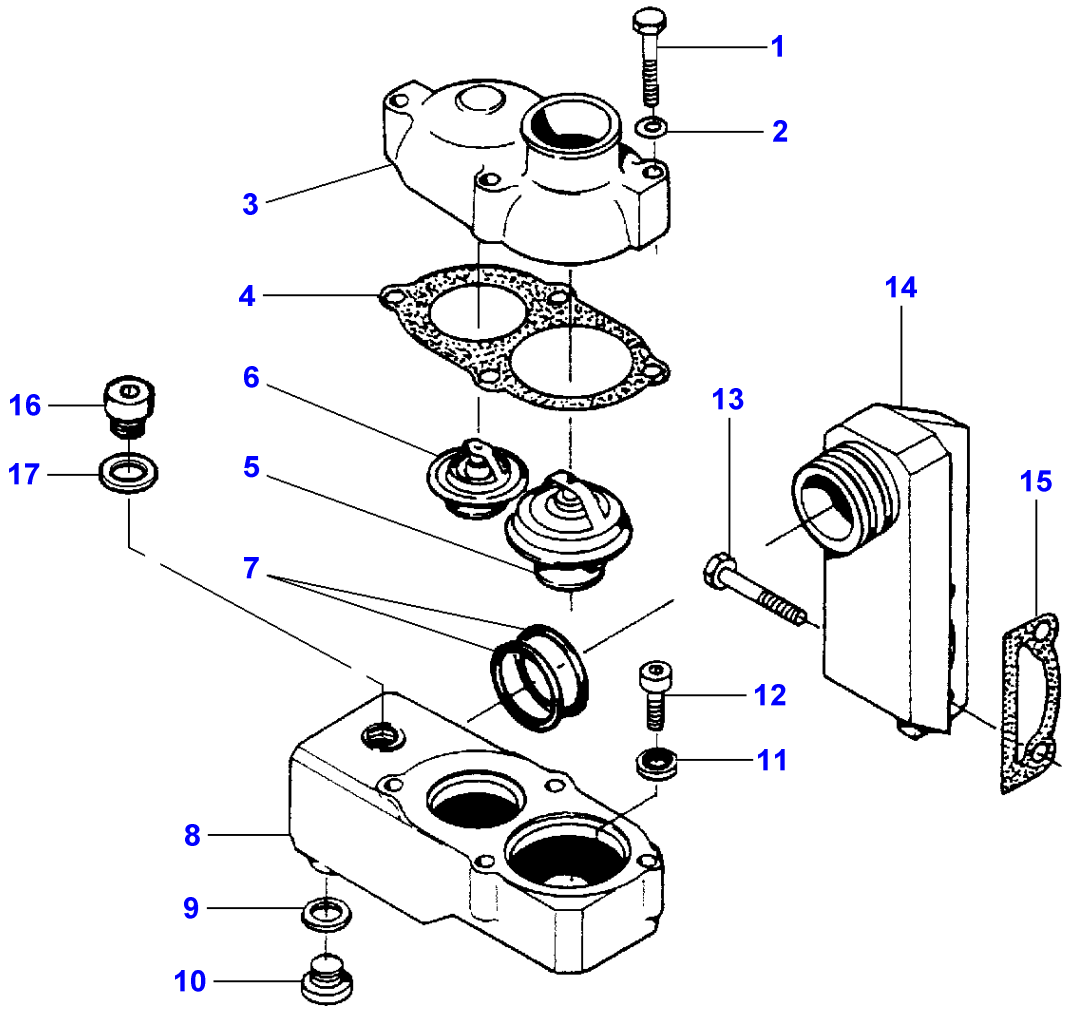

https://truckmanualshub.com/

Item	Part Number	Qty	Description	Comments
1	V529801550	4	Screw	M8X50
2	V500950800	4	Washer	
3	V836329631	1	Cover	
4	V836329632	1	Gasket	
5	**V836352903**	1	Thermostat	[A]
6	**V836015156**	1	Thermostat	[B]
7	V614604958	2	O Ring	
8	V836847880	1	Housing	
9	V615881822	1	Seal	
10	V640325018	1	Plug	
11	V836015967	2	Seal	
12	V581804620	2	Screw	M8X25
13	V529801850	2	Screw	M10X50
14	V836855368	1	Pipe	
15	V836855417	1	Gasket	
16	V640325014	1	Plug	
17	V615881418	1	Seal	

FOOTNOTE [A] OPENS AT 83 DEGREES
FOOTNOTE [B] OPENS AT 79 DEGREES

1-ZH11-004-A

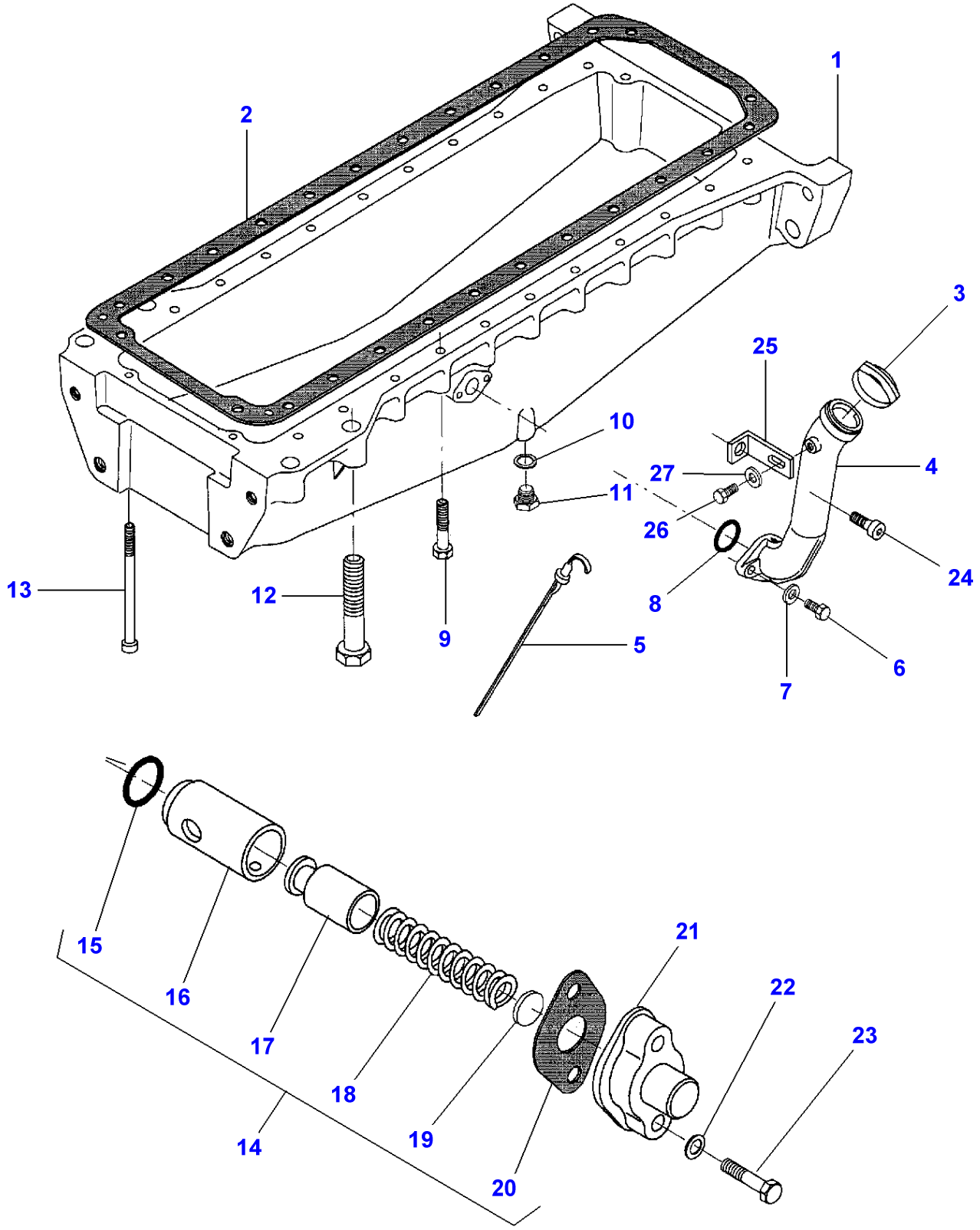

https://truckmanualshub.com/

Item	Part Number	Qty	Description	Comments
1	V836852518	1	Housing	
2	V836322183	1	Gasket	
3	V836659697	1	Plug	
4	V836855400	1	Breather	
5	V836855747	1	Dipstick	
6	V528801380	2	Screw	M8X20
7	V500950800	2	Washer	
8	V614603230	1	O Ring	
9	V529701880	22	Screw	M10X65
10	V615881827	1	Seal	
11	V836655493	1	Plug	
12	V529903990	4	Screw	M20X140
13	V581704830	2	Screw	M8X160
14	V836840851	1	Pressure Valve	
15	V614601524	1	O Ring	(14)
16	V836117834	1	Cylinder	(14)
17	V836338850	1	Piston	(14)
18	V836655246	1	Spring	(14)
19	V836020290	1	Washer	(14)
20	V836322190	1	Gasket	(14)
21	V836129849	1	Cover	
22	V500950800	2	Washer	
23	V528801420	2	Screw	M8X35
24	V581805800	1	Screw	M14X20
25	V836859004	1	Angle	
26	V528801362	1	Screw	M8X16
27	V500150842	1	Washer	

https://truckmanualshub.com/

1-ZH11-007-A

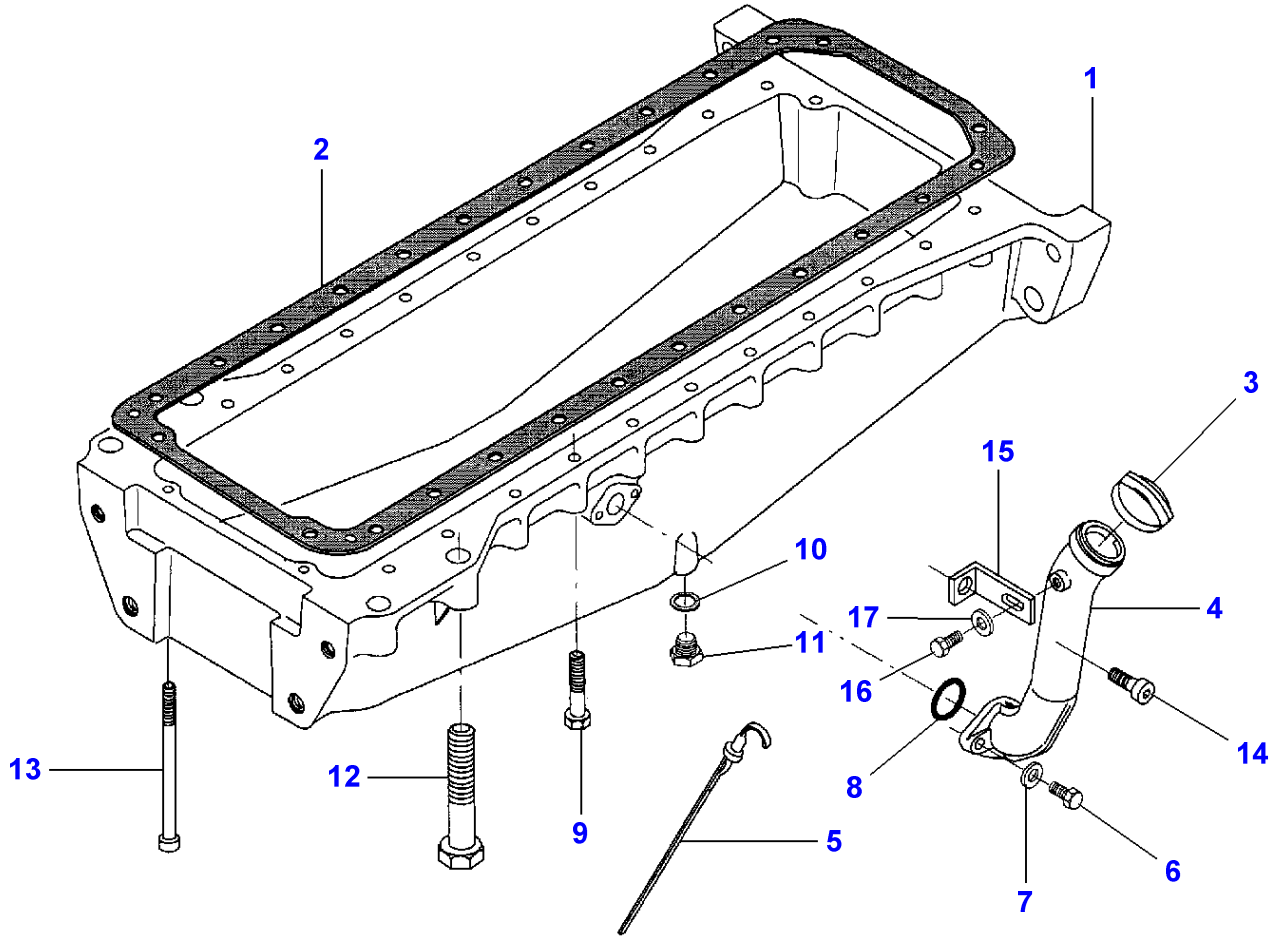

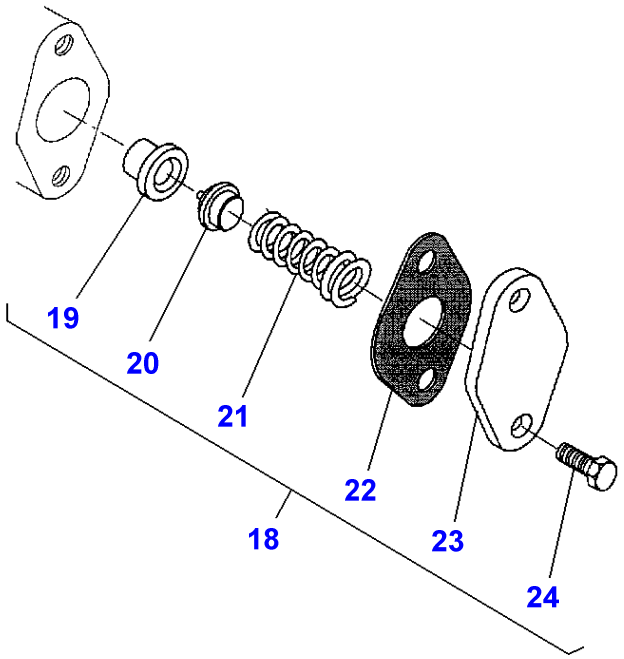

https://truckmanualshub.com/

Item	Part Number	Qty	Description	Comments
1	V836852518	1	Housing	
2	V836322183	1	Gasket	
3	V836659697	1	Plug	
4	V836855400	1	Breather	
5	V836855747	1	Dipstick	
6	V528801380	2	Screw	M8X20
7	V500950800	2	Washer	
8	V614603230	1	O Ring	
9	V529701880	22	Screw	M10X65
10	V615881827	1	Seal	
11	V836655493	1	Plug	
12	V529903990	4	Screw	M20X140
13	V581704830	2	Screw	M8X160
14	V581805800	1	Screw	M14X20
15	V836859004	1	Angle	
16	V528801362	1	Screw	M8X16
17	V500150842	1	Washer	
18	V836662130	1	Pressure Valve	
19	V836659521	1	Valve Seat	(18)
20	V836659522	1	Plate	(18)
21	V836864056	1	Spring	(18)
22	V836322190	1	Gasket	(18)
23	V836659524	1	Cover	(18)
24	V528801380	2	Screw	(18) M8X20

1-ZH25-002-A

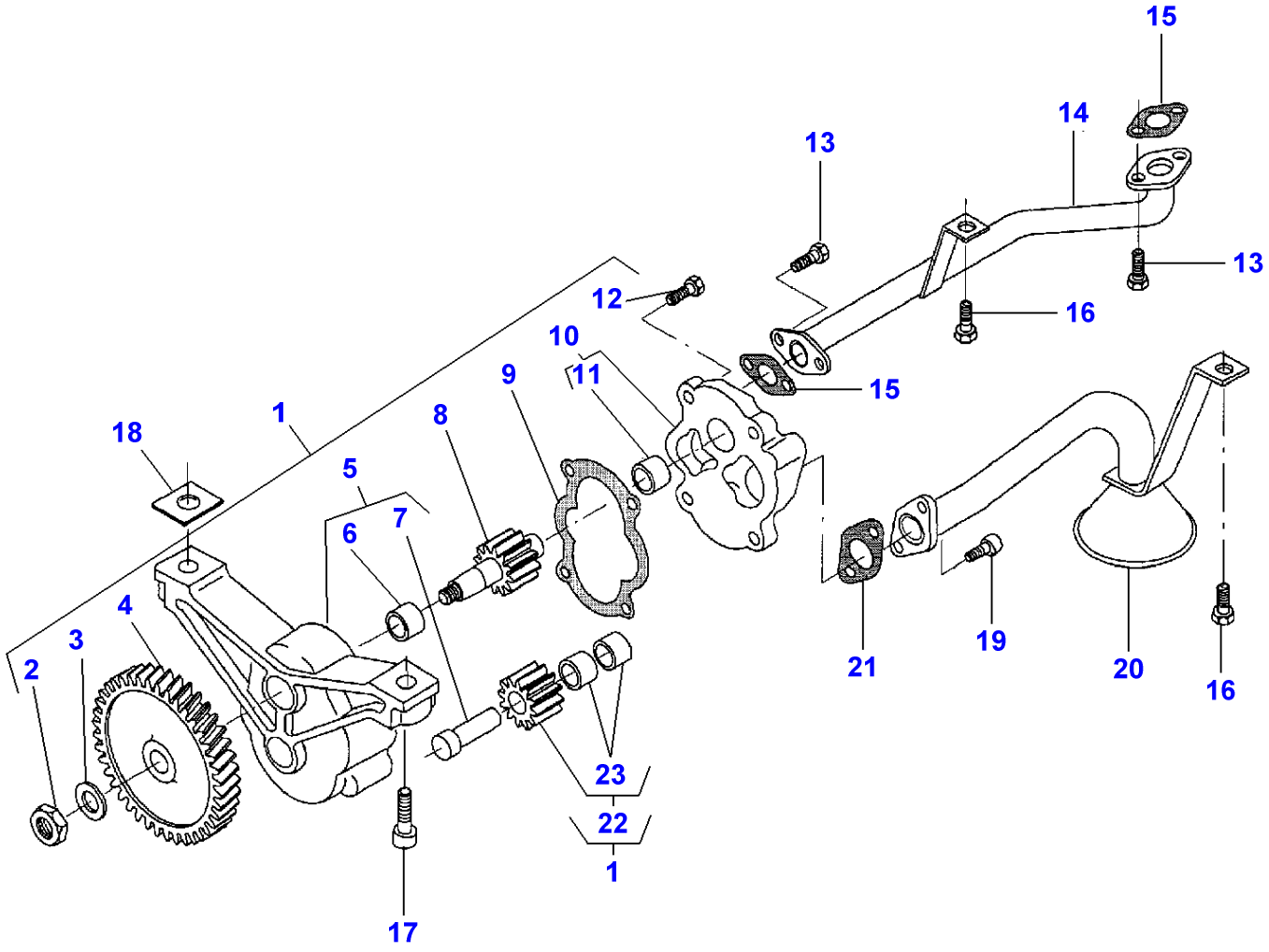

https://truckmanualshub.com/

Item	Part Number	Qty	Description	Comments
1	V836338187	1	Oil Pump	
2	V504861000	1	Nut	(1)
3	V836122910	1	Washer	(1)
4	V836338667	1	Gear	(1)
5	V836338186	1	Housing	(1)
6	V836322909	1	Bush	(5)
7	V836322906	1	Shaft	(5)
8	V836338182	1	Gear	(1)
9	V836338188	1	Gasket	(1)
10	V836338184	1	Cover	(1)
11	V836322909	1	Bush	(10)
12	V528801380	4	Screw	(1) M8X20
13	V528801380	4	Screw	M8X20
14	V836852299	1	Pipe	
15	V836008449	2	Gasket	
16	V528801362	2	Screw	M8X16
17	V581805050	2	Screw	M10X40
18	V836007871	X	Shim	
19	V581804620	2	Screw	M8X25
20	V836338613	1	Strainer	
21	V836338201	1	Gasket	
22	V836338180	1	Gear	(1)
23	V836322909	2	Bush	(22)

1-ZH26-002-A

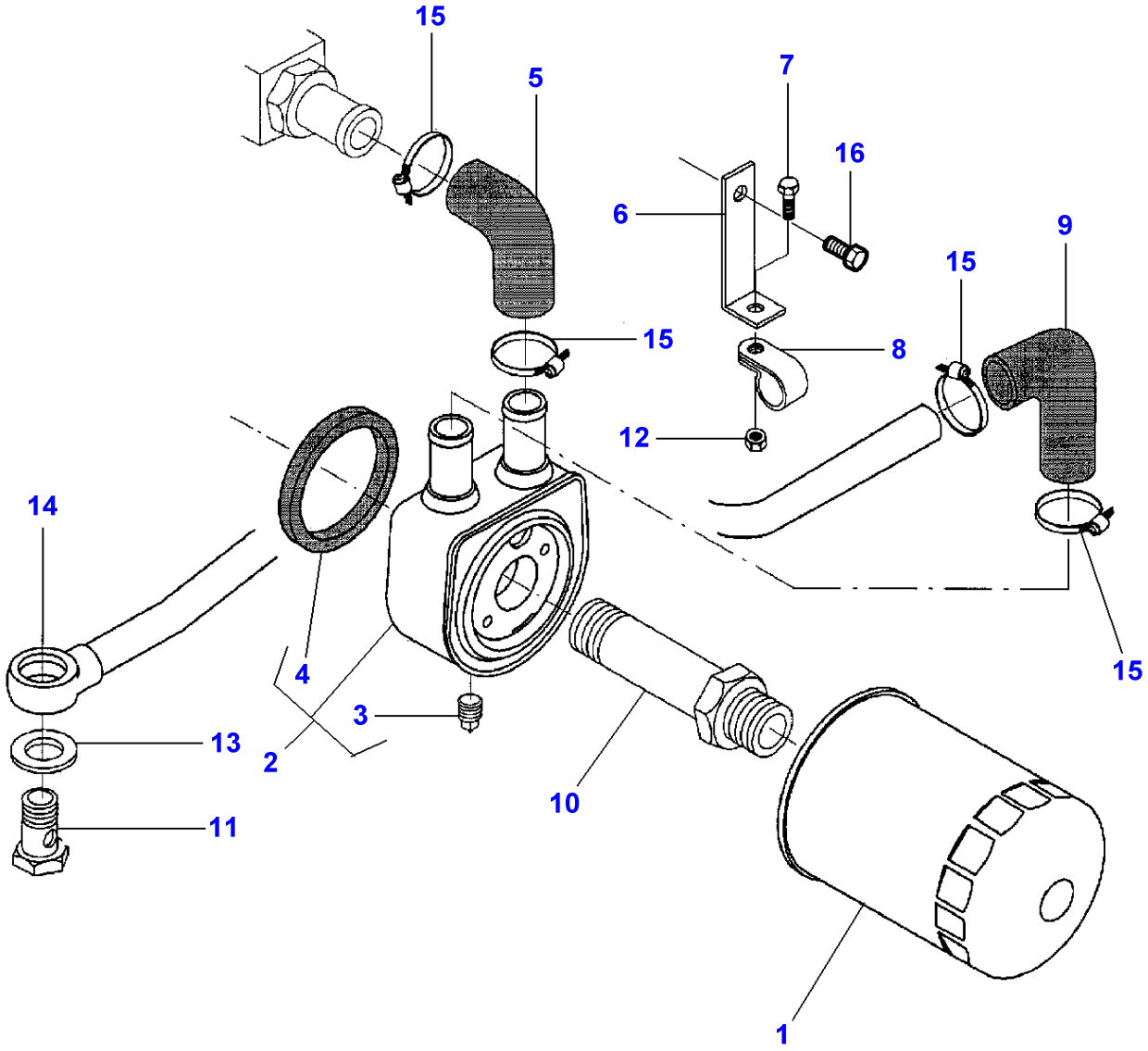

https://truckmanualshub.com/

Item	Part Number	Qty	Description	Comments
1	**V836662111**	1	Filter	
2	V836859699	1	Oil Cooler	
3	V640025006	1	Plug	(2)
4	V835331586	1	Ring	(2)
5	**V836859899**	1	Hose	
6	V836847986	1	Support	
7	V528801362	1	Screw	M8X16
8	V602074615	1	Clamp	
9	V836129329	1	Hose	
10	V836859700	1	Union	
11	V640435015	1	Screw	
12	V504800800	1	Nut	
13	V615881822	2	Seal	
14	V836852437	1	Pipe	
15	V602079516	4	Clamp	
16	V528801750	1	Screw	M10X12

1-ZH28-001-A

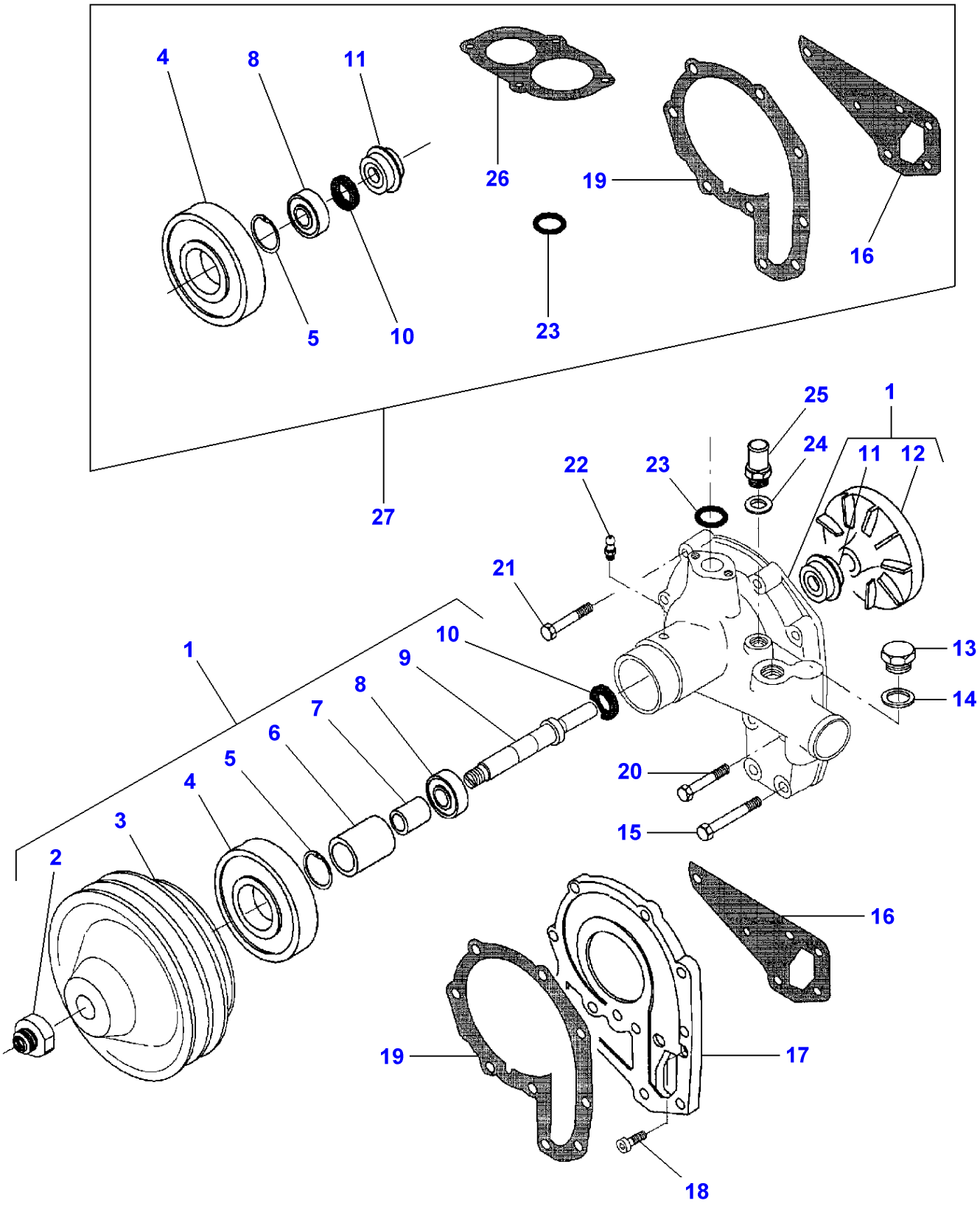
4
8
11
26
19
16
5
10
23
27
25
1
24
11
12
22
23
21
10
1
9
8
7
6
5
4
3
2
13
14
20
15
16
19
17
18

https://truckmanualshub.com/

Item	Part Number	Qty	Description	Comments
1	V836864097	1	Water Pump	
2	V836864020	1	Nut	(1)
3	V836859589	1	Pulley,Waterpump	(1)
4	V610062134	1	Bearing Assy	(1)
5	V617330052	1	Circlip	(1)
6	V836336318	1	Sleeve	(1)
7	V836336317	1	Spacer	(1)
8	GT1159	1	Bear. 6304 Z	(1)
9	V836859593	1	Shaft	(1)
10	V614102636	1	Gasket	(1)
11	V835339425	1	Gasket	(1)
12	V836336047	1	Impeller	(1)
13	V640305027	1	Plug	
14	V615892732	1	O Ring	
15	V529801460	2	Screw	M8X55
16	V836846305	1	Gasket	
17	V836847909	1	Housing	
18	V581804620	3	Screw	M8X25
19	V836338525	1	Gasket	
20	V529801550	1	Screw	M8X50
21	V529801430	6	Screw	M8X40
22	V644441006	1	Greaser	(1)
23	V614602930	1	O Ring	
24	V615881822	1	Seal	
25	V836119837	1	Union	
26	V836329632	1	Gasket	See Page - Reference Number 010-0060/4
27	V836340257	1	Parts Pack	

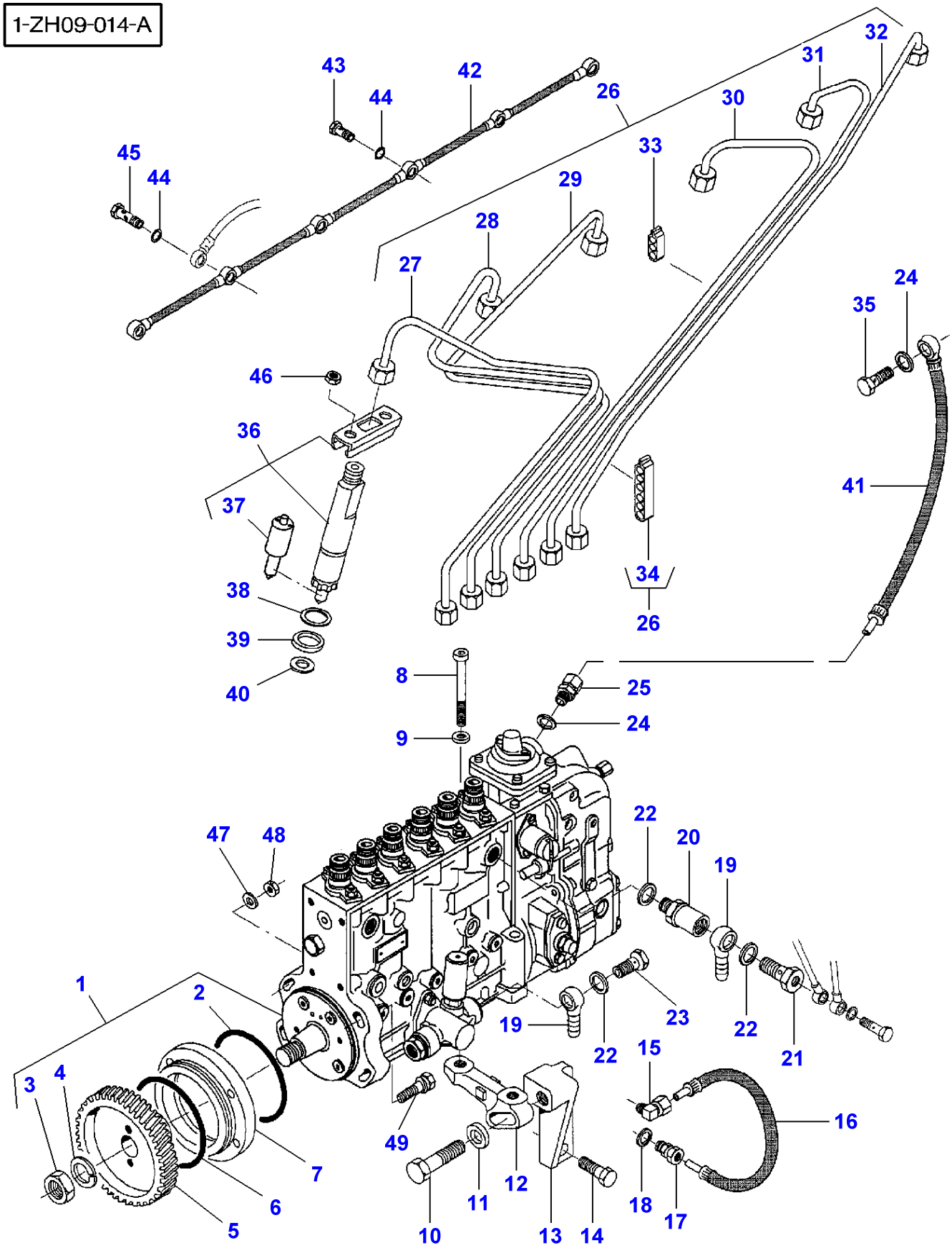
1-ZH09-014-A
43
42
44
26
32
31
30
45
44
33
29
28
27
24
35
46
36
41
37
34
38
26
39
40
8
25
24
9
22
47
48
20
19
1
2
23
19
22
22
21
15
3
4
16
49
7
12
6
11
18
17
5
10
13
14

https://truckmanualshub.com/

Item	Part Number	Qty	Description	Comments
1	V836854838	1	Injection Pump	
2	V614609930	1	O Ring	(1)
3	V505612000	1	Nut	(1)
4	V500452002	1	Washer	(1)
5	V836859251	1	Gear	
6	V614609930	1	O Ring	
7	V836855996	1	Ring	
8	V581805150	2	Screw	M10X90
9	V500151050	2	Washer	
10	V529803072	1	Screw	M16X60
11	V836655994	1	Washer	
12	V836859252	1	Support	
13	V836855993	1	Support	
14	V528802640	2	Screw	M14X45
15	V641166006	1	Elbow Nipple	
16	V836120491	1	Pipe	
17	V641086006	1	Connection	
18	V615871014	1	O Ring	
19	V640255210	2	Pipe	
20	V836330959	1	Valve	Up to Serial or Engine Number J14443
	V836336934	1	Union	From Serial or Engine Number J14444
21	V836007420	1	Screw	Up to Serial or Engine Number J14443
	V836652096	1	Screw	From Serial or Engine Number J14444
22	V615881420	5	Gasket	
23	V640435010	1	Screw	
24	V615881216	3	Gasket	
25	V641086012	1	Union	
26	V836859447	1	Kit, Pipe	
27	V836859441	1	Injection Pipe	(26) CYL. N 1
28	V836859442	1	Injection Pipe	(26) CYL. N 2
29	V836859443	1	Injection Pipe	(26) CYL. N 3
30	V836859444	1	Injection Pipe	(26) CYL. N 4
31	V836859445	1	Injection Pipe	(26) CYL. N 5
32	V836859446	1	Injection Pipe	(26) CYL. N 6
33	V836640095	2	Clamp	(26)
34	V836640097	1	Clamp	(26)
35	V640435008	1	Screw	
36	V836854791	6	Atomiser	
37	V836854792	1	Nozzle	(36)
38	V836652170	6	Washer	
39	V835336276	6	Seal	
40	V899901495	6	Washer	
41	V836852301	1	Tube	
42	V836847522	1	Pipe	
43	V835331289	5	Screw	
44	V615870610	13	Seal	
45	V835336943	1	Screw	
46	V504800800	12	Nut	
47	V500051052	4	Washer	
48	V504801002	3	Nut	
49	V836659346	1	Screw	

FOOTNOTE [A] WITH DYNASHIFT
FOOTNOTE [B] WITH FULL POWERSHIFT

https://truckmanualshub.com/

1-ZH09-015-A

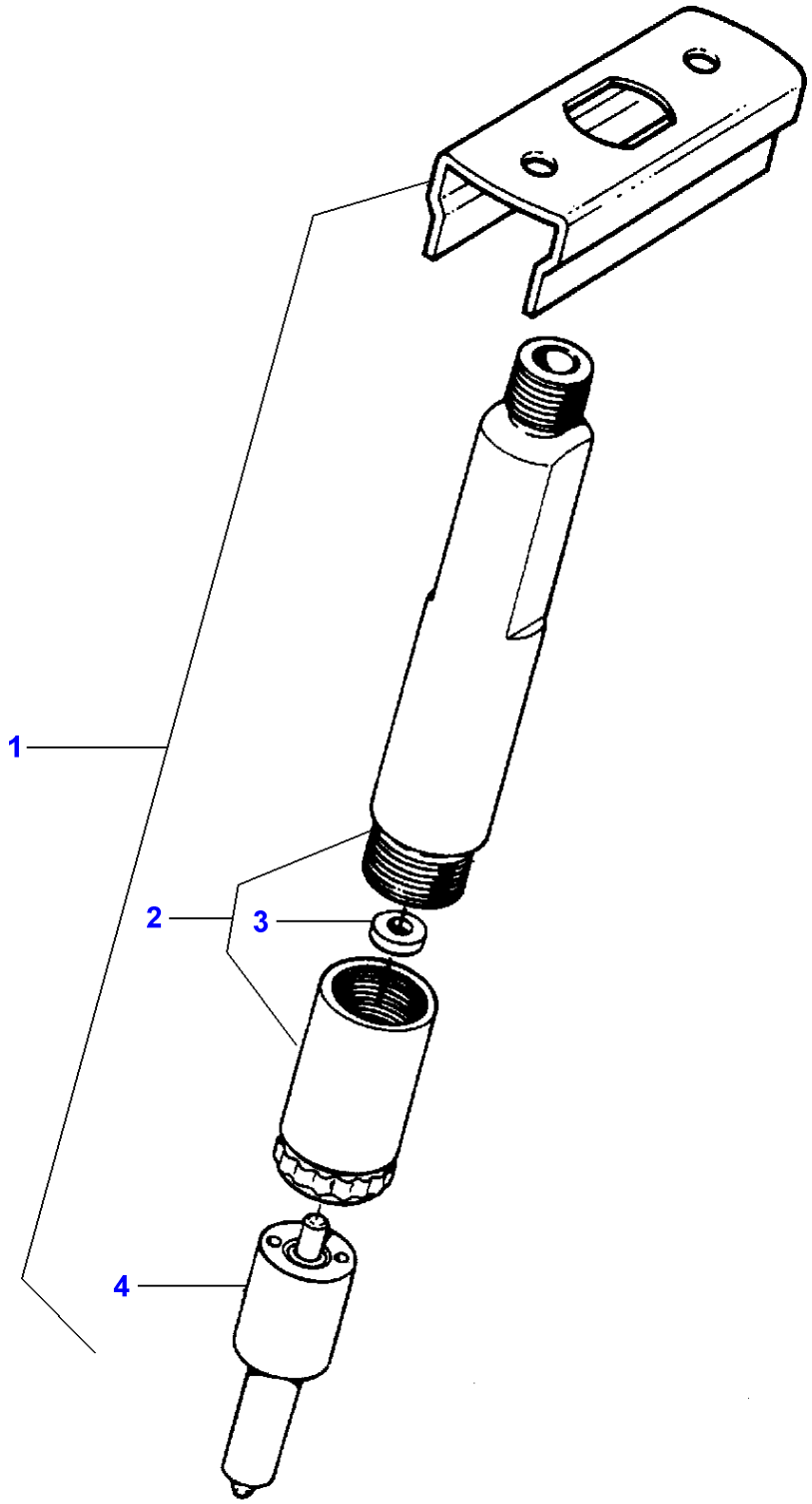

https://truckmanualshub.com/

Item	Part Number	Qty	Description	Comments
1	V836854791	1	Atomiser	
2		1	Body	(1) Not serviced, order REF 1
3	V836862000	X	Chock	(1) Thickness 1,00 MM
	V836862001	X	Chock	(1) Thickness 1,05 MM
	V836862002	X	Chock	(1) Thickness 1,10 MM
	V836862003	X	Chock	(1) Thickness 1,15 MM
	V836862004	X	Chock	(1) Thickness 1,20 MM
	V836862005	X	Chock	(1) Thickness 1,25 MM
	V836862006	X	Chock	(1) Thickness 1,30 MM
	V836862007	X	Chock	(1) Thickness 1,35 MM
	V836862008	X	Chock	(1) Thickness 1,40 MM
	V836862009	X	Chock	(1) Thickness 1,45 MM
	V836862010	X	Chock	(1) Thickness 1,50 MM
	V836862011	X	Chock	(1) Thickness 1,55 MM
	V836862012	X	Chock	(1) Thickness 1,60 MM
	V836862013	X	Chock	(1) Thickness 1,65 MM
	V836862014	X	Chock	(1) Thickness 1,70 MM
	V836862015	X	Chock	(1) Thickness 1,75 MM
	V836862016	X	Chock	(1) Thickness 1,80 MM
	V836862017	X	Chock	(1) Thickness 1,85 MM
	V836862018	X	Chock	(1) Thickness 1,90 MM
	V836862019	X	Chock	(1) Thickness 1,95MM
	V836862020	X	Chock	(1) Thickness 2MM
4	V836854792	1	Nozzle	(1) 270 Bar

1-ZH31-001-A

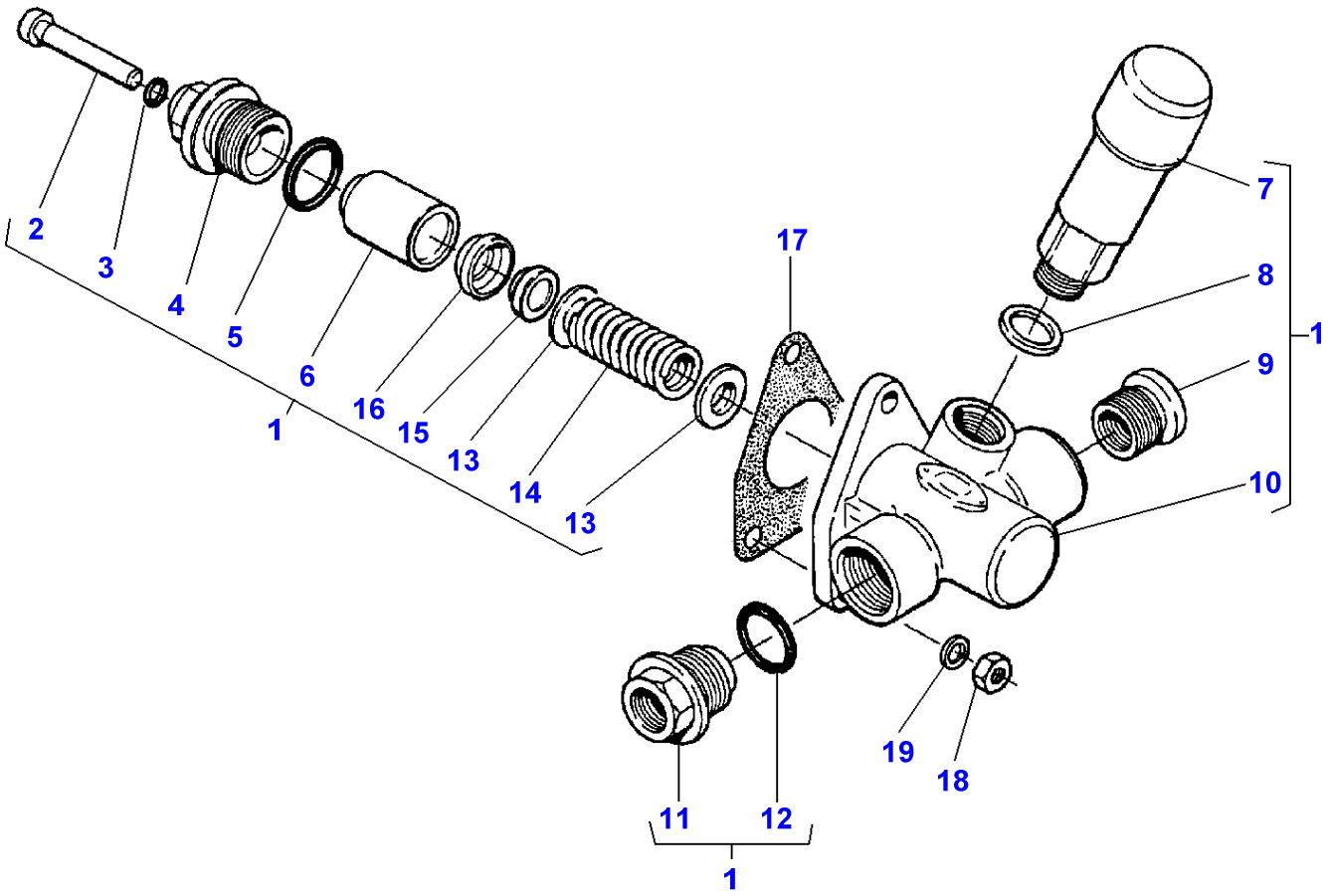

https://truckmanualshub.com/

Item	Part Number	Qty	Description	Comments
1	V836340066	1	Pump	
2	V836340068	1	Clevis Pin	(1)
3	V836139015	1	O Ring	(1)
4	V836340069	1	Body	(1)
5	V835339876	1	O Ring	(1)
6	V835339877	1	Plunger	(1)
7	V835339884	1	Pump	(1)
8	V615881620	1	Seal	(1)
9	V836340067	1	Union	(1)
10		1	Housing	(1)
				Not serviced, order REF. 1
11	V835340971	1	Union	(1)
12	V835340972	1	O Ring	(1)
13	V835339879	2	Washer	(1)
14	V835339878	1	Spring	(1)
15	V835339880	1	Pressure Valve	(1)
16	V835339882	1	Gasket	(1)
17	V836329194	1	Gasket	
18	V504600602	3	Nut	
19	V500450602	3	Washer	

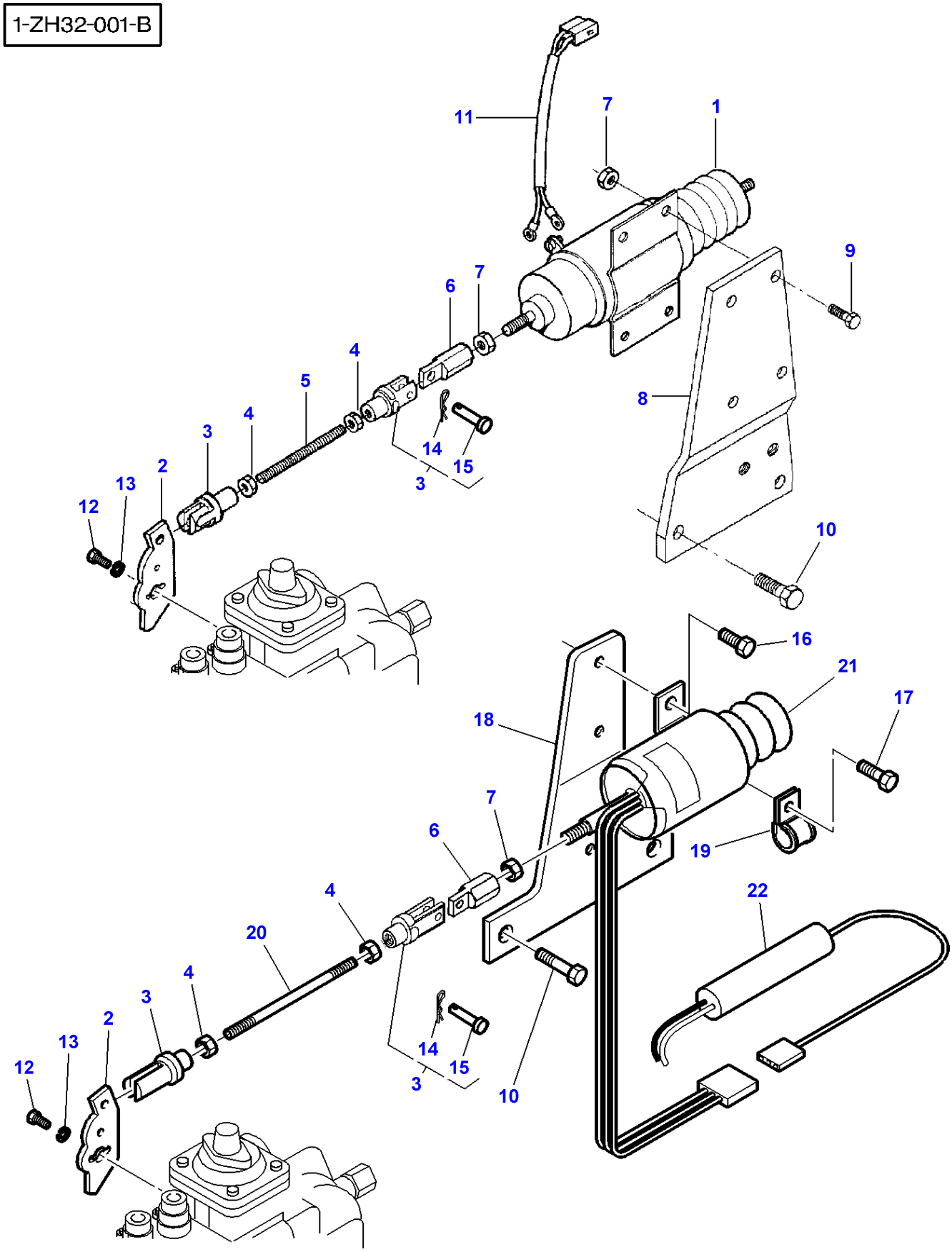
1-ZH32-001-B
11
7
1
9
6
7
4
5
8
4
3
14
15
2
3
13
12
10
16
21
17
18
7
6
19
4
22
20
4
3
2
13
14
15
12
3
10

https://truckmanualshub.com/

Item	Part Number	Qty	Description	Comments
1	**V836640941**	1	Solenoid	Up to Serial or Engine Number J9354
2	V835347344	1	Lever	
3	V835339319	2	Fork	
4	V504600502	2	Nut	
5	V836859495	1	Stem	
6	V836346773	1	Clevis	
7	V504600602	5	Nut	
8	V836859494	1	Support	Up to Serial or Engine Number J9354
9	V528801062	4	Screw	
10	V528801380	2	Screw	M8X20
11	V836659064	1	Harness	Up to Serial or Engine Number J9354
12	V528801062	1	Screw	
13	V500450602	1	Washer	
14		1	Pin	(3) Not serviced, order REF 3
15		1	Clevis Pin	(3) Not serviced, order REF 3
16	V528801062	2	Screw	M6X16
17	V528801360	1	Screw	M8X16
18	V836864198	1	Support	From Serial or Engine Number J9355
19	V602074620	1	Clamp	
20	V836859707	1	Stem	Length 140MM Up to Serial or Engine Number J13140
	V836864199	1	Stem	Length 110MM From Serial or Engine Number J13141
21	V836659690	1	Coil	From Serial or Engine Number J9355
22	V836659691	1	Relay	From Serial or Engine Number J9355

1-ZH14-010-A

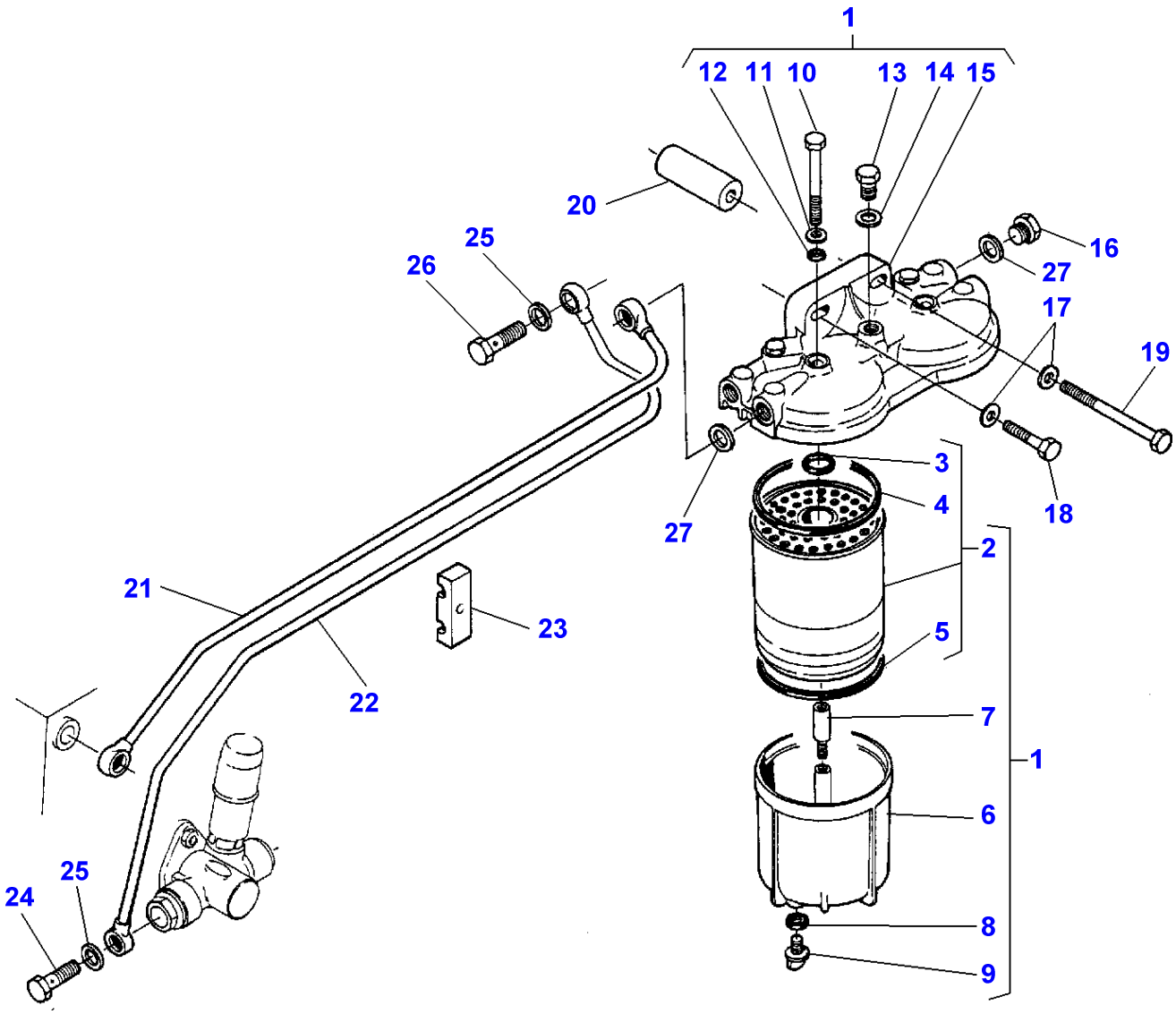
1
12
11
10
13
14
15
20
16
27
25
26
17
19
3
4
18
27
2
21
23
5
22
7
1
6
25
24
8
9

https://truckmanualshub.com/

Item	Part Number	Qty	Description	Comments
1	V836339370	1	Fuel Filter	
2	**1896287M91**	2	Fuel Element	(1) CAV Alternative 3405419M1
	3405419M1	2	Fuel Element	Alternative 1896287M91
3	V836015142	1	O Ring	(2)
4	V835330014	1	Gasket	(2)
5	V835330015	1	Gasket	(2)
6	V836340045	2	Bowl	(1)
7	V836339372	2	Stud	(1)
8	V836015147	2	Gasket	(1)
9	V836015148	2	Plug	(1)
10	V836015149	2	Screw	(1)
11	V836015918	2	Washer	(1)
12	V836015919	2	O Ring	(1)
13	V836015958	1	Screw	(1)
14	V615571014	1	Seal	(1)
15	V836015959	1	Cover	(1)
16	V836117323	2	Plug	
17	V500150842	2	Washer	
18	V528801420	1	Screw	M8X35
19	V529801550	1	Screw	
20	V836859009	1	Spacer	
21	V836859244	1	Pipe	
22	V836859243	1	Pipe	
23	V836655527	2	Clamp	
24	V640435010	2	Screw	
25	V615881418	6	Seal	
26	V836429560	2	Screw	
27	V615581317	4	Seal	

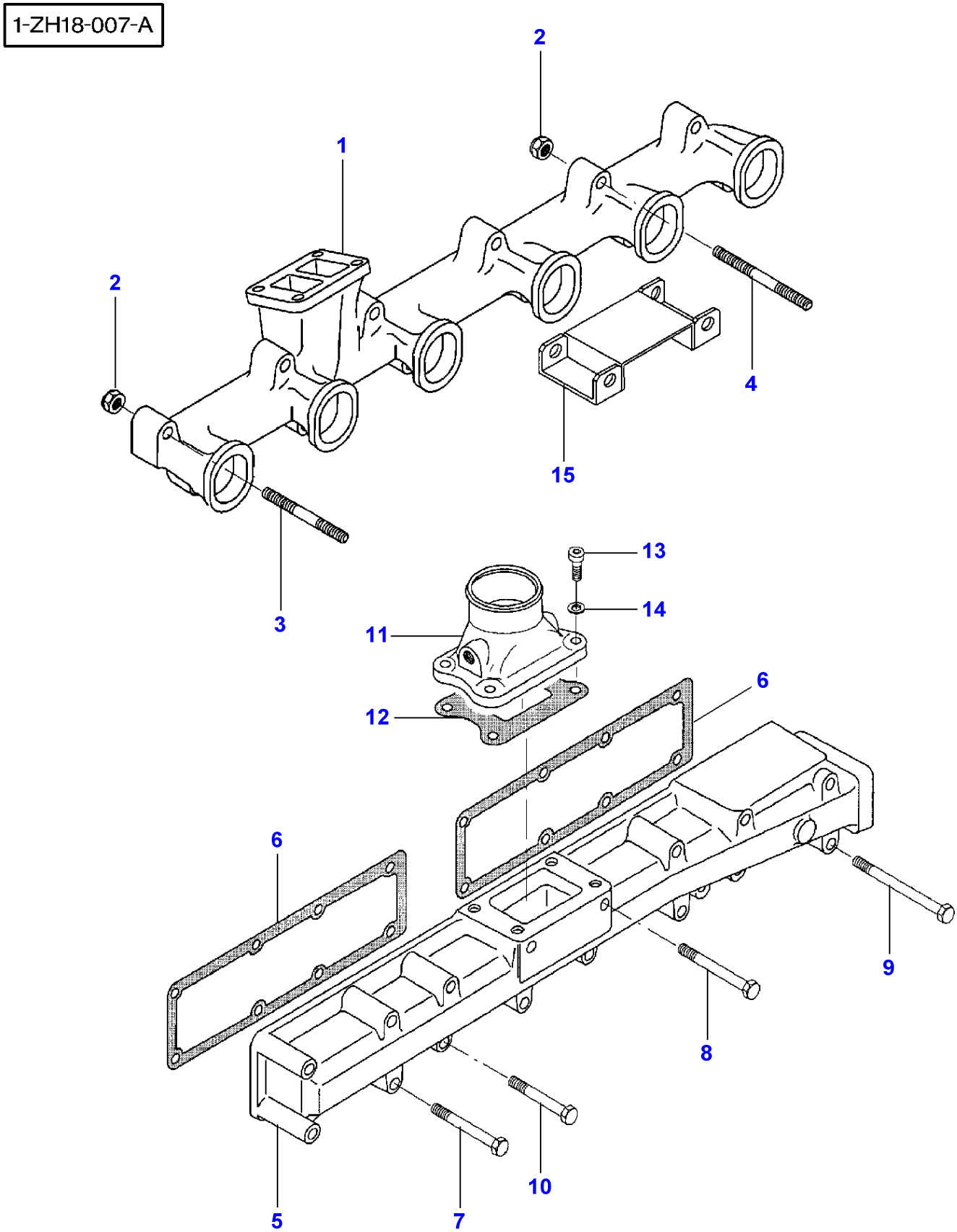
1-ZH18-007-A
2
1
2
4
15
3
13
14
11
12
6
6
9
8
10
5
7

https://truckmanualshub.com/

Item	Part Number	Qty	Description	Comments
1	V836859378	1	Exhaust Manifold	
2	V513601002	12	Nut	
3	V836855995	10	Stud	M10X113
4	V836859034	2	Stud	M10X130
5	V836847493	1	Ind.Manifold	
6	V836847496	2	Gasket	
7	V529801510	8	Screw	M8X80
8	V529801530	3	Screw	M8X90
9	V529801562	2	Screw	M8X110
10	V529801470	2	Screw	M8X60
11	V836847531	1	Pipe	
12	V836847532	1	Gasket	
13	V581804600	4	Screw	M8X20
14	V500950800	4	Washer	
15	V836655735	1	Support	

1-ZH24-001-A

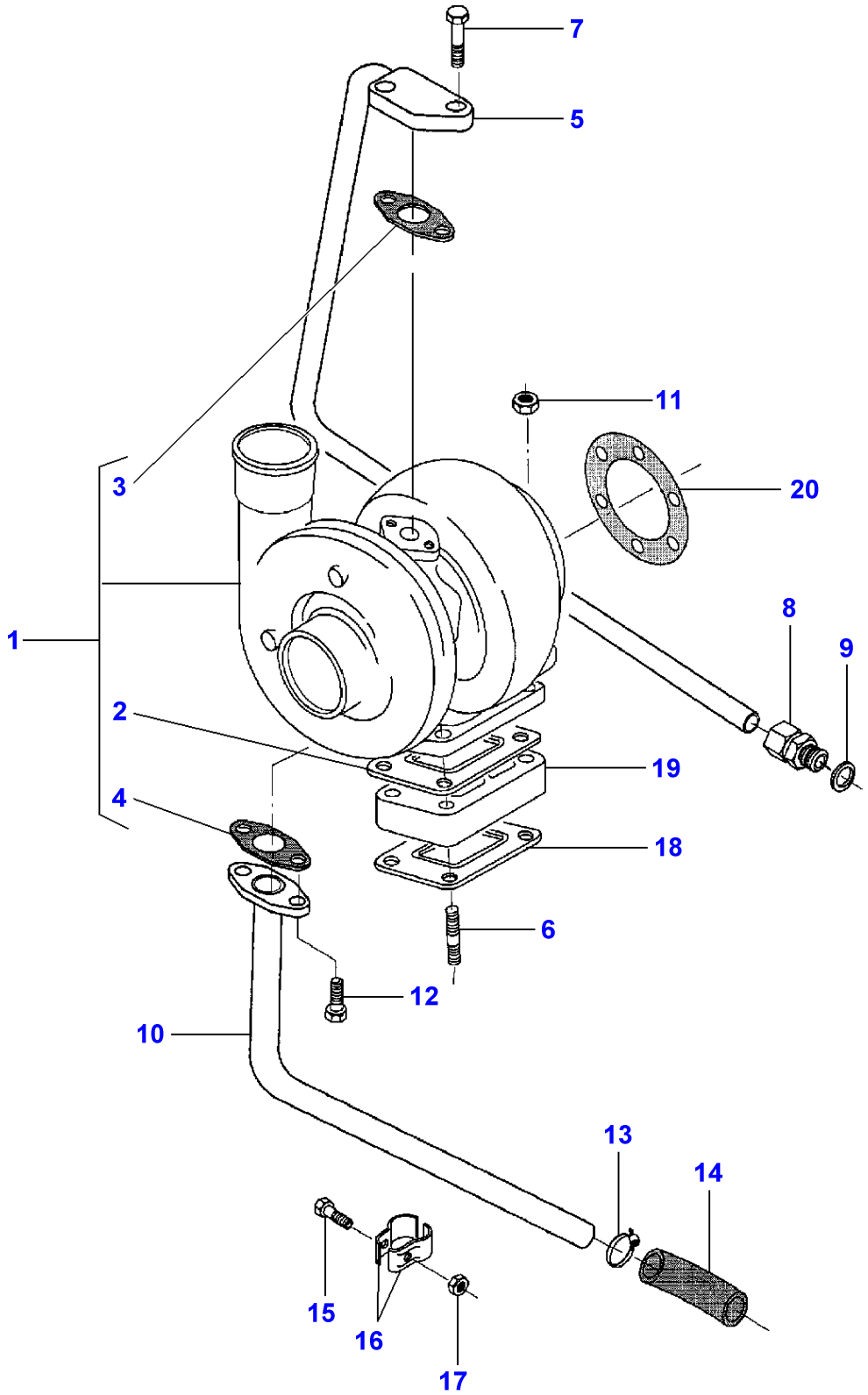

https://truckmanualshub.com/

Item	Part Number	Qty	Description	Comments
1	V836859788	1	Turbocharger	
2	V836316726	1	Gasket	(1)
3	V836308344	1	Joint	(1)
4	V836324580	1	Joint	(1)
5	V836859328	1	Pipe	
6	V546801840	4	Stud	M10X45
7	V528801410	2	Adjusting Screw	M8X30
8	V641086012	1	Union	
9	V615881620	1	Seal	
10	V836859327	1	Pipe	
11	V521601000	4	Nut	
12	V528801380	2	Screw	M8X20
13	V602087528	2	Clamp	
14	**V836647576**	1	Hose	
15	V529801112	1	Screw	M6X30
16	V835324324	2	Clamp	
17	V504600602	1	Nut	
18	V836316726	1	Gasket	
19	V836855630	1	Bridle	
20	V836338985	1	Gasket	

1-ZH19-003-A

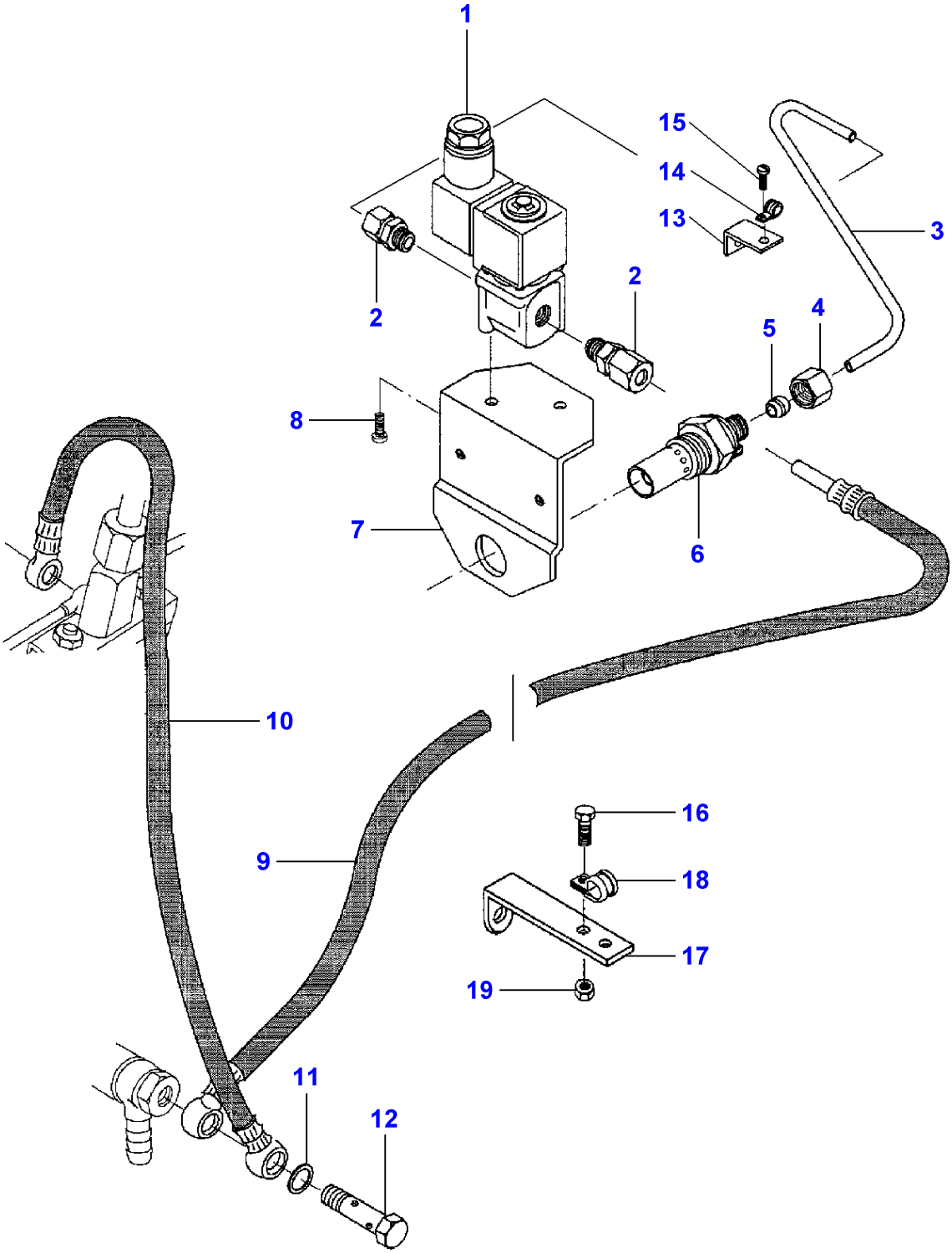

https://truckmanualshub.com/

Item	Part Number	Qty	Description	Comments
1	V836659984	1	Electrovalve	
2	V641046005	2	Union	
3	V836659975	1	Pipe	Diameter 5MM
4	V836659943	1	Nut	
5	V836659944	1	Olive	
6	893501M91	1	Intake Heater	
7	V836752077	1	Support	
8	V563501782	2	Screw	M3X16
9	V836659668	1	Tube	
10	V836855837	2	Hydr Hose	
11	V615570812	3	Gasket	
12	V640425005	1	Screw	
13	V836659102	1	Support	
14	V602070605	1	Clamp	
15	V563502552	2	Screw	M4X8
16	V528800762	1	Screw	M5X16
17	V836852284	1	Support	
18	V602069813	1	Clamp	
19	V504600502	1	Nut	M5

https://truckmanualshub.com/

1-ZH29-002-A

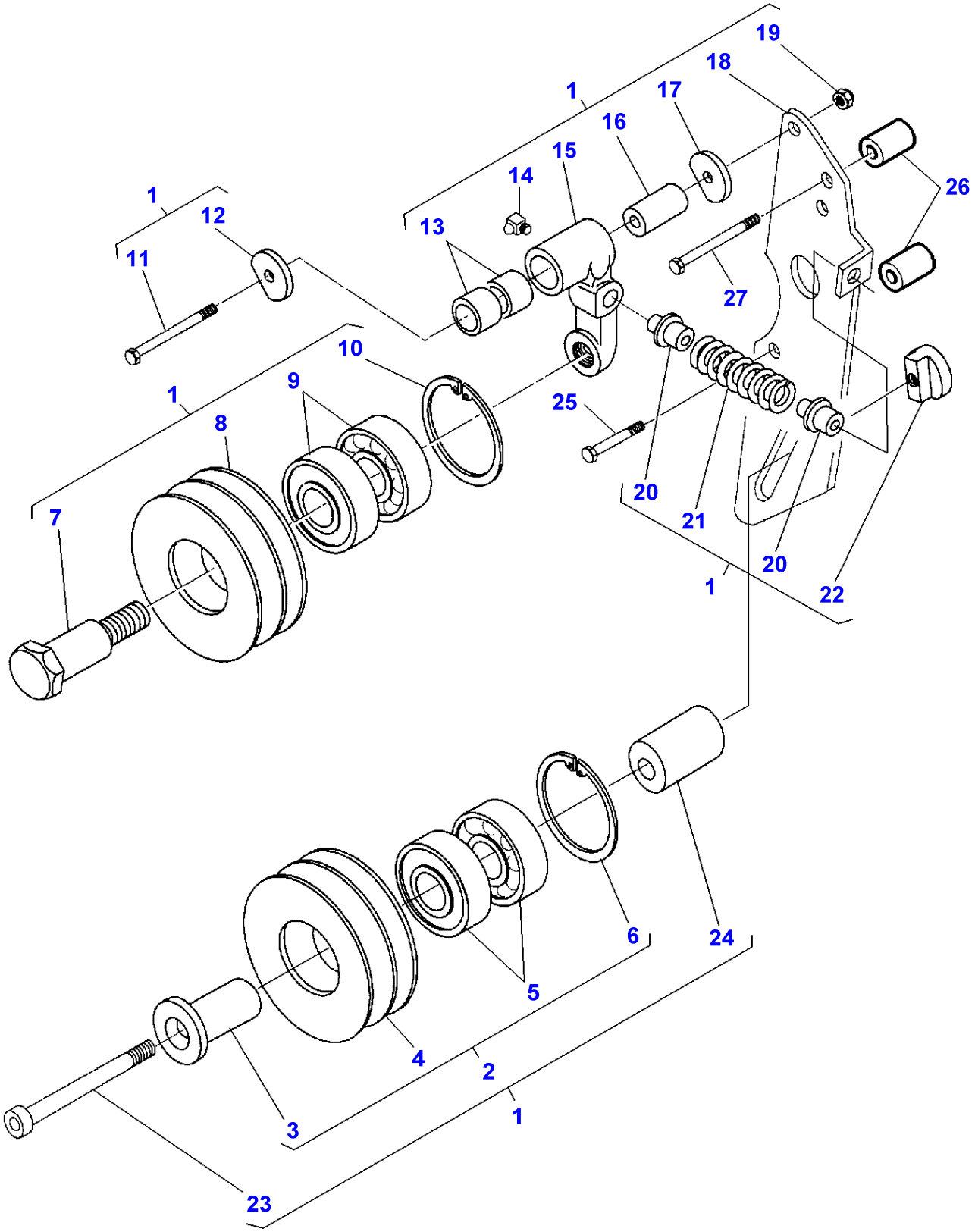

https://truckmanualshub.com/

Item	Part Number	Qty	Description	Comments
1	V836859085	1	Tightener	
2	V836855219	1	Pulley	(1)
3	V836655148	1	Shaft	(2)
4	V835328919	1	Pulley	(2)
5	V610062055	2	Bearing Assy	(2)
6	V617330052	1	Circlip	(2)
7	V835328920	1	Shaft	(1)
8	V835328919	1	Pulley	(1)
9	V610063044	2	Bearing Assy	(1)
10	V617330052	1	Circlip	(1)
11	V529801480	1	Screw	(1)
				M8X65
12	V836655972	1	Washer	(1)
13	V836655981	2	Bush	(1)
14	V644481006	1	Nipple	(1)
15	V836655796	1	Housing	(1)
16	V836655971	1	Sleeve	(1)
17	V836655972	1	Washer	(1)
18	V836859086	1	Bracket	(1)
19	V510600802	1	Nut	(1)
20	V836352611	2	Spring Plate	(1)
21	V836664123	1	Spring	(1)
				Replace and repair. Old not interchangeable with new V836352610
22	V836655151	1	Nut	(1)
23	V581705130	1	Screw	(1)
				M10X80
24	V836859089	1	Sleeve	(1)
25	V529801550	2	Screw	M8X50
26	V836119296	3	Sleeve	
27	V529801550	1	Screw	M8X100

1-ZH30-001-A

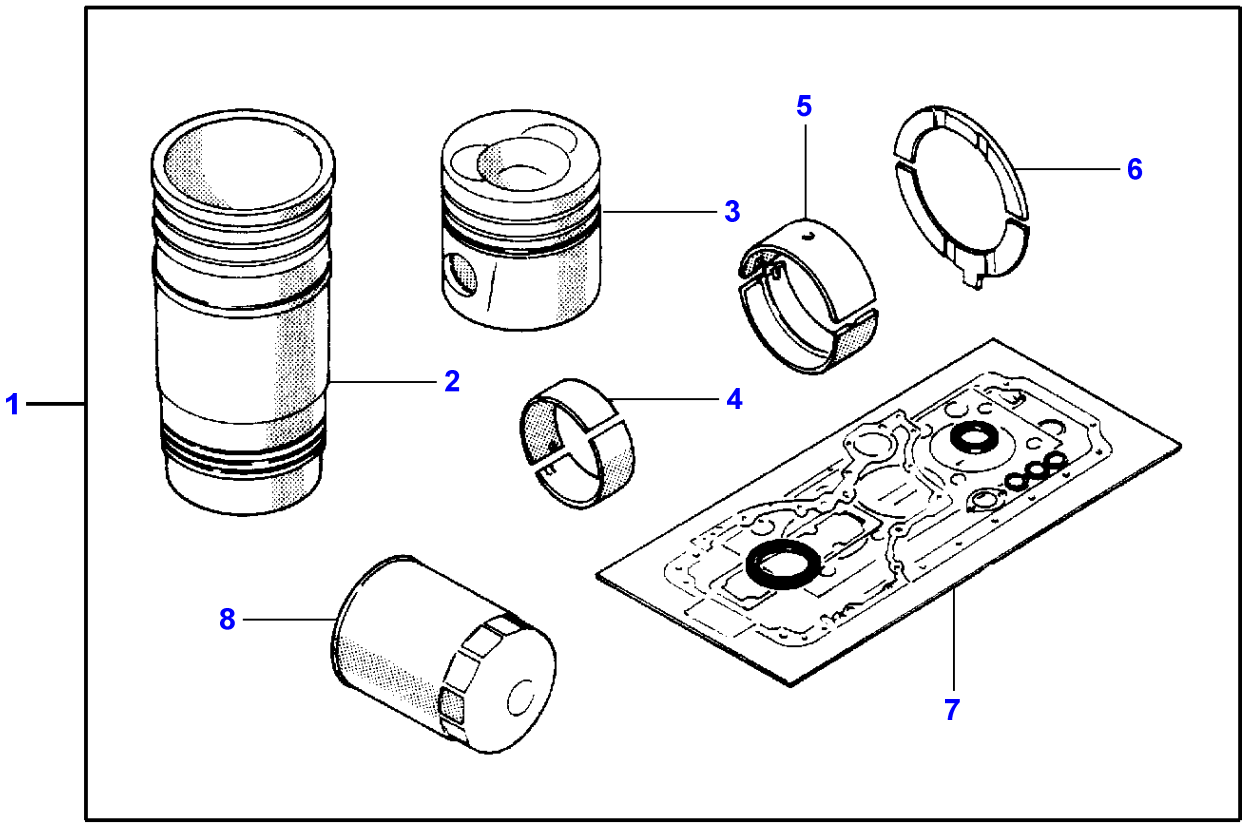

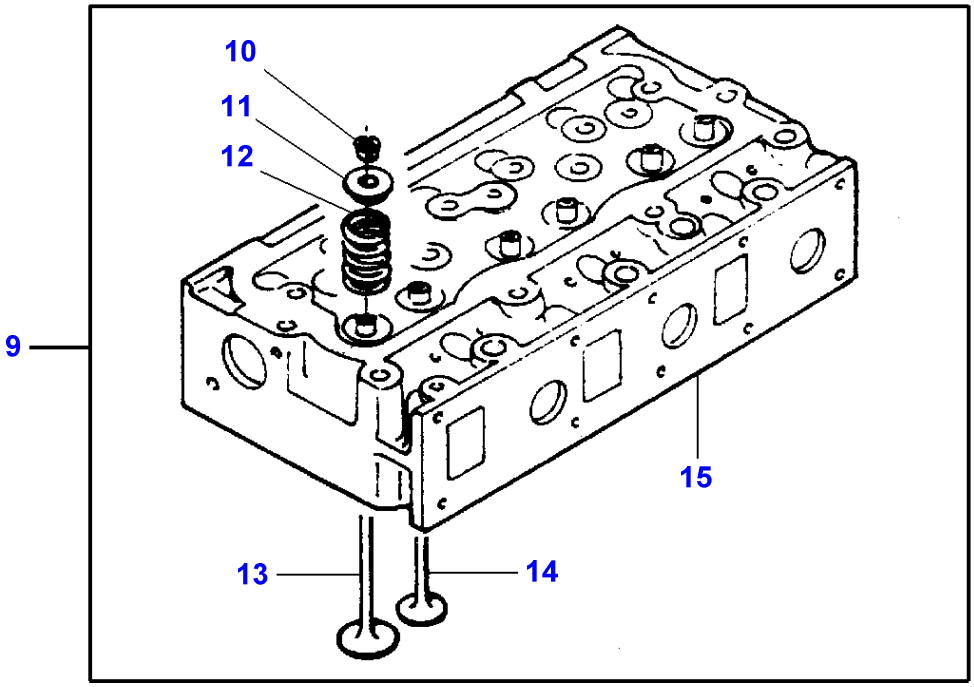

https://truckmanualshub.com/

Item	Part Number	Qty	Description	Comments
1	V836840801	1	Kit, Repair	
2	V836647420	6	Liner	(1)
3	V836840596	6	Piston	(1)
4	V836110552	6	Bearing	(1)
5	V836655514	7	Bearing	(1)
6	V836119459	2	Chock	(1)
7	V836840271	1	Kit,Joint/Gasket	(1)
8	**V836662111**	1	Filter	(1)
9	V836640897	2	Cylinder Head	
10	V836646382	12	Cotter	(9)
11	V836646381	6	Cup	(9)
12	V836646380	6	Spring	(9)
13	V836646357	3	Valve Exhaust	(9)
14	V836646356	3	Valve Inlet	(9)
15	V836640897	1	Cylinder Head	(9)

https://truckmanualshub.com/

1-ZH15-003-A

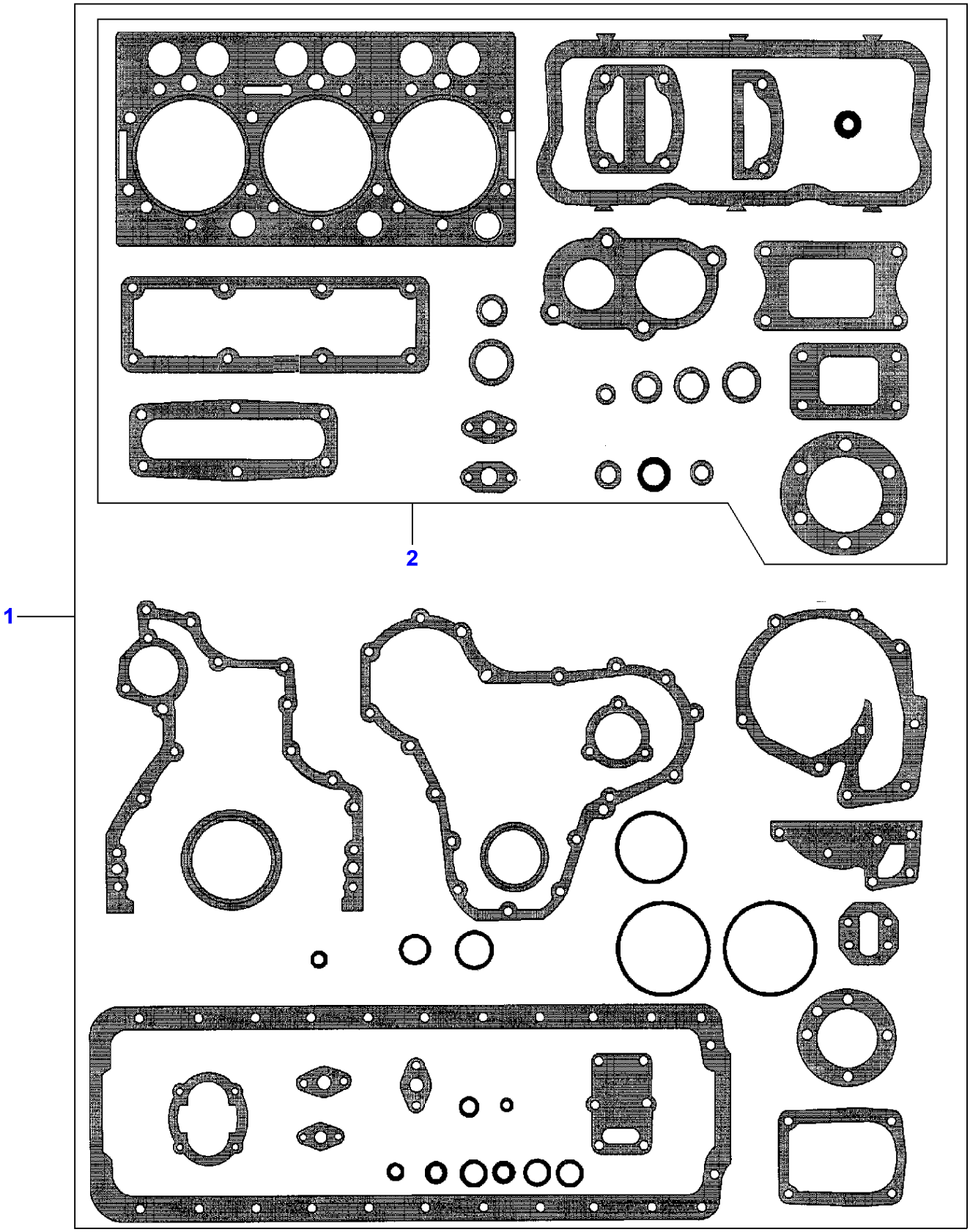

https://truckmanualshub.com/

Item	Part Number	Qty	Description	Comments
1	V836840271	1	Kit,Joint/Gasket	
2	**V836840270**	1	Kit,Joint/Gasket	(1)

https://truckmanualshub.com/

1-ZC38-003-B

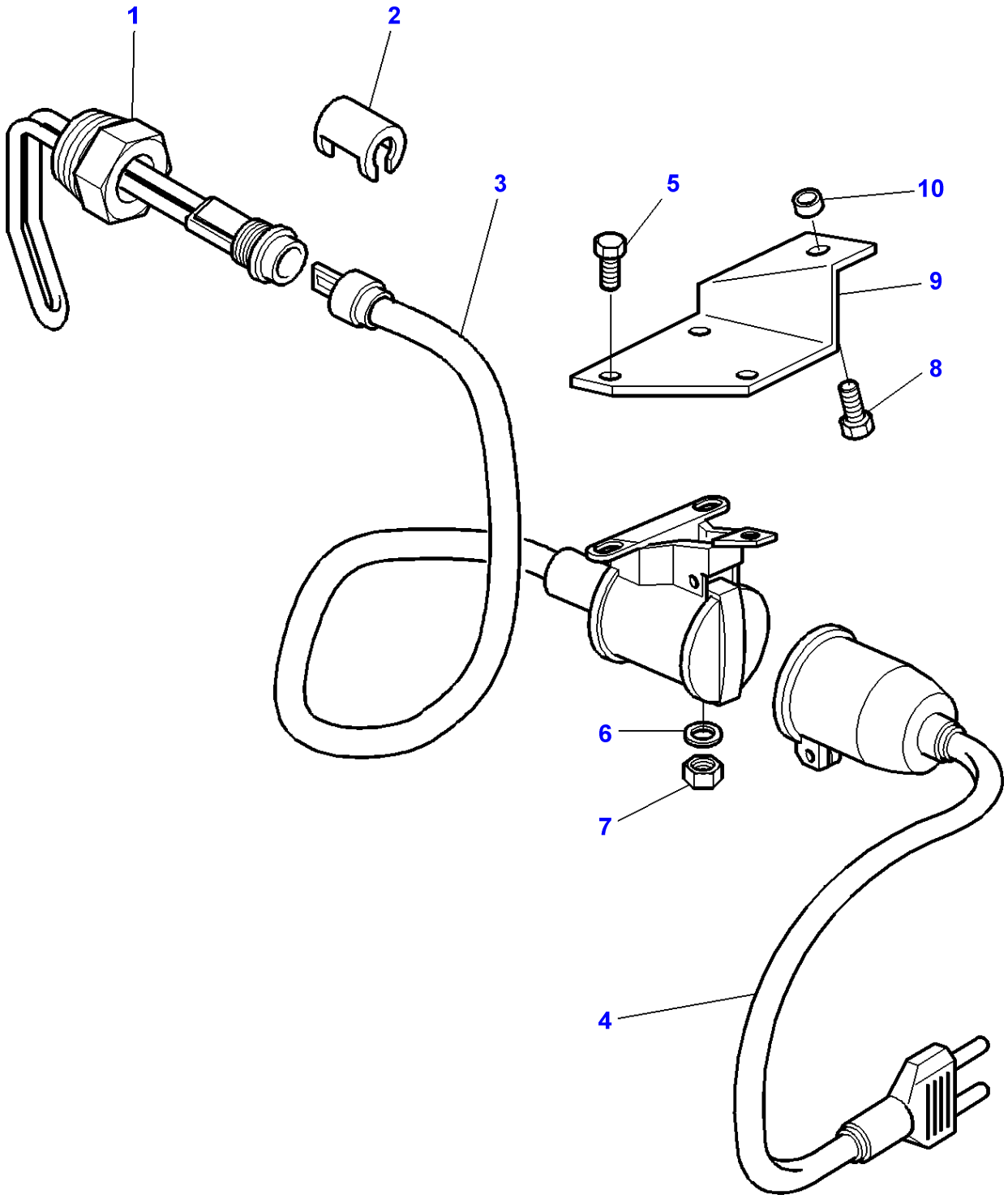

https://truckmanualshub.com/

Item	Part Number	Qty	Description	Comments
1	3615752M2	1	Element	
2	3611974M1	1	Clip	
3	3611973M1	1	Lead	Length 2500MM
4	3611972M1	1	Lead	Length 560MM
5	3009531X1	3	Screw Metric	M4X12
6	3006154X1	3	Washer	
7	1443615X1	3	Nut Metric	
8	339123X1	1	Hex. Sock. Screw	M8X20
9	3615753M1	1	Support	
10	3778809M1	1	Spacer	

https://truckmanualshub.com/

1-ZC38-004-A

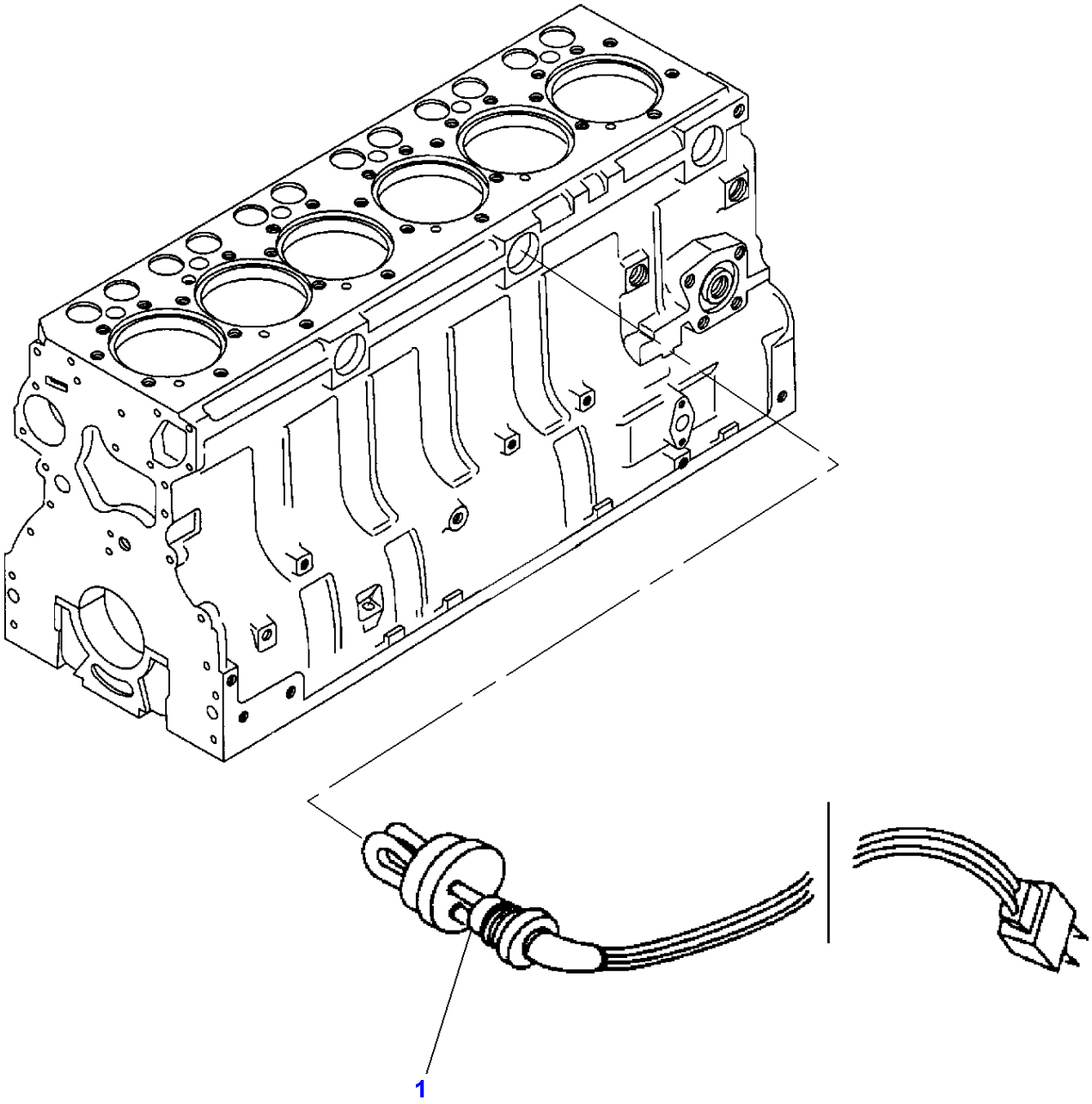

https://truckmanualshub.com/

Item	Part Number	Qty	Description	Comments
1	V836840934	1	Sender	110 VOLT

https://truckmanualshub.com/

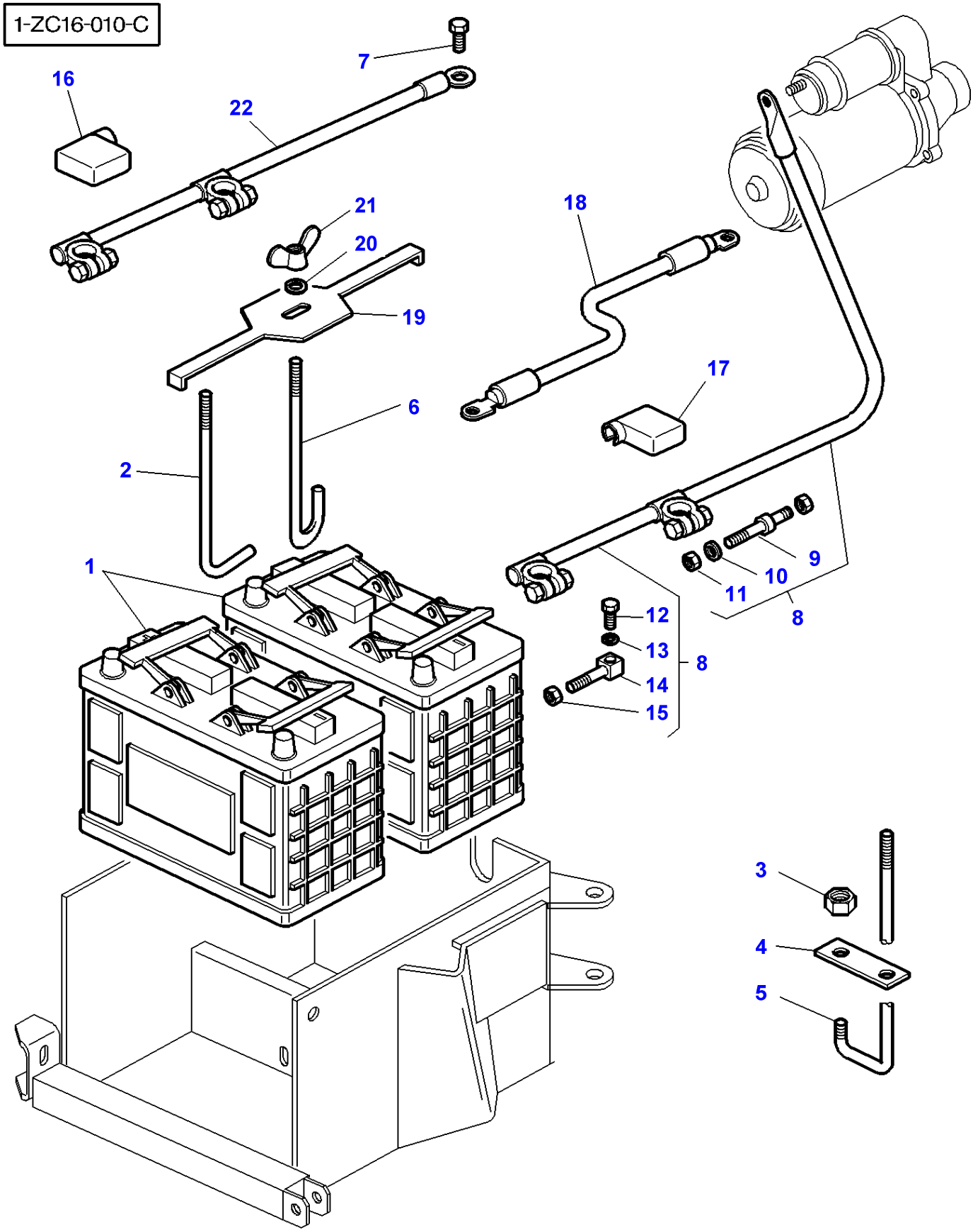

https://truckmanualshub.com/

Item	Part Number	Qty	Description	Comments
1		2	Battery	[A]
				505 AMP.
2	3782448M1	1	Strap	Up to Serial or Engine Number 16-06-1999
3	339169X1	1	Nut	From Serial or Engine Number 17-06-1999
				Up to Serial or Engine Number J189015
4	3780198M1	1	Plate	From Serial or Engine Number 17-06-1999
				Up to Serial or Engine Number J189015
5	3780197M1	1	Strap	From Serial or Engine Number 17-06-1999
				Up to Serial or Engine Number J189015
6	3784434M1	1	Draglink	From Serial or Engine Number J189016
7	393764X1	1	Screw	M16X20
				Up to Serial or Engine Number H286013
	391180X1	1	Screw	M14X20
				From Serial or Engine Number H286014
8	3782162M1	1	Cable	Length 2150MM
				+
9	3781370M1	1	Screw	(8)
10	3010860X1	1	Washer	(8)
11	339169X1	1	Nut	(8)
12	3010859X1	1	Screw	(8)
13	3010860X1	1	Washer	(8)
14	3781143M1	1	Screw	(8)
15	339169X1	1	Nut	(8)
16	3782138M2	1	Protector	
17	3782139M2	1	Protector	
18	3783766M1	1	Cable	Length 930MM
				From Serial or Engine Number H286014
19	5015718M2	1	Stirrup	
20	390972X1	2	Washer Metric	
21	339106X1	1	Wing Nut	
22	5015258M3	1	Cable	Length 1440MM
				-
				Up to Serial or Engine Number H286013
	3782436M2	1	Battery Cable	Length 1650MM
				-
				From Serial or Engine Number H286014

FOOTNOTE [A] PLEASE REFER TO MARKETING CATALOG

https://truckmanualshub.com/

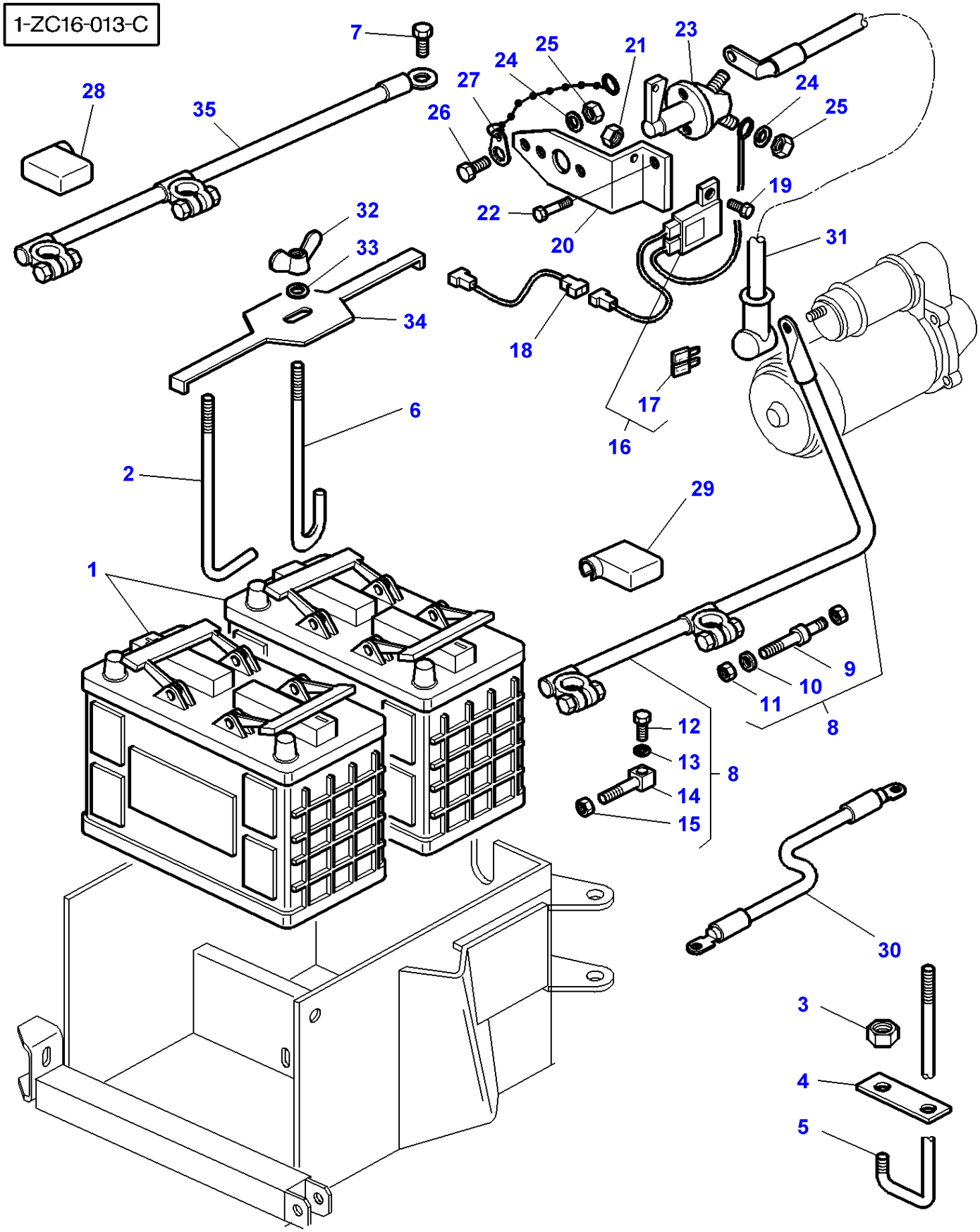

https://truckmanualshub.com/

Item	Part Number	Qty	Description	Comments
1		2	Battery	[A]
				505 AMP.
2	3782448M1	1	Strap	Up to Serial or Engine Number 16-06-1999
3	339169X1	1	Nut	From Serial or Engine Number 17-06-1999
				Up to Serial or Engine Number J18915
4	3780198M1	1	Plate	From Serial or Engine Number 17-06-1999
				Up to Serial or Engine Number J189015
5	3780197M1	1	Strap	From Serial or Engine Number 17-06-1999
				Up to Serial or Engine Number J189015
6	3784434M1	1	Draglink	From Serial or Engine Number J189016
7	393764X1	1	Screw	M16X20
				Up to Serial or Engine Number H286013
	391180X1	1	Screw	M14X20
				From Serial or Engine Number H286014
8	3782162M1	1	Cable	Length 2150MM
				+
9	3781370M1	1	Screw	(8)
10	3010860X1	1	Washer	(8)
11	339169X1	1	Nut	(8)
12	3010859X1	1	Screw	(8)
13	3010860X1	1	Washer	(8)
14	3781143M1	1	Screw	(8)
15	339169X1	1	Nut	(8)
16	3616189M91	1	Harness	
17	**3387318M1**	1	Fuse	(16)
18	3616193M2	1	Wire	
19	390990X1	1	Screw Metric	M5X12
20	3712202M1	1	Support	
21	3010477X1	1	Nut Metric	
22	339666X1	2	Hex. Sock. Screw	M6X20
23	**3712201M1**	1	Switch	
24	391038X1	2	Washer	
25	339030X1	2	Nut Metric	M6
26	339560X1	1	Hex. Sock. Screw	M6X16
27	3613599M91	1	Chain	
28	3782138M2	1	Protector	
29	3782139M2	1	Protector	
30	3783766M1	1	Cable	Length 930MM
				From Serial or Engine Number H286014
31	3777078M1	1	Cable	
32	339106X1	1	Wing Nut	
33	390972X1	2	Washer Metric	
34	5015718M2	1	Stirrup	
35	5015258M3	1	Cable	Length 1440MM
				-
				Up to Serial or Engine Number H286013
	3782436M2	1	Battery Cable	Length 1650MM
				-
				From Serial or Engine Number H286014

FOOTNOTE [A] PLEASE REFER TO MARKETING CATALOG

https://truckmanualshub.com/

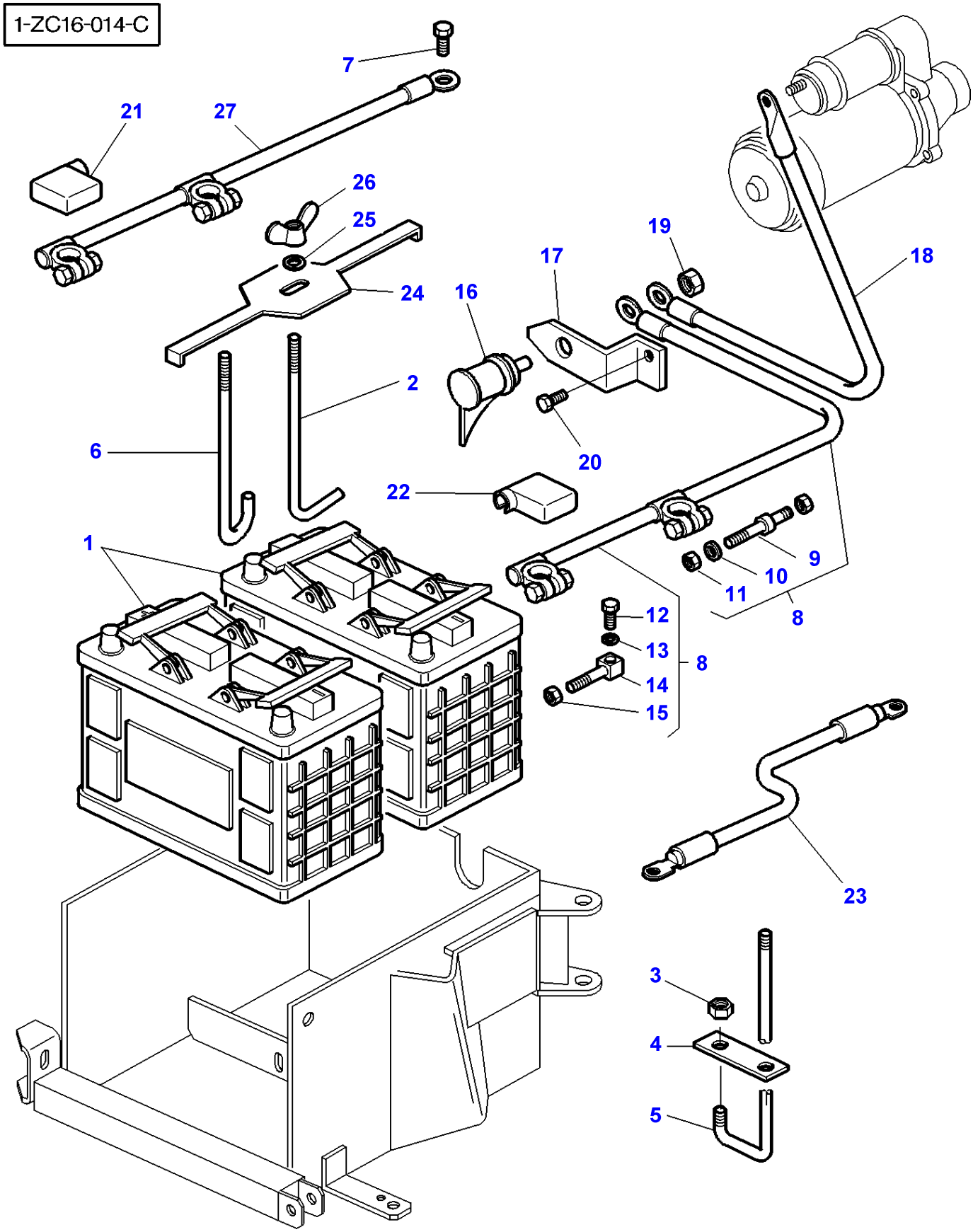

https://truckmanualshub.com/

Item	Part Number	Qty	Description	Comments
1		2	Battery	[A]
				505 AMP.
2	3782448M1	1	Strap	Up to Serial or Engine Number 16-06-1999
3	339169X1	1	Nut	From Serial or Engine Number 17-06-1999
				Up to Serial or Engine Number J189015
4	3780198M1	1	Plate	From Serial or Engine Number 17-06-1999
				Up to Serial or Engine Number J189015
5	3780197M1	1	Strap	From Serial or Engine Number 17-06-1999
				Up to Serial or Engine Number J189015
6	3784434M1	1	Draglink	From Serial or Engine Number J189016
7	393764X1	1	Screw	M16X20
				Up to Serial or Engine Number H286013
	391180X1	1	Screw	M14X20
				From Serial or Engine Number H286014
8	3782162M1	1	Cable	Length 2150MM
				+
9	3781370M1	1	Screw	(8)
10	3010860X1	1	Washer	(8)
11	339169X1	1	Nut	(8)
12	3010859X1	1	Screw	(8)
13	3010860X1	1	Washer	(8)
14	3781143M1	1	Screw	(8)
15	339169X1	1	Nut	(8)
16	**3714454M1**	1	Connector	
17	3714294M2	2	Support	
18	3616128M2	1	Cable	Length 450MM
				+
19	355566X1	1	Nut Unc	(16)
20	391180X1	1	Screw	M14X25
21	3782138M2	1	Protector	
22	3782139M2	1	Protector	
23	3783766M1	1	Cable	Length 930MM
				From Serial or Engine Number H286014
24	5015718M2	1	Stirrup	
25	390972X1	2	Washer Metric	
26	339106X1	1	Wing Nut	
27	5015258M3	1	Cable	Length 1440MM
				-
				Up to Serial or Engine Number H286013
	3782436M2	1	Battery Cable	Length 1650MM
				-
				From Serial or Engine Number H286014

FOOTNOTE [A] PLEASE REFER TO MARKETING CATALOG

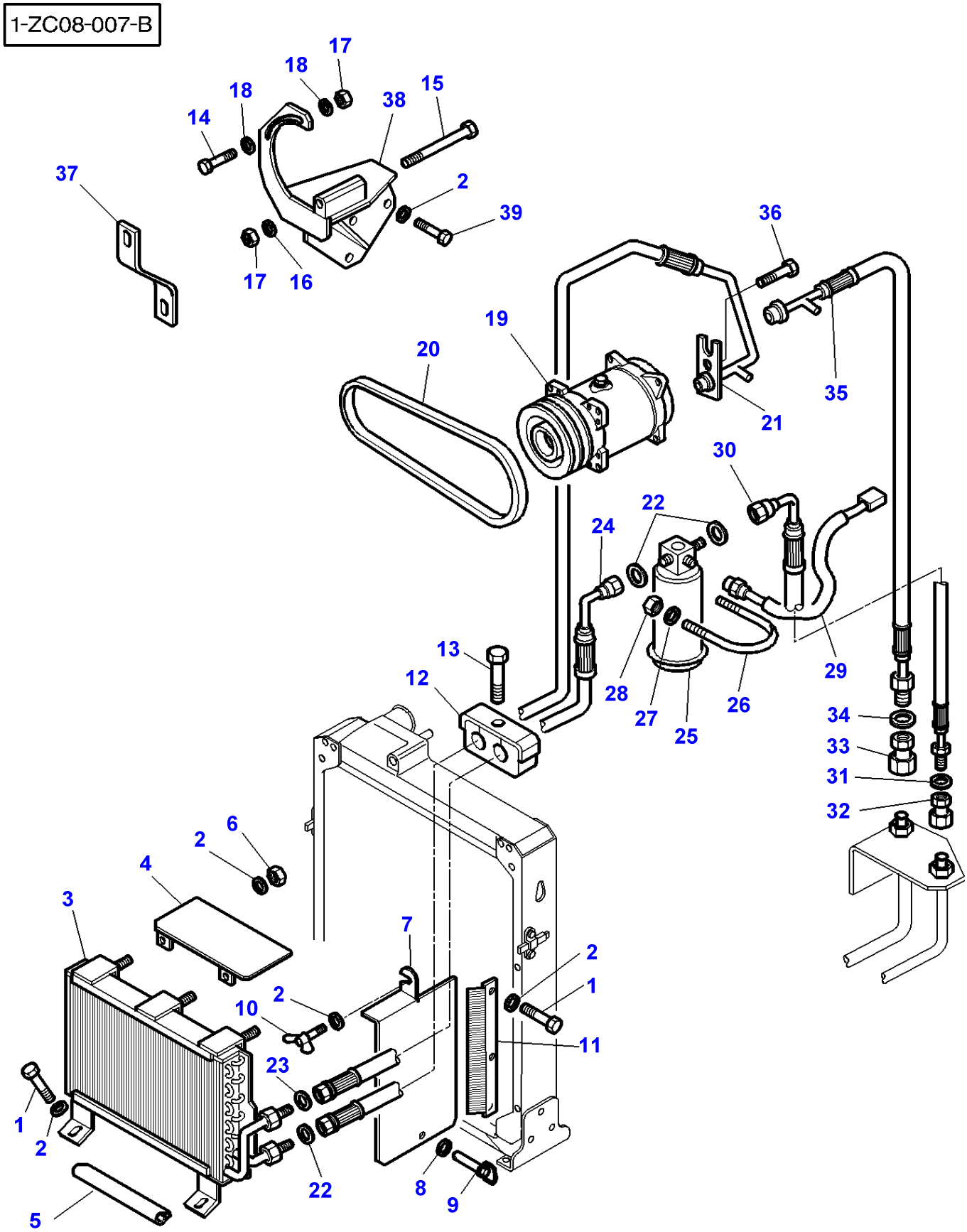
1-ZC08-007-B
17
18
18
15
38
14
37
2
39
36
17
16
19
20
35
21
30
22
24
13
12
28
27
25
26
29
34
33
31
32
6
2
4
3
7
2
1
2
10
11
23
1
2
22
8
9
5

https://truckmanualshub.com/

Item	Part Number	Qty	Description	Comments
1	339124X1	X	Hex. Sock. Screw	M8X16
2	390972X1	X	Washer Metric	
3	3782611M1	1	Condenser	
4	3782713M1	1	Plate	
5	3783129M1	1	Staple	Length 25MM
6	339169X1	2	Nut	M8
7	3782712M2	1	Panel	Left Hand
	3782711M2	1	Panel	Right Hand
8	3782892M1	2	Washer	
9	3782893M2	2	Latch	
10	339107X1	2	Wingbolt	M8X16
11	3782716M1	1	Dust Shield	Left Hand
	3782715M1	1	Dust Shield	Right Hand
12	3781937M1	1	Bridle	
13	339009X1	1	Hex. Sock. Screw	M8X35
14	3009493X1	3	Hex. Sock. Screw	M10X30
15	1442487X1	1	Bolt Metric	M10X130
16	3580856M1	1	Spacer	
17	3009693X1	2	Nut Metric	M10
18	339376X1	X	Lock Washer	
19	3782613M2	1	Compressor	
20	**3389525M1**	1	Belt	
21	3782106M2	1	Hydr Hose	
22	3010471X1	3	O Ring	
23	3010472X1	1	O Ring	
24	3782103M1	1	Hydr Hose	
25	**3712495M1**	1	Filter	
26	3383977M1	1	Stirrup	
27	390971X1	2	Washer	
28	339030X1	2	Nut Metric	M6
29	**3712526M1**	1	Pressure Switch	
30	3782125M1	1	Hydr Hose	
31	3010502X1	1	O Ring	
32	368524X1	1	Union	
33	368543X1	1	Union	
34	3010474X1	1	O Ring	
35	3782102M1	1	Hydr Hose	
36	358139X1	1	Screw	3/8-24 X 25
37	3781063M1	1	Strap	
38	5015431M93	1	Support	
39	339013X1	1	Bolt Metric	M8X110
	339557X1	2	Screw	M8X120

https://truckmanualshub.com/

1-ZC49-001-A

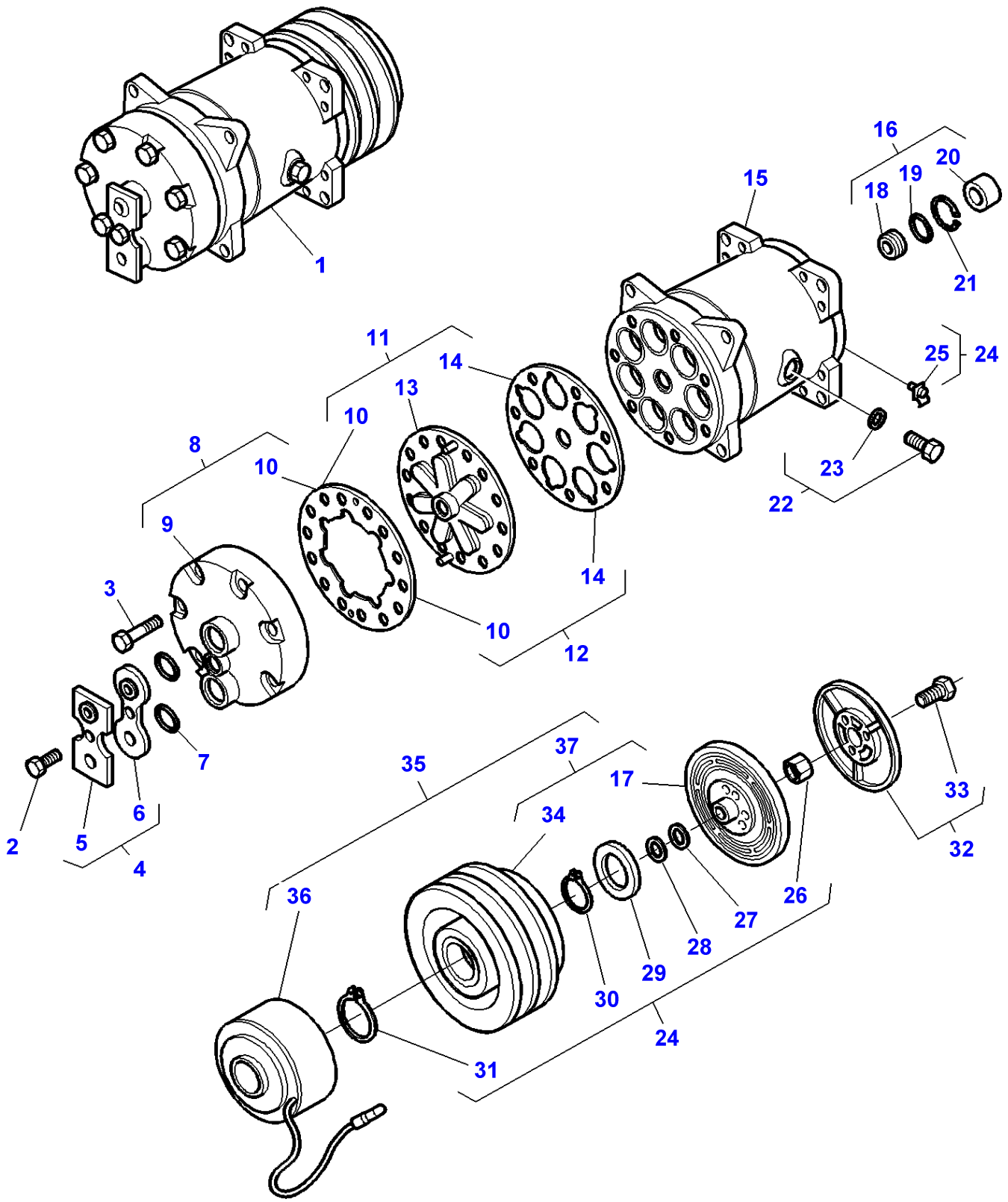

https://truckmanualshub.com/

Item	Part Number	Qty	Description	Comments
1	3782613M2	1	Compressor	
2	3901157M1	1	Screw	(1)
3	3901154M1	6	Screw	(1)
4	3903258M91	1	Kit	(1)
5		1	Plate	(4)
				Not serviced, order REF.4
6		1	Cover	(4)
				Not serviced, order REF.4
7	3901155M1	2	O Ring	(1)
8	3901147M91	1	Head	(1)
9		1	Cover	(8)
				Not serviced, order REF.8
10		1	Gasket	(8)
				Not serviced, order REF.8
11	3903255M91	1	Kit	(1)
12	3903256M91	1	Kit, Gasket	(1)
13		1	Plate	(11)
				Not serviced, order REF.11
14		1	Gasket	(11)
				Not serviced, order REF.11
15		1	Body	(1)
				Not serviced, order REF.1
16	3903257M91	1	Kit, Seal	(1)
17		1	Armature	(37)
				Not serviced, order REF.37
18		1	Seal	(16)
				Not serviced, order REF.16
19		1	O Ring	(16)
				Not serviced, order REF.16
20		1	Felt Ring	(16)
				Not serviced, order REF.16
21	3901150M1	1	Circlip	(1)
22	3901152M91	1	Plug	(1)
23	3901153M1	1	O Ring	(22)
24	3903263M91	1	Kit	(1)
25		1	Clip	(24)
				Not serviced, order REF.24
26		1	Nut	(24)
				Not serviced, order REF.24
27		1	Ring	(24)
				Not serviced, order REF.24
28		1	Ring	(24)
				Not serviced, order REF.24
29	3901162M1	1	Cover	(24)
30		1	Clip	(24)
				Not serviced, order REF.24
31		1	Clip	(24)
				Not serviced, order REF.24
32	3903259M91	1	Kit	
33		3	Screw	(32)
				Not serviced, order REF.32
34		1	Pulley	(37)
				Not serviced, order REF.37
35	3903260M92	1	Clutch	(1)
36	3903262M91	1	Coil	(35)
37	3903261M92	1	Rotor	(35)

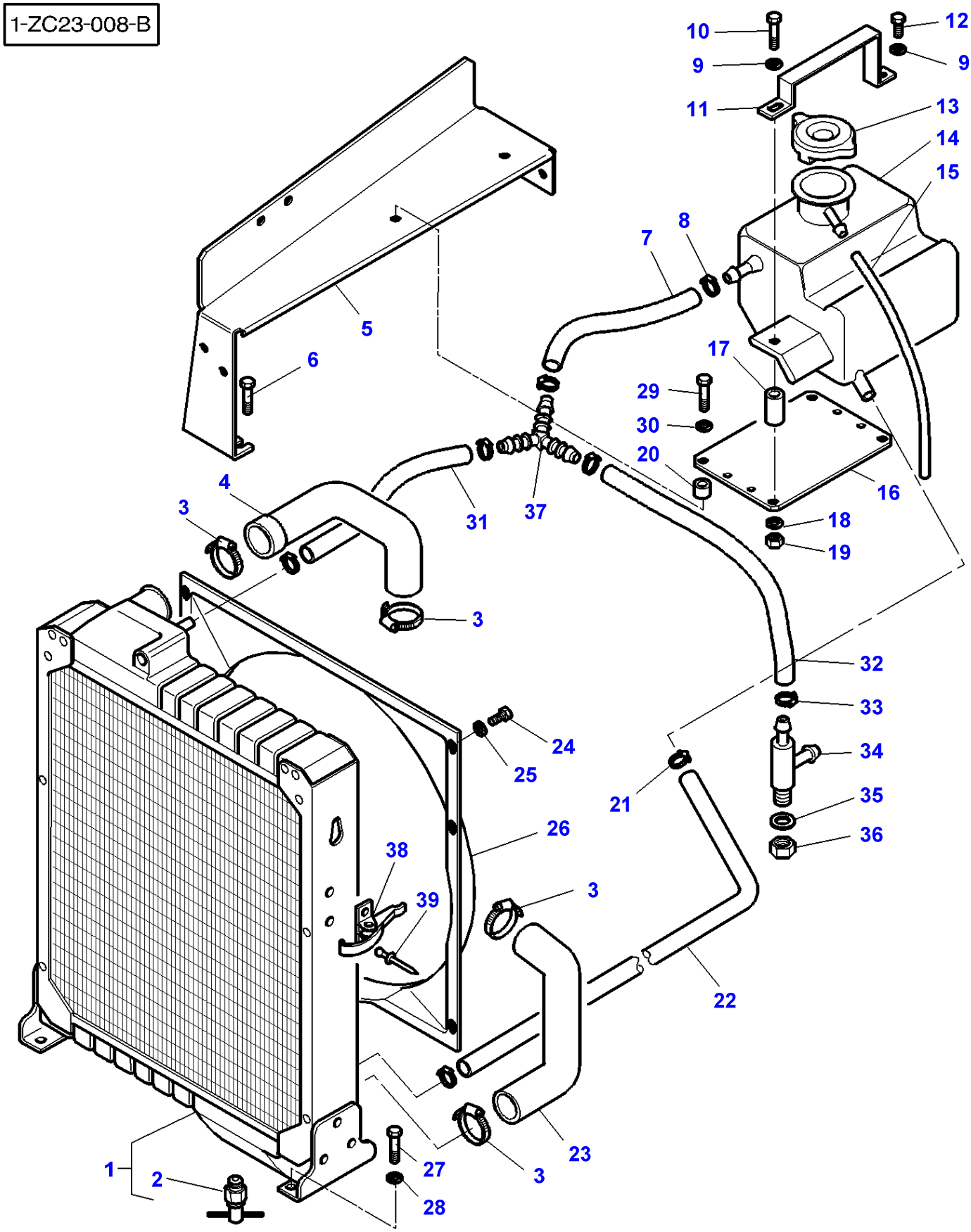
1-ZC23-008-B
10
9
11
12
9
13
14
15
8
7
5
6
17
29
30
20
16
4
3
31
37
18
19
3
32
33
24
25
34
21
35
26
36
38
39
3
22
23
1
2
27
3
28

https://truckmanualshub.com/

Item	Part Number	Qty	Description	Comments
1	3780221M2	1	Water Cooler	
2	**3902881M1**	1	Plug	(1)
3	338618X1	4	Hose Clip	
4	**3780226M2**	1	Hose	
5	3780300M5	1	Support	
6	339299X1	2	Screw Metric	M12X30
7	3783631M1	1	Hose	Length 90MM
8	3000483X1	2	Clamp	
9	390972X1	2	Washer Metric	
10	390246X1	1	Bolt	M8X70
11	3779400M2	1	Bridle	
12	339337X1	1	Hex. Sock. Screw	M8X30
13	**180224M92**	1	Radiator Cap	
14	3810567M3	1	Water Tank	
15	3808186M1	1	Hose	
16	3780561M1	1	Support	
17	3810570M1	1	Spacer	
18	390972X1	2	Washer Metric	
19	339169X1	2	Nut	
20	3712546M1	2	Spacer	
21	338614X1	2	Hose Clip	
22	**3778872M1**	1	Hose	Length 1200MM
23	3782762M2	1	Hose	
24	339228X1	6	Screw Metric	M8X12
25	390972X1	6	Washer Metric	
26	3782738M2	1	Shroud	
27	3009492X1	4	Hex. Sock. Screw	M10X25
28	390734X1	4	Washer	
29	339337X1	4	Hex. Sock. Screw	M8X30
30	391039X1	4	Washer Metric	
31	3780557M1	1	Hose	Length 810MM
32	3783573M1	1	Hydr Hose	Length 650MM
33	3779445M1	4	Clamp	
34	3782829M2	1	Union	
35	339526X1	1	Seal	
36	339617X1	1	Nut	M18X1,5
37	3779038M1	1	Union	
38	3783272M1	2	Latch	
39	3010021X1	4	Rivet	

https://truckmanualshub.com/

1-ZC28-003-B

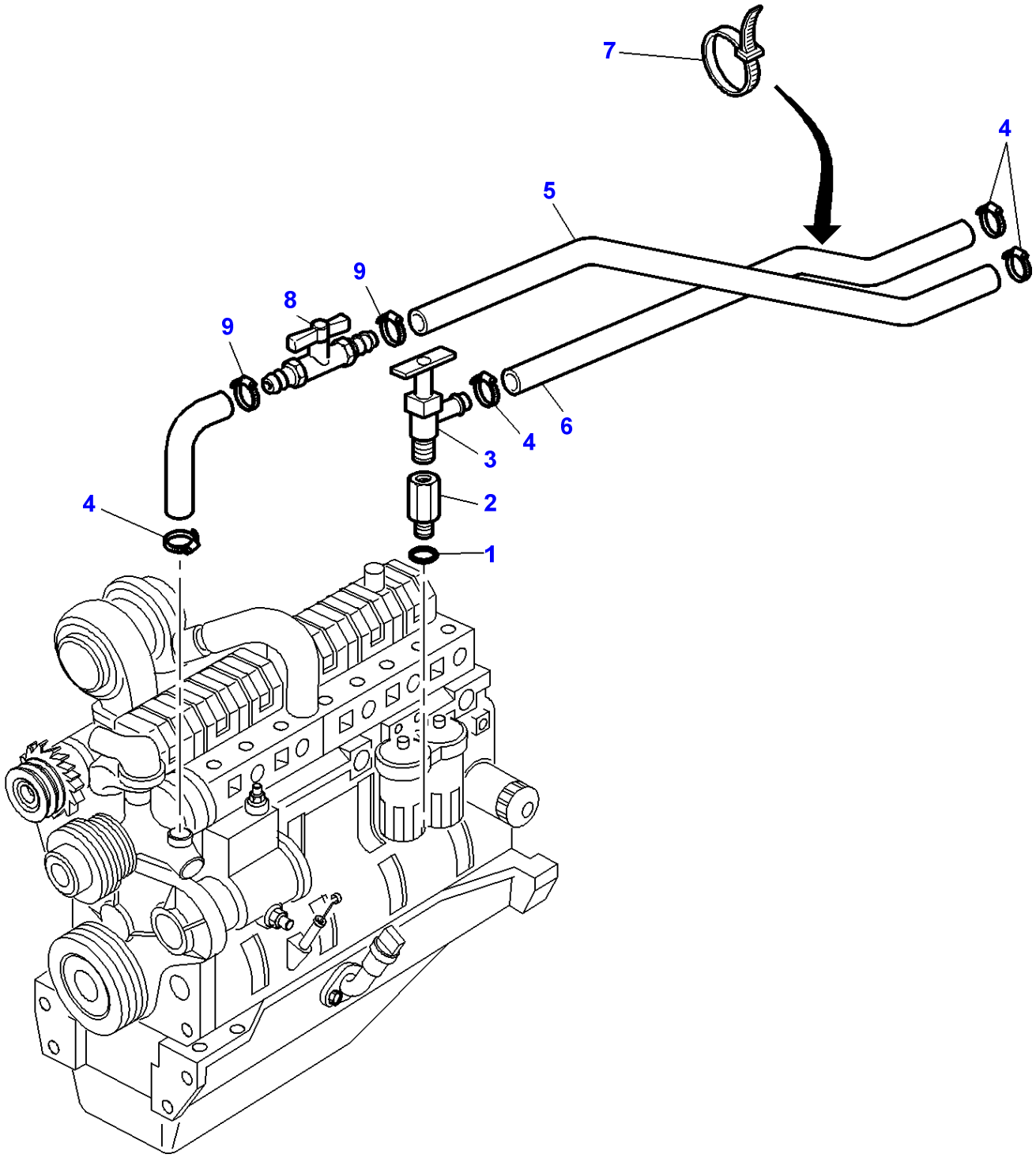

https://truckmanualshub.com/

Item	Part Number	Qty	Description	Comments
1	339526X1	1	Seal	
2	5015331M1	1	Adaptor	
3	71135522	1	Valve	
4	3019564X1	4	Hose Clip	
5	3385681M2	1	Hose	Length 2300MM
6	3580959M3	1	Hose	Length 1150MM
7	3619622M1	X	Cable Tie	
8	3784680M1	1	Cock	For United States of America For Australia For South Africa
9	3019564X1	2	Hose Clip	For United States of America For Australia For South Africa

FOOTNOTE [A] WITH FULL POWERSHIFT
FOOTNOTE [B] WITH DYNASHIFT

https://truckmanualshub.com/

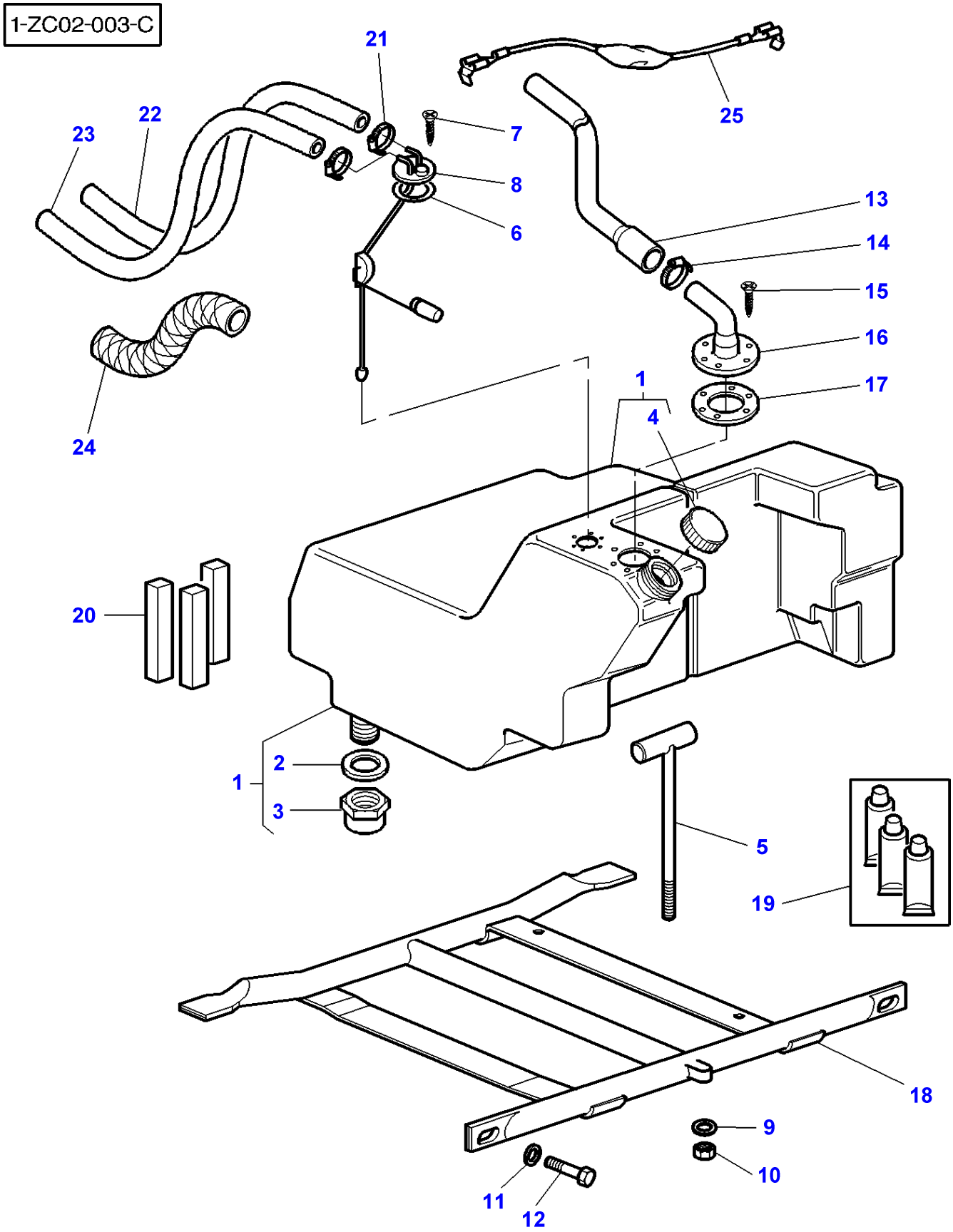

https://truckmanualshub.com/

Item	Part Number	Qty	Description	Comments
1	3782335M91	1	Fuel Tank	275L
	3777384M94	1	Fuel Tank	[A] 275L
2	3616911M1	1	Gasket	(1)
3	3616909M1	1	Plug	(1)
4	3782340M1	1	Tank Cap	[B] (1)
5	3777391M1	1	Stem	
6	1617869M2	1	Gasket	
7	3005728X1	6	Screw	No 10X16
8	3782343M1	1	Dipstick	
	3777389M2	1	Fuel Gauge	[A]
9	390734X1	1	Washer	
10	1440329X1	1	Locknut	
11	385363X1	2	Washer	
12	390912X1	2	Hex. Sock. Screw	
13	3778733M2	1	Tube	
14	338614X1	1	Hose Clip	Diameter 20-32
15	3005728X1	6	Screw	No 10X16
16	3782043M1	1	Non Return Valve	
17	1617869M2	1	Gasket	
18	3778874M2	1	Support	
19	3600444M91	1	Kit, Service	
20	3600195M91	1	Parts Pack	
21	3712464M1	4	Clamp	
22	3780476M1	1	Hydr Hose	Length 3500MM
23	3780476M1	1	Hydr Hose	Length 3500MM
24	3580974M2	2	Protective Strip	Length 380MM Up to Serial or Engine Number H169012
	3782421M1	7	Protective Strip	Length 500MM From Serial or Engine Number H169013
25	3783665M1	1	Harness	

FOOTNOTE [A] USED WITH ADDITIONAL FUEL TANK
FOOTNOTE [B] USED WITH 3782335M91

https://truckmanualshub.com/

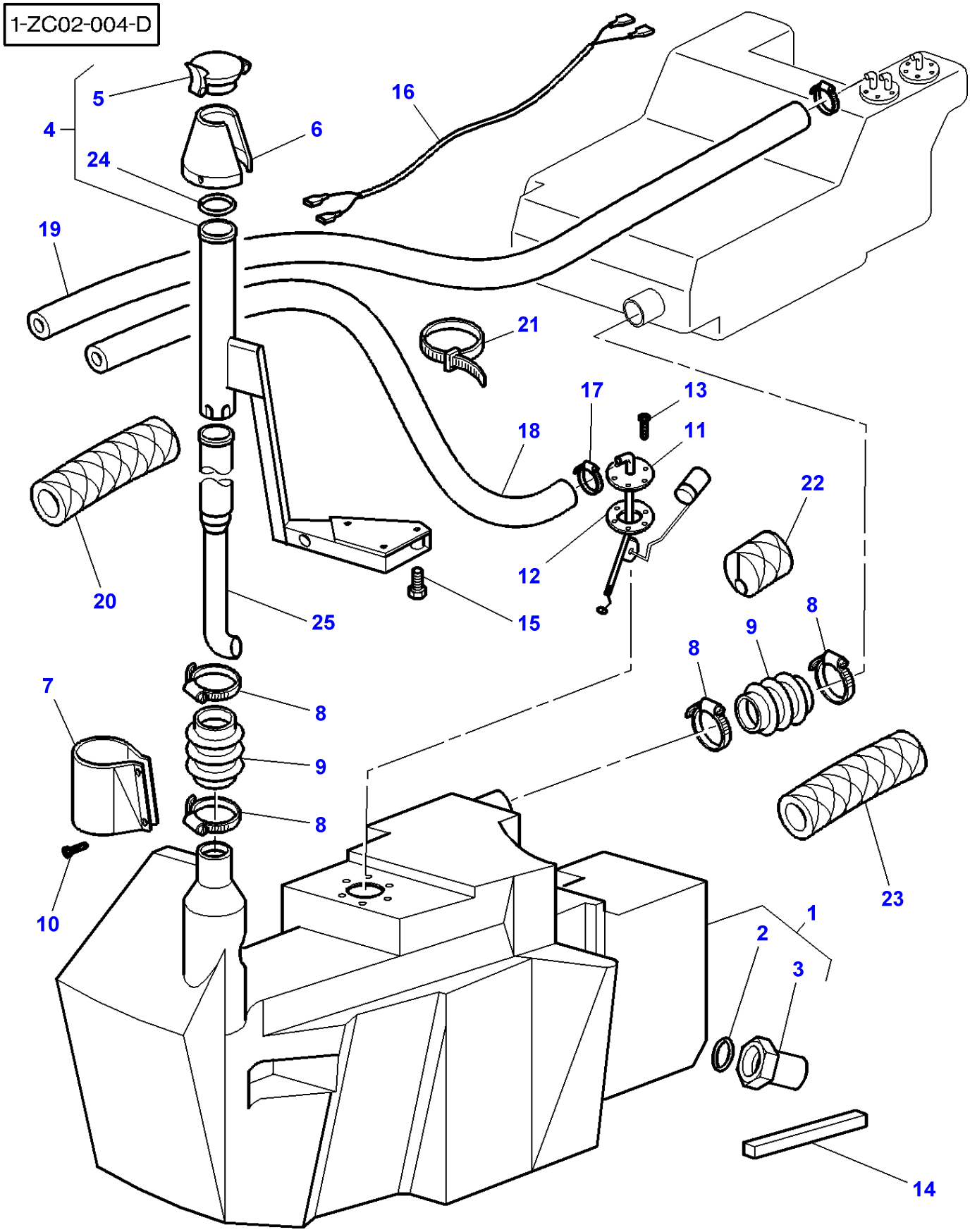

https://truckmanualshub.com/

Item	Part Number	Qty	Description	Comments
1	3777386M93	1	Tank	
2	3616911M1	1	Gasket	(1)
3	3616909M1	1	Plug	(1)
4	3778296M96	1	Spout	Up to Serial or Engine Number J055016
	3783921M91	1	Tube	From Serial or Engine Number J055017
5	3778761M1	1	Plug	(4)
6	3778531M1	1	Cowl	
7	3778781M1	1	Cowl	
8	1440860X1	2	Clamp	Diameter 60-80
9	3778297M1	2	Hose	Diameter 68MM
	3582877M2	1	Hose	Diameter 58MM
10	3005728X1	2	Screw	No 10X16
11	3777392M3	1	Dipstick	
12	1617869M2	1	Gasket	
13	3005728X1	6	Screw	No 10X16
14	3618690M1	2	Gasket	Length 30 X 13 X 545MM
15	339204X1	1	Screw	M10X65
	3009498X1	2	Bolt Metric	M10X55
16	3582936M1	1	Harness	
17	3712464M1	4	Clamp	Diameter 12MM
	3712465M1	4	Clamp	Diameter 15MM
18	3777664M1	1	Hydr Hose	Length 1700MM
19	3780476M1	1	Hydr Hose	Length 3500MM
20	3580974M2	X	Protective Strip	Length 380MM
				Up to Serial or Engine Number H169012
	3782421M1	X	Protective Strip	Length 500MM
				From Serial or Engine Number H169013
21	3619622M1	X	Cable Tie	
22	3783599M1	1	Protective Strip	[A]
23	3777884M1	2	Protective Strip	[A]
24	359187X1	1	O Ring	(4)
				From Serial or Engine Number J055017
25	3782142M93	1	Tube	From Serial or Engine Number J055017

FOOTNOTE [A] FOR JAPANESE MARKET ONLY

https://truckmanualshub.com/

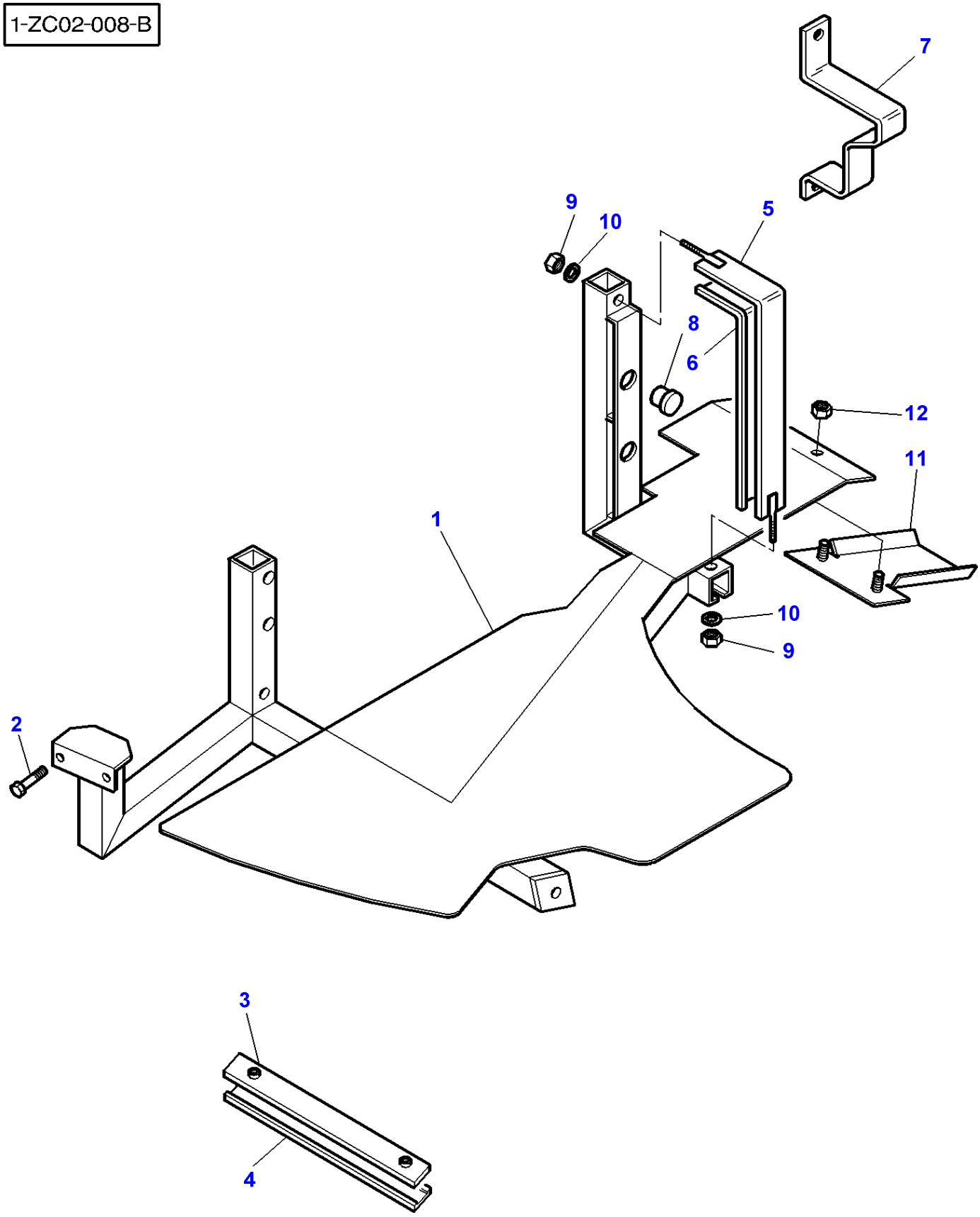

https://truckmanualshub.com/

Item	Part Number	Qty	Description	Comments
1	3782401M93	1	Frame	
2	390830X1	2	Screw	M8X70
3	3780189M91	1	Support	
4	3778385M1	1	Protector	
5	3778298M1	1	Bridle	
6	3778317M1	1	Protector	
7	3779656M1	1	Stop	
8	3580599M1	2	Plug	
9	1441500X1	2	Locknut	M6
10	391038X1	2	Washer	
11	3784015M1	1	Cowl	[A]
12	1441462X1	2	Locknut	

FOOTNOTE [A] FOR JAPANESE MARKET ONLY

https://truckmanualshub.com/

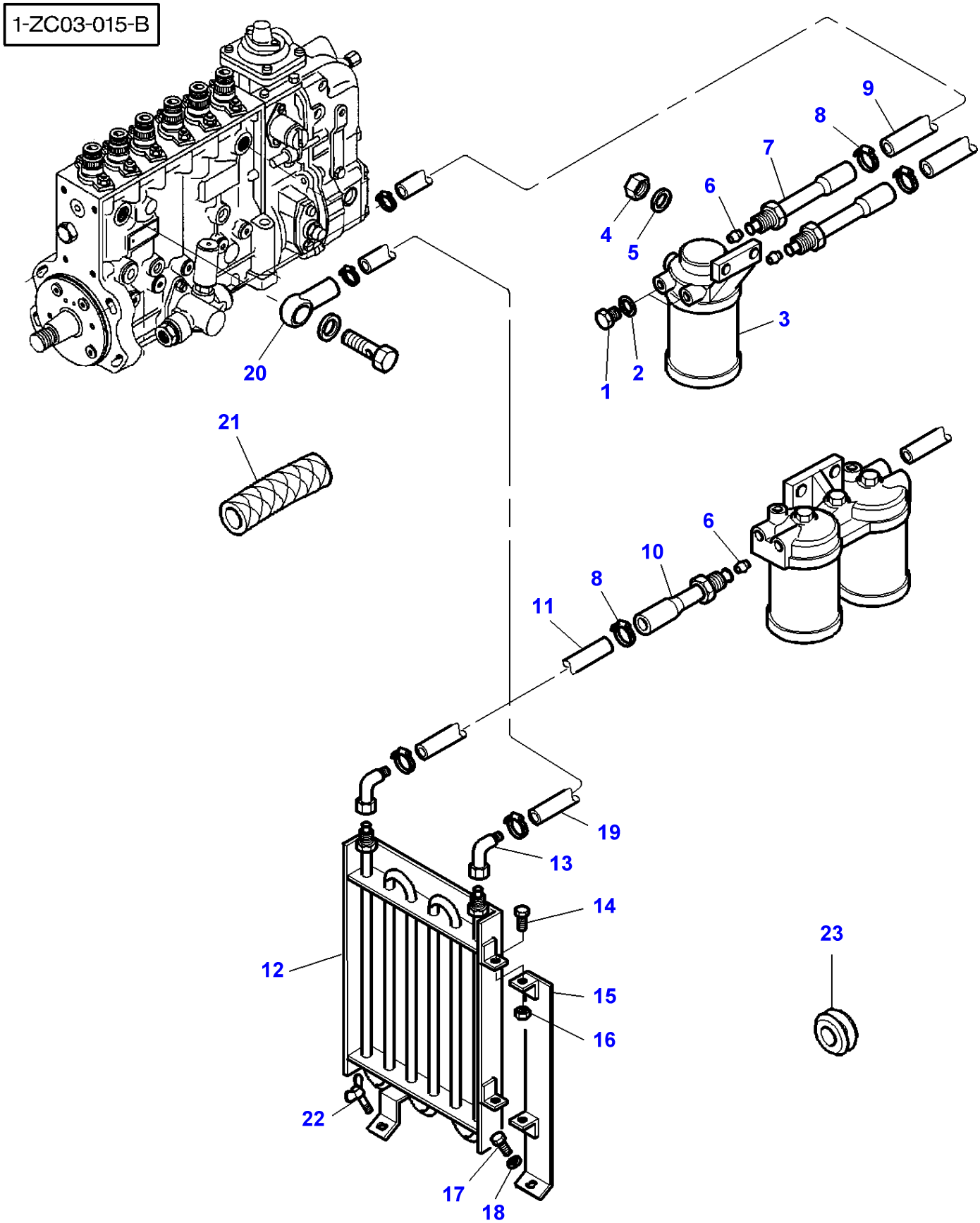

https://truckmanualshub.com/

Item	Part Number	Qty	Description	Comments
1	884748M1	2	Plug	1/2-20
2	880961M1	2	Washer	13.5-18X1.6
3	3781314M91	1	Sediment Bowl	150 MICRONS
4	339169X1	2	Nut	M8
5	391039X1	2	Washer Metric	
6	376526X1	3	Olive	
7	3615331M1	2	Union	
8	3712464M1	6	Clamp	
9	3615358M1	1	Hydr Hose	Length 1250MM
10	3615331M1	1	Union	
11	3615358M1	1	Hydr Hose	Length 1250MM
12	3781199M2	1	Cooler	
13	380048X1	2	Union	
14	390990X1	2	Screw Metric	M5X12
15	3781332M1	1	Support	
16	1441494X1	2	Nut Metric	M5
17	339123X1	1	Hex. Sock. Screw	M8X20
18	339024X1	1	Washer Metric	
19	3777664M1	1	Hydr Hose	Length 1700MM
20	72163068	1	Banjo Fitting	Diameter 12MM
21	3782421M1	4	Protective Strip	
22	339107X1	1	Wingbolt	M8X16
23	367439X1	2	Grommet	Diameter 15-25

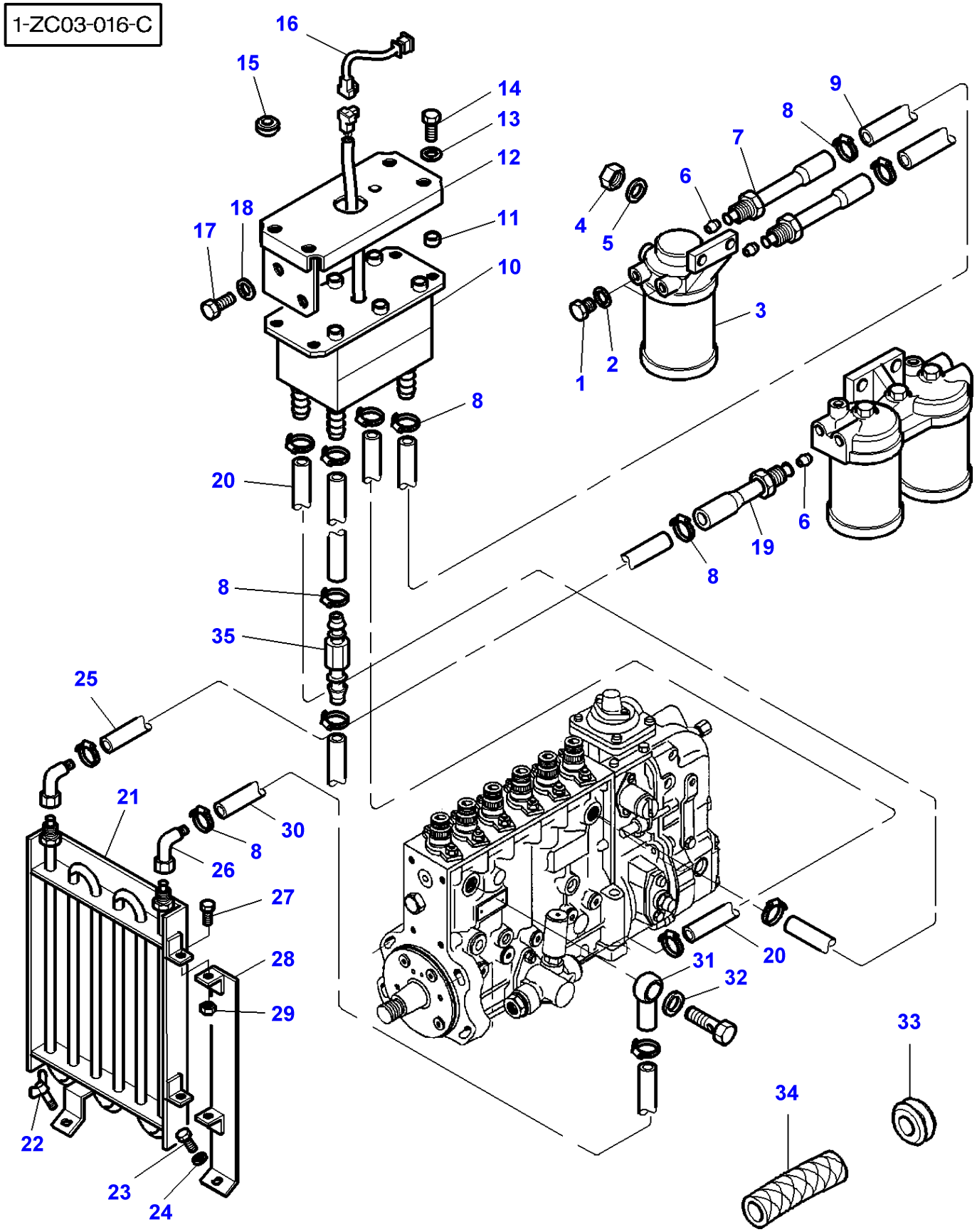
1-ZC03-016-C
16
15
14
13
12
11
10
18
17
9
8
7
6
4
5
3
2
1
8
20
6
19
8
8
35
25
21
30
8
26
27
28
29
22
23
24
31
32
20
33
34

https://truckmanualshub.com/

Item	Part Number	Qty	Description	Comments
1	884748M1	2	Plug	1/2-20
2	880961M1	2	Washer	13.5-18.2X1.6
3	3781977M91	1	Sediment Bowl	30 MICRONS
4	339169X1	2	Nut	M8
5	391039X1	2	Washer Metric	
6	376526X1	3	Olive	
7	3615331M1	2	Union	
8	3712464M1	8	Clamp	Diameter 12MM
	3715229M1	2	Clamp	Diameter 10MM
9	3777800M1	1	Hydr Hose	Length 1550MM
10	3582830M1	1	Flowmeter	
11	3582832M1	4	Spacer	
12	3777280M1	1	Support	
13	3019560X1	4	Washer	
14	339563X1	4	Screw Metric	M5X20
15	3389410M1	4	Grommet	Diameter 8-11
16	3714288M1	1	Harness	
17	339123X1	2	Hex. Sock. Screw	M8X20
18	339024X1	2	Washer Metric	
19	3615331M1	1	Union	
20	3615358M1	2	Hydr Hose	Length 1250MM
21	3781199M2	1	Cooler	
22	339107X1	1	Wingbolt	M8X16
23	339123X1	1	Hex. Sock. Screw	M8X20
24	339024X1	1	Washer Metric	
25	3580971M1	1	Hydr Hose	Length 2100MM
26	380048X1	2	Union	
27	390990X1	2	Screw Metric	M5X12
28	3781332M1	1	Support	
29	1441494X1	2	Nut Metric	M5
30	3777664M1	1	Hydr Hose	Length 1700MM
31	72163068	1	Banjo Fitting	
32	3007188X1	1	Gasket	
33	367439X1	2	Grommet	Diameter 15-25
34	3782421M1	4	Protective Strip	
35	3781262M1	1	Junction	

1-ZZ09-001-A

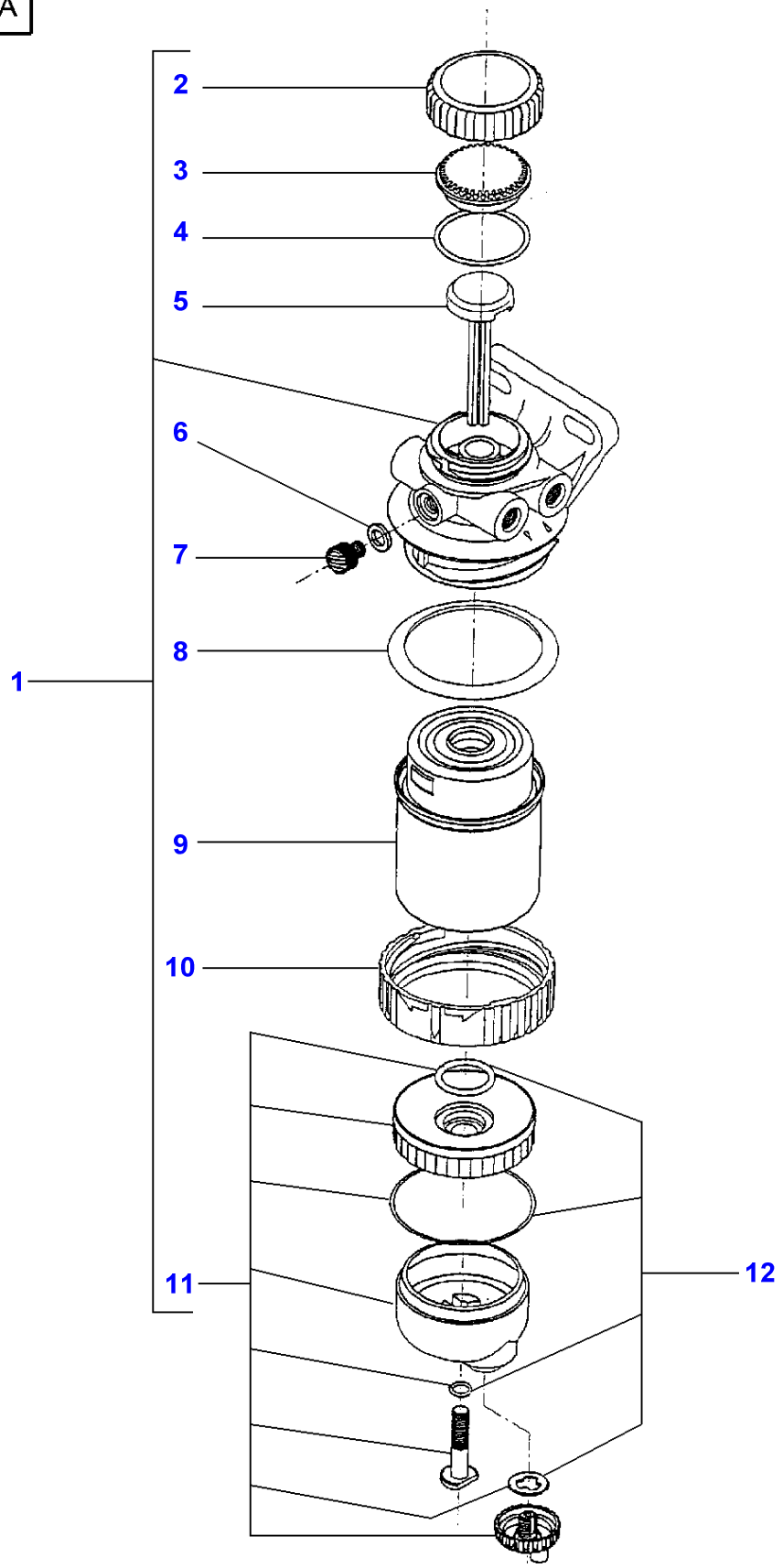

https://truckmanualshub.com/

Item	Part Number	Qty	Description	Comments
1	3781314M91	1	Sediment Bowl	150 MICRONS
	3781977M91	1	Sediment Bowl	[A] 30 MICRONS
2	3903292M1	1	Nut	(1)
3	3903294M1	1	Capsule	(1)
4	3903293M1	1	O Ring	(1)
5	3903295M1	1	Plug	(1)
6	3903296M1	1	Gasket	(1)
7	3903297M1	1	Bleeder	(1)
8	3903298M1	1	Seal	(1)
9	**3780299M1**	1	Filter Insert	[C] (1) 150 MICRONS
	3780931M1	1	Filter Insert	[B] (1) 30 MICRONS
10	3903299M1	1	Ring	(1)
11	3903300M91	1	Container	(1)
12	3903301M91	1	Kit, Joint	

FOOTNOTE [A] WITH FUEL FLOWMETER
FOOTNOTE [B] USE WITH 3781977M91
FOOTNOTE [C] USE WITH 3781314M91

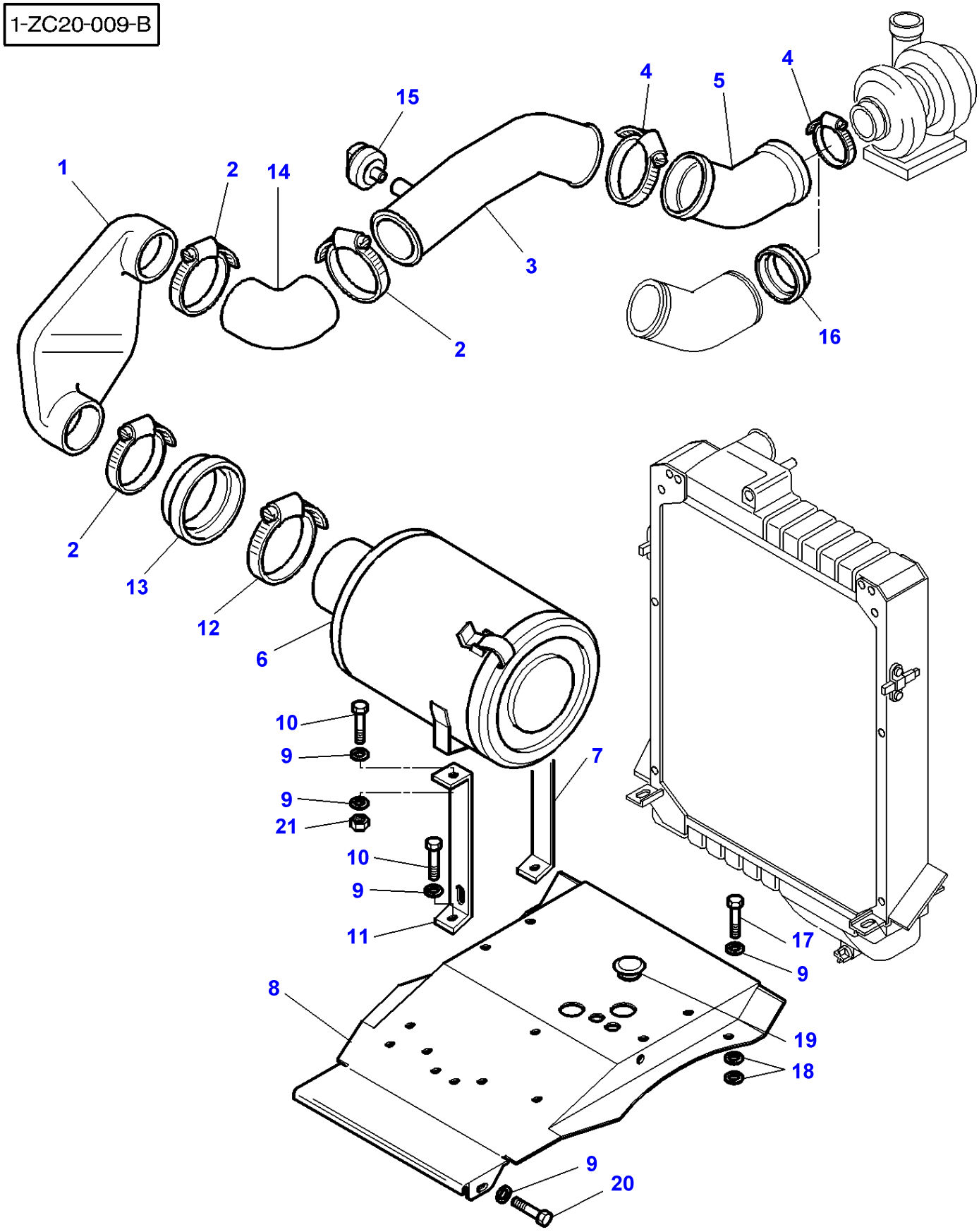
1-ZC20-009-B
1
2
14
15
4
5
4
3
2
16
2
13
12
6
10
9
9
21
10
9
11
7
17
9
8
19
18
9
20

https://truckmanualshub.com/

Item	Part Number	Qty	Description	Comments
1	3780243M2	1	Hose	
2	3780574M1	3	Clamp	
3	3780244M2	1	Tube	
4	338622X1	2	Clamp	
5	3780245M2	1	Hose	
6	3782339M91	1	Air Filter	See Page - Reference Number 010-0225/1
7	3783210M1	1	Support	
8	3782181M6	1	Shield	
9	391039X1	10	Washer Metric	
10	339123X1	4	Hex. Sock. Screw	M8X20
11	3783211M1	1	Support	
12	3010161X1	1	Clamp	
13	3782169M1	1	Hose	
14	3780727M1	1	Hose	
15	**3781297M1**	1	Valvometer	
16	3782169M1	1	Hose	From Serial or Engine Number H172007 Up to Serial or Engine Number H312020
17	339010X1	2	Bolt Metric	M8X40
18	1440264X1	4	Washer Metric	Up to Serial or Engine Number 23-01-2000
19	3778376M2	1	Tap	
20	339337X1	2	Hex. Sock. Screw	M8X30
21	339169X1	2	Nut	M8

https://truckmanualshub.com/

1-ZC20-006-A

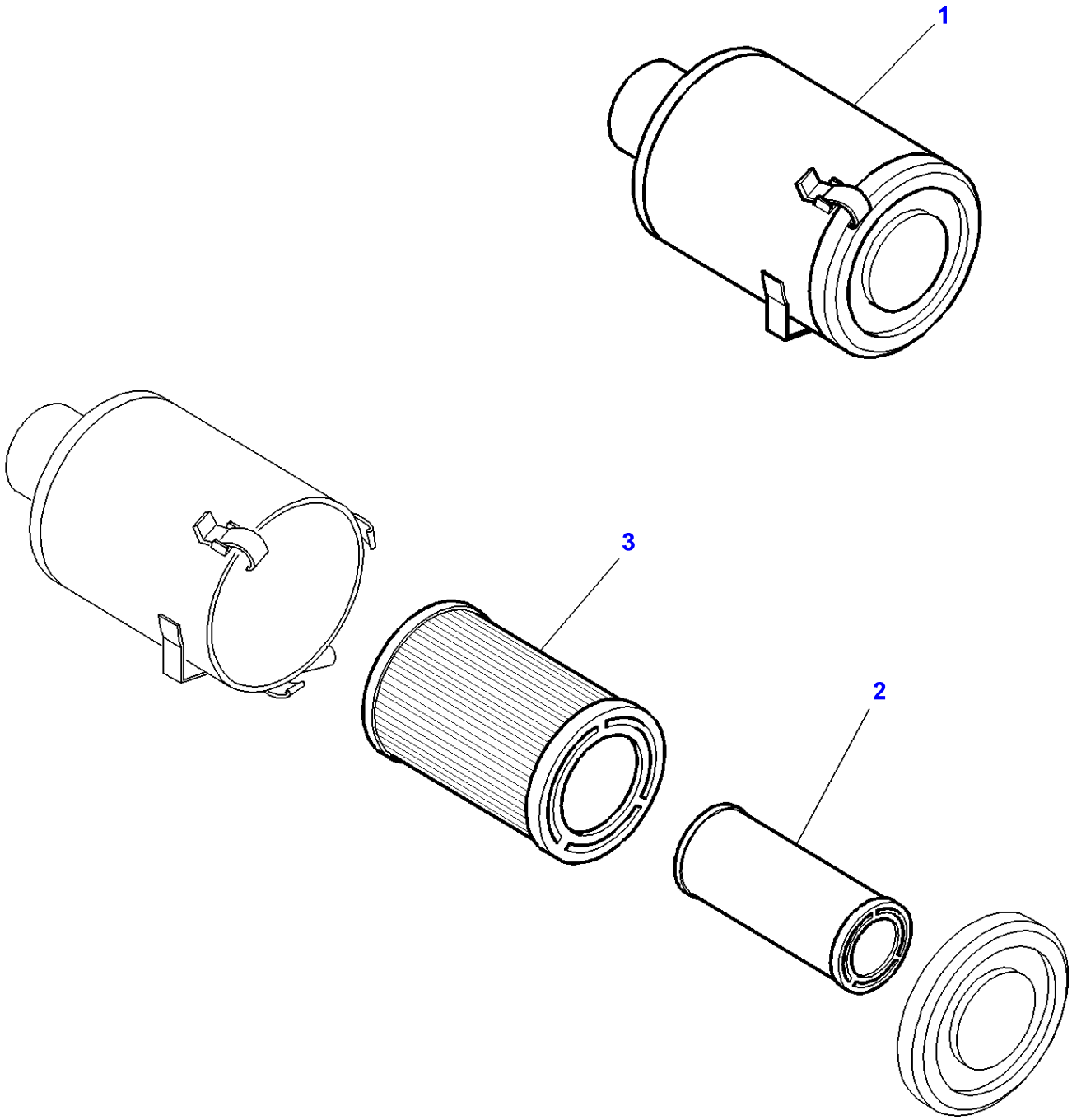

https://truckmanualshub.com/

Item	Part Number	Qty	Description	Comments
1	3782339M91	1	Air Filter	
2	**3782387M1**	1	Element,Air Fitr	(1)
3	**3782386M1**	1	Element,Air Fitr	(1)

https://truckmanualshub.com/

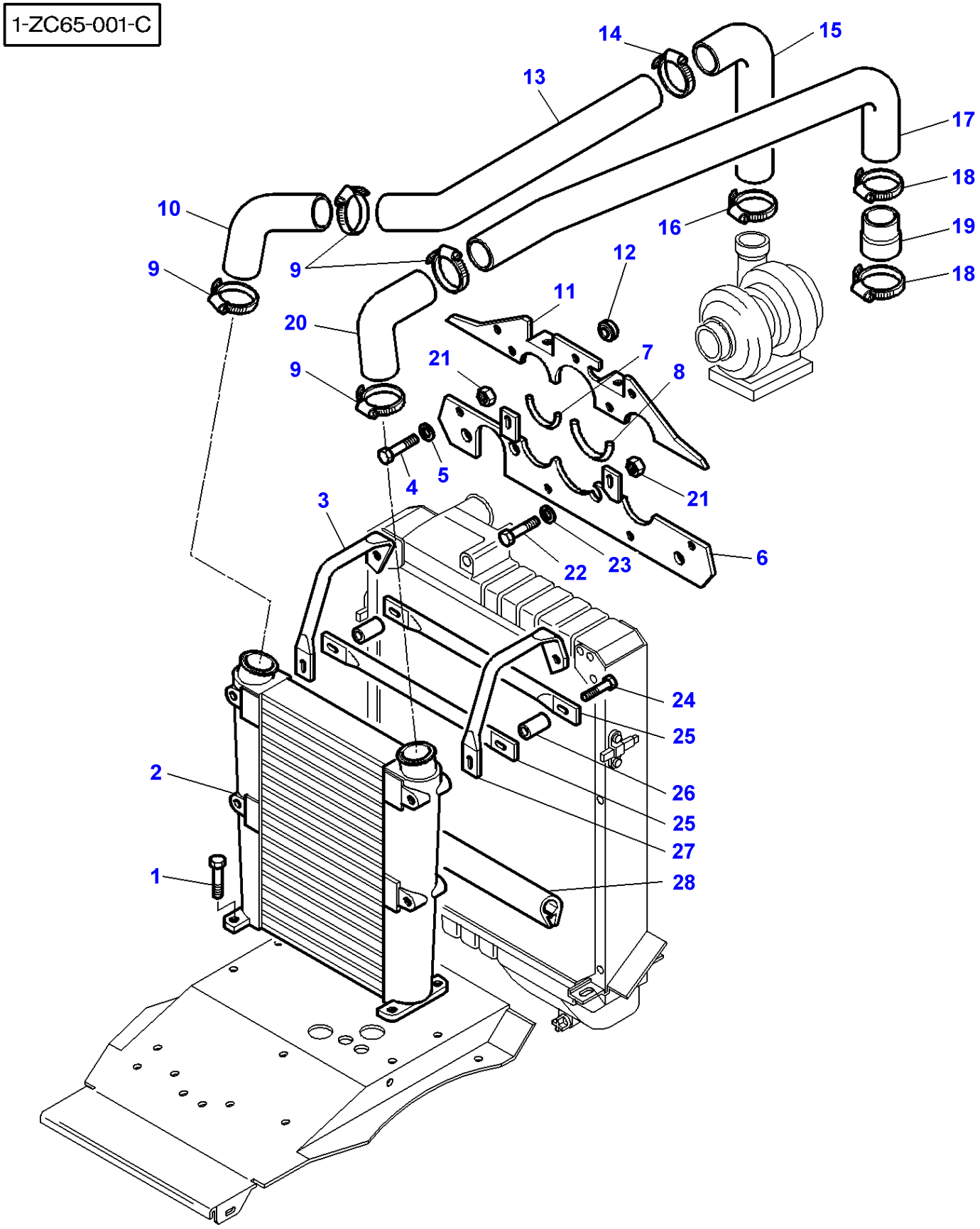

https://truckmanualshub.com/

Item	Part Number	Qty	Description	Comments
1	339010X1	4	Bolt Metric	M8X40
2	3780241M1	1	Cooler	
3	3783261M1	1	Reinforcement	Right Hand
4	339124X1	6	Hex. Sock. Screw	M8X16
5	391039X1	6	Washer Metric	
6	3783714M1	1	Baffle	Bottom
				Replace and repair. Old not interchangeable with new 3782159M1
7	3814904M1	4	Protector	Length 110MM
8	3778990M1	2	Gasket	Length 165MM
9	3780574M1	4	Clamp	
10	**3780247M1**	1	Hose	
11	3782158M3	1	Baffle	Top
12	3388889M1	1	Grommet	
13	3780246M1	1	Tube	
14	338620X1	1	Clamp	
15	3780250M1	1	Hose	
16	3780573M1	1	Clamp	
17	3780248M1	1	Tube	
18	338622X1	2	Clamp	
19	3780249M1	1	Hose	
20	**3780577M1**	1	Hose	
21	339169X1	4	Nut	
22	339560X1	2	Hex. Sock. Screw	M6X16
23	391038X1	2	Washer	
24	390246X1	2	Bolt	M8X70
25	3781665M1	2	Guide	
26	3582393M1	2	Spacer	
27	3783260M1	1	Reinforcement	Left Hand
28	3782344M1	1	Gasket	

https://truckmanualshub.com/

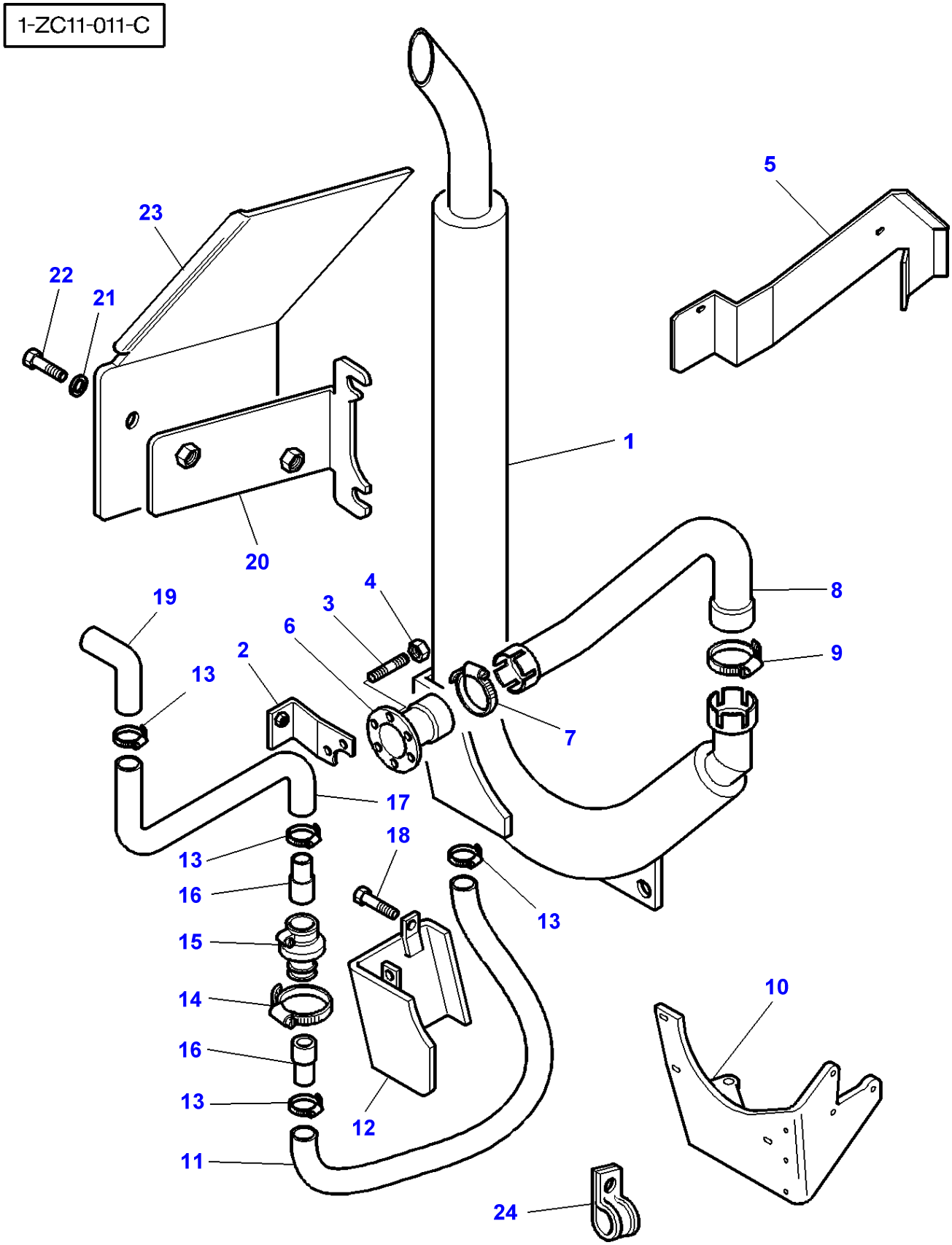

https://truckmanualshub.com/

Item	Part Number	Qty	Description	Comments
1	3782179M3	1	Tube	
2	3782357M3	1	Strap	
3	1440022X1	6	Stud	M8X20
4	3010572X1	6	Nut	
5	3783254M1	1	Cowl	
6	3783255M1	1	Tube	
7	3780862M1	1	Clamp	
8	3783256M1	1	Tube	
9	3780863M1	1	Clamp	
10	3782206M3	1	Support	
11	3040888M1	1	Tube	Up to Serial or Engine Number J046020 Length 1524MM
	3038134M1	1	Tube	From Serial or Engine Number J046021 Length 1270MM
12	3782180M3	1	Cowl	
13	338615X1	X	Clamp	Diameter 25-40
	338616X1	X	Hose Clip	Diameter 32-50
14	1440860X1	1	Clamp	
15	3780483M1	1	Non Return Valve	
16	3782356M1	2	Adaptor	
17	3777809M1	1	Tube	Length 3350MM
18	391074X1	2	Hex. Sock. Screw	M6X12
19	3777308M1	1	Hose	
20	3781101M2	1	Support	
21	390972X1	2	Washer Metric	
22	339228X1	2	Screw Metric	M8X12
23	3781102M2	1	Cowl	
24	3010808X1	1	Strap	

FOOTNOTE [A] DRIVE FRONT PTO

https://truckmanualshub.com/

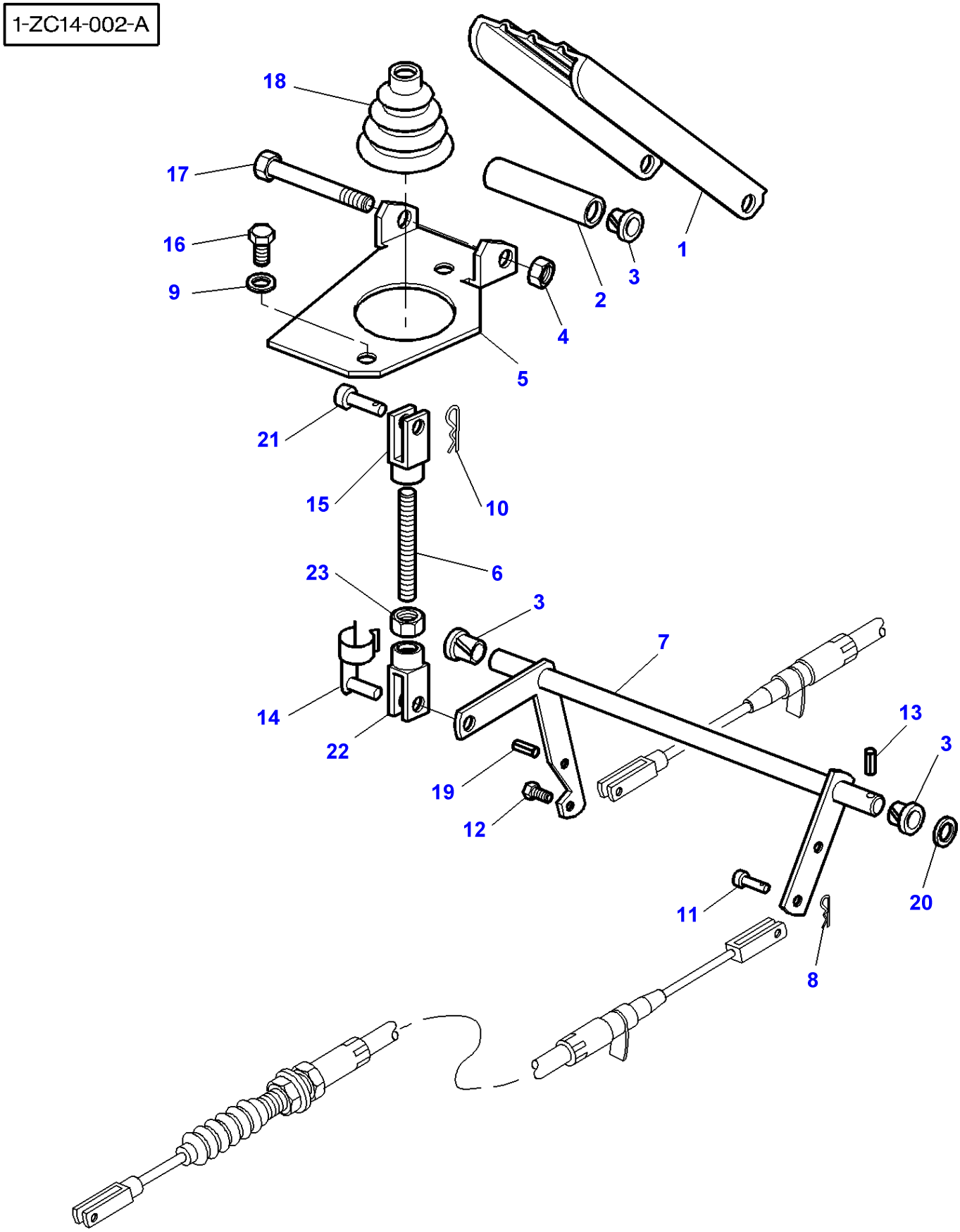

https://truckmanualshub.com/

Item	Part Number	Qty	Description	Comments
1	3712851M91	1	Pedal	
2	3712867M1	1	Spacer	
3	3385913M2	4	Bush	
4	1441461X1	1	Locknut	
5	3712852M2	1	Support	
6	3712866M2	1	Stem	
7	3712895M91	1	Rod	
8	357145X1	1	Pin	
9	390972X1	2	Washer Metric	
10	357145X1	1	Pin	
11	3007850X1	1	Clevis Pin	
12	391883X1	1	Screw	M5X25
13	357146X1	1	Pin	
14	3713042M1	1	Clevis Pin	
15	3009130X1	1	Clevis	
16	339124X1	2	Hex. Sock. Screw	M8X16
17	391286X1	1	Bolt Metric	M8X85
18	3712886M1	1	Bellows	
19	339548X1	1	Pin	
20	1444351X1	1	Washer	
21	392235X1	1	Clevis Pin	
22	392463X1	1	Clevis	
23	339030X1	1	Nut Metric	M6

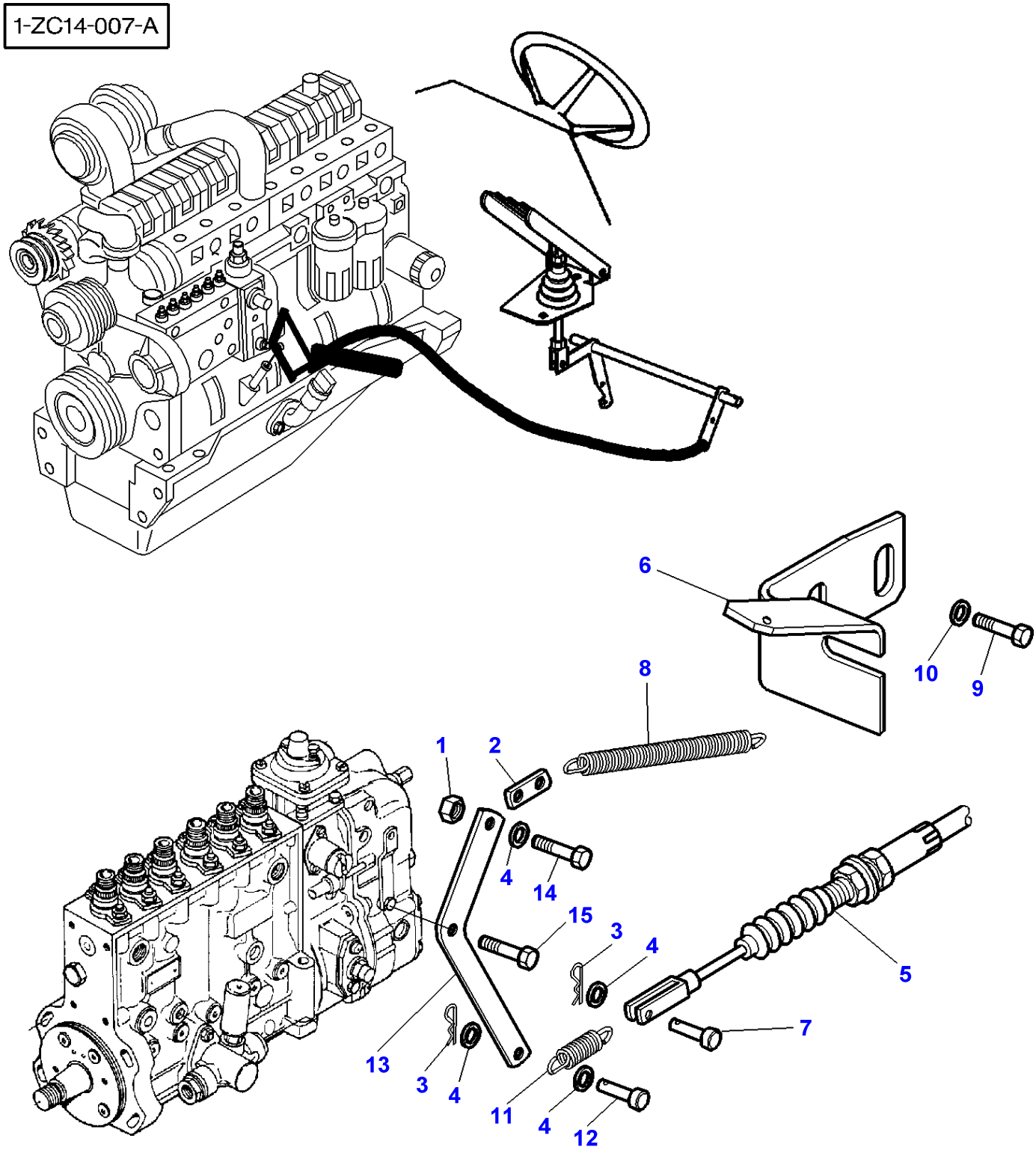
1-ZC14-007-A
6
10
9
8
1
2
4
14
15
3
4
5
7
13
3
4
11
4
12

https://truckmanualshub.com/

Item	Part Number	Qty	Description	Comments
1	339030X1	1	Nut Metric	
2	1660774M2	1	Lug	
3	357145X1	2	Pin	
4	390971X1	4	Washer	
5	3615919M3	1	Cable	Length 1040MM
6	3779764M2	1	Thruster	
7	832297M1	1	Clevis Pin	
8	3615253M1	1	Spring	
9	339124X1	2	Hex. Sock. Screw	M8X16
10	390972X1	2	Washer Metric	
11	3387022M2	1	Spring	
12	3007850X1	1	Clevis Pin	
13	3580837M2	1	Lever	
14	339666X1	1	Hex. Sock. Screw	M6X20
15	339262X1	1	Bolt Metric	M6X30

https://truckmanualshub.com/

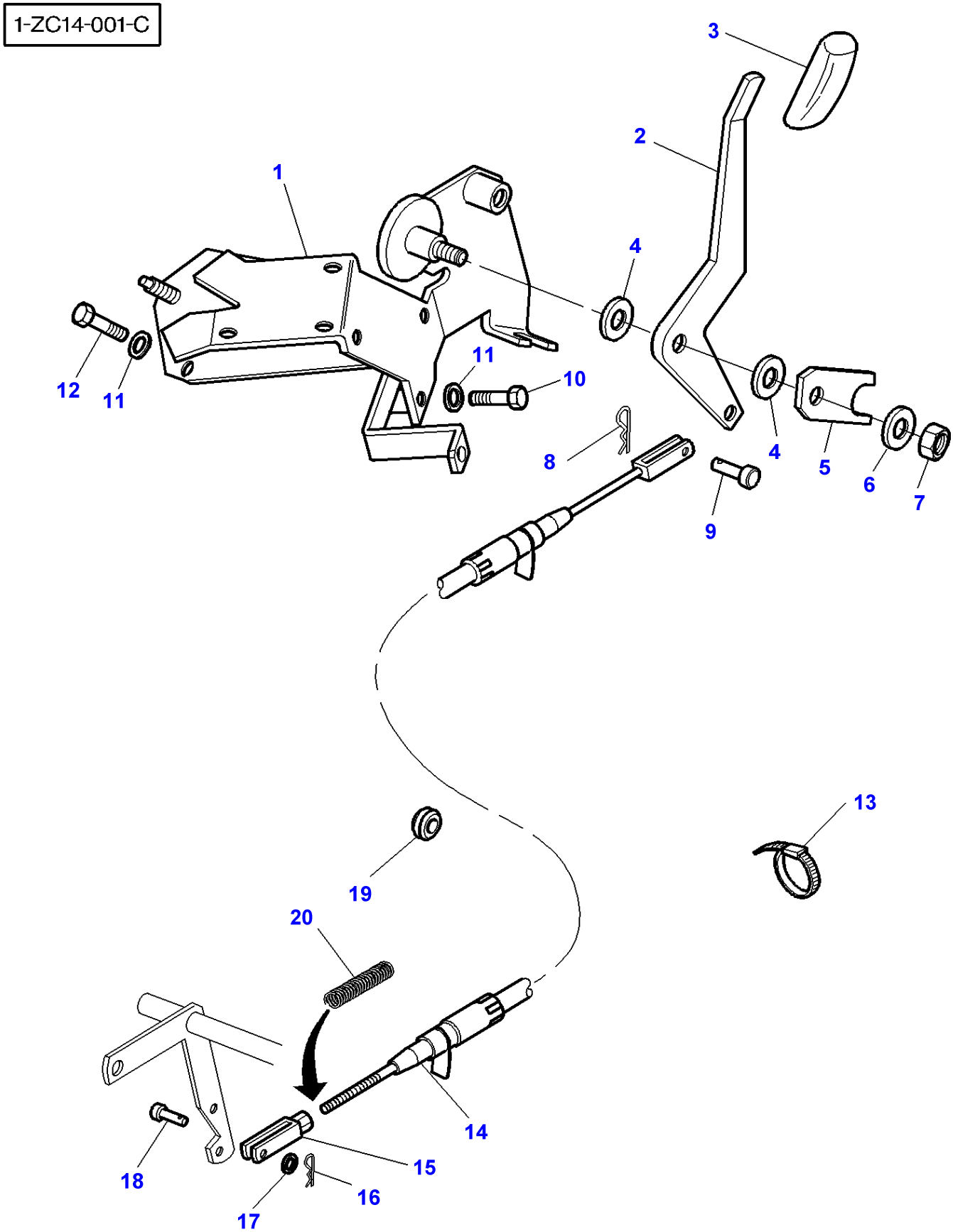

https://truckmanualshub.com/

Item	Part Number	Qty	Description	Comments
1	3778645M94	1	Support	
2	3778583M2	1	Lever	
3	3777015M1	1	Handle	
4	3042581M2	2	Washer	
5	3712271M1	1	Plate	
6	880712M1	1	Washer	
7	1440330X1	1	Locknut	M12
8	357145X1	1	Pin	
9	3007850X1	1	Clevis Pin	
10	339368X1	1	Bolt Metric	M8X60
11	390972X1	3	Washer Metric	
12	339368X1	1	Bolt Metric	M8X60
13	3619622M1	1	Cable Tie	
14	3778639M1	1	Cable	Length 855MM
15	3616399M1	1	Stirrup	
16	357145X1	1	Pin	
17	390971X1	1	Washer	
18	832297M1	1	Clevis Pin	
19	1699748M1	1	Plug	Diameter 9,5MM
20	3784906M1	1	Spring	From Serial or Engine Number J147003 Length 125MM

FOOTNOTE [B] INDUSTRIAL CAB

https://truckmanualshub.com/

Page Title	Page Number
Flywheel	020-0005
Clutch Pedal And Linkage	020-0010
Braking Assistance Accumulator - With Pump 45cc	020-0015
Braking Assistance Accumulator - With Pump 150 L/mm	020-0020

https://truckmanualshub.com/

1-ZA07-005-A

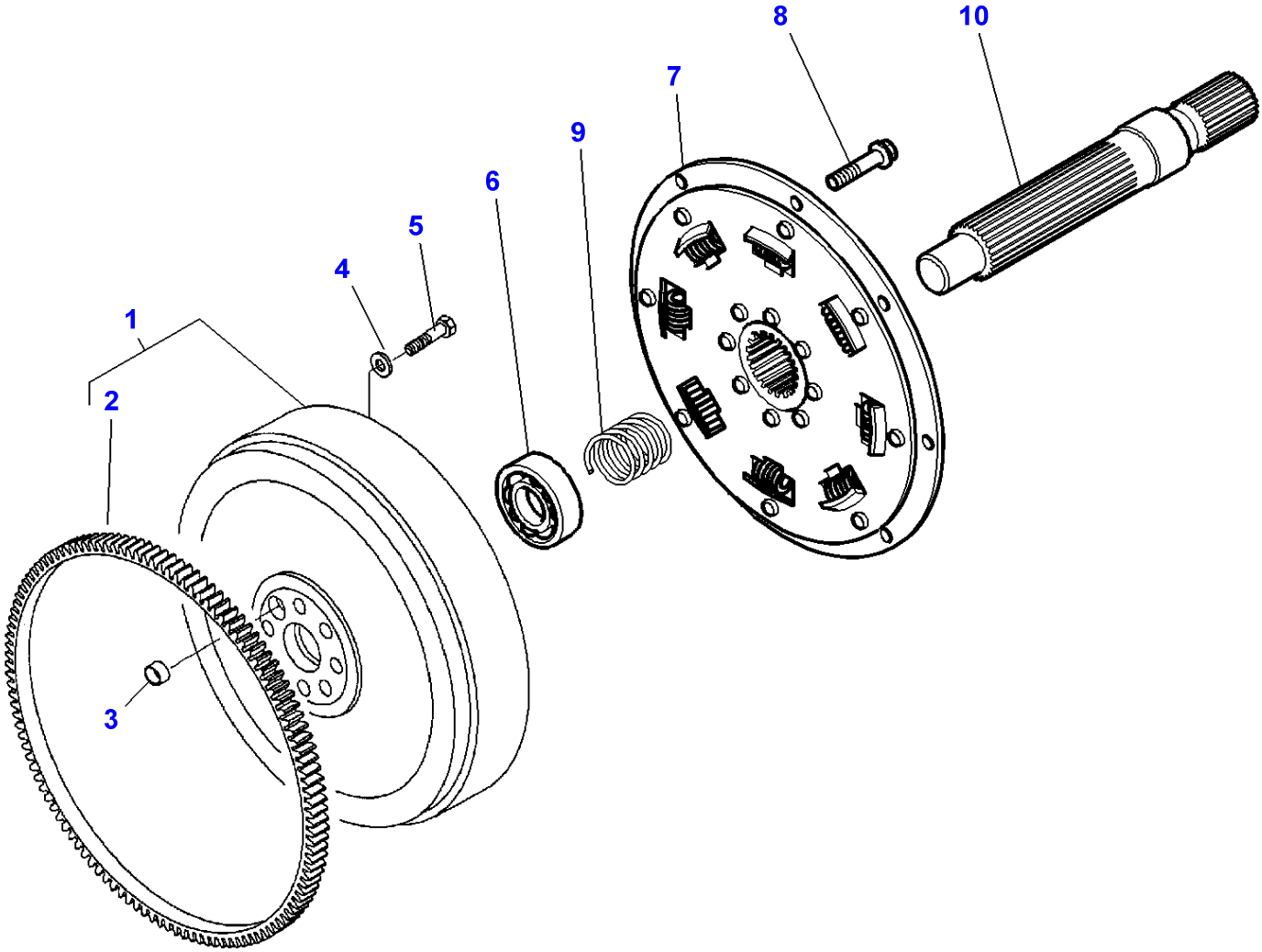

https://truckmanualshub.com/

Item	Part Number	Qty	Description	Comments
1	V836859744	1	Flywheel	
2	V836659026	1	Annular Gear	(1)
3	V836659527	1	Sleeve	
4	V500951200	8	Washer	
5	V529702290	8	Screw	
6	339583X1	1	Bear. 6206 2rs	
7	3792346M1	1	Shock Absorber	
8	3010239X1	8	Screw Metric	M10X45
9	3792345M2	1	Spring	
10	3792344M1	1	Shaft	

1-ZD06-005-D

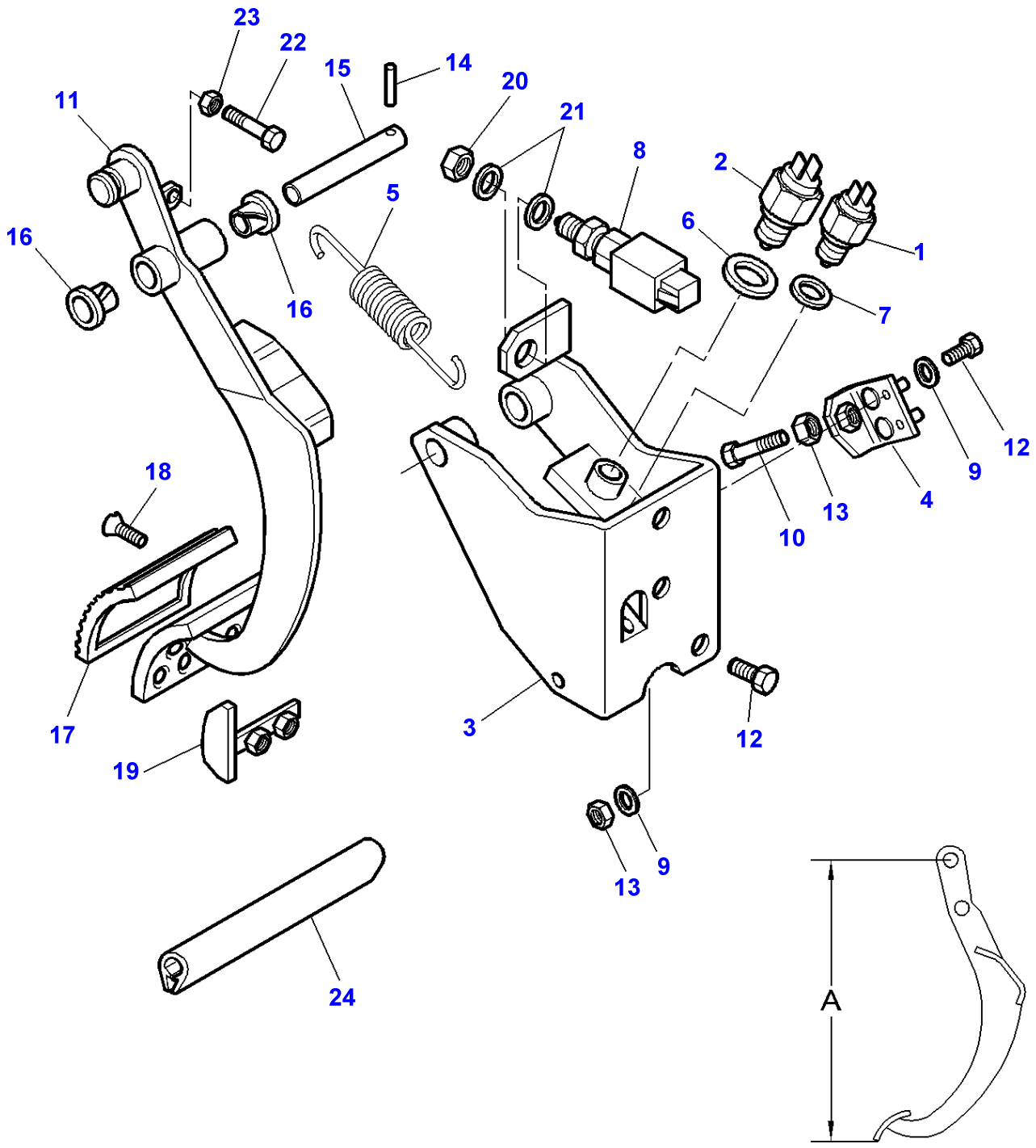

https://truckmanualshub.com/

Item	Part Number	Qty	Description	Comments
1	**3780580M1**	1	Switch,Indirect	
2	**3778375M2**	1	Switch,Indirect	Up to Serial or Engine Number J032030
	3783832M1	1	Switch,Indirect	From Serial or Engine Number J032031
3	3780941M3	1	Support	Up to Serial or Engine Number J032030
	3783836M1	1	Support	From Serial or Engine Number J032031
4	3780942M3	1	Stop	
5	3780978M2	1	Spring	
6	3783413M1	1	Washer	Diameter 16,5X22,5X5
				Up to Serial or Engine Number J032030
7	390973X1	1	Washer Metric	Diameter 15-28X2,5
8	**3777157M2**	1	Transmitter	
9	390972X1	6	Washer Metric	
10	3783659M1	1	Screw Special	M8X35
11	3782120M2	1	Pedal	A = 426,5MM
12	339123X1	4	Hex. Sock. Screw	M8X20
13	339169X1	3	Nut	
14	391290X1	1	Pin	Diameter 5X30
15	3780939M1	1	Clevis Pin	
16	3385604M1	2	Bearing	
17	1626321M2	1	Skate	
18	392404X1	2	Screw	M5X16
19	3714488M3	1	Stop	
20	339070X1	1	Nut	
21	339794X1	2	Washer Metric	Diameter 14,5X27X1,5
				Up to Serial or Engine Number J089008
22	3783659M1	1	Screw Special	M8X35
				From Serial or Engine Number J089009
23	339169X1	1	Nut	From Serial or Engine Number J089009
24	1684844M1	1	Seal	Length 80MM

FOOTNOTE [A] TRACTOR WITH CAB

https://truckmanualshub.com/

1-ZP02-002-B

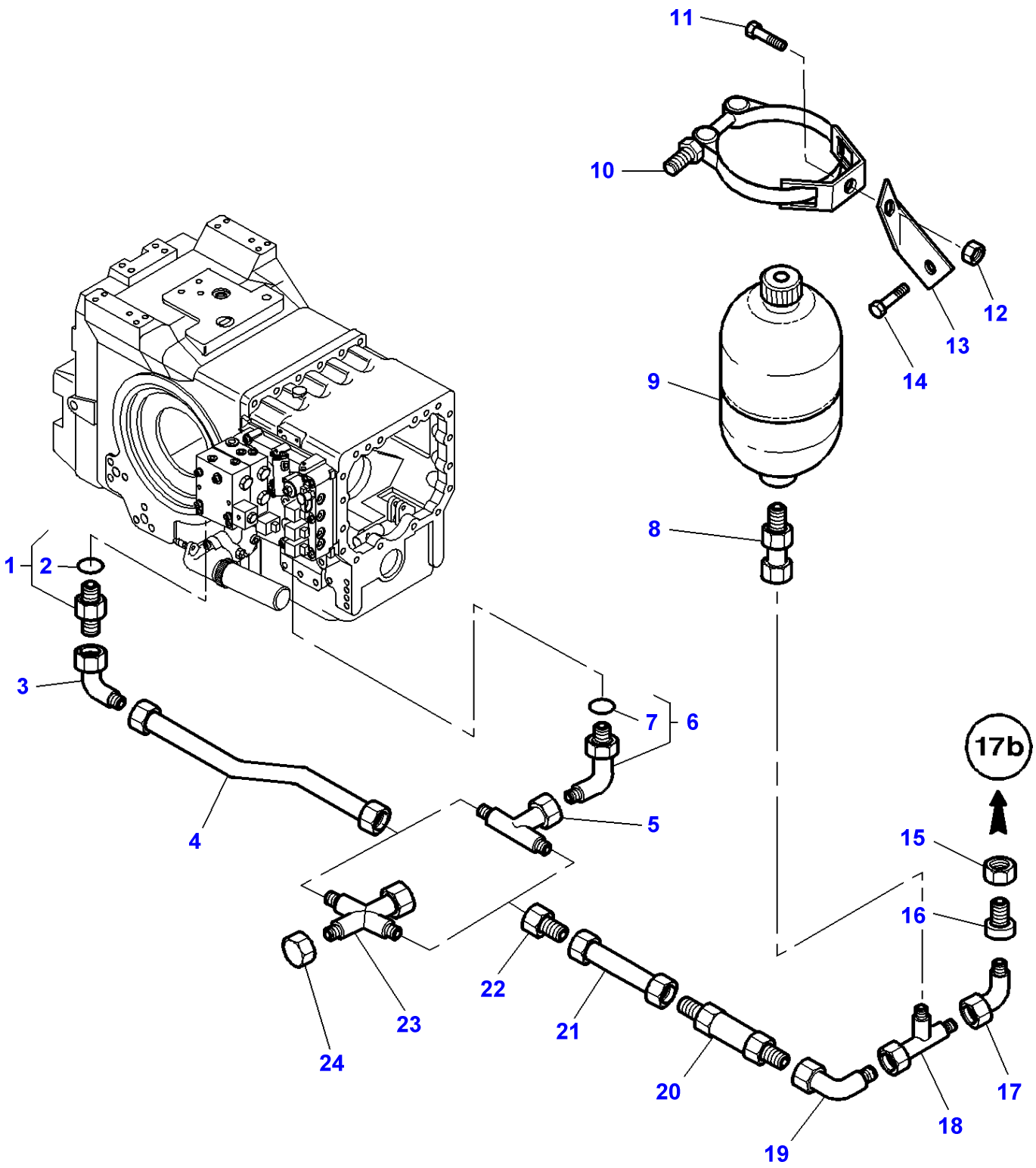

https://truckmanualshub.com/

Item	Part Number	Qty	Description	Comments
1	3019387X91	1	Union	
2	3019398X1	1	O Ring	(1)
3	367386X1	1	Elbow	
4	3716780M92	1	Tube	
5	367261X1	1	Union	Up to Serial or Engine Number H322040
6	3019416X91	1	Elbow	
7	3019397X1	1	O Ring	(6)
8	380018X1	1	Connector	M16X20
9	3619551M1	1	Accumulator	
10	3619807M1	1	Bridle	
11	339124X1	1	Hex. Sock. Screw	M8X16
12	339169X1	1	Nut	
13	3793064M1	1	Bracket	
14	393764X1	1	Screw	M16X20
15	195960M1	1	Nut	
16	356627X1	1	Adaptor	
17	365233X1	1	Elbow	
18	364735X1	1	Union	
19	365233X1	1	Elbow	
20	3790409M1	1	Non Return Valve	
21	3386900M92	1	Tube	
22	377651X1	1	Reducer	
23	380059X1	1	Union	From Serial or Engine Number H322041
24	22833X	1	Cap	From Serial or Engine Number H322041

1-ZP02-003-A

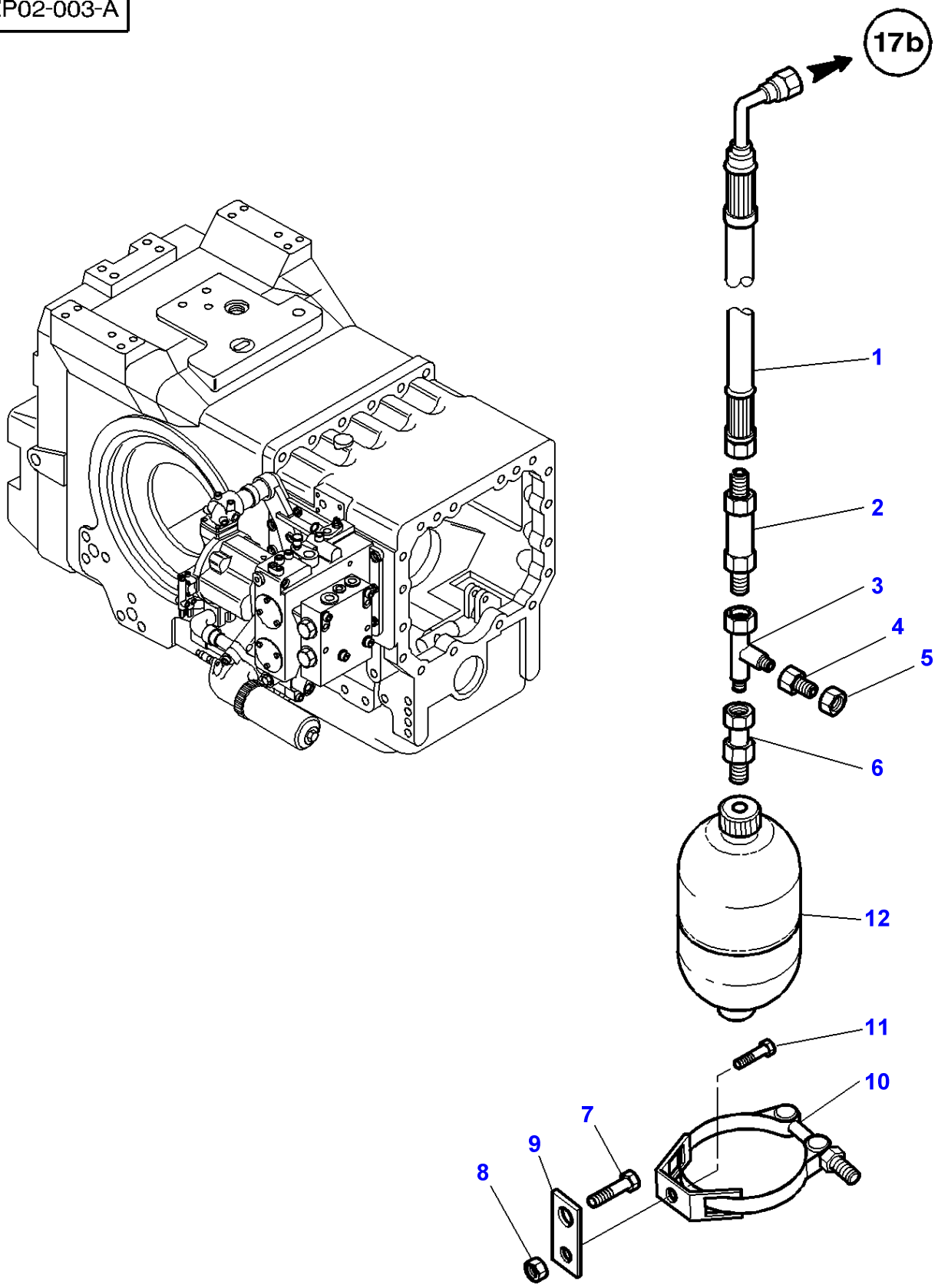

https://truckmanualshub.com/

Item	Part Number	Qty	Description	Comments
1	3793406M1	1	Hydr Hose	
2	3790409M1	1	Non Return Valve	
3	364735X1	1	Union	
4	356627X1	1	Adaptor	
5	195960M1	1	Nut	
6	380018X1	1	Connector	
7	393764X1	1	Screw	M16X20
8	339169X1	1	Nut	
9	3793408M1	1	Support	
10	3619807M1	1	Bridle	
11	339124X1	1	Hex. Sock. Screw	M8X16
12	3619551M1	1	Accumulator	

https://truckmanualshub.com/

Page Title	Page Number
Epicyclic Unit - Creeper Gear Full Powershift Transmission	025-0005
Transmission - Output Shaft - With Full Powershift - Without Creeper Gear	025-0010
Creeper Gearbox Control	025-0015
Control Armrest	025-0020
Controle Full Powershift	025-0025
Control Armrest - Without Electronic Lift With Full Powershift	025-0030
Controle Full Powershift - Without Electronic Lift	025-0035
Engine-Transmission Assembling	025-0040
Gear Box Full Power Shift	025-0045
Gear Box Full Power Shift	025-0050
Gear Box Full Power Shift	025-0055
Gear Box Full Power Shift - Pump	025-0060
Gear Box Full Power Shift - Input Shaft	025-0065
Gear Box Full Power Shift - 2 nd Gears	025-0070
Gear Box Full Power Shift - 3 rd Gears	025-0075
Gear Box Full Power Shift - 4 th Gears	025-0080
Gear Box Full Power Shift - 5 th Gears	025-0085
Gear Box Full Power Shift - 6 th Gears	025-0090
Gear Box Full Power Shift - 7 th Gears	025-0095
Full Powershift - Electrovalves - Cowl	025-0100

https://truckmanualshub.com/

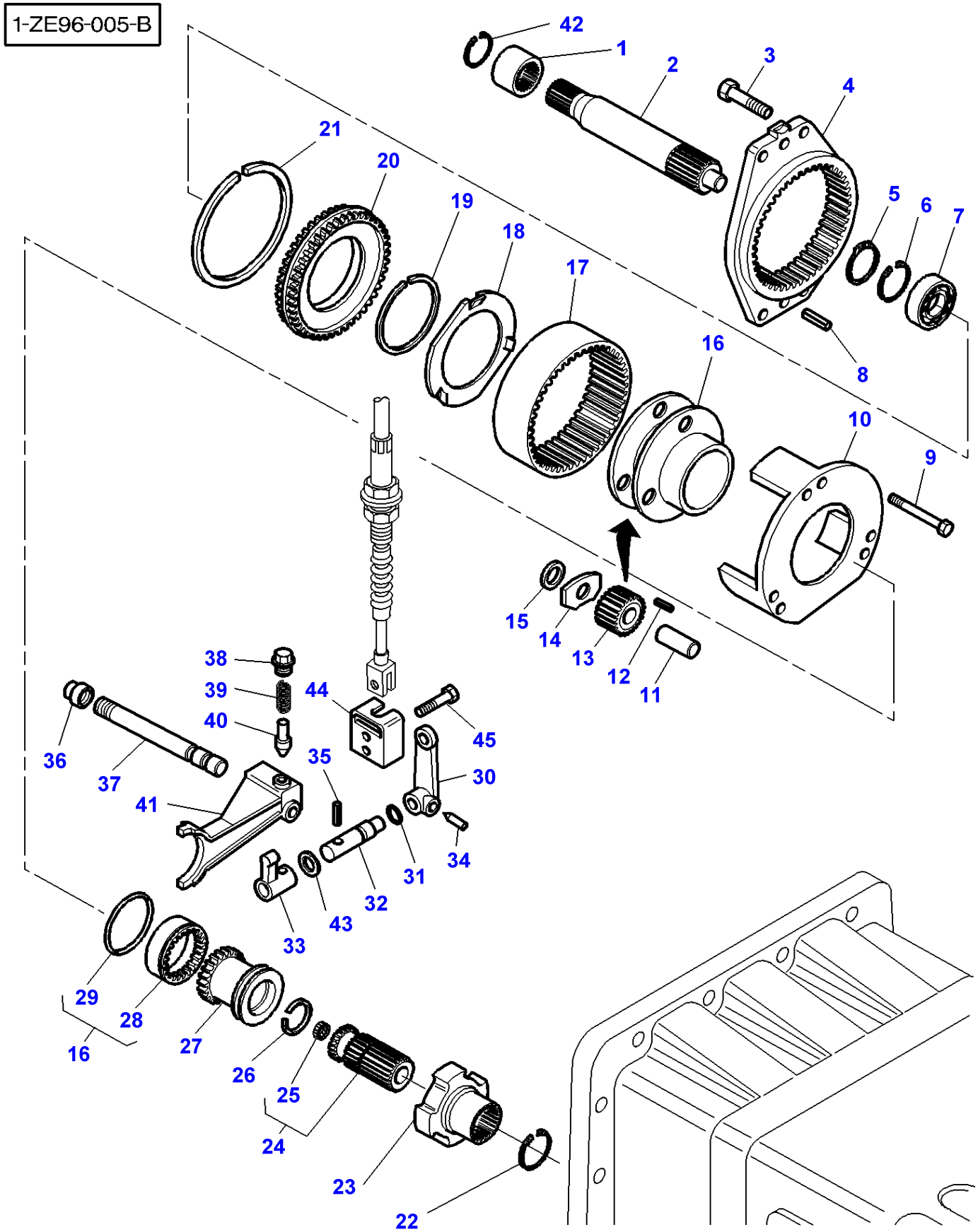

https://truckmanualshub.com/

Item	Part Number	Qty	Description	Comments
1	3716442M1	1	Sleeve	
2	3716838M2	1	Shaft	
3	3009507X1	4	Hex. Sock. Screw	M12X35MM
4	3716843M1	1	Support	
5	339605X1	1	Circlip	
6	339606X1	1	Circlip	
7	3010128X1	1	Bearing Assy	
8	3385839M2	2	Pin	
9	3015134X1	6	Screw	M6X65MM
10	3716862M3	1	Plate	
11	1866538M2	3	Shaft	
12	1866553M2	96	Roller	
13	1866552M1	3	Pinion	
14	1866543M1	3	Washer	
15	1866542M1	6	Thrust Washer	
16	1866558M93	1	Carrier	
17	3716821M2	1	Annular Gear	
18	1866545M2	2	Washer	
19	377424X1	1	Ring	
20	3716837M1	1	Support	
21	3010750X1	1	Segment	Diameter 180MM
22	1441247X1	1	Ring	
23	3791821M1	1	Sleeve	[A]
24	3716840M11	1	Shaft	
25	3010741X1	1	Insert	(24)
26	3010640X1	1	Ring	
27	3716845M1	1	Coupling	
28	1866544M2	1	Spacer	(16)
29	1866539M1	1	Ring	(16)
30	3386195M2	1	Rod Link	
31	851258M1	1	O Ring	
32	3716448M1	1	Clevis Pin	
33	3716449M1	1	Selector	
34	3382979M1	1	Screw Special	
35	3001293X1	1	Pin	
36	3716447M2	1	Nut	
37	3716847M2	1	Stem	
38	3382343M1	1	Plug	
39	3794220M1	1	Spring	
40	180418M2	1	Plunger	
41	3716846M3	1	Fork	
42	392376X1	1	Circlip	
43	3792320M1	X	Chock	Thickness 0,50MM
	3792321M1	X	Chock	Thickness 1MM
	3792322M1	X	Chock	Thickness 3MM
	3792361M1	X	Chock	Thickness 5MM
44	3791565M2	1	Thruster	
45	1444232X1	2	Screw	M8x16

FOOTNOTE [A] WITH PARKING BRAKE

https://truckmanualshub.com/

1-ZE99-004-A

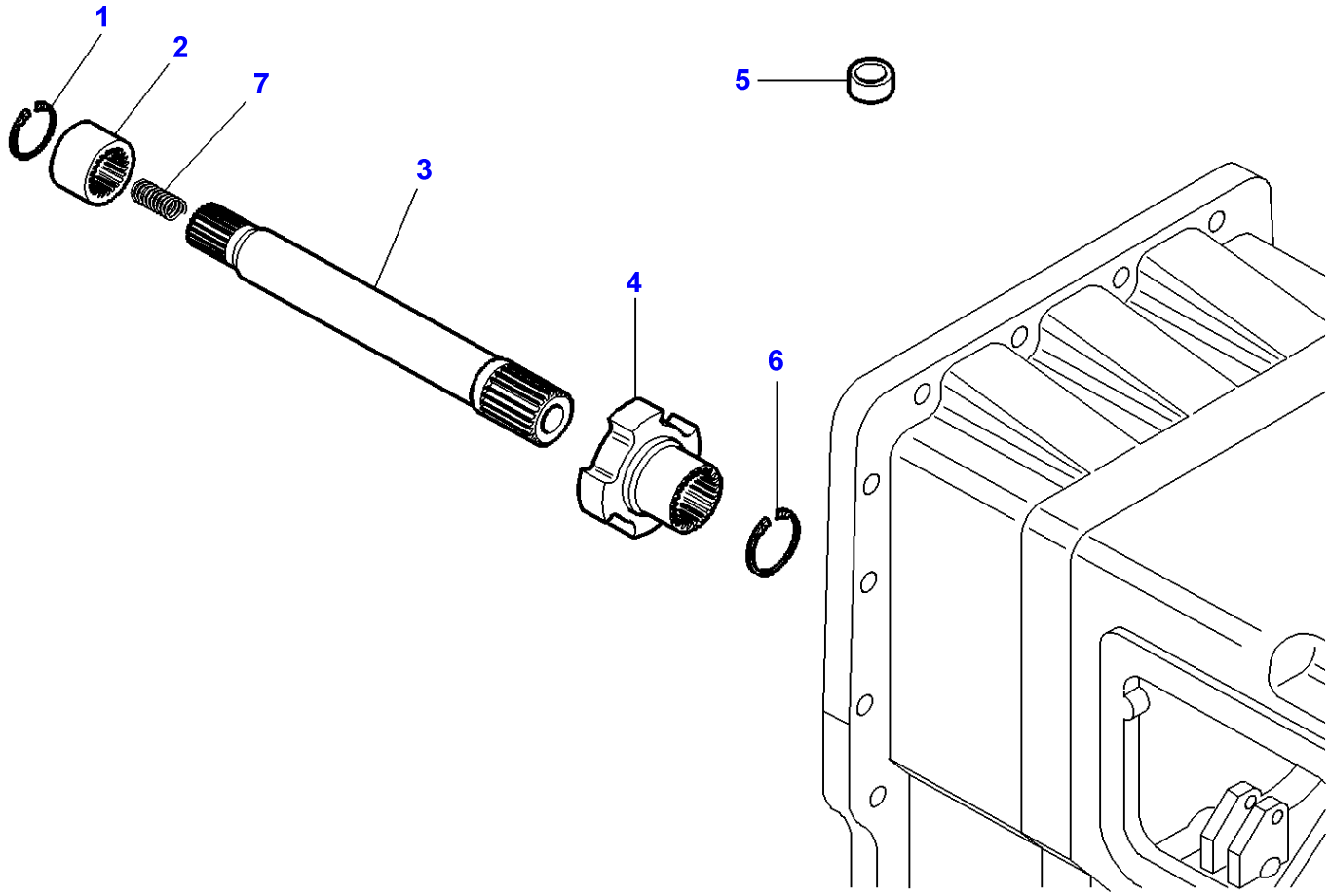

https://truckmanualshub.com/

Item	Part Number	Qty	Description	Comments
1	392376X1	1	Circlip	
2	3716442M1	1	Sleeve	
3	3716459M3	1	Shaft	
4	3791821M1	1	Sleeve	[A]
5	3006020X1	1	Plug	Diameter 20MM
6	1441247X1	1	Ring	
7	3715534M1	1	Spring	

FOOTNOTE [A] WITH PARKING BRAKE

https://truckmanualshub.com/

1-ZF10-004-A

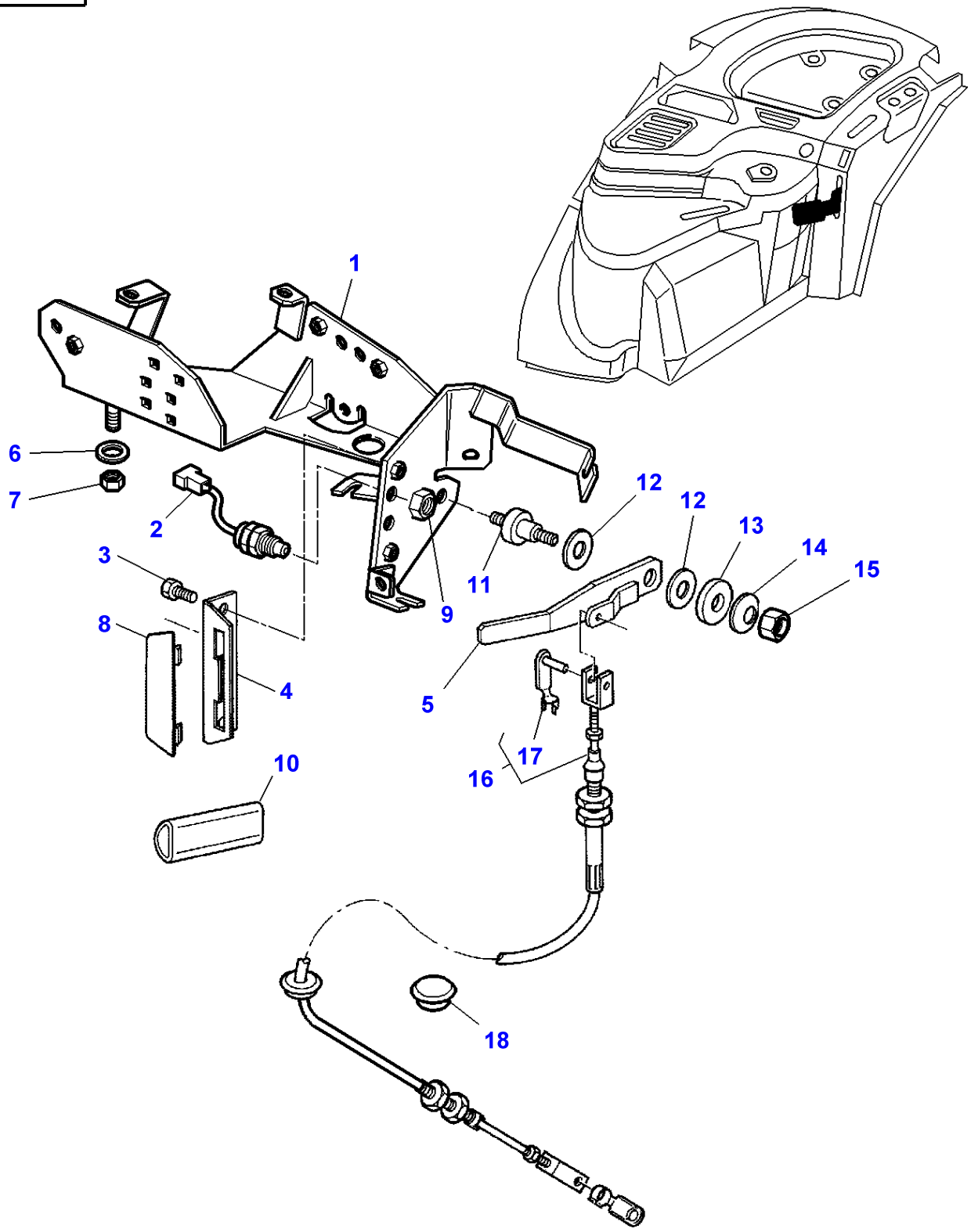

https://truckmanualshub.com/

Item	Part Number	Qty	Description	Comments
1	3778480M91	1	Support	
2	**3780581M1**	1	Switch,Indirect	
3	339228X1	2	Screw Metric	M8X12
4	3712275M1	1	Grille	
5	3712281M3	1	Lever	
6	385361X1	4	Washer Metric	
7	1441461X1	4	Locknut	
8	3712984M1	X	Plate	
9	3386198M1	1	Nut Special	
10	3712976M2	1	Handle	
11	3712277M1	1	Clevis Pin	
12	3386166M1	2	Washer	
13	1442174X1	1	Washer	
14	3386192M1	1	Washer	
15	1441461X1	1	Locknut	
16	3712989M2	1	Cable	
17	3600190M1	1	Clevis Pin	(16) Length 28MM
	3600191M1	1	Clevis Pin	(16) Length 40MM
18	3713587M1	1	Plug	Diameter 22MM

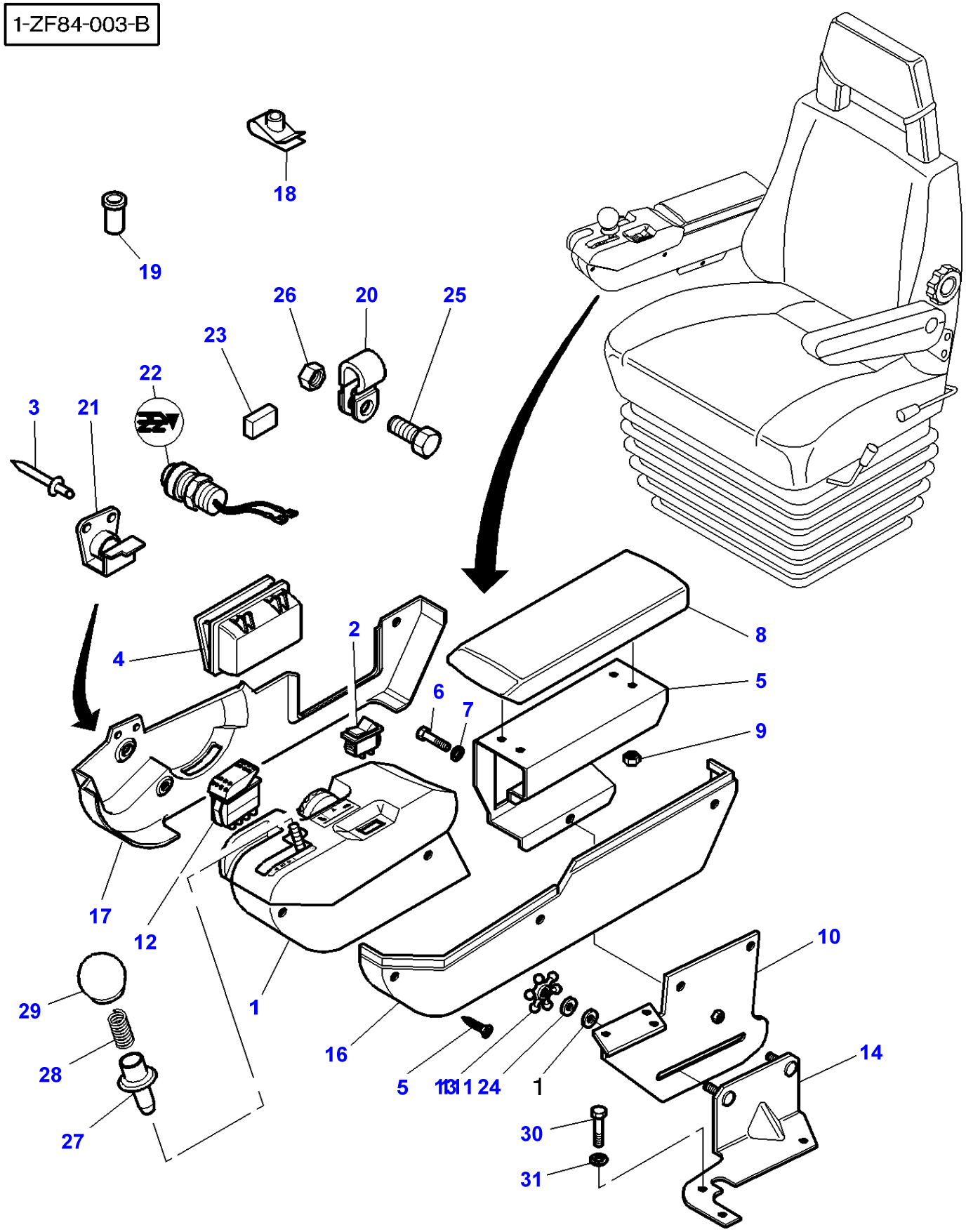
1-ZF84-003-B
18
19
26
20
25
23
22
3
21
4
2
8
5
6
7
9
17
12
10
29
1
16
28
5
13
11
24
1
14
27
30
31

https://truckmanualshub.com/

Item	Part Number	Qty	Description	Comments
1	3782014M93	1	Plate Control	See Page - Reference Number 025-0025
2	**3780077M2**	1	Switch,Indirect	
3	391349X1	2	Rivet	Diameter 3,2 X 7,5MM
				Up to Serial or Engine Number J102023
4	3712912M1	1	Ashtray	
5	3778674M2	1	Support	
6	391074X1	3	Hex. Sock. Screw	M6x12
7	390971X1	3	Washer	
8	3778521M1	1	Armrest	
9	1441500X1	4	Locknut	Diameter M6
10	3778518M2	1	Plate	Up to Serial or Engine Number J025011
	3783660M1	1	Plate	From Serial or Engine Number J025012
11	3778519M1	2	Washer	
12	**3782020M2**	1	Switch,Indirect	
13	3778520M1	2	Button	
14	3778517M1	1	Angle	Up to Serial or Engine Number
15	3010578X1	7	Screw	
16	3778528M2	1	Flange	Left Hand
17	3782019M2	1	Flange	Right Hand
				Up to Serial or Engine Number J102023
	3784095M1	1	Flange	Right Hand
				From Serial or Engine Number J102024
18	3715142M1	2	Nut	Diameter M5
19	3778672M1	3	Nut	Diameter M5
20	3779547M1	1	Clamp	Diameter 10-12 MM
21	3782022M3	1	Support	Up to Serial or Engine Number J102023
22	**3783772M1**	1	Switch,Indirect	From Serial or Engine Number J102024
23	3782023M1	1	Chock	Up to Serial or Engine Number J102023
24	3619096M1	2	Washer	
25	3009494X1	1	Screw Metric	M10X35
26	3009693X1	1	Nut Metric	
27	3782951M2	1	Latch	
28	3783315M1	1	Spring	
29	3782952M1	1	Knob	
30	339228X1	3	Screw Metric	M8X12
31	390972X1	3	Washer Metric	

https://truckmanualshub.com/

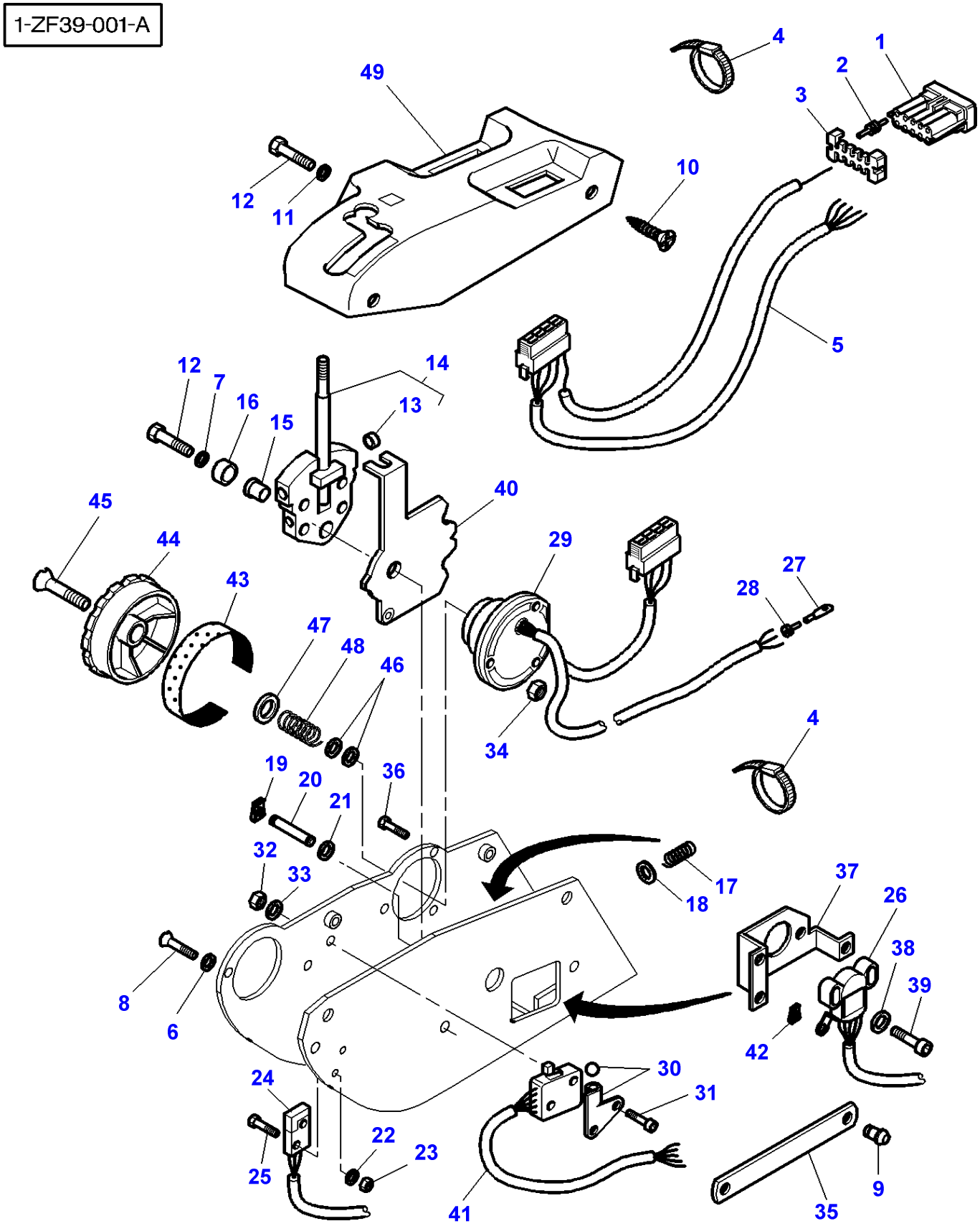

https://truckmanualshub.com/

Item	Part Number	Qty	Description	Comments
1	3902942M1	1	Connectors	GREY
	3902943M1	1	Connectors	BLACK
2	3902940M1	2	Plastic Plug	
3	3902941M1	2	Connectors	
4	3902829M1	X	Tie	
5	3903445M91	1	Cable	
6	339102X1	2	Washer	
7	1441206X1	1	Lock Washer	
8	3008179X1	2	Screw Metric	M4X10
9	3903447M1	1	Clevis Pin	
10	3004566X1	2	Screw	M6x16
11	3902863M1	2	Washer	M6
12	339560X1	3	Hex. Sock. Screw	M6x16
13	3902863M1	1	Washer	(14)
14	3903449M91	1	Lever	
15	3902838M1	1	Bearing	
16	3902850M1	1	Spacer	
17	3902859M1	1	Spring	
18	3902863M1	1	Washer	
19	3902944M1	2	Clip	Diameter 6 MM
20	3902945M2	1	Pin	
21	3902947M1	1	Roller	
22	3902866M1	2	Washer	M3
23	3010599X1	2	Nut Metric	M3
24	**3902860M1**	1	Switch,Indirect	
25	1442829X1	2	Screw	M3x16
26	**3902946M91**	1	Potentiometer	
27	3902843M1	4	Connectors	
28	3902842M1	4	Grommet	RED
29	**3903312M91**	1	Potentiometer	
30	3902862M1	1	Plate	
31	3903270M1	2	Screw	M3x16
32	3010599X1	2	Nut Metric	M3
33	3902866M1	2	Washer	M3
34	3019139X1	3	Nut	M4
35	3903448M1	1	Cam	
36	3009531X1	3	Screw Metric	M4x12
37	3903446M91	1	Support	
38	3903451M1	2	Washer	
39	3009534X1	2	Screw Metric	M4X25
40	3903450M91	1	Lever	
41	3903199M91	1	Harness	
42	3902955M1	2	Clip	Diameter 5 MM
43	3902826M1	1	Decal	
44	3902836M1	1	Button	
45	3009674X1	1	Screw	M6x35
46	3902833M1	1	Seal	
47	3902830M1	1	Washer	
48	3902832M1	1	Spring	
49	3903476M1	1	Cover	

https://truckmanualshub.com/

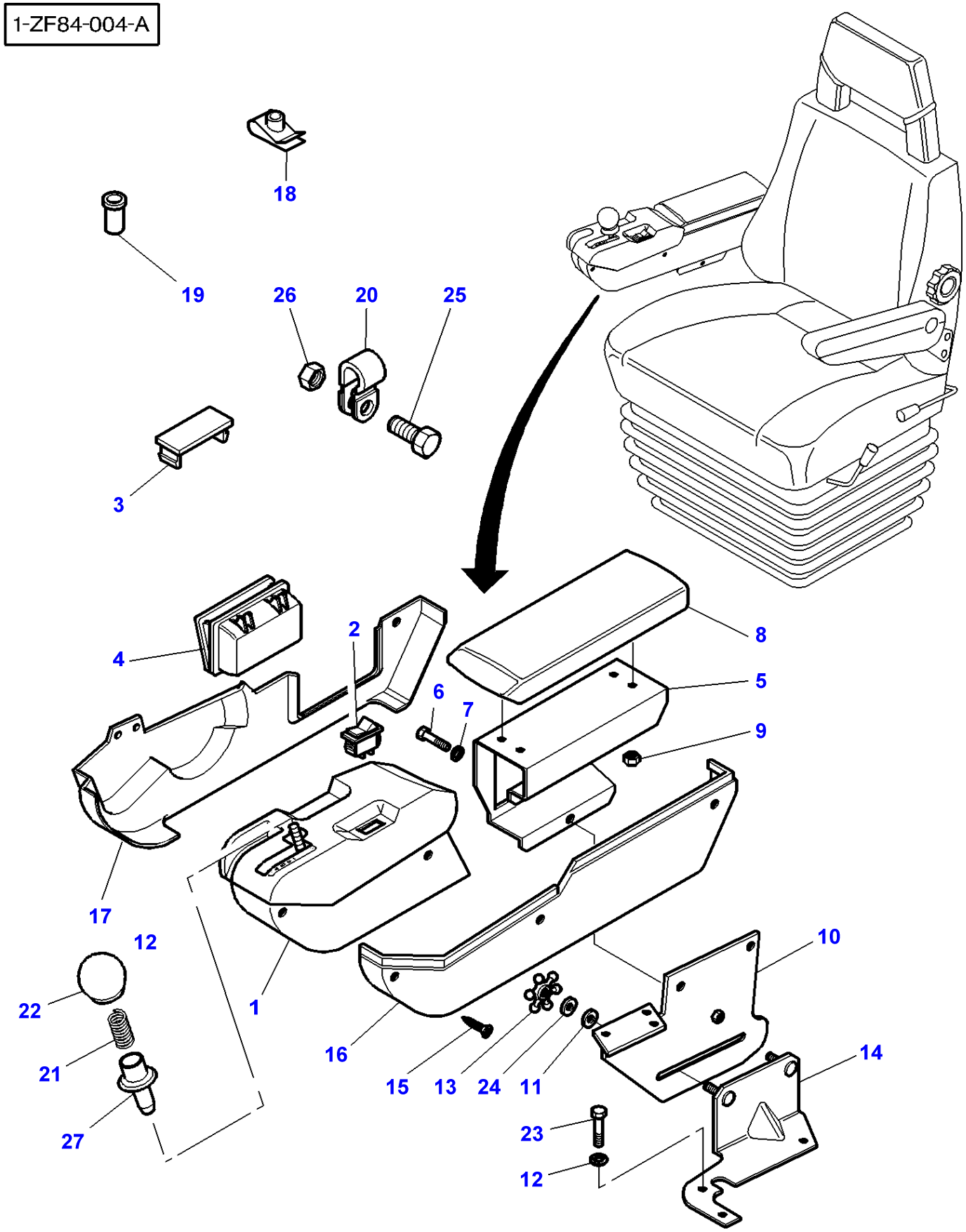

https://truckmanualshub.com/

Item	Part Number	Qty	Description	Comments
1	3782018M92	1	Plate Control	See Page - Reference Number 025-0035
2	3780077M2	1	Switch,Indirect	
3	3713151M1	2	Tap	
4	3712912M1	1	Ashtray	
5	3778674M2	1	Support	
6	391074X1	3	Hex. Sock. Screw	M6x12
7	390971X1	3	Washer	
8	3778521M1	1	Armrest	
9	1441500X1	4	Locknut	M6
10	3778518M2	1	Plate	Up to Serial or Engine Number J025011
	3783660M1	1	Plate	From Serial or Engine Number J025012
11	3778519M1	2	Washer	
12	390972X1	3	Washer Metric	
13	3778520M1	2	Button	
14	3778517M1	1	Angle	Up to Serial or Engine Number
15	3010578X1	7	Screw	
16	3778528M2	1	Flange	Left Hand
17	3783015M1	1	Flange	Right Hand
18	3715142M1	2	Nut	M5
19	3778672M1	3	Nut	M5
20	3779547M1	1	Clamp	Diameter 10-12 MM
21	3783315M1	1	Spring	
22	3782952M1	1	Knob	
23	339228X1	3	Screw Metric	M8X12
24	3619096M1	2	Washer	
25	3009494X1	1	Screw Metric	M10X35
26	3009693X1	1	Nut Metric	
27	3782951M2	1	Latch	

1-ZF39-002-A

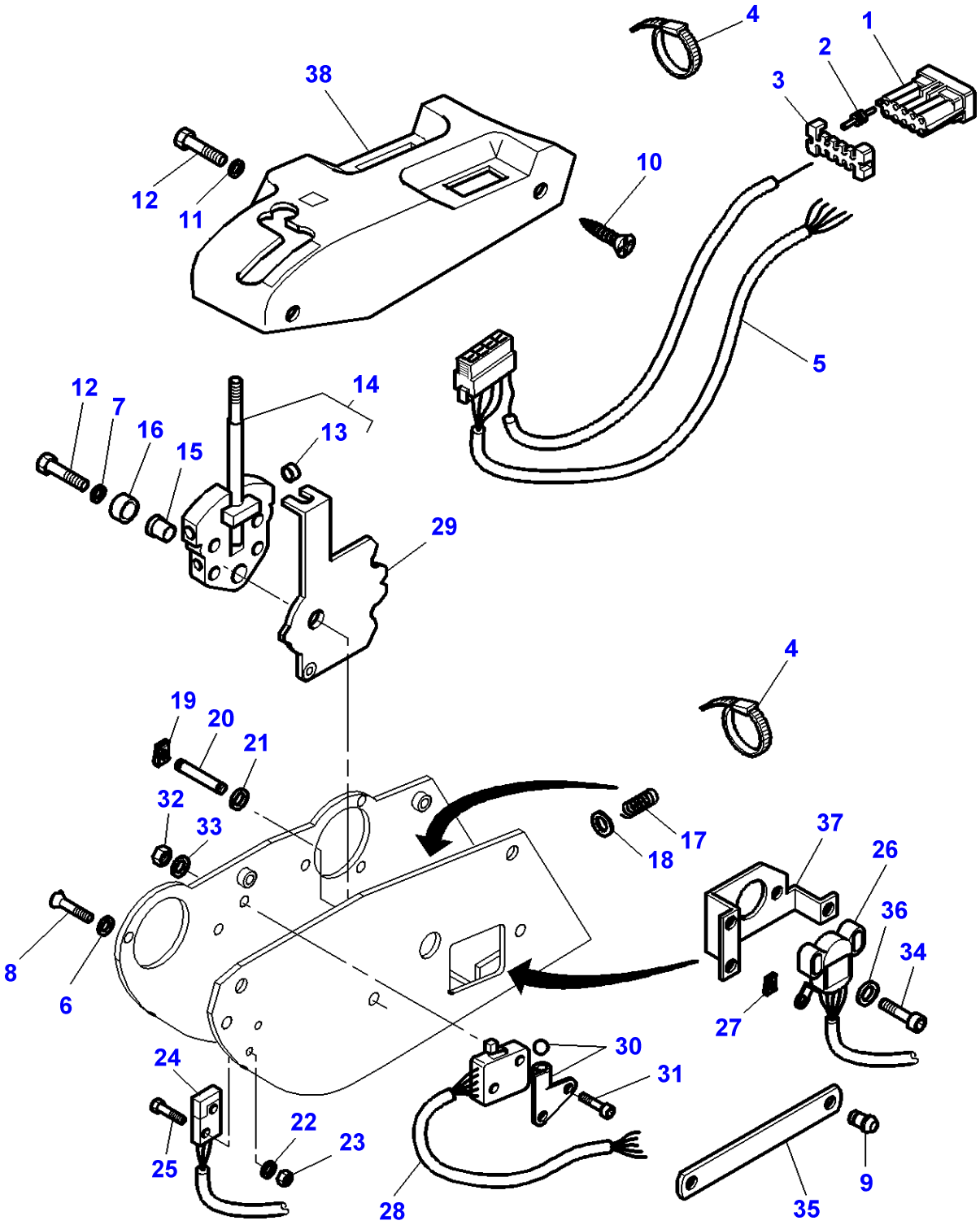
4
1
2
3
38
10
12
11
5
12
7
16
15
14
13
29
4
19
20
21
32
33
17
18
37
26
36
34
8
6
27
30
31
24
22
23
25
28
35
9

https://truckmanualshub.com/

Item	Part Number	Qty	Description	Comments
1	3902942M1	1	Connectors	GREY
	3902943M1	1	Connectors	BLACK
2	3902940M1	X	Plastic Plug	
3	3902941M1	2	Connectors	
4	3902829M1	X	Tie	
5	3903445M91	1	Cable	
6	339102X1	2	Washer	
7	1441206X1	1	Lock Washer	
8	3008179X1	2	Screw Metric	M4X10
9	3903447M1	1	Clevis Pin	
10	3004566X1	2	Screw	M6x16
11	3902863M1	2	Washer	M6
12	339560X1	3	Hex. Sock. Screw	M6x16
13	3902863M1	1	Washer	(14)
14	3903449M91	1	Lever	
15	3902838M1	1	Bearing	
16	3902850M1	1	Spacer	
17	3902859M1	1	Spring	
18	3902863M1	1	Washer	
19	3902944M1	2	Clip	Diameter 6 MM
20	3902945M2	1	Pin	
21	3902947M1	1	Roller	
22	3902866M1	2	Washer	M3
23	3010599X1	2	Nut Metric	M3
24	3902860M1	1	Switch,Indirect	
25	1442829X1	2	Screw	M3x16
26	3902946M91	1	Potentiometer	
27	3902955M1	2	Clip	Diameter 5 MM
28	3903199M91	1	Harness	
29	3903450M91	1	Lever	
30	3902862M1	1	Plate	
31	3903270M1	2	Screw	M3x16
32	3010599X1	2	Nut Metric	M3
33	3902866M1	2	Washer	M3
34	3009534X1	2	Screw Metric	M4X25
35	3903448M1	1	Cam	
36	3903451M1	2	Washer	
37	3903446M91	1	Support	
38	3903475M1	1	Cover	

1-ZD12-004-A

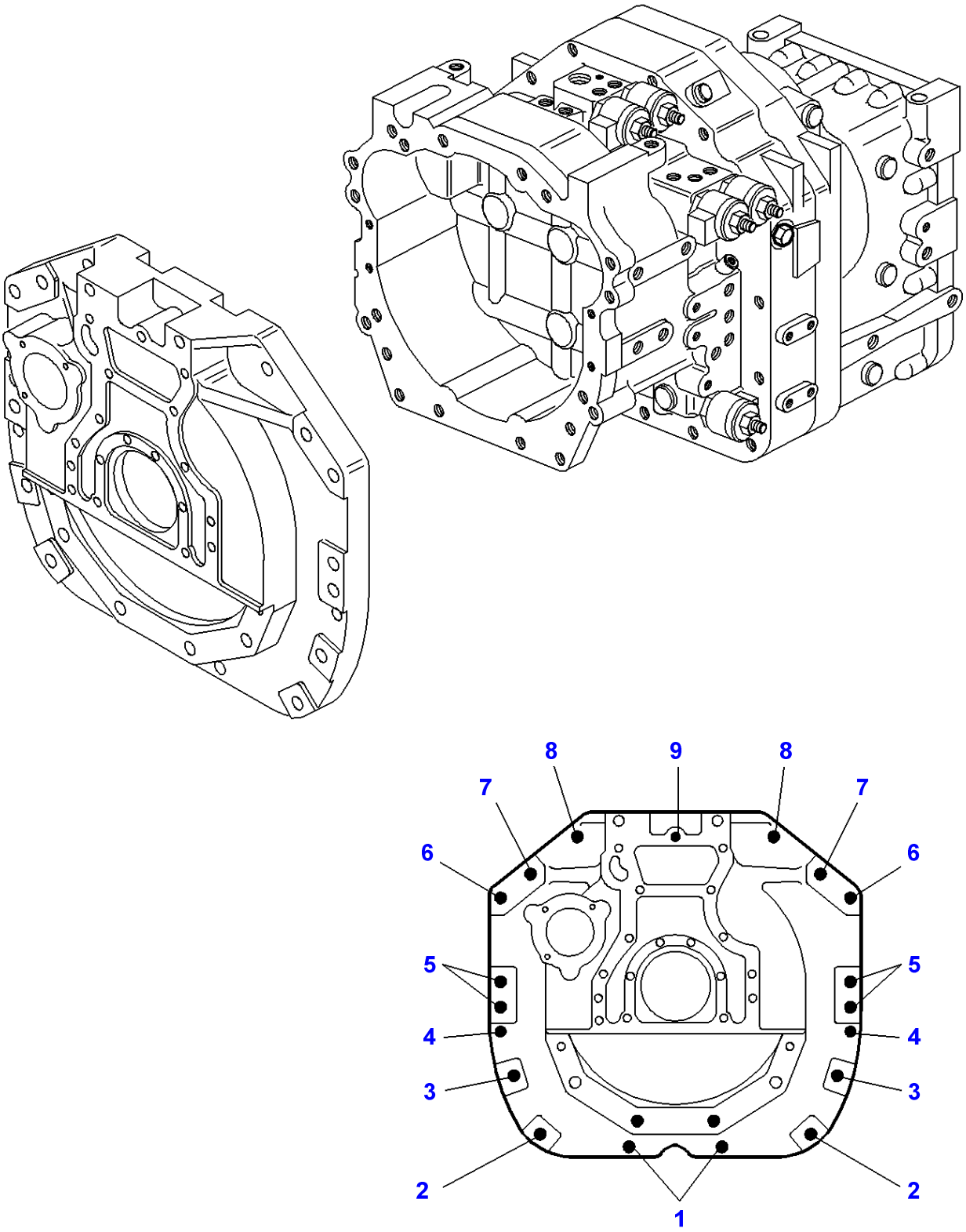

https://truckmanualshub.com/

Item	Part Number	Qty	Description	Comments
1	3010575X1	2	Screw	M20X130
	385365X1	2	Washer	
	3009746X1	2	Nut	M20
2	3010557X1	2	Screw Metric	M20X100
	385365X1	2	Washer	
	3009746X1	2	Nut	M20
3	3010575X1	2	Screw	M20X130
	385365X1	2	Washer	
	3009746X1	2	Nut	M20
4	3583428M1	2	Centraliser	
5	3010850X1	4	Screw	M20X170
	385365X1	4	Washer	
	3009746X1	4	Nut	M20
6	3010563X1	2	Screw	M20X90
	385365X1	2	Washer	
	3009746X1	2	Nut	M20
7	3010556X1	2	Screw Metric	M20X70
8	3010563X1	2	Screw	M20X90
	385365X1	2	Washer	
	3009746X1	2	Nut	M20
9	3010563X1	1	Screw	M20X90

1-ZF60-004-B

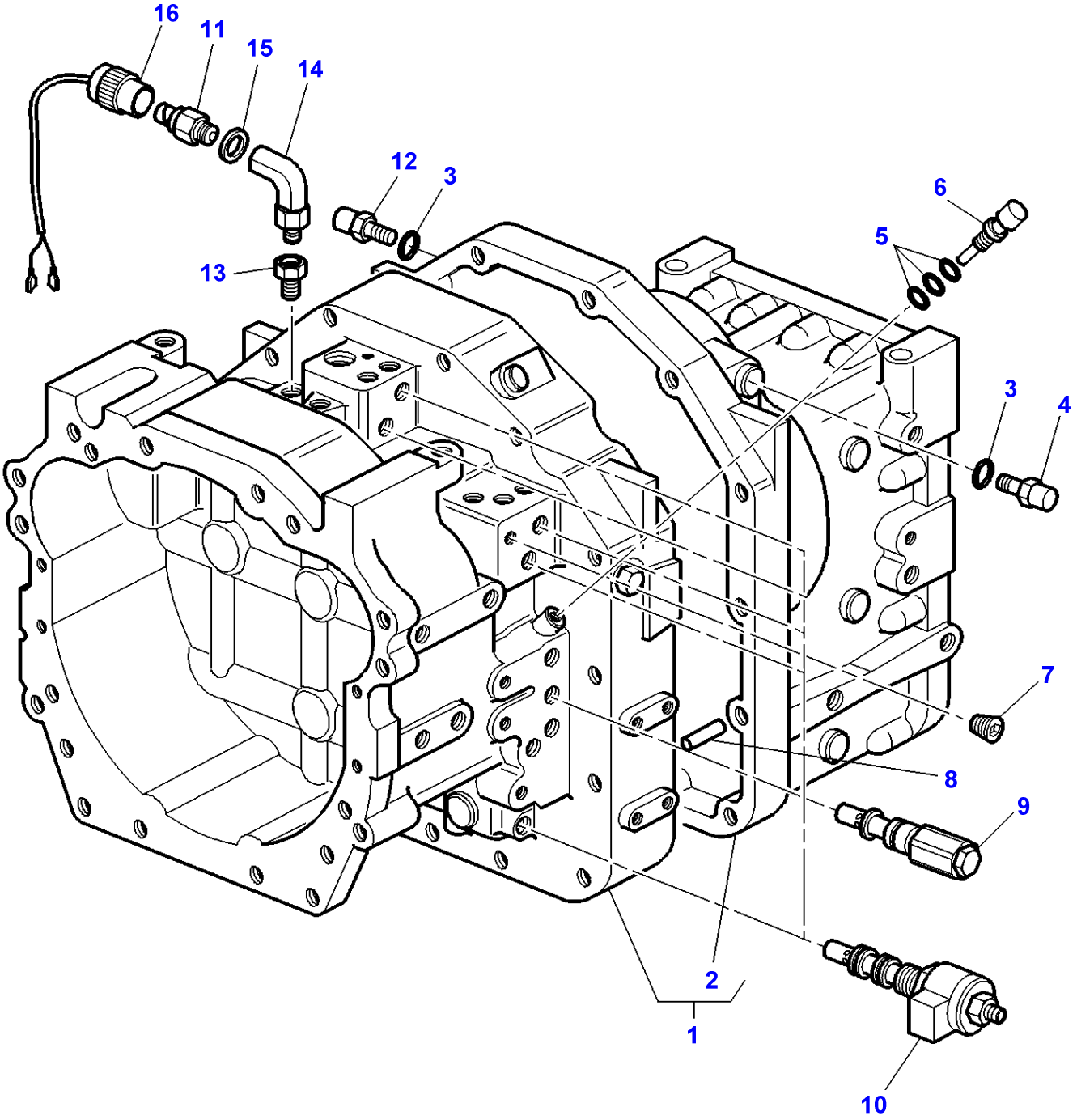

https://truckmanualshub.com/

Item	Part Number	Qty	Description	Comments
1	3716349M91	1	Gearbox	
2	3779362M1	1	Housing	(1)
3	3779222M1	2	O Ring	
4	**3779280M1**	1	Eng.Speed Sensor	[B]
5	3779235M1	1	Kit, O Rings	
6	**3779237M1**	1	Transmitter	[A]
7	3779234M1	1	Plug	Diameter 9/16"
8	3779225M1	2	Locator	
9	**3779244M91**	1	Relief Valve	260 PSI
10	**3779284M91**	5	Solenoid	
11	**3381387M4**	1	Low Pr.Oil Trmtr	
12	**3779280M1**	1	Eng.Speed Sensor	[C]

FOOTNOTE [A] HEAT
FOOTNOTE [B] MOTOR SPEED
FOOTNOTE [C] TRAVELLING SPEED

https://truckmanualshub.com/

1-ZF60-002-A

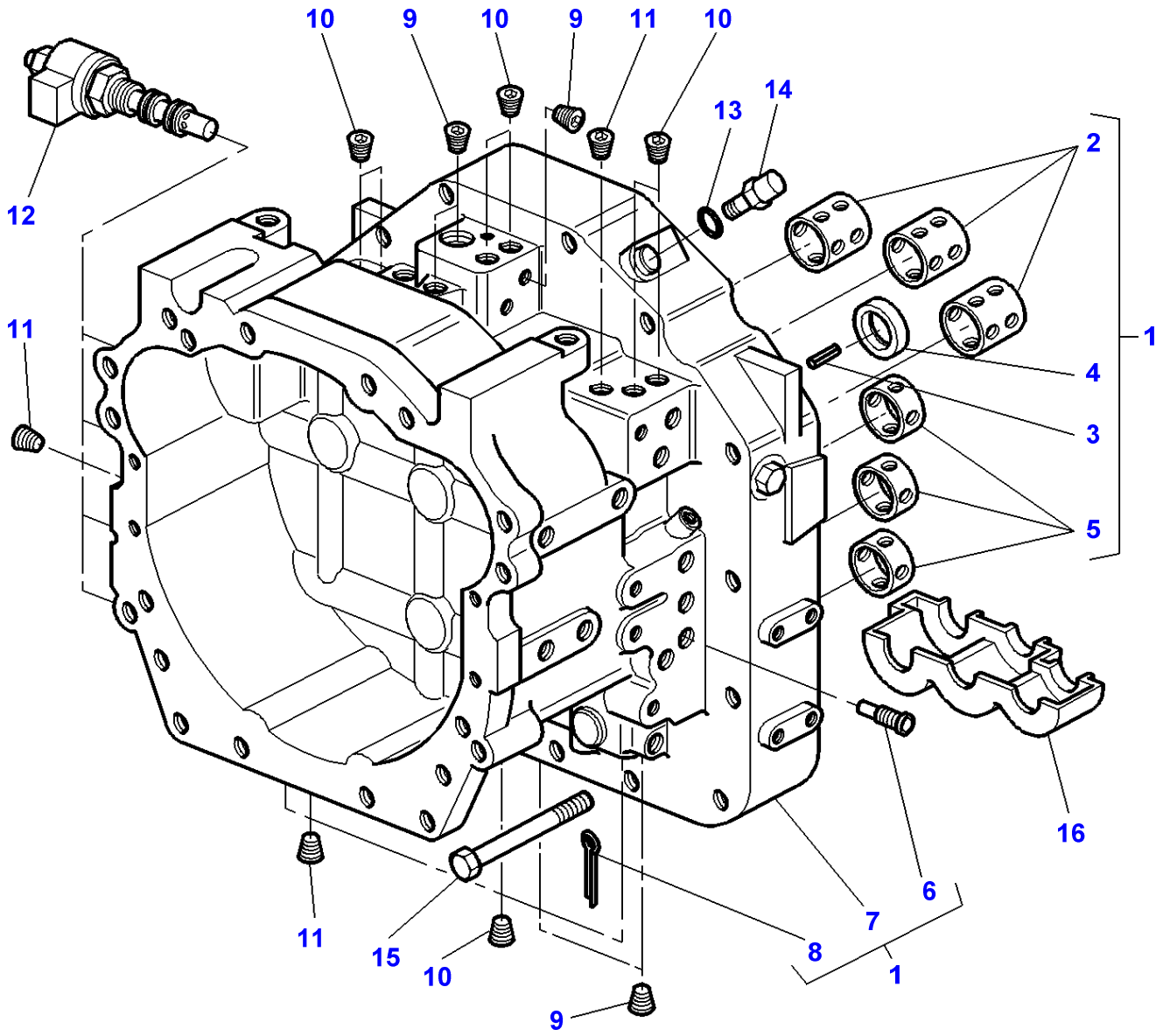

https://truckmanualshub.com/

Item	Part Number	Qty	Description	Comments
1	3779367M91	1	Housing	
2	3779206M1	3	Bush	(1)
3	3779215M1	1	Plug	(1)
4	3779208M1	1	Gasket	(1)
5	3779207M1	3	Bush	(1)
6	**3779283M91**	1	Pressure Valve	(1)
7	3779365M1	1	Housing	(1)
8	3779224M1	1	Pin	(1)
9	3779308M1	5	Plug	
10	3779242M1	11	Plug	Diameter 7/16"
11	3779234M1	6	Plug	Diameter 9/16"
12	**3779284M91**	4	Solenoid	
13	3779222M1	1	O Ring	
14	**3779280M1**	1	Eng.Speed Sensor	[A]
15	3779318M1	18	Screw	M16x200
16	3779359M1	1	Deflector	

FOOTNOTE [A] INTERMEDIARY SPEED

1-ZF60-005-A

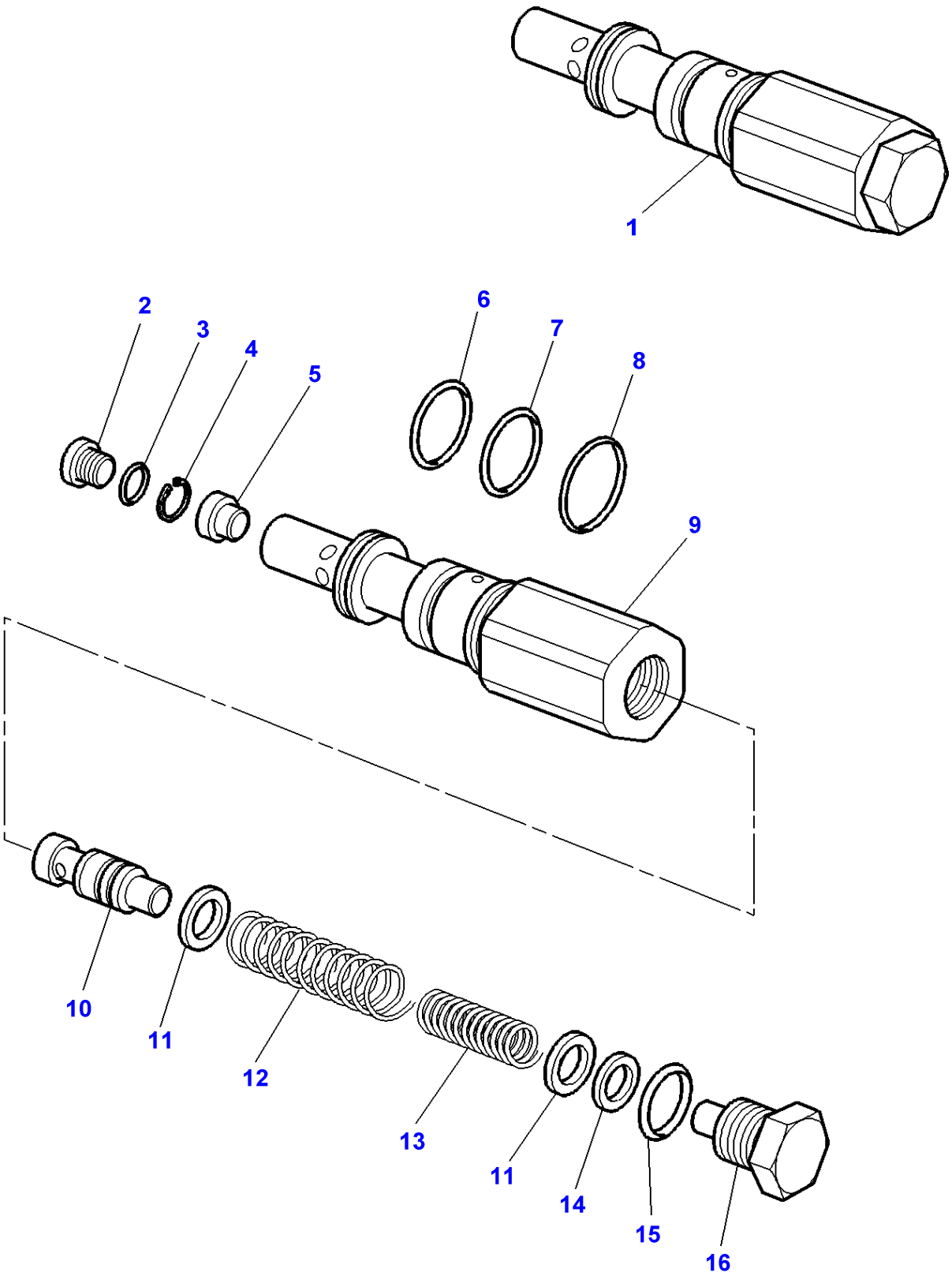

https://truckmanualshub.com/

Item	Part Number	Qty	Description	Comments
1	**3779244M91**	1	Relief Valve	260 PSI
2	3779308M1	1	Plug	(1)
3	3779307M1	1	O Ring	(1)
4	3779306M1	1	Circlip	(1)
5	3779305M1	1	Cover	(1)
6	3779315M1	1	O Ring	(1)
7	3779316M1	1	O Ring	(1)
8	3779317M1	1	O Ring	(1)
9	3779303M1	1	Cartridge	(1)
10	3779304M1	1	Distributor	(1)
11	3779309M1	2	Washer	(1)
12	3779311M1	1	Spring	(1)
13	3779310M1	1	Spring	(1)
14	3779312M1	3	Chock	(1)
15	3779313M1	1	O Ring	(1)
16	3779314M1	1	Plug	(1)

https://truckmanualshub.com/

1-ZF68-001-A

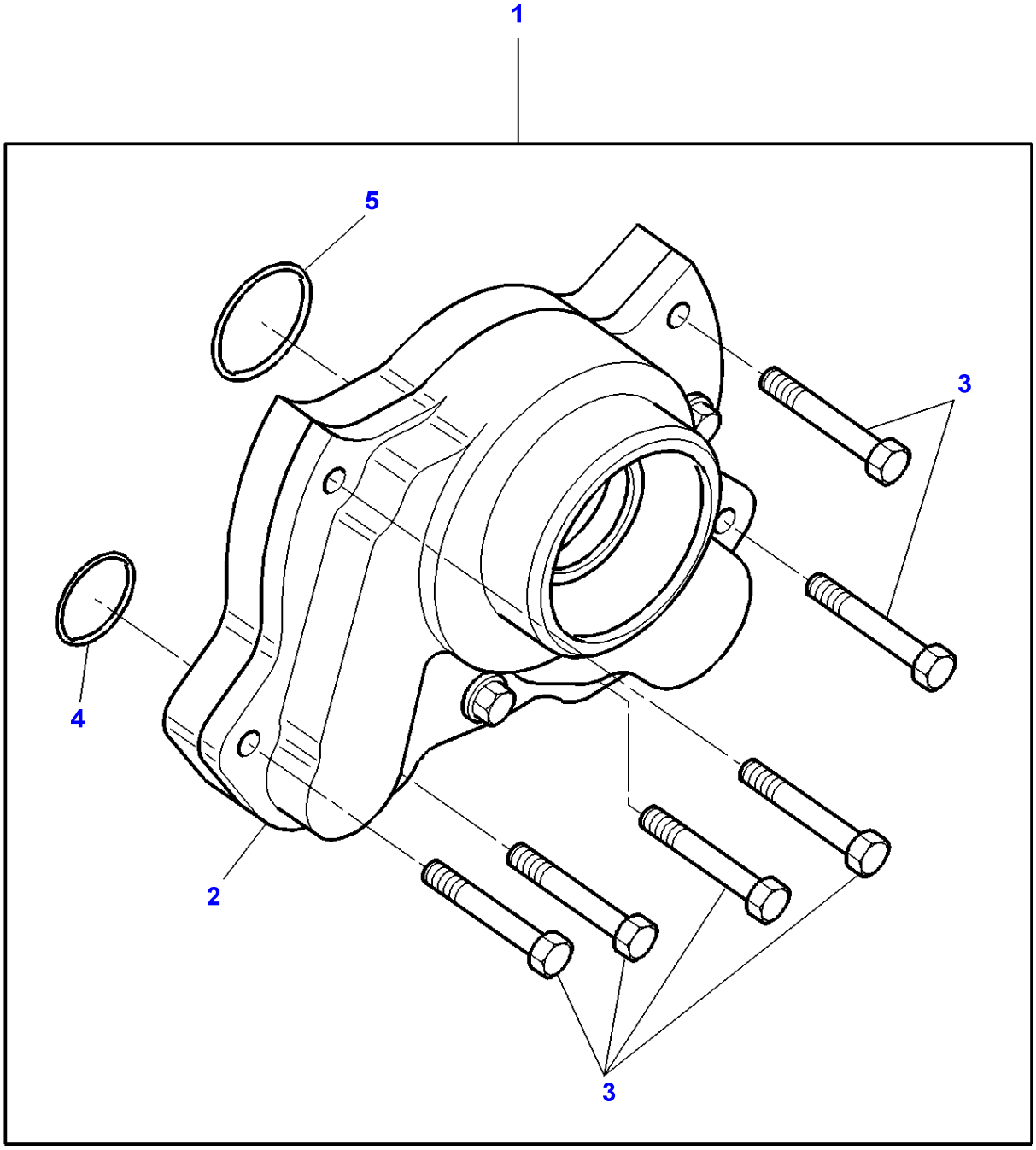

https://truckmanualshub.com/

Item	Part Number	Qty	Description	Comments
1	3779272M91	1	Pump	
2	3779273M1	1	Pump	(1)
3	3779217M1	6	Screw	(1)
4	3779227M1	1	O Ring	(1)
5	3779228M1	1	O Ring	(1)

https://truckmanualshub.com/

1-ZF61-002-A

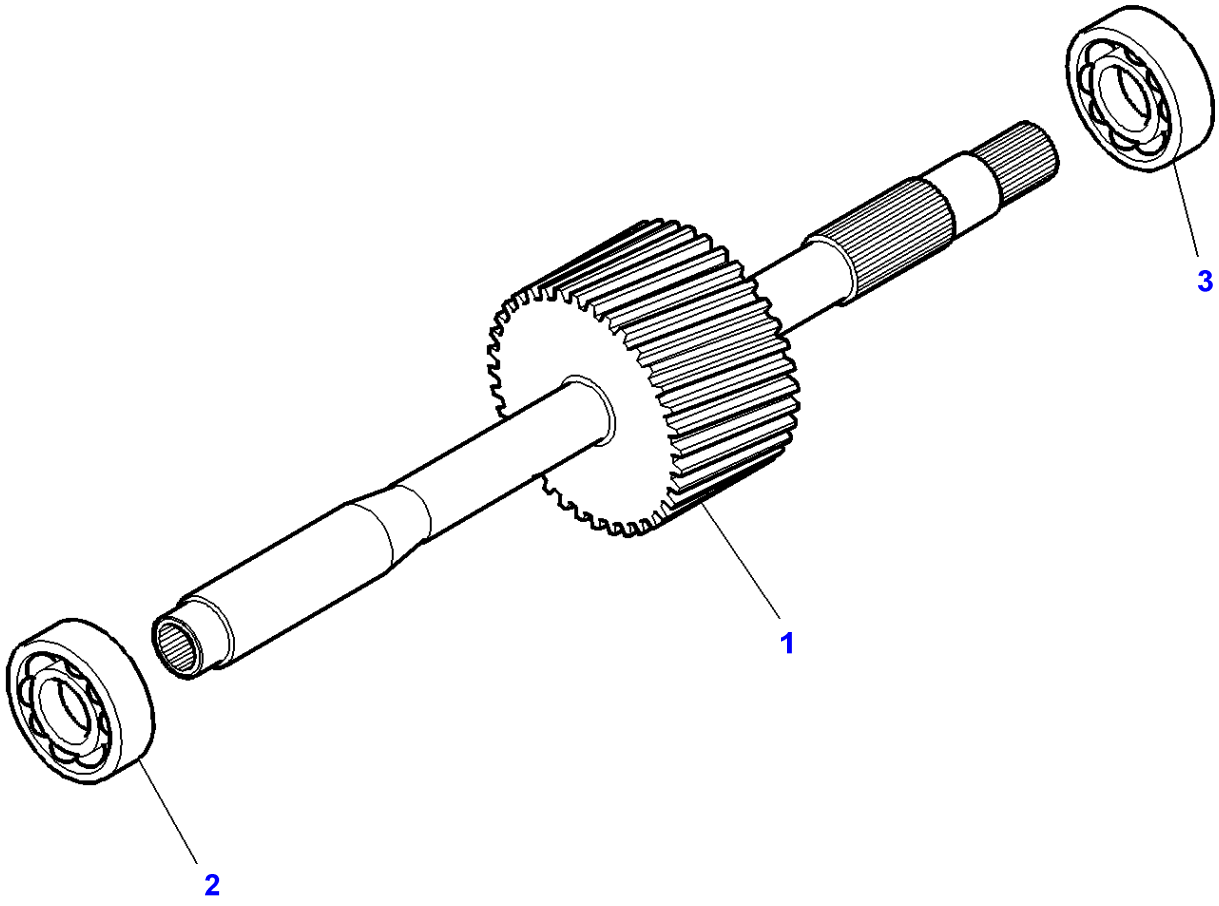

https://truckmanualshub.com/

Item	Part Number	Qty	Description
1	3779363M1	1	Shaft
2	3779259M1	1	Bearing Assy
3	3779336M1	1	Bearing Assy

https://truckmanualshub.com/

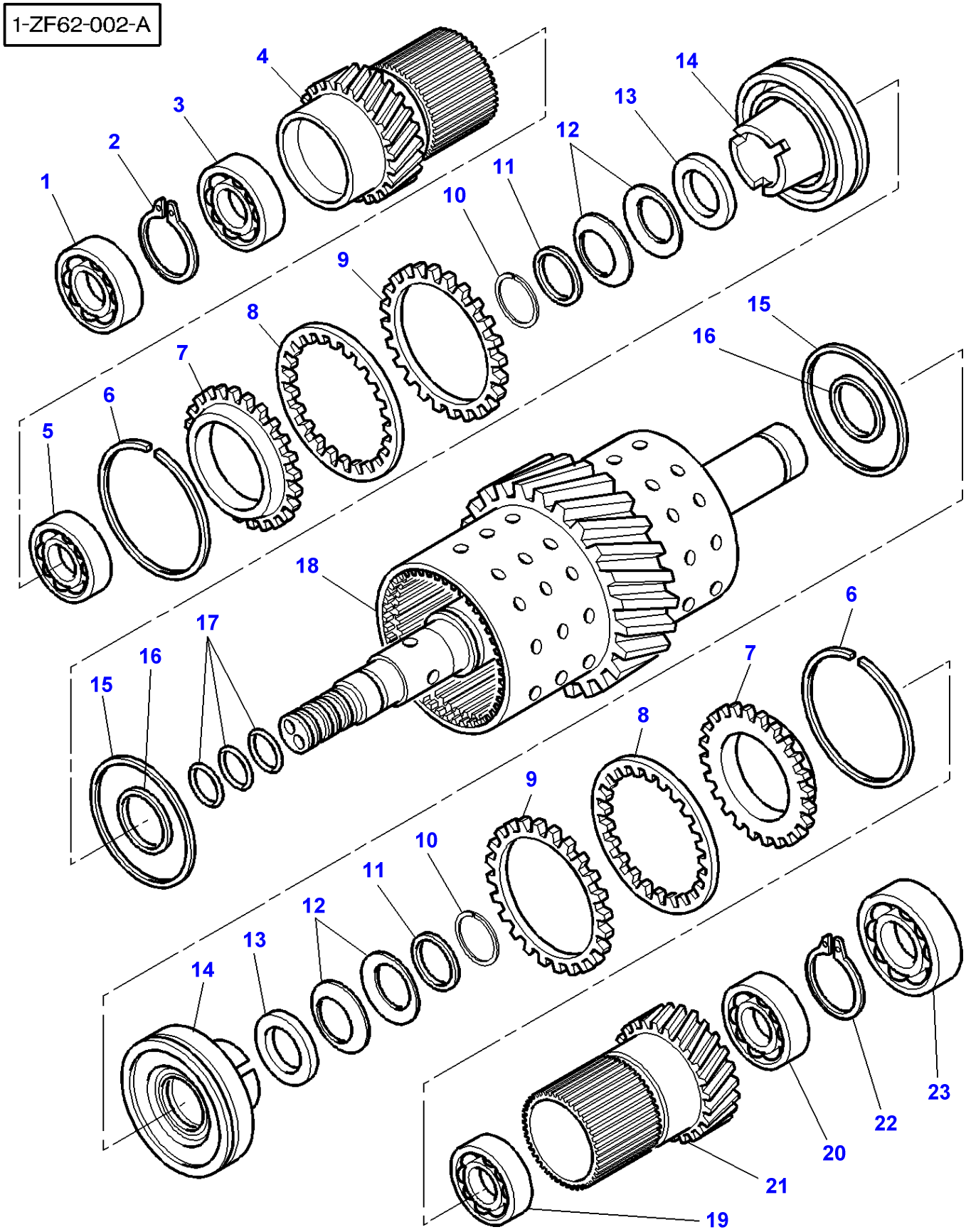

https://truckmanualshub.com/

Item	Part Number	Qty	Description	Comments
	3779338M91	1	Kit, Pinion	
1	3779336M1	1	Bearing Assy	
2	3779231M1	1	Circlip	
3	3779259M1	1	Bearing Assy	
4	3779335M1	1	Pinion	Number of teeth/spines 48
5	3779334M1	1	Bearing Assy	
6	3779326M1	2	Circlip	
7	3779330M1	2	Crownwheel	
8	3779324M1	20	Disc	
9	3779323M1	20	Disc	
10	3779322M1	2	Circlip	
11	3779360M1	2	Circlip	
12	3779328M1	12	Washer	
13	3779327M1	2	Washer	
14	3779329M1	2	Piston	
15	3779325M1	2	Gasket	
16	3779319M1	2	O Ring	
17	3779220M1	3	Oil Seal	
18	3779332M1	1	Shaft	
19	3779337M1	1	Bearing Assy	
20	3779212M1	1	Bearing Assy	
21	3779333M1	1	Pinion	Number of teeth/spines 59
22	3779321M1	1	Circlip	
23	3779331M1	1	Bearing Assy	

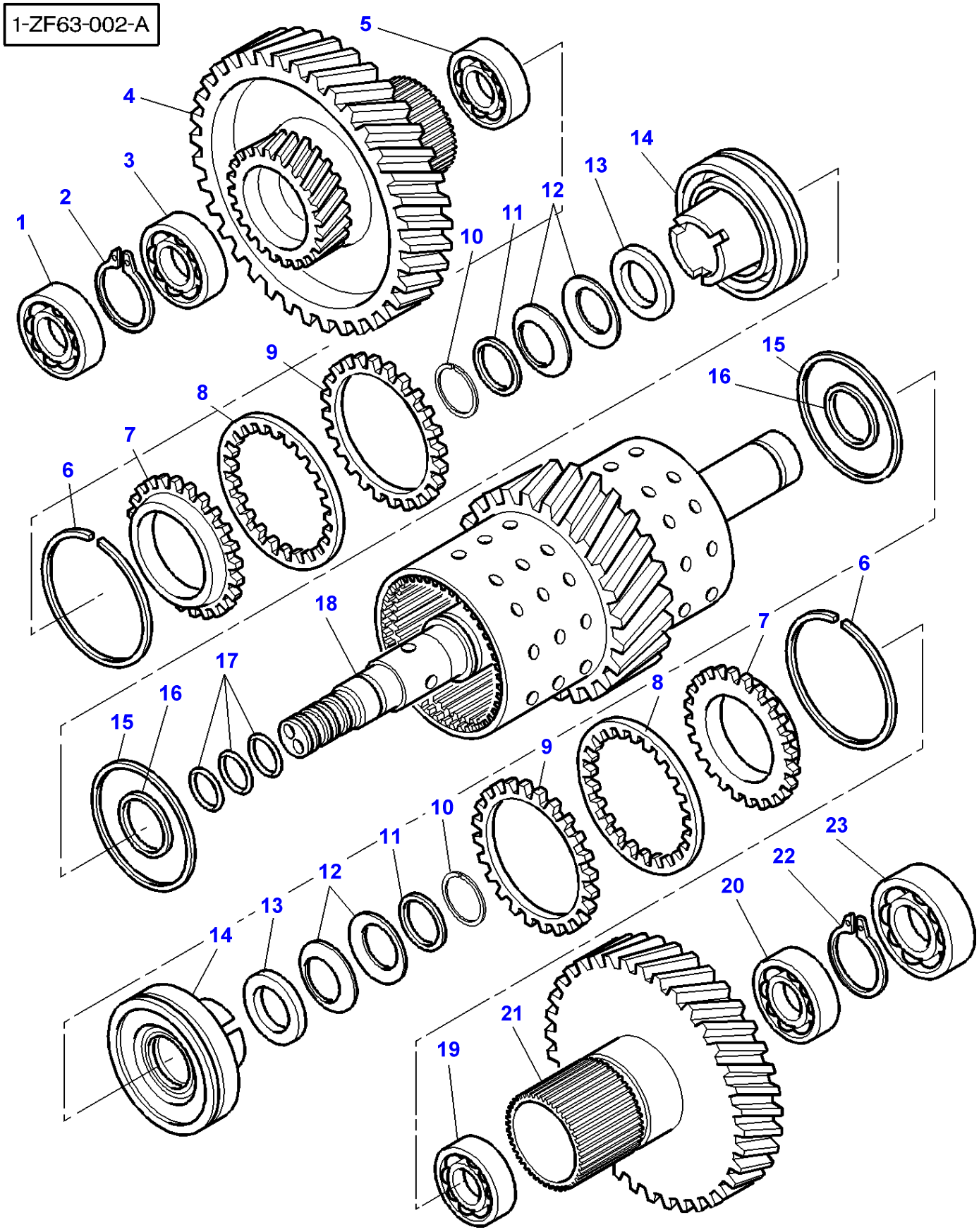
1-ZF63-002-A
1
2
3
4
5
6
7
8
9
10
11
12
13
14
15
16
17
18
19
20
21
22
23

https://truckmanualshub.com/

Item	Part Number	Qty	Description	Comments
	3779339M91	1	Kit, Sprocket	
1	3779336M1	1	Bearing Assy	
2	3779231M1	1	Circlip	
3	3779260M1	1	Bearing Assy	
4	3779343M1	1	Pinion	
5	3779342M1	1	Bearing Assy	
6	3779326M1	2	Circlip	
7	3779330M1	2	Crownwheel	
8	3779324M1	20	Disc	
9	3779323M1	20	Disc	
10	3779322M1	2	Circlip	
11	3779360M1	2	Circlip	
12	3779328M1	12	Washer	
13	3779327M1	2	Washer	
14	3779329M1	2	Piston	
15	3779325M1	2	Gasket	
16	3779319M1	2	O Ring	
17	3779220M1	3	Oil Seal	
18	3779340M1	1	Shaft	
19	3779337M1	1	Bearing Assy	
20	3779212M1	1	Bearing Assy	
21	3779341M1	1	Pinion	Number of teeth/spines 76
22	3779321M1	1	Circlip	
23	3779213M1	1	Bearing Assy	

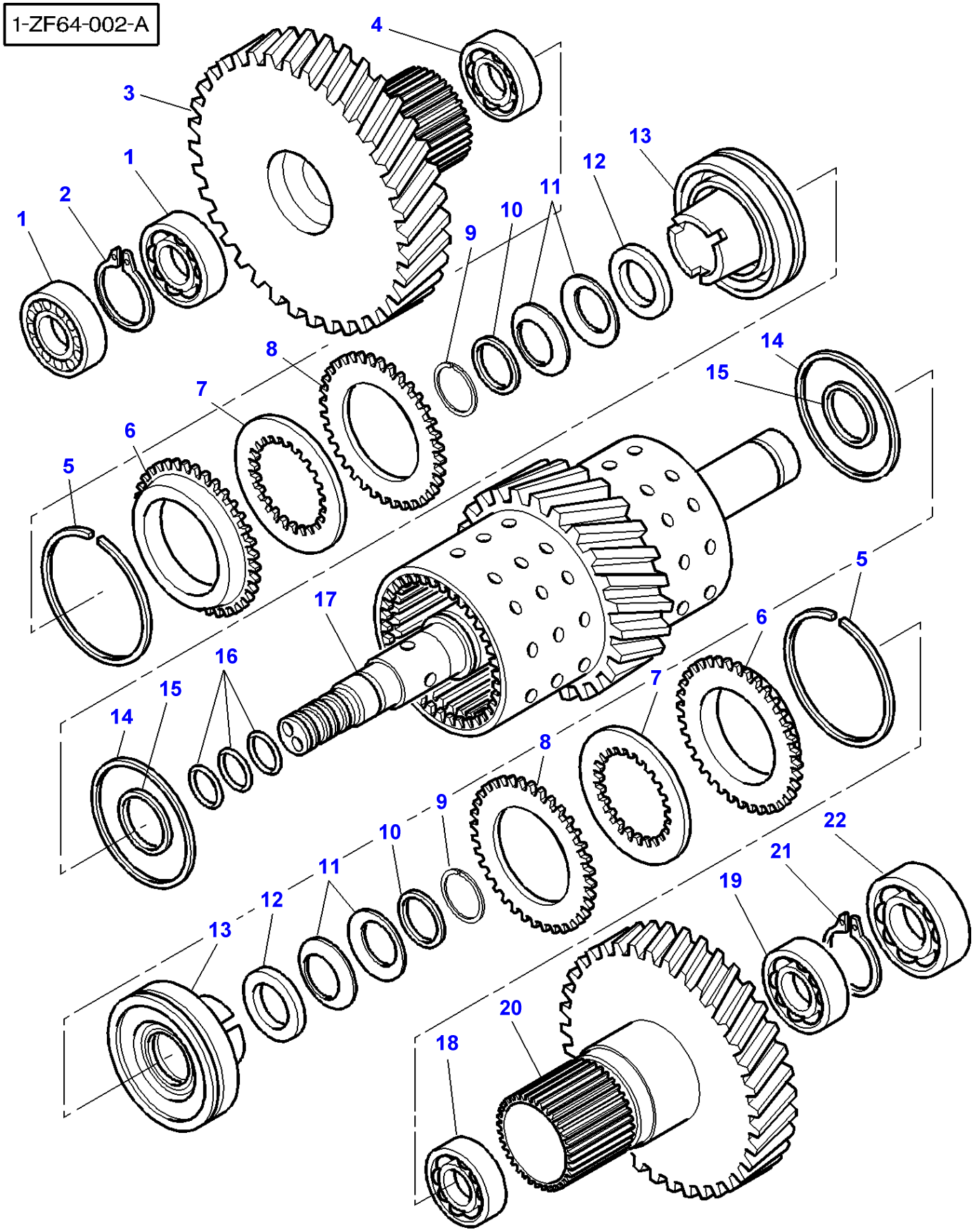
1-ZF64-002-A
1
2
1
3
4
13
12
11
10
9
8
7
6
5
14
15
17
16
15
14
5
6
7
8
9
10
11
12
13
22
21
19
20
18

https://truckmanualshub.com/

Item	Part Number	Qty	Description	Comments
	3779344M91	1	Kit, Sprocket	
1	3779336M1	2	Bearing Assy	
2	3779231M1	1	Circlip	
3	3779347M1	1	Pinion	Number of teeth/spines 80
4	3779346M1	1	Bearing Assy	
5	3779326M1	2	Circlip	
6	3779330M1	2	Crownwheel	
7	3779324M1	20	Disc	
8	3779323M1	20	Disc	
9	3779322M1	2	Circlip	
10	3779360M1	2	Circlip	
11	3779328M1	12	Washer	
12	3779327M1	2	Washer	
13	3779329M1	2	Piston	
14	3779325M1	2	Gasket	
15	3779319M1	2	O Ring	
16	3779220M1	3	Oil Seal	
17	3779332M1	1	Shaft	
18	3779337M1	1	Bearing Assy	
19	3779212M1	1	Bearing Assy	
20	3779345M1	1	Pinion	Number of teeth/spines 76
21	3779321M1	1	Circlip	
22	3779331M1	1	Bearing Assy	

https://truckmanualshub.com/

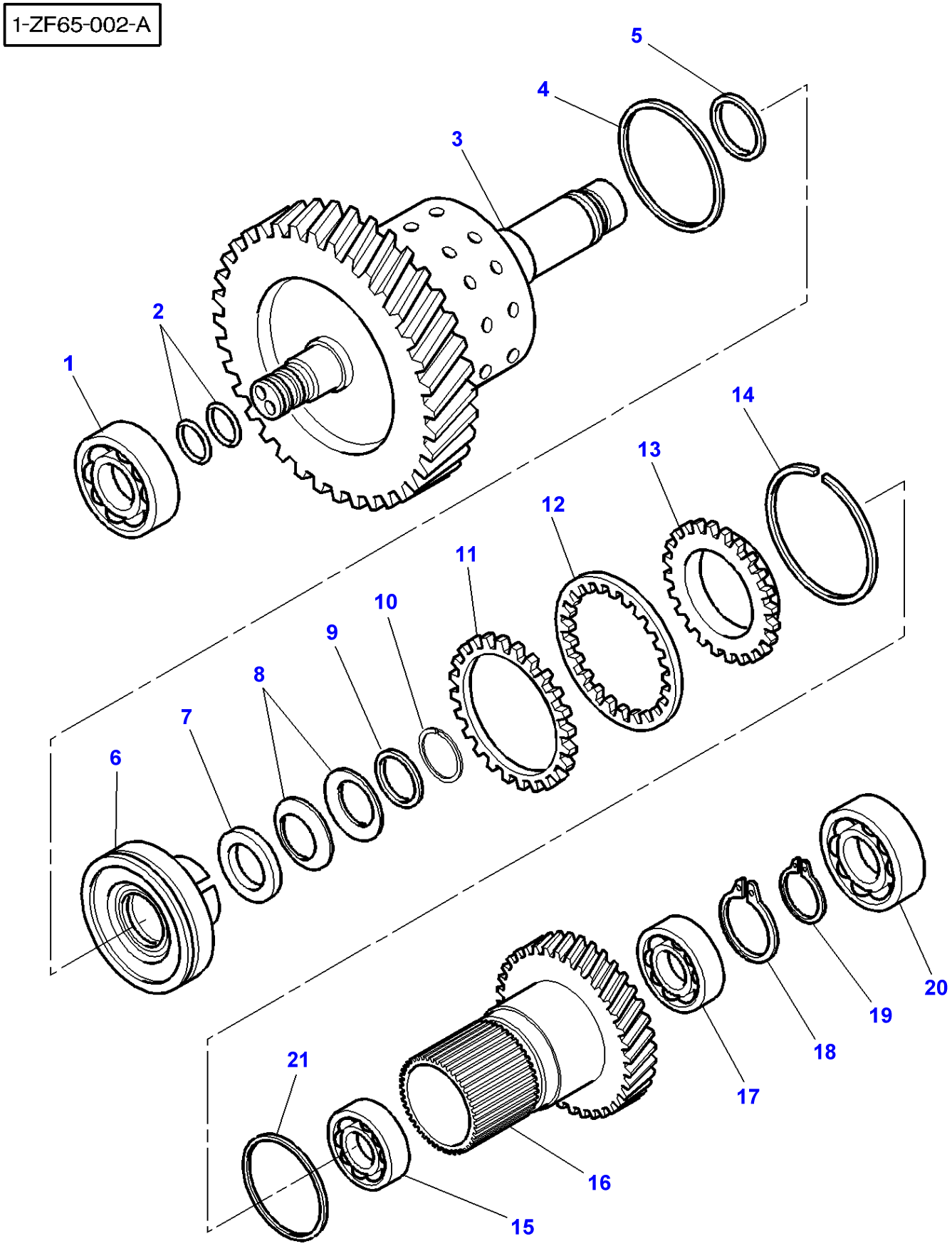

https://truckmanualshub.com/

Item	Part Number	Qty	Description	Comments
	3779348M91	1	Kit, Sprocket	
1	3779331M1	1	Bearing Assy	
2	3779220M1	2	Oil Seal	
3	3779349M1	1	Shaft	
4	3779325M1	1	Gasket	
5	3779319M1	1	O Ring	
6	3779329M1	1	Piston	
7	3779327M1	1	Washer	
8	3779328M1	6	Washer	
9	3779360M1	1	Circlip	
10	3779322M1	1	Circlip	
11	3779323M1	10	Disc	
12	3779324M1	10	Disc	
13	3779330M1	1	Crownwheel	
14	3779326M1	1	Circlip	
15	3779350M1	1	Bearing Assy	
16	3779351M1	1	Pinion	Number of teeth/spines 44
17	3779352M1	1	Bearing Assy	
18	3779321M1	1	Circlip	
19	3779231M1	1	Circlip	
20	3779336M1	1	Bearing Assy	
21	3779320M1	1	O Ring	

https://truckmanualshub.com/

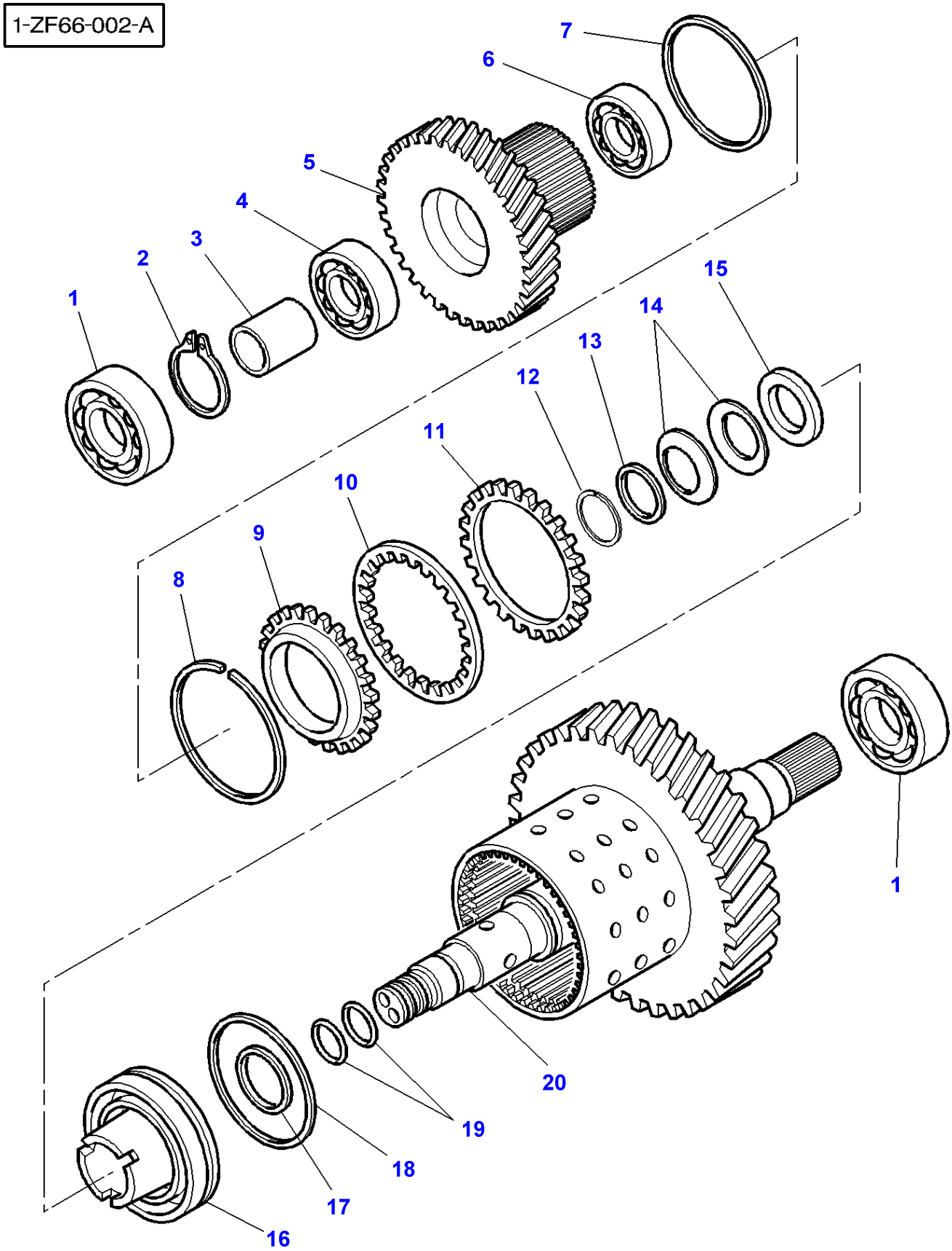

https://truckmanualshub.com/

Item	Part Number	Qty	Description
	3779353M91	1	Kit, Sprocket
1	3779331M1	2	Bearing Assy
2	3779321M1	1	Circlip
3	3779361M1	1	Spacer
4	3779212M1	1	Bearing Assy
5	3779355M1	1	Pinion
6	3779350M1	1	Bearing Assy
7	3779320M1	1	O Ring
8	3779326M1	1	Circlip
9	3779330M1	1	Crownwheel
10	3779324M1	10	Disc
11	3779323M1	10	Disc
12	3779322M1	1	Circlip
13	3779360M1	1	Circlip
14	3779328M1	6	Washer
15	3779327M1	1	Washer
16	3779329M1	1	Piston
17	3779319M1	1	O Ring
18	3779325M1	1	Gasket
19	3779220M1	2	Oil Seal
20	3779354M1	1	Shaft

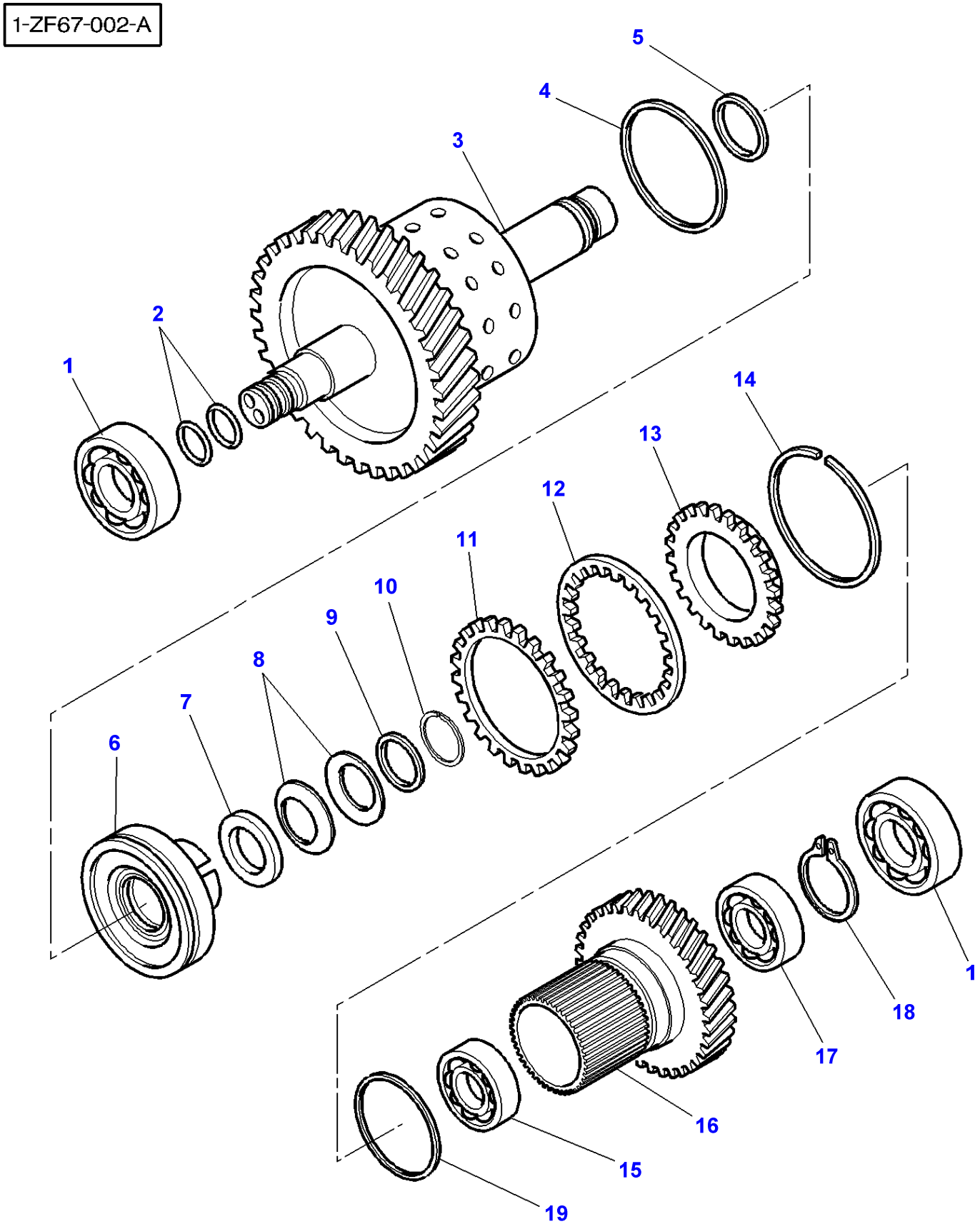
1-ZF67-002-A
5
4
3
2
1
14
13
12
11
10
9
8
7
6
1
18
17
16
15
19

https://truckmanualshub.com/

Item	Part Number	Qty	Description	Comments
	3779356M91	1	Kit, Pinion	
1	3779331M1	2	Bearing Assy	
2	3779220M1	2	Oil Seal	
3	3779357M1	1	Shaft	
4	3779325M1	1	Gasket	
5	3779319M1	1	O Ring	
6	3779329M1	1	Piston	
7	3779327M1	1	Washer	
8	3779328M1	6	Washer	
9	3779360M1	1	Circlip	
10	3779322M1	1	Circlip	
11	3779323M1	10	Disc	
12	3779324M1	10	Disc	
13	3779330M1	1	Crownwheel	
14	3779326M1	1	Circlip	
15	3779350M1	1	Bearing Assy	
16	3779358M1	1	Pinion	Number of teeth/spines 47
17	3779352M1	1	Bearing Assy	
18	3779321M1	1	Circlip	
19	3779320M1	1	O Ring	

https://truckmanualshub.com/

1-ZW26-002-B

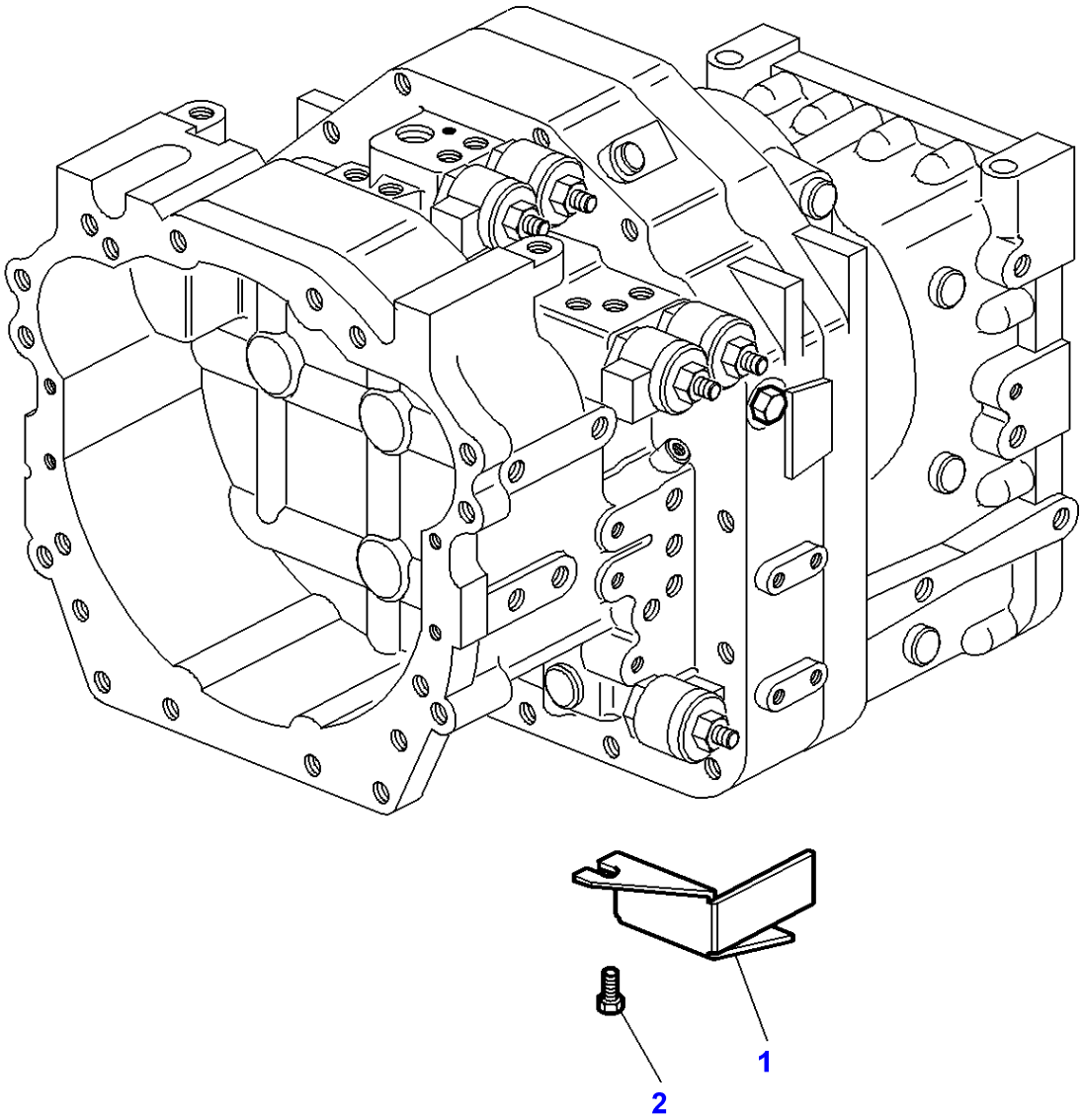

https://truckmanualshub.com/

Item	Part Number	Qty	Description	Comments
1	3791246M4	1	Cowl	Right Hand
	3791247M4	1	Cowl	Left Hand
2	339228X1	2	Screw Metric	M8X12

https://truckmanualshub.com/

Page Title	Page Number
Rear Axle - Intermediary Housing - With Full Powershift	030-0005
Handbrake - Lower Control	030-0010
Brakes - Handbrake	030-0015
Parking Brake - With Powershift	030-0020
Rear Axle - Centre Housing	030-0025
Short Rear Axle Housings - Outer Final Drive Gear - With Dual Reducer	030-0030
Rear Axle - Differential	030-0035
Rear Axle Differential Lock Mecchanism - Multidiscs	030-0040

1-ZG63-002-B

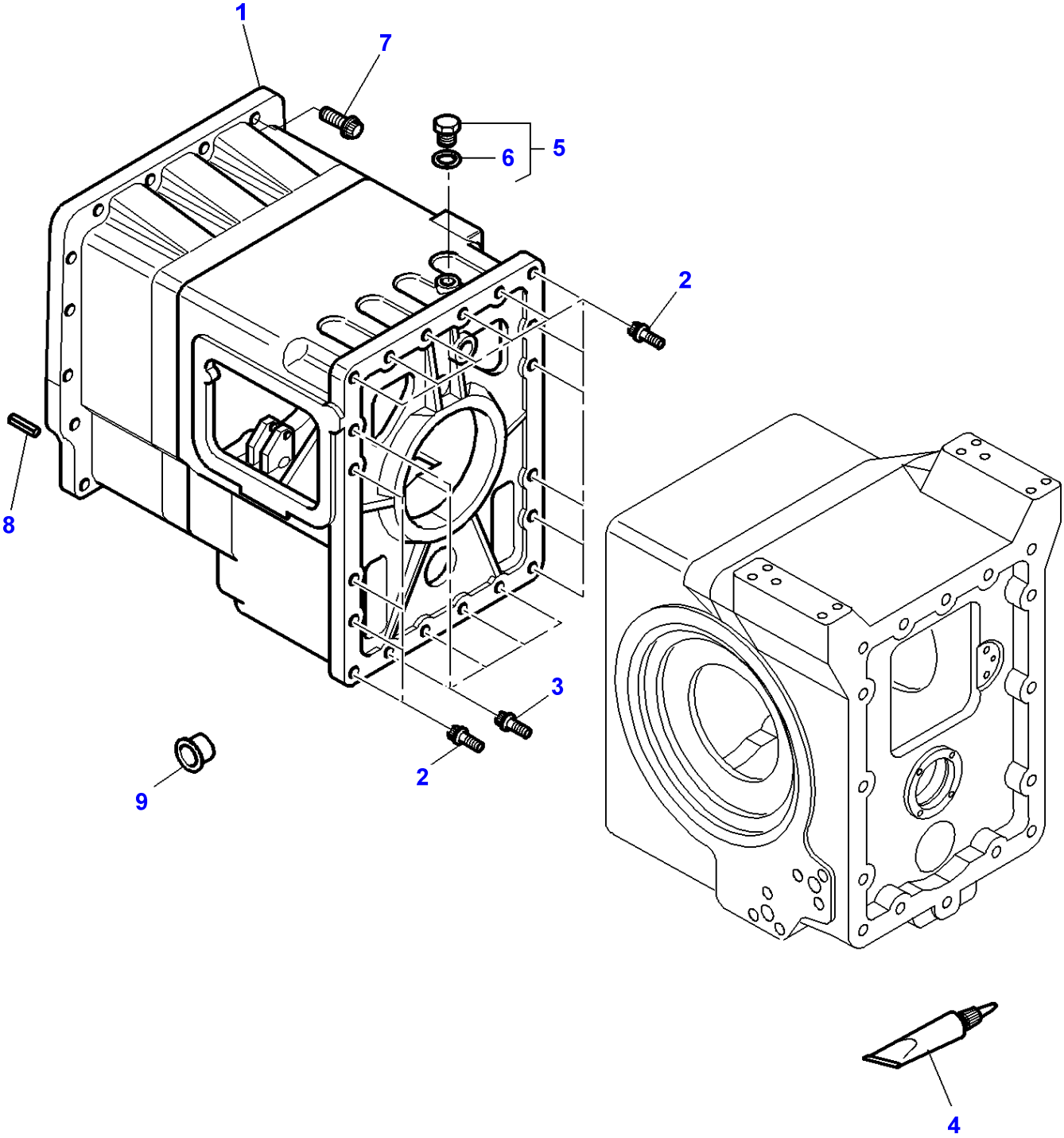

https://truckmanualshub.com/

Item	Part Number	Qty	Description	Comments
1	3716412M5	1	Housing	
2	3009805X1	15	Screw Metric	M16X60
3	3009806X1	5	Plough Bolt	M16X70
4	3900613M2	X	Loctite	
5	3019649X91	1	Plug	M33
6	3019399X1	1	O Ring	(5)
7	3010007X1	18	Screw Metric	M16X60
8	3385839M2	2	Pin	
9	3792315M1	2	Plug	[A] Diameter 20,9MM
	3792314M1	4	Plug	[A] Diameter 15MM
	3583240M1	8	Plug	[A] Diameter 6MM

FOOTNOTE [A] PLASTICS

https://truckmanualshub.com/

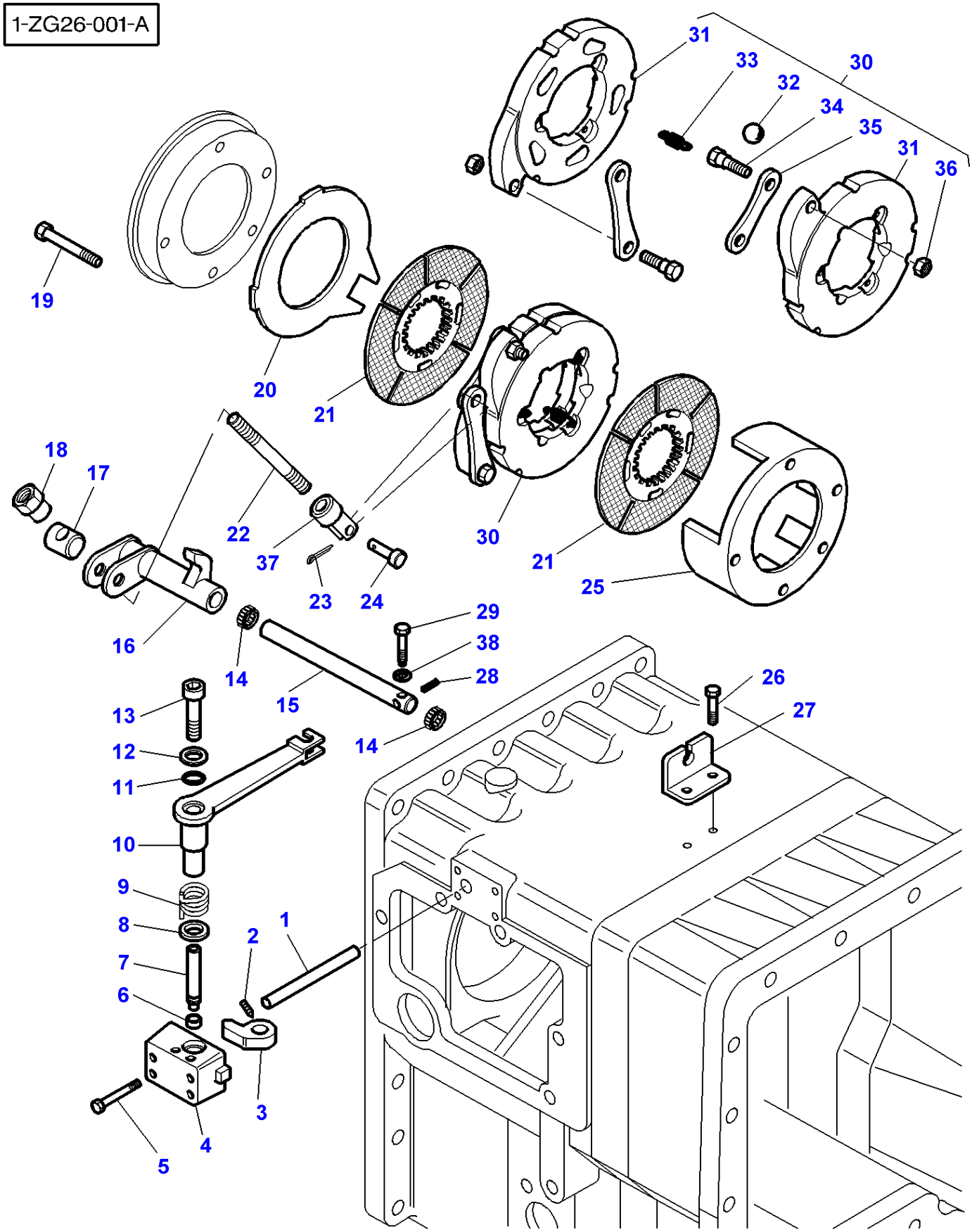

https://truckmanualshub.com/

Item	Part Number	Qty	Description	Comments
1	3716540M1	1	Tappet Rod	
2	3009429X1	1	Screw	M6x10
3	3716544M1	1	Poppet	
4	3716501M1	1	Case Assy	
5	390246X1	4	Bolt	M8X70
6	3716560M1	1	Bush	
7	3716503M2	1	Clevis Pin	
8	3716310M1	1	Oil Seal	
9	3716554M2	1	Spring	
10	3716502M2	1	Shifter	
11	3010740X1	1	O Ring	
12	3716539M1	1	Washer	
13	1440350X1	1	Screw Metric	M6X20
14	3716561M1	2	Bush	Diameter 20 MM
15	3716542M1	1	Clevis Pin	
16	3716477M2	1	Angle Trans.	
17	3581305M1	1	Trunnion	
18	3791431M1	1	Nut Special	
19	3009301X1	5	Screw Metric	M12x80
20	3716932M1	4	Counterplate	[A]
21	3716933M1	6	Disc	[A]
22	3791669M1	1	Stud	
23	354048X1	1	Pin	Diameter 2,4 MM Length 19 MM
24	354190X1	1	Clevis Pin	Diameter 7/16"
25	3716411M2	1	Case Assy	[A]
26	339228X1	2	Screw Metric	M8x12
27	3716543M1	1	Support	From Serial or Engine Number H344001
28	1440394X1	1	Pin	Diameter 4 MM Length 30 MM
29	3791488M2	1	Screw Special	
30	3716920M91	1	Brake	
31		2	Disc	(30) Not serviced, order REF NO 30
32	3310764M1	5	Ball	(30)
33	3310765M1	3	Spring	(30)
34	3902669M1	2	Screw	(30)
35	3902668M1	2	Draglink	(30)
36	3902667M1	2	Nut	(30)
37	3790494M1	1	Draglink	
38	195561M1	1	O Ring	

FOOTNOTE [A] 6 PLATE WET BRAKES

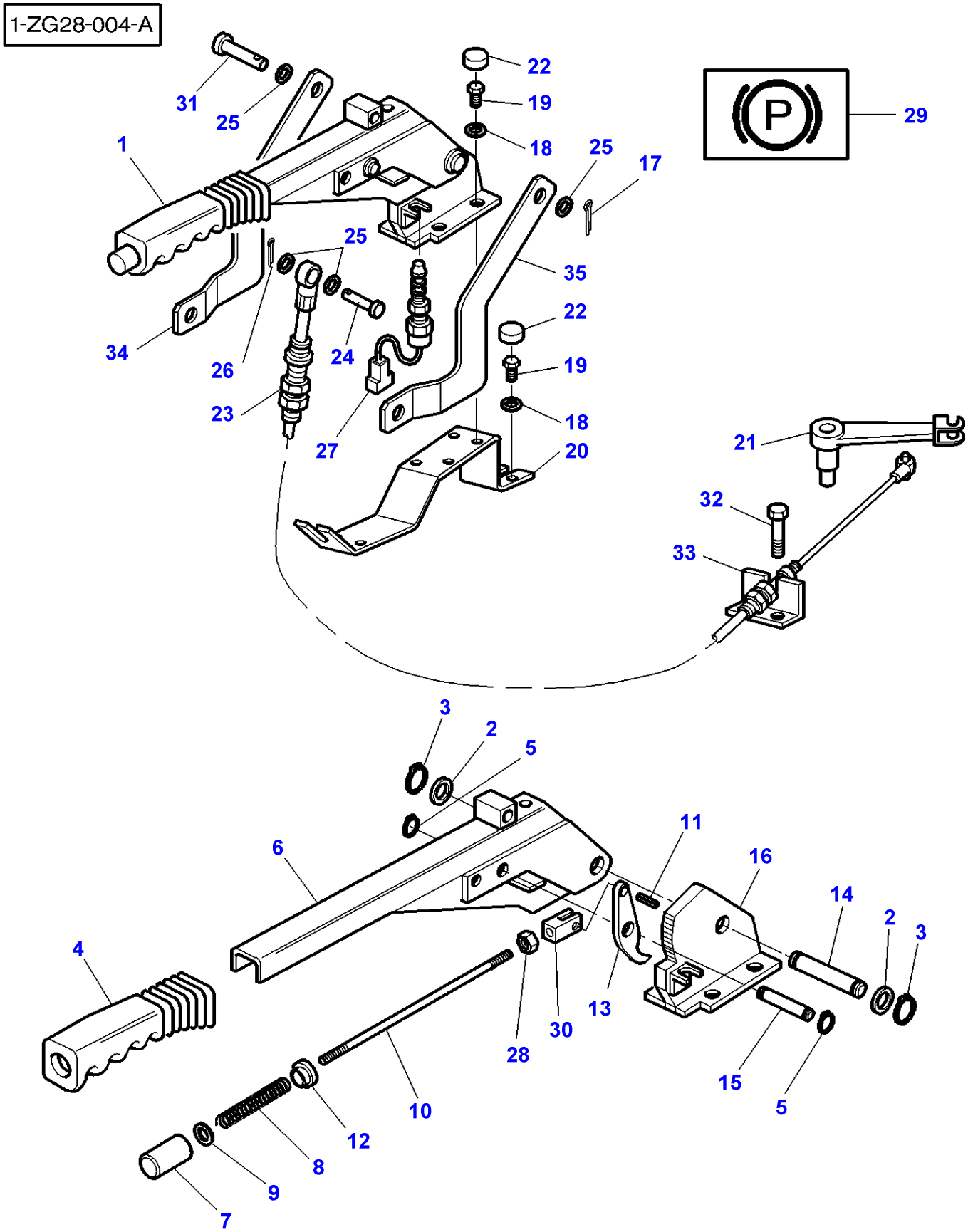
1-ZG28-004-A
31
25
1
22
19
18
25
17
29
P
25
35
22
34
26
24
19
23
18
27
20
21
32
33
3
2
5
6
11
16
14
2
3
4
13
30
28
15
5
10
12
8
9
7

https://truckmanualshub.com/

Item	Part Number	Qty	Description	Comments
1	3782572M91	1	Handbrake Assy	
2	1693980M1	2	Washer	(1)
3	339356X1	2	Circlip	(1)
4	1693965M1	1	Handle	(1)
5	1440988X1	2	Circlip	(1)
6		1	Hand Brake Lever	(1)
				Not serviced, order REF. No 1
7	3616904M1	1	Button	(1)
8	1693970M1	1	Spring	(1)
9	353754X1	1	Washer	(1)
10	3782646M1	1	Rod	(1)
11	3782649M1	1	Pin	(1)
12	3616905M1	1	Washer	(1)
13	3782645M1	1	Hasp	(1)
14	1693976M1	1	Clevis Pin	(1)
15	1693974M1	1	Clevis Pin	(1)
16	3779133M92	1	Sector	(1)
17	354057X1	1	Pin	
18	390972X1	8	Washer Metric	
19	339123X1	8	Hex. Sock. Screw	M8X20
20	3782571M2	1	Support	
21	3716502M2	1	Shifter	
22	3616277M1	8	Helmet	
23	3782575M2	1	Cable	Length 1510MM
24	195235M1	1	Clevis Pin	
25	390972X1	4	Washer Metric	
26	354057X1	1	Pin	
27	**3780395M2**	1	Switch,Indirect	
28	3782647M1	1	Nut	(1)
29	3580502M1	1	Decal	
30	3782648M1	1	Clevis	(1)
31	195237M1	1	Clevis Pin	
32	339228X1	2	Screw Metric	M8X12
33	3716543M1	1	Support	
34	3782574M1	1	Rod Link	Right Hand
35	3782573M1	1	Rod Link	Left Hand

1-ZG64-001-A

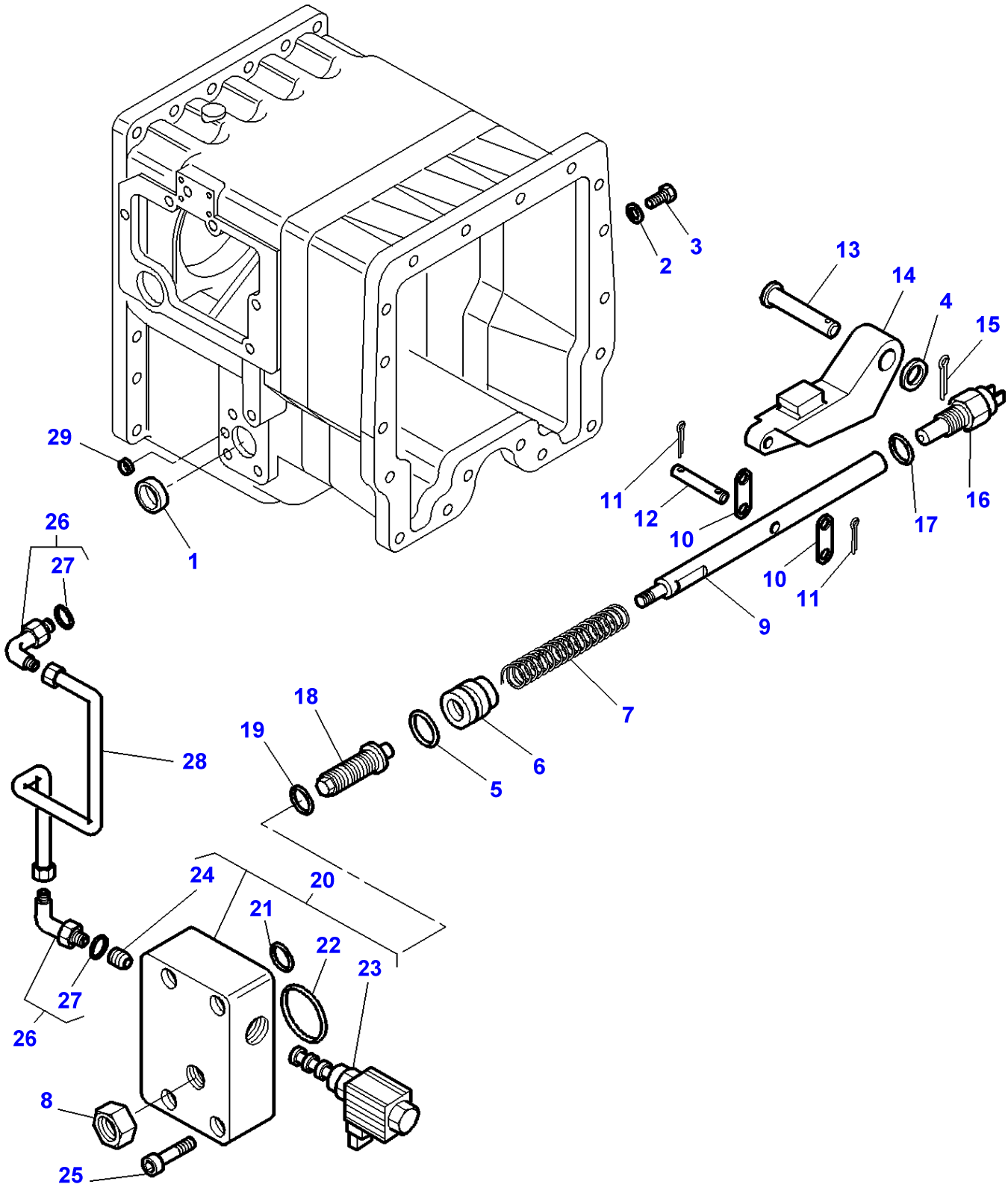
1
2
3
4
5
6
7
8
9
10
10
11
11
12
13
14
15
16
17
18
19
20
21
22
23
24
25
26
26
27
27
28
29

https://truckmanualshub.com/

Item	Part Number	Qty	Description	Comments
1	3010663X1	1	Plug	[A]
2	3010890X1	1	Bush	[A]
3	3019424X1	1	Plug	[A] M14
4	3791380M1	1	Washer	Diameter 19 MM
5	366434X1	1	O Ring	
6	3791570M1	1	Piston	
7	3716228M1	1	Spring	
8	**3384600M2**	1	Nut Special	Up to Serial or Engine Number J249006 M18X1,5
	390336X1	1	Nut Metric	From Serial or Engine Number J249007 M18X2,5
9	3791571M2	1	Stem	
10	3716548M1	2	Rod Link	
11	1442993X1	2	Pin	Diameter 3,2 MM
12	3791124M2	2	Clevis Pin	
13	3791125M4	1	Clevis Pin	
14	3716551M4	1	Ratchet	
15	339531X1	1	Pin	Diameter 4 MM
16	**3792196M1**	1	Switch,Indirect	
17	3010890X1	1	Bush	
18	3790951M1	1	Screw	Up to Serial or Engine Number J249006 M18X1,5
	3793504M1	1	Setscrew	From Serial or Engine Number J249007 M18X2,5
19	3007118X1	1	O Ring	Up to Serial or Engine Number J249006
	3010946X1	1	O Ring	From Serial or Engine Number J249007
20	3791141M91	1	Block	Up to Serial or Engine Number J249006
	3793505M91	1	Spacer	From Serial or Engine Number J249007
21	3019467X1	1	O Ring	(20) Diameter 10,1x1,6 MM
22	364281X1	1	O Ring	(20) Diameter 47,35x1,78 MM
23	**3791106M1**	1	Electrovalve	(20)
24	**3791107M1**	1	Non Return Valve	(20)
25	3001758X1	4	Screw Metric	M6x50
26	3019412X91	2	Elbow	
27	3019395X1	1	O Ring	(26)
28	3791287M1	1	Tube	
29	3010761X1	1	Plug	

FOOTNOTE [A] WITHOUT PARKING BRAKE

https://truckmanualshub.com/

1-ZG02-002-B

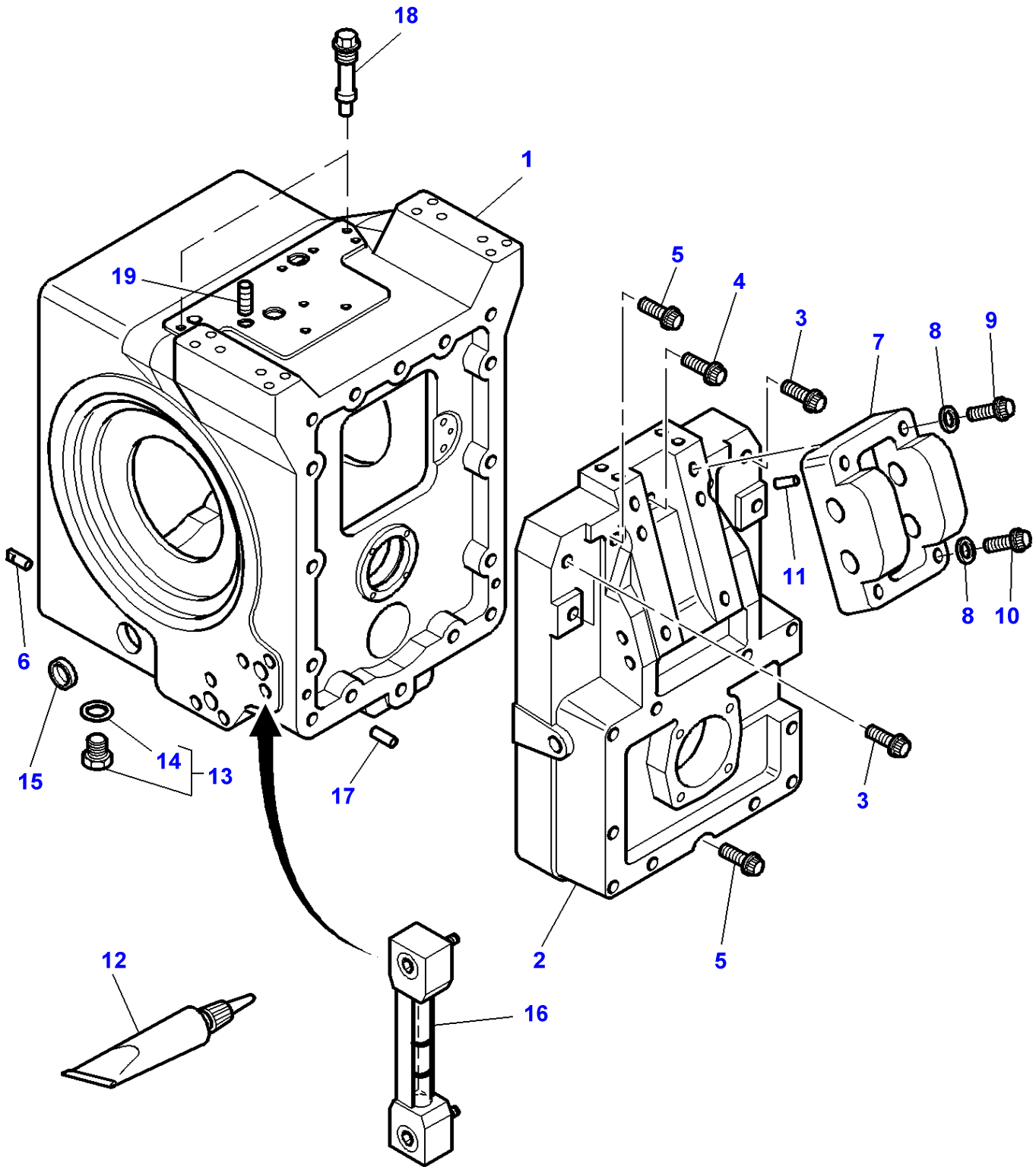

https://truckmanualshub.com/

Item	Part Number	Qty	Description	Comments
1	3792105M3	1	Housing	
2	3716000M5	1	Housing	
3	3010556X1	4	Screw Metric	M20X70
4	3010557X1	1	Screw Metric	M20X100
5	3010558X1	3	Screw Metric	M20X120
6	3716496M2	1	Centraliser	
7	3716917M3	1	Lug	
8	385365X1	4	Washer	Diameter 20 MM Diameter 37 MM Thickness 5 MM
9	3010575X1	2	Screw	M20X130
10	3010563X1	2	Screw	M20X90
11	3716918M2	2	Centraliser	
12	3900613M2	X	Loctite	
13	3583994M91	1	Plug	M18
14	3019397X1	1	O Ring	(13)
15	3010760X1	2	Plug	Diameter 46 MM
16	3790930M1	1	Oil Dipstick	
17	3385839M2	2	Pin	Length 22,2 MM
18	3791706M1	2	Plug	
19	3010990X1	1	Screw	M12X12

FOOTNOTE [A] WITH DYNASHIFT
FOOTNOTE [B] WITH FULL POWERSHIFT

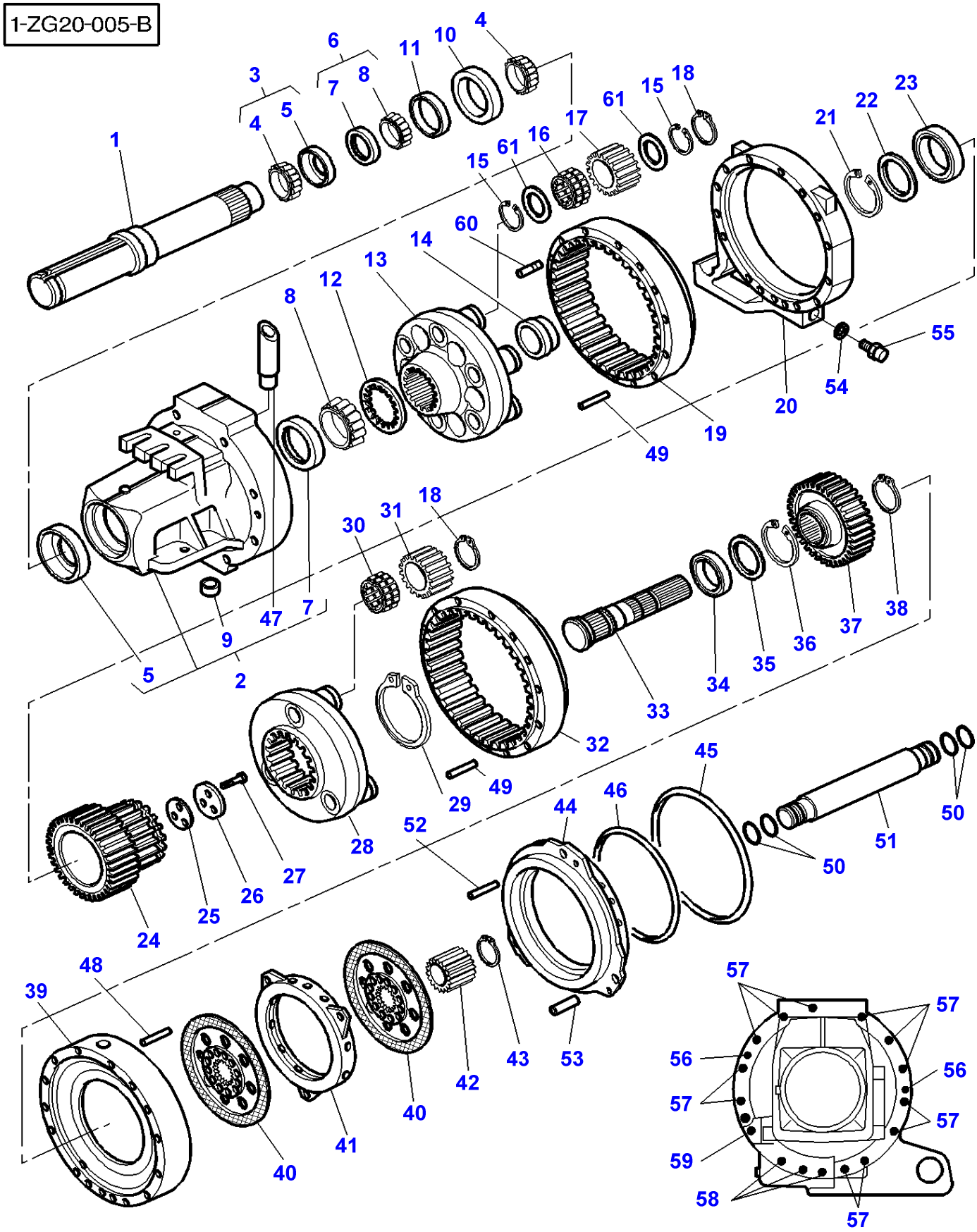
1-ZG20-005-B
1
2
3
4
5
6
7
8
9
10
11
12
13
14
15
16
17
18
19
20
21
22
23
24
25
26
27
28
29
30
31
32
33
34
35
36
37
38
39
40
41
42
43
44
45
46
47
48
49
50
51
52
53
54
55
56
57
58
59
60
61

https://truckmanualshub.com/

Item	Part Number	Qty	Description	Comments
1	3716265M3	2	Shaft	Diameter 110 MM
				Length 1105 MM
	3716264M3	2	Shaft	Diameter 110 MM
				Length 855 MM
2	3791238M15	1	Axle Housing	Right Hand
	3791237M15	1	Axle Housing	Left Hand
3	3010685X91	2	Bearing Assy	
4		1	Bearing Cone	(3)
				Not serviced, order REF. 3
5		1	Cone Cup	(3)
				Not serviced, order REF. 3
6	3010672X91	2	Bearing Assy	
7		1	Cone Cup	(6)
				Not serviced, order REF. 6
8		1	Bearing Cone	(6)
				Not serviced, order REF. 6
9	391560X1	1	Plug	(2)
				Diameter 30 MM
10	3716210M1	2	Gasket	Diameter 190 MM
				Diameter 165 MM
11	3716344M2	2	Bush	Diameter 165 MM
				Diameter 120 MM
12	3716094M1	2	Washer	
13	3716483M2	2	Carrier	
14	3716093M1	2	Washer	
15	3716329M1	24	Segment	
16	3010734X1	12	Bearing Assy	
17	3792442M1	12	Diff Pinion	Number of teeth/spines 20
				Up to Serial or Engine Number H286022
	3793778M1	12	Diff Pinion	Number of teeth/spines 20
				From Serial or Engine Number H286023
18	1440478X1	18	Circlip	
19	3792702M1	2	Annular Gear	Number of teeth/spines 81
20	3716207M2	2	Spacer	
21	1441458X1	2	Ring	
22	3716498M1	2	Washer	
23	1442672X1	2	Bear. 6016	
24	3792441M1	2	Planet	Number of teeth/spines 39
25	3716271M1		Chock	Thickness 0,005 MM
	3716272M1		Chock	Thickness 0,10 MM
	3716273M1		Chock	Thickness 0,25 MM
	3716274M1		Chock	Thickness 0,50 MM
	3716776M1		Chock	Thickness 1 MM
	3716777M1		Chock	Thickness 2 MM
26	3716267M1	2	Washer	Thickness 10 MM
27	3019853X1	6	Bolt Metric	M12X60
28	3716484M2	2	Carrier	
29	392782X1	2	Clip	
30	3010525X1	6	Bearing Assy	
31	3716485M2	6	Diff Pinion	Number of teeth/spines 20
32	3716482M3	2	Crownwheel	Number of teeth/spines 81
33	3716508M4	1	Planet	Left Hand
				Length 362 MM
	3716471M4	1	Planet	Right Hand
				Length 292 MM
34	339673X1	2	Bear. 6013	
35	3716416M1	2	Washer	
36	390613X1	2	Clip	
37	3716487M3	2	Planet	Number of teeth/spines 39
38	1440532X1	2	Circlip	
39	3792134M1	1	Spacer	Left Hand
	3792135M1	1	Spacer	Right Hand
40	3716223M1	4	Disc	
41	3716249M3	2	Plate	
42	3582194M1	2	Hub	
43	380005X1	2	Clip	
44	3716752M4	2	Piston	Right Hand
45	3716252M1	2	O Ring	
46	3716253M1	2	O Ring	
47	3791239M2	1	Tube	(2)

https://truckmanualshub.com/

Item	Part Number	Qty	Description	Comments
48	1612150M1	2	Clevis Pin	Diameter 12,7 MM Length 29 MM
49	3615934M1	4	Clevis Pin	Diameter 12,7 MM Length 82 MM
50	70923650	8	O Ring	
51	3791260M1	1	Tube	
52	3716768M1	4	Clevis Pin	Diameter 16 MM Length 98 MM
53	3791640M1	2	Clevis Pin	[A] Diameter 16 MM Length 98 MM
54	3019397X1	2	O Ring	
55	3583993M1	2	Plug	
56	3010564X1	4	Screw	M12x265
57	3716517M1	24	Stud	M16x363
57	3010875X1	24	Washer	M16
57	3019871X1	24	Nut Metric	M16
58	3791824M1	6	Stud	M16x388
58	3010875X1	6	Washer	M16
58	3019871X1	6	Nut Metric	M16
59	3791261M1	2	Stud	M16x378
59	3010875X1	2	Washer	M16
59	3019871X1	2	Nut Metric	M16
60	3385839M2	2	Pin	Diameter 12,6MM Length 22,2MM
61	3793783M1	24	Washer	From Serial or Engine Number H286023

FOOTNOTE [A] WITH 1 HOLE

1-ZG09-002-A

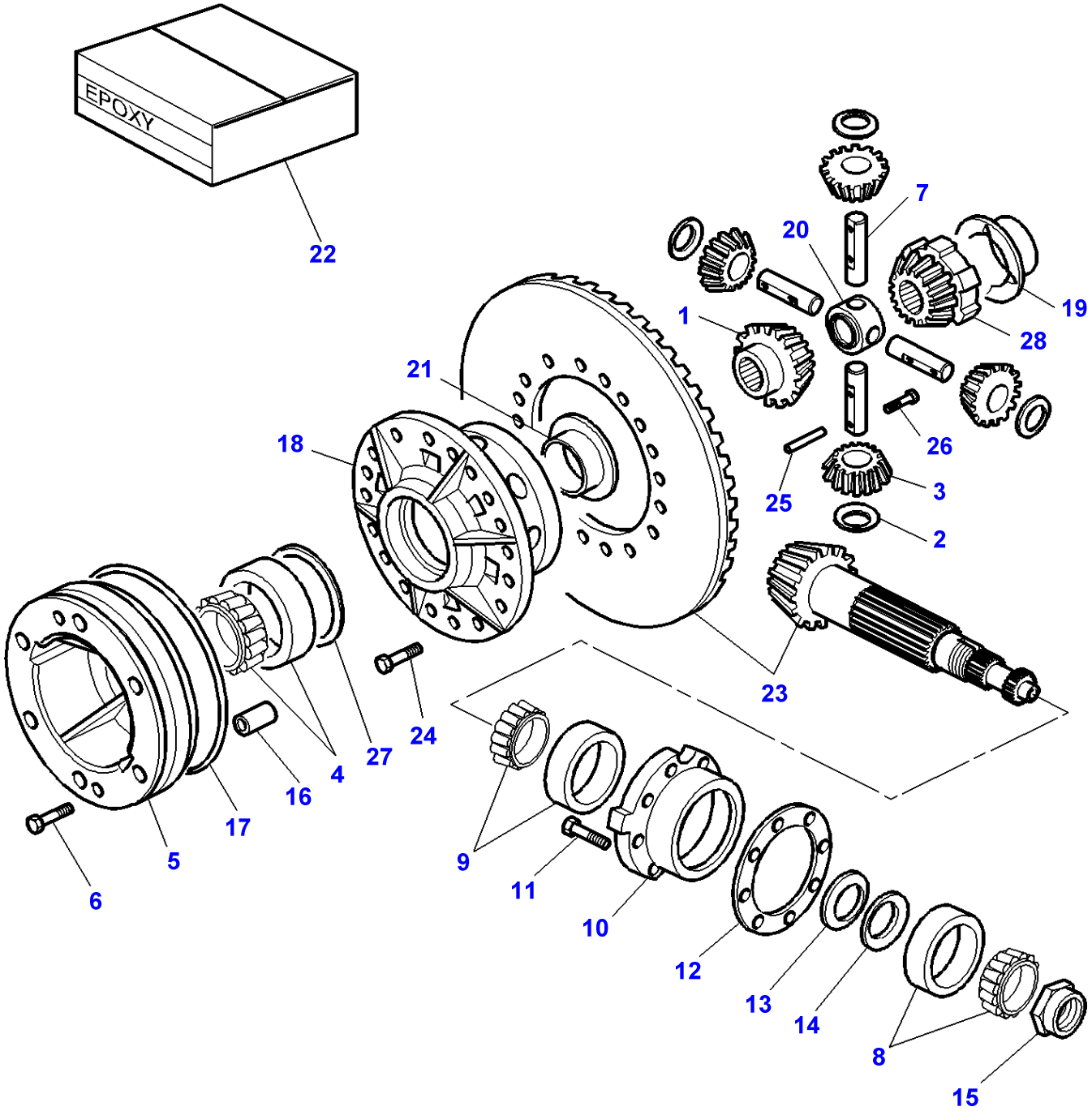
EPOXY
22
7
20
19
1
28
21
26
18
3
25
2
23
24
27
4
16
17
5
6
9
11
10
12
13
14
8
15

https://truckmanualshub.com/

Item	Part Number	Qty	Description	Comments
1	3716473M3	1	Pinion	
2	3791227M2	4	Washer	
3	3716463M1	4	Diff Pinion	
4	3010714X91	1	Bearing Taper	
5	3716246M3	1	Support	
6	3019899X1	6	Bolt Metric	M12X50
7	3716470M2	4	Clevis Pin	
8	3010720X91	1	Bearing Assy	
9	3010735X91	1	Bearing Assy	
10	3716430M2	1	Case Assy	
11	3010010X1	4	Screw	M12X40
	3010770X1	4	Screw Metric	M12X35
12	3716566M1	X	Shim	Thickness 0,05MM
	3716567M1	X	Shim	Thickness 0,1MM
	3716568M1	X	Shim	Thickness 0,2MM
	3716569M1	X	Shim	Thickness 0,3MM
13	3716422M1	1	Washer	
14	3792328M2	X	Chock	Thickness 0,65MM
	3716431M2	X	Chock	Thickness 0,7MM
	3792329M2	X	Chock	Thickness 0,75MM
	3716432M2	X	Chock	Thickness 0,8MM
	3792330M2	X	Chock	Thickness 0,85MM
	3716433M2	X	Chock	Thickness 0,9MM
	3792331M2	X	Chock	Thickness 0,95MM
	3716434M2	X	Chock	Thickness 1MM
15	3716450M1	1	Nut Special	M60
16	1611277M1	1	Pin	Diameter 16X20
17	3716335M1	1	O Ring	
18	3716464M4	1	Case Assy	
19	3716472M3	1	Washer	
20	3716059M4	1	Crosspiece	
21	3716327M3	1	Bush	
22	3930274M92	1	Loctite	
23	3716813M93	1	Kit, Bevel Gear	11X38
24	3010783X1	18	Screw Metric	M16X40
25	3384279M1	4	Needle	
26	1441000X1	4	Screw Metric	M8X16
27	3791616M1	1	Chock	Thickness 0.05 MM
	3791617M1	1	Chock	Thickness 0.1 MM
	3791618M1	1	Chock	Thickness 0.3 MM
28	3716474M4	1	Planet	

FOOTNOTE [A] WITH FULL POWERSHIFT
FOOTNOTE [B] WITH DYNASHIFT
FOOTNOTE [C] OUTER FINAL DRIVE GEAR WITH COMPOSITE REDUCER
FOOTNOTE [D] WITH REAR AXLE HOUSINGS OUTER GEAR WITH SEALED HOUSING

https://truckmanualshub.com/

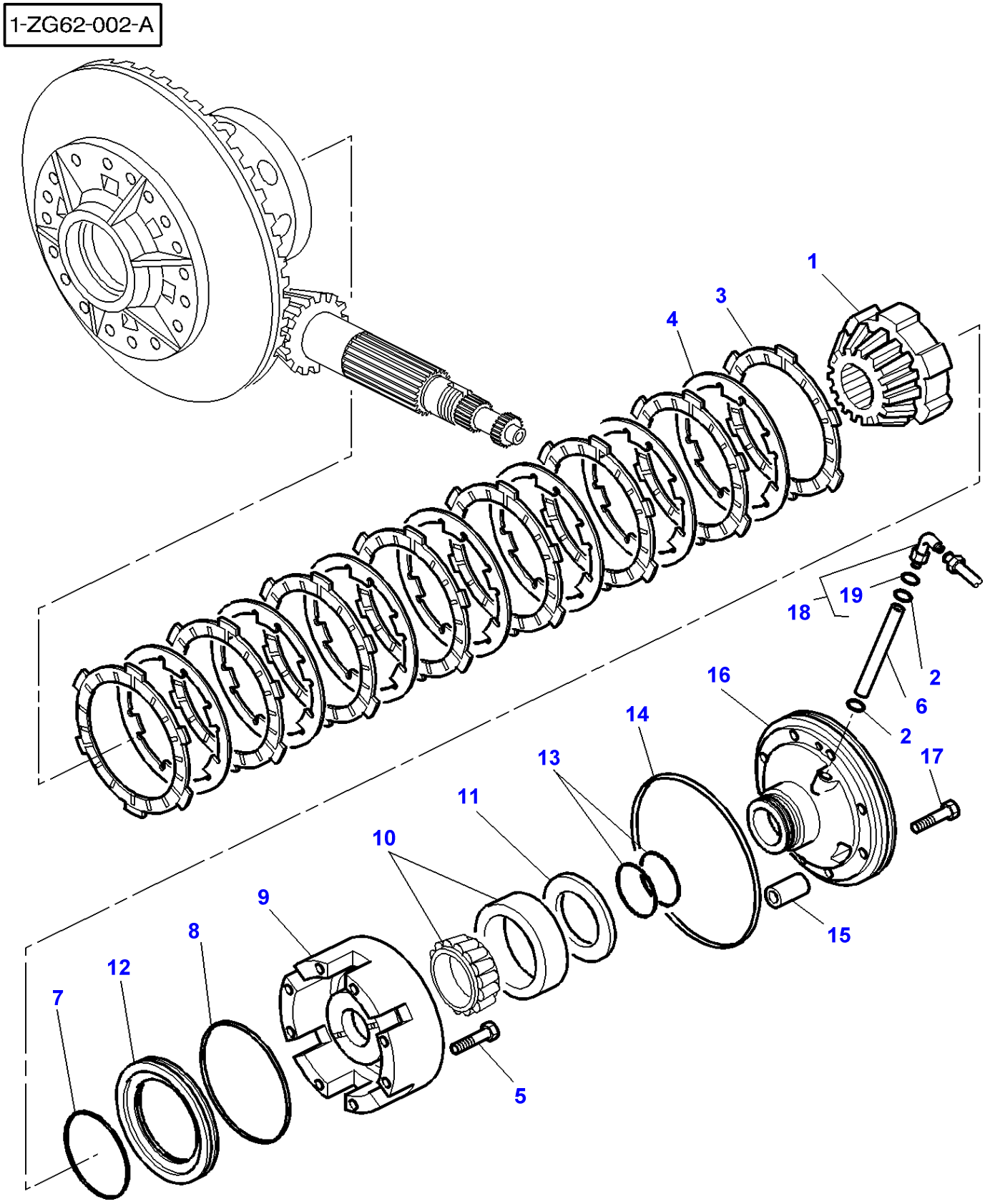

https://truckmanualshub.com/

Item	Part Number	Qty	Description	Comments
1	3716474M4	1	Planet	
2	377494X1	2	O Ring	
3	3616741M1	8	Disc	
4	3616742M1	7	Counterplate	
5	3010784X1	8	Screw Metric	M12X110
6	3716571M2	1	Tube	
7	70923591	1	O Ring	
8	359008X1	1	O Ring	
9	3716562M12	1	Case Assy	
10	1850909M91	1	Bearing Assy	
11	3716479M1	X	Chock	Thickness 0,5 MM
	3716480M1	X	Chock	Thickness 0,6 MM
	3791782M1	X	Chock	Thickness 0,7 MM
	3716486M1	X	Chock	Thickness 0,8 MM
	3791783M1	X	Chock	Thickness 0,9 MM
12	3716467M1	1	Piston	
13	3716580M3	2	Segment	
14	3716335M1	1	O Ring	
15	1611277M1	1	Pin	Diameter 16X20
16	3716247M15	1	Support	
17	3019899X1	6	Bolt Metric	M12X50
18	3385713M91	1	Union	
19	831497M1	1	O Ring	(18)

https://truckmanualshub.com/

Page Title	Page Number
Electronic Lift - Lift Arms	040-0005
Linkage - Lift Cylinders	040-0010
Levelling box	040-0015
Linkage - Top Link With Ball End	040-0020
Linkage - Top Link With Hook End	040-0025
Top Link Lock	040-0030
Linkage - Lower Cat 2 And 3	040-0035
Linkage - Lower Cat 2 And 3 - Up to Serial or Engine Number - H197002	040-0040
Linkage - Lower Cat 2 And 3 - From Serial or Engine Number - H197003	040-0045
Linkage - Swinging Drawbar Support	040-0050
Linkage - Swinging Drawbar Support	040-0055
Linkage - Swinging Drawbar Support	040-0060
Linkage - Swinging Drawbar Support	040-0065
Hitch	040-0070
Hitch	040-0075
Hitch - HAY LADDER SUPPORT FOR AUTOMATIC HOOK "DROMONE" - From 12-NOV-2001	040-0080
Hitch - Cramer	040-0085
Hitch	040-0090
Hitch	040-0095
Linkage - Swinging Drawbar - SAE STANDARD	040-0100
Linkage - Swinging Drawbar - ISO STANDARD	040-0105
Linkage - Swinging Drawbar - SAE STANDARD	040-0110
Linkage - Swinging Drawbar - ISO STANDARD	040-0115
Linkage - Swinging Drawbar - SAE STANDARD	040-0120
Linkage - Swinging Drawbar - With Trailed Implememt Control	040-0125
Linkage - Swinging Drawbar - With Trailed Implememt Control	040-0130
Linkage - Swinging Drawbar - With Trailed Implememt Control	040-0135
Linkage - Swinging Drawbar - With Trailed Implememt Control	040-0140
Tube Stabilizers	040-0145
Tube Stabilizers - For Germany Only	040-0150
Linkage - Shoe Stabilizers	040-0155
Drawbar	040-0160
Automatic Hitch - With Remote Control - Automatic Hook "DROMONE"	040-0165
Autohitch - Dromone - Hydraulic Control	040-0170
Automatic Hitch - With Remote Control - Hitch Support - "DROMONE"	040-0175
Automatic Hitch - With Remote Control	040-0180
Front Linkage 35000N	040-0185
Front Linkage 35000N	040-0190
Front Linkage 35000N	040-0195
Front Linkage 50000N	040-0200
Front Linkage 50000N	040-0205
Front Linkage 50000N - Up to Serial or Engine Number - J068007	040-0210
Front Linkage 50000N - From Serial or Engine Number - J068008	040-0215

https://truckmanualshub.com/

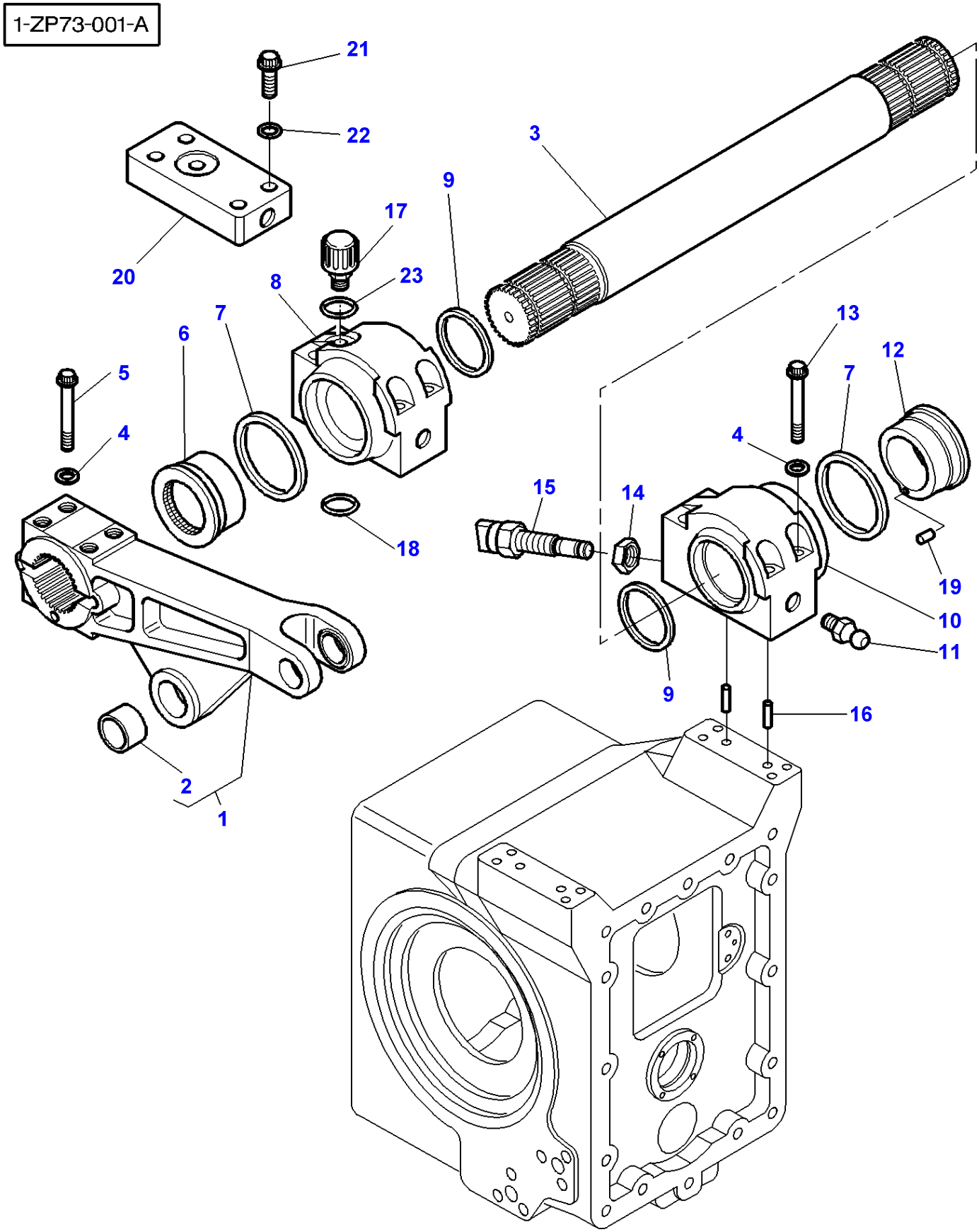

https://truckmanualshub.com/

Item	Part Number	Qty	Description	Comments
1	3716511M13	1	Arm	Left Hand
	3716527M13	1	Arm	Right Hand
2	3716510M2	1	Bush	(1)
3	3716538M2	1	Shaft	
4	3010875X1	16	Washer	Diameter 16 MM
5	3019874X1	8	Screw Metric	M16x115
6	3716522M2	1	Cam	Left Hand
7	3716689M1	2	Gasket	Diameter 120MM
8	3716506M13	1	Bearing Carrier	Left Hand
9	3716616M1	2	Gasket	Diameter 85MM
10	3716521M14	1	Bearing Carrier	Right Hand
11	1441858X1	2	Greaser	
12	3716513M4	1	Cam	Right Hand
13	3010566X1	8	Screw Metric	M16x130
14	3385674M1	1	Nut	M24
15	**3712728M3**	1	Inductive Taker	
16	3385839M2	4	Pin	
17	3716934M1	1	Breather	
18	364105X1	1	O Ring	
19	3019304X1	1	Spirol Pin	
20	3791696M1	1	Bearing Carrier	[A]
21	3009806X1	4	Plough Bolt	[A] M16X70
22	3010875X1	4	Washer	[A]
23	3019396X1	1	O Ring	

FOOTNOTE [A] WITHOUT HYDRAULIC LIFT

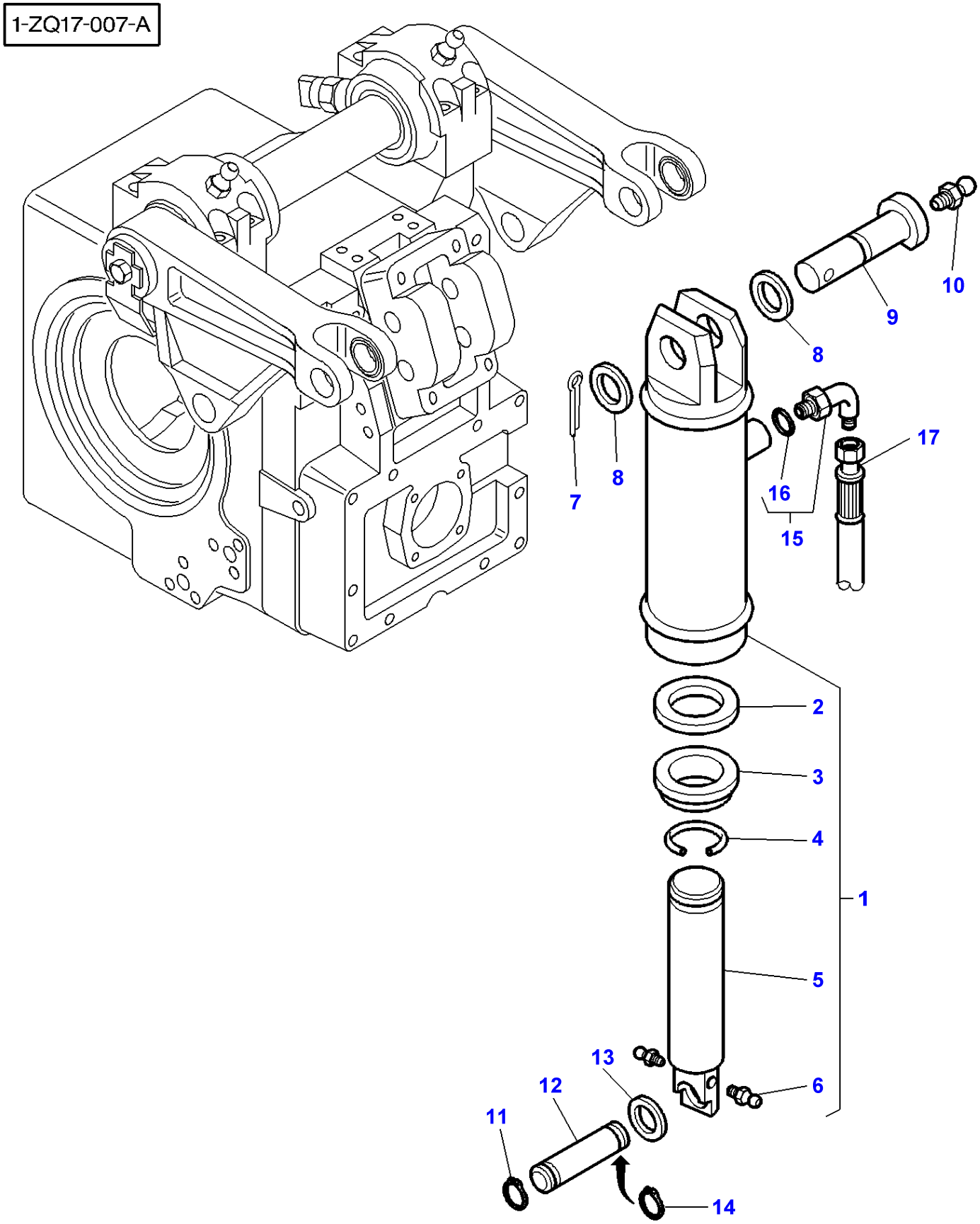
1-ZQ17-007-A
10
9
8
8
7
17
16
15
2
3
4
1
5
13
12
6
11
14

https://truckmanualshub.com/

Item	Part Number	Qty	Description	Comments
1	3716602M94	2	Lift Cylinder	Diameter 105MM
2	3902884M1	1	Gasket	(1)
3	3902883M1	1	Wiper	(1)
4	3902886M1	1	Ring	(1)
5	3902885M1	1	Cylinder Rod	(1)
6	1441858X1	2	Greaser	(1)
7	1442981X1	2	Pin	
8	3716678M2	4	Washer	Diameter 41 MM Diameter 60 MM Thickness 5,5 MM
9	3716609M1	2	Clevis Pin	
10	1441858X1	2	Greaser	
11	339605X1	2	Circlip	
12	3716600M1	2	Clevis Pin	
13	3716679M2	2	Washer	Diameter 61MM Diameter 70MM Thickness 4MM
14	339605X1	2	Circlip	
15	3019420X91	2	Union	
16	3019398X1	1	O Ring	(15)
17	3716386M1	1	Tube	Left Hand
	3716384M1	1	Tube	Right Hand

https://truckmanualshub.com/

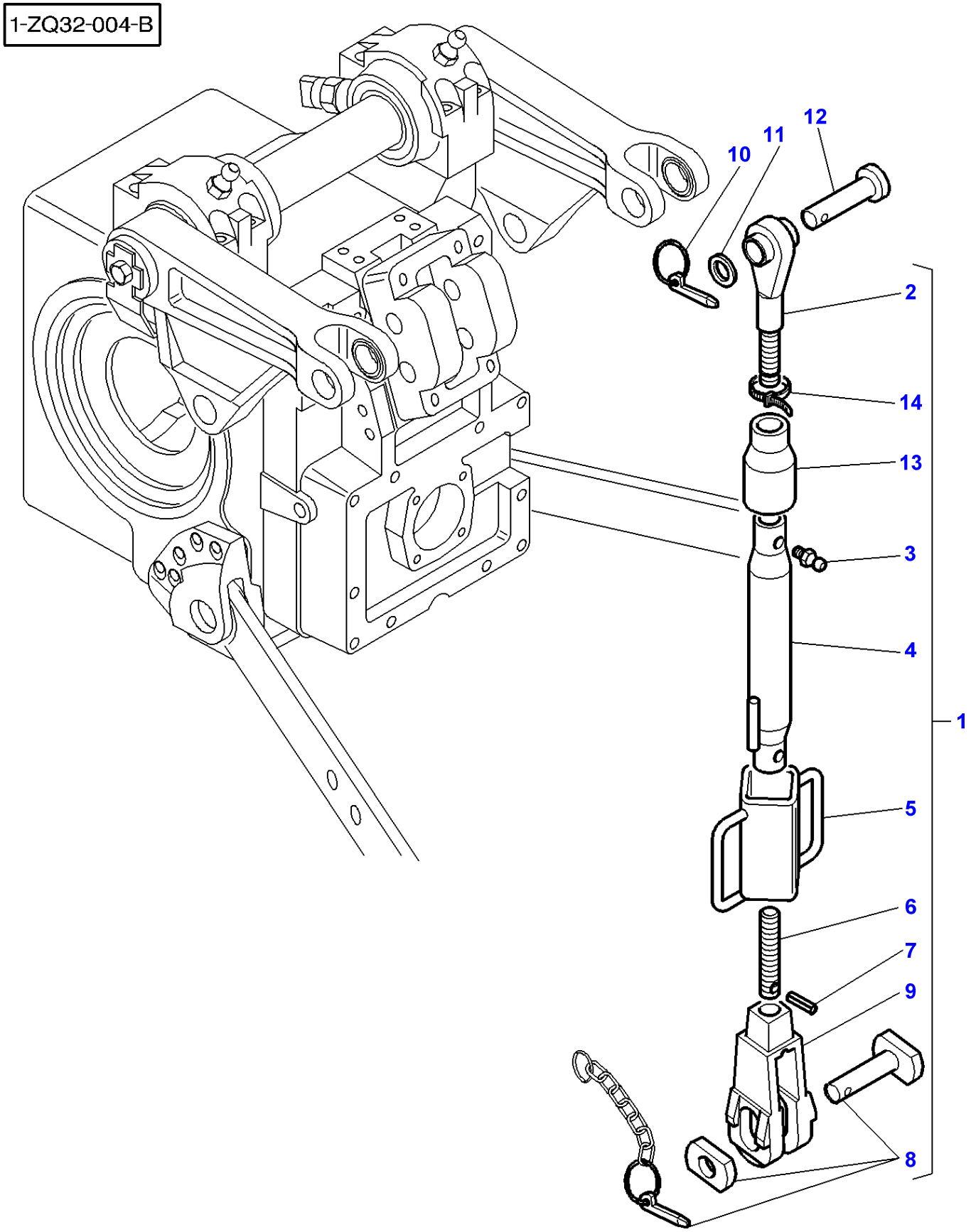

https://truckmanualshub.com/

Item	Part Number	Qty	Description	Comments
1	3792920M1	2	Draglink	Replace and repair. Old not interchangeable with new 3716615M2
2	3902790M1	1	Toggle	(1)
3		2	Greaser	(1) Not serviced, order REF. 4
4	3902788M1	1	Tube	(1)
5	3902787M2	1	Handle	(1)
6	3902785M1	1	Clevis Pin	(1)
7	3902786M1	1	Pin	(1)
8	3902789M91	1	Parts Pack	(1)
9	3902784M1	1	Clevis	(1)
10	3387161M2	2	Pin	
11	3716148M1	2	Washer	Diameter 29 MM
12	3716661M1	2	Clevis Pin	
13	3903576M1	1	Protector	(1) From Serial or Engine Number J168027
14	3903577M1	1	Clamp	(1) From Serial or Engine Number J168027

https://truckmanualshub.com/

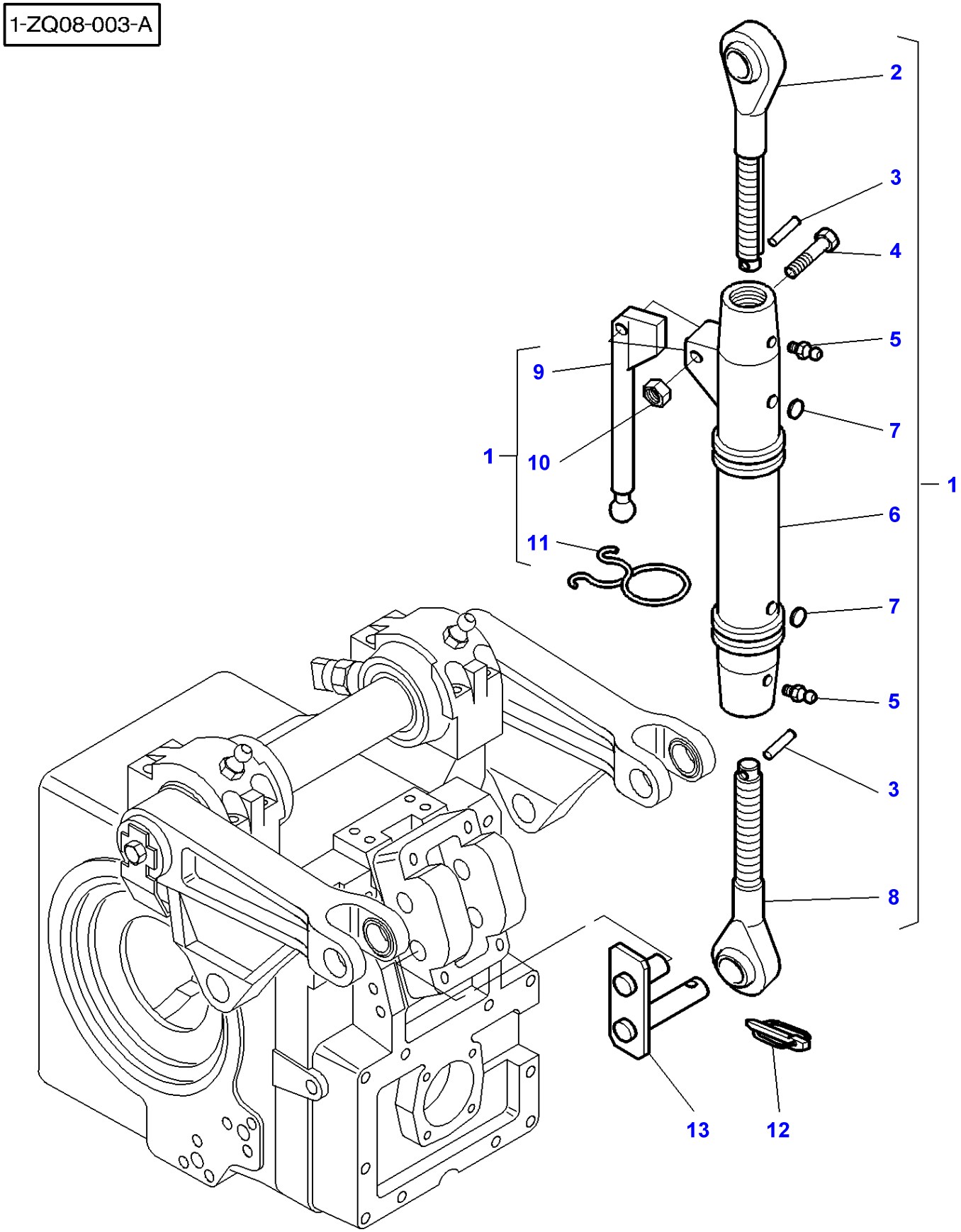

https://truckmanualshub.com/

Item	Part Number	Qty	Description	Comments
1	3716663M1	1	Top Link	
2	**3902856M1**	1	Toggle	(1)
3	3902853M1	2	Clevis Pin	(1)
4	339679X1	1	Bolt Metric	(1)
5	3902857M1	2	Greaser	(1)
6	3902852M1	1	Tube	(1)
7	3902858M1	2	Plug	(1)
8	3902851M1	1	Toggle	(1)
9	3902855M1	1	Lever	(1)
10	1440329X1	1	Locknut	(1)
11	3902854M1	1	Retainer	(1)
12	3387161M2	1	Pin	
13	3716129M3	1	Clevis Pin	

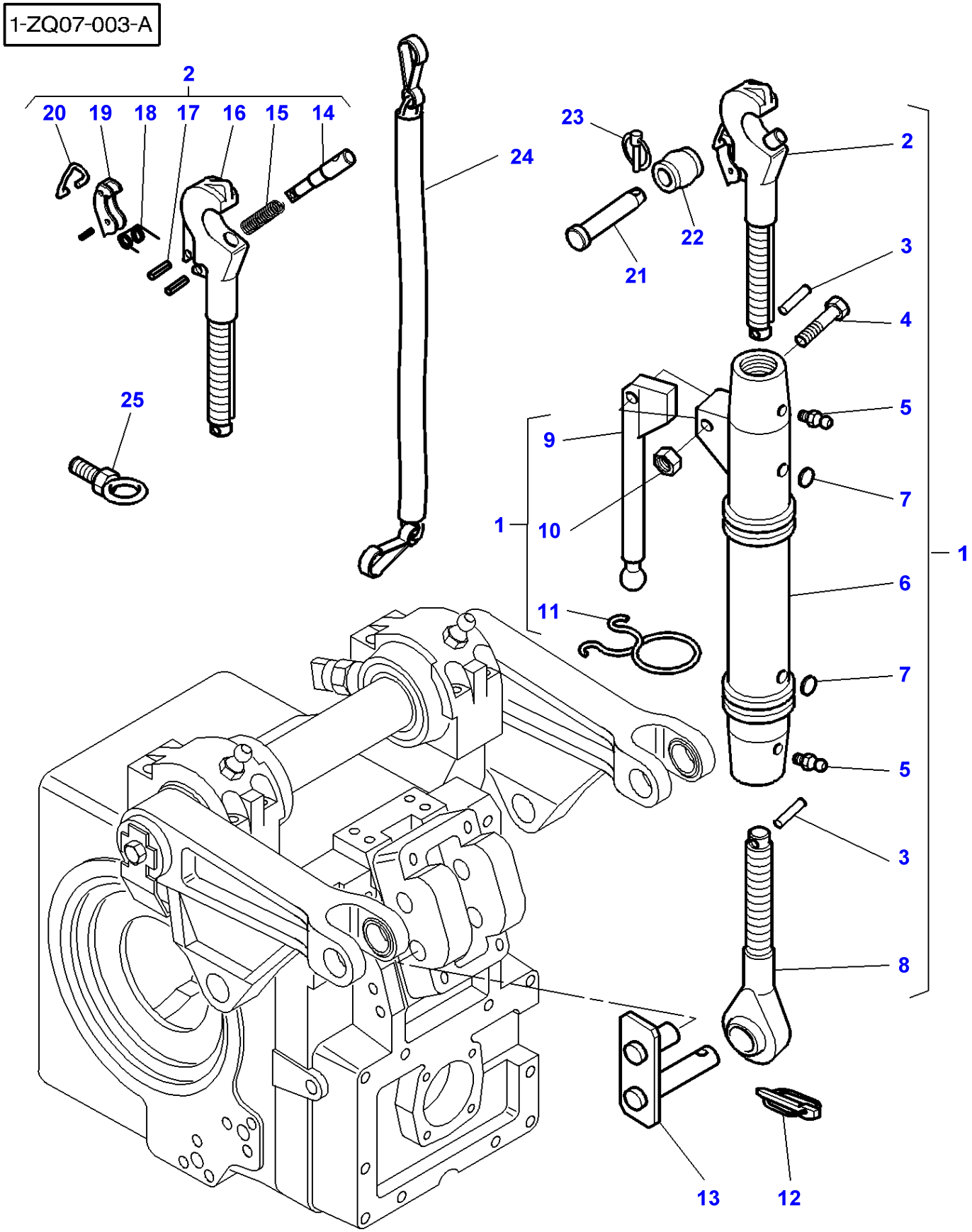
1-ZQ07-003-A
2
20
19
18
17
16
15
14
24
23
2
22
21
3
4
25
5
9
7
1
10
1
6
11
7
5
3
8
13
12

https://truckmanualshub.com/

Item	Part Number	Qty	Description	Comments
1	3716607M1	1	Top Link	
2	3902908M91	1	Hook	(1)
3	3902853M1	2	Clevis Pin	(1)
4	339679X1	1	Bolt Metric	(1)
5	3902857M1	2	Greaser	(1)
6	3902852M1	1	Tube	(1)
7	3902858M1	2	Plug	(1)
8	3902851M1	1	Toggle	(1)
9	3902855M1	1	Lever	(1)
10	1440329X1	1	Locknut	(1)
11	3902854M1	1	Retainer	(1)
12	3387161M2	1	Pin	
13	3716129M3	1	Clevis Pin	
14	3101927M1	1	Clevis Pin	(2)
15	3101929M1	1	Spring	(2)
16		1	Hook	(2)
				Not serviced, order REF.2
17	339662X1	3	Pin	(2)
18	3101930M1	1	Spring	(2)
19	3902909M1	1	Lever	(2)
20	3101935M1	1	Tie	(2)
21	367073X1	1	Clevis Pin	31,75 X 130,2MM
	3582043M2	1	Clevis Pin	25,4 X 124MM
22	3042434M1	1	Toggle	CAT.3
	3042433M1	1	Toggle	CAT.2/3
23	3387161M2	1	Pin	
24	3619220M1	1	Chain	Length 1500MM
25	3580524M91	1	Ring	

https://truckmanualshub.com/

1-ZQ35-002-A

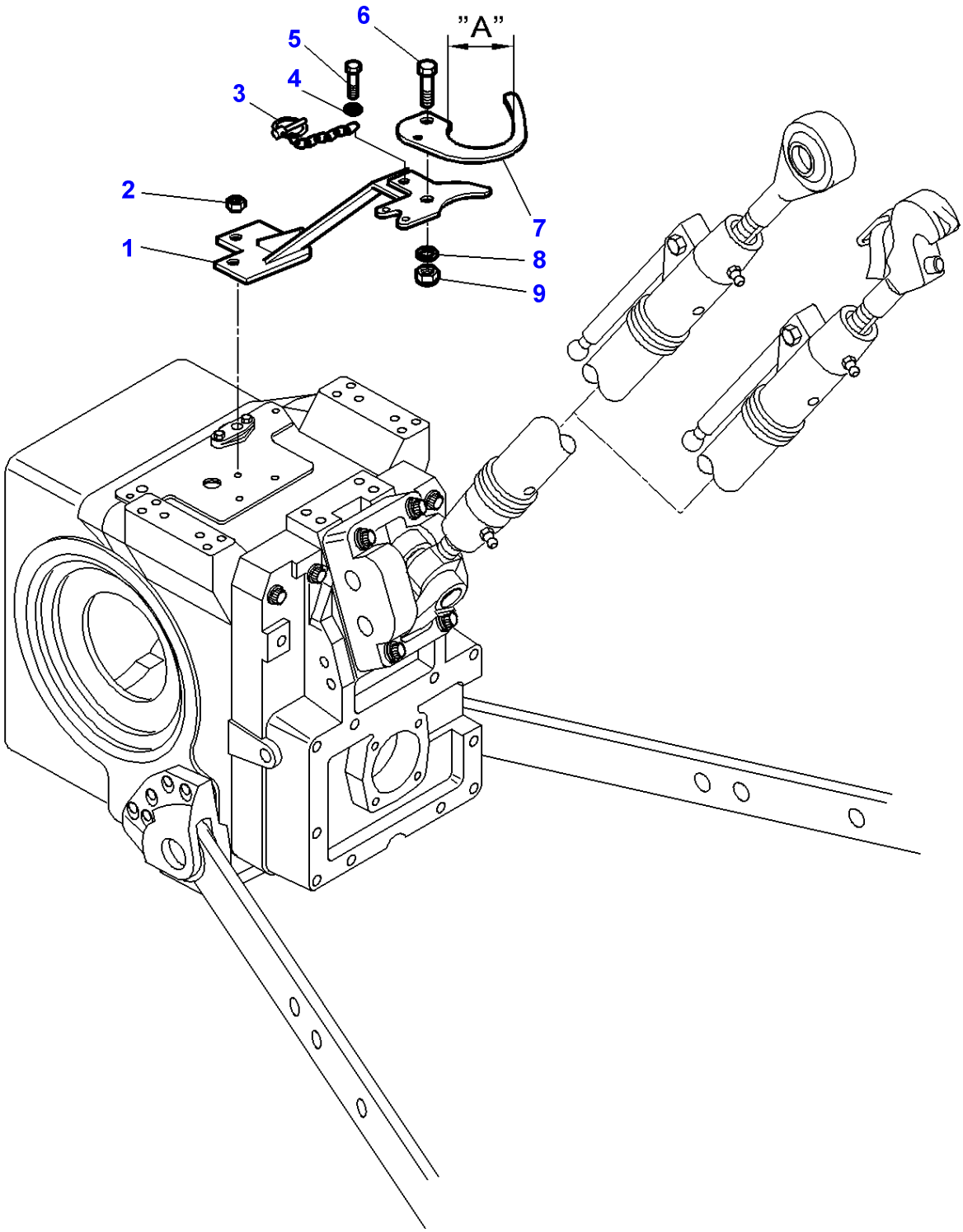

https://truckmanualshub.com/

Item	Part Number	Qty	Description	Comments
1	3792183M1	1	Support	
2	1440330X1	3	Locknut	
3	3712199M91	1	Chain	
4	390971X1	1	Washer	
5	339560X1	1	Hex. Sock. Screw	M6X16MM
6	339009X1	1	Hex. Sock. Screw	M8X35MM
7	3791881M2	1	Latch	"A"= 76MM
8	390972X1	1	Washer Metric	
9	394367X1	1	Locknut	

https://truckmanualshub.com/

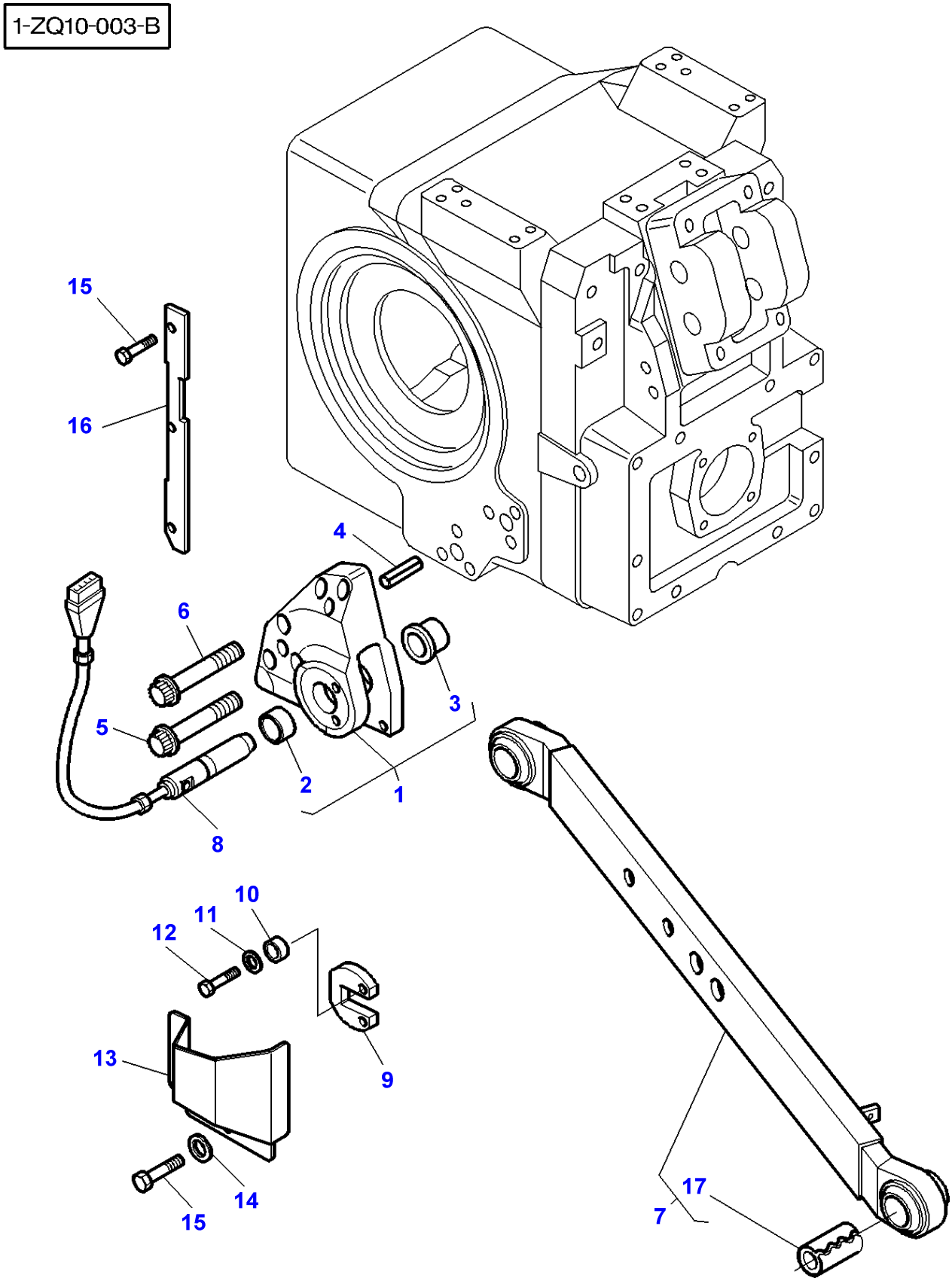

https://truckmanualshub.com/

Item	Part Number	Qty	Description	Comments
1	3791868M11	1	Clevis	Right Hand
	3791867M11	1	Clevis	Left Hand
2	3716994M2	1	Bush	(1)
3	3716995M2	1	Bush	(1)
4	3716624M1	4	Centraliser	
5	3010434X1	10	Screw Metric	M20x80
6	3010558X1	2	Screw Metric	M20x120
7	3791416M2	2	Drawbar	
8	**3713764M1**	2	Sensing Pin	6T
	3716981M1	2	Inductive Taker	9T
9	3716499M1	2	Plate	
10	3384183M2	4	Bush	
11	385362X1	4	Washer Metric	
12	3001429X1	4	Screw	M10X35
13	3791630M1	1	Protector	Left Hand
	3791631M1	1	Protector	Right Hand
14	390972X1	6	Washer Metric	
15	339124X1	12	Hex. Sock. Screw	M8X16
16	3791193M1	2	Cowl	
17	3900841M1	1	Bush	(7)

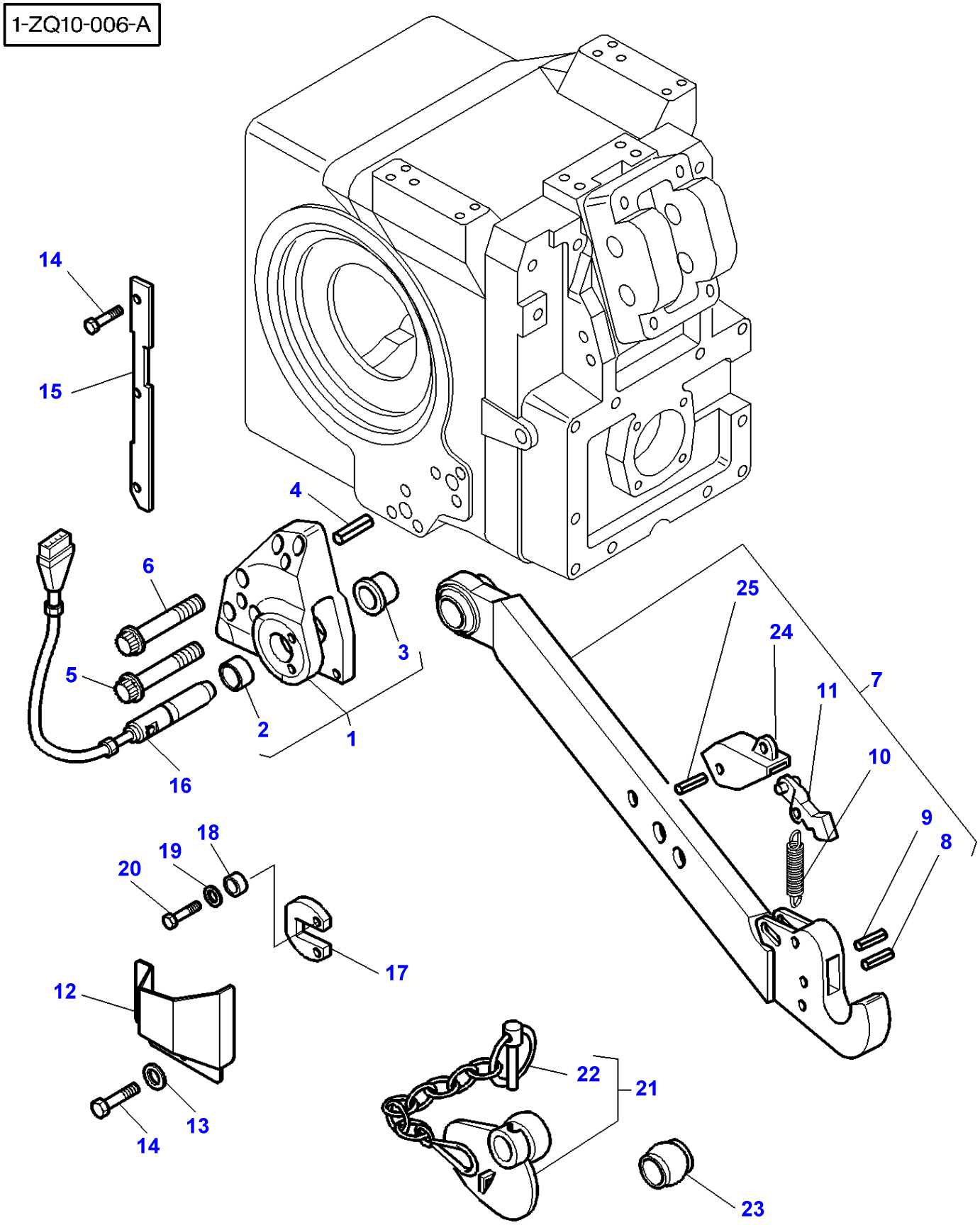
1-ZQ10-006-A
14
15
4
6
5
3
2
1
16
25
24
7
11
10
9
8
18
19
20
17
12
22
21
13
14
23

https://truckmanualshub.com/

Item	Part Number	Qty	Description	Comments
1	3791868M11	1	Clevis	Right Hand
	3791867M11	1	Clevis	Left Hand
2	3716994M2	1	Bush	(1)
3	3716995M2	1	Bush	(1)
4	3716624M1	4	Centraliser	
5	3010434X1	10	Screw Metric	M20x80
6	3010558X1	2	Screw Metric	M20x120
7	3716604M1	1	Bar	Left Hand
				CAT . 3
	3716605M1	1	Bar	Right Hand
				CAT . 3
8	339783X1	1	Pin	(7)
				Diameter 6X32MM
9	3008317X1	1	Pin	(7)
10	3101934M1	1	Spring	(7)
11	3106461M1	1	Ratchet	(7)
12	3791630M1	1	Protector	Left Hand
	3791631M1	1	Protector	Right Hand
13	390972X1	6	Washer Metric	
14	339124X1	12	Hex. Sock. Screw	M8X16
15	3791193M1	2	Cowl	
16	**3713764M1**	2	Sensing Pin	6T
	3716981M1	2	Inductive Taker	9T
17	3716499M1	2	Plate	
18	3384183M2	4	Bush	
19	385362X1	4	Washer Metric	
20	3001429X1	4	Screw	M10X35
21	**3042427M1**	2	Toggle	CAT 2/3
	3042428M1	2	Toggle	CAT 3
22	3102086M91	1	Linch Pin	(21)
23	**3042430M1**	2	Toggle	CAT 2/3
	3042431M1	2	Toggle	CAT 3
24	3103830M1	1	Lever	(7)
25	339290X1	1	Pin	(7)

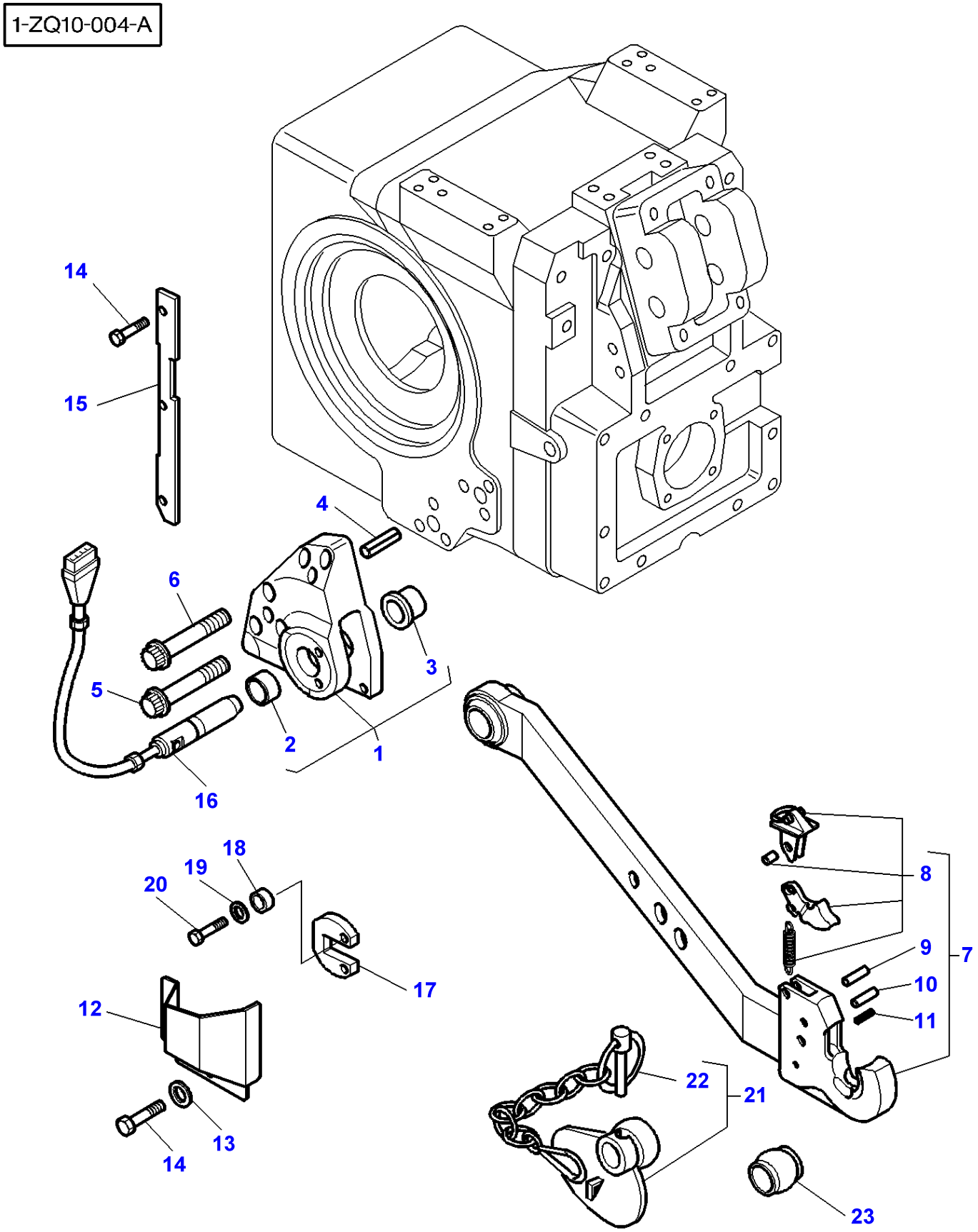
1-ZQ10-004-A
14
15
4
6
3
5
2
1
16
18
19
20
17
12
13
14
8
9
7
10
11
22
21
23

https://truckmanualshub.com/

Item	Part Number	Qty	Description	Comments
1	3791868M11	1	Clevis	Right Hand
	3791867M11	1	Clevis	Left Hand
2	3716994M2	1	Bush	(1)
3	3716995M2	1	Bush	(1)
4	3716624M1	4	Centraliser	
5	3010434X1	10	Screw Metric	M20x80
6	3010558X1	2	Screw Metric	M20x120
7	3792536M1	1	Bar	Left Hand
				CAT . 3
	3792535M1	1	Bar	Right Hand
				CAT . 3
8	3903314M91	1	Kit, Repair	(7)
9	3006429X1	1	Pin	(7)
10	3008317X1	1	Pin	(7)
11	339783X1	1	Pin	(7)
12	3791630M1	1	Protector	Left Hand
	3791631M1	1	Protector	Right Hand
13	390972X1	6	Washer Metric	
14	339124X1	12	Hex. Sock. Screw	M8X16
15	3791193M1	2	Cowl	
16	**3713764M1**	2	Sensing Pin	6T
	3716981M1	2	Inductive Taker	9T
17	3716499M1	2	Plate	
18	3384183M2	4	Bush	
19	385362X1	4	Washer Metric	
20	3001429X1	4	Screw	M10X35
21	**3042427M1**	2	Toggle	CAT 2/3
	3042428M1	2	Toggle	CAT 3
22	3102086M91	1	Linch Pin	(21)
23	**3042430M1**	2	Toggle	CAT 2/3
	3042431M1	2	Toggle	CAT 3

https://truckmanualshub.com/

1-ZQ36-008-A

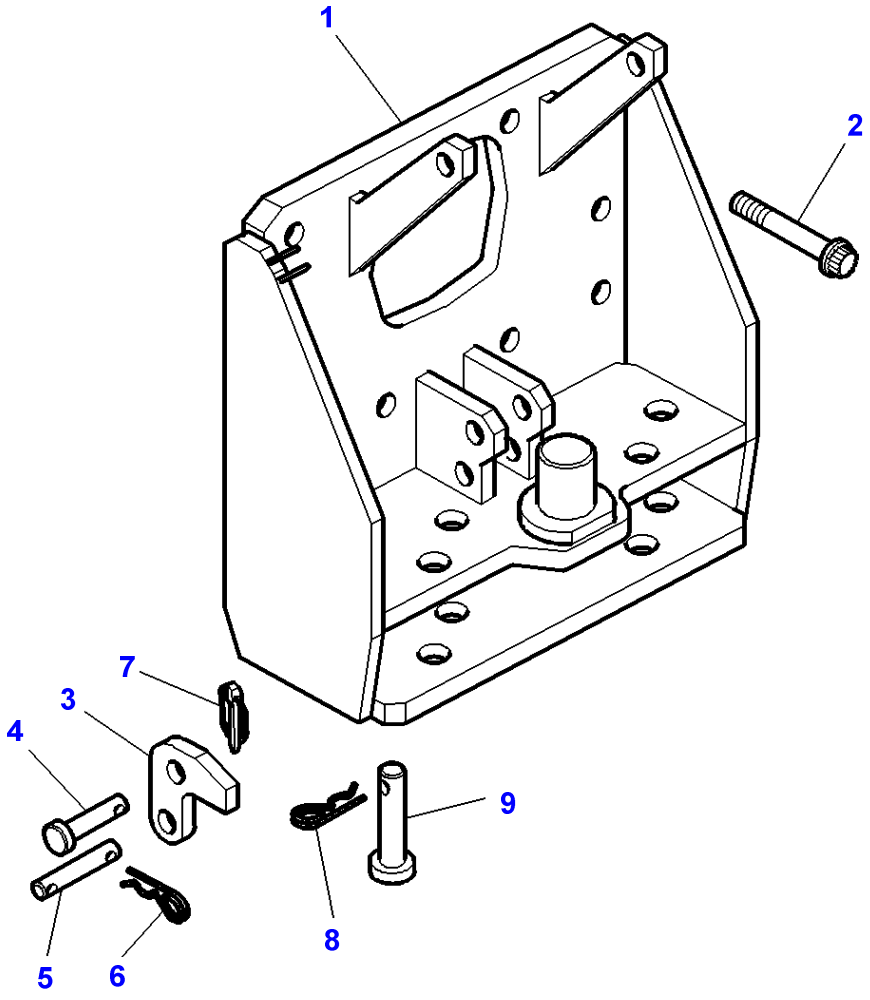

https://truckmanualshub.com/

Item	Part Number	Qty	Description	Comments
1	3716628M92	1	Support	
	3792414M91	1	Support	[A]
2	3010561X1	2	Screw	M20X50
	3010562X1	8	Screw	M20X230
3	3716639M1	1	Hook	
4	3582216M1	1	Clevis Pin	
5	3582197M1	1	Clevis Pin	
6	391403X1	1	Split Pin	
7	3382824M1	1	Pin	
8	3010932X1	2	Pin	Replace and repair. Old interchangeable with new 3010632X1
9	3010631X1	2	Clevis Pin	

FOOTNOTE [A] WITH TRAILED IMPLEMEMT CONTROL

https://truckmanualshub.com/

1-ZQ36-009-A

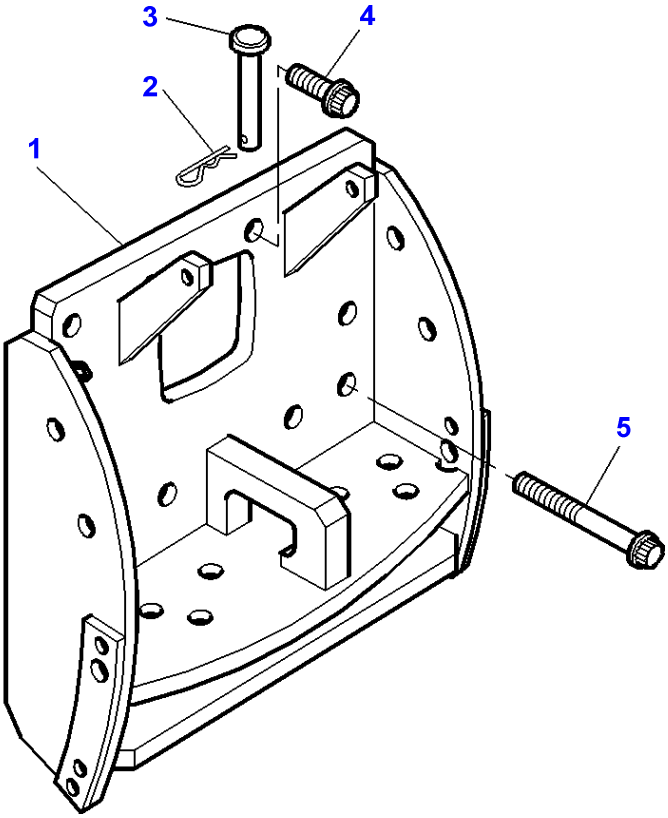

https://truckmanualshub.com/

Item	Part Number	Qty	Description	Comments
1	3716130M92	1	Support	
	3792425M91	1	Support	[A]
2	3010932X1	2	Pin	Replace and repair. Old interchangeable with new 3010632X1
3	3010631X1	2	Clevis Pin	
4	3010561X1	2	Screw	M20X50
5	3010562X1	8	Screw	M20X230

FOOTNOTE [A] WITH TRAILED IMPLEMEMT CONTROL

https://truckmanualshub.com/

1-ZQ36-010-A

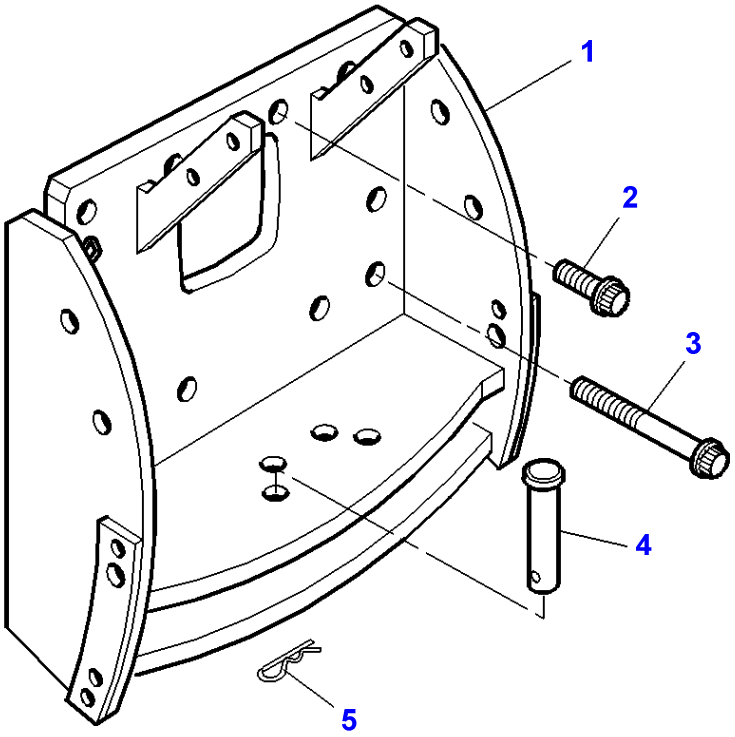

https://truckmanualshub.com/

Item	Part Number	Qty	Description	Comments
1	3791444M91	1	Support	
2	3010561X1	2	Screw	M20X50
3	3010562X1	8	Screw	M20X230
4	3010560X1	2	Clevis Pin	
5	365139X1	2	Hair Pin	

FOOTNOTE [A] WITH TRAILED IMPLEMEMT CONTROL

https://truckmanualshub.com/

1-ZQ36-007-B

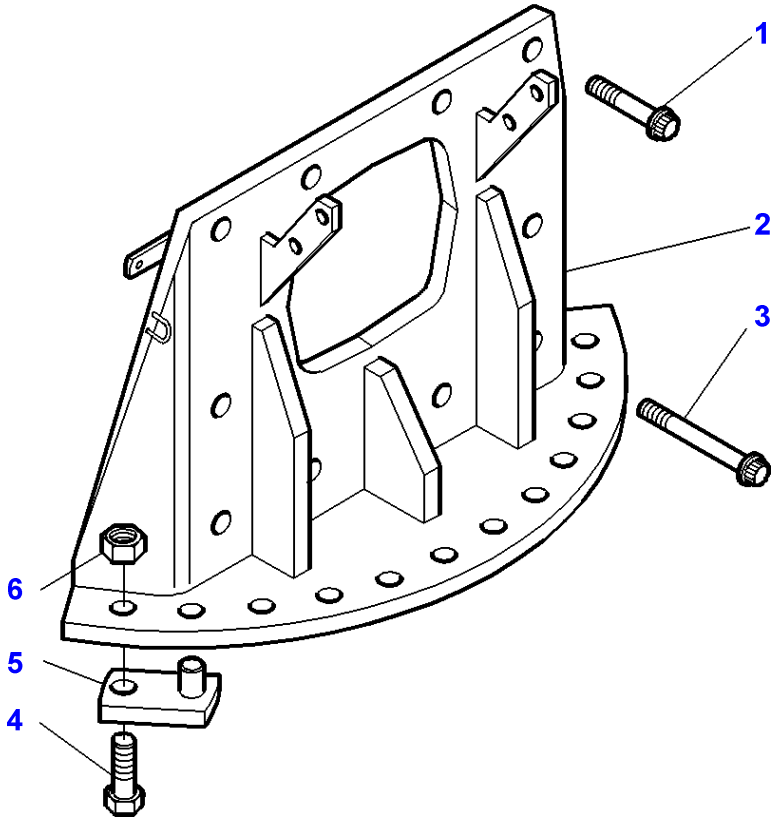

https://truckmanualshub.com/

Item	Part Number	Qty	Description	Comments
1	3010561X1	2	Screw	M20X50
2	3791514M93	1	Support	
3	3010562X1	8	Screw	M20X230
4	1442668X1	2	Screw	M20X70
5	3791677M92	2	Plate	
6	339035X1	2	Nut Metric	M20

1-ZQ18-005-B

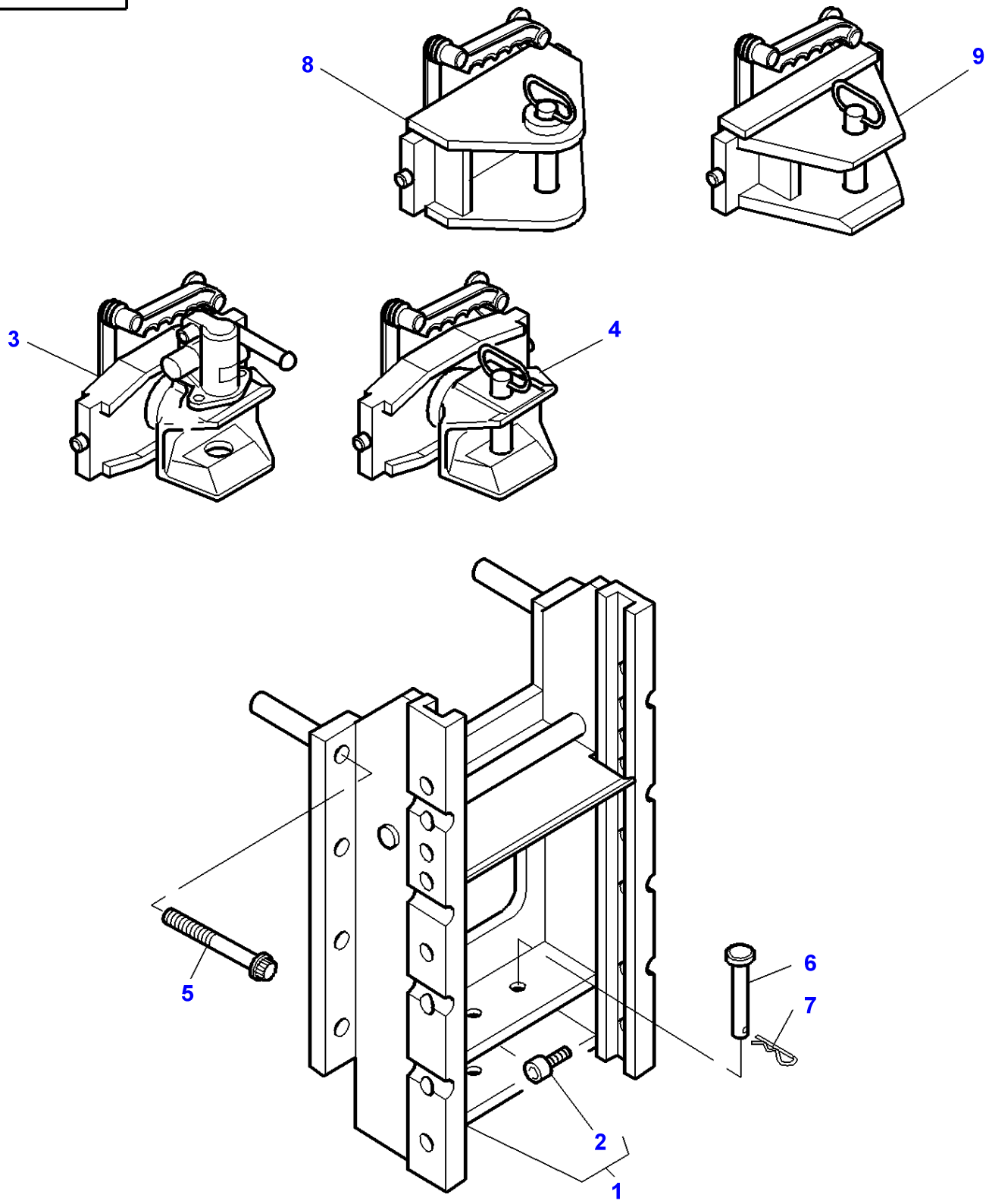

https://truckmanualshub.com/

Item	Part Number	Qty	Description	Comments
1	3791483M1	1	Support	
	3792574M1	1	Support	[A]
2	339114X1	1	Screw Metric	(1) M12X25
3	3791484M1	1	Clevis	For Germany only or any text in German only See Page - Reference Number 040-0090
	3792433M1	1	Clevis	For UK only or any text in English only See Page - Reference Number 040-0090
4	3791502M1	1	Clevis	
5	3010562X1	8	Screw	M20X230
	3010777X1	2	Screw Metric	M20X210
6	3010560X1	2	Clevis Pin	
7	3010932X1	2	Pin	Replace and repair. Old interchangeable with new 3010632X1
8	3792934M91	1	Clevis	For Italy only or any text in Italian only 20 T See Page - Reference Number 040-0085/5
9	3792932M91	1	Clevis	For Italy only or any text in Italian only 6 T See Page - Reference Number 040-0085/1

FOOTNOTE [A] WITH TRAILED IMPLEMEMT CONTROL

https://truckmanualshub.com/

1-ZQ18-008-A

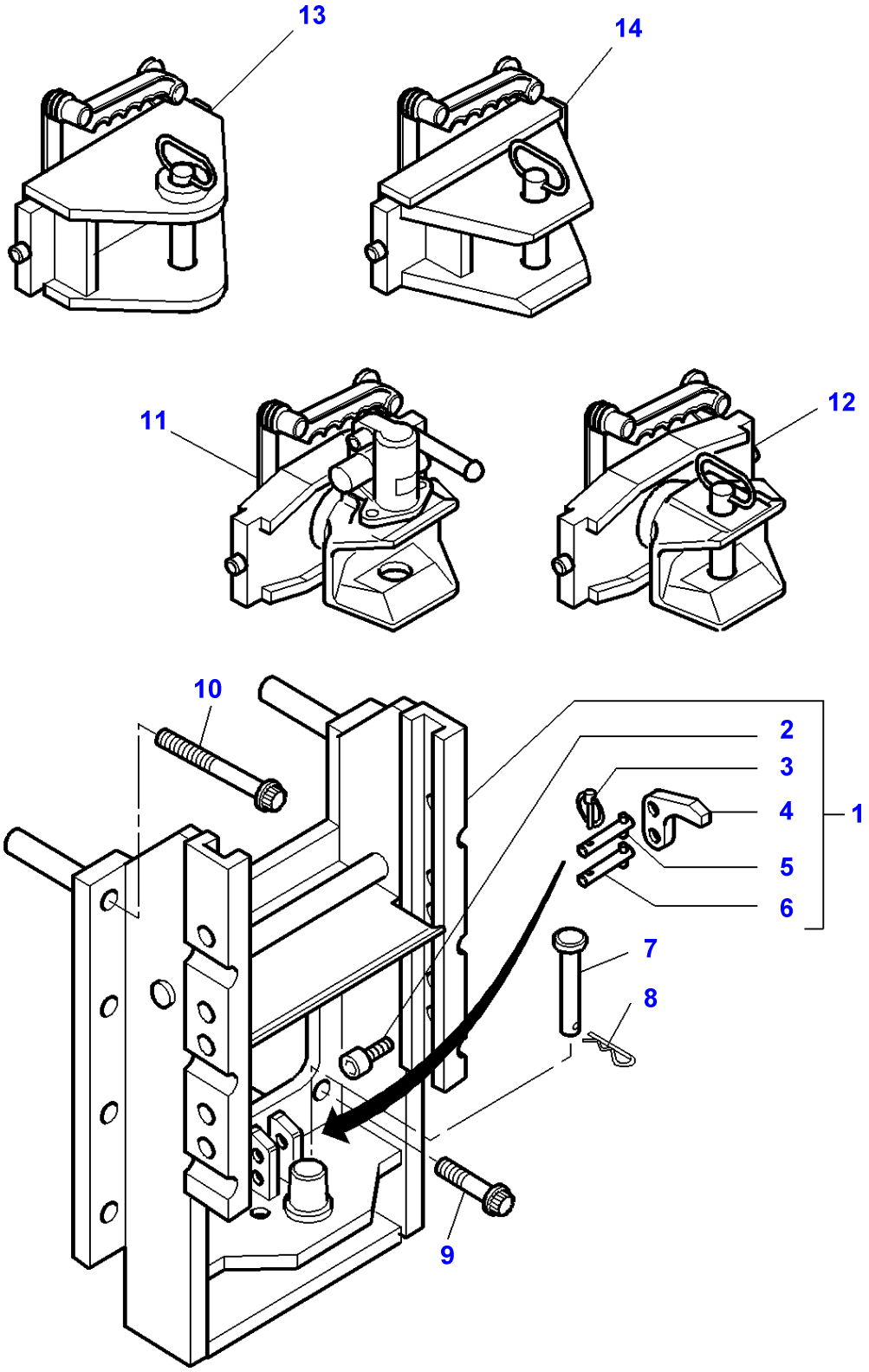

https://truckmanualshub.com/

Item	Part Number	Qty	Description	Comments
1	3791493M1	1	Support	
	3792575M1	1	Support	[A]
2	339114X1	1	Screw Metric	(1) M12X25
3	3382825M1	1	Pin	(1)
4	3903017M1	1	Hook	(1)
5	3714805M1	1	Clevis Pin	(1)
6	3714804M1	1	Clevis Pin	(1)
7	3010560X1	2	Clevis Pin	
8	3010932X1	2	Pin	Replace and repair. Old interchangeable with new 3010632X1
9	3010777X1	2	Screw Metric	M20X210
10	3010562X1	8	Screw	M20X230
11	3791484M1	1	Clevis	For Germany only or any text in German only See Page - Reference Number 040-0090
	3792433M1	1	Clevis	See Page - Reference Number 040-0090
12	3791502M1	1	Clevis	See Page - Reference Number 040-0095
13	3792934M91	1	Clevis	For Italy only or any text in Italian only 20 T See Page - Reference Number 040-0085/5
14	3792932M91	1	Clevis	For Italy only or any text in Italian only 6 T See Page - Reference Number 040-0085/1

FOOTNOTE [A] WITH TRAILED IMPLEMEMT CONTROL

https://truckmanualshub.com/

1-ZQ18-009-A

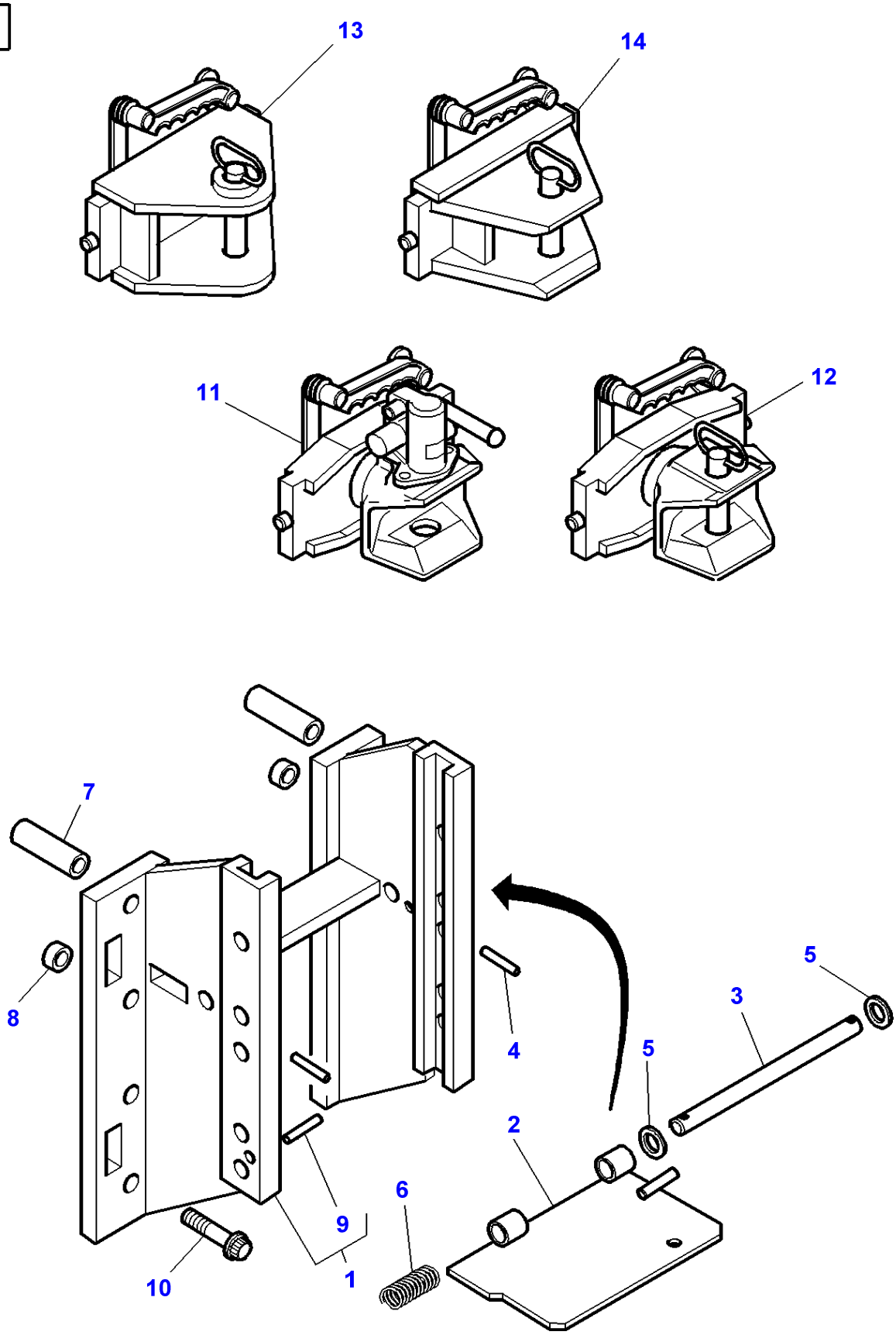

https://truckmanualshub.com/

Item	Part Number	Qty	Description	Comments
1	3794221M91	1	Support	
2	3794230M91	1	Cowl	
3	3794227M1	1	Clevis Pin	
4	391018X1	2	Pin	Diameter 5X35
5	390975X1	2	Washer Metric	
6	3794614M1	1	Spring	
7	3794663M1	2	Spacer	
8	3794662M1	2	Bush	
9	3794232M1	1	Thruster	(1)
10	3010997X1	8	Screw	M20X240
11	3791484M1	1	Clevis	For Germany only or any text in German only See Page - Reference Number 040-0090
	3792433M1	1	Clevis	See Page - Reference Number 040-0090
12	3791502M1	1	Clevis	See Page - Reference Number 040-0095
13	3792934M91	1	Clevis	For Italy only or any text in Italian only 20 T See Page - Reference Number 040-0085/5
14	3792932M91	1	Clevis	For Italy only or any text in Italian only 6 T ZQ181007 1

https://truckmanualshub.com/

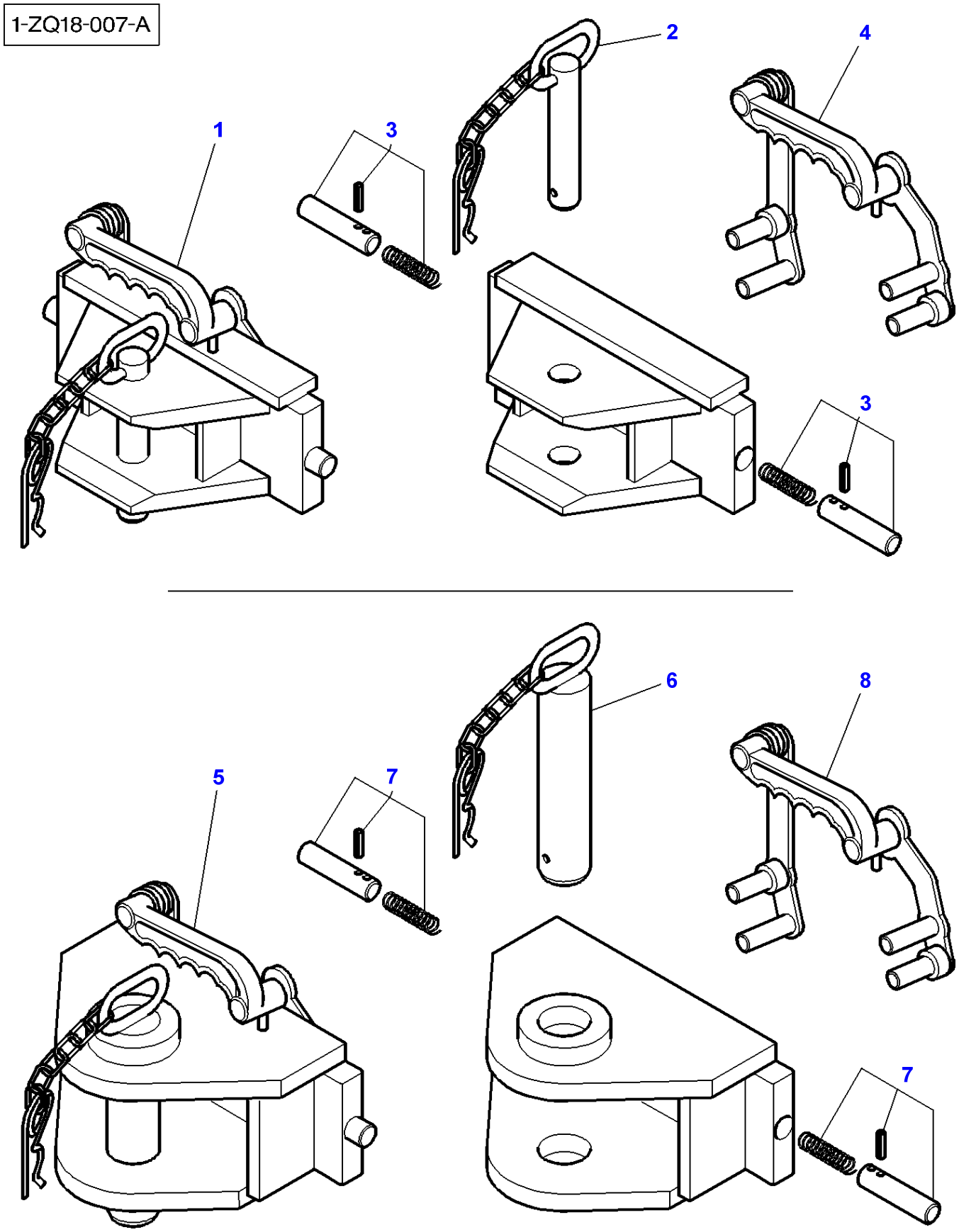

https://truckmanualshub.com/

Item	Part Number	Qty	Description	Comments
1	3792932M91	1	Clevis	For Italy only or any text in Italian only 6 T
2	3903398M91	1	Pin	(1) Diameter 28MM
3	3903394M91	1	Kit, Rod	(1)
4	3903431M91	1	Linkage	(1)
5	3792934M91	1	Clevis	For Italy only or any text in Italian only 20 T
6	3903397M91	1	Pin	(5) Diameter 50MM
7	3903394M91	1	Kit, Rod	(5)
8	3107940M92	1	Linkage	(5)

https://truckmanualshub.com/

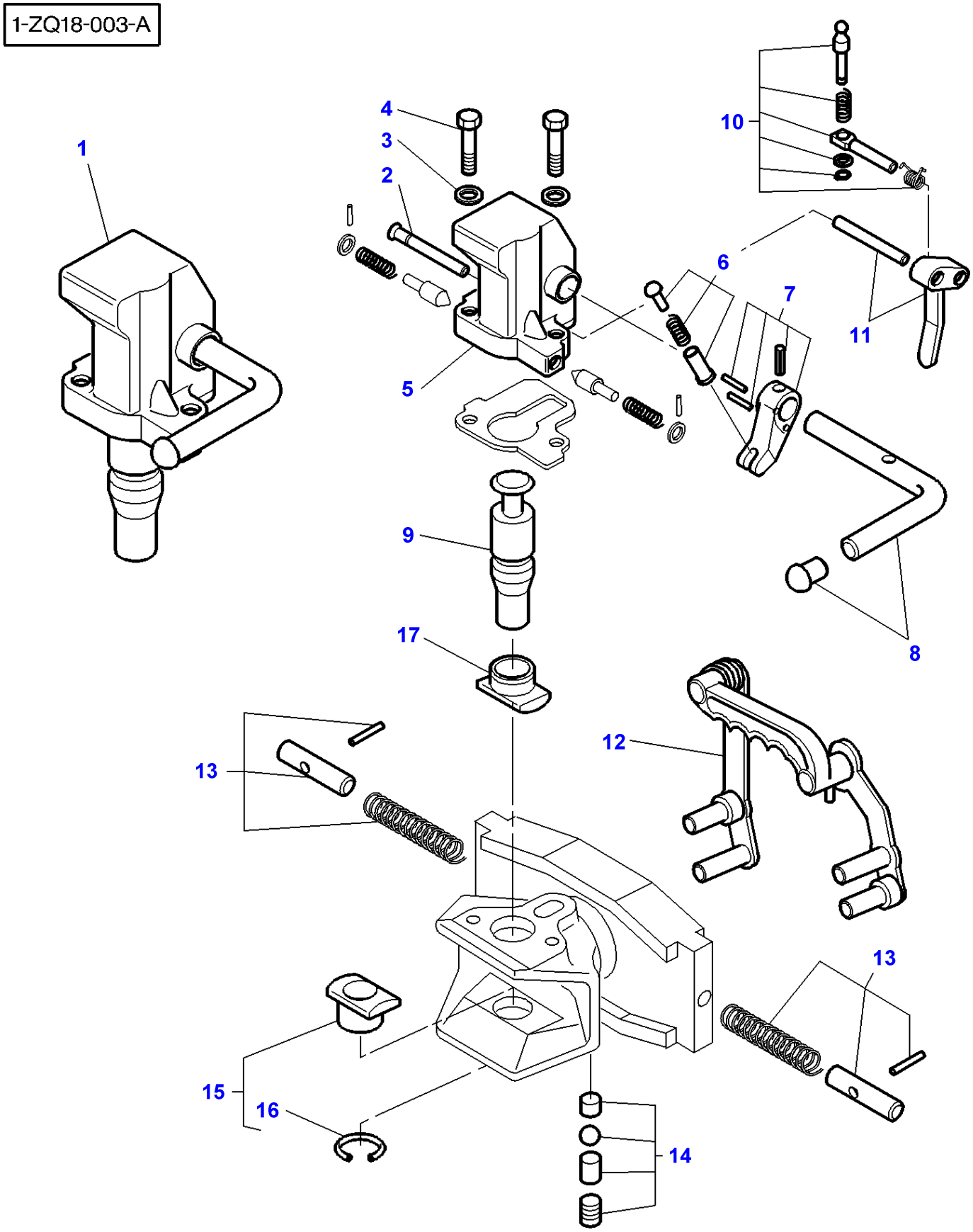

https://truckmanualshub.com/

Item	Part Number	Qty	Description	Comments
1	3902974M91	1	Head	For Germany only or any text in German only
				Diameter 37MM
	3903268M91	1	Head	Diameter 32MM
2	3902982M1	1	Clevis Pin	(1)
				For Germany only or any text in German only
	3903269M1	1	Clevis Pin	(1)
3	390734X1	2	Washer	(1)
4	339246X1	2	Bolt Metric	(1)
5		1	Head	(1)
				Not serviced, order REF. NO 1
6	3902979M91	1	Clevis Pin	(1)
7	3902978M91	1	Cam	(1)
8	3902977M91	1	Lever	(1)
9	3902981M91	1	Clevis Pin	(1)
				For Germany only or any text in German only
				Diameter 37MM
	3903267M91	1	Clevis Pin	(1)
				Diameter 32MM
10	3902976M91	1	Clevis Pin	(1)
11	3902975M91	1	Lever	(1)
12	3107940M92	1	Linkage	
13	3107941M91	2	Kit, Rod	For Germany only or any text in German only
	3903394M91	2	Kit, Rod	
14	3105953M91	1	Kit, Brake	
15	3902983M91	1	Sleeve	For Germany only or any text in German only
	3903264M91	1	Sleeve	
16	395520X1	1	Circlip	(15)
17	3902980M91	1	Sleeve	For Germany only or any text in German only
	3903266M91	1	Sleeve	

https://truckmanualshub.com/

1-ZQ18-004-A

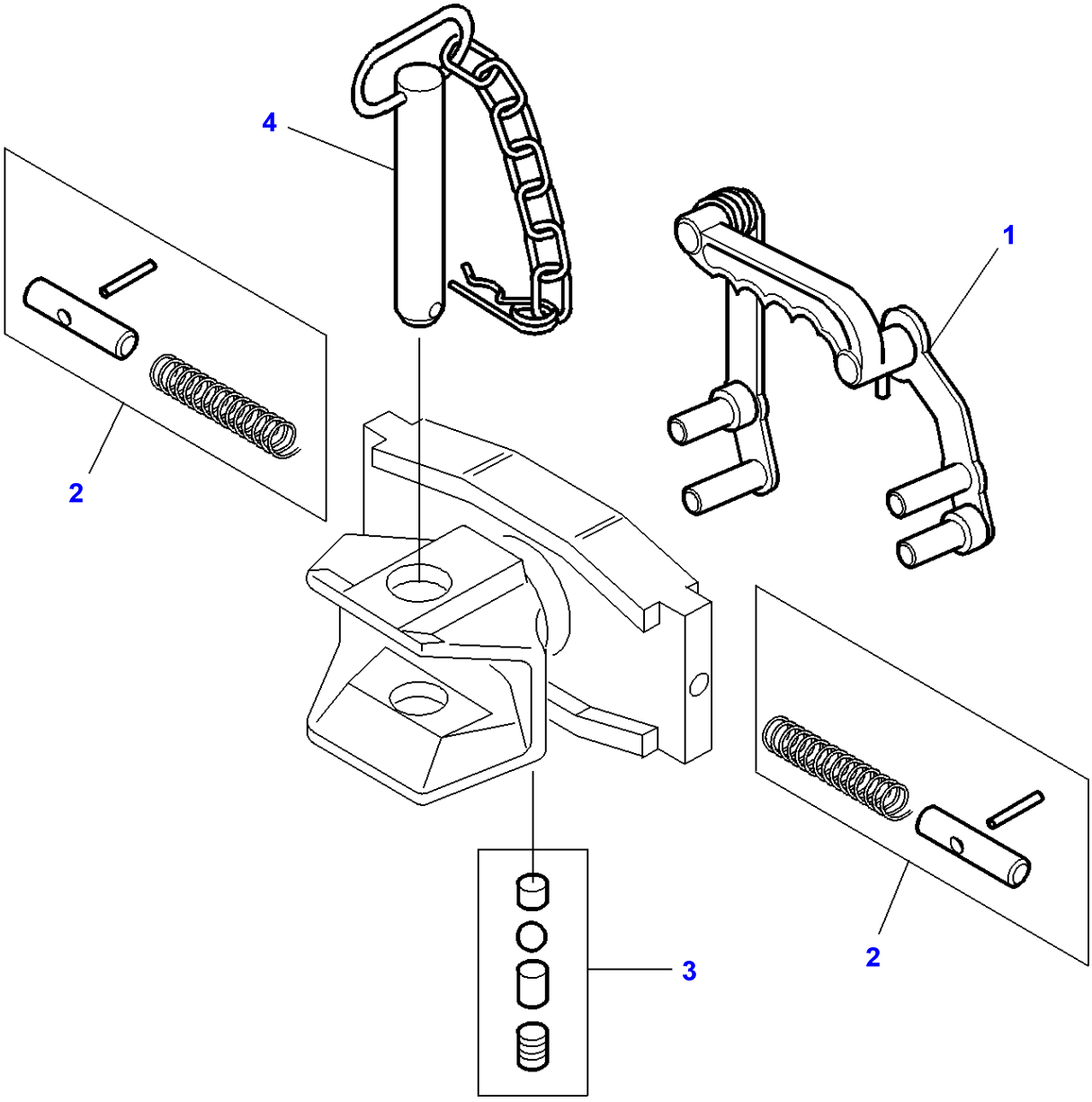

https://truckmanualshub.com/

Item	Part Number	Qty	Description
1	3107940M92	1	Linkage
2	3107941M91	2	Kit, Rod
3	3105953M91	1	Kit, Brake
4	3902984M91	1	Pin Hitch

https://truckmanualshub.com/

1-ZQ12-008-B

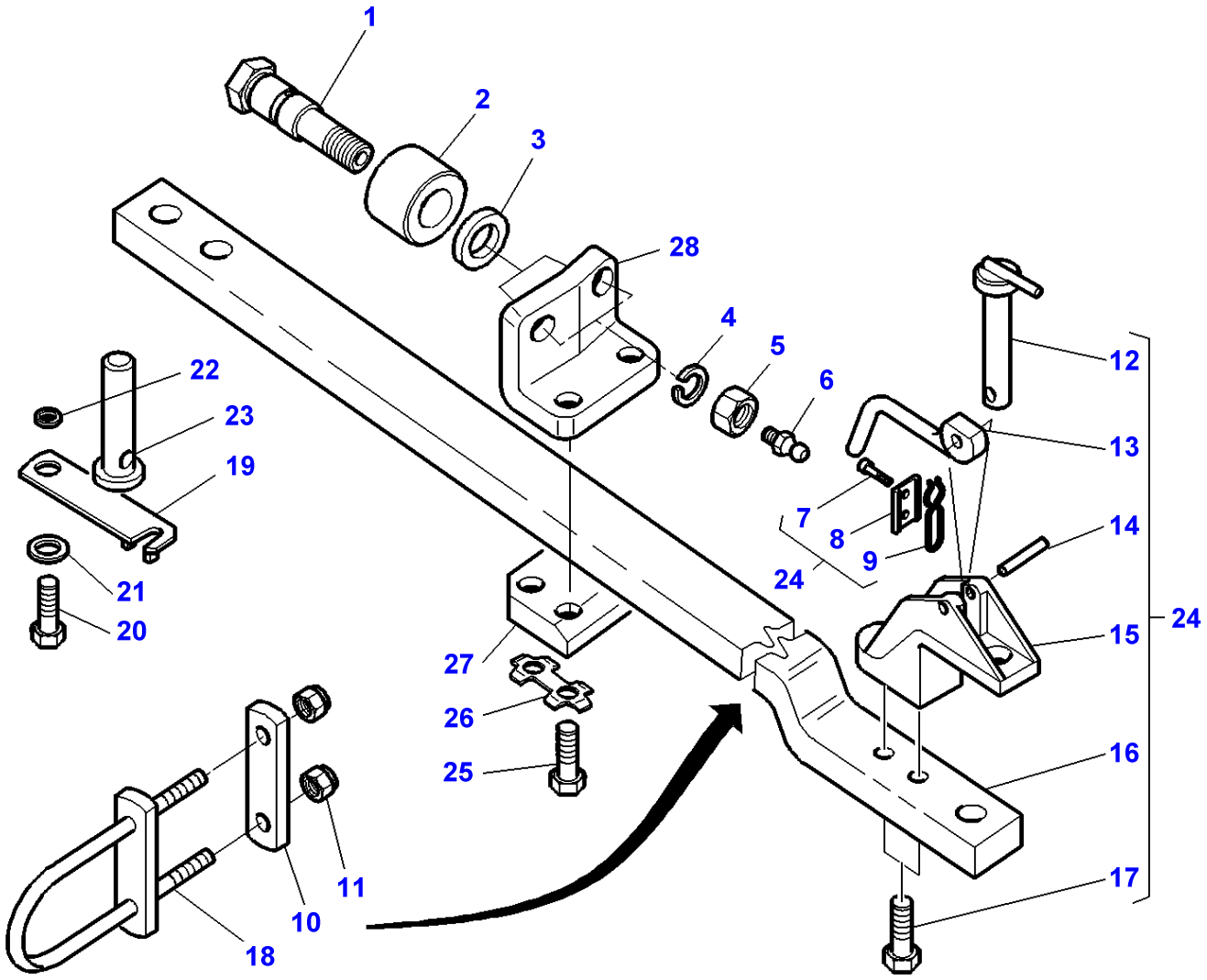

https://truckmanualshub.com/

Item	Part Number	Qty	Description	Comments
1	3791469M1	2	Clevis Pin	
2	3581980M1	2	Roll	
3	3791823M1	2	Washer	
4	353443X1	2	Washer	
5	375102X1	2	Nut Unc	
6	364461X1	2	Grease Nipple	
7	339560X1	2	Hex. Sock. Screw	(24)
8	3716621M2	1	Plate	(24)
9	3716622M1	1	Thruster	(24)
10	3716147M1	1	Counterplate	
11	1442739X1	2	Locknut	
12	**3716103M2**	1	Pin Hitch	(24)
13	3791643M1	1	Lever	(24)
14	3010553X1	1	Pin	(24)
15	3716619M3	1	Clevis	(24)
16		1	Bar	(24) Not serviced, order REF. NO 24
17	1442668X1	2	Screw	(24) M20X80
18	3716146M1	1	Shackle	
19	3716306M91	1	Plate	
20	3009492X1	2	Hex. Sock. Screw	M10X25
21	385362X1	2	Washer Metric	
22	3790749M1	1	Bush	
23	3716121M1	1	Clevis Pin	
24	3716631M94	1	Bar	
25	391332X1	4	Screw	M20X100
26	3790457M1	2	Tongue	
27	3791470M1	1	Counterplate	
28	3791467M1	1	Angle	

https://truckmanualshub.com/

1-ZQ12-013-A

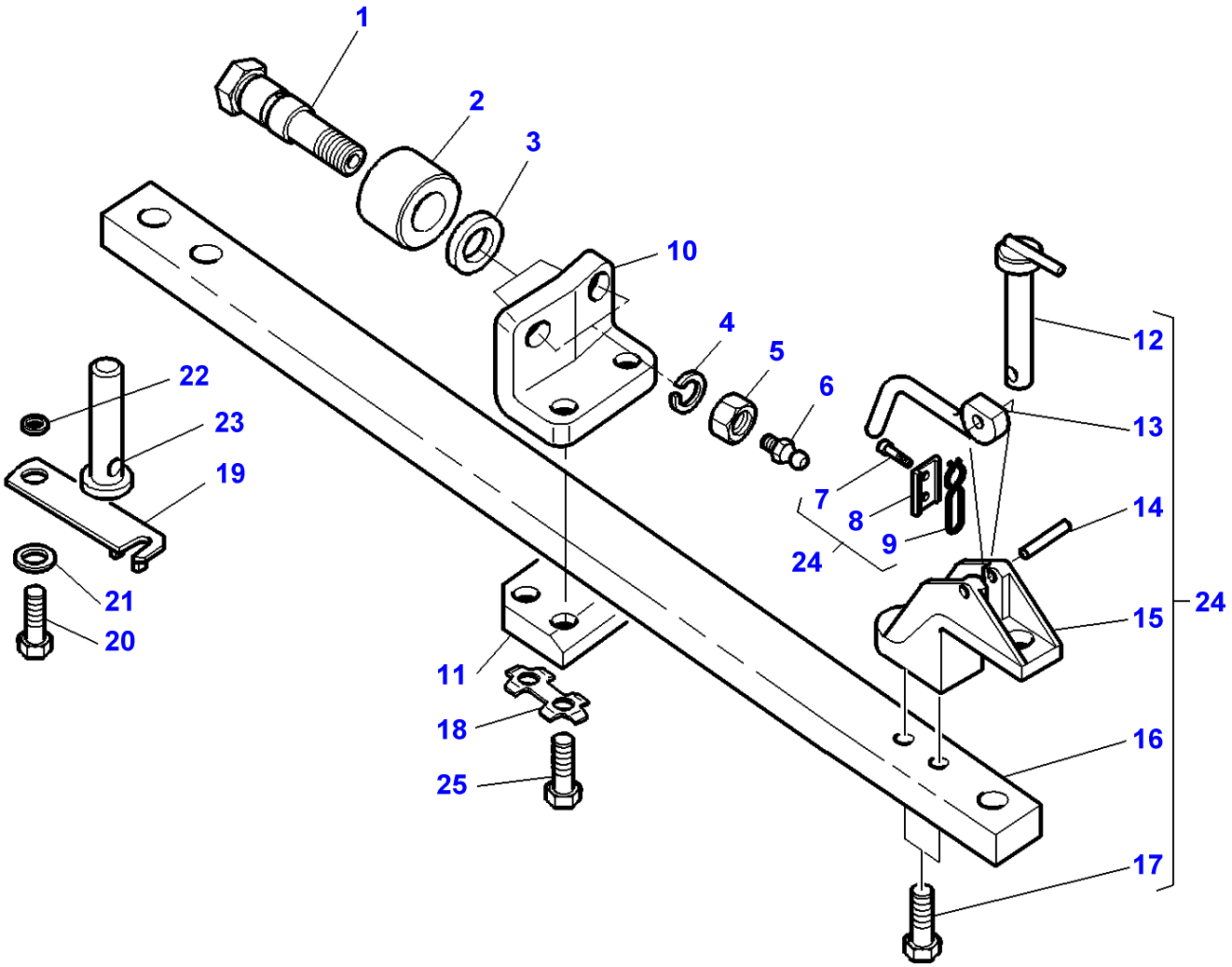

https://truckmanualshub.com/

Item	Part Number	Qty	Description	Comments
1	3791469M1	2	Clevis Pin	
2	3581980M1	2	Roll	
3	3791823M1	2	Washer	
4	353443X1	2	Washer	
5	375102X1	2	Nut Unc	
6	364461X1	2	Grease Nipple	
7	339560X1	2	Hex. Sock. Screw	(24)
8	3716621M2	1	Plate	(24)
9	3716622M1	1	Thruster	(24)
10	3791467M1	1	Angle	
11	3791470M1	1	Counterplate	
12	3716103M2	1	Pin Hitch	(24)
13	3791643M1	1	Lever	(24)
14	3010553X1	1	Pin	(24)
15	3716619M3	1	Clevis	(24)
16		1	Bar	(24)
				Not serviced, order REF. NO 24
17	1442668X1	2	Screw	(24)
				M20X80
18	3790457M1	2	Tongue	
19	3716306M91	1	Plate	
20	3009492X1	2	Hex. Sock. Screw	M10X25
21	385362X1	2	Washer Metric	
22	3790749M1	1	Bush	
23	3716121M1	1	Clevis Pin	
24	3716631M94	1	Bar	
25	391332X1	4	Screw	M20X100

https://truckmanualshub.com/

1-ZQ12-006-B

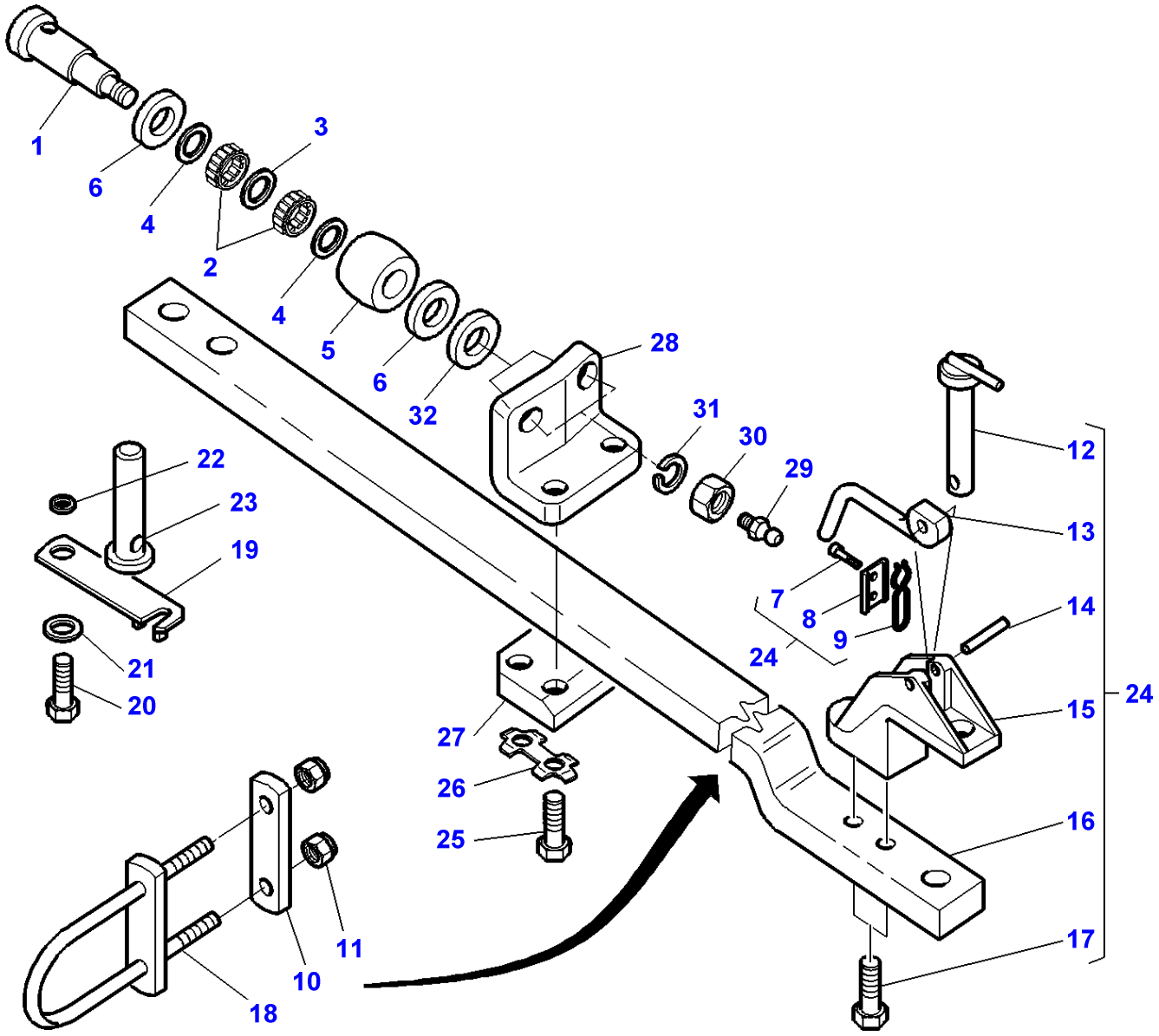

https://truckmanualshub.com/

Item	Part Number	Qty	Description	Comments
1	3791858M1	2	Roll Axle	
2	833083M1	4	Bearing Needle	
3	1618225M1	2	Spacer	
4	831225M1	4	Seal	
5	1618190M1	2	Roller	
6	1618290M1	4	Washer	
7	339560X1	2	Hex. Sock. Screw	(24)
8	3716621M2	1	Plate	(24)
9	3716622M1	1	Thruster	(24)
10	3716147M1	1	Counterplate	
11	1442739X1	2	Locknut	
12	**3716103M2**	1	Pin Hitch	(24)
13	3791643M1	1	Lever	(24)
14	3010553X1	1	Pin	(24)
15	3716619M3	1	Clevis	(24)
16		1	Bar	(24) Not serviced, order REF. NO 24
17	1442668X1	2	Screw	(24) M20X80
18	3716146M1	1	Shackle	
19	3716306M91	1	Plate	
20	3009492X1	2	Hex. Sock. Screw	M10X25
21	385362X1	2	Washer Metric	
22	3790749M1	1	Bush	
23	3716121M1	1	Clevis Pin	
24	3716101M92	6	Bar	
25	391332X1	4	Screw	M20X100
26	3790457M1	2	Tongue	
27	3791470M1	1	Counterplate	
28	3791528M1	1	Angle	
29	364461X1	2	Grease Nipple	
30	375102X1	2	Nut Unc	
31	353443X1	2	Washer	
32	3791823M1	2	Washer	

https://truckmanualshub.com/

1-ZQ12-002-B

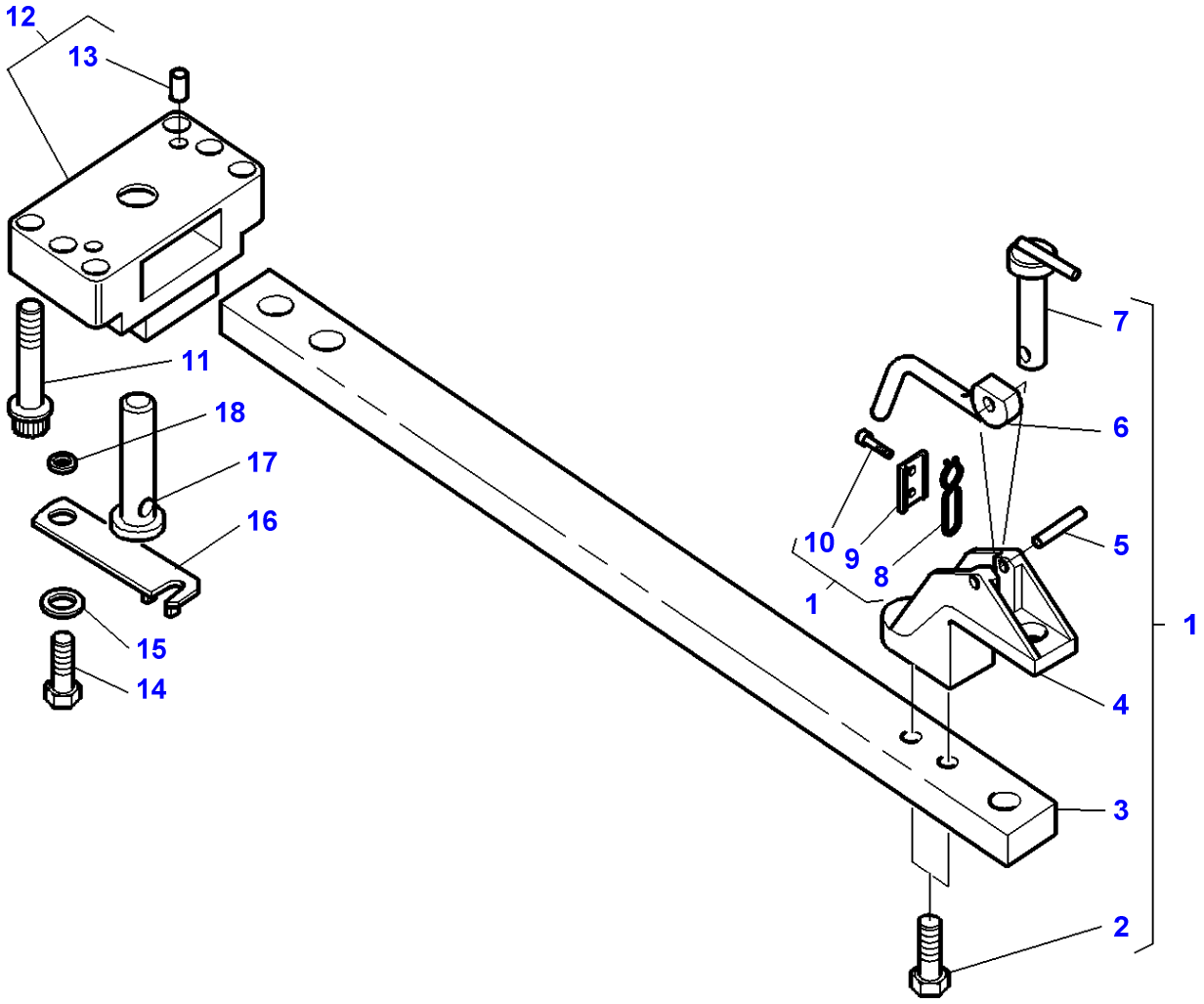

https://truckmanualshub.com/

Item	Part Number	Qty	Description	Comments
1	3716631M94	1	Bar	
2	1442668X1	2	Screw	(1) M20X80
3		1	Bar	(1) Not serviced, order REF.1
4	3716619M3	1	Clevis	(1)
5	3010553X1	1	Pin	(1)
6	3791643M1	1	Lever	(1)
7	**3716103M2**	1	Pin Hitch	(1)
8	3716622M1	1	Thruster	(1)
9	3716621M2	1	Plate	(1)
10	339560X1	2	Hex. Sock. Screw	(1)
11	3010557X1	6	Screw Metric	M20X100
12	3793161M11	1	Bearing Carrier	
13	3716624M1	2	Centraliser	(12) Replace and repair. Old not interchangeable with new 3716623M3
14	3009492X1	2	Hex. Sock. Screw	M10X25
15	385362X1	2	Washer Metric	
16	3716306M91	1	Plate	
17	3716121M1	1	Clevis Pin	
18	3790749M1	1	Bush	

https://truckmanualshub.com/

1-ZQ12-007-B

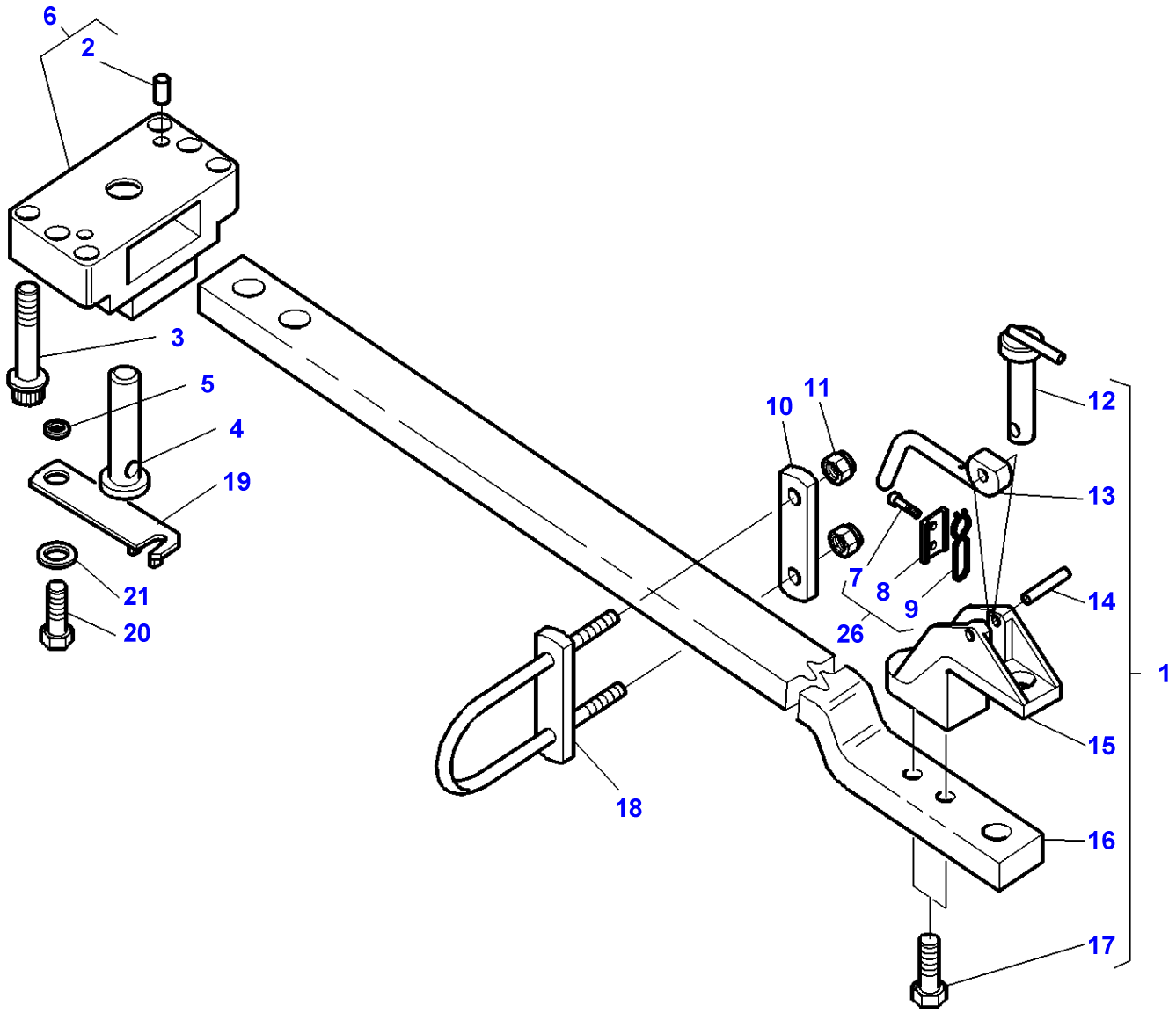

https://truckmanualshub.com/

Item	Part Number	Qty	Description	Comments
1	3716101M92	1	Bar	
2	3716624M1	2	Centraliser	(6)
3	3010557X1	6	Screw Metric	M20X100
4	3716121M1	1	Clevis Pin	
5	3790749M1	1	Bush	
6	3793161M11	1	Bearing Carrier	Replace and repair. Old not interchangeable with new 3716623M3
7	339560X1	2	Hex. Sock. Screw	(1)
8	3716621M2	1	Plate	(1)
9	3716622M1	1	Thruster	(1)
10	3716147M1	1	Counterplate	
11	1442739X1	2	Locknut	
12	**3716103M2**	1	Pin Hitch	(1)
13	3791643M1	1	Lever	(1)
14	3010553X1	1	Pin	(1)
15	3716619M3	1	Clevis	(1)
16		1	Bar	(1) Not serviced, order REF. NO 1
17	1442668X1	2	Screw	(1) M20X80
18	3716146M1	1	Shackle	
19	3716306M91	1	Plate	
20	3009492X1	2	Hex. Sock. Screw	M10X25
21	385362X1	2	Washer Metric	

https://truckmanualshub.com/

1-ZQ12-009-A

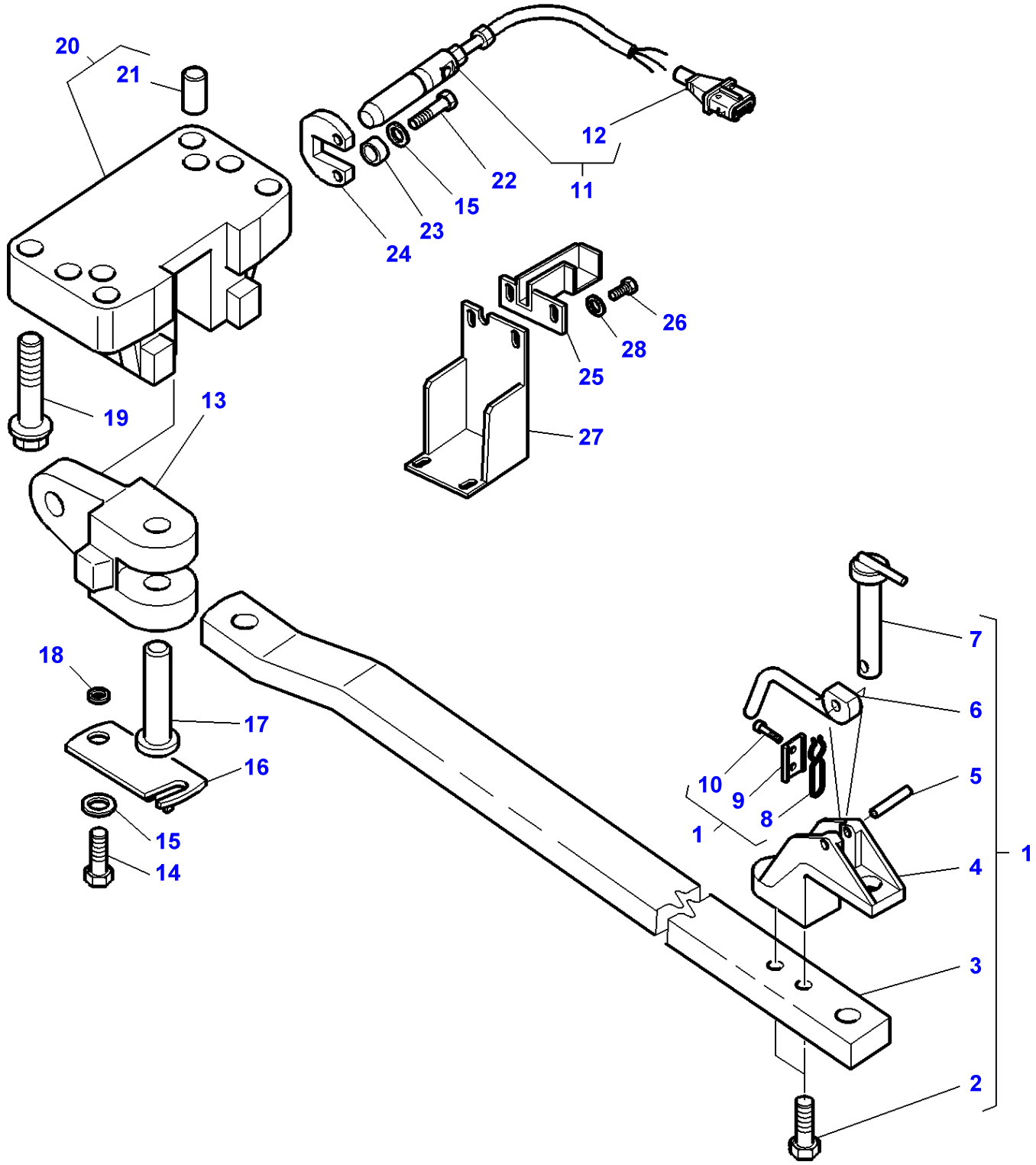

https://truckmanualshub.com/

Item	Part Number	Qty	Description	Comments
1	3792397M93	1	Bar	
2	1442668X1	2	Screw	(1) M20X80
3		1	Bar	(1) Not serviced, order REF.1
4	3716619M3	1	Clevis	(1)
5	3010553X1	1	Pin	(1)
6	3791643M1	1	Lever	(1)
7	3716103M2	1	Pin Hitch	(1)
8	3716622M1	1	Thruster	(1)
9	3716621M2	1	Plate	(1)
10	339560X1	2	Hex. Sock. Screw	(1)
11	3792432M1	1	Switch,Indirect	
12	3385534M1	1	Connectors	(11)
13	3790933M1	1	Clevis	
14	3009492X1	2	Hex. Sock. Screw	M10X25
15	385362X1	4	Washer Metric	
16	3790936M91	1	Locking Plate	
17	3790937M1	1	Clevis Pin	
18	3790749M1	1	Bush	
19	3010557X1	5	Screw Metric	M20X100
	3010561X1	1	Screw	M20X50
20	3793160M11	1	Bearing Carrier	Replace and repair. Old not interchangeable with new 3790932M1
21	3716624M1	2	Centraliser	(20)
22	3001429X1	2	Screw	M10X35
23	3384183M1	2	Bush	
24	3716499M1	1	Plate	
25	3792577M1	1	Cowl	
26	339560X1	4	Hex. Sock. Screw	M6X16
27	3790940M1	1	Cowl	
28	390971X1	4	Washer	

https://truckmanualshub.com/

1-ZQ12-010-A

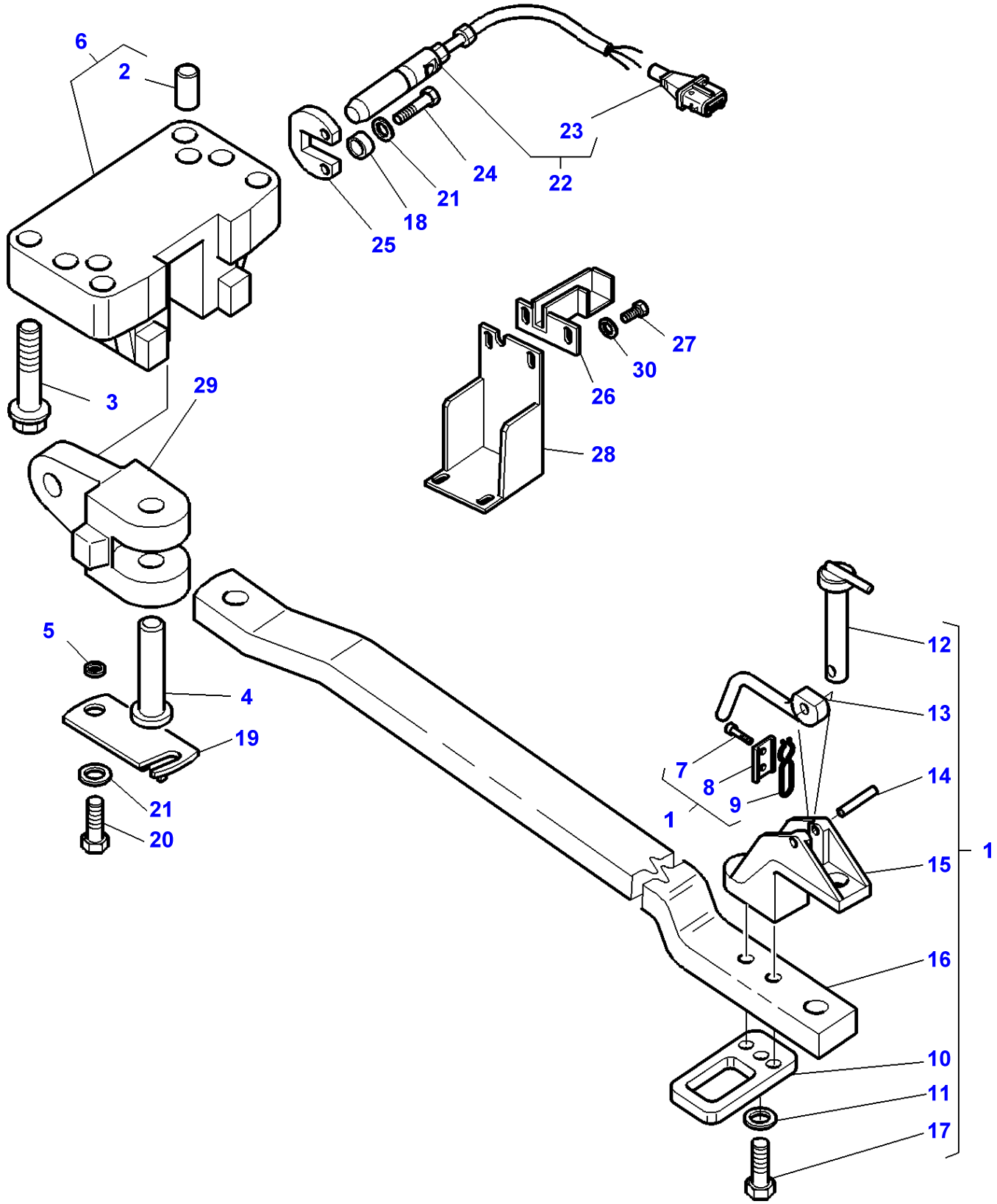

https://truckmanualshub.com/

Item	Part Number	Qty	Description	Comments
1	3792398M92	1	Bar	
2	3716624M1	2	Centraliser	(6)
3	3010557X1	5	Screw Metric	M20X100
	3010561X1	1	Screw	M20X50
4	3790937M1	1	Clevis Pin	
5	3790749M1	1	Bush	
6	3793160M11	1	Bearing Carrier	Replace and repair. Old not interchangeable with new 3790932M1
7	339560X1	2	Hex. Sock. Screw	(1)
8	3716621M2	1	Plate	(1)
9	3716622M1	1	Thruster	(1)
10	3793421M1	1	Shackle	(1)
11	385365X1	2	Washer	(1)
12	**3716103M2**	1	Pin Hitch	(1)
13	3791643M1	1	Lever	(1)
14	3010553X1	1	Pin	(1)
15	3716619M3	1	Clevis	(1)
16		1	Bar	(1)
				Not serviced, order REF. NO 1
17	3010945X1	2	Screw	(1)
				M20X105
18	3384183M1	2	Bush	
19	3790936M91	1	Locking Plate	
20	3009492X1	2	Hex. Sock. Screw	M10X25
21	385362X1	2	Washer Metric	
22	3792432M1	1	Switch,Indirect	
23	3385534M1	1	Connectors	(22)
24	3001429X1	2	Screw	M10X35
25	3716499M1	1	Plate	
26	3792577M1	1	Cowl	
27	339560X1	4	Hex. Sock. Screw	M6X16
28	3790940M1	1	Cowl	
29	3790933M1	1	Clevis	
30	390971X1	4	Washer	

1-ZQ12-011-A

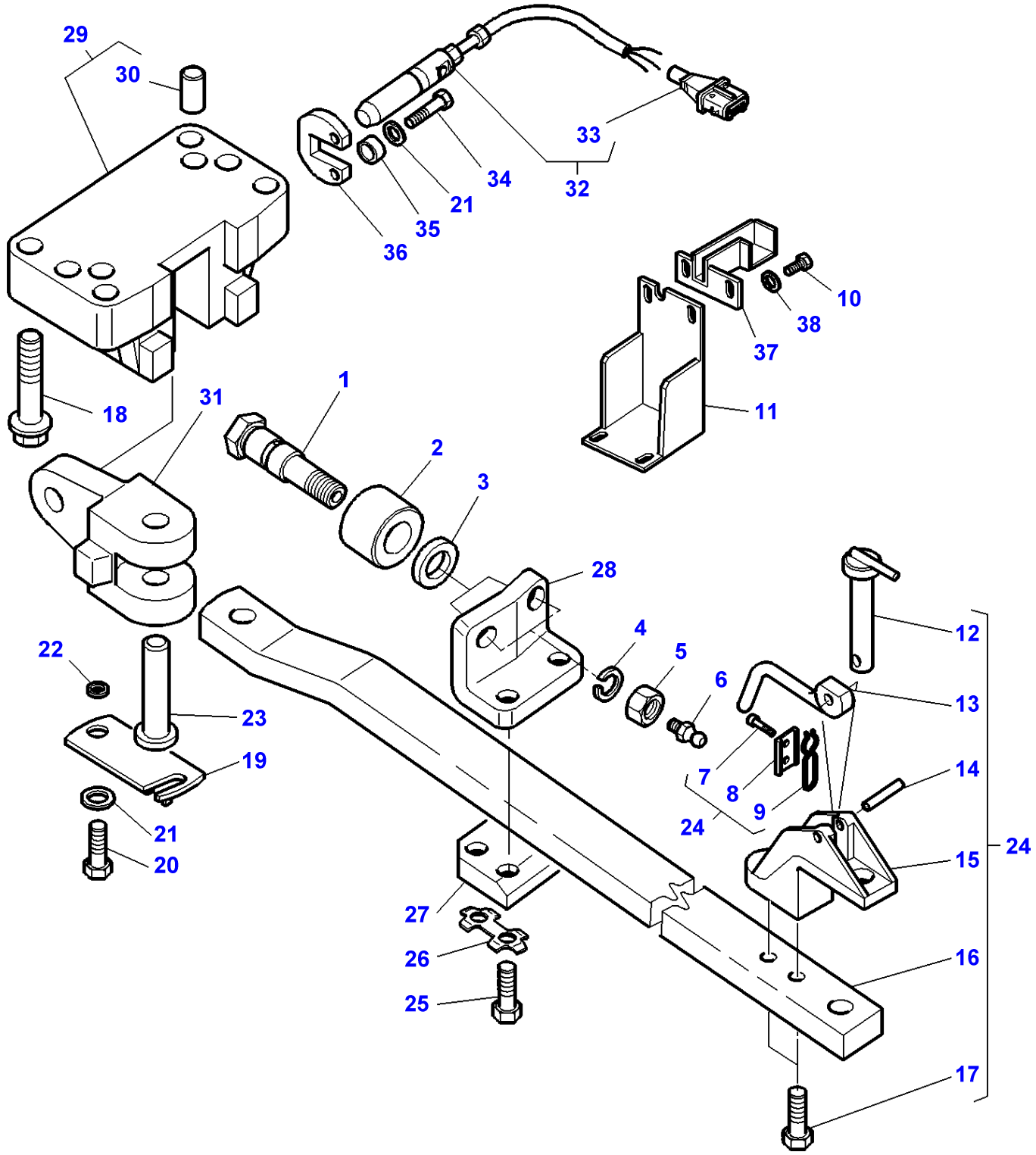
29
30
33
34
32
21
35
36
10
38
37
11
18
31
1
2
3
28
4
5
6
12
13
22
23
19
7
8
9
14
24
21
20
15
24
27
26
25
16
17

https://truckmanualshub.com/

Item	Part Number	Qty	Description	Comments
1	3791469M1	2	Clevis Pin	
2	3581980M1	2	Roll	
3	3791823M1	2	Washer	
4	353443X1	2	Washer	
5	375102X1	2	Nut Unc	
6	364461X1	2	Grease Nipple	
7	339560X1	2	Hex. Sock. Screw	(24)
8	3716621M2	1	Plate	(24)
9	3716622M1	1	Thruster	(24)
10	339560X1	4	Hex. Sock. Screw	M6X16
11	3790940M1	1	Cowl	
12	**3716103M2**	1	Pin Hitch	(24)
13	3791643M1	1	Lever	(24)
14	3010553X1	1	Pin	(24)
15	3716619M3	1	Clevis	(24)
16		1	Bar	(24)
				Not serviced, order REF. NO 24
17	1442668X1	2	Screw	(24)
				M20X80
18	3010557X1	5	Screw Metric	M20X100
	3010561X1	1	Screw	M20X50
19	3790936M91	1	Locking Plate	
20	3009492X1	2	Hex. Sock. Screw	M10X25
21	385362X1	4	Washer Metric	
22	3790749M1	1	Bush	
23	3790937M1	1	Clevis Pin	
24	3792397M93	1	Bar	
25	391332X1	4	Screw	M20X100
26	3790457M1	2	Tongue	
27	3791470M1	1	Counterplate	
28	3791467M1	1	Angle	
29	3793160M11	1	Bearing Carrier	Replace and repair. Old not interchangeable with new 3790932M1
30	3716624M1	2	Centraliser	(29)
31	3790933M1	1	Clevis	
32	3792432M1	1	Switch,Indirect	
33	3385534M1	1	Connectors	(32)
34	3001429X1	2	Screw	M10X35
35	3384183M1	2	Bush	
36	3716499M1	1	Plate	
37	3792577M1	1	Cowl	
38	390971X1	4	Washer	

https://truckmanualshub.com/

1-ZQ12-012-A

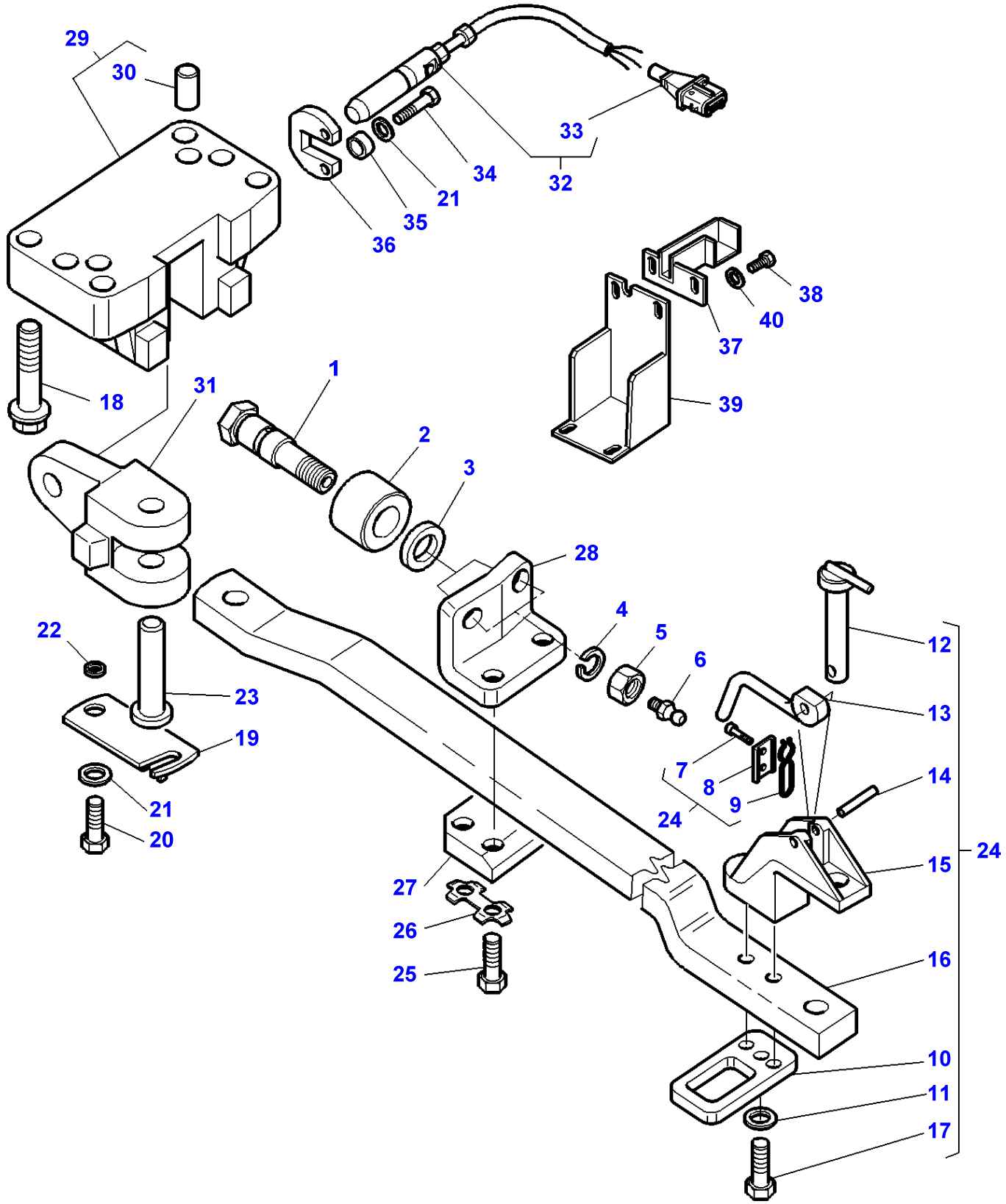

https://truckmanualshub.com/

Item	Part Number	Qty	Description	Comments
1	3791469M1	2	Clevis Pin	
2	3581980M1	2	Roll	
3	3791823M1	2	Washer	
4	353443X1	2	Washer	
5	375102X1	2	Nut Unc	
6	364461X1	2	Grease Nipple	
7	339560X1	2	Hex. Sock. Screw	(24)
8	3716621M2	1	Plate	(24)
9	3716622M1	1	Thruster	(24)
10	3793421M1	4	Shackle	(24)
				M6X16
11	385365X1	2	Washer	(24)
12	**3716103M2**	1	Pin Hitch	(24)
13	3791643M1	1	Lever	(24)
14	3010553X1	1	Pin	(24)
15	3716619M3	1	Clevis	(24)
16		1	Bar	(24)
				Not serviced, order REF. NO 24
17	3010945X1	2	Screw	(24)
				M20X105
18	3010557X1	5	Screw Metric	M20X100
	3010561X1	1	Screw	M20X50
19	3790936M91	1	Locking Plate	
20	3009492X1	2	Hex. Sock. Screw	M10X25
21	385362X1	4	Washer Metric	
22	3790749M1	1	Bush	
23	3790937M1	1	Clevis Pin	
24	3792398M92	1	Bar	
25	391332X1	4	Screw	M20X100
26	3790457M1	2	Tongue	
27	3791470M1	1	Counterplate	
28	3791467M1	1	Angle	
29	3793160M11	1	Bearing Carrier	Replace and repair. Old not interchangeable with new 3790932M1
30	3716624M1	2	Centraliser	(29)
31	3790933M1	1	Clevis	
32	3792432M1	1	Switch,Indirect	
33	3385534M1	1	Connectors	(32)
34	3001429X1	2	Screw	M10X35
35	3384183M1	2	Bush	
36	3716499M1	1	Plate	
37	3792577M1	1	Cowl	
38	339560X1	4	Hex. Sock. Screw	M6X16
39	3790940M1	1	Cowl	
40	390971X1	4	Washer	

https://truckmanualshub.com/

1-ZQ16-008-A

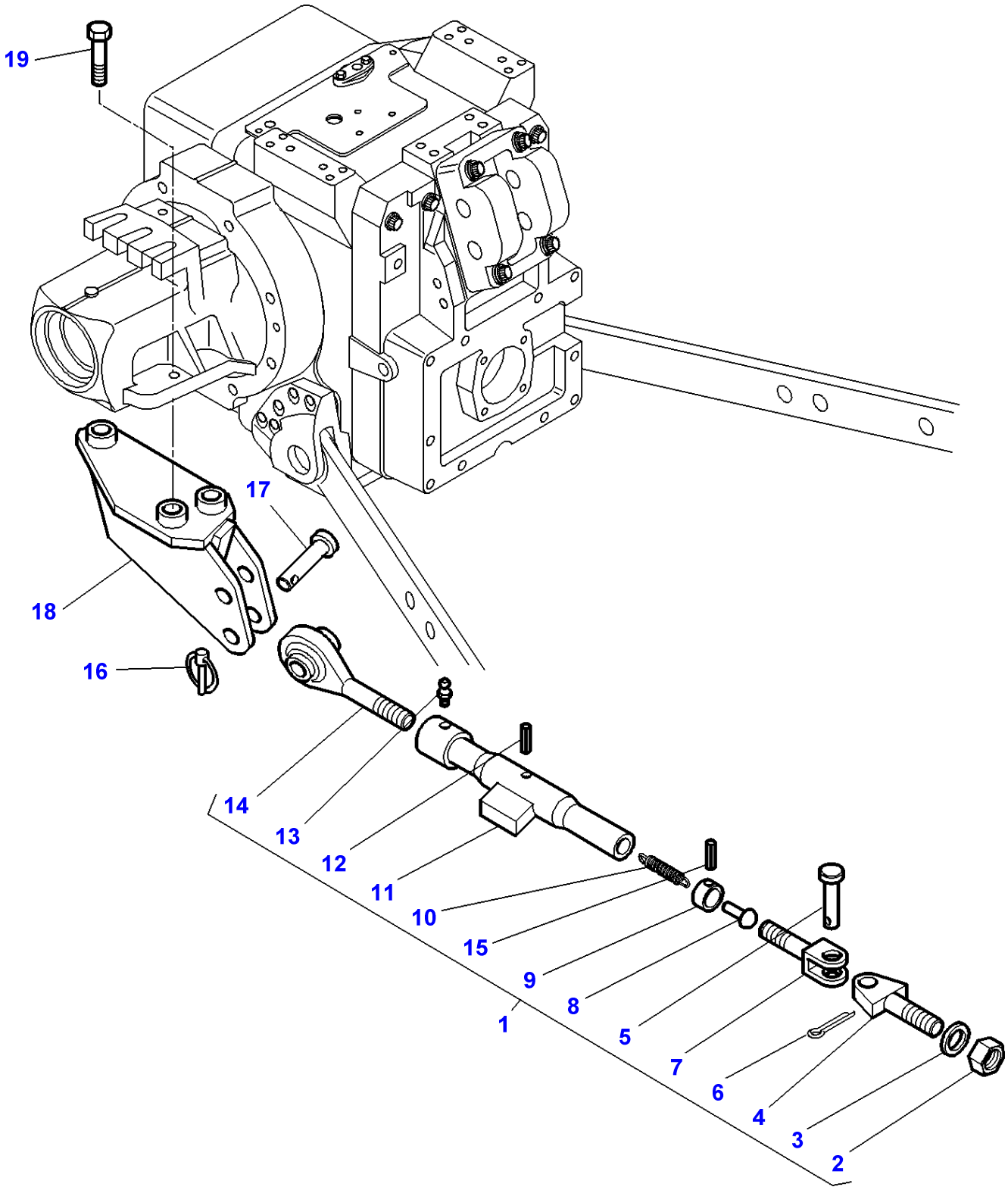

https://truckmanualshub.com/

Item	Part Number	Qty	Description	Comments
1	3716775M1	2	Stabiliser	
2	3902877M1	1	Nut	(1)
3	3902879M1	1	Washer	(1)
4	3902875M1	1	Journal	(1)
5	3902876M1	1	Clevis Pin	(1)
6	354068X1	1	Pin	(1)
7	3902872M1	1	Clevis	(1)
8	3902873M1	1	Clevis Pin	(1)
9	3902874M1	1	Bush	(1)
10	3902871M1	1	Spring	(1)
11	3902870M1	1	Tube	(1)
12	390383X1	1	Pin	(1)
13	3900862M1	1	Greaser	(1)
14	3902878M1	1	Toggle	(1)
15	339304X1	1	Pin	(1)
16	3792034M1	2	Pin	
17	3582043M2	2	Clevis Pin	
18	3716126M1	1	Support	Left Hand
	3716127M1	1	Support	Right Hand
19	3010556X1	2	Screw Metric	M20X70
	3010562X1	4	Screw	M20X230

https://truckmanualshub.com/

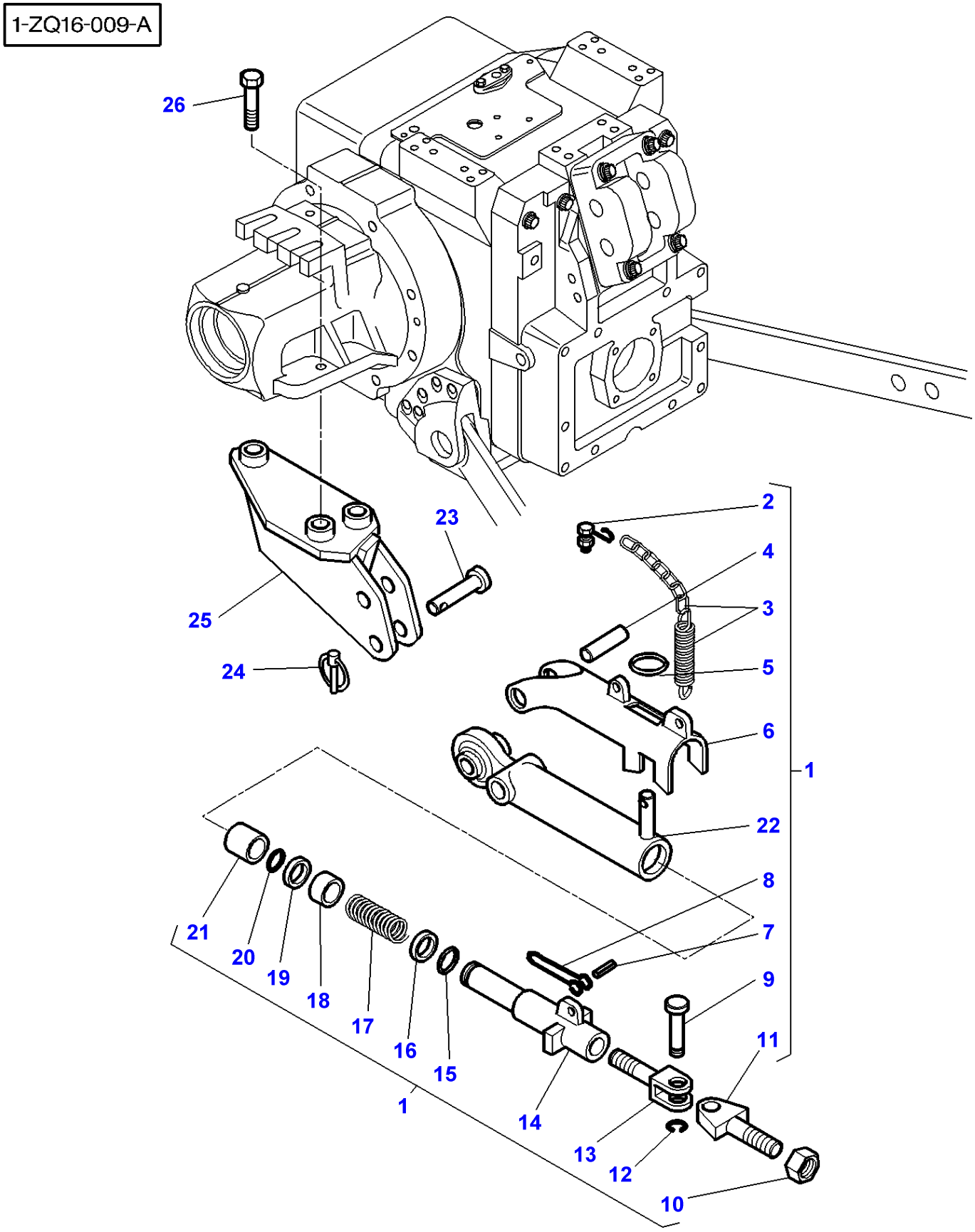

https://truckmanualshub.com/

Item	Part Number	Qty	Description	Comments
1	3716608M1	2	Stabiliser	
2	3902906M1	1	Retainer	(1)
3	3902905M91	1	Parts Pack	(1)
4	3902891M1	1	Pin	(1)
5	3902890M1	1	Ring	(1)
6	3902889M1	1	Latch	(1)
7	3000046X1	1	Pin	(1)
8	3902899M1	1	Handle	(1)
9	3902901M1	1	Screw	(1)
10	3902904M1	1	Nut	(1)
11	3902903M1	1	Journal	(1)
12	3902902M1	1	Clip	(1)
13	3902900M1	1	Clevis	(1)
14	3902898M1	1	Tube	(1)
15	3902897M1	1	Clip	(1)
16	3902894M1	1	Bush	(1)
17	3902896M1	1	Spring	(1)
18	3902895M1	1	Bush	(1)
19	3902894M1	1	Bush	(1)
20	3902893M1	1	Clip	(1)
21	3902892M1	1	Bush	(1)
22	3902888M1	1	Toggle	(1)
23	3582043M2	2	Clevis Pin	
24	3792034M1	2	Pin	
25	3716126M1	1	Support	Left Hand
	3716127M1	1	Support	Right Hand
26	3010556X1	2	Screw Metric	M20X70
	3010562X1	4	Screw	M20X230

https://truckmanualshub.com/

1-ZQ15-002-A

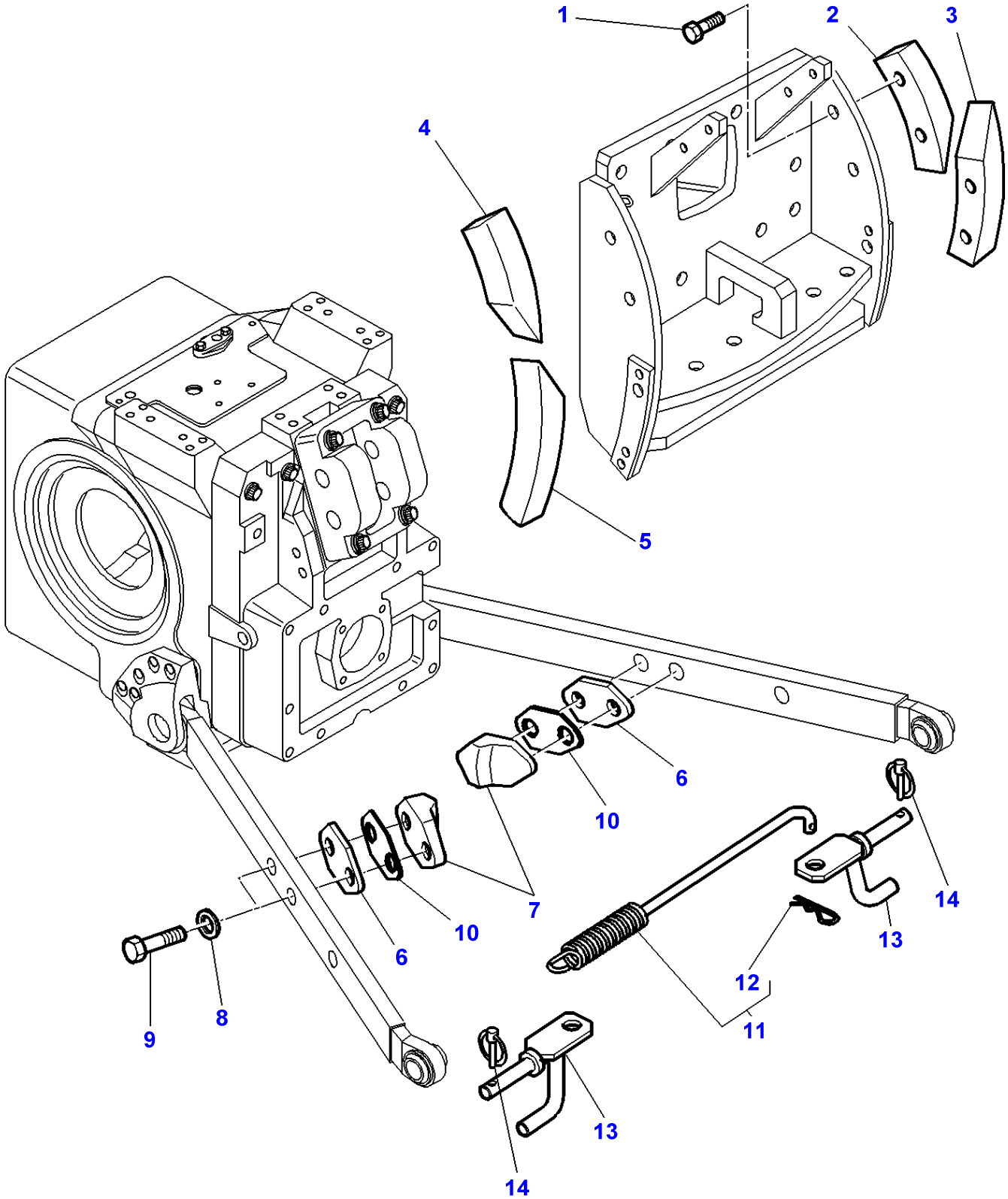

https://truckmanualshub.com/

Item	Part Number	Qty	Description	Comments
1	391120X1	8	Hex. Sock. Screw	M16X45MM
2	3716138M1	1	Shoe	
3	3716141M1	1	Shoe	
4	3716137M1	1	Shoe	
5	3716140M1	1	Shoe	
6	3716144M1	2	Chock	Thickness 4MM
7	3716143M1	2	Stop	
8	3019575X1	4	Washer Metric	
9	339881X1	4	Hex. Sock. Screw	M16X60MM
10	3386369M1	2	Chock	Thickness 1,2MM
11	3617118M1	1	Spring	
12	1633899M1	1	Pin	(11)
13	3791602M1	2	Spring Carrier	
14	3382824M1	2	Pin	

https://truckmanualshub.com/

1-ZQ14-001-A

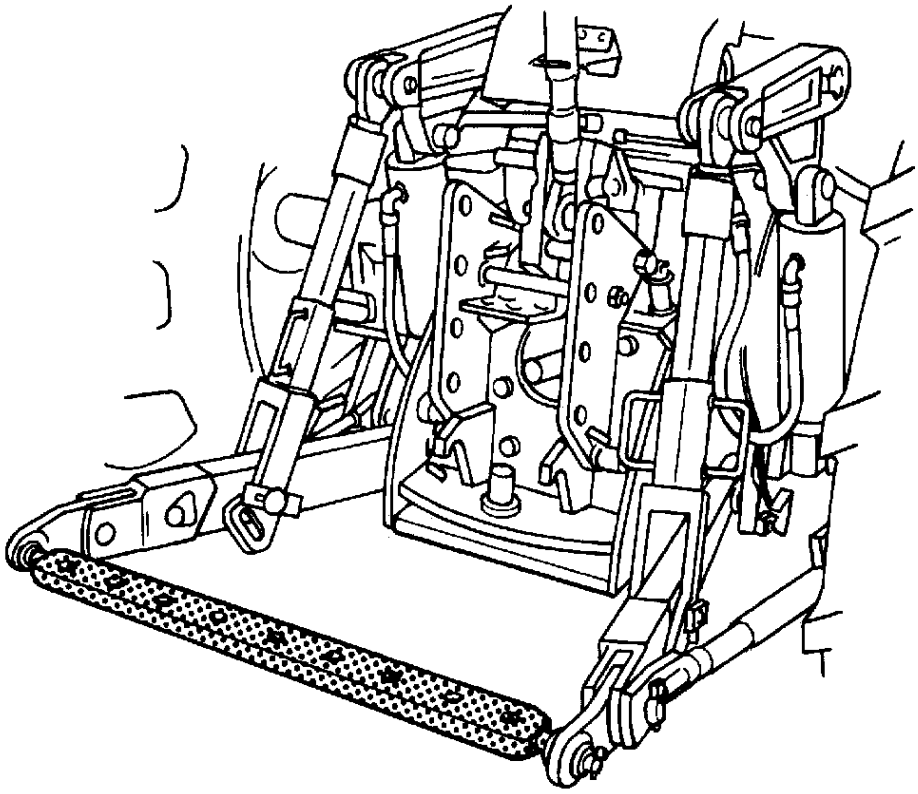

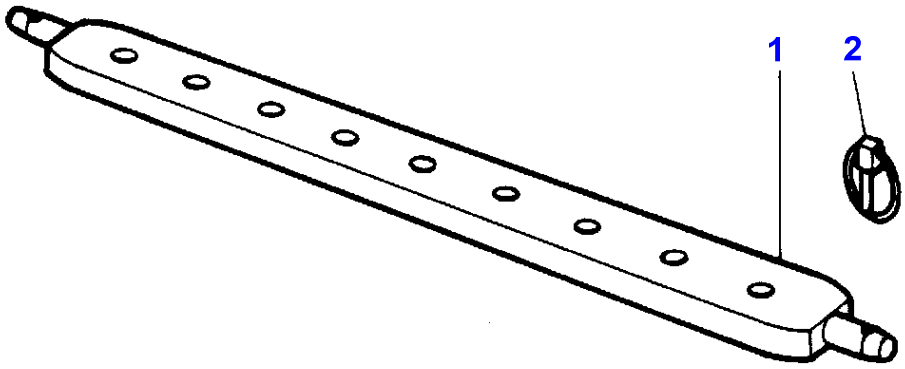

https://truckmanualshub.com/

Item	Part Number	Qty	Description	Comments
1	3387153M1	1	Bar	CAT 2
2	3581687M1	2	Pin	

https://truckmanualshub.com/

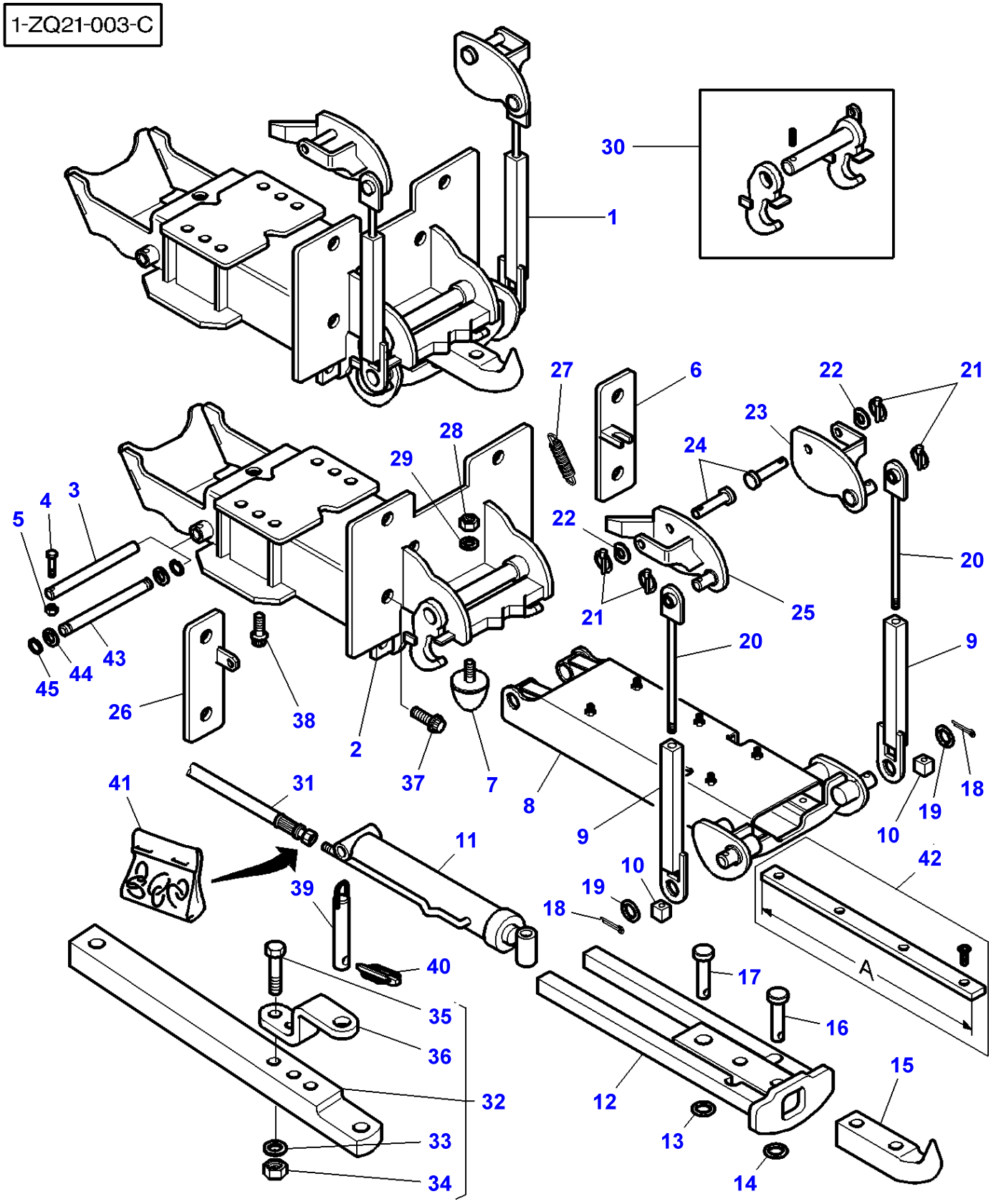

https://truckmanualshub.com/

Item	Part Number	Qty	Description	Comments
1	3792667M91	1	Hook	Up to Serial or Engine Number 17-OCT-2000
	3792667M92	1	Hook	From Serial or Engine Number 18-OCT-2000
2		1	Frame	(1)
				Not serviced, order REF N0 1
3	3010904X1	1	Bolt	(1)
				Up to Serial or Engine Number 17-OCT-2000
4	3792645M1	1	Clevis Pin	(1)
				Up to Serial or Engine Number 17-OCT-2000
5	1441461X1	1	Locknut	(1)
				Up to Serial or Engine Number 17-OCT-2000
6	3792663M91	1	Support	(1)
				Up to Serial or Engine Number 17-OCT-2000
7	3792083M1	1	Buffer	(1)
8	3792646M91	1	Housing	(1)
				Up to Serial or Engine Number 17-OCT-2000
	3794178M91	1	Housing	(1)
				From Serial or Engine Number 18-OCT-2000
9	3792658M91	2	Slider Bearing	(1)
10	3792081M1	2	Nut	(1)
11	3792647M1	1	Ram	(1)
12	3792648M91	1	Pedestal	(1)
13	352438X1	1	Circlip	(1)
14	392758X1	1	Ring	(1)
15	3792649M1	1	Dragbar	(1)
16	3792650M1	1	Clevis Pin	(1)
17	3792660M1	1	Clevis Pin	(1)
18	390721X1	2	Pin	(1)
19	3019558X1	2	Washer	(1)
20	3792654M91	2	Stem	(1)
21	3792091M1	4	Pin	(1)
22	3792664M1	2	Washer	(1)
23	3792652M91	1	Extension	(1)
				Left Hand
24	3792651M1	2	Clevis Pin	(1)
25	3792653M91	1	Extension	(1)
				Right Hand
26	3792665M91	1	Support	(1)
				Up to Serial or Engine Number 17-OCT-2000
27	3792666M1	1	Spring	(1)
28	1440329X1	1	Locknut	(1)
29	390734X1	1	Washer	(1)
30	3792834M91	1	Latch	(1)
31	3792727M1	2	Hydr Hose	
32	3792662M91	1	Bar	
33	1441664X1	2	Washer Metric	(32)
34	339034X1	2	Nut	(32)
35	339616X1	2	Bolt Metric	(32)
				M16X120
36	3792786M1	1	Clevis	(32)
37	3010562X1	6	Screw	M20X230
	3010777X1	2	Screw Metric	M20X210
38	3010561X1	6	Screw	M20X50
39	3790349M91	1	Pin Hitch	
40	3382826M1	1	Pin	
41	3903497M91	1	Kit, Joint	From Serial or Engine Number 18-OCT-2000
42	3903572M91	2	Parts Pack	(8)
				Length A=600MM
	3903573M91	2	Parts Pack	(8)
				Length A=250MM
	3903571M91	2	Parts Pack	(8)
				Length A=148MM
43	3793999M1	1	Clevis Pin	(1)
				From Serial or Engine Number 18-OCT-2000
44	3794000M1	2	Thrust Washer	(1)
				From Serial or Engine Number 18-OCT-2000
45	358956X1	2	Ring	(1)

https://truckmanualshub.com/

1-ZQ22-001-A

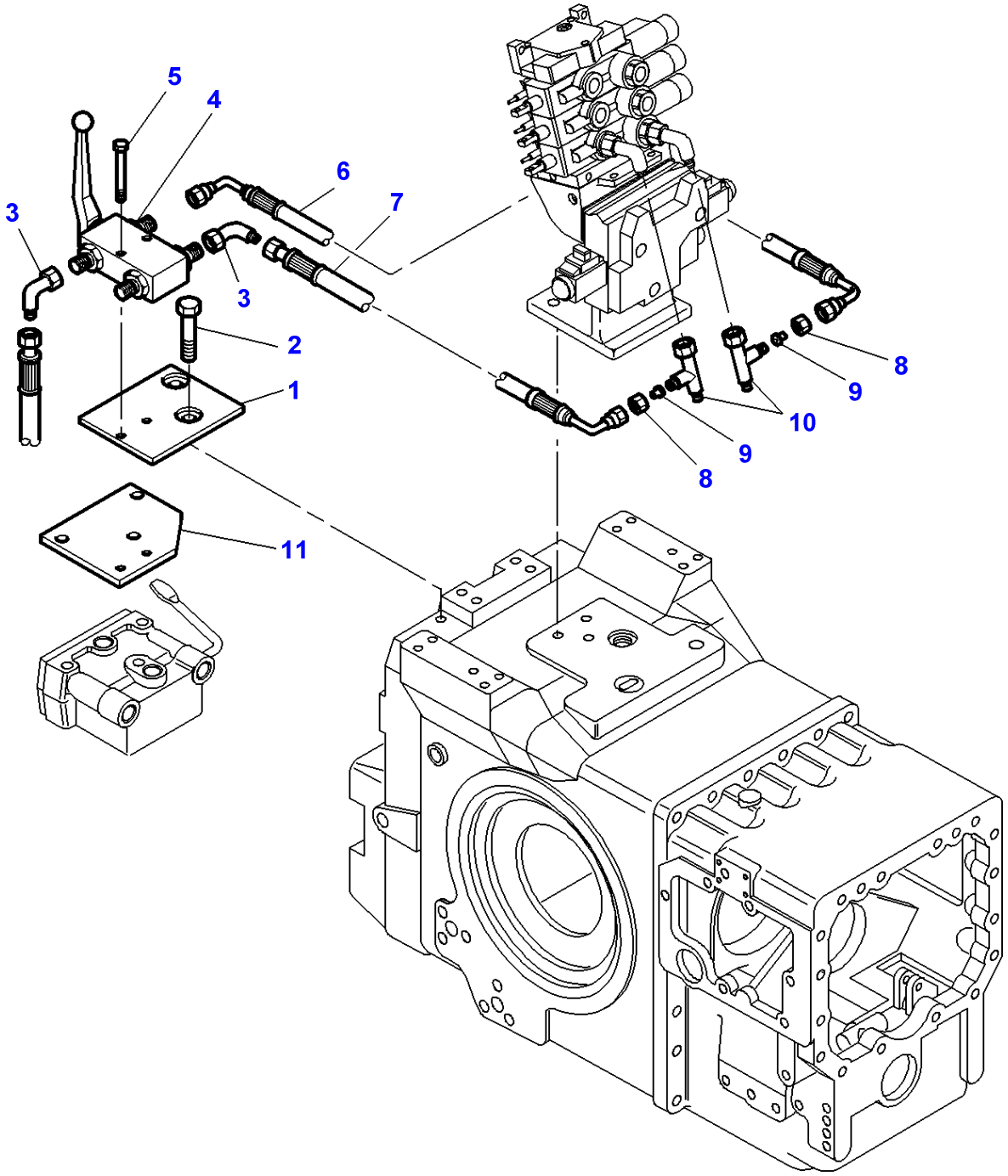

https://truckmanualshub.com/

Item	Part Number	Qty	Description	Comments
1	3792872M1	1	Plate	[B]
2	339123X1	2	Hex. Sock. Screw	[B] M8X20
3	1442508X91	3	Union	
4	3792875M92	1	Vane	
5	339229X1	2	Hex. Sock. Screw	M6X40
6	3792777M2	1	Hydr Hose	Length 760MM
7	3792776M1	1	Hydr Hose	Length 570MM
8	22576X	2	Union Nut	
9	356629X1	2	Reducer	
10	364704X1	2	Teepiece	
11	3792787M1	1	Plate	[A]

FOOTNOTE [A] WITH 4 DISTRIBUTORS
FOOTNOTE [B] WITH 3 DISTRIBUTORS

https://truckmanualshub.com/

1-ZQ21-004-B

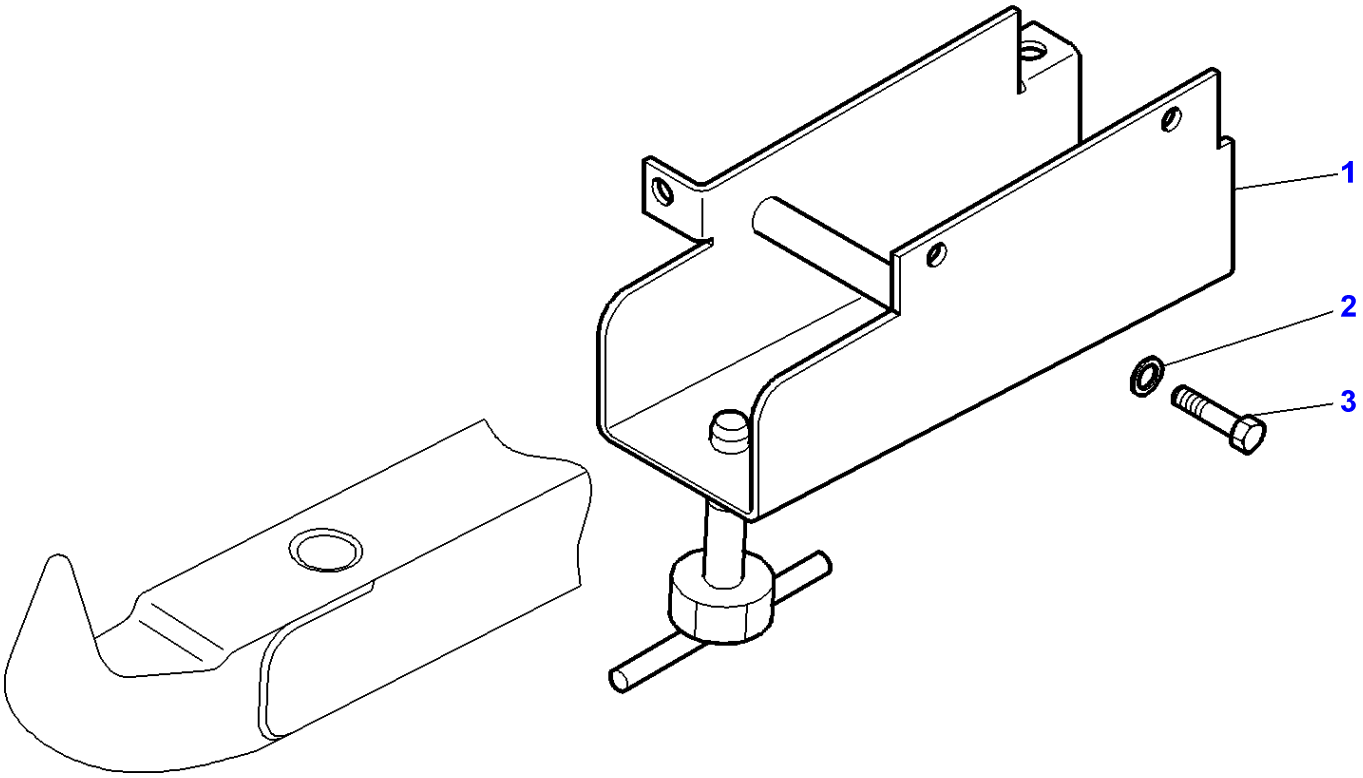

https://truckmanualshub.com/

Item	Part Number	Qty	Description	Comments
1	3783267M93	1	Support	
2	390972X1	4	Washer Metric	
3	339123X1	4	Hex. Sock. Screw	M8X20

https://truckmanualshub.com/

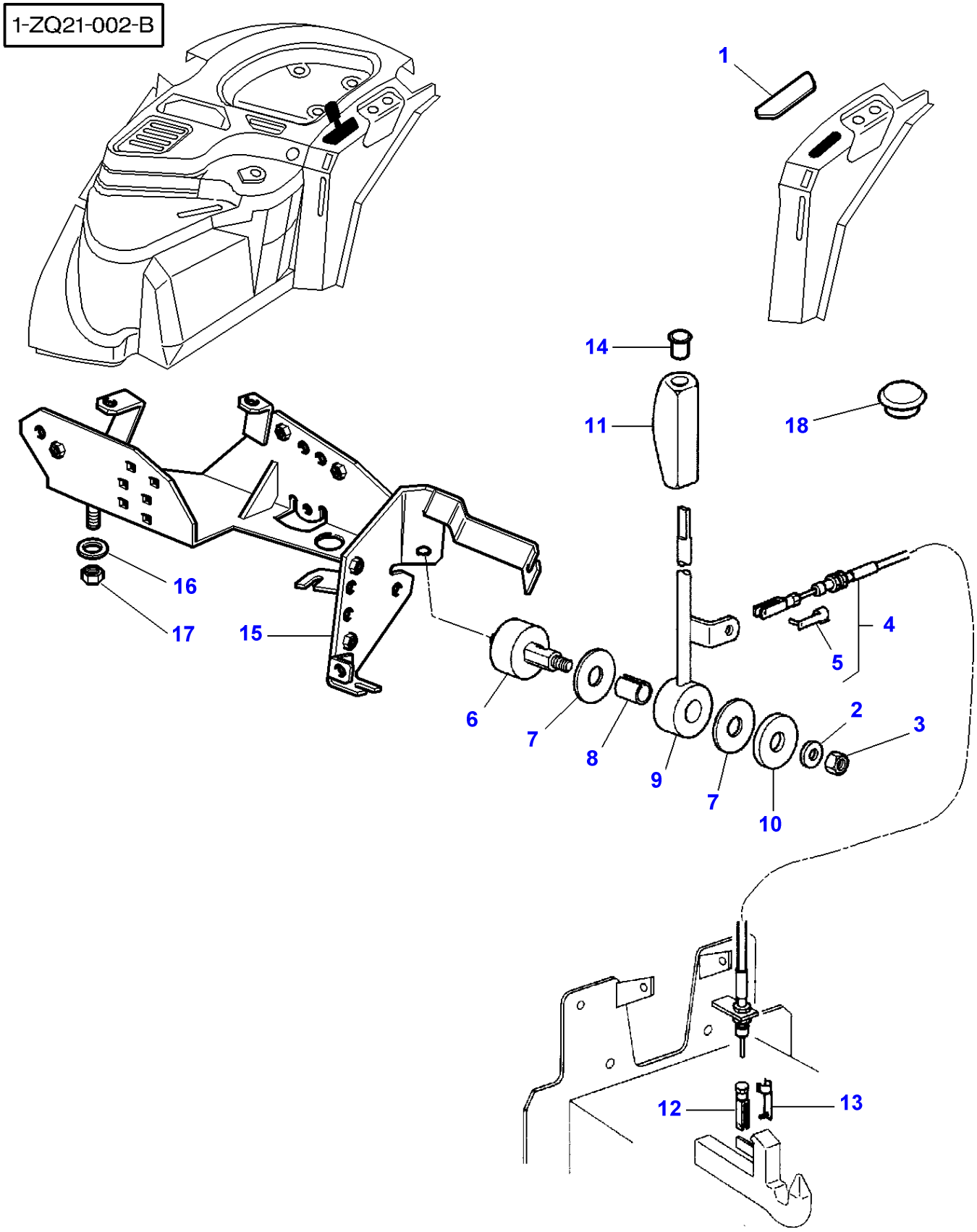

https://truckmanualshub.com/

Item	Part Number	Qty	Description	Comments
1	3712984M1	1	Plate	[A]
2	390972X1	1	Washer Metric	
3	1441461X1	1	Locknut	
4	**3715975M3**	1	Hook Cable	
5	3600190M1	1	Clevis Pin	(4) Length 28MM
	3600191M1	1	Clevis Pin	(4) Length 40MM
6	3712276M1	1	Clevis Pin	
7	3386514M1	2	Friction Disc	
8	3386515M1	1	Bearing	
9	3712280M1	1	Lever	
10	3387447M1	1	Washer	
11	3715495M1	1	Handle	
12	392463X1	1	Clevis	
13	3713042M1	1	Clevis Pin	
14	3715496M1	1	Muff	
15	3778480M91	1	Support	
16	385361X1	4	Washer Metric	
17	1441461X1	4	Locknut	
18	3713587M1	1	Plug	[A] Diameter 22MM

FOOTNOTE [A] WITHOUT AUTOMATIC HITCH

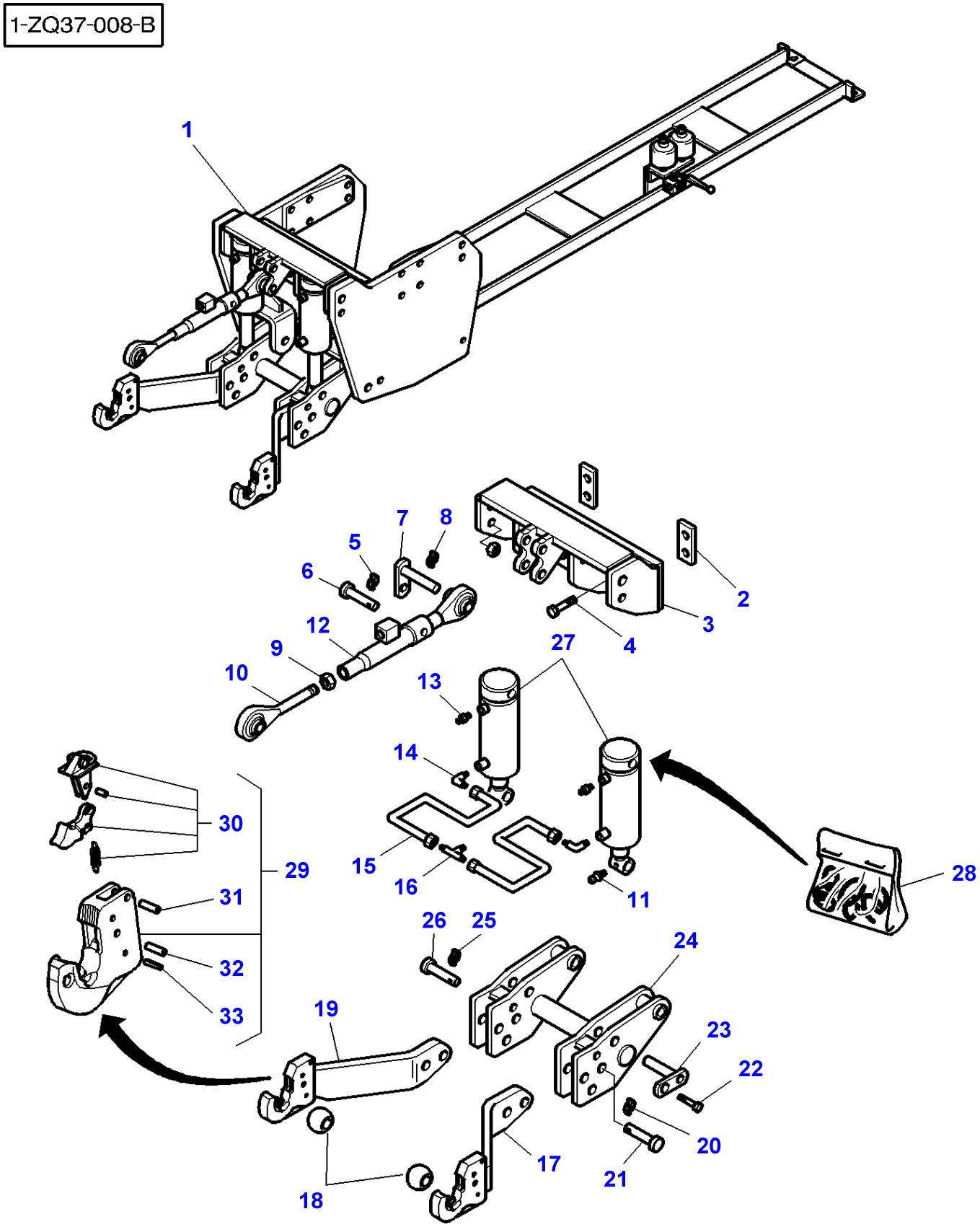
1-ZQ37-008-B
1
2
3
4
5
6
7
8
9
10
11
12
13
14
15
16
17
18
19
20
21
22
23
24
25
26
27
28
29
30
31
32
33

https://truckmanualshub.com/

Item	Part Number	Qty	Description	Comments
1	3783049M92	1	Hitch	[A]
2	3782990M1	2	Chock	(1)
3	3782989M1	1	Support	(1)
4	391329X1	4	Screw	(1)
				M20X70
5	3782691M1	1	Clip	(1)
6	3782690M1	1	Clevis Pin	(1)
7	3782680M1	1	Clevis Pin	(1)
8	3782684M1	1	Clip	(1)
9	3900887M1	1	Nut	(1)
10	**3900885M1**	1	Toggle	(1)
11	3900862M1	6	Greaser	(1)
12	3782689M1	1	Bar	(1)
13	3782522M1	2	Breather	(1)
14	3900868M1	2	Elbow	(1)
15	3783011M1	2	Tube	(1)
16	3902227M1	1	Teepiece	(1)
17	3783840M1	1	Arm	(1)
				Left Hand
18	**3782685M1**	2	Toggle	(1)
				CAT 3
	3782686M1	2	Toggle	(1)
				CAT 2/3
19	3783839M1	1	Arm	(1)
				Right Hand
20	3782691M1	1	Clip	(1)
21	3782682M1	2	Clevis Pin	(1)
22	3009505X1	2	Screw Metric	(1)
				M12X25
23	3782679M1	2	Clevis Pin	(1)
24	3782675M1	1	Support	(1)
25	3010460X1	2	Pin	(1)
26	3782678M1	2	Clevis Pin	(1)
27	3782688M1	2	Ram	(1)
28	**3903317M91**	1	Kit, Joint	
29		1	Hook	CAT 3/2
				Not serviced, order REF NO 17/19
30	3903314M91	1	Kit, Repair	(29)
31	3006429X1	1	Pin	(29)
				Diameter 10X36MM
32	3008317X1	1	Pin	(29)
				Diameter 13X36MM
33	339783X1	1	Pin	(29)
				Diameter 6X32MM

FOOTNOTE [A] WITH FULL POWERSHIFT
FOOTNOTE [B] WITH DYNASHIFT

https://truckmanualshub.com/

1-ZQ37-009-A

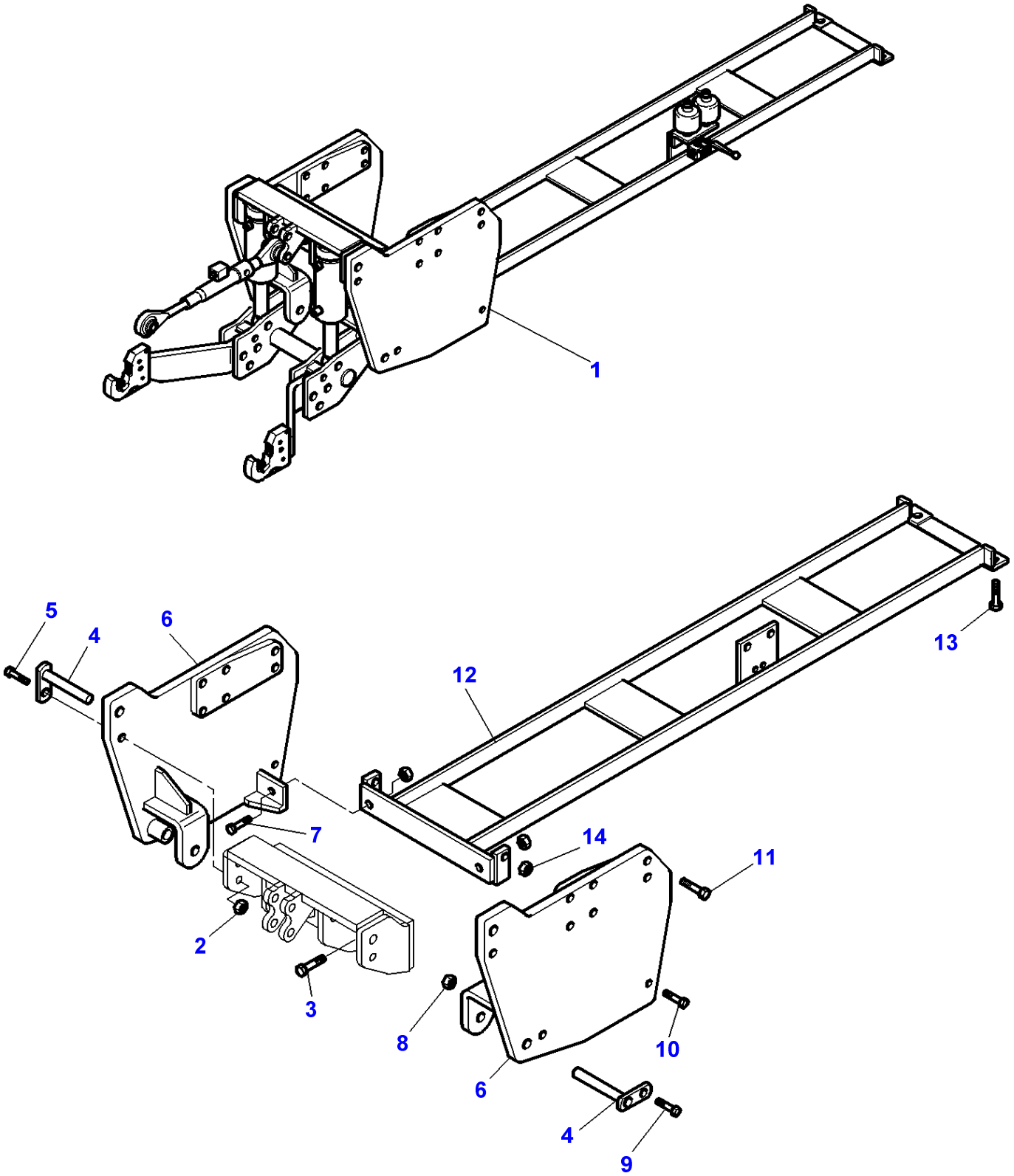

https://truckmanualshub.com/

Item	Part Number	Qty	Description	Comments
1	3783049M92	1	Hitch	
2	3009747X1	2	Nut	(1)
3	391329X1	4	Screw	(1) M20X70
4	3782681M1	4	Clevis Pin	(1)
5	1442668X1	2	Screw	(1) M20X80
6		1	Runner	(1) Not serviced, order REF NO 1
7	339881X1	2	Hex. Sock. Screw	(1) M16X60
8	3009747X1	2	Nut	(1)
9	3001968X1	2	Screw	(1) M20X60
10	339881X1	2	Hex. Sock. Screw	(1) M16X60
11	391332X1	12	Screw	(1) M20X110
12	3782993M2	1	Reinforcement	(1)
13	3010921X1	4	Screw	(1) M16X50
14	339034X1	4	Nut	(1)

https://truckmanualshub.com/

1-ZQ37-012-B

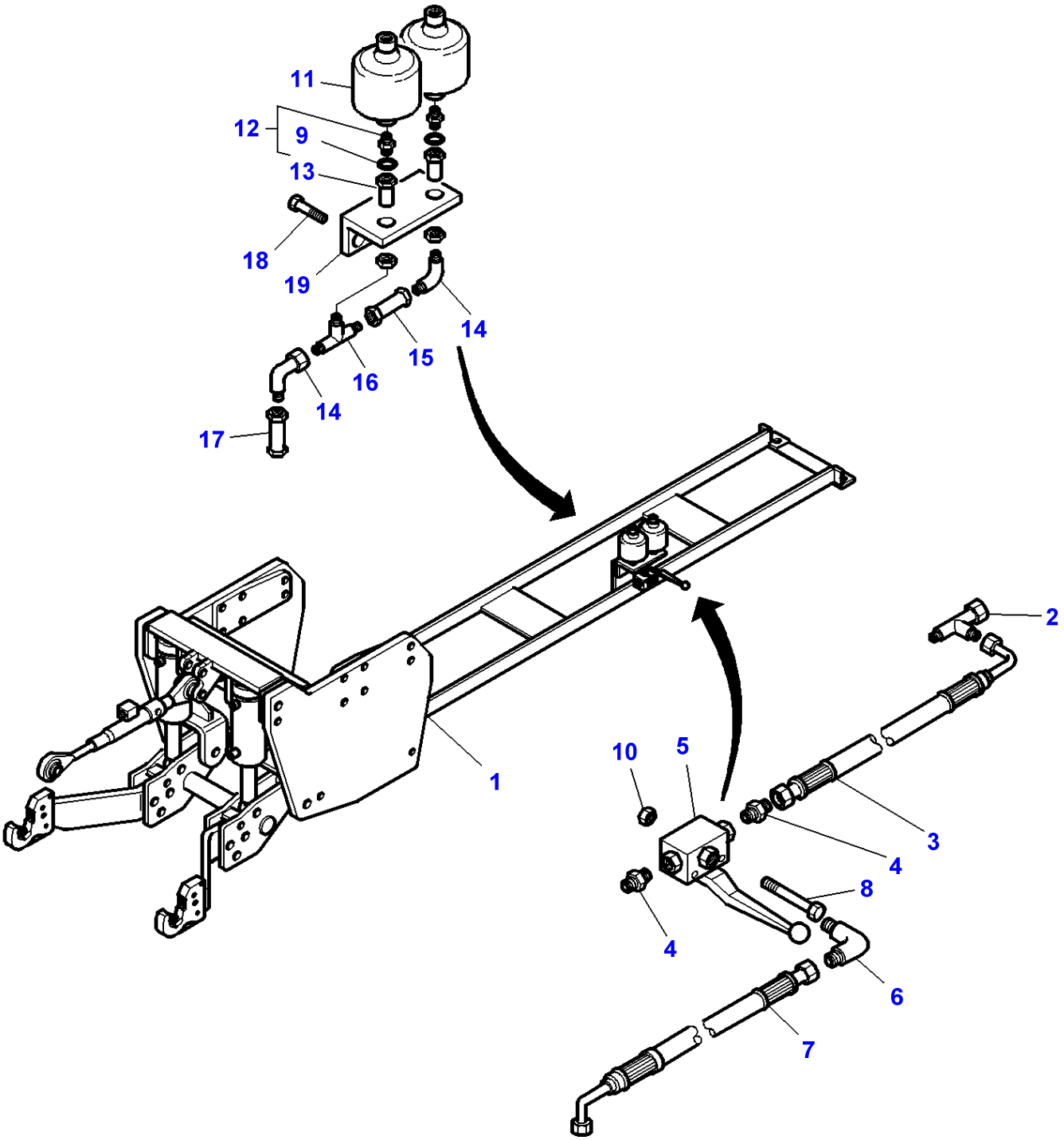

https://truckmanualshub.com/

Item	Part Number	Qty	Description	Comments
1	3783049M92	1	Hitch	
2	3782998M1	1	Teepiece	(1)
3	3782997M1	1	Hydr Hose	(1) Length 3200MM
4	3900869M1	2	Union	(1)
5	3900873M1	1	Vane	(1)
6	3900868M1	1	Elbow	(1)
7	3783856M2	1	Hydr Hose	(1) Length 2700MM
8	3010924X1	2	Screw	(1) M5X50
9	3900865M1	1	Gasket	(12)
10	3005823X1	2	Nut	(1) M5
11	3900877M1	2	Accumulator	(1) Up to Serial or Engine Number J060004 50 Bars
	3900877M1	1	Accumulator	(1) From Serial or Engine Number J060005 50 Bars
	3784036M1	1	Accumulator	(1) From Serial or Engine Number J060005 26 Bars
12	3900878M1	2	Union	(1)
13	3900880M1	2	Union	(1)
14	3900883M1	2	Elbow	(1)
15	3900882M1	2	Tube	(1)
16	3900914M1	2	Teepiece	(1)
17	3783000M1	1	Tube	(1)
18	3010922X1	2	Screw	(1) M14X30
19	3902225M1	1	Support	(1)

https://truckmanualshub.com/

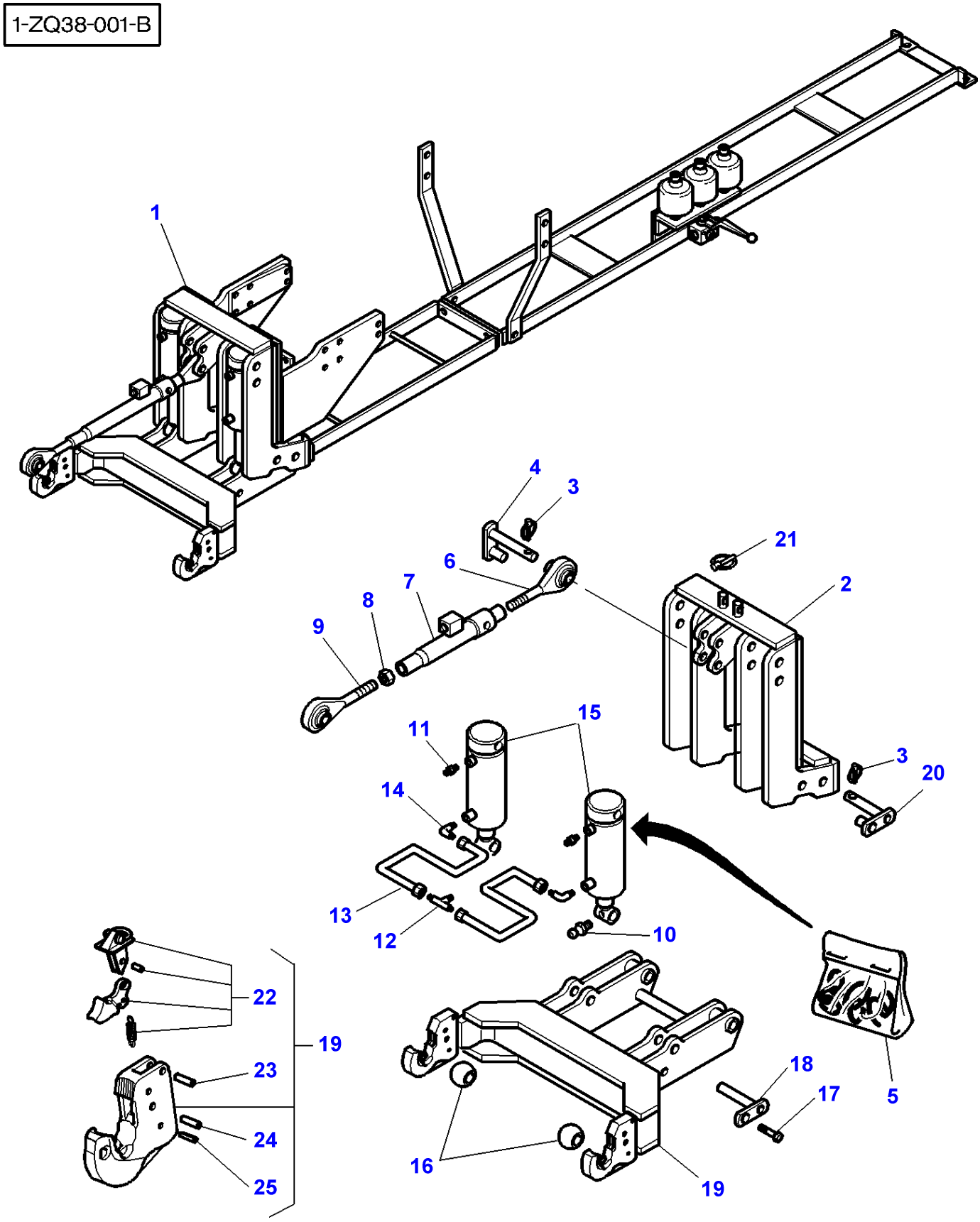

https://truckmanualshub.com/

Item	Part Number	Qty	Description	Comments
1	3783072M93	1	Hitch	
2		1	Frame	(1)
				Not serviced, order REF NO 1
3	3782684M1	5	Clip	(1)
4	3783024M1	1	Support	(1)
5	**3903317M91**	1	Kit, Joint	
6	**3783030M1**	1	Toggle	(1)
7	3783027M1	1	Body	(1)
8	3010927X1	1	Nut	(1)
9	**3783029M1**	1	Toggle	(1)
10	3900862M1	6	Greaser	(1)
11	3782522M1	2	Breather	(1)
12	3902227M1	1	Teepiece	(1)
13	3783025M1	2	Tube	(1)
14	3900868M1	2	Elbow	(1)
15	3783031M1	2	Ram	(1)
				Up to Serial or Engine Number J068007
	3783421M1	2	Ram	(1)
				From Serial or Engine Number J068008
16	**3782685M1**	2	Toggle	(1)
				CAT 3
	3782686M1	2	Toggle	(1)
				CAT 2/3
17	3010923X1	2	Screw	(1)
				M12X20
18	3783023M1	2	Clevis Pin	(1)
19	3783021M1	1	Arm	(1)
20	3783022M1	4	Clevis Pin	(1)
21	3782691M1	1	Clip	(1)
22	3903314M91	1	Kit, Repair	(19)
				CAT 3/2
23	3006429X1	1	Pin	(19)
				Diameter 10X36MM
24	3008317X1	1	Pin	(19)
				Diameter 13X36MM
25	339783X1	1	Pin	(19)
				Diameter 6X32MM

https://truckmanualshub.com/

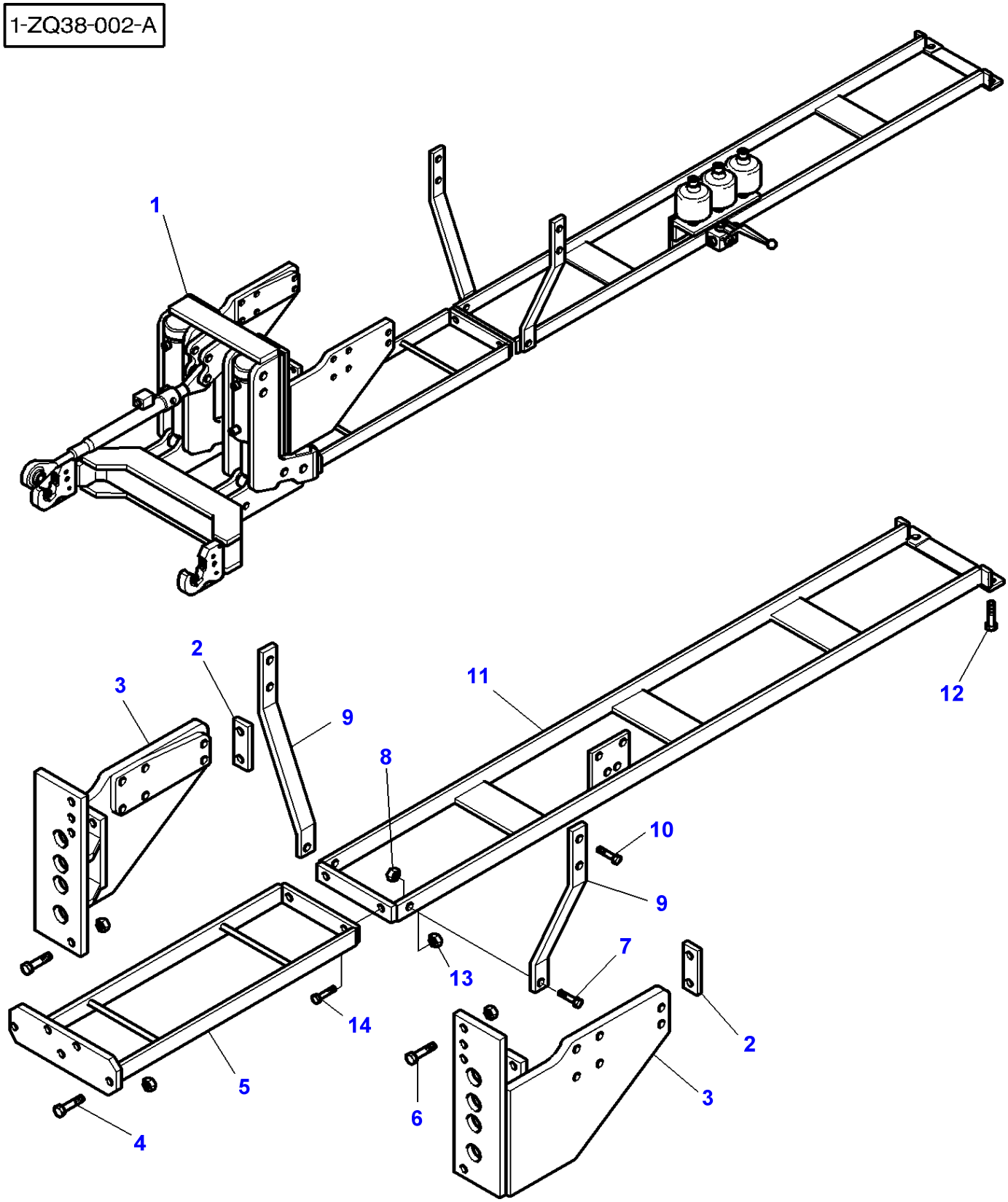

https://truckmanualshub.com/

Item	Part Number	Qty	Description	Comments
1	3783072M93	1	Hitch	
2	3782990M1	2	Chock	(1)
3	3783001M1	1	Support	(1)
4	1442668X1	13	Screw	(1) M20X80
5	3783002M1	1	Transverse	(1)
6	391332X1	12	Screw	(1) M20X100
7	3001968X1	6	Screw	(1) M20X60
8	3009747X1	15	Nut	(1) M20
9	3783004M1	2	Stirrup	(1)
10	1442668X1	4	Screw	(1) M20X80
11	3783003M1	1	Transverse	(1)
12	3010921X1	4	Screw	(1) M16X50
13	392338X1	2	Nut	(1) M18
14	391890X1	2	Screw	(1) M18X60

1-ZQ38-003-A

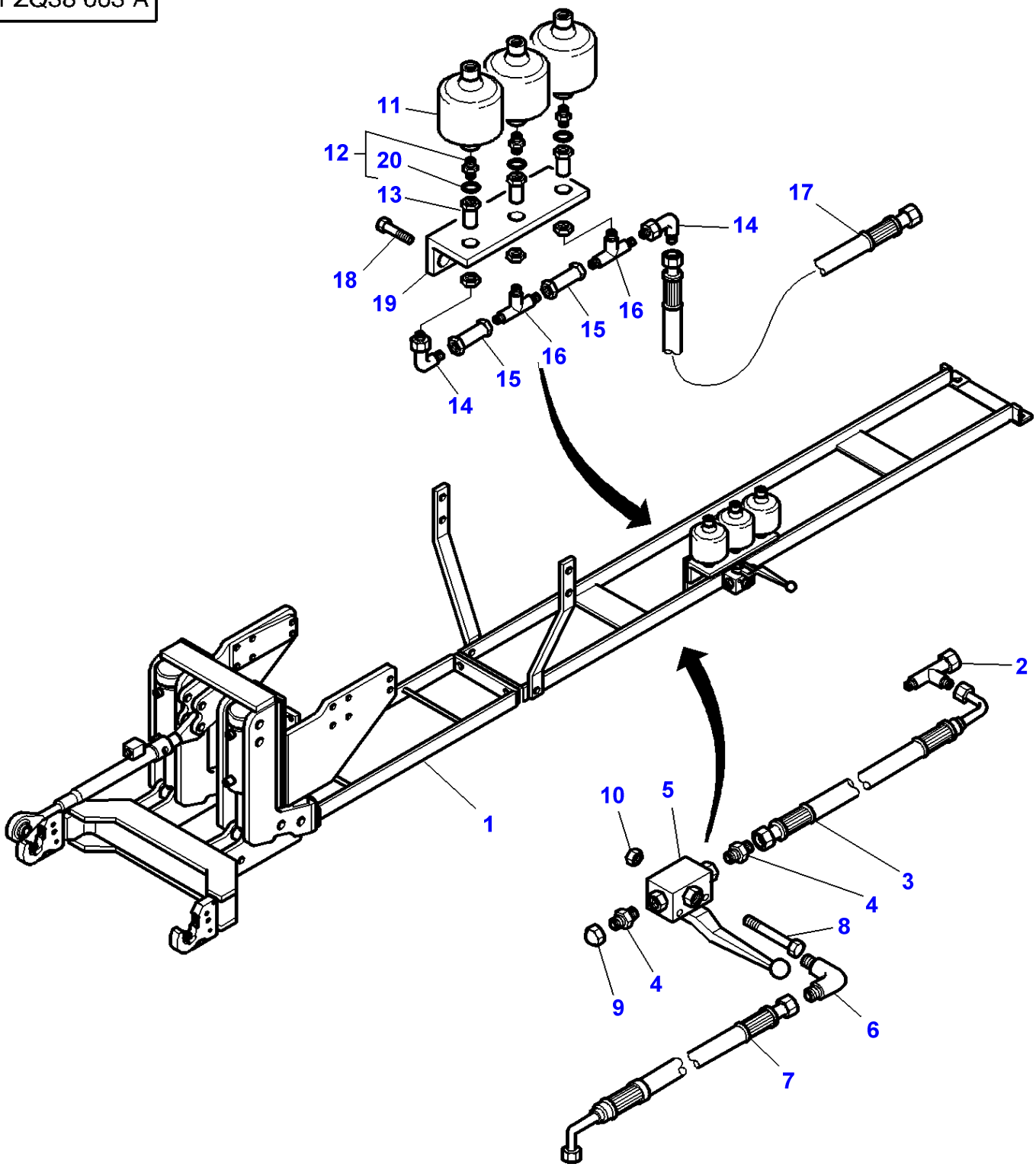

https://truckmanualshub.com/

Item	Part Number	Qty	Description	Comments
1	3783072M91	1	Hitch	
2	3782998M1	1	Teepiece	(1)
3	3782997M1	1	Hydr Hose	(1)
				Length 3200MM
4	3900869M1	2	Union	(1)
5	3900873M1	1	Vane	(1)
6	3900868M1	1	Elbow	(1)
7	3782996M1	1	Hydr Hose	(1)
				Length 2500MM
8	3010924X1	2	Screw	(1)
				M5X50
9	3900872M1	1	Plug	(1)
10	3005823X1	2	Nut	(1)
				M5
11	3900877M1	3	Accumulator	(1)
12	3900878M1	3	Union	(1)
13	3900880M1	3	Union	(1)
14	3900883M1	2	Elbow	(1)
15	3900882M1	2	Tube	(1)
16	3900914M1	2	Teepiece	(1)
17	3783006M1	1	Tube	(1)
18	3010922X1	2	Screw	(1)
				M14X30
19	3783005M1	1	Support	(1)
20	3900865M1	1	Gasket	(12)

https://truckmanualshub.com/

1-ZQ38-011-A

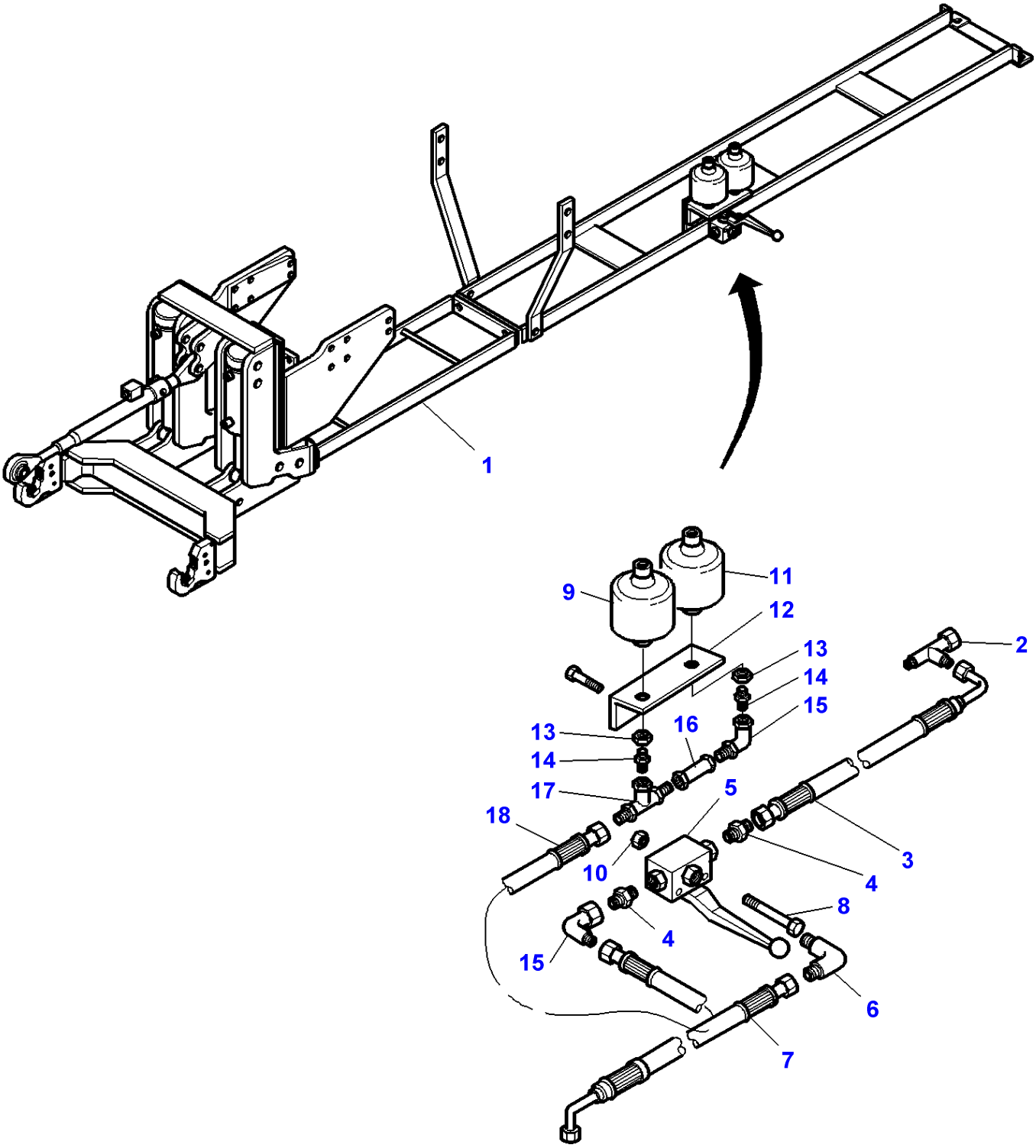

https://truckmanualshub.com/

Item	Part Number	Qty	Description	Comments
1	3783072M93	1	Hitch	
2	3782998M1	1	Teepiece	(1)
3	3782997M1	1	Hydr Hose	(1) Length 3200MM
4	3900869M1	2	Union	(1)
5	3900873M1	1	Vane	(1)
6	3900868M1	1	Elbow	(1)
7	3784043M1	1	Hydr Hose	(1) Length 2500MM
8	3010924X1	2	Screw	(1) M5X50
9	3783641M2	1	Accumulator	(1) 26 Bars
10	3005823X1	2	Nut	(1) M5
11	3783640M1	1	Accumulator	(1) 80 Bars
12	3783854M1	1	Support	(1)
13	3010967X1	2	Nut	(1)
14	3783642M1	2	Union	(1)
15	3900883M1	2	Elbow	(1)
16	3783643M1	1	Tube	(1)
17	3900914M1	1	Teepiece	(1)
18	3783855M1	1	Tube	(1)

https://truckmanualshub.com/

Page Title	Page Number
Pto Shaft	050-0005
Independant Power Take Off Clutch - 7 Disc	050-0010
Independant Power Take Off Drive Mechanism - Two Speed - Brakes	050-0015
Independant Power Take Off Clutch	050-0020
Pto Shaft	050-0025
Pto Shaft - Throttle Control	050-0030
Pto Shaft - Cable Control	050-0035
Pto-Coupling Drive Mechanism	050-0040
Pto-Proportional Drive Mechanism	050-0045
Pto Shaft	050-0050
Pto Shaft	050-0055
Front Pto - Housing - Counterclockwise Drive Front Pto	050-0060
Front Pto - Housing - Clock Wise Drive Front Pto	050-0065
Front Pto - Drive - Clock Wise Drive Or Reverse Drive	050-0070
Front Pto - IPTO Clutch - Clock Wise Drive Or Reverse Drive	050-0075
Front Pto - Drive - Clock Wise Drive Or Reverse Drive	050-0080
Front Pto - Drive - Clock Wise Drive Or Reverse Drive	050-0085
Front Pto - Drive - Clock Wise Drive Or Reverse Drive	050-0090
Front Pto - Lines - Counterclockwise Drive Front Pto	050-0095
Front Pto - Lines - Clock Wise Drive Front Pto	050-0100
Front Pto - Harness	050-0105

https://truckmanualshub.com/

1-ZX18-003-A

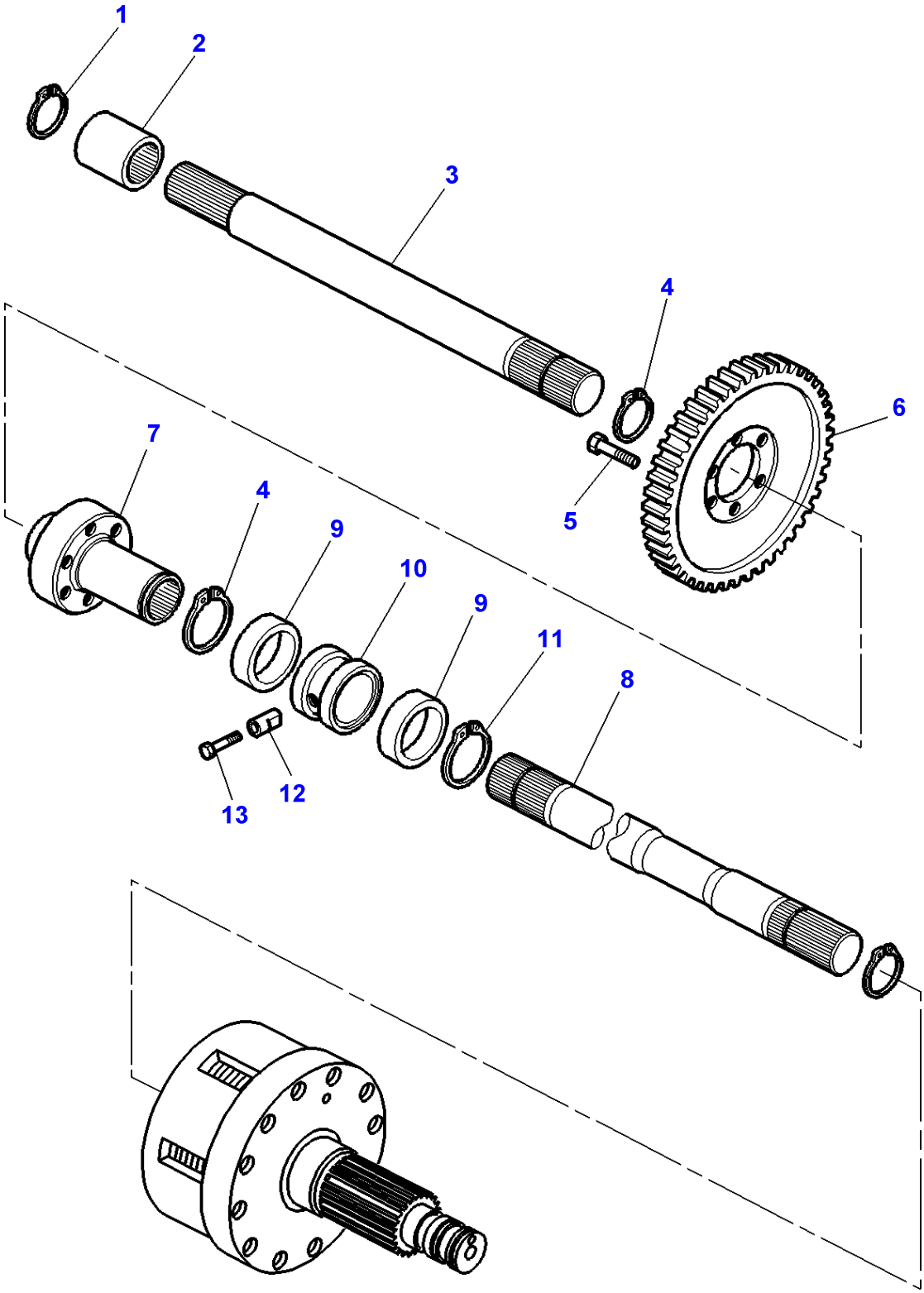

https://truckmanualshub.com/

Item	Part Number	Qty	Description	Comments
1	3019268X1	1	Circlip	
2	3716460M1	1	Sleeve	
3	3716417M1	1	Shaft	Length 370MM
4	339469X1	2	Circlip	
5	3010969X1	6	Screw Metric	M10X20
6	3716420M1	1	Pinion	Number of teeth/spines 87
7	3716489M1	1	Hub	
8	3716421M2	1	Shaft	
9	3003277X1	2	Bear. 6010	
10	3716564M2	1	Bush	
11	391129X1	1	Circlip	
12	3716807M1	1	Pin	
13	3019642X1	1	Plug	M16

https://truckmanualshub.com/

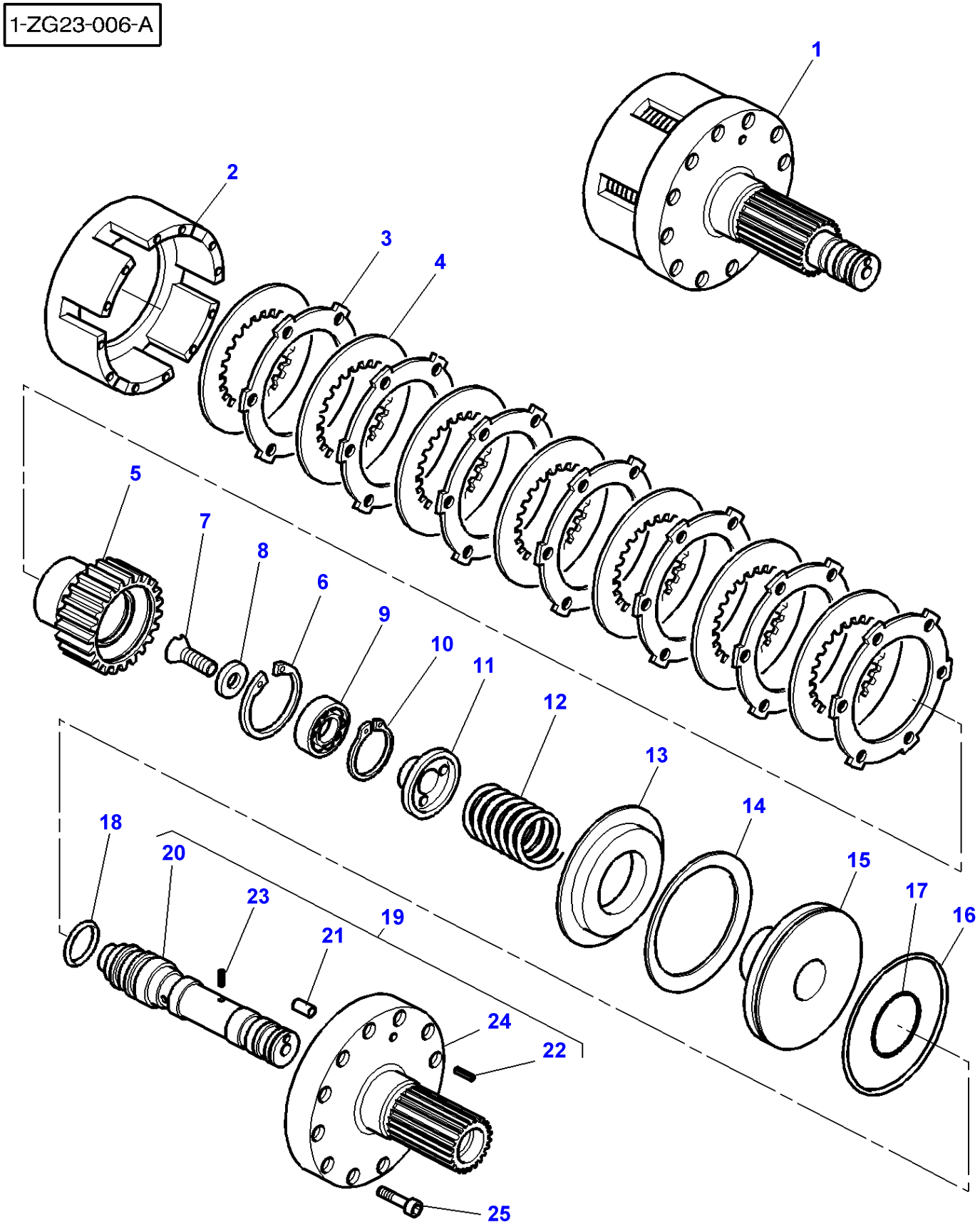

https://truckmanualshub.com/

Item	Part Number	Qty	Description	Comments
1	3716008M14	1	Kit, Clutch	
2	3716032M1	1	Cover	(1)
3	3387347M1	7	Disc	(1)
4	3387346M1	7	Counterplate	(1)
5	3716033M1	1	Hub	(1)
6	3716080M1	1	Ring	(1)
7	3009450X1	1	Screw	(1) M10X20
8	3389211M1	1	Washer	(1)
9	3010767X1	1	Bear. 6004	(1)
10	391061X1	1	Circlip	(1)
11	3716034M1	1	Stop	(1)
12	3582893M1	1	Spring	(1)
13	3387198M1	1	Support	(1)
14	3619148M1	1	Cup Spring	(1)
15	3387193M1	1	Piston	(1)
16	3582933M1	1	Gasket	(1)
17	3582934M1	1	Gasket	(1) Diameter 29,74X3,53MM
18	367156X1	1	O Ring	(1) Diameter 26,64X2,62MM
19	3716061M12	1	Support	(1)
20	3716030M1	1	Clevis Pin	(19)
21	3009351X1	1	Screw	(19) M6x8
22	1872134M92	1	Valve Check	(19)
23	3006442X1	1	Pin	(19) Diameter 2 MM Length 12 MM
24		1	Hub Carrier	(19) Not serviced, order REF 19
25	3010785X1	12	Screw Metric	(1) M8X50

1-ZG24-001-A

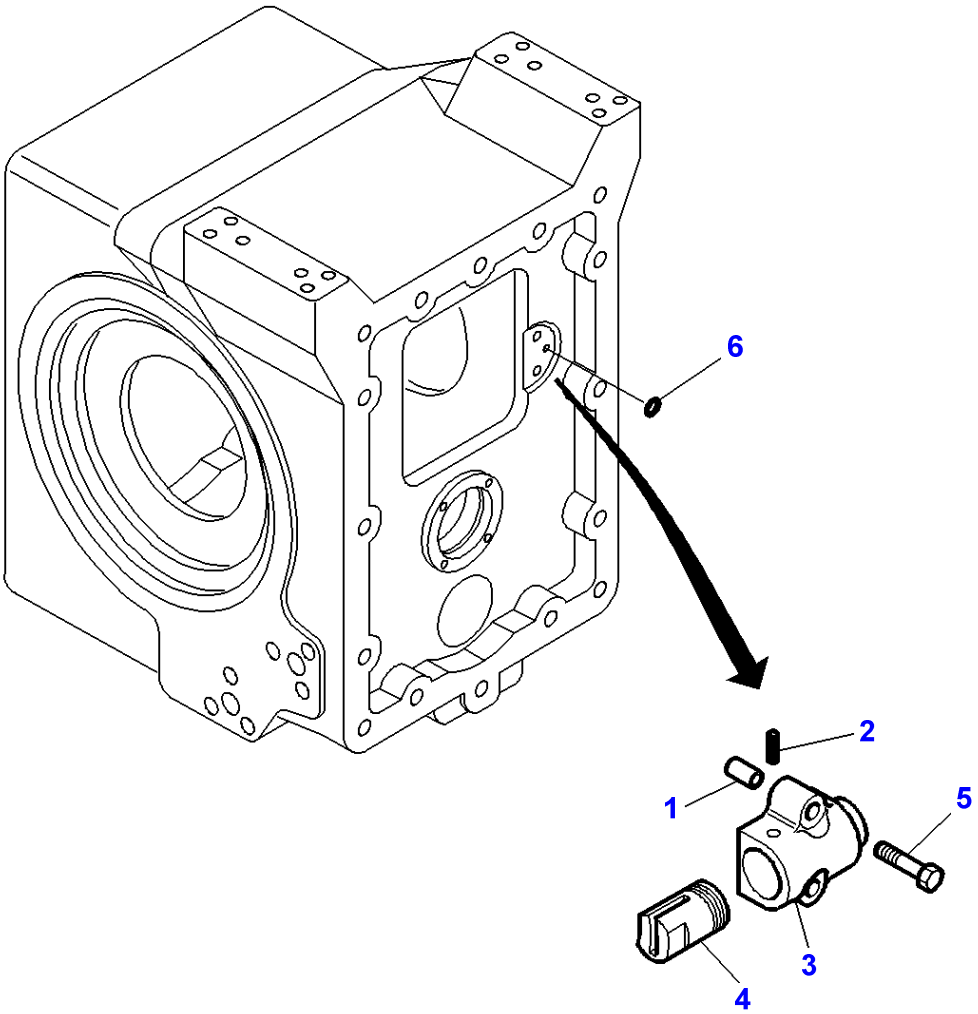

https://truckmanualshub.com/

Item	Part Number	Qty	Description	Comments
1	3000052X1	2	Sleeve	
2	1440961X1	1	Pin	Diameter 4 MM Length 10 MM
3	3716181M1	1	Case Assy	Up to Serial or Engine Number J062012
	3793768M1	1	Case Assy	From Serial or Engine Number J062013
4	3716180M1	1	Piston	
5	3004715X1	2	Screw	M8X60
6	1440011X1	1	O Ring	

https://truckmanualshub.com/

1-ZG23-007-A

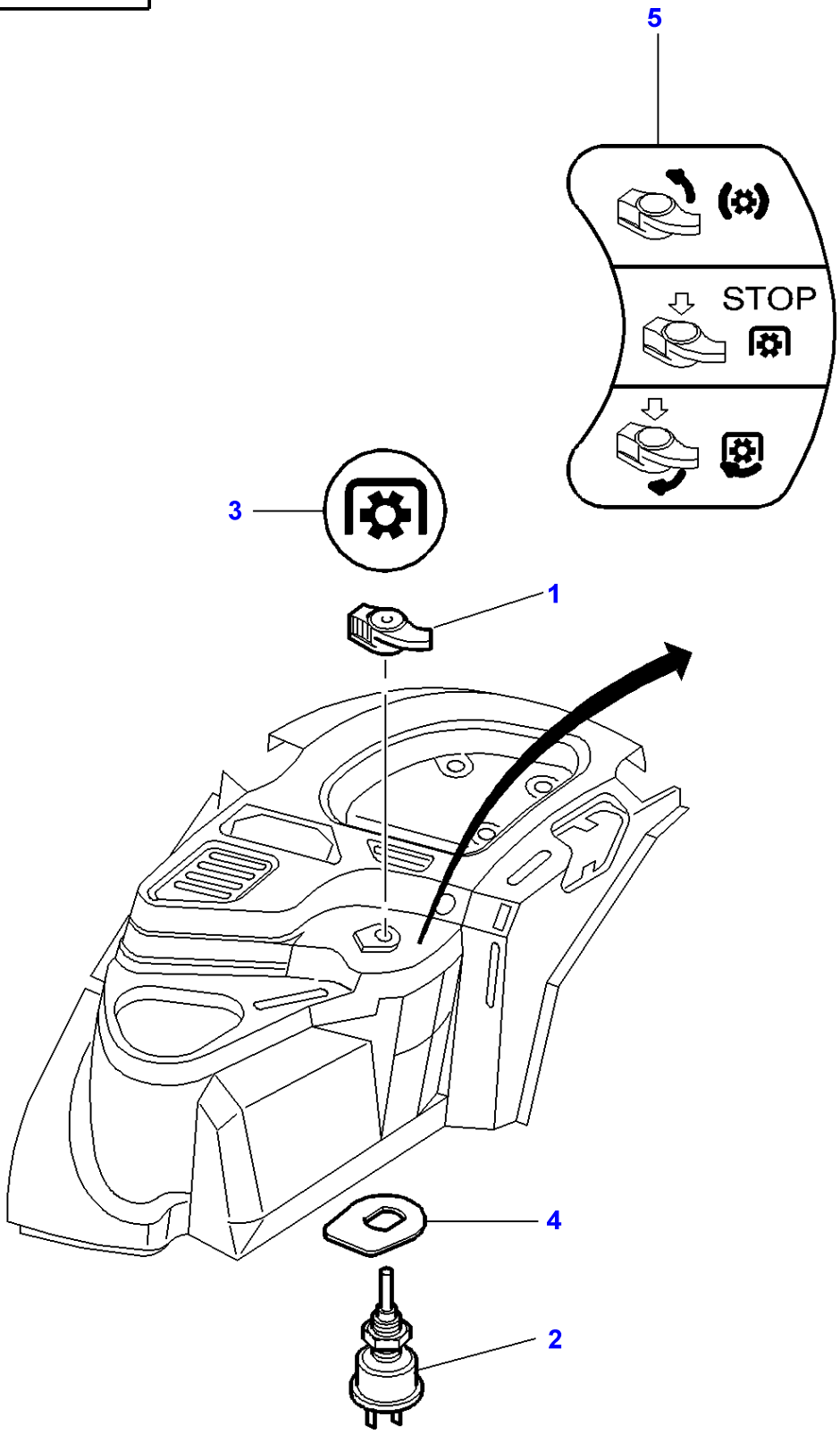

https://truckmanualshub.com/

Item	Part Number	Qty	Description
1	3778562M2	1	Button
2	**3619445M1**	1	Switch,Indirect
3	3781792M1	1	Decal
4	3781924M1	1	Plate
5	3782569M1	1	Decal

https://truckmanualshub.com/

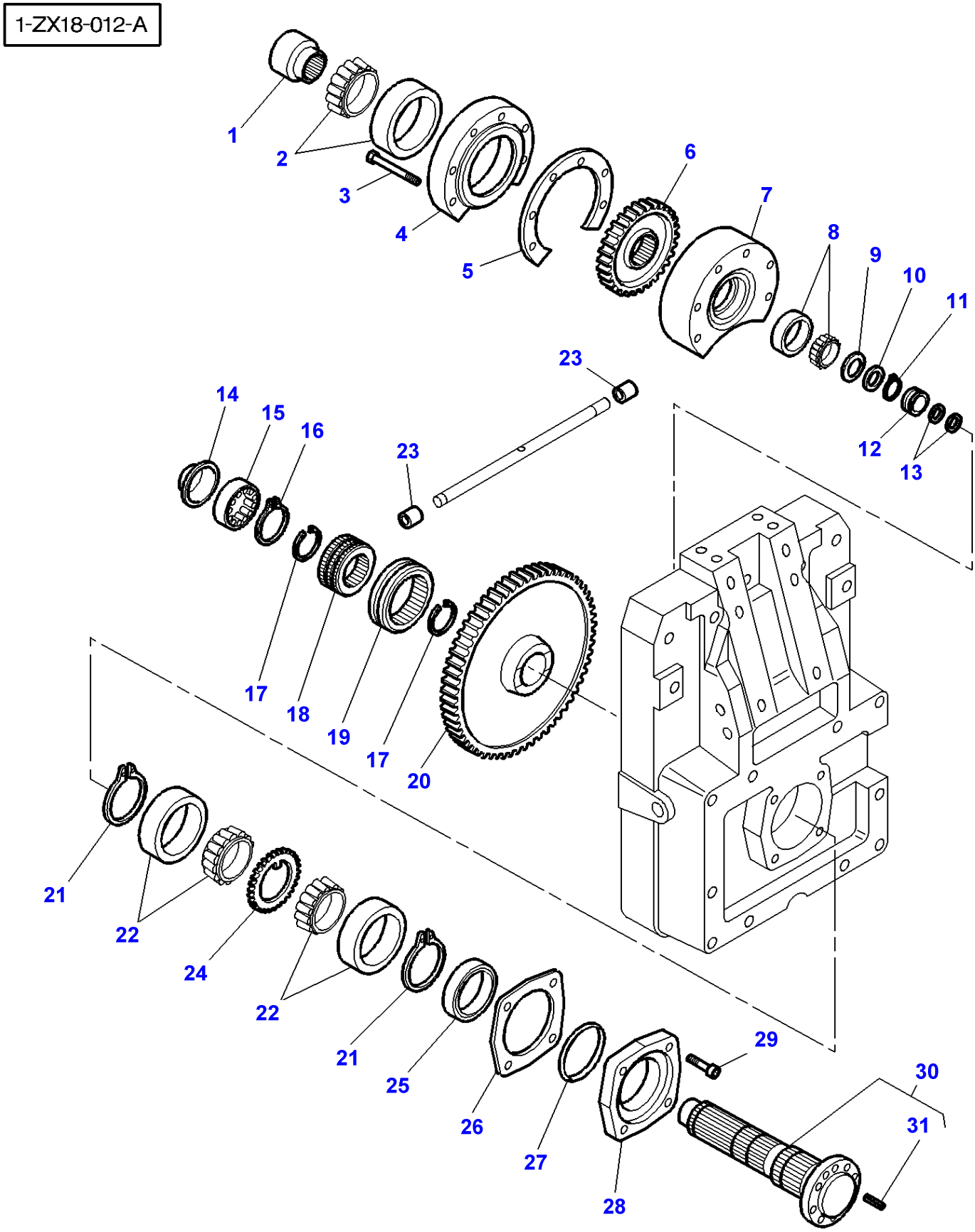

https://truckmanualshub.com/

Item	Part Number	Qty	Description	Comments
1	3716338M1	1	Bush	
2	968634M91	1	Bearing Assy	
3	339488X1	6	Bolt Metric	M10x85
4	3716002M2	1	Bearing Carrier	
5	3716037M1	X	Chock	Thickness 0,1 MM
	3716038M1	X	Chock	Thickness 0,4 MM
6	3716006M1	1	Pinion	Number of teeth/spines 44 1000 RPM
7	3716003M2	1	Case Assy	
8	3009853X1	1	Bearing Taper	
9	3716007M1	1	Washer	
10	3716028M1	1	Washer	
11	3010624X1	1	Ring	
12	3382868M1	1	Bush	
13	3382874M1	2	Segment	
14	3716024M1	1	Deflector	
15	1612707M1	1	Bearing Assy	
16	3015238X1	1	Ring	
17	3010555X1	2	Ring	
18	3716025M2	1	Hub	
19	3382069M2	1	Slider Bearing	
20	3716012M12	1	Pinion	Number of teeth/spines 92 1000 RPM
21	3010554X1	2	Circlip	
22	968634M91	2	Bearing Assy	
23	390979X1	2	Plug	
24	3716014M2	1	Spacer	
25	3716017M1	1	Gasket	
26	3716053M1	X	Chock	Thickness 0,1 MM
	3716054M1	X	Chock	Thickness 0,4 MM
27	152623M1	1	O Ring	
28	3716022M1	1	Hub	
29	3009292X1	4	Screw	M10x25
30	3716057M13	1	Shaft	
31	3006290X1	1	Centraliser	(30) Diameter 10 MM Length 30 MM

https://truckmanualshub.com/

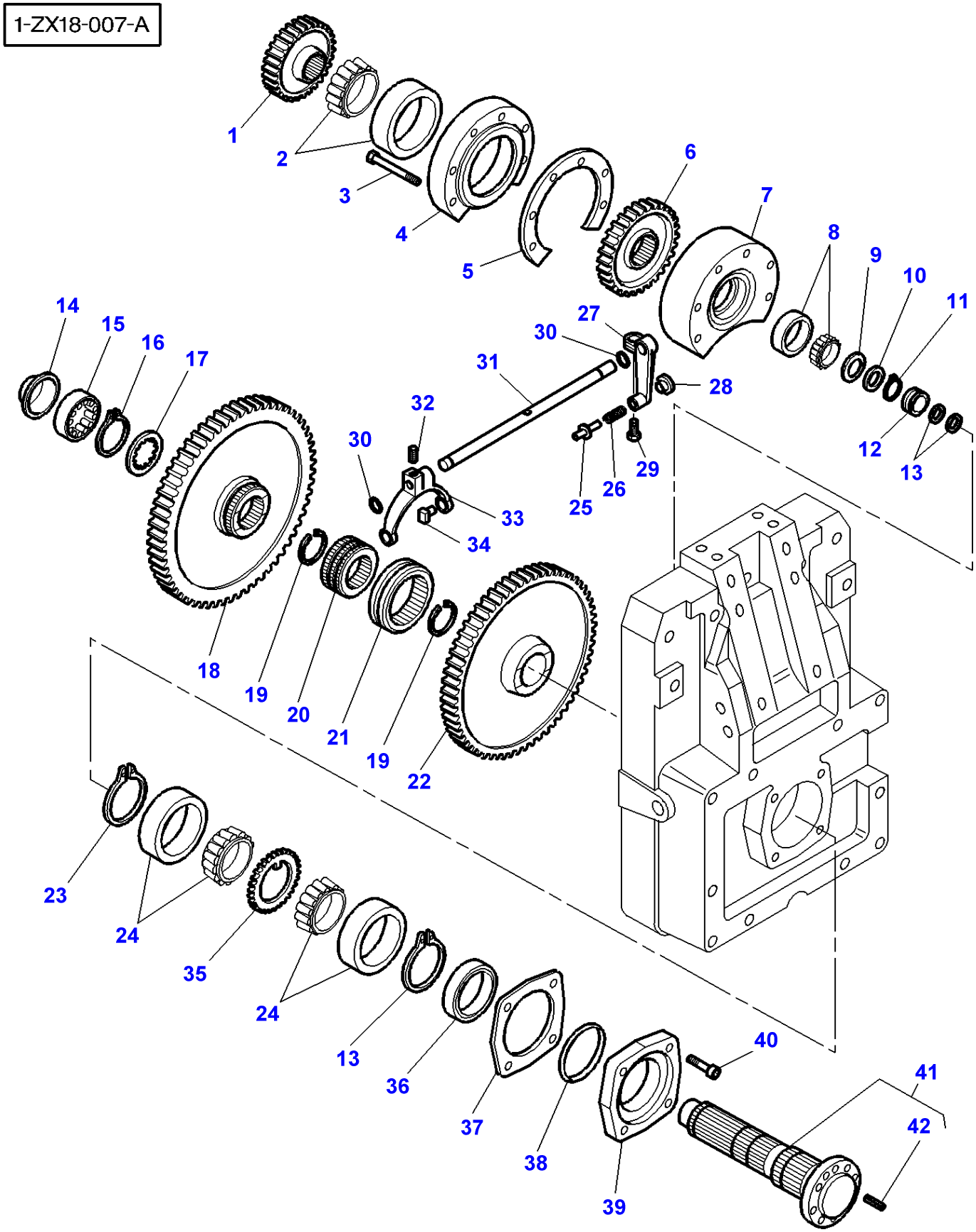

https://truckmanualshub.com/

Item	Part Number	Qty	Description	Comments
1	3716288M1	1	Pinion	Number of teeth/spines 29 540 RPM
	3716005M1	1	Pinion	Number of teeth/spines 37 750 RPM
2	968634M91	1	Bearing Assy	
3	339488X1	6	Bolt Metric	M10x85
4	3716002M2	1	Bearing Carrier	
5	3716037M1	X	Chock	Thickness 0,1 MM
	3716038M1	X	Chock	Thickness 0,4 MM
6	3716006M1	1	Pinion	Number of teeth/spines 44 1000 RPM
7	3716003M2	1	Case Assy	
8	3009853X1	1	Bearing Taper	
9	3716007M1	1	Washer	
10	3716028M1	1	Washer	
11	3010624X1	1	Ring	
12	3382868M1	1	Bush	
13	3382874M1	2	Segment	
14	3716024M1	1	Deflector	
15	1612707M1	1	Bearing Assy	
16	391129X1	1	Circlip	
17	3716027M2	1	Washer	
18	3716290M12	1	Pinion	Number of teeth/spines 107 540 RPM
	3716009M13	1	Pinion	Number of teeth/spines 99 750 RPM
19	3010555X1	2	Ring	
20	3716025M2	1	Hub	
21	3382069M2	1	Slider Bearing	
22	3716012M12	1	Pinion	Number of teeth/spines 92 1000 RPM
23	3010554X1	2	Circlip	
24	968634M91	2	Bearing Assy	
25	3383009M1	1	Clevis Pin	
26	1426515M1	1	Spring	
27	3581440M1	1	Lever	
28	973052M1	1	Knob	
29	1440350X1	1	Screw Metric	M6
30	195868M1	2	O Ring	
31	3716049M1	1	Stem	
32	3382979M1	1	Screw Special	M8x20
33	3382971M1	1	Fork	
34	3382972M2	2	Skate	
35	3716014M2	1	Spacer	
36	3716017M1	1	Gasket	
37	3716053M1	X	Chock	Thickness 0,1 MM
	3716054M1	X	Chock	Thickness 0,4 MM
38	152623M1	1	O Ring	
39	3716022M1	1	Hub	
40	3009292X1	4	Screw	M10x25
41	3716057M13	1	Shaft	
42	3006290X1	1	Centraliser	(41) Diameter 10 MM Length 30 MM

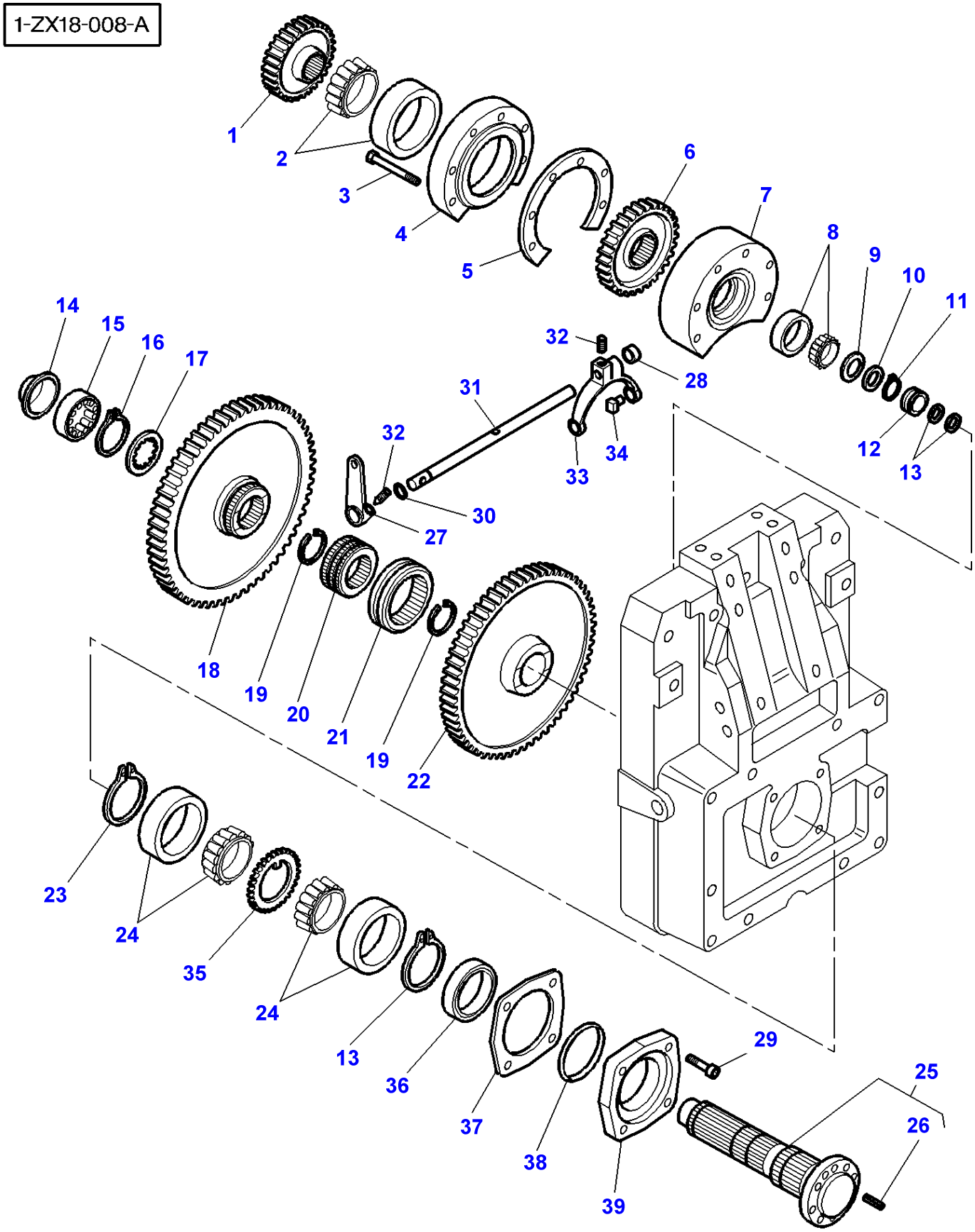
1-ZX18-008-A
1
2
3
4
5
6
7
8
9
10
11
12
13
14
15
16
17
18
19
20
21
19
22
23
24
35
24
13
36
37
38
39
29
25
26
32
28
31
32
33
34
30
27

https://truckmanualshub.com/

Item	Part Number	Qty	Description	Comments
1	3716288M1	1	Pinion	Number of teeth/spines 29 540 RPM
	3716005M1	1	Pinion	Number of teeth/spines 37 750 RPM
2	968634M91	1	Bearing Assy	
3	339488X1	6	Bolt Metric	M10x85
4	3716002M2	1	Bearing Carrier	
5	3716037M1	X	Chock	Thickness 0,1 MM
	3716038M1	X	Chock	Thickness 0,4 MM
6	3716006M1	1	Pinion	Number of teeth/spines 44 1000 RPM
7	3716003M2	1	Case Assy	
8	3009853X1	1	Bearing Taper	
9	3716007M1	1	Washer	
10	3716028M1	1	Washer	
11	3010624X1	1	Ring	
12	3382868M1	1	Bush	
13	3382874M1	2	Segment	
14	3716024M1	1	Deflector	
15	1612707M1	1	Bearing Assy	
16	391129X1	1	Circlip	
17	3716027M2	1	Washer	
18	3716290M12	1	Pinion	Number of teeth/spines 107 540 RPM
	3716009M13	1	Pinion	Number of teeth/spines 99 750 RPM
19	3010555X1	2	Ring	
20	3716025M2	1	Hub	
21	3382069M2	1	Slider Bearing	
22	3716012M12	1	Pinion	Number of teeth/spines 92 1000 RPM
23	3010554X1	2	Circlip	
24	968634M91	2	Bearing Assy	
25	3716057M13	1	Shaft	
26	3006290X1	1	Centraliser	(25) Diameter 10 MM Length 30 MM
27	3389580M2	1	Lever	
28	391563X1	1	Plug	
29	3009292X1	4	Screw	M10x25
30	195868M1	1	O Ring	
31	3791859M1	1	Stem	
32	3382979M1	2	Screw Special	M8x20
33	3382971M1	1	Fork	
34	3382972M2	2	Skate	
35	3716014M2	1	Spacer	
36	3716017M1	1	Gasket	
37	3716053M1	X	Chock	Thickness 0,1 MM
	3716054M1	X	Chock	Thickness 0,4 MM
38	152623M1	1	O Ring	
39	3716022M1	1	Hub	

https://truckmanualshub.com/

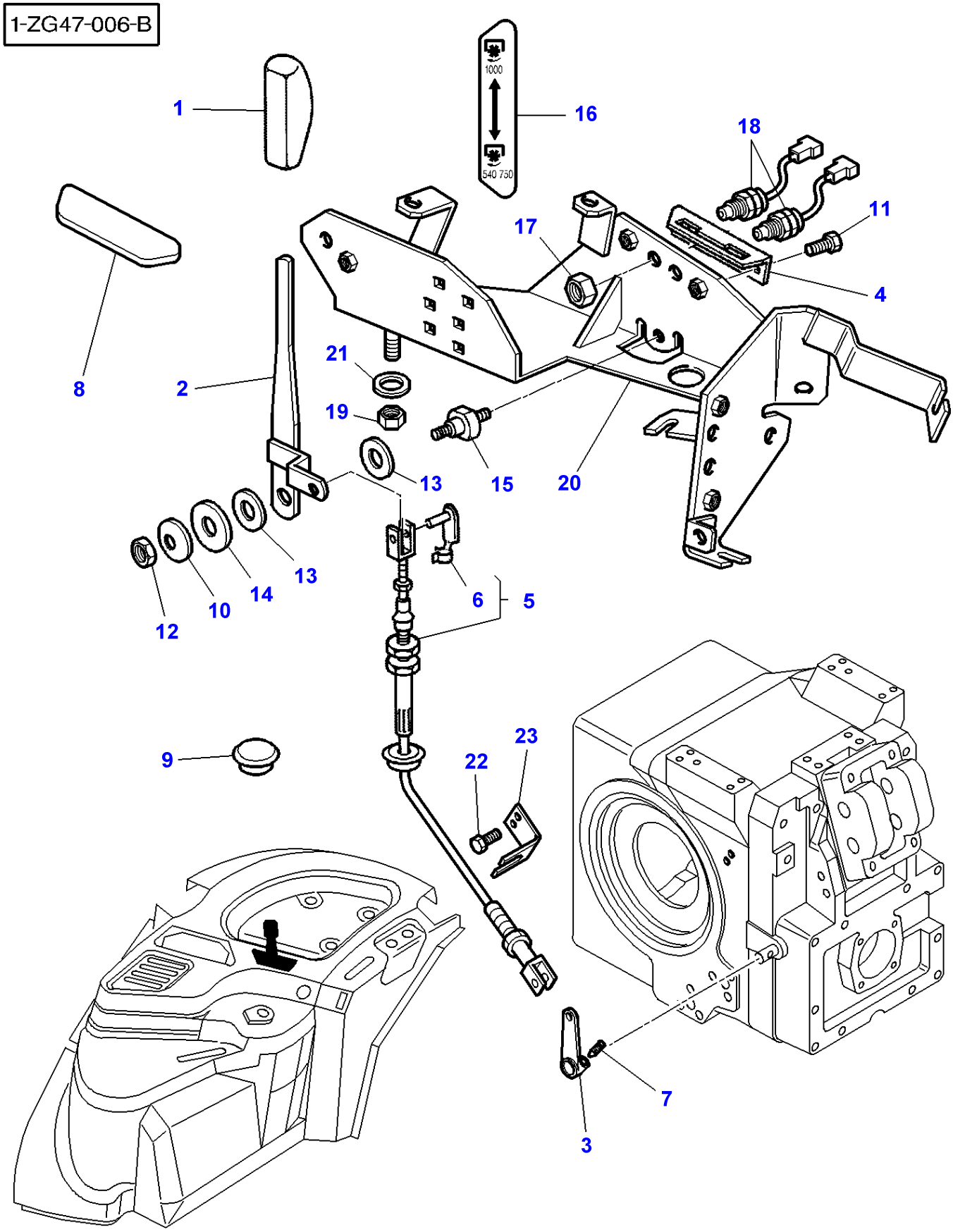

https://truckmanualshub.com/

Item	Part Number	Qty	Description	Comments
1	3712976M2	1	Handle	
2	3712282M3	1	Lever	
3	3389580M2	1	Lever	M16X50
4	3715489M3	1	Grille	
5	3715483M1	1	Cable	
6	3600190M1	1	Clevis Pin	(5) Length 28MM
	3600191M1	1	Clevis Pin	(5) Length 40MM
7	3382979M1	1	Screw Special	
8	3712984M1	X	Plate	
9	3715587M1	1	Decal	Diameter 22MM
10	3386192M1	1	Washer	
11	339228X1	2	Screw Metric	M8X12
12	1441461X1	2	Locknut	
13	3386166M1	2	Washer	
14	1442174X1	1	Washer	
15	3712277M1	1	Clevis Pin	
16	3715185M2	1	Decal	
17	3386198M1	2	Nut Special	
18	**3780581M1**	2	Switch,Indirect	
19	1441461X1	4	Locknut	
20	3778480M91	1	Support	
21	385361X1	4	Washer Metric	
22	391989X1	2	Screw Metric	M8X20
23	3791860M1	1	Thruster	

https://truckmanualshub.com/

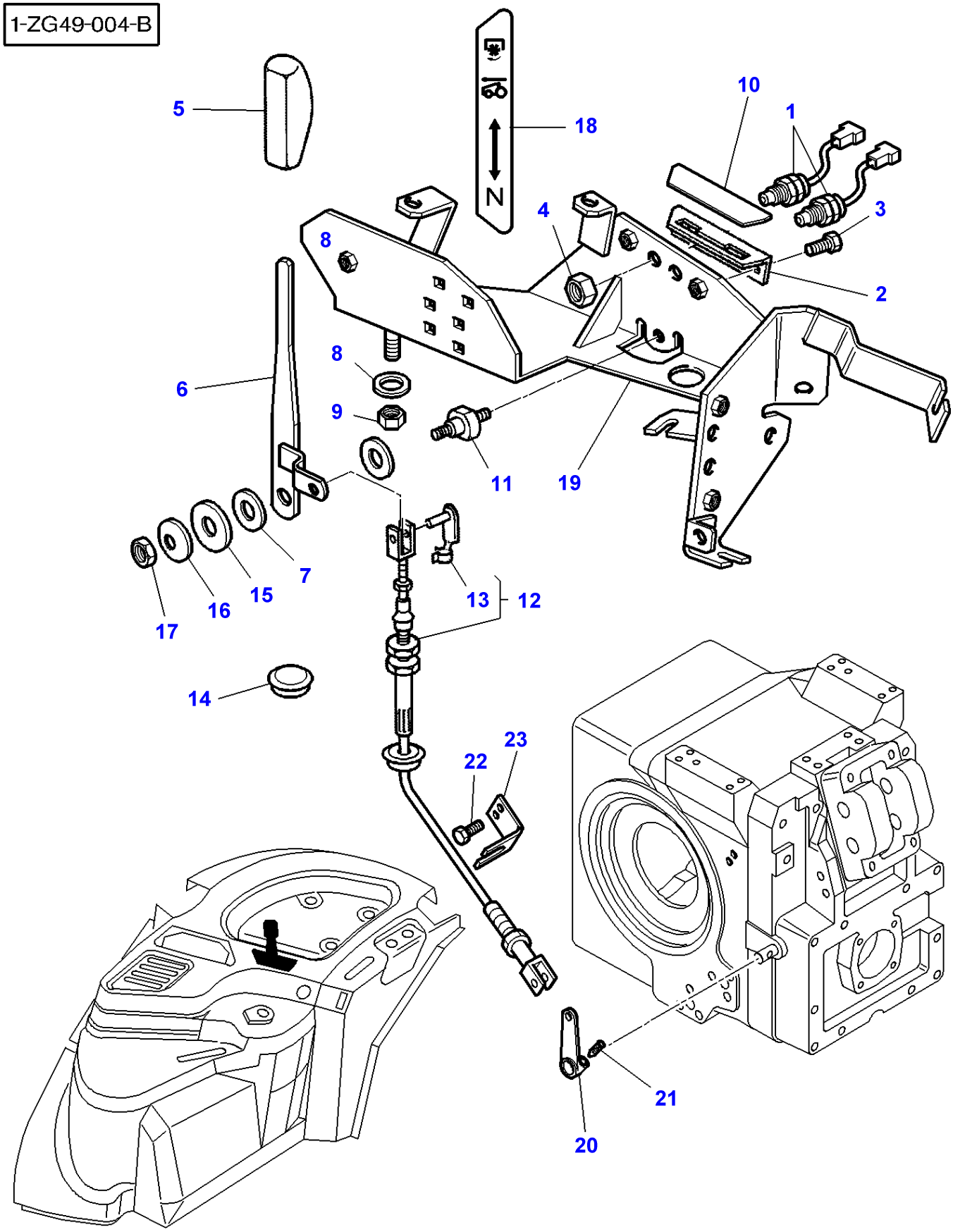

https://truckmanualshub.com/

Item	Part Number	Qty	Description	Comments
1	**3780581M1**	2	Switch,Indirect	
2	3712275M1	1	Grille	
3	339228X1	2	Screw Metric	M8X12
4	3386198M1	2	Nut Special	
5	3712976M2	1	Handle	
6	3712282M3	1	Lever	
7	3386166M1	2	Washer	
8	385361X1	4	Washer Metric	
9	1441461X1	4	Locknut	
10	3712984M1	1	Plate	
11	3712277M1	1	Clevis Pin	
12	3715483M1	1	Cable	
13	3600190M1	1	Clevis Pin	(12) Length 28MM
	3600191M1	1	Clevis Pin	(12) Length 40MM
14	3713587M1	1	Plug	
15	1442174X1	1	Washer	
16	3386192M1	1	Washer	
17	1441461X1	1	Locknut	
18	3780175M1	1	Decal	
19	3778480M91	1	Support	
20	3389580M2	1	Lever	
21	3382979M1	1	Screw Special	
22	391989X1	2	Screw Metric	M8X20
23	3791860M1	1	Thruster	

https://truckmanualshub.com/

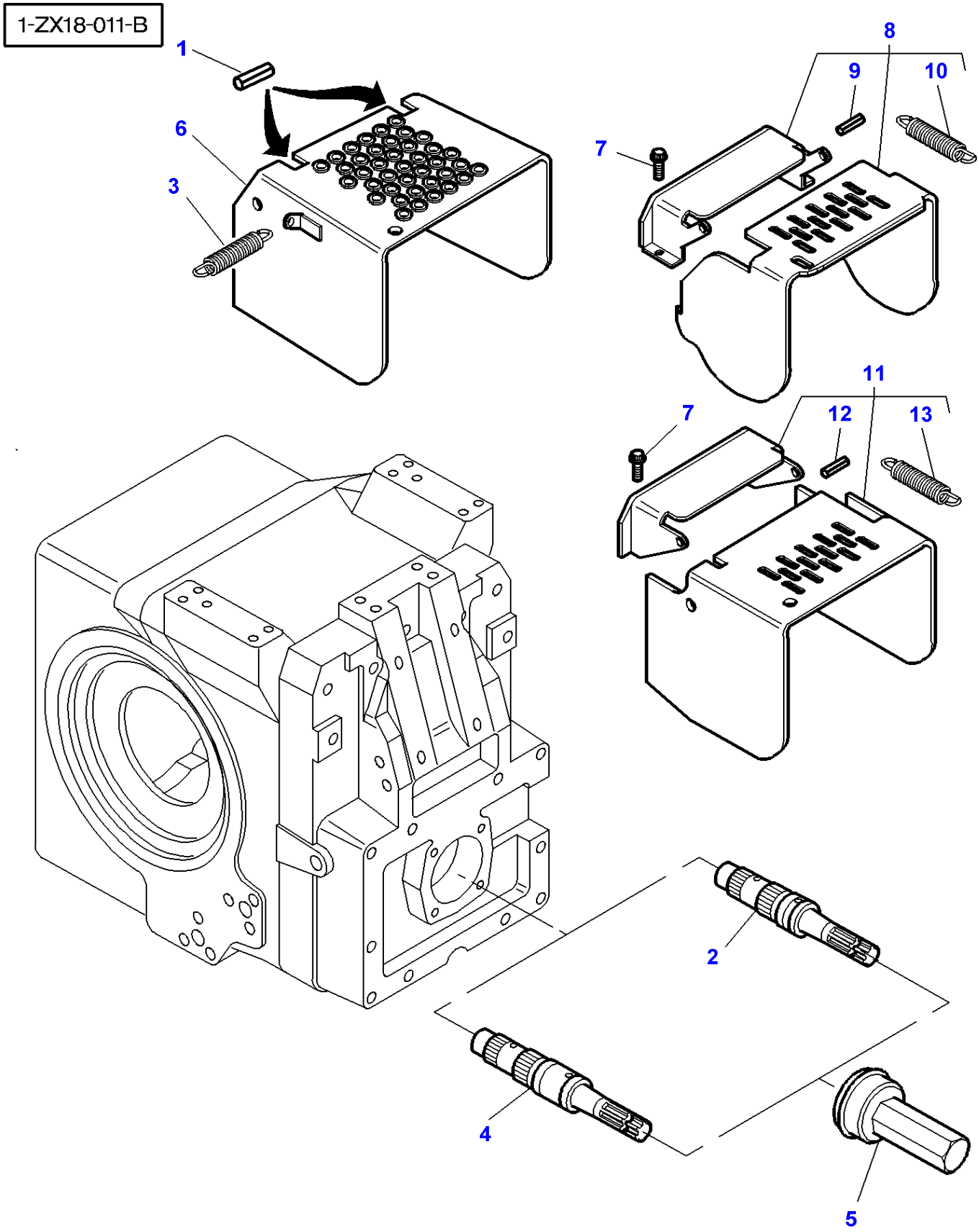

https://truckmanualshub.com/

Item	Part Number	Qty	Description	Comments
1	3019541X1	2	Roll Pin	Diameter 8 MM
				Length 22 MM
2	3716045M4	1	Shaft	Number of teeth/spines 6 / ISO
				Diameter 1"3/8-34,9MM
				Length 368,8MM
				540 RPM
3	3716643M1	1	Spring	Length 85 MM
	3618683M1	1	Spring	[C]
				Length 118 MM
4	3716068M3	1	Shaft	[B]
				Number of teeth/spines 6 / SAE
				Diameter 1"3/8-34,9 MM
				Length 408,8 MM
				540 RPM
5	3716071M1	1	Protector	Length 206MM
	3716021M1	1	Protector	Length 166MM
6	3716693M92	1	Protector	[B]
				CAT. 3
	3716696M91	1	Protector	[D,B]
	3716640M91	1	Protector	[A]
7	3010917X1	2	Screw Metric	M20X30
8	3792679M91	1	Protector	[A]
				Up to Serial or Engine Number H151014
				CAT . 2/3
9	3792837M1	2	Pin	(8)
10	3792838M1	1	Spring	(8)
11	3793135M91	1	Protector	[A]
				From Serial or Engine Number H151015
				CAT . 2/3
12	3002169X1	2	Pin	(11)
13	3793246M1	1	Spring	(11)

FOOTNOTE [A] ISO STANDARD
FOOTNOTE [B] SAE STANDARD
FOOTNOTE [C] LESS STABILISERS
FOOTNOTE [D] WITH SHOE STABILIZERS

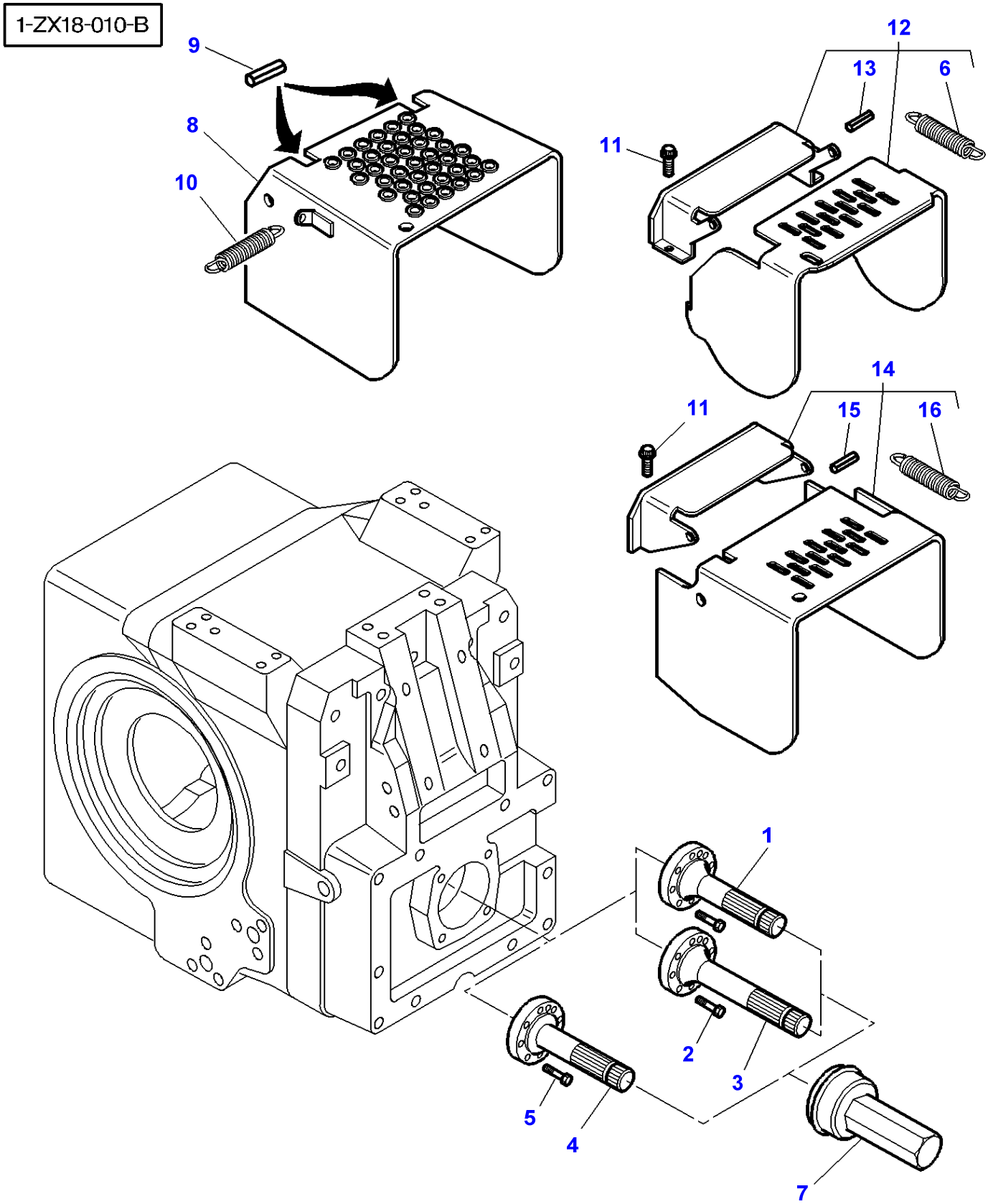
1-ZX18-010-B
9
8
10
12
13
6
11
14
11
15
16
1
2
3
5
4
7

https://truckmanualshub.com/

Item	Part Number	Qty	Description	Comments
1	3716016M1	1	Shaft	Number of teeth/spines 21 / ISO Diameter 1"3/8-34,9 MM Length 137,45 MM 1000 RPM
	3716018M1	1	Shaft	Number of teeth/spines 6 / ISO Diameter 1"3/8-34,9MM Length 137,45MM 540 RPM
2	3010800X1	8	Screw	M12x35
3	3716074M1	1	Shaft	Number of teeth/spines 21 / SAE Diameter 1"3/8-34,9MM Length 177,45 MM 1000 RPM
	3716072M1	1	Shaft	Number of teeth/spines 6 / SAE Diameter 1"3/8-34,9MM Length 177,45MM 540 RPM
4	3716019M1	1	Shaft	Number of teeth/spines 20 / ISO Diameter 1"3/4-44,2 MM Length 137,45 MM 1000 RPM
5	3010800X1	8	Screw	M12x35
6	3792838M1	1	Spring	(12)
7	3716071M1	1	Protector	Length 206MM
	3716021M1	1	Protector	Length 166MM
8	3716693M92	1	Protector	[C] CAT . 3
	3716696M91	1	Protector	[B,C] CAT . 2
	3716640M91	1	Protector	[D]
9	3019541X1	2	Roll Pin	Diameter 8 MM Length 22 MM
10	3716643M1	1	Spring	Length 85MM
	3618683M1	1	Spring	[A] Length 118MM
11	3010917X1	2	Screw Metric	M20X30
12	3792679M91	1	Protector	[D] Up to Serial or Engine Number H151014 CAT . 2/3
13	3792837M1	2	Pin	(12)
14	3793135M91	1	Protector	[D] From Serial or Engine Number H151015 CAT . 2/3
15	3002169X1	2	Pin	(14)
16	3793246M1	1	Spring	(14)

FOOTNOTE [A] LESS STABILISERS
FOOTNOTE [B] WITH SHOE STABILIZERS
FOOTNOTE [C] SAE STANDARD
FOOTNOTE [D] ISO STANDARD

1-ZX39-003-B

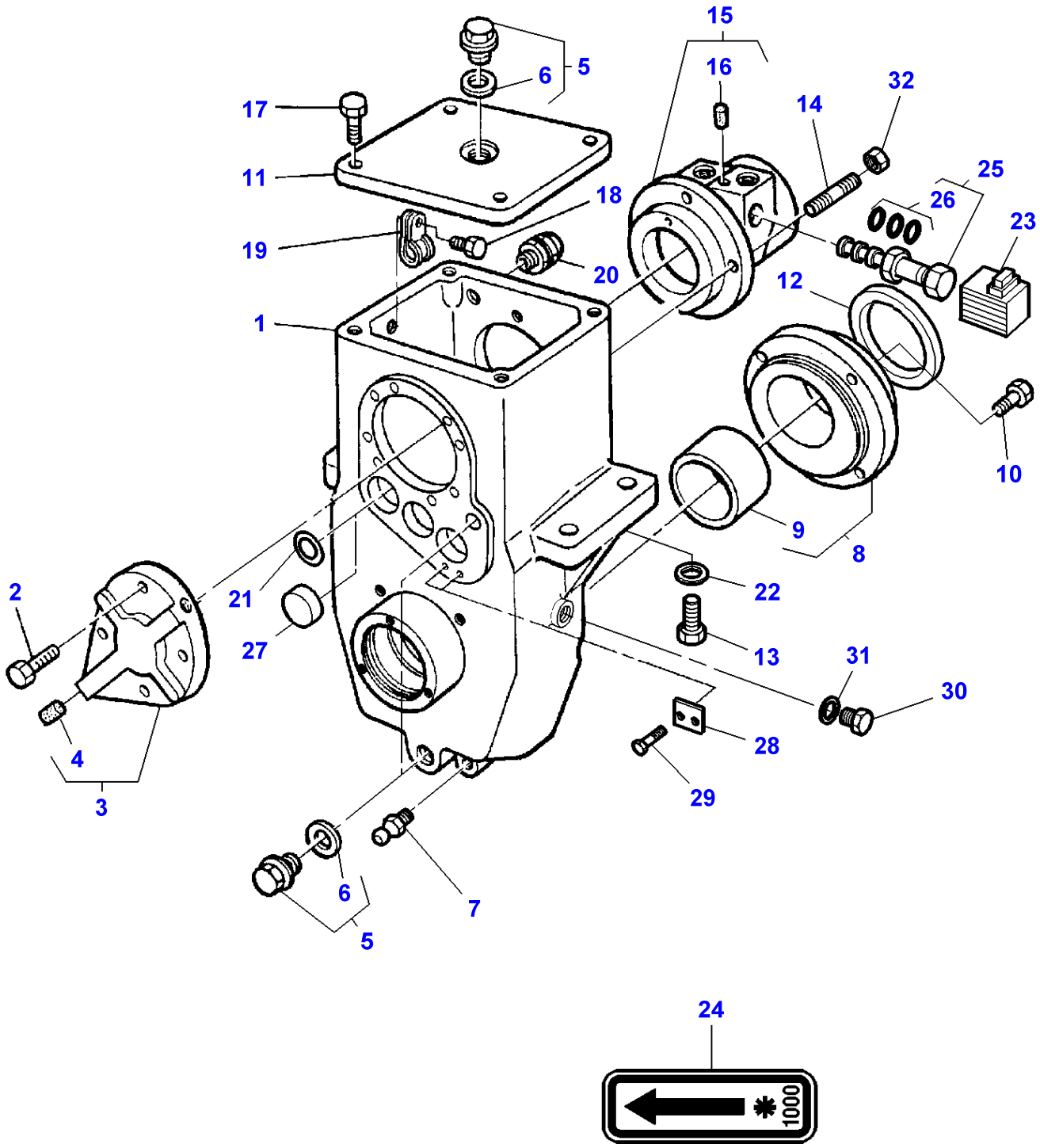
15
16
32
14
5
6
17
11
18
25
26
23
19
20
12
1
10
9
8
2
21
22
27
13
31
30
28
4
29
3
6
7
5
24
1000

https://truckmanualshub.com/

Item	Part Number	Qty	Description	Comments
1	3615609M2	1	Case Assy	
2	339761X1	4	Hex. Sock. Screw	M8X25
3	3581124M11	1	Cover	
4	3581130M1	1	Plug	(3)
5	3583994M91	3	Plug	M18
6	3019397X1	3	O Ring	(5)
7	339608X1	1	Grease Nipple	
8	3783252M12	1	Bearing Carrier	
9	3783251M2	1	Bush	(8)
10	1442210X1	4	Bolt Metric	M12X30
11	3389345M3	1	Cover	
12	3783595M1	1	Cup	Diameter 150MM
13	3386216M1	4	Screw	M20X60
14	3386903M1	2	Stud	M8X32
15	3581116M11	1	Bearing Carrier	
16	3388063M1	1	Plug	(15) Diameter 6MM
17	339761X1	4	Hex. Sock. Screw	M8X25
18	391074X1	1	Hex. Sock. Screw	M6X12
19	3581132M1	1	Clamp	Diameter 15MM
20	3389615M1	1	Gland	
21	195562M1	2	O Ring	
22	385365X1	4	Washer	
23	3619764M1	1	Solenoid	[A] (1)
24	3618157M2	1	Decal	
25	**3619762M1**	1	Spool	
26	3900994M91	1	Kit, Joint	(25)
27	3713445M1	1	Plug	Diameter 36MM
28	3615604M1	1	Stop	
29	339123X1	2	Hex. Sock. Screw	M8X20
30	339494X1	1	Plug	[B] M20
31	390202X1	1	Seal	[B]
32	339169X1	2	Nut	

FOOTNOTE [A] INCLUDING A DIODE
FOOTNOTE [B] WITHOUT SENSOR

1-ZX39-004-B

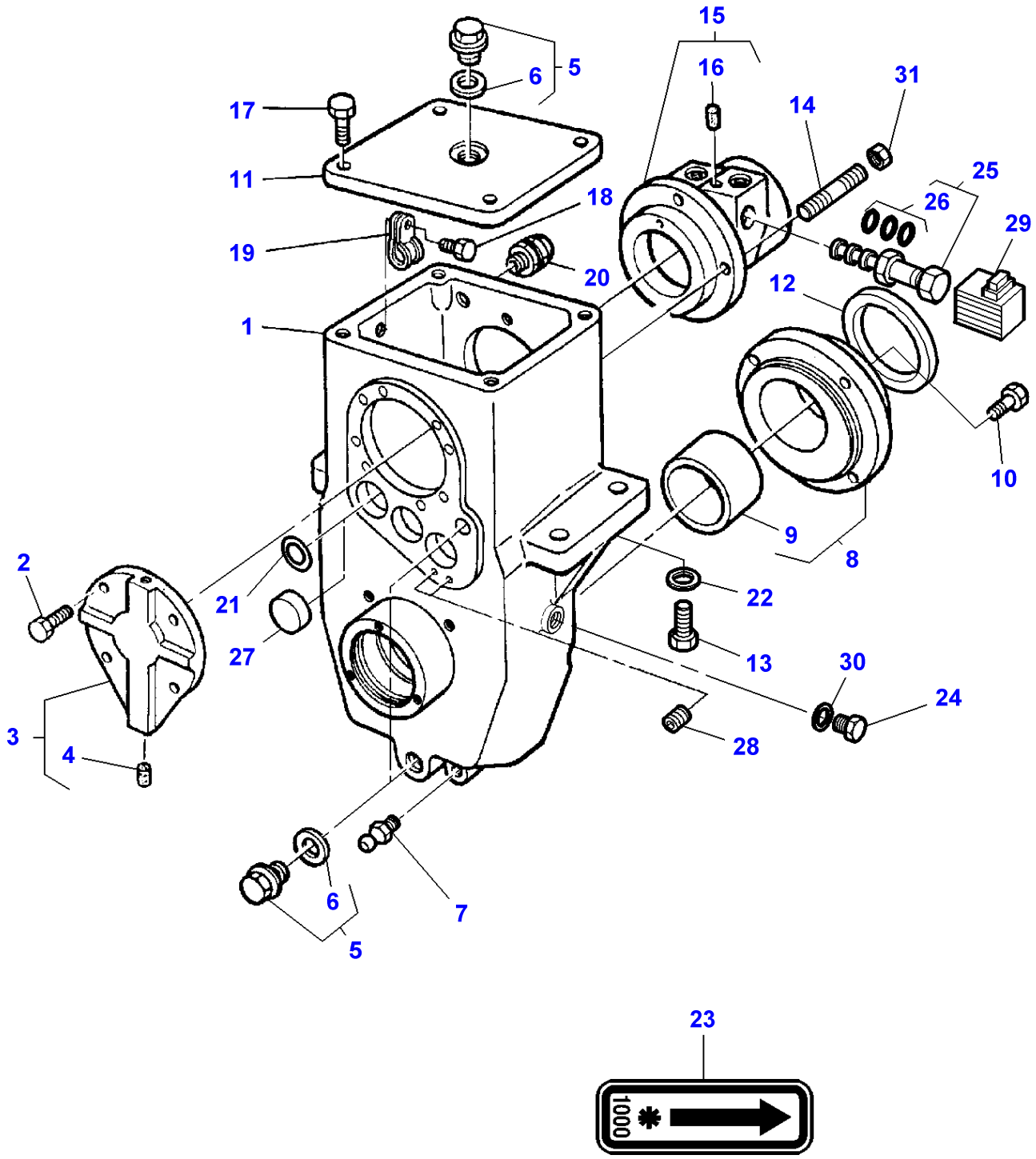
15
16
31
14
5
6
17
11
18
25
26
29
19
20
12
1
10
9
8
2
22
21
27
13
30
24
3
4
28
6
7
5
23
1000

https://truckmanualshub.com/

Item	Part Number	Qty	Description	Comments
1	3615609M2	1	Case Assy	
2	339761X1	4	Hex. Sock. Screw	M8X25
3	3581124M11	1	Cover	
4	3581130M1	1	Plug	(3)
5	3583994M91	3	Plug	M18
6	3019397X1	3	O Ring	(5)
7	339608X1	1	Grease Nipple	
8	3783252M12	1	Bearing Carrier	
9	3783251M2	1	Bush	(8)
10	1442210X1	4	Bolt Metric	M12X30
11	3389345M3	1	Cover	
12	3783595M1	1	Cup	Diameter 150MM
13	3386216M1	4	Screw	M20X60
14	3386903M1	2	Stud	M8X32
15	3581116M11	1	Bearing Carrier	
16	3388063M1	1	Plug	(15) Diameter 6MM
17	339761X1	4	Hex. Sock. Screw	M8X25
18	391074X1	1	Hex. Sock. Screw	M6X12
19	3581132M1	1	Clamp	Diameter 15MM
20	3389615M1	1	Gland	
21	195562M1	1	O Ring	
22	385365X1	4	Washer	
23	3618157M2	1	Decal	
24	339494X1	1	Plug	[B] M20
25	**3619762M1**	1	Spool	
26	3900994M91	1	Kit, Joint	(25)
27	3713445M1	2	Plug	Diameter 36MM
28	3009711X1	2	Screw	
29	3619764M1	1	Solenoid	[A] (1)
30	390202X1	1	Seal	[B]
31	339169X1	2	Nut	

FOOTNOTE [A] INCLUDING A DIODE
FOOTNOTE [B] WITHOUT SENSOR

1-ZX38-002-A

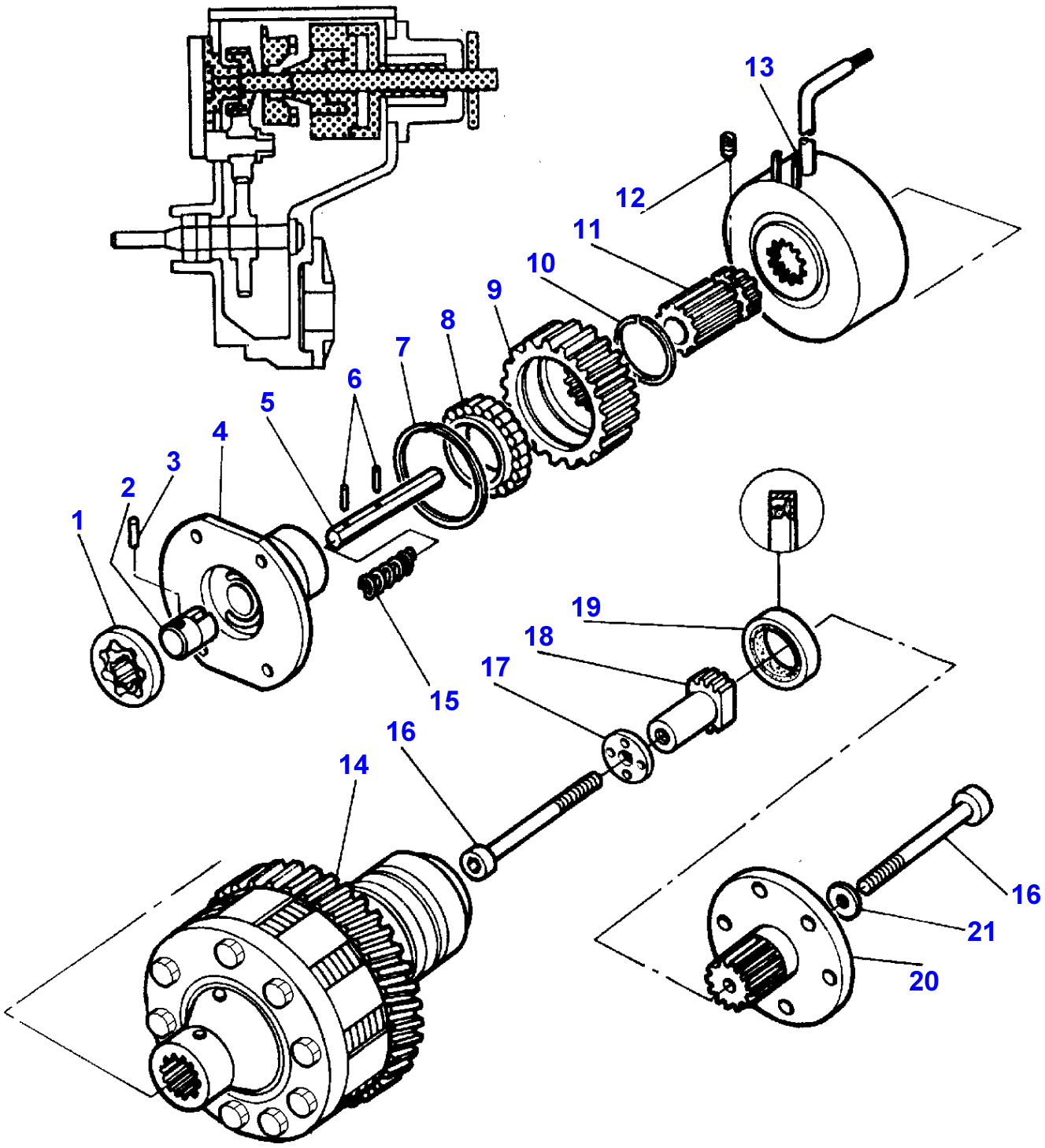

https://truckmanualshub.com/

Item	Part Number	Qty	Description	Comments
1	274797M1	1	Rotor	
2	3389604M1	1	Hub	
3	338334X1	1	Pin	Diameter 3X20MM
4	3615601M1	1	Hub Carrier	
5	3617323M1	1	Clevis Pin	
6	3010612X1	2	Needle	
7	1442502X1	1	Circlip	
8	3580985M1	1	Bearing Assy	
9	3389332M2	1	Pinion	Number of teeth/spines 25
10	3389610M1	X	Chock	Thickness 0,25 MM
	3389611M1	X	Chock	Thickness 0,50 MM
	3389612M1	X	Chock	Thickness 1 MM
11	3389347M2	1	Shaft	
12	3009711X1	1	Screw	M8X12
13	3389631M91	1	Brake	
14	3714535M13	1	Clutch	
15	3389605M1	1	Spring	
16	3389349M1	2	Screw Special	M8X90
17	3389603M1	1	Washer	
18	3617321M1	1	Nut Special	
19	3389614M1	1	Gasket	
20	3389861M91	1	Shaft	
21	391376X1	1	Joint	

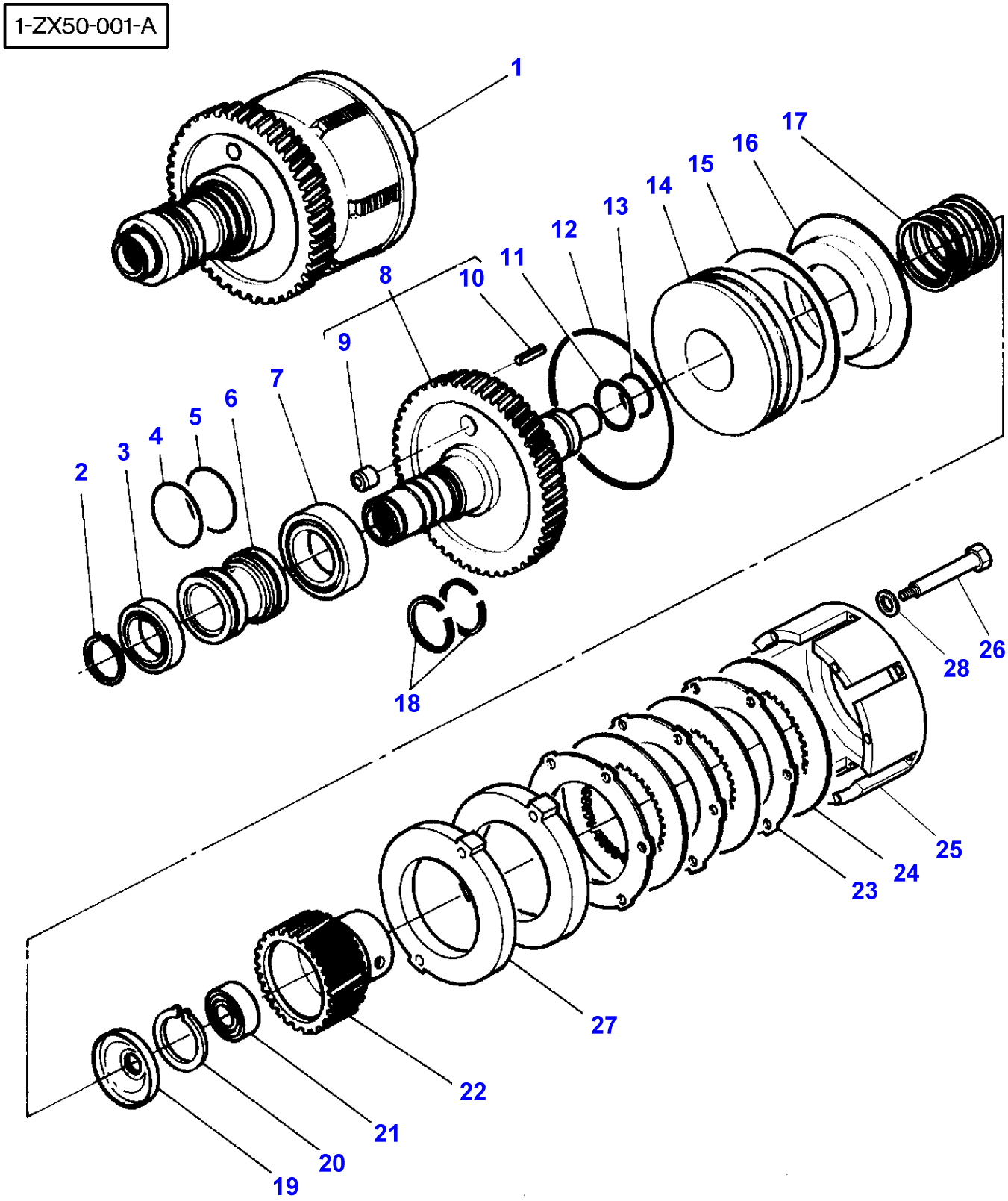
1-ZX50-001-A
1
2
3
4
5
6
7
8
9
10
11
12
13
14
15
16
17
18
19
20
21
22
23
24
25
26
27
28

https://truckmanualshub.com/

Item	Part Number	Qty	Description	Comments
1	3714535M13	1	Clutch	
2	391832X1	1	Circlip	(1)
3	834820M1	1	Bear. 6008	(1)
4	3007077X1	1	Gasket	(1)
5	365801X1	1	Ring	(1)
6	3384388M1	1	Hub	(1)
7	3002233X1	1	Bear. 6009	(1)
8	3714530M12	1	Housing	(1)
				Up to Serial or Engine Number 17-JUN-1999
				Number of teeth/spines 77
	3715426M13	1	Housing	(1)
				From Serial or Engine Number 18-JUN-1999
				Number of teeth/spines 76
9	1872134M92	1	Valve Check	(8)
10	3019306X1	2	Clevis Pin	(8)
				Diameter 6X20MM
11	3582934M1	1	Gasket	(1)
12	3582933M1	1	Gasket	(1)
13	832038M1	1	O Ring	(1)
14	3387193M1	1	Piston	(1)
15	3619148M1	1	Cup Spring	(1)
16	3387198M1	1	Support	(1)
17	3582893M1	1	Spring	(1)
18	3384502M1	2	Segment	(1)
19	3619555M1	1	Spring	(1)
20	391061X1	1	Circlip	(1)
21	339073X1	1	Bear. 6004	(1)
22	3619553M1	1	Hub	(1)
23	3387346M1	3	Counterplate	(1)
24	3387347M1	3	Disc	(1)
25	3387192M2	1	Cover	(1)
26	3010805X1	10	Screw Metric	(1)
				M6x55
27	3616056M2	2	Spacer	(1)
28	3019571X1	10	Washer	(1)

https://truckmanualshub.com/

1-ZX38-001-A

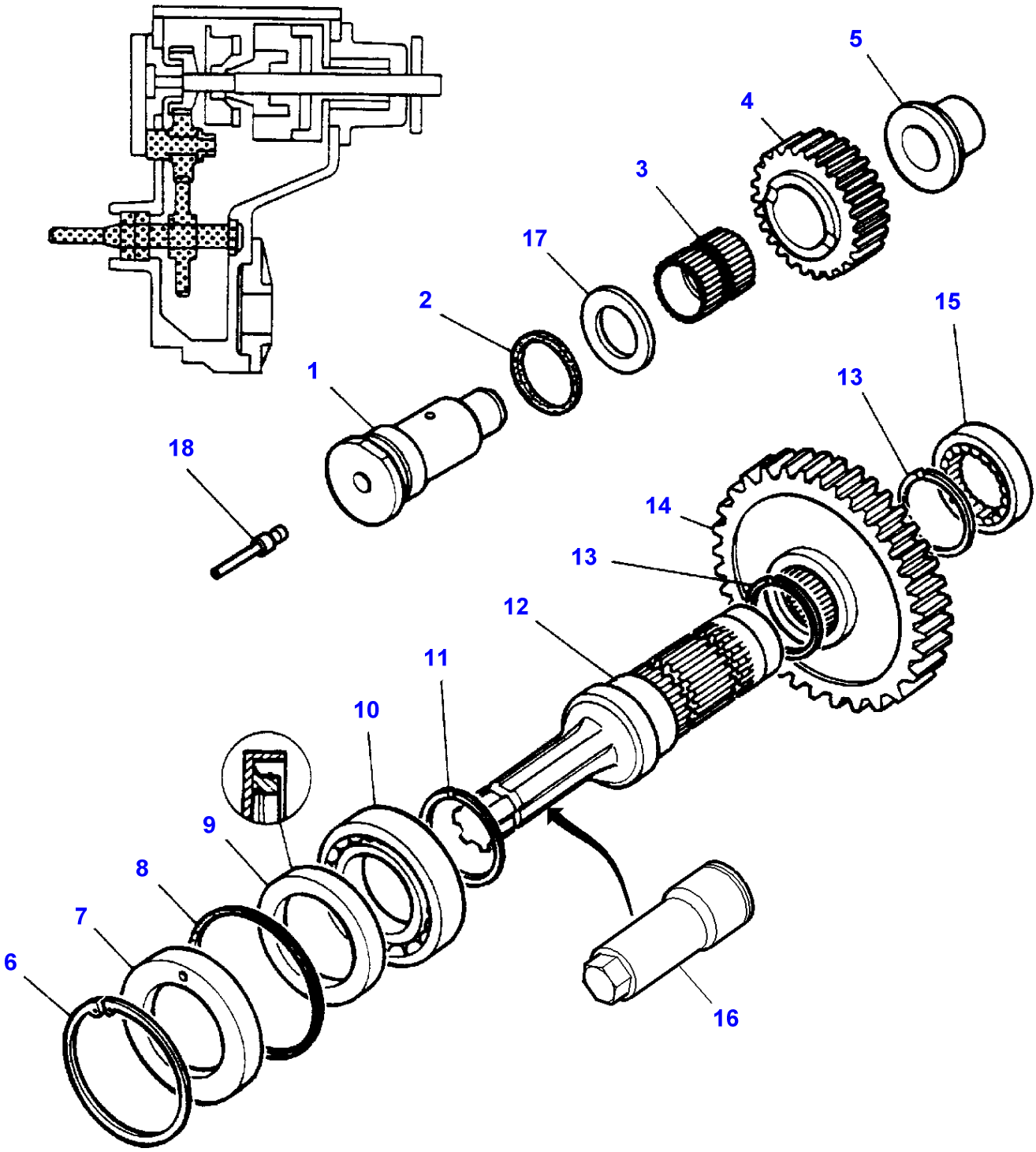

https://truckmanualshub.com/

Item	Part Number	Qty	Description	Comments
1	3615603M2	2	Clevis Pin	[B]
	3615603M2	1	Clevis Pin	[C]
2	378201X1	2	O Ring	[B]
	378201X1	1	O Ring	[C]
3	3389599M1	2	Needle Cage	[B]
	3389599M1	1	Needle Cage	[C]
4	3389333M1	2	Pinion	[B]
				Number of teeth/spines 25
	3389333M1	1	Pinion	[C]
				Number of teeth/spines 25
5	3389346M1	2	Bush	[B]
	3389346M1	1	Bush	[C]
6	1440516X1	1	Circlip	
7	3389339M2	1	Sealing Holder	
8	842332M1	1	Gasket	
9	3389613M2	1	Seal	
10	391261X1	1	Bear. 6011	
11	377602X1	1	Circlip	
12	3617117M1	1	Shaft	Number of teeth/spines 6
	3389338M1	1	Shaft	Number of teeth/spines 21
13	3386987M1	2	Circlip	
14	3389337M1	1	Pinion	Number of teeth/spines 51
15	3387381M1	1	Bearing Assy	
16	3715248M1	1	Protector	
17	3615602M1	2	Washer	[B]
	3615602M1	1	Washer	[C]
18	3581130M1	1	Plug	[B]

FOOTNOTE [B] REVERSE DRIVE FRONT PTO
FOOTNOTE [C] CLOCK WISE DRIVE FRONT PTO

https://truckmanualshub.com/

1-ZX38-004-B

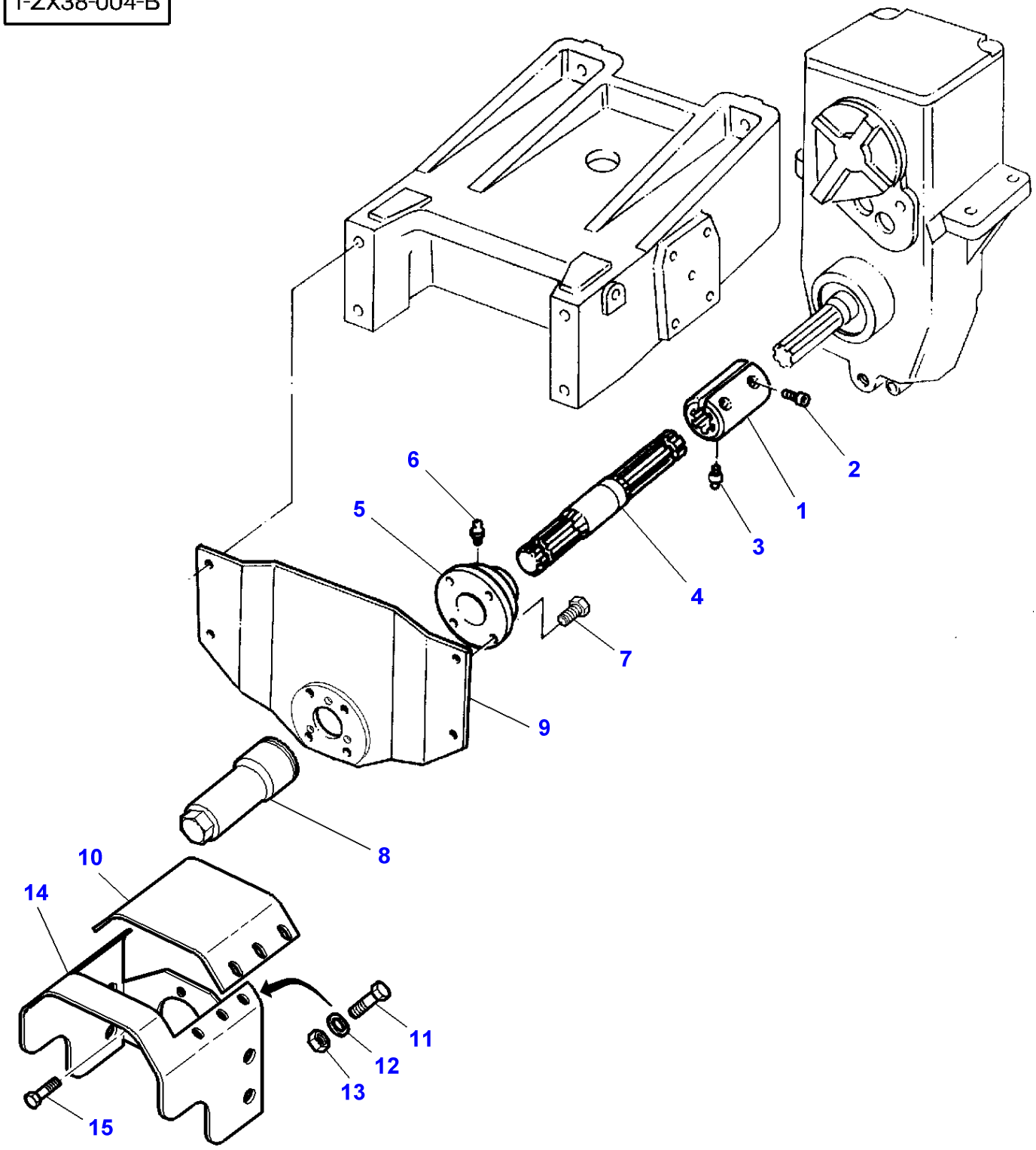

https://truckmanualshub.com/

Item	Part Number	Qty	Description	Comments
1	3617368M1	1	Sleeve	
2	1441366X1	2	Bolt Metric	M12X40
3	339608X1	1	Grease Nipple	
4	3617364M1	1	Shaft	Number of teeth/spines 6
	3617365M1	1	Shaft	Number of teeth/spines 21
5	3617367M1	1	Bearing Carrier	
6	364461X1	1	Grease Nipple	
7	3009505X1	4	Screw Metric	M12X25
8	3715248M1	1	Protector	
9	3618167M1	1	Support	
10	3777563M2	1	Cover	
11	339666X1	4	Hex. Sock. Screw	M6X20
12	390971X1	4	Washer	
13	339030X1	4	Nut Metric	
14	3777564M2	1	Cowl	
15	339123X1	3	Hex. Sock. Screw	M8X20

https://truckmanualshub.com/

1-ZX38-005-A

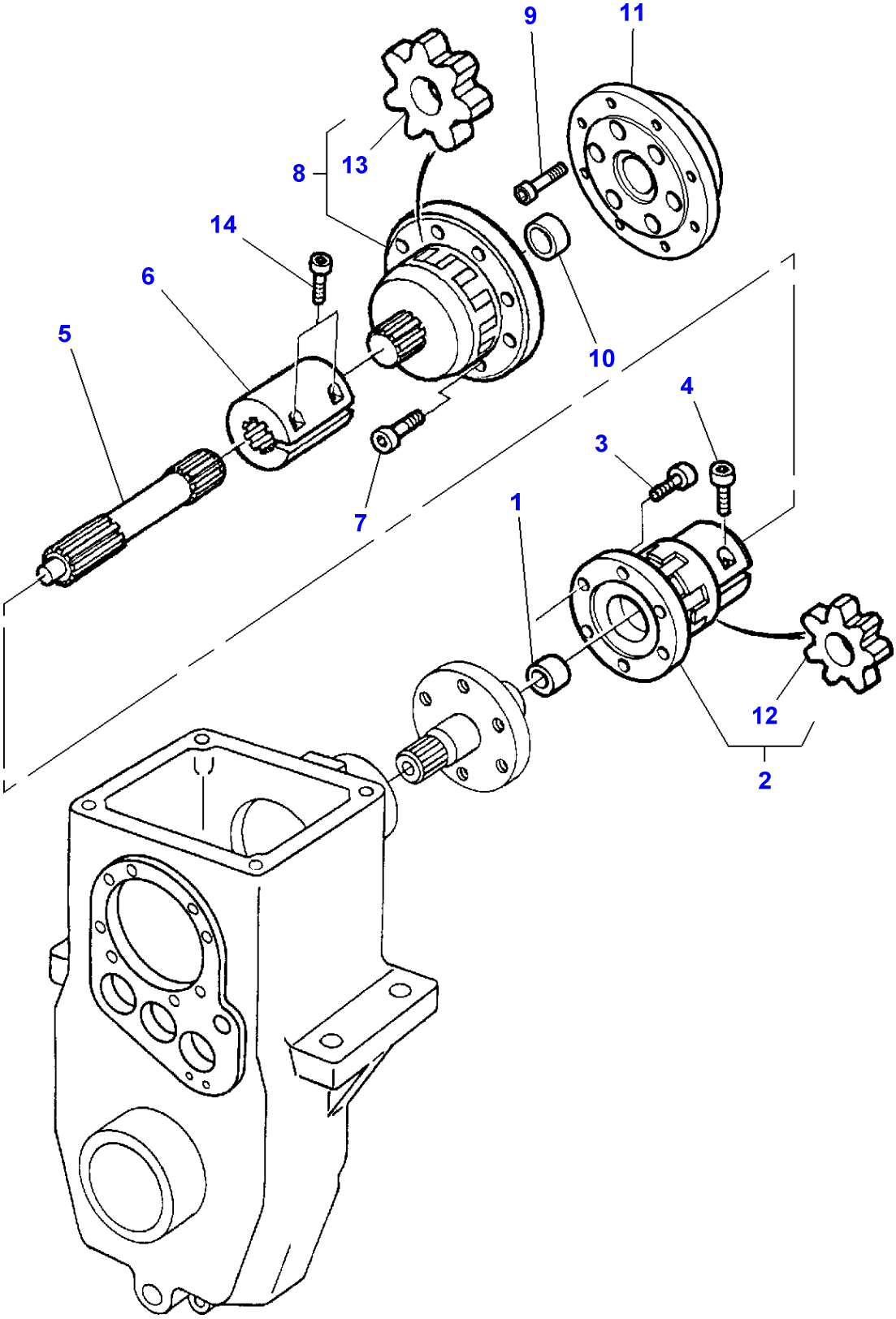

https://truckmanualshub.com/

Item	Part Number	Qty	Description	Comments
1	3389791M1	1	Bush	
2	3389825M1	1	Coupler	
3	1440350X1	6	Screw Metric	M6X20
4	1440349X1	1	Screw Metric	M8X30
5	3617283M1	1	Shaft	Length 150MM
6	3619929M1	1	Sleeve	
7	391989X1	8	Screw Metric	M8X20
8	3580604M91	1	Coupler	
9	3004715X1	6	Screw	M8X60
10	3389766M1	1	Bush	
11	3617282M1	1	Hub	
12	3467932M1	1	Shock Absorber	(2)
13	3467933M1	1	Shock Absorber	(8)
14	3010238X1	2	Screw	M10X40

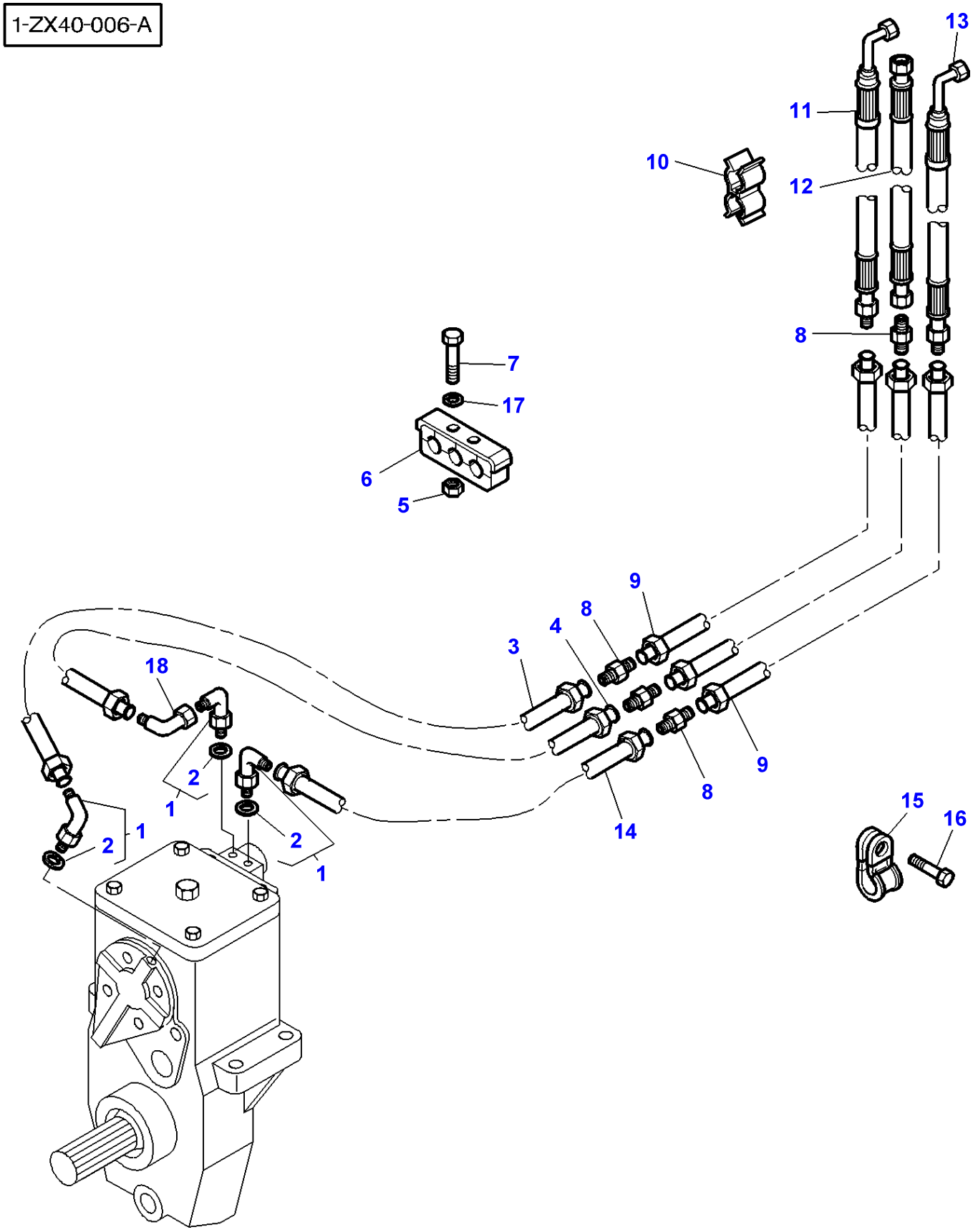
1-ZX40-006-A
13
11
10
12
8
7
17
6
5
9
8
4
3
18
2
1
2
1
2
1
9
8
14
15
16

https://truckmanualshub.com/

Item	Part Number	Qty	Description	Comments
1	3019412X91	3	Elbow	
2	3019395X1	1	O Ring	(1)
3	3784011M1	1	Tube	
4	3784013M1	1	Tube	
5	339030X1	6	Nut Metric	
6	3784009M1	3	Clamp	
7	339096X1	6	Bolt Metric	M6X35
8	355529X1	4	Union	
9	3784010M1	3	Tube	
10	3581696M1	4	Clamp	
11	3783432M1	1	Hydr Hose	Length 1400MM
12	3781572M1	1	Hydr Hose	Length 2200MM
13	3783431M1	1	Hydr Hose	Length 2200MM
14	3784014M1	1	Tube	
15	3010808X1	1	Strap	
16	339123X1	1	Hex. Sock. Screw	M8X20
17	390971X1	6	Washer	
18	364603X1	1	Elbow	

https://truckmanualshub.com/

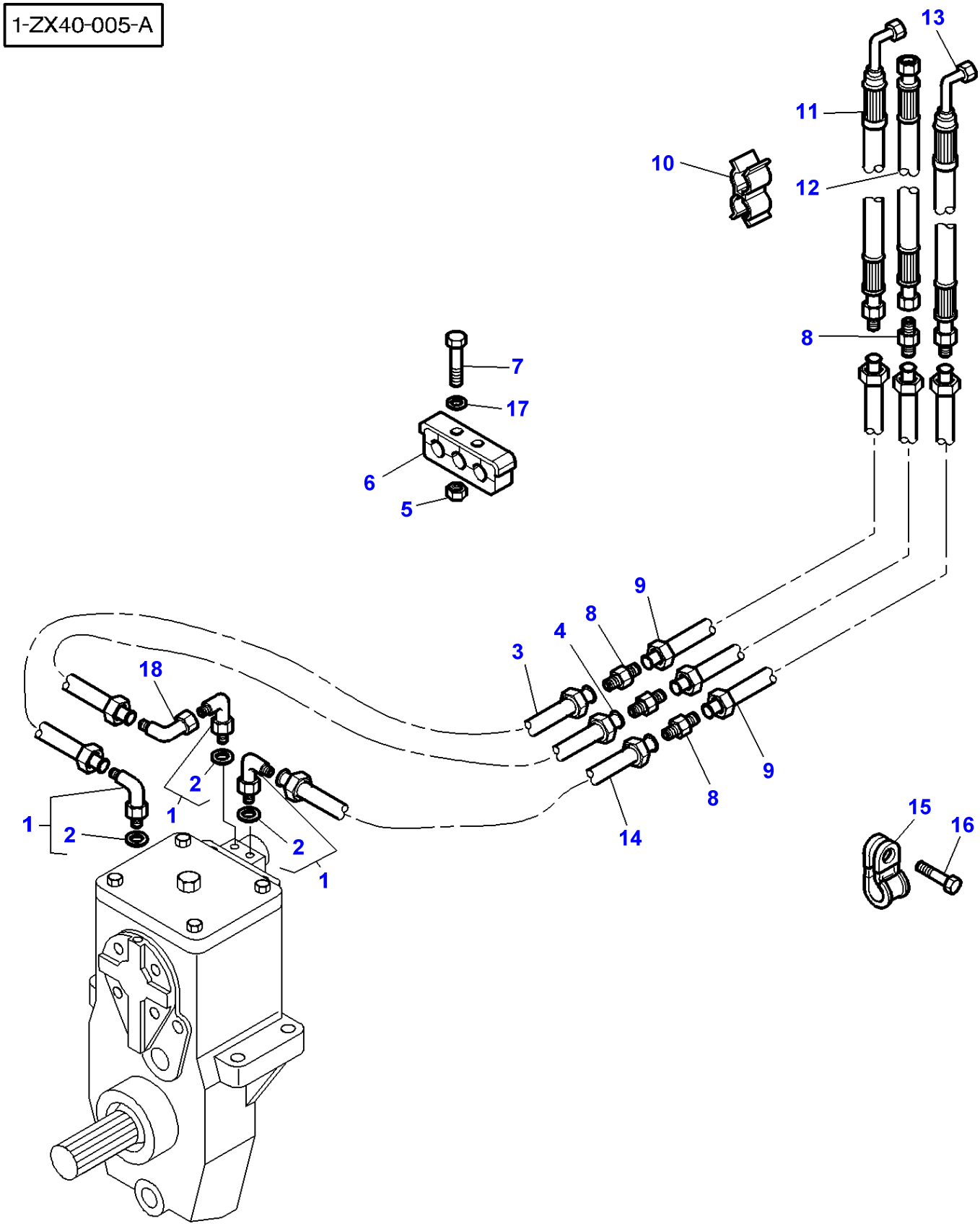

https://truckmanualshub.com/

Item	Part Number	Qty	Description	Comments
1	3019412X91	3	Elbow	
2	3019395X1	1	O Ring	(1)
3	3784012M1	1	Tube	
4	3784013M1	1	Tube	
5	339030X1	6	Nut Metric	
6	3784009M1	3	Clamp	
7	339096X1	6	Bolt Metric	M6X35
8	355529X1	4	Union	
9	3784010M1	3	Tube	
10	3581696M1	4	Clamp	
11	3783432M1	1	Hydr Hose	Length 1400MM
12	3781572M1	1	Hydr Hose	Length 2200MM
13	3783431M1	1	Hydr Hose	Length 2200MM
14	3784014M1	1	Tube	
15	3010808X1	1	Strap	
16	339123X1	1	Hex. Sock. Screw	M8X20
17	390971X1	6	Washer	
18	364603X1	1	Elbow	

https://truckmanualshub.com/

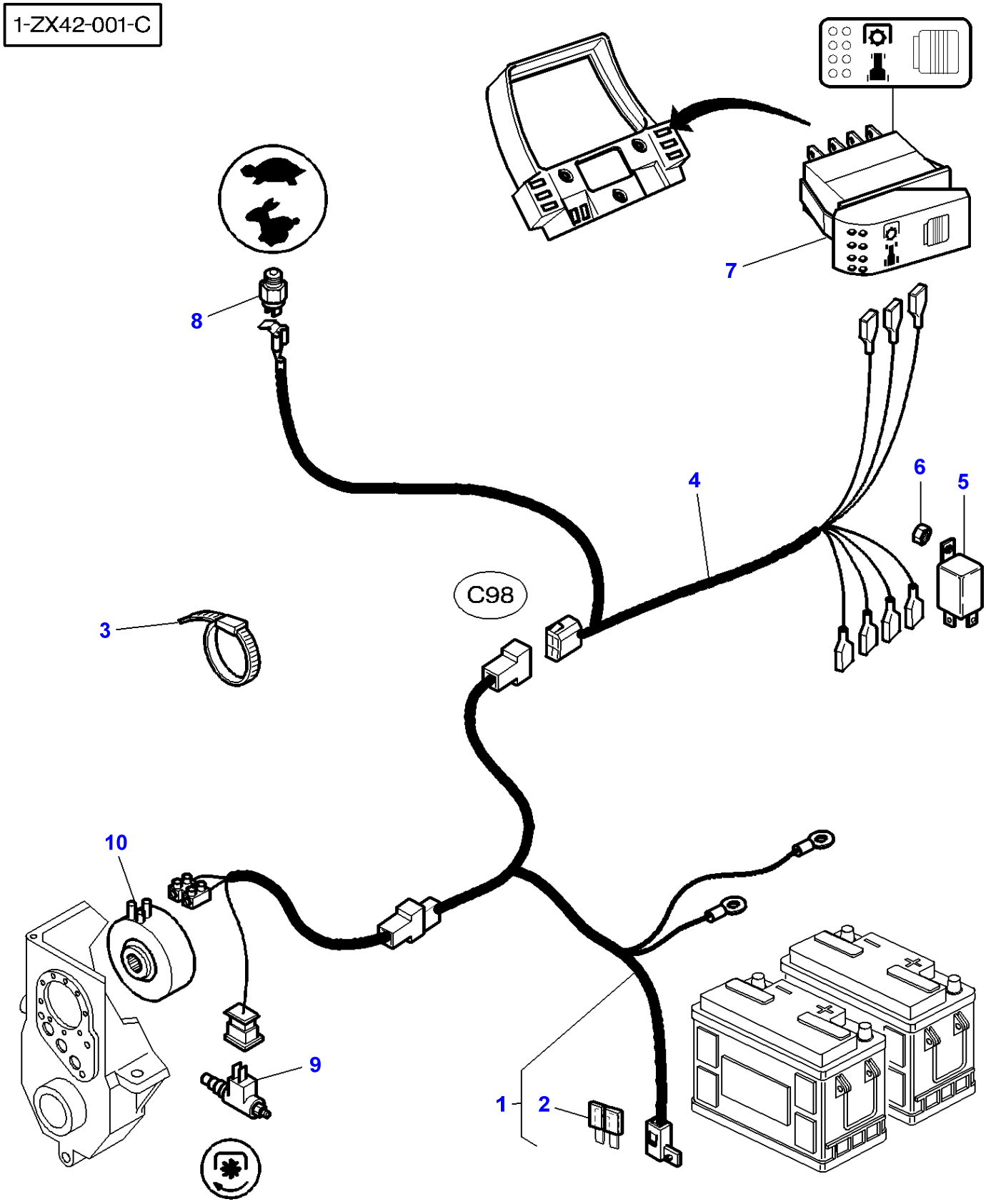

https://truckmanualshub.com/

Item	Part Number	Qty	Description	Comments
1	3784044M91	1	Harness	
2	**3387318M1**	1	Fuse	(1) 5 AMP
3	3619622M1	7	Cable Tie	
4	3783675M1	1	Harness	
5	**3615652M1**	1	Relay	12V-25A
6	3010477X1	1	Nut Metric	
7	**3783086M1**	1	Switch,Indirect	
8	**3792196M1**	1	Switch,Indirect	
10	3389631M91	1	Brake	

FOOTNOTE [B] TRACTOR STEEP NOSE ONLY

https://truckmanualshub.com/

Page Title	Page Number
Weight Frame And Tow Pin	060-0005
Belly Weight	060-0010
Front Axle - Bracket 4 Wheel Drive	060-0015
Front Axle 4 Wheel Drive - Clutch	060-0020
Front Axle 4 Wheel Drive - Differential Lock Mechanism	060-0025
Guard And Transmission Shaft	060-0030
Guard And Transmission Shaft - For East Europe	060-0035
Front Axle 4 Wheel Drive	060-0040
Front Axle 4 Wheel Drive - Steering Cylinders	060-0045
Front Axle 4 Wheel Drive - Housing	060-0050
Front Axle 4 Wheel Drive - Differential	060-0055
Front Axle 4 Wheel Drive - Final Drive	060-0060

https://truckmanualshub.com/

1-ZX15-006-C

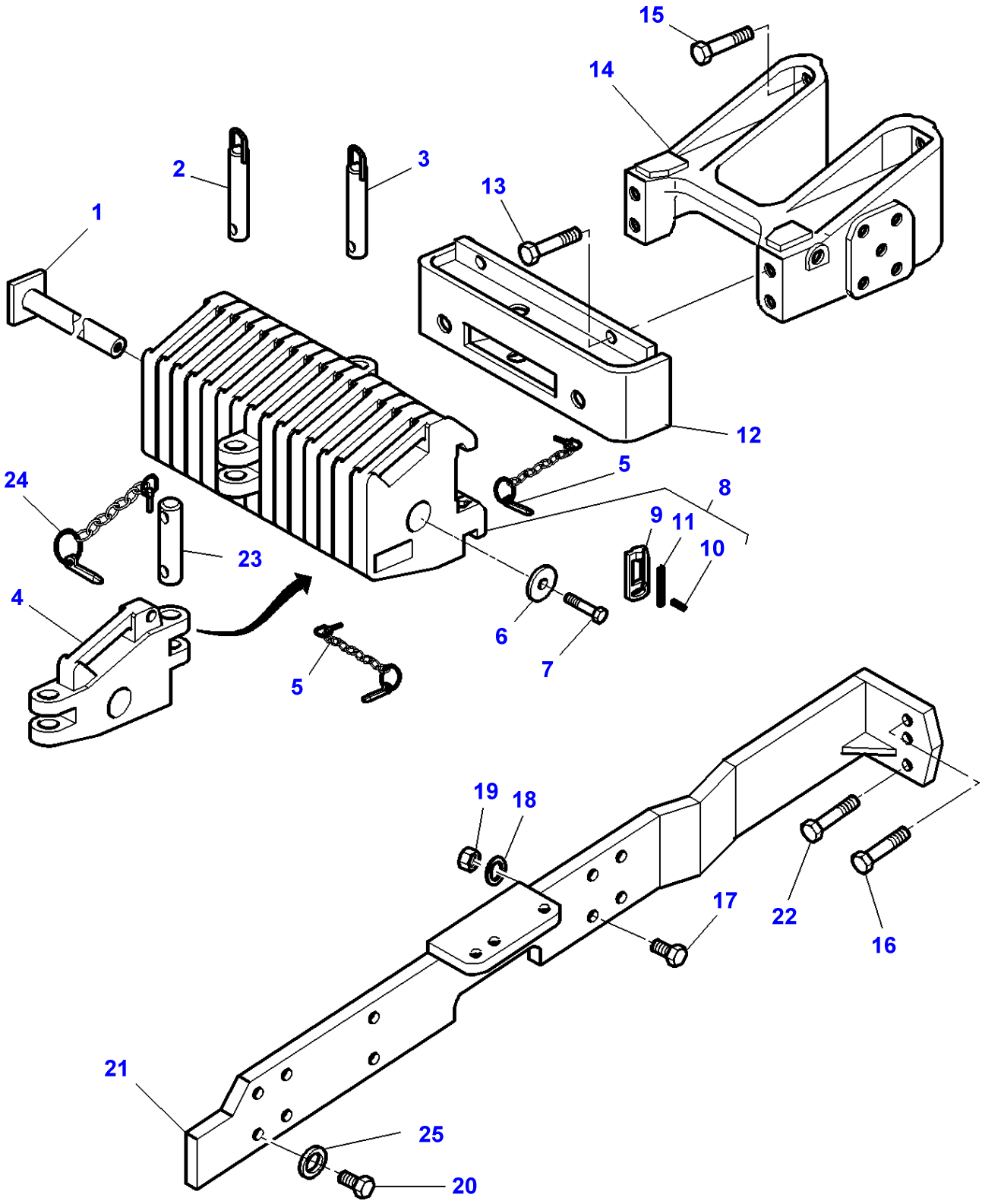

https://truckmanualshub.com/

Item	Part Number	Qty	Description	Comments
1	3619728M1	1	Bridle	Length 335MM
	3618713M1	1	Bridle	Length 470MM
	3618712M1	1	Bridle	Length 550MM
2	3387270M91	1	Pin Hitch	Length 171.5MM
3	3382813M91	1	Pin Hitch	Length 215MM
4	3382789M4	1	Weight	
5	3382812M91	1	Pin	
6	3385963M1	1	Washer	
7	1441685X1	1	Screw Metric	M16X60
	3008823X1	1	Screw Metric	M16X80
	3000171X1	1	Screw Metric	M16X90
8	3582867M92	1	Weight	45KG
9	3581636M1	1	Hasp	(8)
10	339080X1	1	Roll Pin	(8)
11	1680172M1	1	Spring	(8)
12	3580888M5	1	Support	
13	1441590X1	4	Bolt Metric	M20X50
	3001968X1	4	Screw	M20X60
14	3715537M1	1	Spacer	
15	3580231M1	4	Screw	M20X75
16	3010575X1	4	Screw	M20X130
17	391891X1	8	Bolt Metric	M20X90
18	385365X1	8	Washer	
19	339035X1	8	Nut Metric	
20	3001968X1	20	Screw	M20X60
				Up to Serial or Engine Number
	391328X1	20	Screw Metric	M20X65
				From Serial or Engine Number
21	3782168M3	1	Runner	Left Hand
	3782173M3	1	Runner	Right Hand
22	3010558X1	2	Screw Metric	M20X120
23	3782456M1	1	Pin Hitch	
24	3782461M92	1	Pin	
25	385365X1	20	Washer	From Serial or Engine Number

https://truckmanualshub.com/

1-ZJ07-003-A

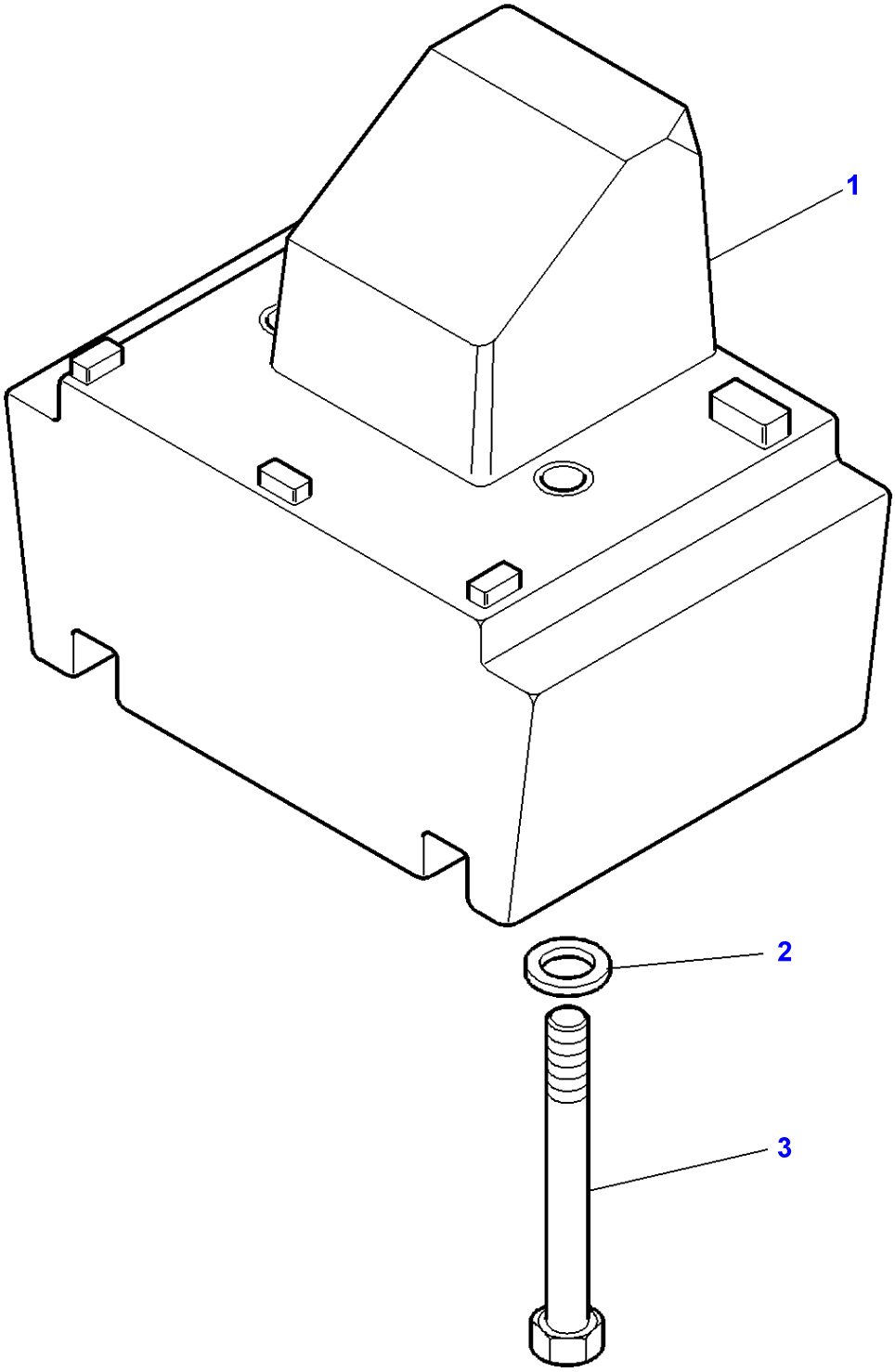

https://truckmanualshub.com/

Item	Part Number	Qty	Description	Comments
1	3715563M5	1	Weight	525 KGS
2	3384348M1	2	Washer	
3	3010613X1	2	Screw	M20X280

https://truckmanualshub.com/

1-ZJ01-005-B

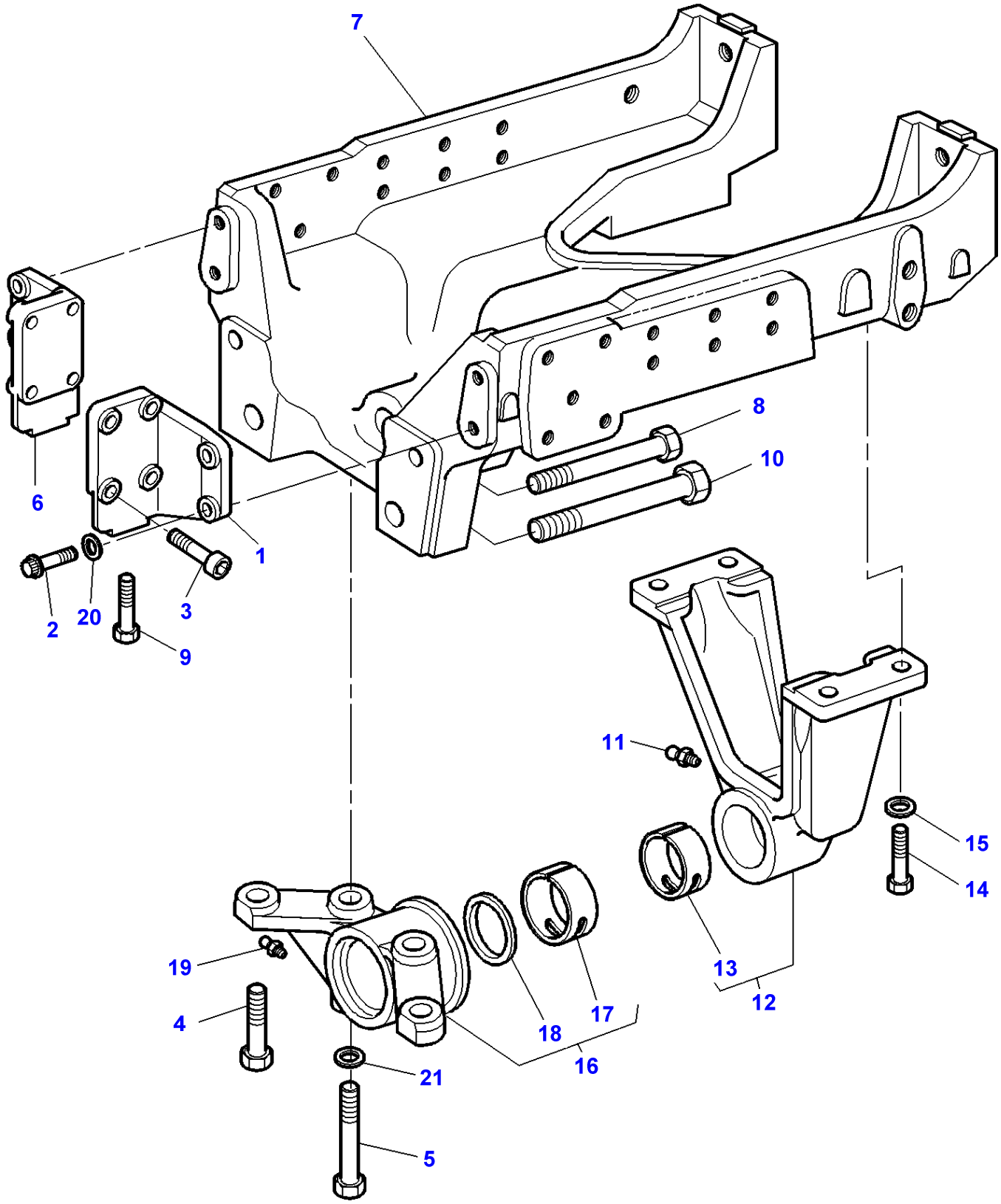

https://truckmanualshub.com/

Item	Part Number	Qty	Description	Comments
1	V836852657	1	Support	Right Hand
2	3009806X1	4	Plough Bolt	M16X70
3	V529802682	8	Screw	M14X65
4	3581527M1	2	Screw	M20X75
5	3019888X1	2	Bolt	Up to Serial or Engine Number 15-09-2000 M16X195
	3019890X1	2	Bolt Metric	From Serial or Engine Number 16-09-2000 M16X200
6	V836852656	1	Support	Left Hand
7	3715695M4	1	Axle Holder	
8	3389552M1	2	Screw	M20X155
9	3019868X1	2	Bolt Metric	M16X115
10	3389553M1	2	Screw	M24X165
11	339608X1	1	Grease Nipple	
12	3780598M14	1	Bearing Carrier	
13	3782845M2	1	Bush	(12)
14	3386216M1	4	Screw	M20X60
15	385365X1	4	Washer	Diameter M20
16	3780600M11	1	Bearing Carrier	
17	5016739M1	1	Bush	(16)
18	3010843X1	1	Gasket	(16)
19	339608X1	1	Grease Nipple	
20	3010875X1	4	Washer	
21	3019575X1	2	Washer Metric	From Serial or Engine Number 16-09-2000

https://truckmanualshub.com/

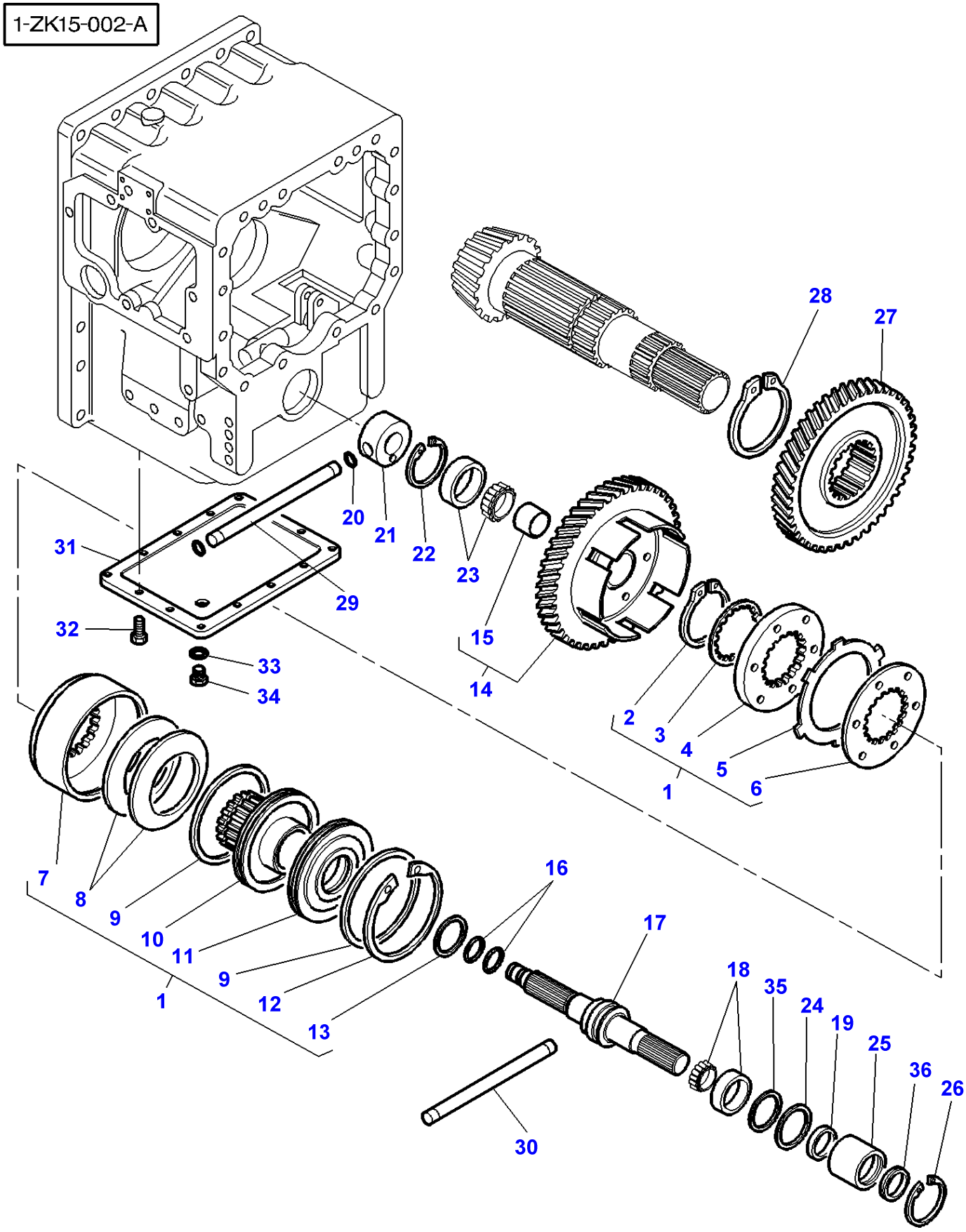

https://truckmanualshub.com/

Item	Part Number	Qty	Description	Comments
1	3716078M13	1	Clutch	[C]
2	1440533X1	1	Circlip	(1)
3	3387182M1	X	Chock	(1) Thickness 0,6 MM
	3033343M1	X	Shim	(1) Thickness 0,8 MM
	3713553M1	X	Chock	(1) Thickness 1,4 MM
	3713554M1	X	Chock	(1) Thickness 1,7 MM
4	3617232M1	1	Tray	[C] (1)
5	3616400M2	7	Disc	[C] (1)
6	3384488M1	6	Tray	[C] (1)
7	3384414M2	1	Housing	(1)
8	3619473M1	2	Washer	(1)
9	3384524M1	2	O Ring	(1)
10	3716509M3	1	Hub	[C] (1)
11	3384427M1	1	Cover	(1)
12	1441403X1	1	Circlip	(1)
13	3384523M1	1	O Ring	(1)
14	3716293M15	1	Pinion	[C,D] Number of teeth/spines 48
15	3387727M1	1	Bush	(14)
16	3382874M1	2	Segment	
17	3716518M11	1	Shaft	[C]
18	3010697X91	1	Bearing Assy	
19	3716067M2	1	Oil Seal	
20	377494X1	2	O Ring	
21	3716441M2	1	Bush	
22	1440480X1	1	Circlip	
23	339481X1	1	Bearing Taper	
24	1441885X1	1	O Ring	
25	3716815M3	1	Sealing Holder	
26	1440819X1	1	Circlip	
27	3716177M5	1	Pinion	[C,D] Number of teeth/spines 40
28	1440533X1	1	Circlip	
29	3716573M1	1	Tube	Length 160 MM
30	3716572M1	1	Tube	[D] Length 95 MM
31	3716553M2	1	Cover	
32	3009493X1	13	Hex. Sock. Screw	M10x30
33	831497M1	1	O Ring	
34	3716563M2	1	Plug	
35	3716801M1	X	Chock	Thickness 0,1 MM
	3716802M1	X	Chock	Thickness 0,2 MM
	3716803M1	X	Chock	Thickness 0,5 MM
	3716804M1	X	Chock	Thickness 0,8 MM
36	3791400M1	1	Gasket	

FOOTNOTE [A] CLUTCH 8 DISCS
FOOTNOTE [B] CLUTCH 6 DISCS
FOOTNOTE [C] CLUTCH 7 DISCS
FOOTNOTE [D] WITH FULL POWERSHIFT
FOOTNOTE [E] WITH DYNASHIFT
FOOTNOTE [G] FOR HIGH-CLEARANCE TRACTOR

https://truckmanualshub.com/

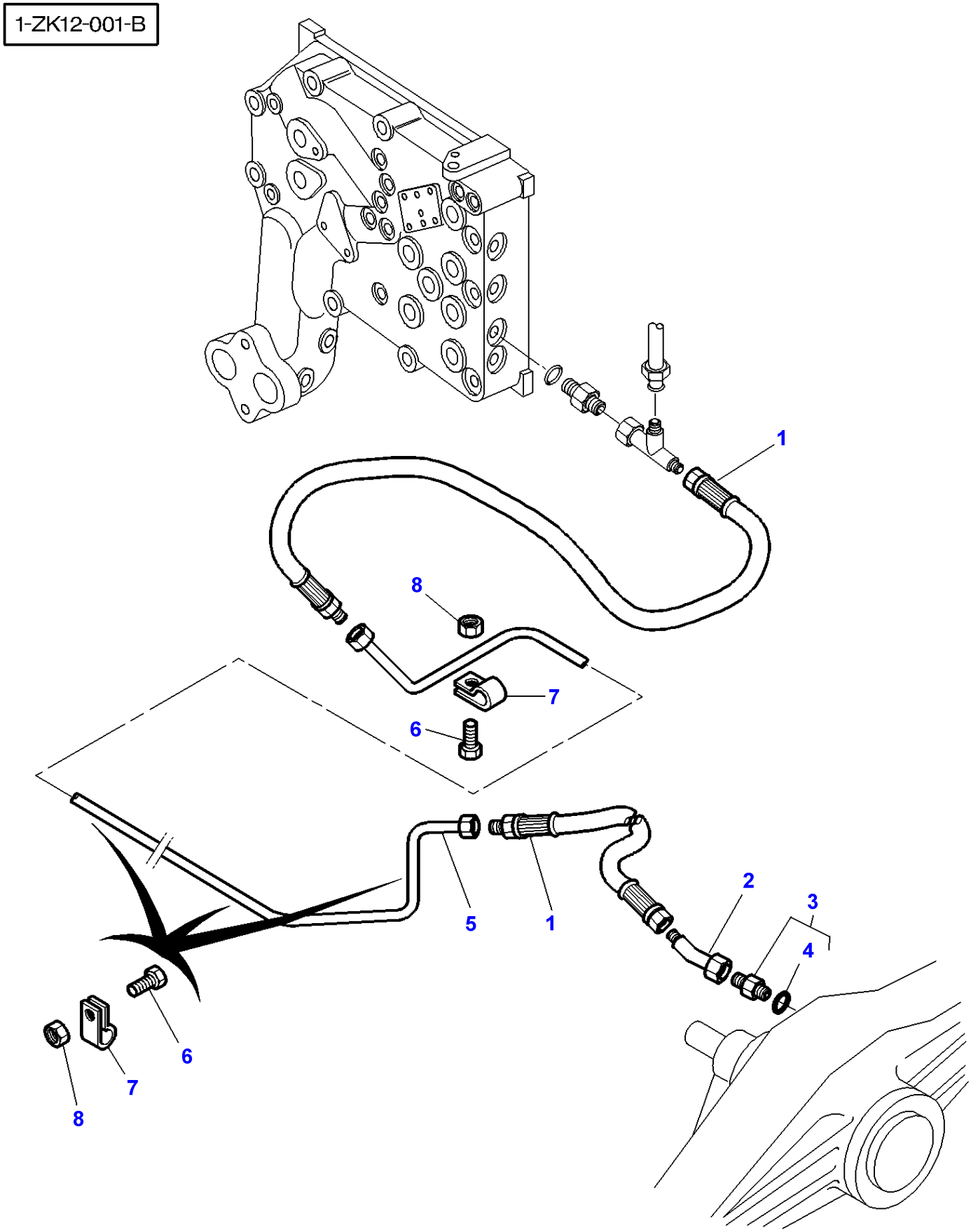

https://truckmanualshub.com/

Item	Part Number	Qty	Description	Comments
1	3389702M1	2	Hydr Hose	
2	366665X1	1	Elbow	
3	3019700X91	1	Union	
4	3019394X1	1	O Ring	(3)
5	3783241M91	1	Tube	
6	339560X1	4	Hex. Sock. Screw	M6X16
7	3389841M1	4	Clamp	
8	339030X1	4	Nut Metric	M6

FOOTNOTE [A] WITH DYNASHIFT
FOOTNOTE [B] WITH FULL POWERSHIFT

https://truckmanualshub.com/

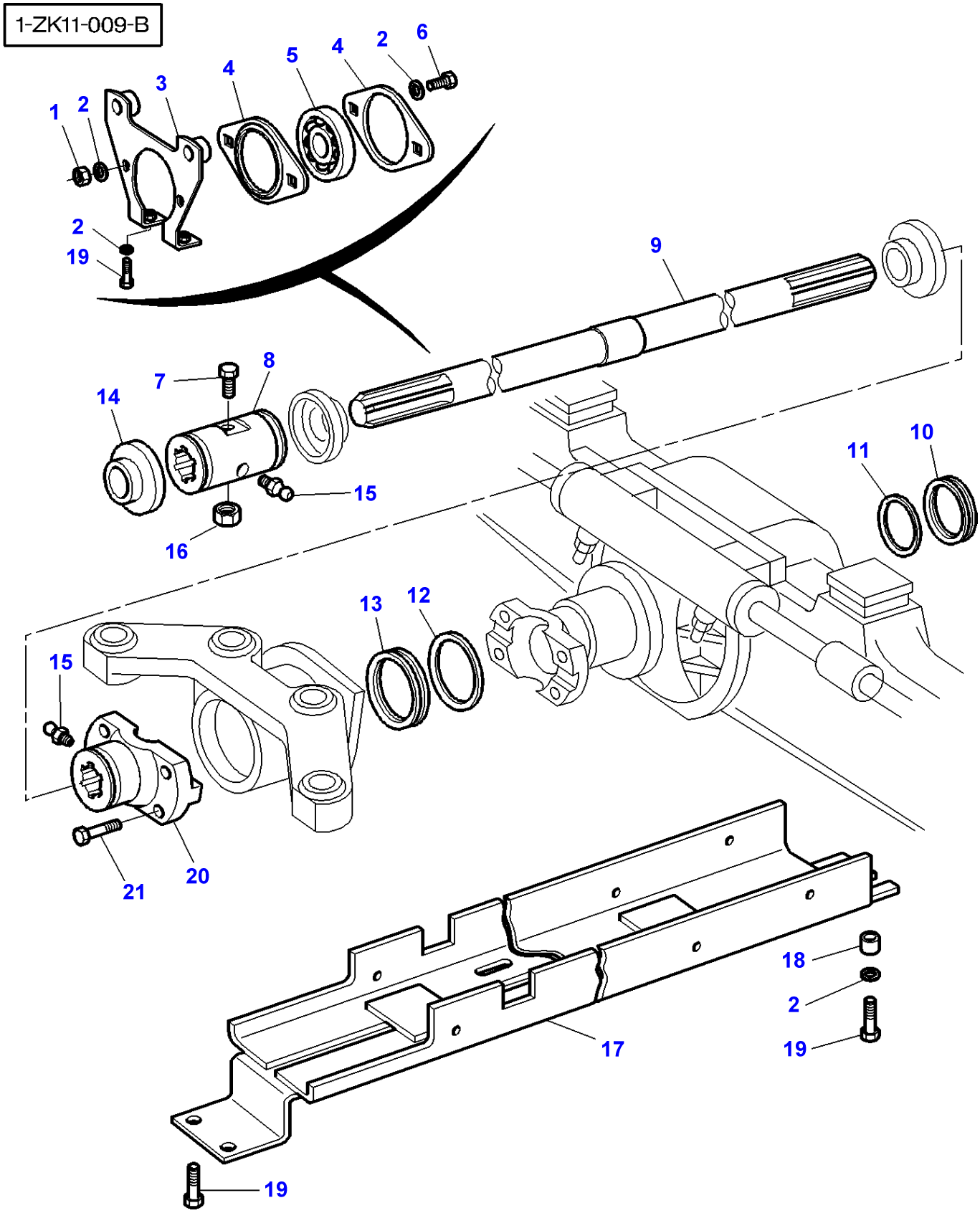

https://truckmanualshub.com/

Item	Part Number	Qty	Description	Comments
1	339402X1	2	Nut	
2	390597X1	8	Washer Metric	
3	3715987M1	1	Bearer	
4	3712872M1	2	Bearing Carrier	
5	3712873M1	1	Bearing Assy	
6	3009493X1	2	Hex. Sock. Screw	M10X30
7	1440922X1	1	Bolt	M6X60
8	3714416M2	1	Sleeve	
9	3781870M2	1	Shaft	Length 2060MM
10	3780671M1	1	Gasket	Diameter 122-142MM
11	3780669M1	1	Thrust Washer	Diameter 100,30-122MM
12	3780670M1	1	Thrust Washer	Diameter 125,30-168MM
13	3780672M1	1	Gasket	Diameter 168-196MM
14	3714575M1	3	Bellows	
15	1441858X1	2	Greaser	
16	339030X1	1	Nut Metric	M6
17	3782595M3	1	Cowl	
18	3042637M2	2	Spacer	
19	392054X1	6	Screw	M10X22
20	3783369M1	1	Sleeve	
21	368506X1	4	Bolt Unf	3/8-24

https://truckmanualshub.com/

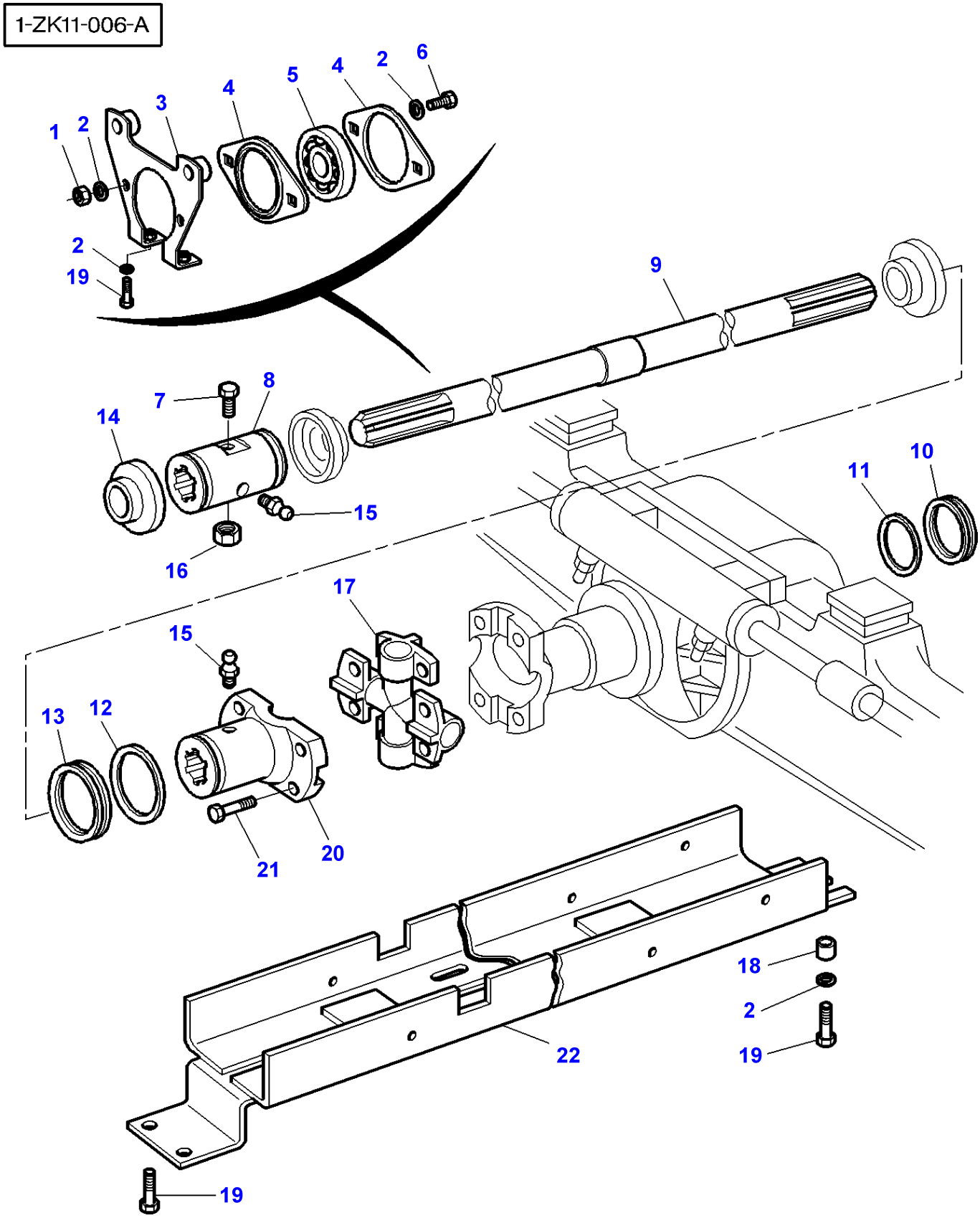

https://truckmanualshub.com/

Item	Part Number	Qty	Description	Comments
1	339402X1	2	Nut	
2	390597X1	8	Washer Metric	
3	3715987M1	1	Bearer	
4	3712872M1	2	Bearing Carrier	
5	3712873M1	1	Bearing Assy	
6	3009493X1	2	Hex. Sock. Screw	M10X30
7	1440922X1	1	Bolt	M6X60
8	3714416M2	1	Sleeve	
9	3783353M1	1	Shaft	Length 2017MM
10	3780671M1	1	Gasket	Diameter 122-142MM
11	3780669M1	1	Thrust Washer	Diameter 100,30-122MM
12	3780670M1	1	Thrust Washer	Diameter 125,30-168MM
13	3780672M1	1	Gasket	Diameter 168-196MM
14	3714575M1	3	Bellows	
15	1441858X1	2	Greaser	
16	339030X1	1	Nut Metric	M6
17	3783305M1	1	Crosspiece	
18	3042637M2	2	Spacer	
19	392054X1	6	Screw	M10X22
20	3782971M1	1	Bridle	
21	358012X1	8	Screw	3/8-24
22	3782595M3	1	Cowl	

https://truckmanualshub.com/

1-ZK01-001-A

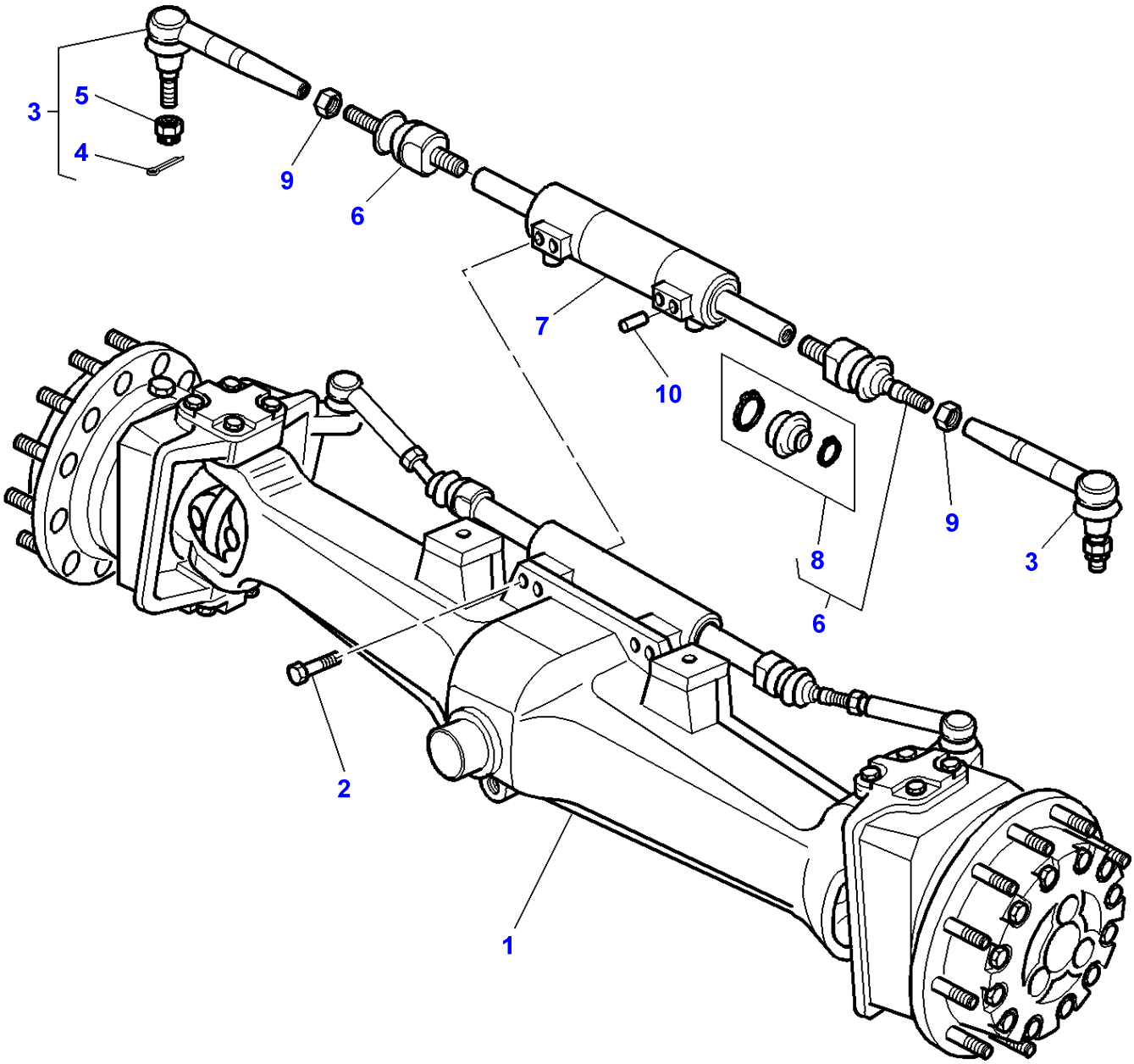

https://truckmanualshub.com/

Item	Part Number	Qty	Description	Comments
1	3765591M91	1	Front Live Axle	TYPE AG 200
2	3764202M1	4	Bolt	(1)
3	**3764286M1**	2	Toggle	(1)
4	354083X1	1	Pin	(3)
5	391233X1	1	Nut Metric	(3) M24
6	3765176M1	2	Ball Joint	(1)
7	3429759M93	1	Steering Cyl	(1)
8	3311603M91	1	Kit, Repair	(6)
9	392420X1	2	Nut	(1) M18X1,5
10	3764700M1	1	Dowel	(1)

1-ZK13-001-A

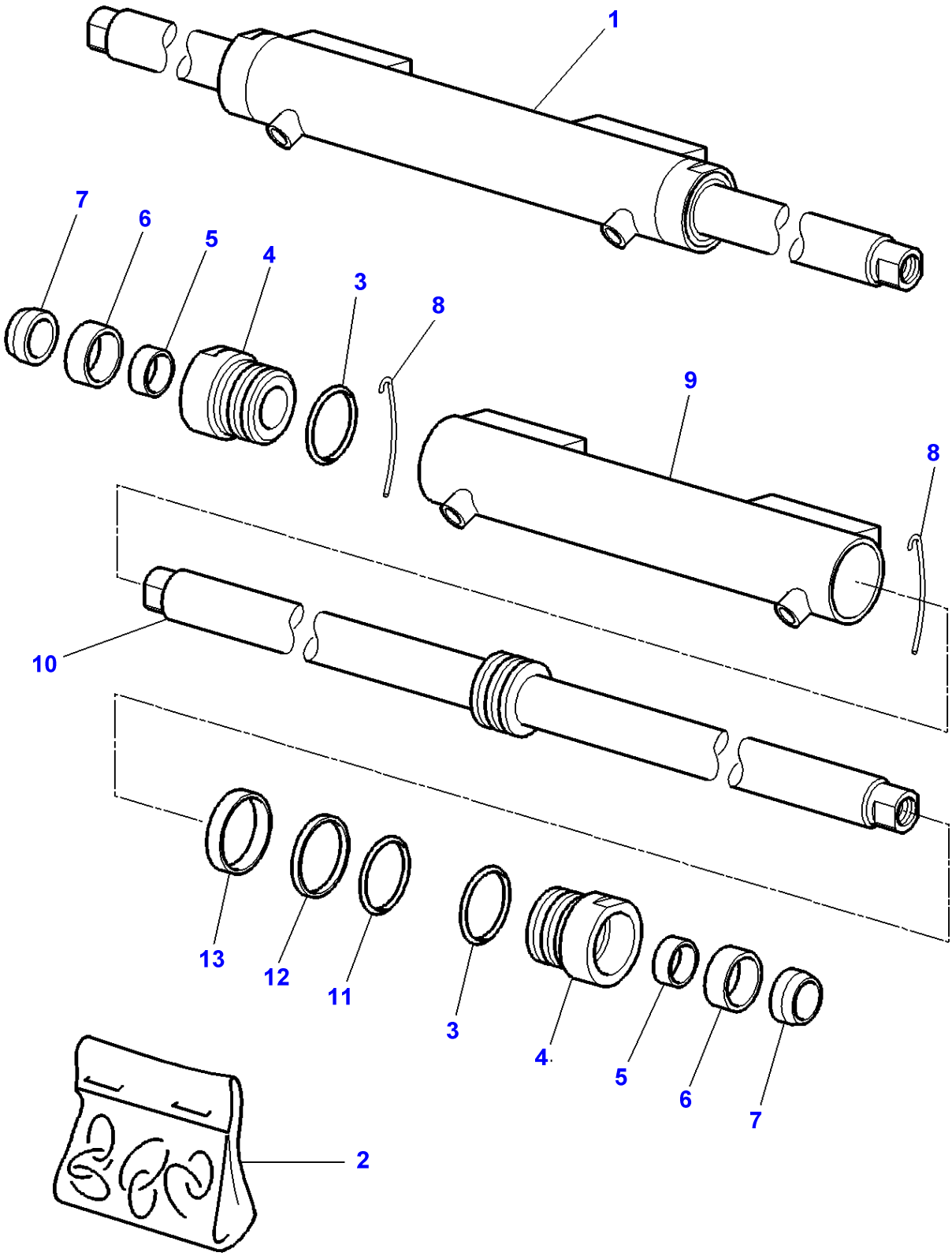

https://truckmanualshub.com/

Item	Part Number	Qty	Description	Comments
1	3429759M93	1	Steering Cyl	
2	3624903M91	X	Kit, Seal	
3		2	O Ring	(2) Not serviced, order REF.2
4	3624902M91	2	Guide Bush	(1)
5		2	Ring	(2) Not serviced, order REF.2
6		2	Seal	(2) Not serviced, order REF.2
7		2	Wiper	(2) Not serviced, order REF.2
8	1605415M1	2	Ring	(1)
9		1	Barrel	(1) Not serviced, order REF.1
10	3623923M91	1	Cylinder Rod	(1)
11		1	O Ring	(2) Not serviced, order REF.2
12		1	Seal	(2) Not serviced, order REF.2
13		1	Seal	(2) Not serviced, order REF.2

FOOTNOTE [A] COLD CLIMATE
FOOTNOTE [B] FOR JAPANESE MARKET ONLY

1-ZK03-003-A

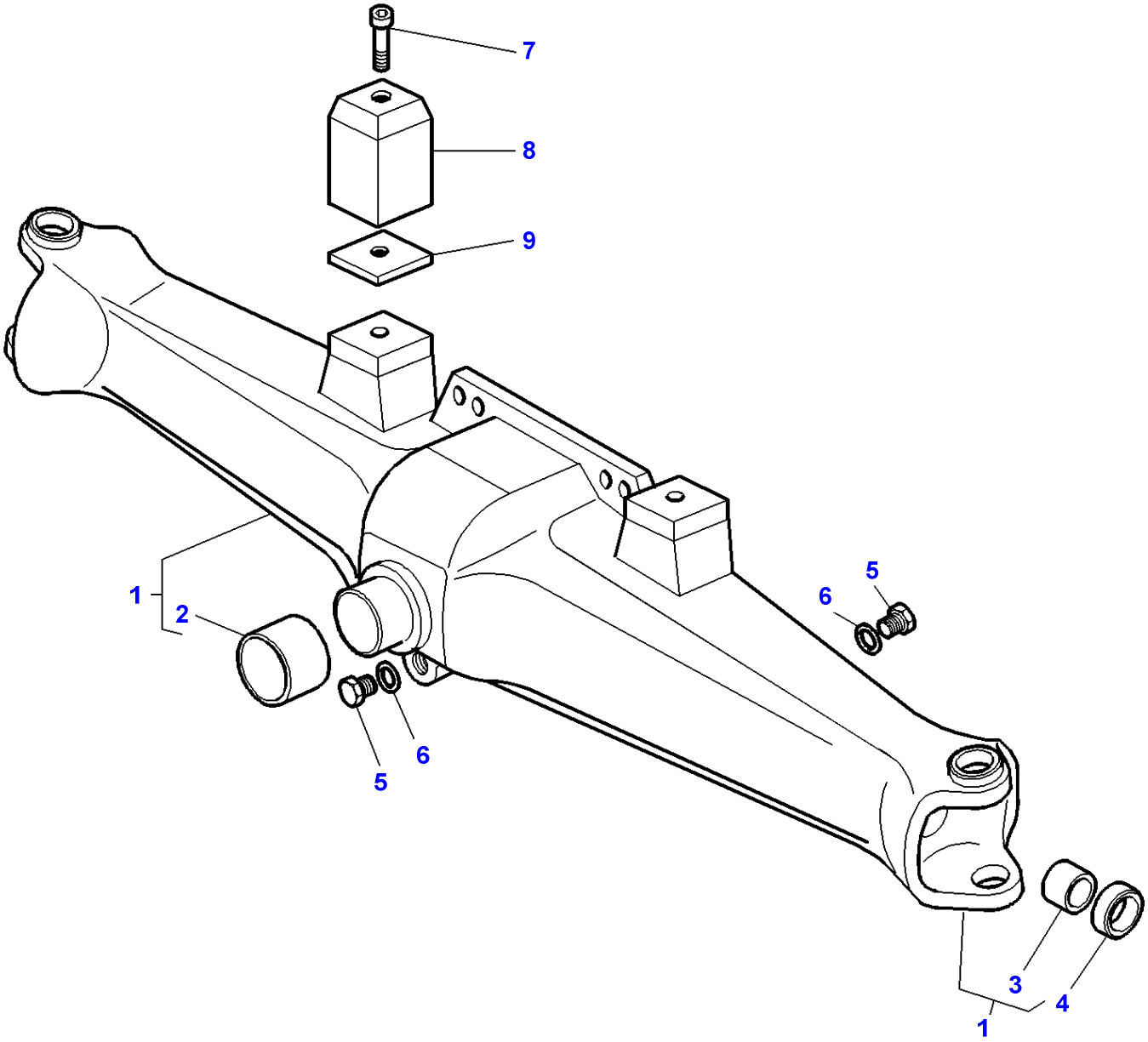

https://truckmanualshub.com/

Item	Part Number	Qty	Description	Comments
1	3765592M91	1	Housing	
2	3765172M2	1	Bush	(1)
3	3426938M1	2	Bush	(1)
4	3428064M1	2	Seal	40X60X18,5
5	3429400M1	2	Plug	
6	3427185M1	2	Washer	
7	3009296X1	2	Screw	[A] M10X80
	3008120X1	2	Screw	M10X70
	3010046X1	2	Screw	M10X95
8	3616572M1	2	Spacer	Thickness 59MM
	3616573M1	2	Spacer	Thickness 76,5MM
9	3580720M1	2	Spacer	

FOOTNOTE [A] USED ONLY WITH 3580720M1
FOOTNOTE [B] FOR JAPANESE MARKET ONLY

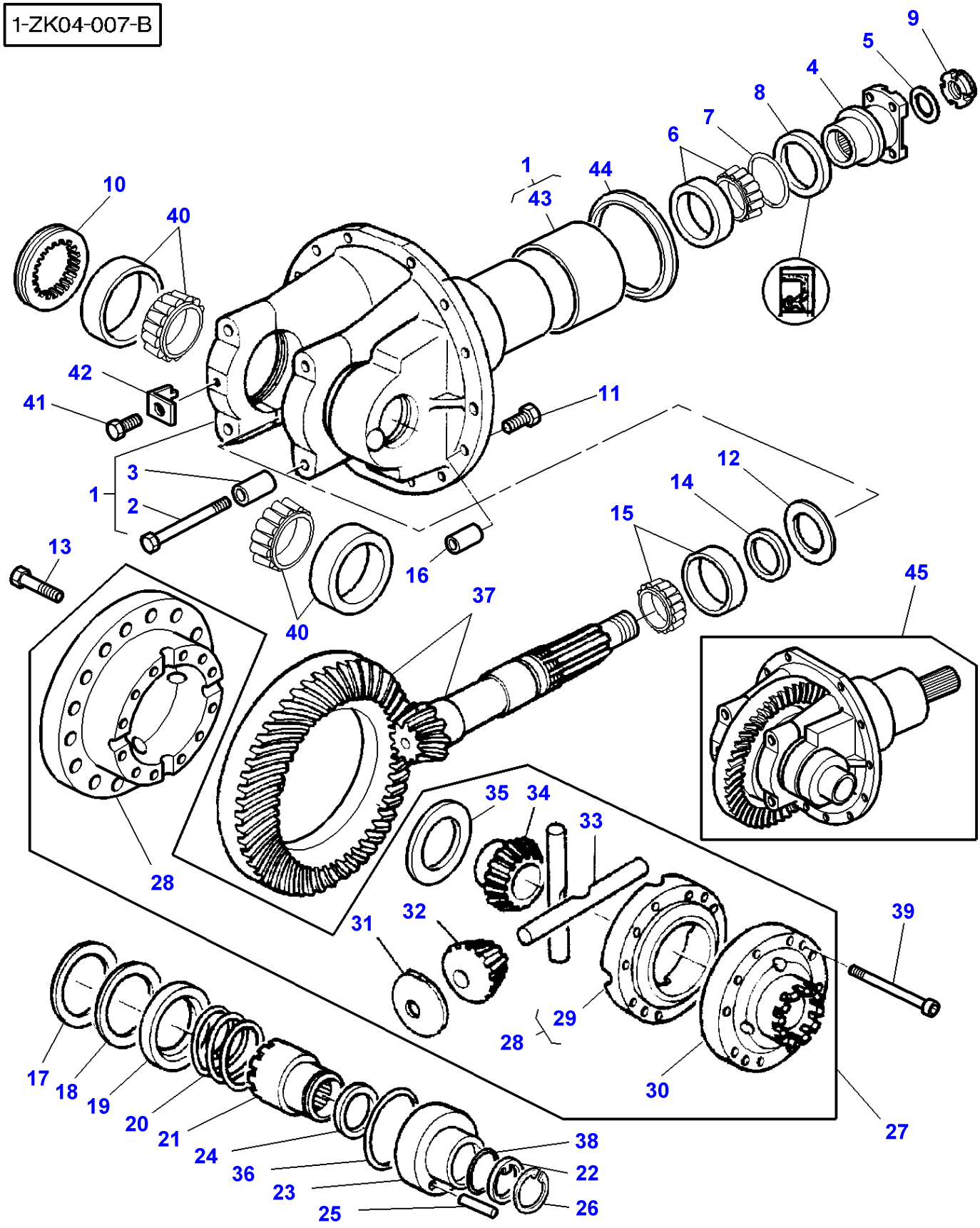
1-ZK04-007-B
9
5
4
8
7
6
1
44
43
10
40
42
41
11
3
1
2
12
14
15
13
16
45
37
40
28
35
34
33
32
31
39
29
28
30
27
17
18
19
20
21
24
36
23
25
38
22
26

https://truckmanualshub.com/

Item	Part Number	Qty	Description	Comments
1	3765163M91	1	Support	
2	3019856X1	4	Bolt Metric	(1) M12X80
3	3427445M1	4	Dowel	(1)
4	3765456M1	1	Flange	
5	3765040M1	1	Washer	
6	3764593M1	1	Bearing	
7	366434X1	1	O Ring	2,62X34,59
8	3428314M1	1	Seal	65X92X18
9	3765039M1	1	Nut	
10	3427462M1	1	Ferrule	
11	3764102M1	12	Screw	M14X45
12	3428487M1	X	Chock	Thickness 0,10MM
	3428488M1	X	Chock	Thickness 0,15MM
	3428489M1	X	Chock	Thickness 0,30MM
	3428490M1	X	Chock	Thickness 0,50MM
	3428491M1	X	Chock	Thickness 0,70MM
	3428492M1	X	Chock	Thickness 1MM
13	3764973M1	16	Screw	M12X35
14	3764216M1	X	Spacer	Thickness 6 MM
	3764217M1	X	Spacer	Thickness 6,03MM
	3764218M1	X	Spacer	Thickness 6,06MM
	3764219M1	X	Spacer	Thickness 6,09MM
	3764220M1	X	Spacer	Thickness 6,12MM
	3764221M1	X	Spacer	Thickness 6,15MM
	3764222M1	X	Spacer	Thickness 6,18MM
	3764223M1	X	Spacer	Thickness 6,21MM
	3764224M1	X	Spacer	Thickness 6,24MM
	3764225M1	X	Spacer	Thickness 6,27MM
	3764226M1	X	Spacer	Thickness 6,30MM
	3764227M1	X	Spacer	Thickness 6,33MM
	3764228M1	X	Spacer	Thickness 6,36MM
	3764229M1	X	Spacer	Thickness 6,39MM
	3764230M1	X	Spacer	Thickness 6,42MM
	3764231M1	X	Spacer	Thickness 6,45MM
	3764232M1	X	Spacer	Thickness 6,48MM
	3764233M1	X	Spacer	Thickness 6,51MM
	3764234M1	X	Spacer	Thickness 6,54MM
	3764235M1	X	Spacer	Thickness 6,57MM
	3764236M1	X	Spacer	Thickness 6,60MM
	3764237M1	X	Spacer	Thickness 6,63MM
	3764238M1	X	Spacer	Thickness 6,66MM
	3764239M1	X	Spacer	Thickness 6,69MM
	3764240M1	X	Spacer	Thickness 6,72MM
	3764241M1	X	Spacer	Thickness 6,75MM
	3764242M1	X	Spacer	Thickness 6,78MM
	3764243M1	X	Spacer	Thickness 7,03MM
15	3764266M1	1	Bearing	
16	3428426M1	2	Centraliser	
17	3427281M1	X	Shim	Thickness 0,10MM
	3427282M1	X	Shim	Thickness 0,15MM
	3427283M1	X	Shim	Thickness 0,30MM
	3427284M1	X	Shim	Thickness 0,50MM
	3427285M1	X	Shim	Thickness 0,70MM
	3427286M1	X	Shim	Thickness 1MM
18	3427079M1	1	Spacer	
19	3427839M1	1	Guide	
20	3427313M1	1	Spring	
21	3427838M1	1	Sleeve	
22	3427463M1	1	Washer	
23	3427460M1	1	Piston	
24	3427443M1	1	Washer	
25	3427444M1	1	Dowel	
26	1442697X1	1	Circlip	
27	3765019M91	1	Differential	
28	3765020M91	1	Housing	(27)
29		1	Housing	(28) Not serviced, order REF.28
30	3429722M1	1	Flange	(27)
31	3764851M1	4	Washer	(27)
32	3429724M1	4	Diff Pinion	(27)

https://truckmanualshub.com/

Item	Part Number	Qty	Description	Comments
33	3429059M1	2	Clevis Pin	(27)
34	3429723M1	2	Planet	(27)
35	3764874M1	2	Washer	(27)
36	359236X1	1	O Ring	97,79X5,33
37	3765008M91	1	Kit, Bevel Gear	10X39
38	3019927X1	1	O Ring	60,33X3,53
39	3765047M1	12	Screw	M12X55
40	391339X1	2	Bearing Bush	
41	1444071X1	1	Screw	M8X8
42	3427466M1	1	Locking Plate	
43	3765164M1	1	Bush	(1)
44	3765167M1	1	Flange	
45	3765705M91	1	Differential	

1-ZK05-007-A

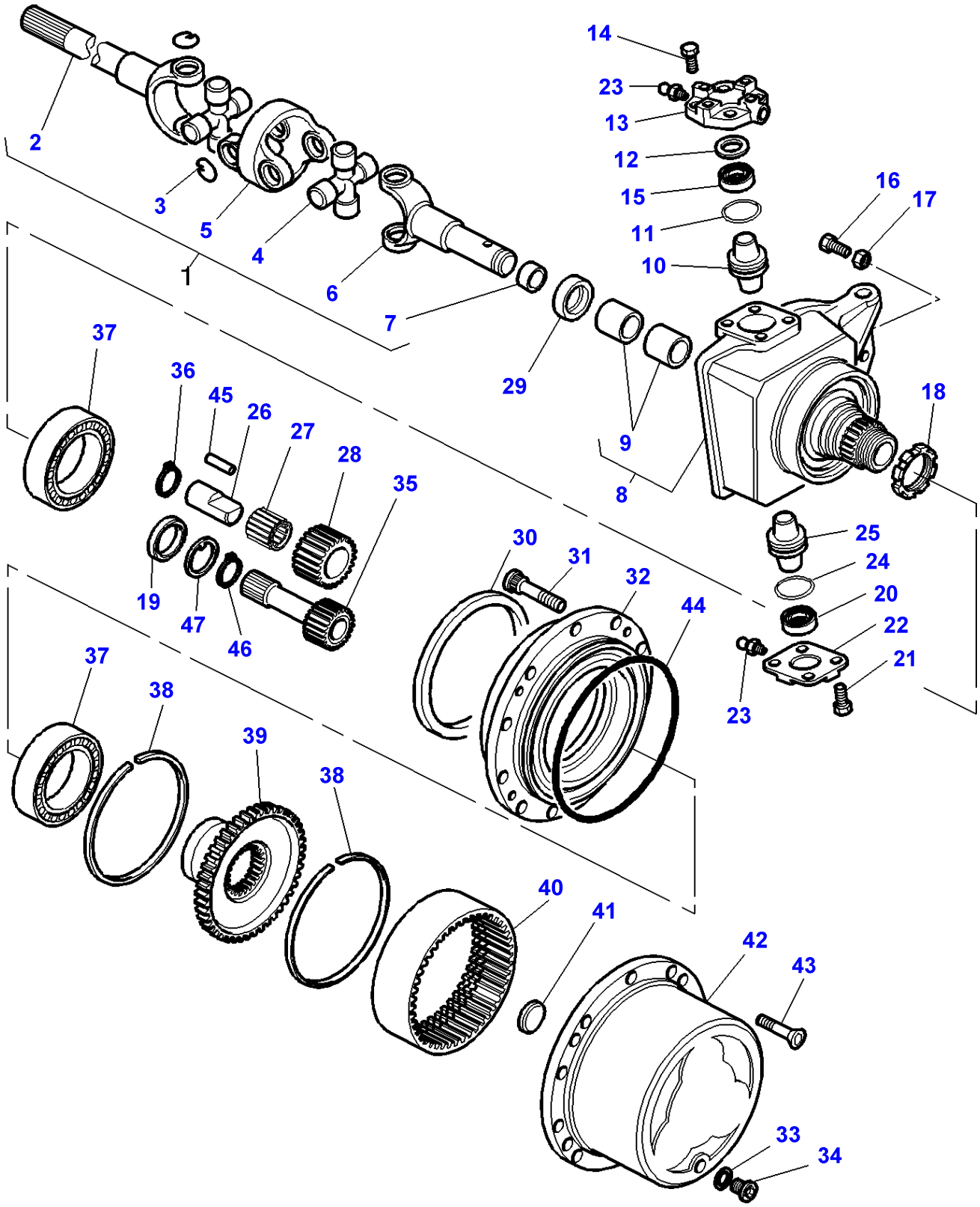
14
23
13
12
15
11
10
16
17
2
3
5
4
1
6
7
29
9
8
18
37
36
45
26
27
28
35
25
24
20
22
21
23
30
31
32
44
19
47
46
37
38
39
38
40
41
42
43
33
34

https://truckmanualshub.com/

Item	Part Number	Qty	Description	Comments
1	3765001M91	1	Universal Joint	Right Hand
	3765002M91	1	Universal Joint	Left Hand
2	3765006M1	1	Yoke	(1) Right Hand BTB
	3765016M1	1	Yoke	(1) Right Hand DBM
	3765007M1	1	Yoke	(1) Left Hand BTB
	3765015M1	1	Yoke	(1) Left Hand DBM
3	339657X1	8	Circlip	(1)
4	3428434M91	2	Spider	(1) BTB
	3765013M91	2	Crosspiece	(1) DBM
5	3428435M1	1	Body	(1) BTB
	3765014M1	1	Body	(1) DBM
6	3765005M1	1	Fork	(1) BTB
	3765012M1	1	Fork	(1) DBM
7	3764962M1	1	Tap	(1) BTB
	3764878M1	1	Tap	(1) DBM
8	3765044M91	1	Housing	Left Hand
	3765042M91	1	Housing	Right Hand
9	3764875M1	2	Bush	(8)
10	3429864M1	2	Pivot	
11	3429318M1	2	Gasket	
12	3428722M1	X	Shim	Thickness 0,10MM
	3428723M1	X	Shim	Thickness 0,15MM
	3428724M1	X	Shim	Thickness 0,30MM
	3428725M1	X	Shim	Thickness 0,50MM
	3428726M1	X	Shim	Thickness 0,70MM
	3428727M1	X	Shim	Thickness 1MM
13	3765004M1	2	Cover	
14	3428397M1	8	Screw	
15	3426619M1	2	Bearing Assy	
16	3764203M2	2	Bolt	
17	3764828M1	2	Nut	
18	3429521M1	2	Nut	
19	3764859M1	2	Thrust Plate	
20	3426619M1	2	Bearing Assy	
21	3428397M1	8	Screw	
22	3429323M1	2	Cover	
23	339003X1	4	Greaser	
24	3429318M1	2	Gasket	
25	3429864M1	2	Pivot	
26	3764935M1	6	Clevis Pin	
27	3428484M1	6	Bearing Assy	
28	3428472M1	6	Gear	Number of teeth/spines 18
29	3428942M1	2	Oil Seal	55X82X16,5
30	3429889M2	2	Seal	210X240X14. 5/18
31	3428141M3	20	Screw	
32	3765003M1	2	Hub	
33	3427185M1	2	Washer	
34	3428230M1	2	Plug	
35	3764999M1	2	Pinion	Number of teeth/spines 12X26
36	3764822M1	6	Circlip	
37	3428478M1	4	Bearing Taper	
38	3428481M1	4	Segment	
39	3429863M1	2	Flange	
40	3429856M1	2	Annular Gear	Number of teeth/spines 51
41	3426771M1	2	Thrust Plate	

https://truckmanualshub.com/

Item	Part Number	Qty	Description	Comments
42	3765011M1	2	Carrier	
43	3007449X1	8	Bolt	
44	3765041M1	2	O Ring	Diameter 253,59 X 3,53
45	3764823M1	6	Needle	
46	3764881M1	2	Circlip	
47	3764860M1	2	Plate	

https://truckmanualshub.com/

Page Title	Page Number
Steering Wheel And Telescopic Column	070-0005
Steering Wheel And Telescopic Column	070-0010
Lighting Power Shuttle	070-0015
Steering Pump	070-0020
Steering Hydraulic Lines	070-0025
Load Sensing - Cover Lh-Pump / Filter	070-0030
Load Sensing - Cover Rh - With Pump 45cc	070-0035
Load Sensing - Cover Rh - Pump 45cc / With Trailer Braking	070-0040
Load Sensing - Cover Rh - With Pump 110 L/mm - Without Trailer Braking	070-0045
Hydraulics - Hydraulic Cover Rh - Pump 45cc / Electrovalves	070-0050
Hydraulics - Hydraulic Cover Rh - Pump 45cc / Hydr. Lines	070-0055
Hydraulics - Hydraulic Cover Rh - Pump 60cc / Electrovalves	070-0060
Load Sensing - Cover Rh - Pump 45cc / Hydr. Lines / With Trailor Braking	070-0065
Load Sensing - Cover Rh - Pump 45cc / Hydr. Lines / Without Trailor Braking	070-0070
Load Sensing - Cover Rh - With Hydraulic Pump 110 L/mn / DUAL CONTROL DISTRIBUTOR FEEDING	070-0075
Hydraulics - Hydraulic Cover Rh - Pump 60cc / Hydr. Lines	070-0080
Load Sensing - Cover Rh - With Pump 150 L/mm	070-0085
Load Sensing - Cover Rh - With Pump 150 L/mm - Without Trailor Braking	070-0090
Load Sensing - Cover Rh - With Pump 150 L/mm - With Trailor Braking	070-0095
Load Sensing - Cover Rh - Pump 60cc / Hydr. Lines - With Trailor Braking	070-0100
Load Sensing - Cover Rh - WITH PUMP 60CC / HYDR. LINES / WITH OR WITHOUT TR AILOR BRAKING	070-0105
Load Sensing - Cover Rh - With Hydraulic Pump 150 L/mn / DUAL CONTROL DISTRIBUTOR FEEDING	070-0110
Hydraulic Circuit Lube Systeme - With Full Powershift	070-0115
Hydraulic Circuit Lube Systeme - With Pump 45cc	070-0120
Hydraulic Circuit Lube Systeme - With Pump 150 L/mm	070-0125
Oil Cooler	070-0130
Oil Cooler	070-0135
Hydraulic Valve	070-0140
Brakes - Pedals	070-0145
Brakes - Master Cylinder - ASSISTED - WITHOUT TRAILER BRAKING	070-0150
Brakes - Master Cylinder - Assisted - With Trailor Brakes	070-0155
Brakes - Brake Pipes And Master Cylinder - ASSISTED - WITHOUT TRAILER BRAKING	070-0160
Brakes - Assisted- Pipes And Fitting - ASSISTED - WITHOUT TRAILER BRAKING	070-0165
Brakes - Brake Pipes And Master Cylinder - Assisted - With Trailor Brakes	070-0170
Brakes - Assisted- Pipes And Fitting - Assisted - With Trailor Brakes	070-0175
Brakes - Assisted- Pipes And Fitting - Without Trailer Braking	070-0180
Brakes - Assisted- Pipes And Fitting - With Pump 150 L/mm - Without Trailor Braking	070-0185
Brakes - Assisted- Pipes And Fitting - With Trailer Braking	070-0190
Brakes - Assisted- Pipes And Fitting - With Pump 150 L/mm - With Trailor Braking	070-0195
Brakes - Hydraulic Pipes	070-0200
Brakes - Hydraulic Pipes	070-0205
Hydraulic Lift Distributor	070-0210
Hydraulic Lift Distributor	070-0215
Auxiliary Distributor - 2 Distributors	070-0220
Load Sensing - Auxiliary Distributors Installati - 2 DISTRIBUTORS - PLUMBING	070-0225
Auxiliary Distributor - 3 Distributors	070-0230
Load Sensing - Auxiliary Distributors Installati - 3 DISTRIBUTORS - Plumbing	070-0235
Auxiliary Distributor - 3 DISTRIBUTORS - FOR HYDRAULIC MOTOR	070-0240
Load Sensing - Auxiliary Distributors Installati - 3 DISTRIBUTORS - FOR HYDRAULIC MOTOR - PLUMBING	070-0245
Auxiliary Distributor - 3 Distributors	070-0250

https://truckmanualshub.com/

Load Sensing - Auxiliary Distributors Installati - 3 DISTRIBUTORS - Plumbing	070-0255
Auxiliary Distributor - 3 DISTRIBUTORS - DUAL CONTROL	070-0260
Load Sensing - Auxiliary Distributors Installati - 3 DISTRIBUTORS - DUAL CONTROL - PLUMBING	070-0265
Auxiliary Distributor - 4 Distributors	070-0270
Load Sensing - Auxiliary Distributors Installati - 4 DISTRIBUTORS - Plumbing	070-0275
Auxiliary Distributor - 4 DISTRIBUTORS - FOR HYDRAULIC MOTOR	070-0280
Load Sensing - Auxiliary Distributors Installati - 4 DISTRIBUTORS - FOR HYDRAULIC MOTOR - PLUMBING	070-0285
Auxiliary Distributor - 4 Distributors	070-0290
Load Sensing - Auxiliary Distributors Installati - 4 Distributors	070-0295
Auxiliary Distributor - 4 DISTRIBUTORS - DUAL CONTROL	070-0300
Load Sensing - Auxiliary Distributors Installati - 4 DISTRIBUTORS - DUAL CONTROL - PLUMBING	070-0305
Auxiliary Distributor - 4 DISTRIBUTORS - FOR HYDRAULIC MOTOR - DUAL CONTRO L	070-0310
Load Sensing - Auxiliary Distributors Installati - 4 DISTRIBUTORS - FOR HYDRAULIC MOTOR - DUAL CONTRO L - PLUMBING	070-0315
Load Sensing - Auxiliary Distributors Installati - 3 Distributors	070-0320
Load Sensing - Auxiliary Distributors Installati - 4 Distributors	070-0325
Hydraulic Coupling - 2 Distributors	070-0330
Hydraulic Coupling - 3 Distributors	070-0335
Hydraulic Coupling - 4 Distributors	070-0340
Hydraulic Coupling	070-0345
DIPSTICK / CENTRE HOUSING	070-0350
2 DISTRIBUTORS CONTROL - Up to Serial or Engine Number - H351014	070-0355
2 DISTRIBUTORS CONTROL - From Serial or Engine Number - H351015	070-0360
3 DISTRIBUTORS CONTROL - Up to Serial or Engine Number - H351014	070-0365
3 DISTRIBUTORS CONTROL - From Serial or Engine Number - H351015	070-0370
3 DISTRIBUTORS CONTROL - With Dual Control - Up to Serial or Engine Number - H351014	070-0375
3 DISTRIBUTORS CONTROL - With Dual Control - From Serial or Engine Number - H351015	070-0380
4 DISTRIBUTORS CONTROL - Up to Serial or Engine Number - H351014	070-0385
4 DISTRIBUTORS CONTROL - From Serial or Engine Number - H351015	070-0390
4 DISTRIBUTORS CONTROL - With Dual Control - Up to Serial or Engine Number - H351014	070-0395
4 DISTRIBUTORS CONTROL - With Dual Control - From Serial or Engine Number - H351015	070-0400

https://truckmanualshub.com/

1-ZN04-003-A

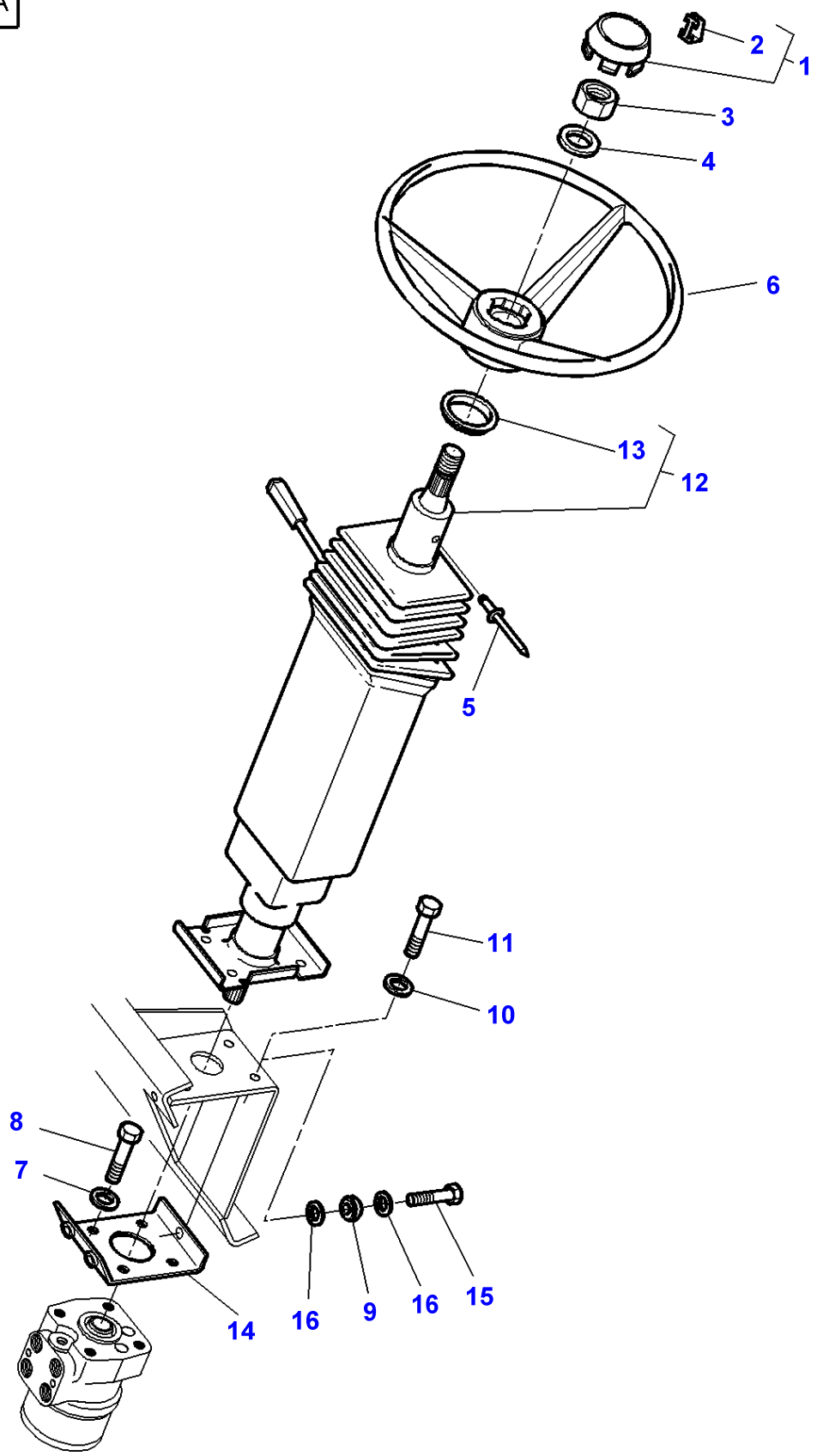

https://truckmanualshub.com/

Item	Part Number	Qty	Description	Comments
1	3759758M92	1	Cap	
2	3817055M1	2	Clip	(1)
3	339070X1	1	Nut	M14
4	390973X1	1	Washer Metric	Diameter 15-28x2,5MM
5	338941X1	1	Rivet	4X7,5MM
6	3809661M1	1	Steering Wheel	
7	390734X1	4	Washer	
8	339282X1	4	Screw Metric	M10X16
9	1619912M1	3	Vibration Mount	
10	1440921X1	4	Washer Metric	Diameter 8-22X2MM
11	339124X1	4	Hex. Sock. Screw	M8x16
12	3713868M2	1	Column	See Page - Reference Number 070-0010/1
13	3902578M1	1	Gasket	(12)
14	3388920M93	1	Support	
15	3009494X1	3	Screw Metric	M10X35
16	3389958M1	3	Washer	

https://truckmanualshub.com/

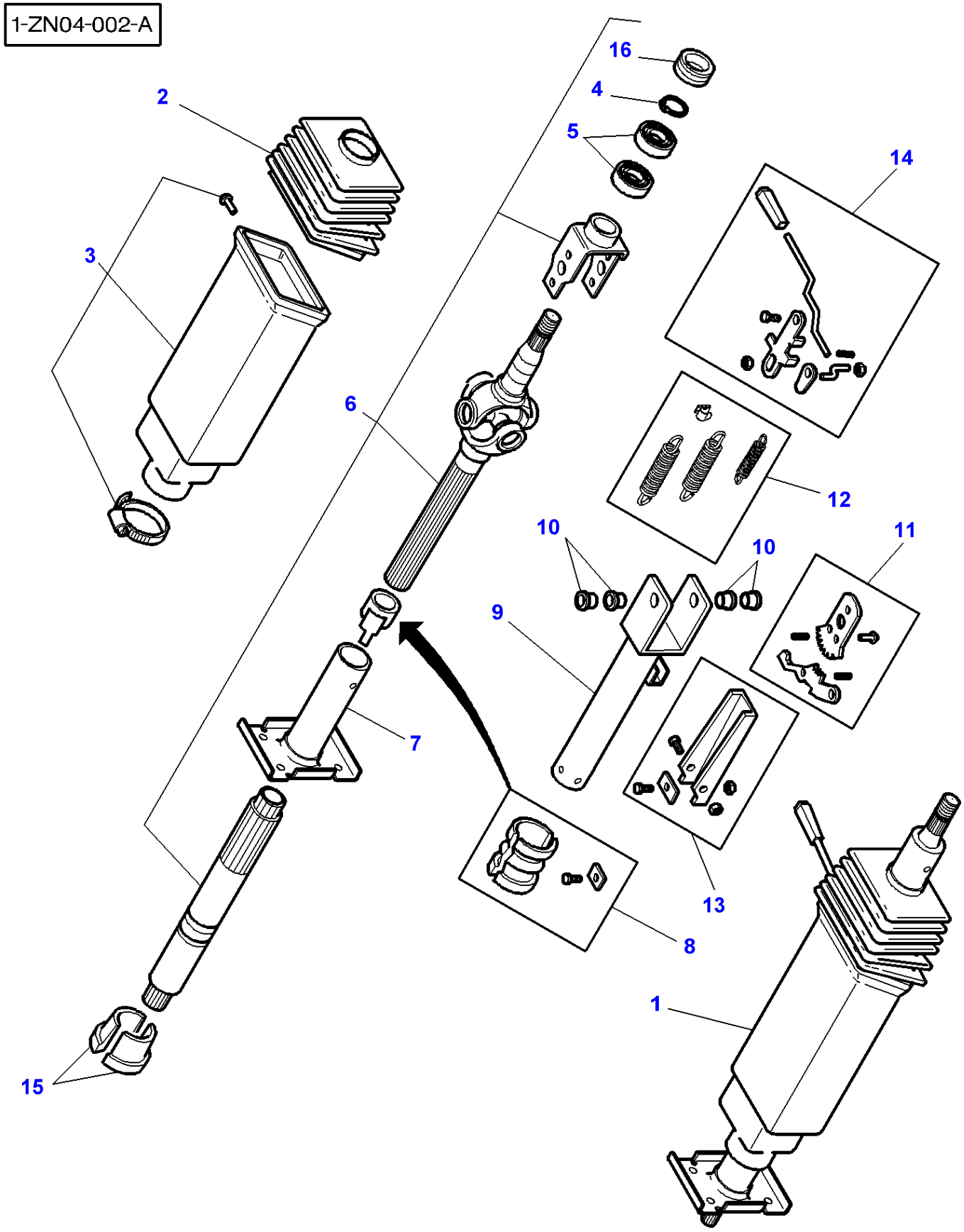

https://truckmanualshub.com/

Item	Part Number	Qty	Description	Comments
1	3713868M2	1	Column	
2	3902566M91	1	Bellows	(1)
3	3902568M91	1	Case Assy	(1)
4	1440475X1	1	Circlip	(6)
5	1440872X1	2	Bear. 6004 Rs	(6)
6	3902564M1	1	Shaft	(1)
7	3902565M1	1	Column	(1)
8	3900242M91	1	Parts Pack	(1)
9	3900241M91	1	Column	(1)
10	3900164M91	1	Clevis Pin	(1)
11	3900146M91	1	Kit, Lever	(1)
12	3900167M91	1	Kit, Spring	(1)
13	3900166M91	1	Kit, Brake	(1)
14	3902567M91	1	Kit, Lever	(1)
15	3900145M1	1	Bearing	(1)
16	3902578M1	1	Gasket	(6)

1-ZN15-001-C

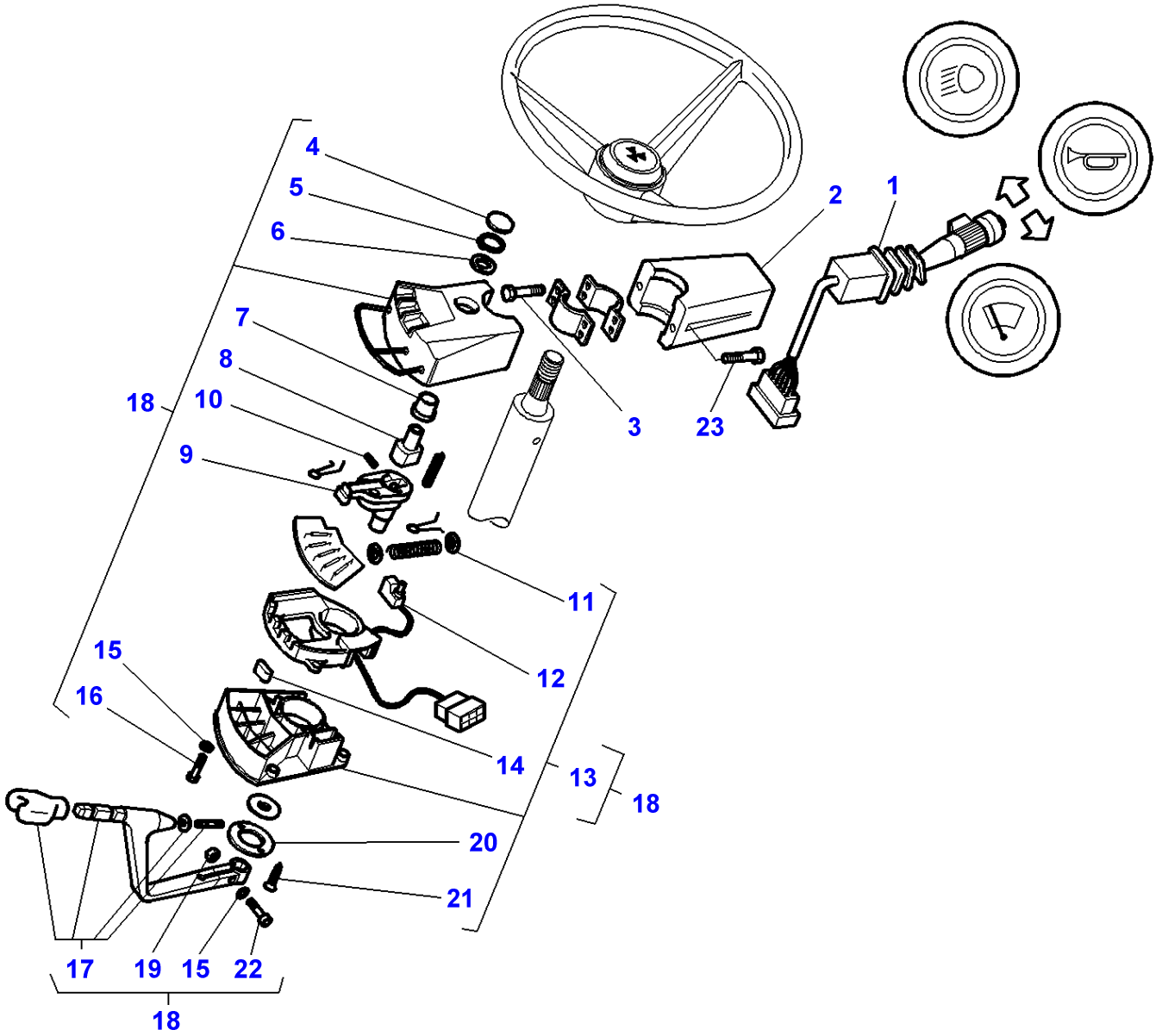

https://truckmanualshub.com/

Item	Part Number	Qty	Description	Comments
1	**3713669M2**	1	Switch,Indirect	
2	3779042M1	1	Case Assy	
3	3713785M1	4	Screw	M4
4	3903223M1	1	Helmet	(18)
5	3903224M1	1	Circlip	(18)
6	3903225M1	1	Washer	(18)
7	3903226M1	1	Guide Bush	(18)
8	3903227M1	1	Flanged Pin	(18)
9	3903507M1	1	Shifter	(18)
10	3903228M1	1	Roll Pin	(18)
				Diameter 4 MM
				Length 28 MM
11	3903243M1	2	Plug	(13)
12	3903230M1	1	Micro Switch	(13)
13	3903302M91	1	Module	(18)
14	3903232M1	1	Rubber	(13)
15	3903234M1	5	Tab Washer	(18)
				M4
16	3903233M1	4	Screw	(18)
				M4x14
17	3903303M91	1	Lever	(18)
18	3780596M94	1	Combi Switch	
19	3903238M1	1	Nut	(18)
				Diameter M4
20	3903235M1	1	Pivot Plate	(13)
21	3903236M1	2	Screw	(13)
22	3903239M1	1	Screw	(18)
				M4x18
23	3010818X1	1	Screw Metric	M4x20
	3010895X1	1	Screw Metric	M4x35

FOOTNOTE [A] NOT ILLUSTRATED

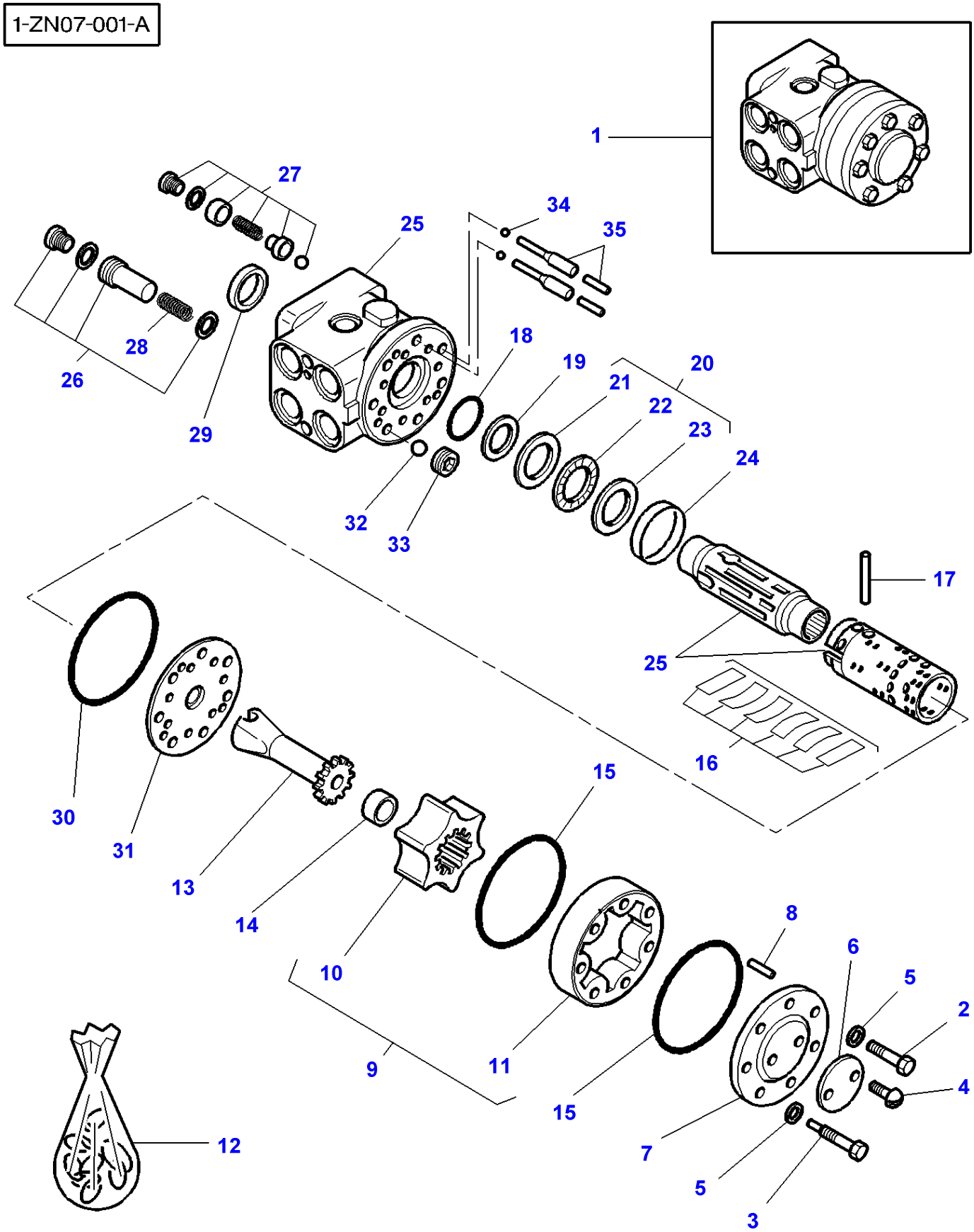
1-ZN07-001-A
1
27
34
35
25
28
26
29
18
19
20
21
22
23
24
32
33
17
25
16
30
31
13
14
15
10
8
6
5
2
4
9
11
15
7
5
3
12

https://truckmanualshub.com/

Item	Part Number	Qty	Description	Comments
1	3712250M1	1	Distributor	200 CM3
2	1429154M1	6	Screw	(1)
3	1429153M1	1	Screw	(1)
4	1806318M1	2	Screw	(1)
5	1806317M1	7	Washer	(1)
6	1890402M1	1	Plate	(1)
7	1806316M1	1	Cap	(1)
8	1806312M1	1	Pin	(1)
9	1429157M91	1	Kit, Gear	(1)
10		1	Gear	(9)
				Not serviced, order REF.9
11		1	Stator	(9)
				Not serviced, order REF.9
12	1810503M92	1	Parts Pack	
13	1806416M1	1	Shaft	(1)
14	1429155M1	1	Spacer	(1)
15	1806315M1	2	Seal	(1)
16	1894415M1	1	Kit, Spring	(1)
17	1806310M1	1	Pin	(1)
18		1	Seal	(12)
				Not serviced, order REF.12
19		1	Seal	(12)
				Not serviced, order REF.12
20	1894414M91	1	Bearing Assy	(1)
21		1	Bearing Assy	(20)
				Not serviced, order REF.20
22		1	Bearing Assy	(20)
				Not serviced, order REF.20
23		1	Bearing Assy	(20)
				Not serviced, order REF.20
24	1806303M1	1	Bush	(1)
25		1	Pump	(1)
				Not serviced, order REF. 1
26	3476502M91	1	Pressure Valve	(1)
27	1897432M91	2	Parts Pack	(1)
28		1	Spring	(26)
				Not serviced, order REF.26
29	1887719M1	1	Seal	(1)
30	1806314M1	1	Seal	(1)
31	1806319M1	1	Plate	(1)
32	1806311M1	1	Ball	(1)
33	1806313M1	1	Seat	(1)
34	1897434M1	2	Ball	(1)
35	1897608M91	2	Roll Pin	(1)

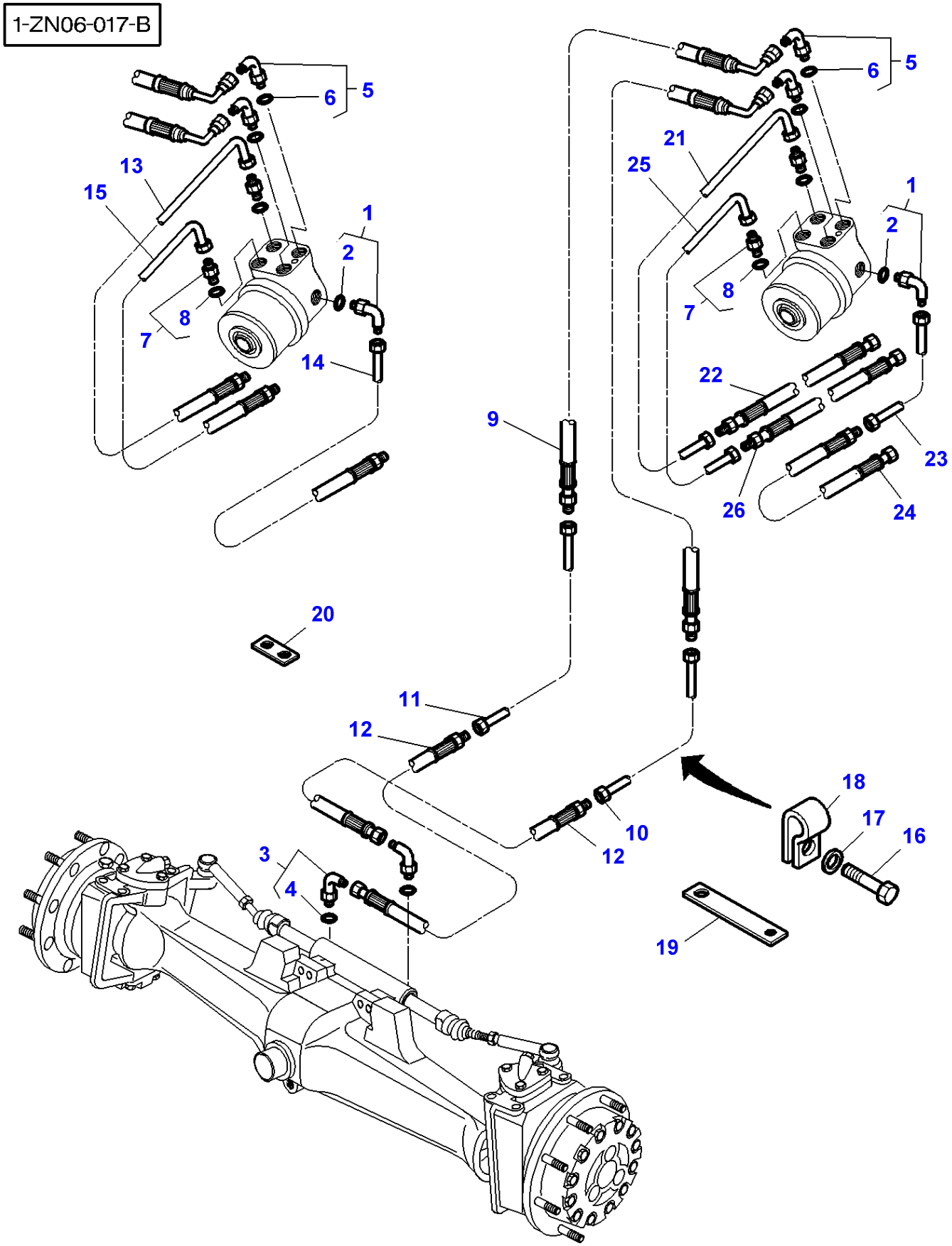
1-ZN06-017-B
5
6
13
15
1
2
8
7
14
21
25
22
23
24
26
9
20
11
12
10
18
17
16
3
4
19

https://truckmanualshub.com/

Item	Part Number	Qty	Description	Comments
1	3019410X91	1	Elbow Nipple	M12
2	3019394X1	1	O Ring	(1)
3	3019414X91	2	Union	M16
4	3019396X1	1	O Ring	(3)
5	3019588X91	2	Union	M18
6	3019394X1	1	O Ring	(5)
7	3019383X91	2	Adaptor	M18
8	3019397X1	1	O Ring	(7)
9	5015903M2	2	Hydr Hose	Length 555MM
10	3783269M2	1	Tube	Left Hand
11	3783268M2	1	Tube	Right Hand
12	5015330M3	2	Hydr Hose	
13	3778588M1	1	Tube	Up to Serial or Engine Number J182026
14	3778589M1	1	Tube	Up to Serial or Engine Number J150027
15	3778590M2	1	Tube	Up to Serial or Engine Number J070009
16	339123X1	6	Hex. Sock. Screw	M8X20
17	390972X1	6	Washer Metric	
18	70925617	6	Clamp	
19	3783263M2	1	Strap	Length 95MM
20	3781240M1	2	Strap	Length 45MM
21	3783528M1	1	Tube	From Serial or Engine Number J182027
22	3783517M1	1	Hydr Hose	Length 900MM
				From Serial or Engine Number J182027
23	3783525M1	1	Tube	From Serial or Engine Number J150028
24	3783512M1	1	Hydr Hose	Length 1250MM
				From Serial or Engine Number J150028
25	3783523M1	1	Tube	From Serial or Engine Number J070010
26	3783514M1	1	Hydr Hose	Length 1350MM
				From Serial or Engine Number J070010

1-ZP60-002-C

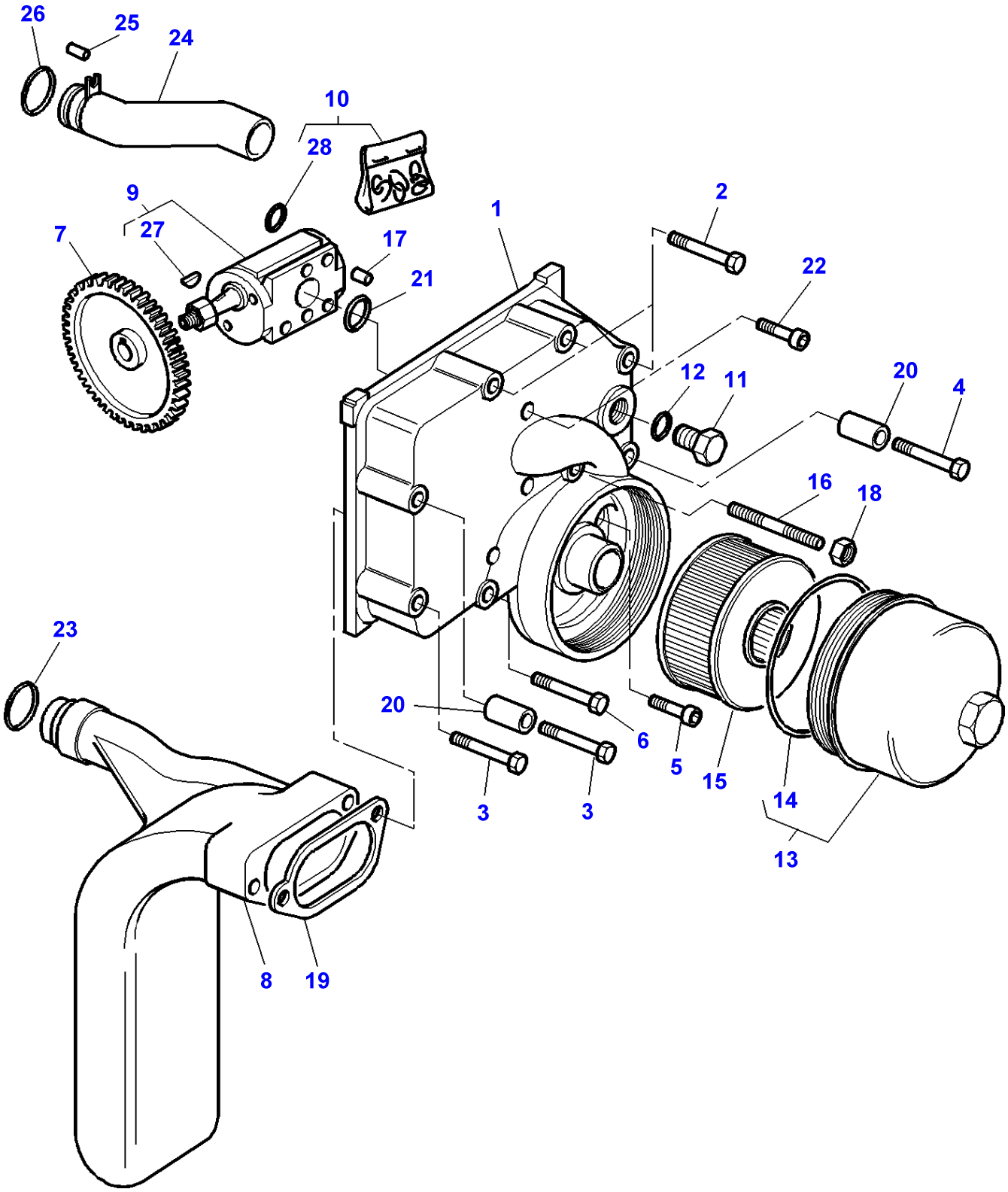
26
25
24
10
28
9
27
7
17
21
1
2
22
12
11
20
4
16
18
23
20
6
5
15
14
3
3
13
8
19

https://truckmanualshub.com/

Item	Part Number	Qty	Description	Comments
1	3791328M4	1	Cover	
2	3009518X1	3	Screw	M12X110
3	3009517X1	2	Bolt Metric	M12X100
4	1444034X1	1	Bolt Metric	M12X125
5	3009300X1	1	Screw	M12X70
6	3009518X1	1	Screw	M12X110
7	3716351M1	1	Pinion	Number of teeth/spines 70
8	3793088M1	1	Manifold	
9	3618001M3	1	Pump	[A]
	3791900M1	1	Pump	[B]
10	3903020M91	1	Kit, Joint	
11	3019438X1	1	Plug	M30
12	391265X1	1	Gasket	
13	3715772M91	1	Cover	[A]
	3790001M91	1	Cover	[B]
14	3715773M1	1	O Ring	(13)
15	**3714453M1**	1	Strainer	[A] Length 98MM
	3790002M1	1	Strainer	[B] Length 139MM
16	392531X1	2	Stud	M8X105
17	1442522X1	2	Dowel	Diameter 6X12
18	339169X1	2	Nut	
19	3791530M1	1	Gasket	
20	3000705X1	2	Pin	Diameter 16X18
21	851150M1	1	Ring	
22	3009297X1	2	Screw Metric	M10X90
23	1001489M1	1	O Ring	
24	3716375M91	1	Tube	
25	1441722X1	1	Pin	Diameter 3X16
26	364777X1	1	O Ring	
27	1440360X1	1	Key	(9)
28	1441708X1	1	O Ring	(10)

FOOTNOTE [A] WITH PUMP 45CC
FOOTNOTE [B] WITH PUMP 60CC
FOOTNOTE [C] WITH DYNASHIFT
FOOTNOTE [D] WITH FULL POWERSHIFT

1-ZP61-023-B

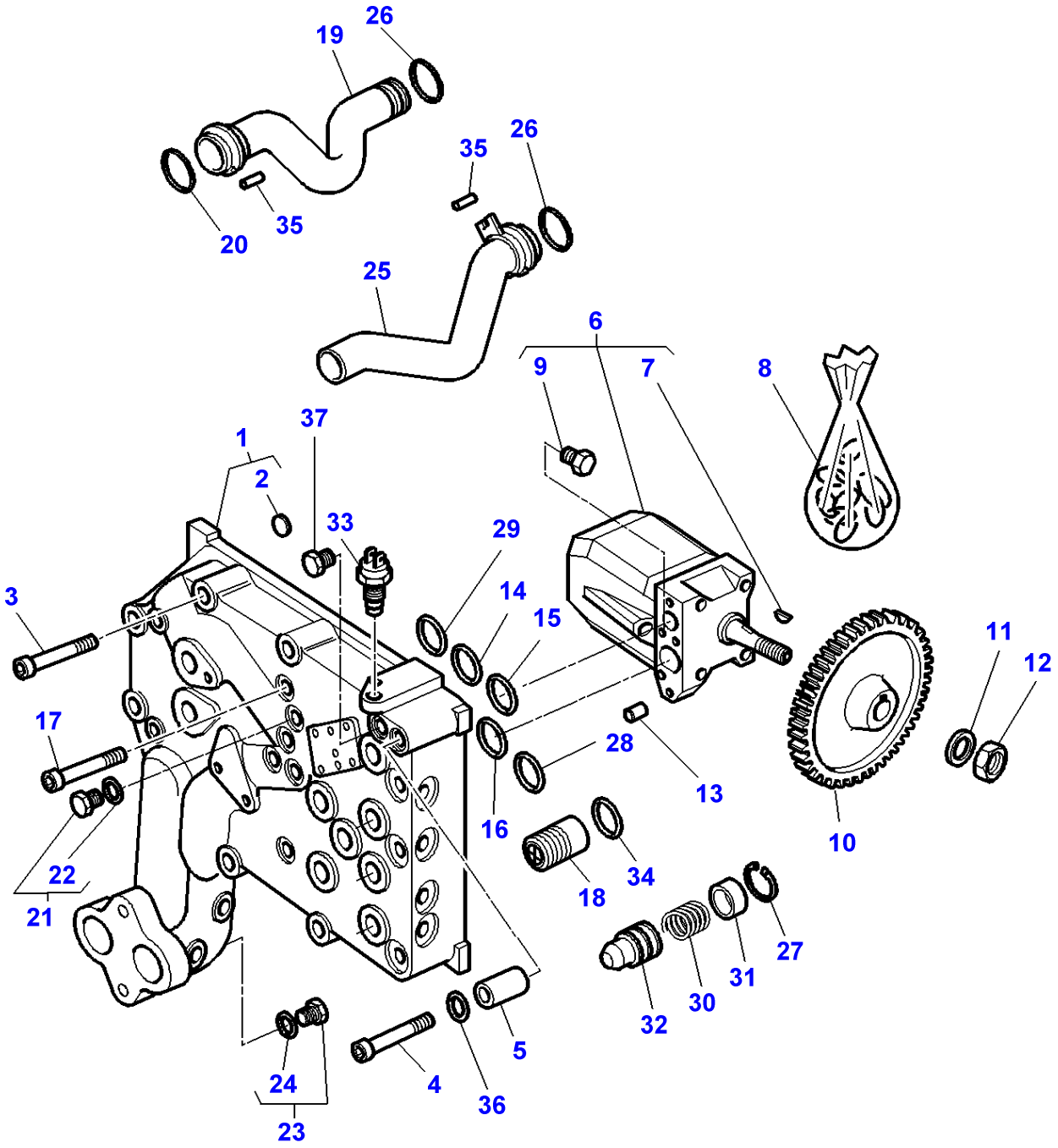
26
19
26
35
35
20
25
6
9
7
8
37
1
2
33
29
3
14
15
11
12
17
28
13
16
10
22
34
18
21
27
31
30
32
5
24
4
36
23

https://truckmanualshub.com/

Item	Part Number	Qty	Description	Comments
1	3716703M15	1	Cover	
2	3712249M1	1	Plug	(1) Diameter 10MM
3	3009302X1	6	Screw Metric	M12X90
4	3009303X1	2	Screw	M12X100
5	3000705X1	2	Pin	Diameter 16X18MM
6	3716370M2	1	Pump	45CM3/RPM
7	22277X	1	Key	(6)
8	3902614M91	1	Kit,Joint/Gasket	
9	3902662M1	1	Plug	(6)
10	3716365M1	1	Pinion	Number of teeth/spines 73
11	353775X1	1	Washer	
12	353436X1	1	Nut Unf	
13	1442522X1	2	Dowel	Diameter 6X12MM
14	**1001833M1**	1	O Ring	Diameter 6,07X1,78MM
15	359299X1	1	O Ring	Diameter 23,4X3,53MM
16	378251X1	1	O Ring	Diameter 36,17X2,62MM
17	1440354X1	4	Screw Metric	M12X50
18	3715621M92	1	Non Return Valve	5BARS
19	3716376M92	1	Tube	
20	3793346M1	1	Seal	
21	3019639X91	1	Plug	M14
22	3019395X1	1	O Ring	(21)
23	3019645X91	1	Plug	M22
24	3019398X1	2	O Ring	(23)
25	3716377M91	1	Tube	
26	364777X1	2	O Ring	
27	1441785X1	1	Clip	
28	**1007240M1**	2	O Ring	Diameter 9,2X2,62MM
29	195562M1	1	O Ring	Diameter 10,77X2,62MM
30	3715619M1	1	Spring	
31	3715618M1	1	Cup	
32	3715616M1	1	Non Return Valve	22BARS
33	**3381387M4**	1	Low Pr.Oil Trmtr	
34	359300X1	1	O Ring	
35	1441722X1	2	Pin	Diameter 3X16MM
36	3792365M1	1	Washer	
37	3792347M1	1	Plug	Diameter 14MM

1-ZP61-027-B

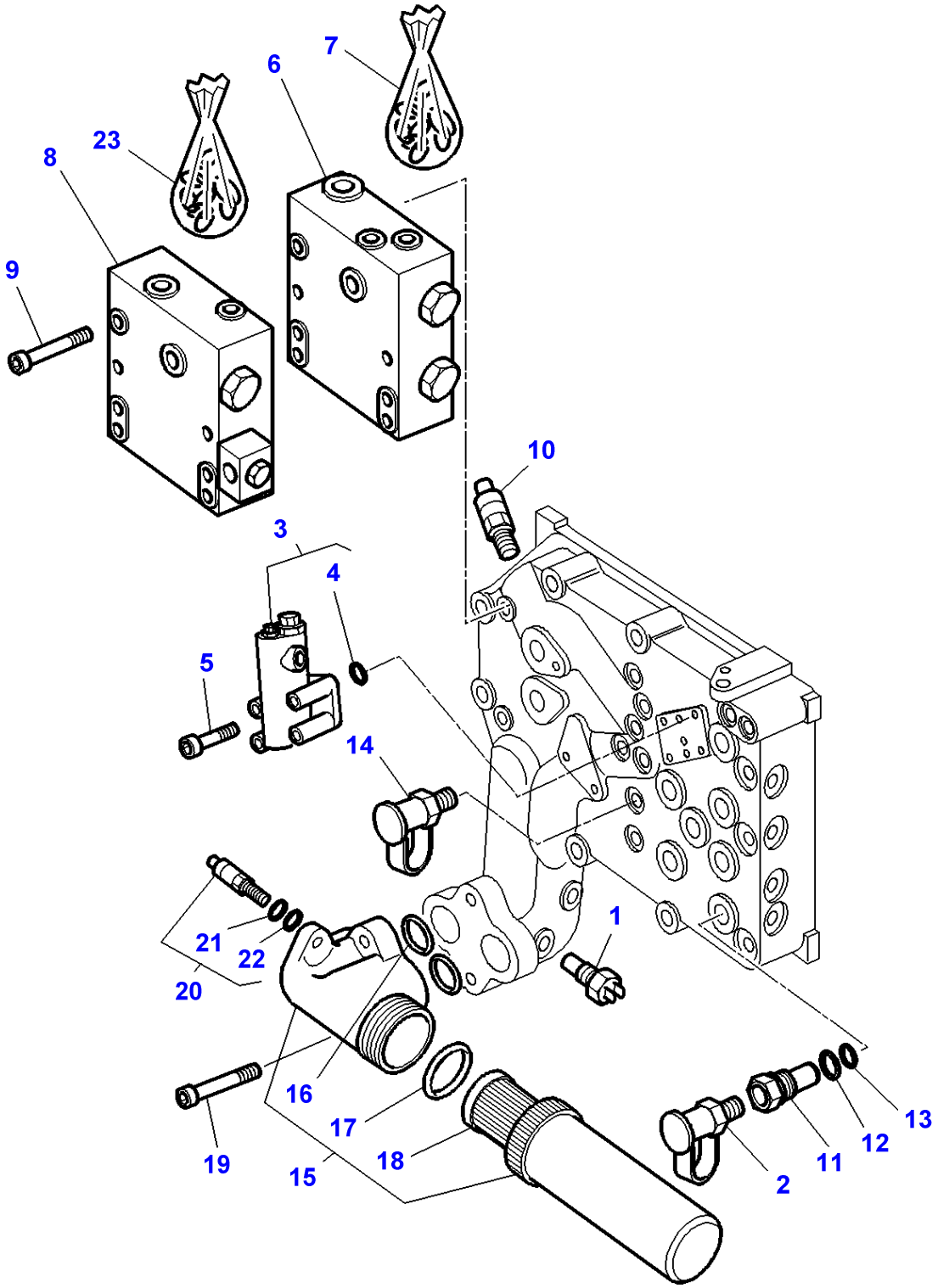

https://truckmanualshub.com/

Item	Part Number	Qty	Description	Comments
1	**3712668M2**	1	Switch,Indirect	[C]
2	**3384387M1**	1	Pressure Intake	
3	3716371M1	1	Adjuster	
4	359291X1	3	O Ring	(3)
5	3009283X1	4	Screw	M6X30
6	3790025M1	1	Safety Valve	[A]
7	3790027M11	1	Kit, Joint	
8	3790036M1	1	Safety Valve	[B]
9	3015017X1	4	Screw	M8X135
10	3716357M1	1	Restrictor	
11	3716195M1	1	Plug	
12	831497M1	1	O Ring	Diameter 16,36X2,21MM
13	70923841	1	O Ring	Diameter 12,42X1,78MM
14	**3384387M1**	2	Pressure Intake	
15	3791109M1	1	Filter	
16	831196M1	2	O Ring	(15)
17	842332M1	1	Gasket	(15)
18	**3618662M1**	1	Filter Insert	(15)
19	3000258X1	2	Screw Metric	M10X40
20	**3618663M3**	1	Indicator	
21	831497M1	1	O Ring	(20) Diameter 16,4X2,2
22	70923841	1	O Ring	(20) Diameter 12,4X1,8
23	3902094M91	1	Kit, Joint	

FOOTNOTE [A] STEERING
FOOTNOTE [B] BRAKING
FOOTNOTE [C] GREEN

1-ZP61-024-B

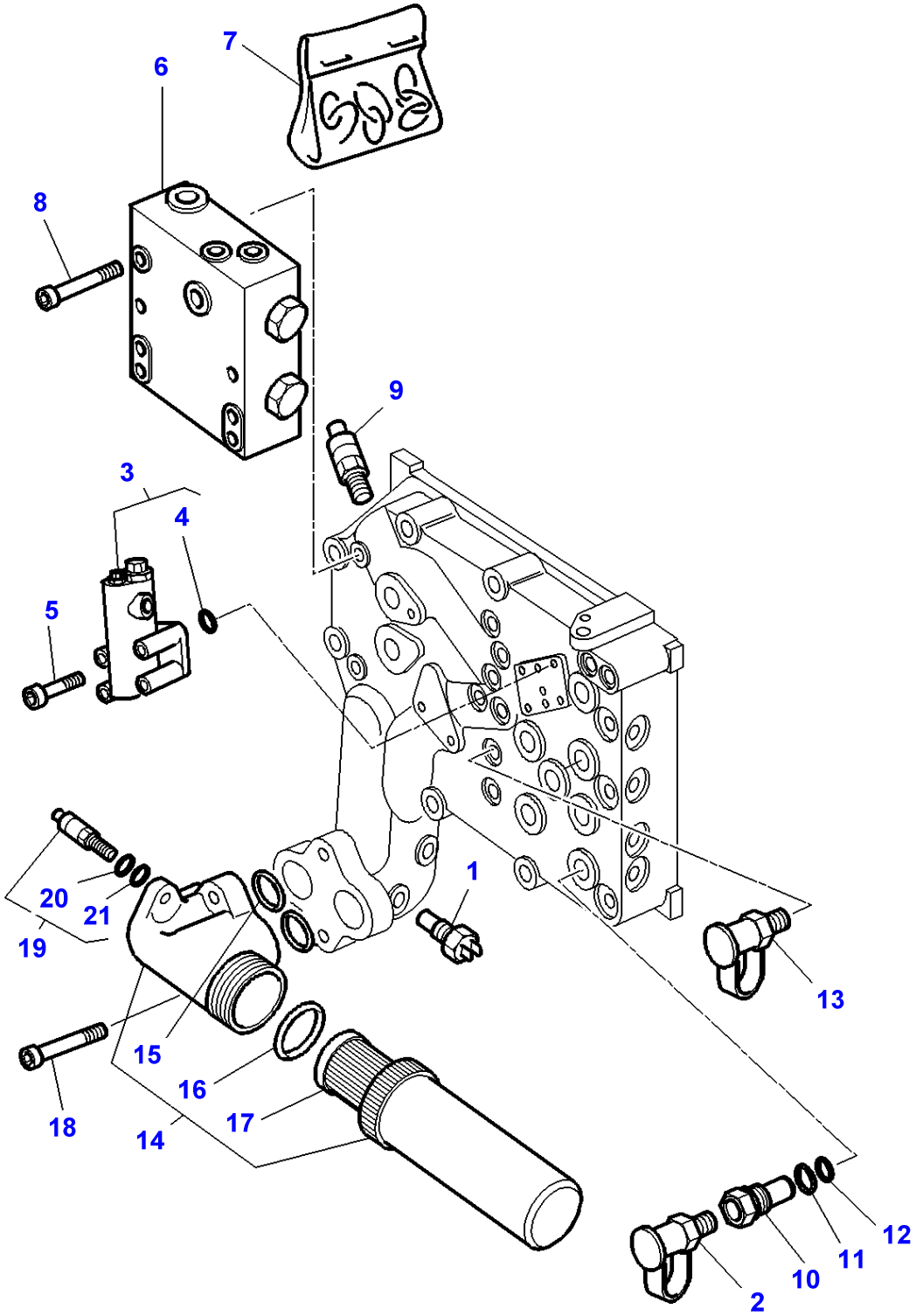

https://truckmanualshub.com/

Item	Part Number	Qty	Description	Comments
1	**3712668M2**	1	Switch,Indirect	[A]
2	**3384387M1**	1	Pressure Intake	
3	3716371M1	1	Adjuster	
4	359291X1	3	O Ring	(3)
5	3009283X1	4	Screw	M6X30
6	3716355M1	1	Safety Valve	
7	3790027M11	1	Kit, Joint	
8	1441946X1	4	Screw	M8X75
9	3716357M1	1	Restrictor	17 Bar
10	3716195M1	1	Plug	
11	831497M1	1	O Ring	Diameter 16,36X2,21MM
12	70923841	1	O Ring	Diameter 12,42X1,78MM
13	**3384387M1**	2	Pressure Intake	
14	3791109M1	1	Filter	
15	831196M1	2	O Ring	(14)
16	842332M1	1	Gasket	(14)
17	**3618662M1**	1	Filter Insert	(14)
18	3000258X1	2	Screw Metric	M10X40
19	**3618663M3**	1	Indicator	
20	831497M1	1	O Ring	(19) Diameter 16,4X2,2
21	70923841	1	O Ring	(19) Diameter 12,4X1,8

FOOTNOTE [A] GREEN

https://truckmanualshub.com/

1-ZP31-005-A

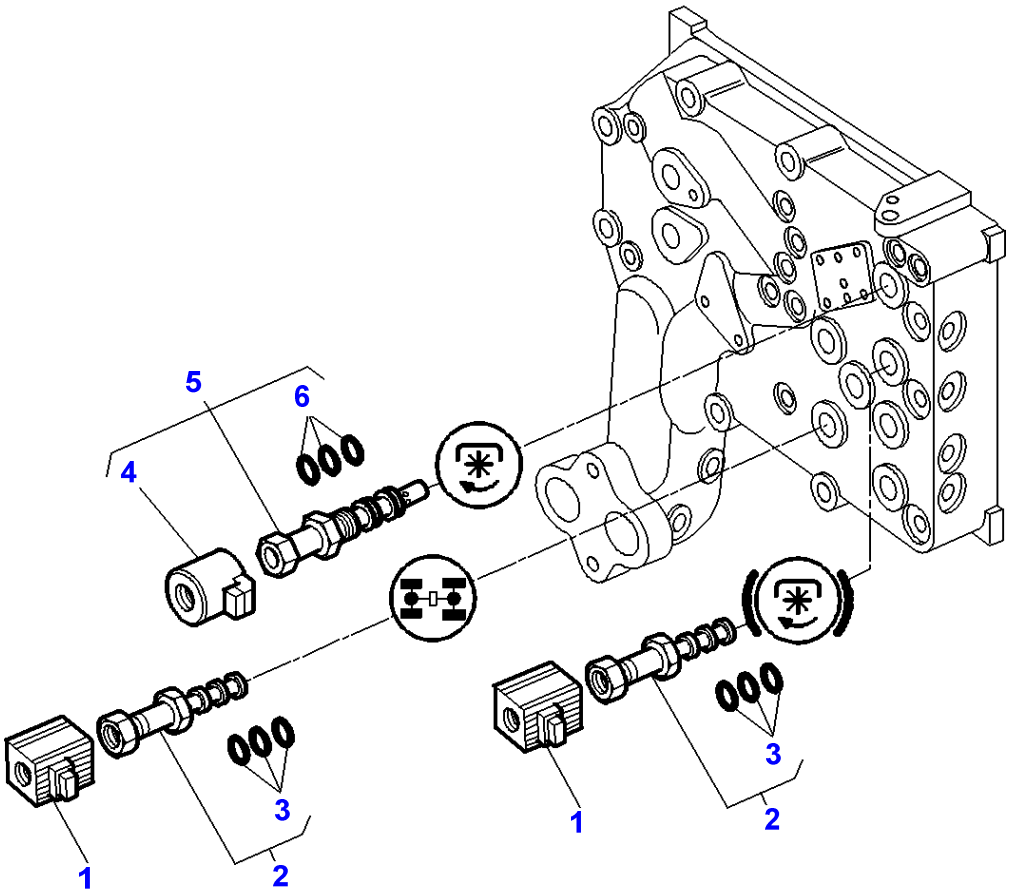

https://truckmanualshub.com/

Item	Part Number	Qty	Description	Comments
1	**3619763M1**	2	Solenoid	
2	**3619762M1**	2	Spool	
3	3900994M91	X	Kit, Joint	(2)
4	3791412M1	1	Solenoid	(5)
5	3793575M1	1	Electrovalve	
6	3902774M92	1	Kit, Joint	(5)

https://truckmanualshub.com/

1-ZP31-008-C

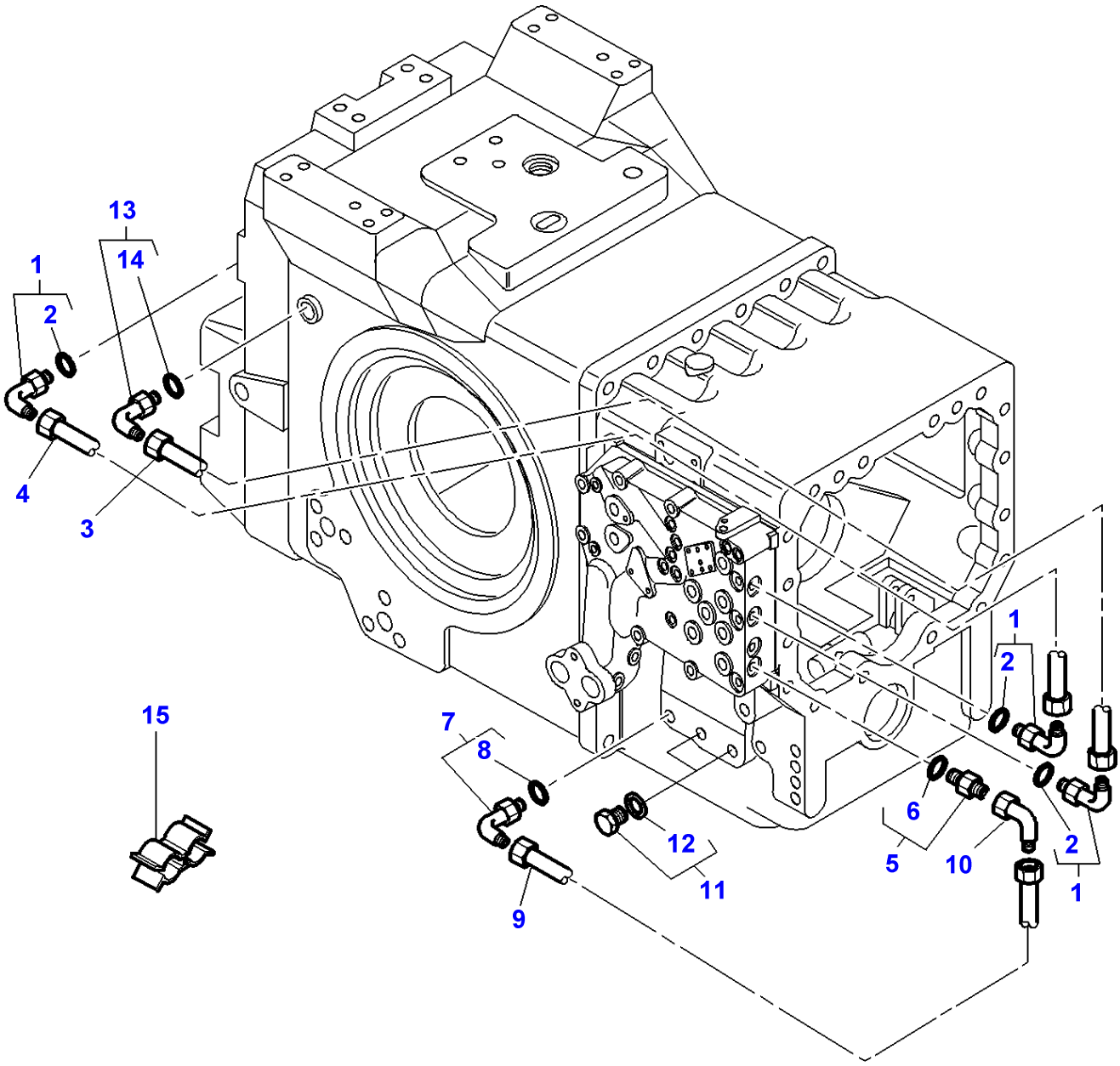

https://truckmanualshub.com/

Item	Part Number	Qty	Description	Comments
1	3019412X91	3	Elbow	
2	3019395X1	1	O Ring	(1)
3	3791375M91	1	Tube	
4	3791376M91	1	Tube	
5	3019700X91	1	Union	
6	3019394X1	1	O Ring	(11)
7	3385713M91	1	Union	
8	831497M1	1	O Ring	(7)
9	3791419M91	1	Tube	
10	365233X1	1	Elbow	
11	3019645X91	2	Plug	M22X1,5
12	3019398X1	1	O Ring	(11)
13	3019412X91	1	Elbow	Up to Serial or Engine Number J062012
	3793772M91	1	Jet	From Serial or Engine Number J062013
14	3019395X1	1	O Ring	(13)
15	3581696M1	2	Clamp	

https://truckmanualshub.com/

1-ZP31-006-A

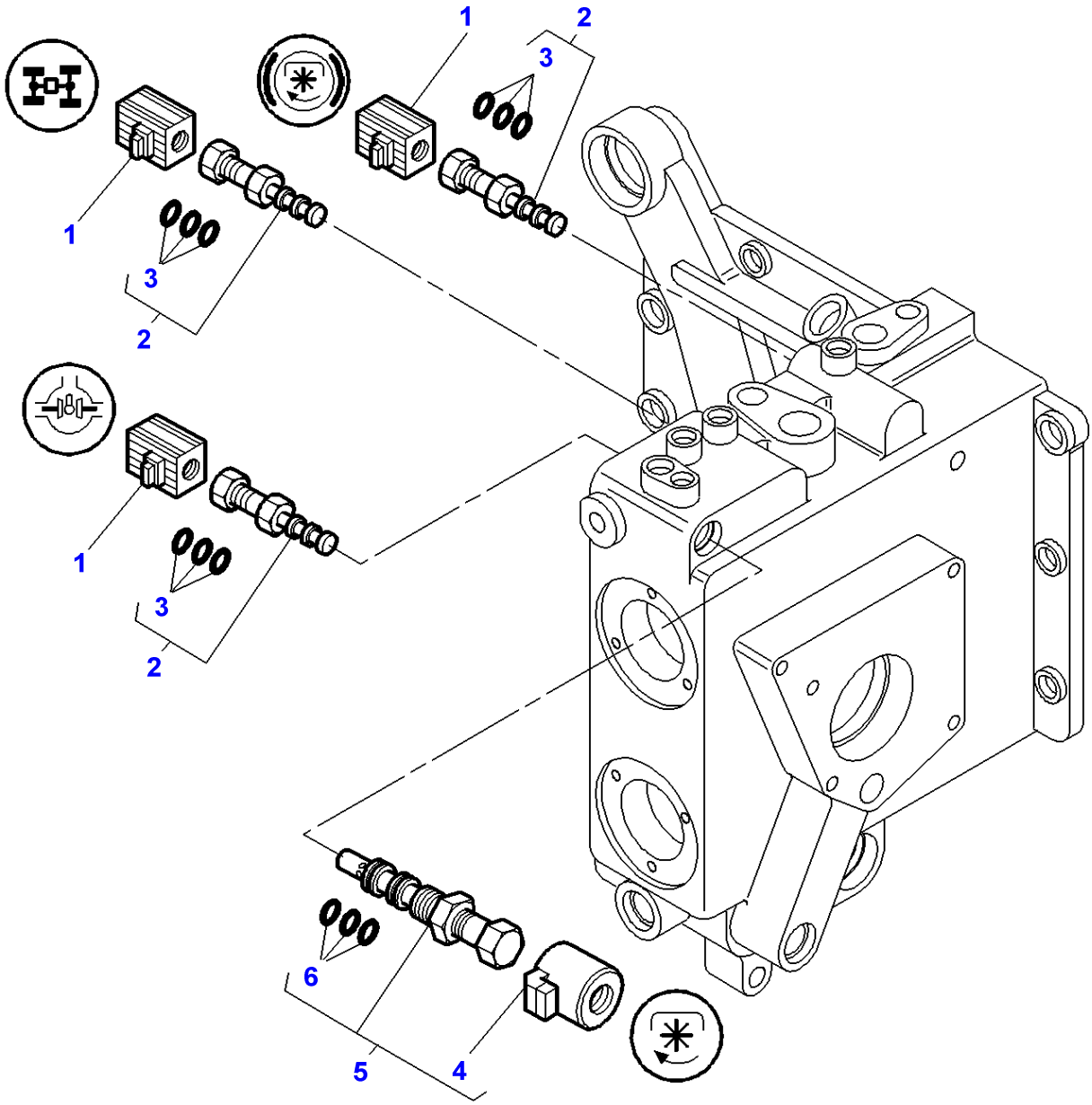

https://truckmanualshub.com/

Item	Part Number	Qty	Description	Comments
1	**3619763M1**	3	Solenoid	
2	**3619762M1**	3	Spool	
3	3900994M91	X	Kit, Joint	(2)
4	3791412M1	1	Solenoid	(5)
5	3793575M1	1	Electrovalve	
6	3902774M92	1	Kit, Joint	(5)

https://truckmanualshub.com/

1-ZP61-028-B

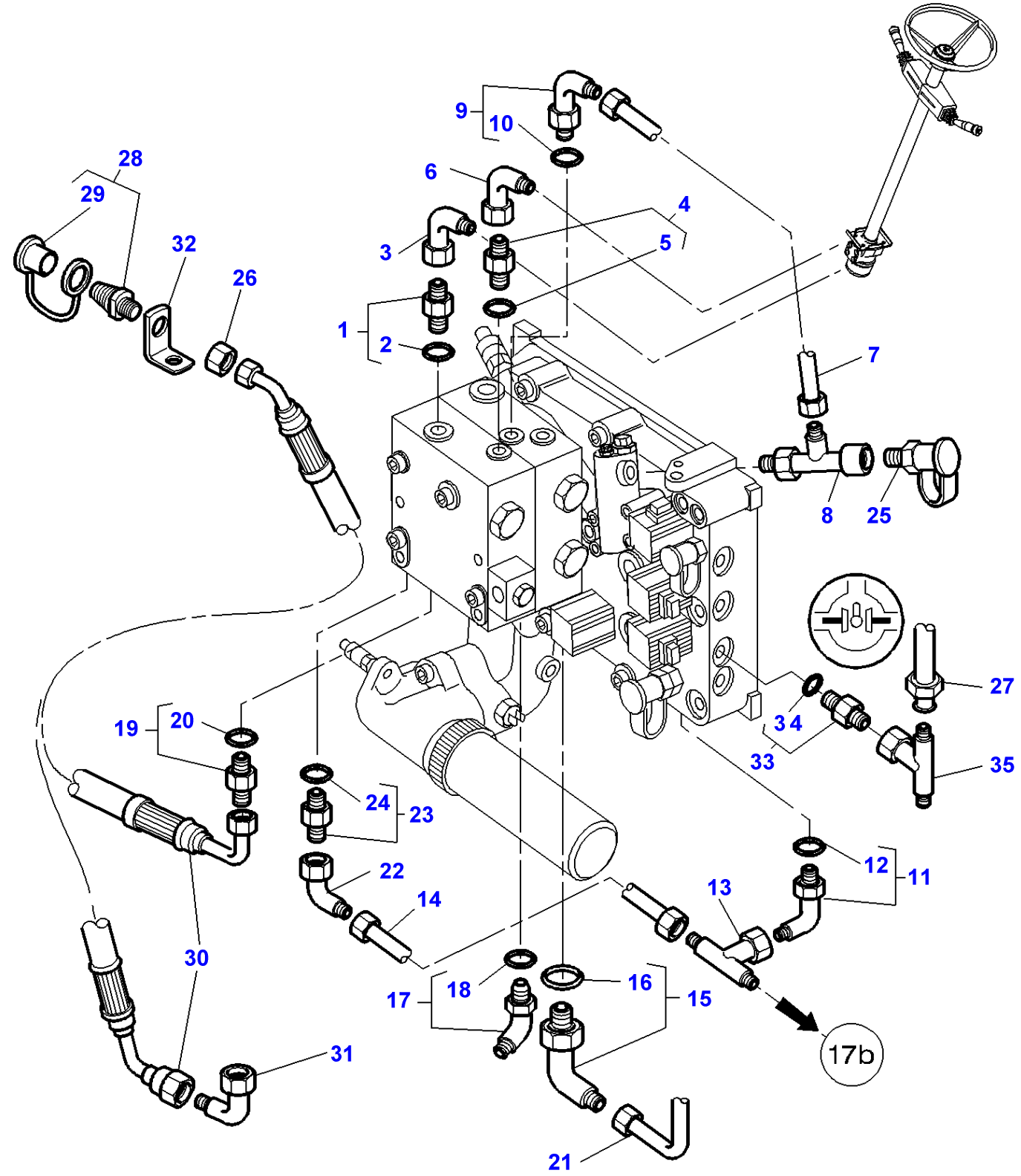

https://truckmanualshub.com/

Item	Part Number	Qty	Description	Comments
1	3019658X91	1	Union	M22
2	3019398X1	1	O Ring	(1)
3	365233X1	1	Elbow	
4	3019379X91	1	Union	M14
5	3019395X1	1	O Ring	(4)
6	364603X1	1	Elbow	9/16"
7	3790074M91	1	Tube	
8	3712689M1	1	Union	
9	3019694X91	1	Union	M14
10	3019395X1	1	O Ring	(9)
11	3019416X91	1	Elbow	M18
12	3019397X1	1	O Ring	(11)
13	367261X1	1	Union	7/8"
14	3716780M92	1	Tube	
15	3019422X91	1	Union	
16	3019399X1	1	O Ring	(15)
				M33
17	3019584X91	1	Union	M14
18	3019395X1	1	O Ring	(17)
19	3019658X91	1	Union	M22
20	3019398X1	1	O Ring	(19)
21	3716397M1	1	Tube	
22	70921325	1	Elbow Nipple	7/8"
23	3019387X91	1	Union	M22
24	3019398X1	1	O Ring	(23)
25	3712707M1	1	Intake	
26	1442336X1	1	Nut	
27	3791202M91	1	Tube	
28	**3581307M2**	1	Pressure Valve	
29	3616259M1	1	Plug	(28)
30	3791611M1	1	Hydr Hose	Length 1480MM
31	365233X1	1	Elbow	Up to Serial or Engine Number 26/08/1999
32	3792736M1	1	Support	
33	3019700X91	1	Union	3/4"-M14
34	3019394X1	1	O Ring	(33)
35	364735X1	1	Union	3/4"

1-ZP61-025-A

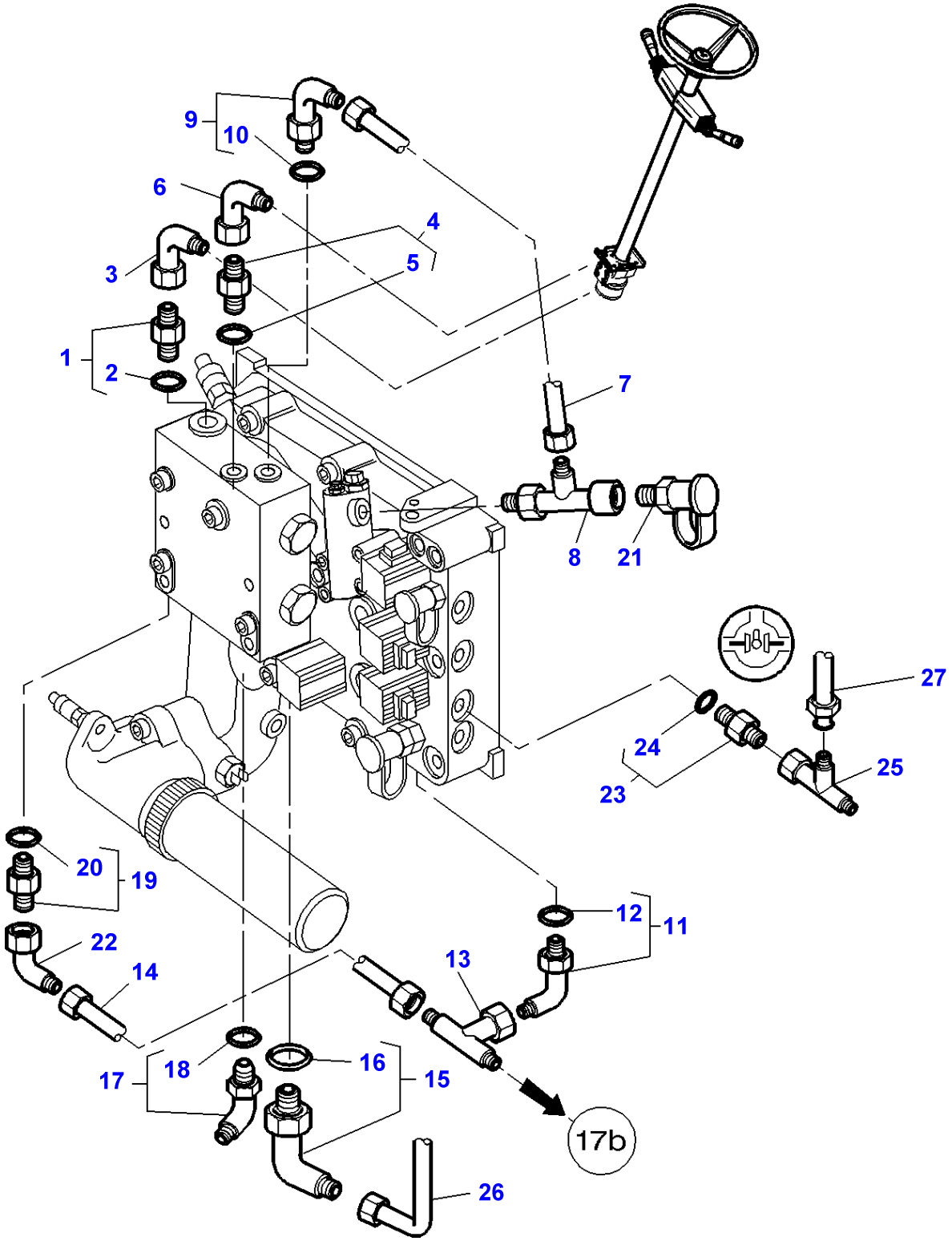

https://truckmanualshub.com/

Item	Part Number	Qty	Description	Comments
1	3019658X91	1	Union	M22
2	3019398X1	1	O Ring	(1)
3	365233X1	1	Elbow	
4	3019379X91	1	Union	M14
5	3019395X1	1	O Ring	(4)
6	364603X1	1	Elbow	9/16"
7	3790074M91	1	Tube	
8	3712689M1	1	Union	
9	3019694X91	1	Union	M14
10	3019395X1	1	O Ring	(9)
11	3019416X91	1	Elbow	M18
12	3019397X1	1	O Ring	(11)
13	367261X1	1	Union	7/8"
14	3716780M92	1	Tube	
15	3019422X91	1	Union	M33
16	3019399X1	1	O Ring	(15)
17	3019584X91	1	Union	M14
18	3019395X1	1	O Ring	(17)
19	3019387X91	1	Union	M22
20	3019398X1	1	O Ring	(19)
21	3712707M1	1	Intake	
22	70921325	1	Elbow Nipple	7/8"
23	3019700X91	1	Union	3/4"/M14
24	3019394X1	1	O Ring	(23)
25	364735X1	1	Union	3:4"
26	3716397M1	1	Tube	
27	3791202M91	1	Tube	

https://truckmanualshub.com/

1-ZP61-021-B

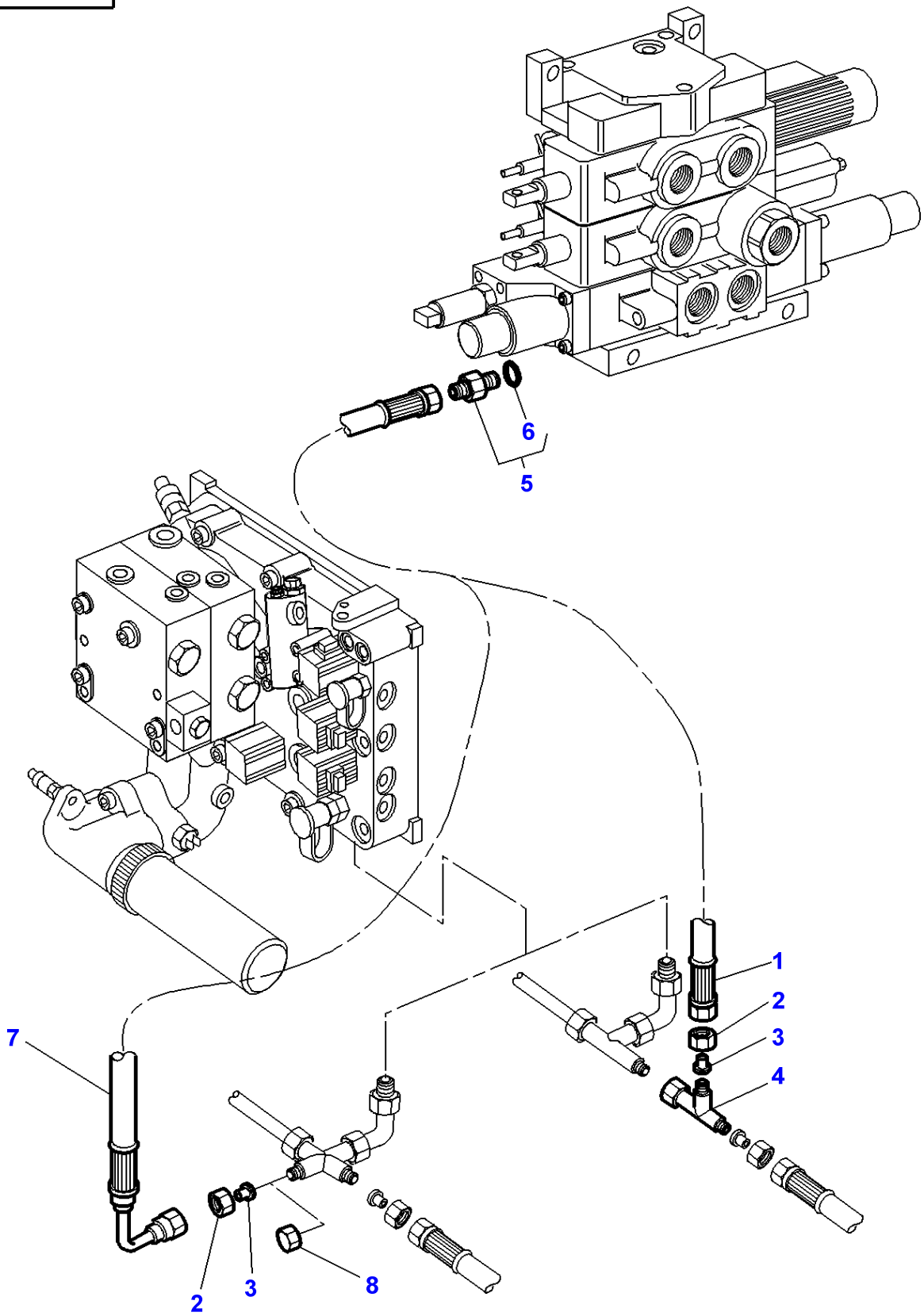

https://truckmanualshub.com/

Item	Part Number	Qty	Description	Comments
1	3716399M1	1	Hydr Hose	Up to Serial or Engine Number H309009
2	22576X	1	Union Nut	
3	356629X1	1	Reducer	
4	377218X1	1	Teepiece	Up to Serial or Engine Number H309009
5	3019660X91	1	Union	
6	3019393X1	1	O Ring	(5)
7	3793445M1	1	Hydr Hose	From Serial or Engine Number H309010
8	22833X	1	Cap	[A]

FOOTNOTE [A] WITHOUT DUAL CONTROL

1-ZP31-007-C

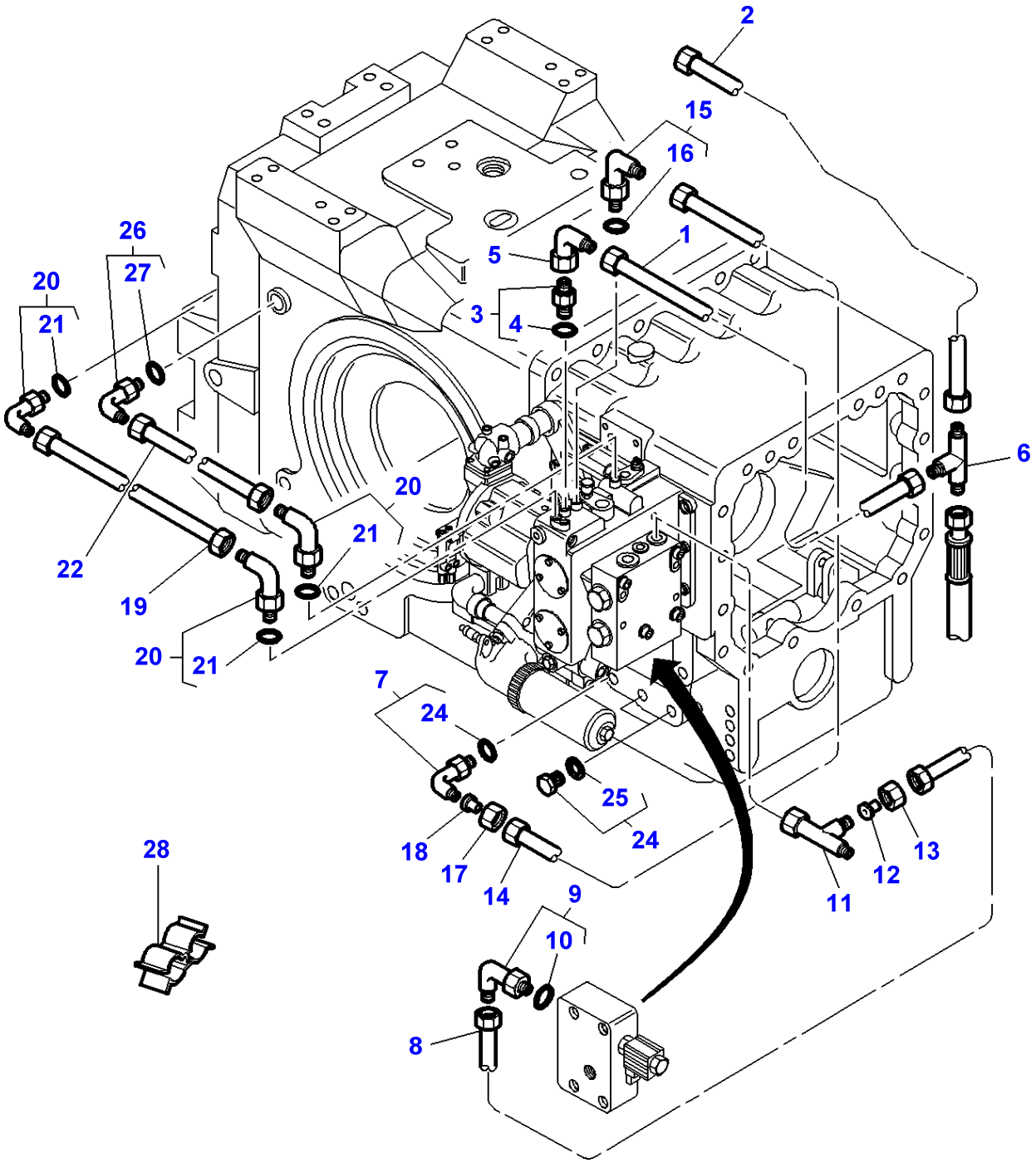
2
15
16
1
5
3
4
26
27
20
21
6
20
21
22
19
20
21
7
24
25
24
18
17
14
9
10
8
28
11
12
13

https://truckmanualshub.com/

Item	Part Number	Qty	Description	Comments
1	3791713M1	1	Tube	
2	3791714M1	1	Tube	
3	3019381X91	1	Union	Diameter M16X3/4
4	3019396X1	1	O Ring	(3)
5	365233X1	1	Elbow	Diameter 3/4-16
6	356560X1	1	Teepiece	Four Wheel Drive Diameter 3/4-16
7	831497M1	1	O Ring	(23)
8	3791718M1	1	Tube	
9	3019412X91	1	Elbow	Diameter M14
10	3019395X1	1	O Ring	(9)
11	364735X1	1	Union	Diameter 3/4-16
12	380003X1	1	Union	Diameter 1/2-20 /12X8
13	338773X1	1	Olive	
14	3791717M1	1	Tube	
15	3019412X91	1	Elbow	Diameter M14
16	3019395X1	1	O Ring	(15)
17	195960M1	1	Nut	Diameter 3/4
18	356627X1	1	Adaptor	Diameter 9/16-18 /12X10
19	3791715M1	1	Tube	
20	3019412X91	3	Elbow	
21	3019395X1	1	O Ring	(20)
22	3791712M1	1	Tube	
23	3385713M91	1	Union	
24	3019645X91	2	Plug	M22X1,5
25	3019398X1	1	O Ring	(24)
26	3019412X91	1	Elbow	Up to Serial or Engine Number J062012
	3793772M91	1	Jet	From Serial or Engine Number J062013
27	3019395X1	1	O Ring	(26)
28	3581696M1	2	Clamp	

https://truckmanualshub.com/

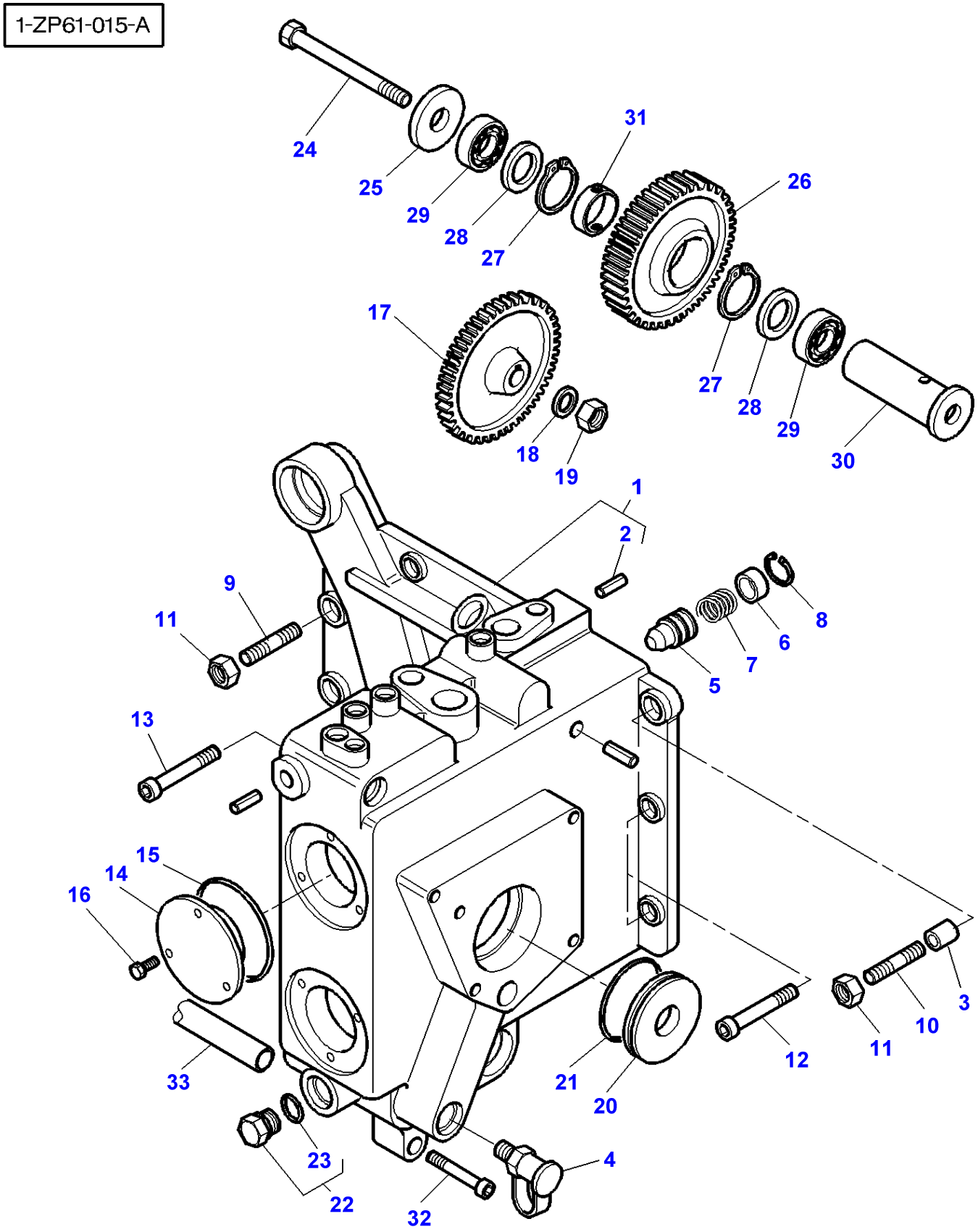

https://truckmanualshub.com/

Item	Part Number	Qty	Description	Comments
1	3716732M11	1	Cover	
2	3712249M1	3	Plug	(1)
3	3000705X1	2	Pin	Diameter 16X18
4	3384387M1	1	Pressure Intake	
5	3715616M1	1	Non Return Valve	22 BARS
6	3715618M1	1	Cup	
7	3715619M1	1	Spring	
8	1441785X1	1	Clip	
9	3019897X1	2	Stud	M12X32
10	1440029X1	2	Stud	M12X38
11	3009695X1	4	Nut	
12	1440356X1	3	Screw Metric	M12X30
13	3009301X1	1	Screw Metric	M12X80
14	3716746M1	2	Cover	
15	3019920X1	2	O Ring	
16	339560X1	6	Hex. Sock. Screw	M6X16
17	3791889M1	1	Pinion	Number of teeth/spines 77
18	11298X	1	Washer	
19	355647X1	1	Nut Unf	M12
20	3716747M1	1	Cover	
21	3580247M1	1	O Ring	
22	3019645X91	1	Plug	M22
23	3019398X1	1	O Ring	(22)
24	3010448X1	1	Screw	M12X140
25	3618971M2	1	Washer	
26	3716735M1	1	Pinion	Number of teeth/spines 80
27	1440480X1	2	Circlip	
28	3716741M1	X	Chock	Thickness 0,1MM
	3716742M1	X	Chock	Thickness 0,2MM
	3716743M1	X	Chock	Thickness 0,5MM
29	339481X1	2	Bearing Taper	
30	3716738M1	1	Clevis Pin	
31	3716739M1	1	Spacer	
32	1440352X1	2	Bolt	M10X60
33	3791844M1	1	Draglink	

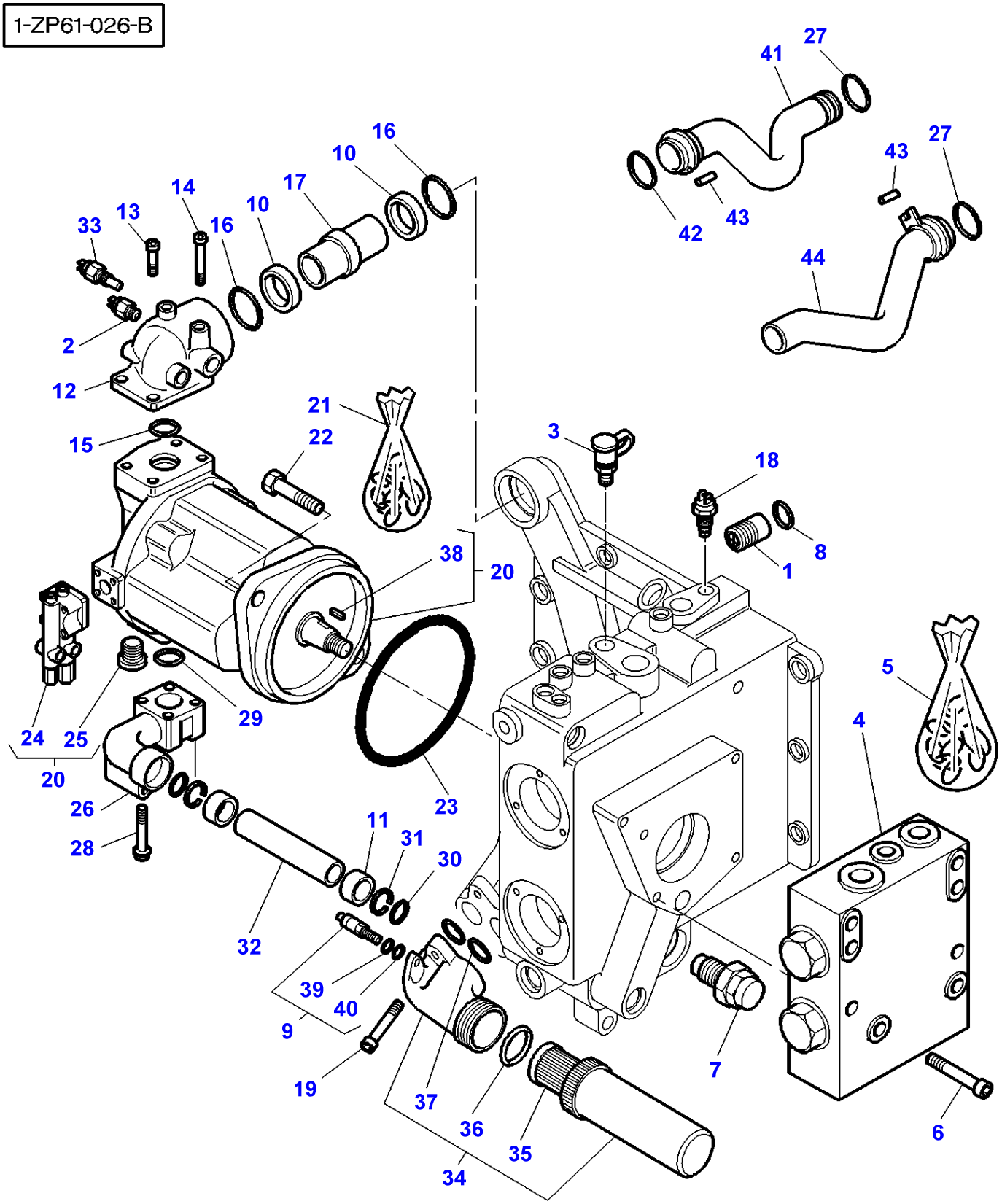
1-ZP61-026-B
27
41
16
10
17
14
13
33
16
10
43
27
42
43
44
2
12
21
22
15
3
18
8
1
38
20
5
4
24
25
29
20
26
28
23
11
31
30
32
39
40
9
19
37
36
35
34
7
6

https://truckmanualshub.com/

Item	Part Number	Qty	Description	Comments
1	3792040M91	1	Non Return Valve	5 BARS
2	**3712668M2**	1	Switch,Indirect	[A]
3	**3384387M1**	1	Pressure Intake	
4	3716355M1	1	Safety Valve	
5	3790027M11	1	Kit, Joint	
6	1441946X1	4	Screw	M8X75
7	3716357M1	1	Restrictor	
8	359300X1	1	O Ring	
9	**3618663M3**	1	Indicator	
10	3716748M1	2	Gasket	
11	3790863M1	2	Gasket	
12	3716737M1	1	Manifold	Up to Serial or Engine Number J102006
	3716737M2	1	Manifold	From Serial or Engine Number J102007
13	3009299X1	2	Screw Metric	M12X25
14	3009300X1	2	Screw	M12X70
15	835130M1	1	O Ring	
16	370087X1	2	O Ring	
17	3716744M1	1	Tube	
18	**3381387M4**	1	Low Pr.Oil Trmtr	
19	3000258X1	2	Screw Metric	M10X40
20	3790900M1	1	Pump	60CM3/RPM
21	3903018M91	1	Kit, Joint	
22	390419X1	2	Hex. Sock. Screw	M16X40
23	70923591	1	O Ring	
24	3903022M1	1	Adjuster	(20)
25	3903019M1	1	Plug	(20)
26	3791912M1	1	Manifold	
27	364777X1	2	O Ring	
28	3811722M1	4	Bolt	M10X70
29	359306X1	1	O Ring	
30	3010827X1	2	O Ring	
31	3010709X1	2	Bush	
32	3716745M1	1	Tube	
33	**3790121M1**	1	Thermocontact	Up to Serial or Engine Number J102006
34	3791109M1	1	Filter	
35	**3618662M1**	1	Filter Insert	(34)
36	842332M1	1	Gasket	(34)
37	831196M1	2	O Ring	(34)
38	3903021M1	1	Key	(20)
39	831497M1	1	O Ring	(9) Diameter 16,4X2,2
40	70923841	1	O Ring	(9) Diameter 12,4X1,8
41	3716376M92	1	Tube	
42	3793346M1	1	Seal	
43	1441722X1	2	Pin	Diameter 3X16MM
44	3716377M91	1	Tube	

FOOTNOTE [A] GREEN

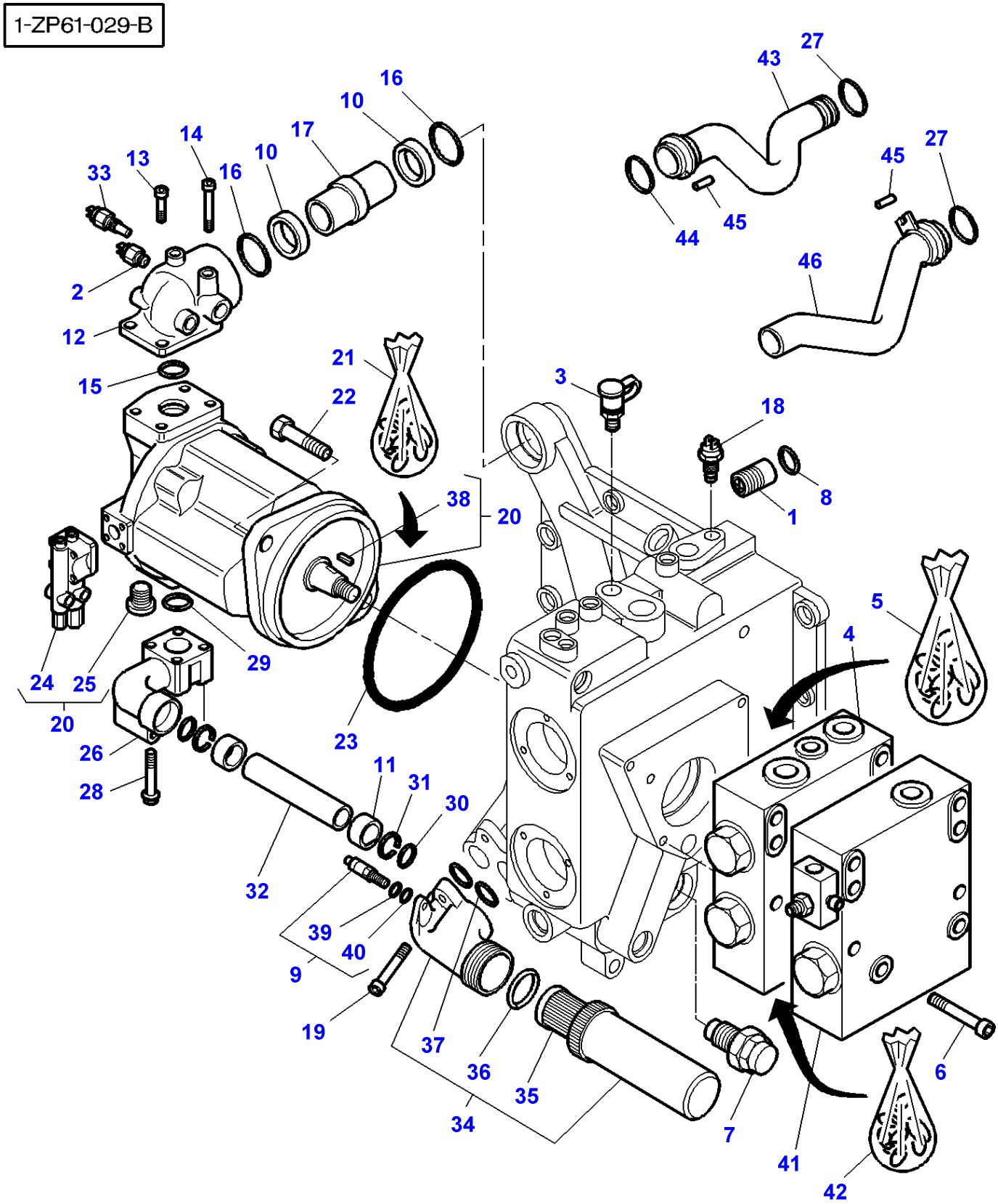
1-ZP61-029-B
16
10
17
14
13
33
16
10
2
12
15
21
22
38
20
43
27
45
27
44
45
46
3
18
8
1
5
4
24
25
20
29
23
26
28
11
31
30
32
39
40
9
19
37
36
35
34
7
41
42
6

https://truckmanualshub.com/

Item	Part Number	Qty	Description	Comments
1	3792040M91	1	Non Return Valve	5 BARS
2	**3712668M2**	1	Switch,Indirect	[A]
3	**3384387M1**	1	Pressure Intake	
4	3790025M1	1	Safety Valve	[B]
5	3790027M11	1	Kit, Joint	
6	3015017X1	4	Screw	M8X135
7	3716357M1	1	Restrictor	
8	359300X1	1	O Ring	
9	**3618663M3**	1	Indicator	
10	3716748M1	2	Gasket	
11	3790863M1	2	Gasket	
12	3716737M1	1	Manifold	Up to Serial or Engine Number J102006
	3716737M2	1	Manifold	From Serial or Engine Number J102007
13	3009299X1	2	Screw Metric	M12X25
14	3009300X1	2	Screw	M12X70
15	835130M1	1	O Ring	
16	370087X1	2	O Ring	
17	3716744M1	1	Tube	
18	**3381387M4**	1	Low Pr.Oil Trmtr	
19	3000258X1	2	Screw Metric	M10X40
20	3790900M1	1	Pump	60CM3/RPM
21	3903018M91	1	Kit, Joint	
22	390419X1	2	Hex. Sock. Screw	M16X40
23	70923591	1	O Ring	
24	3903022M1	1	Adjuster	(20)
25	3903019M1	1	Plug	(20)
26	3791912M1	1	Manifold	
27	364777X1	2	O Ring	
28	3811722M1	4	Bolt	M10X70
29	359306X1	1	O Ring	
30	3010827X1	2	O Ring	
31	3010709X1	2	Bush	
32	3716745M1	1	Tube	
33	**3790121M1**	1	Thermocontact	Up to Serial or Engine Number J102006
34	3791109M1	1	Filter	
35	**3618662M1**	1	Filter Insert	(34)
36	842332M1	1	Gasket	(34)
37	831196M1	2	O Ring	(34)
38	3903021M1	1	Key	(20)
39	831497M1	1	O Ring	(9) Diameter 16,4X2,2
40	70923841	1	O Ring	(9) Diameter 12,4X1,8
41	3790036M1	1	Safety Valve	[C]
42	3902094M91	1	Kit, Joint	
43	3716376M92	1	Tube	
44	3793346M1	1	Seal	
45	1441722X1	2	Pin	Diameter 3X16MM
46	3716377M91	1	Tube	

FOOTNOTE [A] GREEN
FOOTNOTE [B] STEERING
FOOTNOTE [C] BRAKING

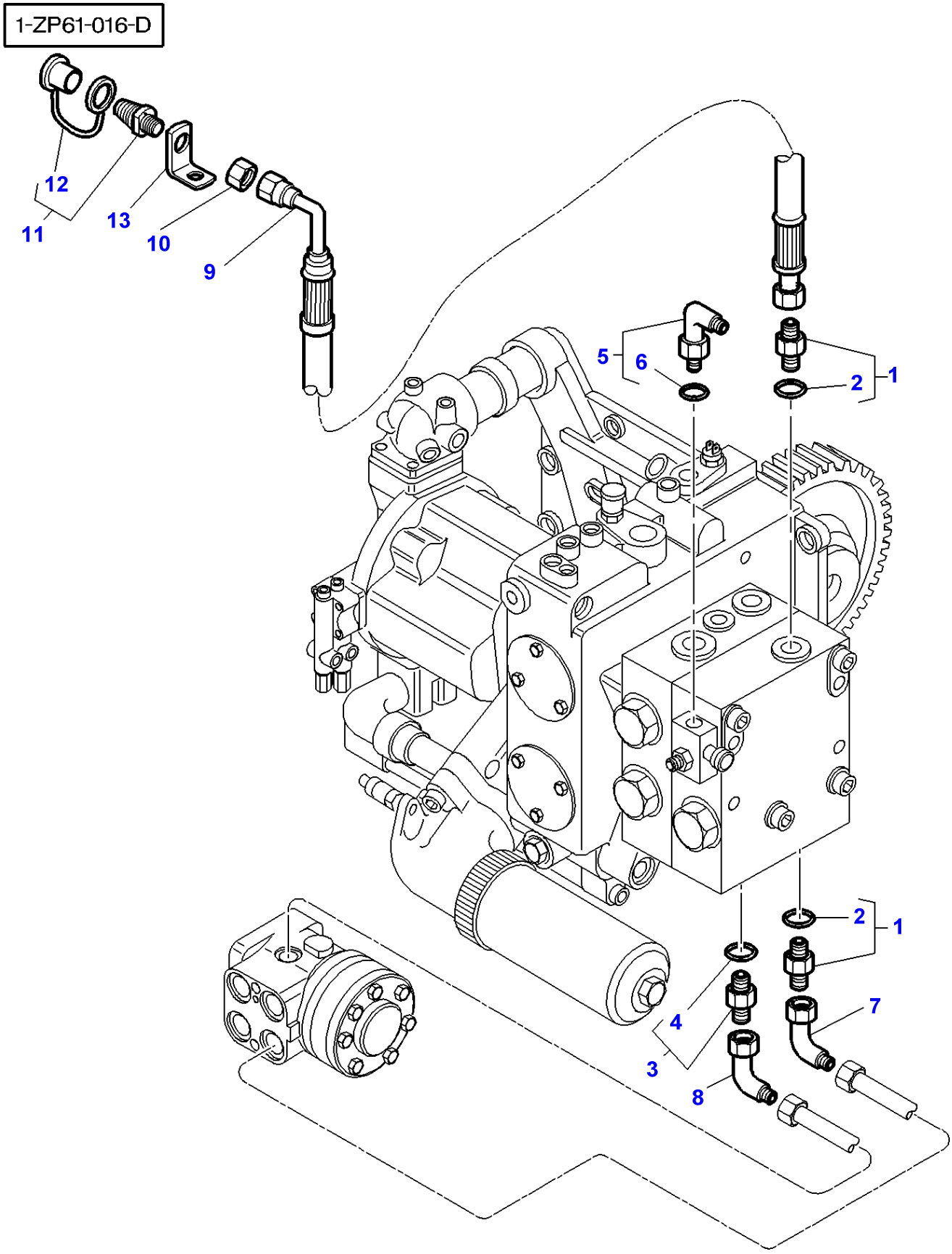
1-ZP61-016-D
12
11
13
10
9
5
6
2
1
2
1
4
3
7
8

https://truckmanualshub.com/

Item	Part Number	Qty	Description	Comments
1	3019658X91	2	Union	Diameter M22-3/4
2	3019398X1	1	O Ring	(1)
3	3019379X91	1	Union	Diameter M14X9/16
4	3019395X1	1	O Ring	(3)
5	3019694X91	1	Union	Diameter M14X1/2
6	3019395X1	1	O Ring	(5)
7	365233X1	1	Elbow	
8	364603X1	1	Elbow	
9	3792041M1	1	Hydr Hose	
10	1442336X1	1	Nut	
11	**3581307M2**	1	Pressure Valve	
12	3616259M1	1	Plug	(11)
13	3792736M1	1	Support	

1-ZP61-020-A

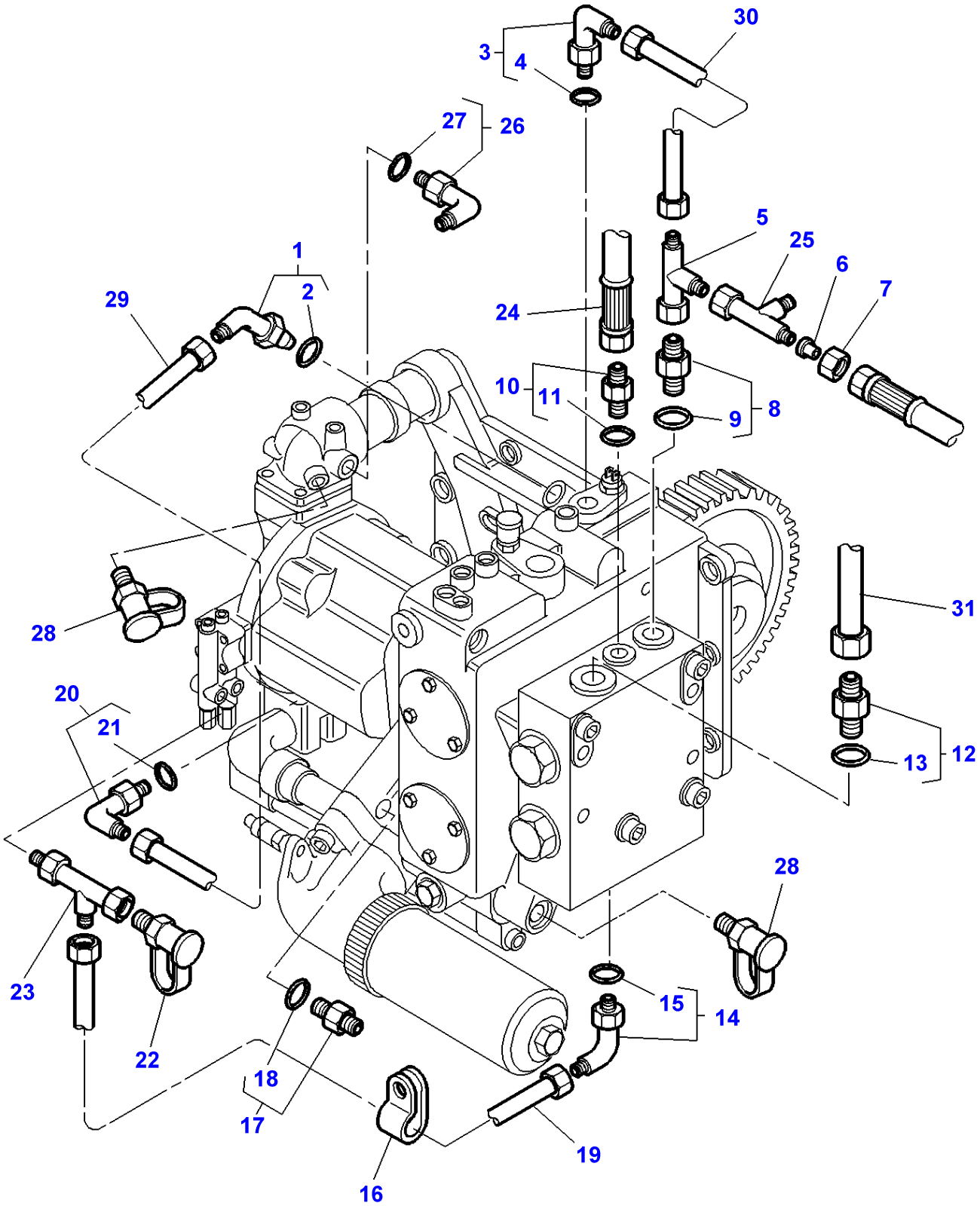
30
3
4
27
26
5
25
6
7
1
2
29
24
10
11
9
8
31
28
20
21
13
12
28
23
15
14
22
18
17
19
16

https://truckmanualshub.com/

Item	Part Number	Qty	Description	Comments
1	3019418X91	1	Elbow Nipple	Diameter M22X7/8
2	3019398X1	1	O Ring	(1)
3	3019414X91	1	Union	Diameter M16X3/4
4	3019396X1	1	O Ring	(3)
5	364735X1	1	Union	
6	356627X1	1	Adaptor	Diameter 3/4X9/16
7	195960M1	1	Nut	Diameter 3/4
8	3019658X91	1	Union	Diameter M22-3/4
9	3019398X1	1	O Ring	(8)
10	3019379X91	1	Union	Diameter M14X9/16
11	3019395X1	1	O Ring	(10)
12	3019391X91	1	Union	Diameter M33X1"5/16
13	3019399X1	1	O Ring	(12)
14	3019694X91	1	Union	Diameter M14X1/2
15	3019395X1	1	O Ring	(14)
16	3581132M1	1	Clamp	
17	3019381X91	1	Union	Diameter M16X3/4
18	3019399X1	1	O Ring	(17)
19	3791710M1	1	Tube	
20	835007M91	1	Elbow	Diameter 7/8X7/8
21	1882958M1	1	O Ring	(20)
22	3712707M1	1	Intake	
23	3712689M1	1	Union	
24	3792042M1	1	Hydr Hose	
25	364735X1	1	Union	Diameter 3/4-16
26	3019416X91	1	Elbow	Diameter M18X7/8
27	3019397X1	1	O Ring	(26)
28	**3384387M1**	2	Pressure Intake	
29	3792313M1	1	Tube	
30	3791711M1	1	Tube	
31	3791709M1	1	Tube	

https://truckmanualshub.com/

1-ZP61-022-A

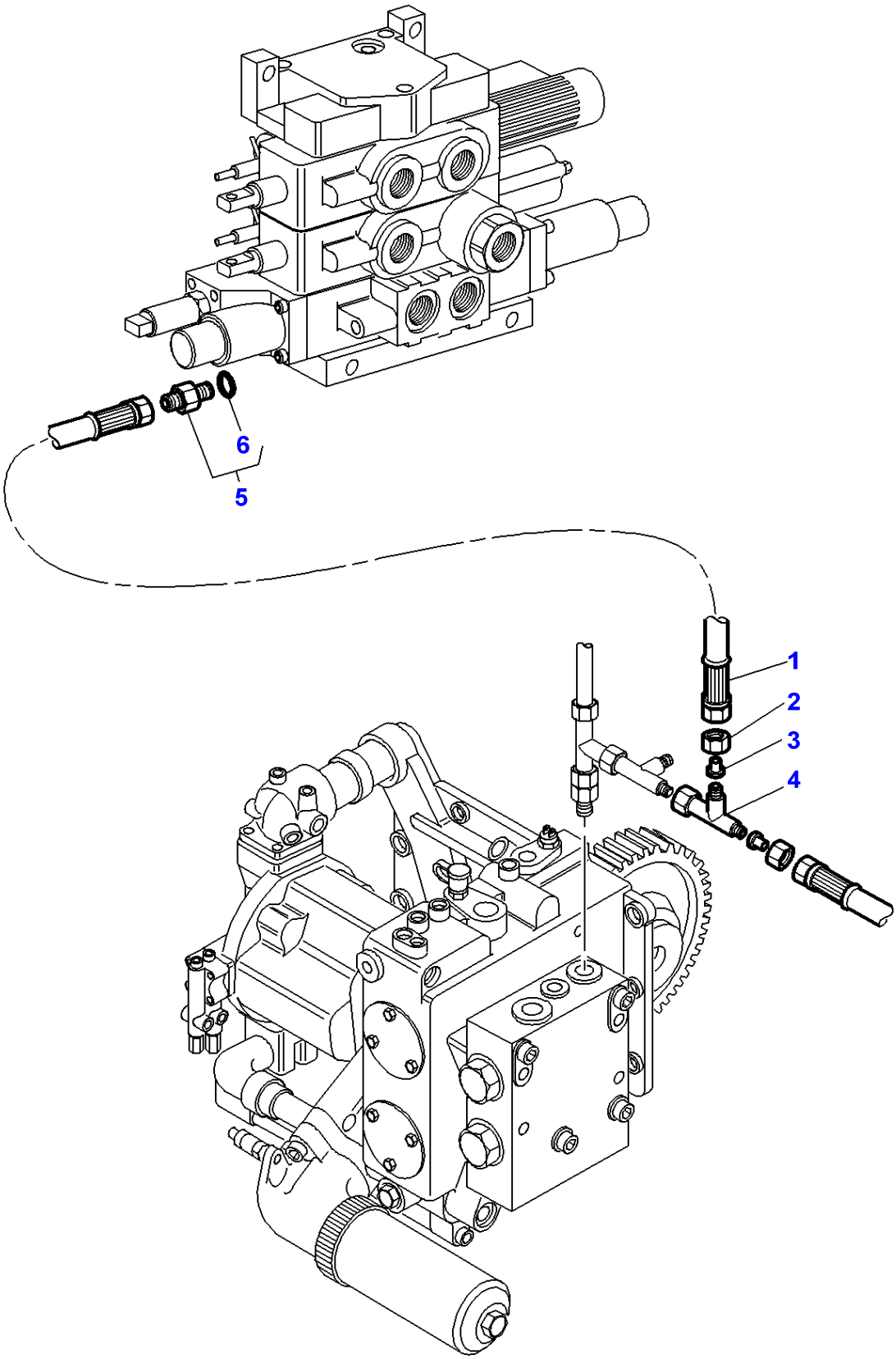

https://truckmanualshub.com/

Item	Part Number	Qty	Description	Comments
1	3716399M1	1	Hydr Hose	Length 1360MM
2	338773X1	1	Olive	
3	356627X1	1	Adaptor	
4	364735X1	1	Union	
5	3019660X91	1	Union	
6	3019393X1	1	O Ring	(5)

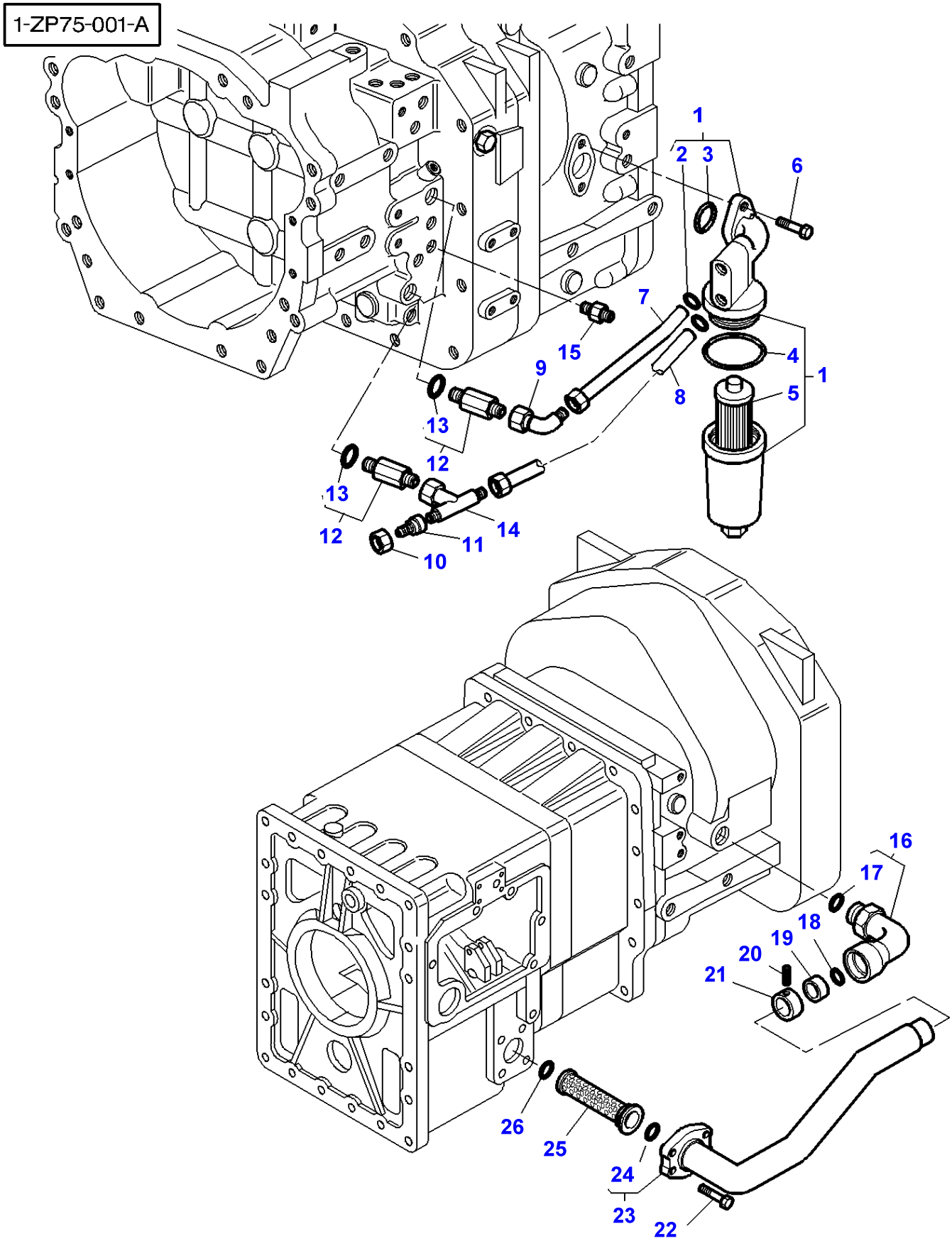
1-ZP75-001-A
1
2
3
6
7
15
4
1
9
8
5
13
12
13
12
14
11
10
16
17
18
19
20
21
26
25
24
23
22

https://truckmanualshub.com/

Item	Part Number	Qty	Description	Comments
1	3791110M2	1	Filter	
2	70924776	2	O Ring	(1)
3	377353X1	1	O Ring	(1)
4	842332M1	1	Gasket	(1)
5	**3618662M1**	1	Filter Insert	(1)
6	1440356X1	2	Screw Metric	M12x30
7	3791875M2	1	Tube	
8	3791876M2	1	Tube	
9	367277X1	1	Elbow	Diameter 1"5/16-12
10	375048X1	1	Nut	
11	356633X1	1	Adaptor	
12	3791393M91	2	Union	Diameter 1"5/16-12
13	835026M1	1	O Ring	(12)
14	373793X1	1	Teepiece	Diameter 1"5/16-12
15	3790887M1	1	Union	Diameter 1"5/16
				Diameter 1"1/16-18
16	3716901M1	1	Bridle	
17	70921887	1	O Ring	(16)
				Replace and repair. Old interchangeable with new 831504M1
18	852140M1	1	O Ring	
19	3716902M1	1	Gasket	
20	3009351X1	1	Screw	M6X8
21	3716903M1	1	Bush	
22	1440356X1	4	Screw Metric	M12X30
23	3716908M92	1	Tube	
24	3716358M1	1	Seal	(23)
25	**3716334M1**	1	Strainer	
26	1006234M1	1	O Ring	

1-ZP76-003-B

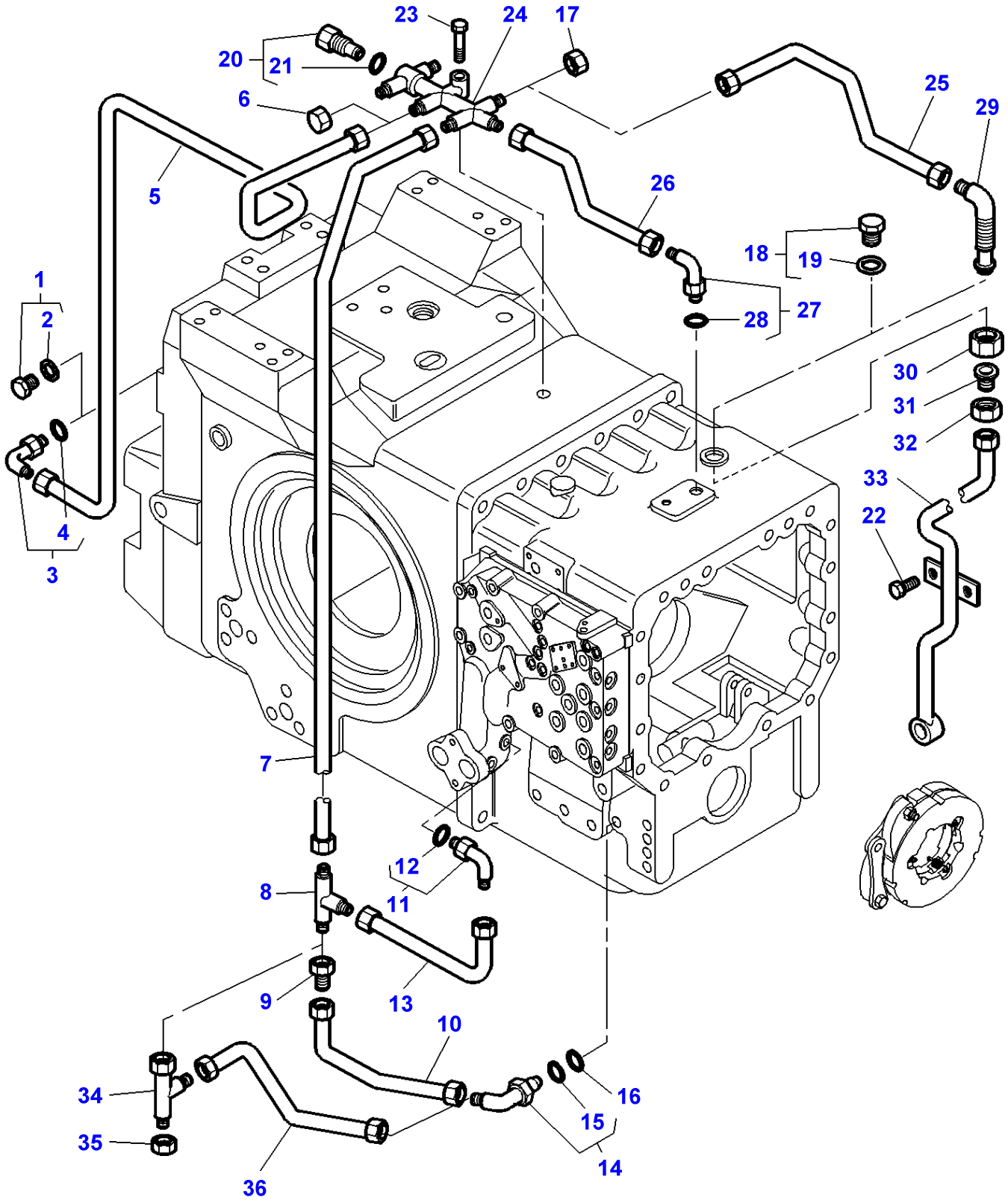
23
24
17
20
21
6
25
29
5
26
18
19
1
2
28
27
30
31
32
33
22
4
3
7
12
8
11
9
13
10
34
16
15
35
14
36

https://truckmanualshub.com/

Item	Part Number	Qty	Description	Comments
1	3019639X91	1	Plug	[C]
2	3019395X1	1	O Ring	[C] (1)
3	3716879M91	1	Union	
4	3019395X1	1	O Ring	(3)
5	3790898M91	1	Tube	
6	356578X1	1	Plug	[C]
7	3790896M91	1	Tube	
8	356561X1	1	Union	
9	377651X1	1	Reducer	Up to Serial or Engine Number J049024
10	3790894M91	1	Tube	Up to Serial or Engine Number J049024
11	3019416X91	1	Elbow	
12	3019397X1	1	O Ring	(11)
13	3790892M91	1	Tube	
14	3716884M91	1	Union	Up to Serial or Engine Number J049024
	3385713M91	1	Union	From Serial or Engine Number J049025
15	831497M1	1	O Ring	(14)
16	3019395X1	1	O Ring	
17	70923737	1	Plug	[E]
18	358724X91	1	Plug	[E]
19	831497M1	1	O Ring	(18)
20	358724X91	1	Plug	
21	831497M1	1	O Ring	(20)
22	391989X1	2	Screw Metric	M8x20
23	339010X1	1	Bolt Metric	M8x40
24	3790871M2	1	Bar	
25	3790924M91	1	Tube	
26	3790918M91	1	Tube	
27	3716772M91	1	Union	
28	831497M1	1	O Ring	(27)
29	3791258M91	1	Union	
30	353436X1	1	Nut Unf	Diameter 3/4"-16
31	380003X1	1	Union	
32	195960M1	1	Nut	Diameter 3/4"
33	3790926M93	1	Tube	
34	3793518M91	1	Union	From Serial or Engine Number J049025
35	70923737	1	Plug	From Serial or Engine Number J049025
36	3793517M1	1	Tube	From Serial or Engine Number J049025

FOOTNOTE [C] WITHOUT INDEPENDANT P.T.O.
FOOTNOTE [E] WITHOUT CREEPER GEAR

https://truckmanualshub.com/

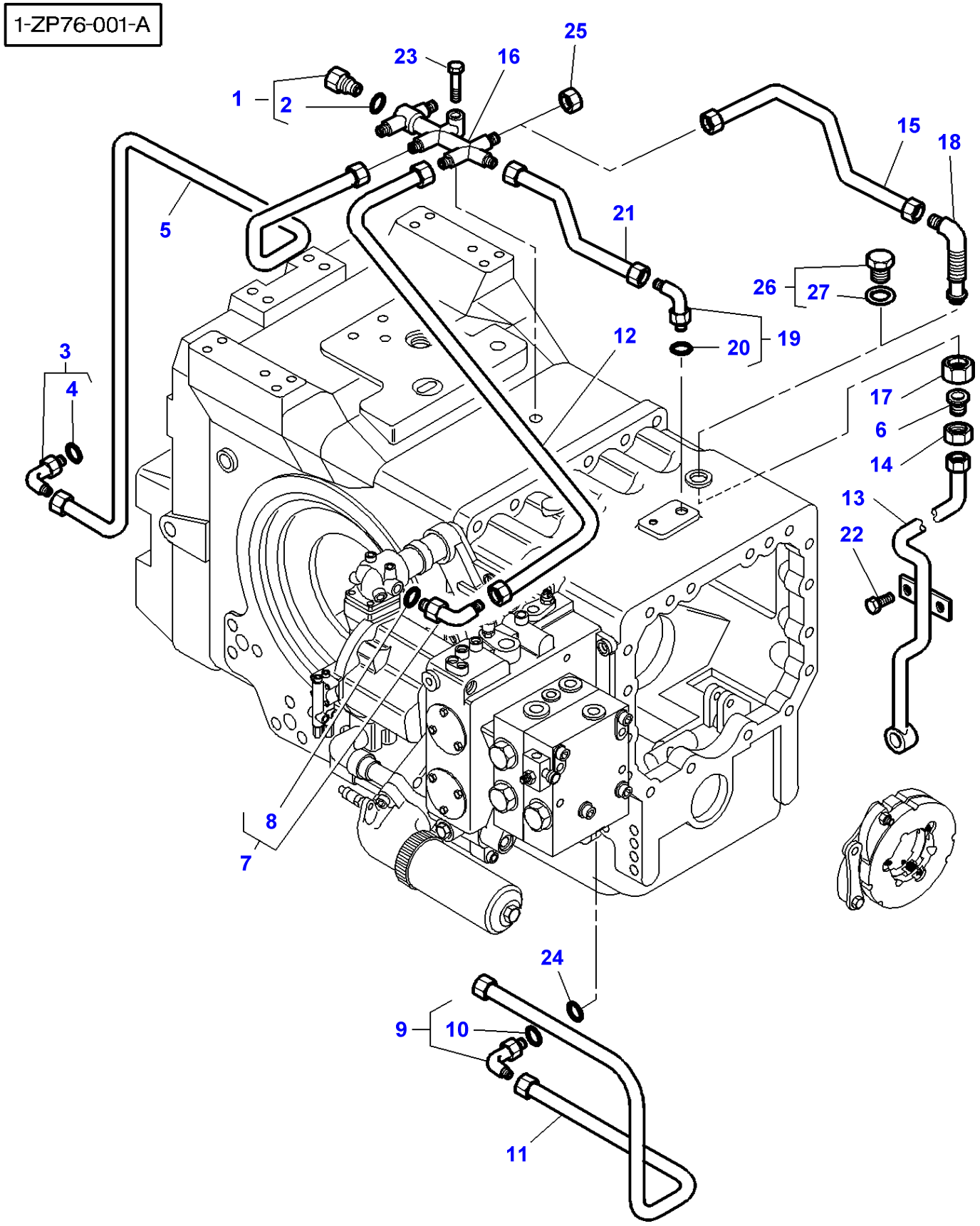

https://truckmanualshub.com/

Item	Part Number	Qty	Description	Comments
1	358724X91	1	Plug	
2	831497M1	1	O Ring	(1)
3	3716879M91	1	Union	
4	3019395X1	1	O Ring	(3)
5	3790898M91	1	Tube	
6	380003X1	1	Union	[B]
7	3019416X91	1	Elbow	Diameter M18
8	3019397X1	1	O Ring	(7)
9	3716884M91	1	Union	
10	831497M1	1	O Ring	(9)
11	3792019M1	1	Tube	
12	3791716M1	1	Tube	
13	3790926M93	1	Tube	
14	195960M1	1	Nut	[B]
15	3790924M91	1	Tube	[B]
16	3790871M2	1	Bar	
17	353436X1	1	Nut Unf	[B]
18	3791258M91	1	Union	
19	3791953M91	1	Union	Up to Serial or Engine Number H174011
	3716772M91	1	Union	From Serial or Engine Number H174012
20	831497M1	1	O Ring	(19)
21	3790918M91	1	Tube	
22	391989X1	2	Screw Metric	[B] M8X20
23	339010X1	1	Bolt Metric	M8X40
24	3019395X1	1	O Ring	
25	70923737	1	Plug	[C]
26	358724X91	1	Plug	[C]
27	831497M1	1	O Ring	[C] (26)

FOOTNOTE [B] WITH CREEPER GEAR
FOOTNOTE [C] WITHOUT CREEPER GEAR

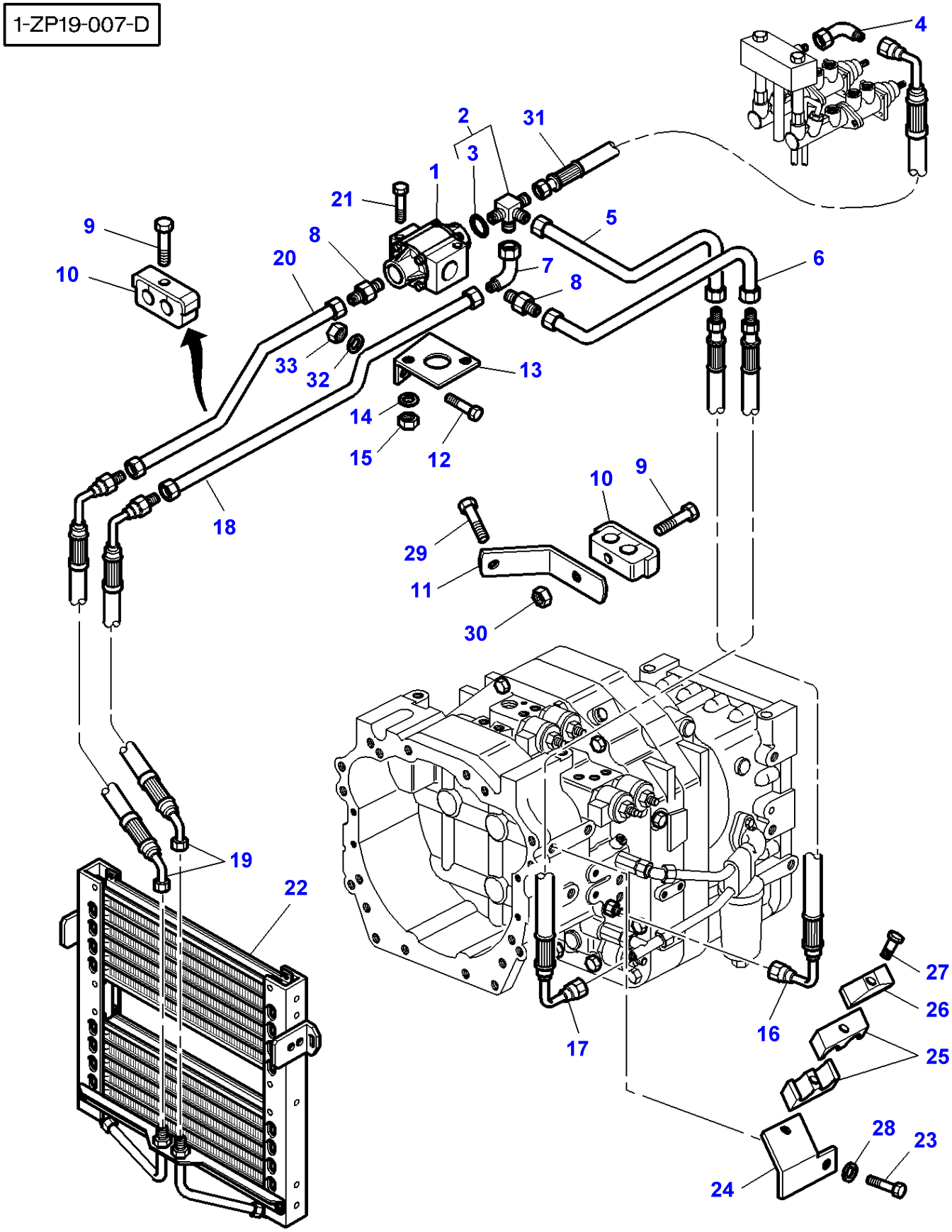
1-ZP19-007-D
4
2
31
3
1
21
5
9
8
20
7
6
10
8
33
32
13
14
15
12
10
9
18
29
11
30
19
22
27
26
17
16
25
28
23
24

https://truckmanualshub.com/

Item	Part Number	Qty	Description	Comments
1	3790883M1	1	Pressure Valve	See Page - Reference Number 070-0140/1
2	5016401M91	1	Pressure Valve	
3	835026M1	1	O Ring	(2)
4	3791382M91	1	Union	
5	3781949M2	1	Tube	
6	3781948M2	1	Tube	
7	366462X1	1	Elbow	
8	70935768	2	Connector	
9	339011X1	2	Bolt Metric	M8X45
10	3781936M1	2	Bridle	
11	3782825M2	1	Strap	
12	339123X1	2	Hex. Sock. Screw	M8X20
13	3781952M1	1	Support	
14	390734X1	2	Washer	
15	3009693X1	2	Nut Metric	
16	3781919M1	1	Hydr Hose	Length 950MM
17	3781920M1	1	Hydr Hose	Length 1050MM
18	3781913M1	1	Tube	
19	3781918M2	2	Hydr Hose	
20	3781912M1	1	Tube	
21	3009502X1	2	Bolt Metric	M10X80
22	3780275M2	1	Oil Cooler	See Page - Reference Number 070-0135/1
23	339761X1	1	Hex. Sock. Screw	M8X25
24	3782861M91	1	Support	
25	3780682M1	2	Bridle	
26	3780683M1	1	Plate	
27	339011X1	1	Bolt Metric	M8X45
28	390972X1	1	Washer Metric	
29	339560X1	1	Hex. Sock. Screw	M6X16
30	339169X1	1	Nut	
31	3783358M1	1	Hydr Hose	Length 750MM
32	390972X1	2	Washer Metric	
33	339169X1	2	Nut	

https://truckmanualshub.com/

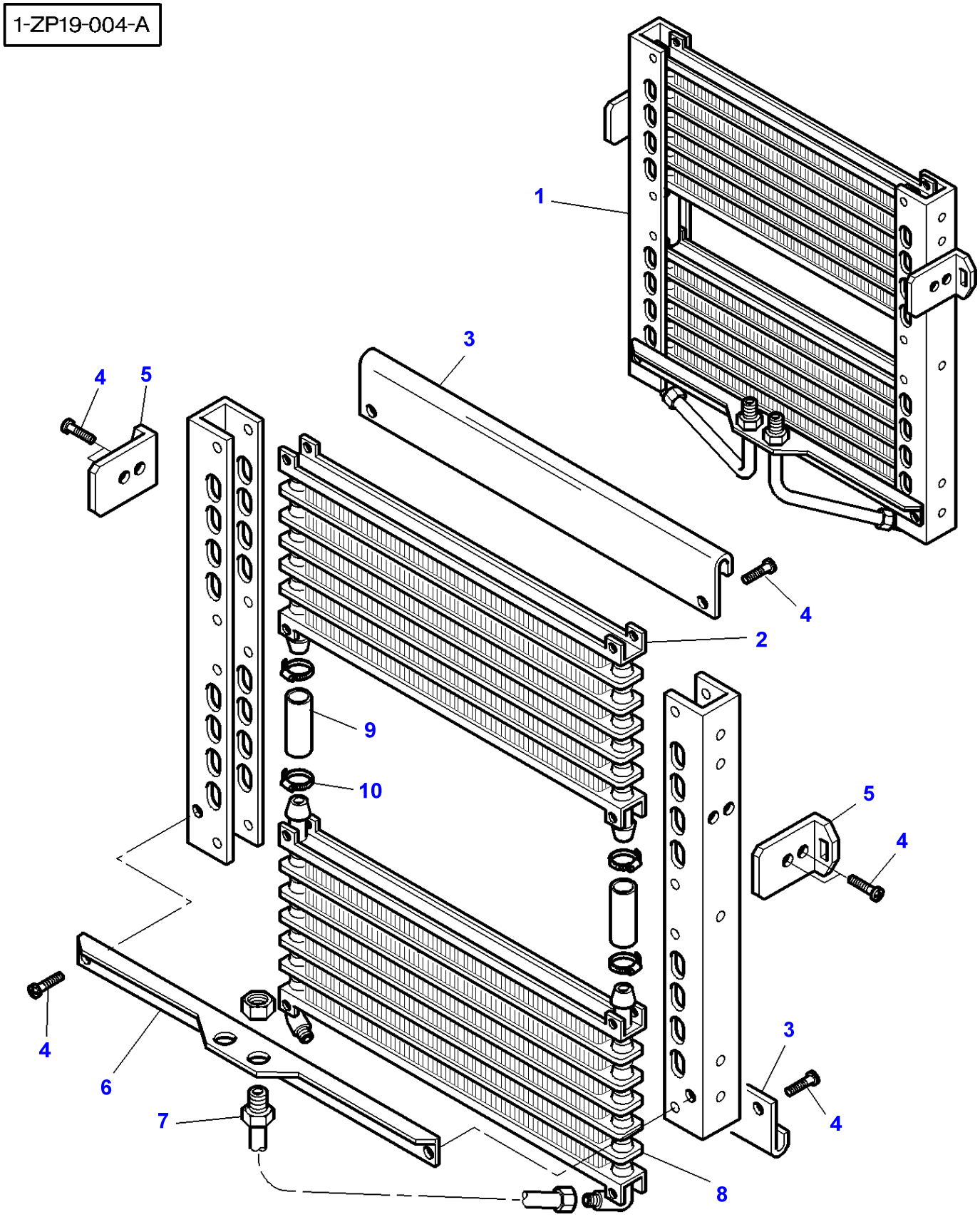

https://truckmanualshub.com/

Item	Part Number	Qty	Description	Comments
1	3780275M2	1	Oil Cooler	
2	3903406M1	1	Oil Cooler	(1)
3	3903404M1	2	Guide	(1)
4	3007920X1	10	Screw Metric	(1) M6X12
5	3903403M1	2	Support	(1)
6	3903402M1	1	Support	(1)
7	3903401M91	2	Tube	(1)
8	3903407M1	1	Oil Cooler	(1)
9	3903405M1	2	Hose	(1)
10	3019566X1	4	Clamp	(1)

1-ZP01-001-A

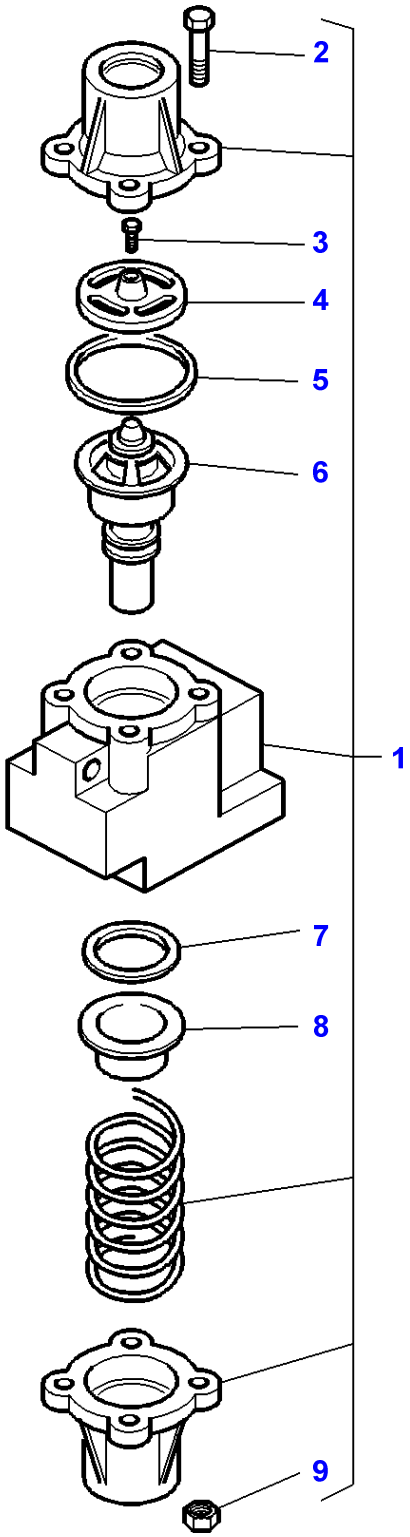

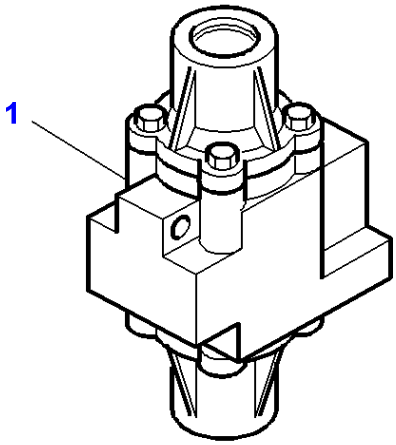

https://truckmanualshub.com/

Item	Part Number	Qty	Description	Comments
1	3790883M1	1	Pressure Valve	
2	70934293	4	Bolt	(1)
3	72514302	1	Screw	(1)
4	72514301	1	Washer	(1)
5	72511856	1	Seal	(1)
6	72514303	1	Pressure Valve	(1)
7	72511856	1	Seal	(1)
8	72511858	1	Seal	(1)
9	70923358	4	Nut	(1)

https://truckmanualshub.com/

1-ZG16-003-C

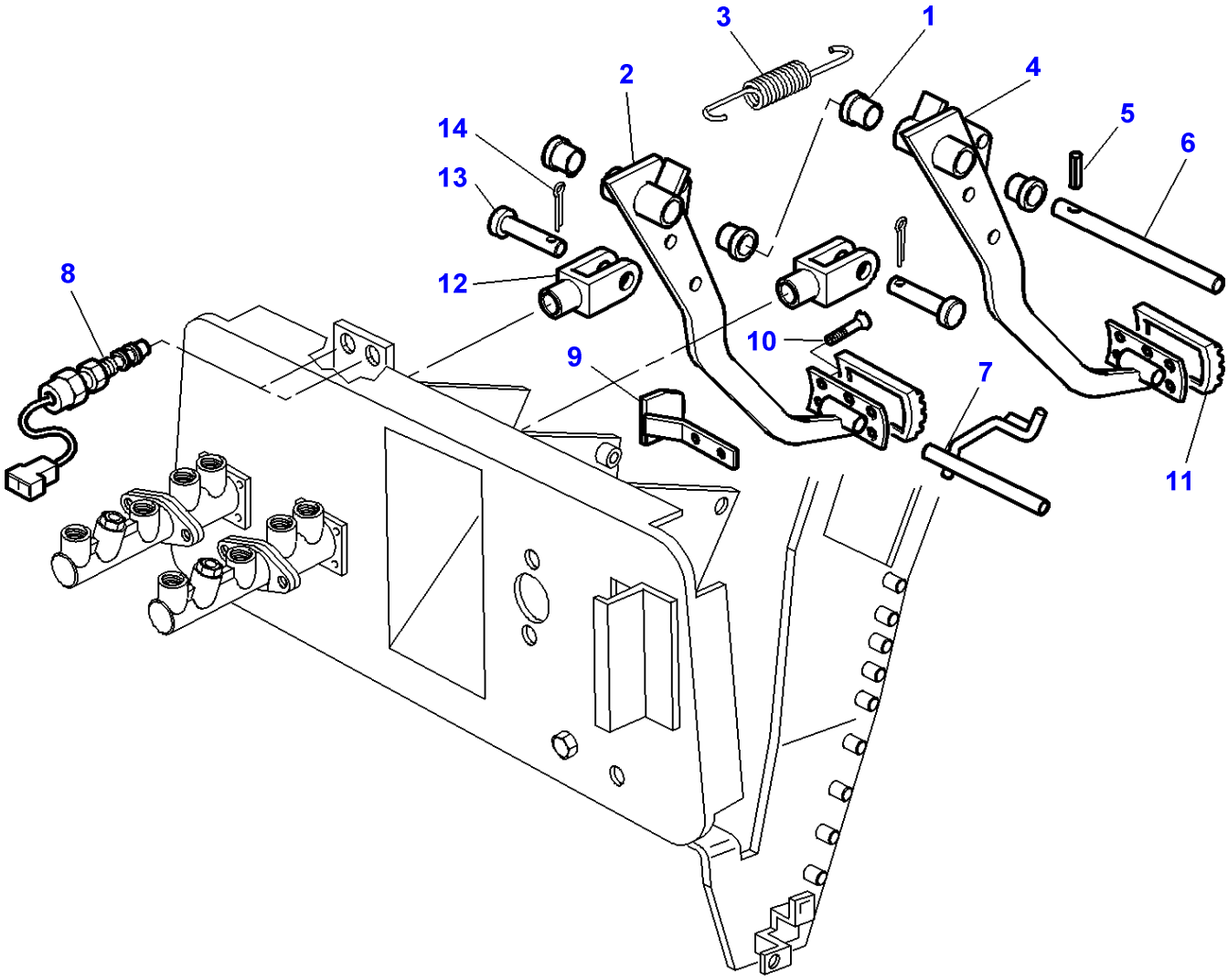

https://truckmanualshub.com/

Item	Part Number	Qty	Description	Comments
1	3385604M1	4	Bearing	
2	3782118M1	1	Brake Pad	Right Hand
3	3781689M1	2	Spring	
4	3782117M1	1	Brake Pad	Left Hand
5	391290X1	1	Pin	5X30
6	3713576M1	1	Clevis Pin	
7	3583930M3	1	Latch	
8	3780395M2	2	Switch,Indirect	
9	3714488M3	1	Stop	
10	392404X1	2	Screw	
11	1626321M2	2	Skate	
12	3385612M3	2	Clevis	[A] Length 51MM
	3384656M1	2	Clevis	Length 61MM
13	3019213X1	2	Clevis Pin	
14	357146X1	2	Pin	2,8X25MM

FOOTNOTE [A] WITH ASSISTED BRAKE

https://truckmanualshub.com/

1-ZG18-006-A

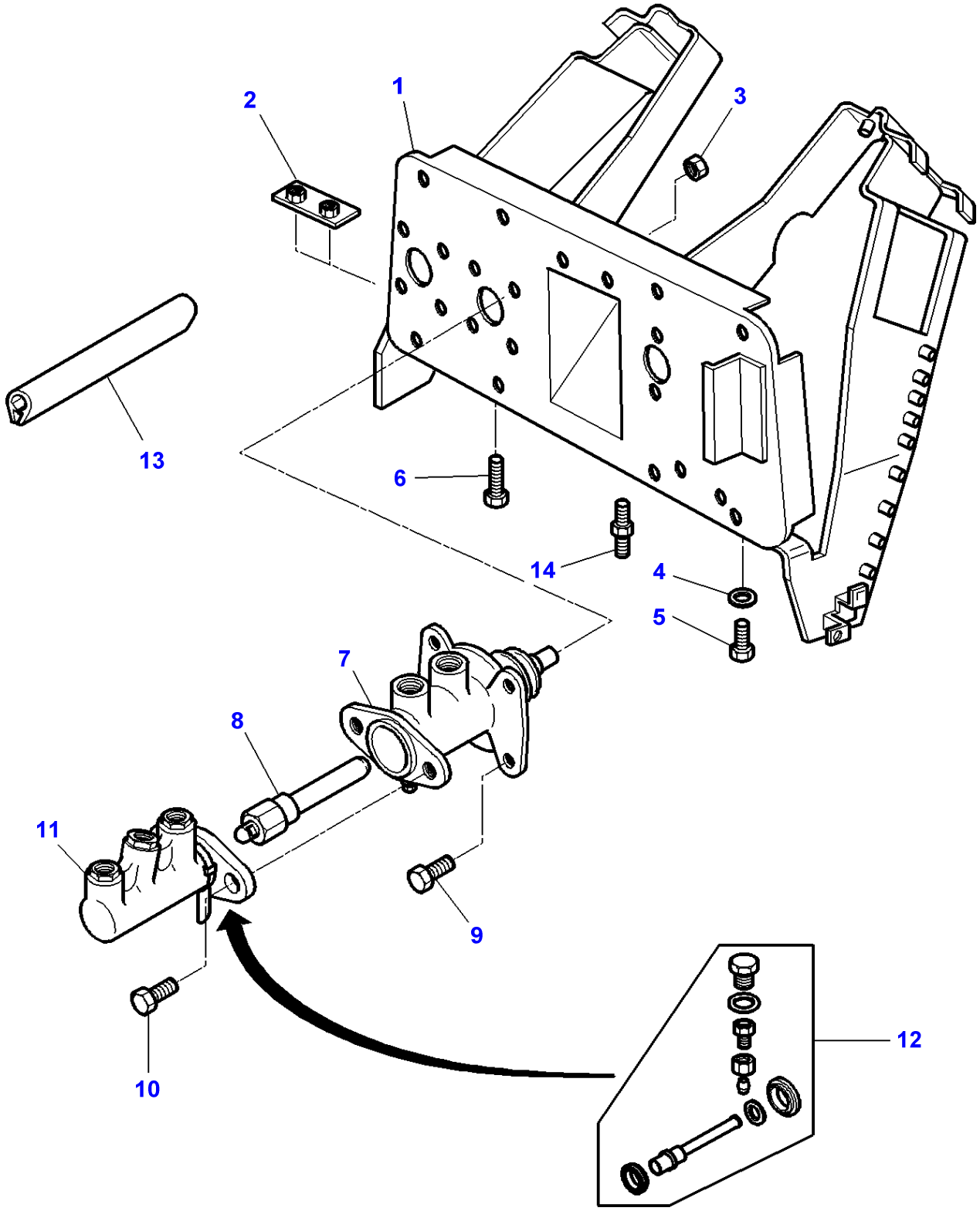

https://truckmanualshub.com/

Item	Part Number	Qty	Description	Comments
1	3713562M96	1	Support	
2	3714445M1	1	Stop	
3	339169X1	4	Nut	
4	390972X1	8	Washer Metric	
5	339123X1	8	Hex. Sock. Screw	M8X20
6	339666X1	2	Hex. Sock. Screw	M6X20
7	3617596M1	2	Brake Cylinder	
8	3617594M93	2	Stem	
9	339761X1	8	Hex. Sock. Screw	M8X25
10	339761X1	4	Hex. Sock. Screw	M8X25
11	3384685M3	2	Main Cylinder	
12	1810832M91	1	Kit, Repair	(11)
13	3580695M1	1	Gasket	Length 1600MM
14	3783231M2	2	Stud	M8X40,5

1-ZG18-007-A

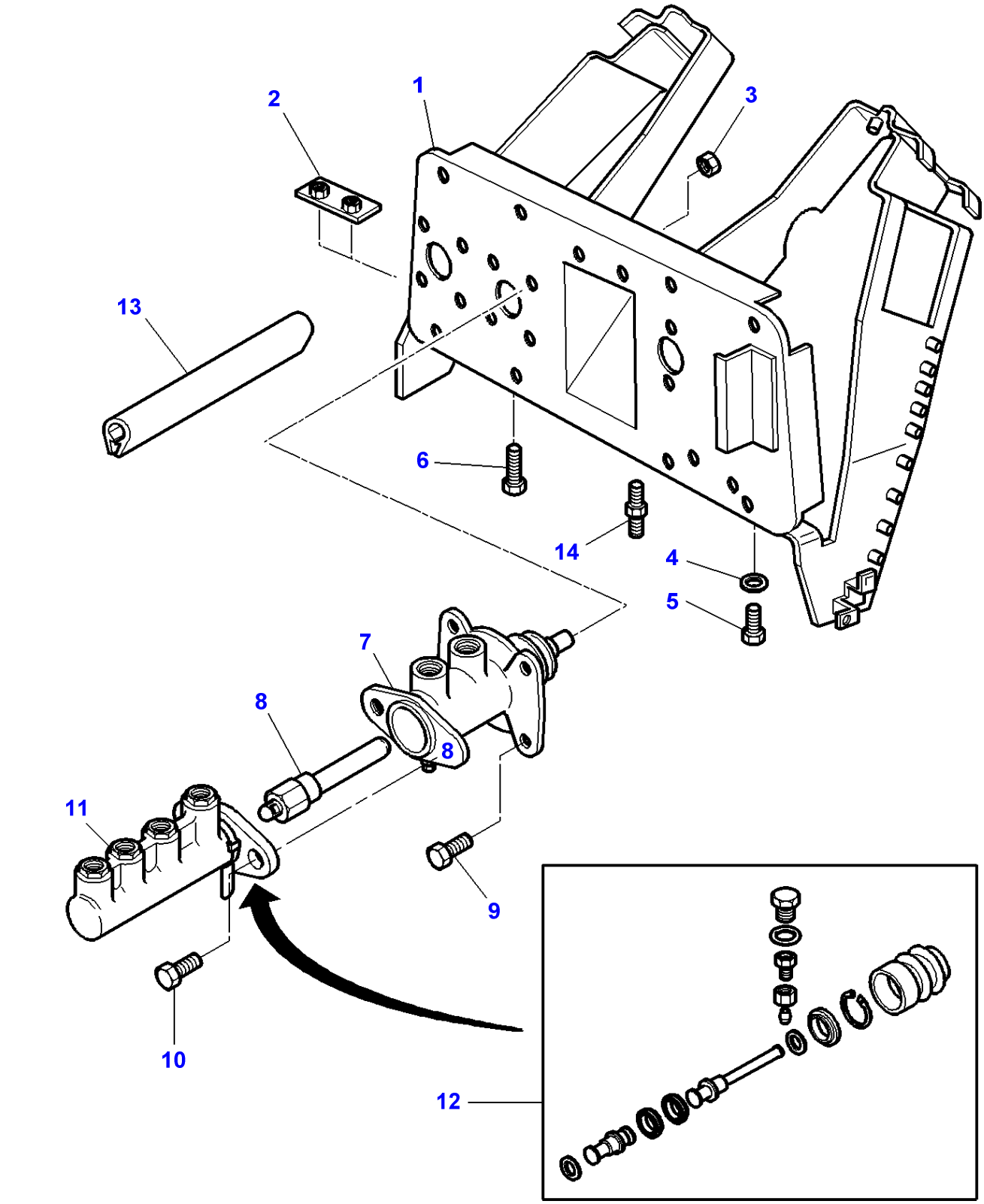

https://truckmanualshub.com/

Item	Part Number	Qty	Description	Comments
1	3713562M96	1	Support	
2	3714445M1	1	Stop	
3	339169X1	4	Nut	
4	390972X1	8	Washer Metric	
5	339123X1	8	Hex. Sock. Screw	M8X20
6	339666X1	2	Hex. Sock. Screw	M6X20
7	3617596M1	2	Brake Cylinder	
8	3617594M93	2	Stem	
9	339761X1	8	Hex. Sock. Screw	M8X25
10	339761X1	4	Hex. Sock. Screw	M8X25
11	3383079M5	2	Main Cylinder	
12	1810833M91	1	Kit, Repair	(12)
13	3580695M1	1	Gasket	Length 1600 MM
14	3783231M2	2	Stud	M8X40,5

https://truckmanualshub.com/

1-ZG32-001-A

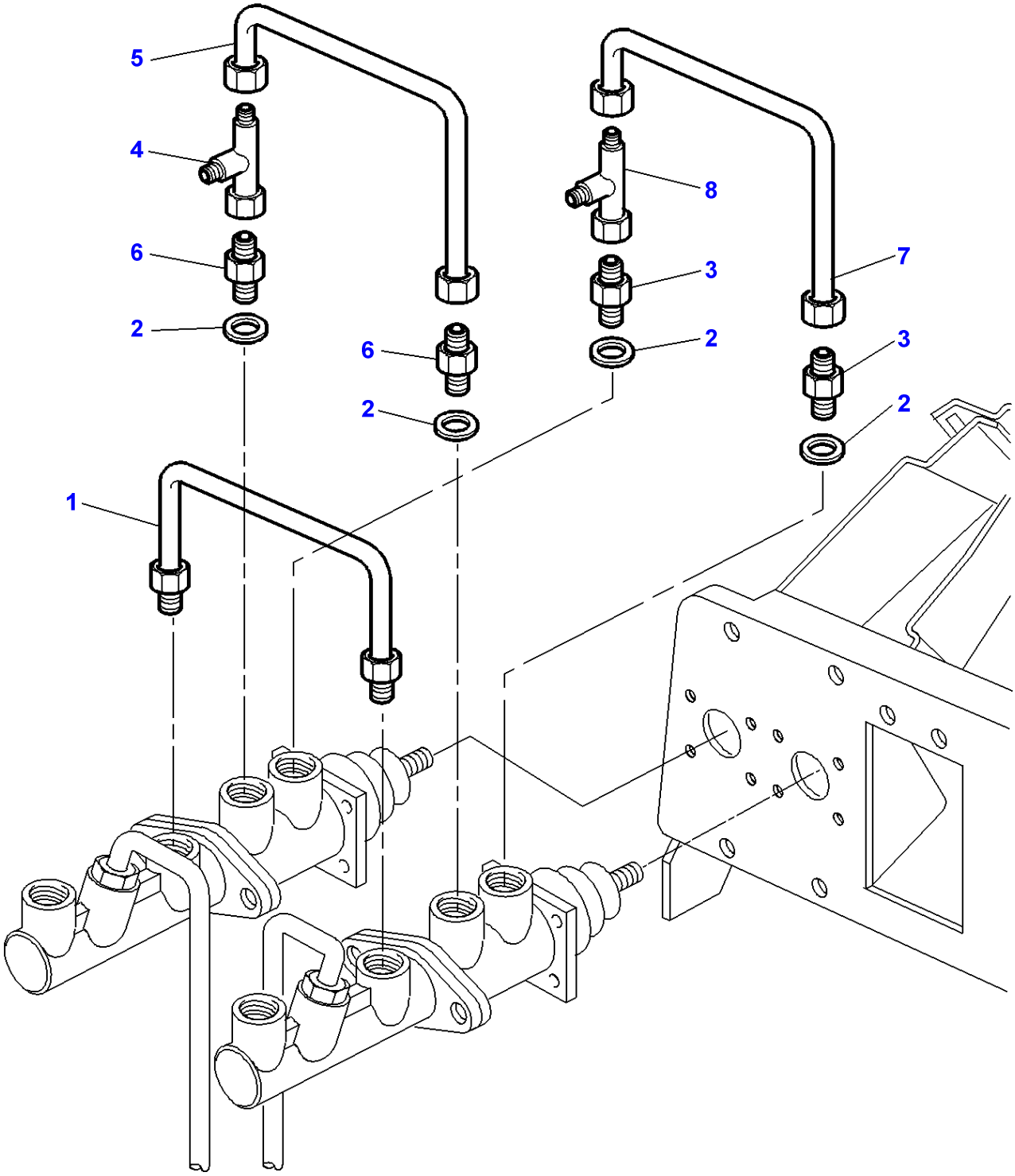

https://truckmanualshub.com/

Item	Part Number	Qty	Description	Comments
1	3386681M92	1	Tube	
2	3004861X1	4	Washer	
3	3019574X1	2	Union	
4	364735X1	1	Union	3/4"-16
5	3387574M91	1	Tube	
6	3019382X1	2	Union	
7	3386678M91	1	Tube	
8	377218X1	1	Teepiece	9/16"-18

1-ZP78-010-A

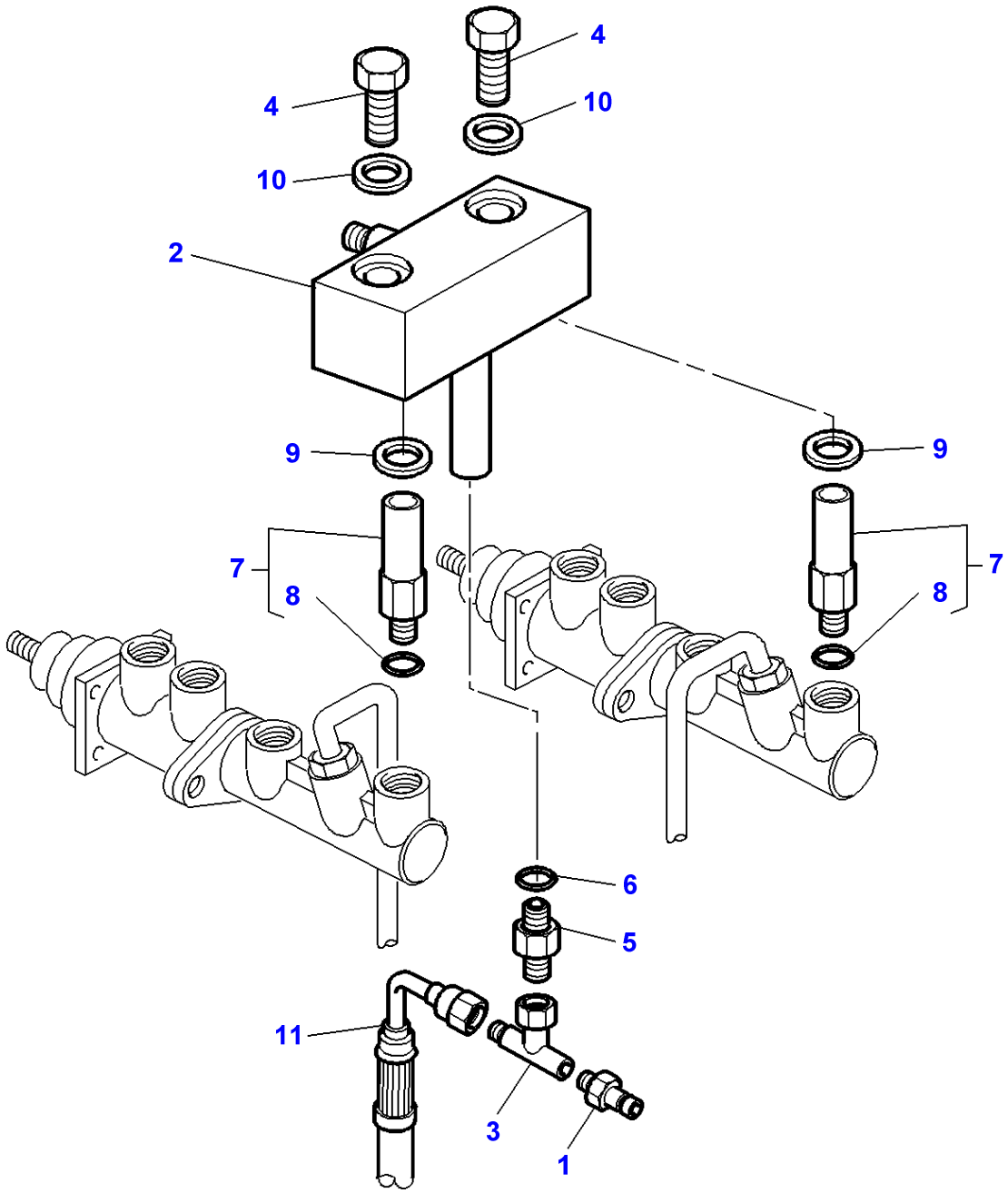

https://truckmanualshub.com/

Item	Part Number	Qty	Description	Comments
1	**3384387M1**	1	Pressure Intake	
2	3778712M93	1	Tank	
3	3780180M1	1	Teepiece	
4	339123X1	2	Hex. Sock. Screw	M8X20
5	3617226M1	1	Jet	
6	3019395X1	1	O Ring	
7	3778718M92	2	Union	
8	3019395X1	1	O Ring	(7)
9	3778767M1	2	Bush	Diameter 14MM
10	3778766M1	2	Bush	Diameter 8MM
11	3782337M2	1	Hydr Hose	Length 1650MM

1-ZG32-006-A

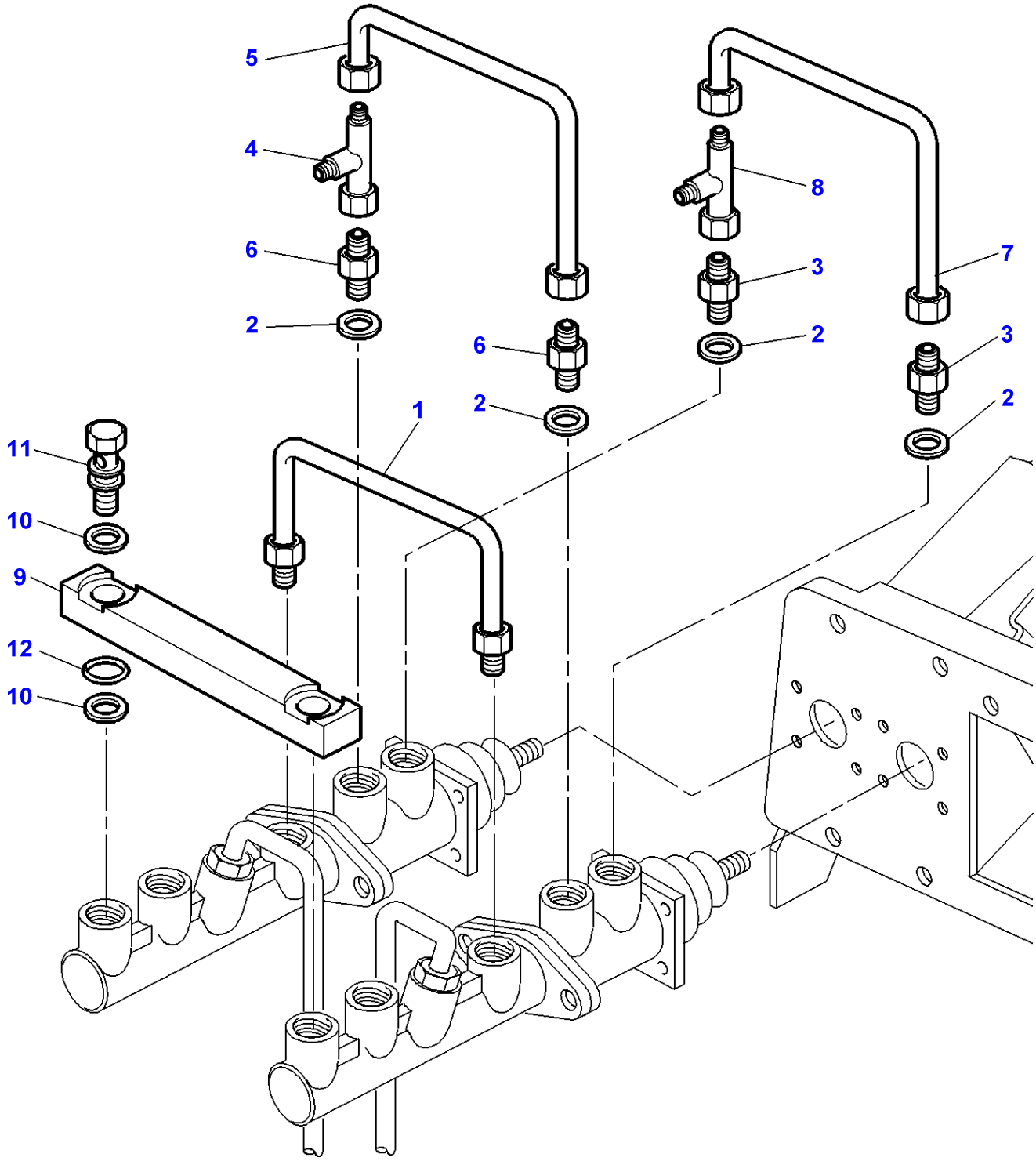

https://truckmanualshub.com/

Item	Part Number	Qty	Description
1	3386681M92	1	Tube
2	3004861X1	4	Washer
3	3019574X1	2	Union
4	364735X1	1	Union
5	3387574M91	1	Tube
6	3019382X1	2	Union
7	3386678M91	1	Tube
8	377218X1	1	Teepiece
9	3581463M2	1	Bar
10	3581464M1	4	Bush
11	3581491M1	2	Banjo Bolt
12	3019395X1	2	O Ring

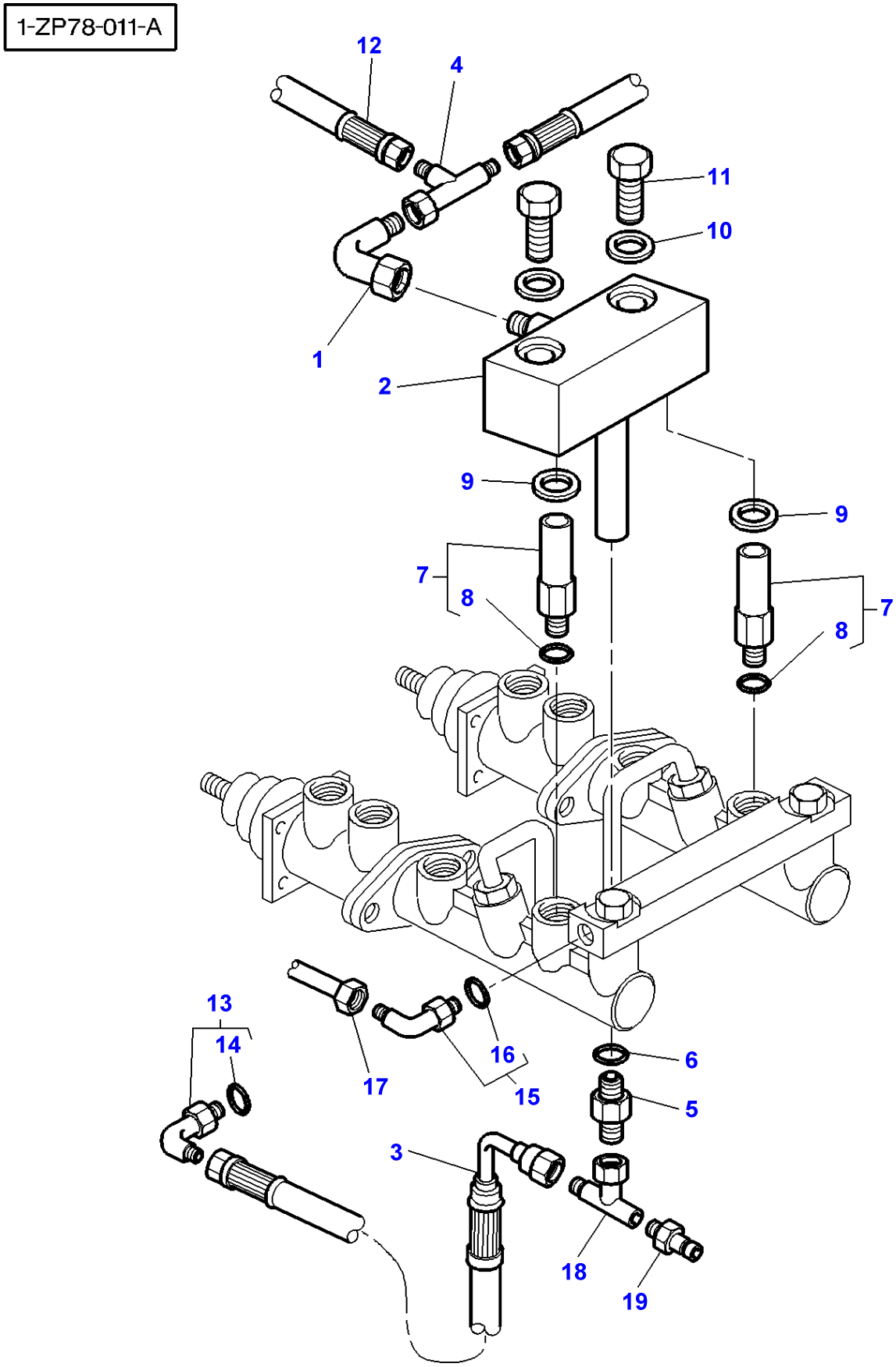
1-ZP78-011-A
12
4
11
10
1
2
9
9
7
8
7
8
13
14
17
16
15
6
5
3
18
19

https://truckmanualshub.com/

Item	Part Number	Qty	Description	Comments
1	364603X1	1	Elbow	
2	3778712M93	1	Tank	
3	3782337M2	1	Hydr Hose	Length 1650MM
4	3791175M92	1	Union	
5	3617226M1	1	Jet	
6	3019395X1	1	O Ring	
7	3778718M92	2	Union	
8	3019395X1	1	O Ring	(7)
9	3778767M1	2	Bush	Diameter 14MM
10	3778766M1	2	Bush	Diameter 8MM
11	339123X1	2	Hex. Sock. Screw	M8
12	3781572M1	1	Hydr Hose	
13	3019418X91	1	Elbow Nipple	M18
14	3019398X1	1	O Ring	(13)
15	3019694X91	1	Union	
16	3019395X1	1	O Ring	(15)
17	3778045M2	1	Tubing	
18	3780180M1	1	Teepiece	
19	**3384387M1**	1	Pressure Intake	

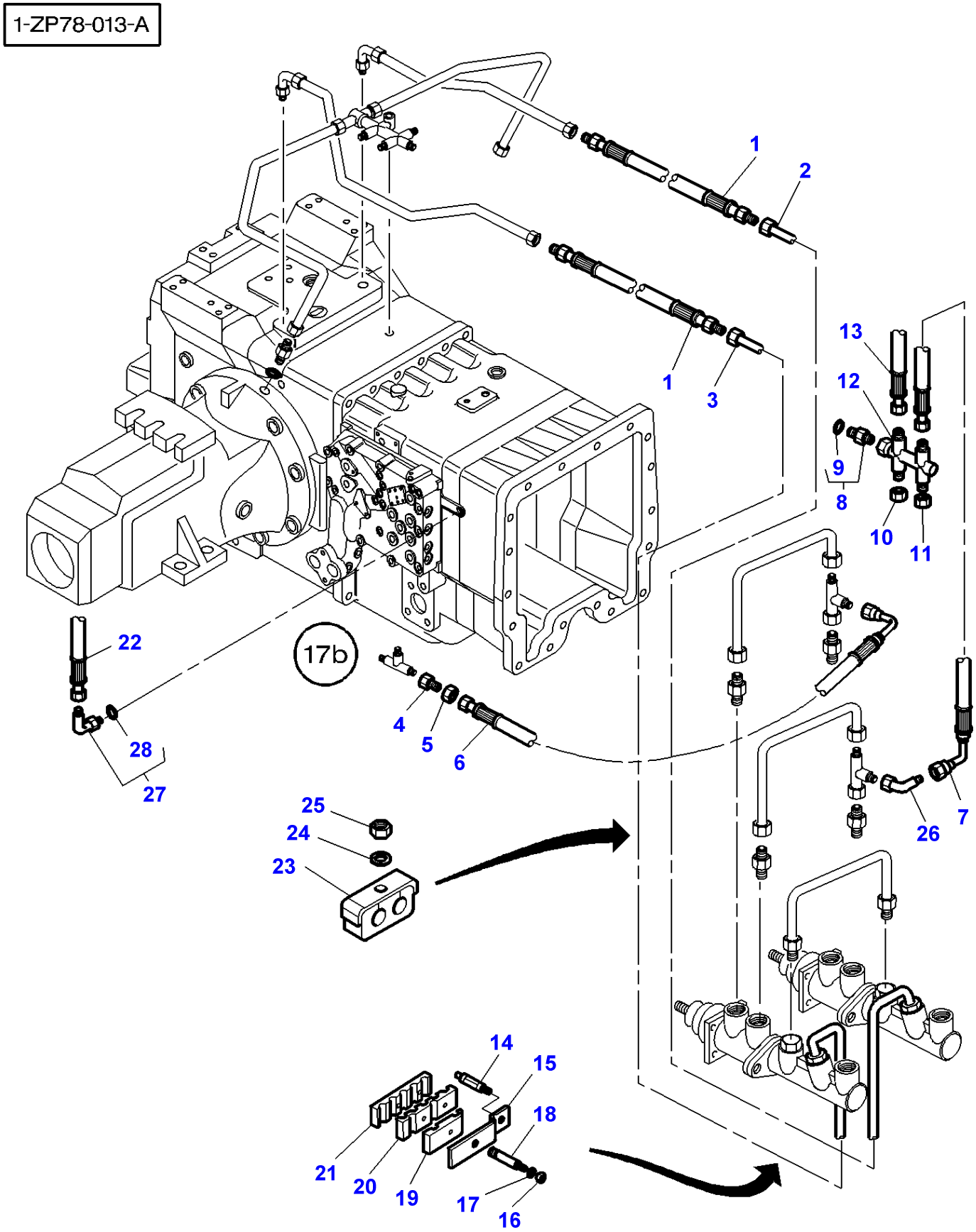
1-ZP78-013-A
1
2
1
3
13
12
9
8
10
11
22
17b
4
5
6
28
27
25
24
23
26
7
14
15
18
21
20
19
17
16

https://truckmanualshub.com/

Item	Part Number	Qty	Description	Comments
1	3778585M1	2	Hydr Hose	
2	3778041M3	1	Tube	Left Hand
3	3778040M2	1	Tube	Right Hand
4	22576X	1	Union Nut	
5	356629X1	1	Reducer	
6	3778664M2	1	Hydr Hose	Length 1800MM
7	3778663M1	1	Hydr Hose	Length 1600MM
8	3019387X91	1	Union	
9	3019398X1	1	O Ring	(8)
10	356580X1	1	Plug	
11	356579X1	1	Cap	
12	3777412M1	1	Union	
13	3779448M2	1	Tube	
14	3778279M1	1	Stud	
15	3778280M1	1	Plate	
16	1441500X1	1	Locknut	M6
17	391038X1	3	Washer	
18	3715878M3	1	Stud	Diameter M8/M6
19	3715882M1	1	Bridle	
20	3715881M1	1	Bridle	
21	3715880M1	1	Bridle	
22	3782337M2	1	Hydr Hose	Length 1650MM
23	3780550M1	2	Bridle	
24	391038X1	2	Washer	
25	339030X1	2	Nut Metric	
26	365233X1	1	Elbow	
27	3019416X91	1	Elbow	M22
28	3019397X1	1	O Ring	(27)

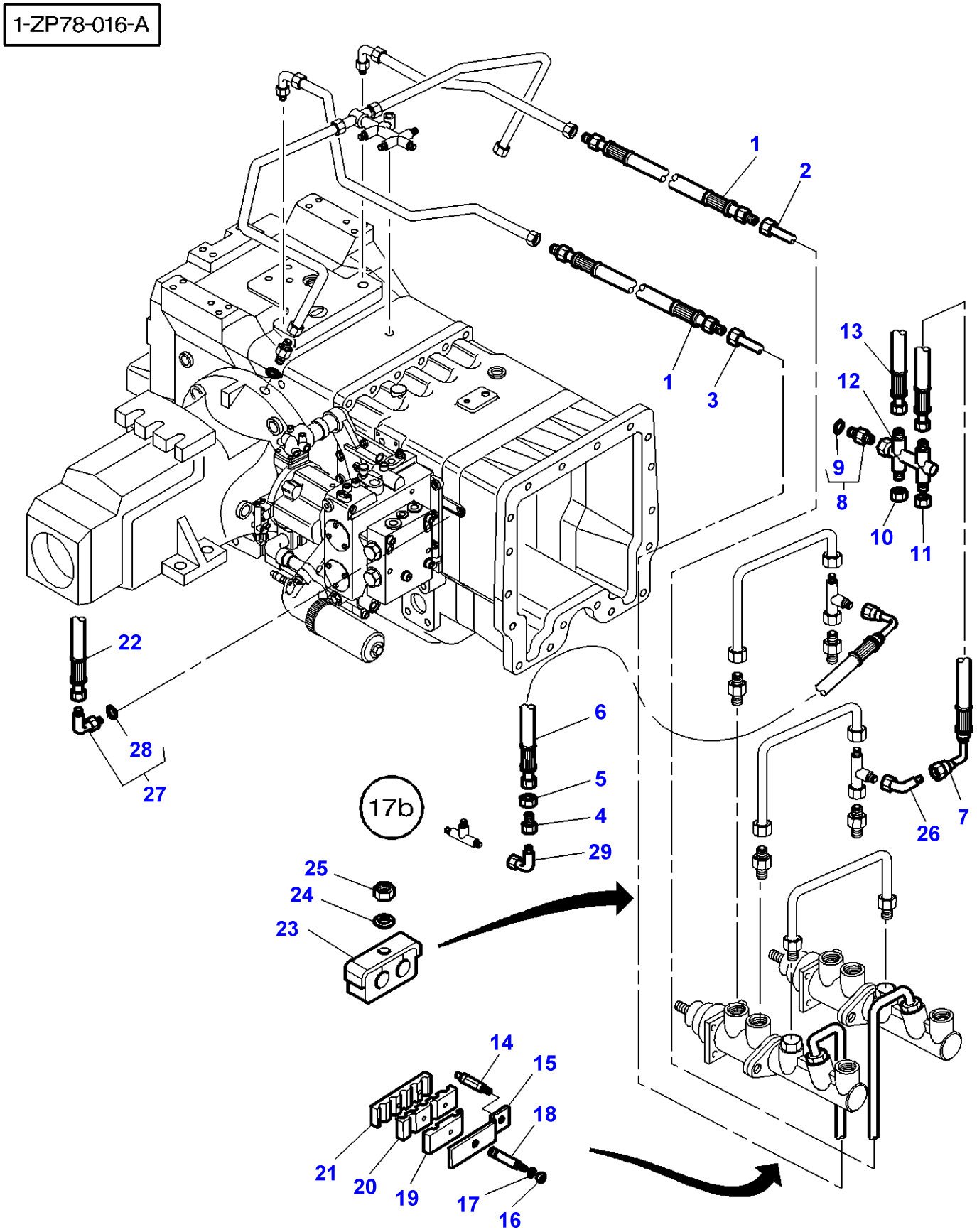
1-ZP78-016-A
1
2
1
3
13
12
9
8
10
11
22
28
27
6
5
4
29
17b
26
7
25
24
23
14
15
18
21
20
19
17
16

https://truckmanualshub.com/

Item	Part Number	Qty	Description	Comments
1	3778585M1	2	Hydr Hose	
2	3778041M3	1	Tube	Left Hand
3	3778040M2	1	Tube	Right Hand
4	22576X	1	Union Nut	
5	356629X1	1	Reducer	
6	3782787M1	1	Hydr Hose	Length 1400MM
7	3778663M1	1	Hydr Hose	
8	3019387X91	1	Union	
9	3019398X1	1	O Ring	(8)
10	356580X1	1	Plug	
11	356579X1	1	Cap	
12	3777412M1	1	Union	
13	3779448M2	1	Tube	
14	3778279M1	1	Stud	
15	3778280M1	1	Plate	
16	1441500X1	1	Locknut	M6
17	391038X1	3	Washer	
18	3715878M3	1	Stud	Diameter M8/M6
19	3715882M1	1	Bridle	
20	3715881M1	1	Bridle	
21	3715880M1	1	Bridle	
22	3782337M2	1	Hydr Hose	Length 1650MM
23	3780550M1	2	Bridle	
24	391038X1	2	Washer	
25	339030X1	2	Nut Metric	
26	365233X1	1	Elbow	
27	3019416X91	1	Elbow	M22
28	3019397X1	1	O Ring	(27)
29	364603X1	1	Elbow	9/16

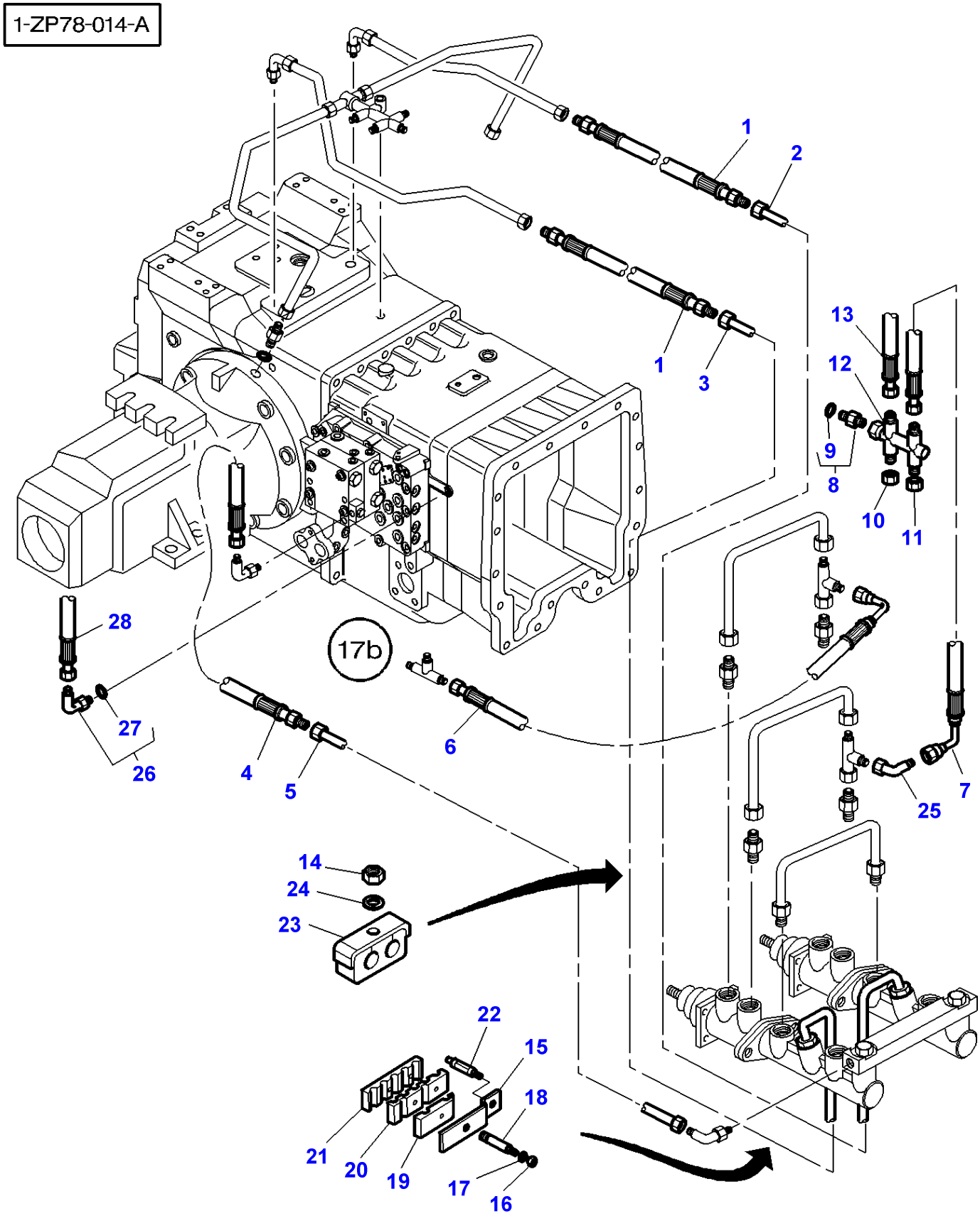
1-ZP78-014-A
1
2
1
3
13
12
9
8
10
11
28
17b
27
26
4
5
6
7
25
14
24
23
22
15
18
21
20
19
17
16

https://truckmanualshub.com/

Item	Part Number	Qty	Description	Comments
1	3778585M1	2	Hydr Hose	
2	3778043M3	1	Tube	Left Hand
3	3778042M2	1	Tube	Right Hand
4	3778586M2	1	Hydr Hose	Length 950MM
5	3778045M2	1	Tubing	
6	3778664M2	1	Hydr Hose	Length 1800MM
7	3778663M1	1	Hydr Hose	Length 1600MM
8	3019387X91	1	Union	
9	3019398X1	1	O Ring	(8)
10	356580X1	1	Plug	
11	356579X1	1	Cap	
12	3777412M1	1	Union	
13	3779448M2	1	Tube	
14	339030X1	2	Nut Metric	
15	3778280M1	1	Plate	
16	1441500X1	1	Locknut	M6
17	391038X1	3	Washer	
18	3715878M3	1	Stud	Diameter M8/M6
19	3715882M1	1	Bridle	
20	3715881M1	1	Bridle	
21	3715880M1	1	Bridle	
22	3778279M1	1	Stud	
23	3780550M1	2	Bridle	
24	391038X1	2	Washer	
25	365233X1	1	Elbow	
26	3019416X91	1	Elbow	
27	3019397X1	1	O Ring	(26)
28	3782337M2	1	Hydr Hose	Length 1650MM

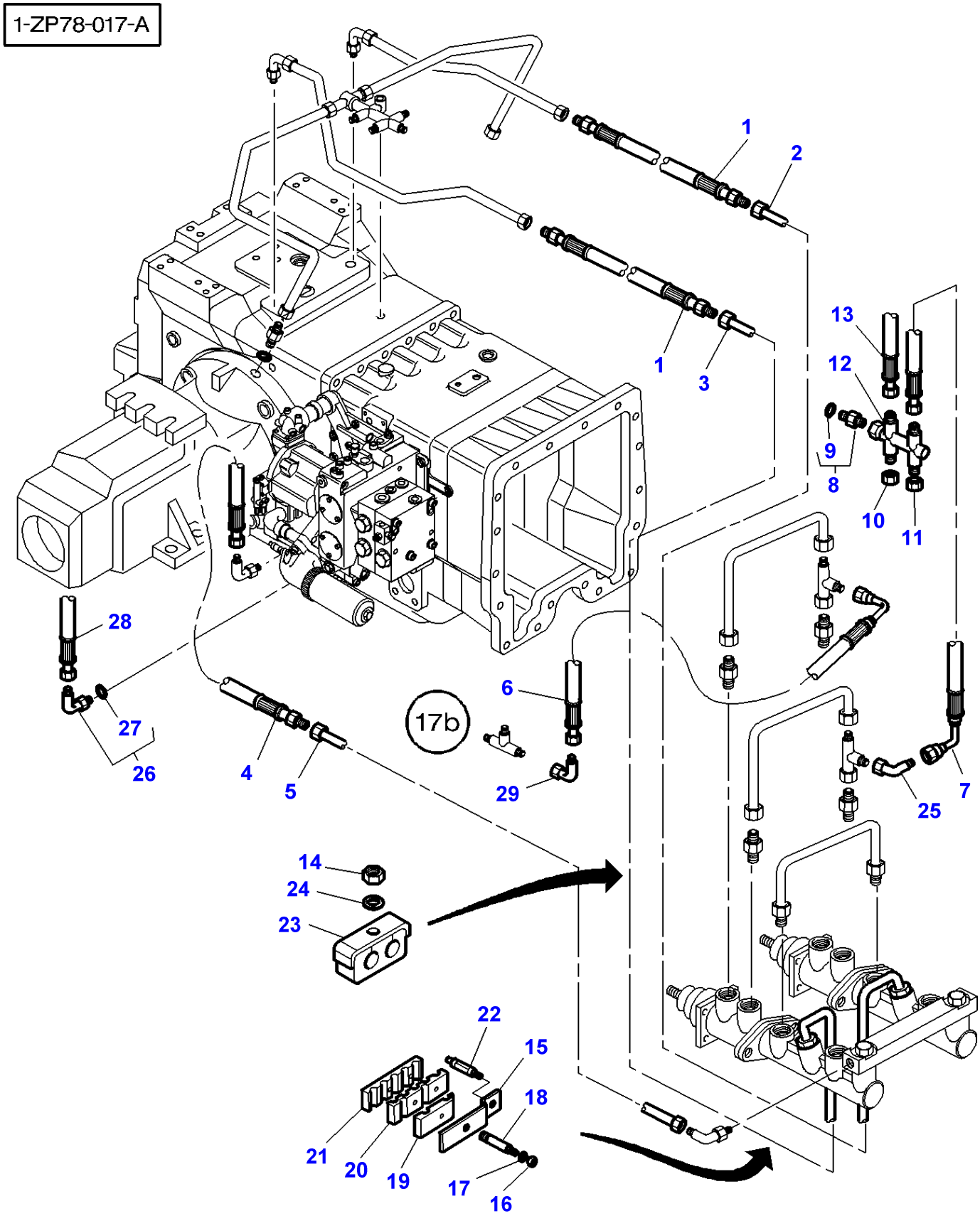
1-ZP78-017-A
1
2
1
3
13
12
9
8
10
11
28
27
26
4
5
6
17b
29
7
25
14
24
23
22
15
18
21
20
19
17
16

https://truckmanualshub.com/

Item	Part Number	Qty	Description	Comments
1	3778585M1	2	Hydr Hose	
2	3778043M3	1	Tube	Left Hand
3	3778042M2	1	Tube	Right Hand
4	3778586M2	1	Hydr Hose	Length 950MM
5	3778045M2	1	Tubing	
6	3782787M1	1	Hydr Hose	Length 1400MM
7	3778663M1	1	Hydr Hose	
8	3019387X91	1	Union	
9	3019398X1	1	O Ring	(8)
10	356580X1	1	Plug	
11	356579X1	1	Cap	
12	3777412M1	1	Union	
13	3779448M2	1	Tube	
14	339030X1	2	Nut Metric	
15	3778280M1	1	Plate	
16	1441500X1	1	Locknut	M6
17	391038X1	3	Washer	
18	3715878M3	1	Stud	Diameter M8/M6
19	3715882M1	1	Bridle	
20	3715881M1	1	Bridle	
21	3715880M1	1	Bridle	
22	3778279M1	1	Stud	
23	3780550M1	2	Bridle	
24	391038X1	2	Washer	
25	365233X1	1	Elbow	
26	3019416X91	1	Elbow	
27	3019397X1	1	O Ring	(26)
28	3782337M2	1	Hydr Hose	Length 1650MM
29	364603X1	1	Elbow	9/16

https://truckmanualshub.com/

1-ZG17-007-A

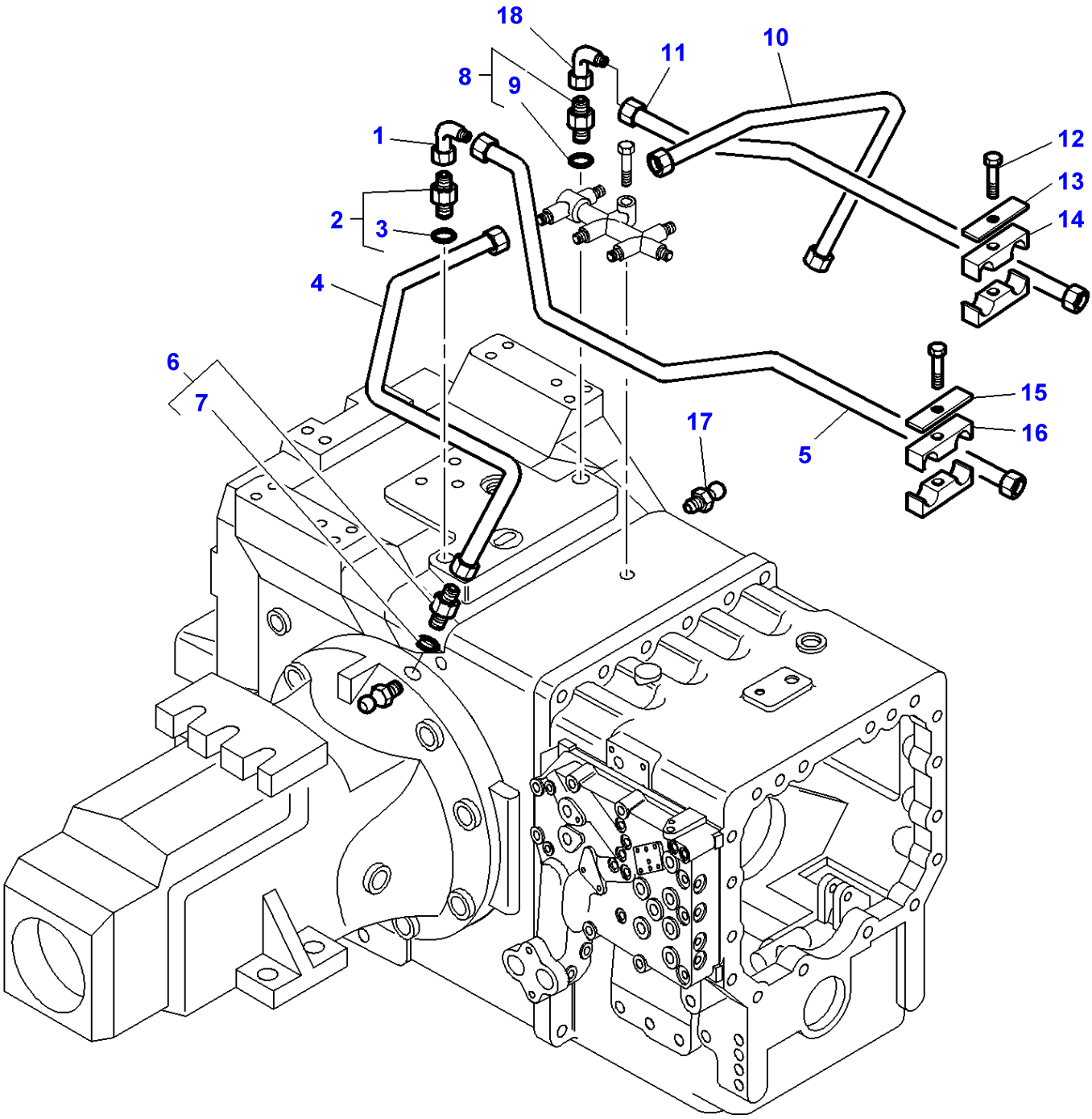

https://truckmanualshub.com/

Item	Part Number	Qty	Description	Comments
1	373778X1	1	Union	
2	3019377X91	1	Union	
3	3019394X1	1	O Ring	(2)
4	3791200M91	1	Tube	Right Hand
5	3791194M91	1	Tube	Right Hand
6	3791486M91	2	Union	
7	3019394X1	1	O Ring	(6)
8	3019377X91	1	Union	
9	3019394X1	1	O Ring	(8)
10	3791198M91	1	Tube	Left Hand
11	3791196M91	1	Tube	Left Hand
12	339337X1	2	Hex. Sock. Screw	M8x30
13	3716911M1	1	Plate	
14	3716910M1	2	Bridle	
15	3716913M1	1	Plate	
16	3716912M1	2	Bridle	
17	3052960M1	2	Banjo Bolt	
18	373778X1	1	Union	

https://truckmanualshub.com/

1-ZG17-008-A

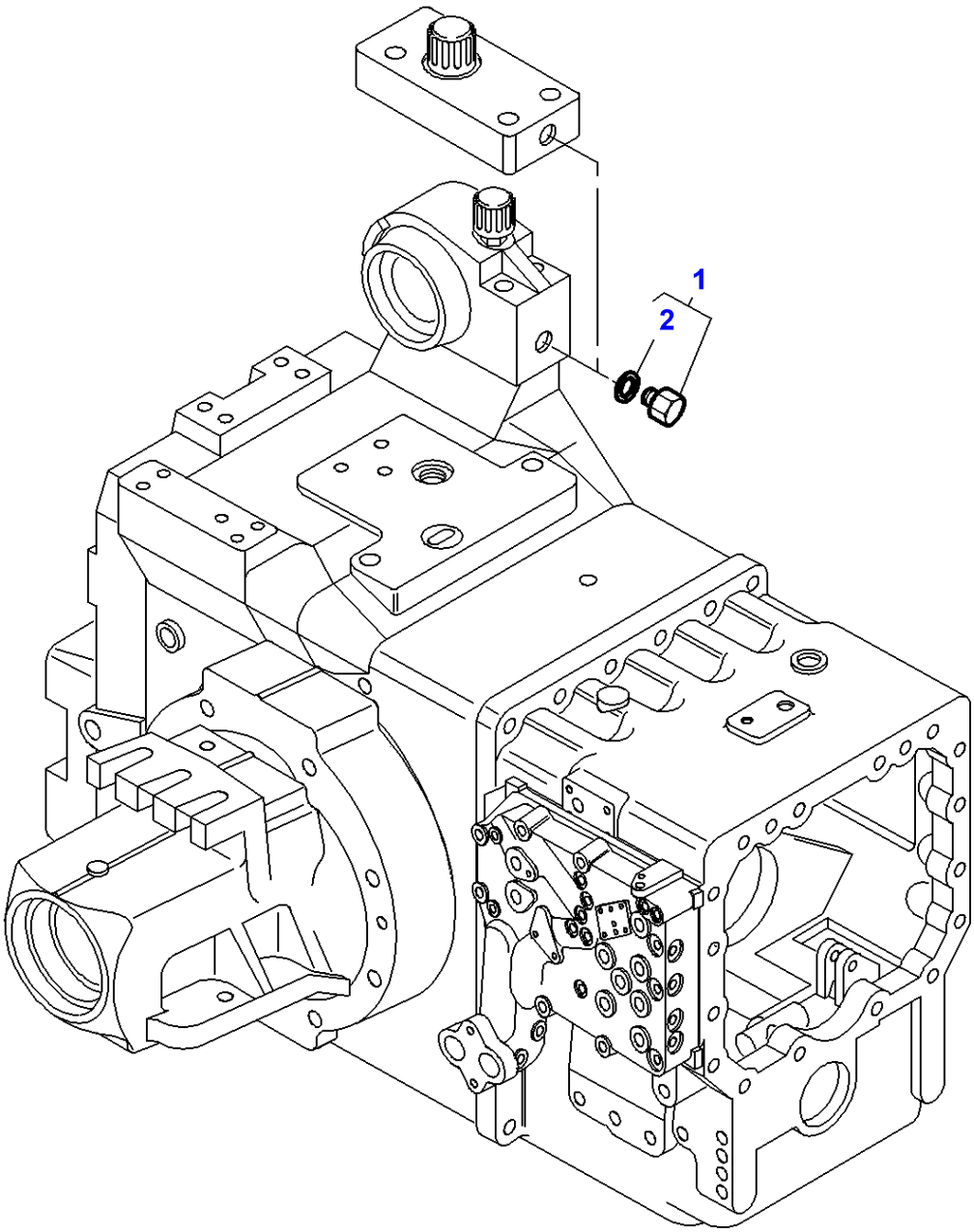

https://truckmanualshub.com/

Item	Part Number	Qty	Description	Comments
1	3019639X91	1	Plug	
2	3019395X1	1	O Ring	(1)

https://truckmanualshub.com/

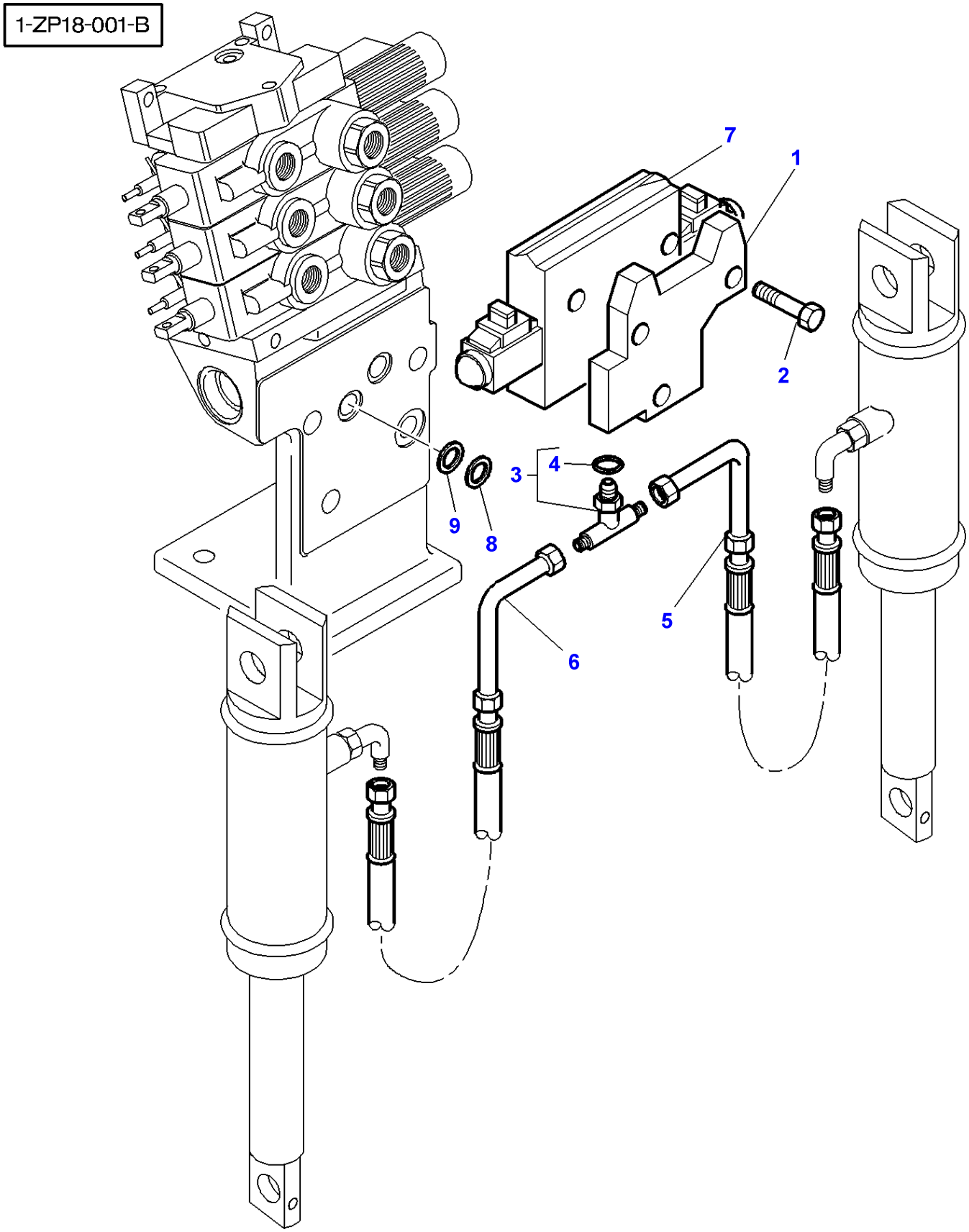

https://truckmanualshub.com/

Item	Part Number	Qty	Description	Comments
1	3716382M1	1	Plate	
2	390246X1	3	Bolt	M8X70
3	3019615X91	1	Union	M22
4	3019398X1	1	O Ring	(3)
5	3716384M1	1	Tube	Right Hand
6	3716386M1	1	Tube	Left Hand
7	3716381M1	1	Pressure Valve	110L/MN
8	1442477X1	1	Gasket	
9	3791884M2	1	Bush	

https://truckmanualshub.com/

1-ZP18-002-A

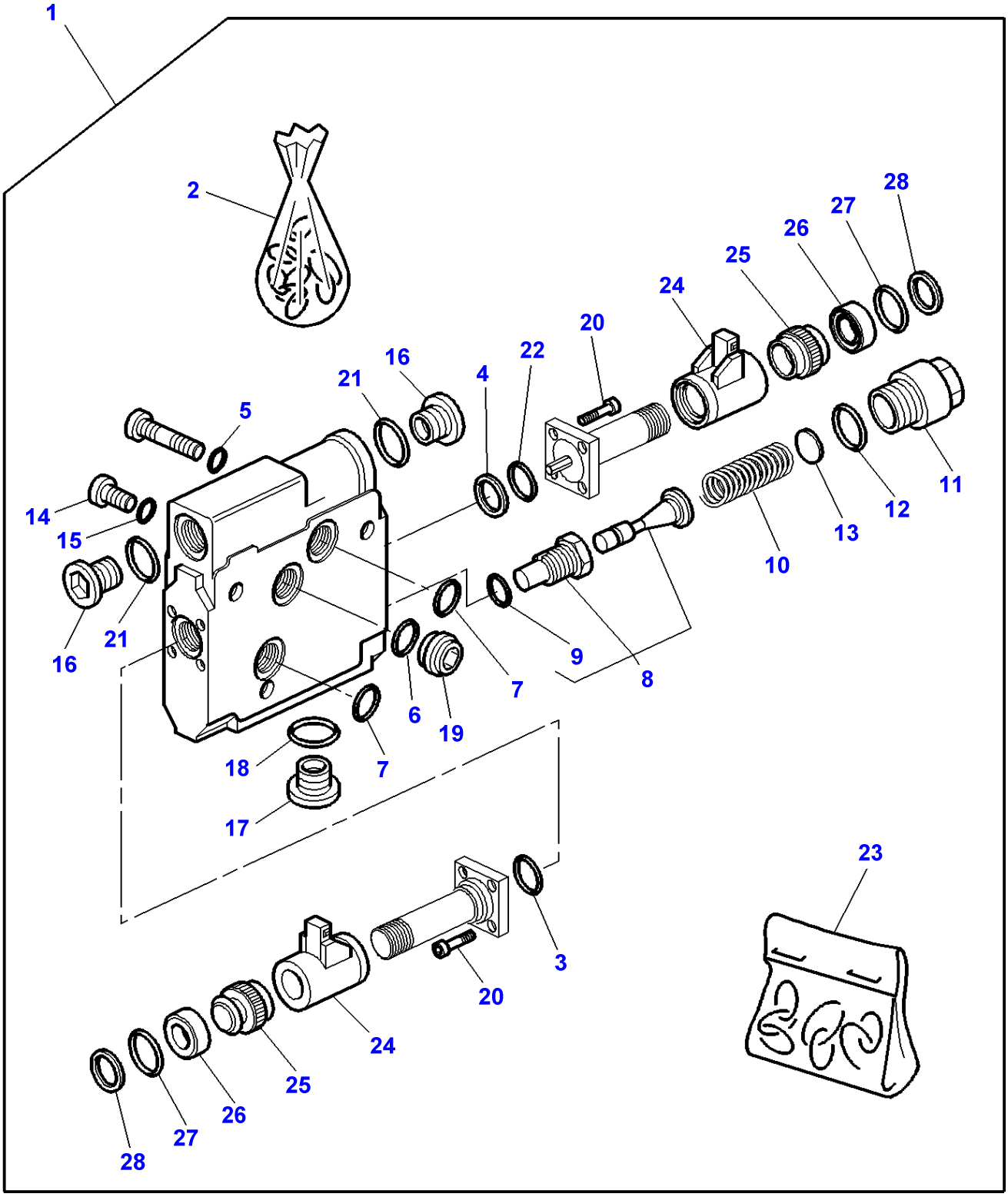

https://truckmanualshub.com/

Item	Part Number	Qty	Description	Comments
1	3716381M1	1	Pressure Valve	[A] BOSCH 110L/MN
2	3902938M91	1	Kit, Joint	(1)
3	3902933M1	1	O Ring	(2) Diameter 19X1,5MM
4	3902934M1	1	Gasket	(2)
5	3108257M1	2	O Ring	(2) Diameter 5X1,5MM
6	3108233M1	1	O Ring	(2) Diameter 18X2,5MM
7	3108232M1	2	O Ring	(2) Diameter 20X2,5MM
8	3108258M1	1	Valve	(1)
9	3902935M1	1	O Ring	(2) Diameter 10,82X1,78MM
10	3104936M1	1	Comp.Spring	(1)
11	3902936M1	1	Plug	(1)
12		1	O Ring	(2) Not serviced, order REF 2 Diameter 22X2,5MM
13	3104724M1	X	Shim	(1) Thickness 0,8MM
	1806184M1	X	Shim	(1) Thickness 0,5MM
	3102069M1	X	Shim	(1) Thickness 0,4MM
	3102068M1	X	Shim	(1) Thickness 0,3MM
14	3102240M1	1	Plug	(1)
15	3108259M1	1	O Ring	(2) Diameter 8X2MM
16	3902932M1	2	Plug	(1)
17	3108244M1	1	Plug	(1)
18	3108238M1	1	O Ring	(1)
19	3108248M1	1	Bypass	(1)
20	3902937M1	8	Screw	(1) M4X8
21		2	O Ring	(2) Not serviced, order REF 2 Diameter 17X2,5MM
22		1	O Ring	(2) Not serviced, order REF 2 Diameter 28X2MM
23	3902961M91	2	Parts Pack	Replace and repair. Old interchangeable with new 3901801M91
24		1	Solenoid	(23) Not serviced, order REF 23
25		1	Union Nut	(23) Not serviced, order REF 23
26		1	Helmet	(23) Not serviced, order REF 23
27		1	O Ring	(23) Not serviced, order REF 23 Diameter 21X1,5MM
28		1	O Ring	(23) Not serviced, order REF 23 Diameter 20X2,5MM

FOOTNOTE [A] ONLY P/NS WITH ITEMS ARE SUPPLIED IN SPARE PARTS

https://truckmanualshub.com/

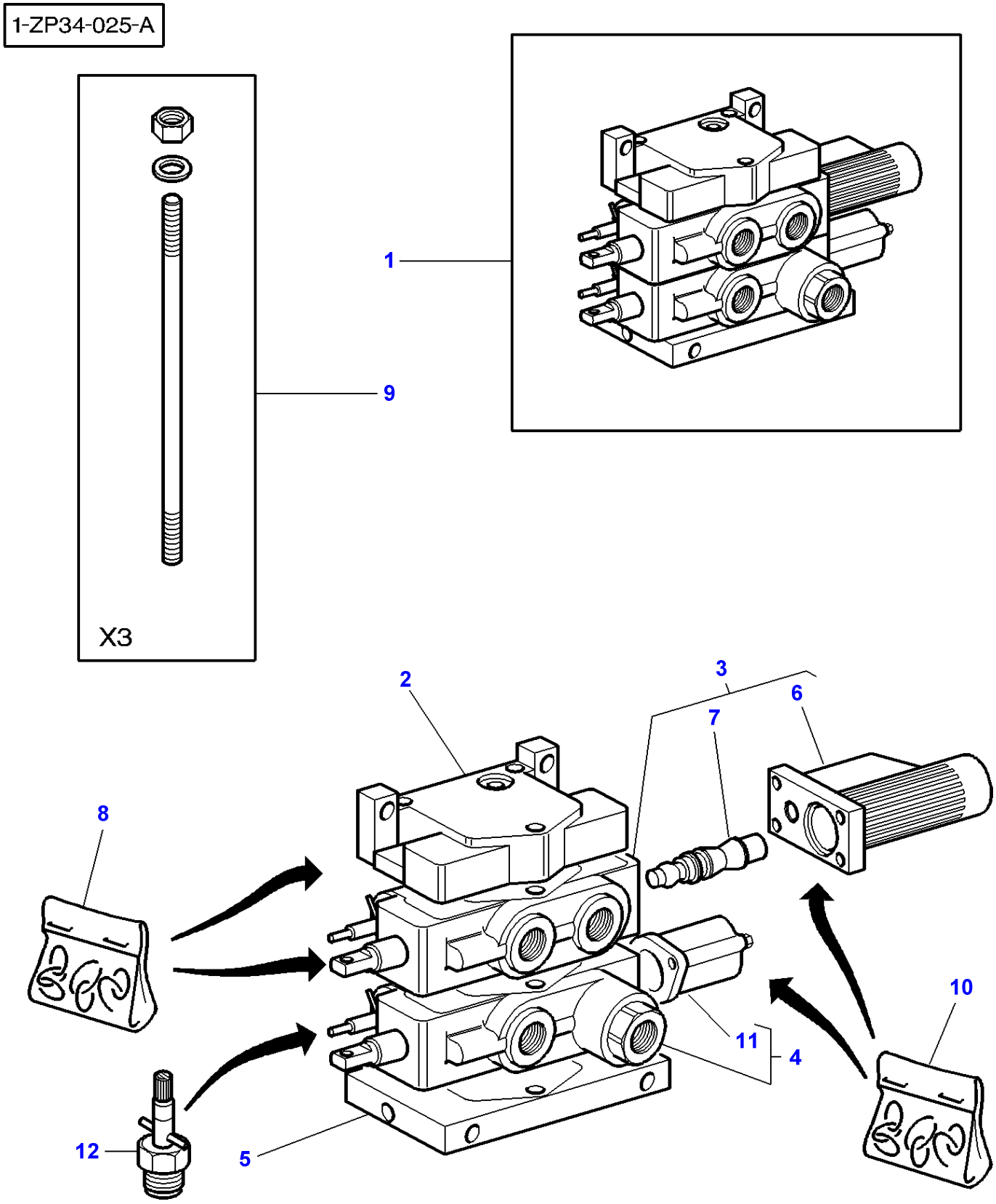

https://truckmanualshub.com/

Item	Part Number	Qty	Description	Comments
1	3716317M93	1	Distributor	
2	3716316M1	1	Element	(1)
3	3792803M3	1	Distributor	[A] (1) Replace and repair. Old interchangeable with new 3902062M92
4	3792802M1	1	Distributor	[B] (1) Replace and repair. Old interchangeable with new 3902063M91
5	3716314M1	1	Element	(1)
6	3902797M91	1	Protector	(3)
7	3790773M11	1	Kit, Service	(3)
8	3792640M1	1	Kit, Joint	(1) Replace and repair. Old interchangeable with new 3902067M91
9	3902732M91	1	Parts Pack	(1)
10	3902066M91	1	Kit, Joint	(1)
11	3902813M91	1	Protector	(4)
12	3790797M11	1	Kit, Service	(1)

FOOTNOTE [A] DIST 4 FLOATING POSITIONS ,FLOW ADJUST,KICK-OUT,W/ O, ZERO LEAK
FOOTNOTE [B] DIST 3 FLOATING POSITIONS,RETURN BY SPRING,FLOW AD JUST,ZERO LEAK

https://truckmanualshub.com/

1-ZP36-014-B

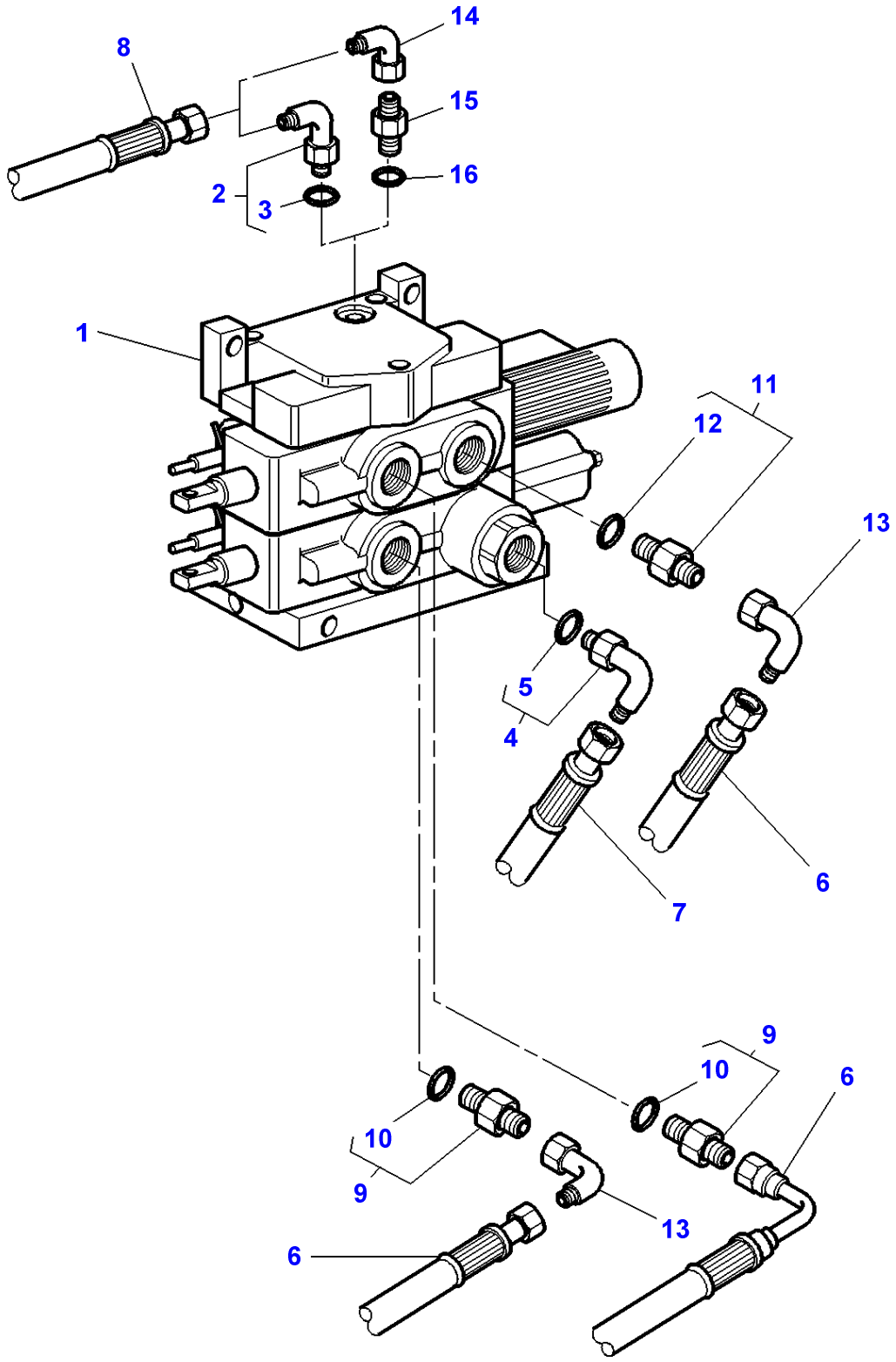

https://truckmanualshub.com/

Item	Part Number	Qty	Description	Comments
1	3716317M93	1	Distributor	
2	357197X91	1	Elbow	Up to Serial or Engine Number H321001
3	831452M1	1	O Ring	(2)
4	380031X91	1	Union	
5	1882958M1	1	O Ring	(4)
6	3712540M1	3	Hydr Hose	Length 650MM
7	3714956M1	1	Hydr Hose	Length 600MM
8	3716398M1	1	Hydr Hose	[A]
	3792042M1	1	Hydr Hose	[B]
				Length 1400MM
9	835013M91	2	Union	
10	1882958M1	1	O Ring	(9)
11	380055X91	1	Union	
12	835024M1	1	O Ring	(11)
13	367386X1	2	Elbow	
14	364603X1	1	Elbow	From Serial or Engine Number H321002
15	358733X1	1	Union	From Serial or Engine Number H321002
16	831452M1	1	O Ring	

FOOTNOTE [A] WITH PUMP 45CC
FOOTNOTE [B] WITH PUMP 60CC

https://truckmanualshub.com/

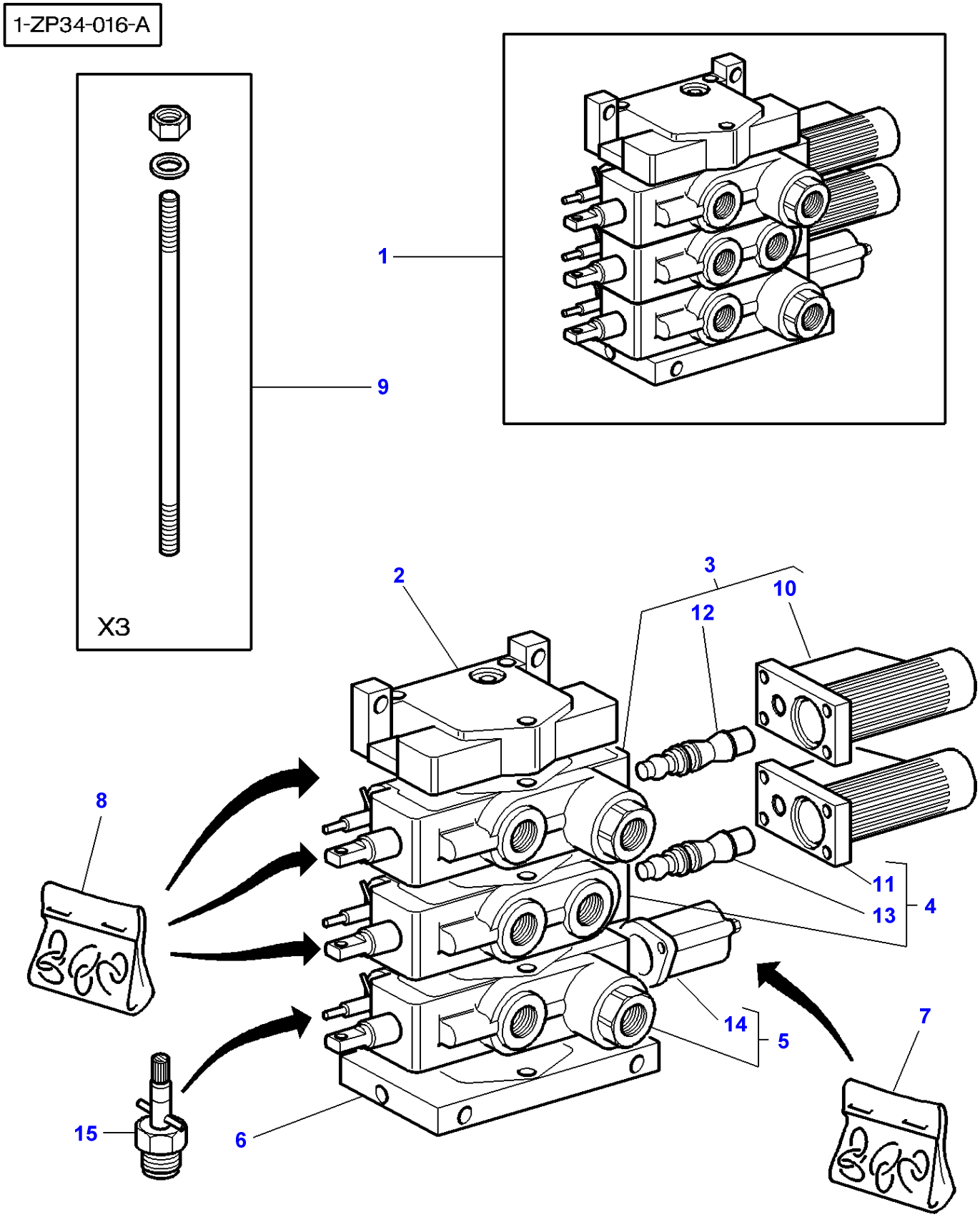

https://truckmanualshub.com/

Item	Part Number	Qty	Description	Comments
1	3716318M93	1	Distributor	
2	3716316M1	1	Element	(1)
3	3713928M5	1	Distributor	[C] (1)
4	3792803M3	1	Distributor	[A] (1) Replace and repair. Old interchangeable with new 3902062M9
5	3792802M1	1	Distributor	[B] (1) Replace and repair. Old interchangeable with new 3902063M91
6	3716314M1	1	Element	(1)
7	3902066M91	1	Kit, Joint	(1)
8	3792640M1	1	Kit, Joint	(1) Replace and repair. Old interchangeable with new 3902067M91
9	3716366M1	1	Parts Pack	(1)
10	3902797M91	1	Protector	(3)
11	3902797M91	1	Protector	(4)
12	3790773M11	1	Kit, Service	(3)
13	3790773M11	1	Kit, Service	(4)
14	3902813M91	1	Protector	(5)
15	3790797M11	1	Kit, Service	(1)

FOOTNOTE [A] DIST 4 FLOATING POSITIONS ,FLOW ADJUST,KICK-OUT,W/ O, ZERO LEAK
FOOTNOTE [B] DIST 3 FLOATING POSITIONS,RETURN BY SPRING,FLOW AD JUST,ZERO LEAK
FOOTNOTE [C] 4 FLOATING POSITIONS DIST,FLOW ADJUST,KICK-OUT,ZER O LEAK

1-ZP36-005-B

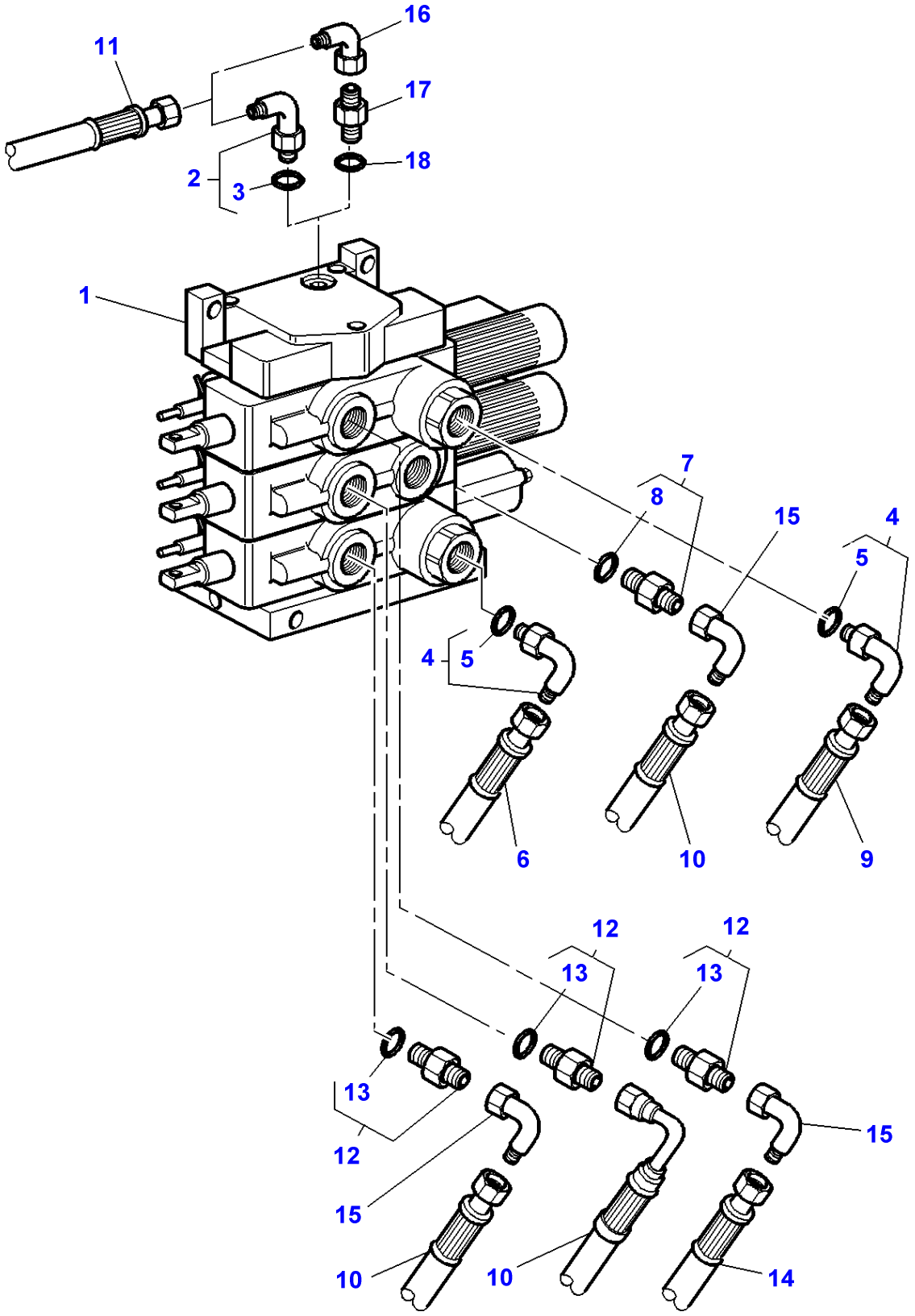

https://truckmanualshub.com/

Item	Part Number	Qty	Description	Comments
1	3716318M93	1	Distributor	
2	357197X91	1	Elbow	Up to Serial or Engine Number H321001
3	831452M1	1	O Ring	(2)
4	380031X91	2	Union	
5	1882958M1	1	O Ring	(4)
6	3714956M1	1	Hydr Hose	Length 600MM
7	380055X91	1	Union	
8	835024M1	1	O Ring	(7)
9	3583591M1	1	Hydr Hose	Length 690MM
10	3712540M1	3	Hydr Hose	Length 650MM
11	3716398M1	1	Hydr Hose	[A]
	3792042M1	1	Hydr Hose	[B]
				Length 1400MM
12	835013M91	3	Union	
13	1882958M1	1	O Ring	(12)
14	3792164M1	1	Hydr Hose	Length 900MM
15	367386X1	3	Elbow	
16	364603X1	1	Elbow	From Serial or Engine Number H321002
17	358733X1	1	Union	From Serial or Engine Number H321002
18	831452M1	1	O Ring	

FOOTNOTE [A] WITH PUMP 45CC
FOOTNOTE [B] WITH PUMP 60CC

https://truckmanualshub.com/

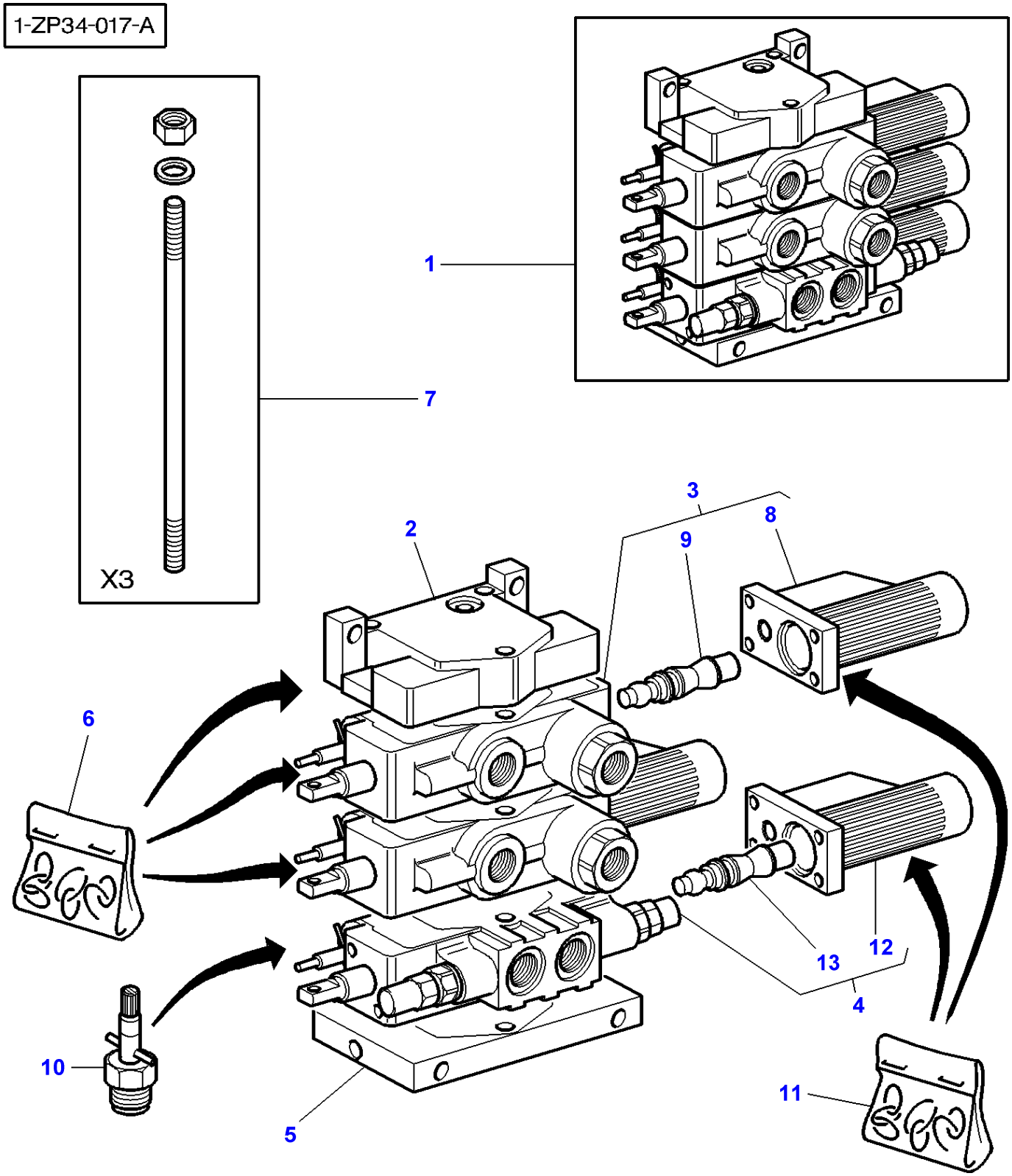

https://truckmanualshub.com/

Item	Part Number	Qty	Description	Comments
1	3716319M93	1	Distributor	
2	3716316M1	1	Element	(1)
3	3713928M5	2	Distributor	[A] (1)
4	3713927M4	1	Distributor	[B] (1)
5	3716314M1	1	Element	(1)
6	3792640M1	1	Kit, Joint	(1) Replace and repair. Old interchangeable with new 3902067M91
7	3716366M1	1	Parts Pack	(1)
8	3902797M91	1	Protector	(3)
9	3790773M11	1	Kit, Service	(3)
10	3790797M11	1	Kit, Service	(1)
11	3902066M91	1	Kit, Joint	(1)
12	3902797M91	1	Protector	(4)
13	3790773M11	1	Kit, Service	(4)

FOOTNOTE [A] 4 FLOATING POSITIONS DIST,FLOW ADJUST,KICK-OUT,ZER O LEAK
FOOTNOTE [B] 4 FLOAT POSIT DIST,FLOW ADJUST,KICK-OUT W 2 OVERP RES.VALVE AND RESUPPLYING FOR HYDRAULIC MOTOR

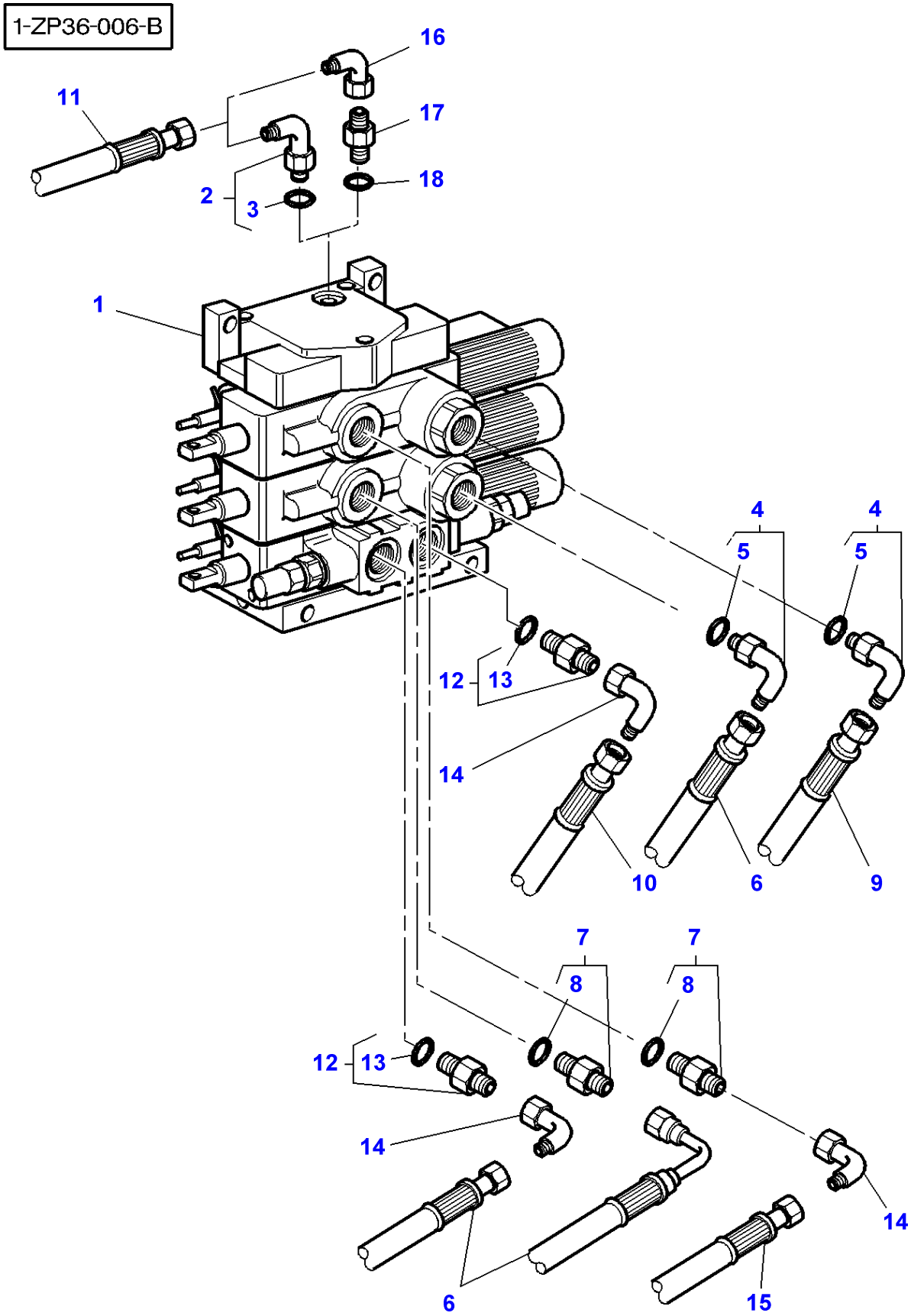
1-ZP36-006-B
16
11
17
18
2
3
1
4
5
4
5
12
13
14
10
6
9
7
8
7
8
12
13
14
14
6
15

https://truckmanualshub.com/

Item	Part Number	Qty	Description	Comments
1	3716319M93	1	Distributor	
2	357197X91	1	Elbow	Up to Serial or Engine Number H321001
3	831452M1	1	O Ring	(2)
4	380031X91	2	Union	
5	1882958M1	1	O Ring	(4)
6	3712540M1	3	Hydr Hose	Length 650MM
7	380055X91	1	Union	
8	835024M1	1	O Ring	(7)
9	3583591M1	1	Hydr Hose	Length 690MM
10	3714956M1	1	Hydr Hose	Length 600MM
11	3716398M1	1	Hydr Hose	[A]
	3792042M1	1	Hydr Hose	[B]
				Length 1400MM
12	835013M91	2	Union	
13	1882958M1	1	O Ring	(12)
14	367386X1	3	Elbow	
15	3792164M1	1	Hydr Hose	Length 900MM
16	364603X1	1	Elbow	From Serial or Engine Number H321002
17	358733X1	1	Union	From Serial or Engine Number H321002
18	831452M1	1	O Ring	

FOOTNOTE [A] WITH PUMP 45CC
FOOTNOTE [B] WITH PUMP 60CC

https://truckmanualshub.com/

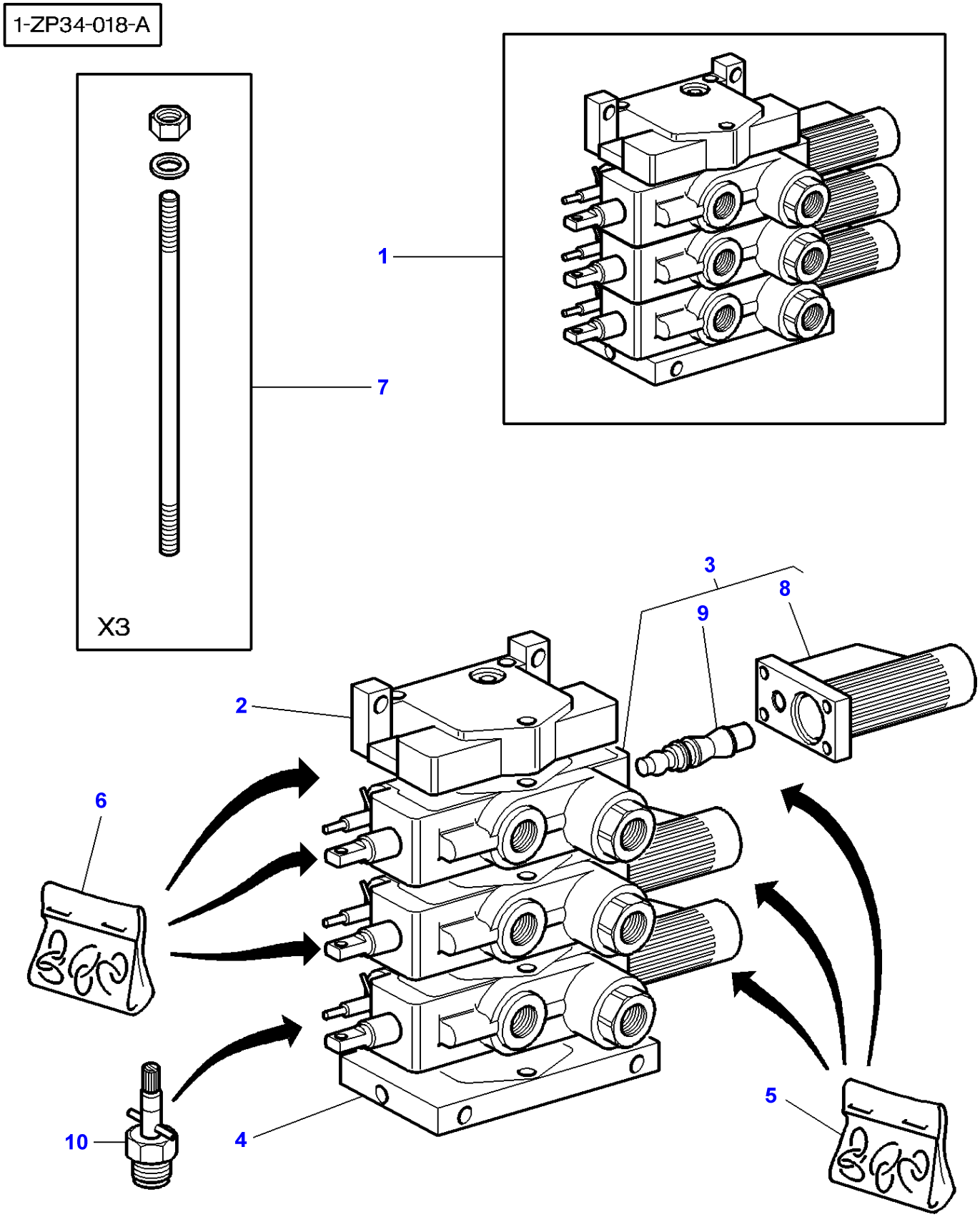

https://truckmanualshub.com/

Item	Part Number	Qty	Description	Comments
1	3716320M93	1	Distributor	
2	3716316M1	1	Element	(1)
3	3713928M5	3	Distributor	[A]
				(1)
4	3716314M1	1	Element	(1)
5	3902066M91	1	Kit, Joint	(1)
6	3792640M1	1	Kit, Joint	(1)
				Replace and repair. Old interchangeable with new 3902067M91
7	3716366M1	1	Parts Pack	(1)
8	3902797M91	1	Protector	(3)
9	3790773M11	1	Kit, Service	(3)
10	3790797M11	1	Kit, Service	(3)

FOOTNOTE [A] 4 FLOATING POSITIONS DIST,FLOW ADJUST,KICK-OUT,ZER O LEAK

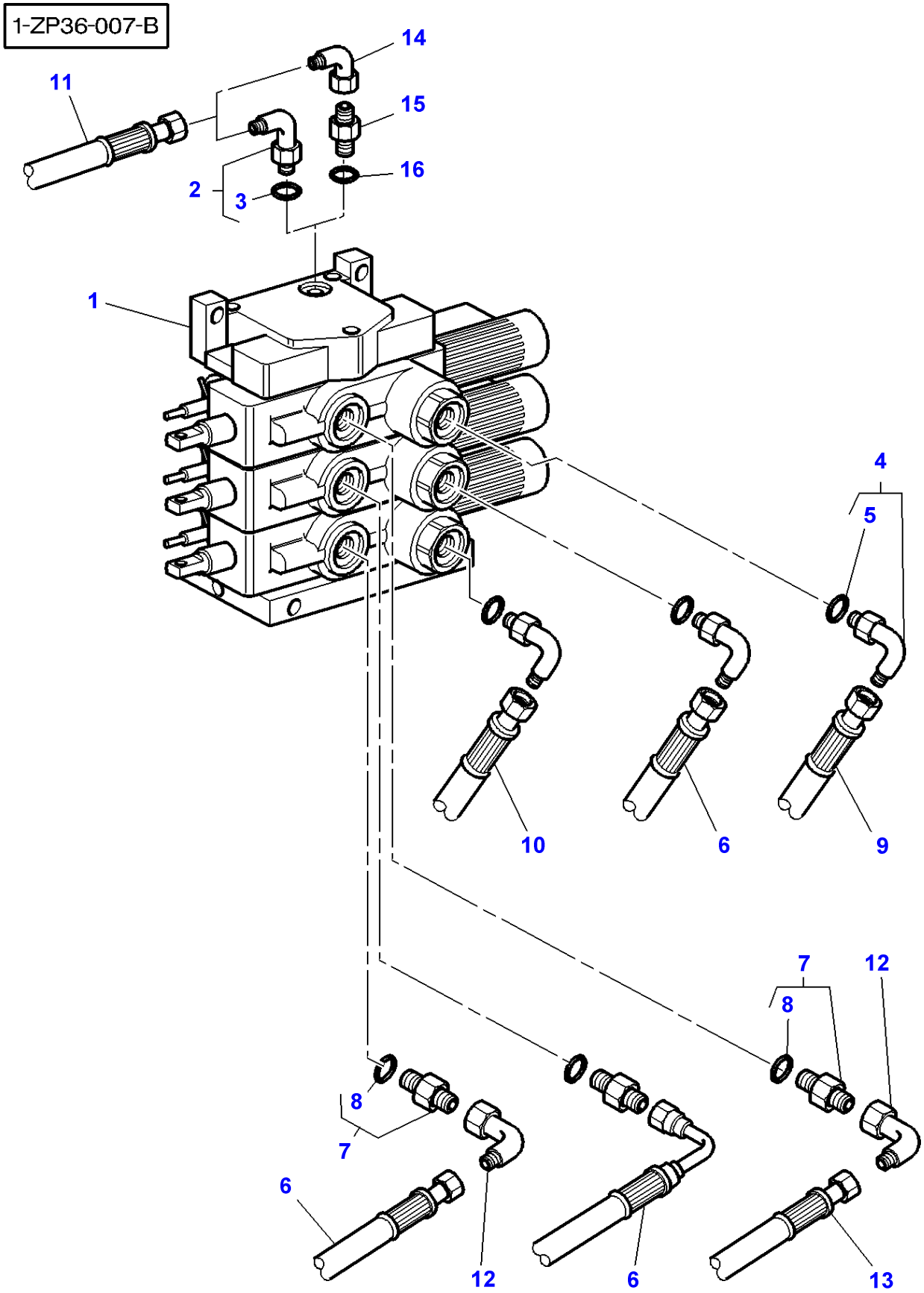
1-ZP36-007-B
14
11
15
16
2
3
1
4
5
10
6
9
7
12
8
8
7
6
12
6
13

https://truckmanualshub.com/

Item	Part Number	Qty	Description	Comments
1	3716320M93	1	Distributor	
2	357197X91	1	Elbow	Up to Serial or Engine Number H321001
3	831452M1	1	O Ring	(2)
4	380031X91	3	Union	7/88-14
5	1882958M1	1	O Ring	(4)
6	3712540M1	3	Hydr Hose	Length 650MM
7	835013M91	3	Union	
8	1882958M1	1	O Ring	(7)
9	3583591M1	1	Hydr Hose	Length 690MM
10	3714956M1	1	Hydr Hose	Length 600MM
11	3716398M1	1	Hydr Hose	[A]
	3792042M1	1	Hydr Hose	[B]
				Length 1400MM
12	367386X1	2	Elbow	
13	3792164M1	1	Hydr Hose	Length 900MM
14	364603X1	1	Elbow	From Serial or Engine Number H321002
15	358733X1	1	Union	From Serial or Engine Number H321002
16	831452M1	1	O Ring	

FOOTNOTE [A] WITH PUMP 45CC
FOOTNOTE [B] WITH PUMP 60CC

https://truckmanualshub.com/

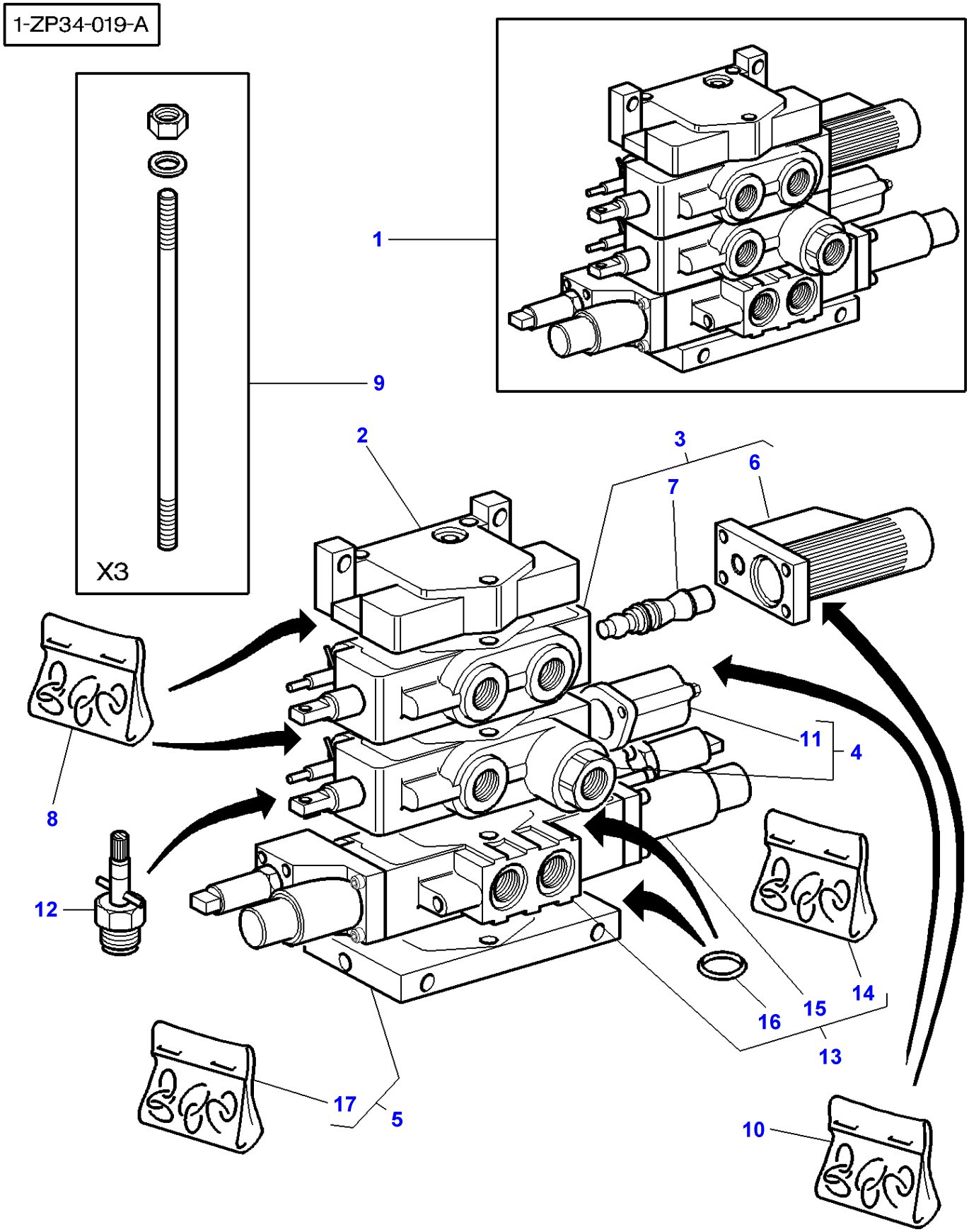

https://truckmanualshub.com/

Item	Part Number	Qty	Description	Comments
1	3716321M93	1	Distributor	
2	3716316M1	1	Element	(1)
3	3792803M3	1	Distributor	[A]
				(1)
				Replace and repair. Old interchangeable with new 3902062M92
4	3792802M1	1	Distributor	[B]
				(1)
				Replace and repair. Old interchangeable with new 3902063M91
5	3716315M1	1	Element	(1)
6	3902797M91	1	Protector	(3)
7	3790773M11	1	Kit, Service	(3)
8	3792640M1	1	Kit, Joint	(1)
				Replace and repair. Old interchangeable with new 3902067M91
9	3716366M1	1	Parts Pack	(1)
10	3902066M91	1	Kit, Joint	(1)
11	3902813M91	1	Protector	(4)
12	3790797M11	2	Kit, Service	(1)
13	3715122M2	1	Pressure Valve	[C]
				(1)
14	3902734M91	1	Kit, Joint	(13)
15	3900512M92	2	Pressure Valve	(13)
16	359288X1	4	Seal	(13)
17	**3792639M1**	1	Kit, Joint	(5)
				Replace and repair. Old interchangeable with new 3902733M91

FOOTNOTE [A] DIST 4 FLOATING POSITIONS ,FLOW ADJUST,KICK-OUT,W/ O, ZERO LEAK
FOOTNOTE [B] DIST 3 FLOATING POSITIONS,RETURN BY SPRING,FLOW AD JUST,ZERO LEAK
FOOTNOTE [C] DIST 3 FLOATING POSITIONS,AUTOMATIC KICK-OUT(BY SP RING),FLOW ADJUST,ELECTRIC CONTROL

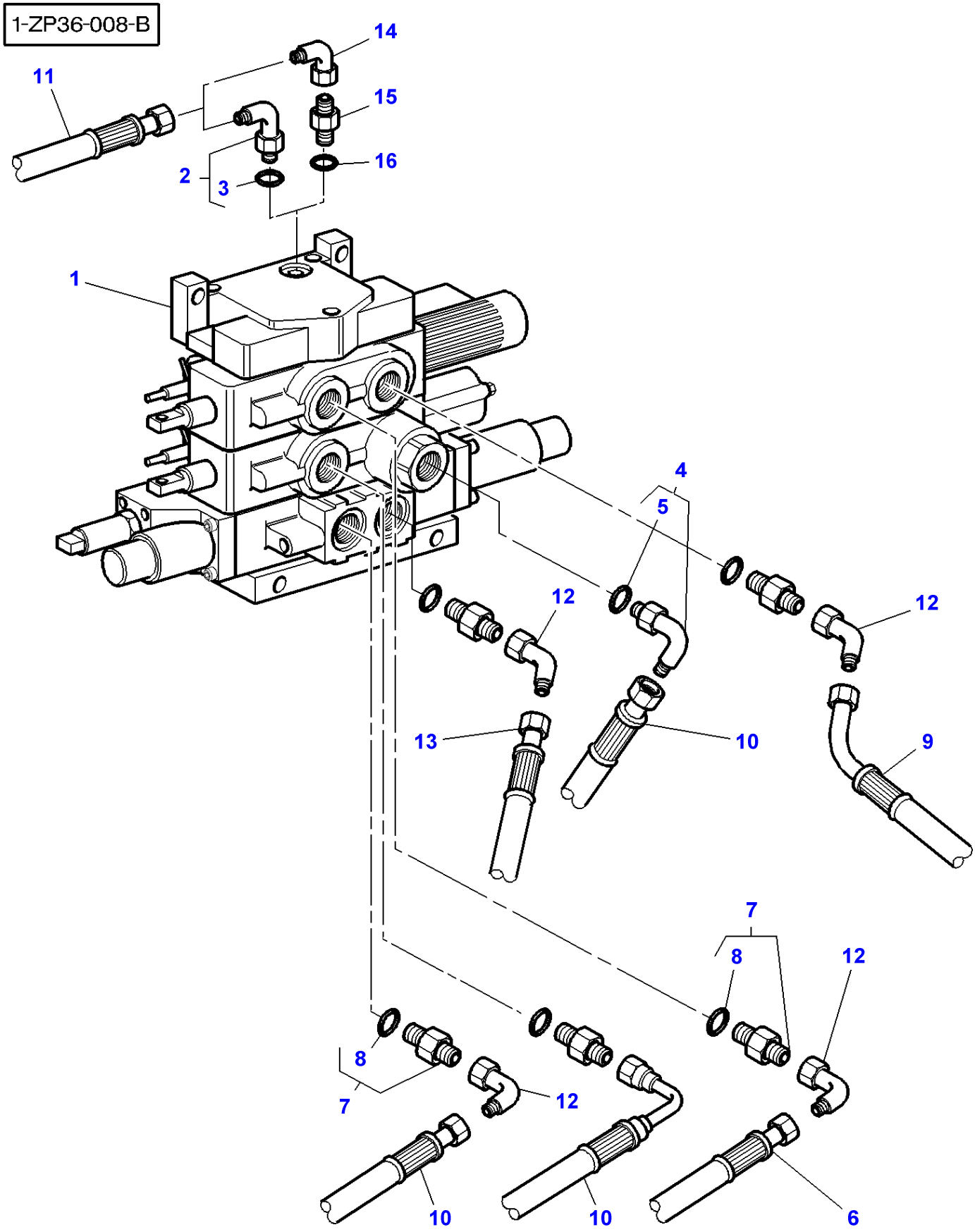
1-ZP36-008-B
14
11
15
16
2
3
1
4
5
12
12
13
10
9
7
8
12
8
7
12
10
10
6

https://truckmanualshub.com/

Item	Part Number	Qty	Description	Comments
1	3716321M93	1	Distributor	
2	357197X91	1	Elbow	Up to Serial or Engine Number H321001
3	831452M1	1	O Ring	(2)
4	380031X91	1	Union	
5	1882958M1	1	O Ring	(4)
6	3792164M1	1	Hydr Hose	Length 900MM
7	835013M91	5	Union	
8	1882958M1	1	O Ring	(7)
9	3792167M1	1	Hydr Hose	Length 780MM
10	3712540M1	3	Hydr Hose	Length 650MM
11	3716398M1	1	Hydr Hose	[A]
	3792042M1	1	Hydr Hose	[B]
				Length 1400MM
12	367386X1	4	Elbow	
13	3714956M1	1	Hydr Hose	Length 600MM
14	364603X1	1	Elbow	From Serial or Engine Number H321002
15	358733X1	1	Union	From Serial or Engine Number H321002
16	831452M1	1	O Ring	

FOOTNOTE [A] WITH PUMP 45CC
FOOTNOTE [B] WITH PUMP 60CC

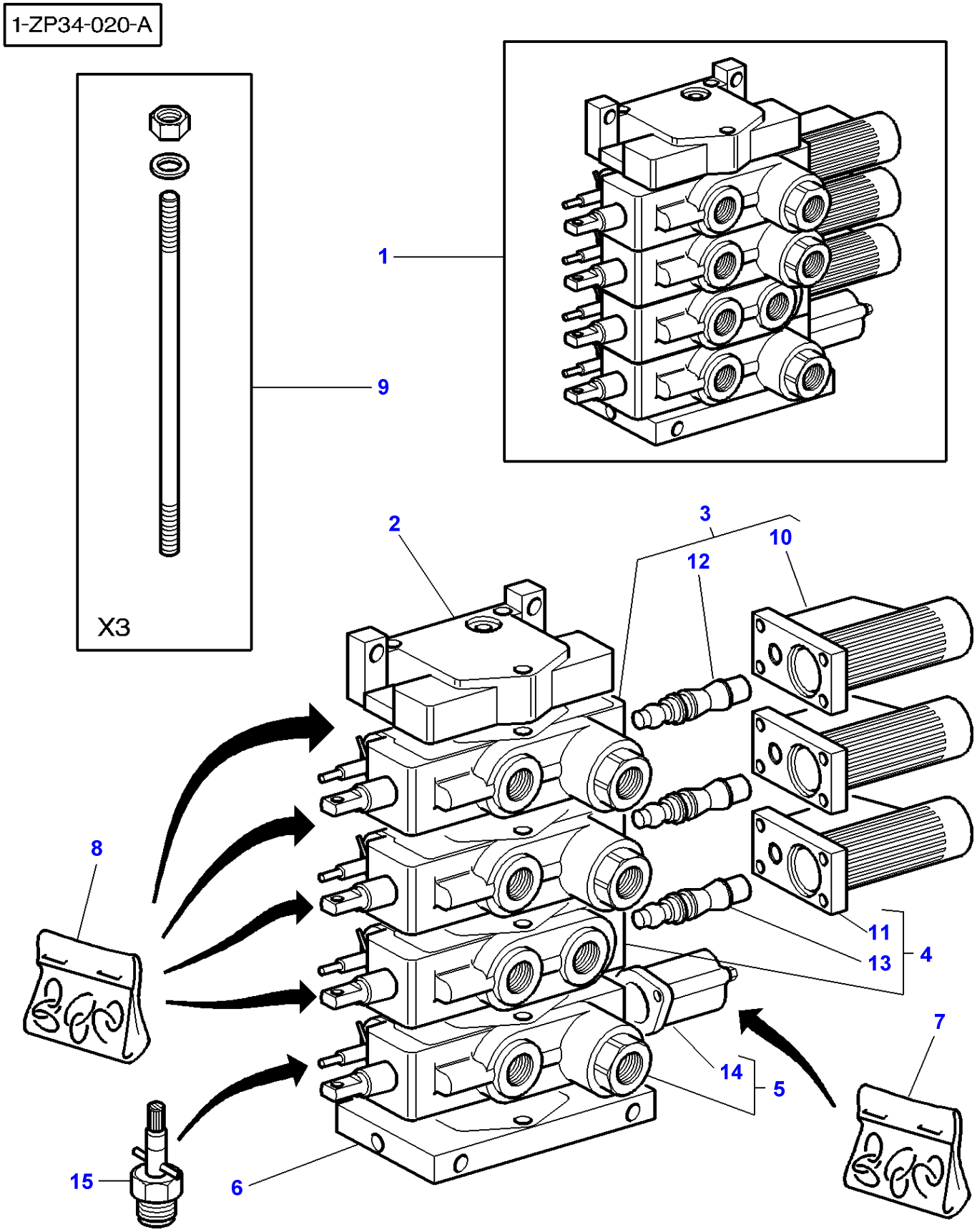
1-ZP34-020-A
X3
1
2
3
4
5
6
7
8
9
10
11
12
13
14
15

https://truckmanualshub.com/

Item	Part Number	Qty	Description	Comments
1	3716322M93	1	Distributor	
2	3716316M1	1	Element	(1)
3	3713928M5	2	Distributor	[C]
				(1)
4	3792803M3	1	Distributor	[A]
				(1)
				Replace and repair. Old interchangeable with new 3902062M92
5	3792802M1	1	Distributor	[B]
				(1)
				Replace and repair. Old interchangeable with new 3902063M91
6	3716314M1	1	Element	(1)
7	3902066M91	1	Kit, Joint	(1)
8	3792640M1	1	Kit, Joint	(1)
				Replace and repair. Old interchangeable with new 3902067M91
9	3716367M1	1	Parts Pack	(1)
10	3902797M91	1	Protector	(3)
11	3902797M91	1	Protector	(4)
12	3790773M11	1	Kit, Service	(3)
13	3790773M11	1	Kit, Service	(4)
14	3902813M91	1	Protector	(5)
15	3790797M11	4	Kit, Service	(1)

FOOTNOTE [A] DIST 4 FLOATING POSITIONS ,FLOW ADJUST,KICK-OUT,W/ O, ZERO LEAK
FOOTNOTE [B] DIST 3 FLOATING POSITIONS,RETURN BY SPRING,FLOW AD JUST,ZERO LEAK
FOOTNOTE [C] 4 FLOATING POSITIONS DIST,FLOW ADJUST,KICK-OUT,ZER O LEAK

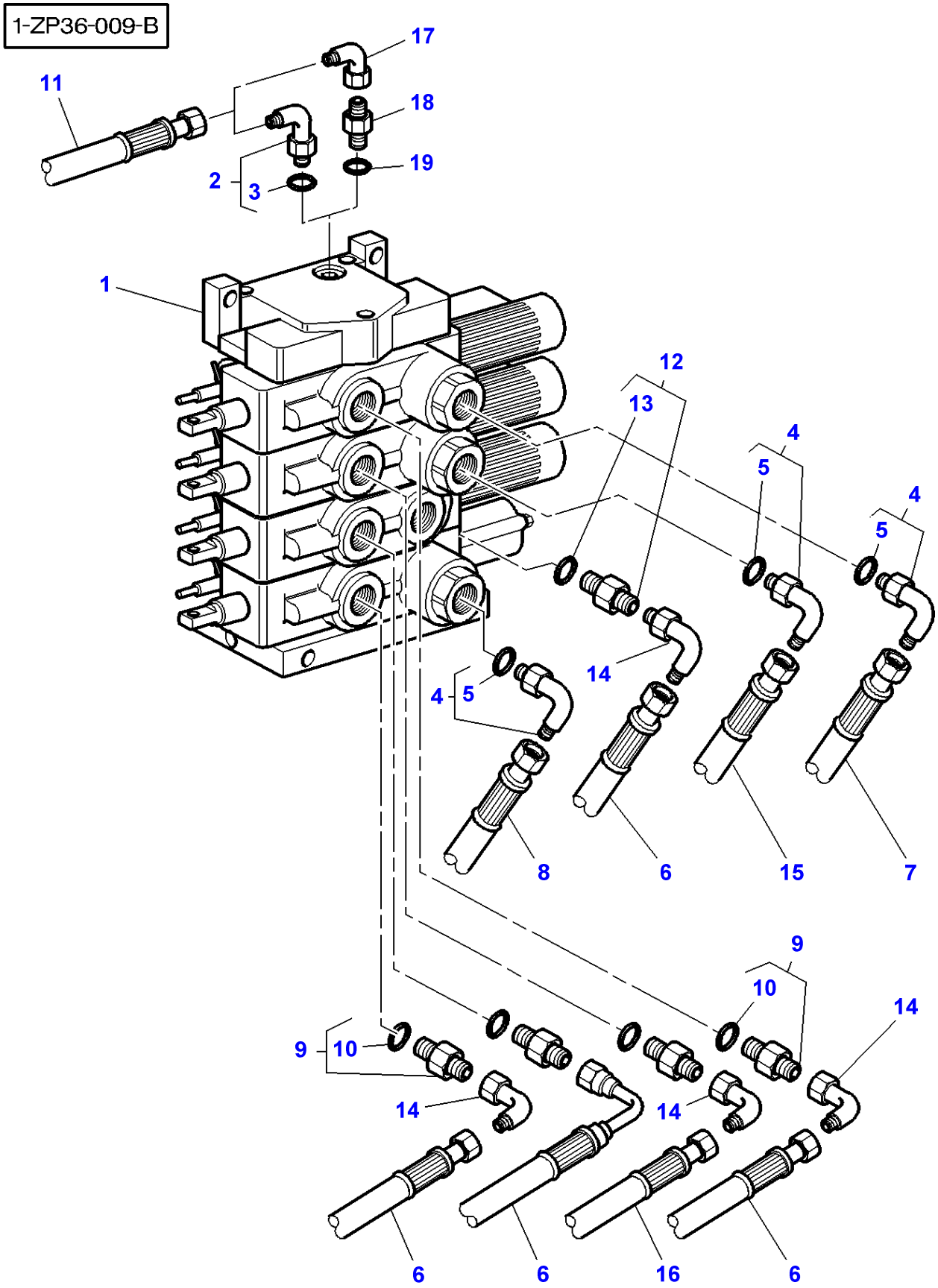
1-ZP36-009-B
17
11
18
19
2
3
1
12
13
4
5
4
5
14
4
5
8
6
15
7
9
10
14
9
10
14
14
6
6
16
6

https://truckmanualshub.com/

Item	Part Number	Qty	Description	Comments
1	3716322M93	1	Distributor	
2	357197X91	1	Elbow	Up to Serial or Engine Number H321001
3	831452M1	1	O Ring	(2)
4	380031X91	3	Union	7/88-14
5	1882958M1	1	O Ring	(4)
6	3712540M1	4	Hydr Hose	Length 650MM
7	3714953M1	1	Hydr Hose	Length 600MM
8	3714956M1	1	Hydr Hose	Length 600MM
9	835013M91	4	Union	
10	1882958M1	1	O Ring	(9)
11	3716398M1	1	Hydr Hose	[A]
	3792042M1	1	Hydr Hose	[B]
				Length 1400MM
12	380055X91	1	Union	
13	835024M1	1	O Ring	(12)
14	367386X1	4	Elbow	
15	3583591M1	1	Hydr Hose	Length 690MM
16	3792164M1	1	Hydr Hose	Length 900MM
17	364603X1	1	Elbow	From Serial or Engine Number H321002
18	358733X1	1	Union	From Serial or Engine Number H321002
19	831452M1	1	O Ring	

FOOTNOTE [A] WITH PUMP 45CC
FOOTNOTE [B] WITH PUMP 60CC

https://truckmanualshub.com/

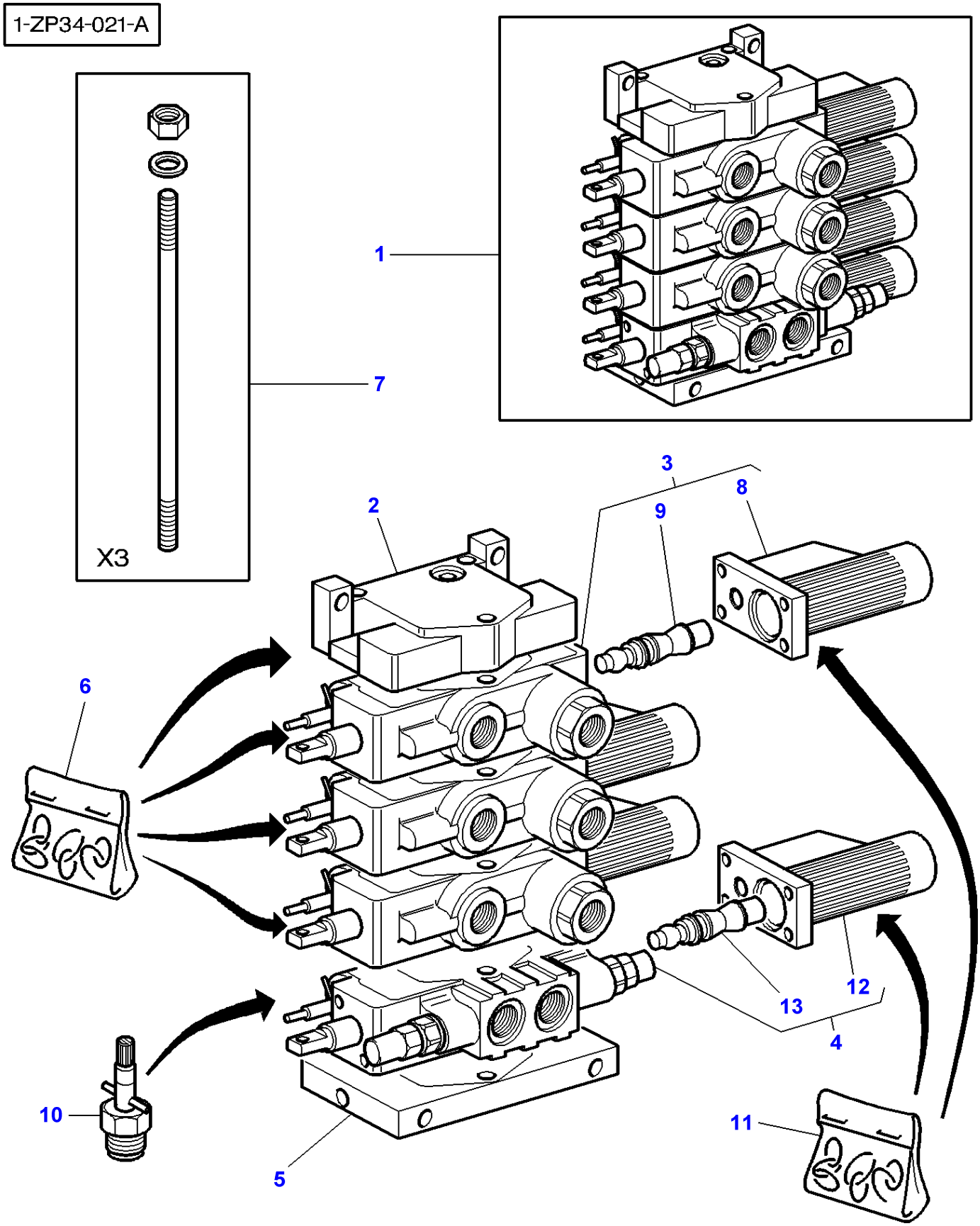

https://truckmanualshub.com/

Item	Part Number	Qty	Description	Comments
1	3716323M93	1	Distributor	
2	3716316M1	1	Element	(1)
3	3713928M5	3	Distributor	[A] (1)
4	3713927M4	1	Distributor	[B] (1)
5	3716314M1	1	Element	(1)
6	3792640M1	1	Kit, Joint	(1) Replace and repair. Old interchangeable with new 3902067M91
7	3716367M1	1	Parts Pack	(1)
8	3902797M91	1	Protector	(3)
9	3790773M11	1	Kit, Service	(3)
10	3790797M11	1	Kit, Service	(1)
11	3902066M91	1	Kit, Joint	(1)
12	3902797M91	1	Protector	(4)
13	3790773M11	1	Kit, Service	(4)

FOOTNOTE [A] 4 FLOATING POSITIONS DIST,FLOW ADJUST,KICK-OUT,ZER O LEAK
FOOTNOTE [B] 4 FLOAT POSIT DIST,FLOW ADJUST,KICK-OUT W 2 OVERP RES.VALVE AND RESUPPLYING FOR HYDRAULIC MOTOR

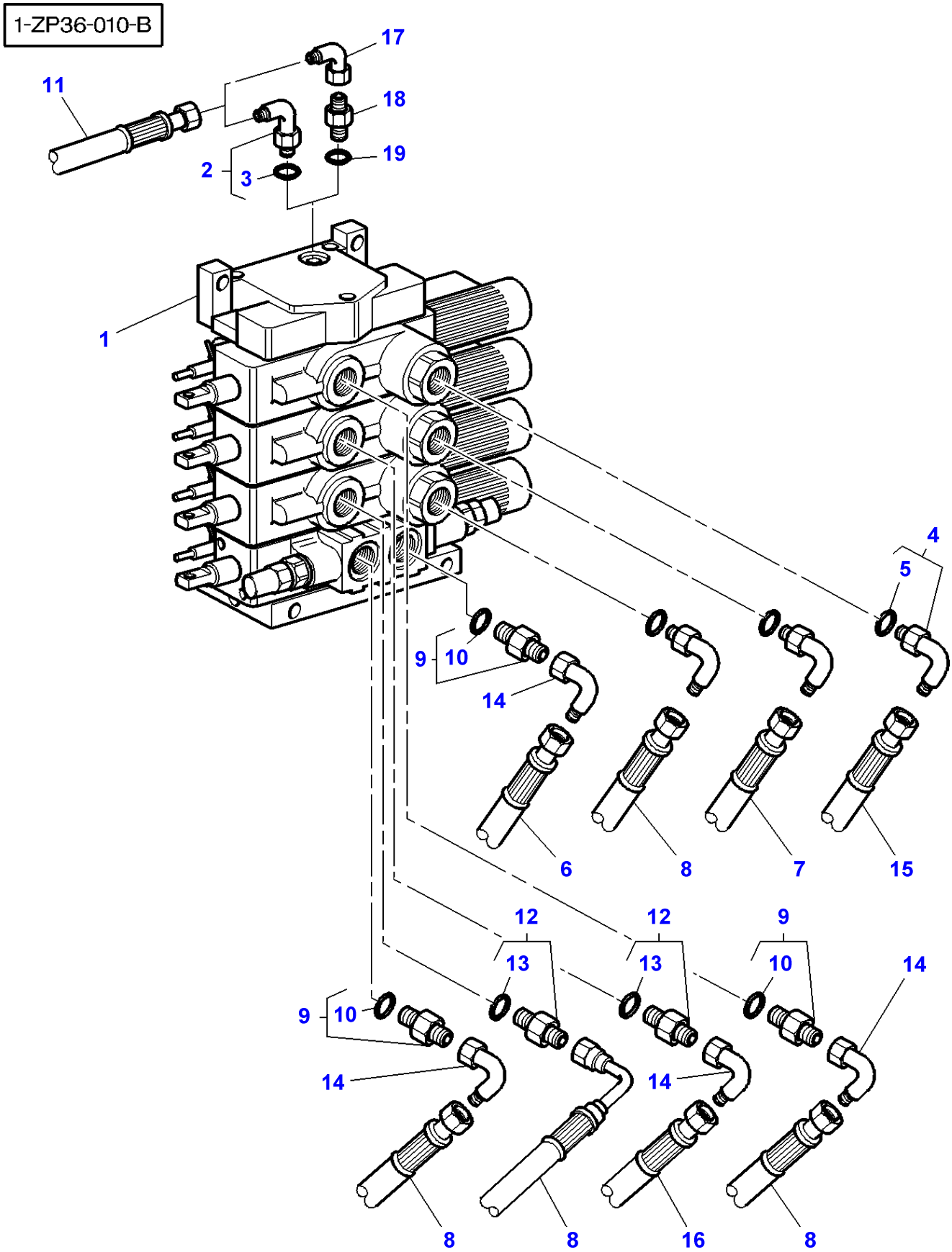
1-ZP36-010-B
17
11
18
19
2
3
1
4
5
9
10
14
6
8
7
15
12
12
9
13
13
10
14
9
10
14
14
8
8
16
8

https://truckmanualshub.com/

Item	Part Number	Qty	Description	Comments
1	3716323M93	1	Distributor	
2	357197X91	1	Elbow	Up to Serial or Engine Number H321001
3	831452M1	1	O Ring	(2)
4	380031X91	3	Union	7/88-14
5	1882958M1	1	O Ring	(4)
6	3714956M1	1	Hydr Hose	Length 600MM
7	3583591M1	1	Hydr Hose	Length 690MM
8	3712540M1	4	Hydr Hose	Length 650MM
9	835013M91	3	Union	
10	1882958M1	1	O Ring	(9)
11	3716398M1	1	Hydr Hose	[A]
	3792042M1	1	Hydr Hose	[B]
				Length 1400MM
12	380055X91	2	Union	
13	835024M1	1	O Ring	(12)
14	367386X1	4	Elbow	
15	3714953M1	1	Hydr Hose	Length 600MM
16	3792164M1	1	Hydr Hose	Length 900MM
17	364603X1	1	Elbow	From Serial or Engine Number H321002
18	358733X1	1	Union	From Serial or Engine Number H321002
19	831452M1	1	O Ring	

FOOTNOTE [A] WITH PUMP 45CC
FOOTNOTE [B] WITH PUMP 60CC

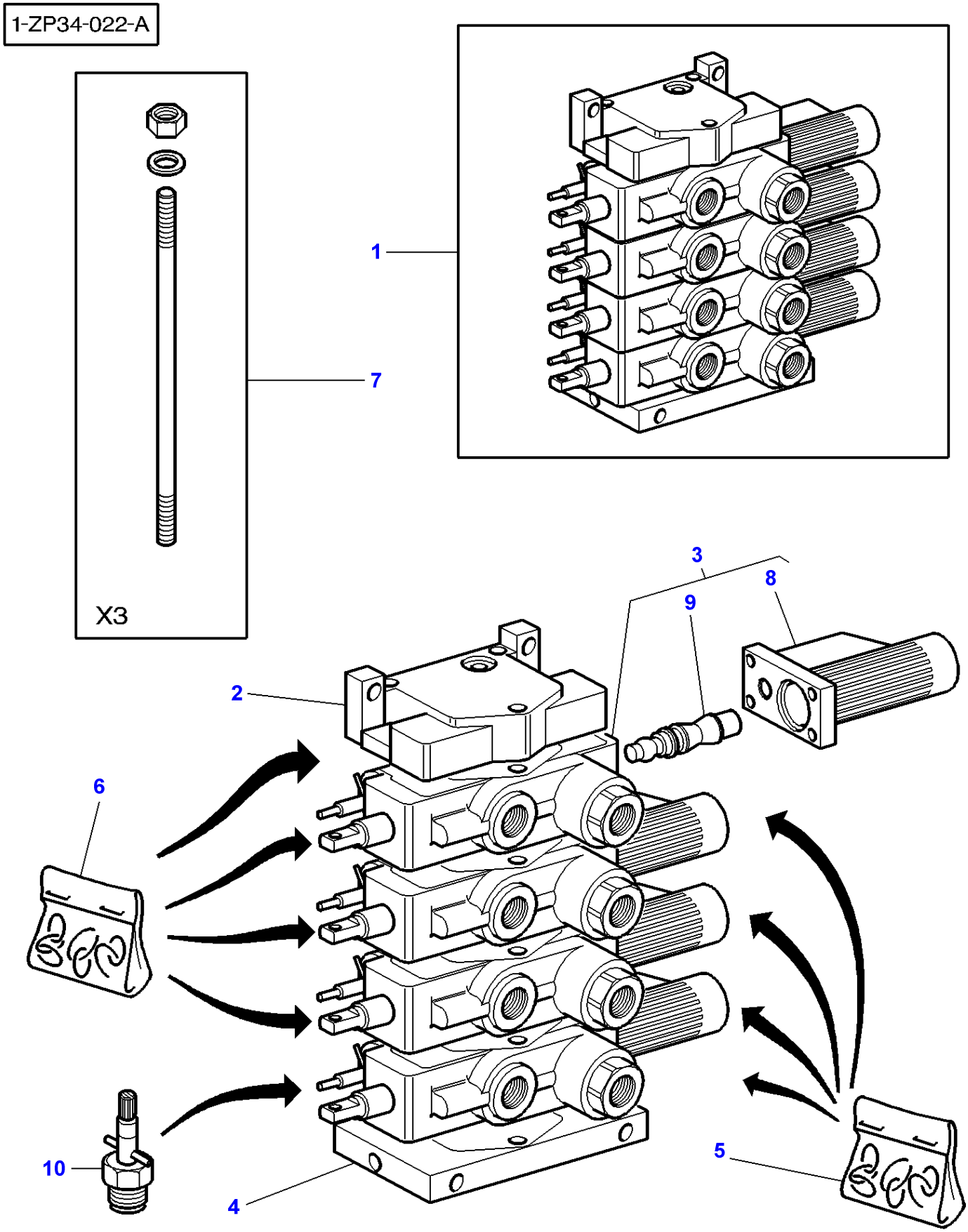
1-ZP34-022-A
X3
1
7
2
3
8
9
6
10
4
5

https://truckmanualshub.com/

Item	Part Number	Qty	Description	Comments
1	3716324M93	1	Distributor	
2	3716316M1	1	Element	(1)
3	3713928M5	4	Distributor	[A]
				(1)
4	3716314M1	1	Element	(1)
5	3902066M91	1	Kit, Joint	(1)
6	3792640M1	1	Kit, Joint	(1)
				Replace and repair. Old interchangeable with new 3902067M91
7	3716367M1	1	Parts Pack	(1)
8	3902797M91	1	Protector	(3)
9	3790773M11	1	Kit, Service	(3)
10	3790797M11	1	Kit, Service	(3)

FOOTNOTE [A] 4 FLOATING POSITIONS DIST,FLOW ADJUST,KICK-OUT,ZER O LEAK

https://truckmanualshub.com/

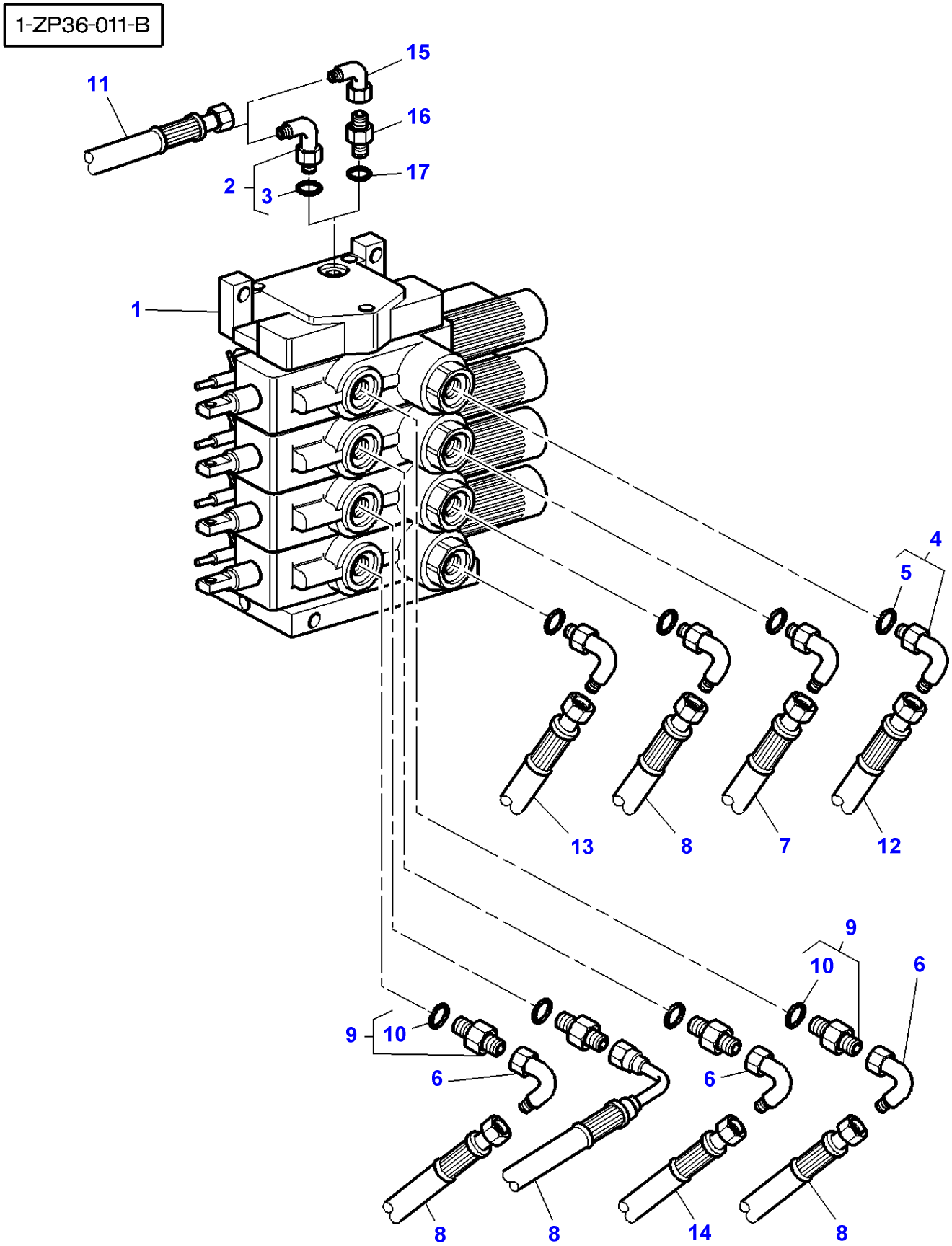

https://truckmanualshub.com/

Item	Part Number	Qty	Description	Comments
1	3716324M93	1	Distributor	
2	357197X91	1	Elbow	Up to Serial or Engine Number H321001
3	831452M1	1	O Ring	(2)
4	380031X91	4	Union	7/88-14
5	1882958M1	1	O Ring	(4)
6	367386X1	3	Elbow	
7	3583591M1	1	Hydr Hose	Length 690MM
8	3712540M1	4	Hydr Hose	Length 650MM
9	835013M91	4	Union	
10	1882958M1	1	O Ring	(9)
11	3716398M1	1	Hydr Hose	[A]
	3792042M1	1	Hydr Hose	[B]
				Length 1400MM
12	3714953M1	1	Hydr Hose	Length 600MM
13	3714956M1	1	Hydr Hose	Length 600MM
14	3792164M1	1	Hydr Hose	Length 900MM
15	364603X1	1	Elbow	From Serial or Engine Number H321002
16	358733X1	1	Union	From Serial or Engine Number H321002
17	831452M1	1	O Ring	

FOOTNOTE [A] WITH PUMP 45CC
FOOTNOTE [B] WITH PUMP 60CC

https://truckmanualshub.com/

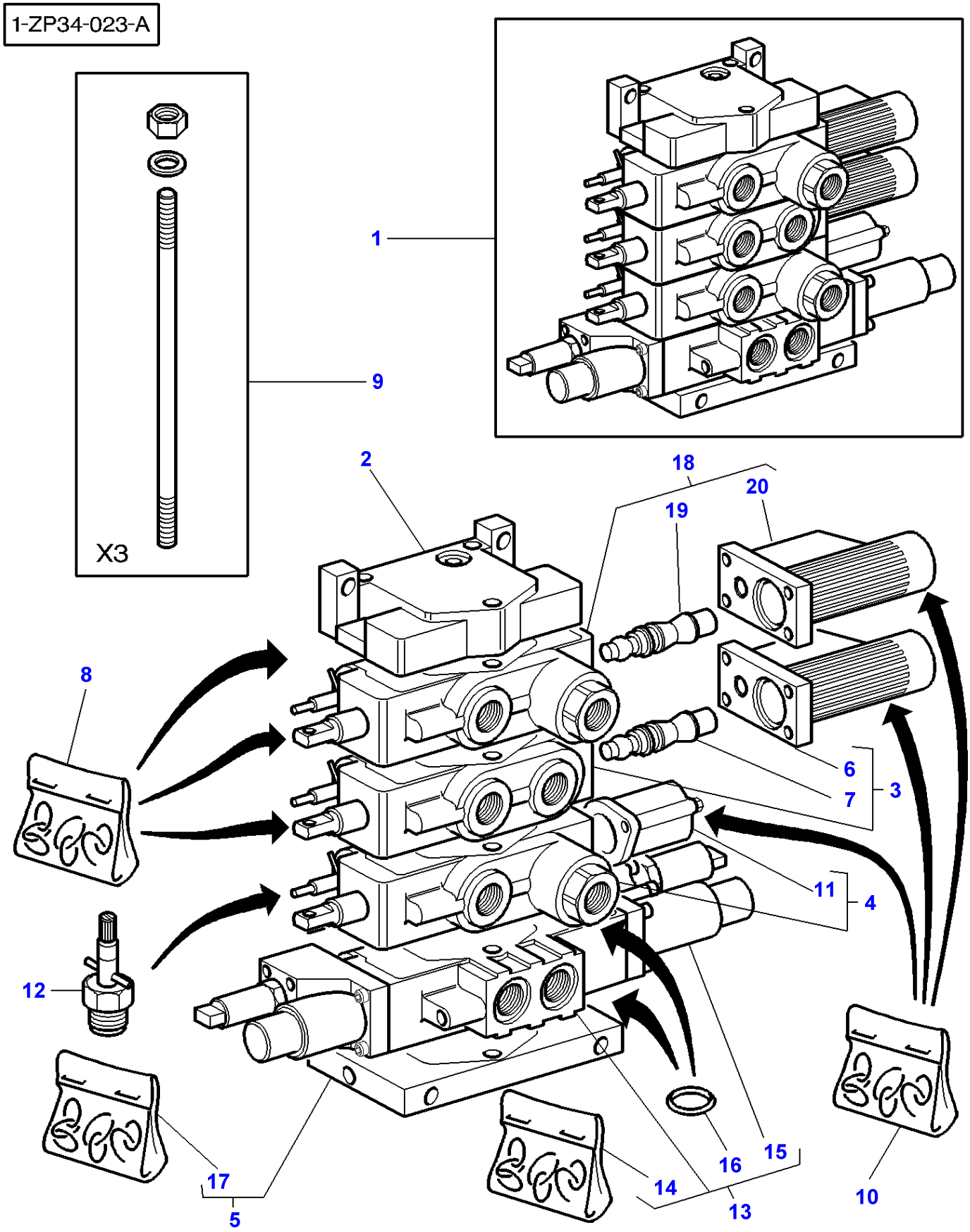

https://truckmanualshub.com/

Item	Part Number	Qty	Description	Comments
1	3716393M93	1	Distributor	
2	3716316M1	1	Element	(1)
3	3792803M3	1	Distributor	[A]
				(1)
				Replace and repair. Old interchangeable with new 3902062M92
4	3792802M1	1	Distributor	[B]
				(1)
				Replace and repair. Old interchangeable with new 3902063M91
5	3716315M1	1	Element	(1)
6	3902797M91	1	Protector	(3)
7	3790773M11	1	Kit, Service	(3)
8	3792640M1	1	Kit, Joint	(1)
				Replace and repair. Old interchangeable with new 3902067M91
9	3716367M1	1	Parts Pack	(1)
10	3902066M91	1	Kit, Joint	(1)
11	3902813M91	1	Protector	(4)
12	3790797M11	3	Kit, Service	(1)
13	3715122M2	1	Pressure Valve	[C]
				(1)
14	3902734M91	1	Kit, Joint	(13)
15	3900512M92	2	Pressure Valve	(13)
16	359288X1	4	Seal	(13)
17	**3792639M1**	1	Kit, Joint	(5)
				Replace and repair. Old interchangeable with new 3902733M91
18	3713928M5	1	Distributor	[D]
				(1)
19	3790773M11	1	Kit, Service	(18)
20	3902797M91	1	Protector	(18)

FOOTNOTE [A] DIST 4 FLOATING POSITIONS ,FLOW ADJUST,KICK-OUT,W/ O, ZERO LEAK
FOOTNOTE [B] DIST 3 FLOATING POSITIONS,RETURN BY SPRING,FLOW AD JUST,ZERO LEAK
FOOTNOTE [C] DIST 3 FLOATING POSITIONS,AUTOMATIC KICK-OUT(BY SP RING),FLOW ADJUST,ELECTRIC CONTROL
FOOTNOTE [D] 4 FLOATING POSITIONS DIST,FLOW ADJUST,KICK-OUT,ZER O LEAK

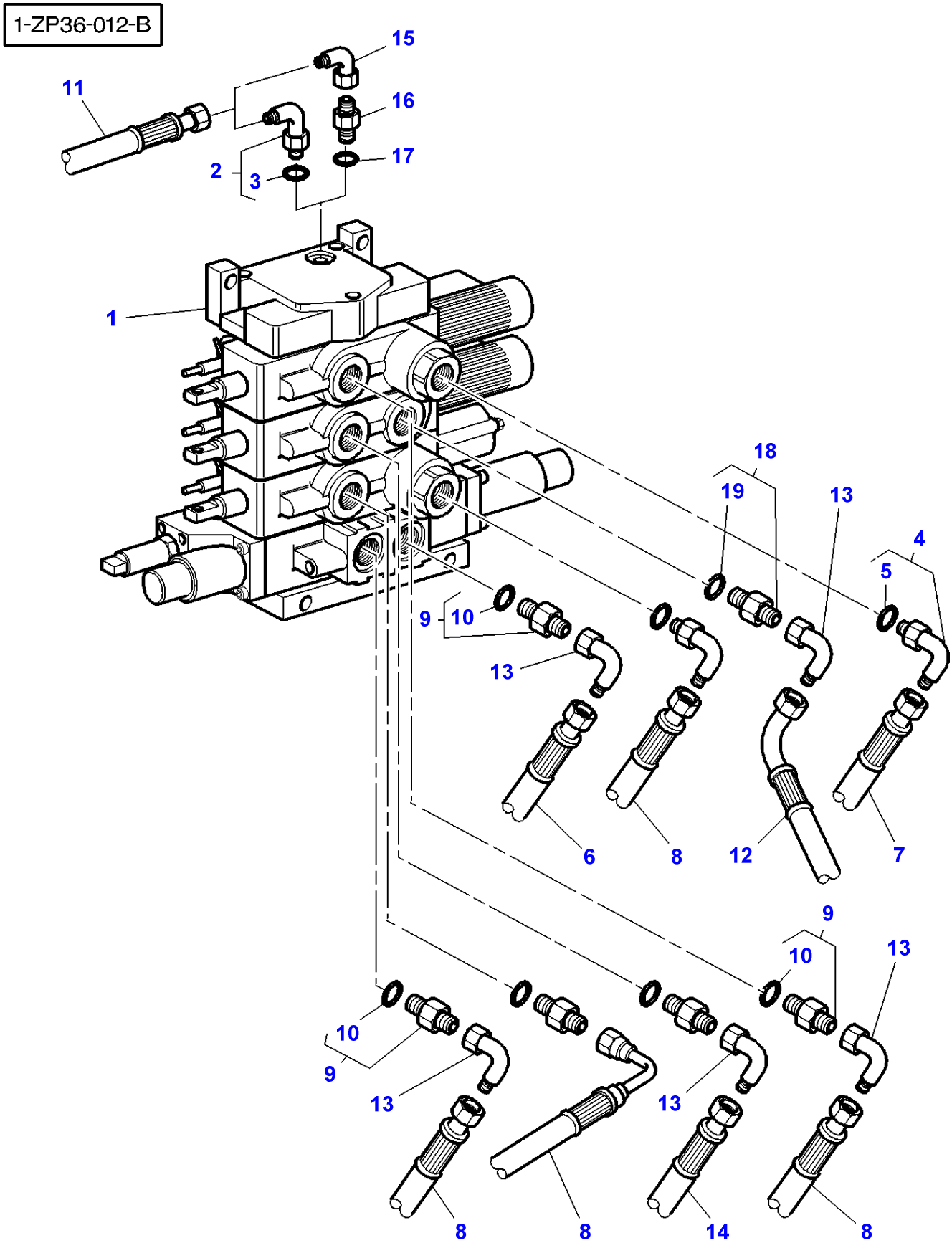
1-ZP36-012-B
15
11
16
17
2
3
1
18
19
13
4
5
9
10
13
6
8
12
7
9
10
13
10
9
13
13
8
8
14
8

https://truckmanualshub.com/

Item	Part Number	Qty	Description	Comments
1	3716393M93	1	Distributor	
2	357197X91	1	Elbow	Up to Serial or Engine Number H321001
3	831452M1	1	O Ring	(2)
4	380031X91	2	Union	7/88-14
5	1882958M1	1	O Ring	(4)
6	3714956M1	1	Hydr Hose	Length 600MM
7	3714953M1	1	Hydr Hose	Length 600MM
8	3712540M1	4	Hydr Hose	Length 650MM
9	835013M91	5	Union	
10	1882958M1	1	O Ring	(9)
11	3716398M1	1	Hydr Hose	[A]
	3792042M1	1	Hydr Hose	[B]
				Length 1400MM
12	3792167M1	1	Hydr Hose	Length 780MM
13	367386X1	5	Elbow	
14	3792164M1	1	Hydr Hose	Length 900MM
15	364603X1	1	Elbow	From Serial or Engine Number H321002
16	358733X1	1	Union	From Serial or Engine Number H321002
17	831452M1	1	O Ring	
18	380055X91	1	Union	
19	835024M1	1	O Ring	(18)

FOOTNOTE [A] WITH PUMP 45CC
FOOTNOTE [B] WITH PUMP 60CC

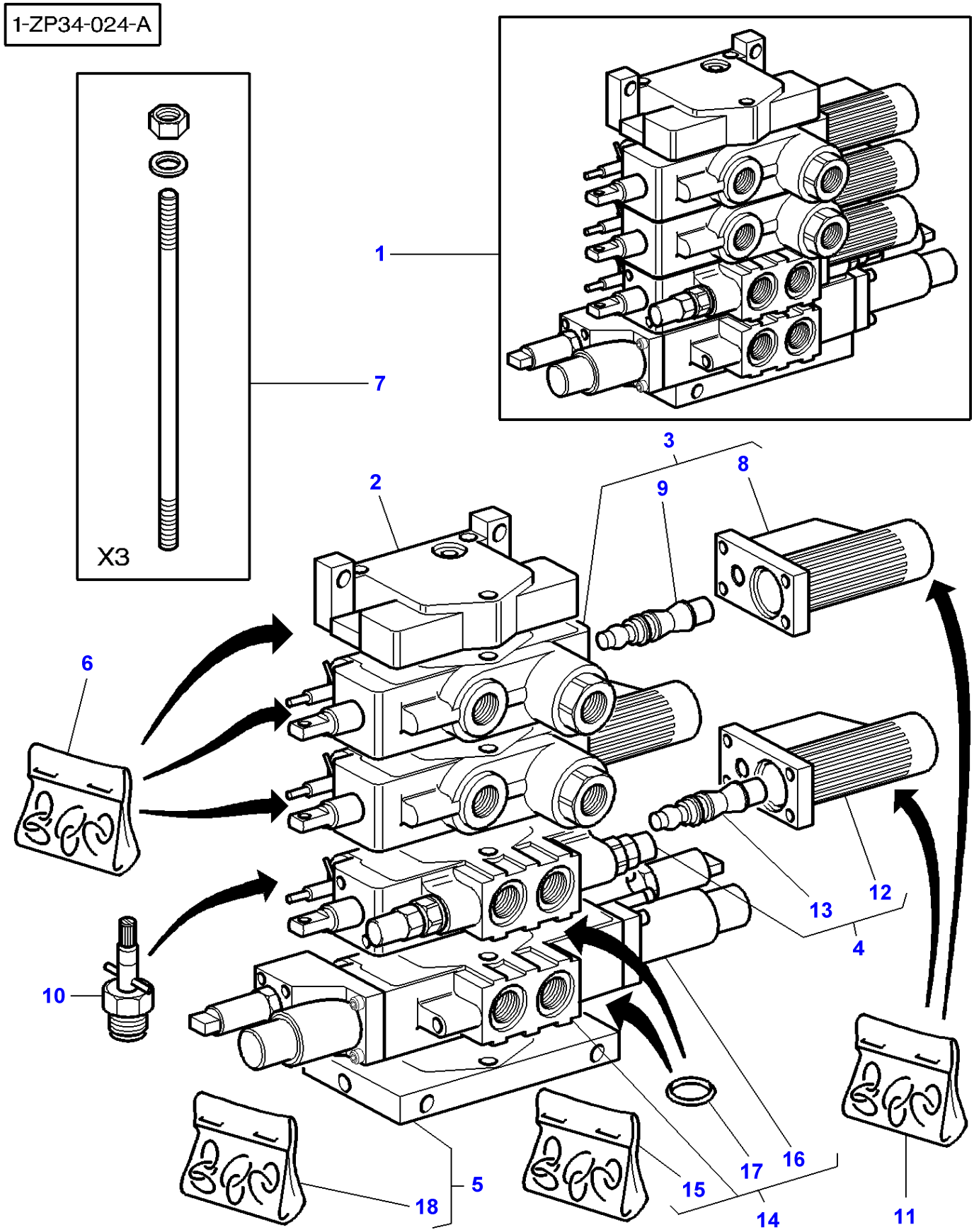
1-ZP34-024-A
X3
1
2
3
4
5
6
7
8
9
10
11
12
13
14
15
16
17
18

https://truckmanualshub.com/

Item	Part Number	Qty	Description	Comments
1	3716394M93	1	Distributor	
2	3716316M1	1	Element	(1)
3	3713928M5	2	Distributor	[A] (1)
4	3713927M4	1	Distributor	[B] (1)
5	3716315M1	1	Element	(1)
6	3792640M1	1	Kit, Joint	(1) Replace and repair. Old interchangeable with new 3902067M91
7	3716367M1	1	Parts Pack	(1)
8	3902797M91	1	Protector	(3)
9	3790773M11	1	Kit, Service	(3)
10	3790797M11	2	Kit, Service	(1)
11	3902066M91	1	Kit, Joint	(1)
12	3902797M91	1	Protector	(4)
13	3790773M11	1	Kit, Service	(4)
14	3715122M2	1	Pressure Valve	[C] (1)
15	3902734M91	1	Kit, Joint	(14)
16	3900512M92	2	Pressure Valve	(14)
17	359288X1	4	Seal	(14)
18	**3792639M1**	1	Kit, Joint	(5) Replace and repair. Old interchangeable with new 3902733M91

FOOTNOTE [A] 4 FLOATING POSITIONS DIST,FLOW ADJUST,KICK-OUT,ZER O LEAK
FOOTNOTE [B] 4 FLOAT POSIT DIST,FLOW ADJUST,KICK-OUT W 2 OVERP RES.VALVE AND RESUPPLYING FOR HYDRAULIC MOTOR
FOOTNOTE [C] DIST 3 FLOATING POSITIONS,AUTOMATIC KICK-OUT(BY SP RING),FLOW ADJUST,ELECTRIC CONTROL

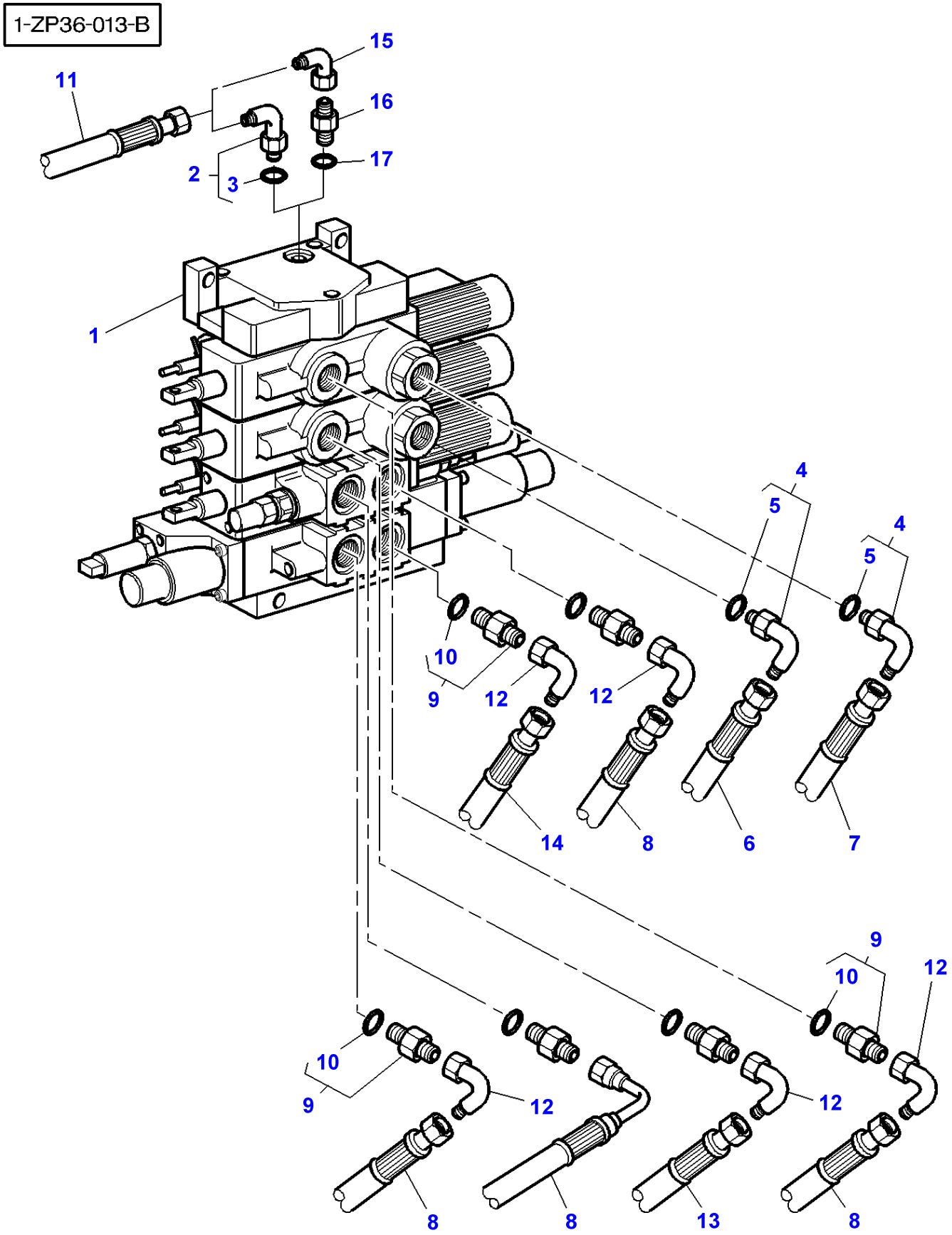
1-ZP36-013-B
15
11
16
17
2
3
1
4
5
4
5
10
9
12
12
14
8
6
7
9
10
12
10
9
12
12
8
8
13
8

https://truckmanualshub.com/

Item	Part Number	Qty	Description	Comments
1	3716394M93	1	Distributor	
2	357197X91	1	Elbow	Up to Serial or Engine Number H321001
3	831452M1	1	O Ring	(2)
4	380031X91	2	Union	7/88-14
5	1882958M1	1	O Ring	(4)
6	3583591M1	1	Hydr Hose	Length 690MM
7	3714953M1	1	Hydr Hose	Length 600MM
8	3712540M1	4	Hydr Hose	Length 650MM
9	835013M91	6	Union	
10	1882958M1	1	O Ring	(9)
11	3716398M1	1	Hydr Hose	[A]
	3792042M1	1	Hydr Hose	[B]
				Length 1400MM
12	367386X1	5	Elbow	
13	3792164M1	1	Hydr Hose	Length 900MM
14	3714956M1	1	Hydr Hose	Length 600MM
15	364603X1	1	Elbow	From Serial or Engine Number H321002
16	358733X1	1	Union	From Serial or Engine Number H321002
17	831452M1	1	O Ring	

FOOTNOTE [A] WITH PUMP 45CC
FOOTNOTE [B] WITH PUMP 60CC

https://truckmanualshub.com/

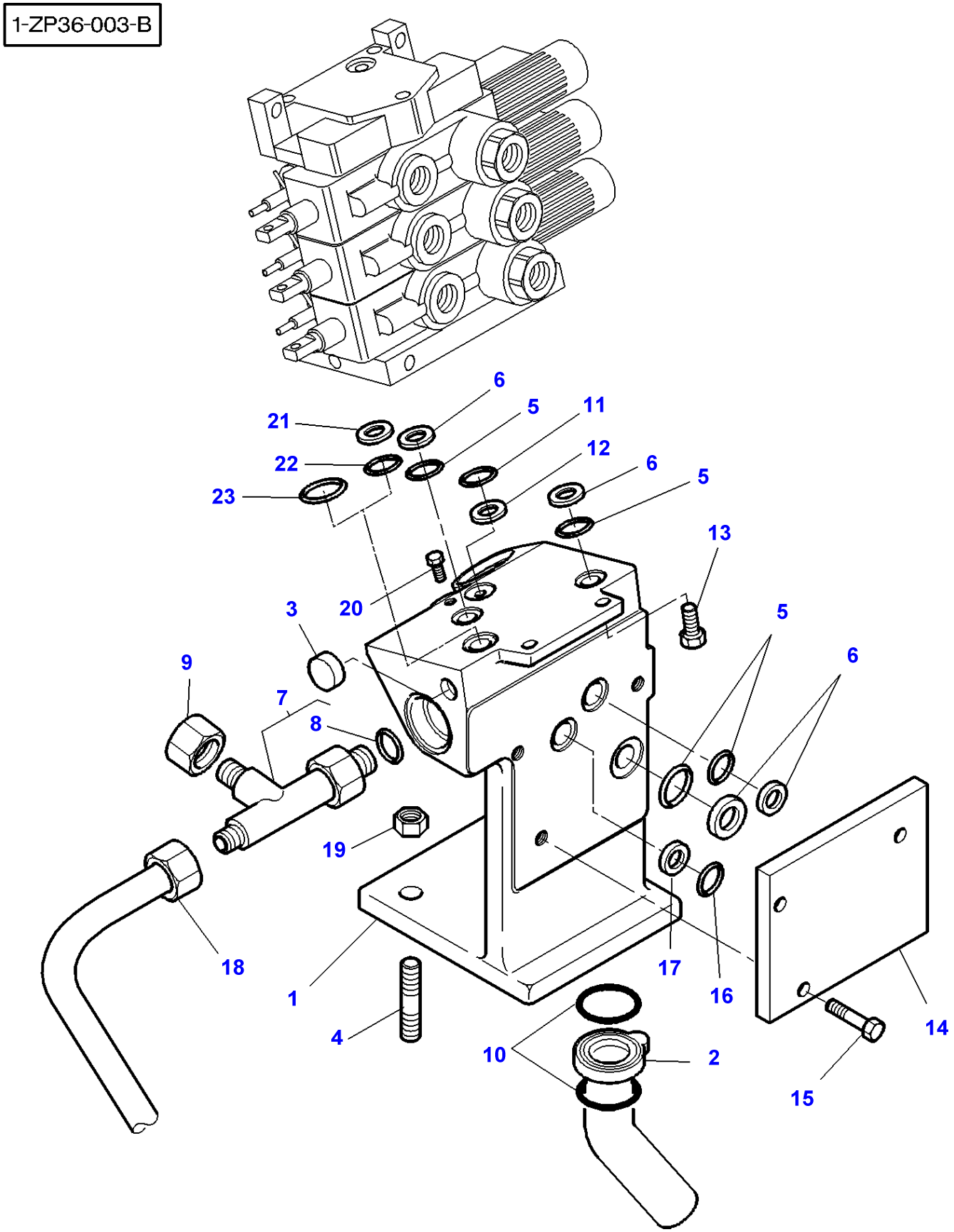

https://truckmanualshub.com/

Item	Part Number	Qty	Description	Comments
1	3716900M5	1	Angle	
2	3716914M92	1	Tube	
3	3015150X1	2	Plug	Diameter 24MM
4	3791655M1	3	Stud	
5	392224X1	4	O Ring	
6	3791880M1	4	Bush	Diameter 22,3 MM
7	3019633X91	1	Union	
8	3019399X1	1	O Ring	(7)
9	70922195	1	Cap	
10	366617X1	2	O Ring	Diameter 47MM
11	3791879M1	1	Bush	
12	1441133X1	1	Gasket	
13	3009292X1	2	Screw	M10X25
14	3716325M1	1	Plate	[B]
15	339123X1	3	Hex. Sock. Screw	M8X20
16	1442477X1	1	Gasket	
17	3791884M2	1	Bush	
18	3716397M1	1	Tube	[A]
	3791709M1	1	Tube	[C]
19	3019862X1	3	Nut Metric	M12
20	3010812X1	1	Screw	M8X30
21	3791880M1	1	Bush	Up to Serial or Engine Number H328037
22	392224X1	1	O Ring	Up to Serial or Engine Number H328037
23	3010980X1	1	O Ring	From Serial or Engine Number H328038 Diameter 25,07MM

FOOTNOTE [A] WITH PUMP 45CC
FOOTNOTE [B] WITHOUT HYDRAULIC LIFT
FOOTNOTE [C] WITH PUMP 60CC

https://truckmanualshub.com/

1-ZP36-004-B

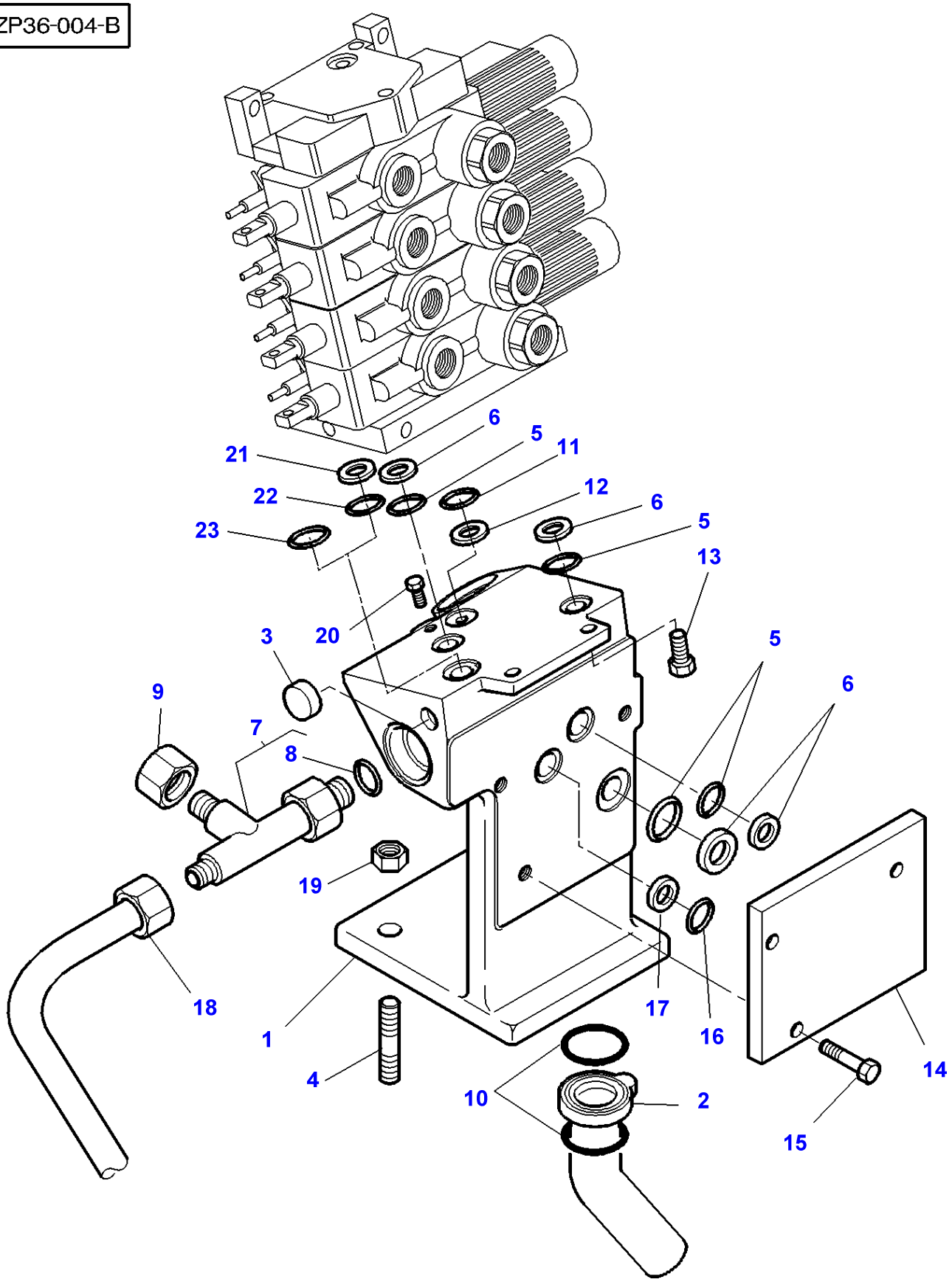

https://truckmanualshub.com/

Item	Part Number	Qty	Description	Comments
1	3716900M5	1	Angle	
2	3716914M92	1	Tube	
3	3015150X1	2	Plug	Diameter 24MM
4	3791655M1	3	Stud	
5	392224X1	4	O Ring	
6	3791880M1	4	Bush	Diameter 22,3 MM
7	3019633X91	1	Union	
8	3019399X1	1	O Ring	(7)
9	70922195	1	Cap	
10	366617X1	2	O Ring	Diameter 47MM
11	3791879M1	1	Bush	
12	1441133X1	1	Gasket	
13	3009292X1	2	Screw	M10X25
14	3716325M1	1	Plate	[B]
15	339123X1	3	Hex. Sock. Screw	M8X20
16	1442477X1	1	Gasket	
17	3791884M2	1	Bush	
18	3716397M1	1	Tube	[A]
	3791709M1	1	Tube	[C]
19	3019862X1	3	Nut Metric	M12
20	3010812X1	1	Screw	M8X30
21	3791880M1	1	Bush	Up to Serial or Engine Number H328037
22	392224X1	1	O Ring	Up to Serial or Engine Number H328037
23	3010980X1	1	O Ring	From Serial or Engine Number H328038 Diameter 25,07MM

FOOTNOTE [A] WITH PUMP 45CC
FOOTNOTE [B] WITHOUT HYDRAULIC LIFT
FOOTNOTE [C] WITH PUMP 60CC

https://truckmanualshub.com/

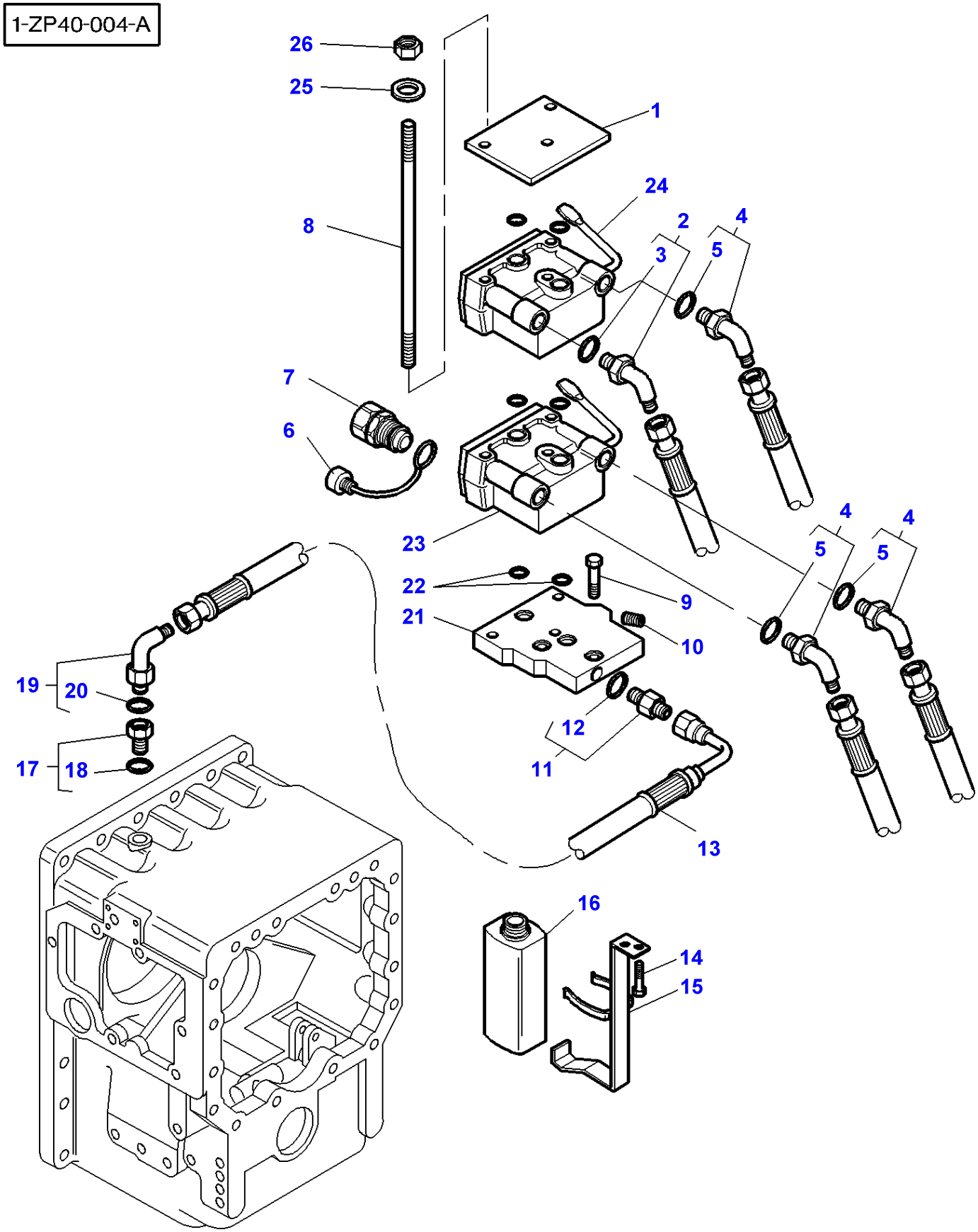

https://truckmanualshub.com/

Item	Part Number	Qty	Description	Comments
1	3792734M1	1	Plate	
2	3019592X91	1	Union	
3	3019396X1	1	O Ring	(2)
4	3019418X91	3	Elbow Nipple	
5	3019398X1	1	O Ring	(4)
6	3615822M1	4	Cap	
7	**1026700M91**	4	Male Coupler	3/4-16
	3583932M1	4	Male Coupler	M18
8	3793410M2	3	Stud	M8X173
9	339123X1	2	Hex. Sock. Screw	M8X20
10	3791352M1	1	Plug	
11	3019660X91	1	Union	
12	3019393X1	1	O Ring	(11)
13	3792750M1	1	Hydr Hose	
14	3009270X1	2	Screw Metric	M5X10
15	3792769M91	1	Support	
16	3792741M1	1	Can	
17	3792739M1	1	Plug	
18	3019399X1	1	O Ring	(17)
19	3019302X91	1	Union	
20	3019393X1	1	O Ring	(19)
21	3792745M1	1	Support	
22	3007432X1	6	O Ring	
23	**3792559M1**	1	Female Coupler	[A]
24	**3792561M1**	1	Female Coupler	[B]
25	390972X1	3	Washer Metric	
26	339169X1	3	Nut	

FOOTNOTE [A] BLACK
FOOTNOTE [B] RED

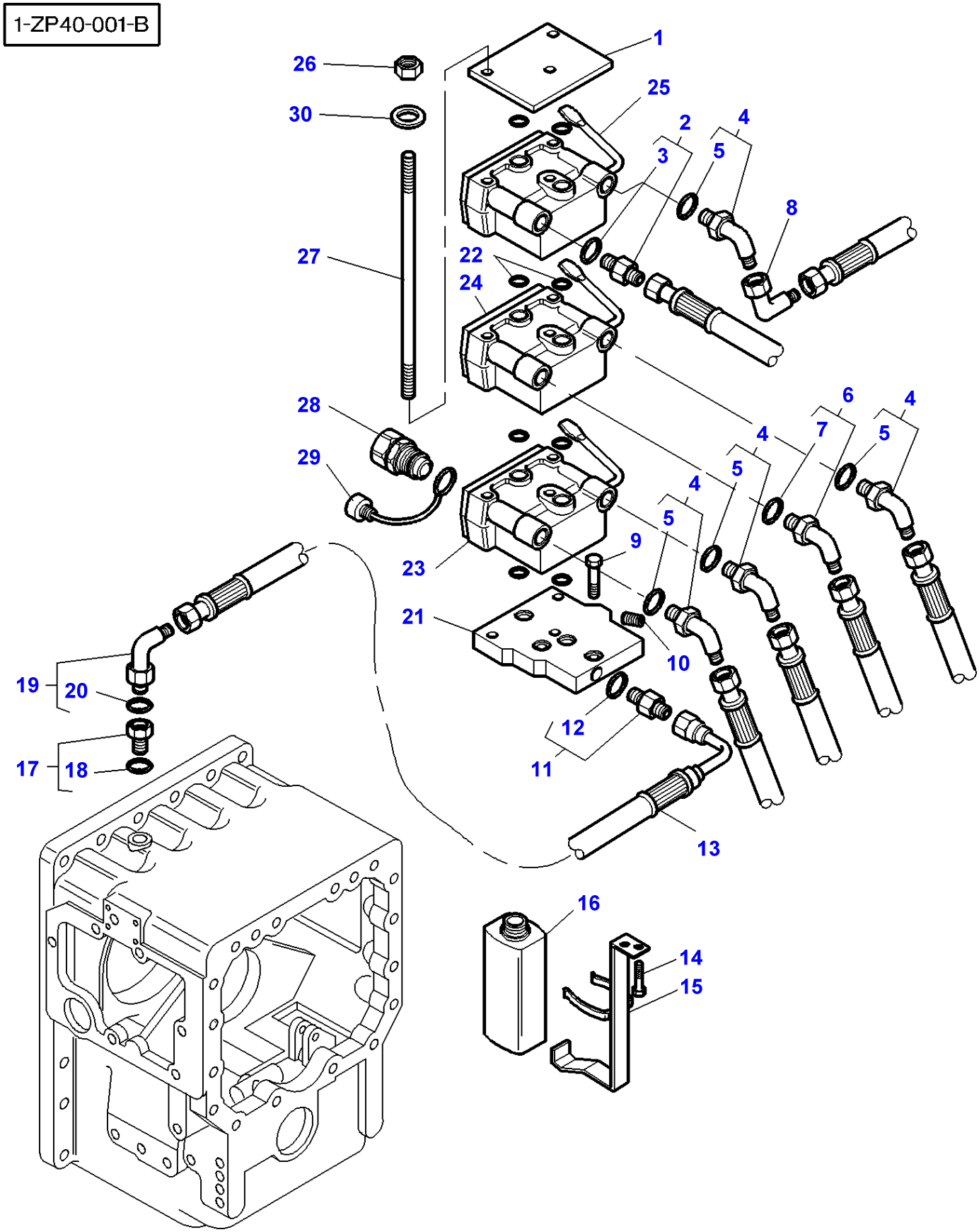
1-ZP40-001-B
1
2
3
4
5
6
7
8
9
10
11
12
13
14
15
16
17
18
19
20
21
22
23
24
25
26
27
28
29
30

https://truckmanualshub.com/

Item	Part Number	Qty	Description	Comments
1	3792734M1	1	Plate	
2	3019387X91	1	Union	
3	3019398X1	1	O Ring	(2)
4	3019418X91	4	Elbow Nipple	
5	3019398X1	1	O Ring	(4)
6	3019592X91	1	Union	
7	3019396X1	1	O Ring	(6)
8	367386X1	1	Elbow	
9	339123X1	2	Hex. Sock. Screw	M8X20
10	3791352M1	1	Plug	
11	3019660X91	1	Union	
12	3019393X1	1	O Ring	(11)
13	3792750M1	1	Hydr Hose	
14	3009270X1	2	Screw Metric	M5X10
15	3792769M91	1	Support	
16	3792741M1	1	Can	
17	3792739M1	1	Plug	
18	3019399X1	1	O Ring	(17)
19	3019302X91	1	Union	
20	3019393X1	1	O Ring	(19)
21	3792745M1	1	Support	
22	3007432X1	8	O Ring	
23	**3792559M1**	1	Female Coupler	[A]
24	**3792561M1**	1	Female Coupler	[B]
25	**3792562M1**	1	Female Coupler	[C]
26	339169X1	3	Nut	
27	3792751M2	3	Stud	M8X243
28	**1026700M91**	6	Male Coupler	3/4-16
	3583932M1	6	Male Coupler	M18
29	3615822M1	6	Cap	
30	390972X1	3	Washer Metric	

FOOTNOTE [A] BLACK
FOOTNOTE [B] RED
FOOTNOTE [C] GREEN

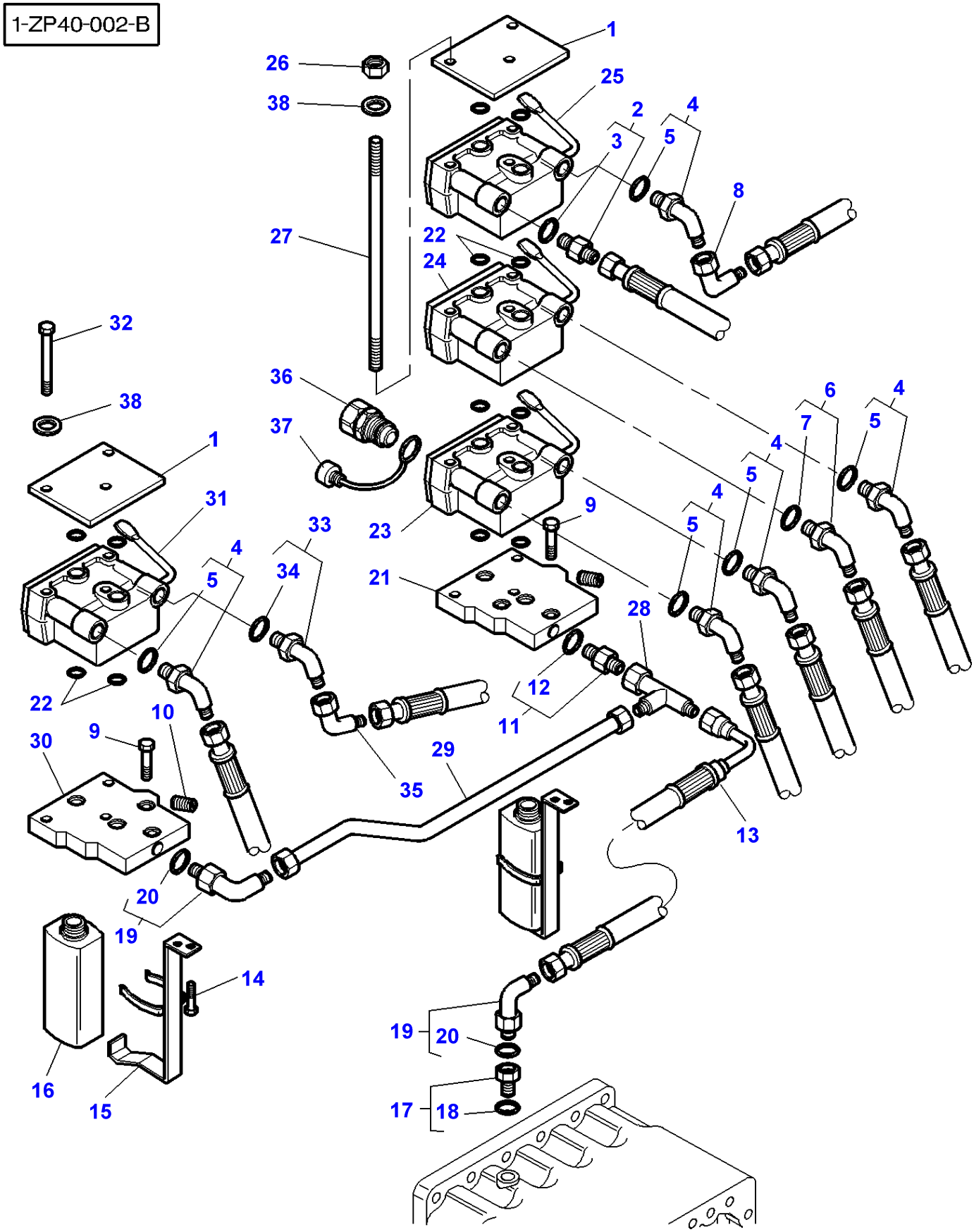
1-ZP40-002-B
1
2
3
4
5
6
7
8
9
10
11
12
13
14
15
16
17
18
19
20
21
22
23
24
25
26
27
28
29
30
31
32
33
34
35
36
37
38

https://truckmanualshub.com/

Item	Part Number	Qty	Description	Comments
1	3792734M1	2	Plate	
2	3019387X91	1	Union	
3	3019398X1	1	O Ring	(2)
4	3019418X91	5	Elbow Nipple	
5	3019398X1	1	O Ring	(4)
6	3019592X91	1	Union	
7	3019396X1	1	O Ring	(6)
8	367386X1	1	Elbow	
9	339123X1	4	Hex. Sock. Screw	M8X20
10	3791352M1	2	Plug	
11	3019660X91	1	Union	
12	3019393X1	1	O Ring	(11)
13	3792750M1	1	Hydr Hose	
14	3009270X1	4	Screw Metric	M5X10
15	3792769M91	2	Support	
16	3792741M1	2	Can	
17	3792739M1	1	Plug	
18	3019399X1	1	O Ring	(17)
19	3019302X91	2	Union	
20	3019393X1	1	O Ring	(19)
21	3792745M1	1	Support	
22	3007432X1	12	O Ring	
23	**3792559M1**	1	Female Coupler	[A]
24	**3792561M1**	1	Female Coupler	[B]
25	**3792562M1**	1	Female Coupler	[C]
26	339169X1	3	Nut	
27	3792751M2	3	Stud	M8X243
28	373796X1	1	Teepiece	
29	3792720M91	1	Tube	
30	3792747M1	1	Support	
31	**3792563M1**	1	Female Coupler	[D]
32	339136X1	3	Hex. Sock. Screw	M8X90
33	3019592X91	1	Union	
34	3019396X1	1	O Ring	(33)
35	373784X1	1	Elbow	
36	**1026700M91**	8	Male Coupler	3/4-16
	3583932M1	8	Male Coupler	M18
37	3615822M1	8	Cap	
38	390972X1	6	Washer Metric	

FOOTNOTE [A] BLACK
FOOTNOTE [B] RED
FOOTNOTE [C] GREEN
FOOTNOTE [D] YELLOW

https://truckmanualshub.com/

1-ZP40-003-A

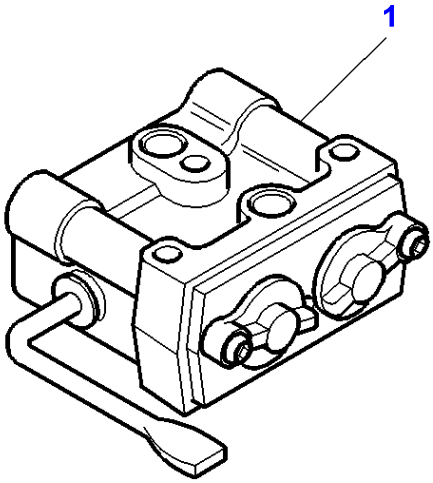

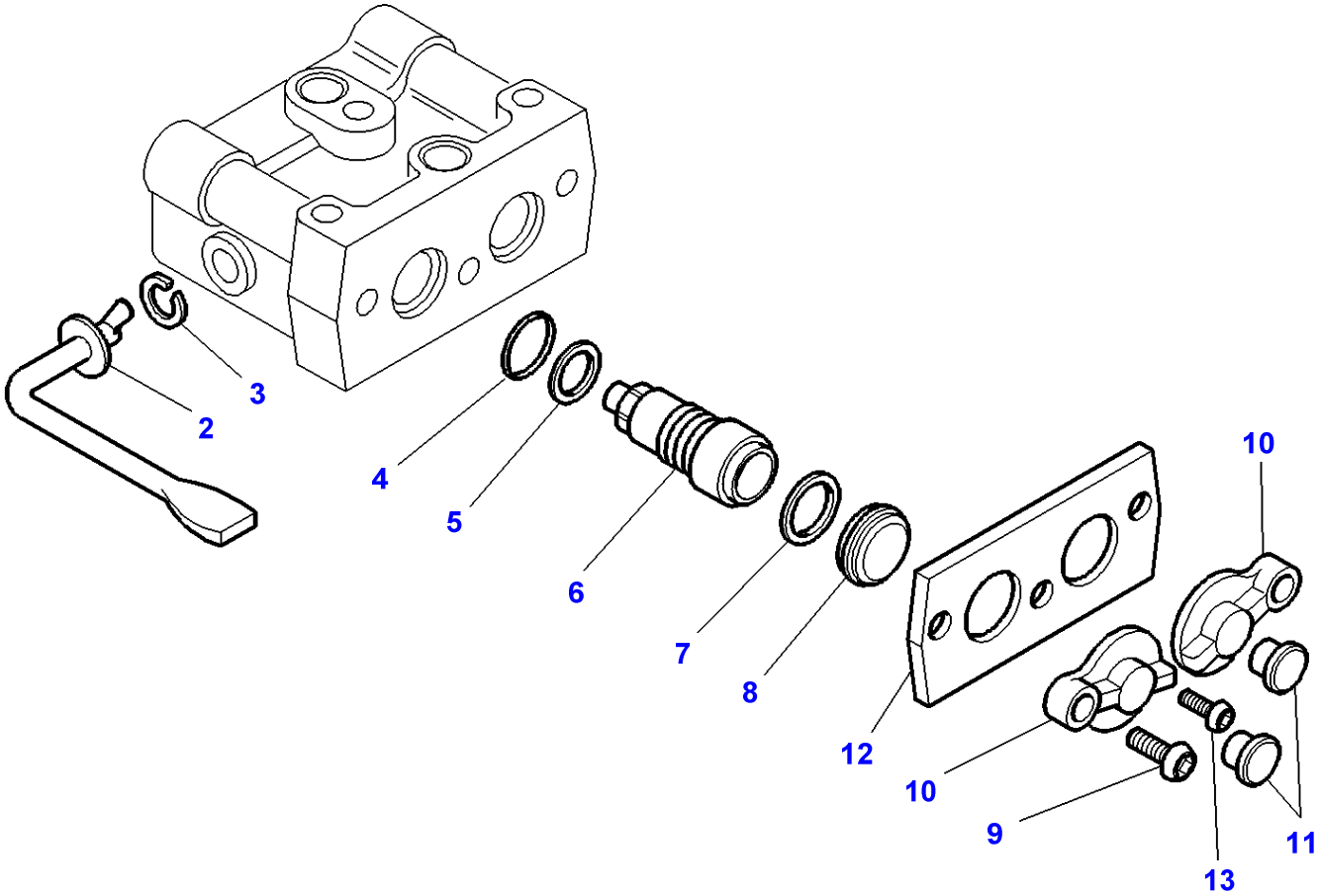

https://truckmanualshub.com/

Item	Part Number	Qty	Description	Comments
1	**3792559M1**	1	Female Coupler	[A]
	3792561M1	1	Female Coupler	[B]
	3792562M1	1	Female Coupler	[C]
	3792563M1	1	Female Coupler	[D]
2	3903463M91	1	Lever	(1)
3	3903462M1	1	Circlip	(1)
4	3903465M1	2	Gasket	(1)
5	3903464M1	2	Gasket	(1)
6	3903461M91	2	Female Coupler	(1)
7	3903460M1	2	Clip	(1)
8	3903459M1	2	Seal	(1)
9	3903455M1	2	Screw	(1)
10	3903456M1	2	Tap	(1)
11	3903467M1	2	Plug	[A] (1)
	3903468M1	2	Plug	[B] (1)
	3903466M1	2	Plug	[C] (1)
	3903454M1	2	Plug	[D] (1)
12	3903458M1	1	Plate	(1)
13	3903457M1	1	Screw	(1)

FOOTNOTE [A] BLACK
FOOTNOTE [B] RED
FOOTNOTE [C] GREEN
FOOTNOTE [D] YELLOW

https://truckmanualshub.com/

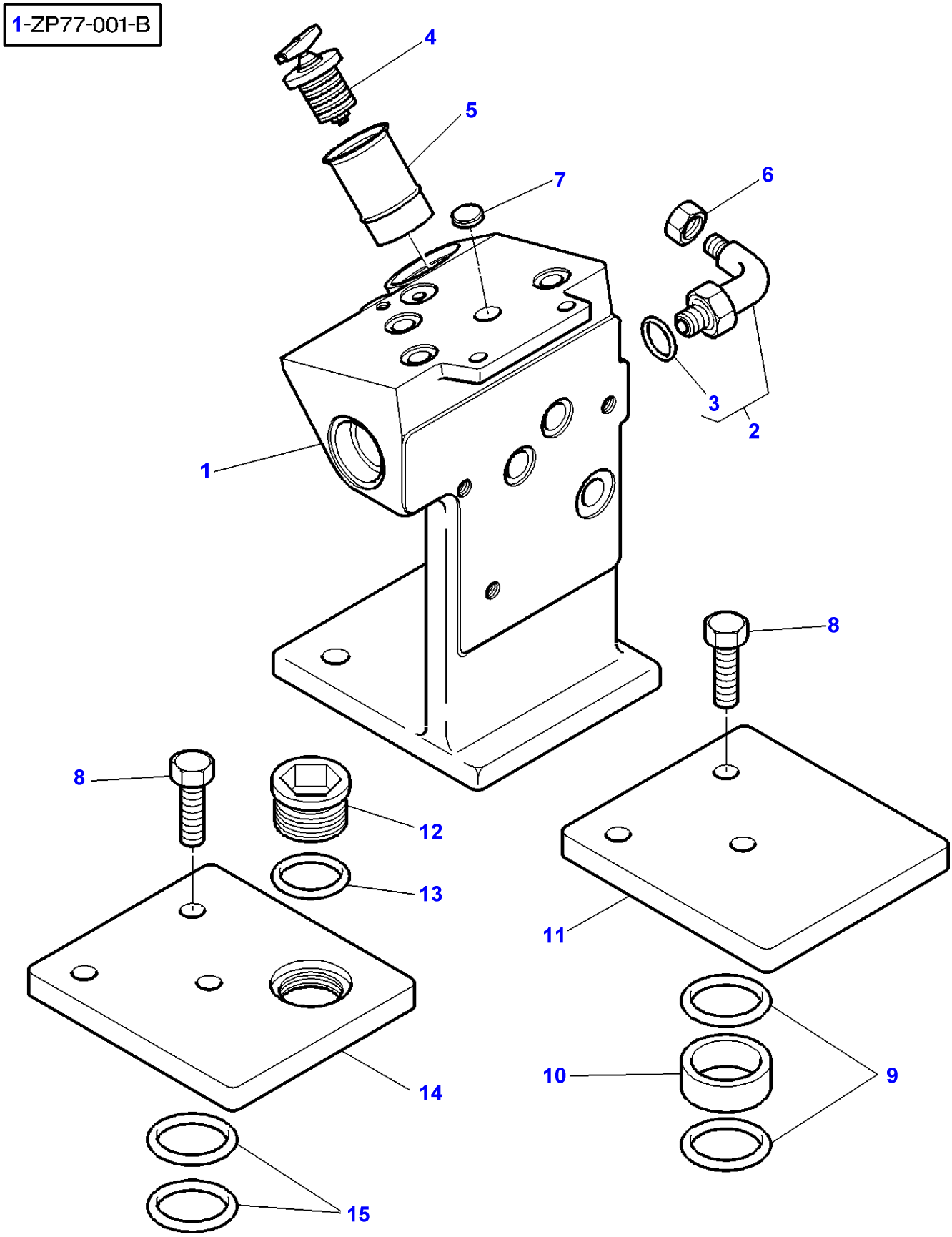

https://truckmanualshub.com/

Item	Part Number	Qty	Description	Comments
1	3716900M5	1	Angle	
2	3019420X91	1	Union	
3	3019398X1	1	O Ring	(2)
4	**3791288M1**	1	Plug	
5	3791466M2	1	Tube	
6	355782X1	1	Plug	
7	391563X1	1	Plug	Diameter 16MM
8	3009507X1	3	Hex. Sock. Screw	[A] M12X35
9	366617X1	2	O Ring	[A] Diameter 47MM Up to Serial or Engine Number 01/10/2000
10	3792280M1	1	Collar	[A] Up to Serial or Engine Number 01/10/2000
11	3716396M1	1	Plate	[A] Up to Serial or Engine Number 01/10/2000
12	3019438X1	1	Plug	[A] From Serial or Engine Number 02/10/2000
13	391265X1	1	Gasket	[A] From Serial or Engine Number 02/10/2000
14	3716396M2	1	Plate	[A] From Serial or Engine Number 02/10/2000
15	3015474X1	2	O Ring	[A] From Serial or Engine Number 02/10/2000

FOOTNOTE [A] WITHOUT DISTRIBUTOR

https://truckmanualshub.com/

1-ZP39-002-A

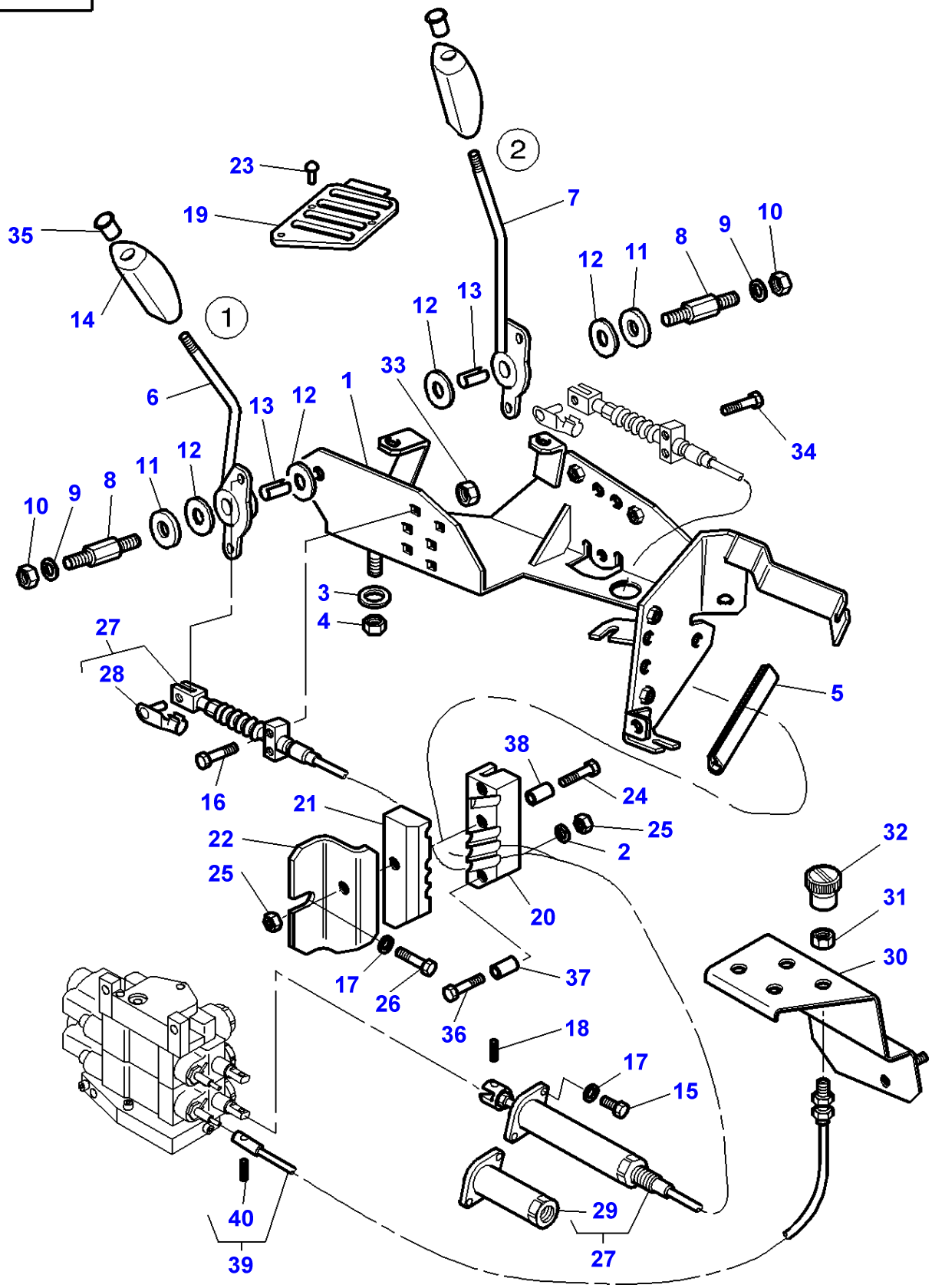

https://truckmanualshub.com/

Item	Part Number	Qty	Description	Comments
1	3778480M91	1	Support	
2	390971X1	2	Washer	
3	385361X1	4	Washer Metric	
4	1441461X1	4	Locknut	M8
5	1684844M1	1	Seal	Length 80MM
6	3778481M2	1	Lever	
7	3778482M2	1	Lever	
8	3712956M3	2	Clevis Pin	
9	390972X1	2	Washer Metric	
10	1441461X1	2	Locknut	M8
11	3387447M1	2	Washer	
12	3386514M1	4	Friction Disc	
13	3713905M1	2	Bearing	
14	3715495M1	2	Handle	
15	357831X1	4	Screw	1/4"-20X16
16	3009332X1	2	Screw	M6X30
17	390971X1	7	Washer	
18	3714223M1	2	Clevis Pin	
19	3778486M1	1	Grille	
20	3712979M2	1	Bridle	
21	3712980M2	1	Bridle	
22	3712981M2	1	Angle	
23	3010506X1	7	Screw	M5X16
24	339096X1	2	Bolt Metric	M6X35
25	339030X1	3	Nut Metric	
26	339560X1	1	Hex. Sock. Screw	M6X16
27	3778566M2	2	Hydraulic Cable	Length 1310MM
28	3600190M1	1	Clevis Pin	(27) Length 28MM
29	3902200M91	1	Parts Pack	(27)
30	3779479M1	1	Support	
31	3009693X1	2	Nut Metric	
32	3715367M1	1	Button	[B]
	3715365M1	1	Button	[C]
33	1441500X1	4	Locknut	M6
34	3009332X1	2	Screw	M6X30
35	3715496M1	1	Muff	[B]
	3715497M1	1	Muff	[C]
36	1440922X1	1	Bolt	M6X60
37	3714645M1	2	Spacer	Diameter 8X26,5
38	3714646M1	1	Spacer	Diameter 8X50
39	3779469M1	2	Cable	Length 593MM
40	3010003X1	1	Screw	(39)

FOOTNOTE [B] BLACK
FOOTNOTE [C] RED

1-ZP39-003-A

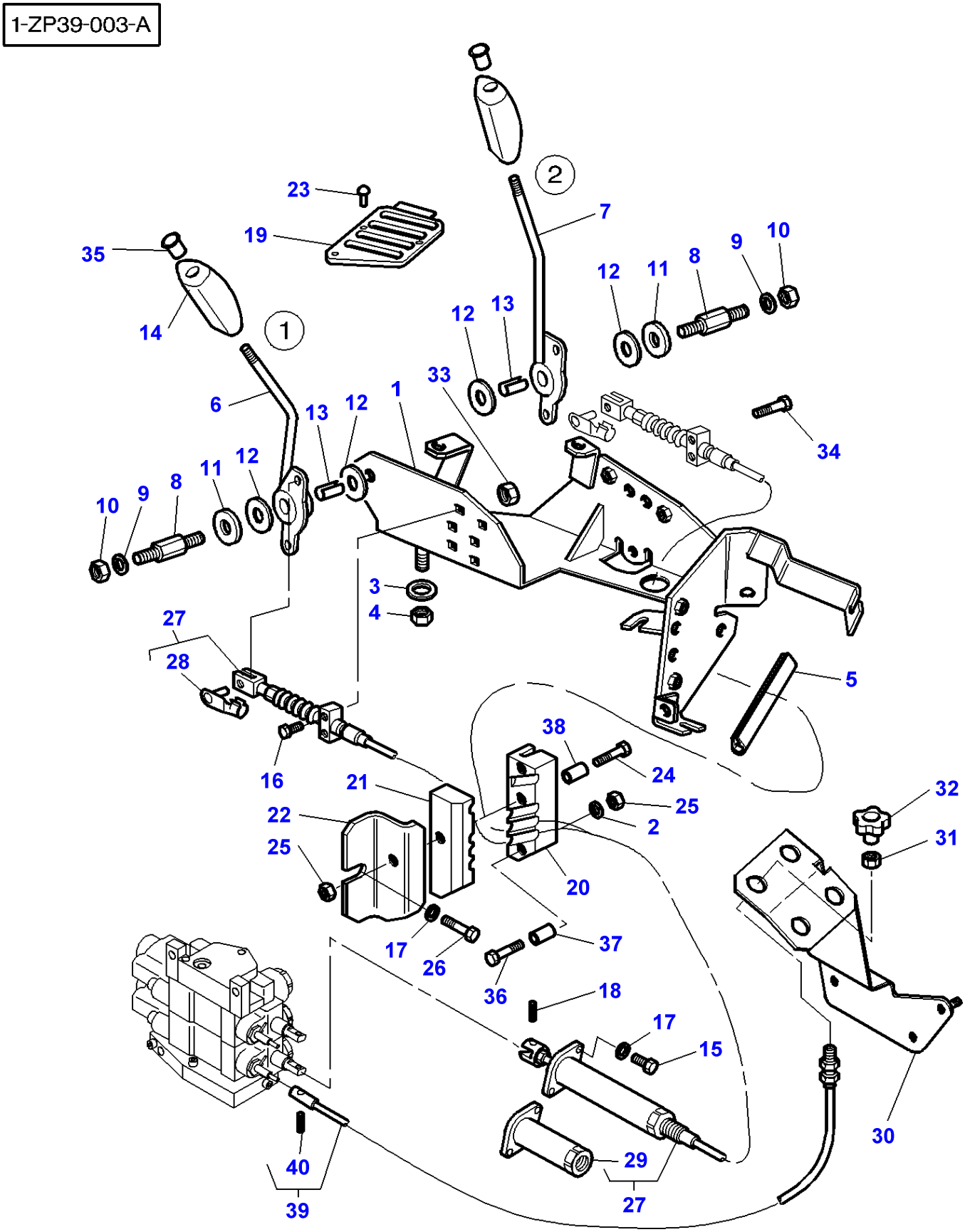
1
2
23
19
35
14
7
12
11
8
9
10
12
13
33
1
6
13
12
34
11
12
8
9
10
3
4
27
28
5
38
24
16
21
25
32
22
2
31
25
20
17
26
37
36
18
17
15
30
40
29
39
27

https://truckmanualshub.com/

Item	Part Number	Qty	Description	Comments
1	3778480M91	1	Support	
2	390971X1	2	Washer	
3	385361X1	4	Washer Metric	
4	1441461X1	4	Locknut	M8
5	1684844M1	1	Seal	Length 80MM
6	3778481M2	1	Lever	
7	3778482M2	1	Lever	
8	3712956M3	2	Clevis Pin	
9	390972X1	2	Washer Metric	
10	1441461X1	2	Locknut	M8
11	3387447M1	2	Washer	
12	3386514M1	4	Friction Disc	
13	3713905M1	2	Bearing	
14	3715495M1	2	Handle	
15	357831X1	4	Screw	1/4"-20X16
16	3009332X1	2	Screw	M6X30
17	390971X1	7	Washer	
18	3714223M1	2	Clevis Pin	
19	3778486M1	1	Grille	
20	3712979M2	1	Bridle	
21	3712980M2	1	Bridle	
22	3712981M2	1	Angle	
23	3010506X1	7	Screw	M5X16
24	339096X1	2	Bolt Metric	M6X35
25	339030X1	3	Nut Metric	
26	339560X1	1	Hex. Sock. Screw	M6X16
27	3778566M2	2	Hydraulic Cable	Length 1310MM
28	3600190M1	1	Clevis Pin	(27) Length 28MM
29	3902200M91	1	Parts Pack	(27)
30	3783151M1	1	Plate	
31	3009693X1	2	Nut Metric	
32	3783400M1	1	Button	[B]
	3783401M1	1	Button	[C]
33	1441500X1	4	Locknut	M6
34	3009332X1	2	Screw	M6X30
35	3715496M1	1	Muff	[B]
	3715497M1	1	Muff	[C]
36	1440922X1	1	Bolt	M6X60
37	3714645M1	2	Spacer	Diameter 8X26,5
38	3714646M1	1	Spacer	Diameter 8X50
39	3783230M1	2	Cable	Length 605,5MM
40	3010003X1	1	Screw	(39)

FOOTNOTE [B] BLACK
FOOTNOTE [C] RED

https://truckmanualshub.com/

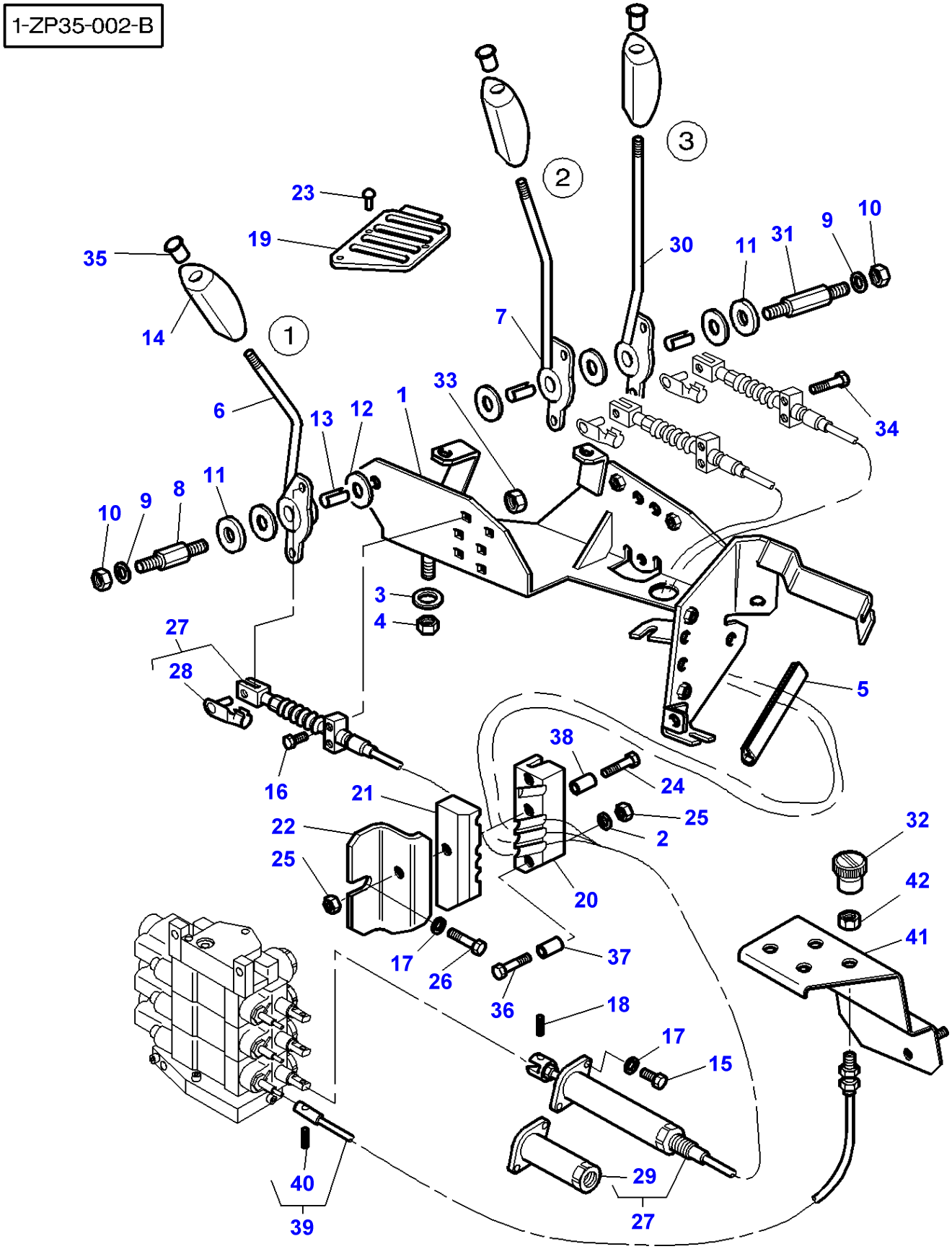

https://truckmanualshub.com/

Item	Part Number	Qty	Description	Comments
1	3778480M91	1	Support	
2	390971X1	2	Washer	
3	385361X1	4	Washer Metric	
4	1441461X1	4	Locknut	M8
5	1684844M1	1	Seal	Length 80MM
6	3778481M2	1	Lever	
7	3778482M2	1	Lever	
8	3712956M3	1	Clevis Pin	
9	390972X1	2	Washer Metric	
10	1441461X1	2	Locknut	M8
11	3387447M1	2	Washer	
12	3386514M1	5	Friction Disc	
13	3713905M1	3	Bearing	
14	3715495M1	3	Handle	
15	357831X1	6	Screw	1/4"-20X16
16	3009332X1	2	Screw	M6X30
17	390971X1	7	Washer	
18	3714223M1	3	Clevis Pin	
19	3778487M1	1	Grille	
20	3712979M2	1	Bridle	
21	3712980M2	1	Bridle	
22	3712981M2	1	Angle	
23	3010506X1	7	Screw	M5X16
24	339096X1	2	Bolt Metric	M6X35
25	339030X1	3	Nut Metric	
26	339560X1	1	Hex. Sock. Screw	M6X16
27	3778566M2	3	Hydraulic Cable	Length 1310MM
28	3600190M1	1	Clevis Pin	(27) Length 28MM
29	3902200M91	1	Parts Pack	(27)
30	3778483M2	1	Lever	
31	3712279M3	1	Clevis Pin	Length 78MM
32	3715367M1	1	Button	[B]
	3715365M1	1	Button	[C]
	3715364M1	1	Button	[D]
33	1441500X1	4	Locknut	M6
34	3009336X1	2	Screw	M6X55
35	3715496M1	1	Muff	[B]
	3715497M1	1	Muff	[C]
	3715498M1	1	Muff	[D]
36	1440922X1	1	Bolt	M6X60
37	3714645M1	2	Spacer	Diameter 8X26,5
38	3714646M1	1	Spacer	Diameter 8X50
39	3778560M2	1	Cable	Length 563MM
	3779469M1	2	Cable	Length 593MM
40	3010003X1	1	Screw	(39)
41	3779479M1	1	Support	
42	3009693X1	3	Nut Metric	

FOOTNOTE [B] BLACK
FOOTNOTE [C] RED
FOOTNOTE [D] GREEN

https://truckmanualshub.com/

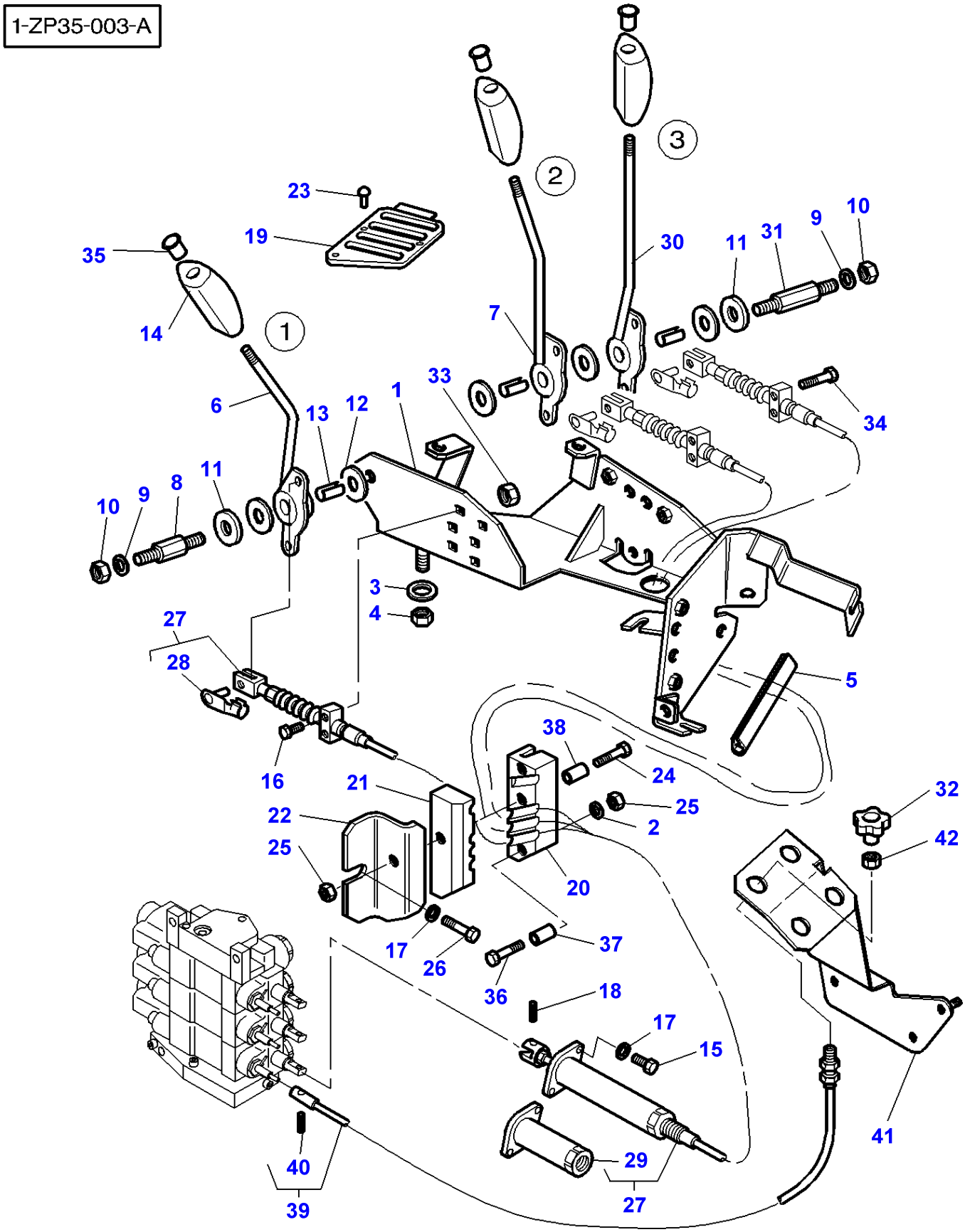

https://truckmanualshub.com/

Item	Part Number	Qty	Description	Comments
1	3778480M91	1	Support	
2	390971X1	2	Washer	
3	385361X1	4	Washer Metric	
4	1441461X1	4	Locknut	M8
5	1684844M1	1	Seal	Length 80MM
6	3778481M2	1	Lever	
7	3778482M2	1	Lever	
8	3712956M3	1	Clevis Pin	
9	390972X1	2	Washer Metric	
10	1441461X1	2	Locknut	M8
11	3387447M1	2	Washer	
12	3386514M1	5	Friction Disc	
13	3713905M1	3	Bearing	
14	3715495M1	3	Handle	
15	357831X1	6	Screw	1/4"-20X16
16	3009332X1	2	Screw	M6X30
17	390971X1	7	Washer	
18	3714223M1	3	Clevis Pin	
19	3778487M1	1	Grille	
20	3712979M2	1	Bridle	
21	3712980M2	1	Bridle	
22	3712981M2	1	Angle	
23	3010506X1	7	Screw	M5X16
24	339096X1	2	Bolt Metric	M6X35
25	339030X1	3	Nut Metric	
26	339560X1	1	Hex. Sock. Screw	M6X16
27	3778566M2	3	Hydraulic Cable	Length 1310MM
28	3600190M1	1	Clevis Pin	(27) Length 28MM
29	3902200M91	1	Parts Pack	(27)
30	3778483M2	1	Lever	
31	3712279M3	1	Clevis Pin	Length 78MM
32	3783400M1	1	Button	[B]
	3783401M1	1	Button	[C]
	3783402M1	1	Button	[D]
33	1441500X1	4	Locknut	M6
34	3009336X1	2	Screw	M6X55
35	3715496M1	1	Muff	[B]
	3715497M1	1	Muff	[C]
	3715498M1	1	Muff	[D]
36	1440922X1	1	Bolt	M6X60
37	3714645M1	2	Spacer	Diameter 8X26,5
38	3714646M1	1	Spacer	Diameter 8X50
39	3783229M1	1	Cable	Length 515,5MM
	3783230M1	2	Cable	Length 605,5MM
40	3010003X1	1	Screw	(39)
41	3783151M1	1	Plate	
42	3009693X1	3	Nut Metric	

FOOTNOTE [B] BLACK
FOOTNOTE [C] RED
FOOTNOTE [D] GREEN

1-ZP43-001-C

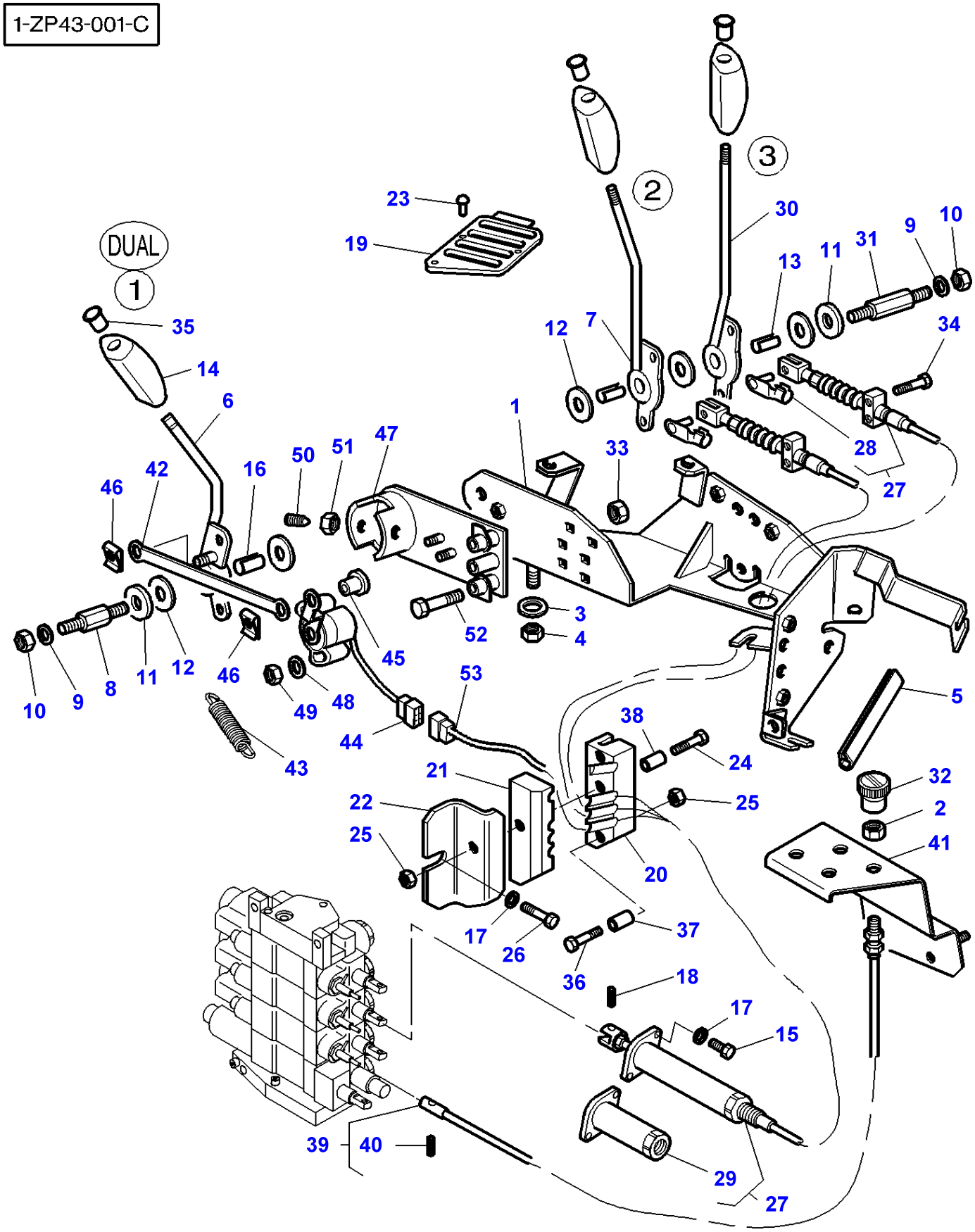
DUAL
1
2
3
23
19
30
10
9
31
11
13
35
14
12
7
34
6
1
28
27
33
47
51
50
16
42
46
3
4
52
45
53
5
10
9
8
11
12
46
49
48
44
43
38
24
21
32
22
25
2
25
41
20
17
26
37
36
18
17
15
39
40
29
27

https://truckmanualshub.com/

Item	Part Number	Qty	Description	Comments
1	3778480M91	1	Support	
2	3009693X1	3	Nut Metric	
3	385361X1	4	Washer Metric	
4	1441461X1	4	Locknut	M8
5	1684844M1	1	Seal	Length 80MM
6	3783143M1	1	Lever	
7	3778482M2	1	Lever	
8	3712956M3	1	Clevis Pin	
9	390972X1	2	Washer Metric	
10	1441461X1	2	Locknut	M8
11	3387447M1	2	Washer	
12	3386514M1	5	Friction Disc	
13	3713905M1	2	Bearing	
14	3715495M1	3	Handle	
15	357831X1	6	Screw	1/4"-20X16
16	3386515M1	1	Bearing	
17	390971X1	7	Washer	
18	3714223M1	2	Clevis Pin	
19	3778487M1	1	Grille	
20	3712979M2	1	Bridle	
21	3712980M2	1	Bridle	
22	3712981M2	1	Angle	
23	3010506X1	7	Screw	M5X16
24	339096X1	2	Bolt Metric	M6X35
25	1441500X1	3	Locknut	
26	339560X1	1	Hex. Sock. Screw	M6X16
27	3778566M2	2	Hydraulic Cable	Length 1310MM
28	3600190M1	1	Clevis Pin	(27) Length 28MM
29	3902200M91	1	Parts Pack	(27)
30	3778483M2	1	Lever	
31	3712279M3	1	Clevis Pin	Length 78MM
32	3715367M1	1	Button	[B]
	3715365M1	1	Button	[C]
	3715364M1	1	Button	[D]
33	1441500X1	4	Locknut	M6
34	3009336X1	2	Screw	M6X55
35	3715496M1	1	Muff	[B]
	3715497M1	1	Muff	[C]
	3715498M1	1	Muff	[D]
36	1440922X1	1	Bolt	M6X60
37	3714645M1	2	Spacer	Diameter 8X26,5
38	3714646M1	1	Spacer	Diameter 8X50
39	3778560M2	1	Cable	Length 563MM
	3779469M1	2	Cable	Length 593MM
40	3010003X1	1	Screw	(39)
41	3779479M1	1	Support	
42	3715466M1	1	Rod Link	
43	3616740M2	2	Spring	
44	3715459M1	1	Inductive Taker	
45	3783144M1	1	Clevis Pin	
46	3783145M1	2	Thruster	
47	3783142M1	1	Support	
48	390469X1	2	Washer Metric	
49	3010477X1	2	Nut Metric	
50	3618127M2	2	Poppet	
51	3009696X1	2	Nut	
52	3010974X1	2	Screw	M6X40
53		1	Harness	See Page - Reference Number 090-0015/2

FOOTNOTE [B] BLACK
FOOTNOTE [C] RED
FOOTNOTE [D] GREEN

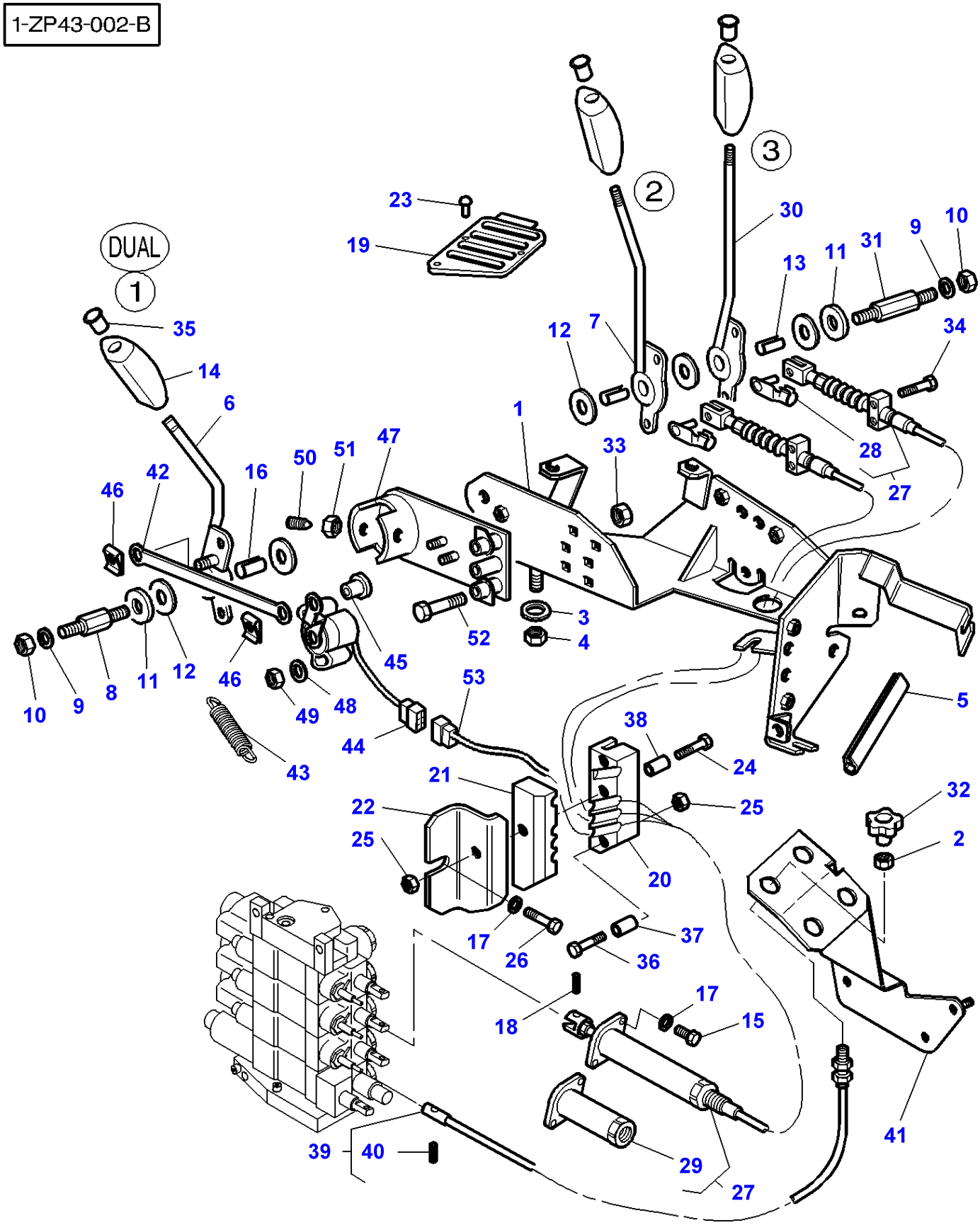
1-ZP43-002-B
DUAL
1
2
3
23
19
30
10
9
31
11
13
35
14
12
7
34
6
1
28
27
33
47
51
50
16
42
46
3
4
52
45
53
10
9
8
11
12
46
49
48
44
43
5
38
24
21
22
25
25
32
2
20
17
26
37
36
17
18
15
41
39
40
29
27

https://truckmanualshub.com/

Item	Part Number	Qty	Description	Comments
1	3778480M91	1	Support	
2	3009693X1	3	Nut Metric	
3	385361X1	4	Washer Metric	
4	1441461X1	4	Locknut	M8
5	1684844M1	1	Seal	Length 80MM
6	3783143M1	1	Lever	
7	3778482M2	1	Lever	
8	3712956M3	1	Clevis Pin	
9	390972X1	2	Washer Metric	
10	1441461X1	2	Locknut	M8
11	3387447M1	2	Washer	
12	3386514M1	5	Friction Disc	
13	3713905M1	2	Bearing	
14	3715495M1	3	Handle	
15	357831X1	6	Screw	1/4"-20X16
16	3386515M1	1	Bearing	
17	390971X1	7	Washer	
18	3714223M1	2	Clevis Pin	
19	3778487M1	1	Grille	
20	3712979M2	1	Bridle	
21	3712980M2	1	Bridle	
22	3712981M2	1	Angle	
23	3010506X1	7	Screw	M5X16
24	339096X1	2	Bolt Metric	M6X35
25	1441500X1	3	Locknut	
26	339560X1	1	Hex. Sock. Screw	M6X16
27	3778566M2	2	Hydraulic Cable	Length 1310MM
28	3600190M1	1	Clevis Pin	(27) Length 28MM
29	3902200M91	1	Parts Pack	(27)
30	3778483M2	1	Lever	
31	3712279M3	1	Clevis Pin	Length 78MM
32	3783400M1	1	Button	[B]
	3783401M1	1	Button	[C]
	3783402M1	1	Button	[D]
33	1441500X1	4	Locknut	M6
34	3009336X1	2	Screw	M6X55
35	3715496M1	1	Muff	[B]
	3715497M1	1	Muff	[C]
	3715498M1	1	Muff	[D]
36	1440922X1	1	Bolt	M6X60
37	3714645M1	2	Spacer	Diameter 8X26,5
38	3714646M1	1	Spacer	Diameter 8X50
39	3783229M1	1	Cable	Length 515,5MM
	3783230M1	2	Cable	Length 605,5MM
40	3010003X1	1	Screw	(39)
41	3783151M1	1	Plate	
42	3715466M1	1	Rod Link	
43	3616740M2	2	Spring	
44	3715459M1	1	Inductive Taker	
45	3783144M1	1	Clevis Pin	
46	3783145M1	2	Thruster	
47	3783142M1	1	Support	
48	390469X1	2	Washer Metric	
49	3010477X1	2	Nut Metric	
50	3618127M2	2	Poppet	
51	3009696X1	2	Nut	
52	3010974X1	2	Screw	M6X40
53		1	Harness	See Page - Reference Number 090-0015/2

FOOTNOTE [B] BLACK
FOOTNOTE [C] RED
FOOTNOTE [D] GREEN

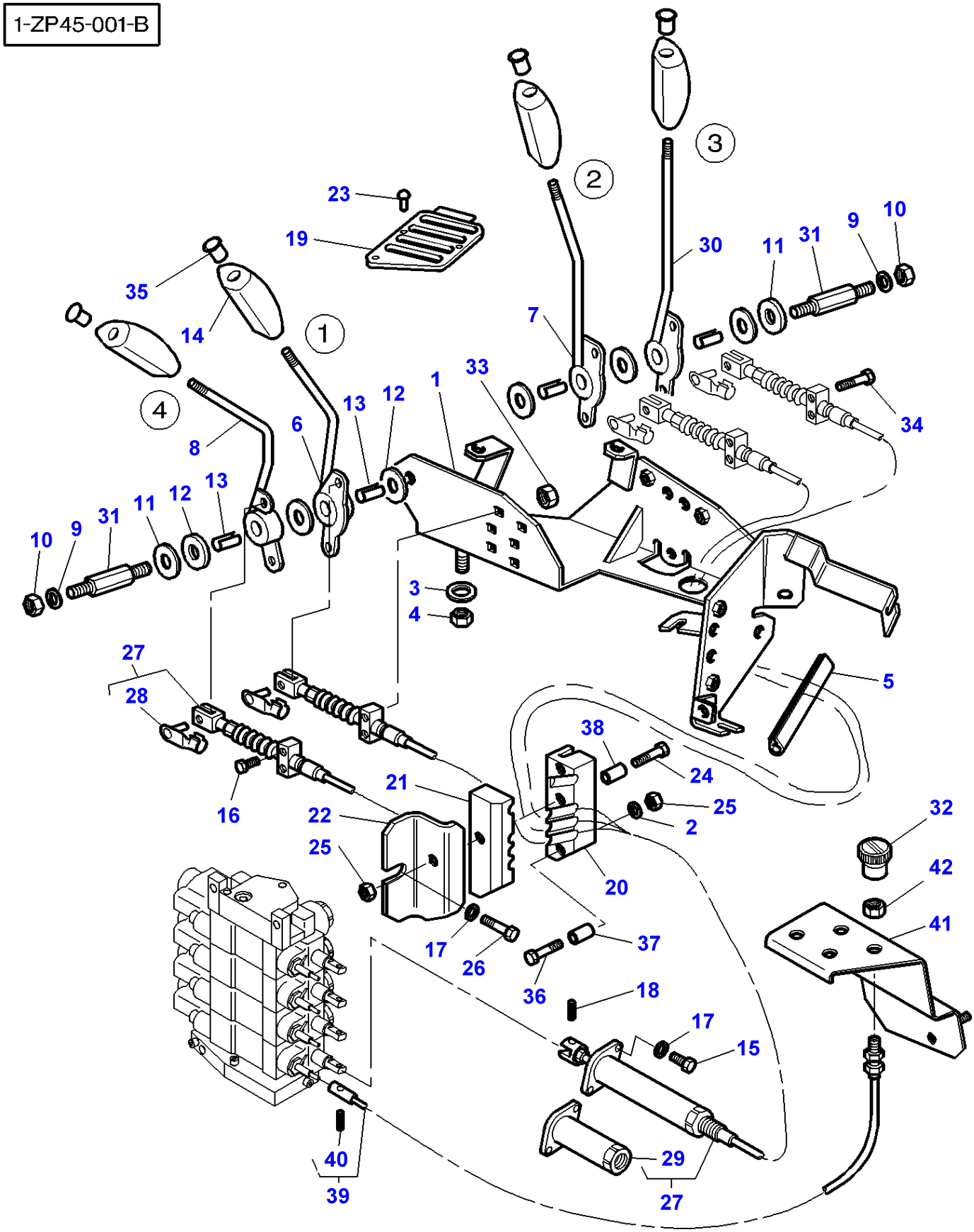
1-ZP45-001-B
1
2
3
4
1
2
3
4
5
6
7
8
9
10
11
12
13
14
15
16
17
18
19
20
21
22
23
24
25
26
27
28
29
30
31
32
33
34
35
36
37
38
39
40
41
42

https://truckmanualshub.com/

Item	Part Number	Qty	Description	Comments
1	3778480M91	1	Support	
2	390971X1	2	Washer	
3	385361X1	4	Washer Metric	
4	1441461X1	4	Locknut	M8
5	1684844M1	1	Seal	Length 80MM
6	3778481M2	1	Lever	
7	3778482M2	1	Lever	
8	3778484M3	1	Lever	
9	390972X1	2	Washer Metric	
10	1441461X1	2	Locknut	M8
11	3387447M1	2	Washer	
12	3386514M1	6	Friction Disc	
13	3713905M1	4	Bearing	
14	3715495M1	4	Handle	
15	357831X1	8	Screw	1/4"-20X16
16	3009336X1	2	Screw	M6X55
17	390971X1	9	Washer	
18	3714223M1	4	Clevis Pin	
19	3778488M1	1	Grille	
20	3712979M2	1	Bridle	
21	3712980M2	1	Bridle	
22	3712981M2	1	Angle	
23	3010506X1	7	Screw	M5X16
24	339096X1	2	Bolt Metric	M6X35
25	339030X1	3	Nut Metric	
26	339560X1	1	Hex. Sock. Screw	M6X16
27	3778566M2	4	Hydraulic Cable	Length 1310MM
28	3600190M1	1	Clevis Pin	(27) Length 28MM
29	3902200M91	1	Parts Pack	(27)
30	3778483M2	1	Lever	
31	3712279M3	2	Clevis Pin	Length 78MM
32	3715366M1	1	Button	[A]
	3715367M1	1	Button	[B]
	3715365M1	1	Button	[C]
	3715364M1	1	Button	[D]
33	1441500X1	4	Locknut	M6
34	3009336X1	2	Screw	M6X55
35	3715496M1	1	Muff	[B]
	3715497M1	1	Muff	[C]
	3715498M1	1	Muff	[D]
	3715499M1	1	Muff	[A]
36	1440922X1	1	Bolt	M6X60
37	3714645M1	2	Spacer	Diameter 8X26,5
38	3714646M1	1	Spacer	Diameter 8X50
39	3778560M2	2	Cable	Length 563MM
	3779469M1	2	Cable	Length 593MM
40	3010003X1	1	Screw	(39)
41	3779479M1	1	Support	
42	3009693X1	4	Nut Metric	

FOOTNOTE [A] YELLOW
FOOTNOTE [B] BLACK
FOOTNOTE [C] RED
FOOTNOTE [D] GREEN

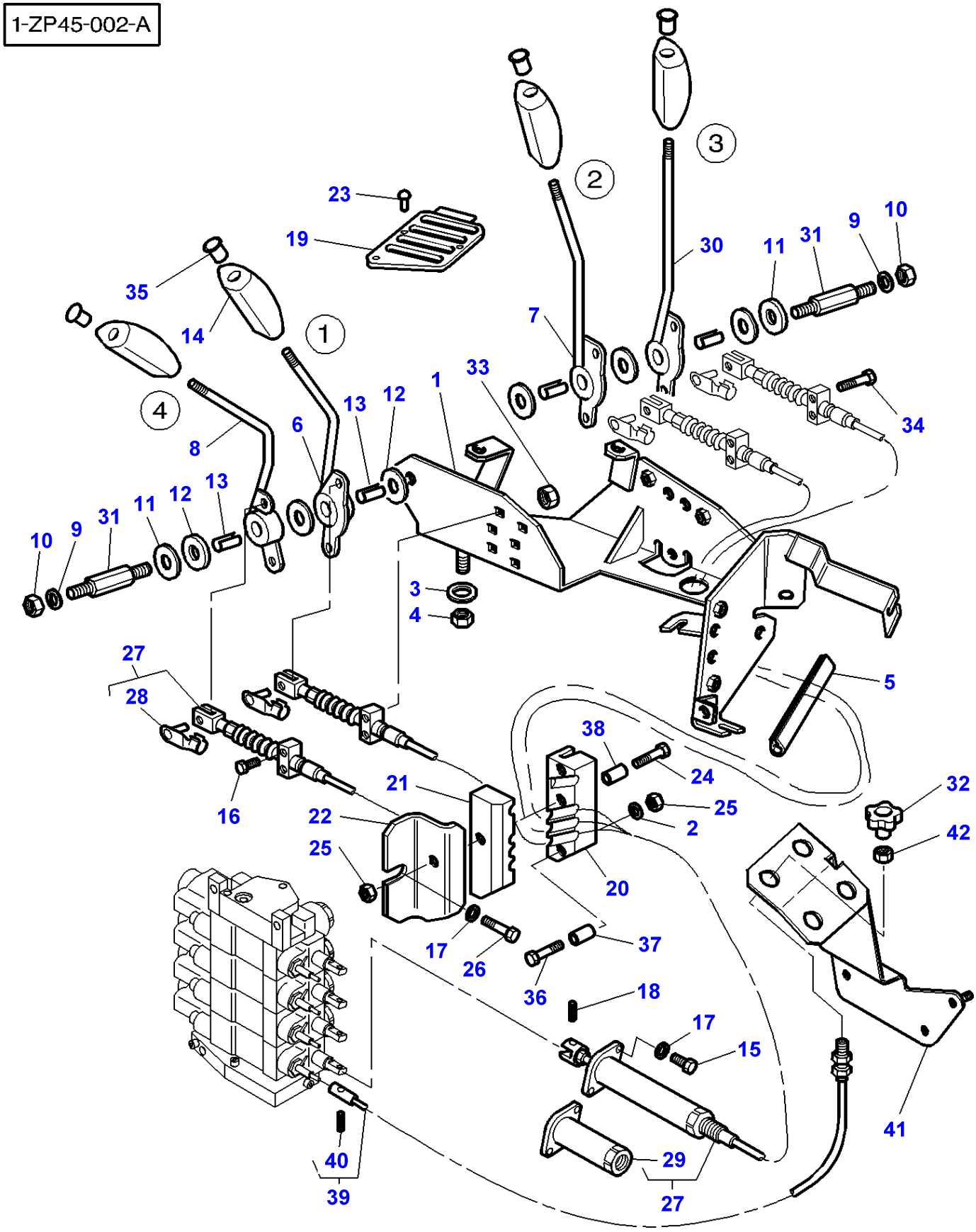
1-ZP45-002-A
1
2
3
4
23
19
35
14
7
30
11
31
9
10
33
1
34
13
12
6
8
13
12
11
31
9
10
3
4
5
27
28
16
38
24
21
25
2
32
42
22
25
20
17
26
37
36
18
17
15
41
40
39
29
27

https://truckmanualshub.com/

Item	Part Number	Qty	Description	Comments
1	3778480M91	1	Support	
2	390971X1	2	Washer	
3	385361X1	4	Washer Metric	
4	1441461X1	4	Locknut	M8
5	1684844M1	1	Seal	Length 80MM
6	3778481M2	1	Lever	
7	3778482M2	1	Lever	
8	3778484M3	1	Lever	
9	390972X1	2	Washer Metric	
10	1441461X1	2	Locknut	M8
11	3387447M1	2	Washer	
12	3386514M1	6	Friction Disc	
13	3713905M1	4	Bearing	
14	3715495M1	4	Handle	
15	357831X1	8	Screw	1/4"-20X16
16	3009336X1	2	Screw	M6X55
17	390971X1	9	Washer	
18	3714223M1	4	Clevis Pin	
19	3778488M1	1	Grille	
20	3712979M2	1	Bridle	
21	3712980M2	1	Bridle	
22	3712981M2	1	Angle	
23	3010506X1	7	Screw	M5X16
24	339096X1	2	Bolt Metric	M6X35
25	339030X1	3	Nut Metric	
26	339560X1	1	Hex. Sock. Screw	M6X16
27	3778566M2	4	Hydraulic Cable	Length 1310MM
28	3600190M1	1	Clevis Pin	(27) Length 28MM
29	3902200M91	1	Parts Pack	(27)
30	3778483M2	1	Lever	
31	3712279M3	2	Clevis Pin	Length 78MM
32	3783403M1	1	Button	[A]
	3783400M1	1	Button	[B]
	3783401M1	1	Button	[C]
	3783402M1	1	Button	[D]
33	1441500X1	4	Locknut	M6
34	3009336X1	2	Screw	M6X55
35	3715496M1	1	Muff	[B]
	3715497M1	1	Muff	[C]
	3715498M1	1	Muff	[D]
	3715499M1	1	Muff	[A]
36	1440922X1	1	Bolt	M6X60
37	3714645M1	2	Spacer	Diameter 8X26,5
38	3714646M1	1	Spacer	Diameter 8X50
39	3783229M1	2	Cable	Length 515,5MM
	3783230M1	2	Cable	Length 605,5MM
40	3010003X1	1	Screw	(39)
41	3783151M1	1	Plate	
42	3009693X1	4	Nut Metric	

FOOTNOTE [A] YELLOW
FOOTNOTE [B] BLACK
FOOTNOTE [C] RED
FOOTNOTE [D] GREEN

1-ZP44-001-C

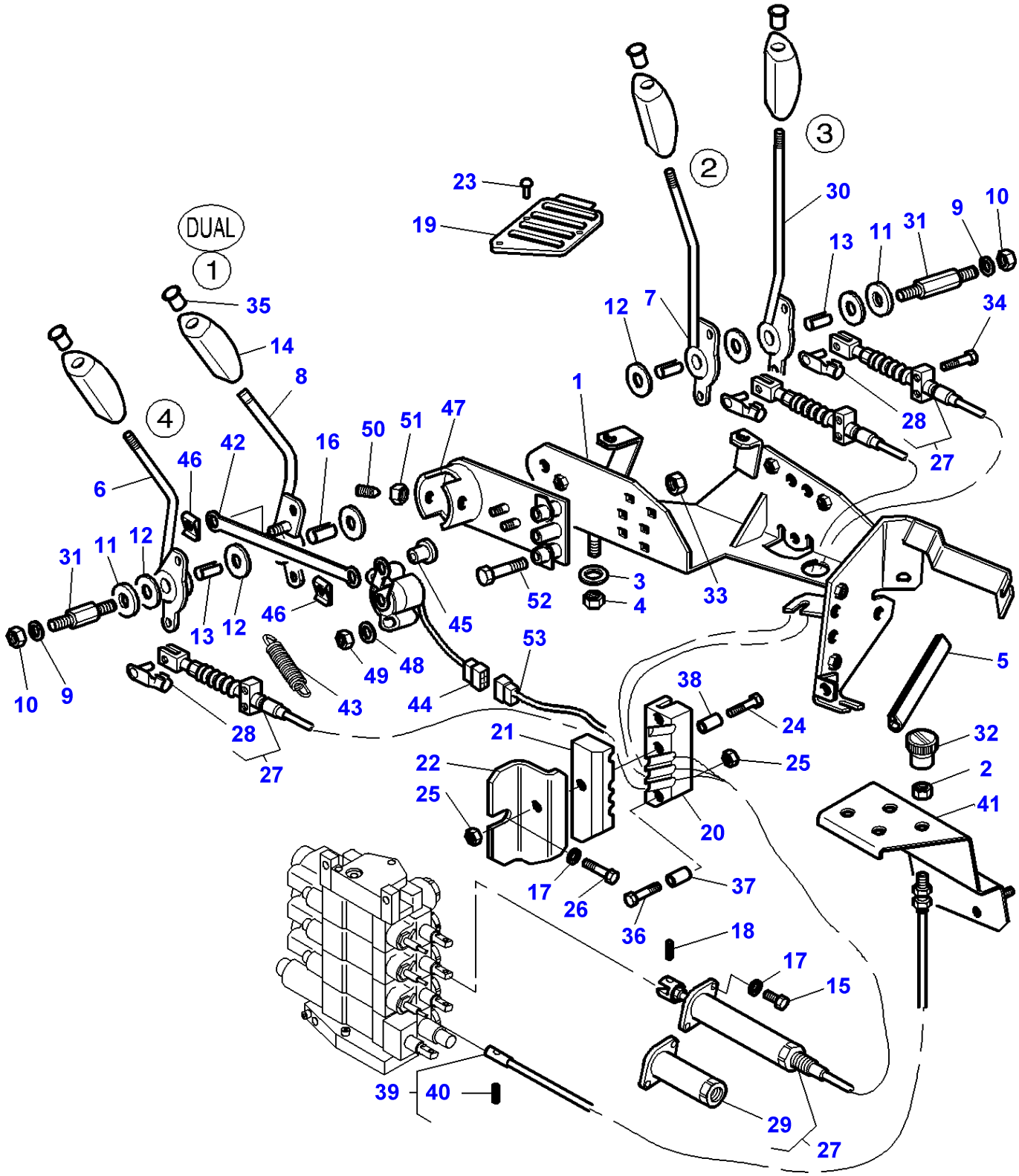
DUAL
1
2
3
4
23
19
30
9
10
31
11
13
35
14
8
12
7
34
1
28
27
47
51
50
16
42
46
6
31
11
12
13
12
46
45
52
3
4
33
10
9
49
48
43
44
53
5
38
24
28
27
21
22
25
25
32
2
41
20
17
26
37
36
18
17
15
39
40
29
27

https://truckmanualshub.com/

Item	Part Number	Qty	Description	Comments
1	3778480M91	1	Support	
2	3009693X1	4	Nut Metric	
3	385361X1	4	Washer Metric	
4	1441461X1	4	Locknut	M8
5	1684844M1	1	Seal	Length 80MM
6	3783146M1	1	Lever	
7	3778482M2	1	Lever	
8	3783143M1	1	Lever	
9	390972X1	2	Washer Metric	
10	1441461X1	2	Locknut	M8
11	3387447M1	2	Washer	
12	3386514M1	6	Friction Disc	
13	3713905M1	3	Bearing	
14	3715495M1	4	Handle	
15	357831X1	8	Screw	1/4"-20X16
16	3386515M1	1	Bearing	M6X55
17	390971X1	9	Washer	
18	3714223M1	3	Clevis Pin	
19	3778488M1	1	Grille	
20	3712979M2	1	Bridle	
21	3712980M2	1	Bridle	
22	3712981M2	1	Angle	
23	3010506X1	7	Screw	M5X16
24	339096X1	2	Bolt Metric	M6X35
25	1441500X1	3	Locknut	
26	339560X1	1	Hex. Sock. Screw	M6X16
27	3778566M2	3	Hydraulic Cable	Length 1310MM
28	3600190M1	1	Clevis Pin	(27) Length 28MM
29	3902200M91	1	Parts Pack	(27)
30	3778483M2	1	Lever	
31	3712279M3	2	Clevis Pin	Length 78MM
32	3715366M1	1	Button	[A]
	3715367M1	1	Button	[B]
	3715365M1	1	Button	[C]
	3715364M1	1	Button	[D]
33	1441500X1	4	Locknut	M6
34	3009336X1	2	Screw	M6X55
35	3715496M1	1	Muff	[B]
	3715497M1	1	Muff	[C]
	3715498M1	1	Muff	[D]
	3715499M1	1	Muff	[A]
36	1440922X1	1	Bolt	M6X60
37	3714645M1	2	Spacer	Diameter 8X26,5
38	3714646M1	1	Spacer	Diameter 8X50
39	3778560M2	2	Cable	Length 563MM
	3779469M1	2	Cable	Length 593MM
40	3010003X1	1	Screw	(39)
41	3779479M1	1	Support	
42	3715466M1	1	Rod Link	
43	3616740M2	2	Spring	
44	3715459M1	1	Inductive Taker	
45	3783144M1	1	Clevis Pin	
46	3783145M1	2	Thruster	
47	3783142M1	1	Support	
48	390469X1	2	Washer Metric	
49	3010477X1	2	Nut Metric	
50	3618127M2	2	Poppet	
51	3009696X1	2	Nut	
52	3010975X1	2	Screw	M6X60
53		1	Harness	See Page - Reference Number 090-0015/2

FOOTNOTE [A] YELLOW
FOOTNOTE [B] BLACK
FOOTNOTE [C] RED
FOOTNOTE [D] GREEN

1-ZP44-002-B

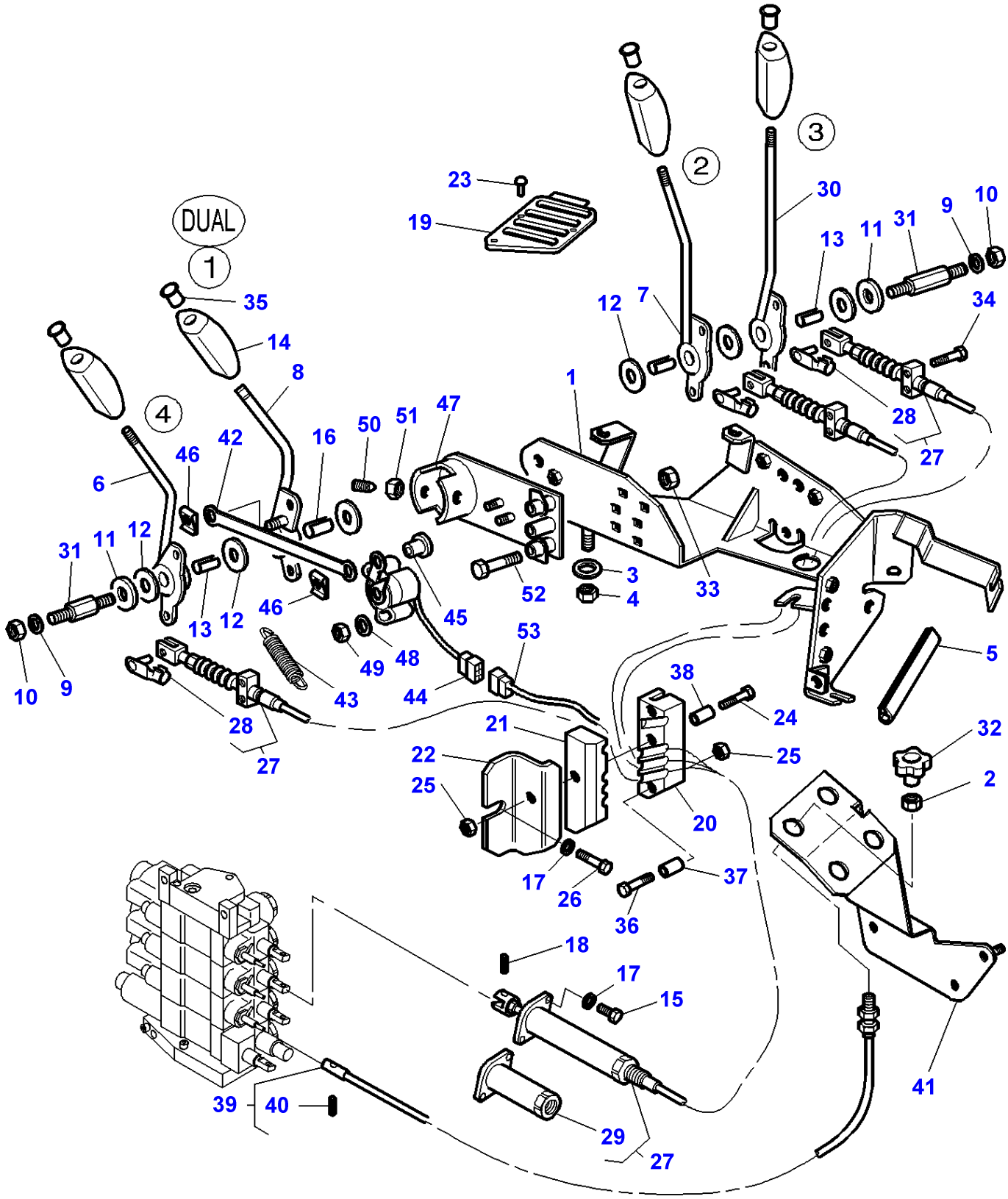
DUAL
1
2
3
4
23
19
30
9
10
31
11
13
12
7
34
35
14
8
1
28
27
47
51
50
16
42
46
6
31
11
12
13
12
46
45
52
3
4
33
10
9
49
48
43
44
53
5
38
24
28
27
21
22
25
25
32
2
20
17
26
37
36
18
17
15
41
39
40
29
27

https://truckmanualshub.com/

Item	Part Number	Qty	Description	Comments
1	3778480M91	1	Support	
2	3009693X1	4	Nut Metric	
3	385361X1	4	Washer Metric	
4	1441461X1	4	Locknut	M8
5	1684844M1	1	Seal	Length 80MM
6	3783146M1	1	Lever	
7	3778482M2	1	Lever	
8	3783143M1	1	Lever	
9	390972X1	2	Washer Metric	
10	1441461X1	2	Locknut	M8
11	3387447M1	2	Washer	
12	3386514M1	6	Friction Disc	
13	3713905M1	3	Bearing	
14	3715495M1	4	Handle	
15	357831X1	8	Screw	1/4"-20X16
16	3386515M1	1	Bearing	M6X55
17	390971X1	9	Washer	
18	3714223M1	3	Clevis Pin	
19	3778488M1	1	Grille	
20	3712979M2	1	Bridle	
21	3712980M2	1	Bridle	
22	3712981M2	1	Angle	
23	3010506X1	7	Screw	M5X16
24	339096X1	2	Bolt Metric	M6X35
25	1441500X1	3	Locknut	
26	339560X1	1	Hex. Sock. Screw	M6X16
27	3778566M2	3	Hydraulic Cable	Length 1310MM
28	3600190M1	1	Clevis Pin	(27) Length 28MM
29	3902200M91	1	Parts Pack	(27)
30	3778483M2	1	Lever	
31	3712279M3	2	Clevis Pin	Length 78MM
32	3783403M1	1	Button	[A]
	3783400M1	1	Button	[B]
	3783401M1	1	Button	[C]
	3783402M1	1	Button	[D]
33	1441500X1	4	Locknut	M6
34	3009336X1	2	Screw	M6X55
35	3715496M1	1	Muff	[B]
	3715497M1	1	Muff	[C]
	3715498M1	1	Muff	[D]
	3715499M1	1	Muff	[A]
36	1440922X1	1	Bolt	M6X60
37	3714645M1	2	Spacer	Diameter 8X26,5
38	3714646M1	1	Spacer	Diameter 8X50
39	3783229M1	2	Cable	Length 515,5MM
	3783230M1	2	Cable	Length 605,5MM
40	3010003X1	1	Screw	(39)
41	3783151M1	1	Plate	
42	3715466M1	1	Rod Link	
43	3616740M2	2	Spring	
44	3715459M1	1	Inductive Taker	
45	3783144M1	1	Clevis Pin	
46	3783145M1	2	Thruster	
47	3783142M1	1	Support	
48	390469X1	2	Washer Metric	
49	3010477X1	2	Nut Metric	
50	3618127M2	2	Poppet	
51	3009696X1	2	Nut	
52	3010975X1	2	Screw	M6X60
53		1	Harness	See Page - Reference Number 090-0015/2

FOOTNOTE [A] YELLOW
FOOTNOTE [B] BLACK
FOOTNOTE [C] RED
FOOTNOTE [D] GREEN

https://truckmanualshub.com/

Page Title	Page Number
Instrument Panel And Instruments - With Full Powershift	080-0005
Electric Equipment & Instrument Panel	080-0010
ENGINE HARNESS	080-0015
Electrical Wiring - With Electronic Lift	080-0020
Tractor Cab - Electrical Wiring - Without Electronic Lift	080-0025
INSTRUMENT PANEL HARNESS	080-0030
FULL POWERSHIFT CONTROL HARNESS - ARMREST	080-0035
Harness Console	080-0040
ROOF HARNESS	080-0045
ROOF HARNESS - With High Visibility Roof	080-0050
ROOF HARNESS - WITH HIGH VISIBILITY ROOF / WAY LIGHTS FITTED ON T HE CAB ROOF	080-0055
LIGHTING HARNESS - ROOF	080-0060
FIELD LIGHTS HARNESS - GUIDEWAY / FOOTSTEPS / FENDERS	080-0065

1-ZC60-001-A

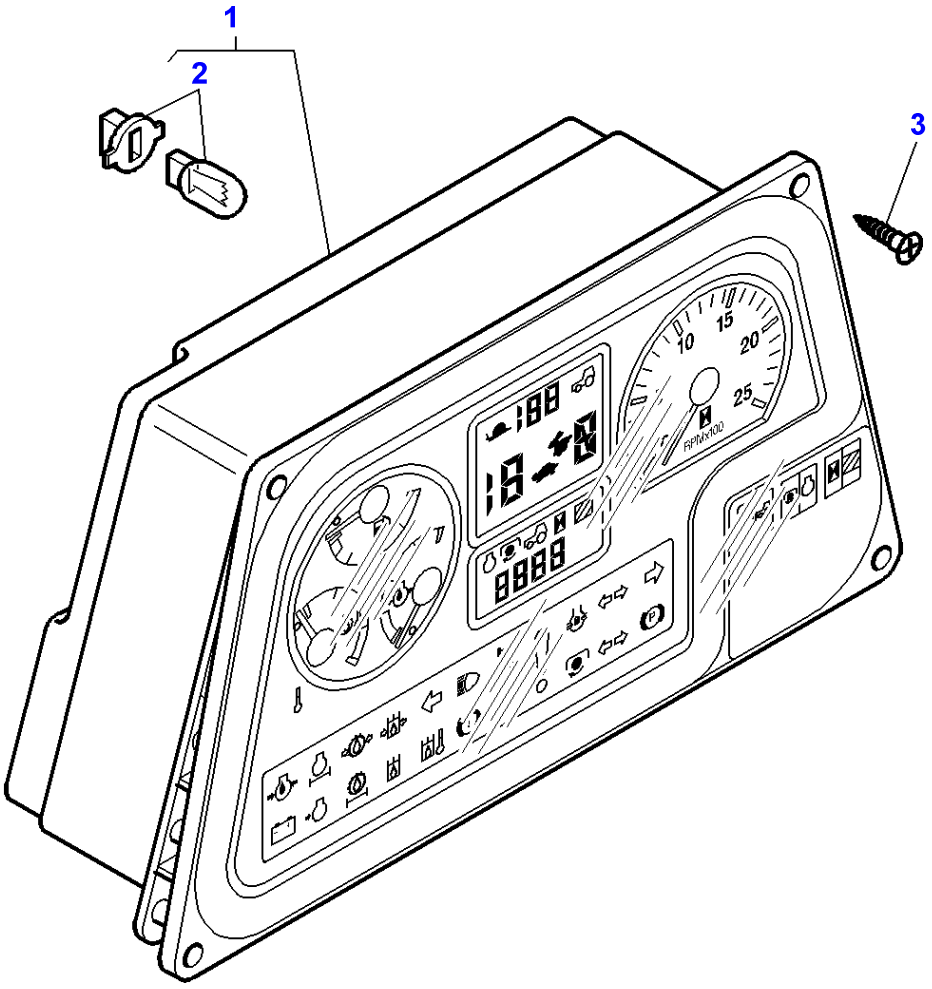

https://truckmanualshub.com/

Item	Part Number	Qty	Description	Comments
1	3783591M1	1	Instrument Panel	
2	**72505208**	26	Bulb	(1)
3	3010791X1	4	Screw	M4x20

https://truckmanualshub.com/

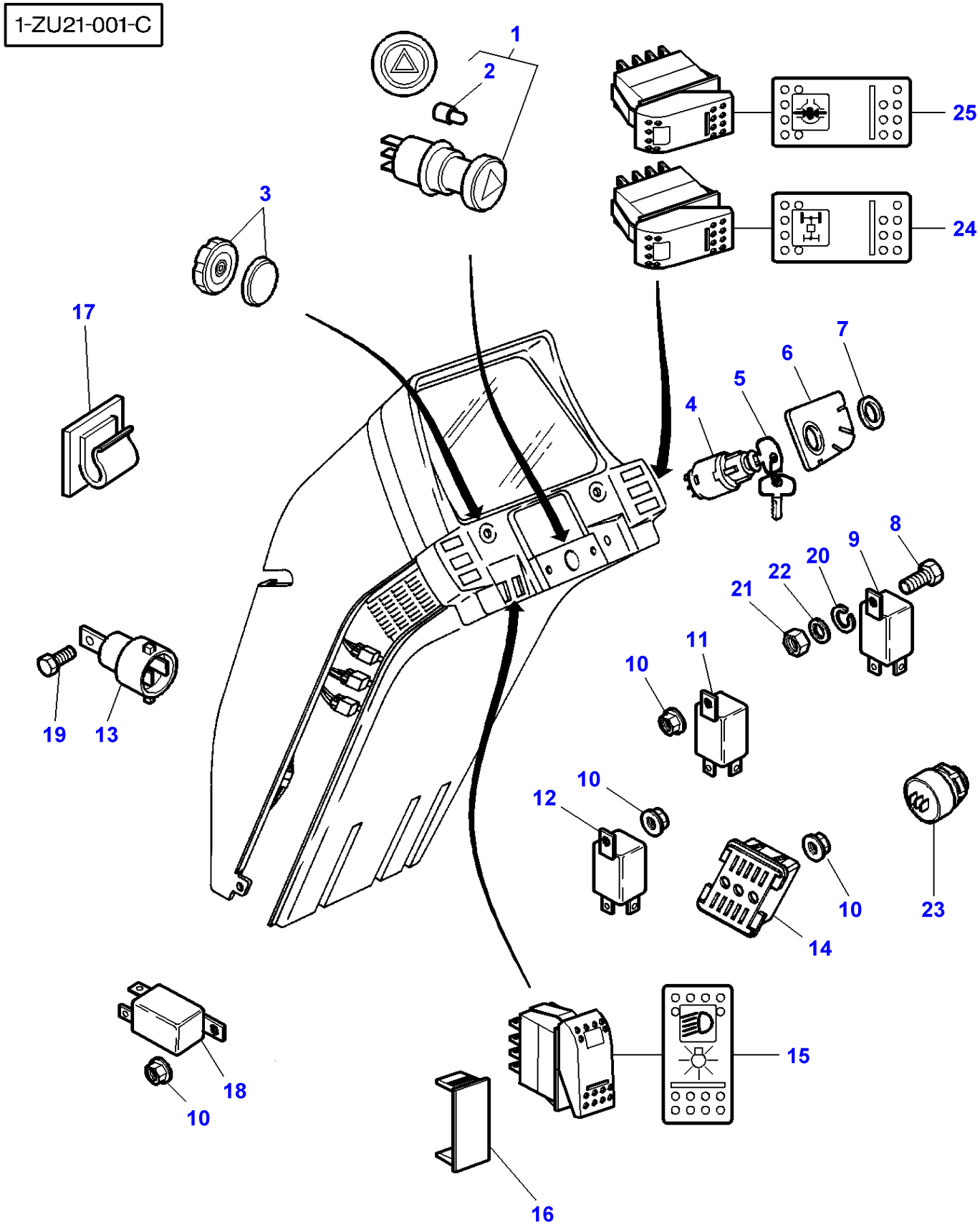

https://truckmanualshub.com/

Item	Part Number	Qty	Description	Comments
1	**3370427M91**	1	Switch	
2	**3405185M1**	1	Bulb 12v 1.2w	(1)
3	2191950K91	1	Button	
4	3779699M1	1	Switch,Indirect	
5	**3813361M1**	1	Ignition Key	
6	3780466M1	1	Plate	
7	1694534M1	1	Nut	
8	339560X1	1	Hex. Sock. Screw	M6X16
9	3617865M1	1	Blinker Unit	
10	3010477X1	X	Nut Metric	
11	**3387326M2**	1	Relay	12V-50A
12	**3615652M1**	1	Relay	
13	**3779879M1**	1	Relay	12V-50A
14	3713103M1	1	Connector	Up to Serial or Engine Number
15	**3713142M2**	1	Switch,Indirect	
16	3713151M1	X	Tap	
17	3582094M1	2	Tie	
18	3713403M1	1	Relay	[C]
19	390990X1	1	Screw Metric	M5X12
20	1441206X1	1	Lock Washer	
21	339030X1	1	Nut Metric	
22	339375X1	1	Lock Washer	
23	3777567M1	1	Buzzer	
24	3713148M2	1	Switch,Indirect	
25	**3713149M2**	1	Switch,Indirect	

FOOTNOTE [A] TRACTOR WITH PLATFORM
FOOTNOTE [B] TRACTOR WITH CAB
FOOTNOTE [C] TEMPORIZER

https://truckmanualshub.com/

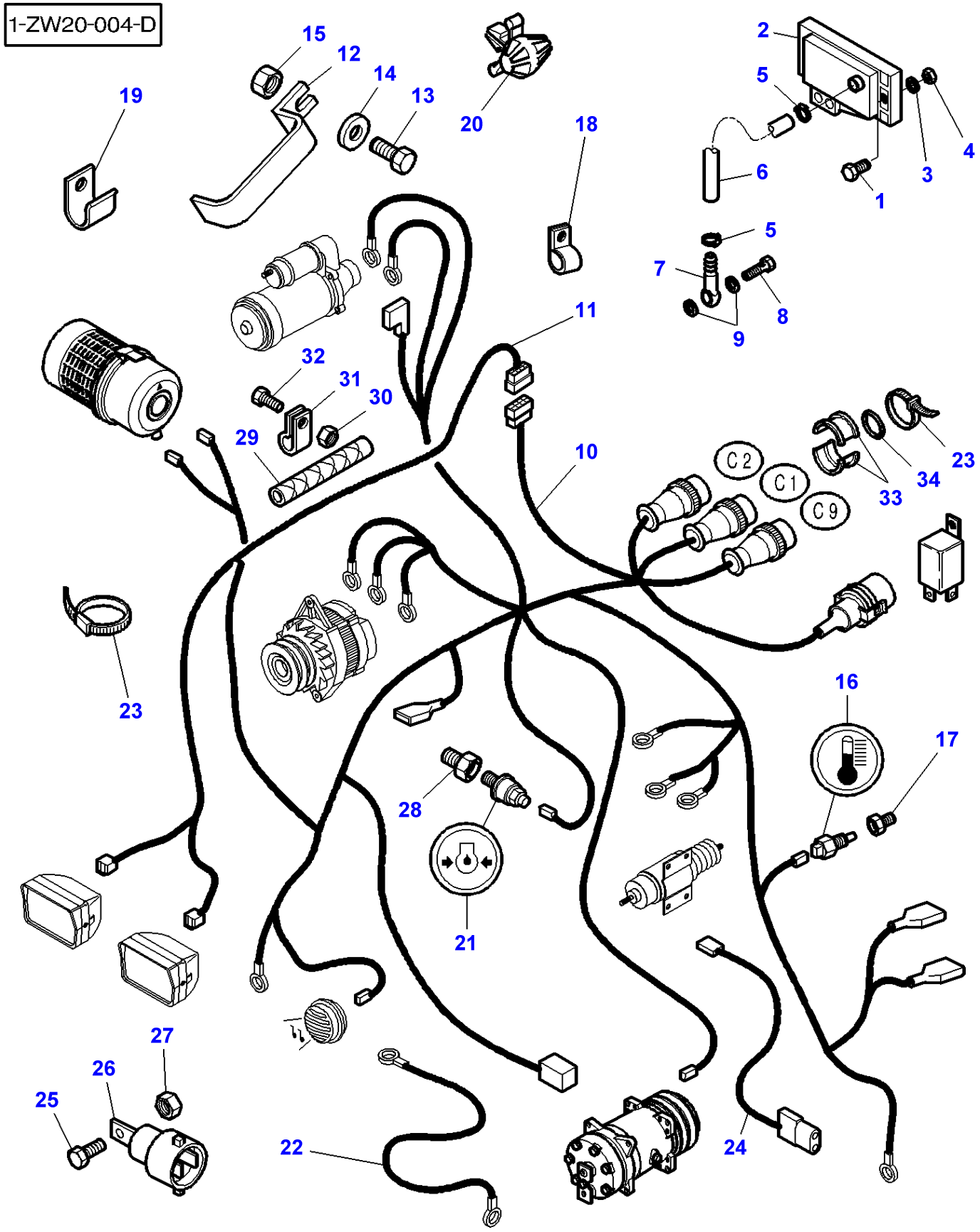

https://truckmanualshub.com/

Item	Part Number	Qty	Description	Comments
1	391883X1	2	Screw	M5X25
2	**72502305**	1	Transmitter	[C]
3	390469X1	2	Washer Metric	
4	1441494X1	2	Nut Metric	M5
5	338612X1	2	Hose Clip	Diameter 10-16
6	3781363M1	1	Hydr Hose	Length 800MM
7	3777546M1	1	Union	
8	3777549M1	1	Screw	
9	3007188X1	2	Gasket	
10	3781081M3	1	Harness	
	3781082M3	1	Harness	For Sweden
11	5015264M2	1	Harness	
12	3715996M1	1	Bridle	
13	339123X1	1	Hex. Sock. Screw	M8X20
14	385361X1	1	Washer Metric	
15	339169X1	1	Nut	M8
16	**5015257M1**	1	Sender	
17	3778202M1	1	Union	M18X1,5
18	3387756M1	X	Strap	
19	3583344M1	2	Strap	
20	3615984M1	1	Fastener	
21	**72512518**	1	Sender	
22	3712175M1	1	Wire	
23	3619622M1	X	Cable Tie	
24	3781072M1	1	Connection	
25	390990X1	1	Screw Metric	M5X12
26	**3779879M1**	1	Relay	12V-50A
27	3010477X1	1	Nut Metric	M5
28	70917032	1	Union	[A]
29	3782421M1	1	Protective Strip	Up to Serial or Engine Number J105020 Length 500MM
	3784039M1	1	Protective Strip	From Serial or Engine Number J105021 Length 240MM
30	339169X1	1	Nut	
31	360567X1	1	Clamp	
32	339368X1	1	Bolt Metric	M8X60
33	3785087M1	6	Bridle	
34	3785088M1	3	O Ring	Diameter 22,5X2

FOOTNOTE [A] WITH FULL POWERSHIFT
FOOTNOTE [B] WITH DYNASHIFT
FOOTNOTE [C] TURBO PRESSURE TRANSDUCER

https://truckmanualshub.com/

1-ZW04-002-A

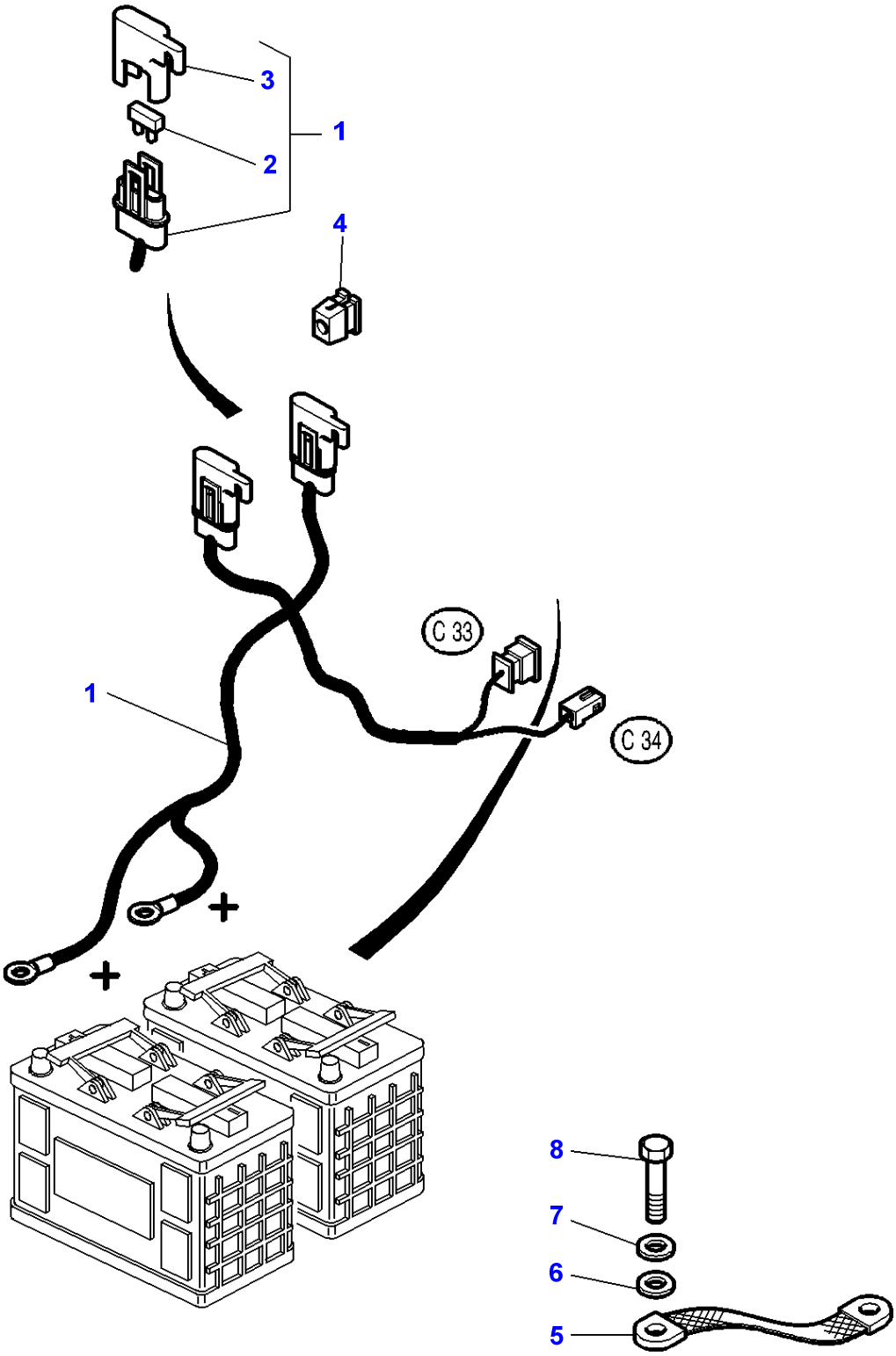

https://truckmanualshub.com/

Item	Part Number	Qty	Description	Comments
1	3779043M91	1	Harness	
2	**3620026M1**	1	Fuse	(1) 15 AMP
	3387319M1	1	Fuse	(1) 7,5 AMP
3	3600224M1	2	Cover	(1)
4	3809347M1	2	Nut	Up to Serial or Engine Number 04-JAN-2000
5	1625401M2	1	Cable	
6	385362X1	1	Washer Metric	
7	339374X1	1	Lock Washer	
8	339761X1	1	Hex. Sock. Screw	M8X25

1-ZU16-003-B

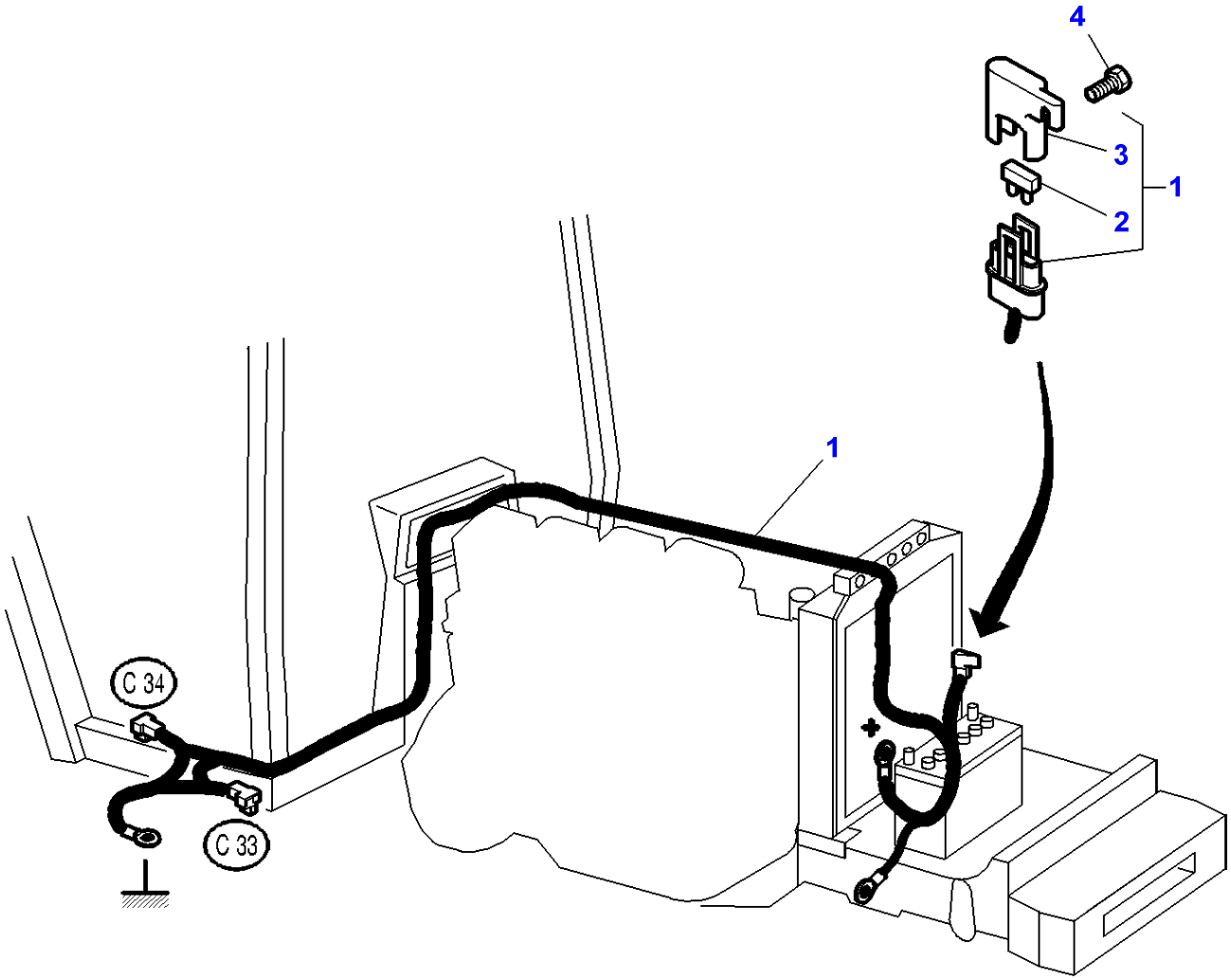

https://truckmanualshub.com/

Item	Part Number	Qty	Description	Comments
1	3779048M91	1	Harness	
2	**3620026M1**	1	Fuse	(1) 15 AMP
3	3600224M1	1	Cover	(1)
4	3010506X1	1	Screw	M5X16

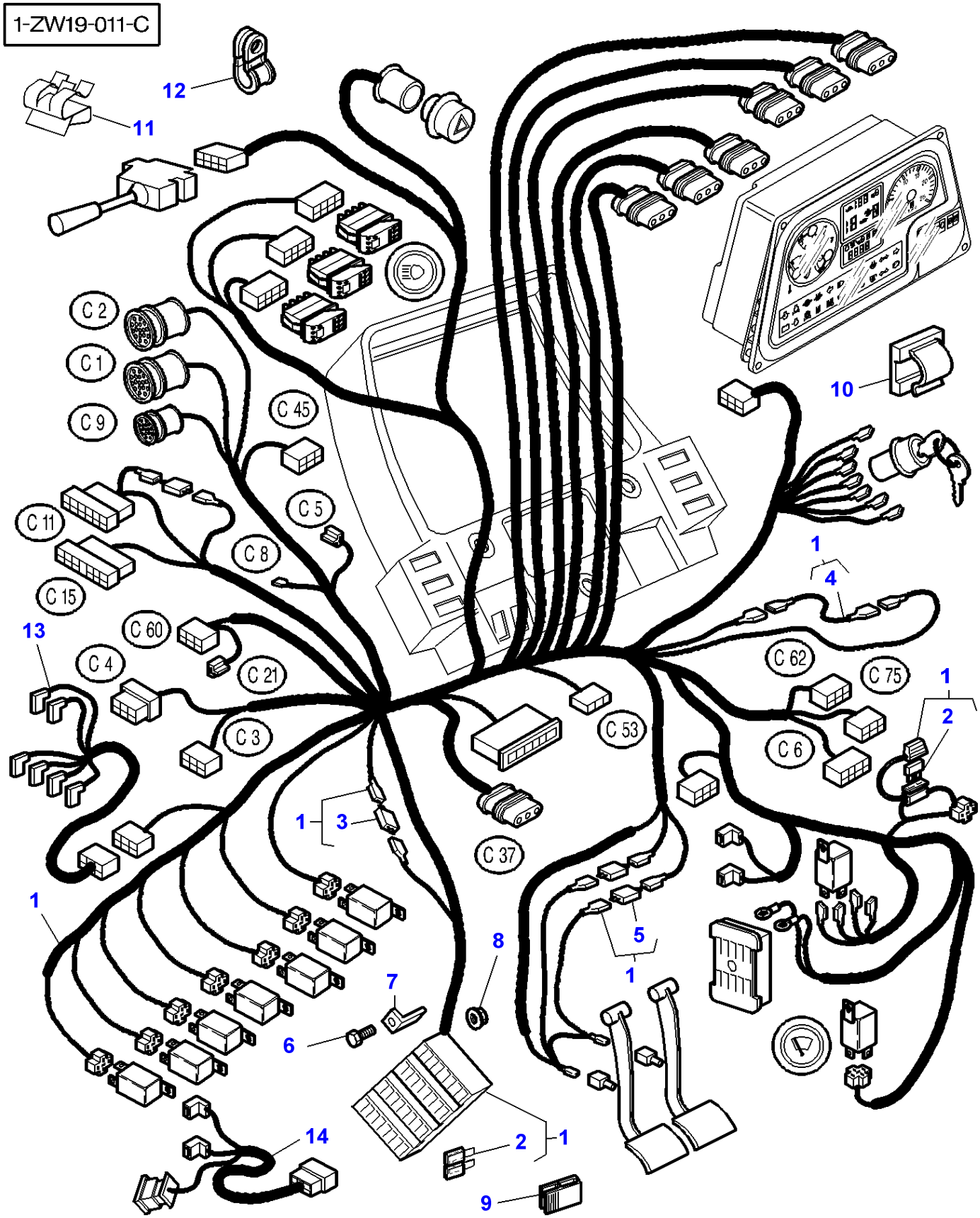
1-ZW19-011-C
12
11
C 2
C 1
C 9
C 45
C 5
C 11
C 8
C 15
C 60
13
C 4
C 21
C 3
C 53
C 37
C 62
C 75
C 6
10
1
4
2
3
5
8
7
6
14
9

https://truckmanualshub.com/

Item	Part Number	Qty	Description	Comments
1	3780154M96	1	Harness	Not for Sweden
	3780156M96	1	Harness	For Sweden Up to Serial or Engine Number 30-JUN-2000
	3780154M96	1	Harness	For Sweden From Serial or Engine Number 01-JUL-2000
	3780159M96	1	Harness	[A] Not for Sweden Up to Serial or Engine Number 30-JUN-2000
	3780154M96	1	Harness	[A] Not for Sweden From Serial or Engine Number 01-JUL-2000
2	**3580868M1**	2	Fuse	(1) 3 AMP.
	3387319M1	3	Fuse	(1) 7.5 AMP.
	1695939M1	3	Fuse	(1) 10 AMP.
	1695966M1	6	Fuse	(1) 15 AMP.
	3387322M1	3	Fuse	(1) 25 AMP.
	3712661M1	6	Fuse	(1) 30 AMP.
3	3783014M1	1	Diode	(1)
4	3781003M1	1	Wire	[B] (1)
5	**3777531M1**	2	Diode	(1)
6	339160X1	4	Screw	M5X10
7	3387325M1	4	Support	
8	3010477X1	4	Nut Metric	M5
9	3389401M1	1	Fastener	
10	3760697M1	X	Clip	
11	3618680M1	1	Fastener	
12	3581424M1	2	Clamp	
13	3780415M1	1	Harness	Up to Serial or Engine Number J032030
14	3783857M1	1	Harness	From Serial or Engine Number J032031

FOOTNOTE [A] WITH WAY LIGHTS FITTED ON THE CAB ROOF
FOOTNOTE [B] EXCEPT WAY LIGHTS FITTED ON THE CAB ROOF

https://truckmanualshub.com/

1-ZW24-001-A

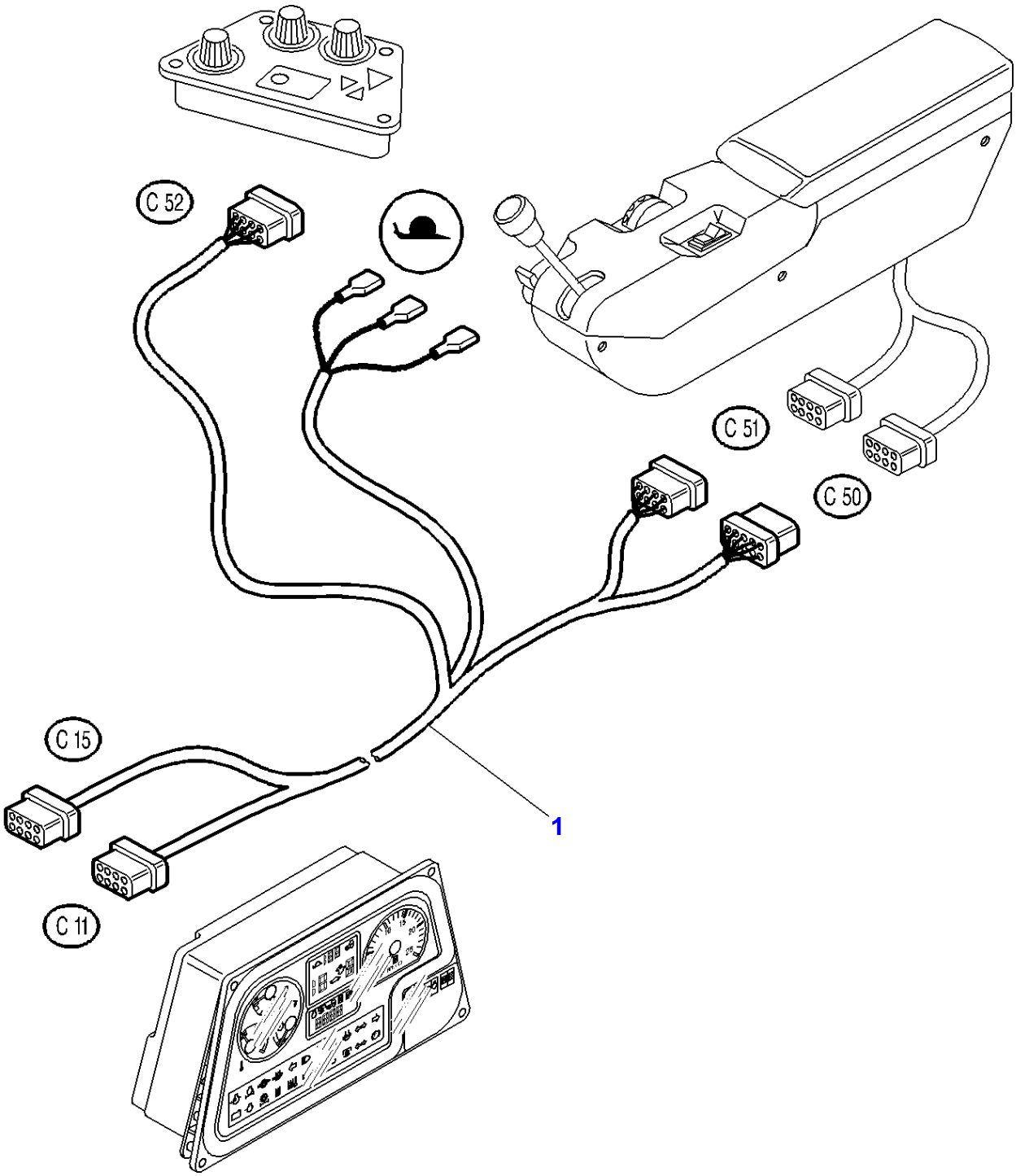

https://truckmanualshub.com/

Item	Part Number	Description
1	3777521M1	Harness

1-ZW23-004-A

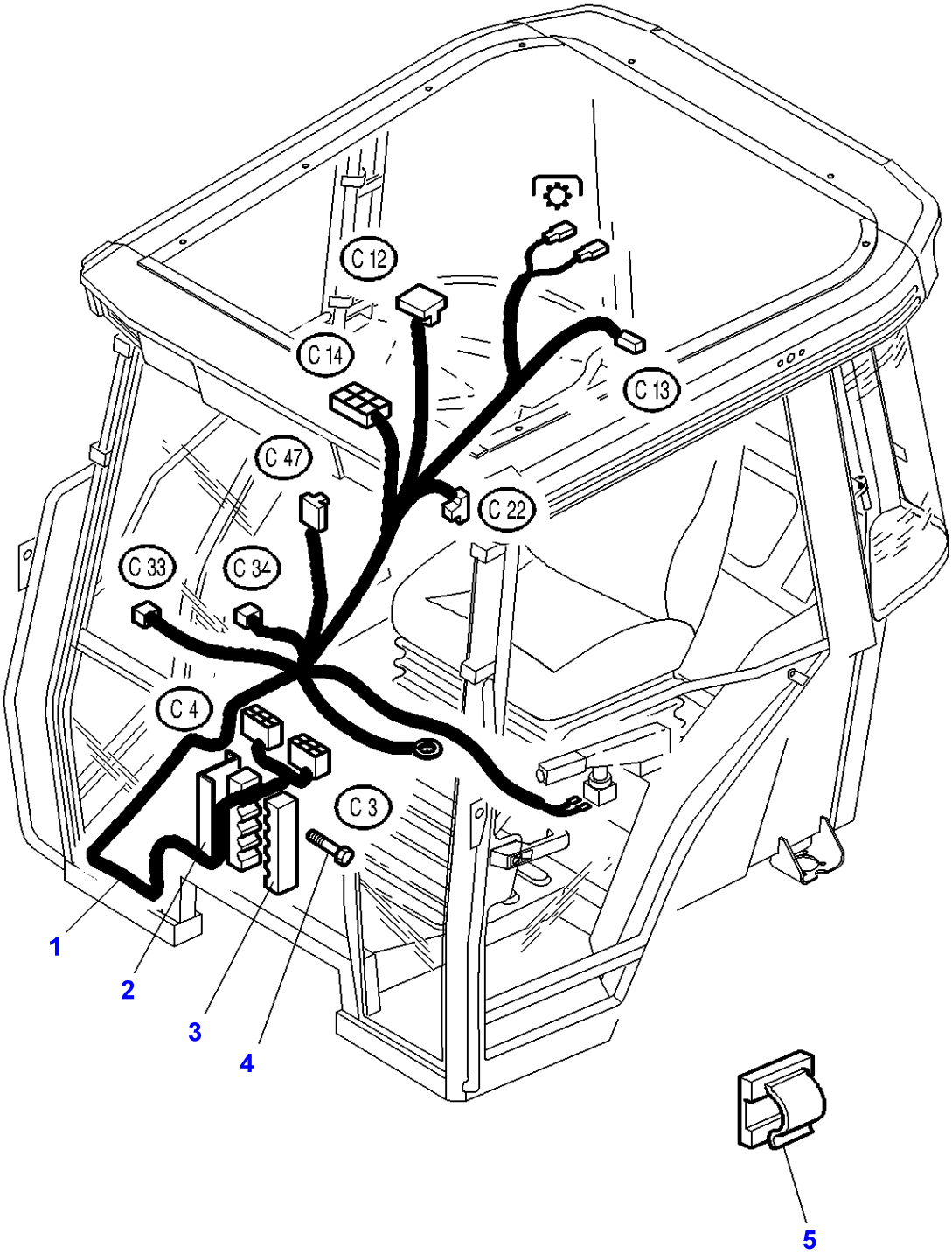

https://truckmanualshub.com/

Item	Part Number	Qty	Description	Comments
1	3777520M1	1	Harness	
2	3583308M92	1	Bridle	
3	3713556M3	2	Bridle	
4	391074X1	1	Hex. Sock. Screw	M6X12
	391884X1	1	Bolt Metric	M6X50
5	3760697M1	X	Clip	

https://truckmanualshub.com/

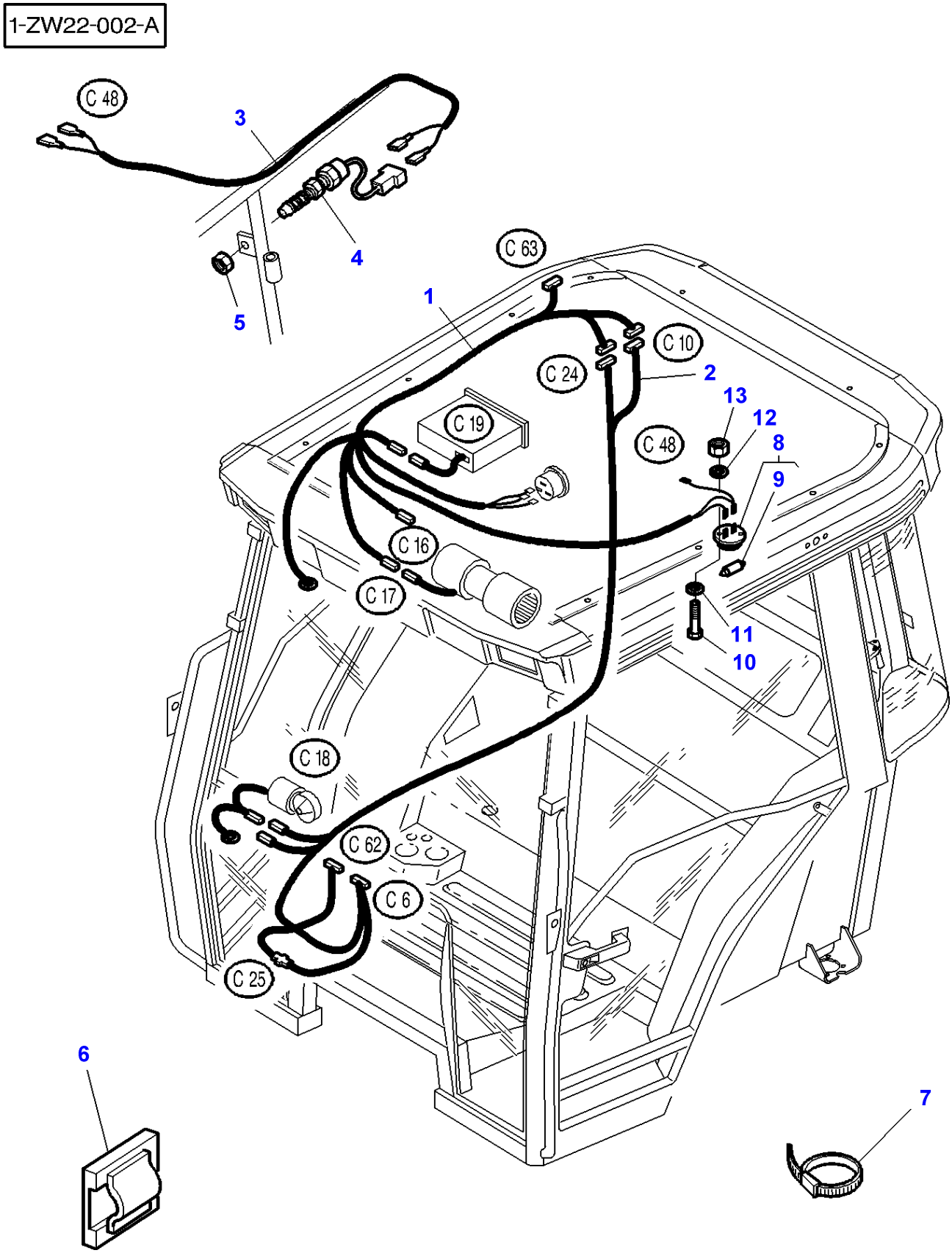

https://truckmanualshub.com/

Item	Part Number	Qty	Description	Comments
1	3780373M1	1	Harness	
2	3780372M2	1	Harness	
3	3714845M1	1	Harness	
4	**3780395M2**	1	Switch,Indirect	
5	390333X1	1	Nut Metric	M10
6	3760697M1	X	Clip	
7	3619622M1	X	Cable Tie	
8	3713129M1	1	Roof Light	
9	**3385821M1**	2	Bulb 12v 10w	(8)
10	3001162X1	2	Screw	M4X16
11	339102X1	2	Washer	Diameter 9MM
12	3001856X1	2	Washer Metric	Diameter 4-12MM
13	3019139X1	2	Nut	M4

https://truckmanualshub.com/

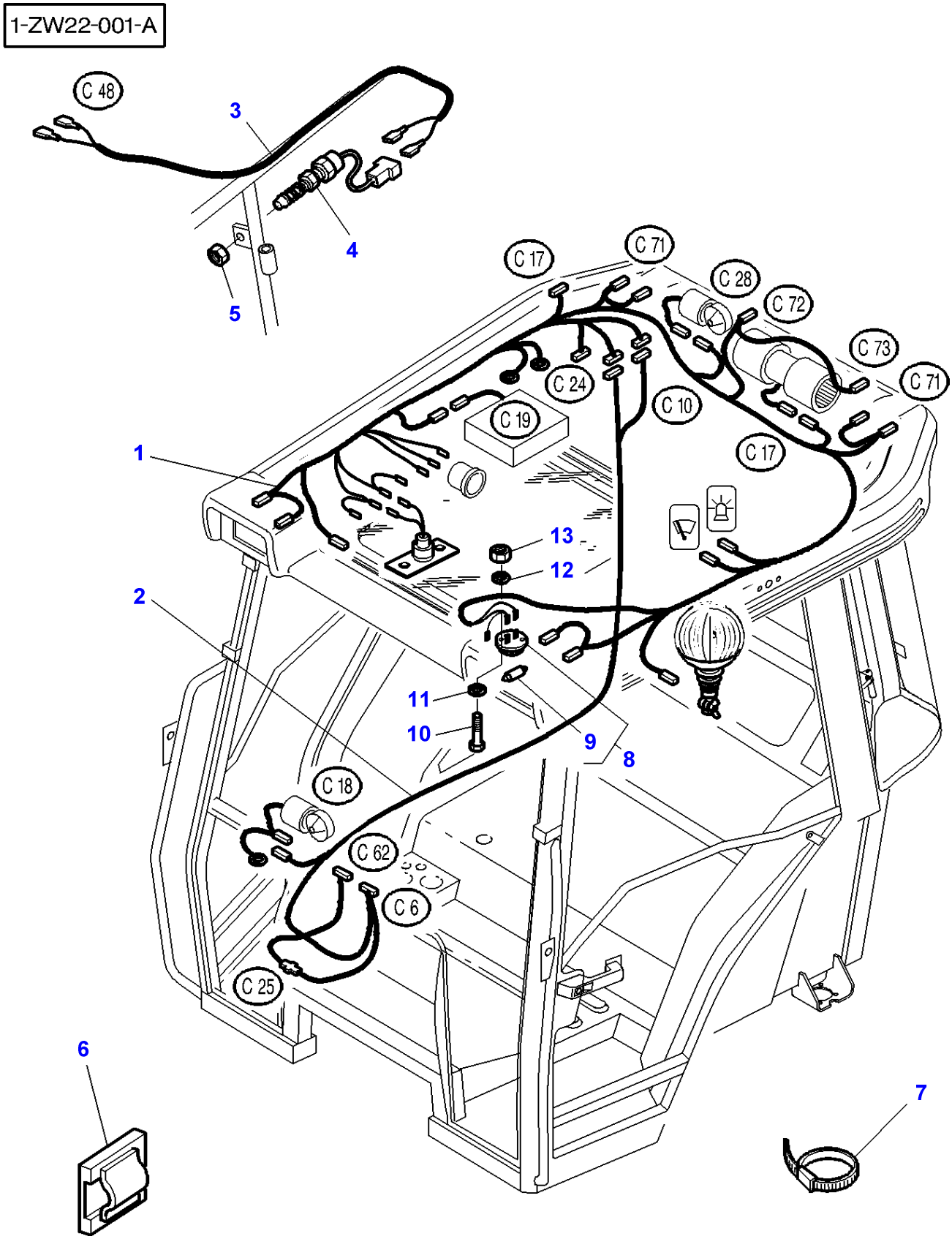

https://truckmanualshub.com/

Item	Part Number	Qty	Description	Comments
1	3779762M1	1	Harness	
2	3777696M3	1	Harness	
3	3714845M1	1	Harness	
4	**3780395M2**	1	Switch,Indirect	
5	390333X1	1	Nut Metric	M10
6	3760697M1	X	Clip	
7	3619622M1	X	Cable Tie	
8	3713129M1	1	Roof Light	
9	**3385821M1**	2	Bulb 12v 10w	(8)
10	3001162X1	2	Screw	M4X16
11	339102X1	2	Washer	Diameter 9MM
12	3001856X1	2	Washer Metric	Diameter 12MM
13	3019139X1	2	Nut	M4

https://truckmanualshub.com/

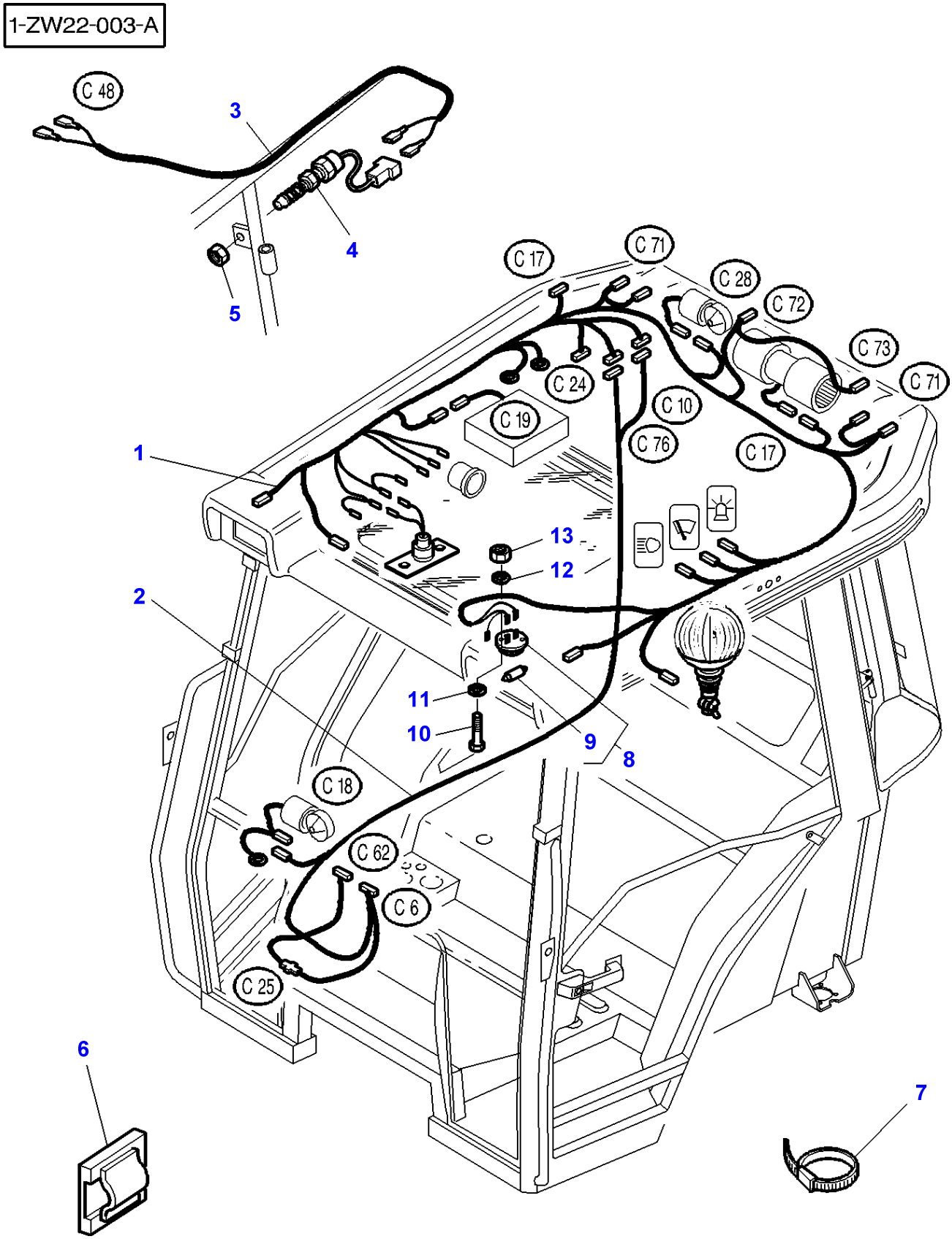

https://truckmanualshub.com/

ROOF HARNESS - WITH HIGH VISIBILITY ROOF / WAY LIGHTS FITTED ON T HE CAB ROOF

Item	Part Number	Qty	Description	Comments
1	3780481M1	1	Harness	
2	3777696M3	1	Harness	
3	3714845M1	1	Harness	
4	**3780395M2**	1	Switch,Indirect	
5	390333X1	1	Nut Metric	M10
6	3760697M1	X	Clip	
7	3619622M1	X	Cable Tie	
8	3713129M1	1	Roof Light	
9	**3385821M1**	2	Bulb 12v 10w	(8)
10	3001162X1	2	Screw	M4X16
11	339102X1	2	Washer	Diameter 9MM
12	3001856X1	2	Washer Metric	Diameter 12MM
13	3019139X1	2	Nut	M4

1-ZW21-003-A

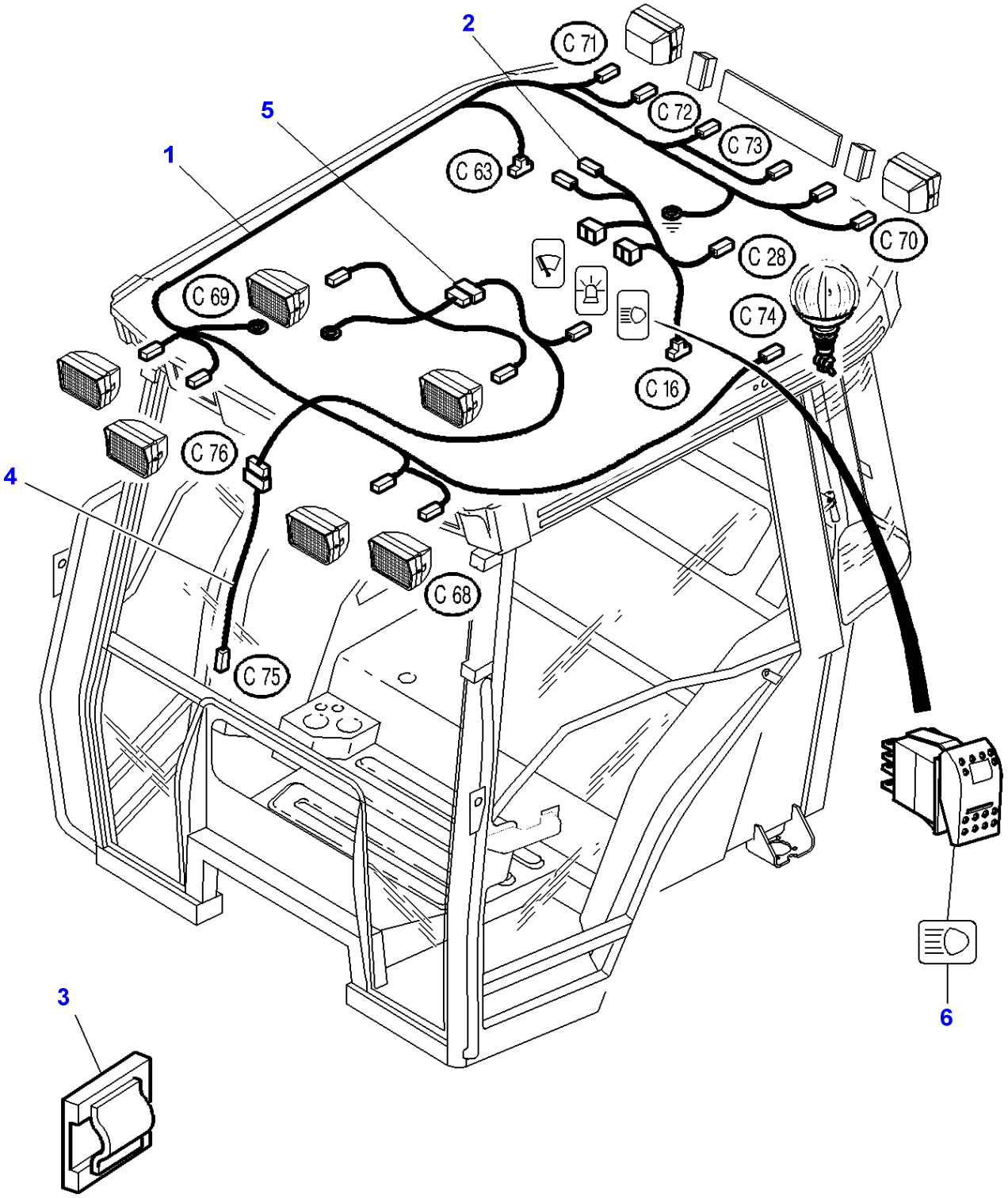

https://truckmanualshub.com/

Item	Part Number	Qty	Description	Comments
1	3778212M1	1	Harness	
2	3780127M1	1	Harness	
3	3760697M1	X	Clip	Diameter 8MM
4	3713331M1	1	Harness	[A]
5	3714887M92	1	Harness	[A]
6	**3713145M1**	1	Switch,Indirect	[A]

FOOTNOTE [A] WITH WAY LIGHTS FITTED ON THE CAB ROOF

https://truckmanualshub.com/

1-ZW28-002-B

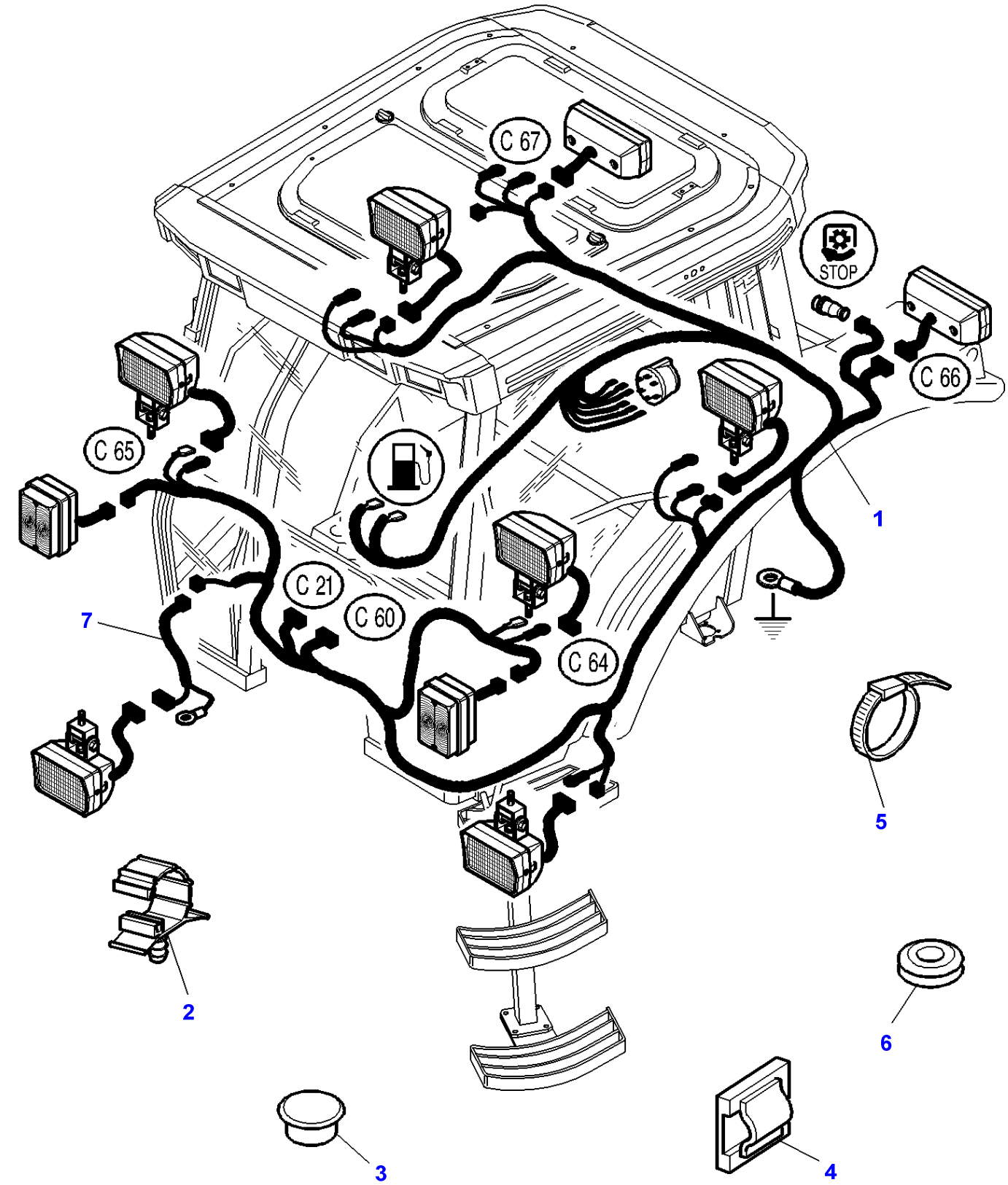

https://truckmanualshub.com/

Item	Part Number	Qty	Description	Comments
1	3779683M4	1	Harness	Not for USA
2	3715130M1	4	Clamp	Diameter 10 MM
	3715129M1	5	Clamp	Diameter 20MM
3	3580599M1	1	Plug	Diameter 22X3
4	3760697M1	2	Clip	
5	3619622M1	X	Cable Tie	
6	3010670X1	1	Grommet	
7	3783465M2	1	Harness	From Serial or Engine Number H250034 Length 1450MM

https://truckmanualshub.com/

Page Title	Page Number
Electrical Wiring - Without Electronic Lift	090-0005
Electronic Lift - Main Harness	090-0010
Electronic Lift - Main Harness - Dual Control - Up To H277037	090-0015
Electronic Lift - Main Harness - Dual Control - From H277038	090-0020
Electronic Lift - Console	090-0025
Electronic Equipment - Sensors	090-0030
Aboard Computer	090-0035
Aboard Computer - Transfers	090-0040
Aboard Computer - Wiring	090-0045
Radar	090-0050
Control Box - Cab	090-0055
Full Powershift - TRANSMISSION MAIN HARNESS	090-0060
Full Powershift - EMERGENCY HARNESS	090-0065
Temporised relay park-lock - Full Powershift - From Serial or Engine Number - H343026	090-0070

https://truckmanualshub.com/

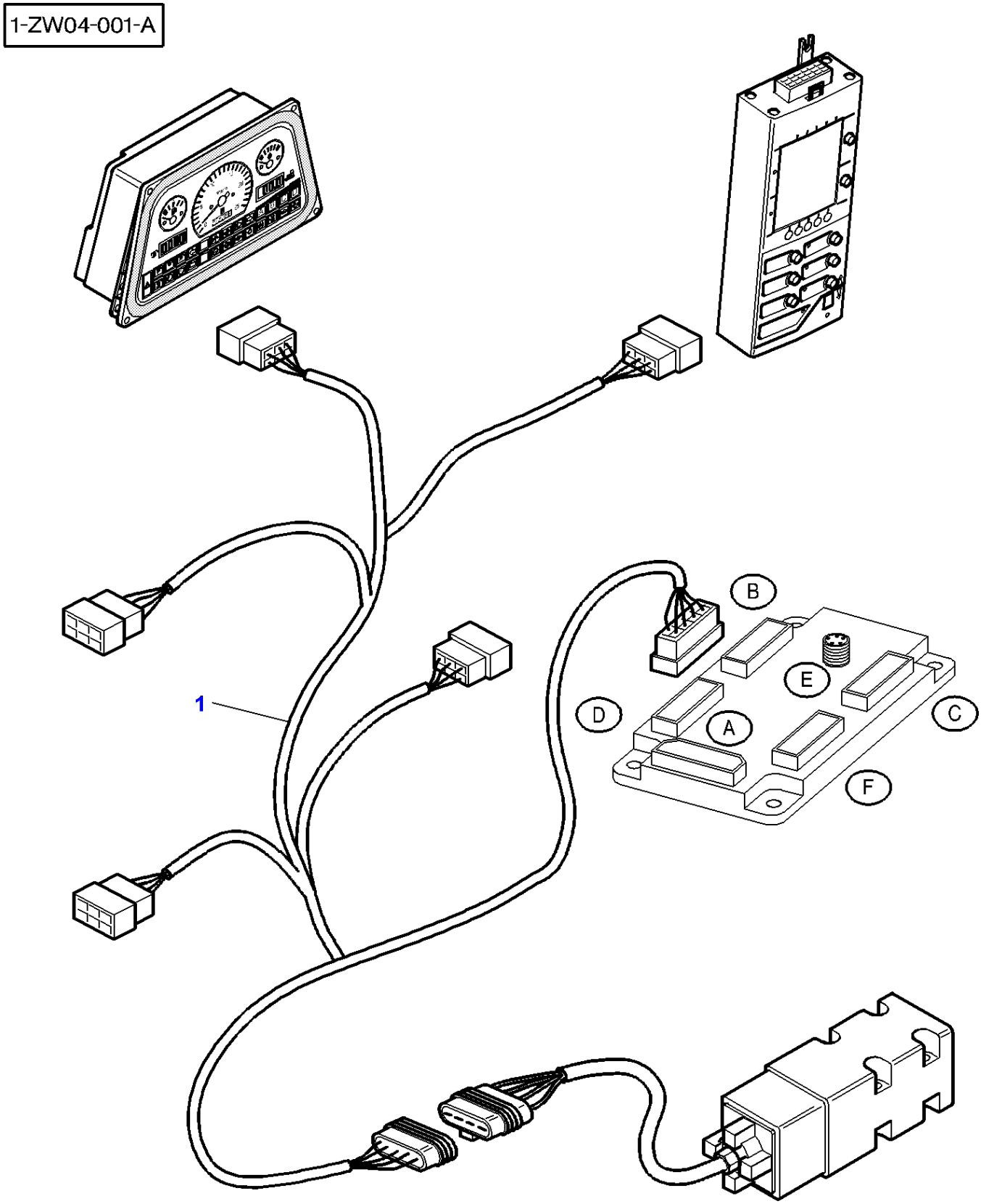

https://truckmanualshub.com/

Item	Part Number	Qty	Description
1	3780090M2	1	Harness

https://truckmanualshub.com/

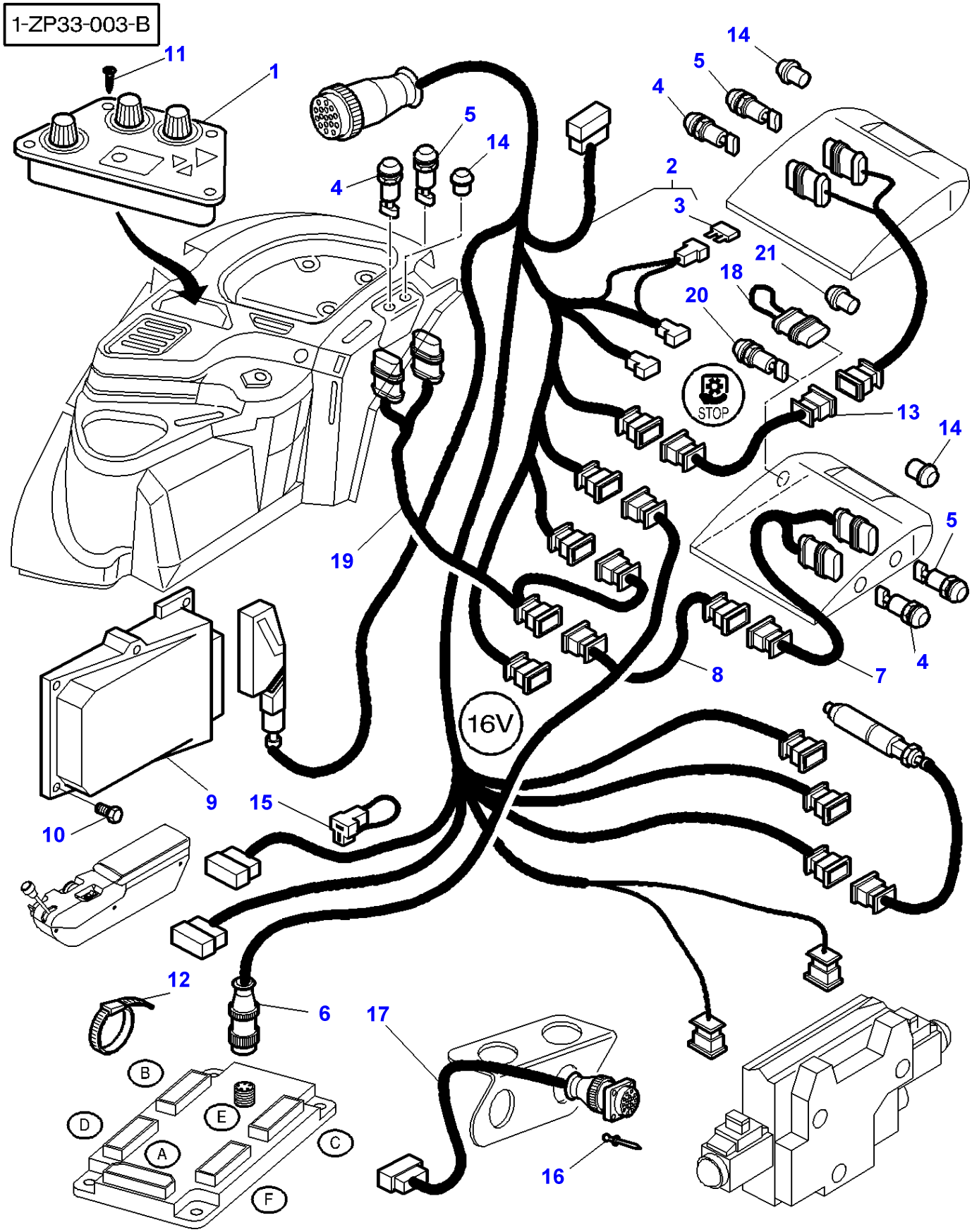

https://truckmanualshub.com/

Item	Part Number	Qty	Description	Comments
1	3778510M94	1	Electron Console	
2	3778505M92	1	Elect.Lift Cable	
3	**3580868M1**	1	Fuse	(2) 3 AMP
4	**3714137M1**	3	Switch,Indirect	[A]
5	**3714138M1**	3	Switch,Indirect	[B]
6	3778707M1	1	Harness	
7	3714135M1	2	Harness	
8	3712725M1	1	Harness	Left Hand Length 3500 MM
9	3779194M93	1	Calculator	
10	3010506X1	2	Screw	M5X16
11	3010559X1	4	Screw	M4X12
12	3619622M1	20	Cable Tie	
13	3712726M1	1	Harness	Right Hand
14	3380422M1	X	Plug	
15	3715934M1	1	Harness	[C]
16	391349X1	4	Rivet	
17	3778708M1	1	Harness	
18	3782172M1	1	Wire	
19	3712724M1	1	Harness	
20	**3777568M2**	1	Switch,Indirect	
21	3778808M1	1	Plug	

FOOTNOTE [A] UP
FOOTNOTE [B] DOWN
FOOTNOTE [C] WITH DYNASHIFT
FOOTNOTE [D] WITH FULL POWERSHIFT

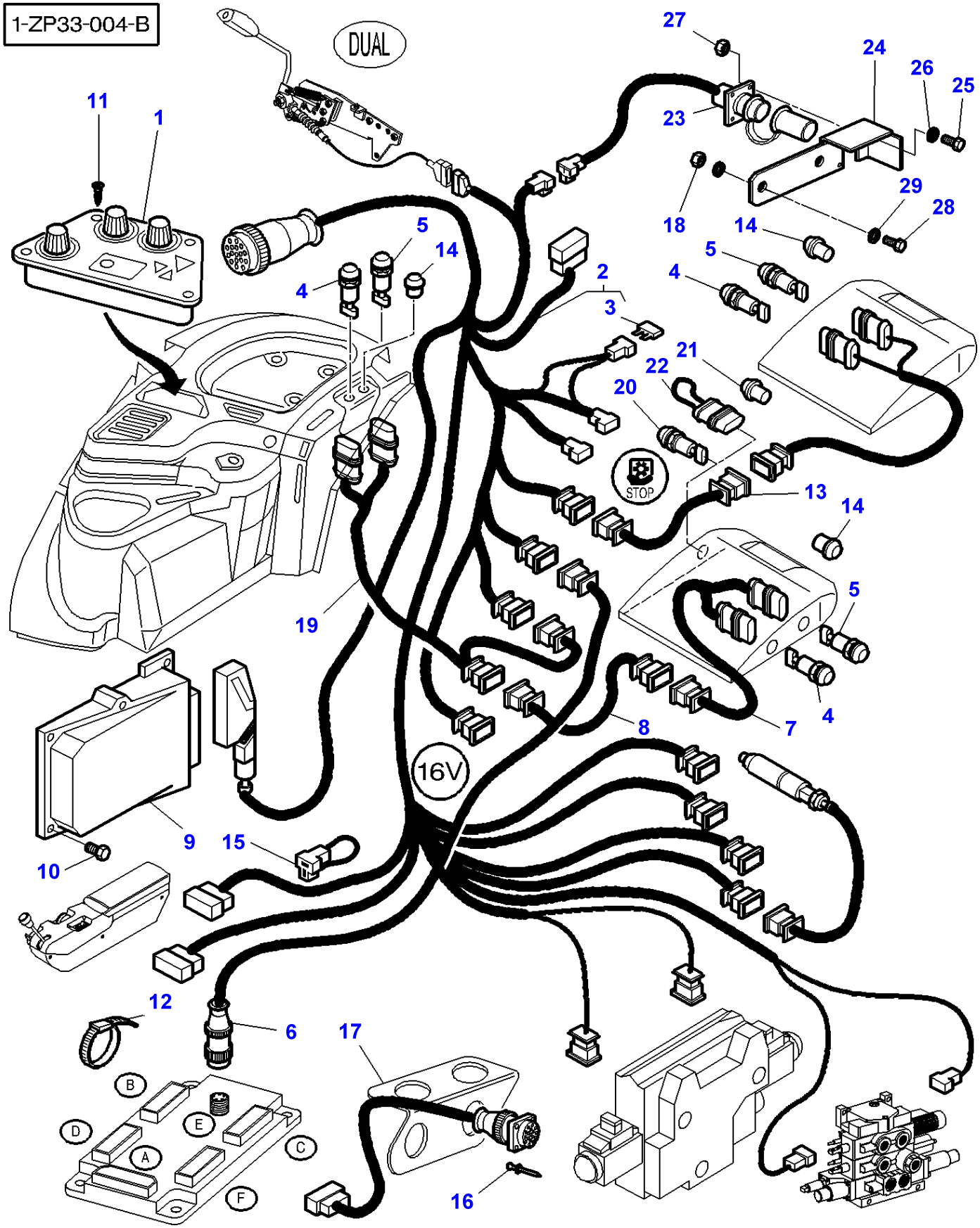
1-ZP33-004-B
DUAL
STOP
16V
1
2
3
4
5
6
7
8
9
10
11
12
13
14
15
16
17
18
19
20
21
22
23
24
25
26
27
28
29
A
B
C
D
E
F

https://truckmanualshub.com/

Item	Part Number	Qty	Description	Comments
1	3778510M94	1	Electron Console	
2	3783148M92	1	Harness	
3	**3580868M1**	1	Fuse	(2) 3 AMP
4	**3714137M1**	3	Switch,Indirect	[A]
5	**3714138M1**	3	Switch,Indirect	[B]
6	3778707M1	1	Harness	
7	3714135M1	2	Harness	
8	3712725M1	1	Harness	Left Hand Length 3500 MM
9	3783218M91	1	Calculator	250KB
10	3010506X1	2	Screw	M5X16
11	3010559X1	4	Screw	M4X12
12	3619622M1	20	Cable Tie	
13	3712726M1	1	Harness	Right Hand
14	3380422M1	X	Plug	
15	3715934M1	1	Harness	
16	391349X1	4	Rivet	
17	3778708M1	1	Harness	
18	3009693X1	2	Nut Metric	
19	3712724M1	1	Harness	
20	**3777568M2**	1	Switch,Indirect	
21	3778808M1	1	Plug	
22	3782172M1	1	Wire	
23	3617813M1	1	Harness	
24	3783205M1	1	Support	
25	3001162X1	4	Screw	
26	339102X1	4	Washer	
27	1443615X1	4	Nut Metric	
28	3009494X1	2	Screw Metric	M10X35
29	390734X1	4	Washer	

FOOTNOTE [A] UP
FOOTNOTE [B] DOWN
FOOTNOTE [C] WITH DYNASHIFT
FOOTNOTE [D] WITH FULL POWERSHIFT

https://truckmanualshub.com/

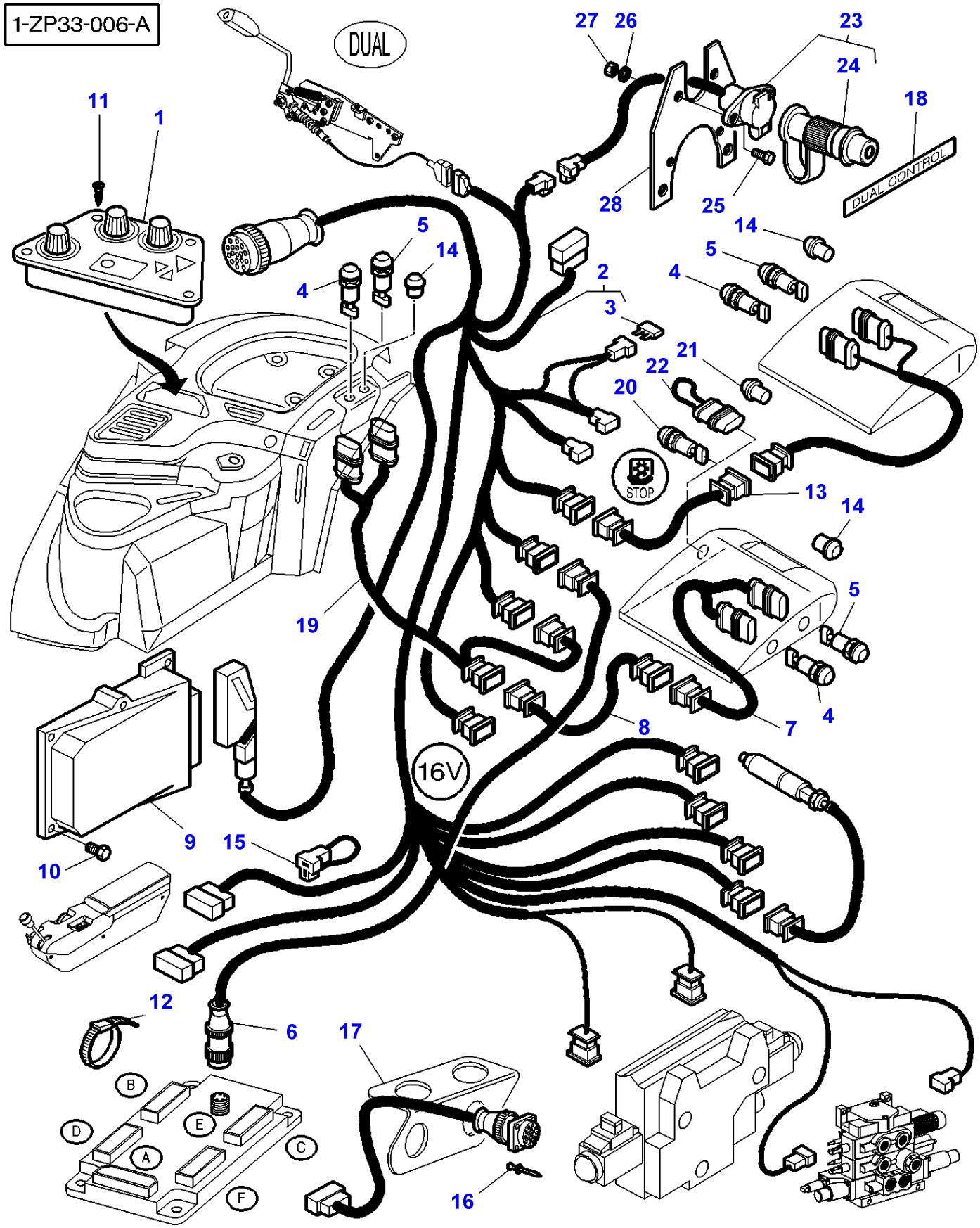

https://truckmanualshub.com/

Item	Part Number	Qty	Description	Comments
1	3778510M94	1	Electron Console	
2	3783148M92	1	Harness	
3	**3580868M1**	1	Fuse	(2) 3 AMP
4	**3714137M1**	3	Switch,Indirect	[A]
5	**3714138M1**	3	Switch,Indirect	[B]
6	3778707M1	1	Harness	
7	3714135M1	2	Harness	
8	3712725M1	1	Harness	Left Hand Length 3500 MM
9	3783218M91	1	Calculator	250KB
10	3010506X1	2	Screw	M5X16
11	3010559X1	4	Screw	M4X12
12	3619622M1	20	Cable Tie	
13	3712726M1	1	Harness	Right Hand
14	3380422M1	X	Plug	
15	3715934M1	1	Harness	
16	391349X1	4	Rivet	
17	3778708M1	1	Harness	
18	3783975M1	1	Decal	
19	3712724M1	1	Harness	
20	**3777568M2**	1	Switch,Indirect	
21	3778808M1	1	Plug	
22	3782172M1	1	Wire	
23	3783970M91	1	Harness	
24		1	Plug 7 Pin Male	(23) Not serviced, order REF NO 23
25	390990X1	2	Screw Metric	M5X12
26	390469X1	2	Washer Metric	
27	3010477X1	2	Nut Metric	
28	3783962M1	1	Support	

FOOTNOTE [A] UP
FOOTNOTE [B] DOWN
FOOTNOTE [C] WITH DYNASHIFT
FOOTNOTE [D] WITH FULL POWERSHIFT

https://truckmanualshub.com/

1-ZP37-001-B

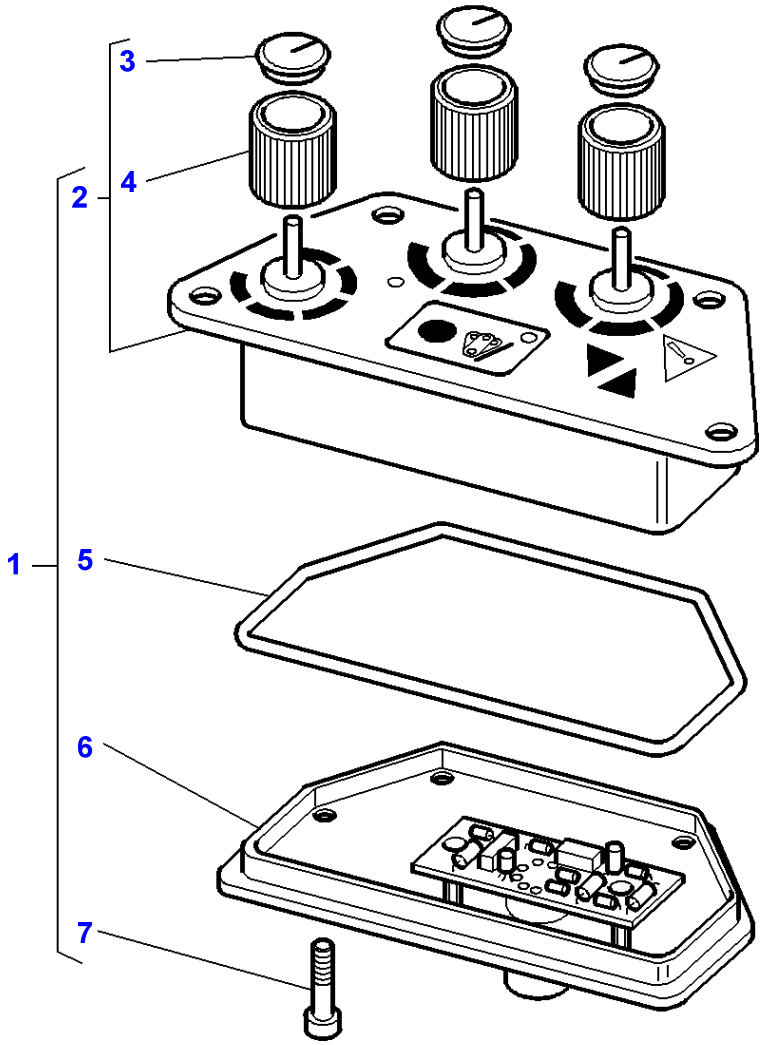

https://truckmanualshub.com/

Item	Part Number	Qty	Description	Comments
1	3778510M94	1	Electron Console	
2	3902809M94	1	Cover	(1)
3	3902440M1	3	Helmet	(2)
4	3902808M1	3	Button	(2)
				Up to Serial or Engine Number H140013
	3903452M1	3	Button	(2)
				From Serial or Engine Number H140014
5	3902452M1	1	O Ring	(1)
6	3902810M91	1	Printed Circuit	(1)
7	3902811M1	4	Screw	(1)

https://truckmanualshub.com/

1-ZU37-002-A

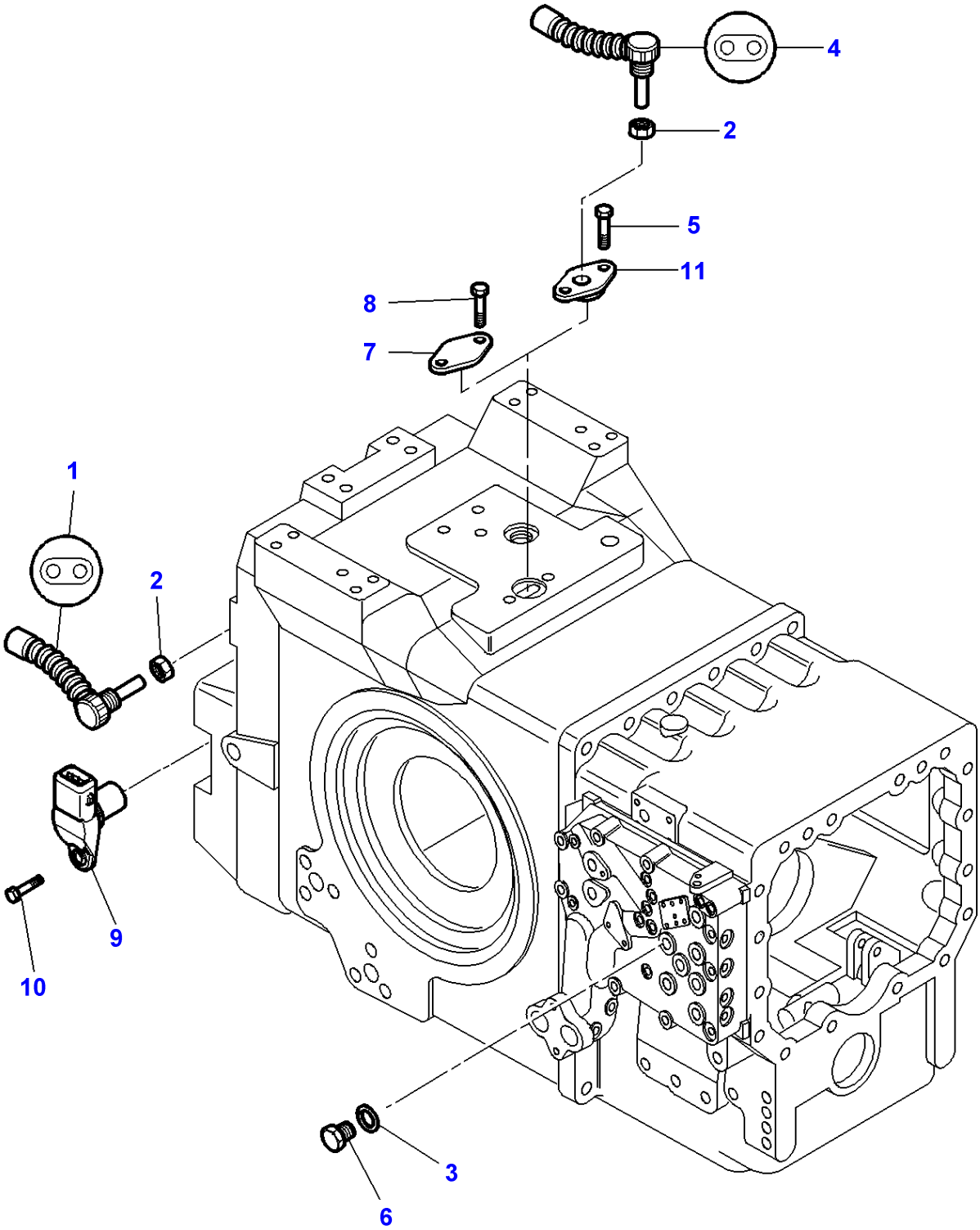

https://truckmanualshub.com/

Item	Part Number	Qty	Description	Comments
1	**3790881M1**	1	Inductive Taker	[F] Length 75MM
2	339592X1	2	Nut Metric	
3	390202X1	1	Seal	
4	**3583287M2**	1	Inductive Taker	[E] Length 150MM
5	339761X1	2	Hex. Sock. Screw	M8X25
6	339494X1	1	Plug	
7	3792054M1	1	Plate	[C]
8	339761X1	2	Hex. Sock. Screw	M8x25
9	**3716042M1**	1	Pto Speed Sensor	
10	3009280X1	1	Screw	M6X12
11	3716581M3	1	Support	

FOOTNOTE [C] WITHOUT DATATRONIC
FOOTNOTE [D] MOTOR SPEED
FOOTNOTE [E] TRAVELLING SPEED
FOOTNOTE [F] PTO SPEED

https://truckmanualshub.com/

1-ZU31-001-A

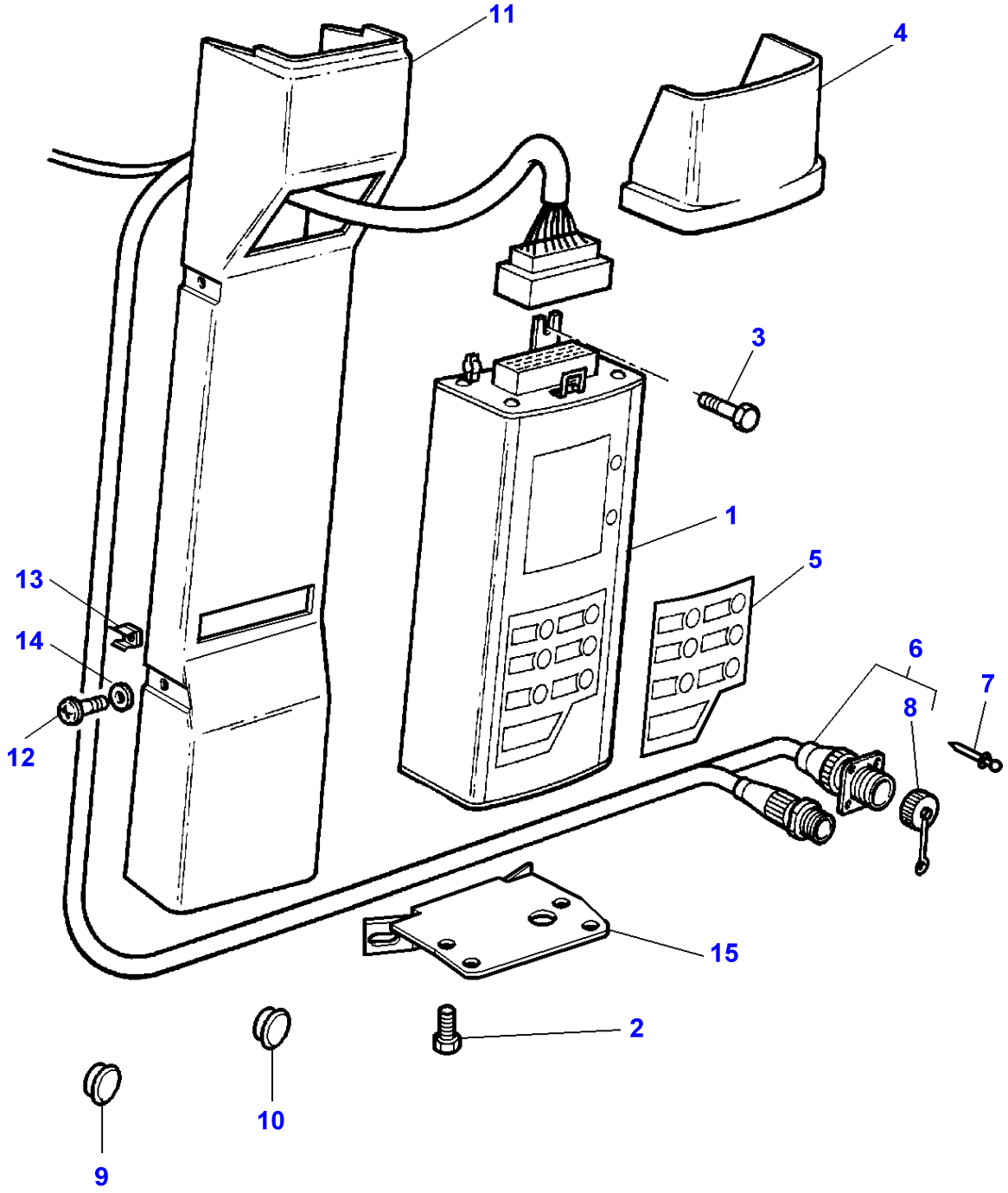

https://truckmanualshub.com/

Item	Part Number	Qty	Description	Comments
1	3792437M92	1	Onboard Computor	
2	3010578X1	2	Screw	M5X10
3	3010506X1	5	Screw	M5X16
4	3714916M1	1	Moulding	
5		1	Decal	See Page - Reference Number 090-0040/1
6	3778701M3	1	Harness	
7	391349X1	4	Rivet	
8	3900383M1	1	Plug	(6)
9	3380422M1	1	Plug	[A]
10	3042671M1	1	Plug	[A] Diameter 12,7MM Up to Serial or Engine Number H043028
	3042523M1	1	Plug	[A] Diameter 10MM From Serial or Engine Number H043029
11	3714919M1	1	Mounting	
	3713072M4	1	Mounting	[A]
12	3010506X1	4	Screw	M5X16
13	3615557M1	7	Boxnut	
14	1427000M1	4	Washer	
15	3714918M2	1	Support	

FOOTNOTE [A] WITHOUT DATATRONIC

https://truckmanualshub.com/

1-ZU32-001-A

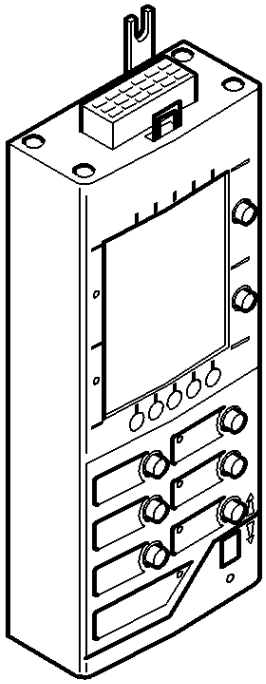

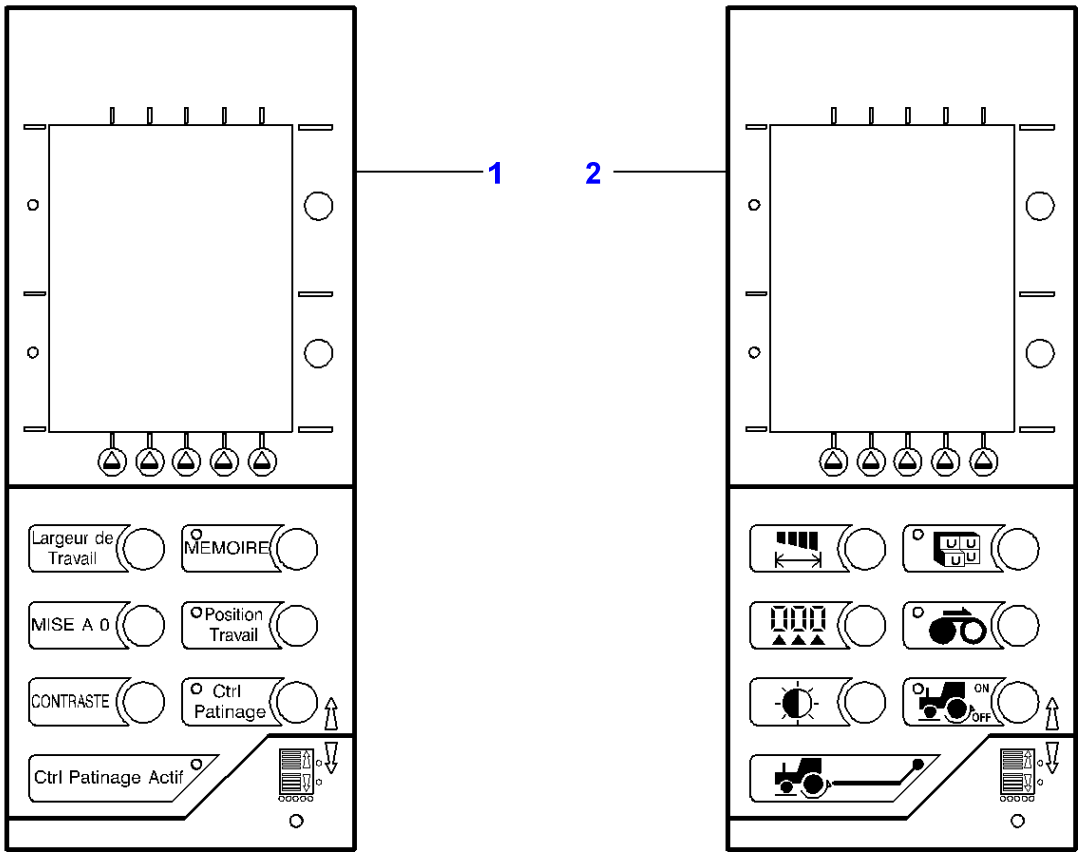

https://truckmanualshub.com/

Item	Part Number	Qty	Description	Comments
1	3714660M1	1	Decal	For France only or any text in French only
	3714661M1	1	Decal	For UK only or any text in English only
	3714662M1	1	Decal	For Germany only or any text in German only
	3714663M1	1	Decal	For Italy only or any text in Italian only
	3714664M1	1	Decal	[A]
2	3714665M1	1	Decal	

FOOTNOTE [A] SPAIN

1-ZU35-001-A

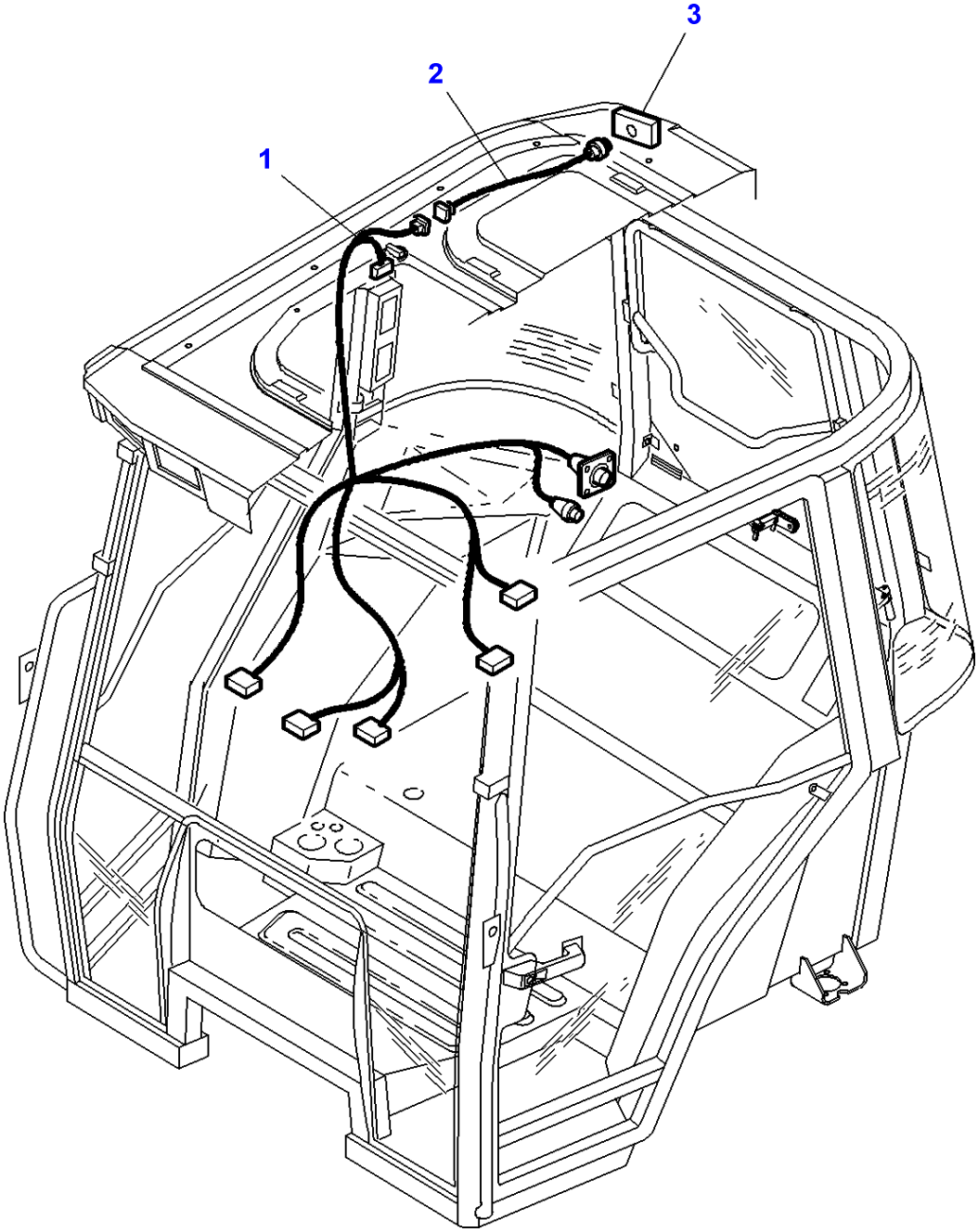

https://truckmanualshub.com/

Item	Part Number	Qty	Description
1	3778701M3	1	Harness
2	3714262M1	1	Harness
3	3714264M1	1	Transmitter

https://truckmanualshub.com/

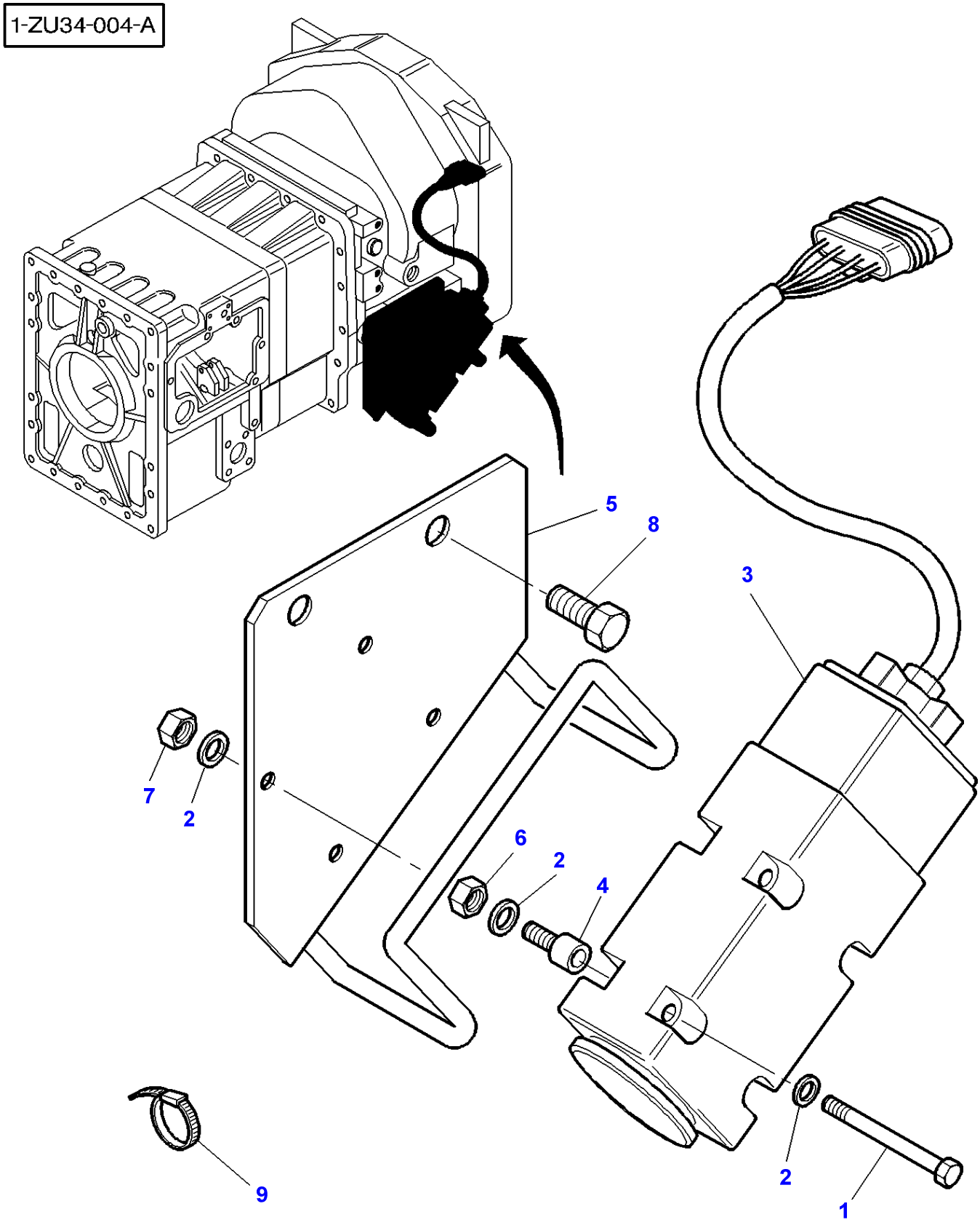

https://truckmanualshub.com/

Item	Part Number	Qty	Description	Comments
1	3019894X1	4	Screw	M6X100
2	390971X1	X	Washer	
3	3714290M2	1	Speed Detector	For UK only or any text in English only GHZ 24.300
	3714291M2	1	Speed Detector	GHZ 24.125
4	3582802M1	4	Spacer	
5	3779850M1	1	Support	
6	1440207X1	4	Nut Metric	
7	339030X1	4	Nut Metric	
8	339613X1	2	Screw	M16X25
9	3619622M1	X	Cable Tie	

https://truckmanualshub.com/

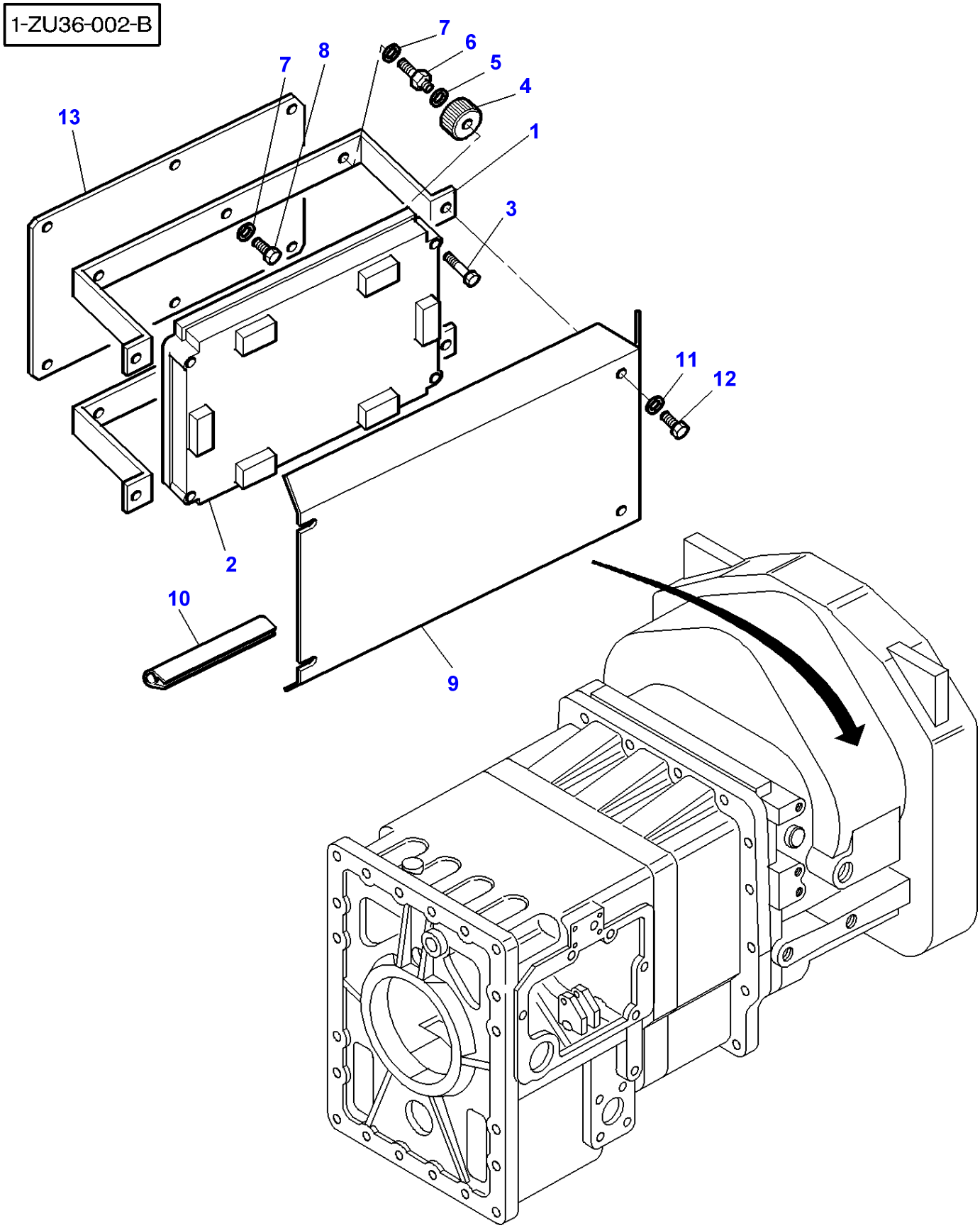

https://truckmanualshub.com/

Item	Part Number	Qty	Description	Comments
1	3790912M1	2	Support	
2	3790842M1	1	Switch Box	
3	339096X1	4	Bolt Metric	M6X35
4	3790853M1	4	Support	
5	391289X1	4	Lock Washer	
6	3791098M1	4	Screw	M6/M8
7	22428X	5	Lock Washer	
8	339228X1	1	Screw Metric	M8X12
9	3790911M3	1	Cowl	
10	3580695M1	X	Gasket	
	3791213M1	2	Gasket	Length 35MM
	1684844M1	1	Seal	Length 80MM
11	390972X1	2	Washer Metric	
12	339228X1	4	Screw Metric	M8X12
13	3783453M1	1	Cowl	

https://truckmanualshub.com/

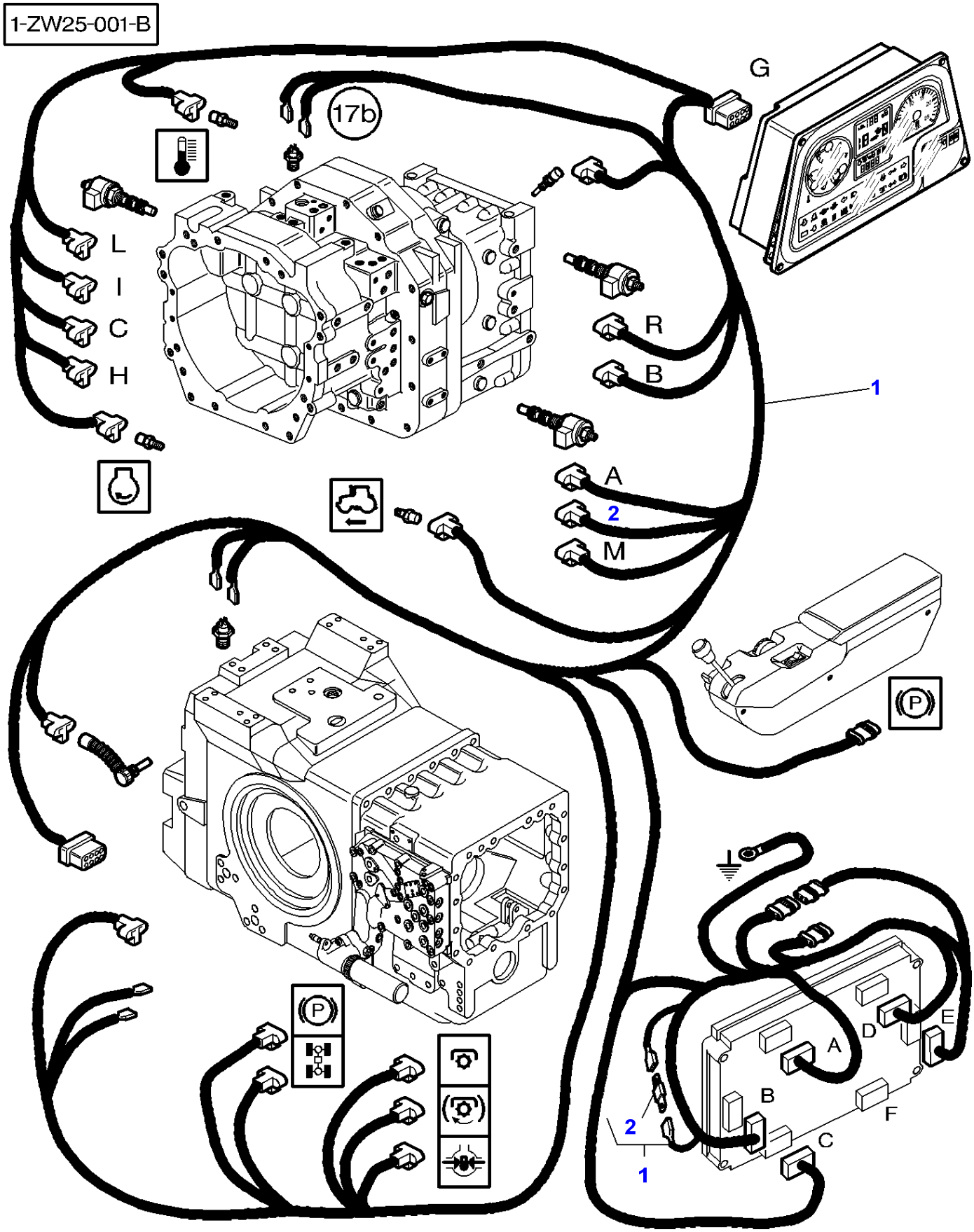

https://truckmanualshub.com/

Item	Part Number	Qty	Description	Comments
1	3790909M5	1	Harness	[A]
	3792505M1	1	Harness	[B]
2	3779377M1	1	Diode	[A] (1)

FOOTNOTE [A] WITH PUMP 45CC
FOOTNOTE [B] WITH PUMP 60CC

https://truckmanualshub.com/

1-ZW37-001-A

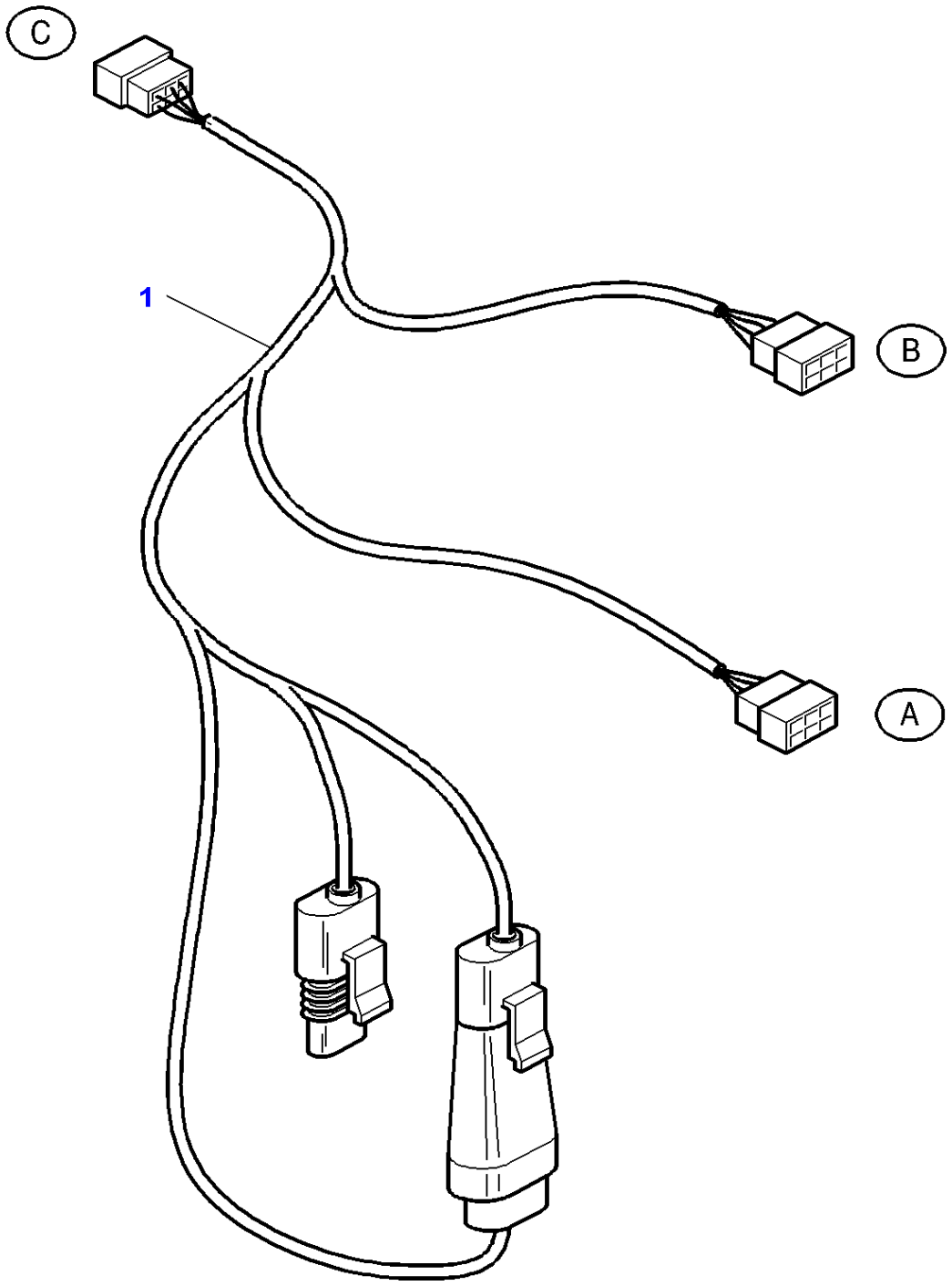

https://truckmanualshub.com/

Item	Part Number	Qty	Description
1	3791105M2	1	Harness

https://truckmanualshub.com/

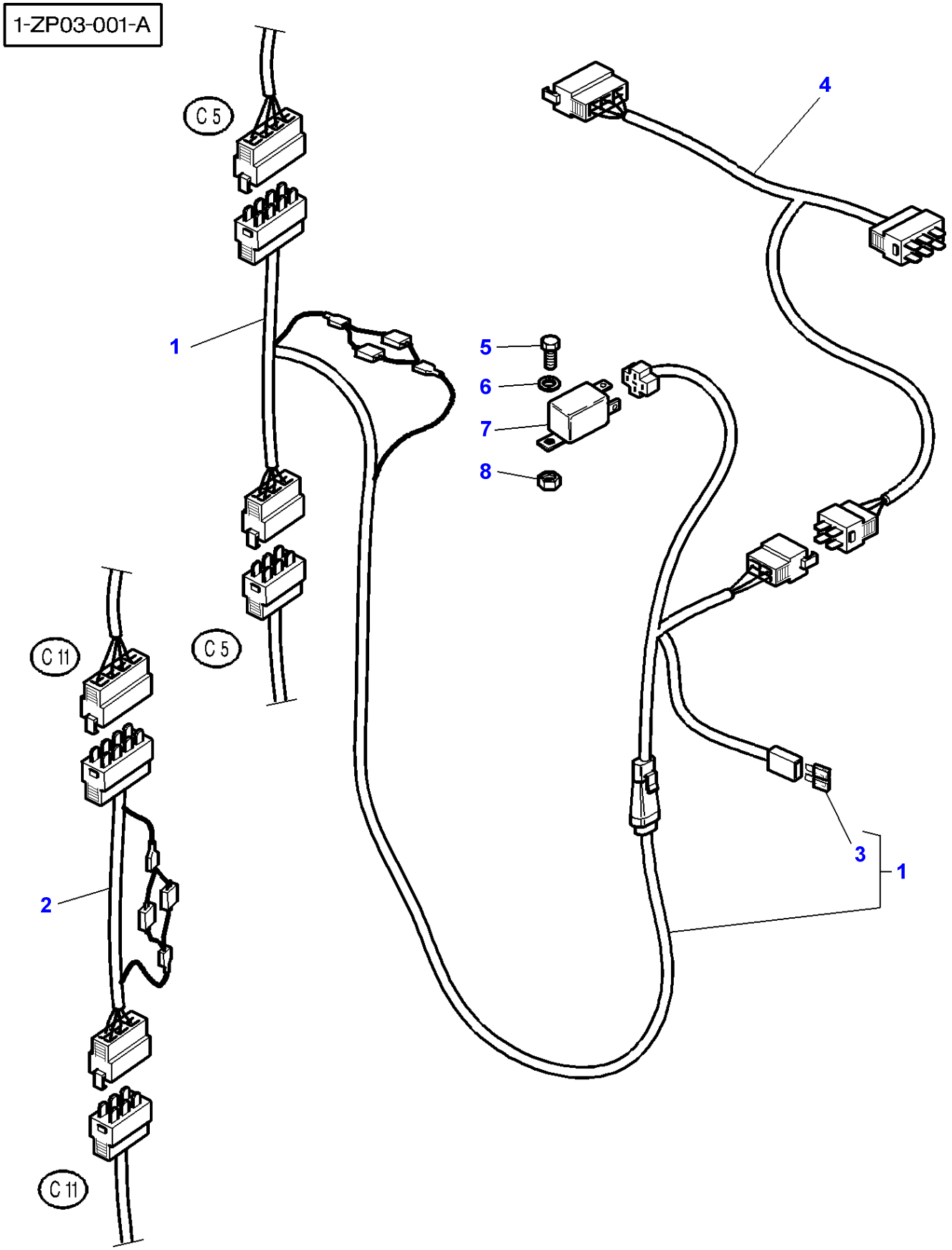

https://truckmanualshub.com/

Item	Part Number	Qty	Description	Comments
1	3783154M2	1	Harness	
2	3783662M1	1	Harness	
3	**1695966M1**	1	Fuse	(1) 15 AMP
4	3783153M1	1	Harness	
5	339666X1	1	Hex. Sock. Screw	M6X20
6	391038X1	2	Washer	Diameter 6-18
7	3783425M1	1	Relay	AST TIMER 48.04.06
8	1441500X1	1	Locknut	M6

https://truckmanualshub.com/

Page Title	Page Number
Sheet Metal - Hood	100-0005
Sheet Metal - Hood handle	100-0010
Sheet Metal - Screen Frame	100-0015
Sheet Metal - Hood Frame	100-0020
Footstep And Battery Box	100-0025
Cab Mountings And Step / Stairs	100-0030
Tool Box	100-0035
Emblems	100-0040
Speed Charts	100-0045
Decals - Safety - For UK only or any text in English only	100-0050
Decals - Safety - For United States of America	100-0055
Decals - Safety - For United States of America	100-0060
Decals - Safety - For France only or any text in French only	100-0065
Decals - Safety - For Germany only or any text in German only	100-0070
Decals - Safety - For Italy only or any text in Italian only	100-0075
Decals - Safety - For Spanish	100-0080
Decals - Safety - For Norway	100-0085
Decals - Safety - For Sweden	100-0090
Decals - Safety - Denmark	100-0095
Decals - Safety - FOR RUSSIAN MARKET ONLY	100-0100
Literature	100-0105

https://truckmanualshub.com/

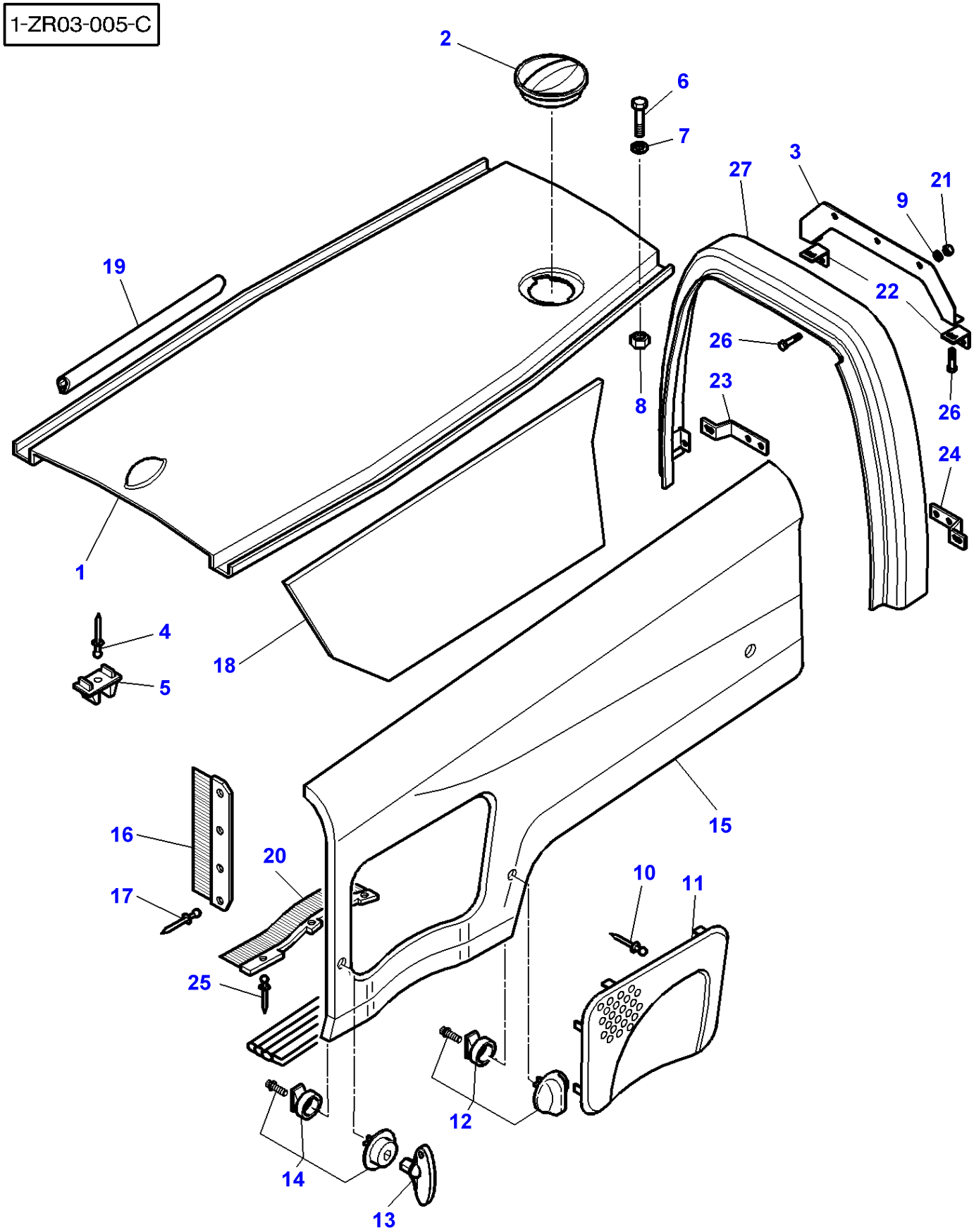

https://truckmanualshub.com/

Item	Part Number	Qty	Description	Comments
1	3780016M1	1	Bonnet	
2	3800373M1	1	Cover	
3	3782174M2	1	Bracket	
4	3010935X1	6	Rivet	
5	3800376M1	6	Buffer	
6	339129X1	8	Split Pin	M8X20
7	385361X1	8	Washer Metric	
8	339169X1	8	Nut	
9	390972X1	2	Washer Metric	
10	3819546M1	18	Rivet	
11	3780859M2	1	Grille	Right Hand
	3780860M2	1	Grille	Left Hand
12	3903344M91	6	Latch	Alternative 3903345M91
13	**3813582M1**	1	Tool	
14	3903345M91	6	Latch	Alternative 3903344M91
15	3780017M1	1	Panel	Left Hand
	3780389M1	1	Panel	Right Hand
16	3782002M1	1	Seal Plate	Left Hand
	3782003M1	1	Seal Plate	Right Hand
17	3010935X1	8	Rivet	
18	3782121M1	1	Fence	
19	3782493M1	2	Gasket	Length 700MM
20	3782000M2	1	Seal	Left Hand
	3782001M2	1	Seal	Right Hand
21	339169X1	2	Nut	
22	3782178M1	2	Strap	
23	3782176M1	1	Bracket	Right Hand
24	3782175M1	1	Bracket	Left Hand
25	3010935X1	6	Rivet	
26	339124X1	6	Hex. Sock. Screw	M8X16
27	3782177M1	1	Support	

https://truckmanualshub.com/

1-ZR28-001-A

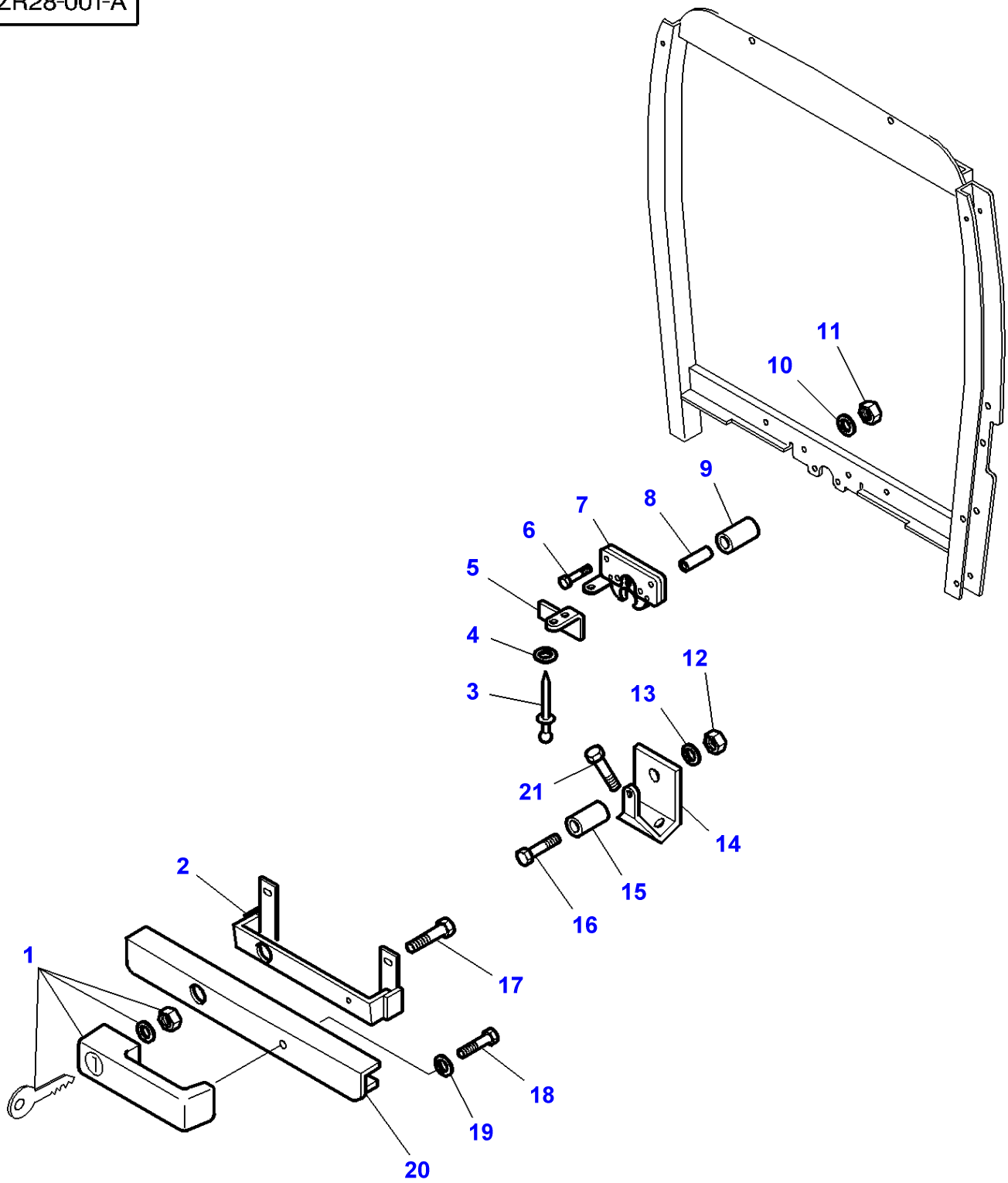

https://truckmanualshub.com/

Item	Part Number	Qty	Description	Comments
1	3902356M91	1	Handle	
2	3780988M3	1	Bracket	
3	391354X1	2	Rivet	
4	390468X1	2	Washer Metric	
5	3780990M2	1	Strap	
6	339262X1	2	Bolt Metric	M6X30
	3015036X1	2	Screw	M6X70
				Up to Serial or Engine Number H186024
7	72161441	1	Latch	
8	3781976M1	2	Spacer	Up to Serial or Engine Number H186024
9	3781233M1	2	Roll	Up to Serial or Engine Number H186024
10	390971X1	4	Washer	Up to Serial or Engine Number H186024
	390971X1	2	Washer	From Serial or Engine Number H186025
11	339030X1	4	Nut Metric	Up to Serial or Engine Number H186024
	339030X1	2	Nut Metric	From Serial or Engine Number H186025
12	339030X1	1	Nut Metric	
13	390971X1	1	Washer	
14	3780699M4	1	Bracket	
15	3781195M3	1	Clevis Pin	
16	3010445X1	1	Screw Metric	M6X80
17	339228X1	2	Screw Metric	M8X12
18	339560X1	1	Hex. Sock. Screw	M6X16
19	390971X1	1	Washer	
20	3780998M92	1	Grille	
21	339124X1	2	Hex. Sock. Screw	M8X16

1-ZR27-001-D

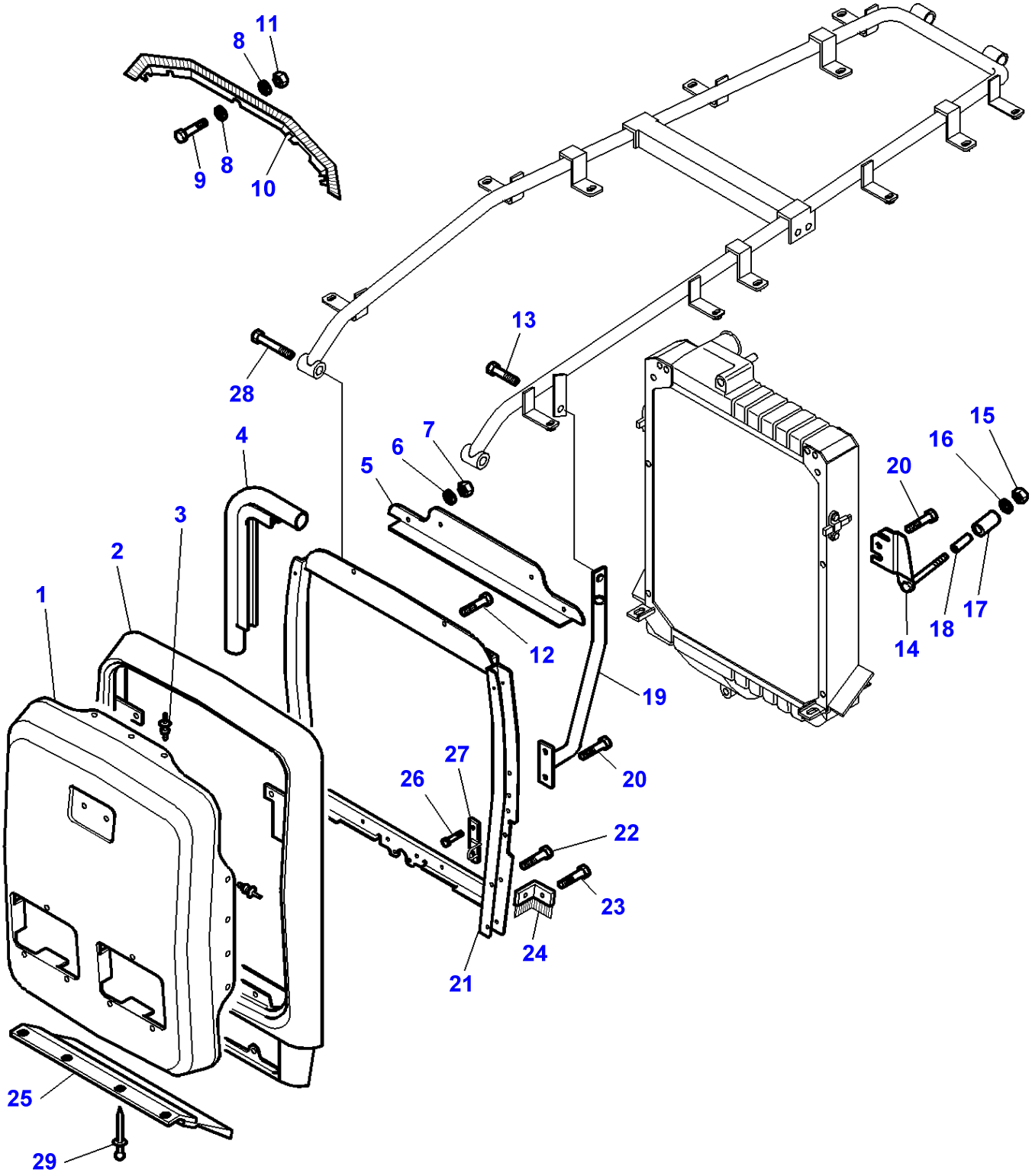
11
8
8
9
10
13
28
4
7
6
5
3
2
1
15
16
20
17
18
14
12
19
20
27
26
22
23
24
21
25
29

https://truckmanualshub.com/

Item	Part Number	Qty	Description	Comments
1	3805876M91	1	Grille	
2	3779302M2	1	Screen	
3	3010935X1	18	Rivet	
4	3783199M1	1	Gasket	Length 2060mm
5	3782763M1	1	Seal Plate	
6	385361X1	2	Washer Metric	
7	339169X1	2	Nut	
8	390971X1	10	Washer	
9	339666X1	5	Hex. Sock. Screw	M6X20
10	3782004M1	1	Gasket	
11	339030X1	5	Nut Metric	
12	391074X1	2	Hex. Sock. Screw	M6X25
13	339228X1	2	Screw Metric	M8X12
14	3782075M3	1	Support	Right Hand
	3782076M3	1	Support	Left Hand
15	339169X1	2	Nut	
16	385361X1	2	Washer Metric	
17	3782073M1	2	Roll	
18	3782072M1	2	Spacer	
19	3781166M3	1	Strut	Left Hand
	3781194M3	1	Strut	Right Hand
20	339124X1	6	Hex. Sock. Screw	M8X16
21	3782630M2	1	Support	
22	1440922X1	4	Bolt	M6X60
23	391074X1	4	Hex. Sock. Screw	M6X12
24	3782726M3	1	Seal	Left Hand
	3782727M3	1	Seal	Right Hand
25	3782722M2	1	Gasket	Length 535MM
				Up to Serial or Engine Number H285006
	3781999M2	1	Gasket	Length 450MM
				From Serial or Engine Number H285007
26	339228X1	4	Screw Metric	M8X12
27	3780693M2	1	Bracket	Left Hand
	3780694M2	1	Bracket	Right Hand
28	3009497X1	2	Bolt Metric	M10X50
29	3808664M1	4	Rivet	

https://truckmanualshub.com/

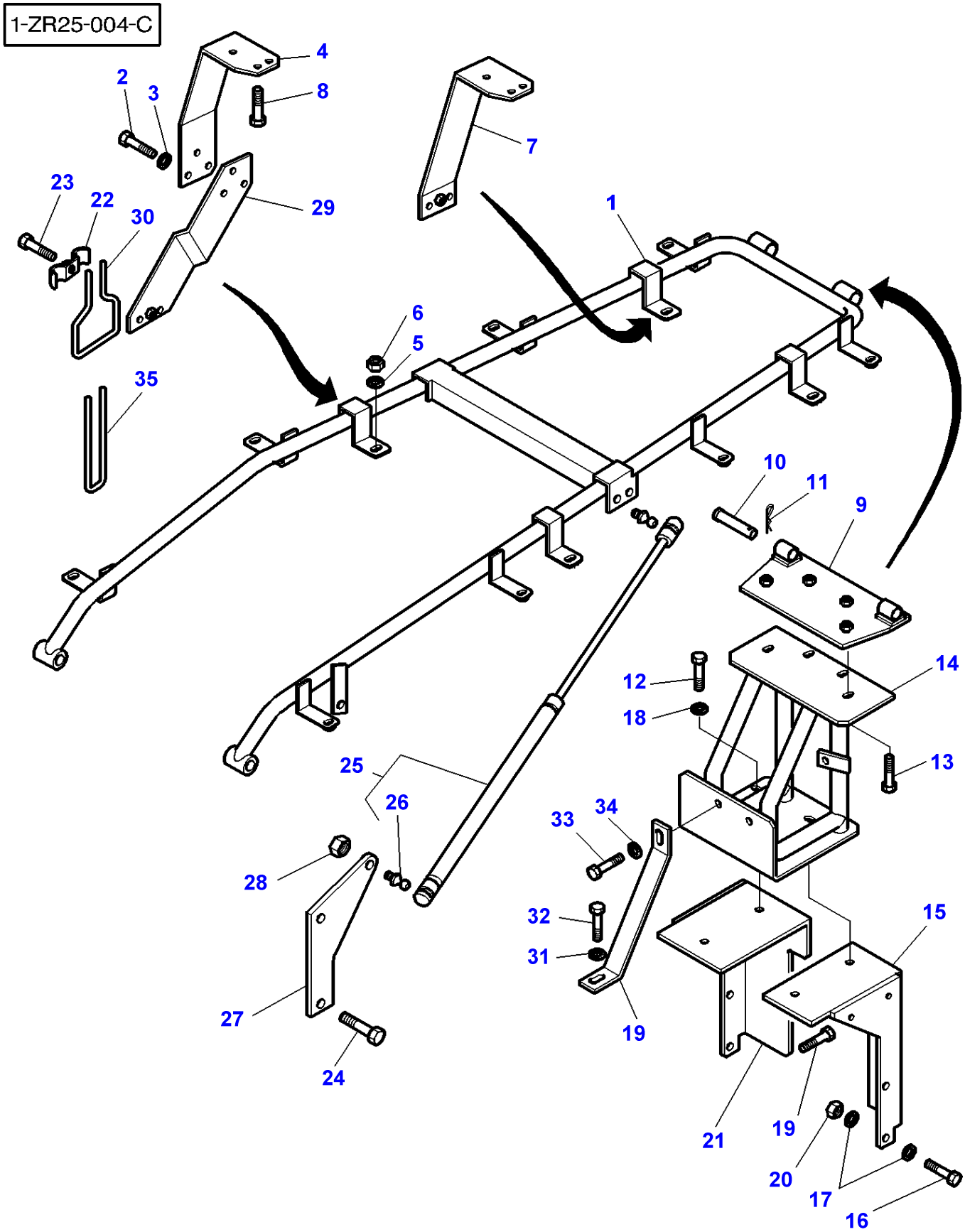

https://truckmanualshub.com/

Item	Part Number	Qty	Description	Comments
1	3782628M2	1	Chassis	
2	339123X1	6	Hex. Sock. Screw	M8X20
3	385361X1	6	Washer Metric	
4	3782728M1	1	Support	Left Hand
	3782729M1	1	Support	Right Hand
5	385361X1	12	Washer Metric	
6	339169X1	12	Nut	
7	3782730M1	1	Support	Left Hand
	3782731M1	1	Support	Right Hand
8	339761X1	12	Hex. Sock. Screw	M8X25
9	3781236M4	1	Plate	
10	3779399M1	2	Clevis Pin	
11	354066X1	2	Pin	
12	339337X1	4	Hex. Sock. Screw	M8X30
13	339337X1	2	Hex. Sock. Screw	M8X30
14	3781229M6	1	Support	
15	3782707M1	1	Support	Left Hand
16	3009492X1	4	Hex. Sock. Screw	M10X25
17	385362X1	6	Washer Metric	
18	385361X1	4	Washer Metric	
19	3782736M1	1	Reinforcement	
20	3009693X1	2	Nut Metric	M8X25
21	3782706M1	1	Support	Right Hand
22	3597673M1	4	Catch	
23	339123X1	4	Hex. Sock. Screw	M8X20
24	339123X1	4	Hex. Sock. Screw	M8X20
25	3782974M1	2	Ram	
26	3903200M1	2	Toggle	(25)
27	3783149M1	2	Support	
28	339169X1	4	Nut	
29	3782732M1	1	Support	Left Hand
	3782733M1	1	Support	Right Hand
30	3808671M1	4	Wire	
31	390735X1	1	Washer	
32	3009505X1	1	Screw Metric	M12X25
33	3009492X1	1	Hex. Sock. Screw	M10X25
34	390734X1	1	Washer	
35	3780301M1	2	Tie	

https://truckmanualshub.com/

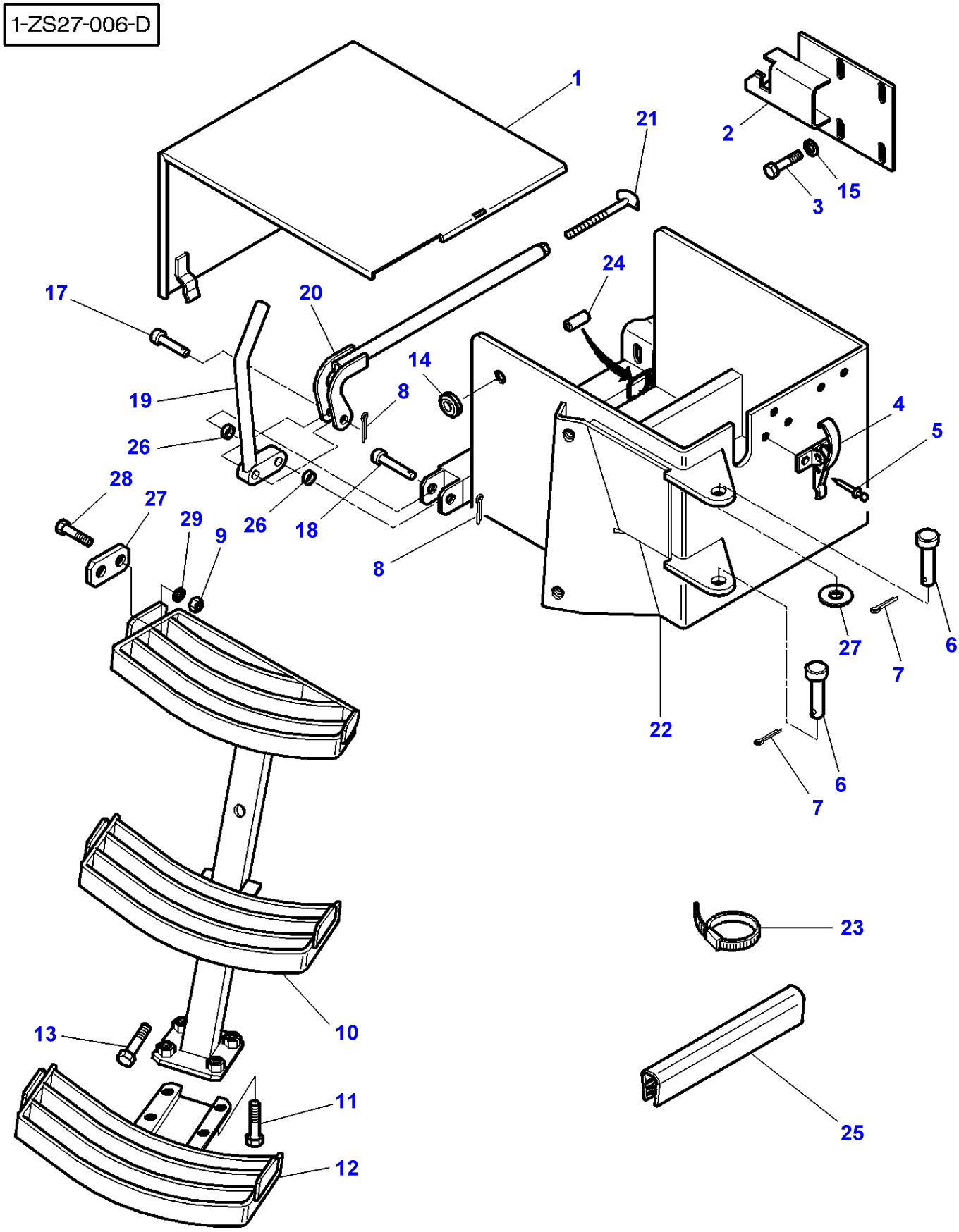

https://truckmanualshub.com/

Item	Part Number	Qty	Description	Comments
1	3779908M93	1	Cover	Up to Serial or Engine Number H307029
	3783485M1	1	Cover	From Serial or Engine Number H307030
2	3779983M91	1	Anglepiece	
3	339337X1	4	Hex. Sock. Screw	M8X30
4	3781710M1	1	Bridle	
5	3010021X1	2	Rivet	
6	3019227X1	2	Clevis Pin	Diameter 20 Length 50MM
7	195415M1	2	Hair Pin	
8	354066X1	2	Pin	
9	339169X1	2	Nut	Up to Serial or Engine Number H250016
10	3781171M92	1	Step	Right Hand
11	3009491X1	4	Hex. Sock. Screw	M10X20
12	3779071M91	1	Stair	Right Hand
13	3009514X1	2	Screw	M12X70
14	3783677M1	1	Grommet	
15	390972X1	4	Washer Metric	
16	385365X1	1	Washer	
17	3019214X1	1	Clevis Pin	Diameter 12 Length 40MM
18	3019216X1	1	Clevis Pin	Diameter 12 Length 60MM
19	3779053M2	1	Lever	
20	3779927M92	1	Stem	
21	3779968M91	1	Stem	
22	3782446M91	1	Battery Box	Up to Serial or Engine Number 16-06-1999
	3782446M92	1	Battery Box	From Serial or Engine Number 17-06-1999 Up to Serial or Engine Number J189015
	3783850M92	1	Battery Box	From Serial or Engine Number J189016
23	3619622M1	X	Cable Tie	
24	3581340M1	2	Shock Absorber	
25	1684844M1	X	Seal	Length 80MM
	3714837M1	X	Gasket	Length 50MM
26	3779066M1	2	Spacer	
27	3781189M1	1	Stop	Up to Serial or Engine Number H250016
28	339123X1	2	Hex. Sock. Screw	M8X20 Up to Serial or Engine Number H250016
29	390972X1	2	Washer Metric	Up to Serial or Engine Number H250016

https://truckmanualshub.com/

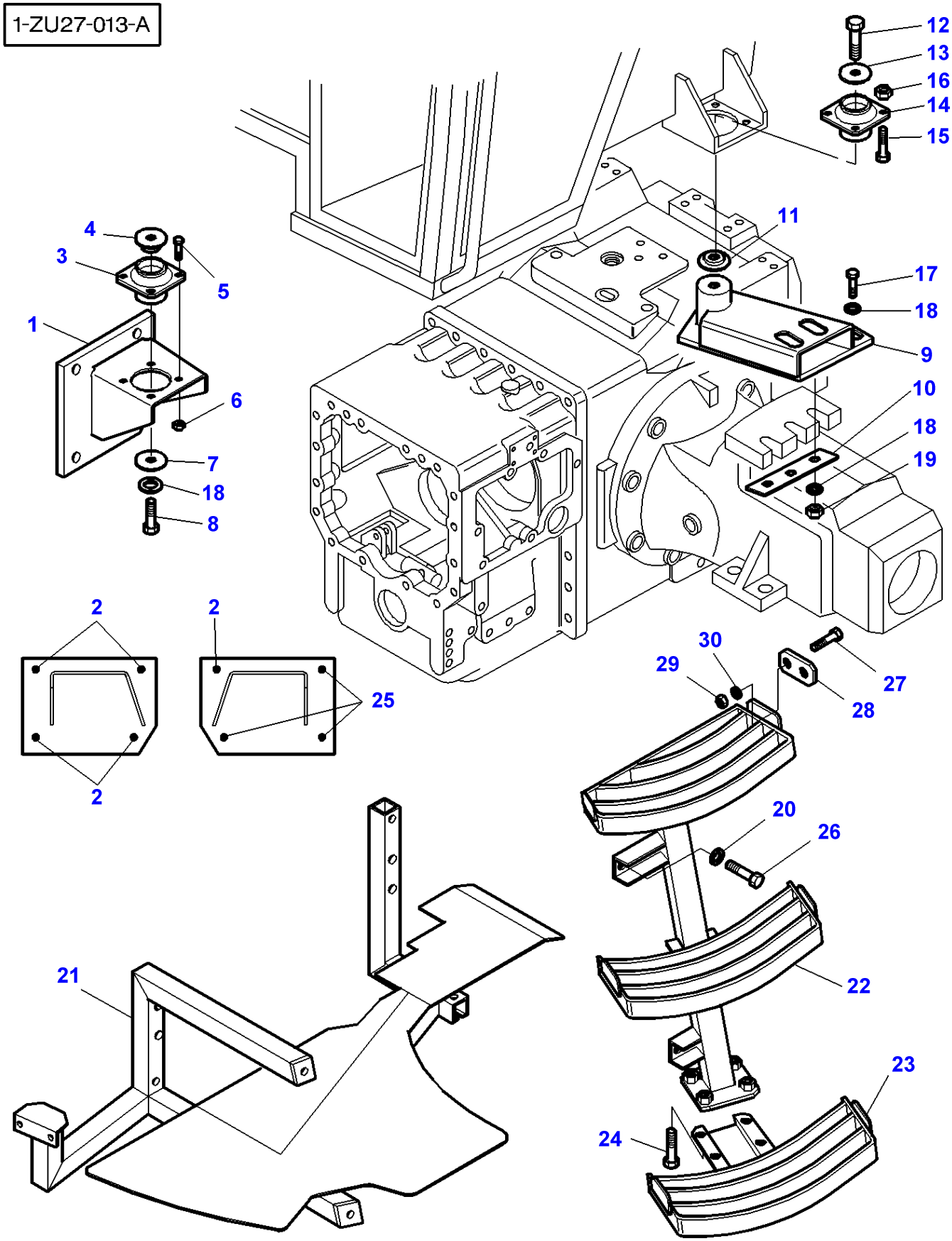

https://truckmanualshub.com/

Item	Part Number	Qty	Description	Comments
1	3781609M1	1	Support	Left Hand
	3781610M1	1	Support	Right Hand
2	339275X1	5	Hex. Sock. Screw	M16X35
3	3712693M1	2	Vibration Mount	
4	3388272M1	2	Washer	
5	3009492X1	7	Hex. Sock. Screw	M10X25
	3009493X1	1	Hex. Sock. Screw	M10X30
6	3009693X1	8	Nut Metric	
7	3712809M2	2	Spacer	
8	339805X1	2	Bolt Metric	M16X100
9	3780125M2	1	Support	Left Hand
	3780126M2	1	Support	Right Hand
10	3777417M1	2	Plate	
11	3388272M1	2	Washer	
12	339805X1	2	Bolt Metric	M16X100
13	3712809M2	2	Spacer	
14	3715926M1	2	Buffer	
15	3009492X1	8	Hex. Sock. Screw	M10X25
16	3009693X1	8	Nut Metric	
17	339805X1	6	Bolt Metric	M16X100
18	3019575X1	14	Washer Metric	
19	339034X1	6	Nut	
20	3019575X1	2	Washer Metric	
21	3782401M93	1	Frame	
22	3782116M92	1	Step	Left Hand
23	3778337M91	1	Stair	
24	3009491X1	4	Hex. Sock. Screw	M10X20
25	339881X1	3	Hex. Sock. Screw	M16X60
26	339275X1	2	Hex. Sock. Screw	M16X35
27	339123X1	2	Hex. Sock. Screw	M8X20
				Up to Serial or Engine Number H266033
28	3781189M1	1	Stop	Up to Serial or Engine Number H266033
29	339169X1	2	Nut	Up to Serial or Engine Number H266033
30	390972X1	2	Washer Metric	Up to Serial or Engine Number H266033

https://truckmanualshub.com/

1-ZR08-003-B

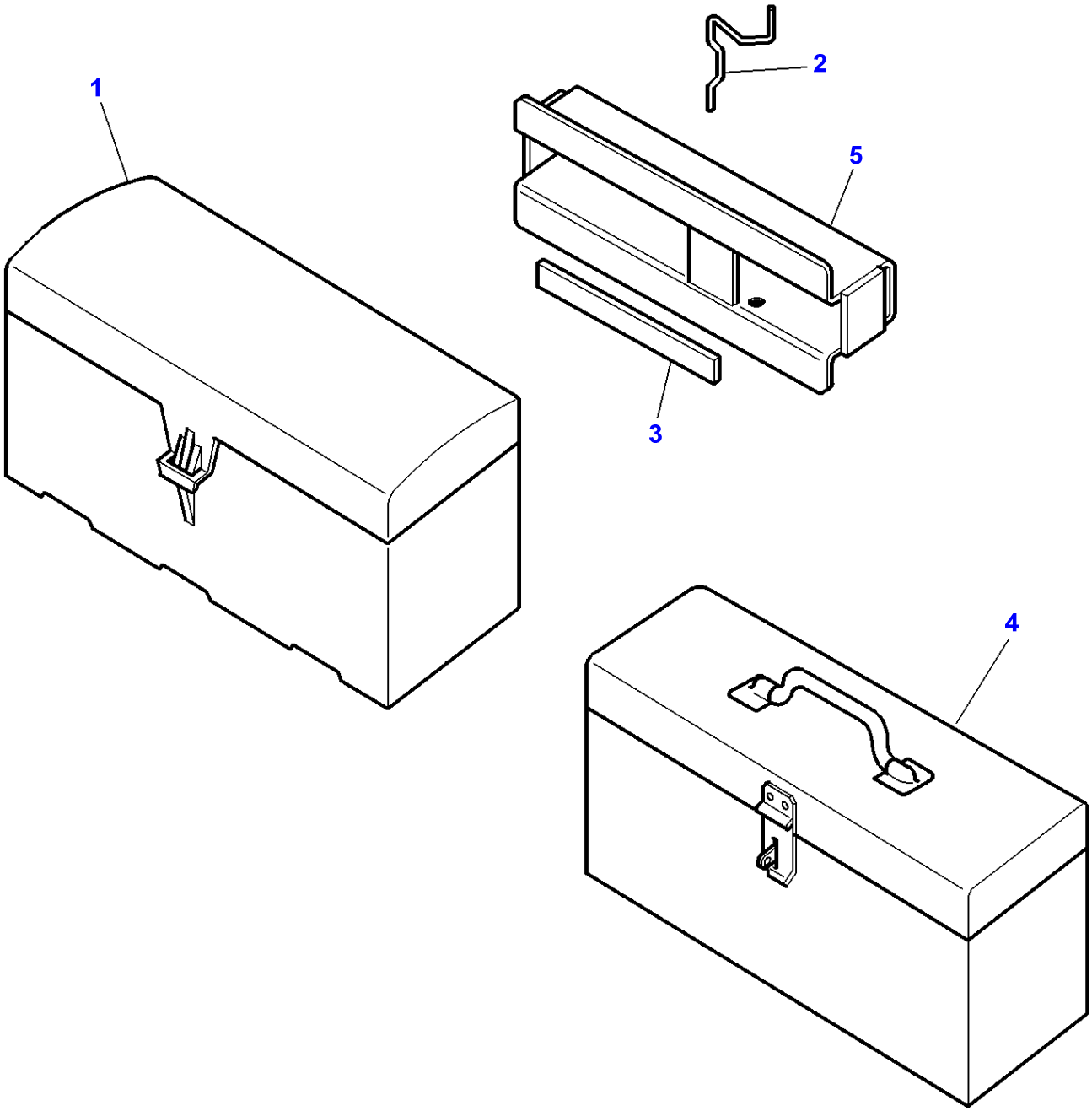

https://truckmanualshub.com/

Item	Part Number	Qty	Description	Comments
1	3616340M1	1	Tool Box	[B]
2	3580564M1	1	Eccentric	
3	3580639M1	1	Gasket	
4	1696186M93	1	Tool Box	[A]
5	3780567M1	1	Support	

FOOTNOTE [A] PLASTICS
FOOTNOTE [B] METAL

https://truckmanualshub.com/

1-ZR05-009-B

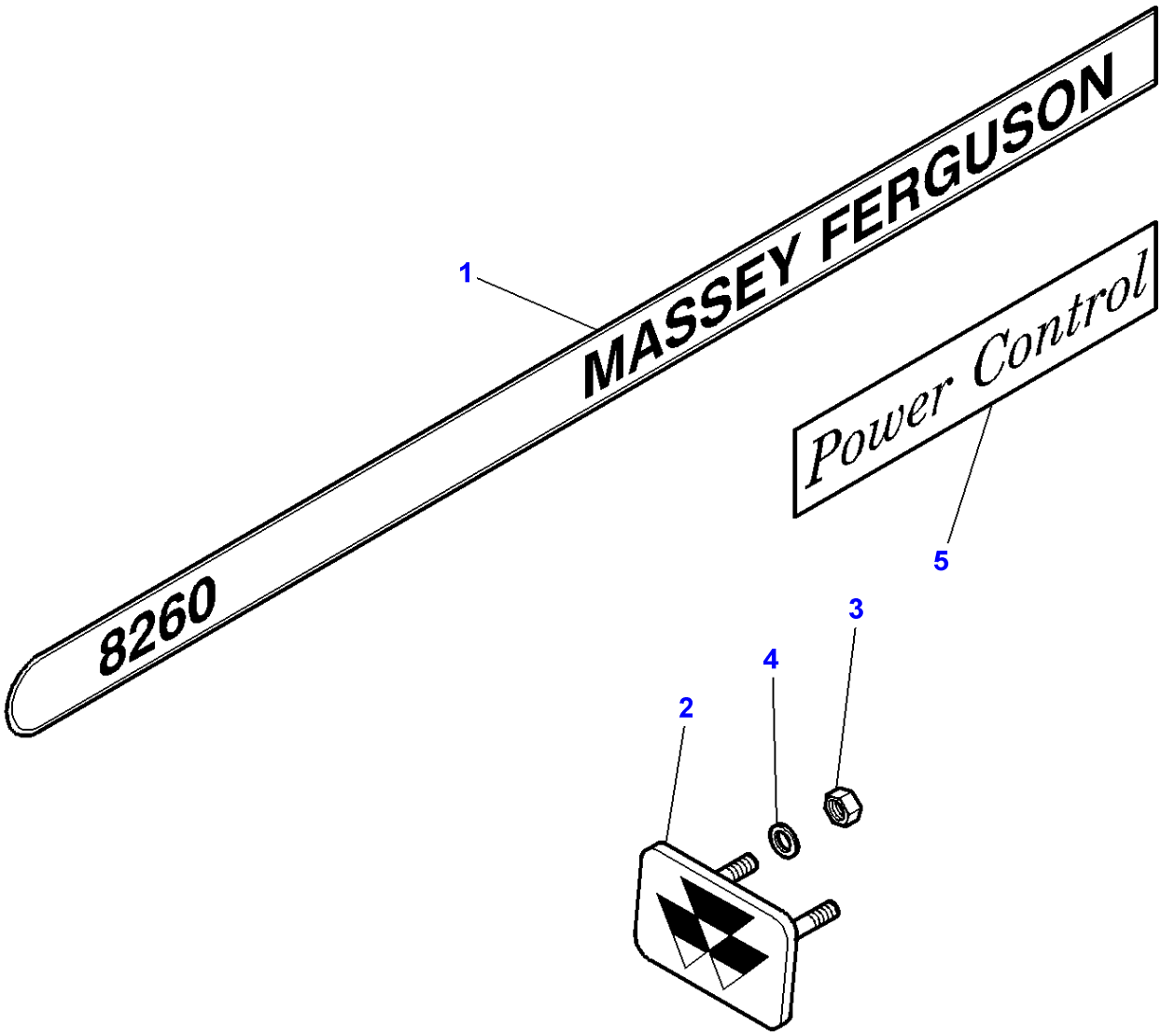

https://truckmanualshub.com/

Item	Part Number	Qty	Description	Comments
1	3782750M1	1	Decal	Right Hand
	3782751M1	1	Decal	Left Hand
2	3808163M91	1	Badge	
3	1441500X1	2	Locknut	
4	390971X1	2	Washer	
5	3783415M1	2	Decal	Not for USA

1-ZR12-004-A

1

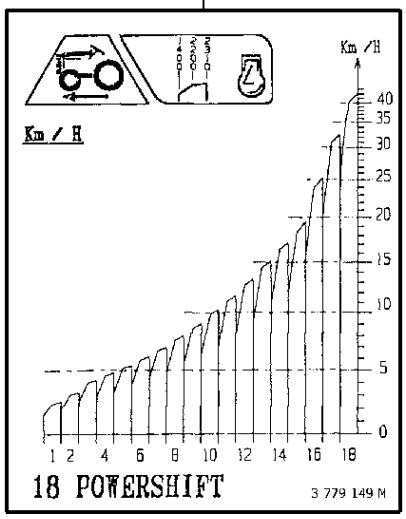

2

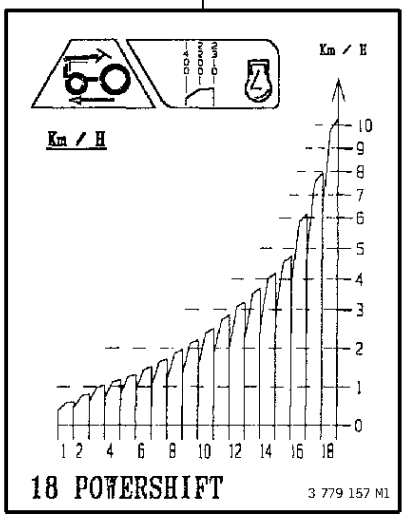

6

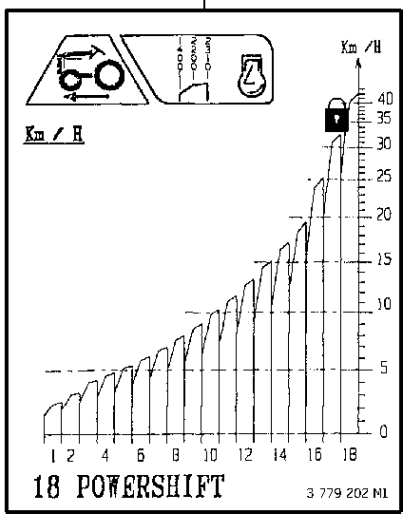

4

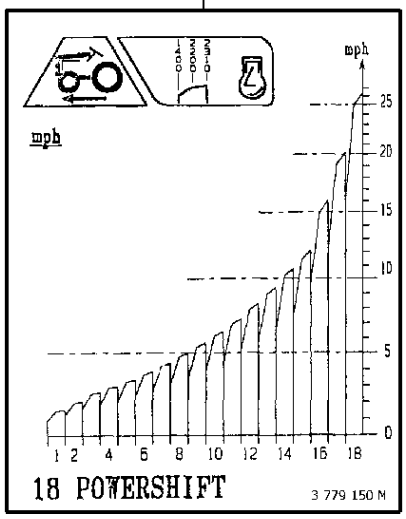

3

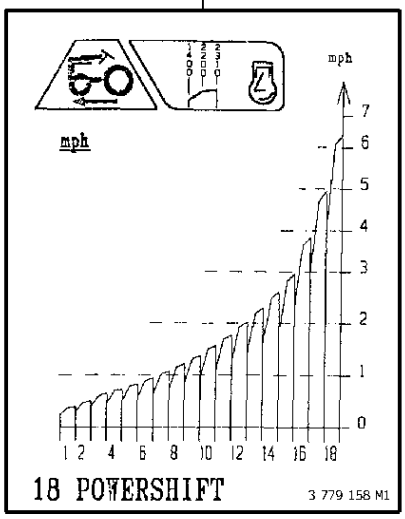

5

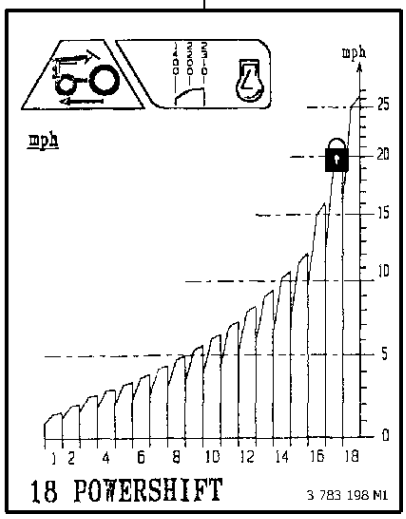

https://truckmanualshub.com/

Item	Part Number	Qty	Description	Comments
1	3779149M1	1	Decal	Km/H
2	3779157M1	1	Decal	Km/H
3	3779158M1	1	Decal	mp/h
4	3779150M1	1	Decal	mp/h
5	3783198M1	1	Decal	mp/h
6	3779202M1	1	Decal	Km/H

1-ZR13-015-B

1

CAUTION

Thoroughly read operator's instruction book before operating the tractor

Make sure everyone is clear of equipment equipment before starting the engine

Keep all shields, covers and guards in place while engine is running

Keep hands, feet and clothing away from power driven or moving parts

Always drive with due care and attention

If differential lock does not disengage automatically, depress clutch pedal
Brake pedals must always be coupled together when independent brakes are not being used

Engage "park lock" apply parking brake, lower equipment, stop engine and remove key before leaving the tractor unattended.

When attaching equipment check operator's instruction book for front and rear axle load limits

Place transmission shift lever in neutral, engage "park lock" apply parking brake before using external lift controls

Ensure that all wheel and rim nuts are tightened as specified in operator's instruction book

On public roads, use SMV emblem and flashing warning lights where required by law

DO NOT REMOVE OR OBSCURE DECAL
3 790 718 M1

3

Do not stop the engine before the vehicle has completely stopped.

3783396M1

2

WARNING

Engage the parking brake to prevent tractor movement with the engine off.

Clutch WILL NOT hold tractor in place, even though transmission is in gear.

Unexpected tractor movement may cause serious injury.

15

WARNING

PLEASE ENSURE PICKUP HITCH IS LATCHED AND FULLY RETRACTED BEFORE TRANSPORT

4

WARNING

Gears lever (1,2,3,4), and the reverse/forward level must be in his neutral position:

- in order to use the external lift controls.

- When the driver is not in his seat.

WARNING

When the tractor is stationary, it is imperative to fully apply the handbrake because leaving the tractor in gear will not prevent movement.

When attempting to start the engine using a slave battery, ensure that the gear lever (1,2,3,4) is in neutral.

Never connect a slave battery directly to the starter motor.

DO NOT REMOVE OR OBSCURE DECAL
3 713 708 M3

5

3595680 M1

DO NOT REMOVE OR OBSCURE DECAL

7

6

WARNING

High pressure steam and hot water.
Remove filler cap with extreme care.

DO NOT REMOVE OR OBSCURE DECAL 3595685 M1

8

CAUTION

TO AVOID POSSIBLE TRACTOR OVERTURN, PULL ONLY FROM DRAWBAR OR LOWER LINKS OF THREE POINT HITCH

2752579 M1

9

IT IS IMPERATIVE TO USE THE TRANSMISSION OIL RECOMMENDED IN THE OPERATING MANUAL

3710699 M1

14

WARNING

Before working on the tractor or removing this cover, disconnect negative leads to all Battery

CAUTION

Do not short across starter terminals to start engine
Never start engine while standing on the ground
Start engine only with start key from operator's seat, ensuring that gearbox and PTO are in neutral with parking brake applied.

DO NOT REMOVE OR OBSCURE DECAL 3598432 M1

10

WARNING

Before working on the tractor, disconnect negative leads to all batteries.

WARNING

Before removing any battery, disconnect all negative leads before positive leads.

DO NOT REMOVE OR OBSCURE DECAL 3595679 M1

11

CAUTION

Keep all shields, covers and guards fastened in place while engine is running.

WARNING

Beware hot parts

DO NOT REMOVE OR OBSCURE DECAL 3595678 M1

13

CAUTION

If tractor is overturning, hold onto steering wheel.

Do not leave seat

3582015 M1

12

WARNING

Always disengage PTO and stop engine before attaching or detaching PTO shafts or working on PTO driven equipment.

Always fit PTO cover when PTO is not in use.

CAUTION

Do not stand between tractor and equipment when operating controls.

Tow only with MF approved tractor drawbar or hitch

DO NOT REMOVE OR OBSCURE DECAL 3581563 M1

https://truckmanualshub.com/

Item	Part Number	Qty	Description
1	3780718M1	1	Decal
2	3777017M2	1	Decal
3	3783396M1	1	Decal
4	3713705M3	1	Decal
5	3595680M1	1	Decal
6	3595685M1	1	Decal
7	3782489M1	1	Decal
8	2752579M1	1	Decal
9	3713699M1	1	Decal
10	3595679M1	1	Decal
11	3595678M1	1	Decal
12	3581563M1	1	Decal
13	3580315M1	1	Decal
14	3596432M1	1	Decal
15	3781401M1	1	Decal

1-ZR13-005-A

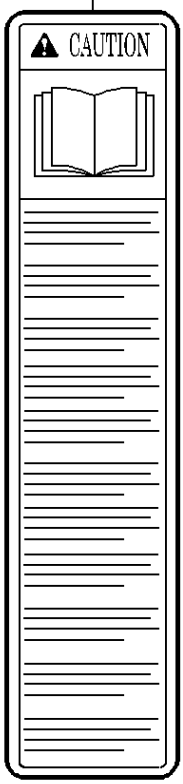

1

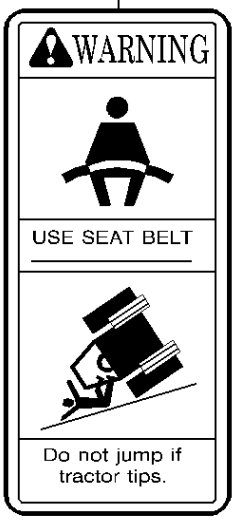

2

3

4

8

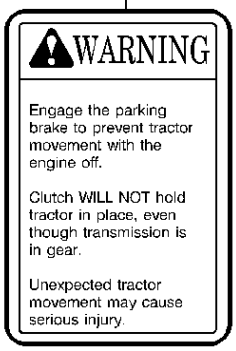

5

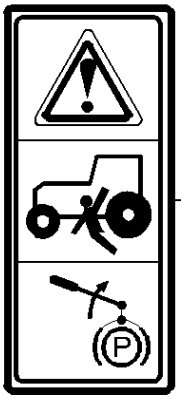

7

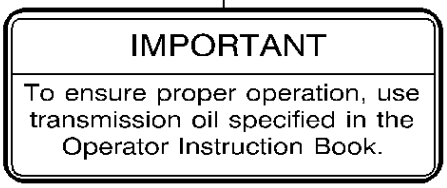

6

https://truckmanualshub.com/

Item	Part Number	Qty	Description
1	3808550M2	1	Decal
2	3808567M2	1	Decal
3	3808561M2	1	Decal
4	3777018M1	2	Decal
5	3777017M2	1	Decal
6	3777020M1	1	Decal
7	3782489M1	1	Decal
8	3777021M2	1	Decal

1-ZR13-006-A

1

DANGER

Shield eyes | Explosive gas | Avoid sparks and flame | Sulphuric acid

EXPLOSIVE GASES

Always shield eyes and face from battery. Cigarettes, flames or sparks could cause battery to explode.
Do not charge or use booster cables or adjust post connections without proper instruction or training.

POISON causes severe burns

Contains sulphuric acid. Avoid contact with skin, eyes or clothing. In event of accident flush with water and call a physician immediately.

Keep out of reach of children

3810054 M1

WARNING

Personal injury could result from PTO driveline separation

1. Drawbar supplied provides standard distance "A". Do not change.

PTO RPM	SHAFT SIZE	DISTANCE "A"
540	35 mm (1.38 in)	355
mm (14.0 in)		1000 35
mm (8.38 in)		196 mm (16.0

"A"

2. Three-point link distance "C" and mounted implement distance "D" may not be standard.

Measure distance "B" over complete lift range for tractor and implement combination. Select driveline length to ensure that driveline will not bottom out at minimum distance "B" and will have sufficient overlap at maximum distance

"B" "C" "D"

3808479 M1

5

DANGER

Start only from seat with transmission and PTO in neutral.
Starting in gear kills.

WARNING

Remove negative cables from batteries before removing solenoid cover and before servicing the eletrical system.

3808564 M1

2

DANGER | **DANGER** | **WARNING**

Pull only from approved drawbar or lowel links of 3 points linkage at horizontal position or below.

Rotating driveline contact may cause serious injury or death.

Keep all driveline, tractor and equipment shields in place during operation.

Stand clear when using controls to move 3 points hitch.

3

WARNING

To avoid personnal injuty, keep all shields, covers and guards in place while engine is running. Beware of hot parts.

4

https://truckmanualshub.com/

Item	Part Number	Qty	Description
1	3810054M1	2	Decal
2	3808564M1	1	Decal
3	3808558M2	2	Decal
4	3777019M1	2	Decal
5	3808479M1	2	Decal

1-ZR13-003-B

1

ATTENTION
Vapeur sous haute pression et eau chaude.
Retirez le bouchon avec précaution.
NE PAS ENLEVER OU COUVRIR CETTE DECAL 3596029 M1

11

3596459 M1
NE PAS ENLEVER OU COUVRIR CETTE DECAL

9

10

ATTENTION
POUR EVITER LE CAPOTAGE DU TRACTEUR, NE REMORQUER QU'AVEC LA BARRE DE TIRAGE OU AVEC LES BRAS INFERIEURS DE L'ATTELAGE EN TROIS POINTS.
539013 M1

14

Toujours débrayer lors du changement de gamme.
3783393M1

AVERTISSEMENT

Avant d'utiliser, lire attentivement le livret d'utilisation.

Avant de mettre le moteur en marche, s'assurer qu'il n'y ait personne à proximité de l'appareil.

Toujours maintenir les garants et protecteurs en place pendant que le moteur tourne.

Eloigner les mains, les pieds et les vêtements de toutes pièces entraînées ou en mouvement.

Toujours conduire avec attention.

Si le blocage de différentiel ne se désengage pas automatiquement enfoncer la pédale d'embrayage.

Les pédales de frein doivent toujours être jumelées lorsque les freins indépendants ne sont pas utilisés.

Avant de quitter le tracteur, serrer le frein à main, abaisser l'instrument, arrêter le moteur et retirer la clé.

Avant d'atteler un instrument voir le livret d'utilisation pour vérifier les charges maximales d'essieux avant et arrière.

Mettre le levier de vitesses (1,2,3,4), et le levier d'inverseur au neutre pour pouvoir utiliser les commandes extérieures de relevage.

Vérifier que tous les écrous de roue et de jante sont serrés au couple indiqué dans le livret.

Sur voie publique, utiliser l'emblème véhicule lent et les feux de warning lorsque la loi l'exige.

NE PAS ENLEVER OU COUVRIR CETTE DECALCOMANIE
3 580 320 M5

3

5

AVERTISSEMENT
Si le tracteur se renverse, tenir le volant.
Ne pas quitter le siège.
NE PAS ENLEVER OU COUVRIR CETTE DECAL 3580313 M1

2

Ne pas stopper le moteur vehicule roulant.
3783396M1

6

ATTENTION
Débrancher les câbles négatifs des batteries avant de retirer ce couvercle ou d'intervenir sur le tracteur

AVERTISSEMENT
Ne pas mettre les bornes en court-circuit pour faire démarrer le moteur.
Ne pas faire démarrer le moteur sans être assis sur le siège.
Ne faire démarrer le moteur qu'avec la clé, la transmission et la PTO étant en point mort, et le frein à main serré.
NE PAS ENLEVER OU COUVRIR CETTE DECAL 3596467 M1

7

UTILISER IMPERATIVEMENT L'HUILE DE TRANSMISSION PRECONISEE PAR LE LIVRET D'UTILISATION.
3713698M1

ATTENTION

Le levier de vitesses (1,2,3,4), et le levier d'inverseur doivent être mis au neutre:

- Pour utiliser les commandes extérieures de relevage.
- Lorsque le chauffeur quitte son siège.

ATTENTION

Pour immobiliser le tracteur, serrer impérativement le frein à main.

Une vitesse engagée ne permet pas de maintenir le tracteur à l'arrêt.

S'assurer que le levier de vitesse est au point mort avant tout démarrage du moteur avec une batterie extérieure.

Ne jamais connecter une batterie extérieure au démarreur.

NE PAS ENLEVER OU COUVRIR CETTE DECALCOMANIE
3 713 704 M3

4

13

ATTENTION
Débrancher les câbles négatifs de toutes les batteries avant d'intervenir sur le tracteur.

ATTENTION
Avant de déposer une batterie, débrancher les câbles négatifs avant les câbles positifs.
NE PAS ENLEVER OU COUVRIR CETTE DECAL 3596045M1

12

AVERTISSEMENT
Toujours maintenir les garants et protecteurs en place pendant que le moteur tourne

ATTENTION
Pièces chaudes
NE PAS ENLEVER OU COUVRIR CETTE DECAL 3596037 M1

8

ATTENTION
Toujours désenclencher la PTO et arrêter le moteur avant d'accoupler ou de désaccoupler un arbre de PTO ou avant d'intervenir sur un instrument entraîné par PTO.
Toujours monter le garant de PTO lorsque la PTO n'est pas utilisée.

AVERTISSEMENT
Ne jamais se tenir entre le tracteur et l'instrument lorsqu'on actionne les commandes.
N'utiliser qu'une barre de traction ou un attelage agréés par MF.
NE PAS ENLEVER OU COUVRIR CETTE DECAL 3581564 M1

https://truckmanualshub.com/

Item	Part Number	Qty	Description
1	3596029M1	1	Decal
2	3783395M1	1	Decal
3	3580320M5	1	Decal
4	3713704M3	1	Decal
5	3580313M1	1	Decal
6	3596467M1	1	Decal
7	3713698M1	1	Decal
8	3581564M1	1	Decal
9	3782489M1	1	Decal
10	539613M1	1	Decal
11	3596459M1	1	Decal
12	3596037M1	1	Decal
13	3596045M1	1	Decal
14		X	Not Used

FOOTNOTE [A] WITH POWER SHUTTLE

1-ZR13-010-B

1

ACHTUNG!

Vor der Inbetriebnahme bitte die Bedienungsanleitung genaudurchlesen.

Vergewissern Sie sich, bevor sie den Motor in Gang setzen, ob sich niemand in nächster Nähe des Gerätes aufhält.

Schutzbleche und Sicherheitsvorrichtungen bei laufendem Motor nicht abnehmen.

Hände, füsse und Kleidungsstücke von allen angetriebenen und bewegten Teilen fernhalten.

Fahren Sie stets vorsichtig.

Wenn sich die Ausgleichsperre nicht automatisch löst, Kupplungspedale treten. Die Bremspedale müssen stets gekoppelt sein, wenn die voneinander unabhängigen Bremsen nicht verwendet werden.

Vor dem Absteigen vom Traktor handbremse anziehen, Vorrichtung herunterlassen, Motor abstellen und Schlüssel abziehen.

Bevor Sie ein Gerät anhängen, prüfen Sie in der Bedienungsanleitung die höchstzulässige Belastung für Vorder- und Hinterachse.

Zur Bedienung der aussenliegenden Hubvorrichtungen Ganghebel (1,2,3,4) auf leerlauf und Kippschalter auf Vor- oder Rückwärtsgang stellen.

Prüfen Sie, ob alle Rad-und Felgenmuttern so angezogen sind, dass sie dem in der Bedienungsanleitung angegebenen Kräftepaar entsprechen.

Auf öffentlichen Wegen ist das Zeichen "langsames Fahrzeug" anzubringen und, soweit gesetzlich vorgeschrieben, die Warnblinkanlage einzuschalten.

ABZIEHBILD NICHT ENTFERNEN ORDER VERDECKEN 3581524 M4

2

ACHTUNG!
Vor jedem Eingriff in Schlepper stets Minuspol-Leiter von Batterien losklemmen.

ACHTUNG!
Vor dem Batterieausbau stets Minusleiter vor den Pluspolleitern losklemmen.

KLEBESCHILD NICHT ABNEHMEN NOCH ÜBERKLEBEN 3587446M1

3

WARNUNG!
Sicherungshauben und Schutzvorrichtungen bei laufendem Motor aufgesetzt lassen.

ACHTUNG!
Heissteilen!

KLEBESCHILD NICHT ABNEHMEN NOCH ÜBERKLEBEN 3587428 M1

4

ACHTUNG!

Bei stehendem Schlepper mit laufendem Motor:
- Gangschalthebel (1,2,3,4) in Neutralstellung stellen und den Reversierhebel in Vorwärts- oder Rückwärtsposition bringen.
- Feststellbremse anziehen.

ACHTUNG!

Bei Abstellen und vor verlassen des Schleppers, muß unbedingt die Feststellbremse angezogen werden. Ein eingelegter Fahrgetriebegang verhindert nicht das Wegrollen des Schleppers. Beim Starten des Motors mit einer Starthilfebatterie, sicherstellen, daß der Getriebegangschalthebel (1-2-3-4) in Neutralstellung stecht. Niemals eine Starthilfebatterie direckt an die Anschlußklemmen des Anlassers anschließen.

AUFKLEBER NICHT ENTFERNEN ODER ÜBERKLEBEN 3713706M2

6

UNBEDINGT DAS IN DER BETRIEBSANLEITUNG EMPFOHLENE ÖL VERWENDEN

3713700M1

12

Always declutch to change gear range.

3783339M1

8

Do not stop the engine before the vehicle has completely stopped.

3783396M1

5

ACHTUNG

AUFKLEBER NICHT ENTFERNEN ODER ÜBERKLEBEN

7

VORSICHT
Bei Zugarbeiten nur die dafür vorgesehenen Vorrichtungen verwenden (Zugmaul, Zugpendel 3-Pkt. - Gerstange/Ackerschiene), damit sich der Schlepper nicht überschlägt.

Haftschild nicht abnehmen oder überkleben bei Unleserlichkeit Haftschild erneuern !

3581570 M2

11

ACHTUNG!
Bevor dieser Deckel abgenommen oder im Schlepper Eingriffe vorgenommen werden sind Minsupol-Leiter von den Batterien loszuklemmen.

WARNUNG!

Klemmen zum Anlassen des Motors nie kurzschliessen.
Motor nie anlassen, ohne schon auf dem Fahrersitz zu sitzen.
Motor nur mit zugehörigem Kontaktschlüssel bei neutral geschalteten Getriebe und PTO-Zapfwelle und bei abgezogener Handbremse anlassen.

KLEBESCHILD NICHT ABNEHMEN NOCH ÜBERKLEBEN 3597449 M1

10

9

ACHTUNG!

Die Stabl.-Streben der Unterlenker schleppserseitig in der oberen Bohrung befestigen für im Boden arbeitende Anbaugeräte, die während der Arbeit seitliche Beweglichkeit erfordern.
Bei diesen Geräten die beiden Stabl.-Streben im ausgehobenen Zustand einstellen damit das Gerät starrgestellt ist.
Die Stabl.-Streben schleppserseitig in der unteren Bohrung befestigen für Anbaugeräte, die während der Arbeit starr geführt werden müssen (z.B. Schleuderdüngerstreuer).
Siehe auch Betriebsanleitung.

3583497 M1

https://truckmanualshub.com/

Item	Part Number	Qty	Description
1	3581524M5	1	Decal
2	3597446M1	1	Decal
3	3597428M1	1	Decal
4	3713706M3	1	Decal
5	3780746M1	1	Decal
6	3713700M1	1	Decal
7	3581570M2	1	Decal
8	3783396M1	1	Decal
9	3583497M1	1	Decal
10	3782489M1	1	Decal
11	3597449M1	1	Decal
12		X	Not Used

FOOTNOTE [A] WITH POWER SHUTTLE

1-ZR13-016-A

2

AVVERTENZA

Prima dell'uso, leggere attentamente il relativo manuale

Prima di avviare il motore, verificare che nessuno si trovi in prossimità dell'apparecchio

Mentre il motore gira, mantenere sempre in posizione i tiranti e gli elementi di protezione

Tenere lontani mani, piedi e abiti da tutti i pezzi trainati o in movimento Guidare sempre con attenzione

Se il bloccaggio del differenziale non si disinnesca automaticamente, premere la frizione

I pedali del freno vanno sempre accoppiati quando i freni indipendenti non vengono utilizzati

Prima di lasciare il trattore, innestare il " park lock ", tirare il freno a mano, abbassare l'attrezzo, spegnere il motore e togliere la chiavetta

Prima di agganciare un attrezzo, leggere il manuale per l'uso per verificare i carichi massimi degli assi anteriori e posteriori

Per poter utilizzare i comandi esterni di sollevamento, mettere la leva del cambio in folle, innestare il " park lock " e tirare il freno a mano

Verificare che tutti i dadi delle ruote e dei cerchi siano stretti come indicato nel manuale

Sulla via pubblica, ove prescritto dalla legge, utilizzare l'emblema veicolo lento e le luci di soccorso

NON TOGLIERE O COPRIRE QUESTA DECALCOMANIA 3 780 747M1

3

AVVERTENZA

Si il trattore si rovescia tenere il volante.
Non abbandonare il sedile.

NON STACCARE O NASCONDERE LA DECALCOMANIA 3581633 M1

5

3597435 M1

NON STACCARE O NASCONDERE LA DECALCOMANIA

ATTENZIONE

La leva cambio (1, 2, 3, 4) deve essere in posizione di folle & la leva inversore in posizione marcia avanti o retromarcia:
- Per usare i comandi esterne del sollevatore.
- Quando il conducente lascia il sedile.

ATTENZIONE

Per immobilizzare la trattrice è imperativo inserire a fondo il freno a mano.

Una marcia inserita non assicura di mantenere bloccata la trattrice.

Assicurarsi che la leva innesto marce sia in folle prima di avviare il motore con una batteria esterna.

Non collegare mai una batteria esterna al motorino di avviamento.

NON STACCARE O NASCONDERE LA DECALCOMANIA 3713721 M2

10

Do not stop the engine before the vehicle has completely stopped.

3783396M1

6

4

7

ATTENZIONE

PER EVITARE IL RIBALTAMENTO DEL TRATTORE, TRAINATE SOLO CON LA BARRA DI TRAINO O CON LE ESTREMITA INFEROIRI DELL'ATTACCO A 3 PUNTI.

NON STACCARE O NASCONDERE LA DECALCOMANIA 3581571 M2

8

PER LA TRASMISSIONE UTILIZZARE OBLIGATORIAMENTE L'OLIO RACCOMANDATO NEL LIBRETTO D'USO. 3713701 M1

ADVERTENCIA

Staccare i cavi negativi di tutte le batterie prima d'intervenire sul trattore.

ATTENZIONE

Prima di rimuovere una batteria, staccare i cavi negativi prima dei cavi positivi.

NON STACCARE O NASCONDERE LA DECALCOMANIA 3597447 M1

9

ATTENZIONE

L'impiato contiene liquido pressurizzato e caldo.
Toglierei il tappo lentamente

NON STACCARE O NASCONDERE LA DECALCOMANIA 3597432M1

11

ATTENZIONE

Staccare i cavi negativi delle batterie prima di tagliere questo coperchio o d'intervenire sul trattore.

AVVERTENZA

Non mettere i morsetti in corto circuito per avviare il motore.
Non avviare il motore senza essere seduti sul sedile.
Avviare il motore solo con la chiave con la trasmissione e la PDP (presa di potenza) in folle ed il freno a mano inserito.

NON STACCARE O NASCONDORE LA DECALCOMANIA 3597450 M1

13

AVVERTENZA

Mantenere sempre le sicurezze ed i protettori al loro posto quando il motore gira.

ATTENZIONE

Pezzi caldi

NON STACCARE O NASCONDERE LA DECALCOMANIA 3597429

12

ATTENZIONE

Disinnestare sempre la PTO e spegnere il motore prima di accoppiare o disaccoppiare un albero di PTO a prima d'intervenire su uno strumento azionato da PTO. Montare sempre la sicurezza di PTO quando quest'ultima non viene utilizzata.

AVVERTENZA

Non sostare mai fra lo strumento ed il trattore quando si azionano i commandi.
Utilizzare unicamente una barra di trazione od un attacco autorizzato da MF.

NON STACCARE O NASCONDERE LA DECALCOMANIA 3581566 M1

1

https://truckmanualshub.com/

Item	Part Number	Qty	Description
1	3581566M1	1	Decal
2	3780747M1	1	Decal
3	3581533M2	1	Decal
4	3782489M1	1	Decal
5	3597435M1	1	Decal
6	3783396M1	1	Decal
7	3581571M2	1	Decal
8	3713701M1	1	Decal
9	3597447M1	1	Decal
10	3713721M3	1	Decal
11	3597432M1	1	Decal
12	3597429M1	1	Decal
13	3597450M1	1	Decal

1-ZR13-017-A

9

UTILIZAR IMPERATIVAMENTE EL ACEITE DE TRANSMISION RECOMENDADO EN EL MANUAL DE USUARIO.

13

11

Do not stop the engine before the vehicle has completely stopped.

3783398M1

10

ATENCION

La palanca de velocidades (1-2-3-4) debe estar al neutro y la palanca de inversor en posicion adelante o astras.
- Para utilizar los mandos exteriores de levanta-miento.
- Cuando el conductor deja su asiento.

ATENCION

Para immobilizar el tractor es imprescindible poner el freno de mano.

Una velocidad enganchada no permite mantener el tractor detenido.

Cerciorarse que la palanca de cambios esta en neutro antes de arrancar el motor con una bateria exterior.

Nunca conectar una baterie exterior al arrancador.

NO QUITAR O CUBRIR ESTA CALCOMANIA 3713722M2

1

ADVERTENCIA

Antes de usar, leer atentamente el cuaderno de utilización

Antes de poner el motor en funcionamiento asegurarse que no haya nadie a proximidad del aparato

Mantener siempre los garantías y protecciones instalados, mientras el motor funciona

Alejar las manos, los pies y las ropas de todas las piezas accionadas y en movimiento

Conducir siempre atentamente

Si el bloqueo del diferencial no se libera automáticamente, hundir el pedal de embrague

Los pedales de freno siempre deben estar hermanados cuando no se utilizan los frenos independientes

Antes de abandonar el tractor, poner el "park lock", aprocar el freno de mano, bajar el instrumento, parar el motor y retirar la llave

Antes de enganchar un instrumento, ver el cuaderno de utilización para verificar las cargas máximas de los ejes delantero y trasero

Poner la palanca de velocidad en neuro, poner el "park lock" y apretar el freno de mano, para poder utilizar los mandos exteriores de levantamiento

Verificar que todas las tuercas de rueda y de llanta están apretadas al par indicado en el cuaderno

En la vía pública, utilizar el emblema vehículo lento y las luces de peligro cuando la ley lo exige

NO RETIRAR NI CUBRIR ESTA CALCOMANIA

3 790 742 M1

8

ADVERTENCIA

Si le tractor vuelca, sujetar el volante.
No abandonar el asiento.

NO RETIRAR NI CUBRIR ESTA CALCOMANIA 3581532 M1

ADVERTENCIA

Desconectar los cables negativos de todas las baterías antes de intervenir en el tractor.

ATENCION

Piezas calientes

NO RETIRAR NI CUBRIR ESTA CALCOMANIA 3597430 M1

2

ADVERTENCIA

Mantener siempre protecciones y protectores en su sitio mientras el motor esté en marcha.

ATENCION

Antes de retirar una batería, desconectar los cables negativos antes que los cables positivos.

NO RETIRAR NI CUBRIR ESTA CALCOMANIA 3597448M1

3

ATENCION

Vapor de alta presión y agua caliente.
Quite el tapon con sumo cuidado.

NO RETIRAR NI CUBRIR ESTA CALCOMANIA
3597 433 M1

4

12

3597436M1

NO RETIRAR NI CUBRIR ESTA CALCOMANIA

ATENCION

PARA EVITAR EL VOLTEO DEL TRACTOR, REMOLCAR SOLAMENTE CON LA BARRA TRACCION O CON LOS BRAZOS INFERIORES DEL ENGANCHE DE TRES PUNTOS.

3581573 M2

5

ATENCION

Siempre desengrane la TDF y pare el motor antes de acoplar o de desacoplar los ejes de TDF o ajustar el equipo mandado por TDF . Siempre coloque la defensa de TDF cuando no se emplea la TDF. Siempre lape la TDF cuando no se usa.

ADVERTENCIA

No se pongo entre entre el tractor y el equipo cuando se accionen los mandos.
Remolque solamente con una barra o enganche approbado MF.

NO RETIRAR NI CUBRIR ESTA CALCOMANIA 3581558 M1

6

ATENCION

Antes de trabajar en el tractor o quitar esta tapa, desconecte los cables negativos en todas las baterias

ADVERTENCIA

No ponga en cortocircuito los terminales del arrancarador para poner en marcha el motor.
No ponga en marcha el motor estando de pie.
Arranque el motor con la llave desde el asiento comprobando que la caja de cambios y la TDF esten en neutral y el freno de estacionamiento este apretado.

NO RETIRAR NI CUBRIR ESTA CALCOMANIA 3597451 M1

7

https://truckmanualshub.com/

Item	Part Number	Qty	Description
1	3780742M1	1	Decal
2	3597430M1	1	Decal
3	3597448M1	1	Decal
4	3597433M1	1	Decal
5	3581573M2	1	Decal
6	3581568M1	1	Decal
7	3597451M1	1	Decal
8	3581532M1	1	Decal
9	3713702M1	1	Decal
10	3713722M3	1	Decal
11	3783396M1	1	Decal
12	3597436M1	1	Decal
13	3782489M1	1	Decal

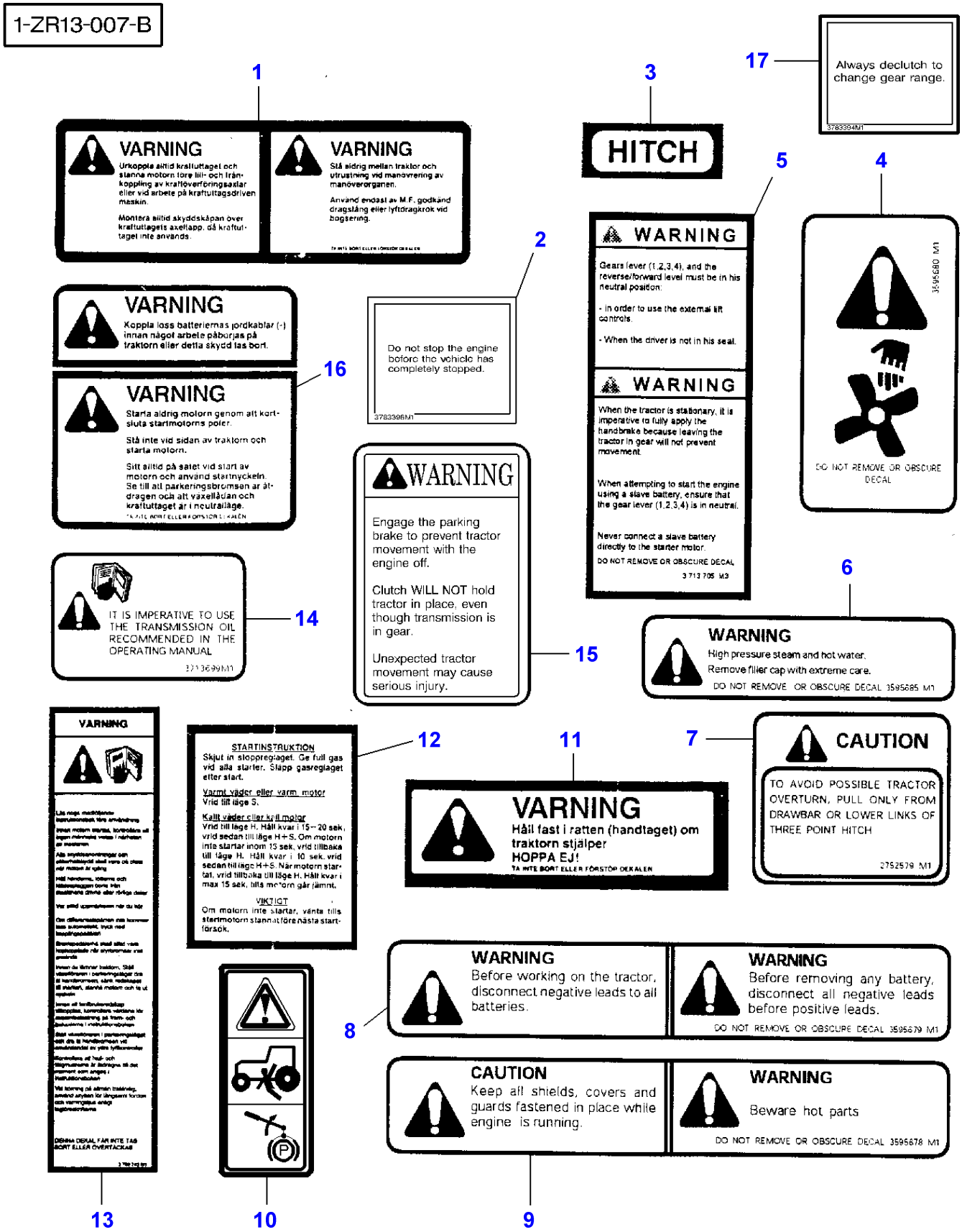
1-ZR13-007-B
1
VARNING
Urkoppla alltid kraftuttaget och stanna motorn före lill- och tränkoppling av kraftöverföringsaxlar eller vid arbete på kraftuttagsdriven maskin.
Montera alltid skyddskåpan över kraftuttagets axeltapp, då kraftuttaget inte används.
VARNING
Stå aldrig mellan traktor och utrustning vid manövrering av manöverorganen.
Använd endast av M.F. godkänd dragstång eller lyftdragkrok vid bogsering.
2
Do not stop the engine before the vehicle has completely stopped.
3783396M1
3
HITCH
4
3595680 M1
DO NOT REMOVE OR OBSCURE DECAL
5
WARNING
Gears lever (1,2,3,4), and the reverse/forward level must be in his neutral position:
- in order to use the external lift controls.
- When the driver is not in his seat.
WARNING
When the tractor is stationary, it is imperative to fully apply the handbrake because leaving the tractor in gear will not prevent movement.
When attempting to start the engine using a slave battery, ensure that the gear lever (1,2,3,4) is in neutral.
Never connect a slave battery directly to the starter motor.
DO NOT REMOVE OR OBSCURE DECAL
3 713 705 M3
6
WARNING
High pressure steam and hot water.
Remove filler cap with extreme care.
DO NOT REMOVE OR OBSCURE DECAL 3595685 M1
7
CAUTION
TO AVOID POSSIBLE TRACTOR OVERTURN, PULL ONLY FROM DRAWBAR OR LOWER LINKS OF THREE POINT HITCH
2752579 M1
8
WARNING
Before working on the tractor, disconnect negative leads to all batteries.
WARNING
Before removing any battery, disconnect all negative leads before positive leads.
DO NOT REMOVE OR OBSCURE DECAL 3595679 M1
9
CAUTION
Keep all shields, covers and guards fastened in place while engine is running.
WARNING
Beware hot parts
DO NOT REMOVE OR OBSCURE DECAL 3595678 M1
10
11
VARNING
Håll fast i ratten (handtaget) om traktorn stjälper
HOPPA EJ!
TA INTE BORT ELLER FÖRSTÖP DEKALEN
12
STARTINSTRUKTION
Skjut in stoppreglaget. Ge full gas vid alla starter. Slapp gasreglaget efter start.
Varmt väder eller varm motor
Vrid till läge S.
Kallt väder eller kall motor
Vrid till läge H. Håll kvar i 15–20 sek, vrid sedan till läge H+S. Om motorn inte startar inom 15 sek, vrid tillbaka till läge H. Håll kvar i 10 sek, vrid sedan till läge H+S. När motorn startat, vrid tillbaka till läge H. Håll kvar i max 15 sek, tills motorn går jämnt.
VIKTIGT
Om motorn inte startar, vänta tills startmotorn stannat före nästa startförsök.
13
VARNING
14
IT IS IMPERATIVE TO USE THE TRANSMISSION OIL RECOMMENDED IN THE OPERATING MANUAL
3713699M1
15
WARNING
Engage the parking brake to prevent tractor movement with the engine off.
Clutch WILL NOT hold tractor in place, even though transmission is in gear.
Unexpected tractor movement may cause serious injury.
16
VARNING
Koppla loss batteriernas jordkablar (-) innan något arbete påbörjas på traktorn eller detta skydd tas bort.
VARNING
Starta aldrig motorn genom att kortsluta startmotorns poler.
Stå inte vid sidan av traktorn och starta motorn.
Sitt alltid på satet vid start av motorn och använd startnyckeln. Se till att parkeringsbromsen är åtdragen och att växellådan och kraftuttaget är i neutralläge.
TA INTE BORT ELLER FÖRSTÖP DEKALEN
17
Always declutch to change gear range.
3783394M1

https://truckmanualshub.com/

Item	Part Number	Qty	Description
1	3618264M1	1	Decal
2	3783396M1	1	Decal
3	3618263M1	1	Decal
4	3595680M1	1	Decal
5	3713705M3	1	Decal
6	3595685M1	1	Decal
7	2752579M1	1	Decal
8	3595679M1	1	Decal
9	3595678M1	1	Decal
10	3782489M1	1	Decal
11	3618260M1	1	Decal
12	3618261M1	1	Decal
13	3780743M1	1	Decal
14	3713699M1	1	Decal
15	3777017M2	1	Decal
16	3618262M1	1	Decal
17		X	Not Used

FOOTNOTE [A] WITH POWER SHUTTLE

1-ZR13-013-B

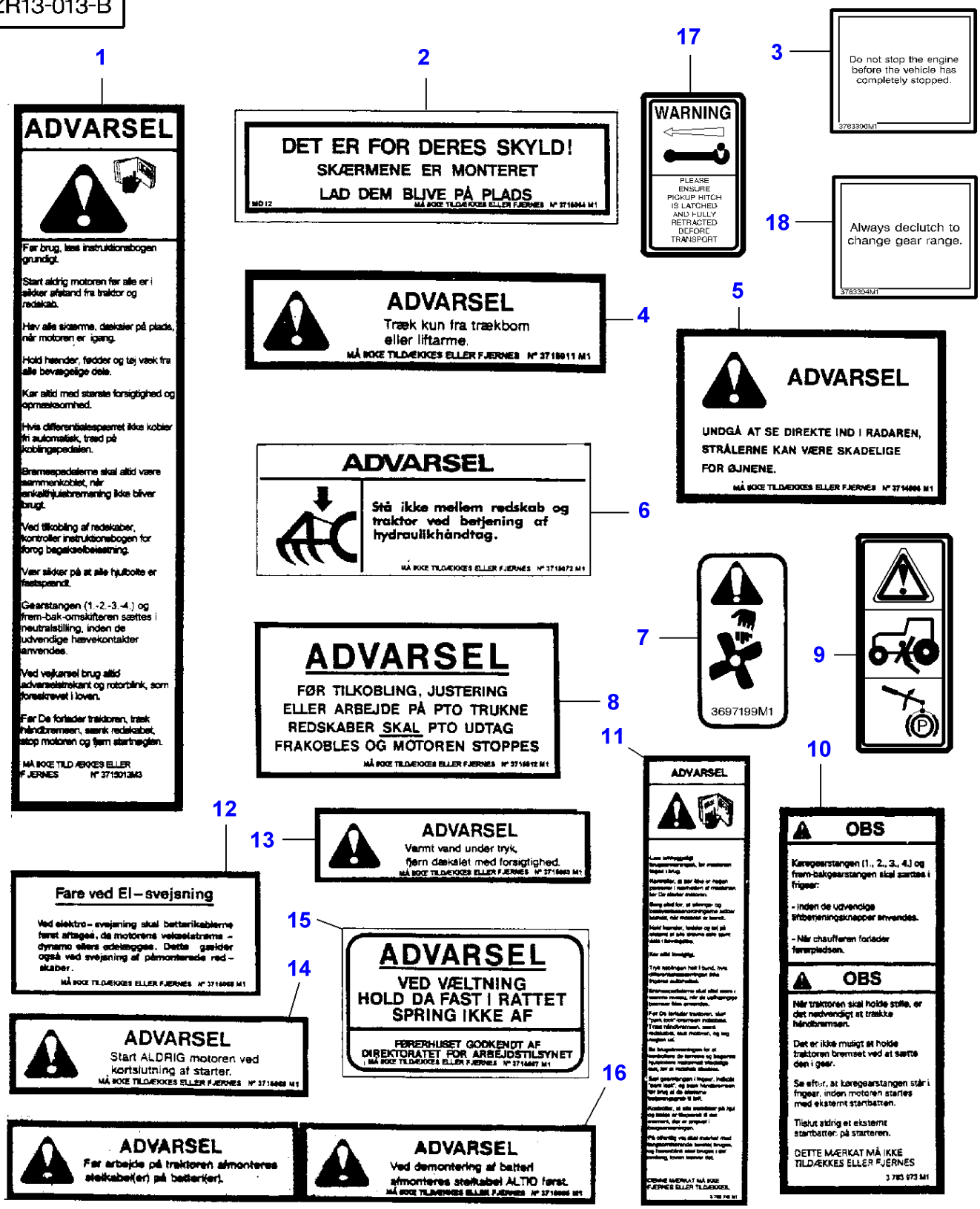
1
ADVARSEL
Før brug, læs instruktionsbogen grundigt.
Start aldrig motoren før alle er i sikker afstand fra traktor og redskab.
Hav alle skærme, dæksler på plads, når motoren er igang.
Hold hænder, fødder og tøj væk fra alle bevægelige dele.
Kør altid med største forsigtighed og opmæksomhed.
Hvis differentialespærret ikke kobler fri automatisk, træd på koblingspedalen.
Bremsepedalerne skal altid være sammenkoblet, når enkelthjulsbremsning ikke bliver brugt.
Ved tilkobling af redskaber, kontroller instruktionsbogen for forog bagakselbelastning.
Vær sikker på at alle hjulbolte er fastspændt.
Gearstangen (1.-2.-3.-4.) og frem-bak-omskifteren sættes i neutralstilling, inden de udvendige hævekontakter anvendes.
Ved vejkørsel brug altid advarselstrekant og rotorblink, som foreskrevet i loven.
Før De forlader traktoren, træk håndbremsen, sænk redskabet, stop motoren og fjern startnøglen.
MÅ IKKE TILDÆKKES ELLER FJERNES
2
DET ER FOR DERES SKYLD!
SKÆRMENE ER MONTERET
LAD DEM BLIVE PÅ PLADS
17
WARNING
PLEASE ENSURE PICKUP HITCH IS LATCHED AND FULLY RETRACTED BEFORE TRANSPORT
3
Do not stop the engine before the vehicle has completely stopped.
18
Always declutch to change gear range.
4
ADVARSEL
Træk kun fra trækbom eller liftarme.
MÅ IKKE TILDÆKKES ELLER FJERNES
5
ADVARSEL
UNDGÅ AT SE DIREKTE IND I RADAREN, STRÅLERNE KAN VÆRE SKADELIGE FOR ØJNENE.
MÅ IKKE TILDÆKKES ELLER FJERNES
6
ADVARSEL
Stå ikke mellem redskab og traktor ved betjening af hydraulikhåndtag.
MÅ IKKE TILDÆKKES ELLER FJERNES
7
3697199M1
9
8
ADVARSEL
FØR TILKOBLING, JUSTERING ELLER ARBEJDE PÅ PTO TRUKNE REDSKABER SKAL PTO UDTAG FRAKOBLES OG MOTOREN STOPPES
MÅ IKKE TILDÆKKES ELLER FJERNES
11
ADVARSEL
10
OBS
Køregearstangen (1., 2., 3., 4.) og frem-bakgearstangen skal sættes i frigear:
- inden de udvendige liftbetjeningsknapper anvendes.
- Når chaufferen forlader førerpladsen.
OBS
Når traktoren skal holde stille, er det nødvendigt at trække håndbremsen.
Det er ikke muligt at holde traktoren bremset ved at sætte den i gear.
Se efter, at køregearstangen står i frigear, inden motoren startes med eksternt startbatten.
Tilslut aldrig et eksternt startbatteri på starteren.
DETTE MÆRKAT MÅ IKKE TILDÆKKES ELLER FJERNES
12
Fare ved El-svejsning
Ved elektro-svejsning skal batterikablerne først aftages, da motorens vekselstrøms-dynamo ellers ødelægges. Dette gælder også ved svejsning af påmonterede redskaber.
MÅ IKKE TILDÆKKES ELLER FJERNES
13
ADVARSEL
Varmt vand under tryk, fjern dæksler med forsigtighed.
MÅ IKKE TILDÆKKES ELLER FJERNES
15
ADVARSEL
VED VÆLTNING HOLD DA FAST I RATTET SPRING IKKE AF
FØRERHUSET GODKENDT AF DIREKTORATET FOR ARBEJDSTILSYNET
MÅ IKKE TILDÆKKES ELLER FJERNES
14
ADVARSEL
Start ALDRIG motoren ved kortslutning af starter.
MÅ IKKE TILDÆKKES ELLER FJERNES
16
ADVARSEL
Før arbejde på traktoren afmonteres stelkabel(er) på batteri(er).
ADVARSEL
Ved demontering af batteri afmonteres stelkabel ALTID først.
MÅ IKKE TILDÆKKES ELLER FJERNES

https://truckmanualshub.com/

Item	Part Number	Qty	Description
1	3715013M2	1	Decal
2	3715064M1	1	Decal
3	3783396M1	1	Decal
4	3715011M1	1	Decal
5	3714996M1	1	Decal
6	3715072M1	1	Decal
7	3697199M1	1	Decal
8	3715012M1	1	Decal
9	3782489M1	1	Decal
10	3783973M1	1	Decal
11	3780745M1	1	Decal
12	3715068M1	1	Decal
13	3715063M1	1	Decal
14	3715069M1	1	Decal
15	3715067M1	1	Decal
16	3715065M1	1	Decal
17	3781401M1	1	Decal
18		X	Not Used

FOOTNOTE [A] WITH POWER SHUTTLE

1-ZR13-004-A

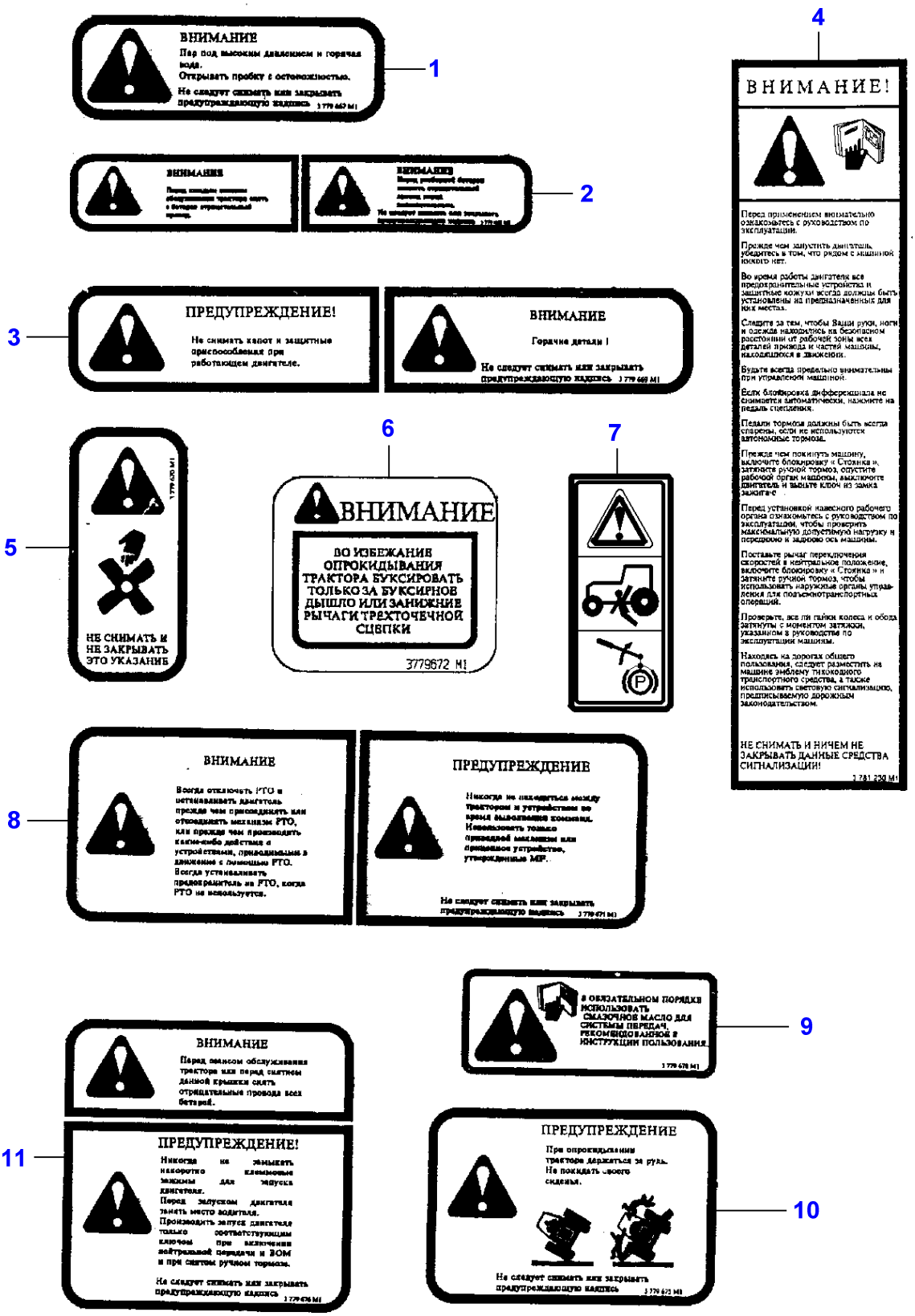
1
ВНИМАНИЕ
Пар под высоким давлением и горячая вода.
Открывать пробку с осторожностью.
Не следует снимать или закрывать предупреждающую надпись
2
3
ПРЕДУПРЕЖДЕНИЕ!
Не снимать капот и защитные приспособления при работающем двигателе.
ВНИМАНИЕ
Горячие детали !
Не следует снимать или закрывать предупреждающую надпись
4
ВНИМАНИЕ!
Перед применением внимательно ознакомьтесь с руководством по эксплуатации.
Прежде чем запустить двигатель, убедитесь в том, что рядом с машиной никого нет.
Во время работы двигателя все предохранительные устройства и защитные кожухи всегда должны быть установлены на предназначенных для них местах.
Следите за тем, чтобы Ваши руки, ноги и одежда находились на безопасном расстоянии от рабочих зон всех деталей привода и частей машины, находящихся в движении.
Будьте всегда предельно внимательны при управлении машиной.
Если блокировка дифференциала не снимается автоматически, нажмите на педаль сцепления.
Педали тормоза должны быть всегда стыкованы, если не используются автономные тормоза.
Прежде чем покинуть машину, включите блокировку « Стоянка », затяните ручной тормоз, опустите рабочий орган машины, выключите двигатель и выдите ключ из замка зажигания
Перед установкой навесного рабочего органа ознакомьтесь с руководством по эксплуатации, чтобы проверить максимальную допустимую нагрузку и переднюю и заднюю ось машины.
Поставьте рычаг переключения скоростей в нейтральное положение, включите блокировку « Стоянка » и затяните ручной тормоз, чтобы использовать наружные органы управления для подъемно-транспортных операций.
Проверьте, все ли гайки колеса и обода затянуты с моментом затяжки, указанном в руководстве по эксплуатации машины.
Находясь на дорогах общего пользования, следует разместить на машине эмблему тихоходного транспортного средства, а также использовать световую сигнализацию, предписываемую дорожным законодательством.
НЕ СНИМАТЬ И НИЧЕМ НЕ ЗАКРЫВАТЬ ДАННЫЕ СРЕДСТВА СИГНАЛИЗАЦИИ!
5
НЕ СНИМАТЬ И НЕ ЗАКРЫВАТЬ ЭТО УКАЗАНИЕ
6
ВНИМАНИЕ
ВО ИЗБЕЖАНИЕ ОПРОКИДЫВАНИЯ ТРАКТОРА БУКСИРОВАТЬ ТОЛЬКО ЗА БУКСИРНОЕ ДЫШЛО ИЛИ ЗАНИЖНИЕ РЫЧАГИ ТРЕХТОЧЕЧНОЙ СЦЕПКИ
3779672 M1
7
8
ВНИМАНИЕ
Всегда отключать PTO и останавливать двигатель прежде чем присоединять или отсоединять механизм PTO, или прежде чем производить какие-либо действия с устройствами, приводимыми в движение с помощью PTO. Всегда устанавливать предохранитель на PTO, когда PTO не используется.
ПРЕДУПРЕЖДЕНИЕ
Никогда не находиться между трактором и устройством во время выполнения команды. Использовать только приводной механизм или прицепное устройство, утвержденные MF.
Не следует снимать или закрывать предупреждающую надпись
9
В ОБЯЗАТЕЛЬНОМ ПОРЯДКЕ ИСПОЛЬЗОВАТЬ СМАЗОЧНОЕ МАСЛО ДЛЯ СИСТЕМЫ ПЕРЕДАЧ, РЕКОМЕНДОВАННОЕ В ИНСТРУКЦИИ ПОЛЬЗОВАНИЯ.
ВНИМАНИЕ
Перед осмотром обслуживания трактора или перед снятием данной крышки снять отрицательные провода всех батарей.
11
ПРЕДУПРЕЖДЕНИЕ!
Никогда не замыкать накоротко клеммные зажимы для запуска двигателя.
Перед запуском двигателя занять место водителя.
Производить запуск двигателя только соответствующим ключом при включении нейтральной передачи и ВОМ и при снятом ручном тормозе.
Не следует снимать или закрывать предупреждающую надпись
10
ПРЕДУПРЕЖДЕНИЕ
При опрокидывании трактора держаться за руль. Не покидать своего сиденья.
Не следует снимать или закрывать предупреждающую надпись

https://truckmanualshub.com/

Item	Part Number	Qty	Description
1	3779667M1	1	Decal
2	3779668M1	1	Decal
3	3779669M1	1	Decal
4	3781230M1	1	Decal
5	3779670M1	1	Decal
6	3779672M1	1	Decal
7	3782489M1	1	Decal
8	3779671M1	1	Decal
9	3779678M1	1	Decal
10	3779675M1	1	Decal
11	3779676M1	1	Decal

https://truckmanualshub.com/

1-ZR06-002-B

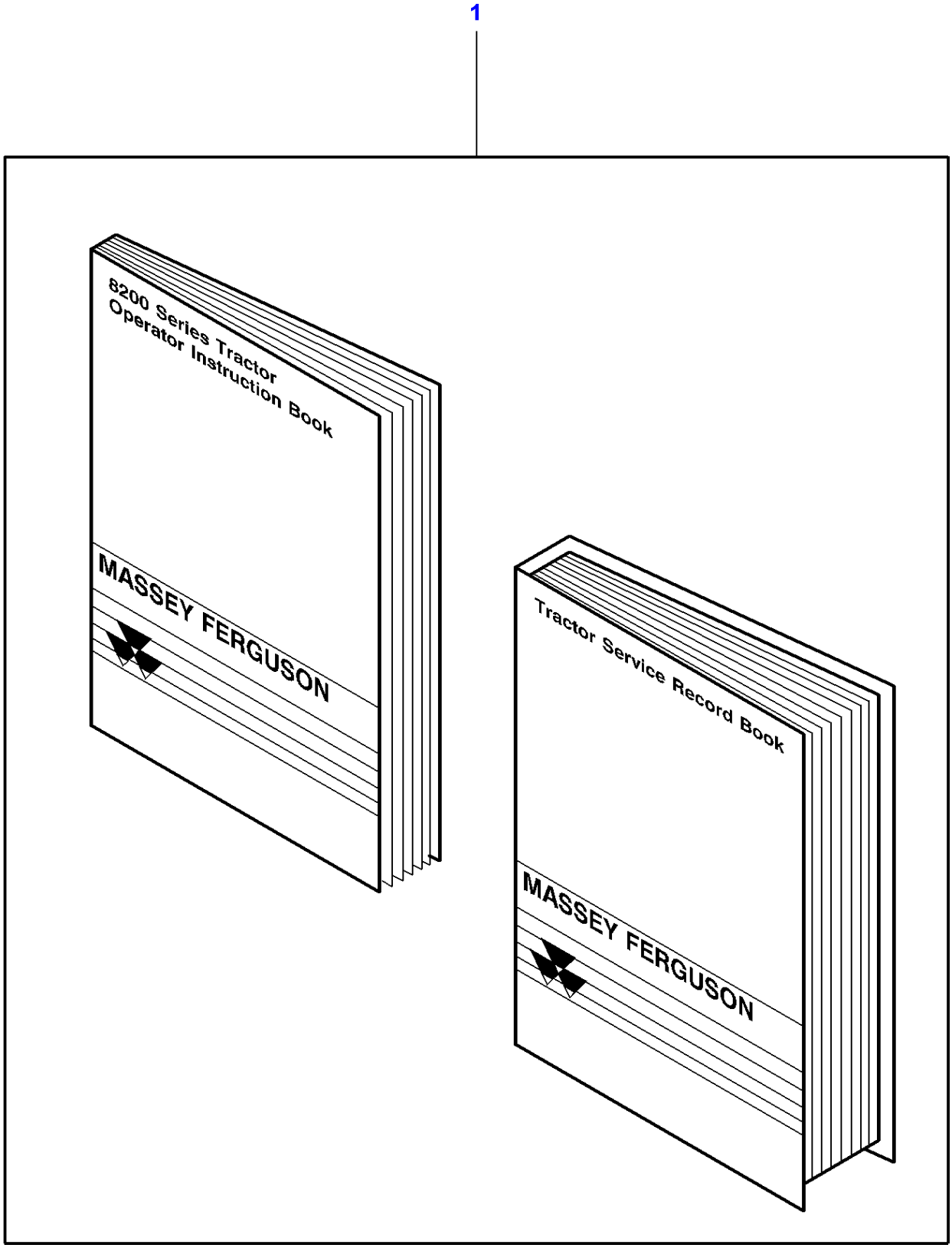

https://truckmanualshub.com/

Item	Part Number	Qty	Description	Comments
1	3784145M91	1	Instruction Book	FRENCH
	3784146M91	1	Instruction Book	ENGLISH
	3784147M91	1	Instruction Book	For United States of America ENGLISH
	3784148M91	1	Instruction Book	GERMAN
	3784149M91	1	Instruction Book	SPANISH
	3784150M91	1	Instruction Book	ITALIAN
	3784151M91	1	Instruction Book	DANISH
	3784152M91	1	Instruction Book	NORWEGIAN
	3784153M91	1	Instruction Book	SWEDISH
	3784154M91	1	Instruction Book	RUSSIAN

https://truckmanualshub.com/

Page Title	Page Number
Tractor Cab	110-0005
Doors	110-0010
Glass	110-0015
Side Window Mechanism	110-0020
Rear Window Mechanism	110-0025
Roof	110-0030
Heating Hatchway	110-0035
Air Hatchway	110-0040
High Visibility Roof	110-0045
High Visibility Roof - Window	110-0050
Tractor Cab - Cladding	110-0055
High Visibility Roof - Cladding	110-0060
Tractor Cab - Cladding	110-0065
High Visibility Roof - Cladding	110-0070
Tractor Cab - Cladding	110-0075
Instrument Panel Cladding	110-0080
Tractor Cab - Cab Insulation	110-0085
Tractor Cab - Cab Insulation	110-0090
Tractor Cab - Fenders	110-0095
Tractor Cab - Fenders - FENDERS EXTENSION	110-0100
Air Conditioner - Hose	110-0105
Air Conditioner - Hose - With High Visibility Roof	110-0110
Tractor Cab - Heater Hoses	110-0115
Tractor Cab - Heater Hoses - With High Visibility Roof	110-0120
Tractor Cab - Heater	110-0125
Tractor Cab - Heater	110-0130
Tractor Cab - Heater - With High Visibility Roof	110-0135
Air Conditioner	110-0140
Air Conditioner	110-0145
Air Conditioner - With High Visibility Roof	110-0150
Tractor Cab - Heater	110-0155
Tractor Cab - Heater - With High Visibility Roof	110-0160
Tractor Cab - Heater - HIGH COLD	110-0165
Tractor Cab - Heater - HIGH COLD - WITH HIGH VISIBILITY ROOF	110-0170
Windscreen Washer	110-0175
Front Windscreen Wiper	110-0180
Rear Window Wiper	110-0185
Tractor Cab - Canopy	110-0190
Tractor Cab - Canopy - With High Visibility Roof	110-0195
Radio Installation	110-0200
Watch	110-0205
Electrical Plug And Cigar Lighter	110-0210
Tractor Cab - External Mirrors	110-0215
Tractor Cab - External Mirrors	110-0220
Tractor Cab - Internal Mirrors	110-0225
Seat - Grammer	110-0230
Seat - Grammer - MECHANICAL SEAT	110-0235
Seat - Grammer - MECHANICAL SEAT	110-0240
Seat - Grammer - Air Ride Seat & Suspension	110-0245
Seat - Grammer - AIR PRESSURE SEAT WITH AUTOMATIC ADJUSTMENT	110-0250
Seat - Grammer - AIR PRESSURE SEAT WITH MANUAL ADJUSTMENT	110-0255
Seat Belt	110-0260
SECONDARY SEAT	110-0265

https://truckmanualshub.com/

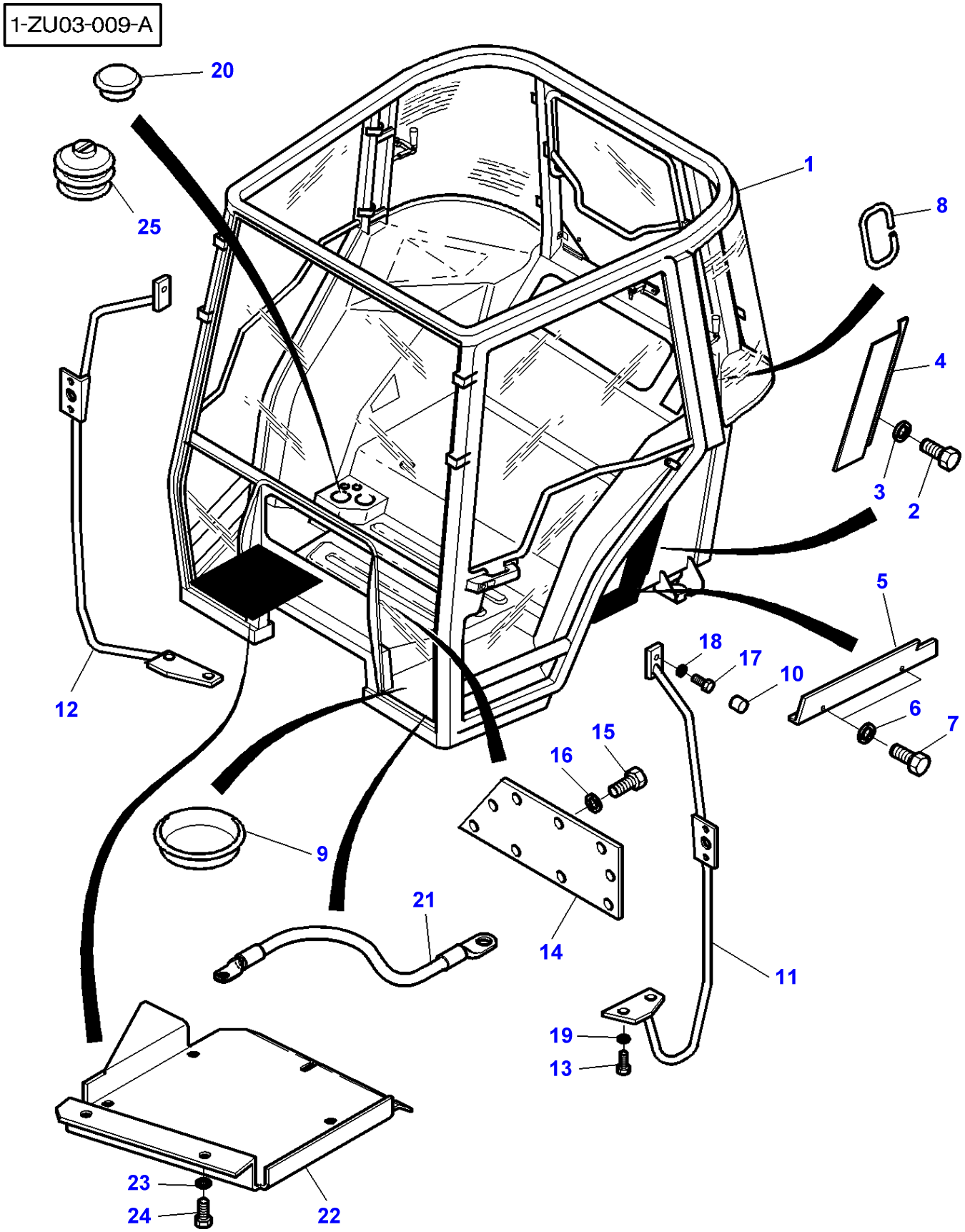

https://truckmanualshub.com/

Item	Part Number	Qty	Description	Comments
1	3779192M93	1	Cab	
2	339123X1	4	Hex. Sock. Screw	M8X20
3	390972X1	4	Washer Metric	Diameter 9MM
4	3713290M1	1	Cowl	Right Hand Top
	3713289M1	1	Cowl	Left Hand Top
5	3713292M1	1	Cowl	Right Hand Bottom
	3713291M1	1	Cowl	Left Hand Bottom
6	390971X1	4	Washer	M6
7	391074X1	4	Hex. Sock. Screw	M6X12
8	3714681M1	1	Profile	Length 150MM
9	3902363M1	1	Plug	Diameter 20MM
10	3616277M1	2	Helmet	
11	3780049M91	1	Guideway	Left Hand
12	3780048M92	1	Guideway	Right Hand
13	3009493X1	2	Hex. Sock. Screw	M8X30
14	3778052M1	1	Inspection Cover	(1)
15	3010775X1	9	Screw	(1) CBLX M6X25 Replace and repair. Old interchangeable with new 3903188M1
16	390971X1	9	Washer	(1)
17	339228X1	2	Screw Metric	M8X12
18	22428X	2	Lock Washer	
19	385362X1	2	Washer Metric	
20	3782487M1	1	Plug	Diameter 29MM
	3782486M1	1	Plug	Up to Serial or Engine Number H140028 Diameter 50MM
21	1625401M2	1	Cable	
22	3782614M3	1	Cover	
23	391038X1	3	Washer	
24	339560X1	3	Hex. Sock. Screw	M6X16
25	3783232M1	1	Plug	From Serial or Engine Number H140029 50X55MM

FOOTNOTE [A] NORTH AMERICA ONLY
FOOTNOTE [B] WITH DYNASHIFT
FOOTNOTE [C] WITH FULL POWERSHIFT
FOOTNOTE [D] WITHOUT WORK LIGHT WITH FLASHERS ON ROOF

1-ZU05-001-B

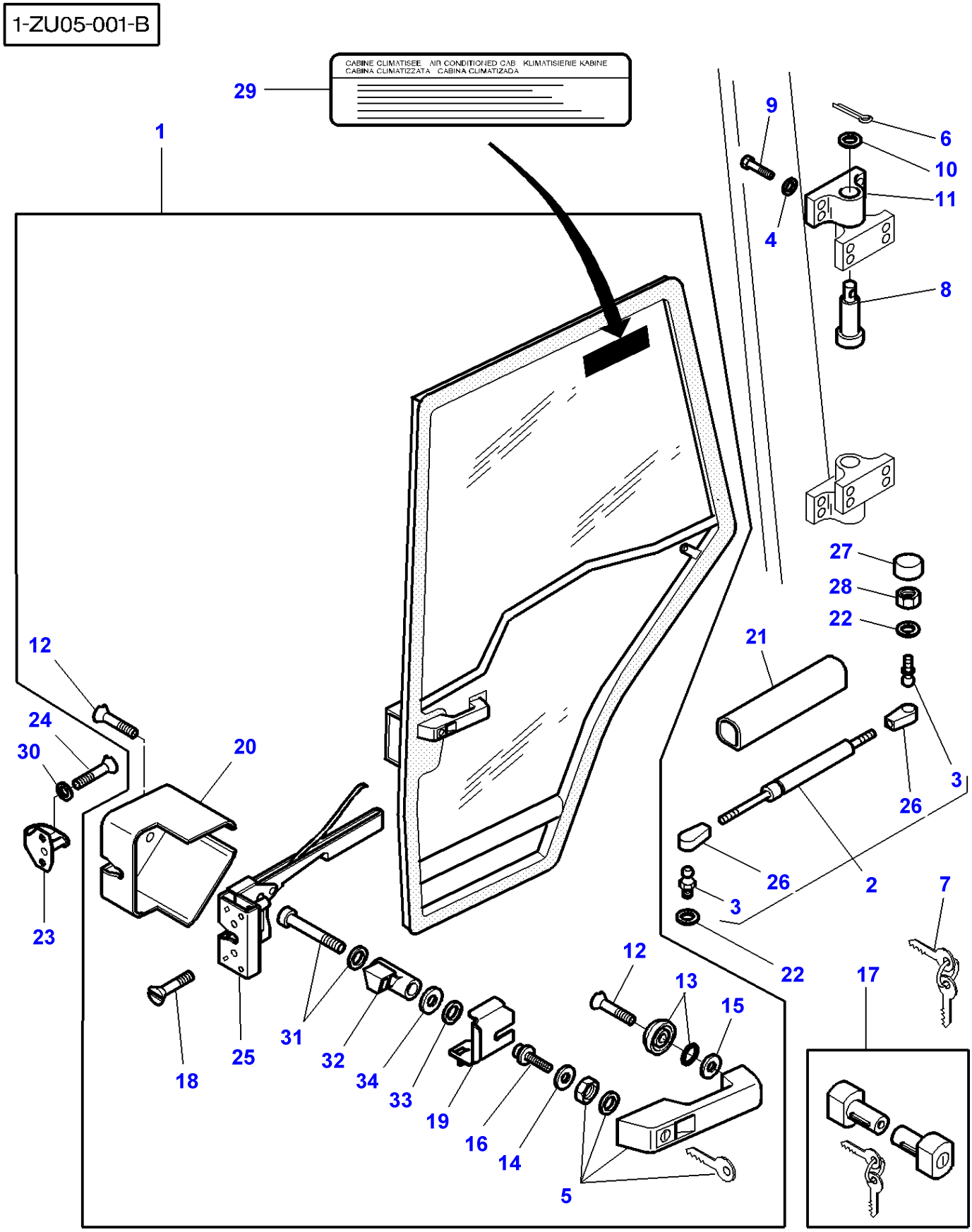
CABINE CLIMATISEE AIR CONDITIONED CAB KLIMATISIERIE KABINE
CABINA CLIMATIZZATA CABINA CLIMATIZADA
29
1
9
6
10
11
4
8
27
28
22
21
12
24
30
20
3
26
26
2
3
7
23
22
12
13
15
17
31
25
32
34
33
18
19
16
14
5

https://truckmanualshub.com/

Item	Part Number	Qty	Description	Comments
1	3902120M91	1	Gate	Right Hand
	3902119M91	1	Gate	Left Hand
2	3902121M3	2	Ram	
3	3902773M1	2	Toggle	(2)
4	385361X1	16	Washer Metric	
5	3902356M91	2	Handle	[A]
				(1)
				No610
6	1442963X1	4	Split Pin	Diameter 2,5X32
7	**3902584M91**	1	Kit, Spanner	
8	3903186M1	4	Clevis Pin	
9	3902414M1	16	Screw	M8X20
10	3903187M1	4	Washer	Diameter 22X12X1,2
11	3902116M1	4	Hinge	
12	3902411M1	4	Screw	(1)
				M6X16
13	3902145M1	2	Skate	(1)
14	3902366M1	2	Washer	(1)
				28X42X2
15	3902367M1	2	Washer	(1)
				5X18X1
16	3902368M1	2	Screw Special	(1)
				Up to Serial or Engine Number
17	3902370M91	1	Parts Pack	No 610
18	3902412M1	4	Screw	(1)
				M6X25
19	3902369M1	1	Rod Link	(1)
				Left Hand
				Up to Serial or Engine Number
	3902371M1	1	Rod Link	(1)
				Right Hand
				Up to Serial or Engine Number
20	3804660M1	1	Cover	(1)
				Right Hand
	3804661M1	1	Cover	(1)
				Left Hand
21	3902415M1	2	Protector	
22	391025X1	4	Lock Washer	
23	3902372M1	2	Latch	
24	3010775X1	4	Screw	CBLX M6X25
				Replace and repair. Old interchangeable with new 3903188M1
25	3804663M1	1	Latch	(1)
				Left Hand
	3804662M1	1	Latch	(1)
				Right Hand
26		2	Toggle	(2)
				Not serviced, order REFNo2
27	3616277M1	2	Helmet	
28	339169X1	2	Nut	
29	3619471M1	1	Decal	
30	391038X1	4	Washer	
31		2	Parts Pack	(17)
				Not serviced, order REF 17
32	3903504M1	2	Latch	From Serial or Engine Number
33		1	Washer	[B]
34		1	Washer	[B]

FOOTNOTE [A] NUMBER STAMPED ON THE LOCK
FOOTNOTE [B] NUMBER TO BE ADVISED

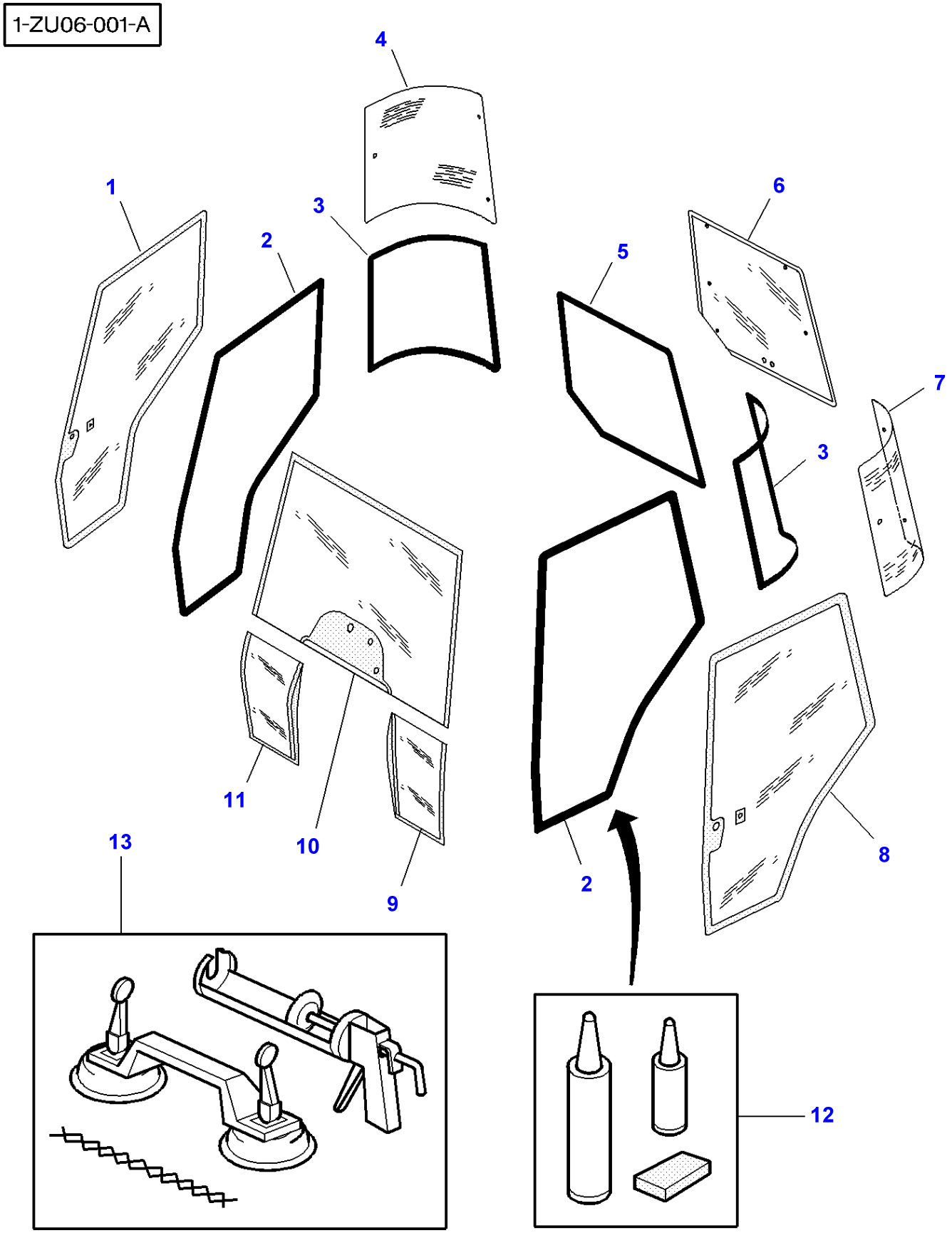
1-ZU06-001-A
4
1
3
2
6
5
7
3
11
10
9
2
8
13
12

https://truckmanualshub.com/

Item	Part Number	Qty	Description	Comments
1	3902124M1	1	Window	Right Hand
2	3902122M1	2	Seal	
3	3902133M1	2	Seal	
4	3902131M1	1	Window	Right Hand
5	3902144M1	1	Seal	
6	3715438M1	1	Window	
7	3902130M1	1	Window	Left Hand
8	3902123M1	1	Window	Left Hand
9	3902149M1	1	Window	Left Hand
10	3777602M2	1	Windscreen	
11	3902150M1	1	Window	Right Hand
12	3902373M91	1	Parts Pack	
13	3902503M91	1	Parts Pack	

https://truckmanualshub.com/

1-ZU85-002-A

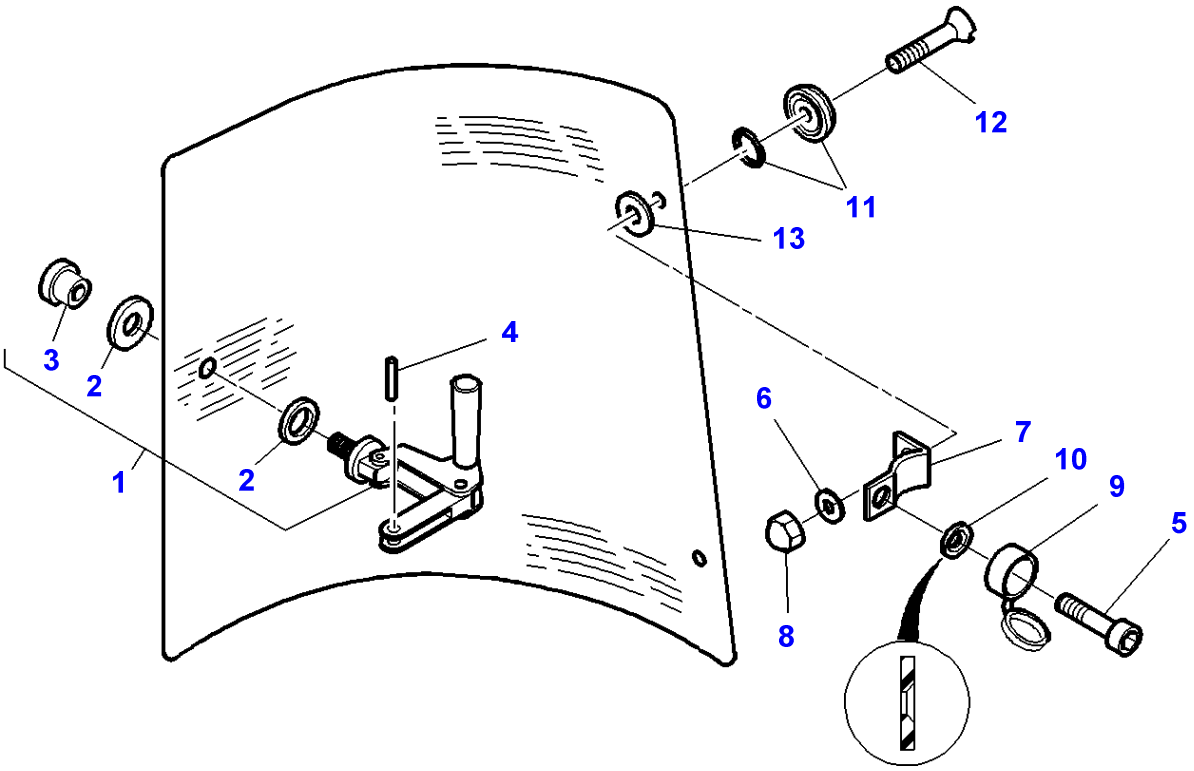

https://truckmanualshub.com/

Item	Part Number	Qty	Description	Comments
1	3476132M91	1	Stay	Left Hand
	3476133M91	1	Stay	Right Hand
2	3478052M1	2	Washer	(1)
3	3478051M1	1	Nut	(1)
4	1440396X1	2	Dowel	5X12
5	3010775X1	4	Screw	CBLX M6X25
				Replace and repair. Old interchangeable with new 3903188M1
6	390971X1	4	Washer	
7	3902128M1	4	Hinge	
8	3902455M1	4	Nut	M6
9	3902129M1	4	Muff	
10		4	Muff	Not serviced, order REF 5+9
11	3902145M1	4	Skate	
12	3010775X1	4	Screw	CBLX M6X25
				Replace and repair. Old interchangeable with new 3903188M1
13	3902365M1	4	Washer	Diameter 8X30X3

1-ZU84-001-B

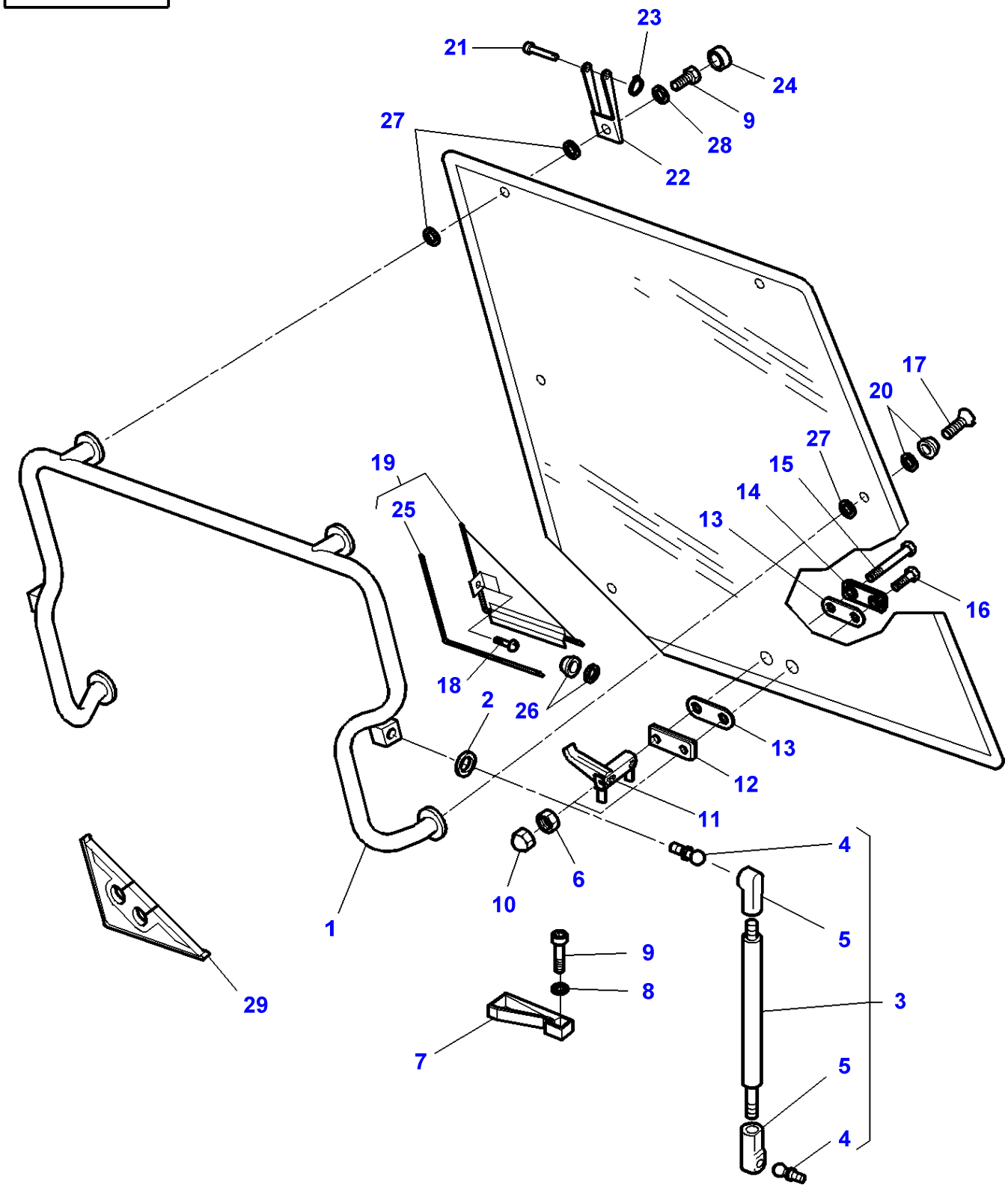
23
21
24
9
28
27
22
17
20
27
15
19
14
25
13
16
18
2
26
13
12
11
4
6
10
5
1
9
8
3
29
7
5
4

https://truckmanualshub.com/

Item	Part Number	Qty	Description	Comments
1	3902135M92	1	Support	
2	391025X1	4	Lock Washer	
3	3902140M1	2	Ram	
4		2	Toggle	(3) Not serviced, order REFNo3
5		2	Toggle	(3) Not serviced, order REFNo3
6	1441204X1	2	Nut Metric	M10
7	3619610M1	1	Thruster	
8	391289X1	2	Lock Washer	
9	3010775X1	4	Screw	CBLX M6X25 Replace and repair. Old interchangeable with new 3903188M1
10	3619609M1	2	Helmet	M10
11	3619605M1	1	Handle	
12	3619604M1	1	Plate	
13	3619906M1	2	Gasket	
14	3619603M1	1	Plate	
15	3619907M1	1	Screw	M10X130
16	3619908M1	1	Screw	M10X35
17	3010775X1	2	Screw	M6X25 Replace and repair. Old interchangeable with new 3903188M1
18	339228X1	1	Screw Metric	Up to Serial or Engine Number 12/09/99 M8X12
19	3902386M91	1	Plate	Up to Serial or Engine Number 12/09/99
20	3902145M1	2	Skate	
21	3902137M1	2	Clevis Pin	
22	3902136M2	2	Clevis	
23	1440988X1	2	Circlip	
24	3902129M1	2	Muff	
25	3902417M1	1	Gasket	(19) Up to Serial or Engine Number 12/09/99
26	3619241M1	1	Button	Up to Serial or Engine Number 12/09/99
27	3902365M1	6	Washer	Diameter 8X30X3
28	385361X1	2	Washer Metric	
29	3806376M1	1	Seal	From Serial or Engine Number 13/09/99

1-ZU02-001-C

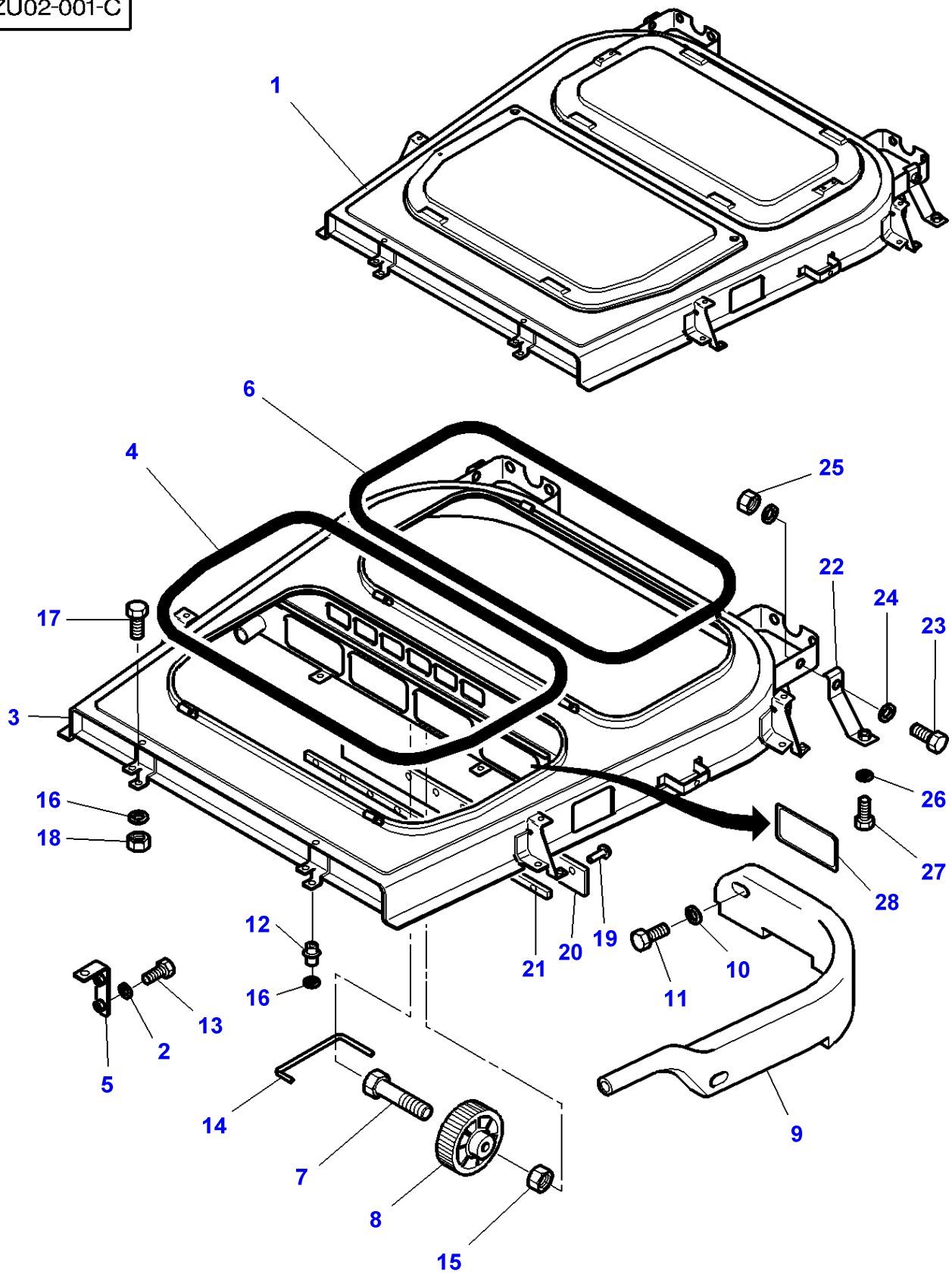

https://truckmanualshub.com/

Item	Part Number	Qty	Description	Comments
1	3714088M93	1	Roof	
2	339102X1	2	Washer	(1) M5
3		1	Roof	(1) Not serviced, order REF NO 1
4	3713158M1	1	Gasket	(1) Length 2858MM
5	3713802M1	1	Strap	(1)
6	3713159M1	1	Gasket	Length 2740MM
7	339229X1	1	Hex. Sock. Screw	(1) M6
8	3713167M1	1	Button	(1)
9	3713163M1	1	Manifold	(1) Right Hand
	3713164M1	1	Manifold	(1) Left Hand
10	390971X1	4	Washer	(1) M6
11	3008342X1	4	Screw Metric	(1) M6X25
12	3901206M1	8	Nut	(1) M6
	3778304M1	8	Nut	(1) M8
13	390990X1	2	Screw Metric	(1) M5X12
14	3714090M1	1	Draglink	(1)
15	1441500X1	1	Locknut	(1) M6
16	3010597X1	16	Tab Washer	Diameter 8-22MM
17	339123X1	8	Hex. Sock. Screw	M8X20MM
18	339169X1	8	Nut	M8
19	338980X1	9	Rivet	(1)
20	3713165M1	1	Band	(1)
21	3713166M2	1	Plate	(1)
22	3782969M1	2	Bracket	
23	339123X1	2	Hex. Sock. Screw	
24	390972X1	4	Washer Metric	
25	394367X1	2	Locknut	
26	391038X1	2	Washer	
27	339560X1	2	Hex. Sock. Screw	
28	3784593M1	1	Plate	For United States of America For Australia For South Africa

https://truckmanualshub.com/

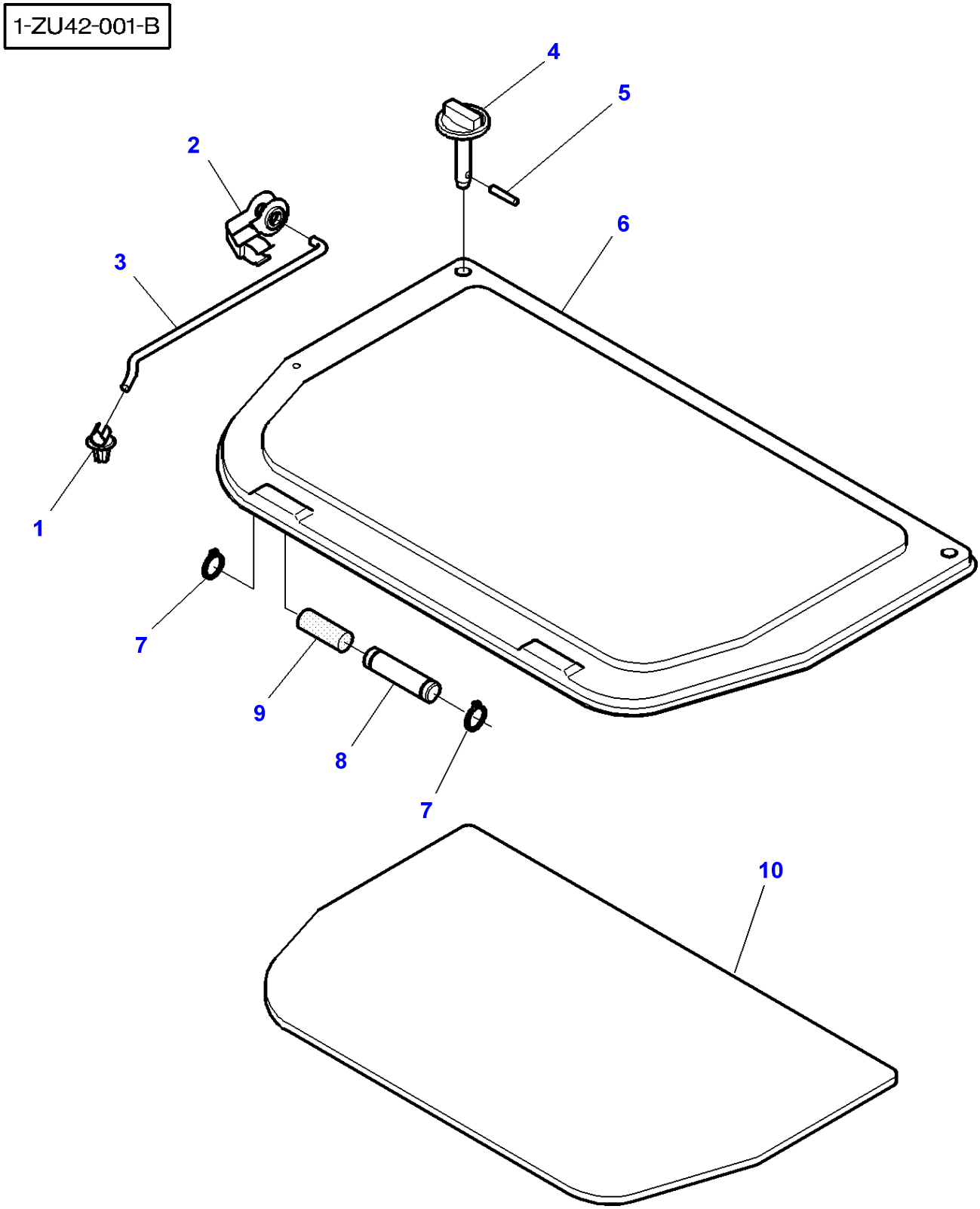

https://truckmanualshub.com/

Item	Part Number	Qty	Description	Comments
1	3385465M1	1	Pliers	
2	894225M1	1	Clip	
3	3713161M1	1	Stem	
4	3713160M91	2	Stem	
5	3006465X1	2	Roll Pin	
6	3712959M1	1	Trap	
7	3000261X1	4	Clip	
8	3303074M1	2	Clevis Pin	
9	3303077M1	2	Bush	
10	3784700M1	1	Foam	Thickness 5MM For United States of America For Australia For South Africa

https://truckmanualshub.com/

1-ZU43-001-A

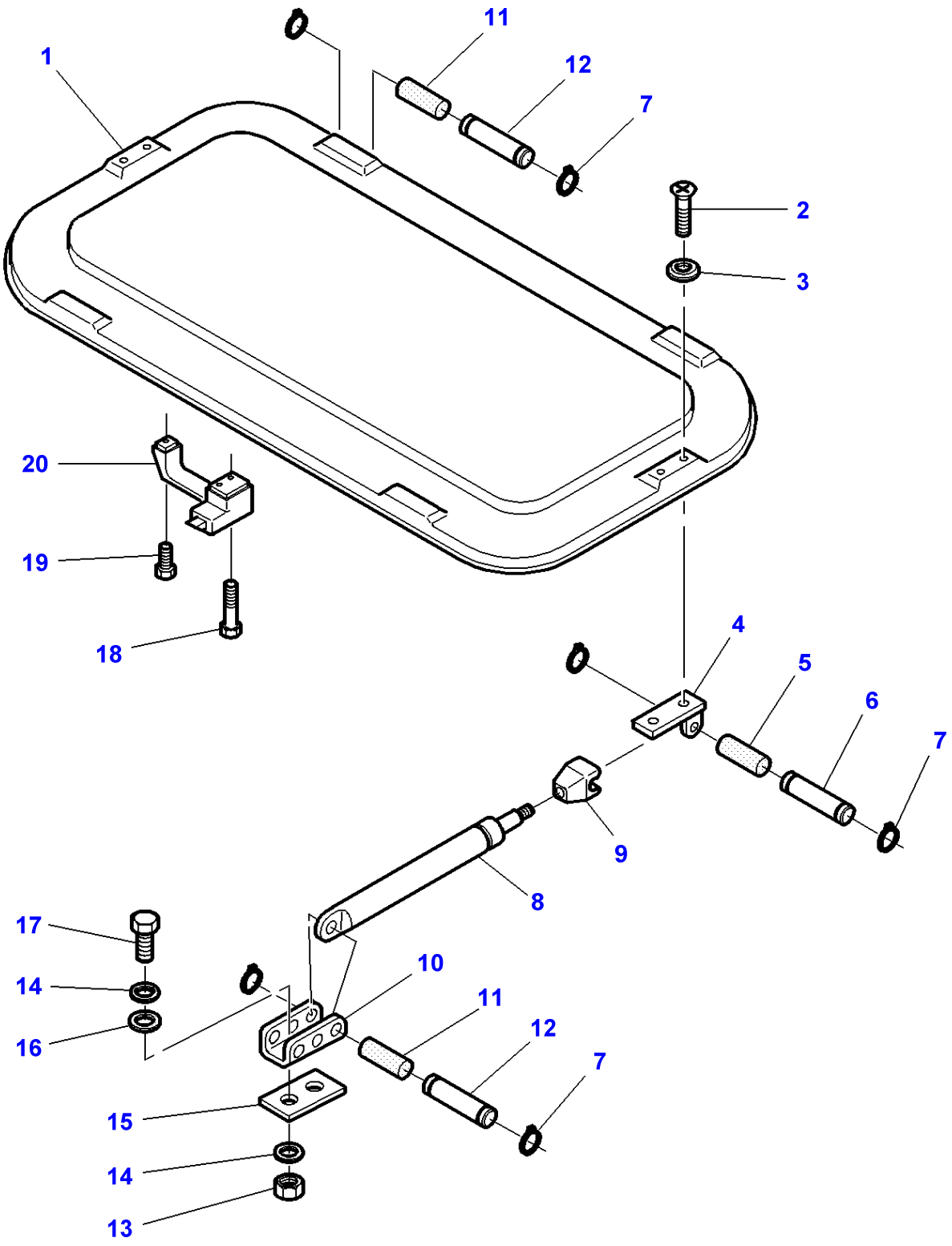

https://truckmanualshub.com/

Item	Part Number	Qty	Description	Comments
1	3712960M1	1	Trap	
2	3009439X1	4	Screw	M8X16
3	3530168M1	4	Washer	
4	3580934M91	1	Support	Right Hand
	3580933M91	1	Support	Left Hand
5	3303076M1	2	Bush	
6	3303075M1	2	Clevis Pin	6X33
7	3000261X1	8	Clip	
8	3303021M91	2	Gas Strut	
9	3303019M3	1	Head	
10	3301743M1	2	Lock	
11	3303077M1	4	Bush	
12	3303074M1	4	Clevis Pin	6X38
13	339169X1	4	Nut	M8
14	390972X1	8	Washer Metric	
15	3385446M1	2	Gasket	
16	3301742M1	4	Washer	
17	339123X1	4	Hex. Sock. Screw	M8X20
18	1441967X1	2	Screw Metric	M6X45
19	395579X1	1	Screw Metric	M6X16
20	3388511M91	1	Handle	

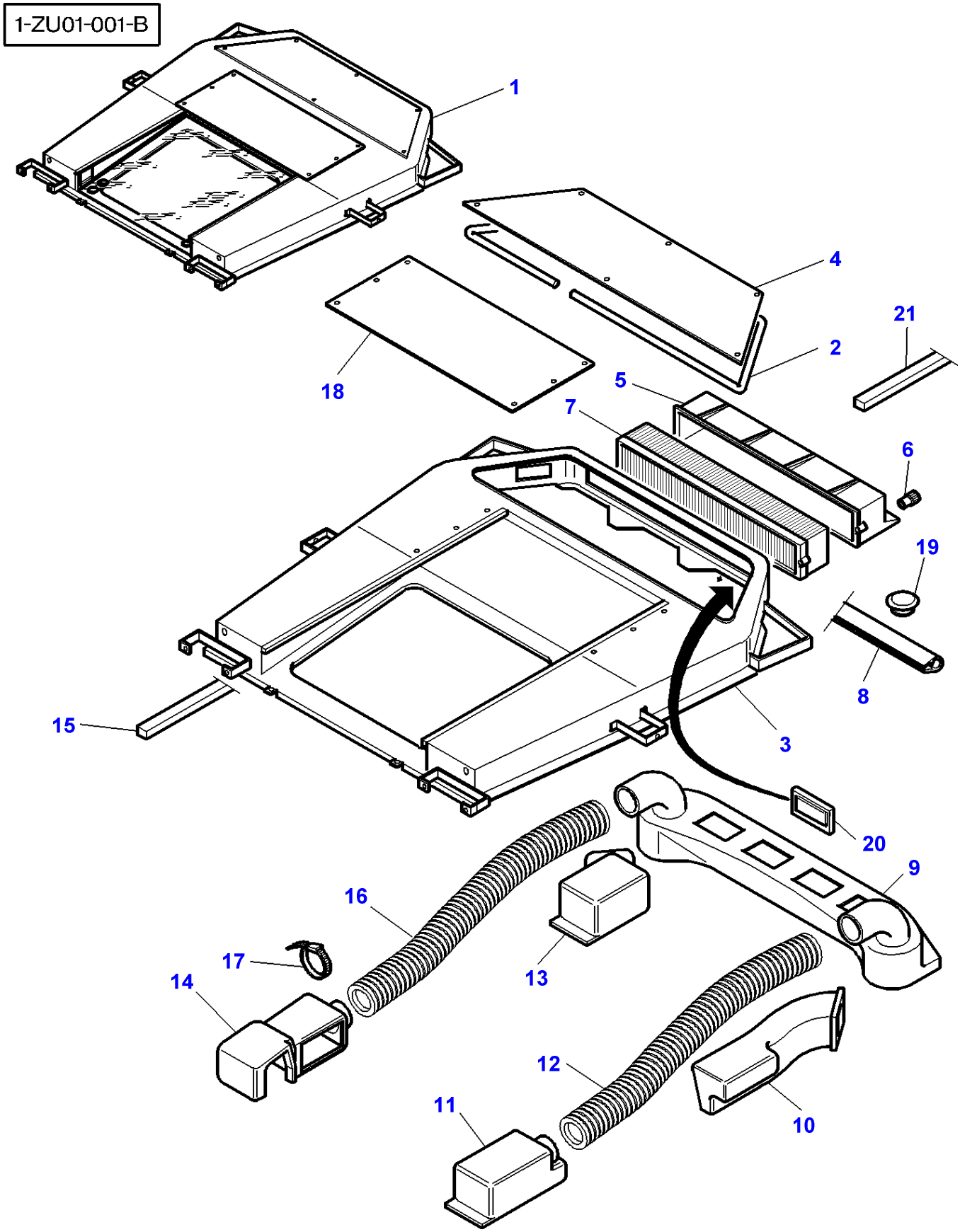
1-ZU01-001-B
1
4
21
2
18
5
7
6
19
8
15
3
20
9
16
17
13
14
12
11
10

https://truckmanualshub.com/

Item	Part Number	Qty	Description	Comments
1	3780714M91	1	Roof	
2	3778710M1	1	Gasket	(1)
3		1	Roof	(1)
				Not serviced, order REF NO 1
4	3777396M1	1	Trap	(1)
5	3388743M1	1	Frame Assy	
6	3778322M1	2	Button	(1)
7	**3388840M2**	1	Cab Filter	
	3389746M1	1	Cab Filter	[A]
8	3778711M1	2	Gasket	
	3783129M1	1	Staple	Length 25
	3580695M1	1	Gasket	
9	3778070M1	1	Locker	(1)
10	3778072M1	1	Locker	(1)
				Left Hand
11	3778069M1	1	Locker	(1)
				Left Hand
12	3777709M1	1	Warm Air Ducting	(1)
				Length 780MM
13	3778071M1	1	Locker	(1)
				Right Hand
14	3778068M1	1	Locker	(1)
				Right Hand
15	3778289M1	4	Gasket	10X15X580MM
16	3777710M1	1	Warm Air Ducting	(1)
				Length 670MM
17	3619622M1	4	Cable Tie	(1)
18	3778704M1	1	Bonnet	(1)
19	3713587M1	4	Plug	Diameter 22
20	3784593M1	1	Plate	130X216MM
				For United States of America
				For Australia
				For South Africa
21	3713635M1	1	Gasket	From Serial or Engine Number
				Up to Serial or Engine Number
				25X10X200
	3782881M1	2	Gasket	From Serial or Engine Number
				30X10X55

FOOTNOTE [A] CARBON FILTER

1-ZU14-001-A

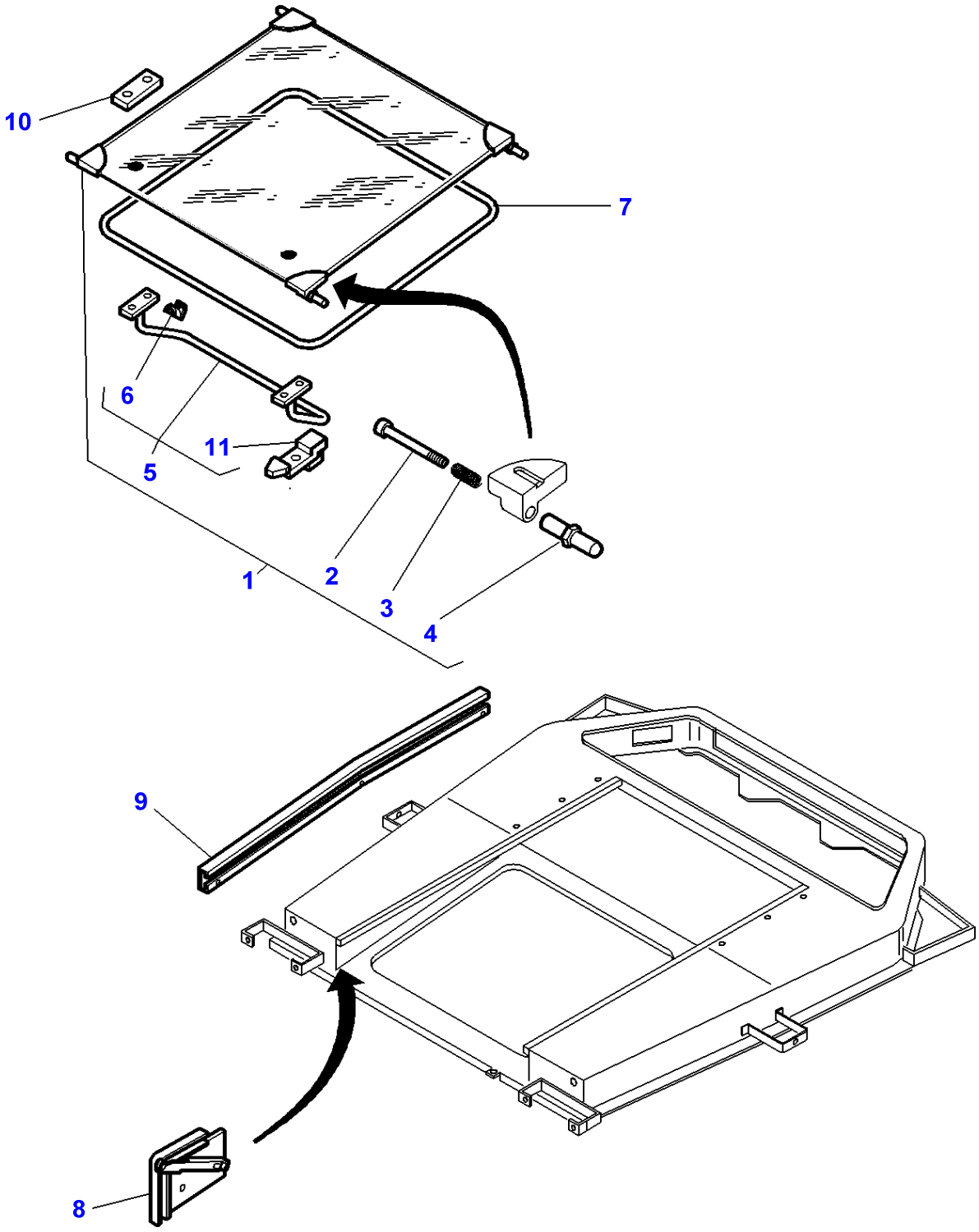

https://truckmanualshub.com/

Item	Part Number	Qty	Description	Comments
1	3780538M91	1	Window	
2	3780474M1	4	Screw	(1)
3	3780473M1	4	Spring	(1)
4	3780472M1	4	Roller	(1)
5	3780540M91	1	Handle	(1)
6	3780544M1	2	Strap	(5)
7	3902869M91	1	Frame Assy	
8	3780529M91	1	Thruster	Left Hand
	3780523M91	1	Thruster	Right Hand
9	3904102M91	1	Guide	Left Hand
	3780532M91	1	Guide	Right Hand
10	3904103M1	2	Plate	
11	3904104M1	2	Lever	(5)

https://truckmanualshub.com/

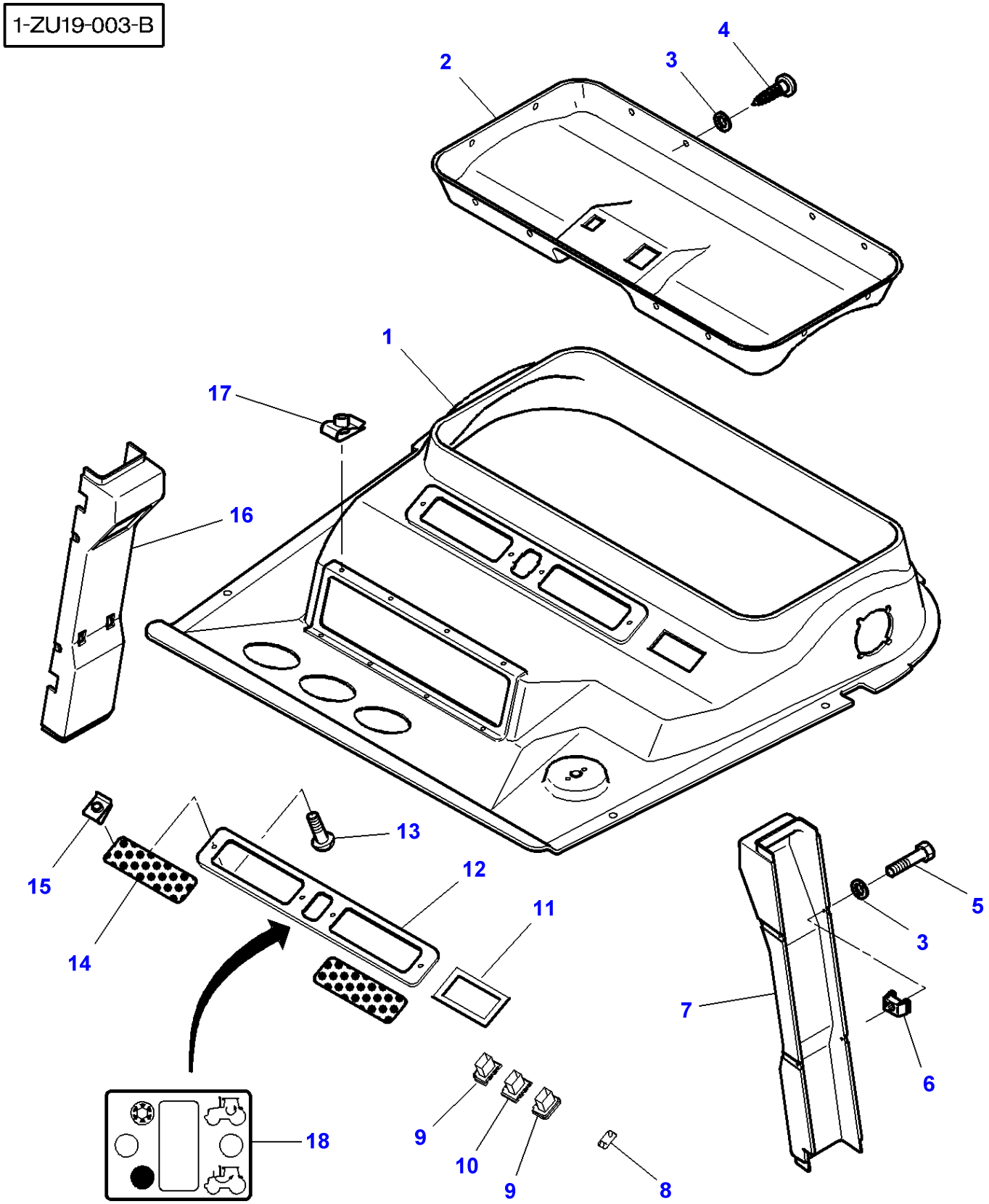

https://truckmanualshub.com/

Item	Part Number	Qty	Description	Comments
1	3780279M1	1	Facing	
2	3712606M1	1	Facing	
3	1427000M1	23	Washer	
4	3389854M1	15	Self Tap Screws	
5	3580257M1	8	Screw	M5 X 20
6	3615557M1	8	Boxnut	M5
7	3712752M5	1	Mounting	Left Hand
8	3713151M1	1	Tap	
9	3713153M1	2	Support	
10	3713152M1	1	Support	
11	3713621M1	1	Plate	
12	3712608M1	1	Cover	
13	3010506X1	4	Screw	
14	3712607M2	2	Grille	
15	3715142M1	4	Nut	Thickness 3/5MM
16	3713072M4	1	Mounting	[A] Right Hand
	3714919M1	1	Mounting	Right Hand
17	3715142M1	8	Nut	Thickness 3/5MM
18	3784594M1	1	Decal	For United States of America For Australia For South Africa

FOOTNOTE [A] WITHOUT DATATRONIC

1-ZU54-002-A

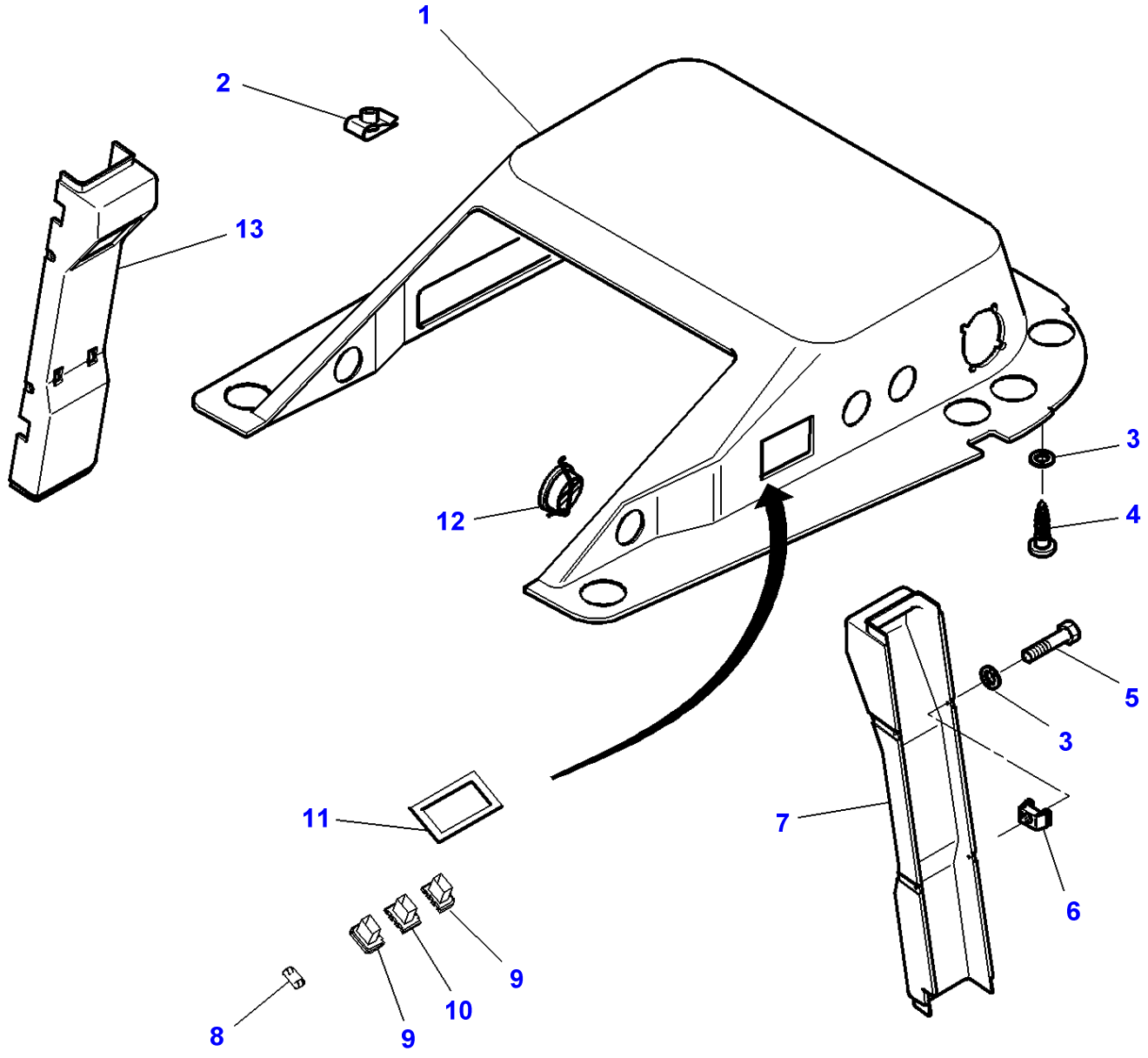

https://truckmanualshub.com/

Item	Part Number	Qty	Description	Comments
1	3777402M1	1	Facing	
2	3715142M1	8	Nut	Thickness 3/5MM
3	1427000M1	X	Washer	
4	3389854M1	X	Self Tap Screws	
5	3010506X1	4	Screw	M5X16
6	3615557M1	4	Boxnut	M5
7	3712752M5	1	Mounting	Left Hand
8	3713151M1	1	Tap	
9	3713153M1	2	Support	
10	3713152M1	1	Support	
11	3778011M1	1	Support	
12	3807934M1	12	Vent	
13	3713072M4	1	Mounting	[A] Right Hand
	3714919M1	1	Mounting	Right Hand

FOOTNOTE [A] WITHOUT DATATRONIC

https://truckmanualshub.com/

1-ZU19-001-A

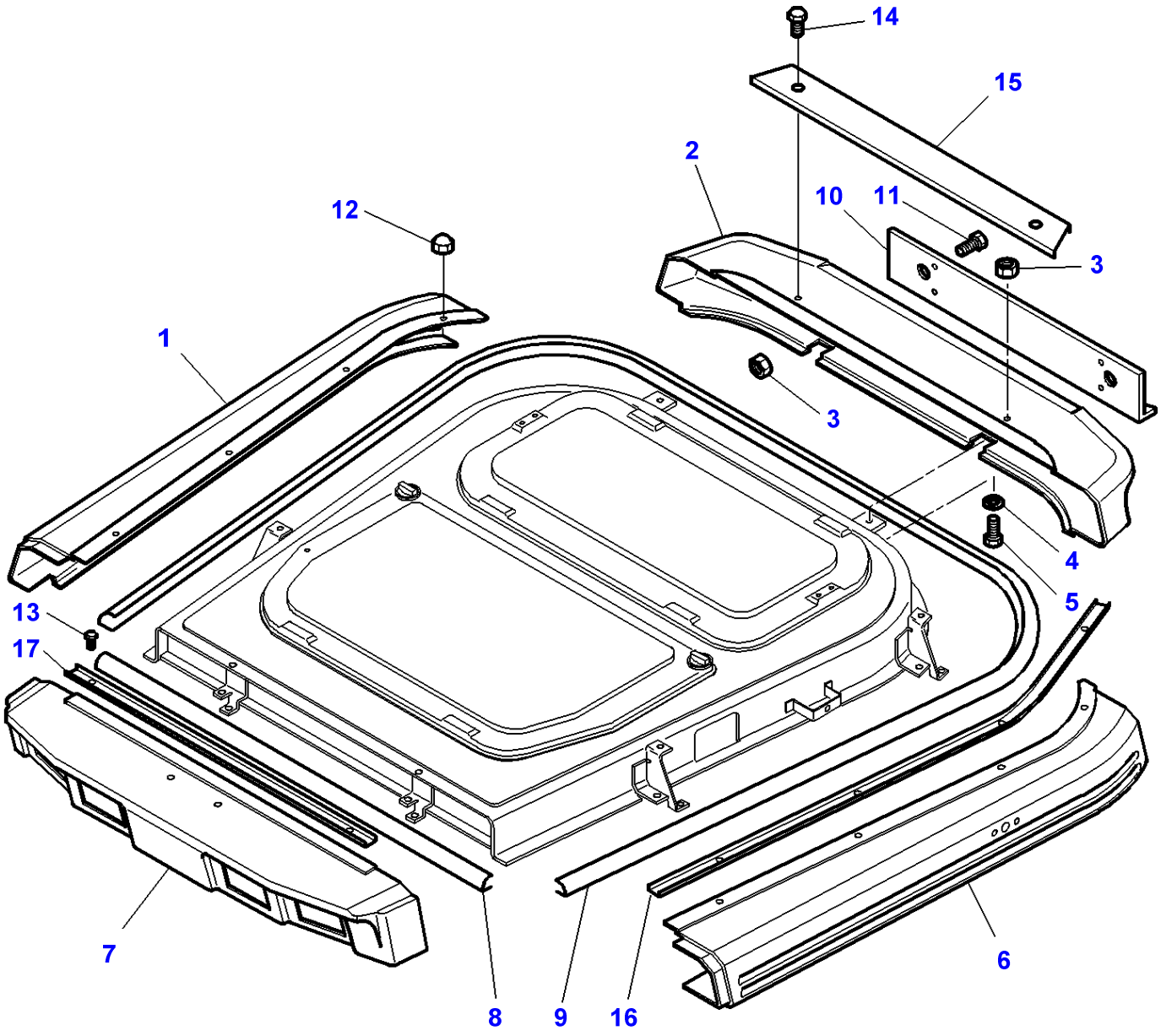

https://truckmanualshub.com/

Item	Part Number	Qty	Description	Comments
1	3712833M2	1	Trim	Right Hand
2	3712831M2	1	Visor	
3	339030X1	12	Nut Metric	M6
4	391038X1	14	Washer	Diameter 6MM
5	339666X1	2	Hex. Sock. Screw	M6X20
6	3712832M1	1	Trim	Left Hand
7	3780676M1	1	Visor	[A]
	3780675M1	1	Visor	[B]
8	3714885M1	1	Gasket	Length 1050mm
9	3714884M1	1	Gasket	Length 3700mm
10	3715422M1	1	Deflector	
11	391074X1	4	Hex. Sock. Screw	M6x12MM
12	3010594X1	8	Nut Metric	
13	339804X1	2	Hex. Sock. Screw	M6X25
14	339262X1	2	Bolt Metric	M6X30
15	3715679M1	1	Profile	
16	3715676M1	1	Profile	Right Hand
	3715677M1	1	Profile	Left Hand
17	3715678M1	1	Profile	

FOOTNOTE [A] WITH 2 HEADLAMPS
FOOTNOTE [B] WITH 4 HEADLAMPS

https://truckmanualshub.com/

1-ZU54-001-B

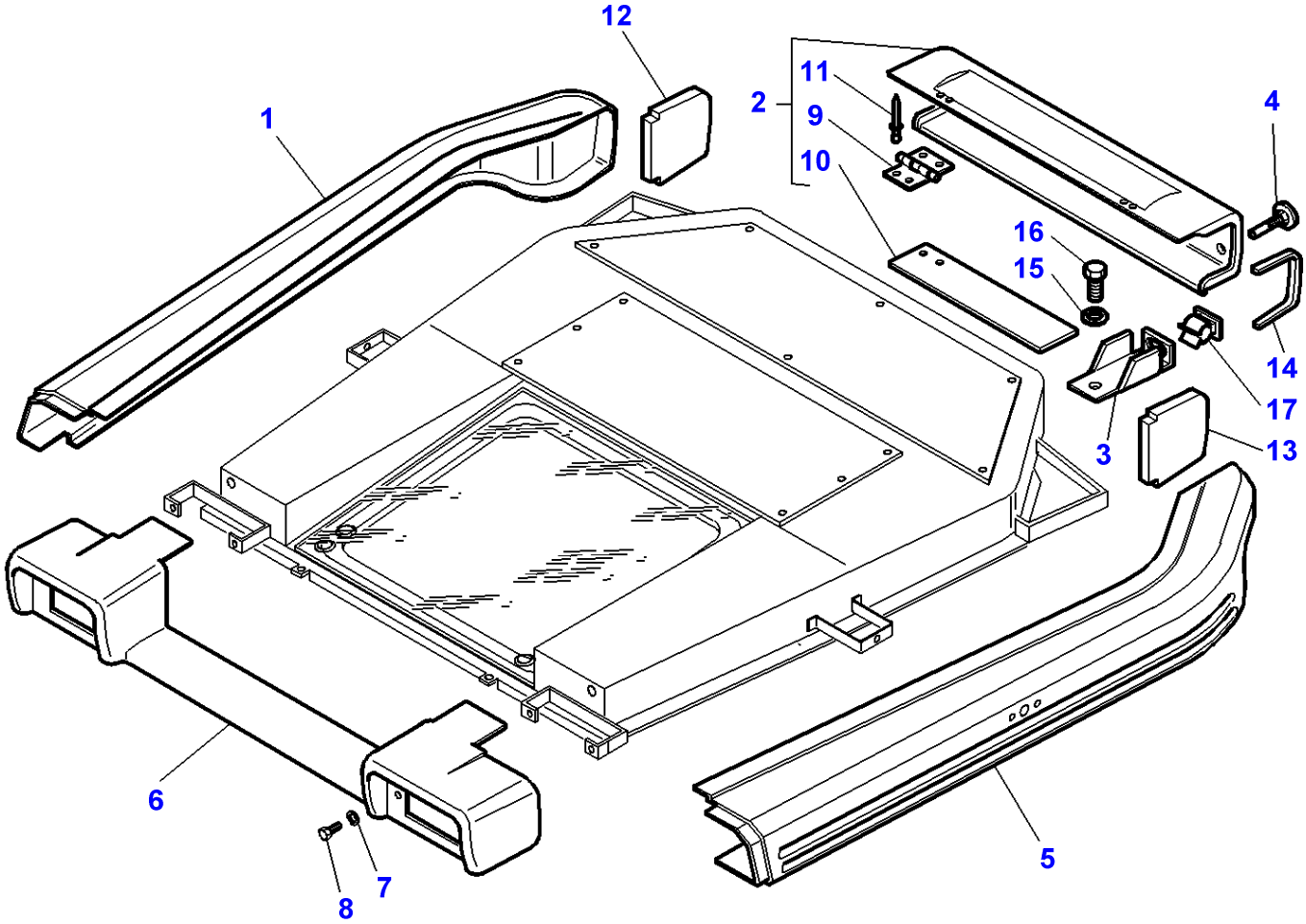

https://truckmanualshub.com/

Item	Part Number	Qty	Description	Comments
1	3777399M1	1	Visor	Right Hand
2	3778744M91	1	Visor	
3	3778313M1	1	Support	Left Hand
	3778314M1	1	Support	Right Hand
4	3778784M1	2	Latch	
5	3777398M1	1	Visor	Left Hand
6	3777397M1	1	Visor	
7	391038X1	4	Washer	
8	339666X1	4	Hex. Sock. Screw	M6X20
9	3778703M1	2	Hinge	(2)
10	3778745M1	1	Reinforcement	(2)
11	3778746M1	4	Rivet	(2)
12	3778705M1	1	Pad	Right Hand
13	3778706M1	1	Pad	Left Hand
14	3778785M1	2	Gasket	25X20X230MM
15	339123X1	2	Hex. Sock. Screw	M8X20
16	3010597X1	2	Tab Washer	
17	3713226M1	2	Bridle	

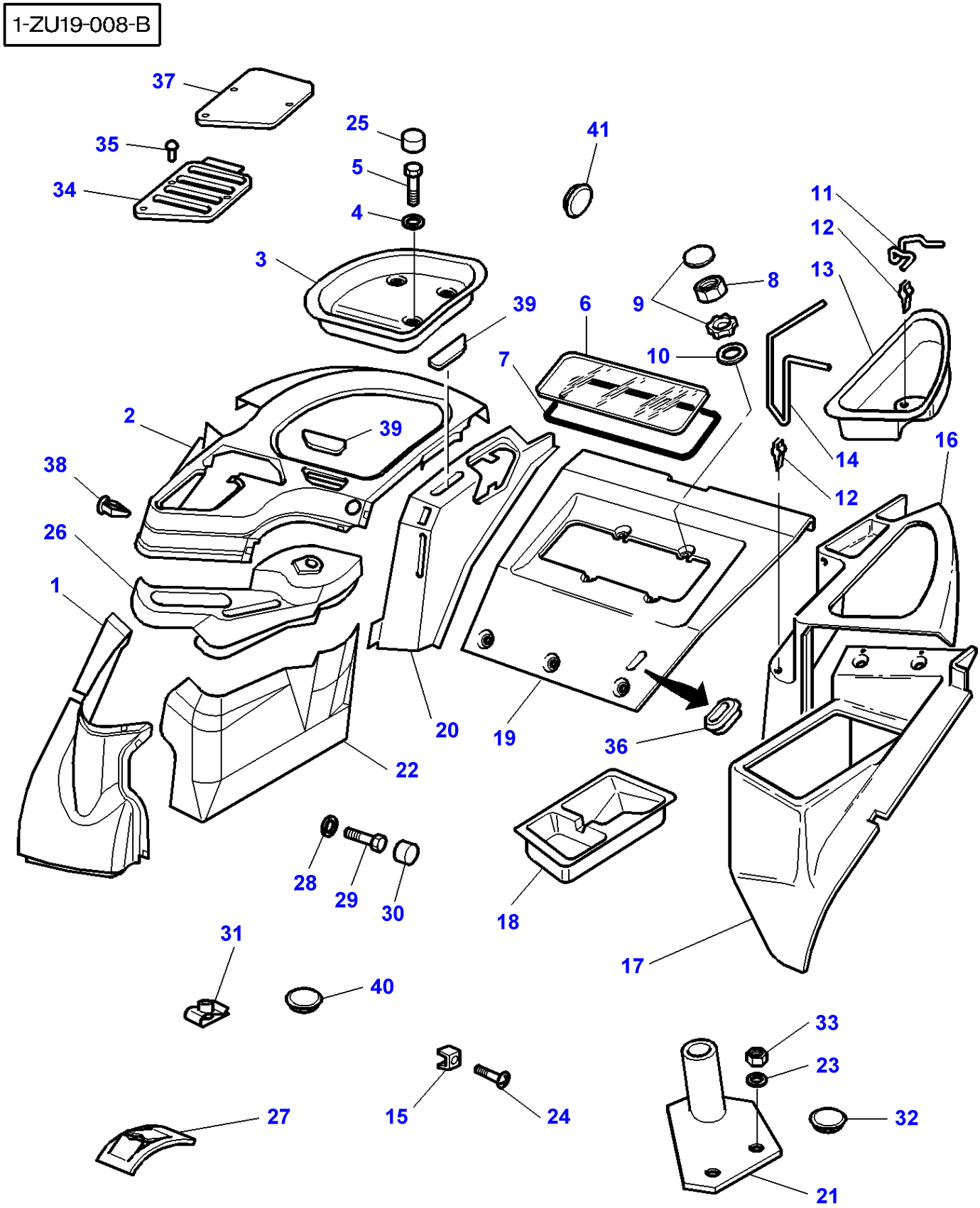
1-ZU19-008-B
37
35
34
25
5
4
41
3
39
6
9
8
11
12
13
10
7
2
39
38
26
1
14
12
16
20
19
36
22
28
29
30
18
17
31
40
33
23
27
15
24
32
21

https://truckmanualshub.com/

Item	Part Number	Qty	Description	Comments
1	3778252M2	1	Plate Clamping	Right Hand
2	3778055M1	1	Plate Clamping	
3	3712410M1	1	Pocket	Right Hand
4	390597X1	4	Washer Metric	Diameter 10MM
5	339282X1	4	Screw Metric	M10 X 16
6	3714482M1	1	Window	
7	3714481M1	1	Gasket	
8	339169X1	4	Nut	
9	3619241M1	4	Button	
10	390972X1	4	Washer Metric	
11	3713500M2	1	Stem	
12	3713616M1	2	Clip	
13	3712414M1	1	Pocket	Left Hand
14	3713501M1	1	Stem	
15	3714235M1	8	Nut	M5
16	3712412M1	1	Panel	
17	3712413M2	1	Panel	
	3715179M2	1	Panel	[E]
18	3712925M1	1	Pocket	
19	3712421M2	1	Breech Plate	
20	3712408M1	1	Panel	
21	3714666M1	1	Support	
22	3778253M2	1	Panel	
23	339024X1	2	Washer Metric	
24	3010506X1	21	Screw	M5X16
	3010578X1	2	Screw	M5X10
25	3619609M1	4	Helmet	
26	3778426M1	1	Plate Clamping	[D]
27	3714529M1	4	Nut Special	
28	3715991M1	1	Spacer	
29	339123X1	1	Hex. Sock. Screw	
30	3616277M1	1	Helmet	
31	3715142M1	11	Nut	Thickness 3/5MM
	3715143M1	3	Nut	Thickness 0,5/4MM
32	3580982M1	1	Plug	[A]
33	339169X1	2	Nut	M8
34	3778488M1	1	Grille	[J]
	3778487M1	1	Grille	[I]
35	3010506X1	7	Screw	
36	3715170M1	1	Tap	Replace and repair. Old not interchangeable with new 3715169M1
37	3778506M1	1	Plate	[H]
38	3780626M1	4	Tie	
39	3712984M1	X	Plate	[F,G]
40	3713587M1	X	Plug	[F,G] Diameter 22MM
41	3041932M1	1	Plug	Diameter 13/19MM

FOOTNOTE [A] WITHOUT ROTATING LIGHT
FOOTNOTE [B] WITHOUT DISTRIBUTOR
FOOTNOTE [C] WITH REVERSING GEAR MANUAL
FOOTNOTE [D] WITHOUT REVERSING GEAR MANUAL
FOOTNOTE [E] WITHOUT SECONDARY SEAT
FOOTNOTE [F] WITHOUT AUTOMATIC HITCH
FOOTNOTE [G] LESS PTO
FOOTNOTE [H] WITHOUT HYDRAULIC LIFT
FOOTNOTE [I] WITH 3 DISTRIBUTORS
FOOTNOTE [J] WITH 4 DISTRIBUTORS

https://truckmanualshub.com/

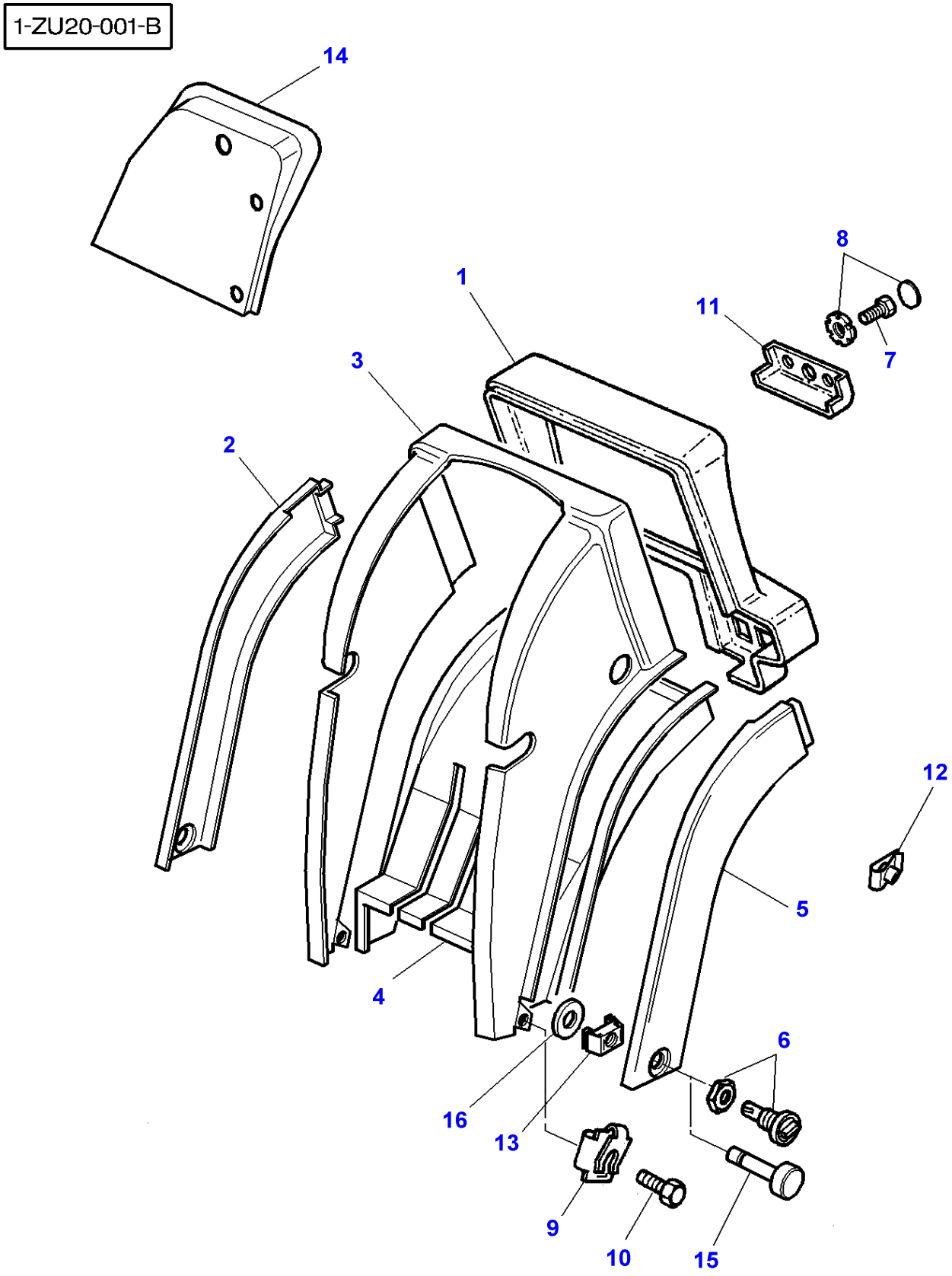

https://truckmanualshub.com/

Item	Part Number	Qty	Description	Comments
1	3777603M1	1	Plate Clamping	
2	3712420M1	1	Facing	Up to Serial or Engine Number H259015 Right Hand
	3712420M2	1	Facing	From Serial or Engine Number H259016 Left Hand
3	3777604M1	1	Envelope	
4	3712417M1	1	Envelope	
5	3712419M1	1	Facing	Up to Serial or Engine Number H259015 Left Hand
	3712419M2	1	Facing	From Serial or Engine Number H259016 Left Hand
6	3618739M1	2	Button	Up to Serial or Engine Number H259015
7	339560X1	2	Hex. Sock. Screw	M6 X 16
8	3713550M1	2	Latch	
9	3388231M1	1	Nut	M5
10	3010506X1	7	Screw	M5 X 16
	3010578X1	2	Screw	M5X10
11	3714209M1	1	Plate	
12	3715142M1	2	Nut	Thickness 3/5MM
	3715143M1	1	Nut	Thickness 0,5/4MM
13	3618738M1	2	Clamp	Up to Serial or Engine Number H259015
	3782697M1	2	Clamp	From Serial or Engine Number H259016
14	3777606M1	1	Envelope	
15	3782696M1	2	Button	From Serial or Engine Number H259016
16	3782892M1	2	Washer	From Serial or Engine Number H259016

FOOTNOTE [A] WITH MANUAL SHUTTLE SHIFT LEVERS LEFT HAND CONTROLS

https://truckmanualshub.com/

1-ZU11-002-B

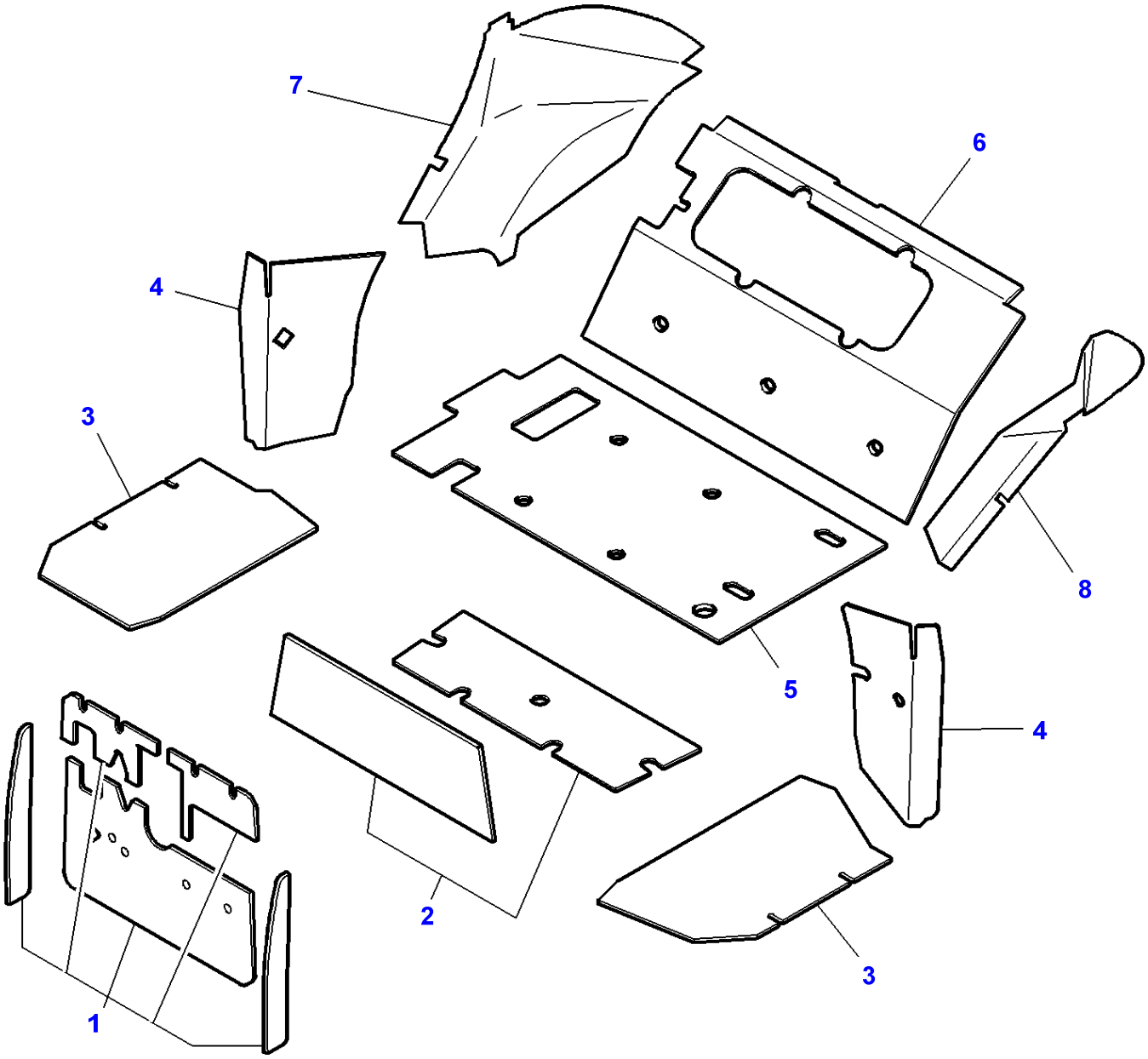

https://truckmanualshub.com/

Item	Part Number	Qty	Description	Comments
1	3714448M94	1	Sound Reduction	[B]
	3713870M93	1	Sound Reduction	[A]
2	3778445M91	1	Sound Reduction	
3	3713881M92	1	Sound Reduction	
4	3713884M93	1	Sound Reduction	
5	3713899M3	1	Sound Reduction	
6	3713898M5	1	Sound Reduction	
7	3713897M5	1	Sound Reduction	Right Hand
8	3713896M5	1	Sound Reduction	Left Hand

FOOTNOTE [A] WITH ASSISTED BRAKE
FOOTNOTE [B] WITH MECHANICAL BRAKES

https://truckmanualshub.com/

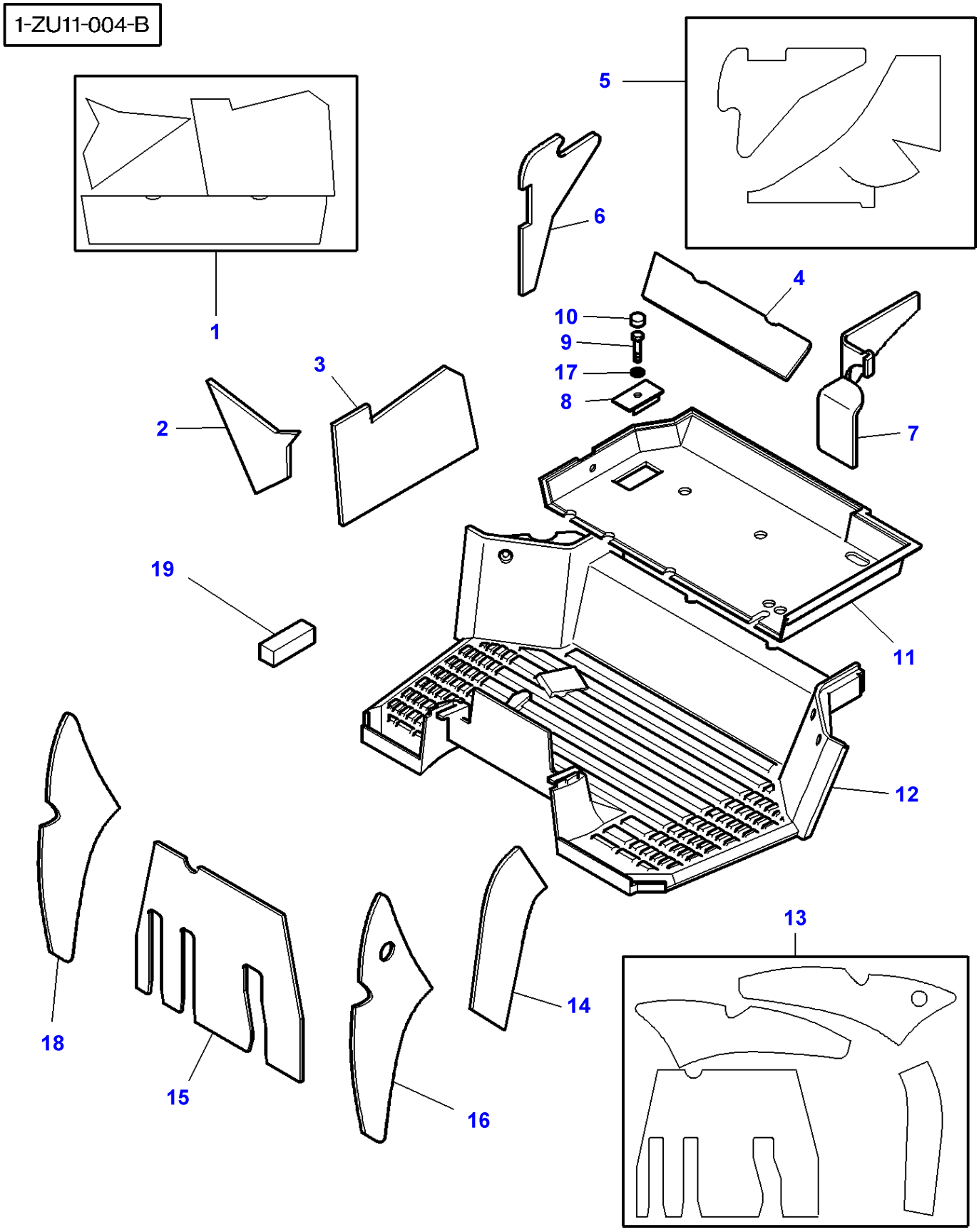

https://truckmanualshub.com/

Item	Part Number	Qty	Description	Comments
1	3778448M92	1	Sound Reduction	
2		1	Sound Reduction	(1) Not serviced, order REF.1
3		1	Sound Reduction	(1) Not serviced, order REF.1
4		1	Sound Reduction	(1) Not serviced, order REF.1
5	3778447M91	1	Sound Reduction	
6		1	Sound Reduction	(5) Not serviced, order REF.5
7		1	Sound Reduction	(5) Not serviced, order REF.5
8	3778789M1	1	Helmet	
9	339124X1	1	Hex. Sock. Screw	M8X16
10	3616277M1	1	Helmet	
11	3777378M3	1	Mat	
12	3777377M2	1	Mat	
13	3778449M93	1	Sound Reduction	
14		1	Sound Reduction	(13) Not serviced, order REF.13
15		1	Sound Reduction	(13) Not serviced, order REF.13
16		1	Sound Reduction	(13) Not serviced, order REF.13
17	390972X1	1	Washer Metric	
18		1	Sound Reduction	(13) Not serviced, order REF.13
19	3779389M1	1	Gasket	30X16X160MM

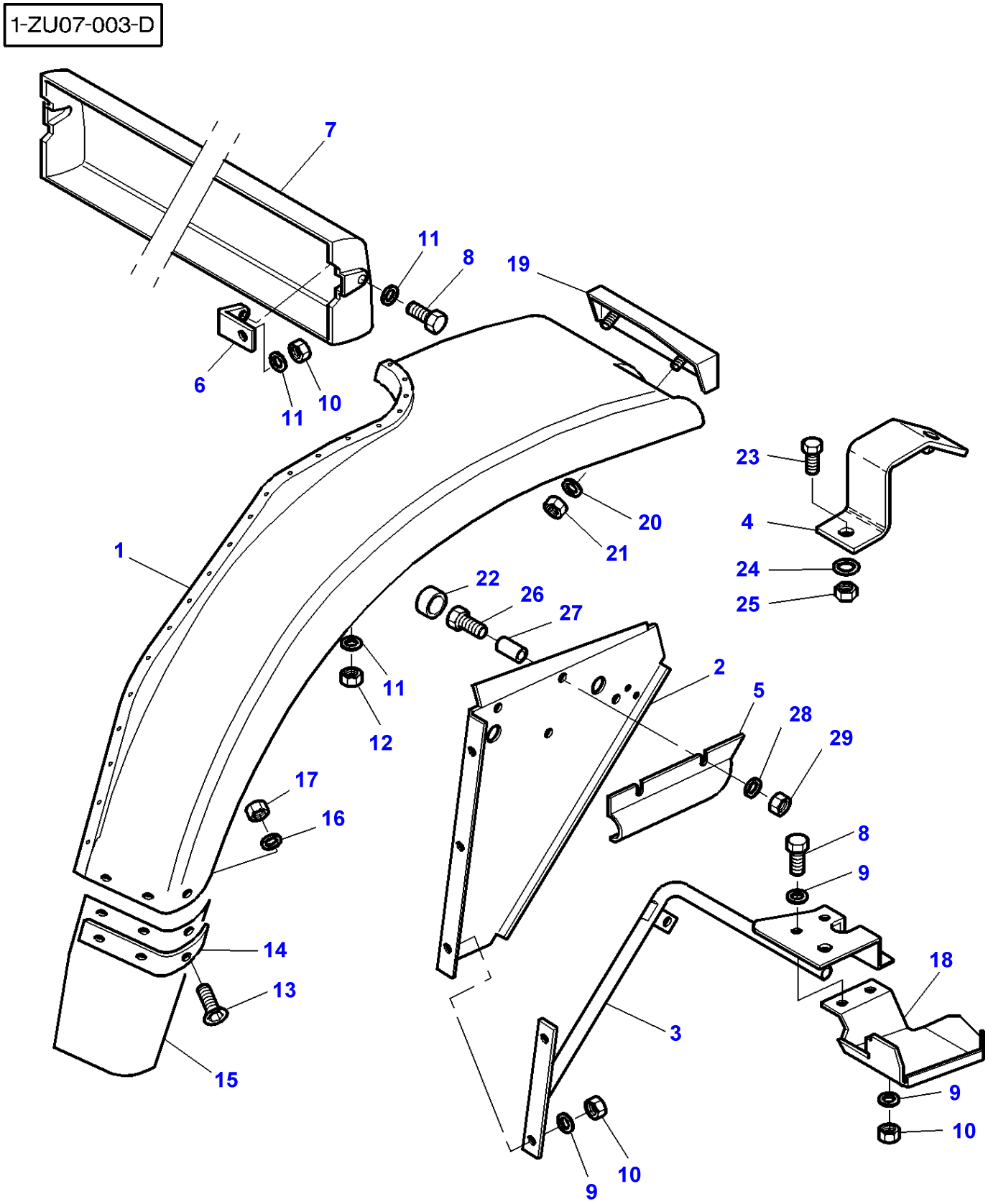
1-ZU07-003-D
7
11
8
19
6
11
10
23
20
4
21
1
24
22
26
25
27
11
2
5
12
28
29
17
16
8
9
14
18
13
3
15
9
10
10
9

https://truckmanualshub.com/

Item	Part Number	Qty	Description	Comments
1	5015465M2	1	Fender	Left Hand
	5015466M2	1	Fender	Right Hand
2	5015292M6	1	Skirt	Left Hand
	5015293M5	1	Skirt	Right Hand
3	5015287M93	1	Support	Left Hand
	5015288M93	1	Support	Right Hand
4	3783012M1	1	Support	
5	3778897M1	1	Protector	Left Hand
	3778898M1	1	Protector	Right Hand
6	5015298M93	2	Strap	
7	5015296M2	1	Panel	
8	339123X1	14	Hex. Sock. Screw	M8x20
9	385361X1	20	Washer Metric	Diameter 9 MM Diameter 17 MM Thickness 3,2 MM
10	339169X1	24	Nut	M8
11	3010467X1	18	Washer	
12	394367X1	20	Locknut	M8
13	3010909X1	6	Screw	M8X20
14	3782599M2	2	Plate	
15	3781117M2	1	Extension	Left Hand
	3781118M2	1	Extension	Right Hand
16	390972X1	6	Washer Metric	
17	394367X1	6	Locknut	M8
18	3781881M1	1	Cowl	Left Hand
	3781882M1	1	Cowl	Right Hand
19	3781889M1	1	Support	Left Hand
	3781890M1	1	Support	Right Hand
20	390469X1	4	Washer Metric	
21	1441494X1	4	Nut Metric	
22	3616277M1	2	Helmet	
23	339123X1	1	Hex. Sock. Screw	M8x20
24	390972X1	1	Washer Metric	Diameter 8-17X1,7
25	339169X1	1	Nut	M8
26	339291X1	2	Hex. Sock. Screw	M8X55
27	3781233M1	1	Roll	
28	390972X1	2	Washer Metric	
29	394367X1	2	Locknut	M8

1-ZU07-004-B

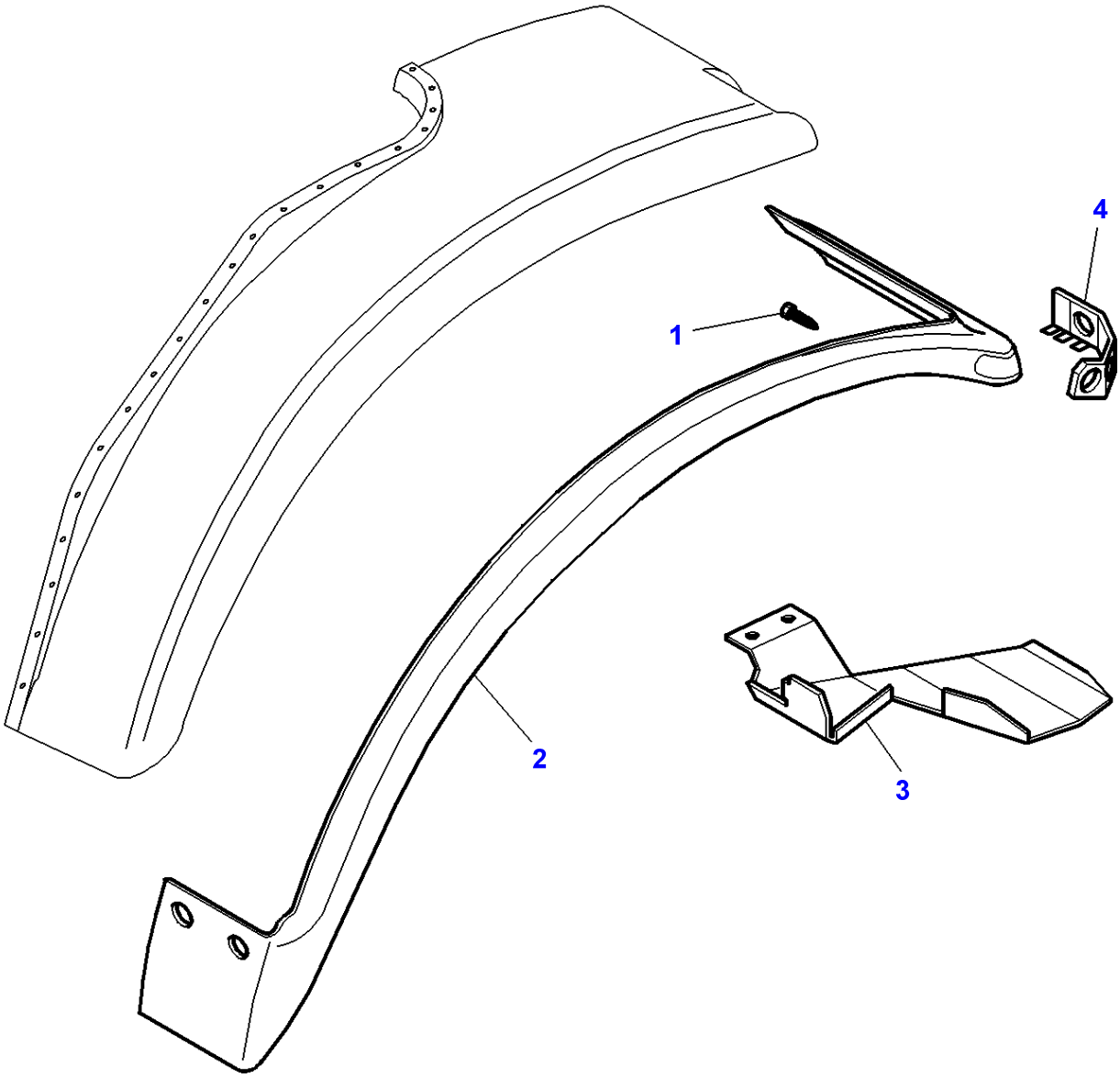

https://truckmanualshub.com/

Item	Part Number	Qty	Description	Comments
1	3782092M1	X	Screw	
2	3781447M2	1	Extension	Left Hand Width 115MM
	3781446M2	1	Extension	Right Hand Width 115MM
	3781449M2	1	Extension	Left Hand Width 205MM
	3781448M2	1	Extension	Right Hand Width 205MM
3	3781883M4	1	Cowl	[A] Left Hand
	3781884M4	1	Cowl	[A] Right Hand
	3781885M4	1	Cowl	[B] Left Hand
	3781886M4	1	Cowl	[B] Right Hand
4	3781891M2	1	Support	Left Hand
	3781892M2	1	Support	Right Hand

FOOTNOTE [A] USED WITH 115MM EXTENSION FENDERS
FOOTNOTE [B] USED WITH 205MM EXTENSION FENDERS

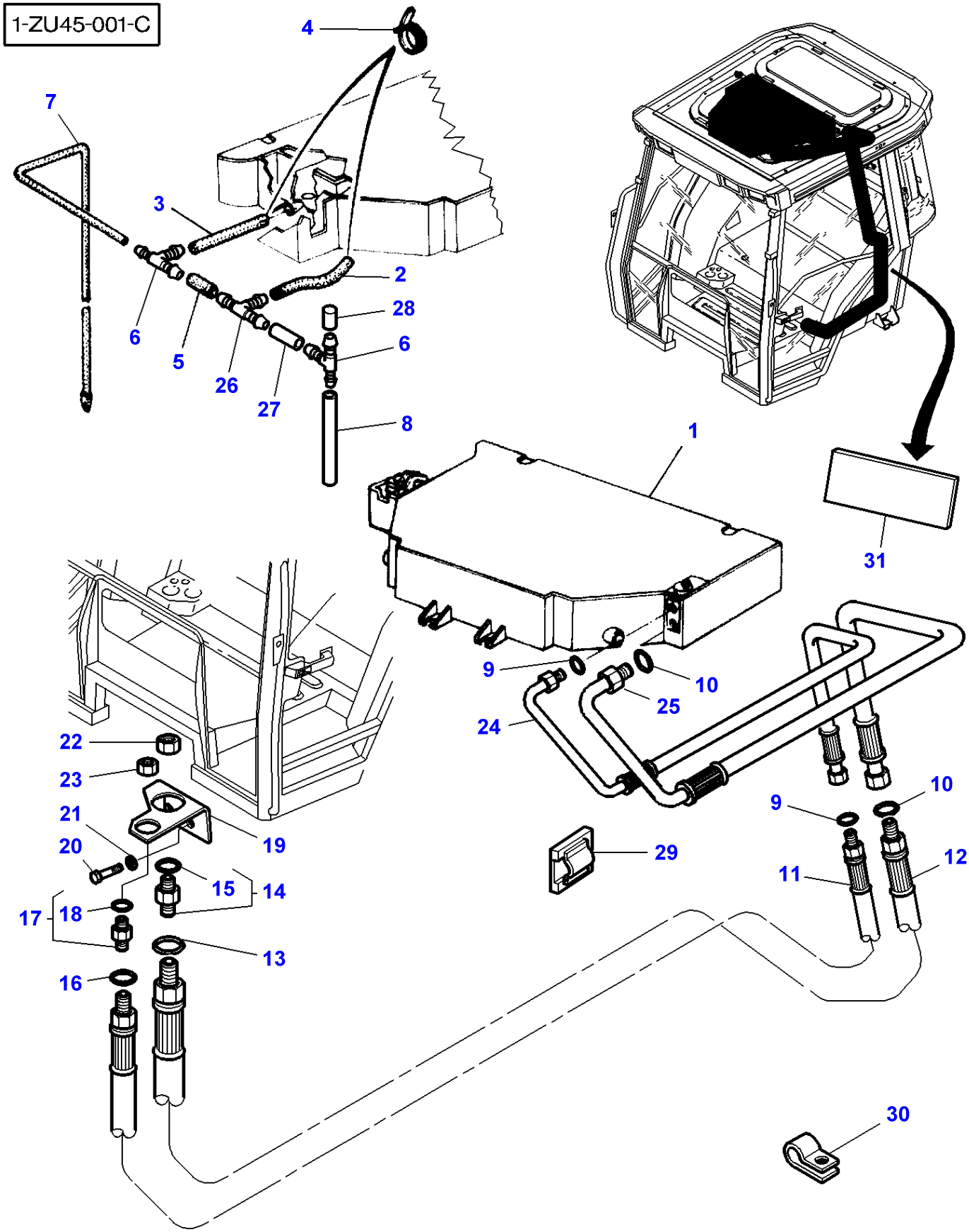
1-ZU45-001-C
4
7
3
2
28
6
6
5
26
27
8
1
31
9
10
25
24
22
23
21
20
19
15
14
17
18
13
16
29
9
10
11
12
30

https://truckmanualshub.com/

Item	Part Number	Qty	Description	Comments
1	3713375M2	1	Air Conditioner	
2	3777614M1	2	Tube	Diameter 15,9-23MM Length 150MM
3	3777616M1	2	Hose	Diameter 15,9-23MM Length 195MM
4	3000483X1	4	Clamp	Diameter 12-22MM
5	3777613M1	2	Hose	Diameter 15,9-23MM Length 60MM
6	3388779M1	2	Union	Diameter 16-16-08MM
7	3713470M1	2	Hose	Diameter 08-12 Length 165MM
8	3777744M1	2	Tube	Diameter 8MM Length 1500MM
9	3010473X1	2	O Ring	
10	3010471X1	2	O Ring	
11	3714143M1	1	Hydr Hose	
12	3714246M1	1	Hydr Hose	
13	3010502X1	1	O Ring	
14	368544X1	1	Union	
15	3600218M1	1	Joint	(14)
16	3010474X1	1	O Ring	
17	368523X1	1	Union	
18	3600219M1	1	Joint	(17)
19	3713615M1	1	Support	
20	339124X1	2	Hex. Sock. Screw	M8X16
21	390972X1	2	Washer Metric	
22	1691973M1	1	Nut	
23	1691972M1	1	Nut	
24	3713462M1	1	Hydr Hose	
25	3714144M1	1	Hydr Hose	
26	3010683X1	2	Teepiece	Diameter 16-16-16MM
27	3777741M1	2	Hose	Diameter 16MM Length 490MM
28	3777737M1	2	Plug	
29	3582094M1	1	Tie	
30	3581507M1	1	Clamp	
31	3784596M1	1	Gasket	55x165x19 For United States of America For South Africa For Australia

https://truckmanualshub.com/

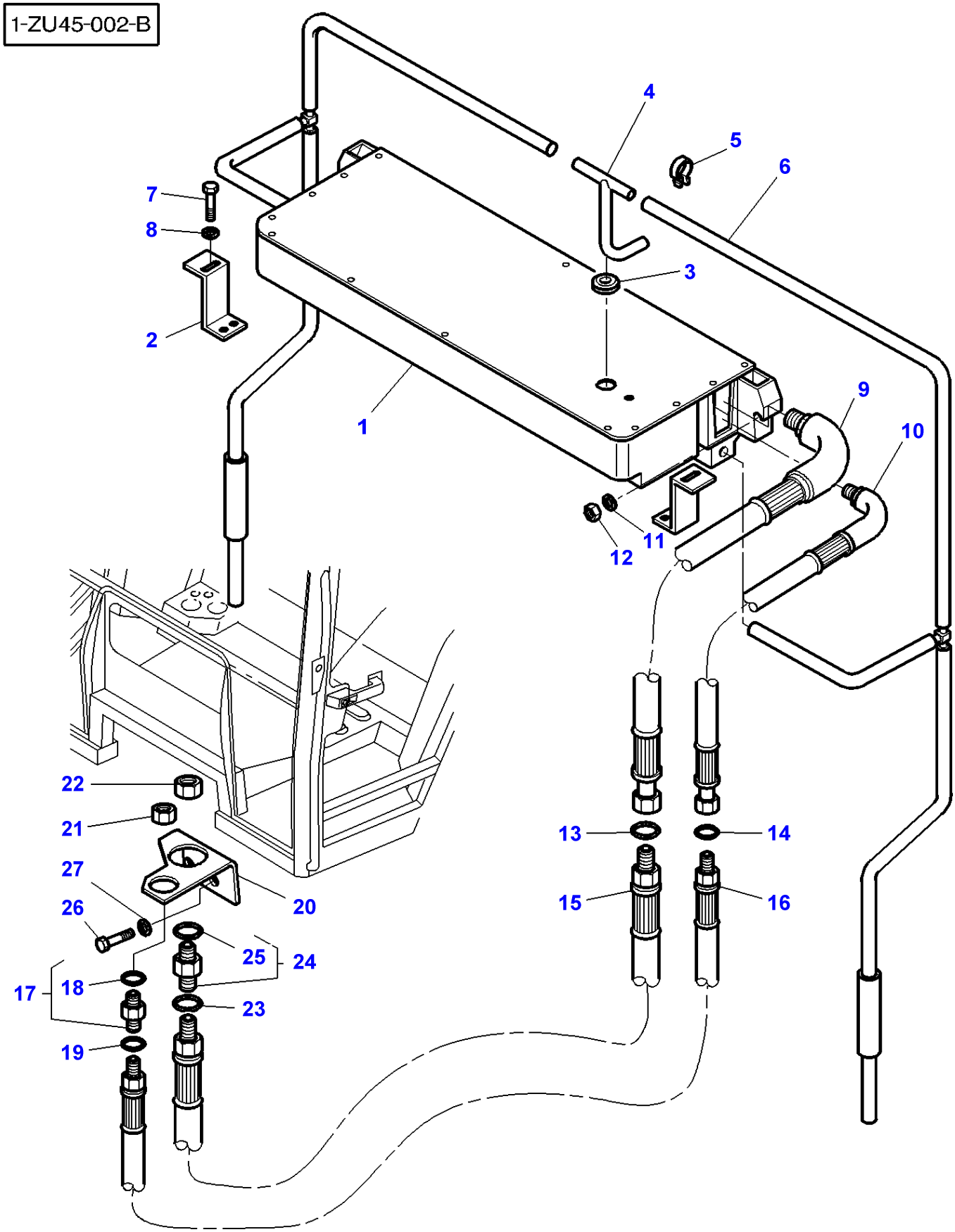

https://truckmanualshub.com/

Item	Part Number	Qty	Description	Comments
1	3778116M4	1	Air Conditioner	See Page - Reference Number 110-0150/1
2	3778321M1	2	Strap	
3	3714694M1	1	Grommet	
4	3779905M1	1	Teepiece	
5	3779906M1	1	Clamp	
6	3779892M91	1	Tube	Left Hand
	3779893M91	1	Tube	Right Hand
7	339124X1	2	Hex. Sock. Screw	
8	391039X1	2	Washer Metric	
9	3777707M1	1	Hydr Hose	
10	3777708M1	1	Hydr Hose	
11	391039X1	2	Washer Metric	
12	390345X1	2	Nut Metric	
13	3010471X1	1	O Ring	
14	3010473X1	1	O Ring	
15	3714246M1	1	Hydr Hose	
16	3714143M1	1	Hydr Hose	
17	368523X1	1	Union	
18	3600219M1	1	Joint	(17)
19	3010474X1	1	O Ring	
20	3713615M1	1	Support	
21	1691972M1	1	Nut	
22	1691973M1	1	Nut	
23	3010502X1	1	O Ring	
24	368544X1	1	Union	
25	3600218M1	1	Joint	(24)
26	339124X1	2	Hex. Sock. Screw	M8X16
27	339374X1	2	Lock Washer	

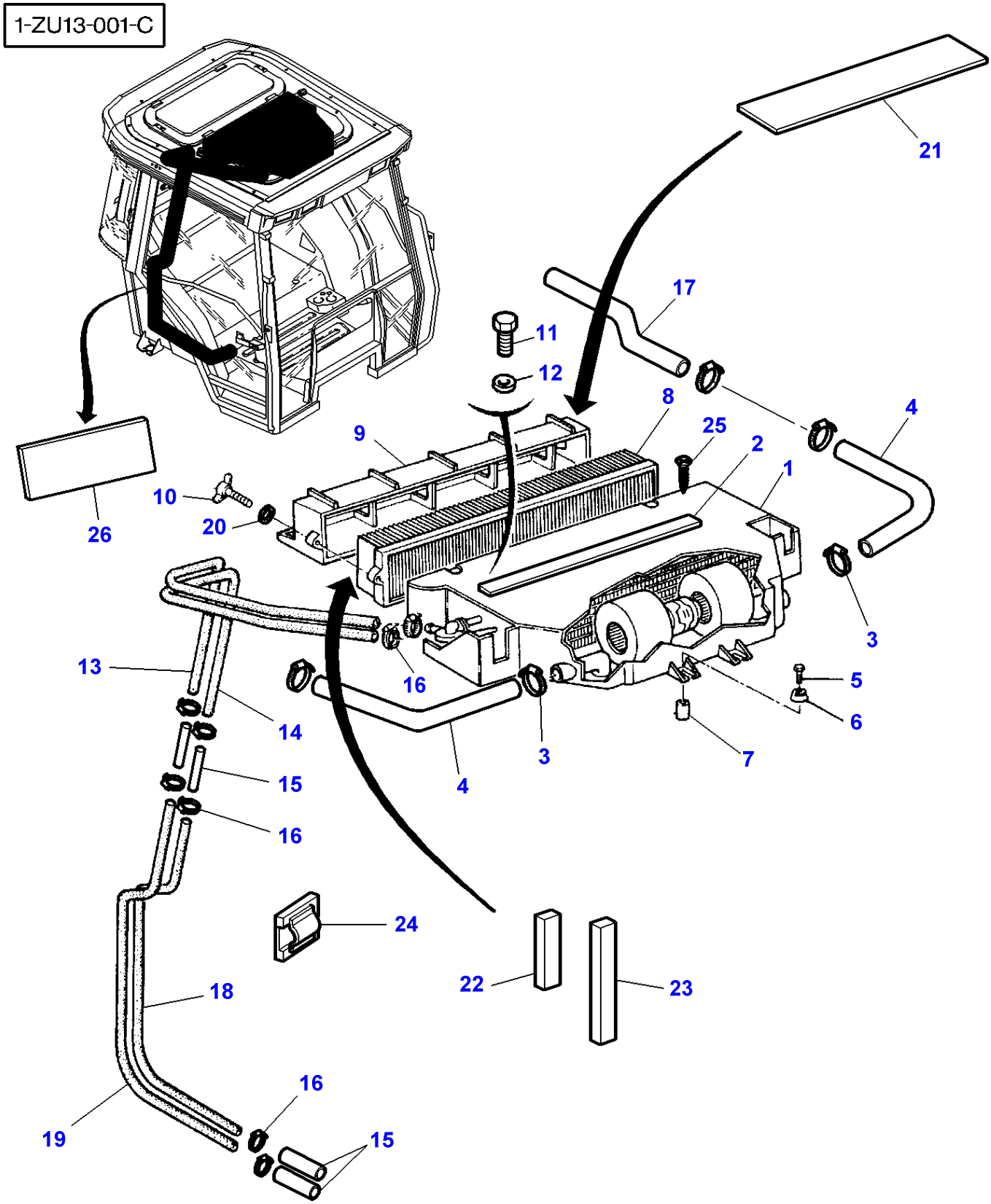
1-ZU13-001-C
21
17
11
12
8
4
25
2
1
9
10
20
26
3
13
16
5
6
14
3
7
15
4
16
24
22
23
18
16
19
15

https://truckmanualshub.com/

Item	Part Number	Qty	Description	Comments
1	3713375M2	1	Air Conditioner	[A]
	3713374M1	1	Boot	[B]
2	3713745M1	1	Gasket	15X05X1950
3	338616X1	8	Hose Clip	Diameter 32X50
4	3387515M1	2	Hose	
5	339009X1	4	Hex. Sock. Screw	M8X35
6	3387512M1	8	Buffer	
7	3387513M1	4	Spacer	
8	**3388840M2**	1	Cab Filter	
	3389746M1	1	Cab Filter	[C]
9	3388743M1	1	Frame Assy	
10	3388758M2	2	Wingbolt	M6X60
				Up to Serial or Engine Number 14/05/2000
	3783455M1	2	Screw	M6X60
				From Serial or Engine Number 15/05/2000
11	339160X1	1	Screw	M5X10
12	390469X1	1	Washer Metric	
13	3714872M1	1	Hose	Length 1000MM
14	3714871M1	1	Hose	Length 900MM
15	3713469M1	4	Tube	
16	3019564X1	8	Hose Clip	Diameter 16-27
17	3713461M1	2	Hose	
18	3779739M1	1	Hose	Length 1670MM
19	3714873M1	1	Hose	Length 2350MM
20	391038X1	2	Washer	Up to Serial or Engine Number 14/05/2000
21	3778497M2	1	Foam	915X150X12MM
22	3778658M1	1	Gasket	38X13X60MM
23	3778659M1	1	Gasket	38X13X80MM
24	3582094M1	1	Tie	
25	380026X1	9	Screw	16X3,5
26	3784596M1	4	Gasket	For United States of America
				For Australia
				For South Africa
				165X55X19MM

FOOTNOTE [A] WITH CONDITIONED AIR
FOOTNOTE [B] WITHOUT CONDITIONED AIR
FOOTNOTE [C] CARBON FILTER

https://truckmanualshub.com/

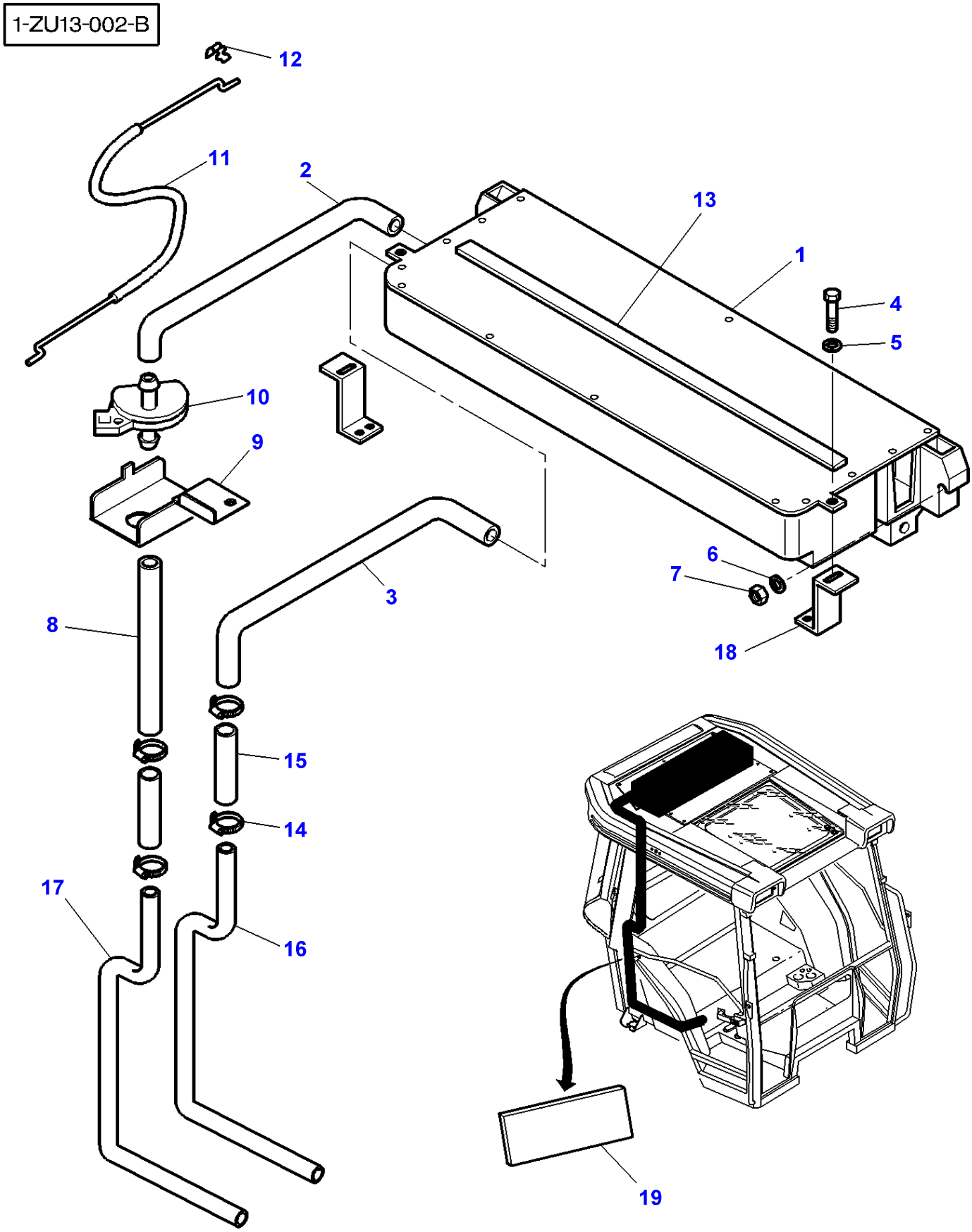

https://truckmanualshub.com/

Item	Part Number	Qty	Description	Comments
1	3778116M4	1	Air Conditioner	[A] See Page - Reference Number 110-0150/1
2	3777712M1	1	Hose	
3	3777711M1	1	Hose	
4	339124X1	2	Hex. Sock. Screw	M8X16
5	391039X1	2	Washer Metric	
6	391039X1	2	Washer Metric	
7	390345X1	2	Nut Metric	
8	3778361M1	1	Water Hose	Length 500MM
9	3778366M2	1	Support	
10	1694047M1	1	Cock	
11	3902700M1	1	Cable	
12	1696477M1	1	Clip	
13	3713745M1	1	Gasket	15X05X1950
14	3000483X1	4	Clamp	
15	3713469M1	2	Tube	
16	3779739M1	1	Hose	Length 1670MM
17	3714873M1	1	Hose	Length 2350MM
18	3778321M1	2	Strap	
19	3784596M1	4	Gasket	For United States of America For Australia For South Africa 165X55X19MM

FOOTNOTE [A] WITH CONDITIONED AIR
FOOTNOTE [B] WITHOUT CONDITIONED AIR

1-ZU12-002-A

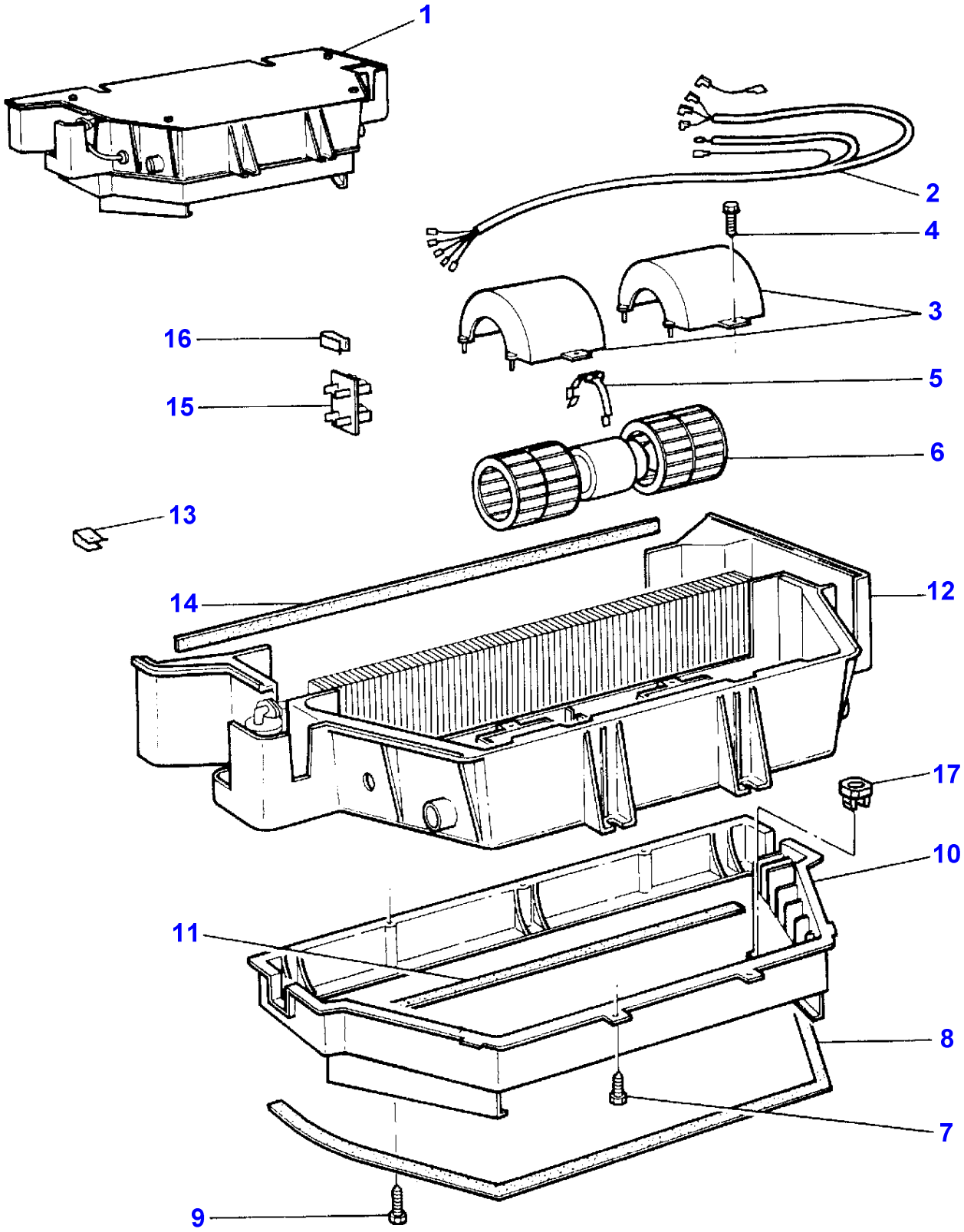

https://truckmanualshub.com/

Item	Part Number	Qty	Description	Comments
1	3713374M1	1	Boot	
2	3310850M1	1	Harness	(1)
3	3310833M1	2	Cover	(1)
4	3310837M1	4	Screw	(1)
5	3902320M1	1	Strap	(1)
6	3310831M91	1	Motor	(1)
7	3310837M1	6	Screw	(1)
8	3902322M1	1	Foam	(1)
9	3310841M1	3	Screw	(1)
10	3310840M1	1	Housing	(1)
11	3310843M1	1	Foam	(1)
12	3310848M1	1	Housing	(1)
13	3310842M1	9	Strap	(1)
14	3310849M1	1	Foam	(1)
15	3304510M92	1	Resistor	(1)
16	3310834M1	1	Strap	(1)
17	3583649M1	1	Nut Special	

https://truckmanualshub.com/

1-ZU12-003-A

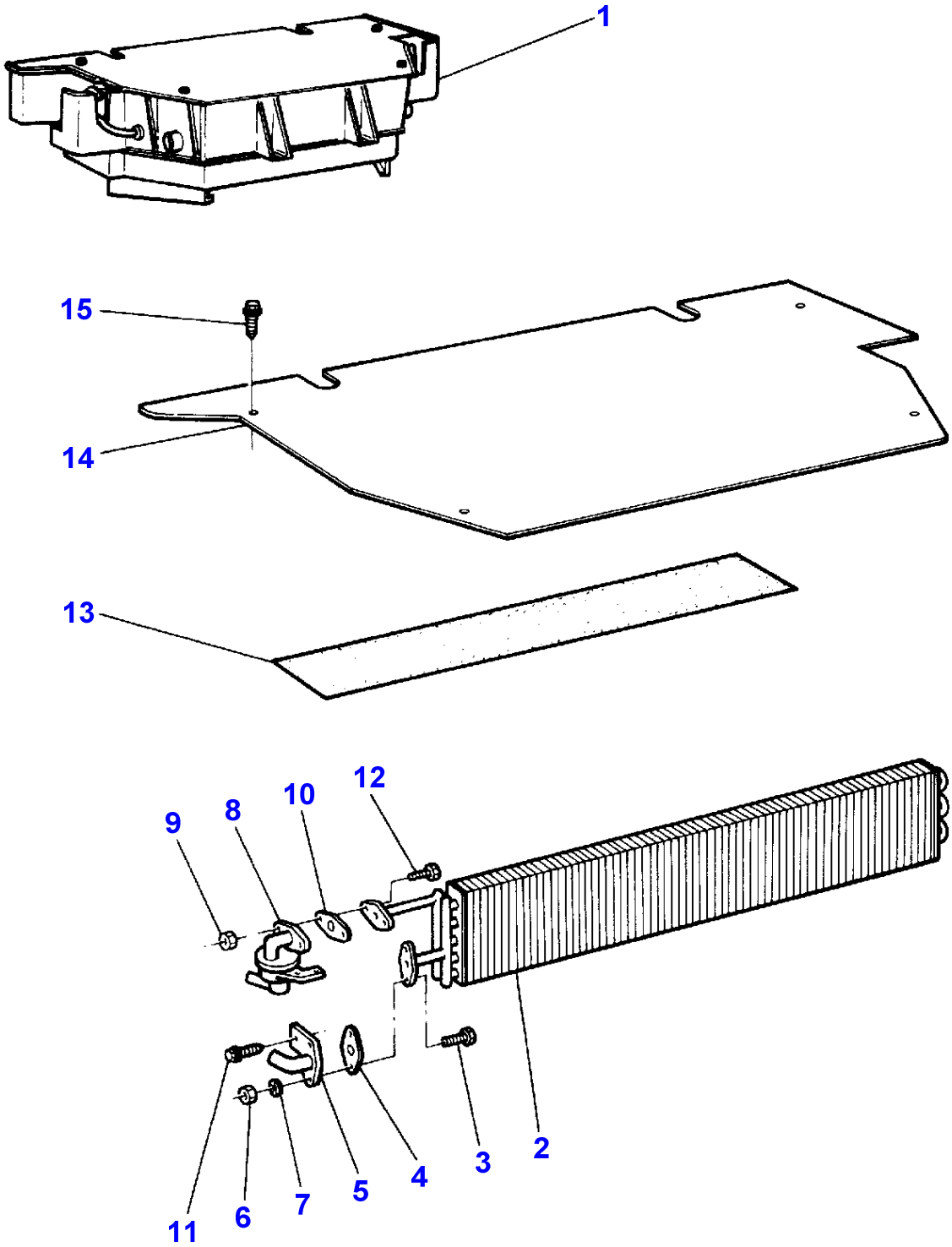

https://truckmanualshub.com/

Item	Part Number	Qty	Description	Comments
1	3713374M1	1	Boot	
2	3310827M92	1	Radiator	(1)
3	3902089M1	2	Screw	(1)
4	3902327M1	1	Gasket	(1)
5	3310946M1	1	Elbow	(1)
6	3902090M1	2	Nut	(1)
7	3902090M1	2	Nut	(1)
8	3310945M1	1	Cock	(1)
9	3902090M1	2	Nut	(1)
10	3902327M1	1	Gasket	(1)
11	3902089M1	1	Screw	(1)
12	3902089M1	2	Screw	(1)
13	3902332M1	1	Foam	(1)
14	3310839M1	1	Plate	(1)
15	3310837M1	5	Screw	(1)

https://truckmanualshub.com/

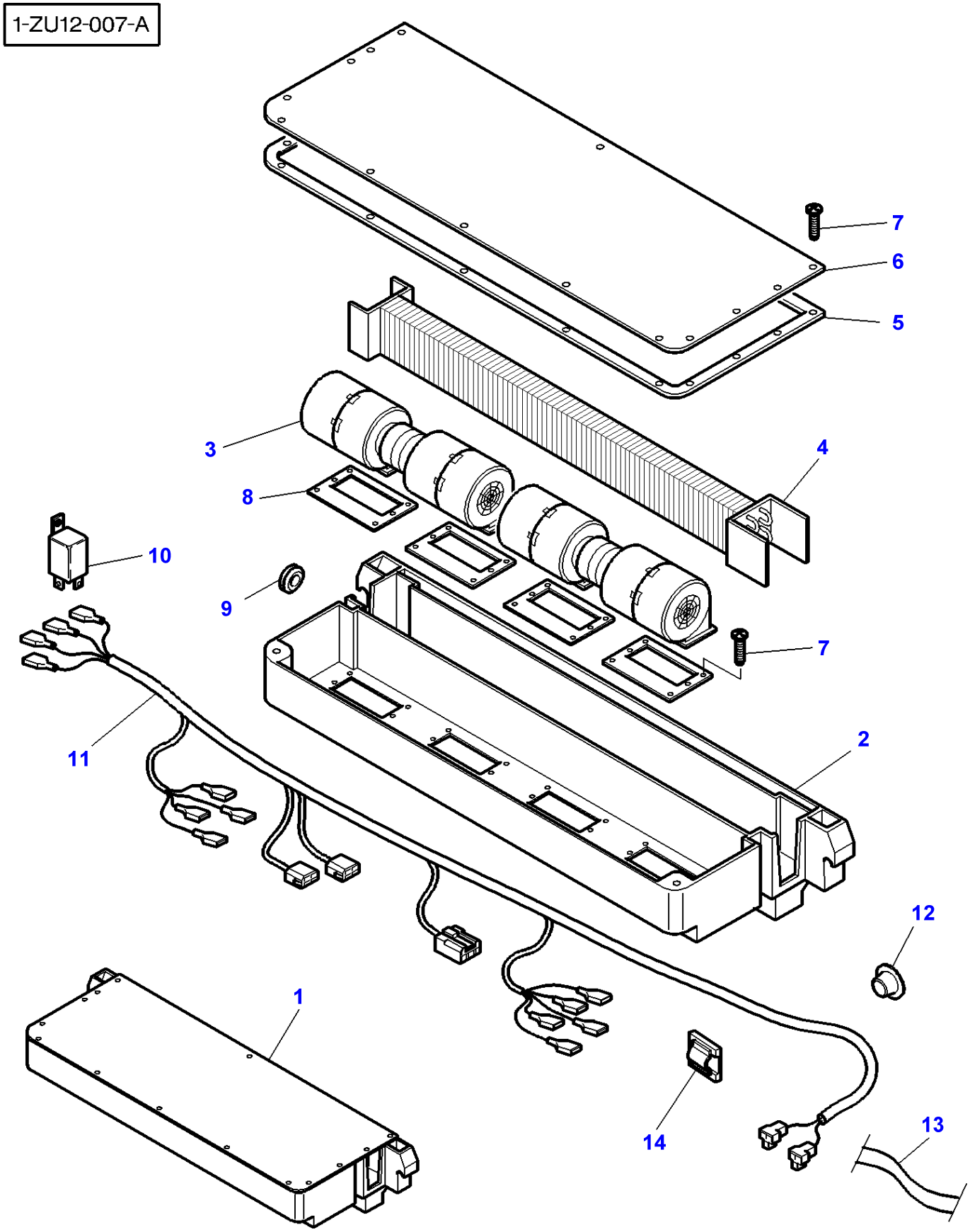

https://truckmanualshub.com/

Item	Part Number	Qty	Description	Comments
1	3778115M2	1	Heater	
2	3901499M1	1	Housing	(1)
3	3901501M91	2	Blower	(1)
4	3901502M1	1	Radiator	(1)
5	3901506M1	1	Seal	(1)
6	3901500M1	1	Plate	(1)
7	3902719M1	26	Screw	(1)
8	3901505M1	4	Seal	(1)
9	3901503M1	1	Grommet	(1)
10	3611893M1	1	Relay	(1)
11	3902720M91	1	Harness	(1)
12	3901512M1	2	Cap	(1)
13	3901504M1	1	Tape	(1)
				Length 0.10M
14	3582094M1	4	Tie	

https://truckmanualshub.com/

1-ZU44-001-A

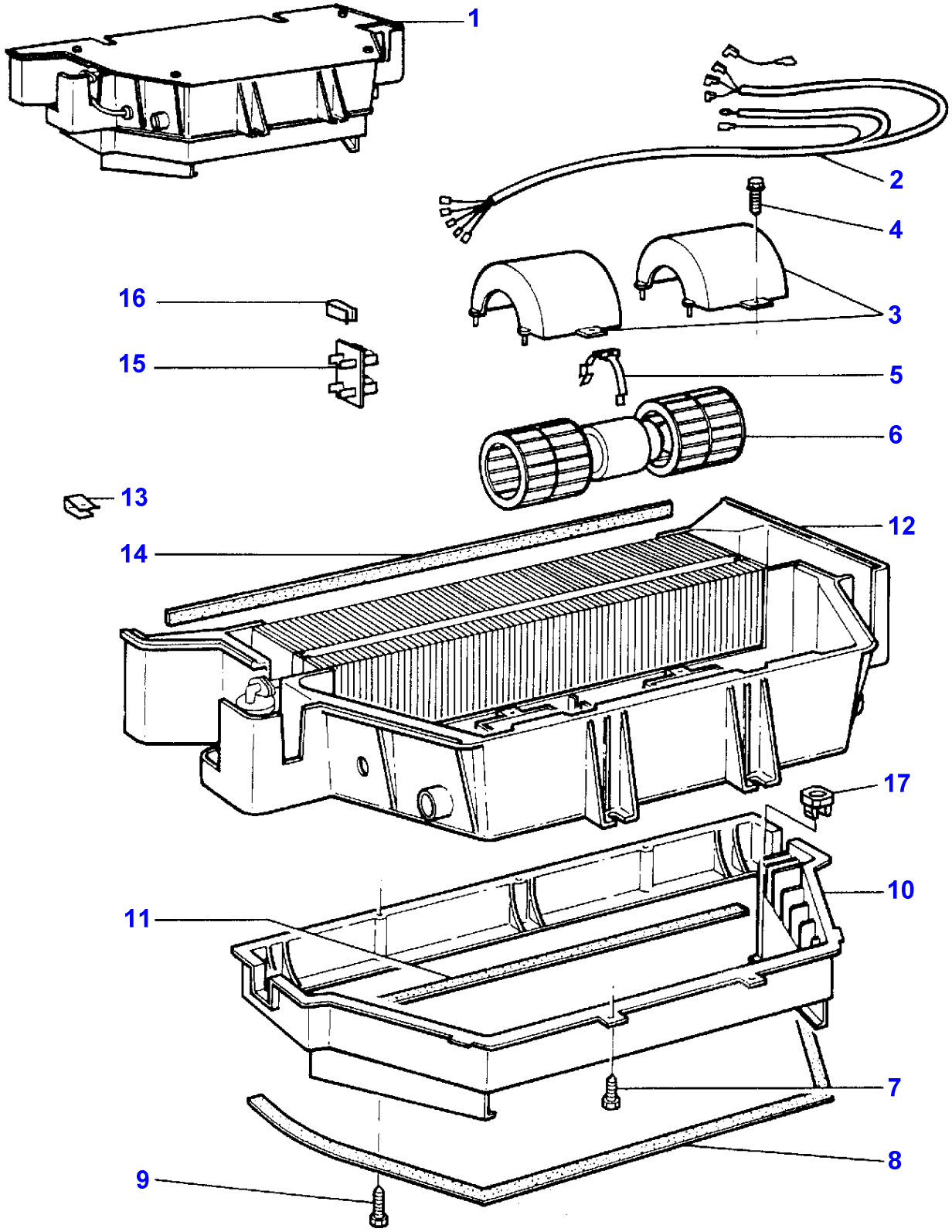

https://truckmanualshub.com/

Item	Part Number	Qty	Description	Comments
1	3713375M2	1	Air Conditioner	
2	3902318M91	1	Harness	(1)
3	3310833M1	2	Cover	(1)
4	3310837M1	4	Screw	(1)
5	3902320M1	1	Strap	(1)
6	3310831M91	1	Motor	(1)
7	3310837M1	6	Screw	(1)
8	3902322M1	1	Foam	(1)
9	3310841M1	3	Screw	(1)
10	3310840M1	1	Housing	(1)
11	3310843M1	1	Foam	(1)
12	3310825M1	1	Housing	(1)
13	3310842M1	9	Strap	(1)
14	3310849M1	1	Foam	(1)
15	3304510M92	1	Resistor	(1)
16	3310834M1	1	Strap	(1)
17	3583649M1	1	Nut Special	(1)

https://truckmanualshub.com/

1-ZU44-002-A

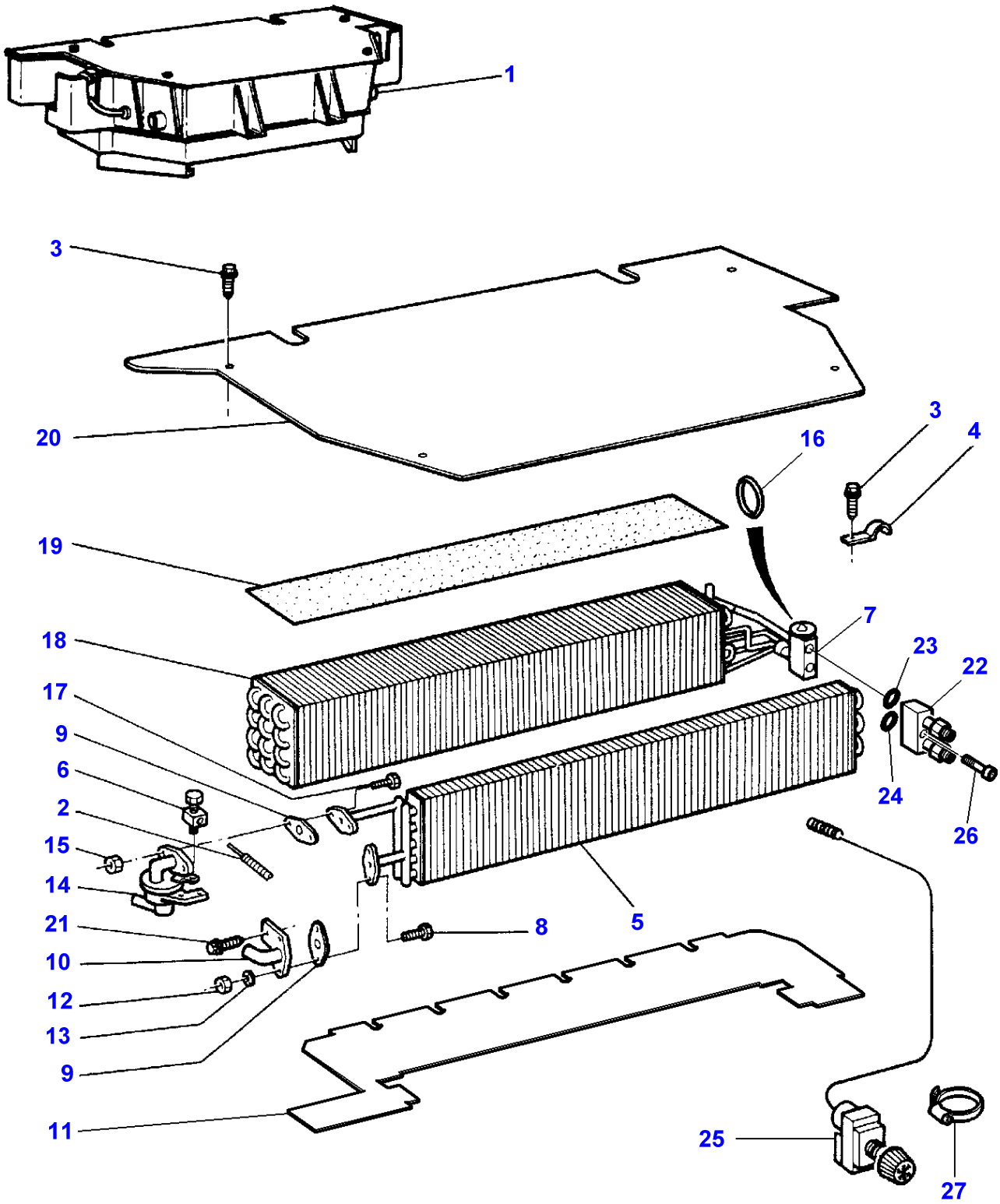

https://truckmanualshub.com/

Item	Part Number	Qty	Description	Comments
1	3713375M2	1	Air Conditioner	
2	3902212M1	1	Cable	
3	3310837M1	6	Screw	(1)
4	3310836M1	1	Strap	(1)
5	3310827M92	1	Radiator	(1)
6	3311579M91	1	Union	(1)
7	3902334M91	1	Regulator	(1)
8	3902089M1	2	Screw	(1)
9	3902327M1	2	Gasket	(1)
10	3310946M1	1	Elbow	(1)
11	3902329M2	1	Plate	(1)
12	3902090M1	2	Nut	(1)
13	3902090M1	2	Nut	(1)
14	3310945M1	1	Cock	(1)
15	3902090M1	2	Nut	(1)
16	3902499M1	1	Gasket	(1)
				Diameter 6,7MM
	3902500M1	3	Gasket	(1)
				Diameter 13,4MM
17	3902089M1	2	Screw	(1)
18	3902331M91	1	Evaporator	(1)
19	3902332M1	1	Foam	(1)
20	3310839M1	1	Plate	(1)
21	3902089M1	2	Screw	(1)
22	3902549M91	1	Connection	(1)
23	3902550M1	1	O Ring	(1)
				Diameter 6,7X1,8MM
24	3902551M1	1	O Ring	(1)
				Diameter 13,4X2,4MM
25	3310669M91	1	Thermostat	(1)
26	3015257X1	2	Screw Metric	(1)
				M6X55
27	3000483X1	2	Clamp	

https://truckmanualshub.com/

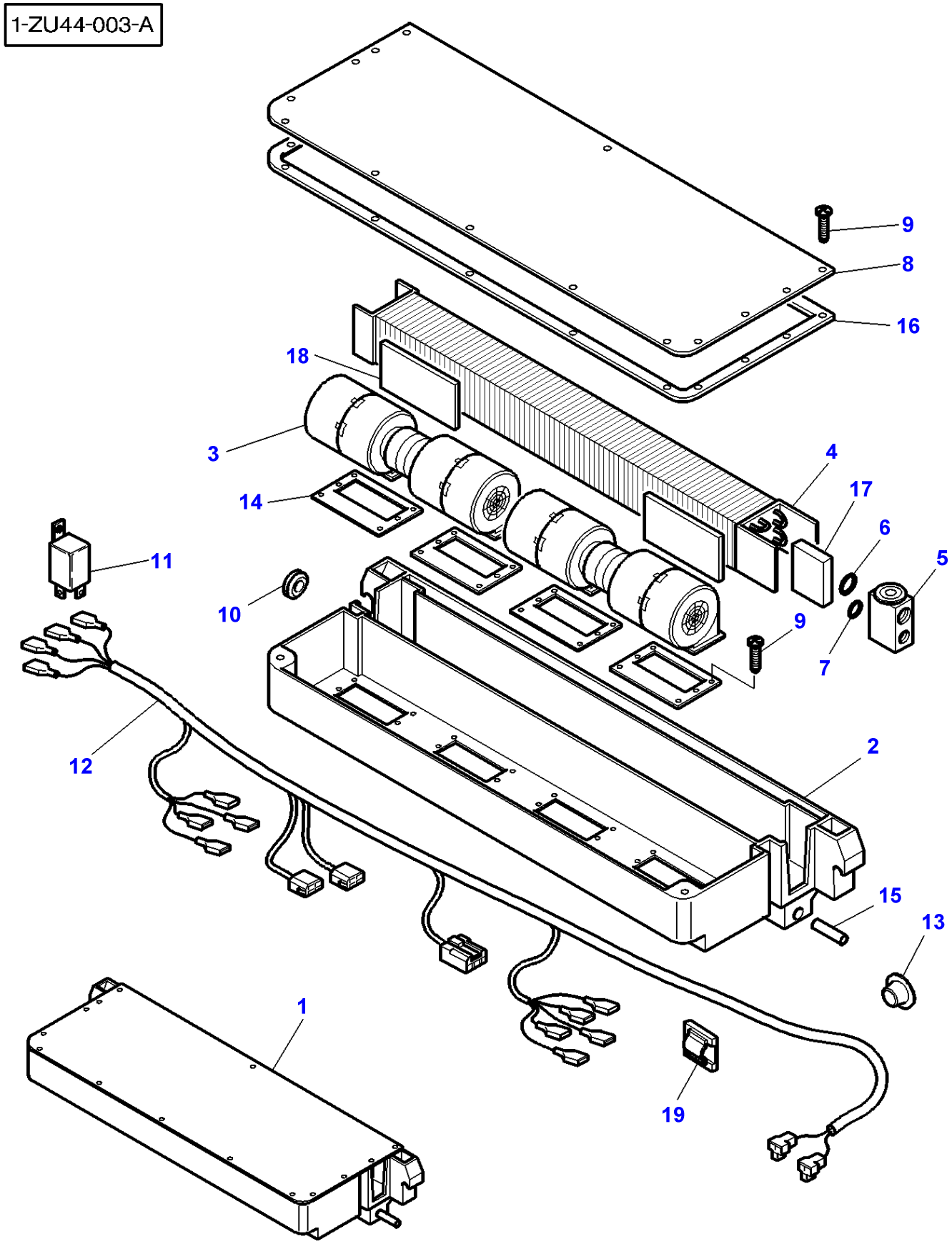

https://truckmanualshub.com/

Item	Part Number	Qty	Description	Comments
1	3778116M4	1	Air Conditioner	
2	3901499M1	1	Housing	(1)
3	3901501M91	2	Blower	(1)
4	3901516M1	1	Evaporator	(1)
5	3901517M1	1	Pressure Valve	(1)
6	3901518M1	1	O Ring	(1)
7	3901519M1	1	O Ring	(1)
8	3901500M1	1	Plate	(1)
9	3902719M1	26	Screw	(1)
10	3901503M1	1	Grommet	(1)
11	3611893M1	1	Relay	(1)
12	3902720M91	1	Harness	(1)
13	3901512M1	2	Cap	(1)
14	3901505M1	4	Seal	(1)
15	3901515M2	2	Tube	(1)
16	3901513M1	1	Seal	(1)
17	3901822M1	1	Seal	(1)
18	3901823M1	2	Pad	(1)
19	3582094M1	4	Tie	

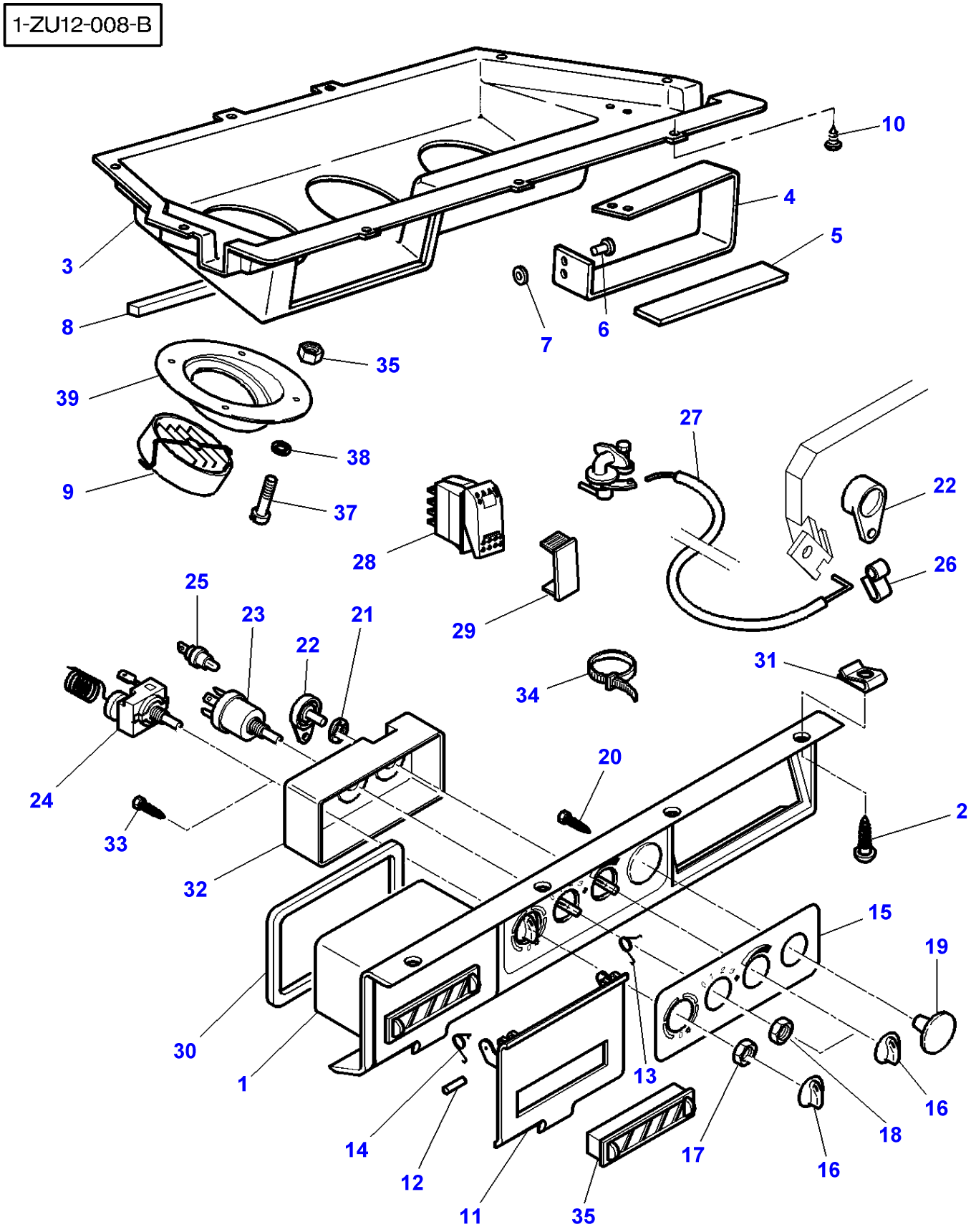
1-ZU12-008-B
10
4
5
3
8
7
6
35
39
27
38
9
37
22
28
26
25
23
21
29
22
31
34
24
20
2
33
32
15
19
30
1
13
16
18
14
17
16
12
11
35

https://truckmanualshub.com/

Item	Part Number	Qty	Description	Comments
1	3712609M3	1	Control Panel	[A]
	3713532M3	1	Control Panel	[B]
2	3389854M1	6	Self Tap Screws	N 10X19
	3010506X1	8	Screw	M5X16
3	3714076M2	1	Boot	
4	3714077M1	1	Support	
5	3713635M1	1	Gasket	
6	3714846M1	4	Rivet	
7	339102X1	4	Washer	
8	3713744M1	1	Gasket	10X15X1080MM
9	3388030M1	3	Louvre	
10	380026X1	9	Screw	Diameter 3.5X16
11	3902214M1	1	Gate	[A]
				(1)
				Up to Serial or Engine Number J032033
	3902214M1	1	Gate	[B]
				(1)
				Up to Serial or Engine Number J040028
	3902214M2	1	Gate	[A]
				(1)
				From Serial or Engine Number J032034
	3902214M2	1	Gate	[B]
				(1)
				From Serial or Engine Number J040029
12	3902204M1	2	Clevis Pin	(1)
13	3902203M1	1	Spring	(1)
14	3902202M1	1	Spring	(1)
15	3902215M1	1	Diffusing Lens	[B]
				(1)
	3902299M1	1	Diffusing Lens	[A]
				(1)
16	3902213M1	3	Knob	(1)
17	3902217M1	1	Nut	(1)
18	3902208M1	1	Nut	(1)
19	3902205M1	1	Plug	[A]
				(1)
	3902205M1	2	Plug	[B]
				(1)
20	3902218M1	1	Screw	[A]
				(1)
				M5X14
	3902218M1	2	Screw	[B]
				(1)
				M5X14
21	3902210M1	1	Washer	(1)
22	3902211M1	1	Lever	(1)
23	3310871M1	1	Commutator	(1)
24	3310669M91	1	Thermostat	(1)
25	1427873M1	1	Holder	(1)
26	3902206M1	1	Spring	(1)
27	3902212M1	1	Cable	(1)
28	**3713146M1**	1	Switch,Indirect	
29	3713151M1	1	Tap	
30	3713746M1	1	Gasket	15X10X480MM
31	3389351M1	6	Nut	No 10
	3389250M1	3	Nut	M5
32	3902591M2	1	Cover	(1)
33	365916X1	4	Self Tap Screws	(1)
34	3000483X1	2	Clamp	
35	3010477X1	8	Nut Metric	For United States of America
				For Australia
				For South Africa
36	3783537M1	1	Diffuser	[A]
				(1)
				From Serial or Engine Number J032034
	3783537M1	1	Diffuser	[B]
				(1)
				From Serial or Engine Number J040029
37	3010506X1	8	Screw	For United States of America
				For Australia
				For South Africa
				M5X16

https://truckmanualshub.com/

Item	Part Number	Qty	Description	Comments
38	3019560X1	8	Washer	For United States of America For Australia For South Africa
39	3784566M1	2	Support	For United States of America For Australia For South Africa

FOOTNOTE [A] WITH CONDITIONED AIR
FOOTNOTE [B] WITHOUT CONDITIONED AIR

https://truckmanualshub.com/

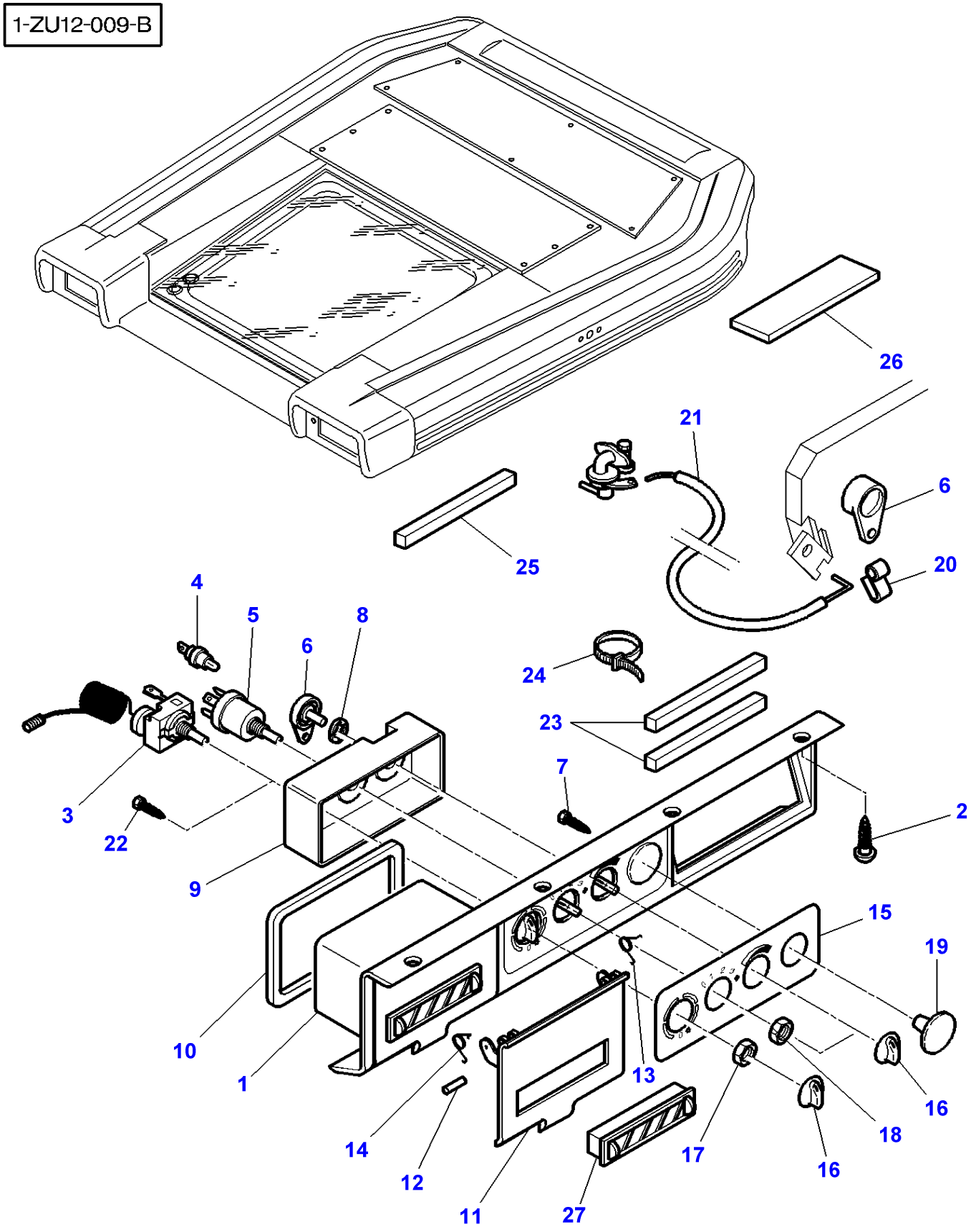

https://truckmanualshub.com/

Item	Part Number	Qty	Description	Comments
1	3778013M3	1	Control Panel	[A]
	3778073M3	1	Control Panel	[B]
2	3010506X1	8	Screw	M5X16
	365925X1		Self Tap Screws	(1)
				No 10X13
3	3902701M91	1	Thermostat	[A]
				(1)
4	1427873M1	2	Holder	(1)
5	3310871M1	1	Commutator	(1)
6	3902211M1	1	Lever	(1)
7	3902218M1	1	Screw	[A]
				(1)
				M5X14
	3902218M1	2	Screw	[B]
				(1)
				M5X14
8	3902210M1	1	Washer	(1)
9	3902591M2	1	Cover	(1)
10	3713746M1	1	Gasket	15X10X480MM
11	3902214M1	1	Gate	[A]
				(1)
				Up to Serial or Engine Number J041011
	3902214M1	1	Gate	[B]
				(1)
				Up to Serial or Engine Number J081004
	3902214M2	1	Gate	[A]
				(1)
				From Serial or Engine Number J041012
	3902214M2	1	Gate	[B]
				(1)
				From Serial or Engine Number J081005
12	3902204M1	2	Clevis Pin	(1)
13	3902203M1	1	Spring	(1)
14	3902202M1	1	Spring	(1)
15	3902299M1	1	Diffusing Lens	[A]
				(1)
	3902215M1	1	Diffusing Lens	[B]
				(1)
16	3902213M1	3	Knob	[A]
				(1)
	3902213M1	2	Knob	[B]
				(1)
17	3902217M1	1	Nut	[A]
				(1)
18	3902208M1	1	Nut	(1)
19	3902205M1	1	Plug	[A]
				(1)
	3902205M1	2	Plug	[B]
				(1)
20	3902206M1	1	Spring	(1)
21	3902700M1	1	Cable	(1)
22	365916X1	4	Self Tap Screws	(1)
23	3778749M1	1	Foam	25X15X80MM
24	3000483X1	2	Clamp	
25	3713635M1	1	Gasket	25X10X200
26	3713744M1	1	Gasket	10X15X1080
27	3783537M1	1	Diffuser	[A]
				(1)
				From Serial or Engine Number J041012
	3783537M1	1	Diffuser	[B]
				(1)
				From Serial or Engine Number J081005

FOOTNOTE [A] WITH CONDITIONED AIR
FOOTNOTE [B] WITHOUT CONDITIONED AIR

https://truckmanualshub.com/

1-ZU12-004-A

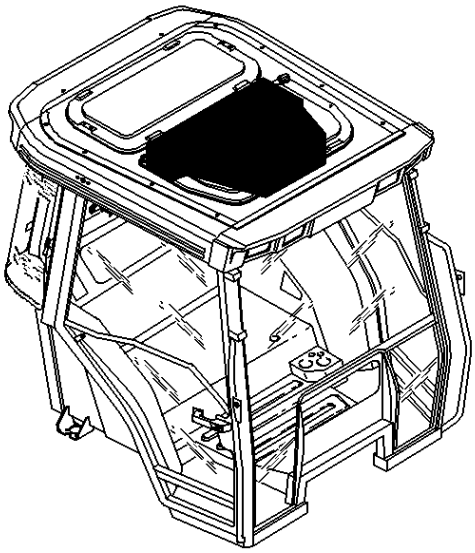

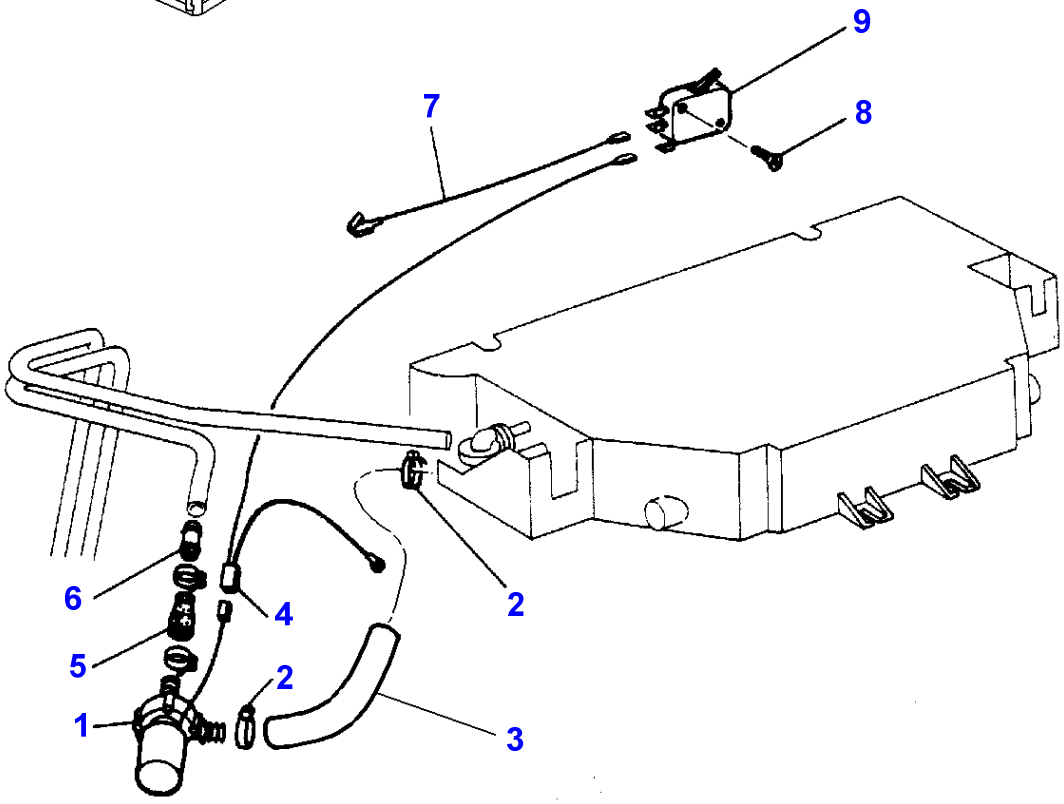

https://truckmanualshub.com/

Item	Part Number	Qty	Description	Comments
1	3712744M1	1	Water Pump	
2	3019564X1	4	Hose Clip	
3	3714538M1	1	Hose	
4	3778017M1	1	Harness	Replace and repair. Old not interchangeable with new 3712734M1
5	3616062M1	1	Hose	
6	3616064M1	1	Tube	
7	3583973M2	1	Wire	
8	3010065X1	2	Self Tap Screws	
9	**3616429M1**	1	Switch,Indirect	

https://truckmanualshub.com/

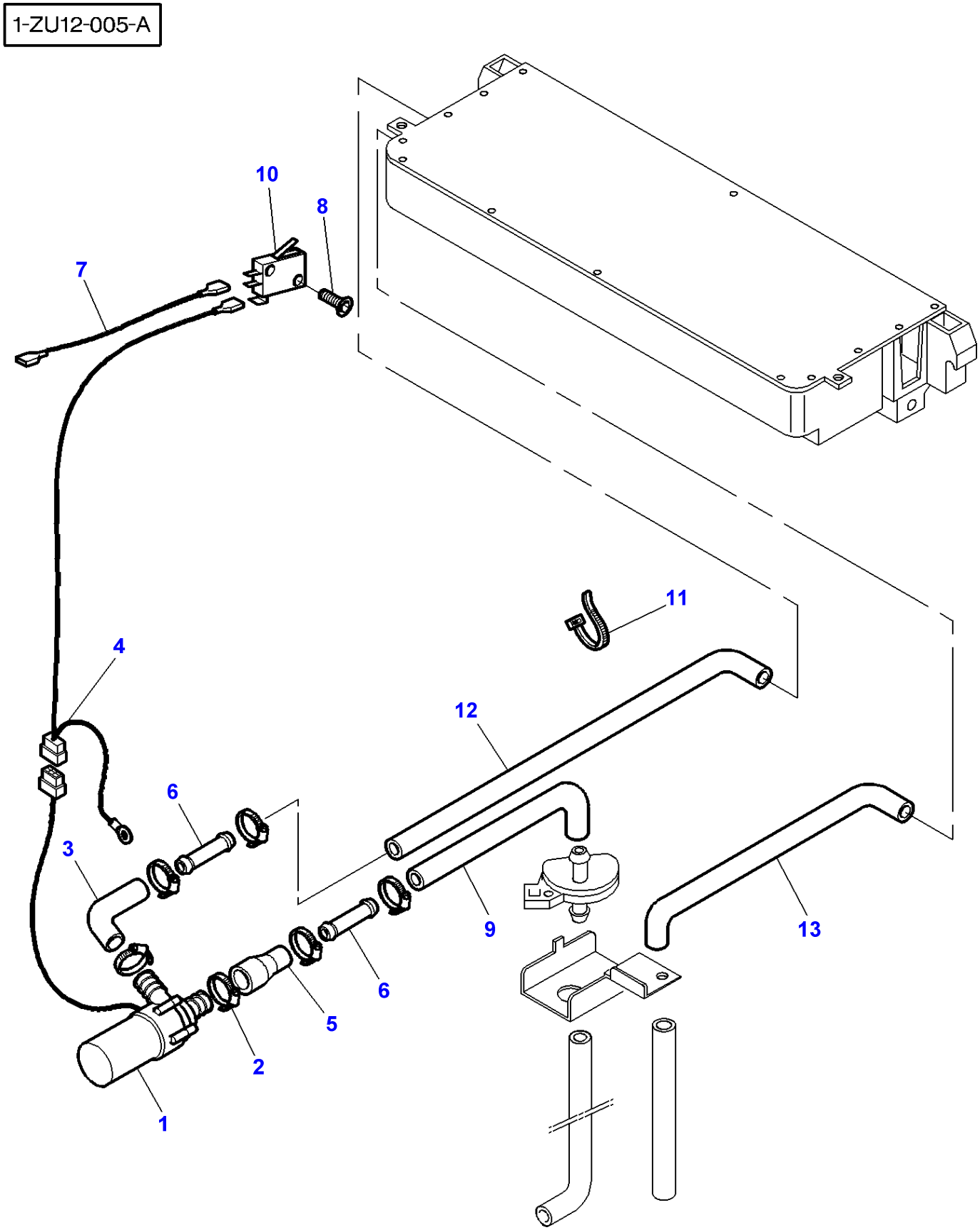

https://truckmanualshub.com/

Item	Part Number	Qty	Description	Comments
1	3712744M1	1	Water Pump	
2	3019564X1	4	Hose Clip	
3	3714538M1	1	Hose	
4	3778017M1	1	Harness	
5	3616062M1	1	Hose	
6	3616064M1	2	Tube	
7	3583973M2	1	Wire	
8	3010065X1	2	Self Tap Screws	
9	3778359M1	1	Water Hose	Length 520MM
10	3616429M1	1	Switch,Indirect	
11	3619622M1	2	Cable Tie	
12	3778335M1	1	Water Hose	Length 910MM
13	3777711M1	1	Hose	

https://truckmanualshub.com/

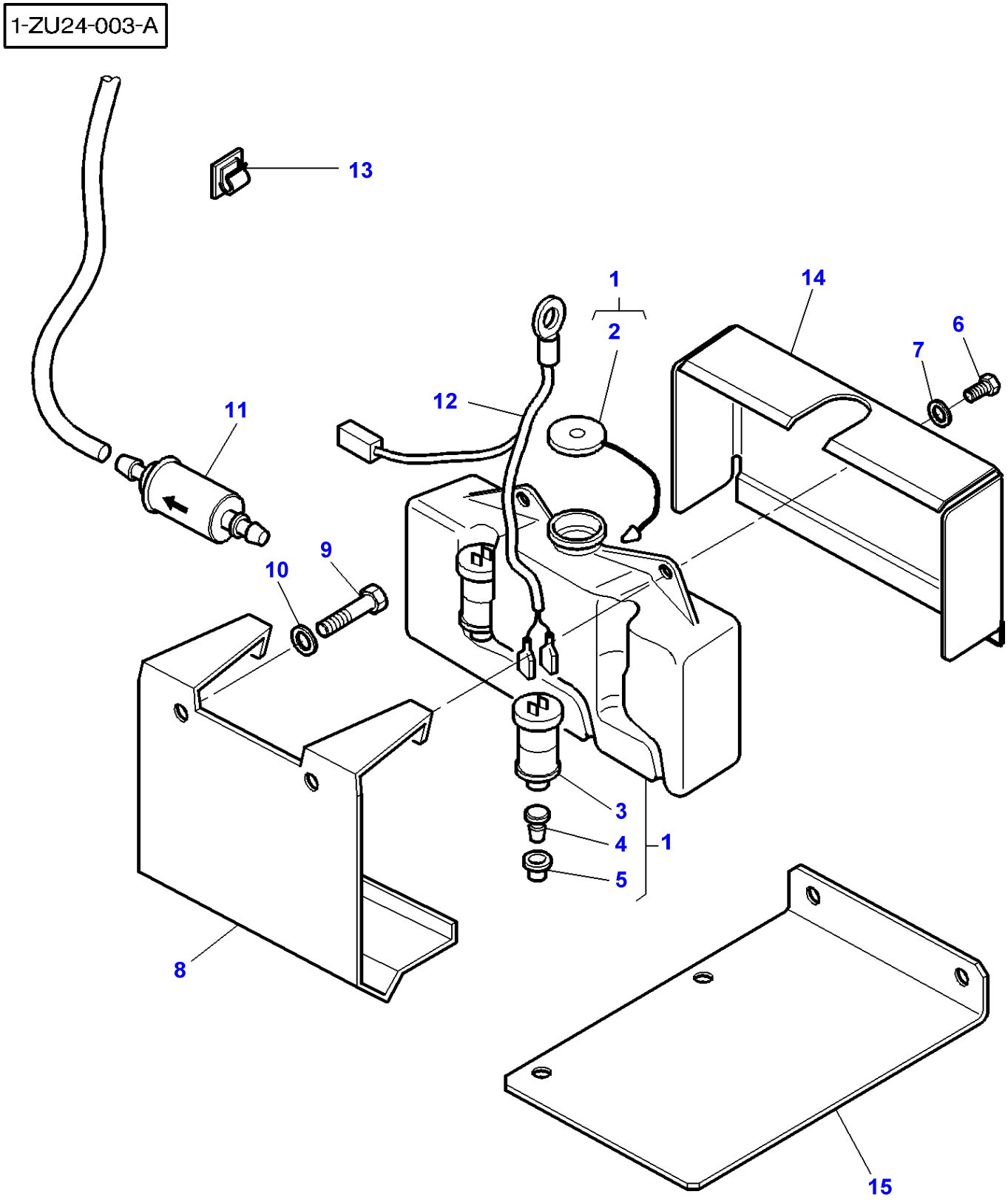

https://truckmanualshub.com/

Item	Part Number	Qty	Description	Comments
1	3582444M91	1	Tank	
2	3106496M1	1	Plug	(1)
3	3582441M1	1	Water Pump	(1)
4	3582442M1	1	Plug	(1)
5	3582443M1	1	Gasket	(1)
6	339123X1	2	Hex. Sock. Screw	
7	391039X1	2	Washer Metric	
8	3778973M1	1	Support	
9	339761X1	2	Hex. Sock. Screw	M8X25MM
10	390972X1	2	Washer Metric	
11	3583086M1	1	Pressure Valve	
12	3618017M1	1	Harness	
13	1677803M1	2	Clip	
14	3780314M91	1	Cowl	Up to Serial or Engine Number
15	3782342M2	1	Support	

https://truckmanualshub.com/

1-ZU23-001-A

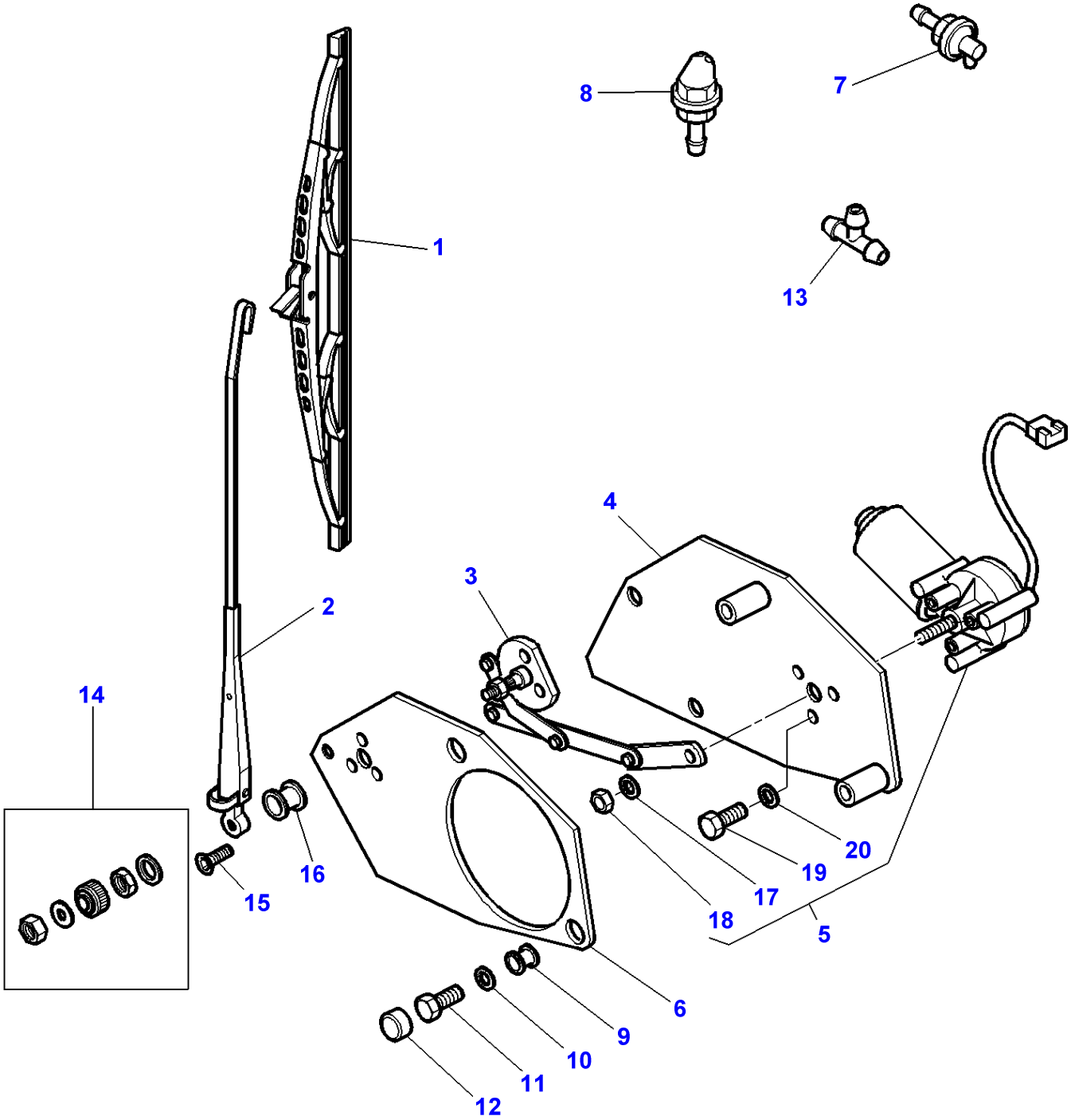

https://truckmanualshub.com/

Item	Part Number	Qty	Description	Comments
1	**3777648M1**	1	Wiper Blade	
2	3777649M1	1	Arm	
3	3778259M1	1	Tie Rod	
4	3777699M2	1	Support	
5	3777698M92	1	Wiper Motor	
6	3777700M2	1	Support	
7	3902342M1	1	Union	
8	3389664M1	2	Jet	
9	3777608M1	2	Grommet	
10	391039X1	2	Washer Metric	
11	339123X1	2	Hex. Sock. Screw	M8X20MM
12	3616277M1	2	Helmet	
13	3583069M1	2	Teepiece	
14	3778258M1	1	Parts Pack	
15	3010762X1	3	Screw	
16	3777607M1	1	Grommet	
17	3008914X1	1	Tab Washer	(5)
18	339169X1	1	Nut	(5) M8
19	339560X1	3	Hex. Sock. Screw	(5) M6
20	391289X1	3	Lock Washer	(5)

FOOTNOTE [A] INDUSTRIAL CAB

https://truckmanualshub.com/

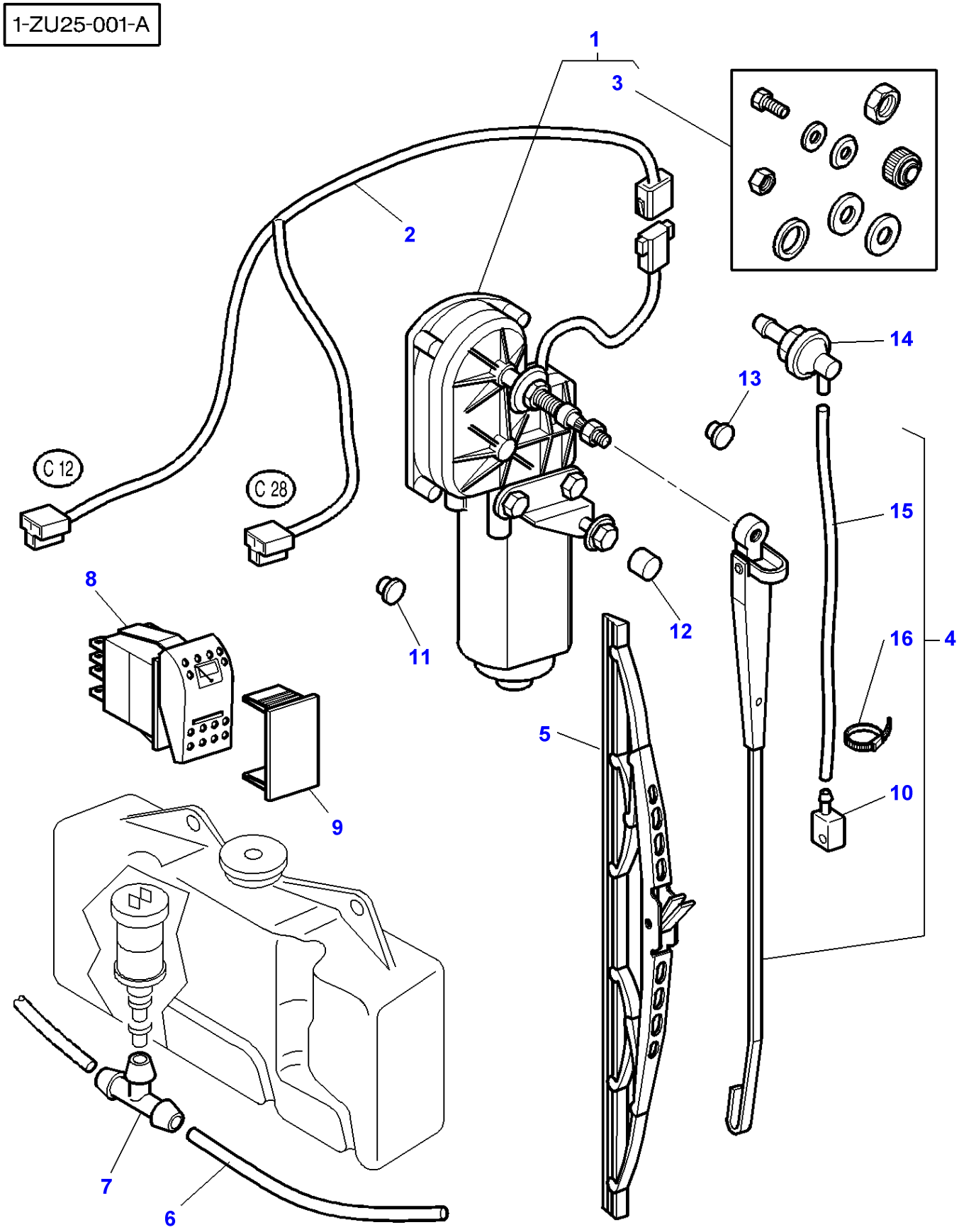

https://truckmanualshub.com/

Item	Part Number	Qty	Description	Comments
1	3715610M1	1	Engine	
2	3713738M2	1	Harness	
3	3902580M91	1	Parts Pack	(1)
4	3713196M2	1	Arm	
5	**3713195M1**	1	Wiper Blade	
6	3781312M1	1	Hydr Hose	Length 250MM
	3714118M1	1	Tube	Length 200MM
	3714119M1	1	Tube	Length 1300MM
	3714120M2	1	Tube	Length 2800MM
	3580902M1	1	Hose	Length 1400MM
7	3583069M1	1	Teepiece	
8	**3713147M1**	1	Switch,Indirect	
9	3713151M1	1	Tap	[A]
10	3902461M1	1	Jet	(4)
11	3713742M1	1	Plug	[A]
				Diameter 9,5MM
12	3616277M1	X	Helmet	
13	3713741M1	1	Plug	[A]
				Diameter 17,5MM
14	3902342M1	1	Union	
15	3902462M1	1	Tube	(4)
16	3902463M1	1	Clamp	(4)

FOOTNOTE [A] WITHOUT REAR WIPER AND WASHER WINDSCREEN

https://truckmanualshub.com/

1-ZU28-001-B

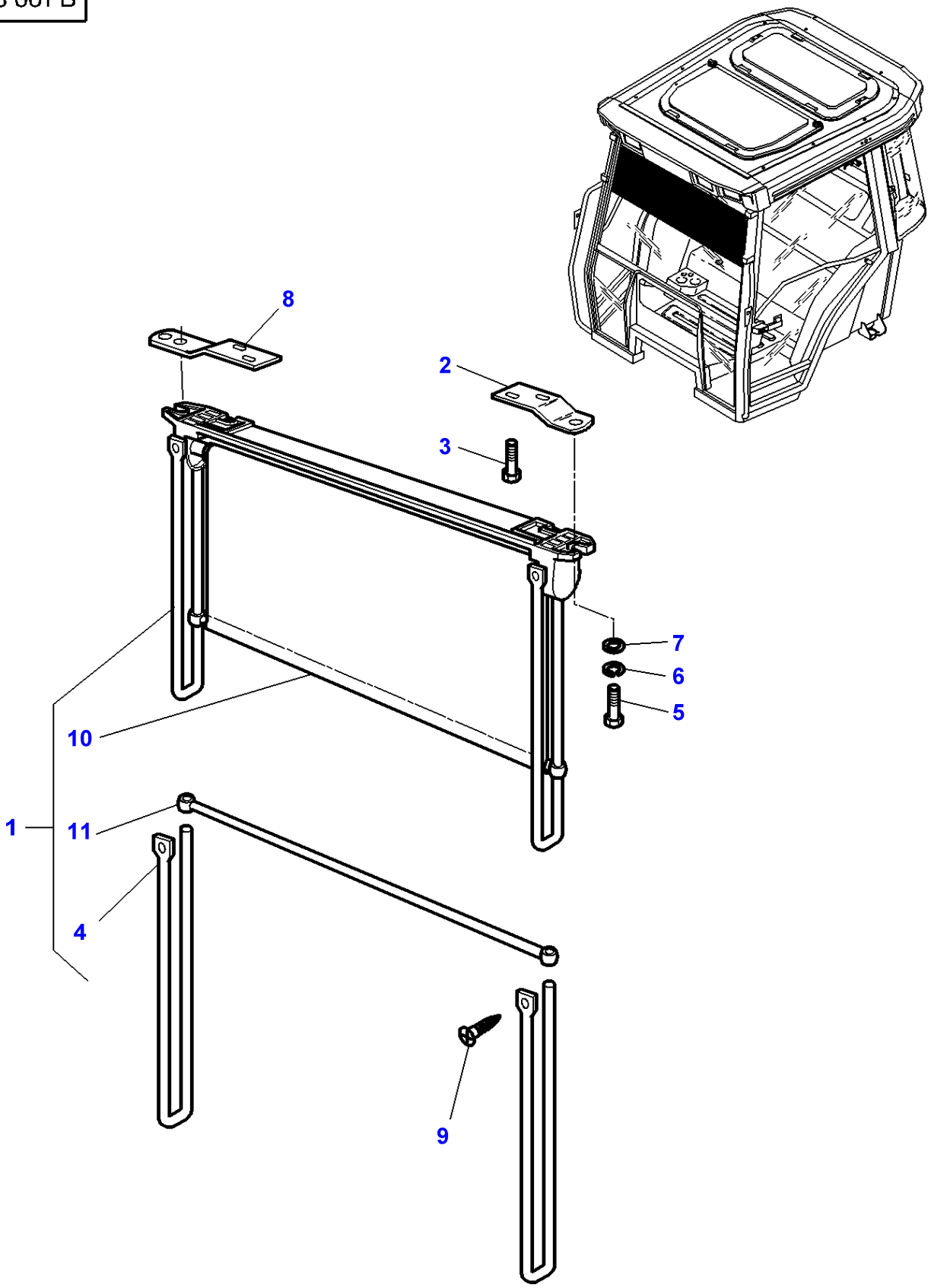

https://truckmanualshub.com/

Item	Part Number	Qty	Description	Comments
1	3714072M91	1	Canopy	
2	3389750M1	1	Support	Left Hand
3	3007934X1	4	Screw Metric	M6X16
4	3902174M91	2	Rod	(1)
5	339560X1	2	Hex. Sock. Screw	M16X16
6	339375X1	2	Lock Washer	
7	390971X1	2	Washer	
8	3389749M1	1	Support	Right Hand
9	3389854M1	2	Self Tap Screws	CBZ N10X19
10	3902176M91	1	Panel	(1)
11	3902175M91	1	Bar	(1)

https://truckmanualshub.com/

1-ZU28-002-B

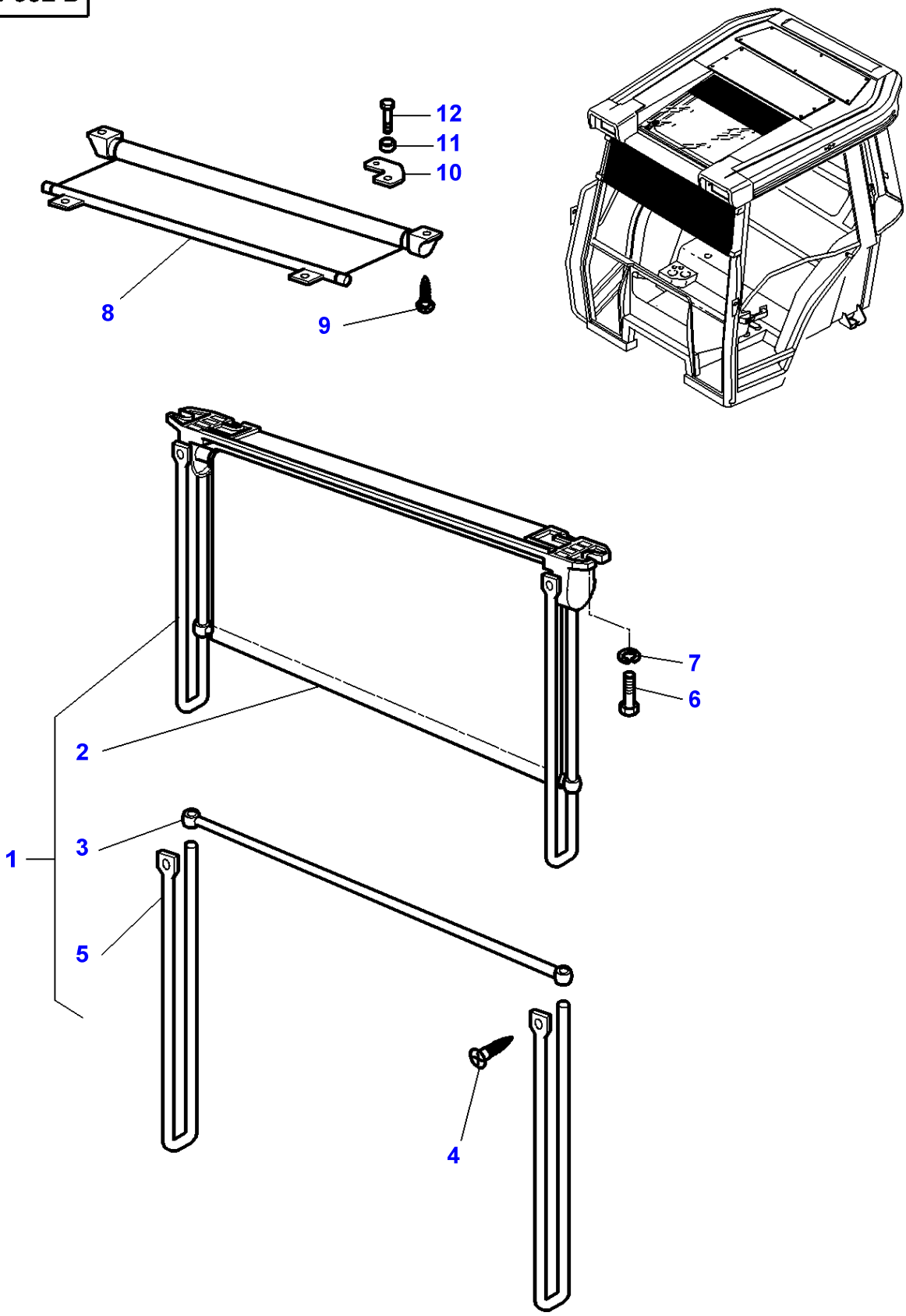

https://truckmanualshub.com/

Item	Part Number	Qty	Description	Comments
1	3714072M91	1	Canopy	
2	3902176M91	1	Panel	(1)
3	3902175M91	1	Bar	(1)
4	3389854M1	2	Self Tap Screws	CBZ N10X19
5	3902174M91	2	Rod	(1)
6	339666X1	2	Hex. Sock. Screw	M6X20
7	339375X1	2	Lock Washer	
8	3777706M1	1	Canopy	
9	360367X1	2	Screw	
10	3778315M1	1	Support	
11	3045014M2	2	Spacer	
12	391244X1	2	Bolt Metric	M6X45

https://truckmanualshub.com/

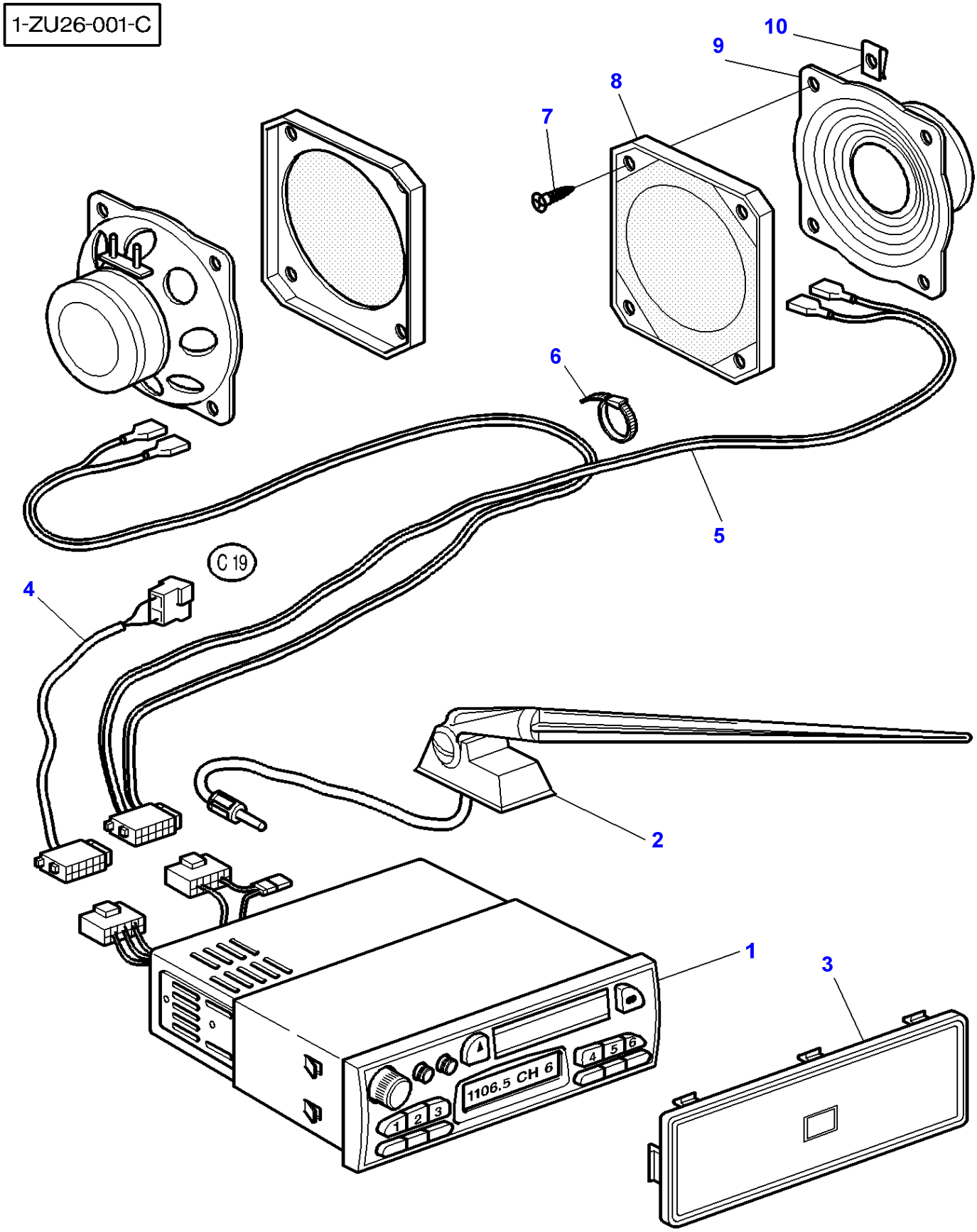

https://truckmanualshub.com/

Item	Part Number	Qty	Description	Comments
1	3816384M91	1	Radio Push Butt.	
2	3617629M92	1	Top Aerial	
3	3580173M1	1	Plate	[A]
4	3715099M1	1	Harness	
5	3715100M1	1	Harness	
	3778108M1	1	Harness	[B]
6	3619622M1	1	Cable Tie	
7	3580257M1	8	Screw	
8	3617395M1	2	Grille	
9	3617394M1	2	Speaker	
10	3715142M1	8	Nut	

FOOTNOTE [A] WITHOUT RADIO
FOOTNOTE [B] WITH HIGH VISIBILITY ROOF
FOOTNOTE [C] INDUSTRIAL CAB

https://truckmanualshub.com/

1-ZU18-001-A

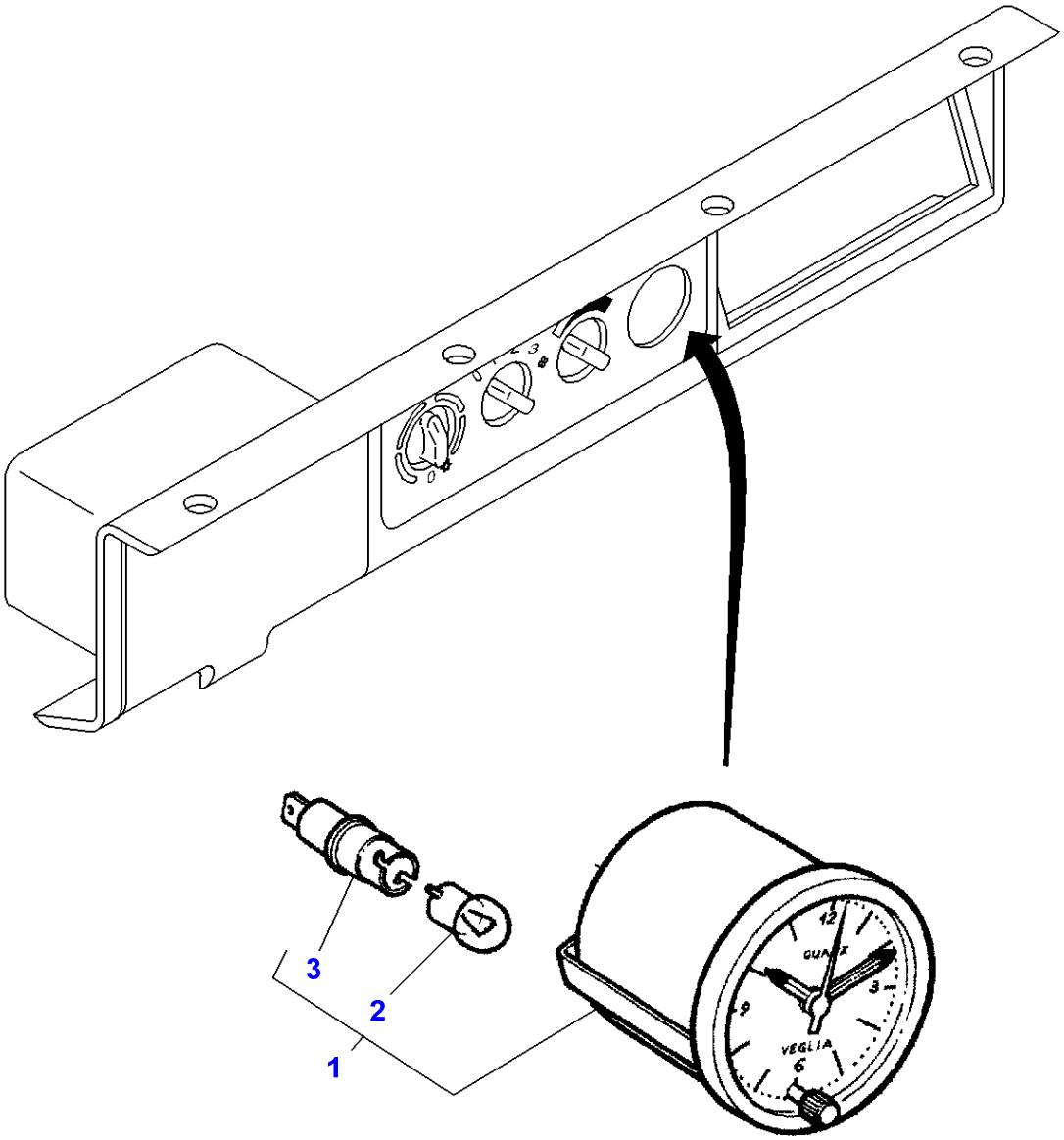

https://truckmanualshub.com/

Item	Part Number	Qty	Description	Comments
1	3713364M1	1	Clock	
2	**963333M1**	1	Bulb 12v 5w	(1)
3	3902191M1	1	Lamp Socket	(1)

https://truckmanualshub.com/

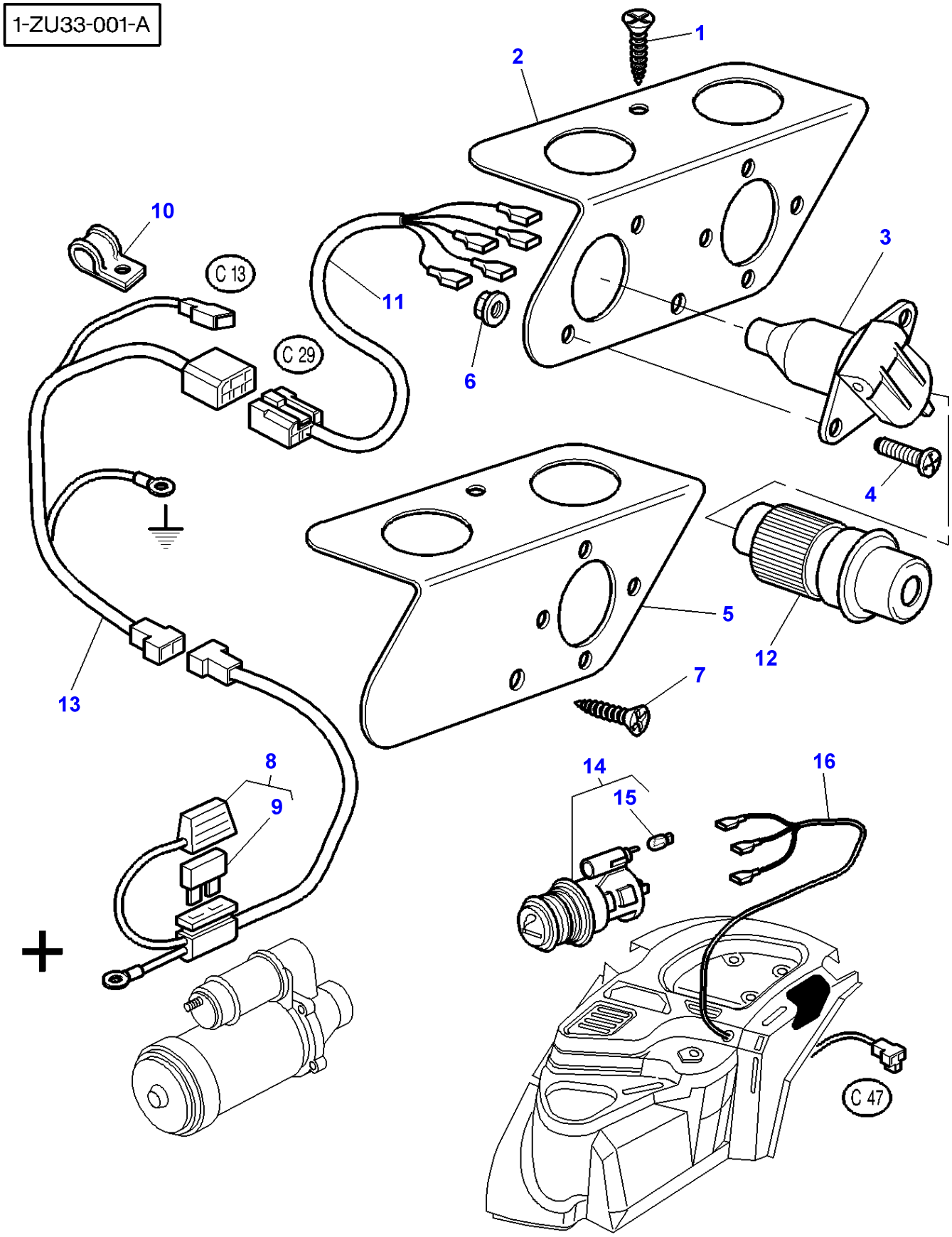

https://truckmanualshub.com/

Item	Part Number	Qty	Description	Comments
1	3010506X1	1	Screw	M5X16
	3010578X1	1	Screw	M5X10
2	3713356M1	1	Support	
3	3713127M1	1	Electric Socket	
4	3000926X1	2	Screw	
5	3713357M1	1	Support	[A]
6	3010477X1	2	Nut Metric	
7	3010506X1	2	Screw	
8	3715073M91	1	Harness	
9	**3712661M1**	1	Fuse	(8) 30 AMP
10	3387578M1	1	Clamp	
11	3714516M1	1	Harness	
12	**3760032M1**	1	Electrical Plug	
13	3714515M1	1	Harness	
14	3617848M91	1	Lighter	
15	**3302213M1**	1	Bulb 12v 1.2w	(14)
16	3714566M1	1	Harness	

FOOTNOTE [A] WITHOUT ELECTRICAL PLUG

https://truckmanualshub.com/

1-ZU29-001-A

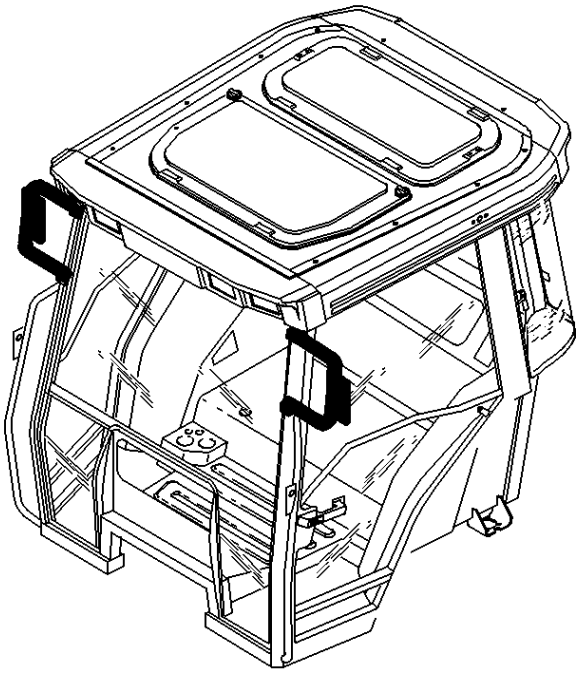

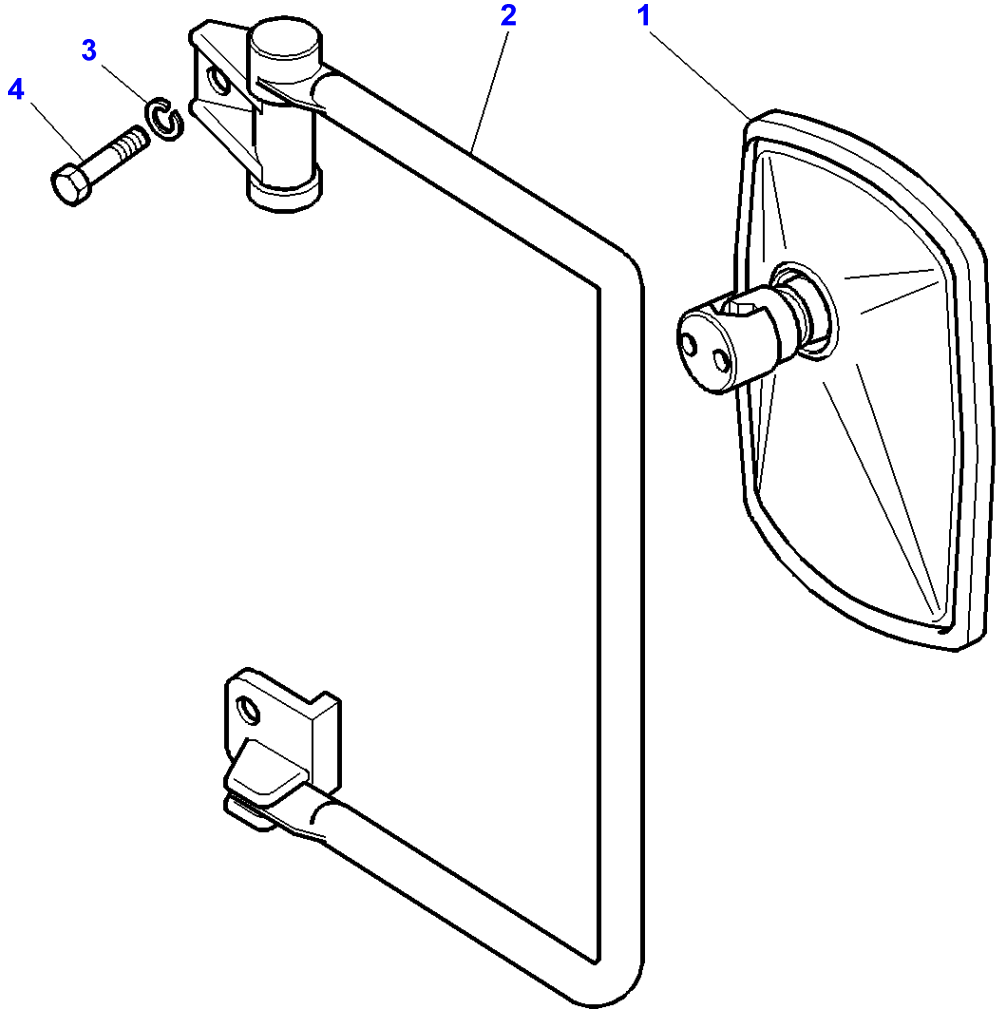

https://truckmanualshub.com/

Item	Part Number	Qty	Description	Comments
1	3806614M91	2	Mirror	
2	3806610M92	1	Arm	Left Hand
	3806611M92	1	Arm	Right Hand
3	385361X1	4	Washer Metric	
4	339123X1	4	Hex. Sock. Screw	M8X20

https://truckmanualshub.com/

1-ZU29-002-B

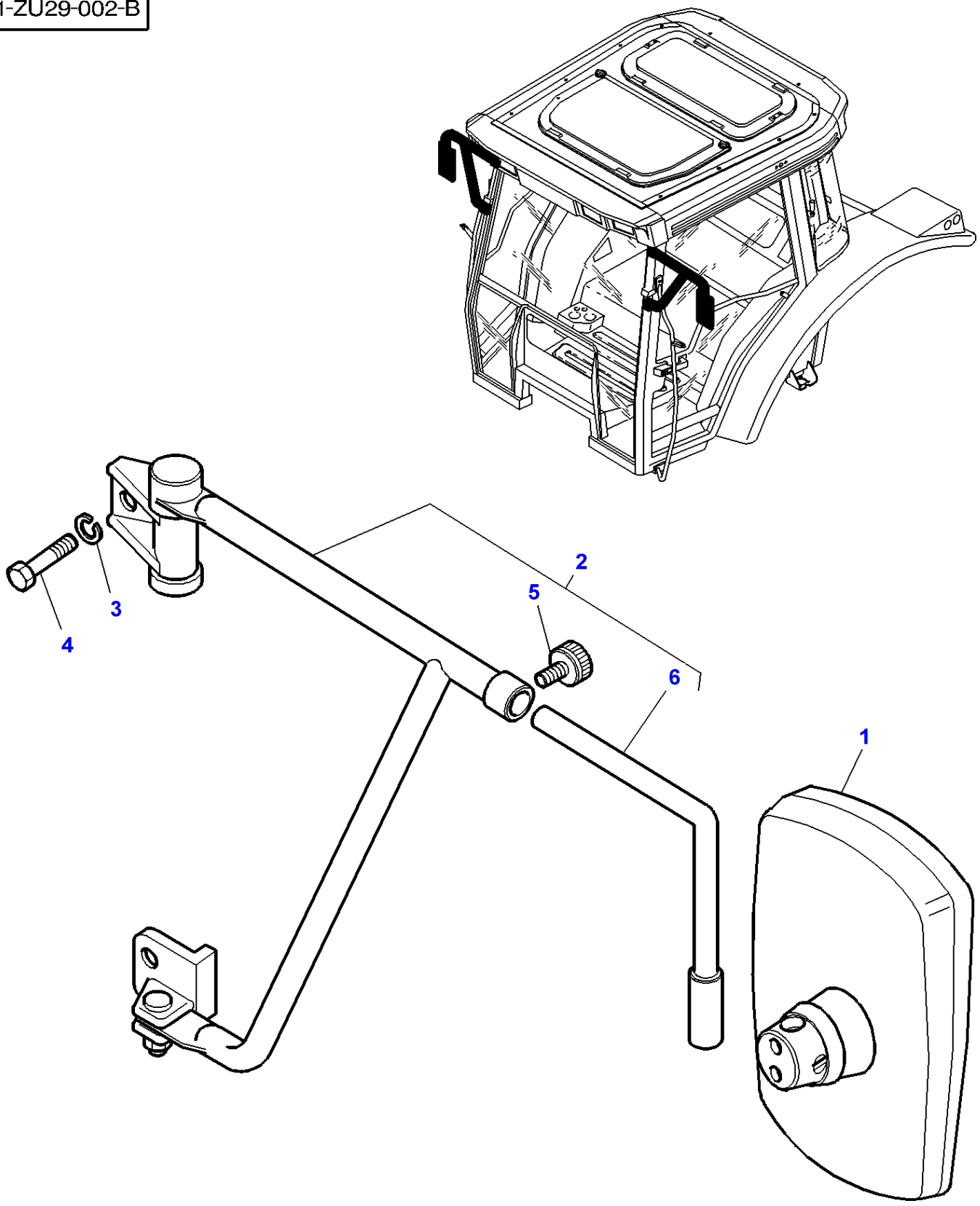

https://truckmanualshub.com/

Item	Part Number	Qty	Description	Comments
1	3818552M1	1	Mirror	
2	3818647M92	1	Arm	Left Hand
	3818648M92	1	Arm	Right Hand
3	385361X1	4	Washer Metric	
4	339123X1	4	Hex. Sock. Screw	
5	3903400M91	1	Setscrew	(2)
6	3903399M91	1	Stem	(2)

FOOTNOTE [A] FOR JAPANESE MARKET ONLY

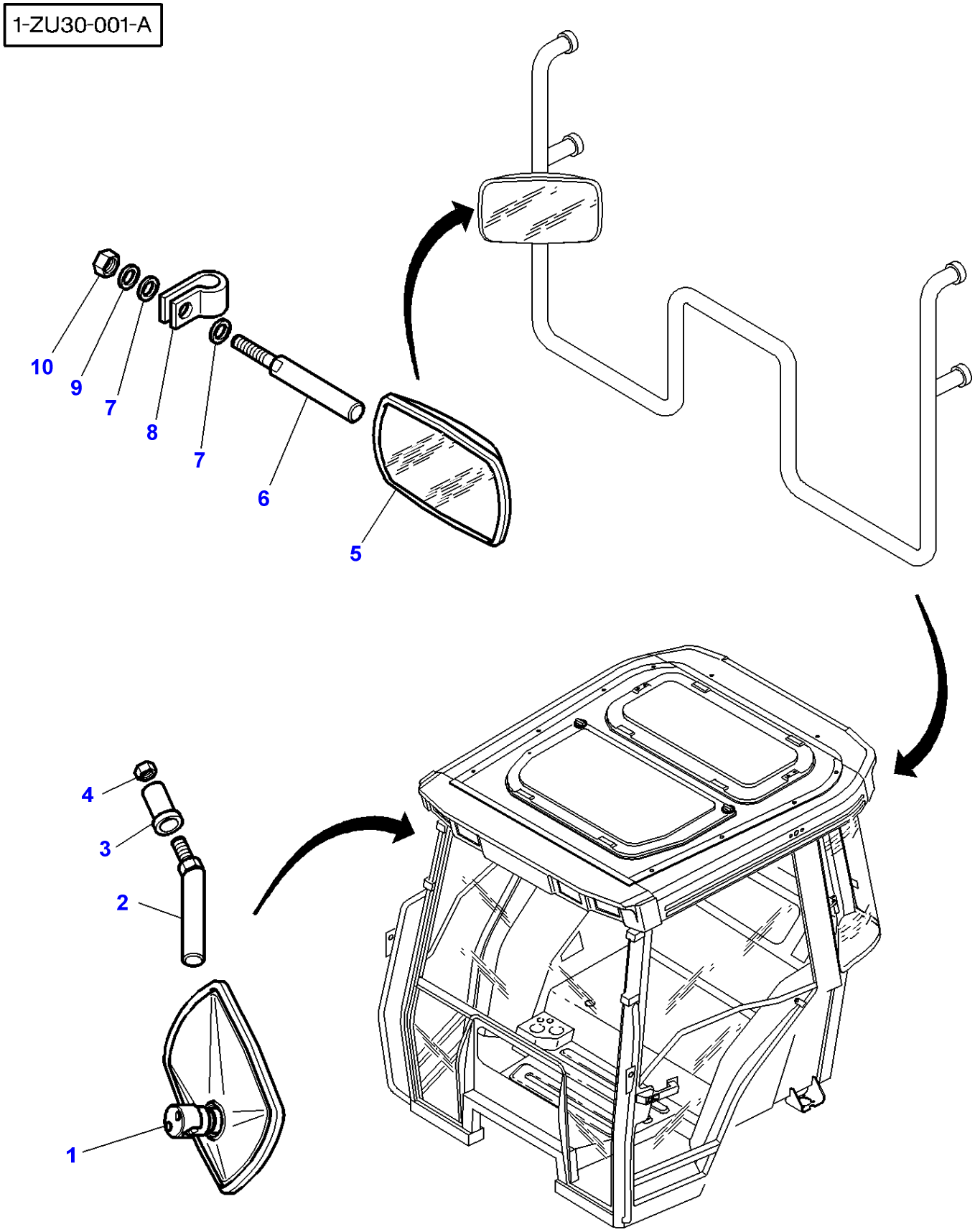
1-ZU30-001-A
10
9
7
8
7
6
5
4
3
2
1

https://truckmanualshub.com/

Item	Part Number	Qty	Description	Comments
1	3806618M91	1	Mirror	
2	3778091M1	1	Clevis Pin	
3	3778092M1	1	Spacer	[A]
4	3009693X1	1	Nut Metric	M10
5	3806618M91	1	Mirror	
6	3581239M1	1	Clevis Pin	
7	385362X1	2	Washer Metric	
8	3581507M1	1	Clamp	
9	391026X1	1	Lock Washer	
10	3009693X1	1	Nut Metric	M10

FOOTNOTE [A] WITH HIGH VISIBILITY ROOF

https://truckmanualshub.com/

1-ZV01-001-B

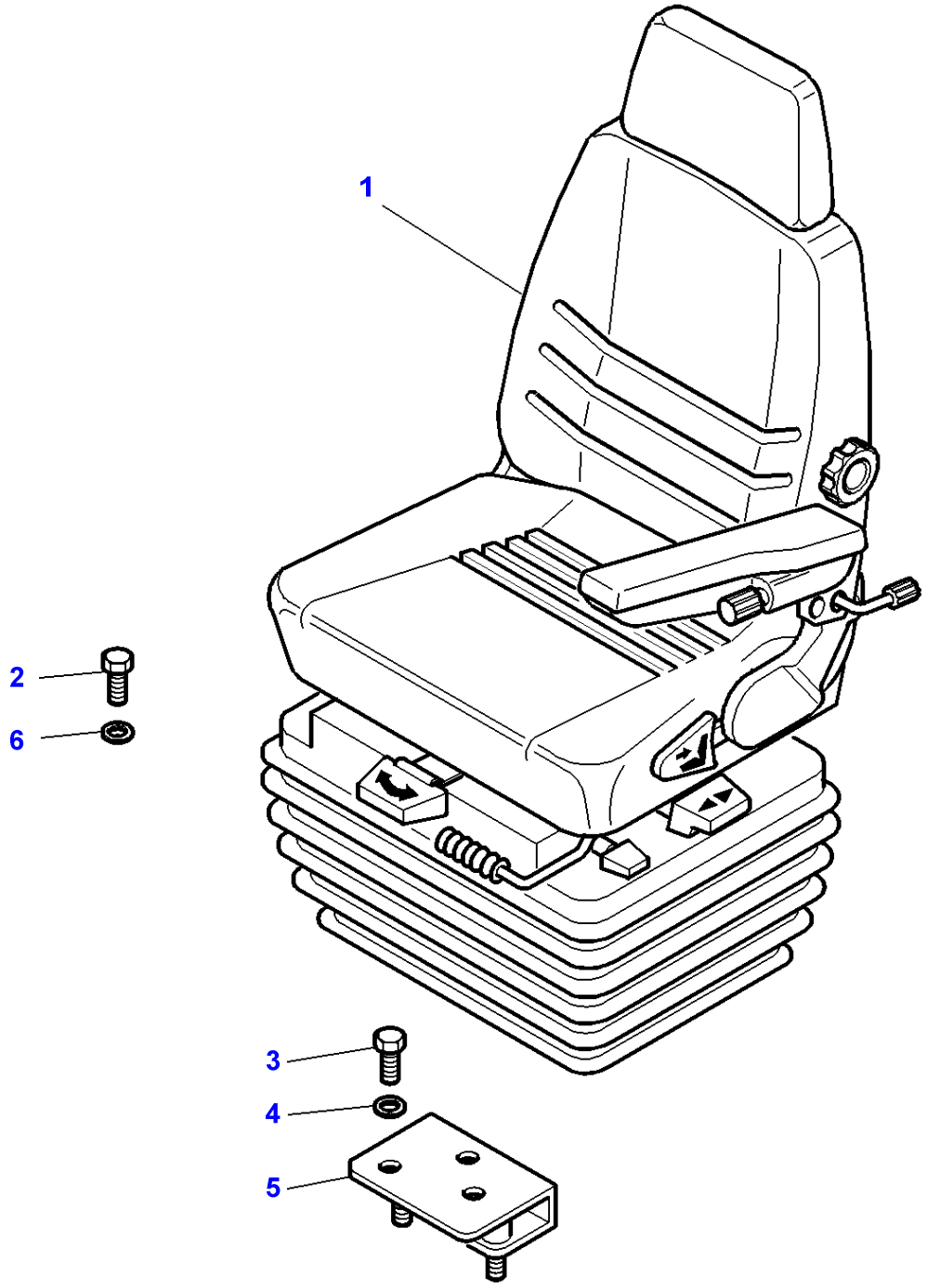

https://truckmanualshub.com/

Item	Part Number	Qty	Description	Comments
1	3780646M91	1	Seat	[A] See Page - Reference Number 110-0235/1 See Page - Reference Number 110-0240/1
	3779611M91	1	Seat	[B] See Page - Reference Number 110-0245 See Page - Reference Number 110-0250
	3780629M91	1	Seat	[C] See Page - Reference Number 110-0245 See Page - Reference Number 110-0255
2	391989X1	4	Screw Metric	M8x20
	1441000X1	4	Screw Metric	M8x16
3	339124X1	3	Hex. Sock. Screw	M8x16
4	390972X1	3	Washer Metric	M8
5	3780410M1	1	Plate	
6	390972X1	4	Washer Metric	M8

FOOTNOTE [A] MECHANICAL SEAT
FOOTNOTE [B] AIR PRESSURE SEAT WITH AUTOMATIC ADJUSTMENT
FOOTNOTE [C] AIR PRESSURE SEAT WITH MANUAL ADJUSTMENT

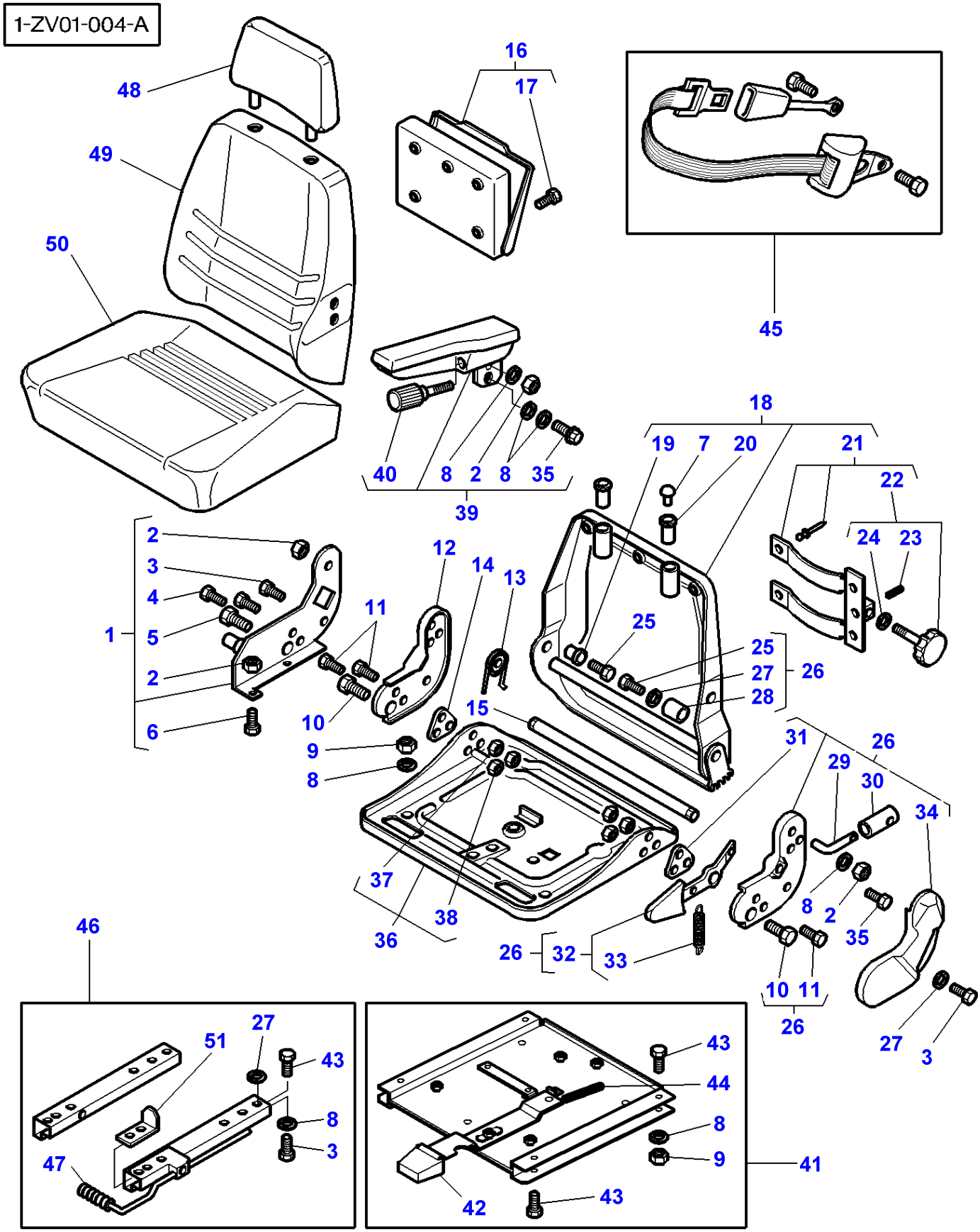
1-ZV01-004-A
48
49
50
16
17
45
18
19
7
20
21
22
24
23
40
8
2
8
35
39
2
3
4
5
1
2
6
12
14
13
11
10
9
8
15
25
25
27
28
26
31
26
29
30
34
37
38
36
26
32
33
8
2
35
10
11
26
27
3
46
27
51
43
8
3
47
43
44
8
9
41
42
43

https://truckmanualshub.com/

Item	Part Number	Qty	Description	Comments
1	3903086M91	1	Support	
2	1441461X1	3	Locknut	M8
3	391148X1	3	Screw	M8x20
4	1440349X1	2	Screw Metric	M8x30
5	3903094M1	1	Screw	Diameter 7/16"-20 Length 35 MM
6	3009439X1	1	Screw	M8x16
7	3101653M1	2	Cap	
8	391565X1	11	Washer Metric	Diameter 8 MM
9	339169X1	8	Nut	Diameter M8
10	353561X1	2	Screw Unf	Diameter 7/16"-20 Length 30 MM
11	391990X1	4	Screw	M8x25
12	3105795M1	1	Support	
13	3105793M1	1	Spring	
14	3903073M1	1	Plate	
15	3903074M1	1	Tube	
16	3903085M91	1	Pocket	
17	3903093M1	4	Screw	Diameter 4 MM
18	3903070M91	1	Frame	
19	3903075M1	1	Insert	
20	3101494M1	2	Bush	
21	3903071M91	1	Support	
22	3903072M91	1	Stem	
23	3009322X1	1	Spirol Pin	Diameter 3 MM Length 18 MM
24	1444351X1	1	Washer	Diameter 13 MM
25	339287X1	2	Screw Metric	M8x35
26	3903079M91	1	Driven Plate	
27	391039X1	5	Washer Metric	Diameter 8 MM
28	3903076M1	1	Tube	
29	3903080M1	1	Lever	
30	3903081M1	1	Handle	
31	3903077M1	1	Plate	
32	3903078M91	1	Lever	
33	3105797M1	1	Spring	
34	3903082M1	1	Housing	
35	3101996M1	1	Screw Special	M8x16
36	3903083M91	1	Frame	
37	339169X1	4	Nut	Diameter M8
38	353428X1	2	Nut Unf	Diameter 7/16"-20
39	3903099M91	1	Armrest	
40	3903098M1	1	Stem	
41	3903100M91	1	Plate	
42	3903102M1	1	Handle	
43	1441000X1	12	Screw Metric	M8x16
44	3903101M1	1	Spring	
45	3903092M1	1	Safety Belt	
46	3903088M91	1	Kit, Guide	
47	3903087M1	1	Handle	
48	3779612M1	1	Head Rest	
49	3903118M1	1	Cushion	
50	3903117M1	1	Cushion	
51	3903142M1	1	Strap	

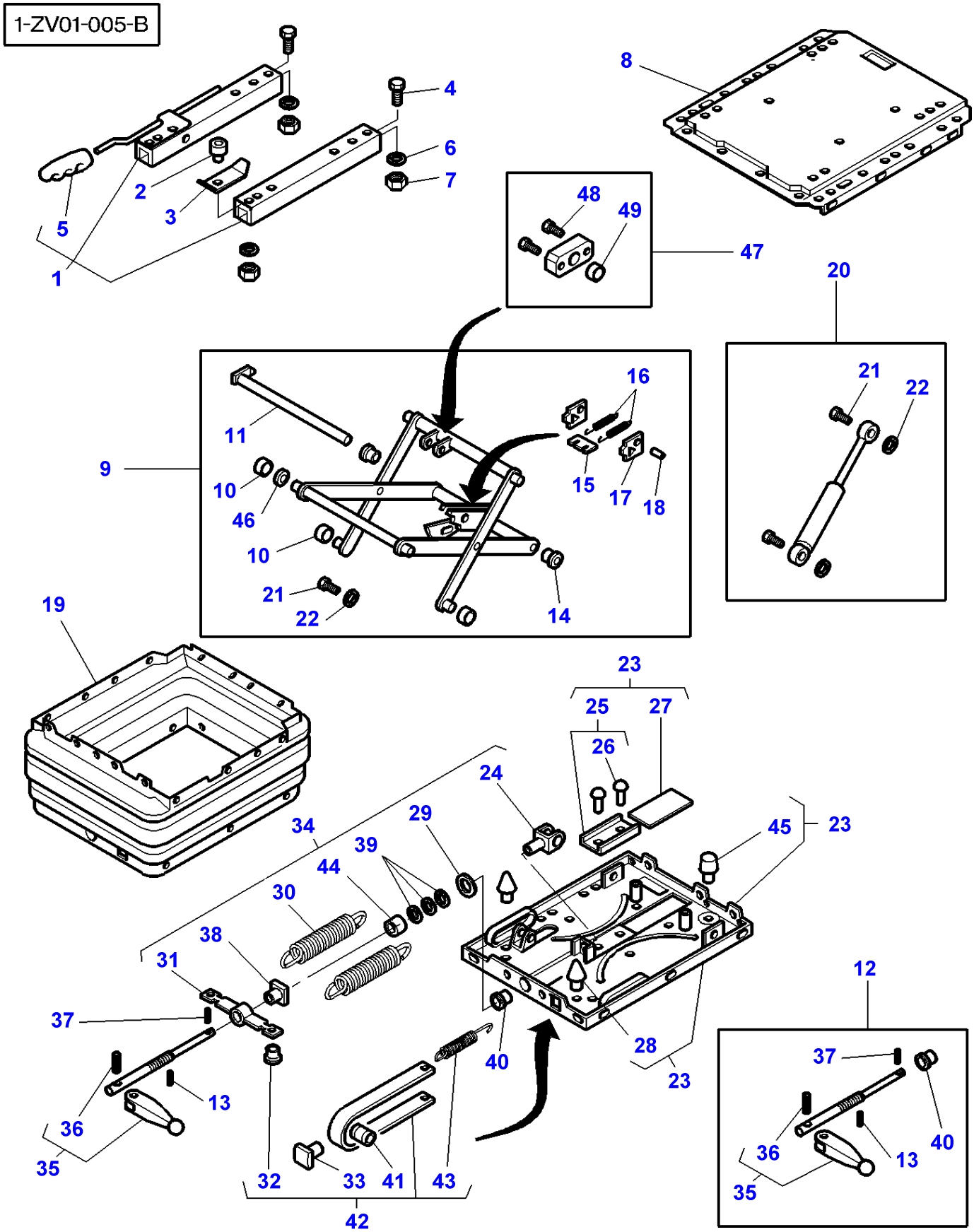
1-ZV01-005-B
1
2
3
4
5
6
7
8
9
10
11
12
13
14
15
16
17
18
19
20
21
22
23
24
25
26
27
28
29
30
31
32
33
34
35
36
37
38
39
40
41
42
43
44
45
46
47
48
49

https://truckmanualshub.com/

Item	Part Number	Qty	Description	Comments
1	3903286M91	1	Kit, Guide	
2	3903291M1	1	Roller	
3	3903142M1	1	Strap	
4	1441000X1	3	Screw Metric	M8x16
5	3903087M1	1	Handle	
6	391039X1	4	Washer Metric	Diameter 8,4 MM
7	339169X1	4	Nut	Diameter M8
8	3903274M91	1	Fit Plate Seat	
9	3903290M91	1	Suspension	
10	1719914M1	4	Roller	
11	3103597M1	1	Stem	
12	3903287M91	1	Stem	
13	3903277M1	1	Pin	Diameter 3 MM Length 18 MM
14	3103596M1	2	Bush	
15	1719910M1	1	Plate	
16	3903148M1	2	Spring	
17	3903275M1	2	Shield	
18	1719923M1	1	Pin	
19	3903145M1	1	Bellows	
20	3903276M91	1	Shock Absorber	
21	1719935M1	2	Pin	
22	1442783X1	2	Circlip	
23	3903281M91	1	Fit Plate Seat	
24	3103605M1	1	Fork	
25	3103612M91	1	Plate	
26	338627X1	2	Rivet	Diameter 4 MM Length 10 MM
27	1719917M1	1	Plate	
28	3903282M1	2	Buffer	
29	1719902M1	1	Washer	
30	3903278M1	2	Tension Spring	
31	1719900M1	1	Support	
32	1719918M1	1	Plug	
33	1719891M1	1	Guide	
34	3903280M91	1	Parts Pack	
35	3903133M91	1	Toggle	
36	3903153M1	1	Pin	Diameter 4 MM Length 28 MM
37	3903152M1	1	Pin	Diameter 3 MM Length 16 MM
38	1719920M1	1	Nut Special	Diameter M12
39	1719921M1	1	Bearing	
40	3103608M1	1	Bush	
41	1719903M1	1	Roller	
42	3903285M91	1	Parts Pack	
43	1719932M1	1	Spring	
44	3903279M1	1	Tube	
45	3903283M1	1	Buffer	
46	3903284M1	2	Insert	
47	3903288M91	1	Bearing Carrier	
48	339560X1	4	Hex. Sock. Screw	(47) M6x16
49	3903289M1	2	Insert	(47)

FOOTNOTE [A] INDUSTRIAL CAB

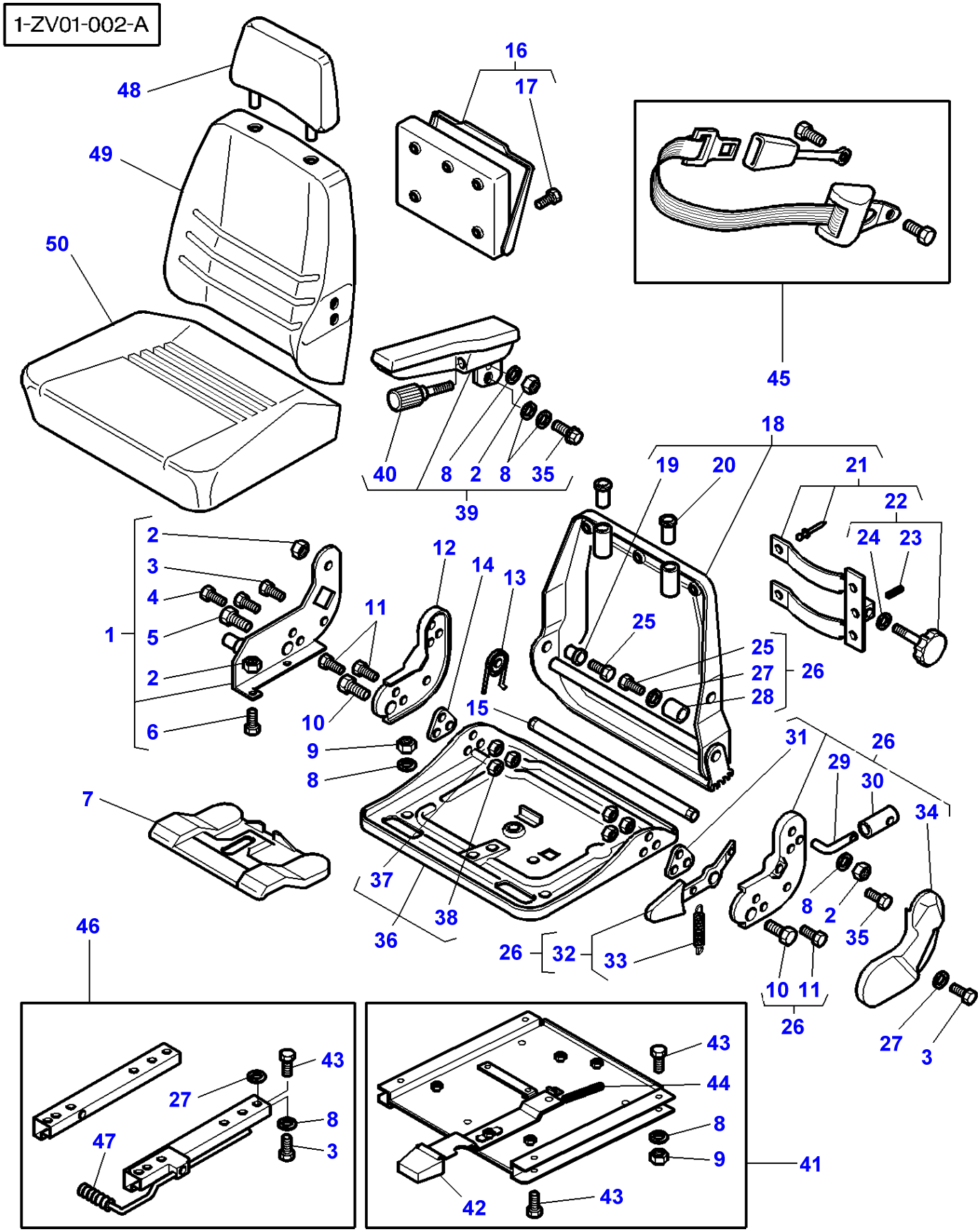
1-ZV01-002-A
48
49
50
16
17
45
40
8
2
8
35
39
18
19
20
21
22
24
23
2
3
4
5
2
6
1
12
14
13
11
10
9
8
15
25
25
27
28
26
7
37
38
36
31
26
29
30
34
8
2
35
26
32
33
10
11
26
27
3
46
43
27
8
47
3
43
44
8
9
41
42
43

https://truckmanualshub.com/

Item	Part Number	Qty	Description	Comments
1	3903086M91	1	Support	
2	1441461X1	3	Locknut	M8
3	391148X1	3	Screw	M8x20
4	1440349X1	2	Screw Metric	M8x30
5	3903094M1	1	Screw	Diameter 7/16"-20 Length 35 MM
6	3009439X1	1	Screw	M8x16
7	3903084M91	1	Driven Plate	
8	390972X1	11	Washer Metric	Diameter 8 MM
9	339169X1	4	Nut	M8
10	353561X1	2	Screw Unf	Diameter 7/16"-20 Length 30 MM
11	391990X1	4	Screw	M8x25
12	3105795M1	1	Support	
13	3105793M1	1	Spring	
14	3903073M1	1	Plate	
15	3903074M1	1	Tube	
16	3903085M91	1	Pocket	
17	3903093M1	4	Screw	Diameter 4 MM
18	3903070M91	1	Frame	
19	3903075M1	1	Insert	
20	3101494M1	2	Bush	
21	3903071M91	1	Support	
22	3903072M91	1	Stem	
23	3009322X1	1	Spirol Pin	Diameter 3 MM Length 18 MM
24	1444351X1	1	Washer	Diameter 13 MM
25	339287X1	2	Screw Metric	M8x35
26	3903079M91	1	Driven Plate	
27	391039X1	5	Washer Metric	Diameter 8 MM
28	3903076M1	1	Tube	
29	3903080M1	1	Lever	
30	3903081M1	1	Handle	
31	3903077M1	1	Plate	
32	3903078M91	1	Lever	
33	3105797M1	1	Spring	
34	3903082M1	1	Housing	
35	3101996M1	1	Screw Special	M8x16
36	3903083M91	1	Frame	
37	339169X1	4	Nut	M8
38	353428X1	2	Nut Unf	Diameter 7/16"-20
39	3903099M91	1	Armrest	
40	3903098M1	1	Stem	
41	3903100M91	1	Plate	
42	3903102M1	1	Handle	
43	1441000X1	12	Screw Metric	M8x16
44	3903101M1	1	Spring	
45	3903092M1	1	Safety Belt	
46	3903088M91	1	Kit, Guide	
47	3903087M1	1	Handle	
48	3779612M1	1	Head Rest	
49	3903118M1	1	Cushion	
50	3903117M1	1	Cushion	

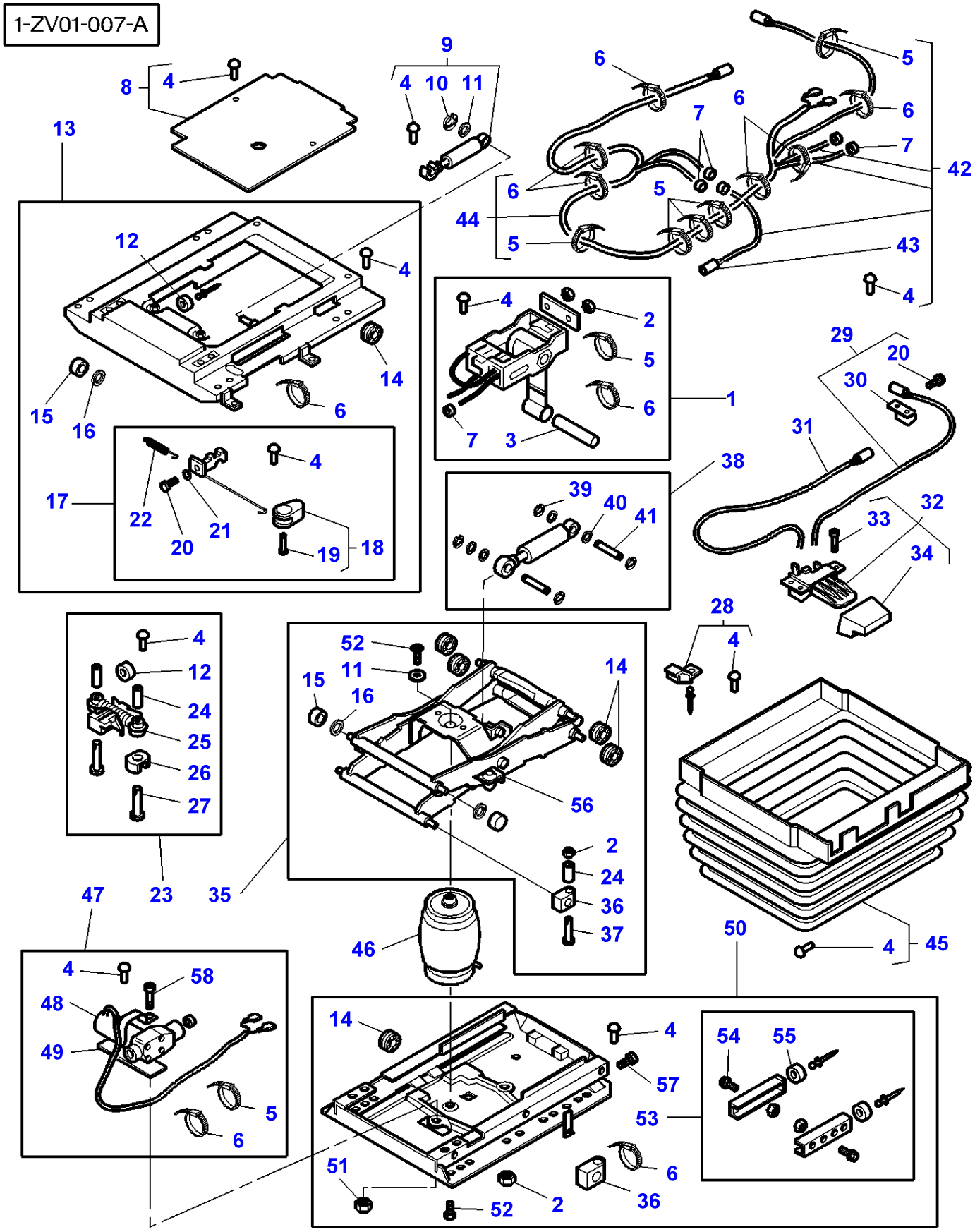
1-ZV01-007-A
8
4
9
4
10
11
13
12
4
14
15
16
6
17
22
20
21
4
19
18
6
5
6
7
6
7
42
6
5
44
5
43
4
4
2
5
6
1
7
3
29
20
30
31
38
39
40
41
32
33
34
28
4
4
12
24
25
26
27
23
52
11
15
16
14
56
2
24
36
37
35
47
46
50
4
45
4
58
48
49
5
6
14
4
57
53
54
55
51
6
52
2
36

https://truckmanualshub.com/

Item	Part Number	Qty	Description	Comments
1	3903129M91	1	Lever	
2	1441461X1	4	Locknut	M8
3	3903130M1	1	Clevis Pin	
4	1719896M1	24	Plug	
5	3903068M1	4	Tie	4,7x204 MM
6	3105397M1	5	Cable Clamp	2,5x102 MM
7	3903052M1	4	Olive	
8	3903037M91	1	Housing	
9	3903039M91	1	Shock Absorber	
10	1441206X1	1	Lock Washer	Diameter 6 MM
11	390972X1	2	Washer Metric	Diameter 8,4 MM
12	3903040M1	1	Buffer	
13	3903132M91	1	Suspension	
14	3903050M1	4	Roller	
15	3105382M1	2	Bearing Needle	
16	3903048M1	2	Ring	
17	3903045M91	1	Rod Link	
18	3903180M91	1	Handle	
19	3903065M1	1	Screw	4x14
20	3903064M1	2	Screw	3,5x12 MM
21	339362X1	1	Washer	Diameter 4,3 MM
22	3903044M1	2	Spring	
23	3903032M91	1	Shock Absorber	
24	3105404M1	4	Tube	
25	3903033M1	2	Insert	
26	3903034M1	2	Buffer	
27	339287X1	2	Screw Metric	M8x35
28	3903036M1	2	Stop	
29	3903138M91	1	Cable	
30	3903136M1	1	Support	
31	3903137M91	1	Cable	
32	3903164M91	1	Selector	Replace and repair. Old interchangeable with new 3903043M91
33	3903063M1	3	Screw	M5x16
34	3903042M1	1	Handle	
35	3903047M91	1	Suspension	
36	3903049M1	2	Bearing Carrier	
37	3903066M1	2	Screw	
38	3903058M91	1	Shock Absorber	
39	390287X1	4	Lock Washer	
40	3101663M1	4	Washer	
41	3903035M1	2	Clevis Pin	
42	3903141M91	1	Hydr Hose	
43	3105395M1	2	Hose Clip	
44	3903140M91	1	Cable	
45	3903139M91	1	Bellows	
46	3903051M91	1	Accumulator	
47	3903057M91	1	Compressor	
48	3903053M1	1	Clamp	
49	3903054M1	1	Plate	
50	3903059M91	1	Fit Plate Seat	
51	339169X1	1	Nut	M8
52	3903067M1	2	Screw	M8x20
53	3903062M1	1	Stop	
54	3101996M1	2	Screw Special	M8x16
55	3102401M1	2	Buffer	
56	1719867M1	2	Protector	
57	3000926X1	1	Screw	M5x10
58	3001414X1	1	Screw Metric	M8x12
59	3903135M91	1	Kit, Repair	[A,B]

FOOTNOTE [A] INCLUDE ITEM 2/4/5/6/11/12/14/15/16/24/25/ 26/36/51/52/53/56/58
FOOTNOTE [B] NOT ILLUSTRATED

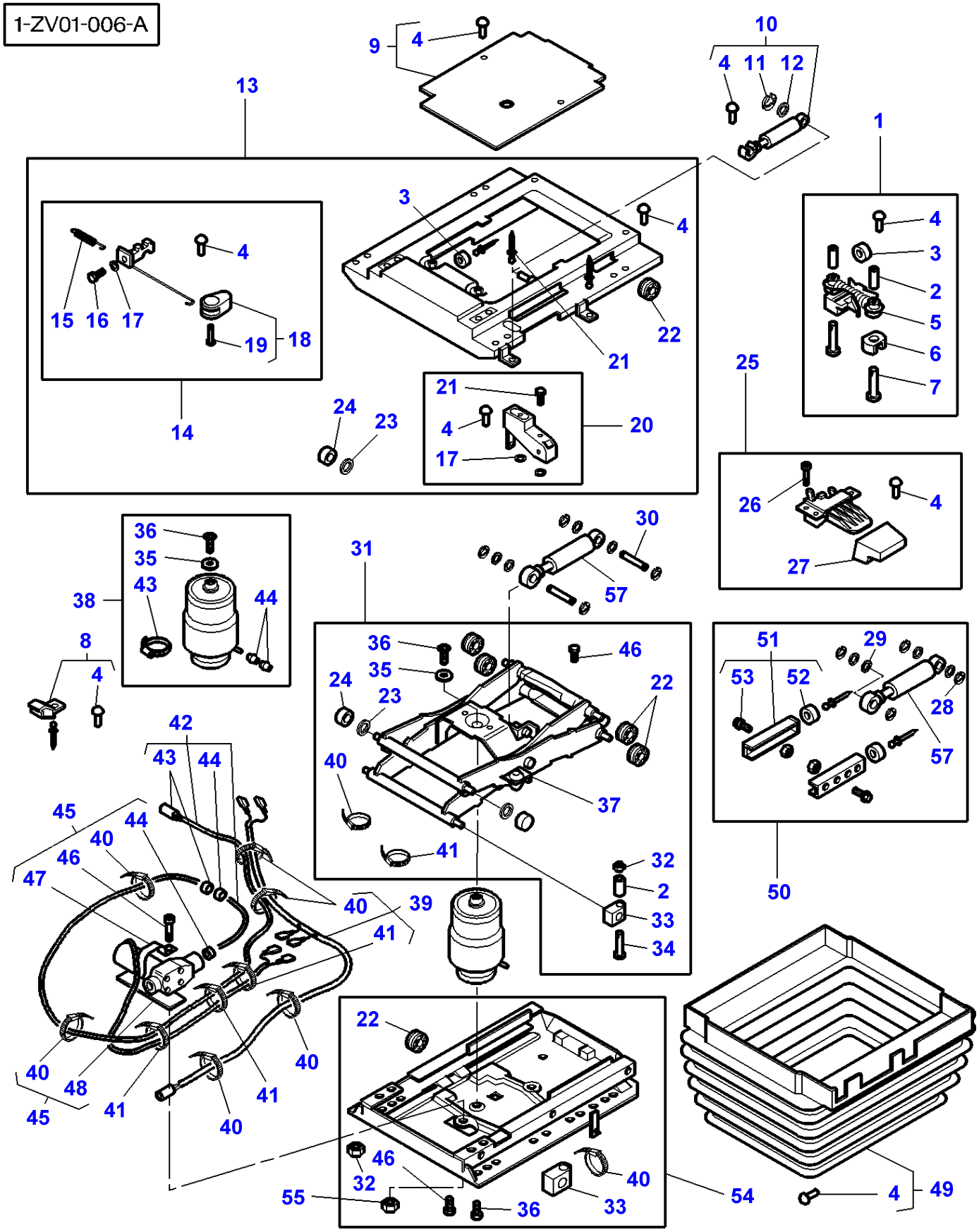
1-ZV01-006-A
9
4
10
4 11 12
13
1
3
4
4
3
2
5
6
7
15 16 17
19
18
22
21
14
24
23
21
4
17
20
25
26
4
27
36
35
43
44
38
8
4
31
30
57
36
35
24
23
46
22
40
37
41
32
2
33
34
51
29
53
52
28
57
50
42
43
44
45
44
40
46
47
40
39
41
40
48
41
45
41
40
40
22
46
32
55
36
33
40
54
4
49

https://truckmanualshub.com/

Item	Part Number	Qty	Description	Comments
1	3903032M91	1	Shock Absorber	
2	3105404M1	4	Tube	
3	3903040M1	1	Buffer	
4	1719896M1	24	Plug	
5	3903033M1	2	Insert	
6	3903034M1	1	Buffer	
7	339287X1	2	Screw Metric	M8x35
8	3903036M1	2	Stop	
9	3903037M91	1	Housing	
10	3903039M91	1	Shock Absorber	M8
11	1441206X1	1	Lock Washer	Diameter 6 MM
12	390972X1	2	Washer Metric	Diameter 8,4 MM
13	3903038M91	1	Fit Plate Seat	
14	3903045M91	1	Rod Link	
15	3903044M1	2	Spring	
16	3903064M1	1	Screw	Diameter 3,5 MM Length 12 MM
17	339362X1	3	Washer	Diameter 4 MM
18	3903046M91	1	Handle	
19	3903065M1	1	Screw	4x14
20	3903041M91	1	Parts Pack	
21	3103289M1	2	Rivet	4x12
22	3903050M1	4	Roller	
23	3903048M1	2	Ring	
24	3105382M1	2	Bearing Needle	
25	3903164M91	1	Selector	Replace and repair. Old interchangeable with new 3903043M91
26	3903063M1	3	Screw	5x16
27	3903042M1	1	Handle	
28	390287X1	4	Lock Washer	Diameter 10 MM
29	3101663M1	4	Washer	Diameter 13 MM
30	3903035M1	2	Clevis Pin	
31	3903047M91	1	Suspension	
32	1441461X1	2	Locknut	M8
33	3903049M1	2	Bearing Carrier	
34	3903066M1	2	Screw	
35	390972X1	2	Washer Metric	Diameter 8,4 MM
36	3903067M1	2	Screw	8x20
37	1719867M1	2	Protector	
38	3903051M91	1	Accumulator	
39	3903056M91	1	Cable	
40	3105397M1	7	Cable Clamp	
41	3903068M1	4	Tie	
42	3903055M91	1	Pressure Valve	
43	3903052M1	2	Olive	
44	3105395M1	2	Hose Clip	
45	3903057M91	1	Compressor	
46	3001414X1	1	Screw Metric	M8x12
47	3903053M1	1	Clamp	
48	3903054M1	1	Plate	
49	3903060M91	1	Bellows	
50	3903058M91	1	Shock Absorber	
51	3903062M1	1	Stop	
52	3102401M1	2	Buffer	
53	3101996M1	2	Screw Special	M8x16
54	3903059M91	1	Fit Plate Seat	
55	339169X1	2	Nut	M8
56	3903061M91	1	Kit, Repair	[A,B]
57		1	Ram	Not serviced, order REF 50

FOOTNOTE [A] INCLUDE ITEM 2/3/4/6/22/23/24/33/35/36/37/ 40/41/44/46/51
FOOTNOTE [B] NOT ILLUSTRATED

1-ZZ02-001-B

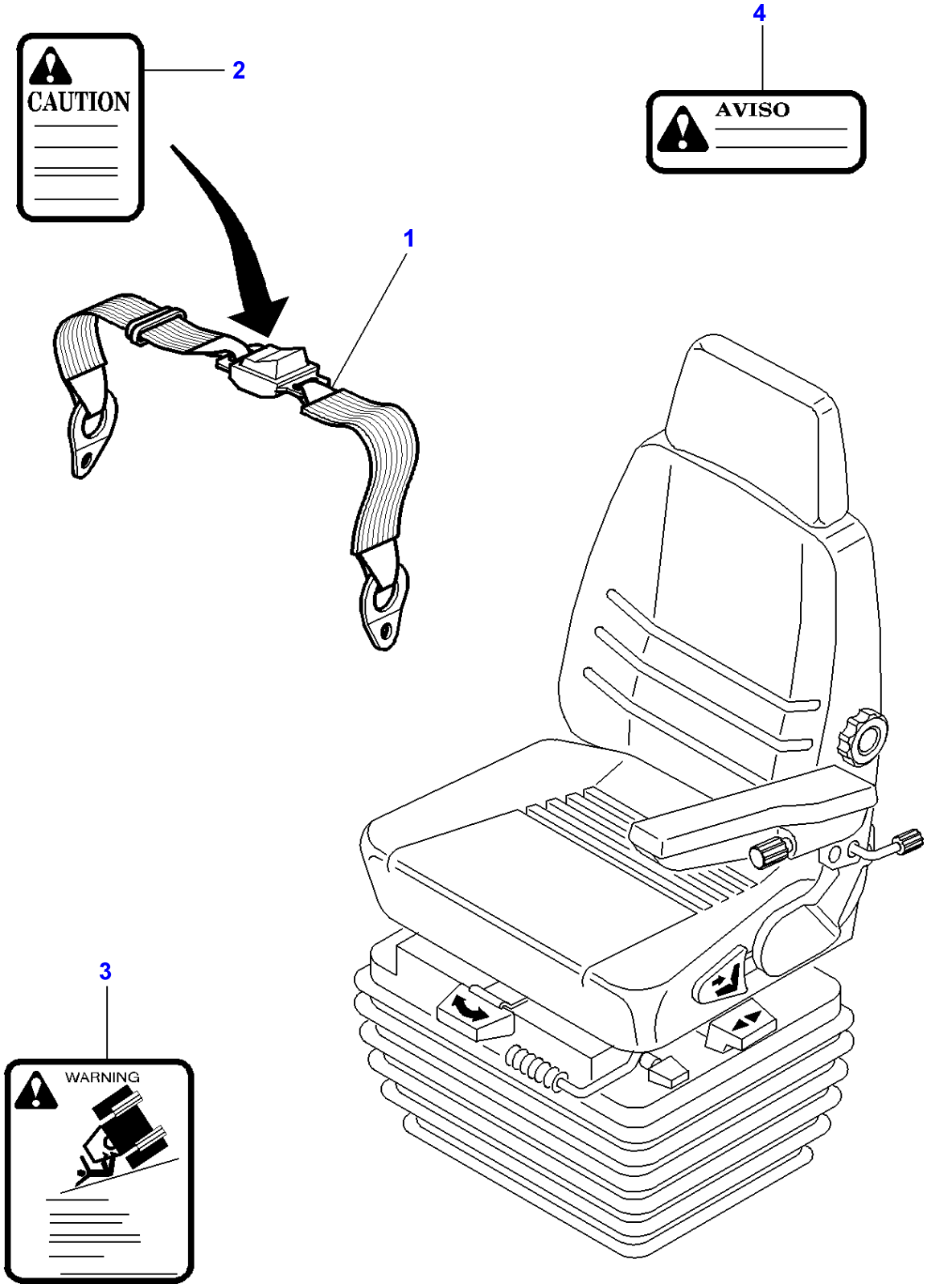

https://truckmanualshub.com/

Item	Part Number	Qty	Description	Comments
1	3772121M91	1	Safety Belt	
2	523784M3	1	Decal	For UK only or any text in English only
	3597443M1	1	Decal	For Germany only or any text in German only
	3597445M1	1	Decal	[A]
3	3760678M1	1	Decal	For UK only or any text in English only
4	3597454M1	1	Decal	[A]

FOOTNOTE [A] SPANISH

https://truckmanualshub.com/

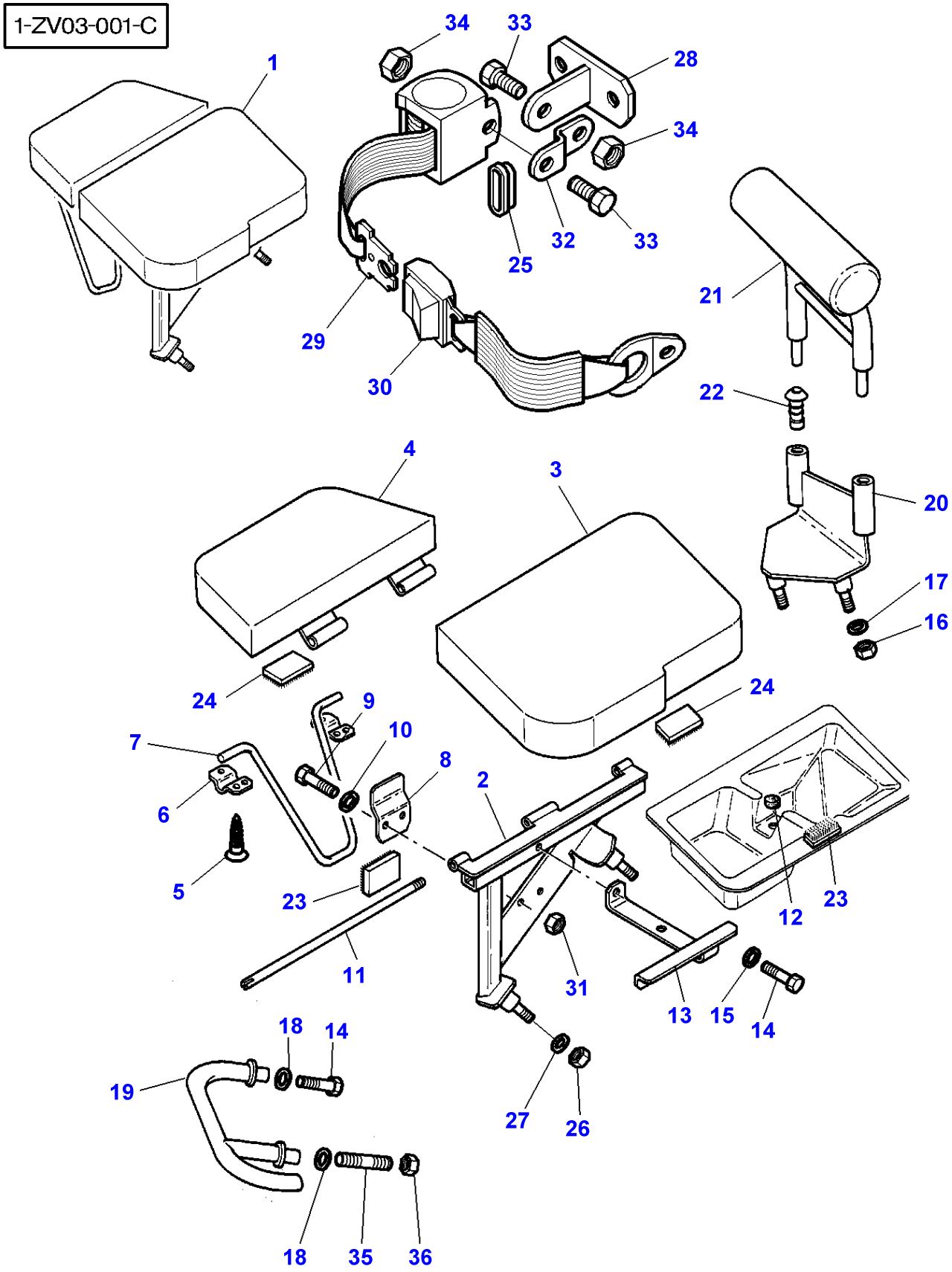

https://truckmanualshub.com/

Item	Part Number	Qty	Description	Comments
1	3779641M92	1	Seat	GREY
2	3712855M3	1	Support	(1)
3	3779636M1	1	Cushion	(1) GREY
4	3779634M1	1	Cushion	(1) GREY
5	3713140M1	6	Screw	(1)
6	3712859M1	2	Bridle	(1)
7	3712861M1	1	Stand	(1)
8	3712856M1	1	Hook	
9	339804X1	2	Hex. Sock. Screw	M6X25
10	390971X1	2	Washer	
11	3712899M1	1	Stem	(1)
12	3616277M1	1	Helmet	
13	3712860M1	1	Angle	(1)
14	339124X1	2	Hex. Sock. Screw	Up to Serial or Engine Number H308001 M8X16
15	390972X1	1	Washer Metric	
16	394367X1	3	Locknut	M8X35
17	390972X1	3	Washer Metric	Diameter 8MM
18	3010467X1	2	Washer	
19	3713139M1	1	Foot Rest	
20	3712857M2	1	Support	
21	3779638M1	1	Back Rest	GREY
22	3713138M1	2	Guide Bush	
23	3714101M1	2	Band	
24	3714102M1	2	Band	
25	3715170M1	1	Tap	
26	394367X1	2	Locknut	
27	390972X1	2	Washer Metric	
28	3715118M1	1	Support	
29	3715151M2	1	Safety Belt	
30	3715149M2	1	Safety Belt	
31	1441500X1	2	Locknut	M6
32	3781090M1	1	Plate	
33	353558X1	2	Screw Unf	7/16x16
34	360201X1	2	Nut Unf	
35	1440022X1	2	Stud	From Serial or Engine Number H308002 M8X20
36	339169X1	2	Nut	From Serial or Engine Number H308002

https://truckmanualshub.com/

Page Title	Page Number
Lighting Equipment - Front	120-0005
Lighting Equipment - Rear	120-0010
TRAFFIC WARNING	120-0015
TRAILOR ELECTRIC SOCKET	120-0020
Field Lights	120-0025
Field Lights - With High Visibility Roof	120-0030
Field Lights	120-0035
ROTATING LIGHT	120-0040

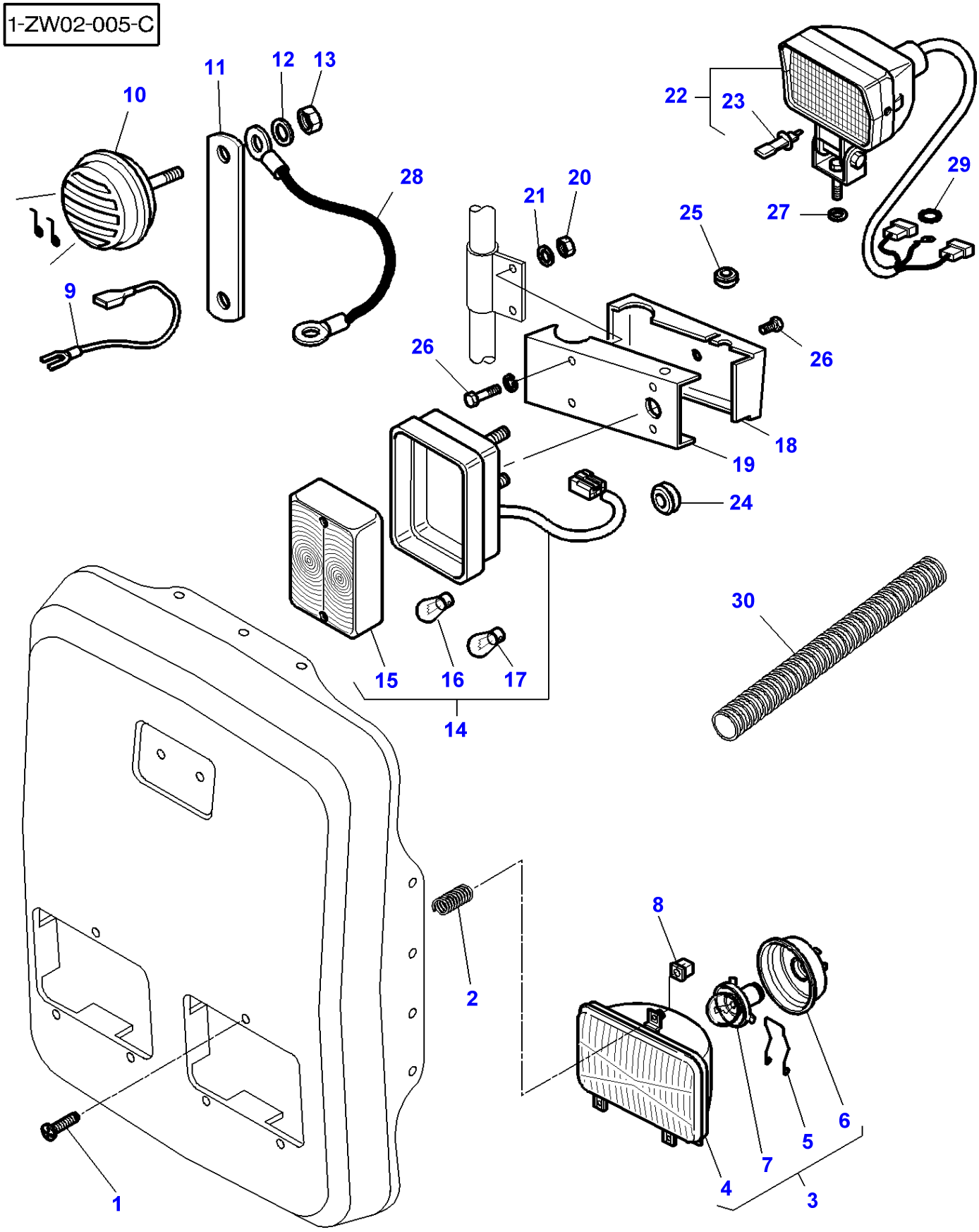
1-ZW02-005-C
10
11
12
13
28
9
22
23
29
27
25
21
20
26
26
18
19
24
30
15
16
17
14
2
8
1
4
7
5
6
3

https://truckmanualshub.com/

Item	Part Number	Qty	Description	Comments
1	3771996M1	6	Screw	
2	3771550M1	6	Spring	
3	3809345M91	2	Headlamp	[A]
	3809346M91	2	Headlamp	[B]
4		1	Housing	(3)
				Not serviced, order REP. NO 4
5	3901522M1	1	Clip	(3)
6	3901521M1	1	Cap	(3)
7	**961866M1**	1	Bulb H/L 45/40w	(3)
8	3809347M1	6	Nut	
9	3042257M1	1	Earth Strap	
10	1678404M1	1	Horn	
11	3778841M1	1	Strap	
12	339374X1	1	Lock Washer	
13	339169X1	1	Nut	M8
14	**3714184M92**	2	Light	
15	3105505M1	1	Lens	(14)
16	**1420037M1**	1	Bulb 12v 5w	(14)
17	**621235M1**	1	Bulb 12v 21w Sbc	(14)
18	3714858M1	1	Case Assy	Left Hand
	3714857M1	1	Case Assy	Right Hand
19	3714316M2	1	Extension	Left Hand
	3714317M2	1	Extension	Right Hand
20	3010477X1	4	Nut Metric	
21	1441100X1	4	Washer	
	390469X1	4	Washer Metric	
22	**3714399M92**	2	Lamp	
23	**1628494M1**	1	Bulb H3	(22)
24	3042523M1	2	Plug	Diameter 10-15
25	338977X1	2	Grommet	Diameter 8-16
26	3010578X1	6	Screw	M5X10
27	385362X1	2	Washer Metric	
28	3782897M1	1	Earth Strap	
29	22428X	2	Lock Washer	
30	5016845M1	1	Sheath	

FOOTNOTE [A] WHITE BULB.FOR LH DRIVING
FOOTNOTE [B] WHITE BULB.FOR RH DRIVING

1-ZW03-005-B

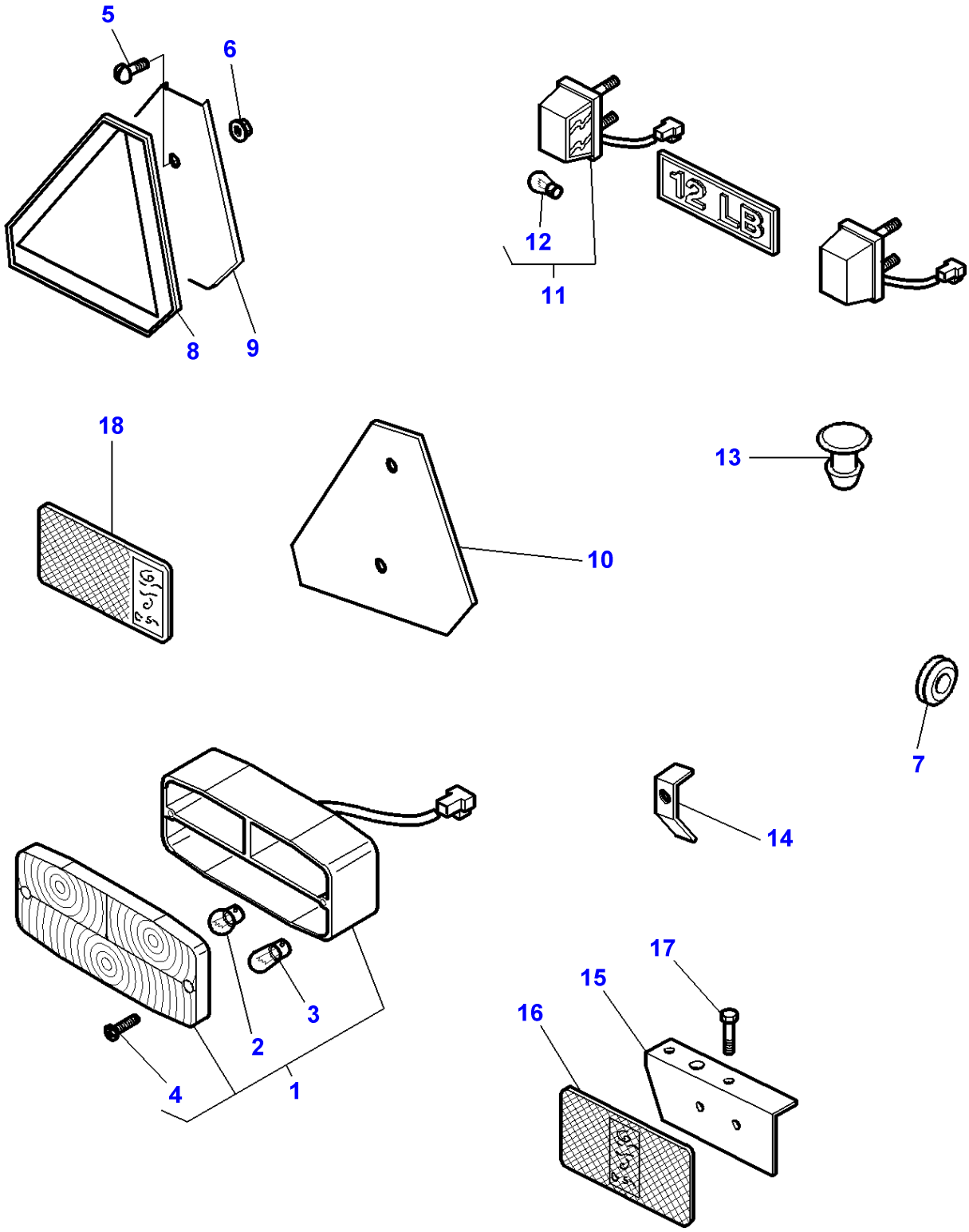

https://truckmanualshub.com/

Item	Part Number	Qty	Description	Comments
1	3781445M92	1	Rear Light	Left Hand
	3781444M92	1	Rear Light	Right Hand
2	**621235M1**	2	Bulb 12v 21w Sbc	(1)
3	**3002706X1**	1	Bulb 12v 10w	(1)
4	1440827X1	2	Screw	(1) M5X30
5	3580257M1	2	Screw	M5X20
6	3010477X1	2	Nut Metric	
7	3580984M1	2	Grommet	Diameter 21/10-28
	3777000M1	2	Grommet	Diameter 21-25MM
8	3712185M1	1	Triangle	[B]
9	3389910M92	1	Plate	
10	71379435	1	Triangle	
11	3619018M91	2	N/Plate Lamp	
12	3042087M1	1	Bulb 12v 10w	(11)
13	3713404M1	1	Plug	Diameter 15MM
14	3713696M1	4	Bridle	
15	3052943M2	1	Bearer	Left Hand
	3052944M2	1	Bearer	Right Hand
16	3581703M1	2	Reflector	105X55
17	339124X1	4	Hex. Sock. Screw	M8X16
18	3389596M1	X	Reflector	[A] 31,5X70

FOOTNOTE [A] ADHESIVE
FOOTNOTE [B] WITH HOLES

https://truckmanualshub.com/

1-ZW27-002-A

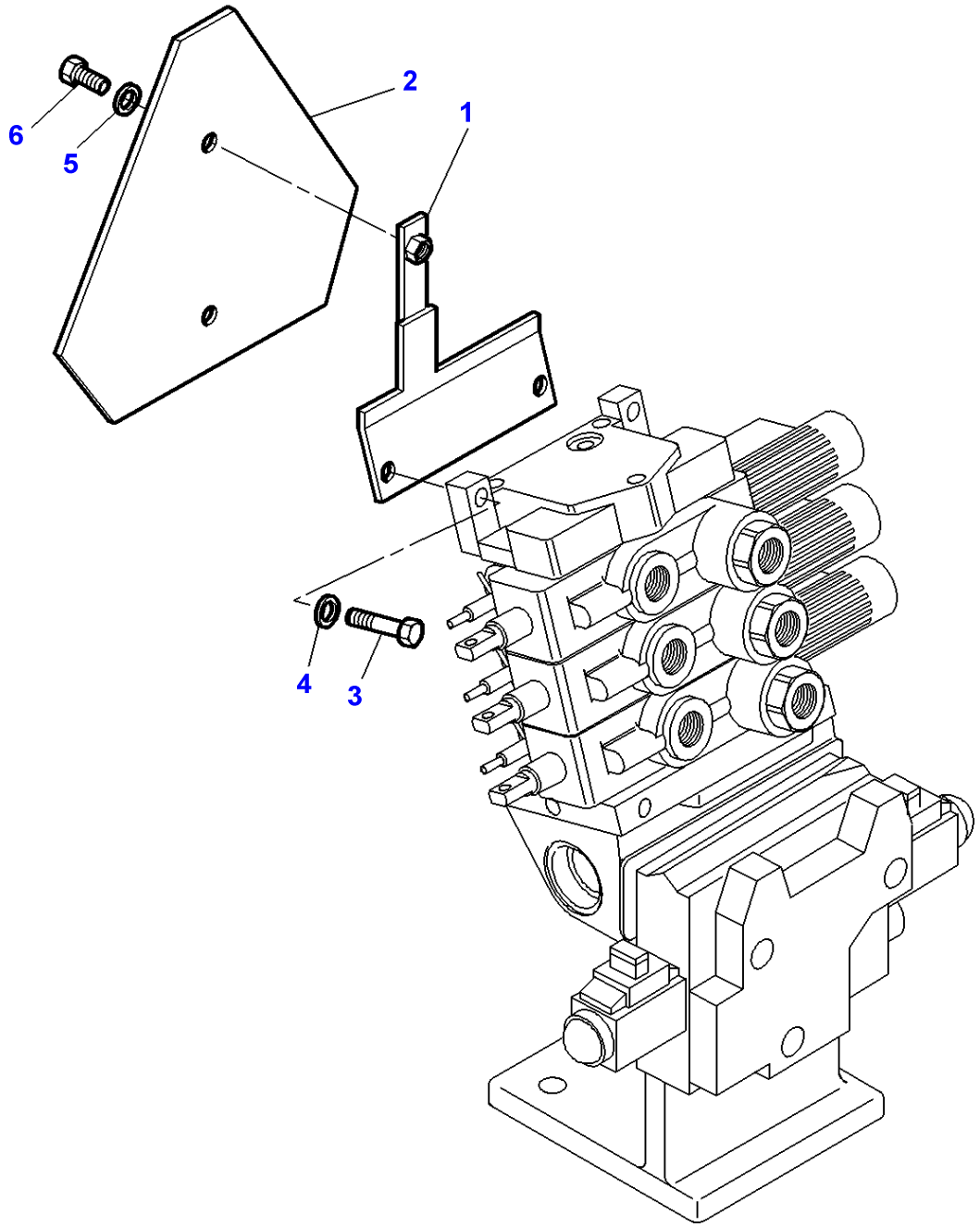

https://truckmanualshub.com/

Item	Part Number	Qty	Description	Comments
1	3779136M92	1	Support	
2	71379435	1	Triangle	
3	3009494X1	2	Screw Metric	M10X35
4	390734X1	2	Washer	
5	390971X1	2	Washer	
6	339560X1	2	Hex. Sock. Screw	M6X16

https://truckmanualshub.com/

1-ZW39-003-C

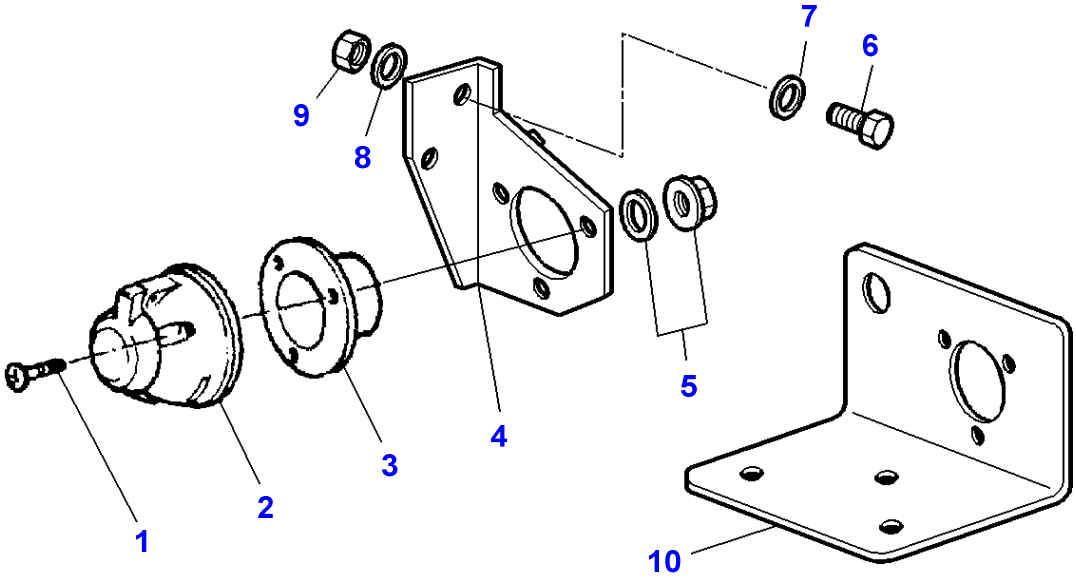

https://truckmanualshub.com/

Item	Part Number	Qty	Description	Comments
1	3009538X1	3	Screw	M5X35
2	409965M1	1	Socket 7 Pin Sup	
3	3041656M1	1	Plate	
4	3779126M2	1	Support	Up to Serial or Engine Number 30-JUN-2000
5	3010477X1	3	Nut Metric	
6	339123X1	2	Hex. Sock. Screw	Up to Serial or Engine Number 30-JUN-2000 M8X20
7	22428X	2	Lock Washer	Up to Serial or Engine Number 30-JUN-2000
8	390972X1	X	Washer Metric	Up to Serial or Engine Number 30-JUN-2000
9	339169X1	X	Nut	Up to Serial or Engine Number 30-JUN-2000
10	3783417M1	1	Support	From Serial or Engine Number 01-JUL-2000

1-ZW05-005-A

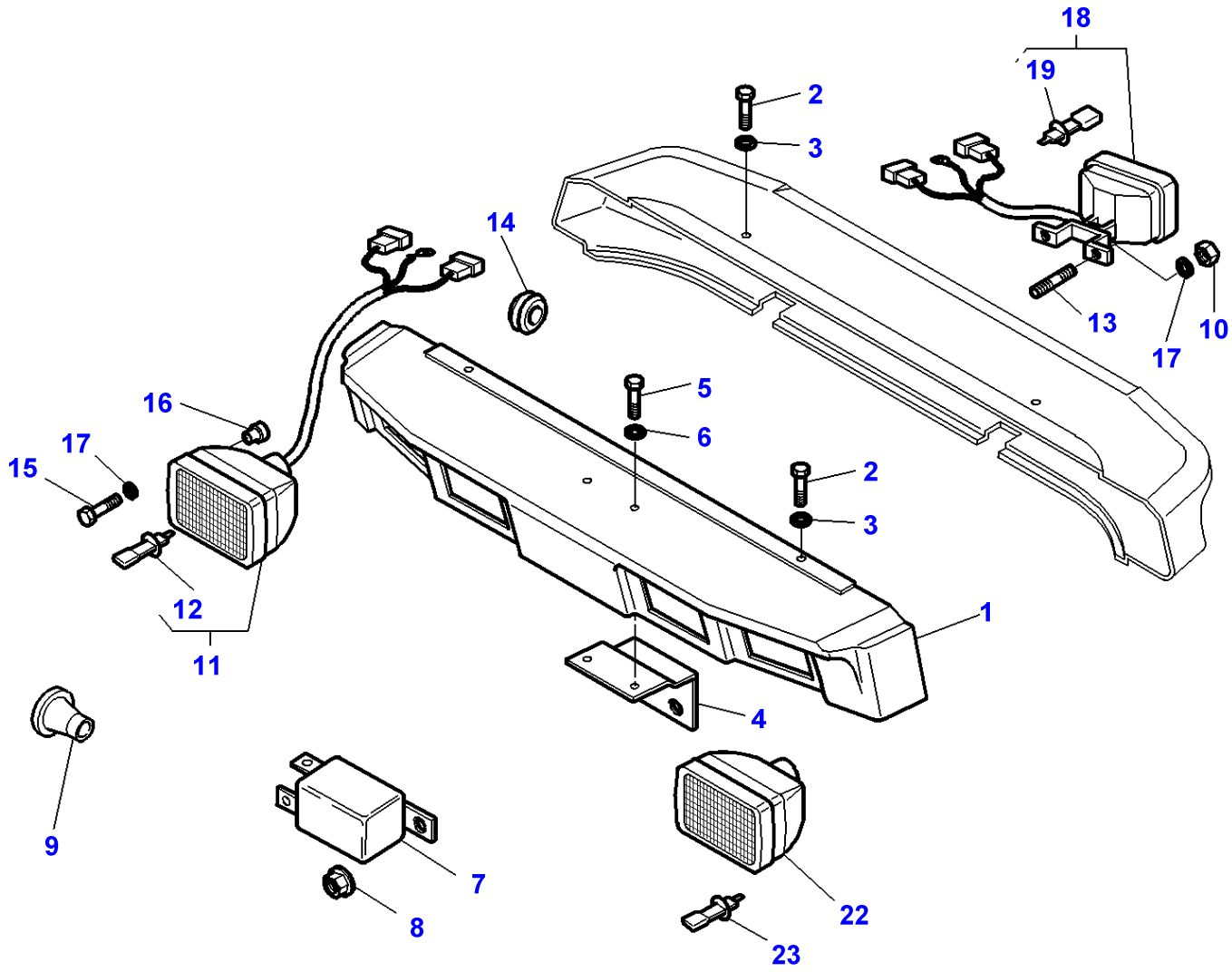

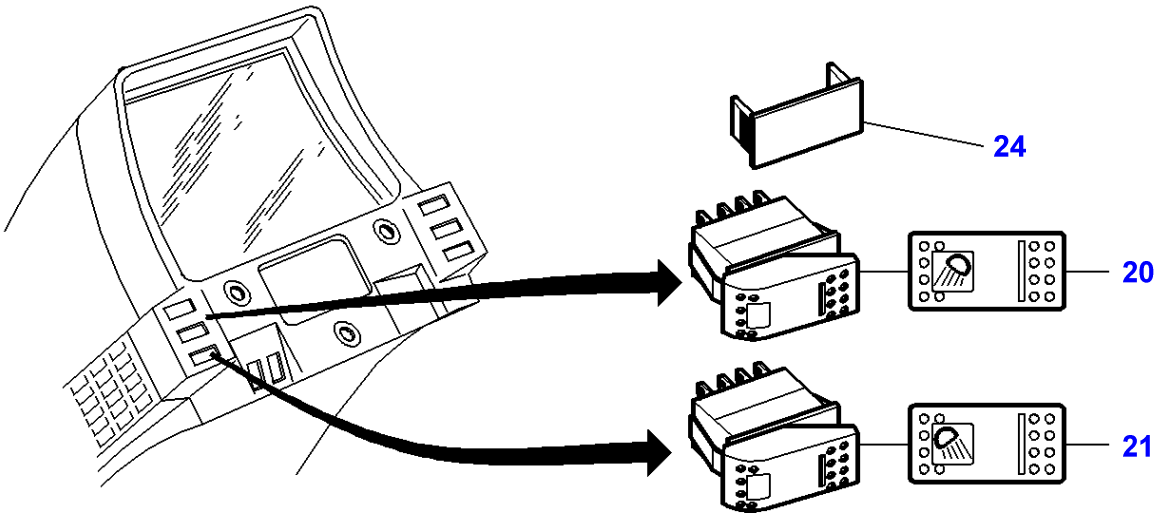

https://truckmanualshub.com/

Item	Part Number	Qty	Description	Comments
1	3780675M1	1	Visor	[A]
	3780676M1	1	Visor	[B]
2	339666X1	4	Hex. Sock. Screw	M6X20
3	391038X1	4	Washer	
4	3714426M1	1	Support	
5	339666X1	2	Hex. Sock. Screw	M6X20
6	391038X1	2	Washer	
7	**3615652M1**	X	Relay	12V-25AMP
8	3010477X1	X	Nut Metric	
9	833062M1	2	Grommet	
10	339169X1	4	Nut	
11	3713132M91	2	Headlamp	[C]
12	**1628494M1**	4	Bulb H3	(11)
13	1440022X1	4	Stud	M8X20
14	3714694M1	X	Grommet	Diameter 7/21
15	3009535X1	8	Screw	M4X30
16	3713803M1	8	Nut	M4
17	390972X1	4	Washer Metric	
18	3713130M91	2	Lamp	[C]
19	**1628494M1**	4	Bulb H3	(18)
20	**3778391M1**	1	Switch,Indirect	
21	**3780552M1**	1	Switch,Indirect	
22	3713134M91	4	Headlamp	[E,F]
	3713137M1	2	Lamp	[G]
23	**1628494M1**	1	Bulb H3	[I] (22)
	3713341M1	2	Bulb 12v 60/55w	[H] (22) H4
24	3713151M1	X	Tap	

FOOTNOTE [A] WITH 4 HEADLAMPS
FOOTNOTE [B] WITH 2 HEADLAMPS
FOOTNOTE [C] WITH 2 BULB WORKLIGHT
FOOTNOTE [E] WITH 1 BULB WORKLIGHT
FOOTNOTE [F] INCLUDE ITEM 13
FOOTNOTE [G] WITH WAY LIGHTS FITTED ON THE CAB ROOF
FOOTNOTE [H] USE WITH 3713137M1
FOOTNOTE [I] USE WITH 3713134M91

https://truckmanualshub.com/

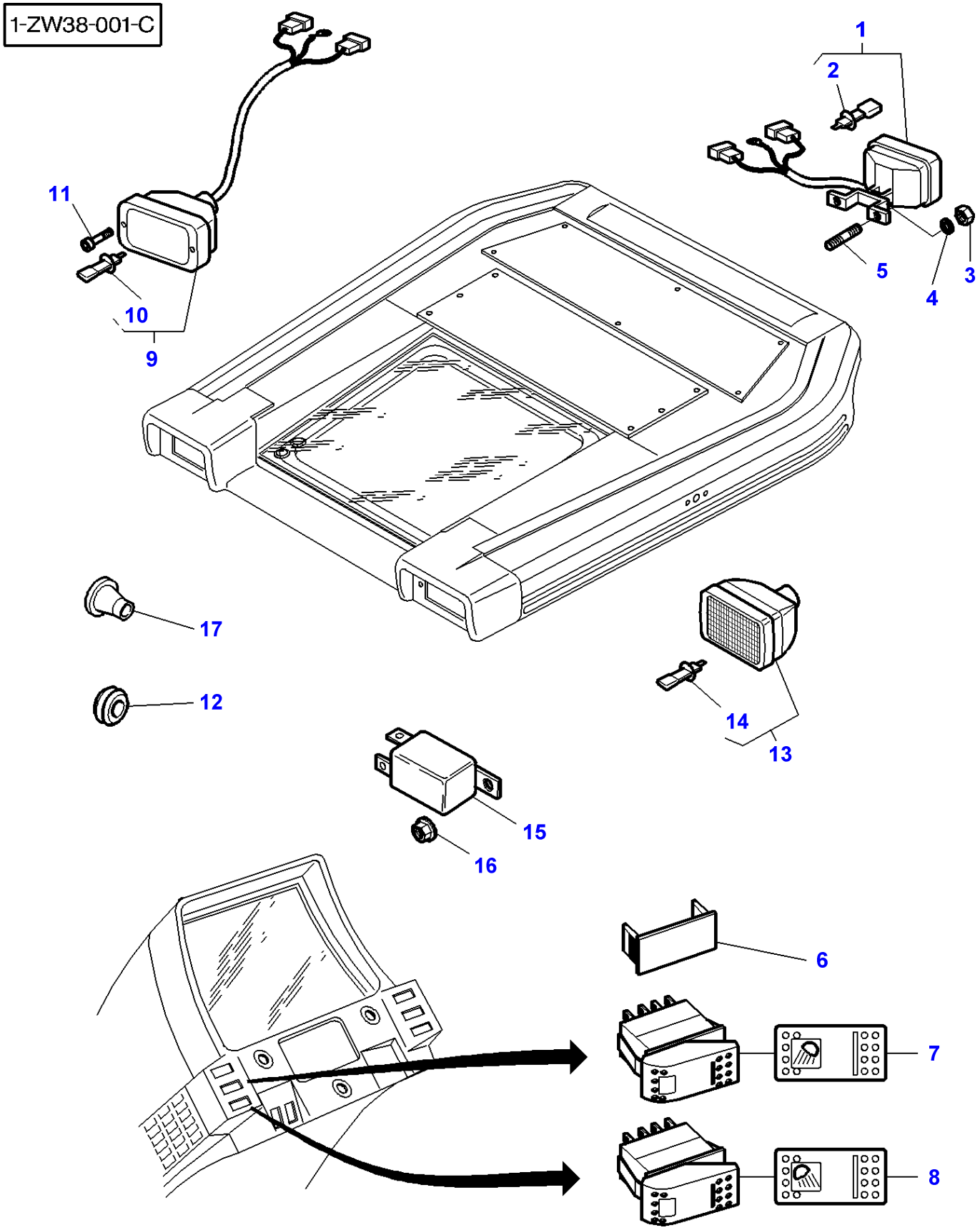

https://truckmanualshub.com/

Item	Part Number	Qty	Description	Comments
1	3713130M91	2	Lamp	[A]
2	**1628494M1**	2	Bulb H3	(1) 12V. 55W.
3	339169X1	4	Nut	
4	390972X1	4	Washer Metric	
5	1440022X1	4	Stud	
6	3713151M1	1	Tap	
7	**3778391M1**	1	Switch,Indirect	
8	**3780552M1**	1	Switch,Indirect	
9	3713132M91	2	Headlamp	[A]
10	**1628494M1**	2	Bulb H3	(9) 12V. 55W.
11	3010742X1	4	Screw Metric	M4X40
12	3714694M1	X	Grommet	
13	3713137M1	2	Lamp	[B]
14	**3713341M1**	2	Bulb 12v 60/55w	(13) H4-12V. 55W.
15	**3615652M1**	X	Relay	12V-25Amp.
16	3010477X1	X	Nut Metric	M5
17	833062M1	2	Grommet	

FOOTNOTE [A] WITH 2 BULB WORKLIGHT
FOOTNOTE [B] WITH WAY LIGHTS FITTED ON THE CAB ROOF
FOOTNOTE [C] WITH 1 BULB WORKLIGHT

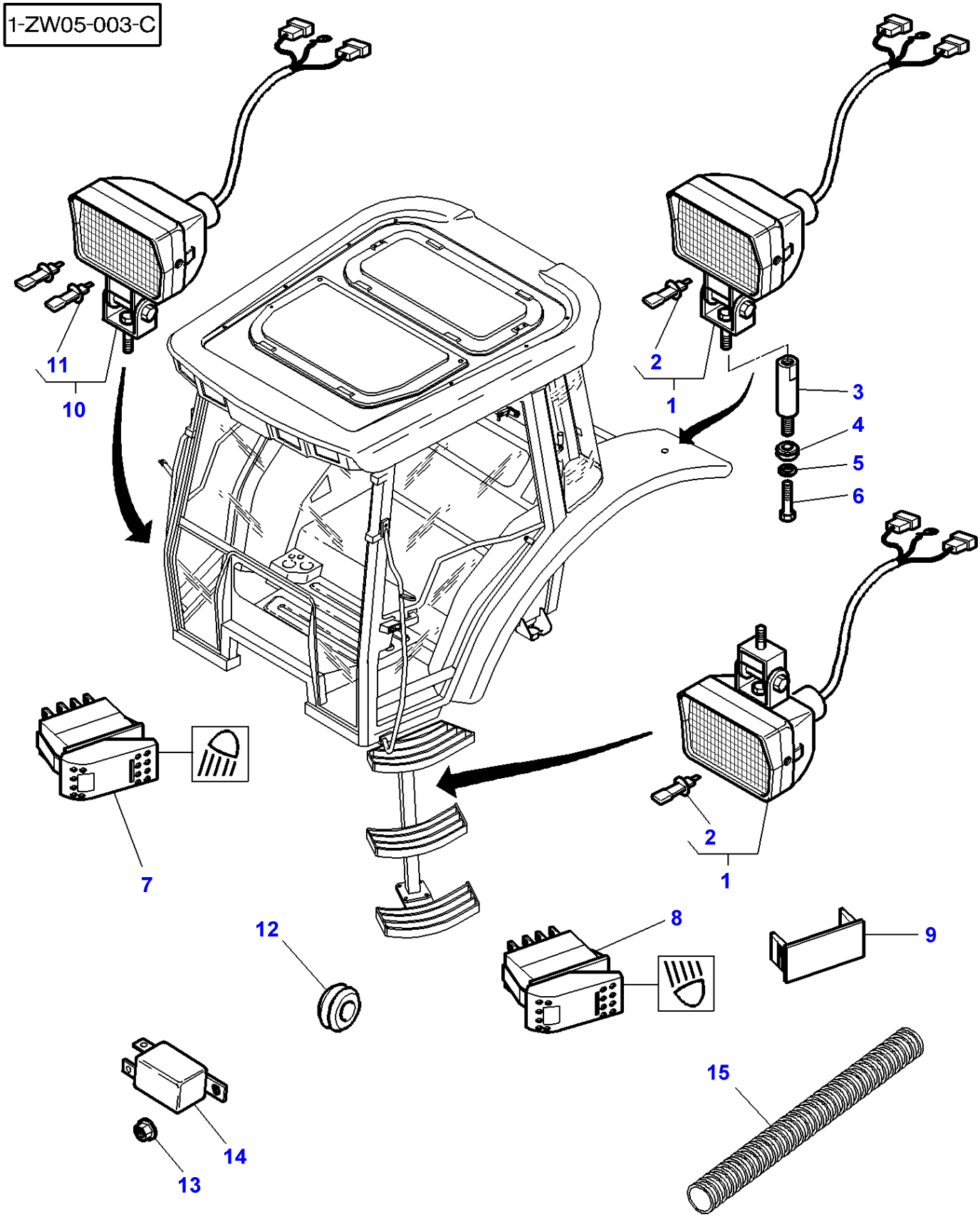
1-ZW05-003-C
11
10
2
1
3
4
5
6
7
2
1
12
8
9
15
14
13

https://truckmanualshub.com/

Item	Part Number	Qty	Description	Comments
1	**3714399M92**	6	Lamp	[C]
2	**1628494M1**	2	Bulb H3	(1) 12V - 55W
3	5016887M2	2	Spacer	From Serial or Engine Number H279035
4	70921230	2	Grommet	Diameter 25-35
5	390734X1	2	Washer	Up to Serial or Engine Number H279034
6	3009491X1	2	Hex. Sock. Screw	Up to Serial or Engine Number H279034 M10X20
7	**3778391M1**	1	Switch,Indirect	
8	3780553M1	1	Switch,Indirect	
9	3713151M1	X	Tap	
10	**3778456M92**	2	Light	[A]
11	**1628494M1**	2	Bulb H3	(10) 12V - 55W
12	367439X1	2	Grommet	Diameter 15-25
13	339030X1	2	Nut Metric	M6
14	**3615652M1**	1	Relay	12V - 25AMP
15	5016845M1	1	Sheath	From Serial or Engine Number J168024

FOOTNOTE [A] WITH 2 BULB WORKLIGHT
FOOTNOTE [B] WITH FIELD LIGHTS ON THE FENDERS
FOOTNOTE [C] WITH 1 BULB WORKLIGHT

https://truckmanualshub.com/

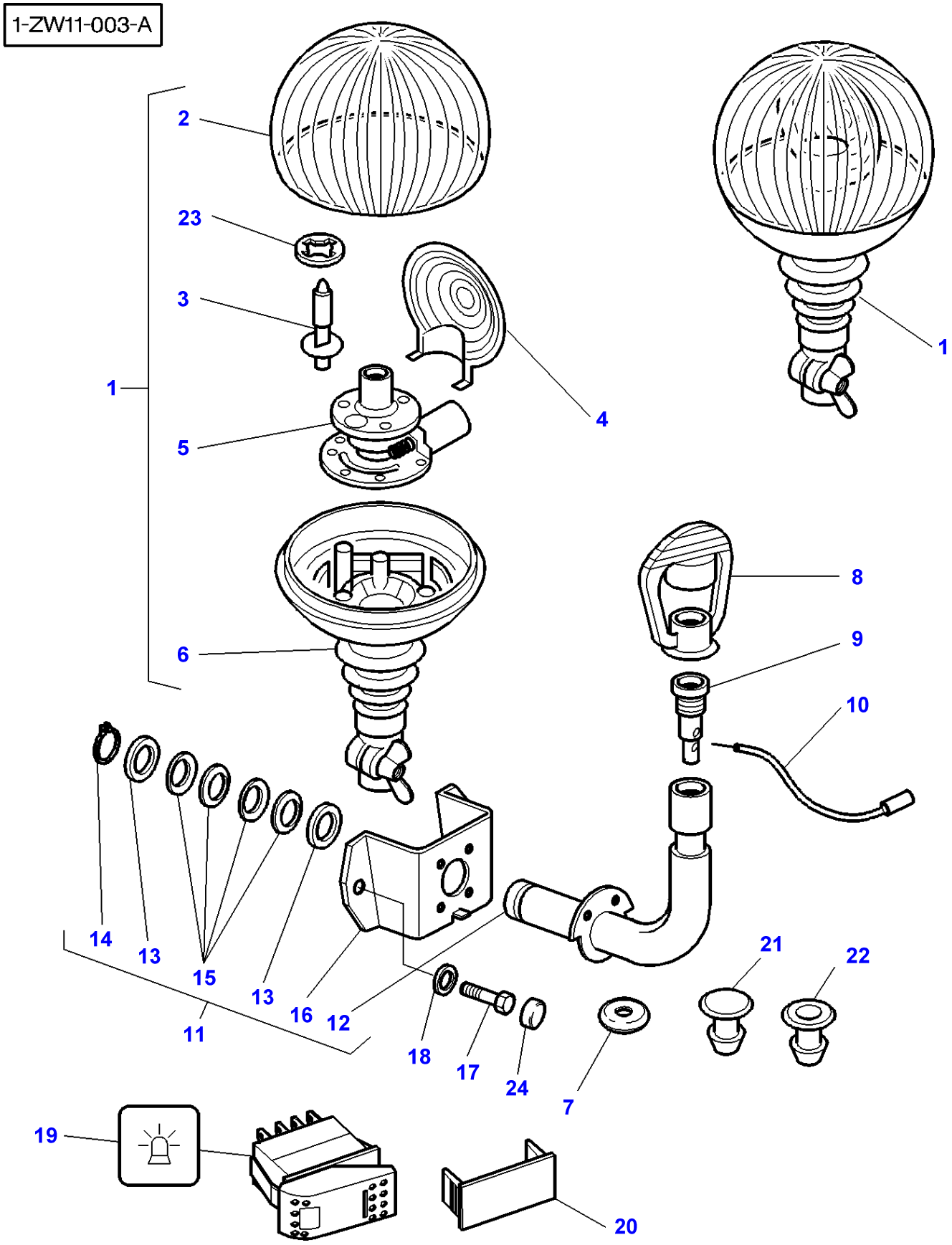

https://truckmanualshub.com/

Item	Part Number	Qty	Description	Comments
1	3715144M92	1	Turning Light	
2	3902469M1	1	Lens	(1)
3	**3405180M1**	1	Bulb 12v	(1)
4	3900282M1	1	Reflectingmirror	(1)
5	3900285M1	1	Engine	(1)
6		1	Support	(1)
				Not serviced, order REF. NO1
7	3714694M1	2	Grommet	
8	3617859M1	1	Helmet	
9	3617860M1	1	Intake	
10	3713260M1	1	Wire	
11	3778093M91	1	Support	
12	3778023M1	1	Tube	(11)
13	3778025M1	2	Washer	(11)
				Diameter 45MM
14	3006699X1	1	Clip	(11)
15	3778094M1	4	Washer	(11)
16	3778024M1	2	Support	(11)
17	339123X1	4	Hex. Sock. Screw	M8X20
18	390972X1	4	Washer Metric	
19	**3713146M1**	1	Switch,Indirect	
20	3713151M1	1	Tap	[A]
21	3713404M1	1	Plug	
22	3713405M2	1	Grommet	
23	3900281M1	1	Bush	(1)
24	3616277M1	4	Helmet	

FOOTNOTE [A] WITHOUT ROTATING LIGHT
FOOTNOTE [B] INDUSTRIAL CAB

https://truckmanualshub.com/

Page Title	Page Number
Front Wheels - 4 Wheel Drive	130-0005
Front Wheels - 4 Wheel Drive - Sirmac	130-0010
Front Wheels - 4 Wheel Drive	130-0015
Front Wheels - 4 Wheel Drive	130-0020
Front Axle 4 Wheel Drive - Mudguards And Supports	130-0025
Front Axle 4 Wheel Drive - Mudguards And Supports - Pivoting	130-0030
Rear Wheels	130-0035
Rear Wheels	130-0040
Rear Wheels	130-0045
Rear Wheels	130-0050
Rear Wheels - Fixing By Cone - Shaft Diameter 95 mm	130-0055
Rear Wheels - Fixing By Cone - Shaft Diameter 110 mm	130-0060
Wheel Weights	130-0065
Wheel Wedges	130-0070

https://truckmanualshub.com/

1-ZL03-006-A

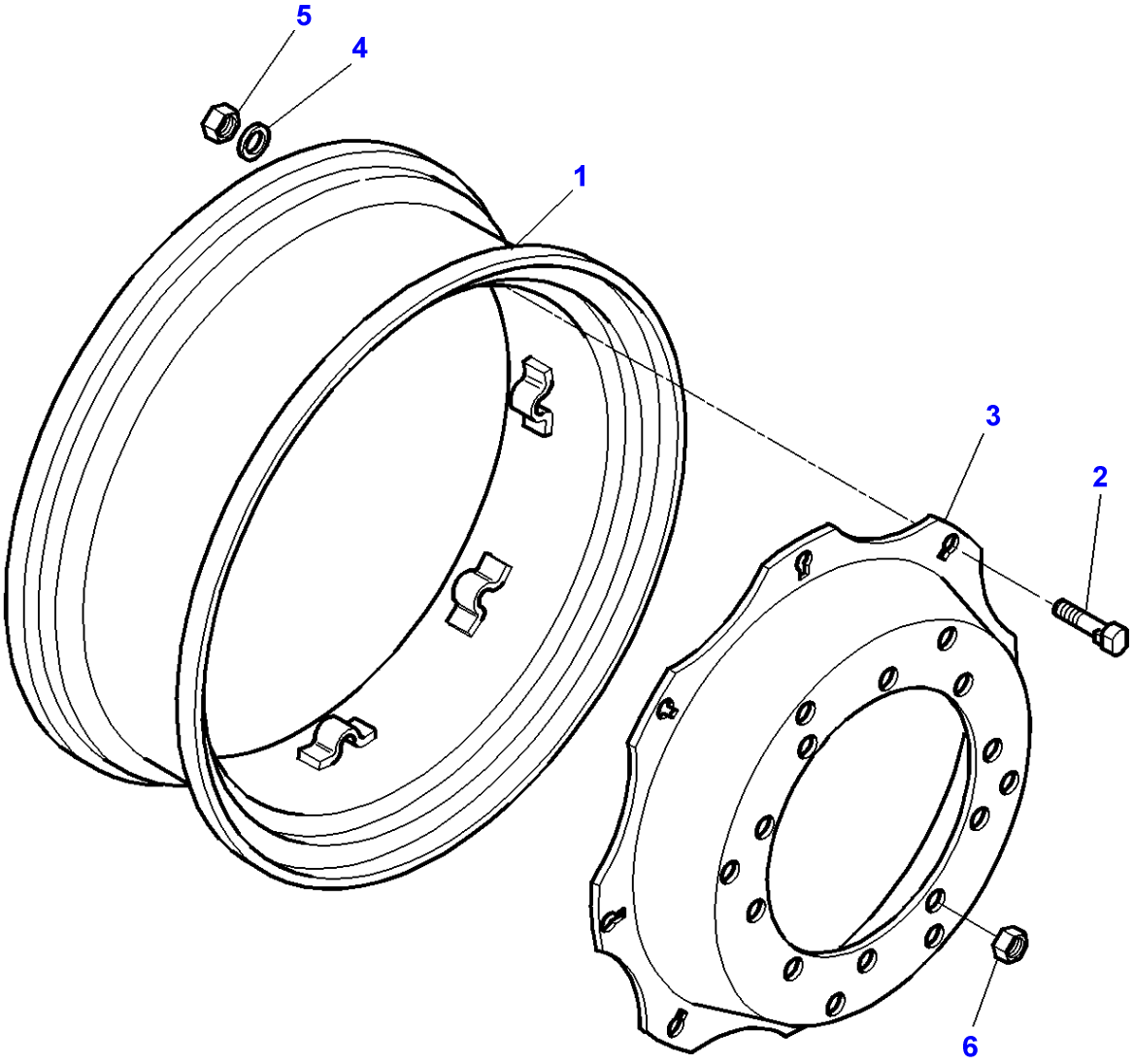

https://truckmanualshub.com/

Item	Part Number	Qty	Description	Comments
1	3714786M1	2	Rim	15x30
2	3384620M1	16	Screw Special	M16X80
3	3712590M1	2	Disc	30"
4	338577X1	16	Washer	
5	1440231X1	16	Nut Metric	M16X1,5
6	3712611M2	20	Nut Special	M22X1,5

https://truckmanualshub.com/

1-ZL03-005-A

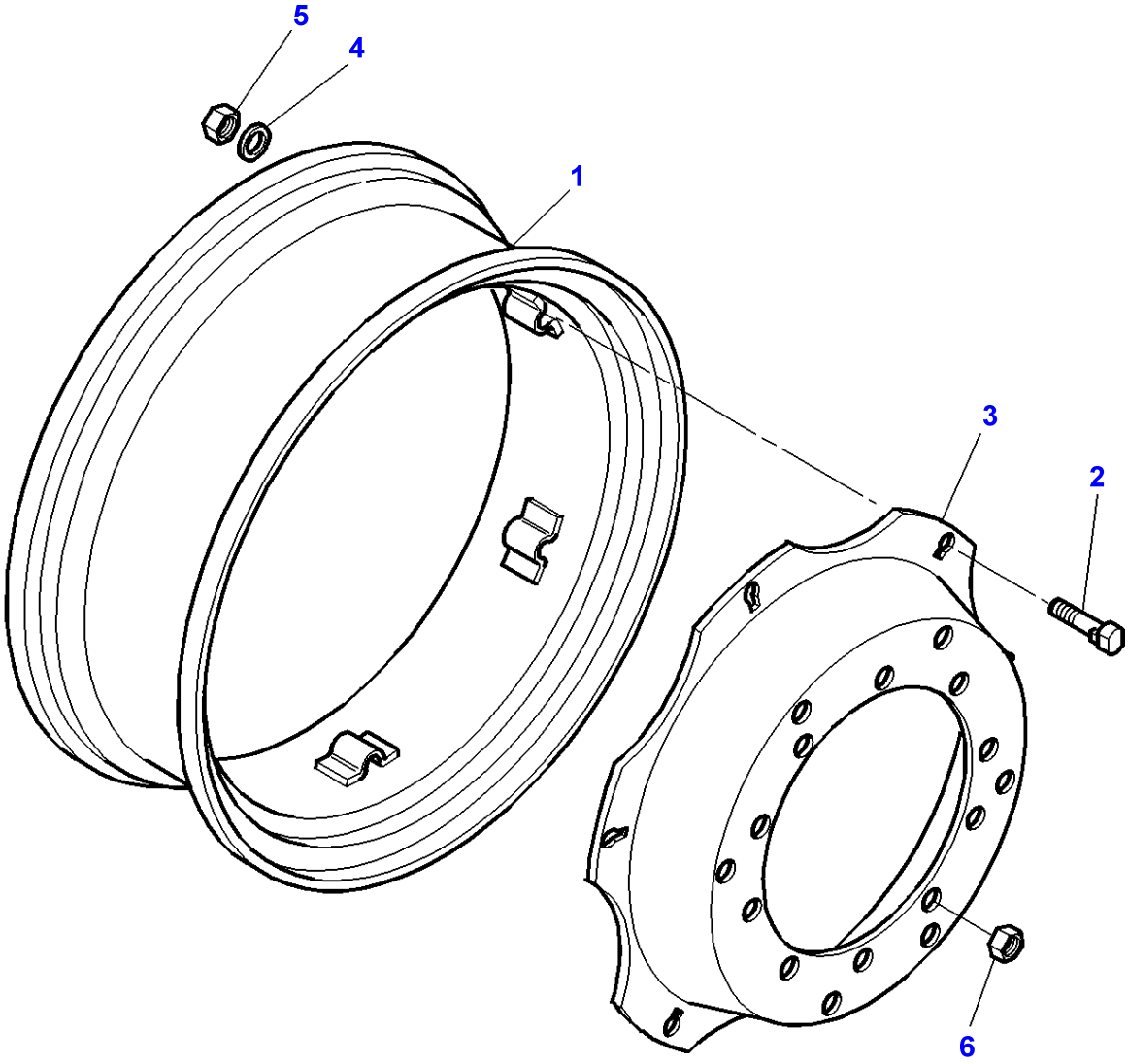

https://truckmanualshub.com/

Item	Part Number	Qty	Description	Comments
1	3583099M2	2	Rim	[E,C] W12 X 28"
	3581857M2	2	Rim	[A,C] W12 X 28"
	3583347M2	2	Rim	[E,G] W14 X 28"
	3581859M2	2	Rim	[A,G] W 14 X 28"
	3714784M1	2	Rim	[A,H] W15L X 28"
2	3384620M1	X	Screw Special	M16X80
3	3712578M1	2	Disc	[A] 28"
	3712587M1	2	Disc	[E] 28"
4	338577X1	X	Washer	
5	1440231X1	X	Nut Metric	
6	**3712611M2**	20	Nut Special	M22

FOOTNOTE [A] 6 BRIDGE PIECES
FOOTNOTE [C] USED WITH 13.6-14.9-340/85-380/70-380/85-420/70-44 0/65-480/65 X 28" TYRES
FOOTNOTE [E] 8 BRIDGE PIECES
FOOTNOTE [G] USED WITH-16.9-420/70-440/65-480/65-480/70-540/65 X 28" TYRES
FOOTNOTE [H] USED WITH 480/65-480/70-540/65 X 28" TYRES

https://truckmanualshub.com/

1-ZL03-004-A

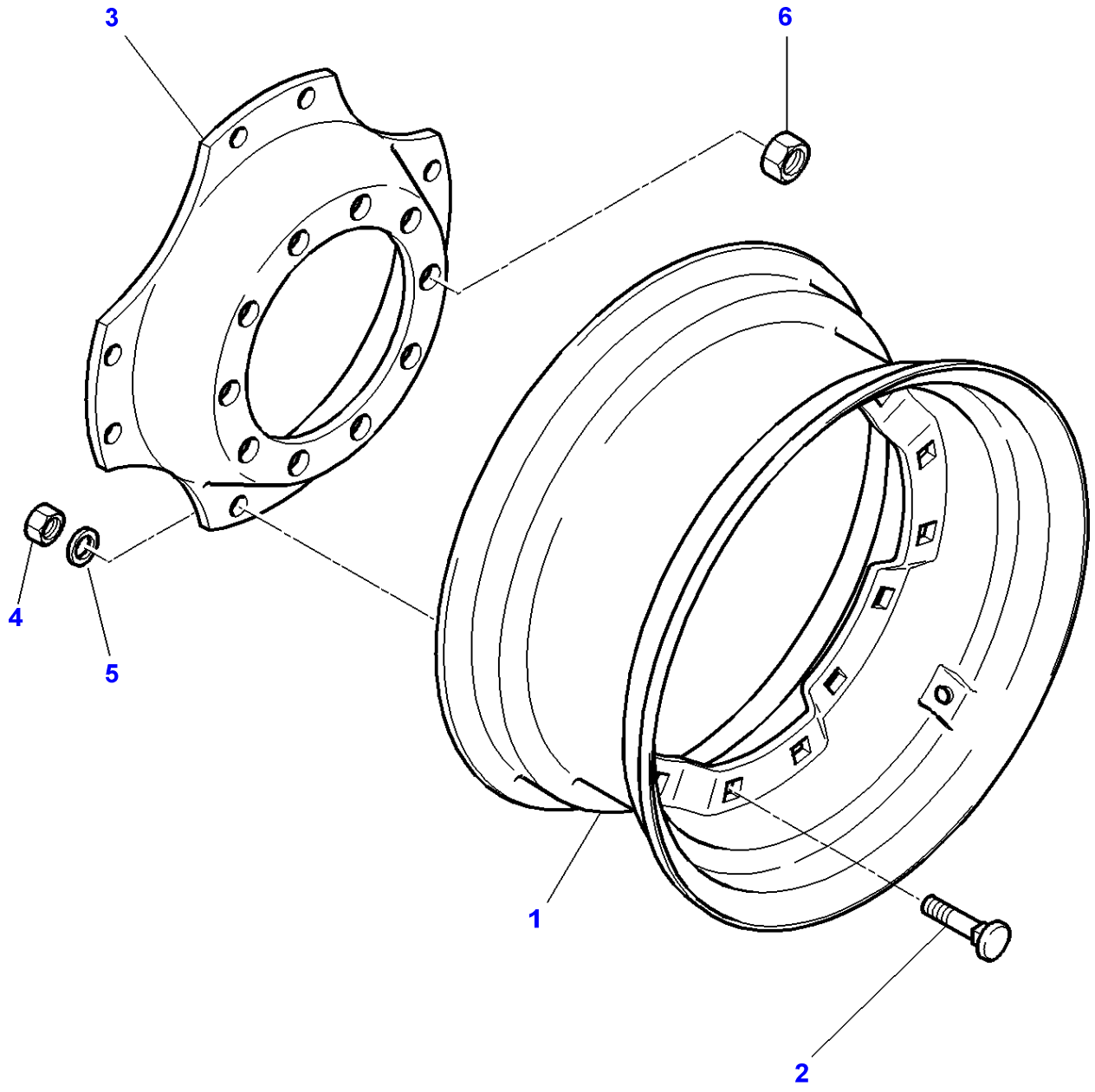

https://truckmanualshub.com/

Item	Part Number	Qty	Description	Comments
1	72508983	2	Rim	28'X12'
	72508984	2	Rim	28'X15'
	72508986	2	Rim	30'X13'
	72508987	2	Rim	30'X15'
	72506345	2	Rim	34'X13'
2	72506938	16	Bolt	
3	72508990	2	Disc	28'X12'-28'X15'
				30'X13'-30'X15'
	72506343	2	Disc	34'X10'-34'X13'
4	70950947	16	Nut	
5	338577X1	16	Washer	
6	**3712611M2**	20	Nut Special	

https://truckmanualshub.com/

1-ZL03-007-A

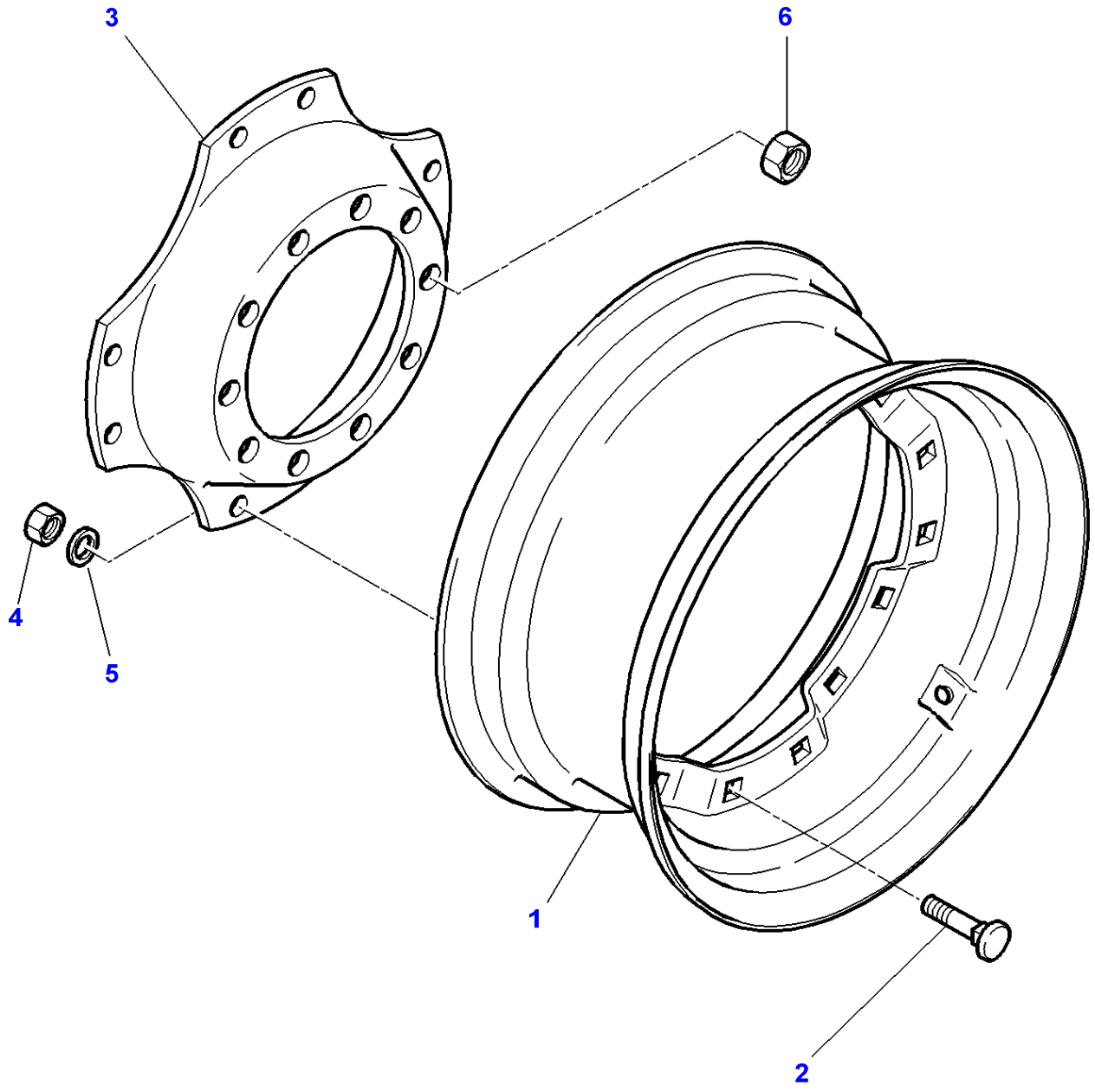

https://truckmanualshub.com/

Item	Part Number	Qty	Description	Comments
1	3903222M1	2	Rim	WD18LX28"
2	3903220M1	16	Screw	
3	3903221M1	2	Flange	
4	3903218M1	16	Nut Special	
5	3903219M1	16	Washer	
6	3712611M2	20	Nut Special	

1-ZK14-004-A

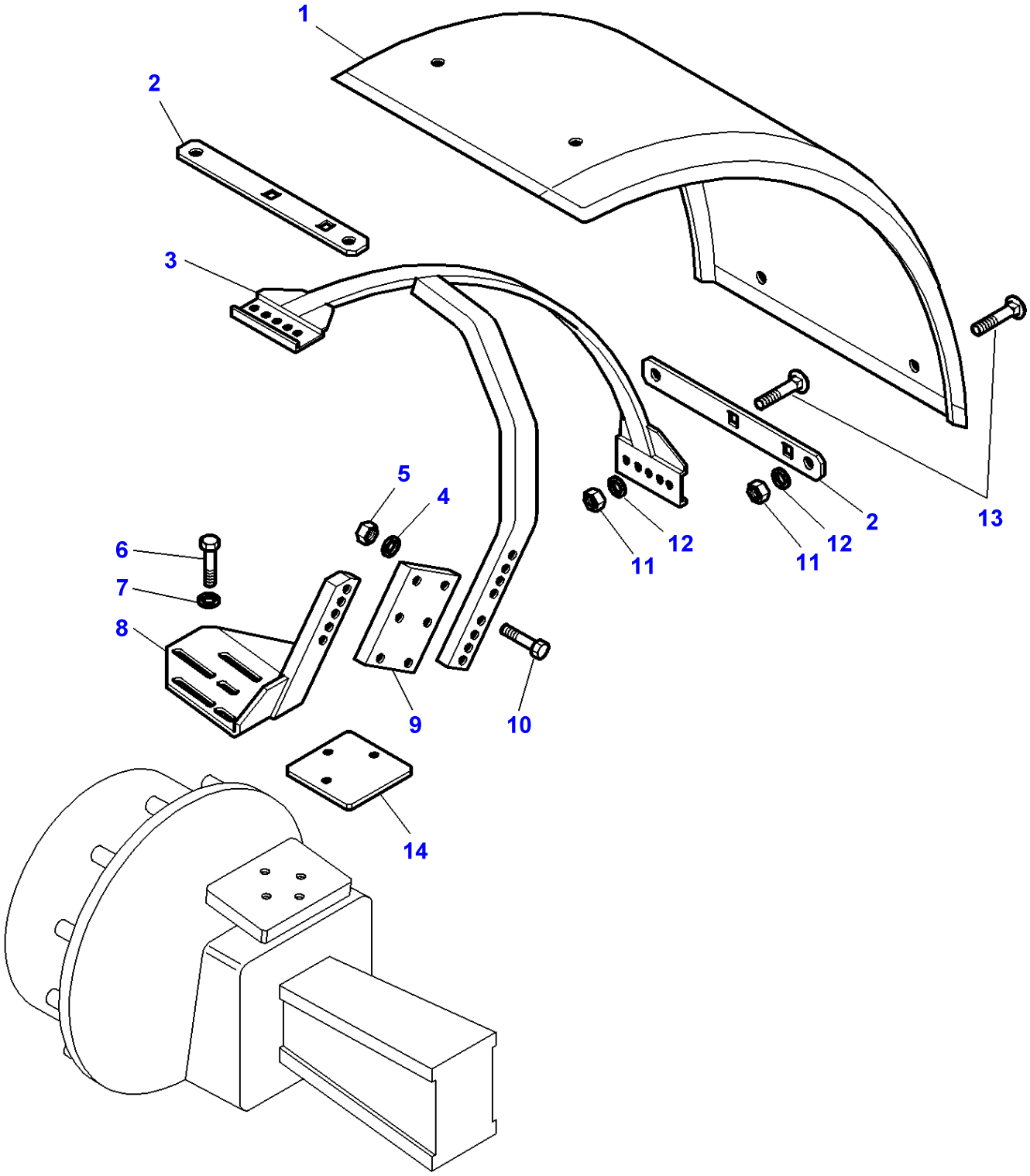

https://truckmanualshub.com/

Item	Part Number	Qty	Description	Comments
1	3619229M2	2	Fender	Width 470MM
	3779567M1	2	Fender	Width 520MM
	3780467M1	2	Fender	Width 620MM
2	3777586M2	4	Plate	Length 340MM
	3777587M2	4	Plate	Length 400MM
	3780468M2	4	Plate	Length 448MM
3	3777588M1	1	Support	Left Hand
	3777590M1	1	Support	Right Hand
4	390735X1	8	Washer	
5	3009695X1	8	Nut	
6	3009506X1	6	Screw Metric	M12X30
7	390735X1	6	Washer	
8	3781337M1	1	Support	Left Hand
	3781336M1	1	Support	Right Hand
9	3779565M2	2	Spacer	
10	3009513X1	8	Bolt Metric	M12X65
11	392310X1	12	Nut Metric	
12	390734X1	12	Washer	
13	385373X1	12	Bolt Metric	M10X25
14	3777717M1	2	Spacer	Up to Serial or Engine Number H091015

1-ZK14-010-A

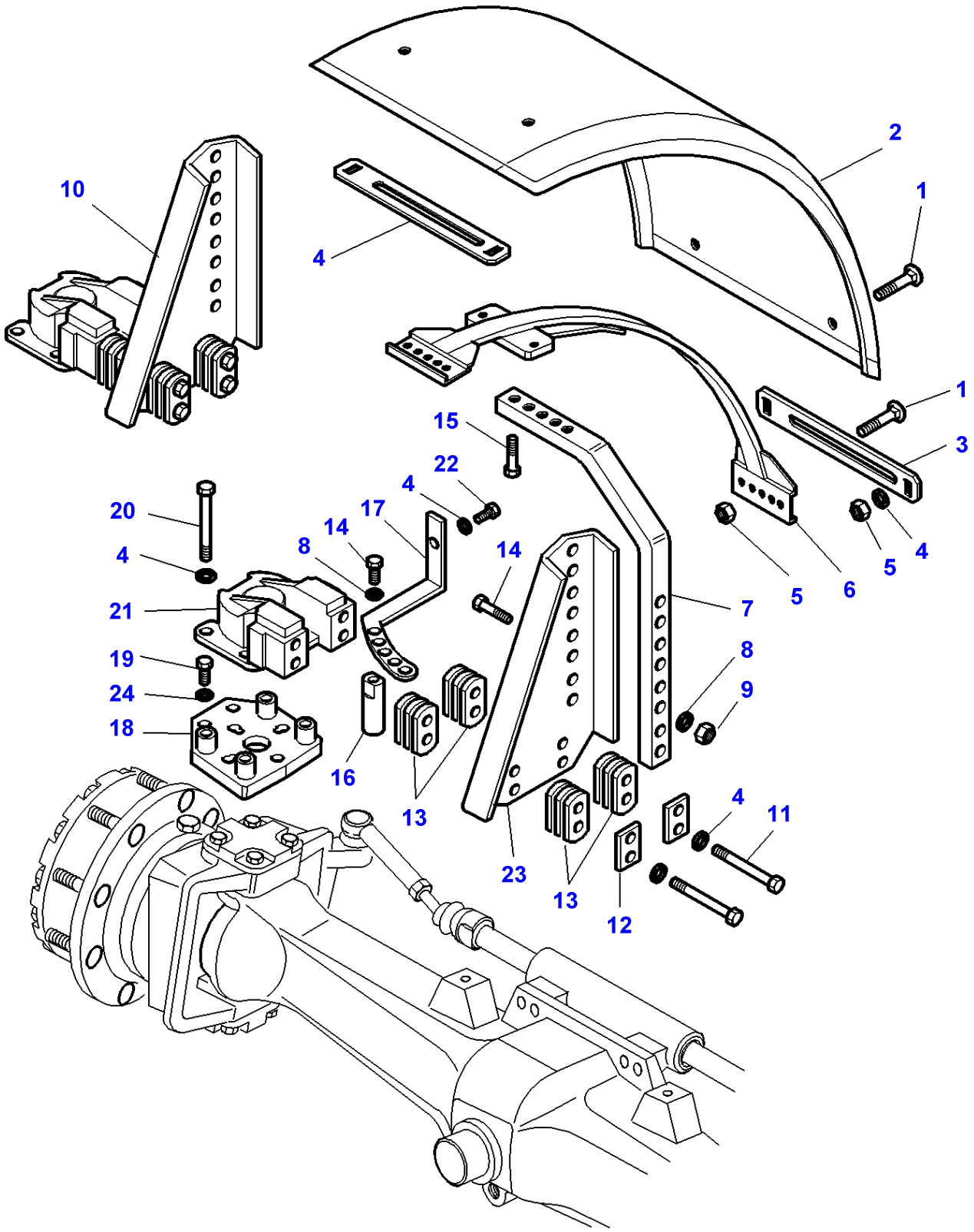
2
1
10
4
1
3
15
22
4
20
17
14
8
14
4
21
19
24
18
16
13
7
5
6
5
4
8
9
4
11
23
13
12

https://truckmanualshub.com/

Item	Part Number	Qty	Description	Comments
1	390809X1	12	Bolt Metric	M10x20
2	3780467M1	2	Fender	Width 620MM
	3619229M2	2	Fender	Width 470MM
	3779567M1	2	Fender	Width 520MM
3	3777586M2	4	Plate	Length 340MM
	3777587M2	4	Plate	Length 400MM
	3780468M2	4	Plate	Length 448MM
4	390734X1	18	Washer	
5	3009693X1	8	Nut Metric	M10
6	3784948M1	2	Safety Frame	
7	3784947M1	2	Arm	
8	390735X1	6	Washer	
9	1442190X1	4	Locknut	M12
10	3784943M91	1	Pivot	Right Hand
	3784944M91	1	Pivot	Left Hand
11	1442602X1	4	Screw Metric	(10) M10X100
12	3785052M1	2	Bridle	(10)
13	3785051M1	26	Spacer	(10)
14	3009509X1	6	Bolt Metric	M12X45
15	1441226X1	4	Screw	M12X40
16	3784976M2	2	Clevis Pin	
17	3785266M1	1	Strap	Left Hand
	3785267M1	1	Strap	Right Hand
18	3785027M1	2	Plate	
19	3009493X1	6	Hex. Sock. Screw	M10X30
20	3009496X1	8	Bolt Metric	M10X45
21	3785053M1	1	Pivot	(10) Right Hand
	3785271M1	1	Pivot	(10) Left Hand
22	3011002X1	2	Screw	M10x35-1,25
23	3785050M1	1	Plate	(10) Left Hand
	3785049M1	1	Plate	(10) Right Hand
24	390734X1	6	Washer	M10

https://truckmanualshub.com/

1-ZM01-004-A

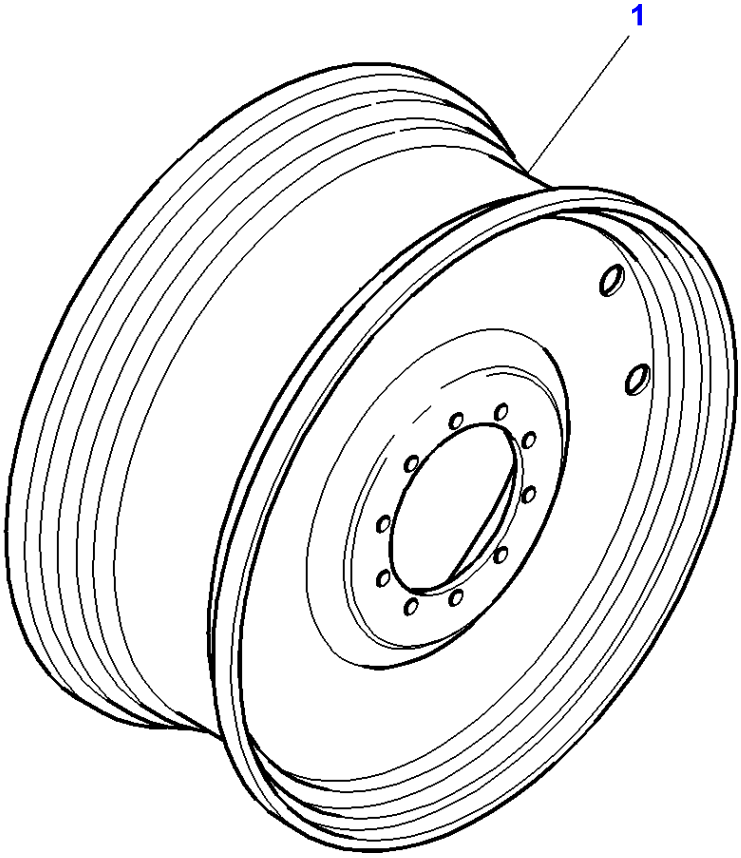

https://truckmanualshub.com/

Item	Part Number	Qty	Description	Comments
1	3781970M1	2	Rim	[A] DWW 16 X 38"
	3781971M1	2	Rim	[B] DWW 18 X 38"
	3781972M1	2	Rim	[C] DWW 23 X 38"
	3781968M1	2	Rim	[D] DWW 16 X 42"
	3781969M2	2	Rim	[E] DWW 18 X 42"
	3781981M1	2	Rim	[G] W 12 X 46"
	3781982M1	2	Rim	[F,G] W 16 X 46"

FOOTNOTE [A] USED WITH 16.9-18.4-20.8-420/85-460/85-480/70 -520/70-540/65 X 38" TYRES
FOOTNOTE [B] USED WITH 20.8-520/70-520/85-580/70-600/65 -650/65 X 38" TYRES
FOOTNOTE [C] USED WITH 650/85-710/70 X 38" TYRES
FOOTNOTE [D] USED WITH 18.4 X 42" TYRES
FOOTNOTE [E] USED WITH 20.8-620/70-350/65-520/85 X 42" TYRES
FOOTNOTE [F] USED WITH 18.4 - 520/85 X 46" TYRES
FOOTNOTE [G] CAN BE TWINED FITTED

https://truckmanualshub.com/

1-ZM01-005-B

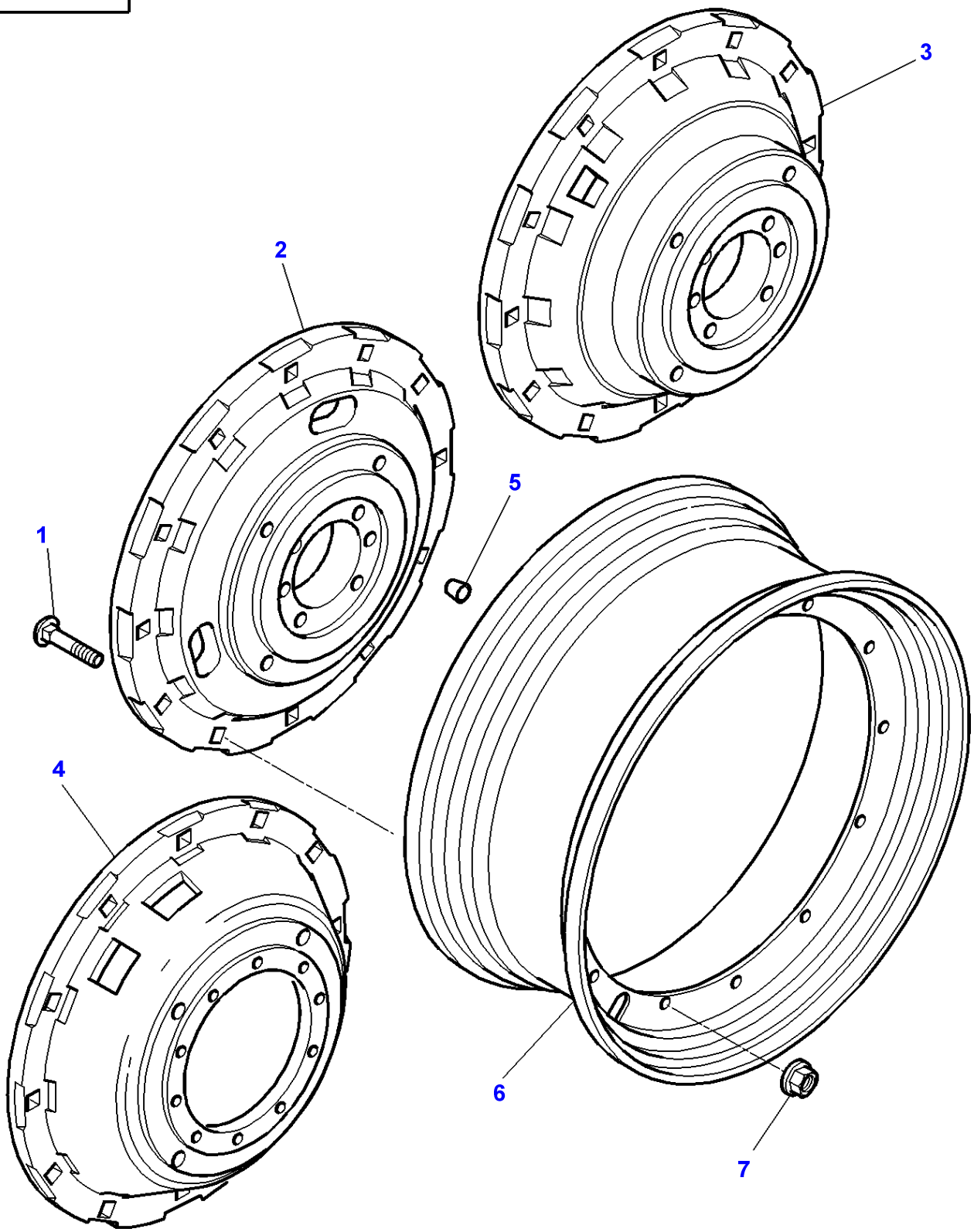

https://truckmanualshub.com/

Item	Part Number	Qty	Description	Comments
1	3384603M1	24	Screw	M18X95 (Single Wheels)
	3384603M1	24	Screw	M18X95 (Dual Wheels)
2	3582139M4	2	Flange	38" (Single Wheels)
3	3615370M3	2	Flange	38" (Single Wheels)
4	3716108M3	2	Weight	(Single Wheels)
	3716108M3	2	Weight	(Dual Wheels)
5	3780302M1	8	Dowel	(Single Wheels)
	3780302M1	8	Dowel	(Dual Wheels)
6	3781929M1	2	Rim	[A,D,E] DWW 16 X 38" (Single Wheels)
	3781929M1	2	Rim	[A,D,E] DWW 16 X 38" (Dual Wheels)
	3781930M1	2	Rim	[B,E,F] DWW 18 X 38" (Single Wheels)
	3781930M1	2	Rim	[B,E,F] DWW 18 X 38" (Dual Wheels)
	3782154M1	2	Rim	[C] DWW 23 X 38" (Single Wheels)
	3782154M1	2	Rim	[C] DWW 23 X 38" (Dual Wheels)
7	3384600M2	24	Nut Special	M18 (Single Wheels)
	3384600M2	24	Nut Special	M18 (Dual Wheels)

FOOTNOTE [A] USED WITH 16.9-18.4-20.8-420/85-460/85-480/70 -520/70-540/65 X 38" TYRES
FOOTNOTE [B] USED WITH 20.8-520/70-520/85-580/70-600/65 -650/65 X 38" TYRES
FOOTNOTE [C] USED WITH 650/85-710/70 X 38" TYRES
FOOTNOTE [D] WITH RIM 3615370M3 CAN BE TWINED FITTED WITH WHEEL 3781970M1
FOOTNOTE [E] WITH RIM 3716108M3 CAN BE TWINED FITTED WITH WHEEL 3781971M1
FOOTNOTE [F] WITH RIM 3615370M3 CAN BE TWINED FITTED WITH WHEEL 3781971M1

https://truckmanualshub.com/

1-ZM01-007-B

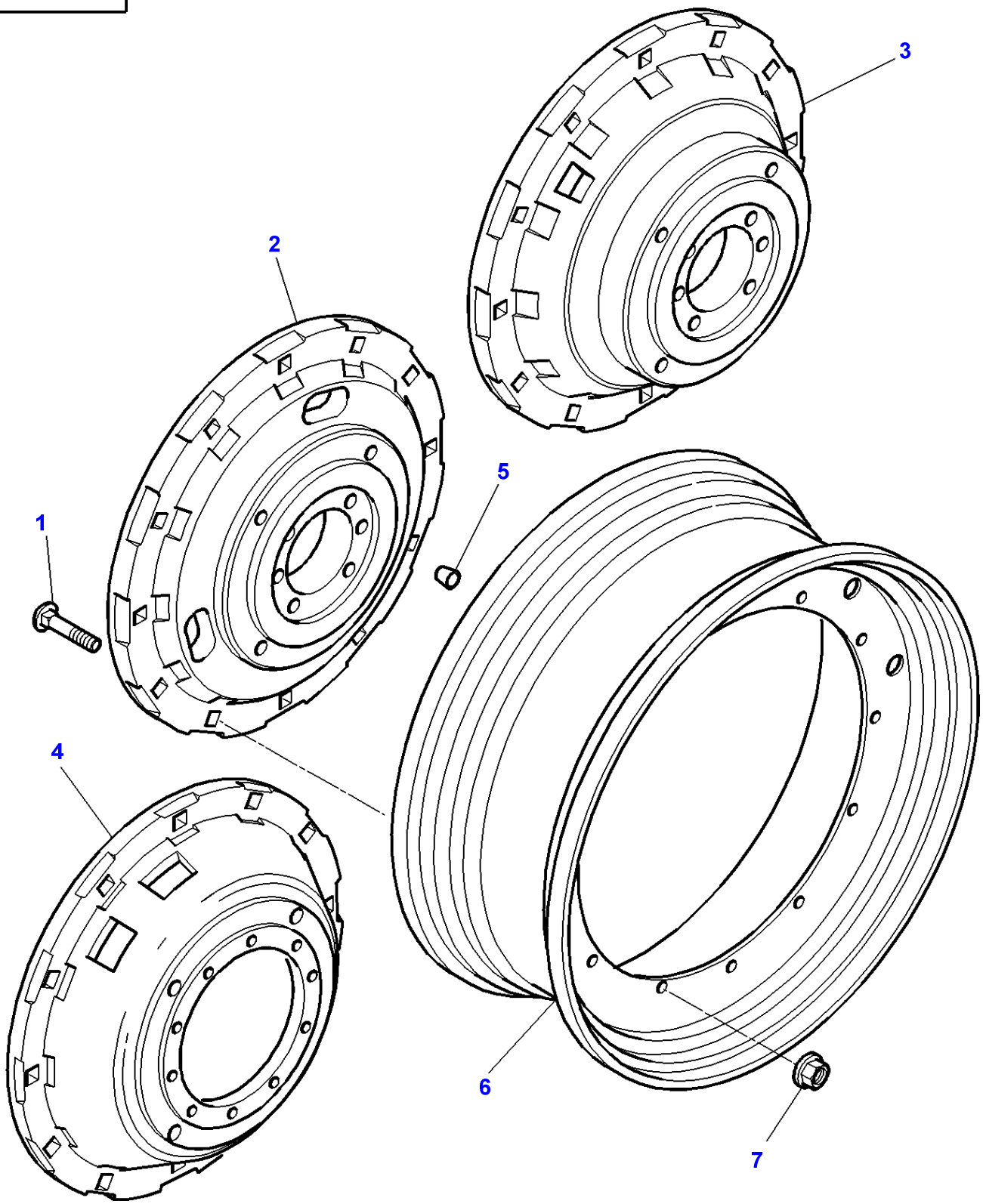

https://truckmanualshub.com/

Item	Part Number	Qty	Description	Comments
1	3384603M1	24	Screw	M18X95
2	3582139M4	2	Flange	38"
3	3615370M3	2	Flange	38"
4	3716108M3	2	Weight	
5	3780302M1	8	Dowel	
6	3782156M1	2	Rim	W 12 X 46"
	3782157M1	2	Rim	[A] W 16 X 46"
7	**3384600M2**	24	Nut Special	M18

FOOTNOTE [A] USED WITH 18.4 - 520/85 X 46" TYRES

https://truckmanualshub.com/

1-ZM01-009-B

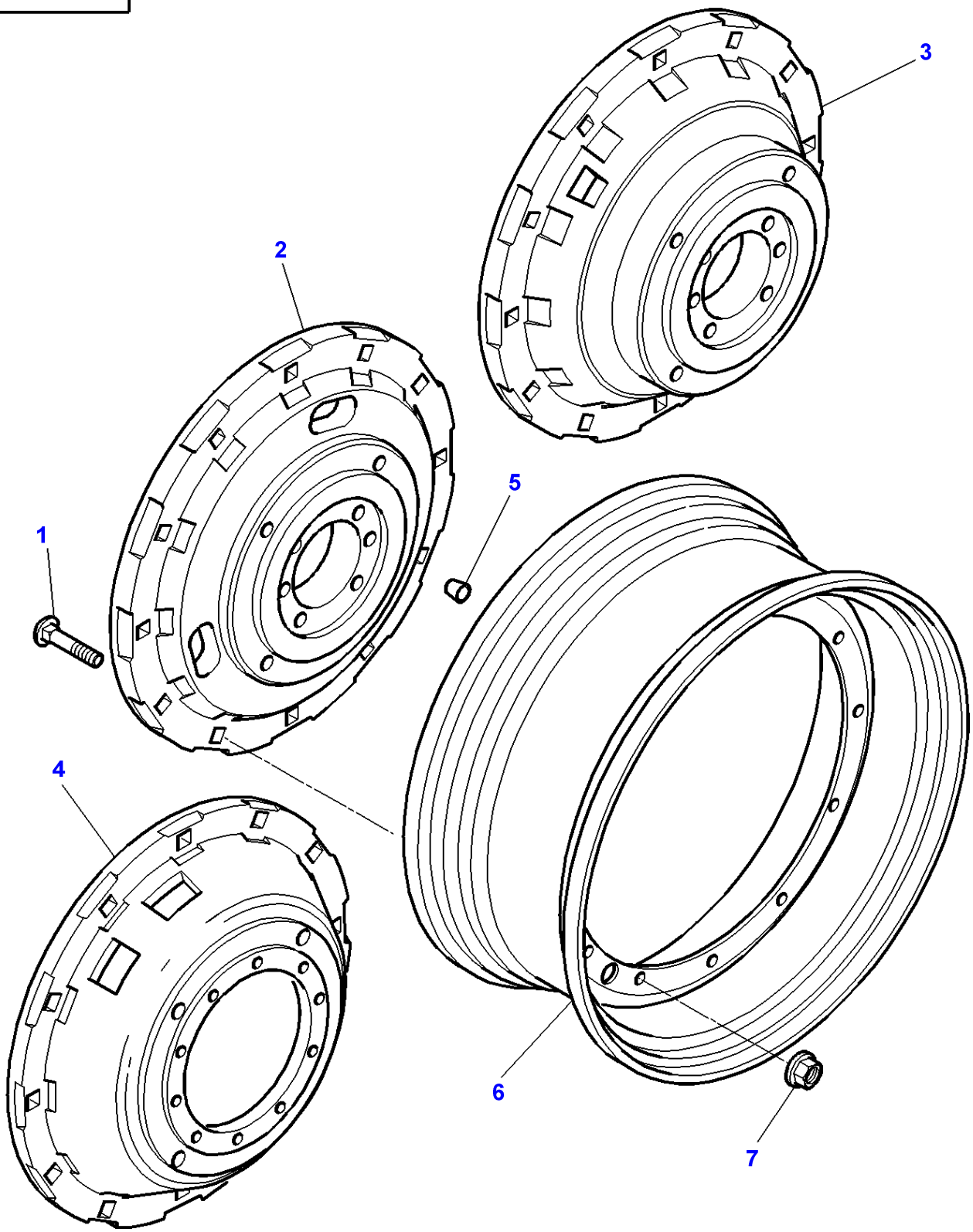

https://truckmanualshub.com/

Item	Part Number	Qty	Description	Comments
1	3384603M1	24	Screw	M18X95 (Single Wheels)
	3384603M1	24	Screw	M18X95 (Dual Wheels)
2	3582139M4	2	Flange	38" (Single Wheels)
3	3615370M3	2	Flange	38" (Single Wheels)
4	3716108M3	2	Weight	(Single Wheels)
	3716108M3	2	Weight	(Dual Wheels)
5	3780302M1	8	Dowel	(Single Wheels)
	3780302M1	8	Dowel	(Dual Wheels)
6	3781926M1	2	Rim	[A,C,D] DWW 16 X 42" (Single Wheels)
	3781926M1	2	Rim	[A,C,D] DWW 16 X 42" (Dual Wheels)
	3782155M1	2	Rim	[B,E,F] DWW 18 X 42" (Single Wheels)
	3782155M1	2	Rim	[B,E,F] DWW 18 X 42" (Dual Wheels)
7	3384600M2	24	Nut Special	M18 (Single Wheels)
	3384600M2	24	Nut Special	M18 (Dual Wheels)

FOOTNOTE [A] USED WITH 18.4 X 42" TYRES
FOOTNOTE [B] USED WITH 20.8-620/70-350/65-520/85 X 42" TYRES
FOOTNOTE [C] WITH RIM 3615370M3 CAN BE TWINED FITTED WITH WHEEL 3781968M2
FOOTNOTE [D] WITH RIM 3716108M3 CAN BE TWINED FITTED WITH WHEEL 3781968M2
FOOTNOTE [E] WITH RIM 3615370M3 CAN BE TWINED FITTED WITH WHEEL 3781969M2
FOOTNOTE [F] WITH RIM 3716108M3 CAN BE TWINED FITTED WITH WHEEL 3781969M2

https://truckmanualshub.com/

1-ZM05-002-B

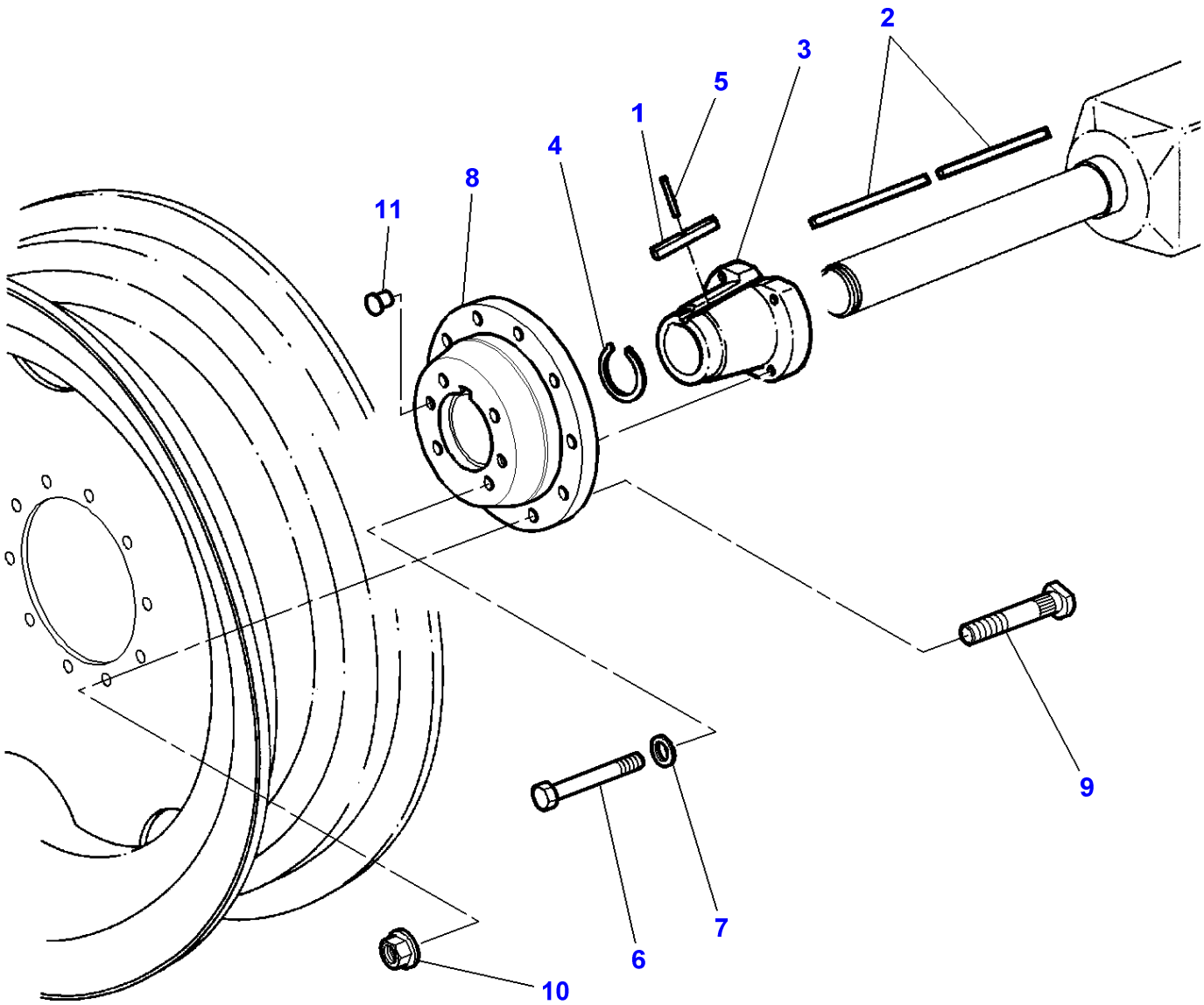

https://truckmanualshub.com/

Item	Part Number	Qty	Description	Comments
1	509816M2	2	Key	(Single Wheels)
	509816M2	2	Key	(Dual Wheels)
2	1612098M2	2	Key	[B] Up to Serial or Engine Number 09-OCT-2000 Diameter 95MM (Single Wheels)
	1612098M2	2	Key	[B] Up to Serial or Engine Number 09-OCT-2000 Diameter 95MM (Dual Wheels)
	3716106M3	2	Key	[C] From Serial or Engine Number 10-OCT-2000 Diameter 95MM (Single Wheels)
	3716106M3	2	Key	[C] From Serial or Engine Number 10-OCT-2000 Diameter 95MM (Dual Wheels)
3	1612096M1	1	Hub	[B] Up to Serial or Engine Number 09-OCT-2000 Left Hand Diameter 95MM (Single Wheels)
	1612096M1	1	Hub	[B] Up to Serial or Engine Number 09-OCT-2000 Left Hand Diameter 95MM (Dual Wheels)
	3793048M1	1	Cone	[C] From Serial or Engine Number 10-OCT-2000 Left Hand Diameter 95MM (Single Wheels)
	3793048M1	1	Cone	[C] From Serial or Engine Number 10-OCT-2000 Left Hand Diameter 95MM (Dual Wheels)
	1612097M1	1	Hub	[B] Up to Serial or Engine Number 09-OCT-2000 Right Hand Diameter 95MM (Single Wheels)
	1612097M1	1	Hub	[B] Up to Serial or Engine Number 09-OCT-2000 Right Hand Diameter 95MM (Dual Wheels)
	3793049M1	1	Cone	[C] From Serial or Engine Number 10-OCT-2000 Right Hand Diameter 95MM (Single Wheels)
	3793049M1	1	Cone	[C] From Serial or Engine Number 10-OCT-2000 Right Hand Diameter 95MM (Dual Wheels)
4	358882X1	2	Ring	Diameter 95MM (Single Wheels)
	358882X1	2	Ring	Diameter 95MM (Dual Wheels)
5	763786M1	2	Pin	Diameter 95MM (Single Wheels)
	763786M1	2	Pin	Diameter 95MM (Dual Wheels)
6	511411M3	8	Screw	3/4-10 X 165 (Single Wheels)
	511411M3	8	Screw	3/4-10 X 165 (Dual Wheels)
7	353775X1	8	Washer	(Single Wheels)
	353775X1	8	Washer	(Dual Wheels)

https://truckmanualshub.com/

Item	Part Number	Qty	Description	Comments
8	3792619M2	2	Impeller Hub	[A] (Single Wheels)
8	3792619M2	2	Impeller Hub	[A] (Dual Wheels)
9	3792488M2	20	Stud	M22X85MM (Single Wheels)
9	3792488M2	20	Stud	M22X85MM (Dual Wheels)
10	**3712611M2**	20	Nut Special	(Single Wheels)
10	**3712611M2**	20	Nut Special	(Dual Wheels)
11	831564M1	4	Plug	(Single Wheels)
11	831564M1	4	Plug	(Dual Wheels)

FOOTNOTE [A] WITH RIM STEEL
FOOTNOTE [B] RECTANGULAR KEY
FOOTNOTE [C] HEXAGONAL KEY

https://truckmanualshub.com/

1-ZM05-003-B

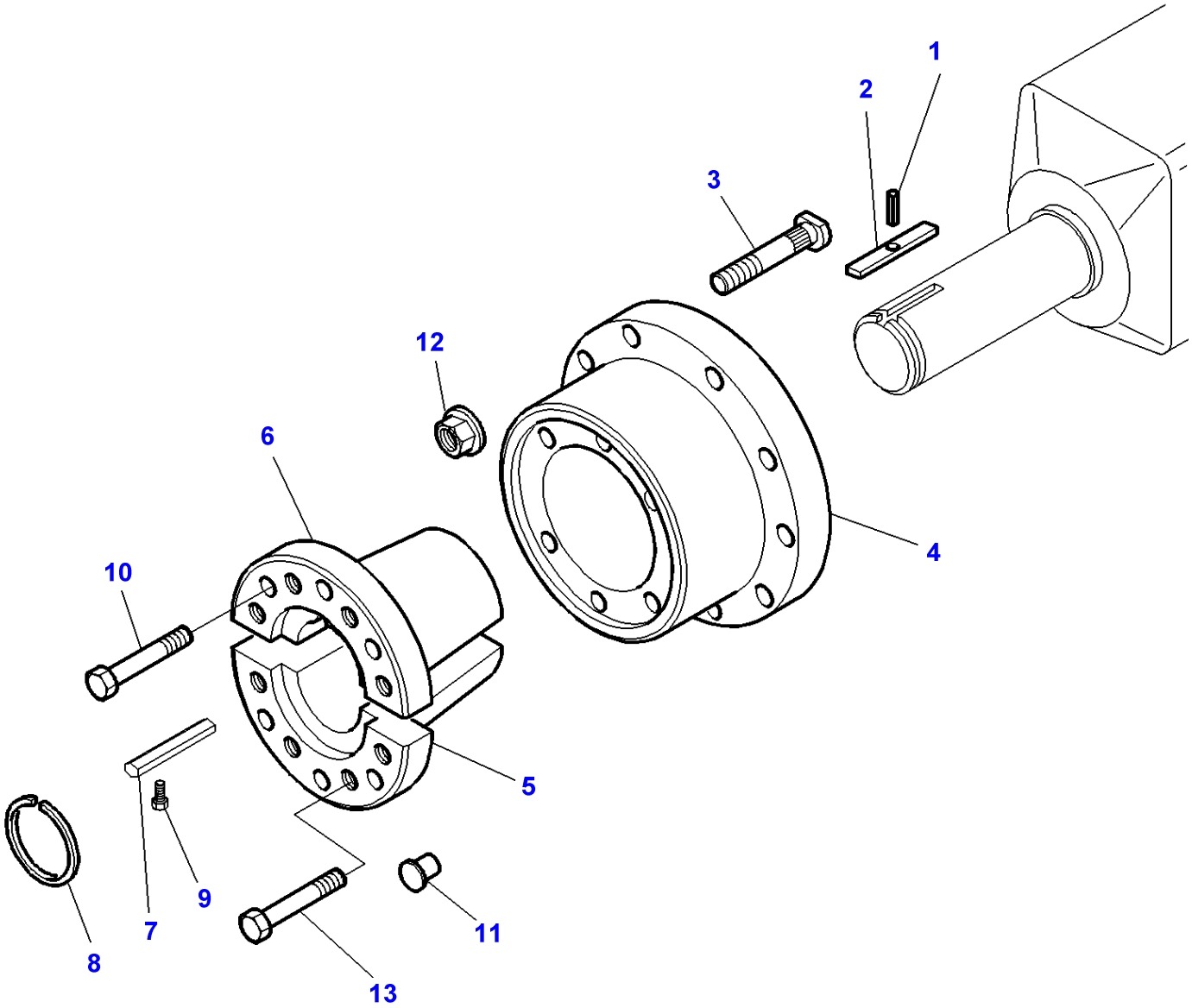

https://truckmanualshub.com/

Item	Part Number	Qty	Description	Comments
1	763786M1	2	Pin	(Single Wheels)
	763786M1	2	Pin	(Dual Wheels)
2	509816M2	2	Key	(Single Wheels)
	509816M2	2	Key	(Dual Wheels)
3	**3716105M2**	20	Stud	M22X100 (Single Wheels)
	3716105M2	20	Stud	M22X100 (Dual Wheels)
	3792488M2	20	Stud	M22X85 (Single Wheels)
	3792488M2	20	Stud	M22X85 (Dual Wheels)
4	3716107M2	2	Hub	Diameter 110MM (Single Wheels)
	3716107M2	2	Hub	Diameter 110MM (Dual Wheels)
5	3716269M1	2	Cone	Diameter 110MM (Single Wheels)
	3716269M1	2	Cone	Diameter 110MM (Dual Wheels)
6	3716268M1	2	Cone	(Single Wheels)
	3716268M1	2	Cone	(Dual Wheels)
7	3716106M3	2	Key	(Single Wheels)
	3716106M3	2	Key	(Dual Wheels)
8	3010765X1	2	Ring	(Single Wheels)
	3010765X1	2	Ring	(Dual Wheels)
9	1440350X1	2	Screw Metric	M6X20 (Single Wheels)
	1440350X1	2	Screw Metric	M6X20 (Dual Wheels)
10	3010569X1	12	Screw	M20X80 (Single Wheels)
	3010569X1	12	Screw	M20X80 (Dual Wheels)
11	3791968M1	16	Plug	(Single Wheels)
	3791968M1	16	Plug	(Dual Wheels)
12	**3712611M2**	20	Nut Special	M22X1,5 (Single Wheels)
	3712611M2	20	Nut Special	M22X1,5 (Dual Wheels)
13	3010047X1	16	Screw	M20X60 (Single Wheels)
	3010047X1	16	Screw	M20X60 (Dual Wheels)

https://truckmanualshub.com/

1-ZX17-001-B

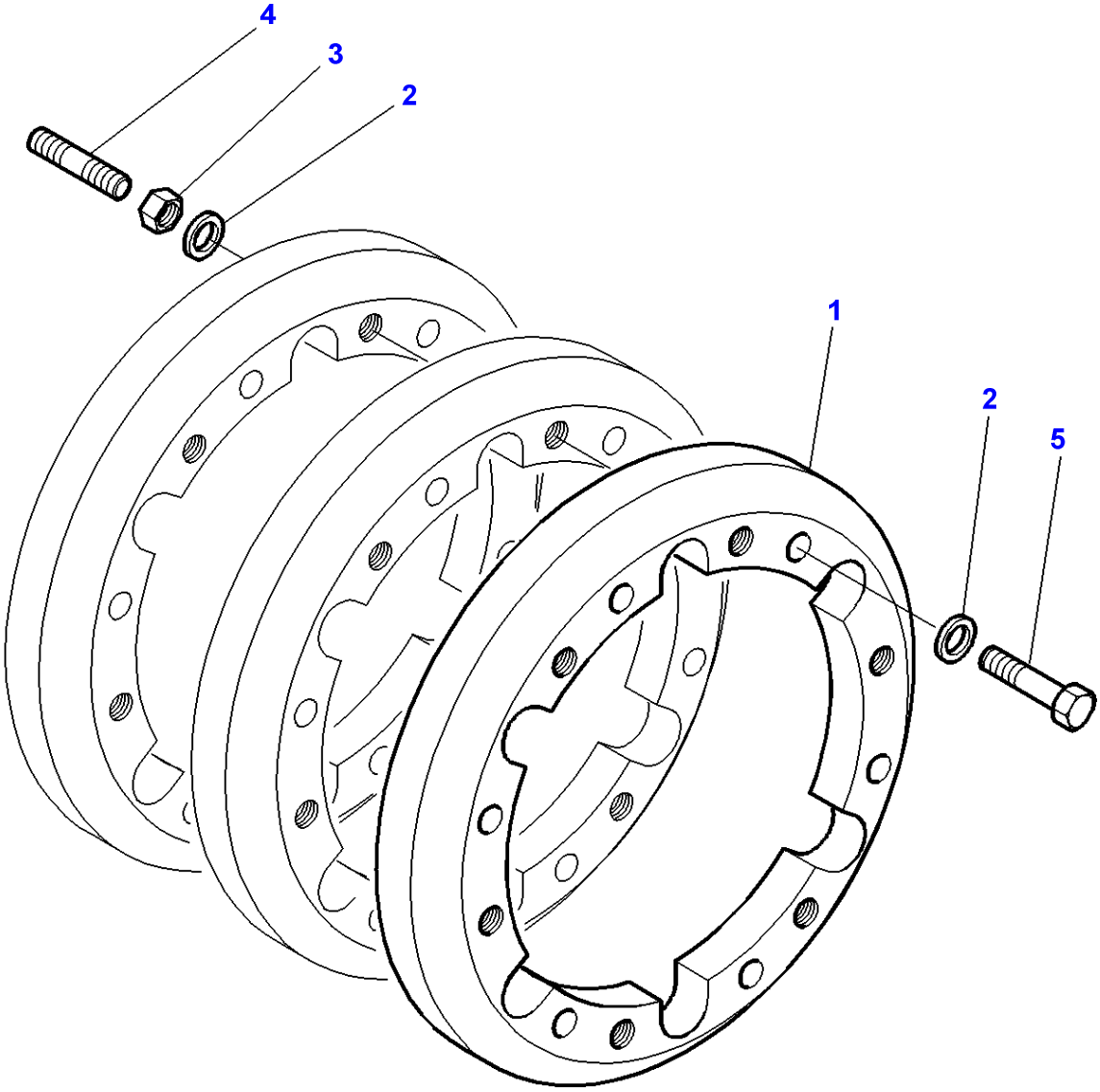

https://truckmanualshub.com/

Item	Part Number	Qty	Description	Comments
1	3712626M1	X	Weight	53KG
2	3019575X1	X	Washer Metric	
3	339034X1	12	Nut	M16
4	3386466M1	12	Stud	M16X65
5	339805X1	X	Bolt Metric	M16X100

FOOTNOTE [A] INDUSTRIAL CAB
FOOTNOTE [B] LEFT, REAR

https://truckmanualshub.com/

1-ZX37-001-A

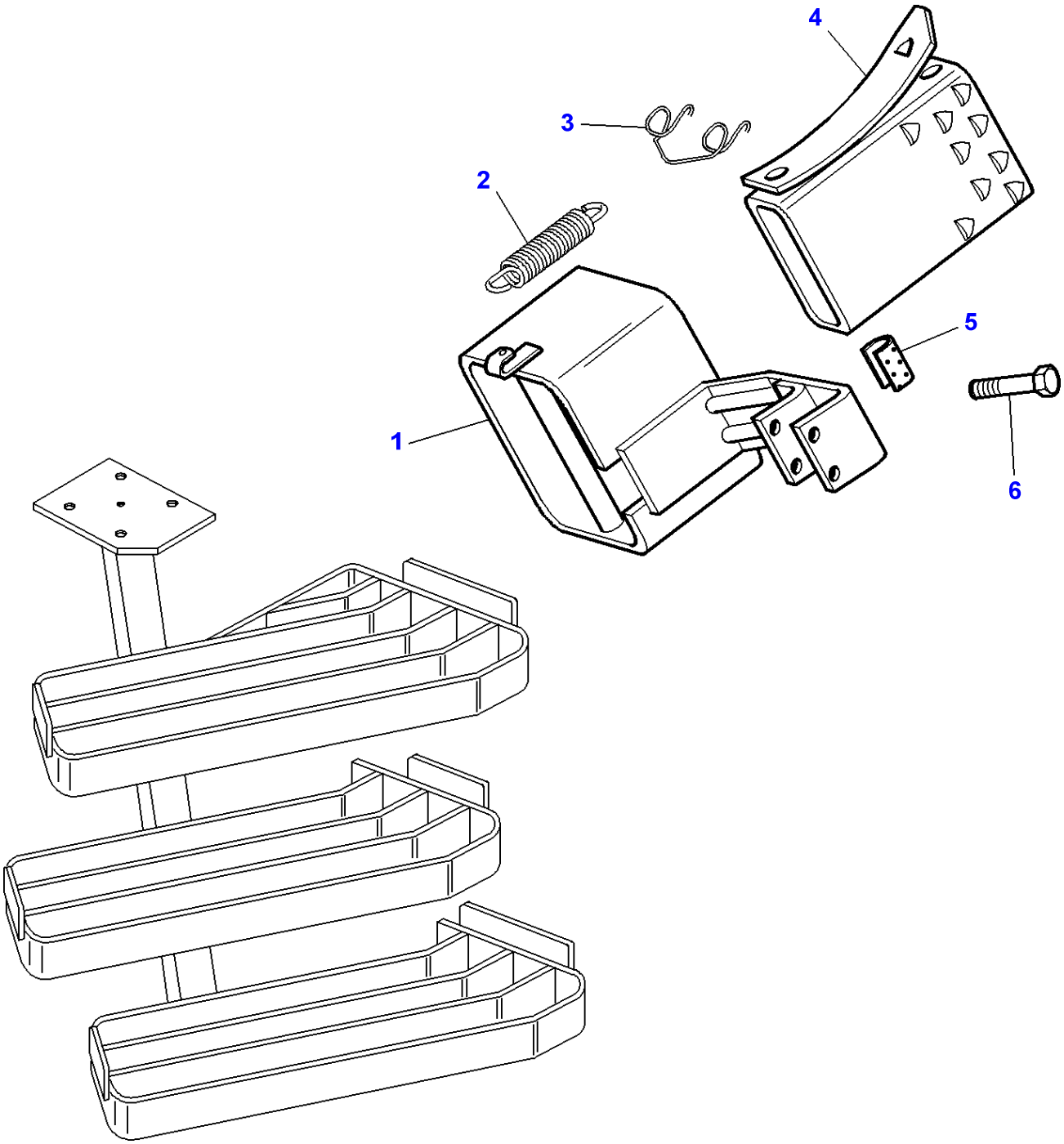

https://truckmanualshub.com/

Item	Part Number	Qty	Description	Comments
1	3715111M91	1	Support	
2	3616740M2	1	Spring	
3	3715112M1	1	Stem	
4	3042422M1	2	Chock	
5	3619191M1	2	Gasket	Length 42MM
6	3015134X1	2	Screw	M6X65

https://truckmanualshub.com/

Page Title	Page Number
FUEL HEATER	150-0005
Epicyclic Unit - Creeper Gear Full Powershift Transmission	150-0010
Front Linkage 35000N	150-0015
Front Linkage 35000N - TWO WAYS KIT FOR RAMS	150-0020
Front Linkage 50000N	150-0025
Front Linkage 50000N - TWO WAYS KIT FOR RAMS	150-0030
TRAILOR BRAKE - With Pump 45cc	150-0035
TRAILOR BRAKE - With Pump 150 L/mm	150-0040
Auxiliary Distributor - 4 Th Spool Valve Kit For Cab	150-0045
Aboard Computer	150-0050
APPLIANCE BRACKET BOARDED FOR CAB	150-0055
Air Conditioner	150-0060
Rear Window Wiper	150-0065
SECONDARY SEAT	150-0070
Seat Belt	150-0075
ROTATING LIGHT	150-0080
Front Axle 4 Wheel Drive - Mudguards And Supports	150-0085

https://truckmanualshub.com/

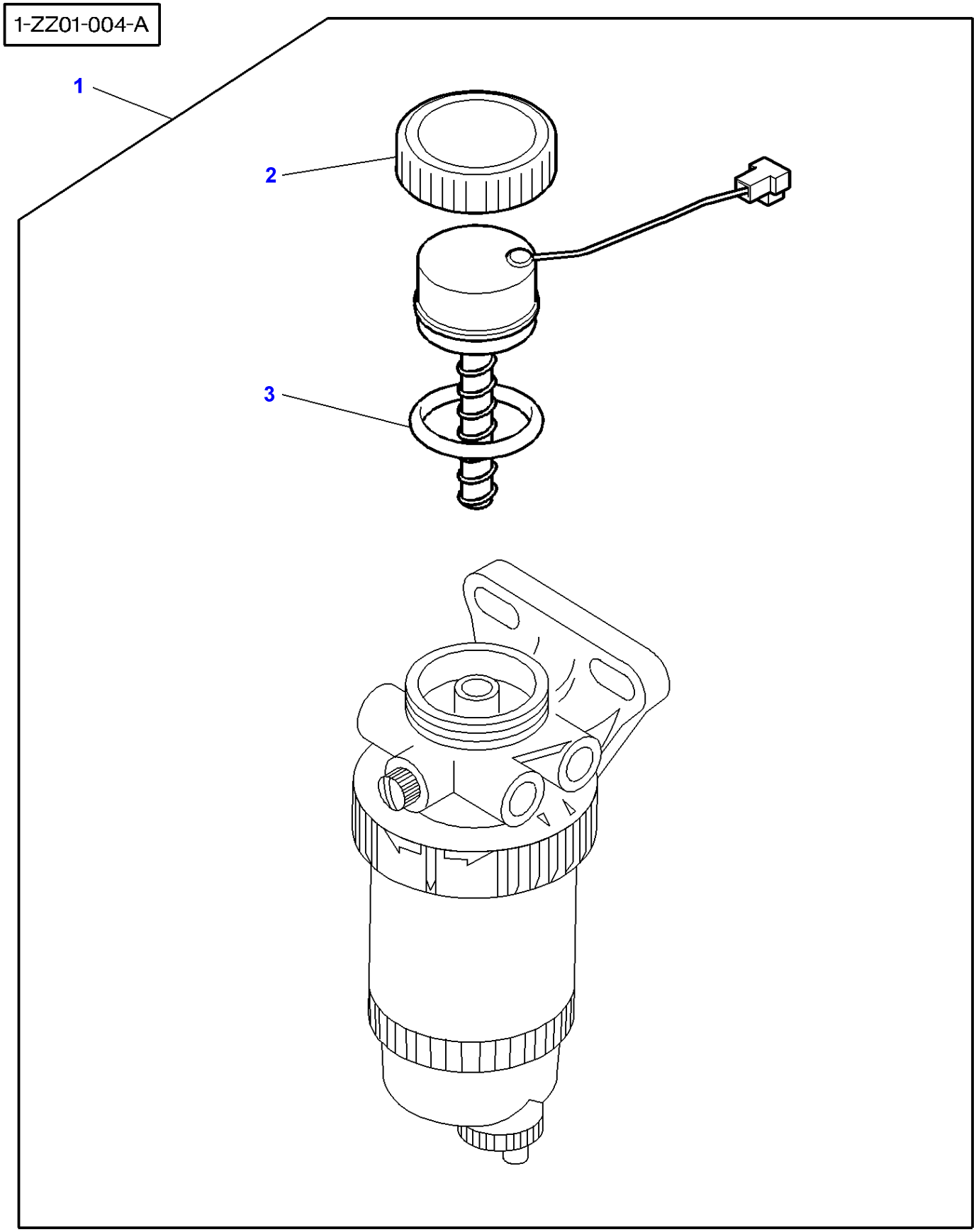

https://truckmanualshub.com/

Item	Part Number	Qty	Description	Comments
1	3781978M11	1	Parts Pack	12V - 100W
2	3903292M1	1	Nut	(1)
3	3903293M1	1	O Ring	(1)

https://truckmanualshub.com/

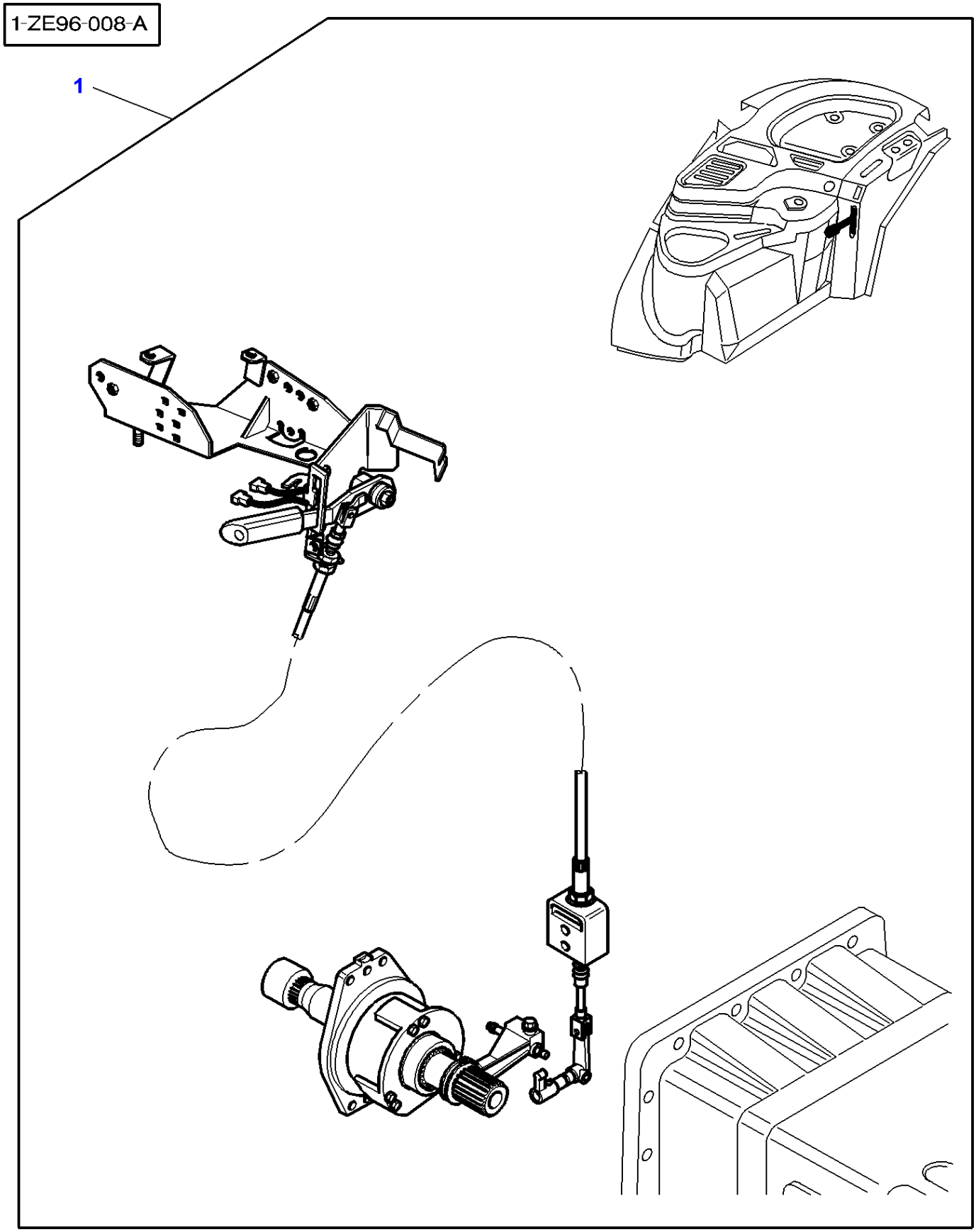

https://truckmanualshub.com/

Item	Part Number	Qty	Description	Comments
1	3783826M11	1	Reducer	[A]

FOOTNOTE [A] FOR SERVICE BREAKDOWN REFER TO TRACTOR BOOK

https://truckmanualshub.com/

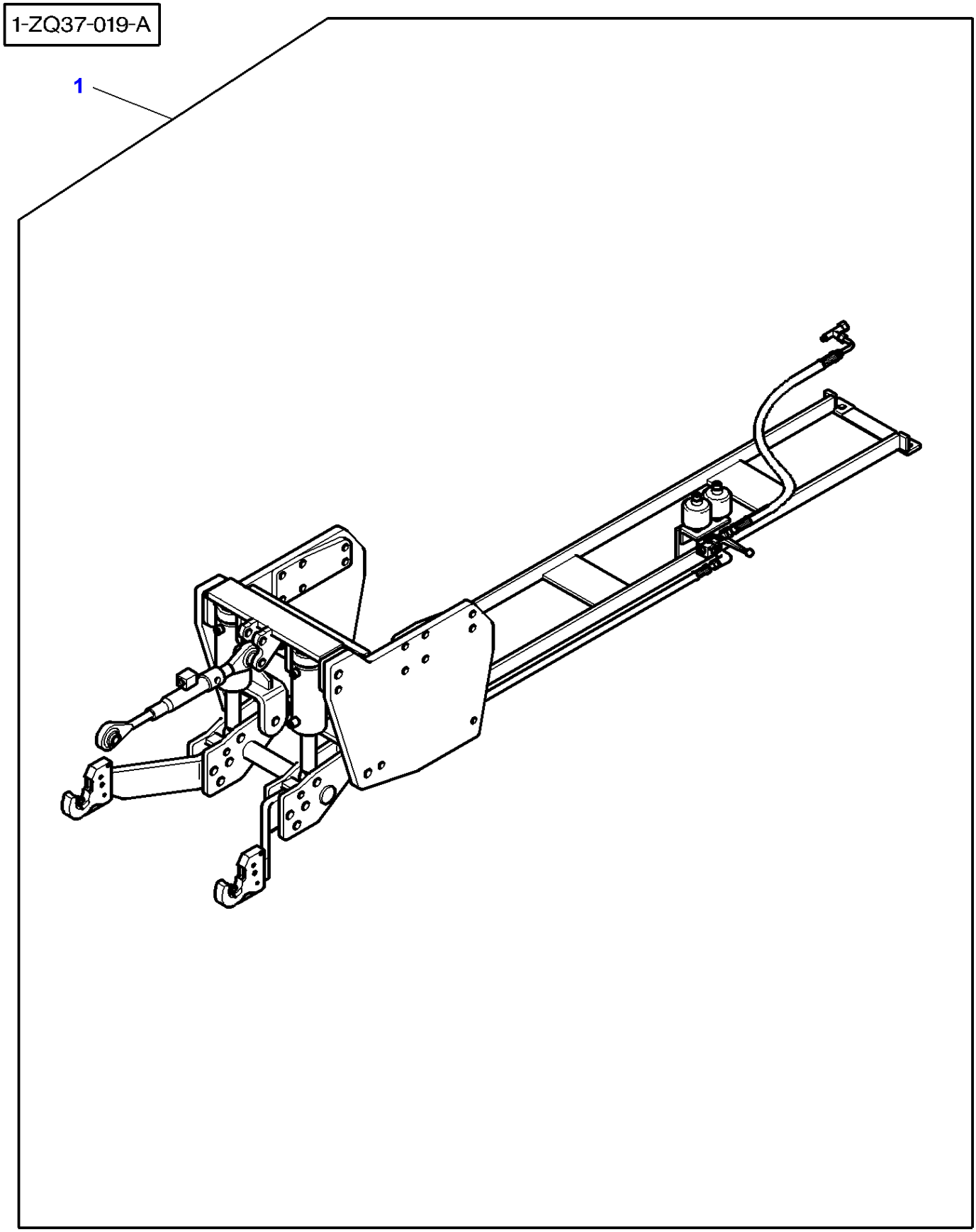

https://truckmanualshub.com/

Item	Part Number	Qty	Description	Comments
1	3783049M92	1	Hitch	[A]

FOOTNOTE [A] FOR SERVICE BREAKDOWN REFER TO TRACTOR BOOK

https://truckmanualshub.com/

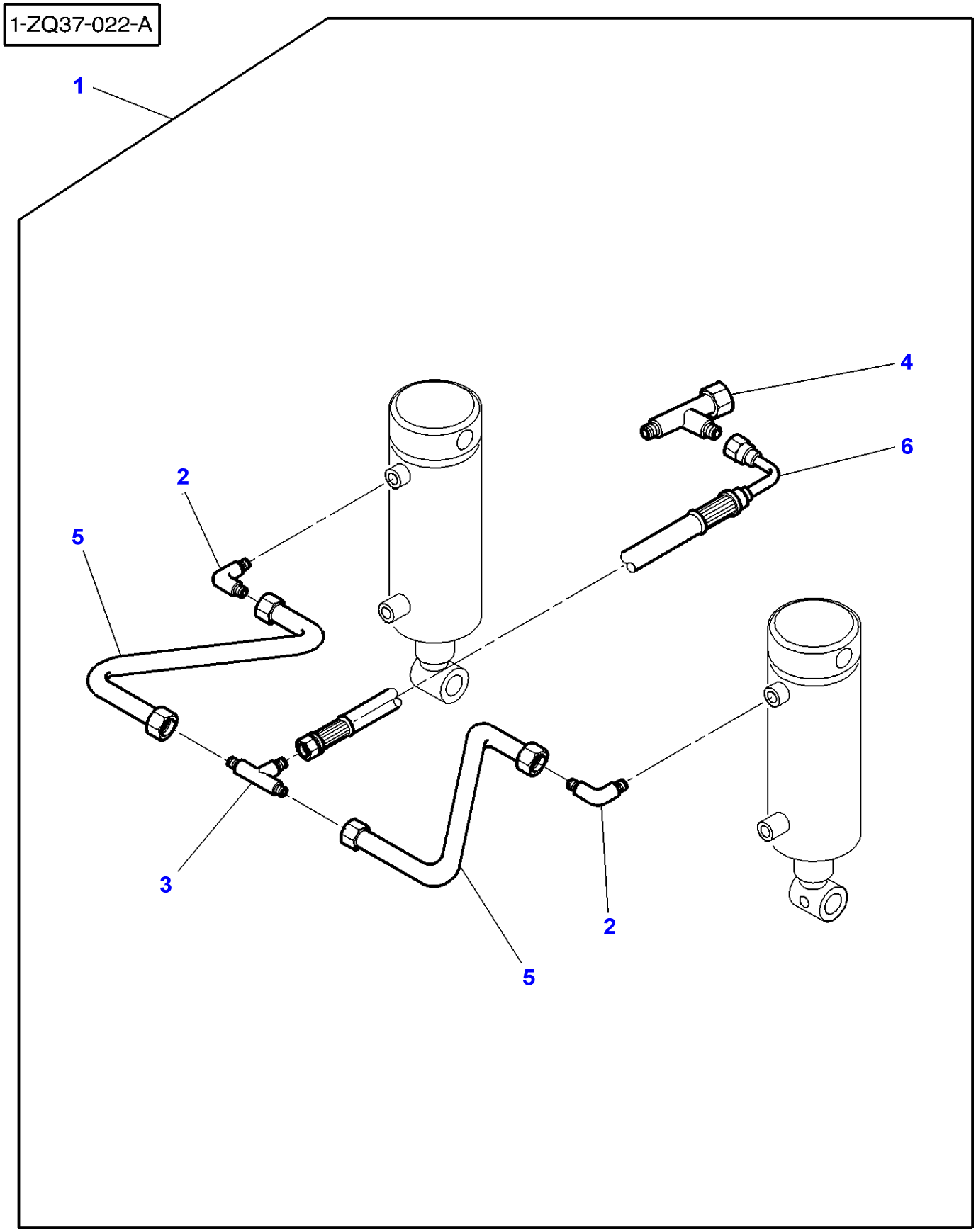

https://truckmanualshub.com/

Item	Part Number	Qty	Description	Comments
1	3903532M91	1	Kit,Hose Fitting	
2	3900868M1	2	Elbow	(1) Diameter 3/8"
3	3902227M1	1	Teepiece	(1)
4	3782998M1	1	Teepiece	(1)
5	3783011M1	2	Tube	(1)
6	3903527M1	1	Hydr Hose	(1) Length 5500MM

https://truckmanualshub.com/

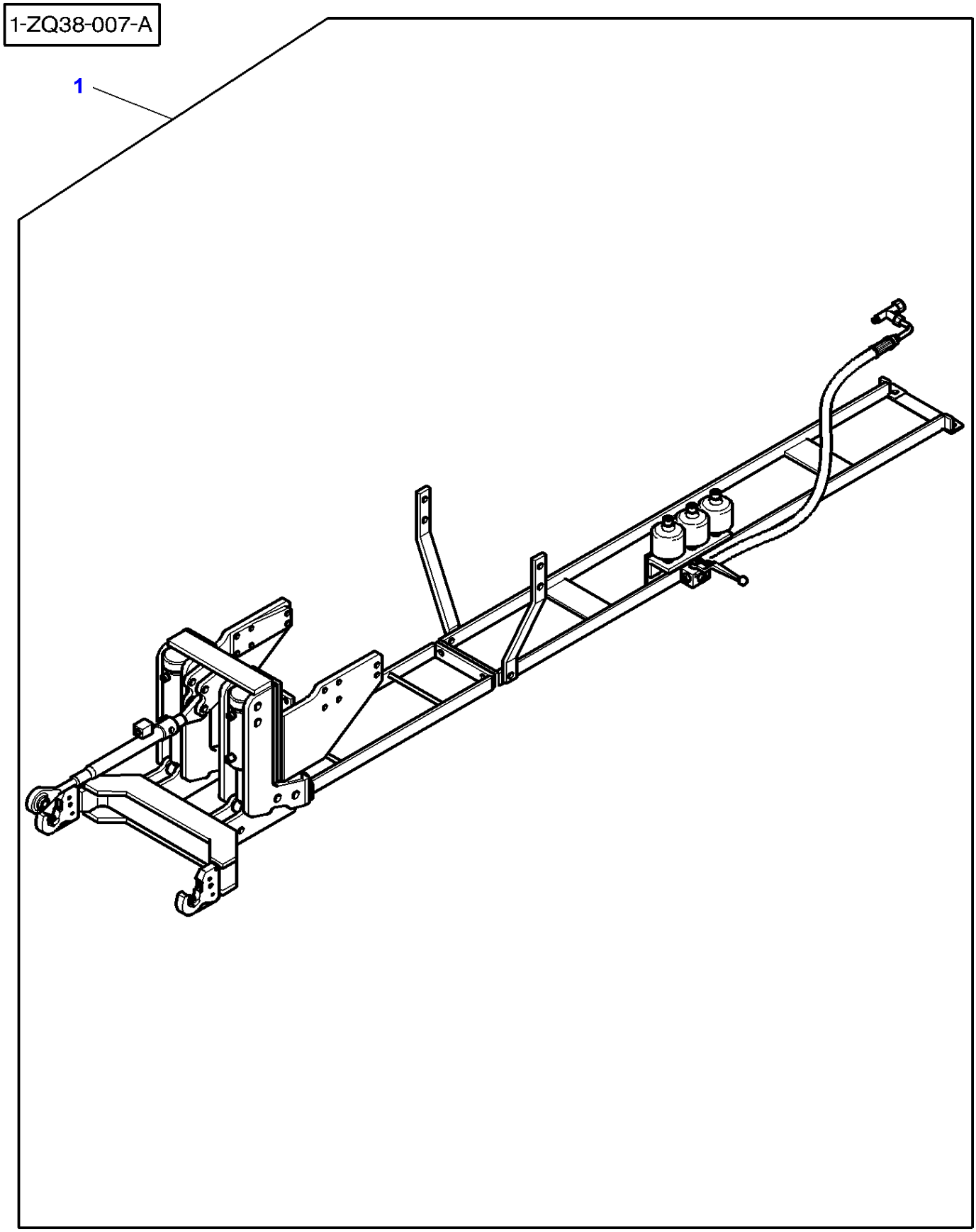

https://truckmanualshub.com/

Item	Part Number	Qty	Description	Comments
1	3783072M91	1	Hitch	[A]

FOOTNOTE [A] FOR SERVICE BREAKDOWN REFER TO TRACTOR BOOK

https://truckmanualshub.com/

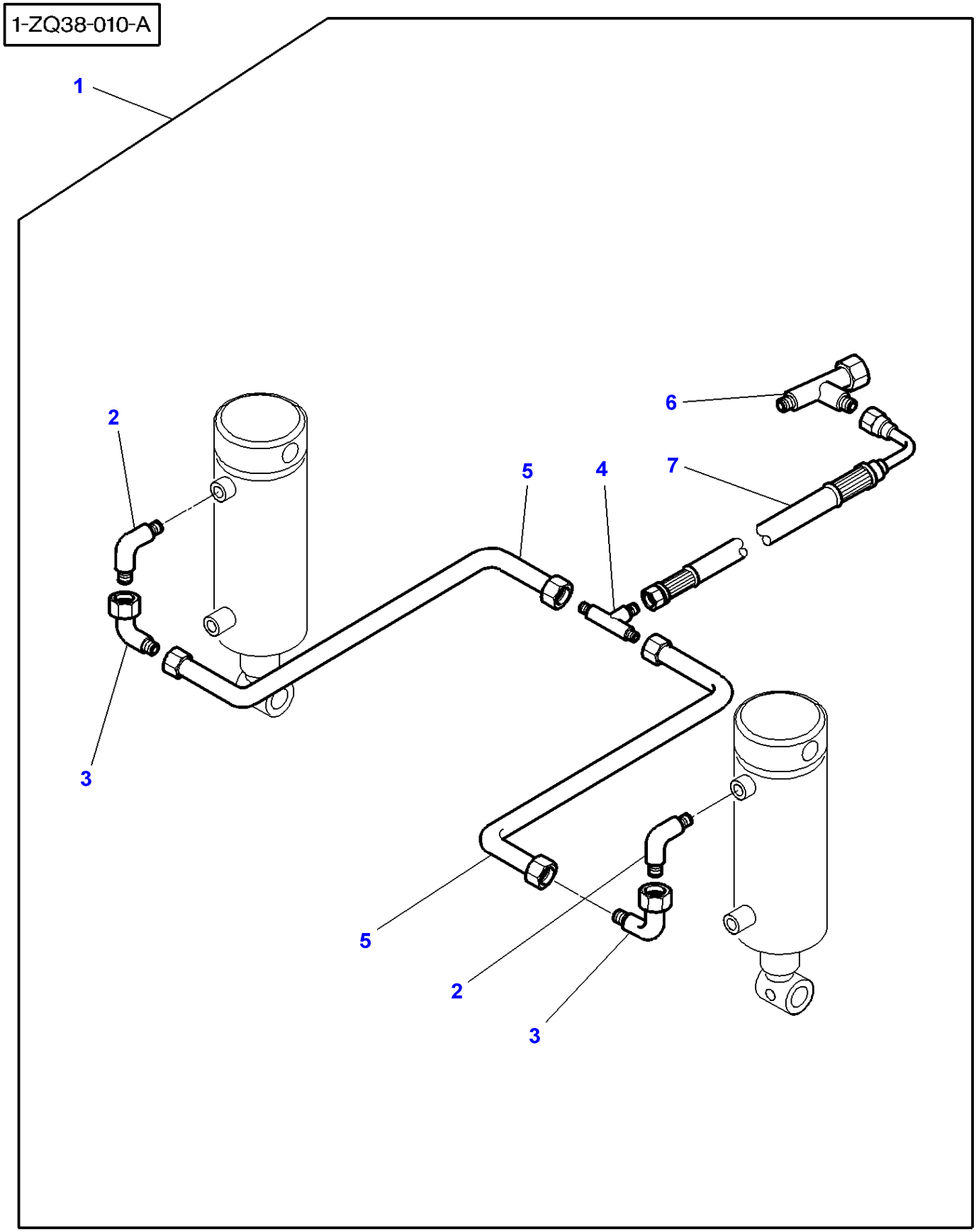

https://truckmanualshub.com/

Item	Part Number	Qty	Description	Comments
1	3903541M91	1	Kit,Fuel Fitting	
2	3900868M1	2	Elbow	(1)
3	3900883M1	2	Elbow	(1)
4	3902227M1	1	Teepiece	(1)
5	3783025M1	2	Tube	(1)
6	3782998M1	1	Teepiece	(1)
7	3903527M1	1	Hydr Hose	(1)
				Length 5500MM

https://truckmanualshub.com/

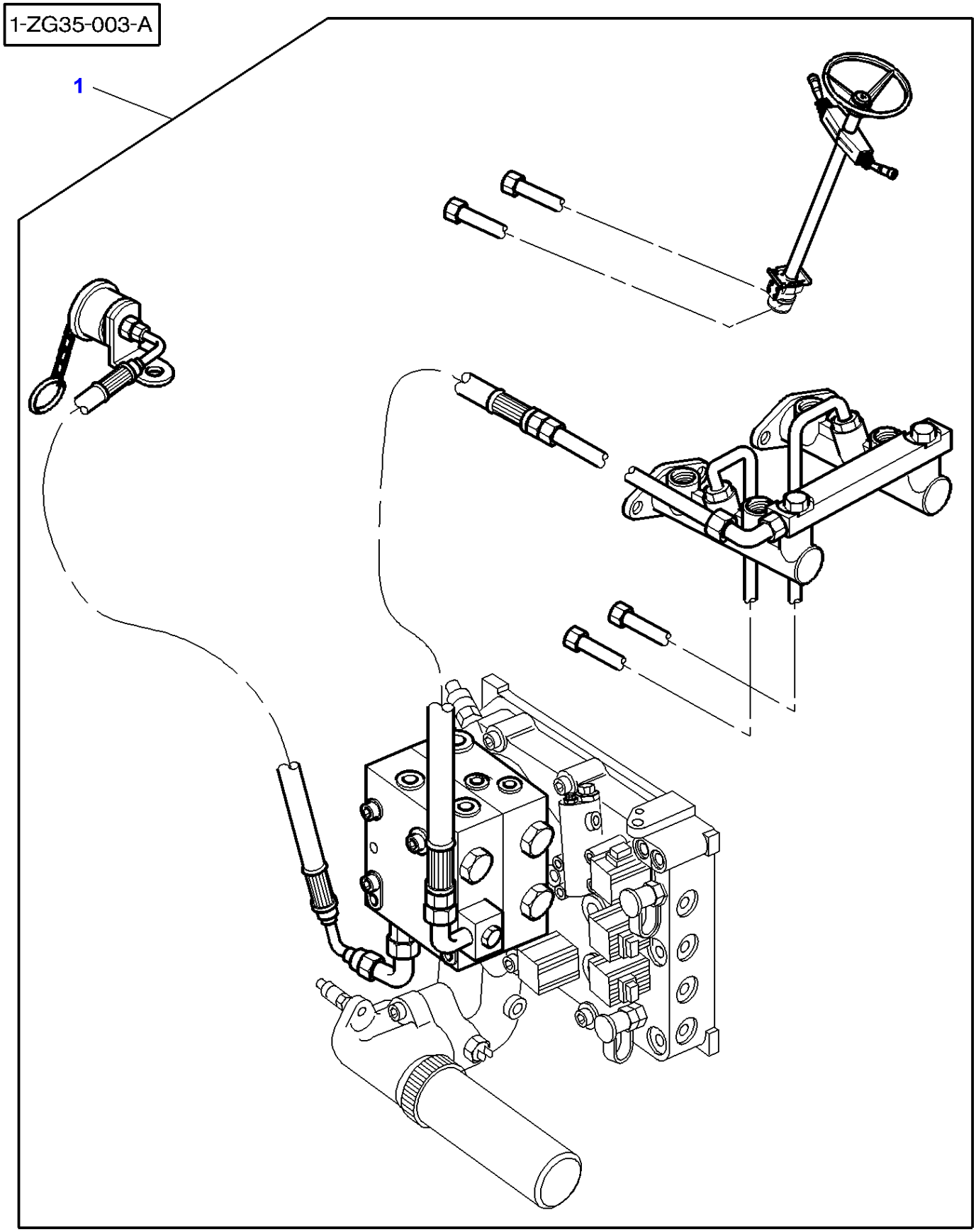

https://truckmanualshub.com/

Item	Part Number	Qty	Description	Comments
1	3781031M11	1	Kit,Trailr Brake	[A,C]
	3781036M11	1	Kit,Trailr Brake	[A,D]

FOOTNOTE [A] FOR SERVICE BREAKDOWN REFER TO TRACTOR BOOK
FOOTNOTE [B] TRACTOR WITH PLATFORM
FOOTNOTE [C] WITH MECHANICAL BRAKES
FOOTNOTE [D] WITH ASSISTED BRAKE
FOOTNOTE [E] TRACTOR WITH CAB

https://truckmanualshub.com/

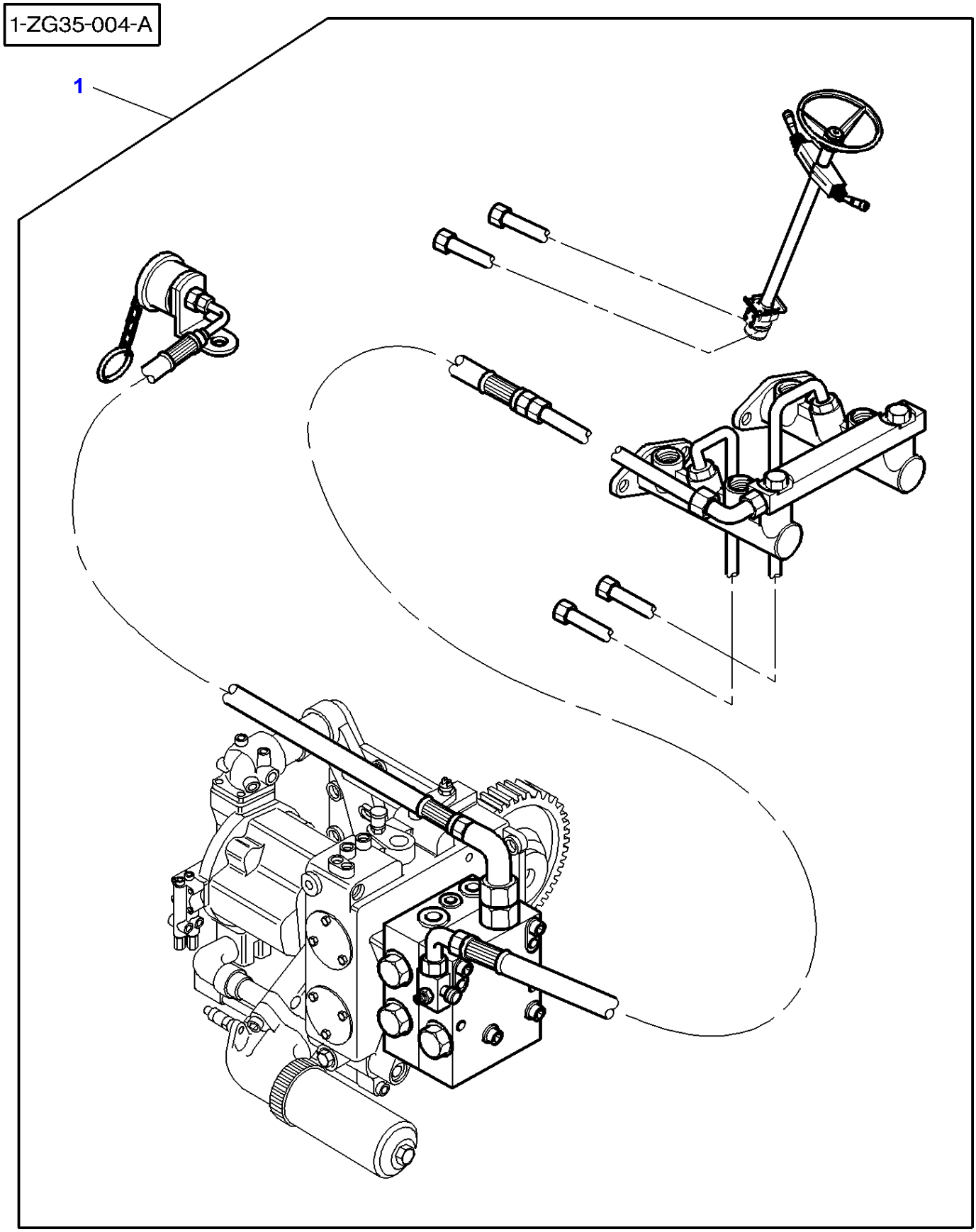

https://truckmanualshub.com/

Item	Part Number	Qty	Description	Comments
1	3781674M11	1	Kit,Trailr Brake	[A,C,D]

FOOTNOTE [A] FOR SERVICE BREAKDOWN REFER TO TRACTOR BOOK
FOOTNOTE [B] TRACTOR WITH PLATFORM
FOOTNOTE [C] WITH MECHANICAL BRAKES
FOOTNOTE [D] WITH ASSISTED BRAKE
FOOTNOTE [E] TRACTOR WITH CAB
FOOTNOTE [F] WITH FULL POWERSHIFT

https://truckmanualshub.com/

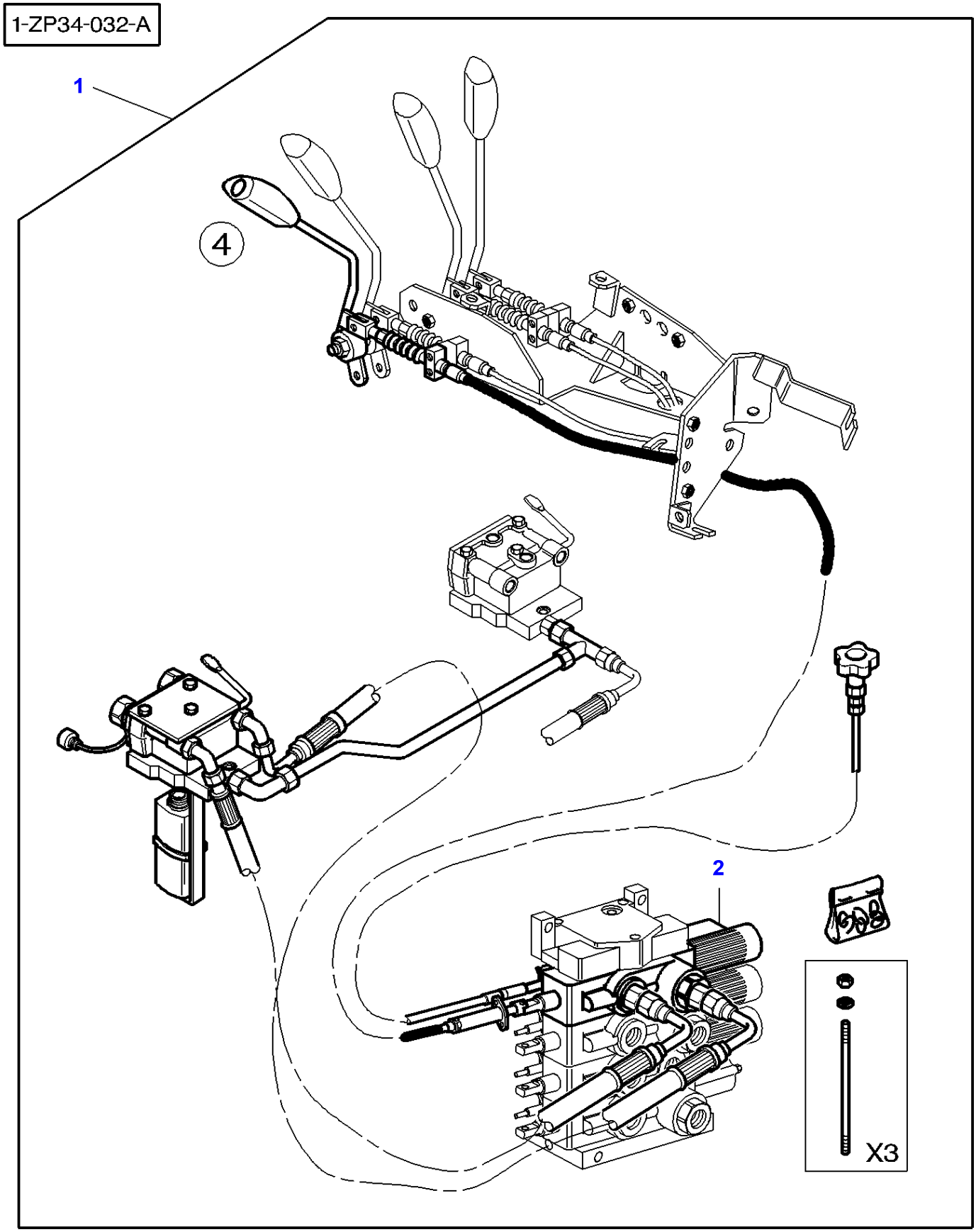

https://truckmanualshub.com/

Item	Part Number	Qty	Description	Comments
1	3783498M11	1	Kit, Contrl Vlve	[B,A]
	3783499M11	1	Kit, Contrl Vlve	[B,C]
2	3713927M3	1	Distributor	[C] (1)

FOOTNOTE [A] 4 FLOATING POSITIONS DIST,FLOW ADJUST,KICK-OUT,ZER O LEAK
FOOTNOTE [B] FOR SERVICE BREAKDOWN REFER TO TRACTOR BOOK
FOOTNOTE [C] 4 FLOAT POSIT DIST,FLOW ADJUST,KICK-OUT W 2 OVERP RES.VALVE AND RESUPPLYING FOR HYDRAULIC MOTOR

https://truckmanualshub.com/

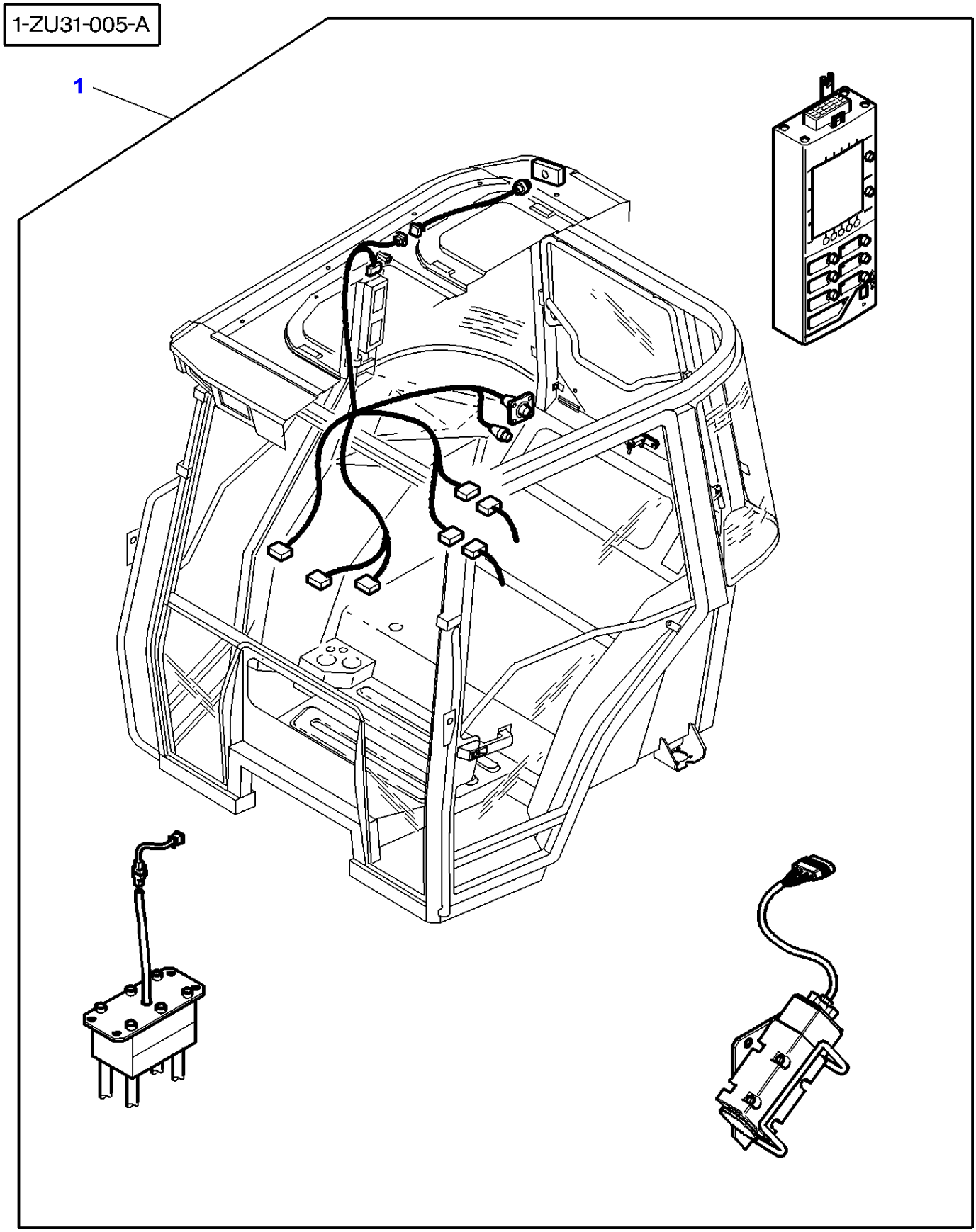

https://truckmanualshub.com/

Item	Part Number	Qty	Description	Comments
1	3903421M11	1	Accessory Code	[C,B] For UK only or any text in English only GHZ 24.300
	3903422M11	1	Accessory Code	[A,B] GHZ 24.125

FOOTNOTE [A] ORDER SEPARATELY ABOARD COMPUTER DECALS
FOOTNOTE [B] FOR SERVICE BREAKDOWN REFER TO TRACTOR BOOK
FOOTNOTE [C] ABOARD COMPUTER DECALS INCLUDED IN KIT

https://truckmanualshub.com/

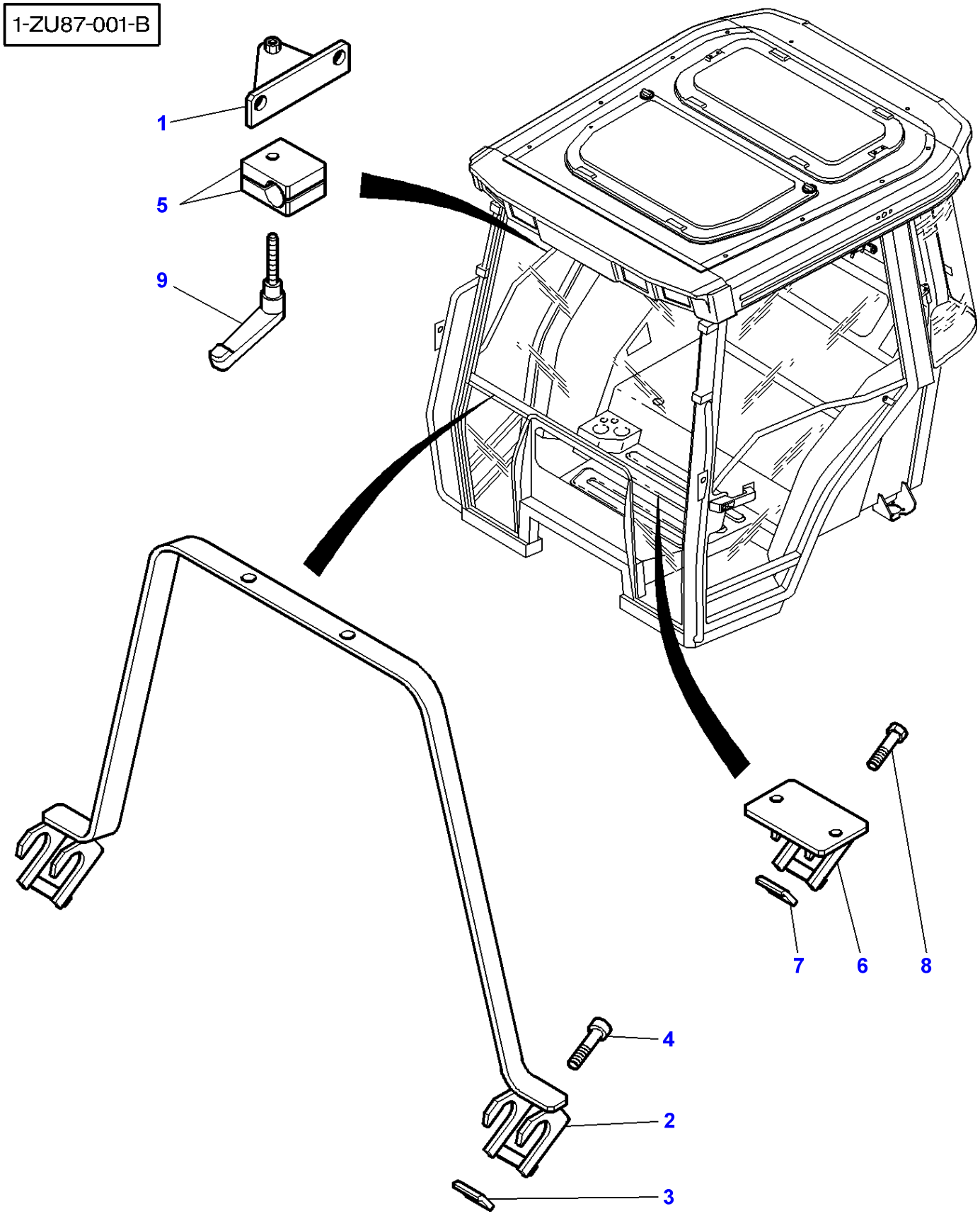

https://truckmanualshub.com/

Item	Part Number	Qty	Description	Comments
1	3782484M1	1	Handle	[C] M8
2	3782478M91	1	Safety Frame	[A]
3	3782479M1	2	Counterplate	
4	3010177X1	2	Screw	M8X90
5	3782482M1	2	Support	[C]
6	3782480M91	1	Support	[B]
7	3782479M1	1	Counterplate	
8	3010177X1	1	Screw	M8X90
9	3782481M1	1	Angle	[C]

FOOTNOTE [A] ON INSTRUMENT PANEL
FOOTNOTE [B] ON TRANSVERSE CABINE
FOOTNOTE [C] ON CAB DOOR

https://truckmanualshub.com/

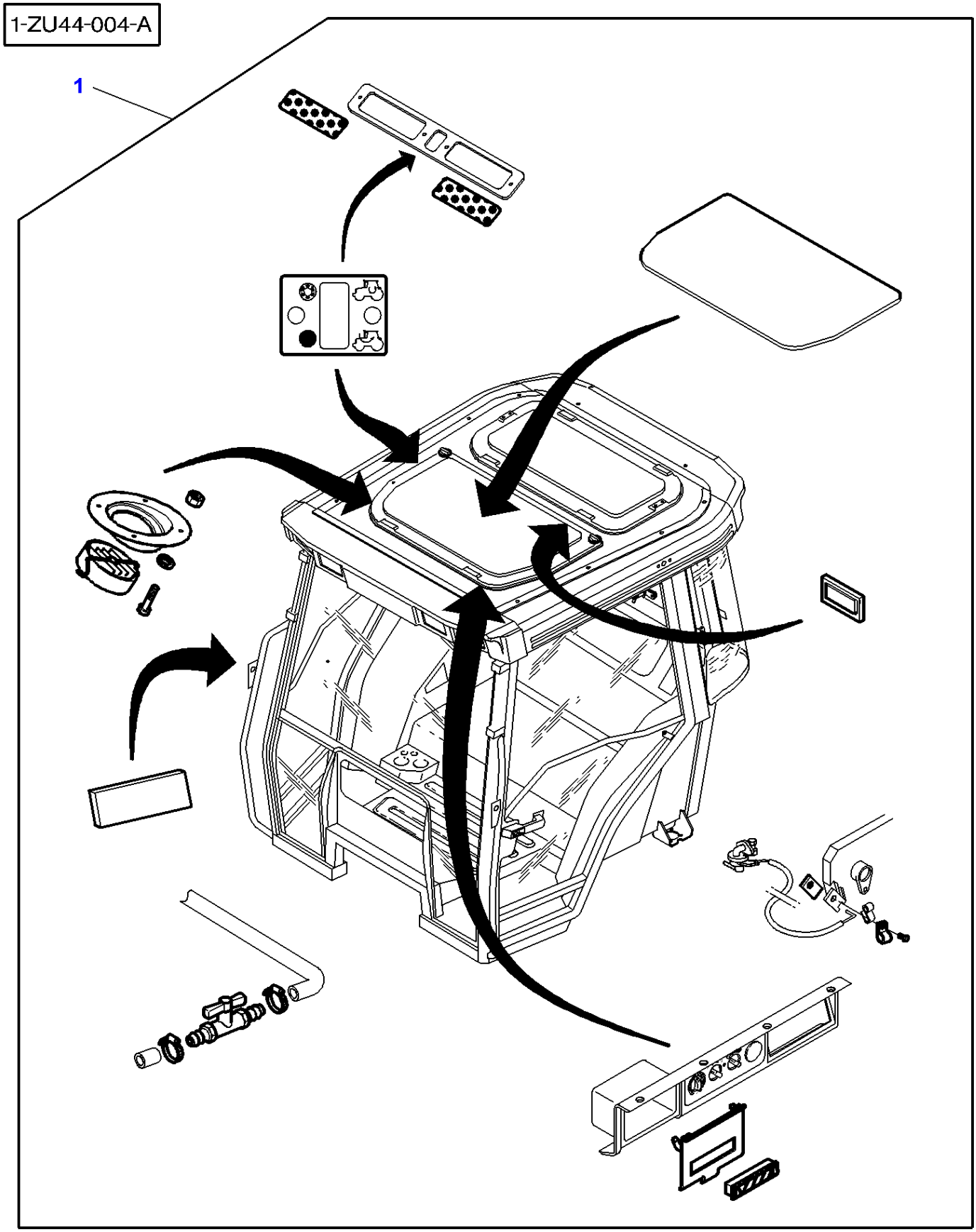

https://truckmanualshub.com/

Item	Part Number	Qty	Description	Comments
1	3784595M11	1	Kit Air Conditi	[A] For United States of America For Australia For South Africa

FOOTNOTE [A] FOR SERVICE BREAKDOWN REFER TO TRACTOR BOOK

https://truckmanualshub.com/

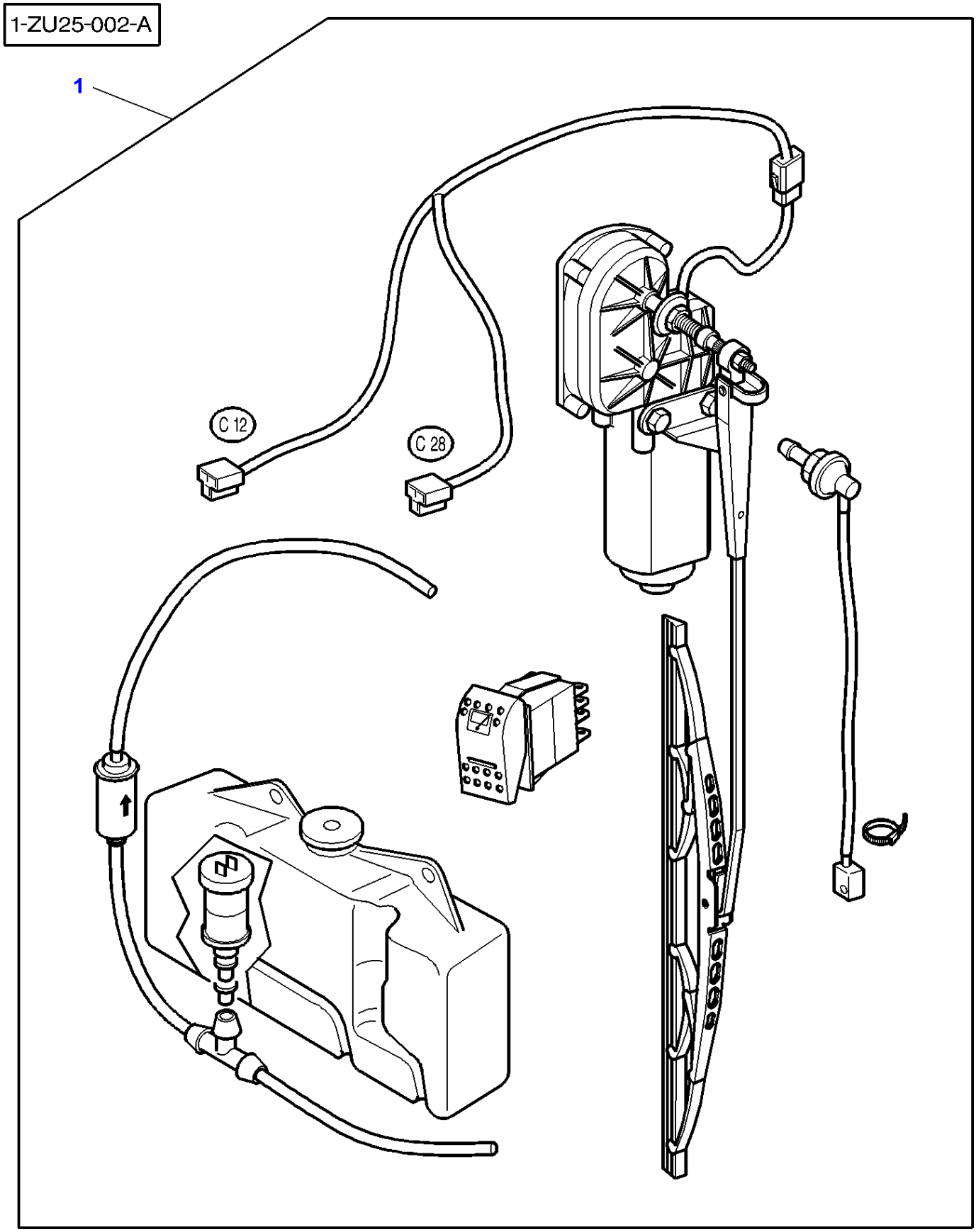

https://truckmanualshub.com/

Item	Part Number	Qty	Description	Comments
1	3777332M11	1	Accessory Code	[A]
	3778374M11	1	Kit, Wiper	[A,B]

FOOTNOTE [A] FOR SERVICE BREAKDOWN REFER TO TRACTOR BOOK
FOOTNOTE [B] WITH HIGH VISIBILITY ROOF

https://truckmanualshub.com/

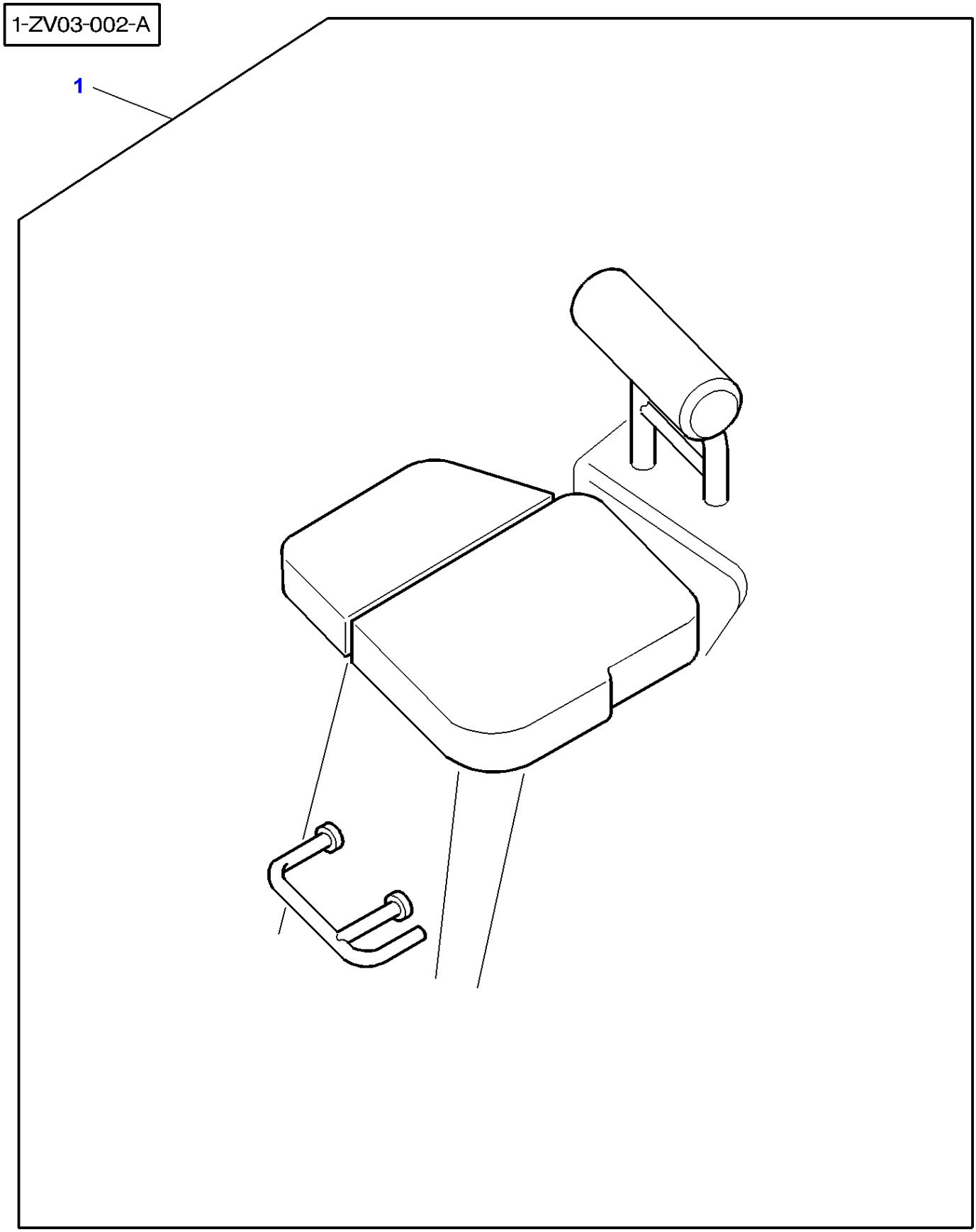

https://truckmanualshub.com/

Item	Part Number	Qty	Description	Comments
1	3781247M11	1	Accessory Code	[A]

FOOTNOTE [A] FOR SERVICE BREAKDOWN REFER TO TRACTOR BOOK

https://truckmanualshub.com/

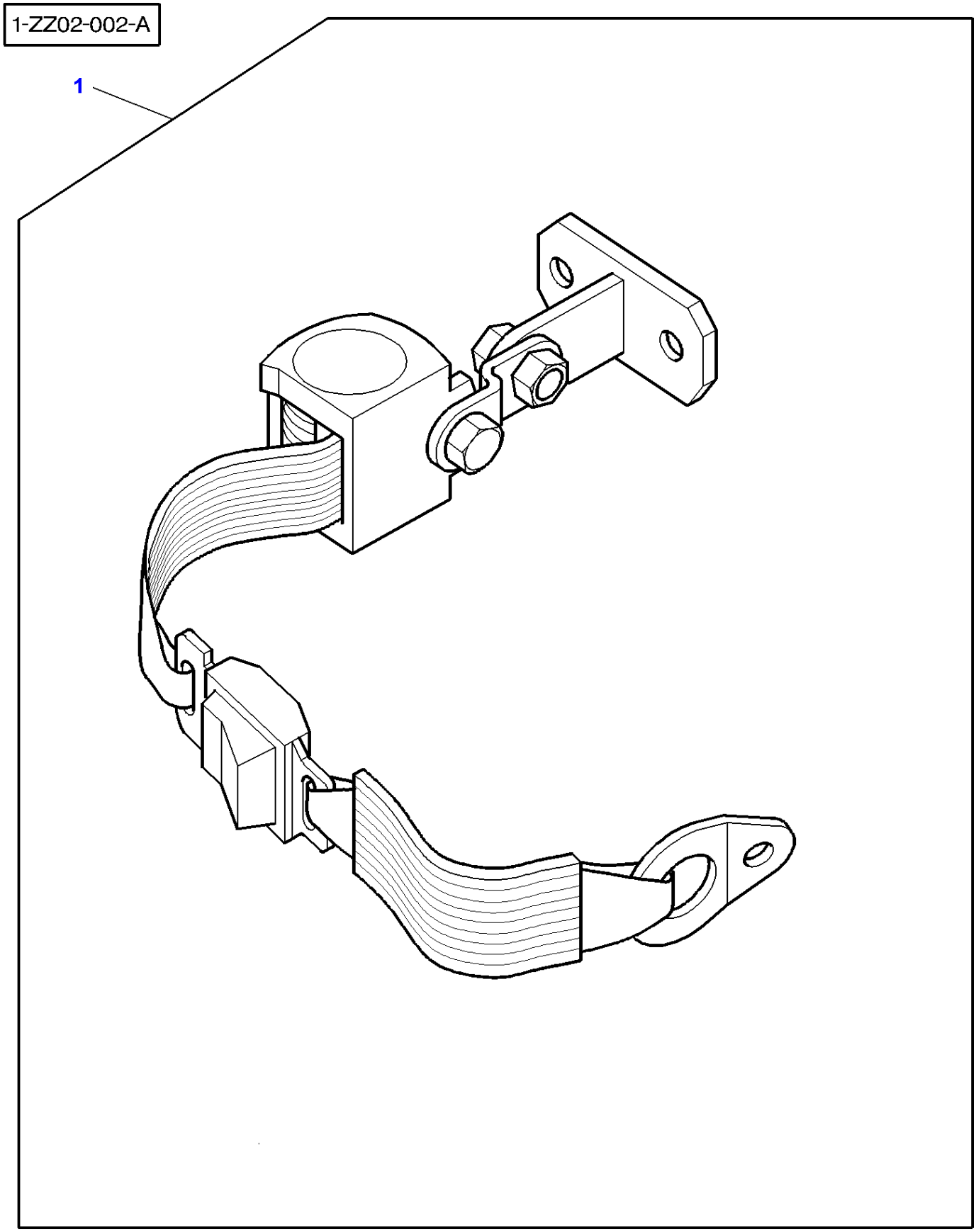

https://truckmanualshub.com/

Item	Part Number	Qty	Description	Comments
1	3781249M11	1	Accessory Code	[A]

FOOTNOTE [A] FOR SERVICE BREAKDOWN REFER TO TRACTOR BOOK

https://truckmanualshub.com/

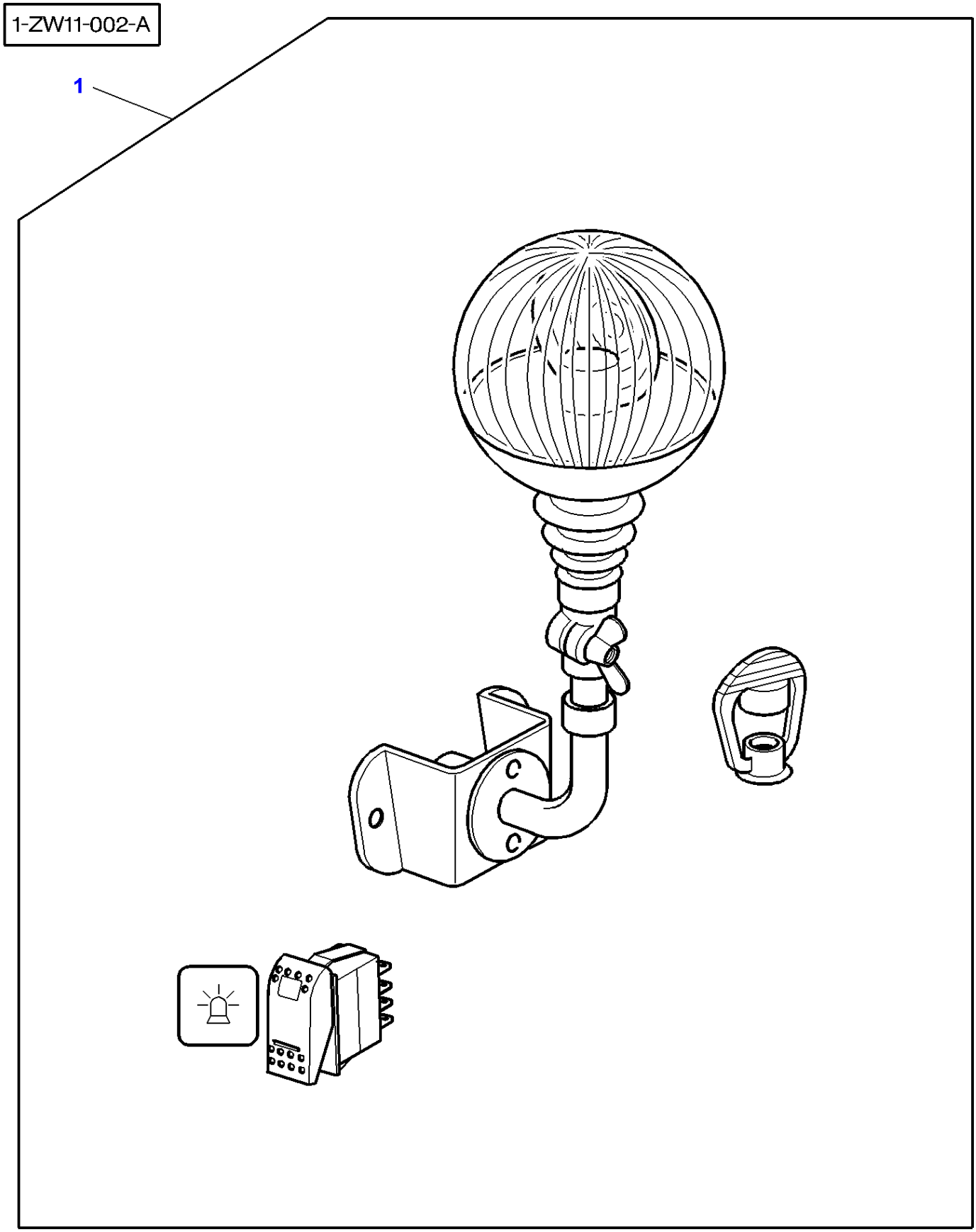

https://truckmanualshub.com/

Item	Part Number	Qty	Description	Comments
1	3777324M11	1	Accessory Code	[A]

FOOTNOTE [A] FOR SERVICE BREAKDOWN REFER TO TRACTOR BOOK

https://truckmanualshub.com/

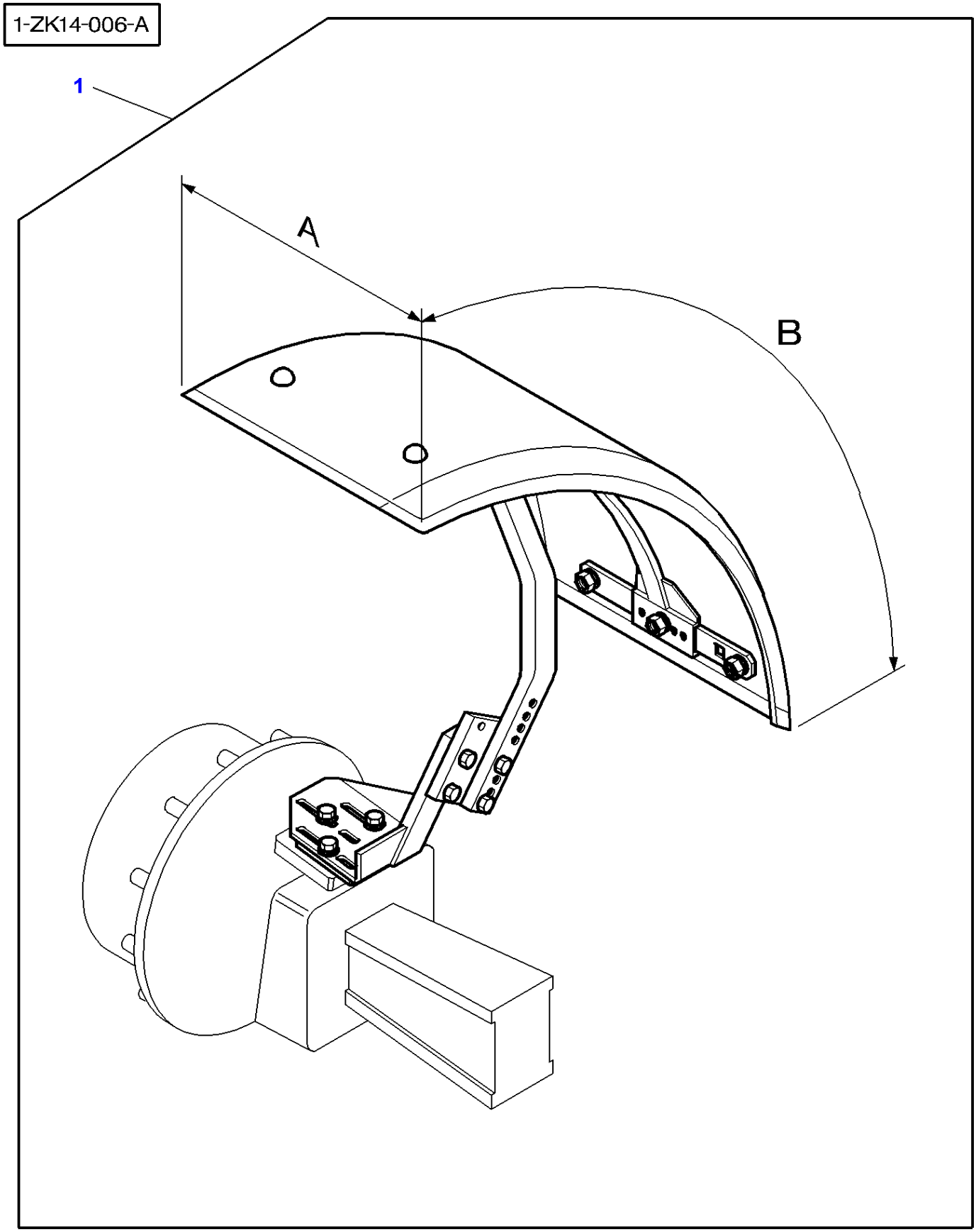

https://truckmanualshub.com/

Item	Part Number	Qty	Description	Comments
1	3783930M11	1	Mudguard	[A] A = 470MM B = 1300MM
	3783931M11	1	Mudguard	[A] A = 520MM B = 1550MM
	3783932M11	1	Mudguard	[A] A = 620MM B = 1560MM

FOOTNOTE [A] FOR SERVICE BREAKDOWN REFER TO TRACTOR BOOK
FOOTNOTE [B] WITH DYNASHIFT
FOOTNOTE [C] WITH FULL POWERSHIFT