7. GAUGES WITH AND WITHOUT INTEGRAL WARNING LIGHT (CHAPTER 7)

7.1. IP/GAUGE LIST, P. 1

INTERNATIONAL TRUCK AND ENGINE CORPORATION THIS PRINT IS PROVIDED ON A RESTRICTED BASIS AND IS NOT TO BE USED IN ANY WAY DETRIMENTAL TO THE INTEREST OF INTERNATIONAL TRUCK AND ENGINE CORPORATION.	ELECTRICAL CIRCUIT DIAGRAM CHAPTER 7 IP/GAUGES

INSTRUMENT PANEL GAUGES

GAUGE	WARN LIGHT	SIGNAL PATH	SENSOR LOCATION
RPM (TACH)	NO	ENGINE CTRLR/DRIVE TRAIN J1939/CLUSTER	ENGINE
MPH/KPH (SPD)	NO	ENGINE CTRLR/DRIVE TRAIN J1939/CLUSTER	TRANSMISSION
FUEL	YES	SYSTEM CTRLR/DRIVE TRAIN J1939/CLUSTER	FUEL TANK
VOLT	YES	SYSTEM CTRLR/DRIVE TRAIN J1939/CLUSTER	----------
AIR 1 (PRES)	YES	SYSTEM CTRLR/DRIVE TRAIN J1939/CLUSTER	INSIDE CAB - DASH PNL
AIR 2 (PRES)	YES	SYSTEM CTRLR/DRIVE TRAIN J1939/CLUSTER	STEERING COL AREA
WATER (TEMP)	YES	ENGINE CTRLR/DRIVE TRAIN J1939/CLUSTER	ENGINE
ENG OIL (TEMP)	YES	ENGINE CTRLR/DRIVE TRAIN J1939/CLUSTER	ENGINE
OIL (PRES)	YES	ENGINE CTRLR/DRIVE TRAIN J1939/CLUSTER	ENGINE
TRANS (TEMP)	YES	XMSN CTRLR/SYSTEM CTRLR/DRIVE TRAIN J1939/CLUSTER	TRANSMISSION
AIR APPLICATION	NO	SYSTEM CTRLR/DRIVE TRAIN J1939/CLUSTER	FWD CHASSIS
REAR AXLE TEMP	YES	SYSTEM CTRLR/DRIVE TRAIN J1939/CLUSTER	AXLE

NOTES:

1) WARNING LIGHTS ARE PART OF THE GAUGES AND LOCATED IN THE GAUGE

CHK	DATE	CHANGE	REV	REFERENCE	DRAWN	NAME		
PEC	16JAN01	PRODUCTION RELEASE.	A	P54304U	U00JXP9	42/43/44/85/8600 & 73/74/7500 CIRC DIAGRAMS		
					RELEASE NO.	DATE	PART NO.	SHEET
					P52778H	09AUG00	AE08-52371	01

Figure 51 IP/Gauge List

SAC
Ingenieria del Transporte

ING. WILLIAM DE LA CRUZ OLIVARES

7.2. WARNING LIGHT LIST, P. 2

INTERNATIONAL TRUCK AND ENGINE CORPORATION THIS PRINT IS PROVIDED ON A RESTRICTED BASIS AND IS NOT TO BE USED IN ANY WAY DETRIMENTAL TO THE INTEREST OF INTERNATIONAL TRUCK AND ENGINE CORPORATION.	ELECTRICAL CIRCUIT DIAGRAM CHAPTER 7 WARNING LIGHTS LIST

IP WARNING LIGHTS		
WARNING LIGHT TITLE	SIGNAL PATH	SENSOR LOCATION
RANGE INHIBITED	TRANS CTRLR/DRIVE TRAIN J1939/CLUSTER	
FUEL FILTER	SYSTEM CTRLR/DRIVE TRAIN J1939/CLUSTER	FUEL FILTER
ENGINE (YELLOW LED)	ENGINE CTRLR/DRIVE TRAIN J1939/CLUSTER	
ENGINE (RED LED)	ENGINE CTRLR/DRIVE TRAIN J1939/CLUSTER	
BRAKE PRESSURE ( )	SYSTEM CTRLR/DRIVE TRAIN J1939/CLUSTER	SWITCH
BRAKE FLUID	SYSTEM CTRLR/DRIVE TRAIN J1939/CLUSTER	BRK RESEVOIR
TRAC CTRL	TRUCK ABS CTRLR/DRIVE TRAIN J1939/CLUSTER	
CHECK TRANS	TRANS CTRLR/DRIVE TRAIN J1939/CLUSTER	
TRAILER ABS	TRLR ABS CTRLR/DRIVE TRAIN J1939/CLUSTER	
WASHER FLUID	SYSTEM CTRLR/DRIVE TRAIN J1939/CLUSTER	WASHER BOTTLE
(LEFT TURN)	SYSTEM CTRLR/DRIVE TRAIN J1939/CLUSTER	TURN SIG SW
AIR BAG	DISCRETE NOT ON DATA BUS	
WATER IN FUEL	SYSTEM CTRLR/DRIVE TRAIN J1939/CLUSTER	FUEL FILTER
COOLANT LEVEL	ENGINE CTRLR/DRIVE TRAIN J1939/CLUSTER	SURGE TANK
CHECK ELECT SYS	SYSTEM CTRLR/DRIVE TRAIN J1939/CLUSTER	
PARK (P)	SYSTEM CTRLR/DRIVE TRAIN J1939/CLUSTER	SWITCH
CRUISE	SYSTEM CTRLR/DRIVE TRAIN J1939/CLUSTER	
ABS	TRUCK CTRLR/DRIVE TRAIN J1939/CLUSTER	
(RIGHT TURN)	SYSTEM CTRLR/DRIVE TRAIN J1939/CLUSTER	
WAIT TO START	ENGINE CTRLR/DRIVE TRAIN J1939/CLUSTER	
FASTEN BELTS	SYSTEM CTRLR/DRIVE TRAIN J1939/CLUSTER	
(HIGH BEAM IND)	SYSTEM CTRLR/DRIVE TRAIN J1939/CLUSTER	
COLD AMB PROTEC	SYSTEM CTRLR/DRIVE TRAIN J1939/CLUSTER	
RETARD OVERHEAT	TRANS CTRLR/DRIVE TRAIN J1939/CLUSTER	TRANSMISSION
CHECK AC	SYSTEM CTRLR/DRIVE TRAIN J1939/CLUSTER	
AUTO NEUTRAL	DISCRETE NOT ON DATA BUS	SWITCH
ALTERNATOR	DISCRETE NOT ON DATA BUS	
PTO/THROTTLE	SYSTEM CTRLR/DRIVE TRAIN J1939/CLUSTER	
OPTIMIZED IDLE	DISCRETE NOT ON DATA BUS	
SNOW VALVE	DISCRETE NOT ON DATA BUS	SNOW VALVE
FR AXLE DIFF LOCK	DISCRETE NOT ON DATA BUS	FWD RR AXLE
RR AXLE DIFF LOCK	DISCRETE NOT ON DATA BUS	RR RR AXLE
MESSAGE WAIT	DISCRETE NOT ON DATA BUS	
PTO	DISCRETE NOT ON DATA BUS	
CONVERTER TEMP	DISCRETE NOT ON DATA BUS	
TOUCHLOC RELEASE	DISCRETE NOT ON DATA BUS	
PARK FLUID	SYSTEM CTRLR/DRIVE TRAIN	

CHK	DATE	CHANGE	REV	REFERENCE	DRAWN	NAME		
					U00JXP9	42/43/44/85/8600 & 73/74/7500 CIRC DIAGRAMS		
PEC	16JAN01	PRODUCTION RELEASE.	A	P54304U	RELEASE NO.	DATE	PART NO.	SHEET
					P52778H	09AUG00	AE08-52371	02

Figure 52 Warning Light List

TRUCK HOUSE SAC
Ingenieria del Transporte

ING. WILLIAM DE LA CRUZ OLIVARES

7.3. WARNING LIGHTS CONTROLLED BY ENGINE, TRANSMISSION, ABS CONTROLLER, P. 3

INTERNATIONAL TRUCK AND ENGINE CORPORATION	ELECTRICAL CIRCUIT DIAGRAM CHAPTER 7
THIS PRINT IS PROVIDED ON A RESTRICTED BASIS AND IS NOT TO BE USED IN ANY WAY DETRIMENTAL TO THE INTEREST OF INTERNATIONAL TRUCK AND ENGINE CORPORATION.	WARNING LIGHTS CONTROLLED BY ENGINE, TRANSMISSION, ABS CONTROLLER

THE FOLLOWING WARNING LIGHTS ARE CONTROLLED BY THE ENGINE, TRANSMISSION, OR ABS CONTROLLER OVER THE DATA BUS AND DO NOT HAVE INDEPENDENT CIRCUITRY THAT CAN BE OR NEEDS TO BE SHOWN:

RANGE INHIBIT

ENGINE (YELLOW LED)

ENGINE (RED LED)

TRAC CTRL

CHECK TRANS

TRAILER ABS

CHECK ELECTR SYS

ABS

WAIT TO START

RETARD OVERHEAT

AUTO NEUTRAL (NOT ON DATA BUS TO CLUSTER)

OPTIMIZED IDLE (NOT ON DATA BUS TO CLUSTER)

CHK	DATE	CHANGE	REV	REFERENCE	DRAWN	NAME		
PEC	16JAN01	PRODUCTION RELEASE.	A	P54304U	U00JXP9	42/43/44/85/8600 & 73/74/7500 CIRC DIAGRAMS		
					RELEASE NO.	DATE	PART NO.	SHEET
					P52778H	20JUN00	AE08-52371	03

Figure 53 Warning Lights Controlled by Engine, Transmission, ABS Controller

TRUCK HOUSE SAC
Ingenieria del Transporte

ING. WILLIAM DE LA CRUZ OLIVARES

7.4. ENGINE OIL PRESSURE AND TEMP, SPEEDOMETER, TACH, VOLTMETER AND WATER TEMP GAUGE CIRCUITS, P. 4

INTERNATIONAL TRUCK AND ENGINE CORPORATION THIS PRINT IS PROVIDED ON A RESTRICTED BASIS AND IS NOT TO BE USED IN ANY WAY DETRIMENTAL TO THE INTEREST OF INTERNATIONAL TRUCK AND ENGINE CORPORATION.	ELECTRICAL CIRCUIT DIAGRAM CHAPTER 7 ENG OIL PRESS & TEMP, SPEEDOMETER, TACH, VOLTMETER & WATER TEMP GAUGE CIRCUITS

REFER TO CONSOLIDATED ENGINE/VEHICLE CONTROLLER DIAGNOSTICS MANUAL EGES-175 (DT466), EGES-190 (V8-AVNT), FOR CIRCUIT DIAGRAMS SHOWING INPUT CIRCUITRY FOR THE FOLLOWING DATALINK DRIVEN SYSTEM:

ENGINE OIL PRESSURE GAUGE

ENGINE OIL TEMPERATURE GAUGE

SPEEDOMETER GAUGE

TACHOMETER GAUGE

WATER TEMPERATURE GAUGE

CHK	DATE	CHANGE	REV	REFERENCE	DRAWN	NAME		
					U00JXP9	42/43/44/85/8600 & 73/74/7500 CIRC DIAGRAMS		
PEC	16JAN01	PRODUCTION RELEASE.	A	P54304U	RELEASE NO.	DATE	PART NO.	SHEET
					P52778H	20JUN00	AE08-52371	04

Figure 54 Engine Oil Pressure and Temp, Speedometer, Tach, Voltmeter and Water Temp Gauge Circuits

TRUCK HOUSE SAC
Ingenieria del Transporte

ING. WILLIAM DE LA CRUZ OLIVARES

7.5. IP/GAUGES AND WARNING LIGHTS — GAUGE CLUSTER, P. 5

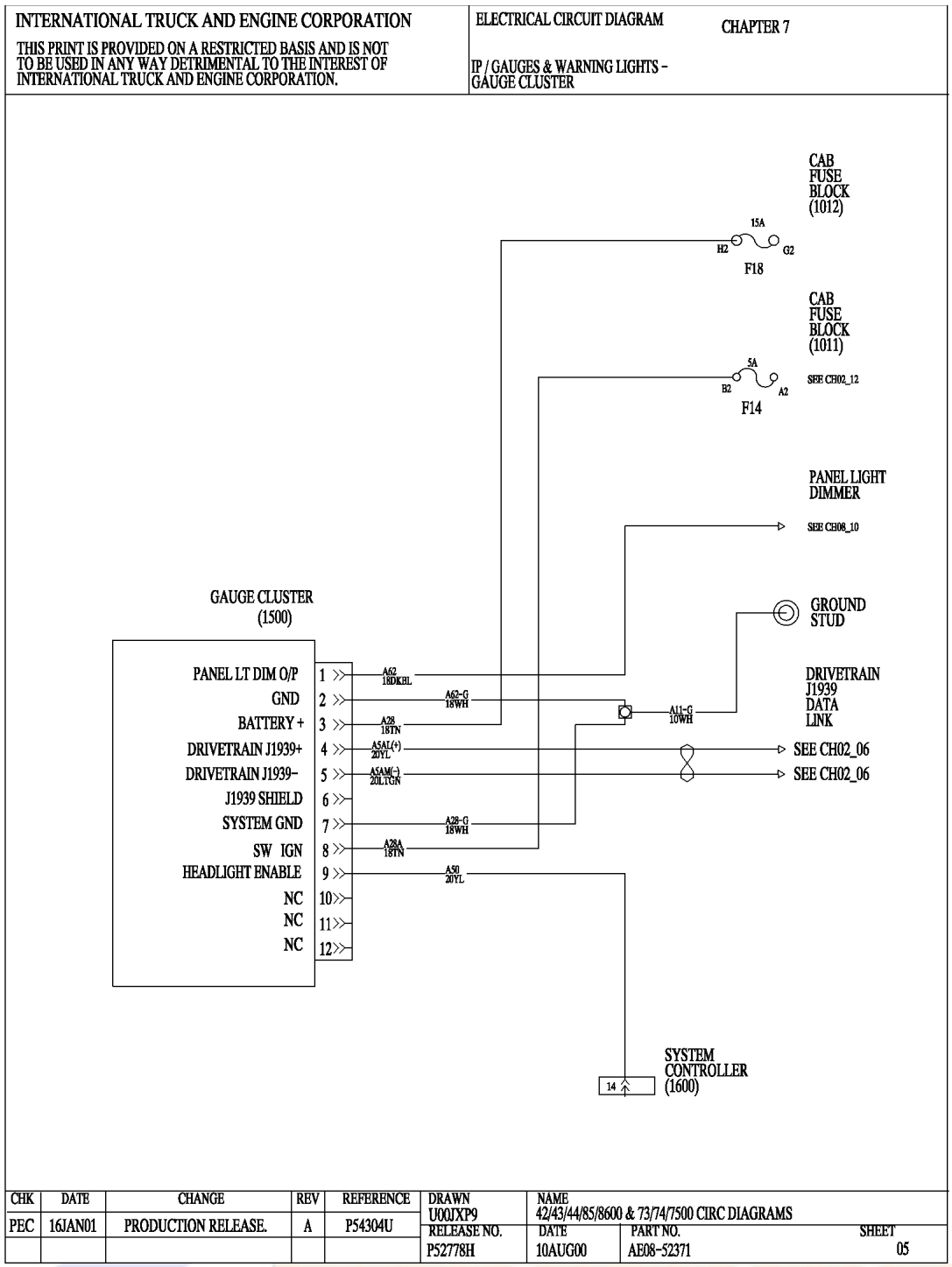

Figure 55 IP/Gauges and Warning Lights — Gauge Cluster

TRUCK HOUSE SAC
Ingenieria del Transporte

ING. WILLIAM DE LA CRUZ OLIVARES

7.6. AIR PRESSURE INPUT CIRCUIT, P. 6

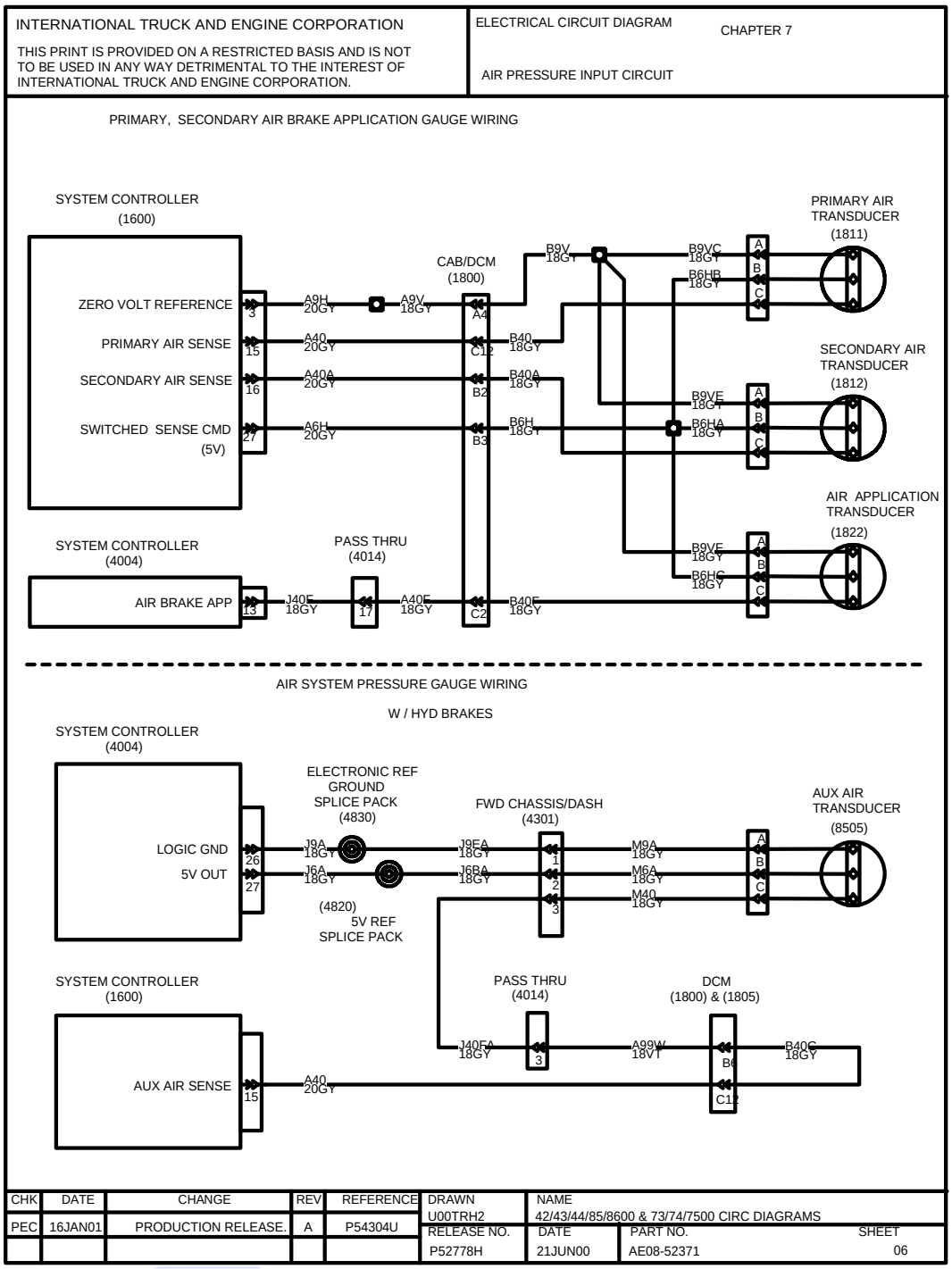

Figure 56 Air Pressure Input Circuit

TRUCK HOUSE SAC
Ingenieria del Transporte

ING. WILLIAM DE LA CRUZ OLIVARES

7.7. AXLE TEMPERATURE, FWD REAR AND REAR AXLES, GAUGE INPUT CIRCUIT, P. 7

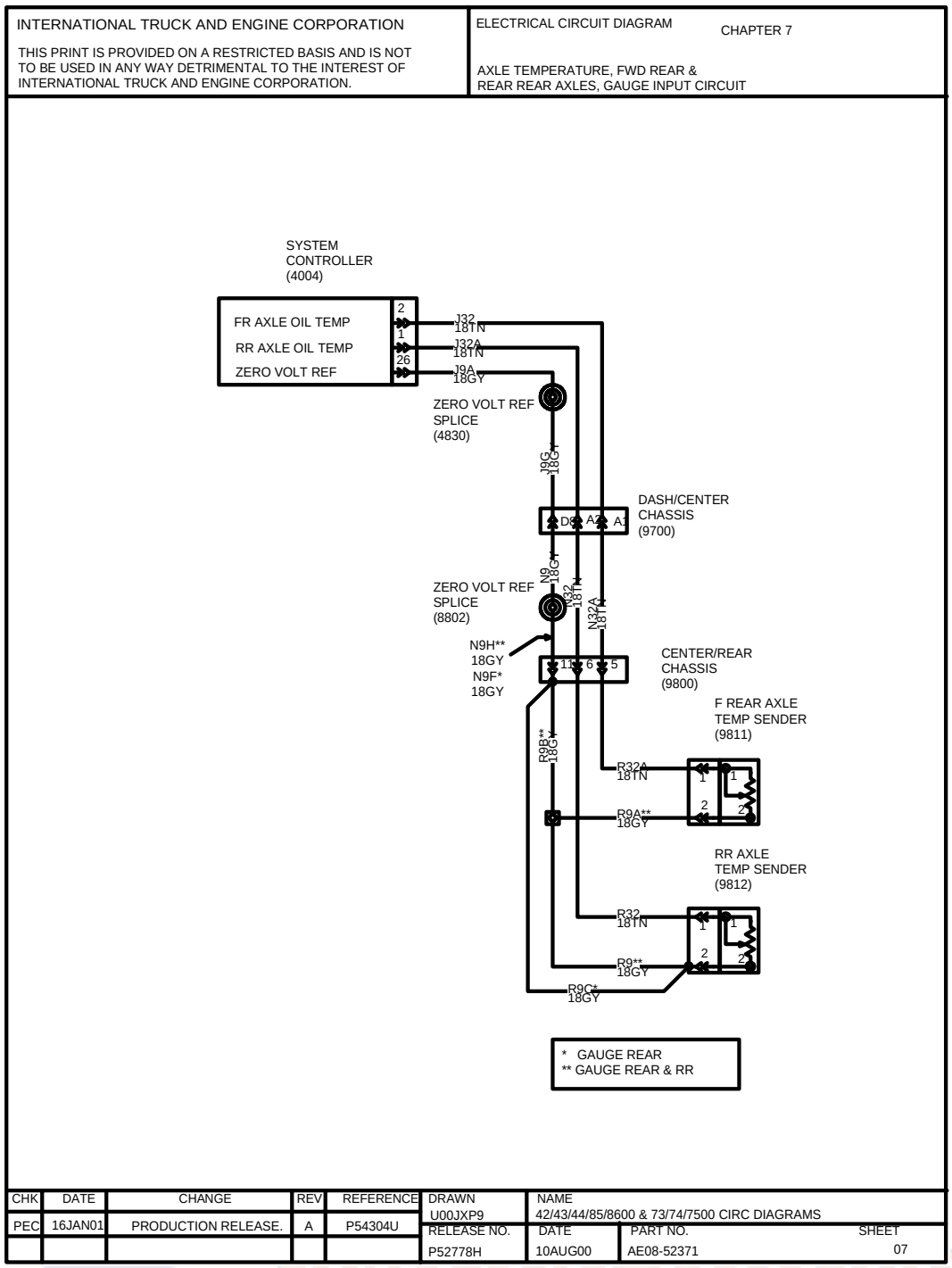

Figure 57 Axle Temperature, FWD Rear and Rear Axles, Gauge Input Circuit

TRUCK HOUSE SAC
Ingenieria del Transporte

ING. WILLIAM DE LA CRUZ OLIVARES

7.8. FUEL GAUGE INPUT CIRCUIT (SINGLE TANK) DIFFERENTIAL LOCK WARNING LAMPS, P. 8

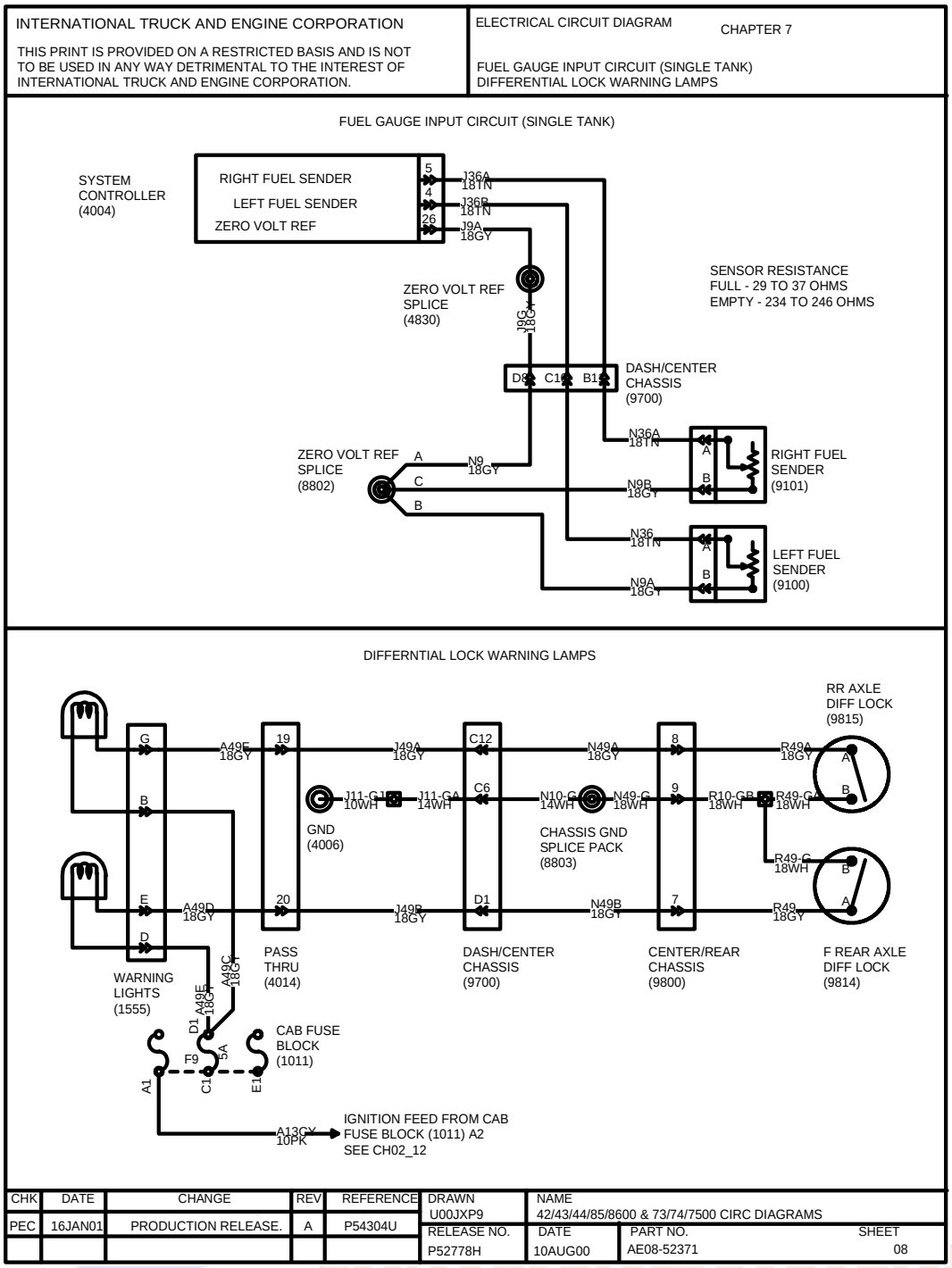

Figure 58 Fuel Gauge Input Circuit (Single Tank) Differential Lock Warning Lamps

TRUCK HOUSE SAC
Ingenieria del Transporte

ING. WILLIAM DE LA CRUZ OLIVARES

7.9. GAUGES AND WARNING LIGHTS — FUEL FILTER RESTRICTION AND WATER IN FUEL LIGHTS, P. 9

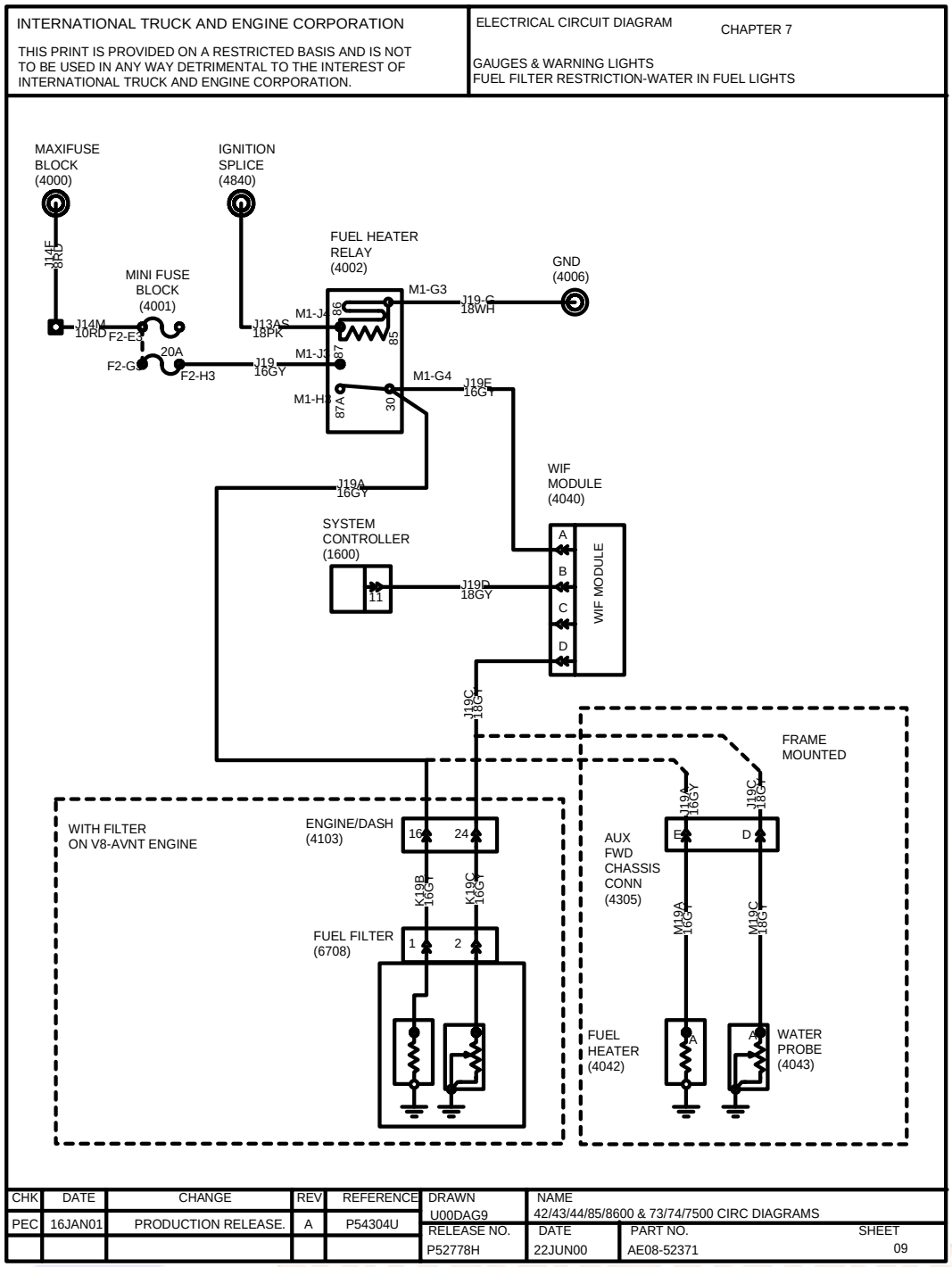

Figure 59 Gauges and Warning Lights — Fuel Filter Restriction and Water in Fuel Lights

TRUCK HOUSE SAC
Ingenieria del Transporte

ING. WILLIAM DE LA CRUZ OLIVARES

7.10. GAUGES AND WARNING LIGHTS — PARK BRAKE LIGHT AND TRANSMISSION OIL TEMP. GAUGE, P. 10

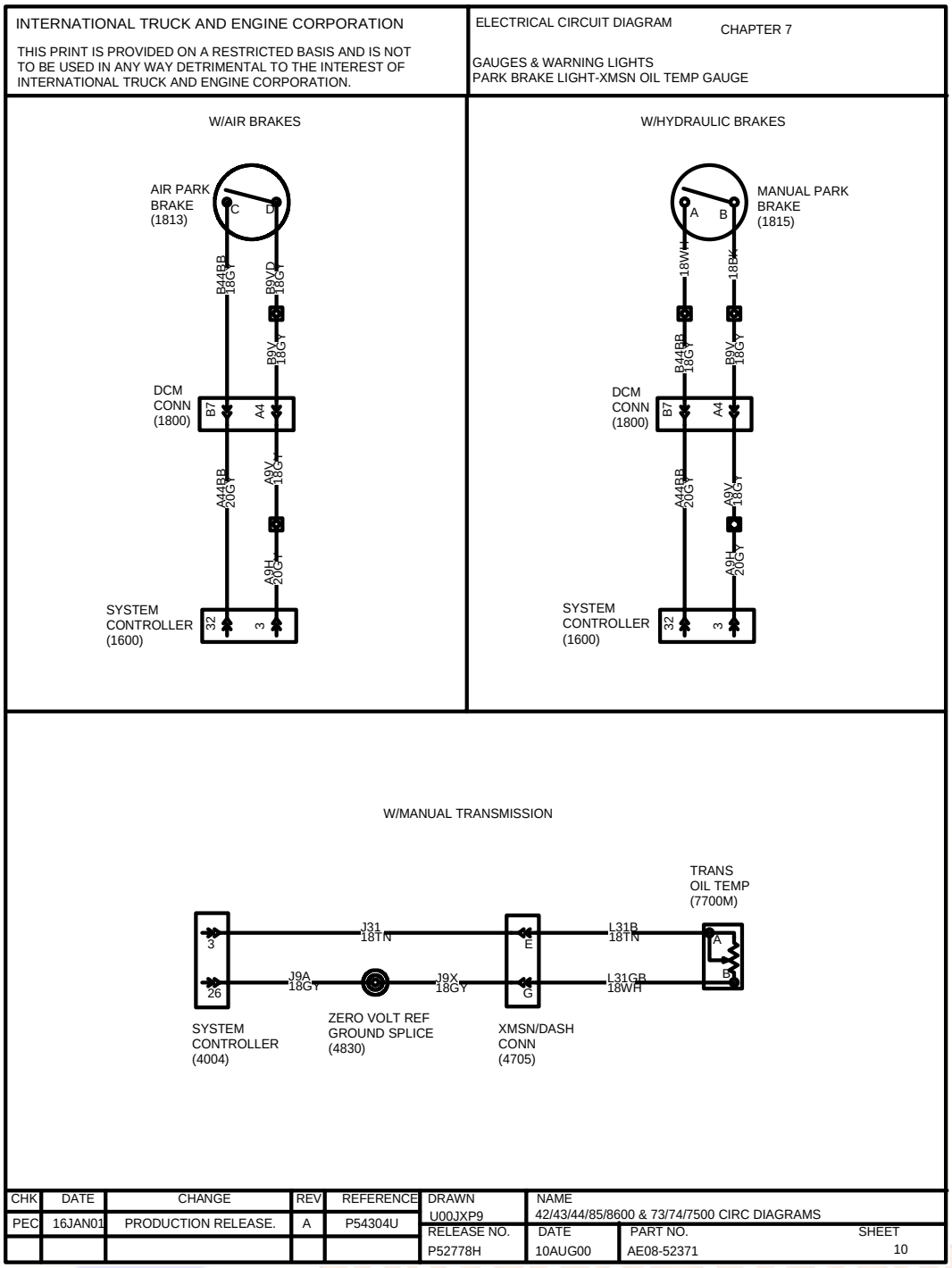

Figure 60 Gauges and Warning Lights — Park Brake Light and Transmission Oil Temp. Gauge

TRUCK HOUSE SAC
Ingenieria del Transporte

ING. WILLIAM DE LA CRUZ OLIVARES

7.11. GAUGES AND WARNING LIGHTS — AMMETER, P. 11

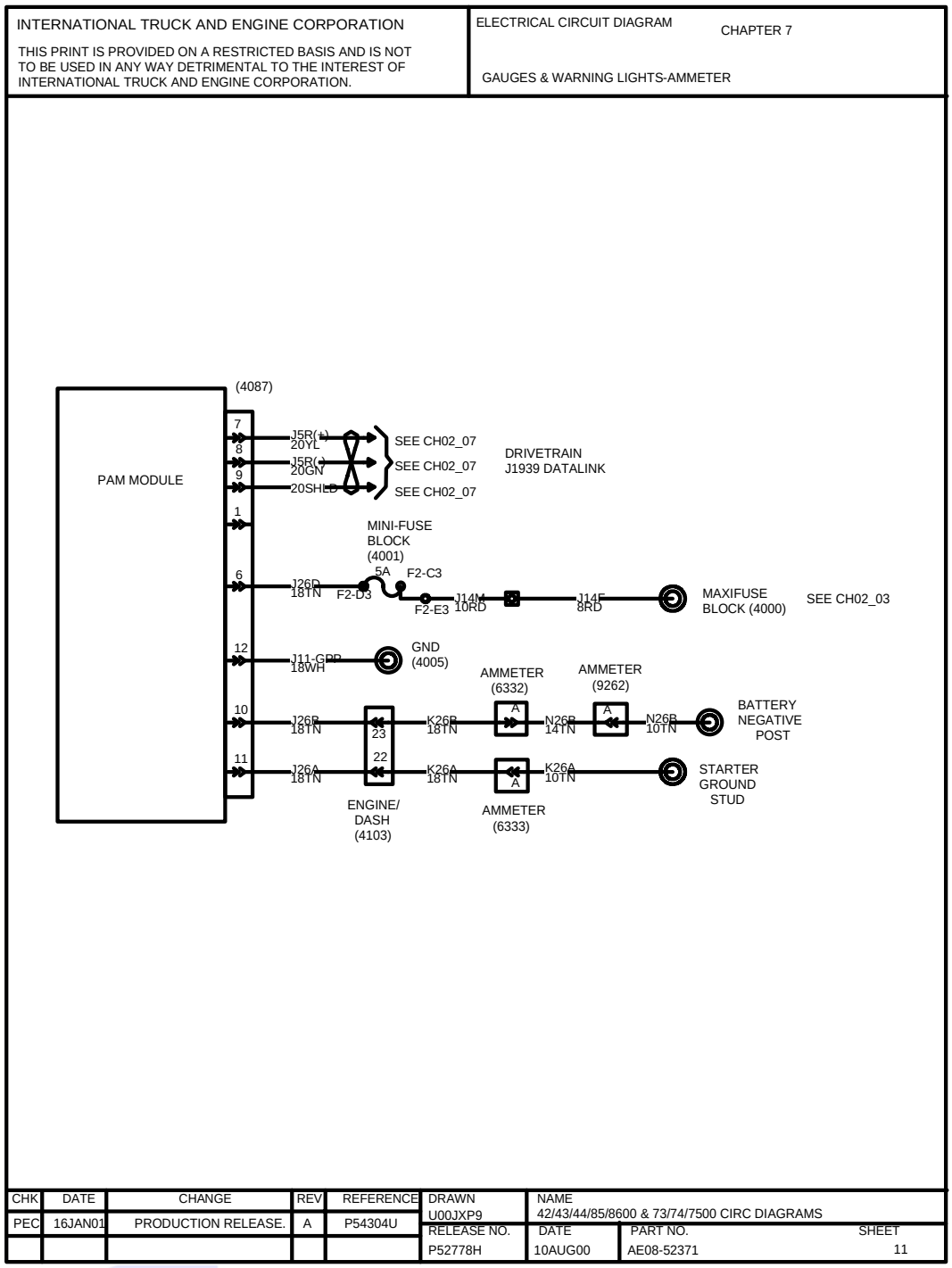

Figure 61 Gauges and Warning Lights — Ammeter

TRUCK HOUSE SAC
Ingenieria del Transporte

ING. WILLIAM DE LA CRUZ OLIVARES

8. LIGHTS (CHAPTER 8)

8.1. BACK UP LIGHTS, P. 1

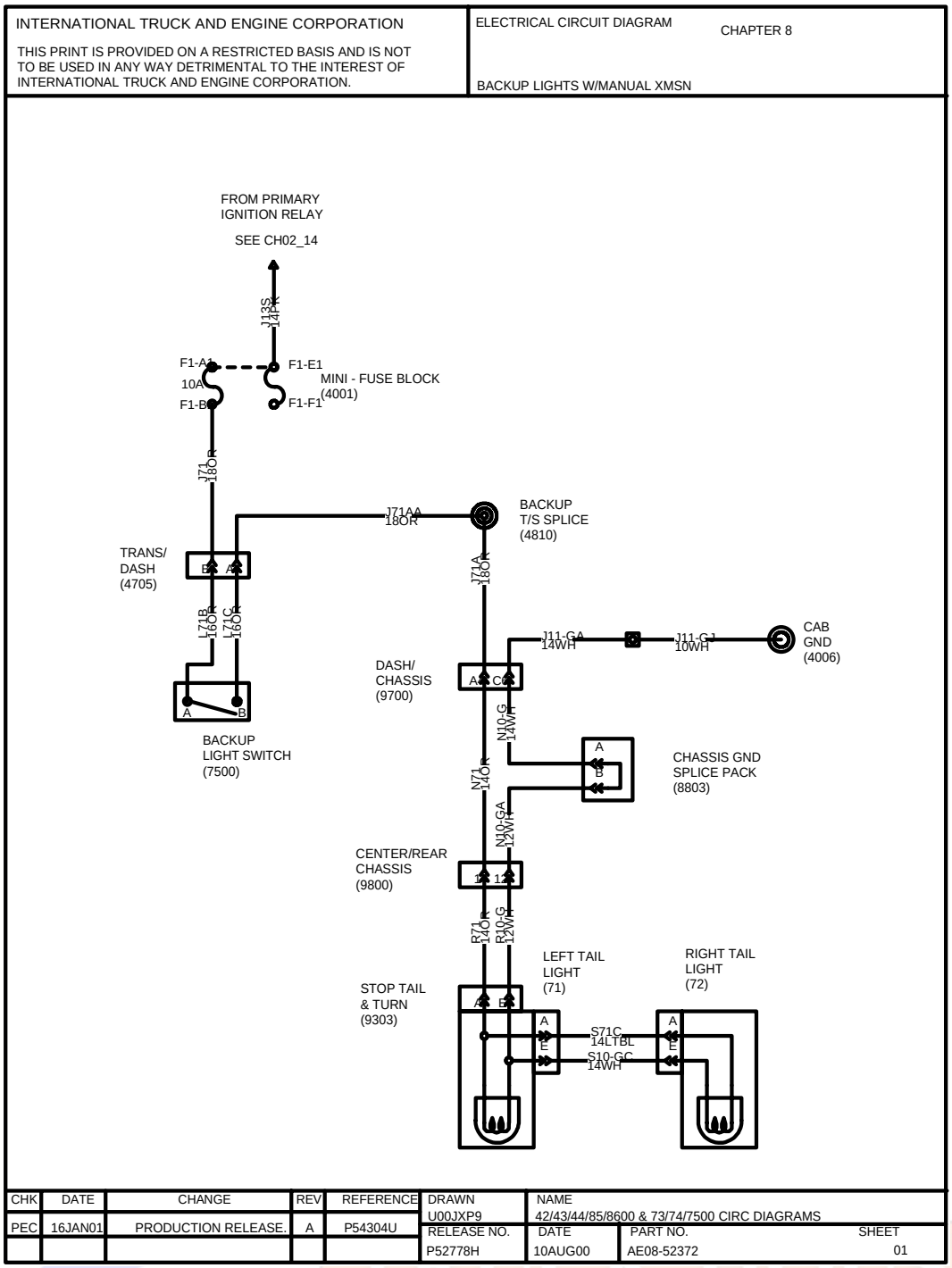

Figure 62 Back Up Lights

TRUCK HOUSE SAC
Ingenieria del Transporte

ING. WILLIAM DE LA CRUZ OLIVARES

8.2. LIGHT SYSTEMS — CLEARANCE, MARKER, PARK, TAIL, TURN AND STOP LAMPS, P. 2

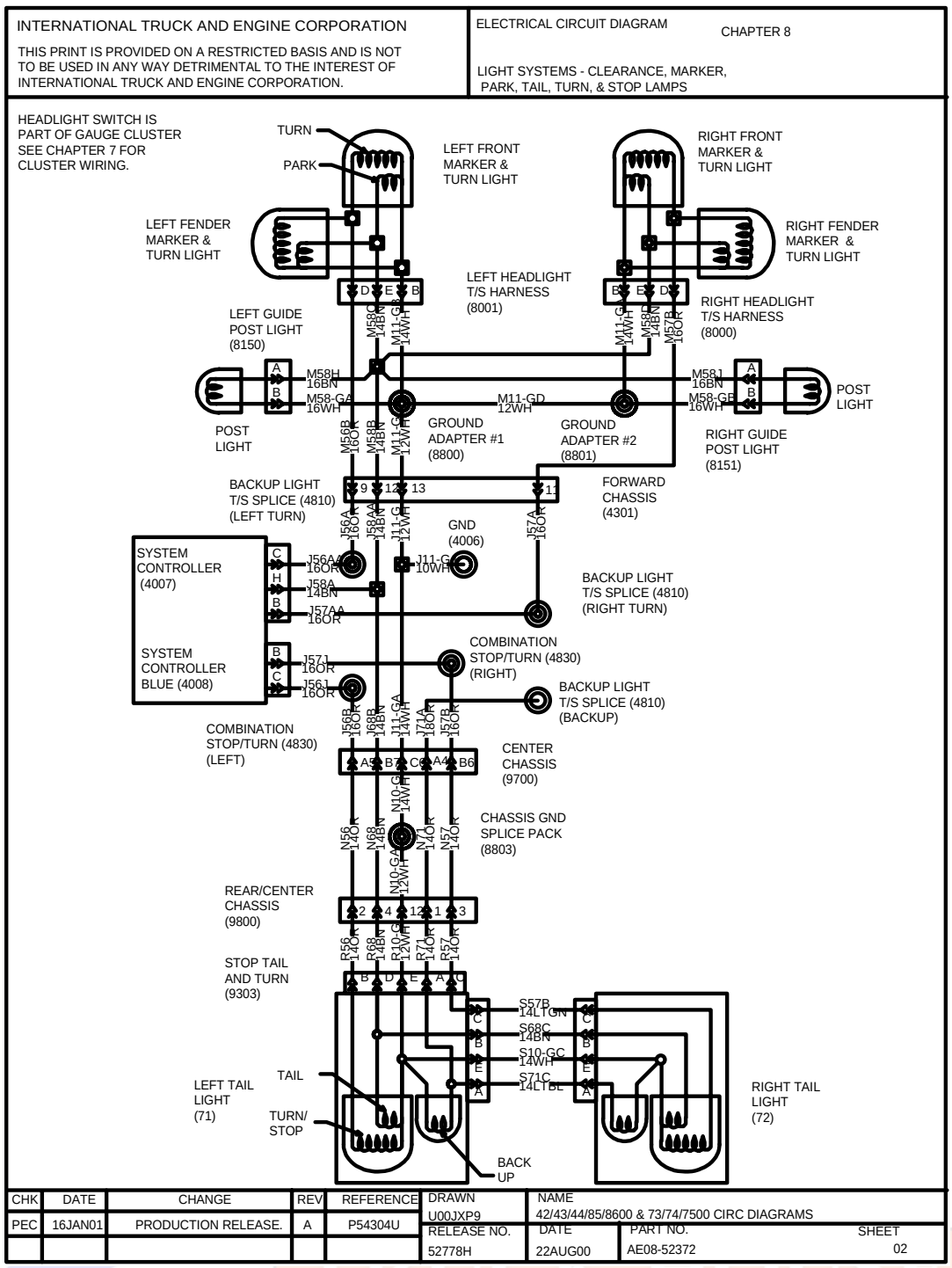

Figure 63 Light Systems — Clearance, Marker, Park, Tail, Turn and Stop Lamps

TRUCK HOUSE SAC
Ingenieria del Transporte

ING. WILLIAM DE LA CRUZ OLIVARES

8.3. LIGHT SYSTEMS — CLEARANCE, MARKER, PARK, TAIL, TURN AND STOP LAMPS (CONT.), P. 3

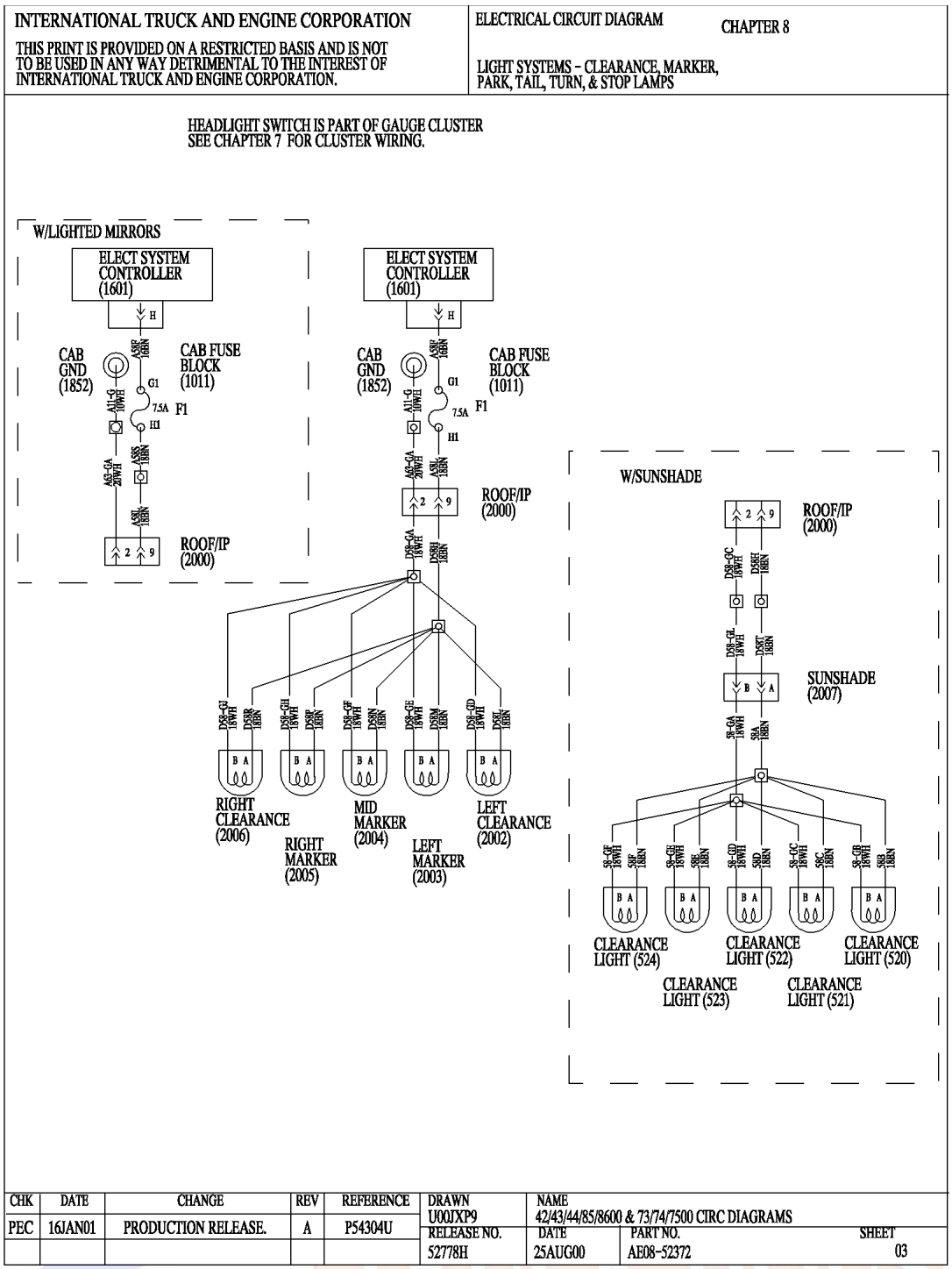

Figure 64 Light Systems — Clearance, Marker, Park, Tail, Turn and Stop Lamps (Cont.)

TRUCK HOUSE SAC
Ingenieria del Transporte

ING. WILLIAM DE LA CRUZ OLIVARES

8.4. LIGHT SYSTEMS — TURN SIGNAL AND STOP SWITCHES, P. 4

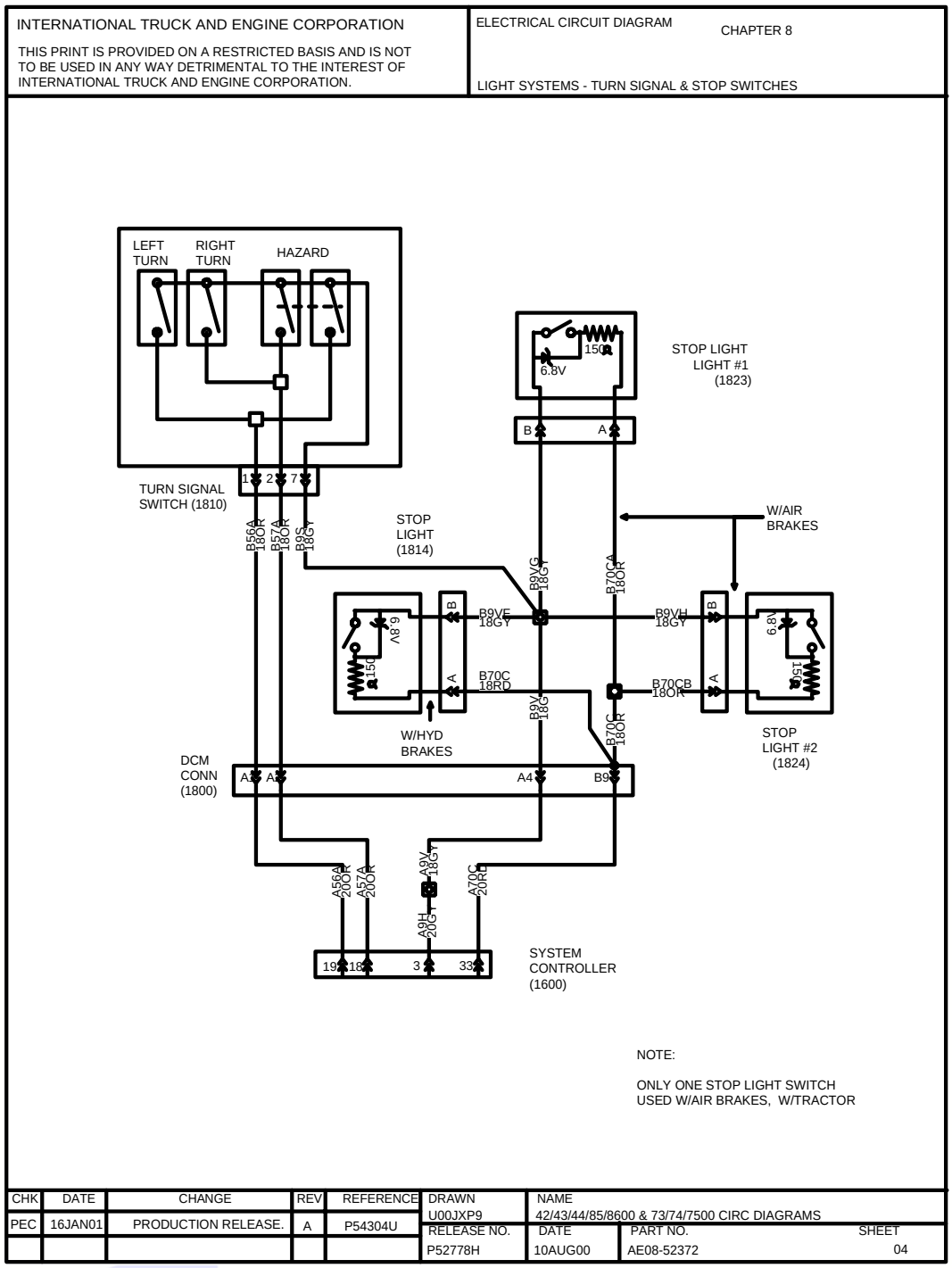

Figure 65 Light Systems — Turn Signal and Stop Switches

TRUCK HOUSE SAC
Ingenieria del Transporte

ING. WILLIAM DE LA CRUZ OLIVARES

8.5. DOME LIGHT, MAP LIGHT, P. 5

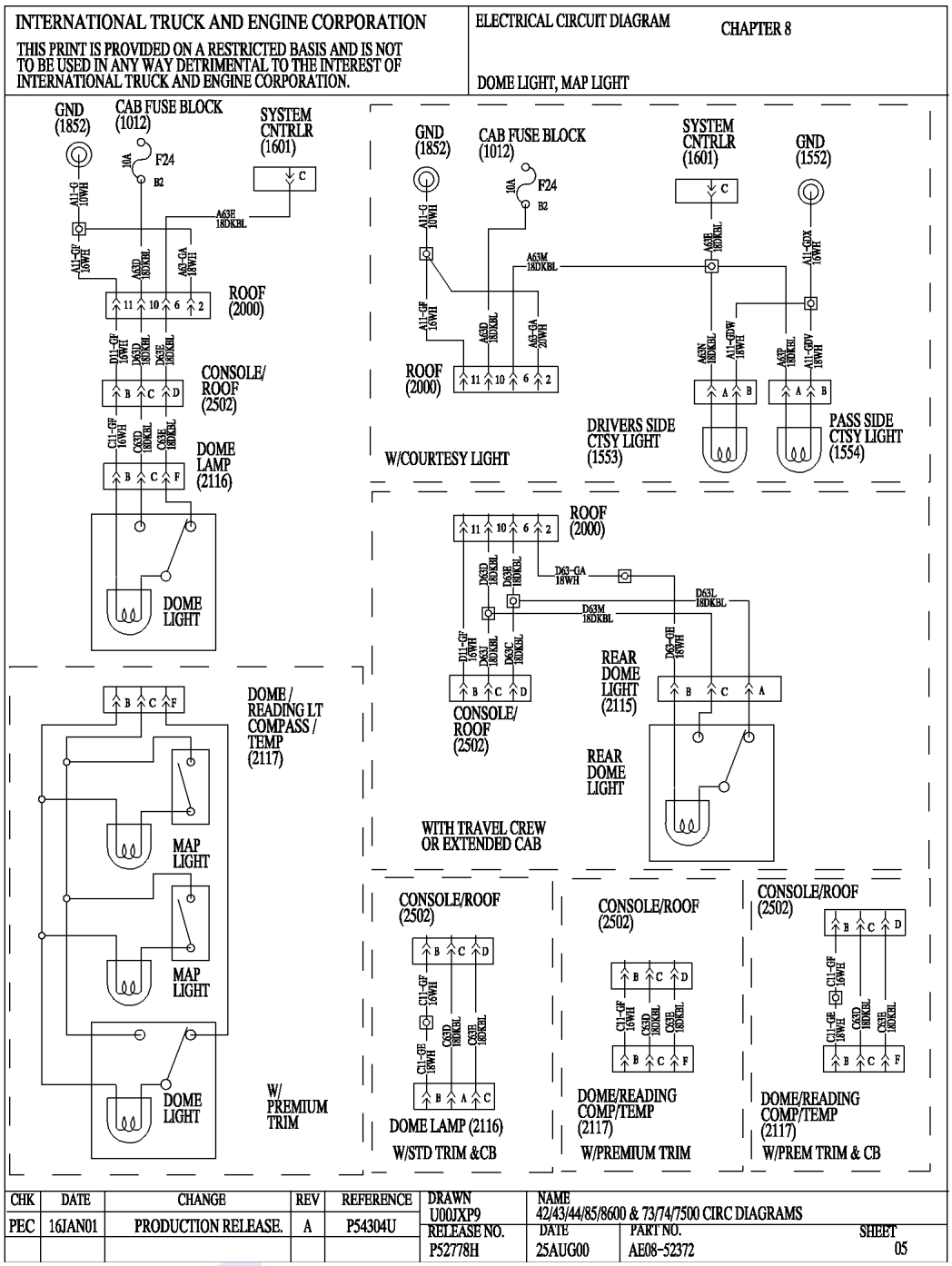

Figure 66 Dome Light, Map Light

TRUCK HOUSE SAC
Ingenieria del Transporte

ING. WILLIAM DE LA CRUZ OLIVARES

8.6. DOME LIGHT, MAP LIGHT (CONT.), P. 6

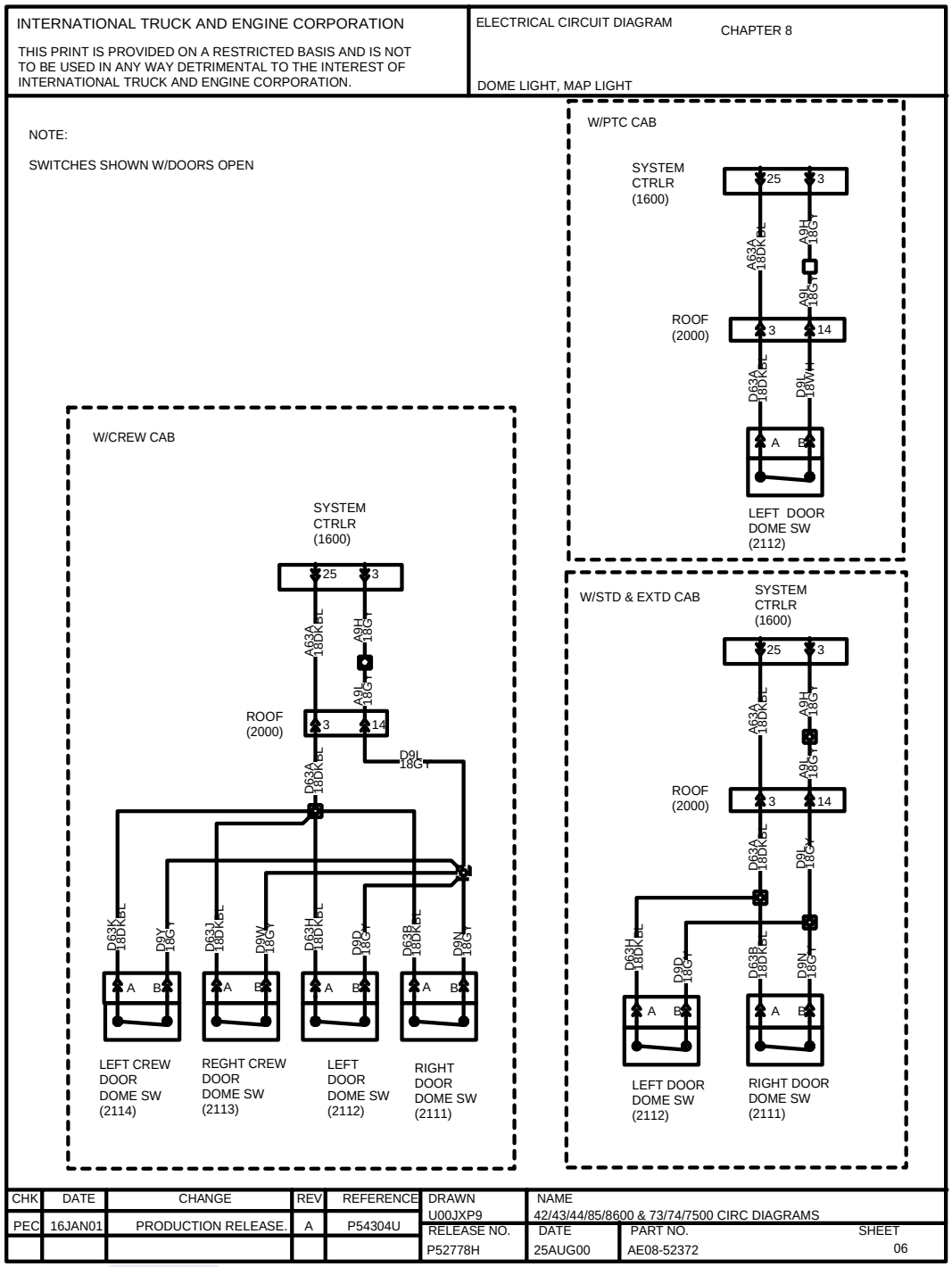

Figure 67 Dome Light, Map Light (Cont.)

TRUCK HOUSE SAC
Ingenieria del Transporte

ING. WILLIAM DE LA CRUZ OLIVARES

8.7. FOG LIGHT AND WORK LIGHT, P. 7

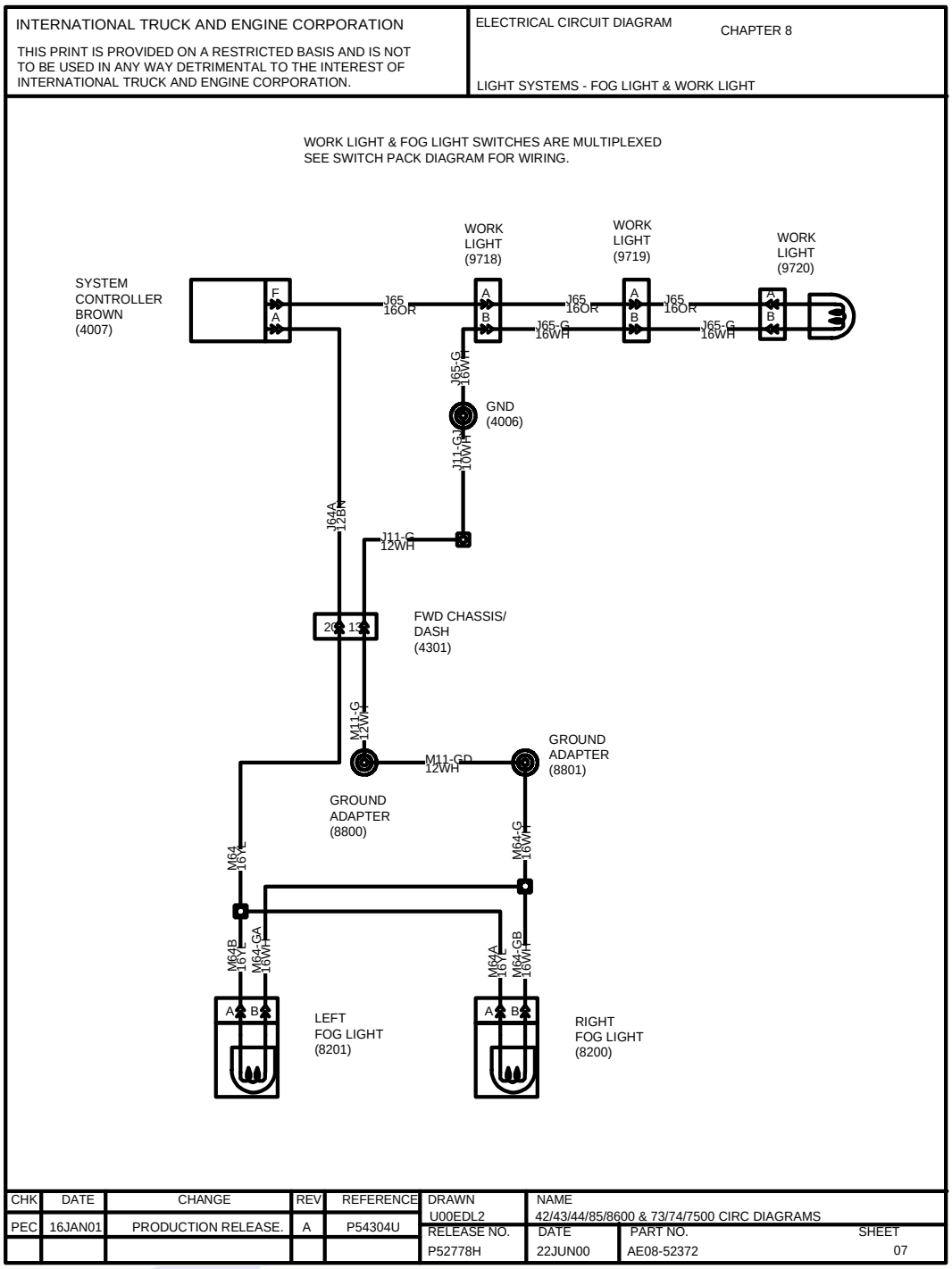

Figure 68 Fog Light and Work Light

TRUCK HOUSE SAC
Ingenieria del Transporte

ING. WILLIAM DE LA CRUZ OLIVARES

8.8. HEADLIGHTS, P. 8

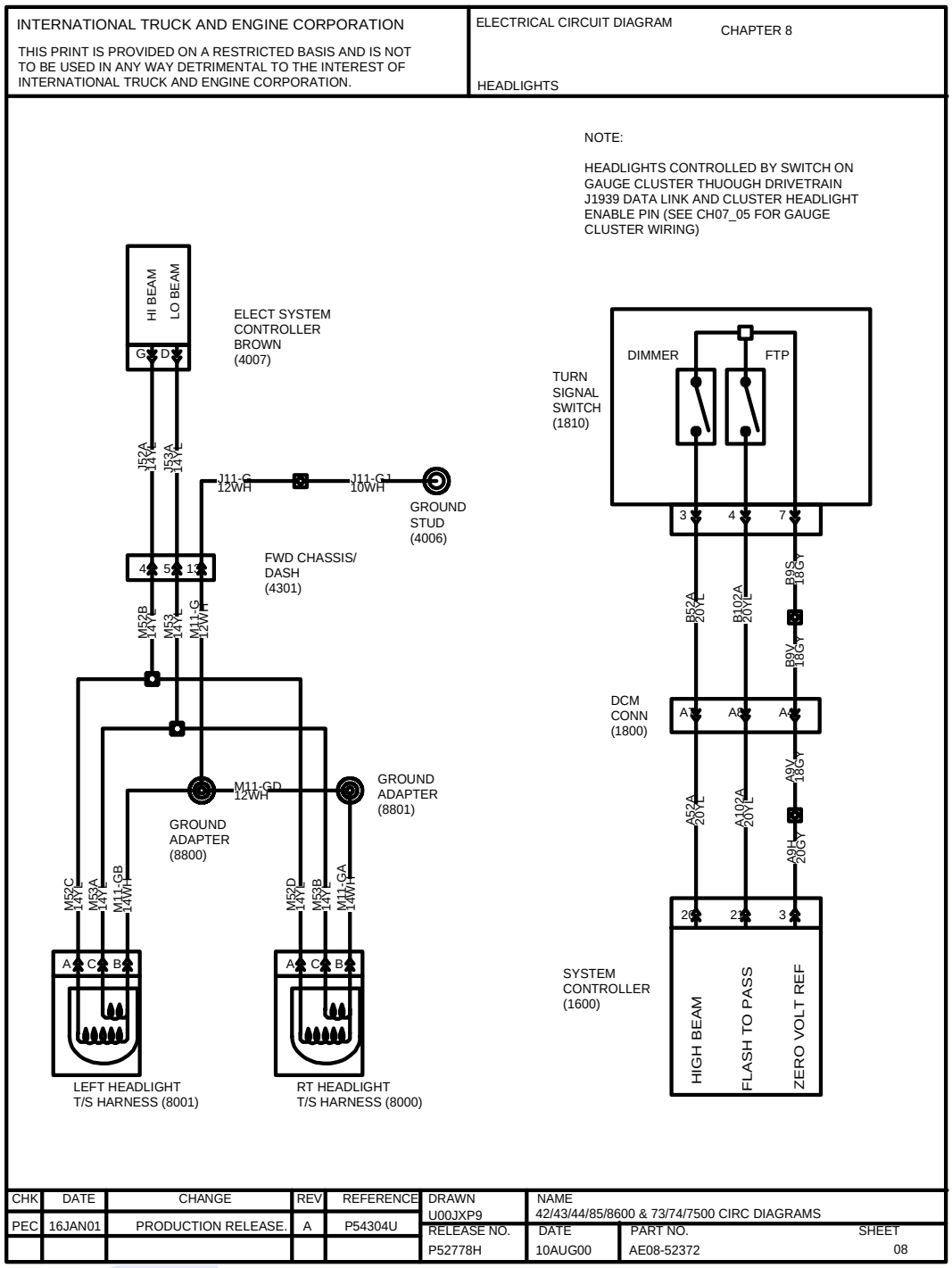

Figure 69 Headlights

TRUCK HOUSE SAC
Ingenieria del Transporte

ING. WILLIAM DE LA CRUZ OLIVARES

8.9. AUX. HEADLIGHTS, AUX. PARK, AUX TURN, P. 9

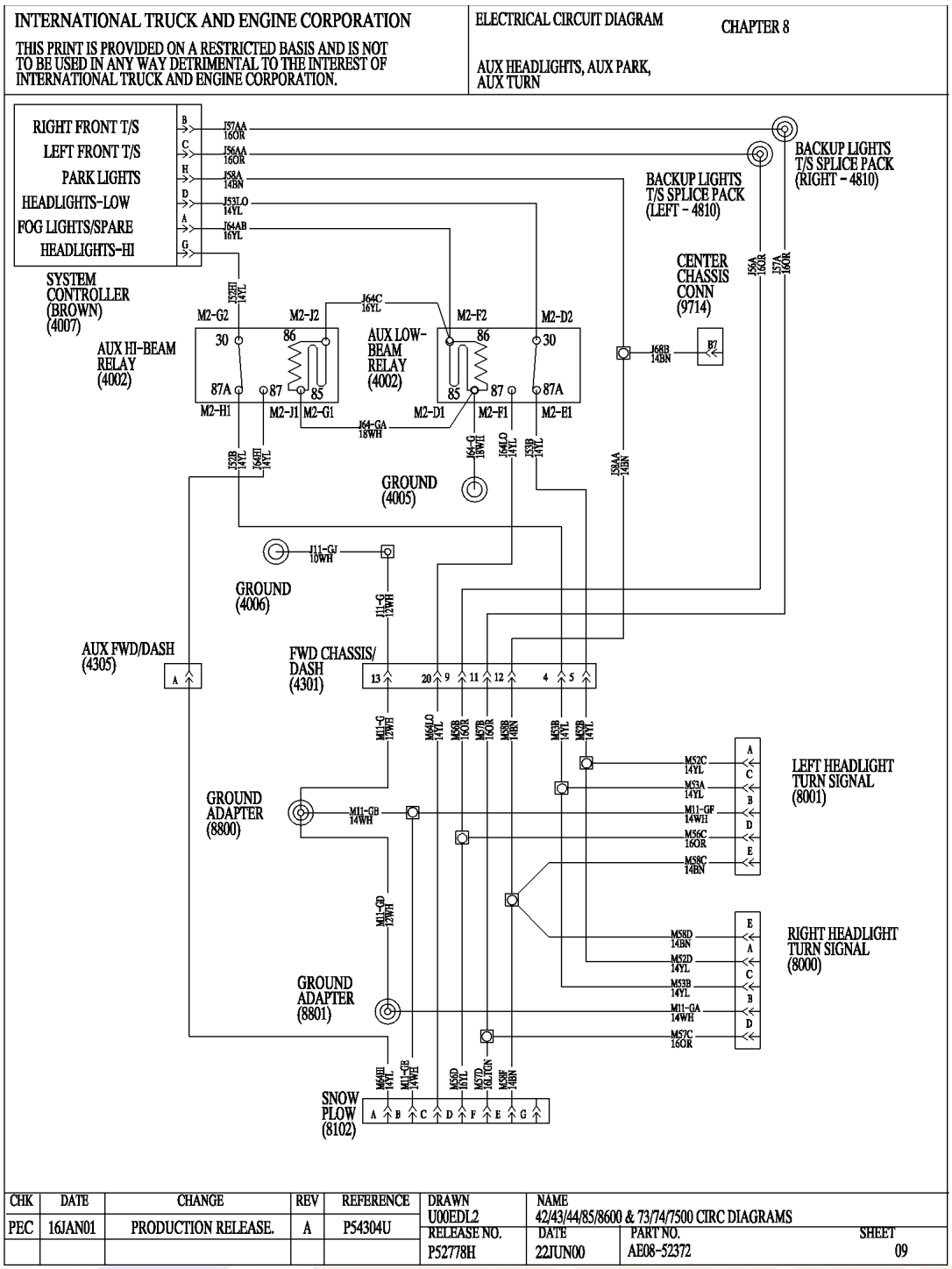

Figure 70 Aux. Headlights, Aux. Park, Aux Turn

TRUCK HOUSE SAC
Ingenieria del Transporte

ING. WILLIAM DE LA CRUZ OLIVARES

8.10. PANEL LIGHTS, P. 10

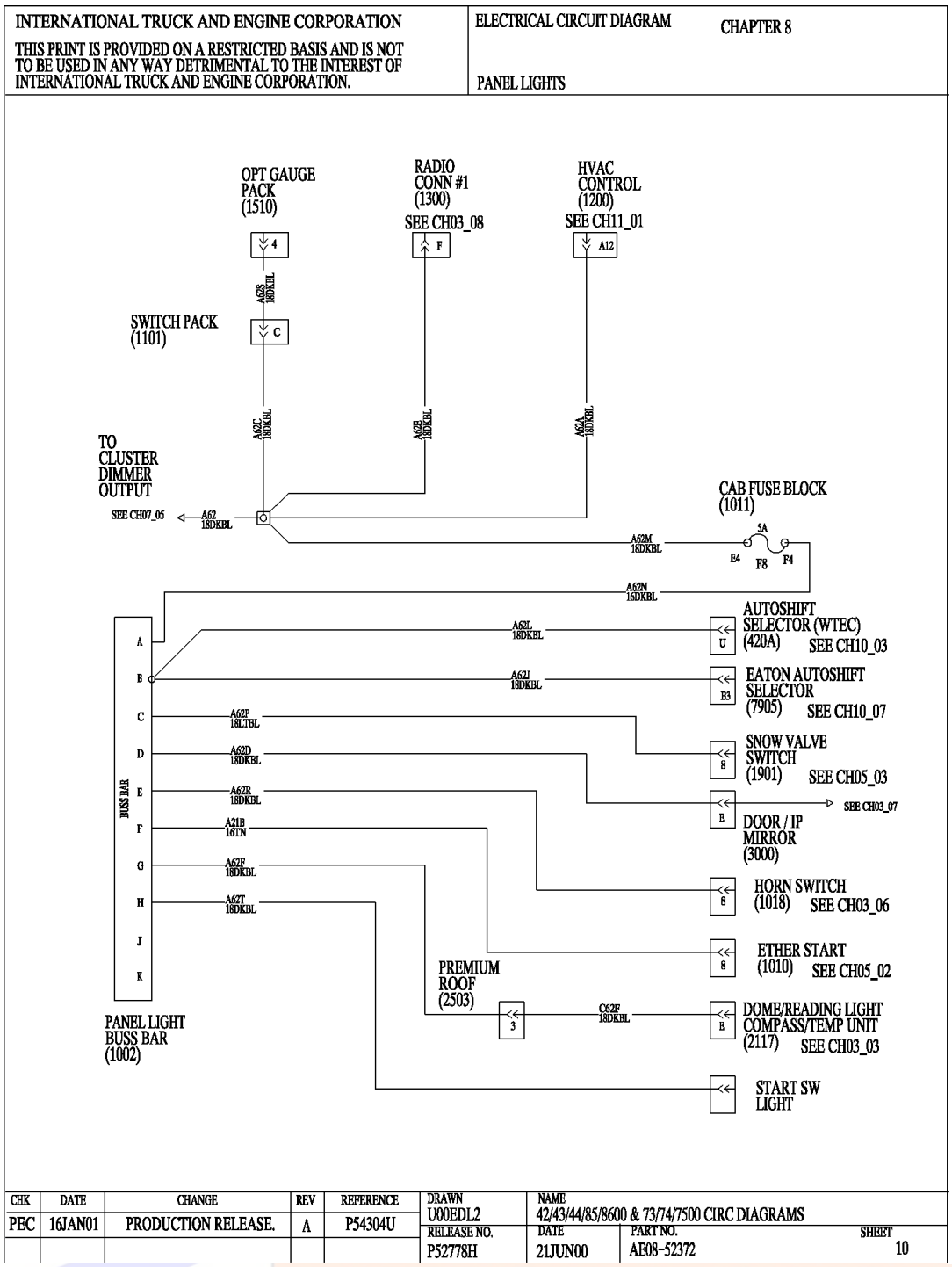

Figure 71 Panel Lights

TRUCK HOUSE SAC
Ingenieria del Transporte

ING. WILLIAM DE LA CRUZ OLIVARES

9. CHASSIS ACCESSORIES (CHAPTER 9)

9.1. AIR DRYER AND HEATED DRAIN VALVE, P. 1

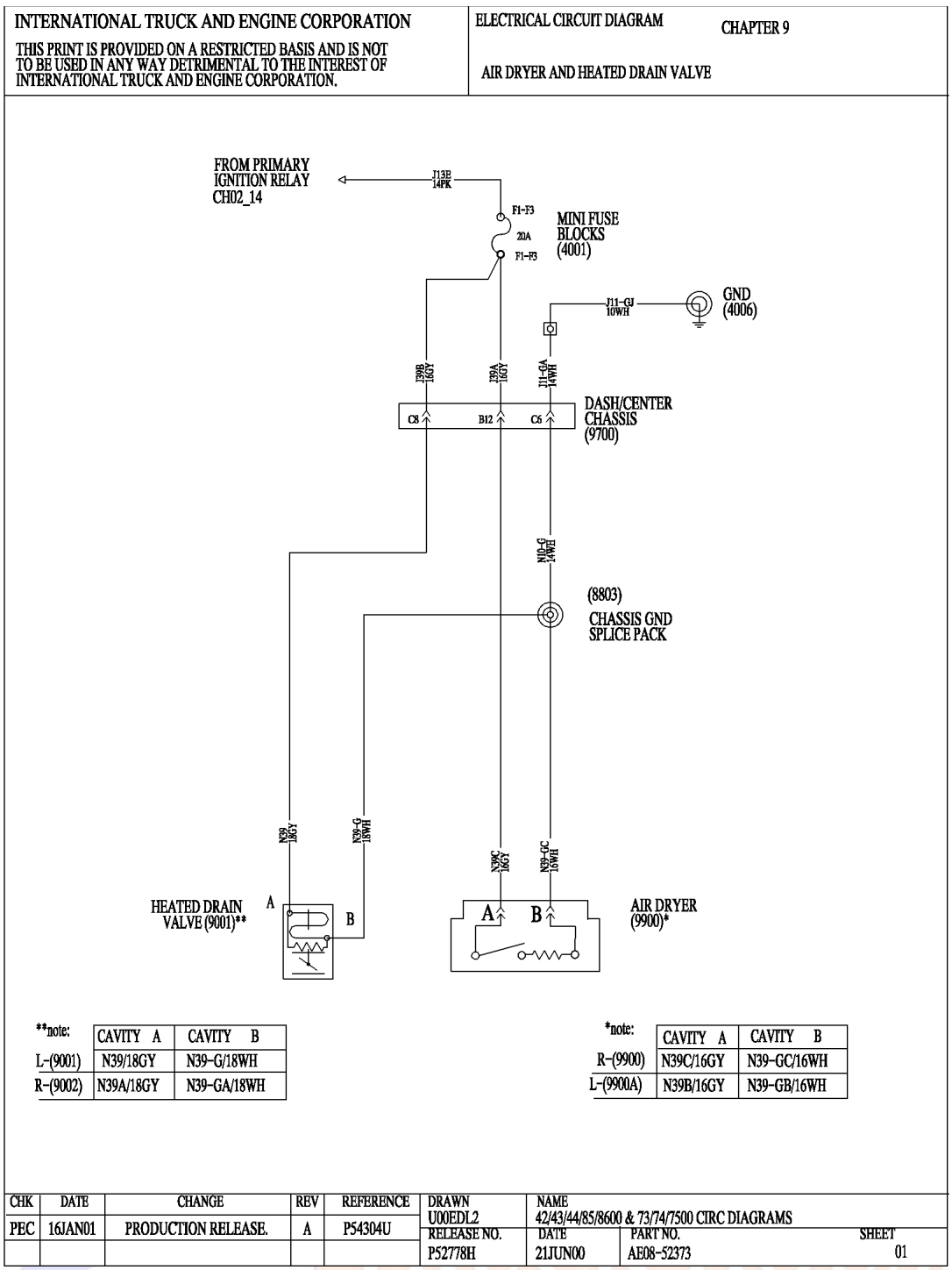

Figure 72 Air Dryer and Heated Drain Valve

Ingeniería del Transporte

ING. WILLIAM DE LA CRUZ OLIVARES

9.2. ANTILOCK BRAKE SYSTEM (ABS), AIR, P. 2

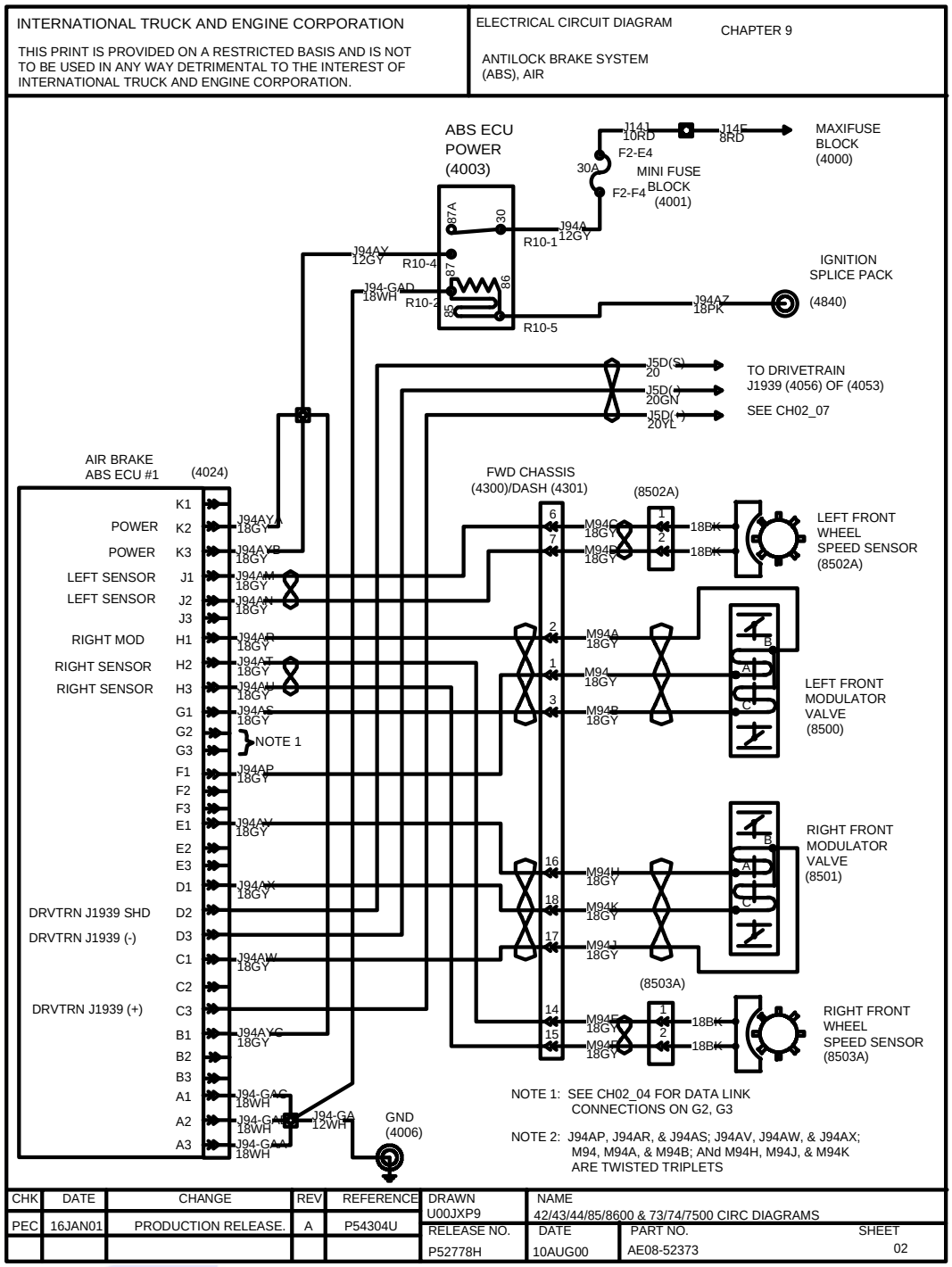

Figure 73 Antilock Brake System (ABS), Air

TRUCK HOUSE SAC
Ingenieria del Transporte

ING. WILLIAM DE LA CRUZ OLIVARES

9.3. ANTILOCK BRAKE SYSTEM (ABS), AIR, TRACTION CONTROL, P. 3

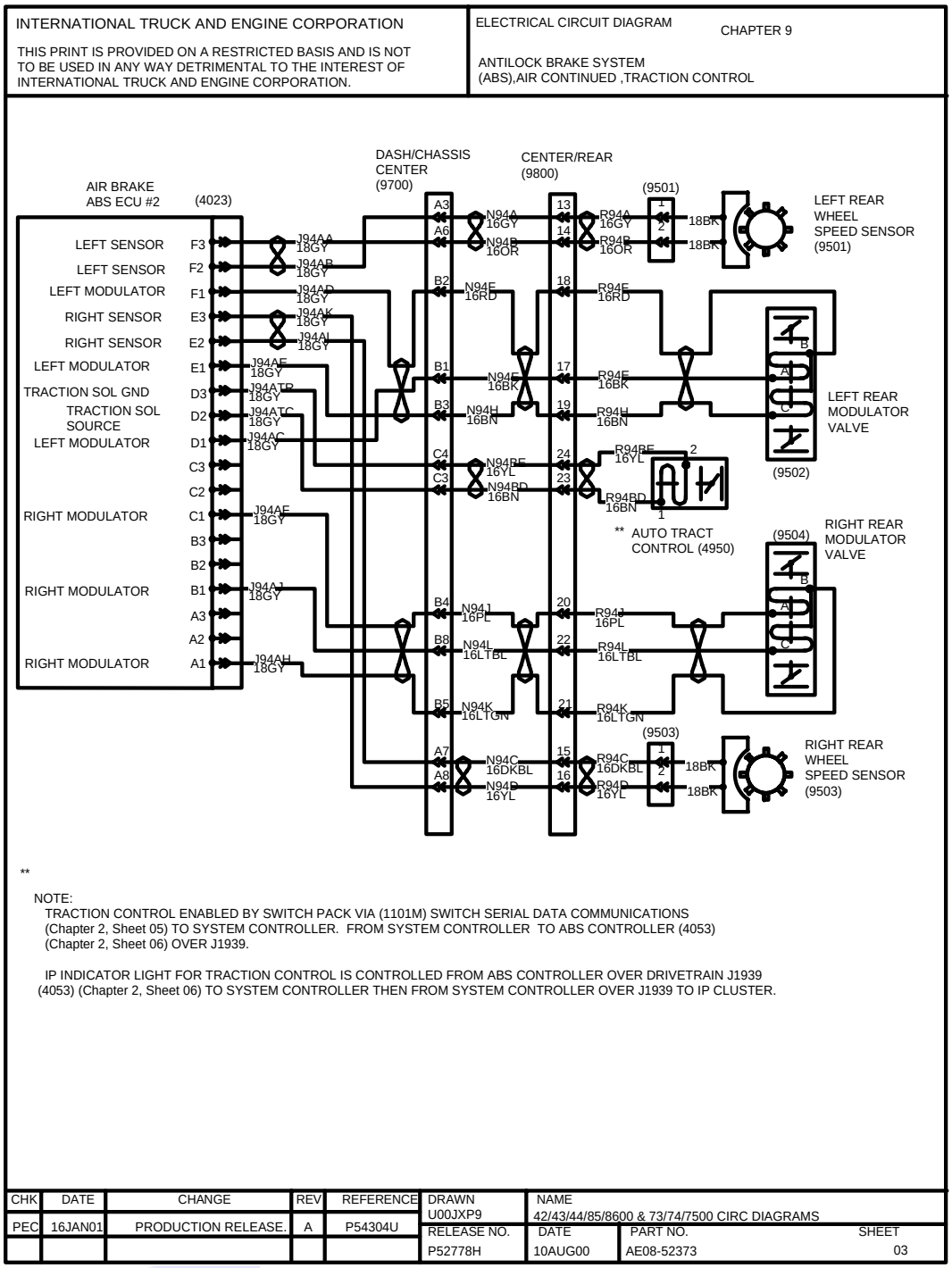

Figure 74 Antilock Brake System (ABS), Air, Traction Control

TRUCK HOUSE SAC
Ingenieria del Transporte

ING. WILLIAM DE LA CRUZ OLIVARES

9.4. ANTILOCK BRAKE SYSTEM (ABS), HYDRAULIC, P. 4

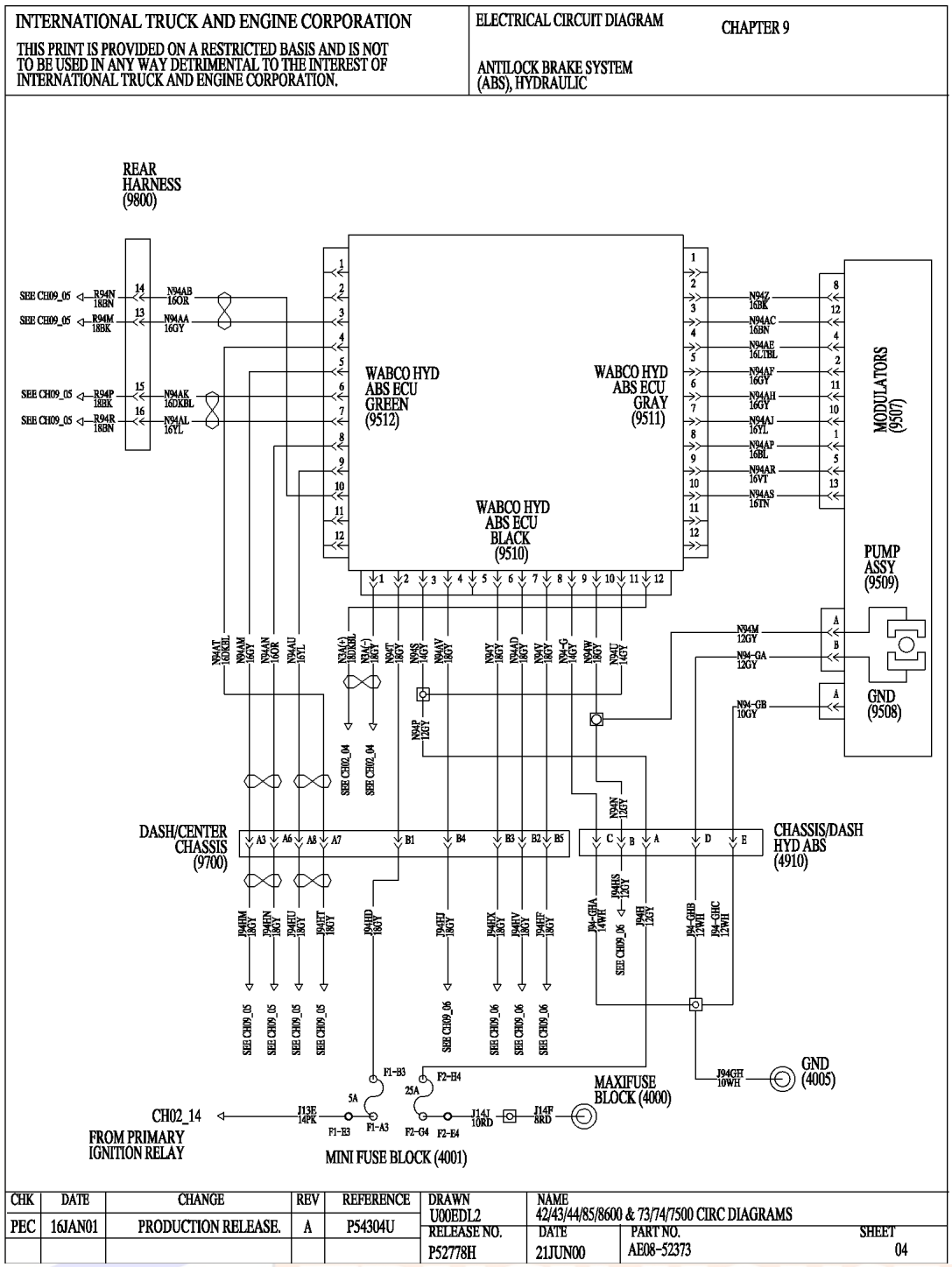

Figure 75 Antilock Brake System (ABS), Hydraulic

TRUCK HOUSE SAC
Ingenieria del Transporte

ING. WILLIAM DE LA CRUZ OLIVARES

9.5. ANTILOCK BRAKE SYSTEM (ABS), HYDRAULIC (CONT.), P. 5

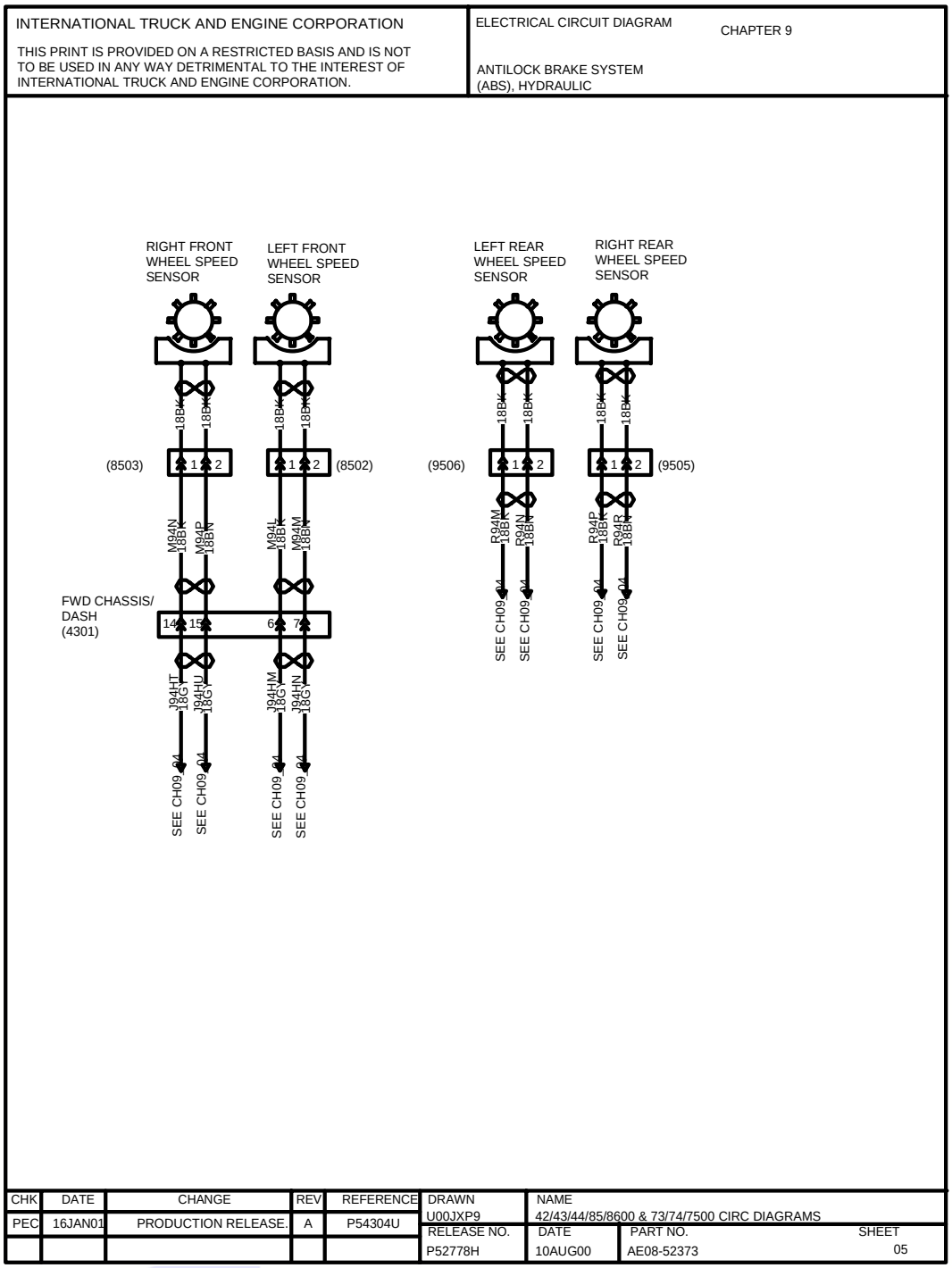

Figure 76 Antilock Brake System (ABS), Hydraulic (Cont.)

TRUCK HOUSE SAC
Ingenieria del Transporte

ING. WILLIAM DE LA CRUZ OLIVARES

9.6. ANTILOCK BRAKE SYSTEM (ABS), HYDRAULIC (CONT.), P. 6

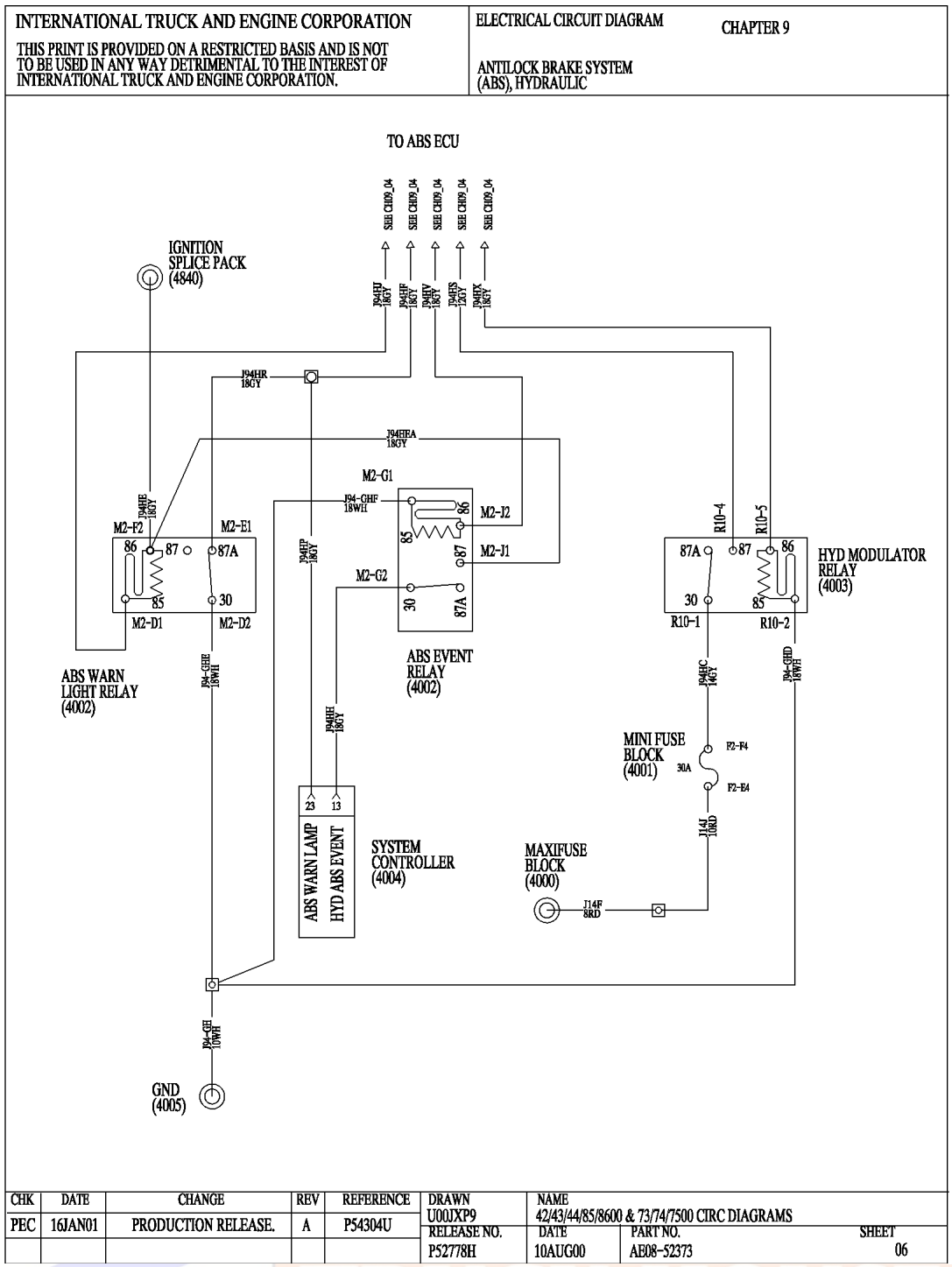

Figure 77 Antilock Brake System (ABS), Hydraulic (Cont.)

TRUCK HOUSE SAC
Ingenieria del Transporte

ING. WILLIAM DE LA CRUZ OLIVARES

9.7. TWO SPEED AXLE SWITCH W/MANUAL TRANSMISSION FUEL HEATER N/WARN LIGHTS, P. 7

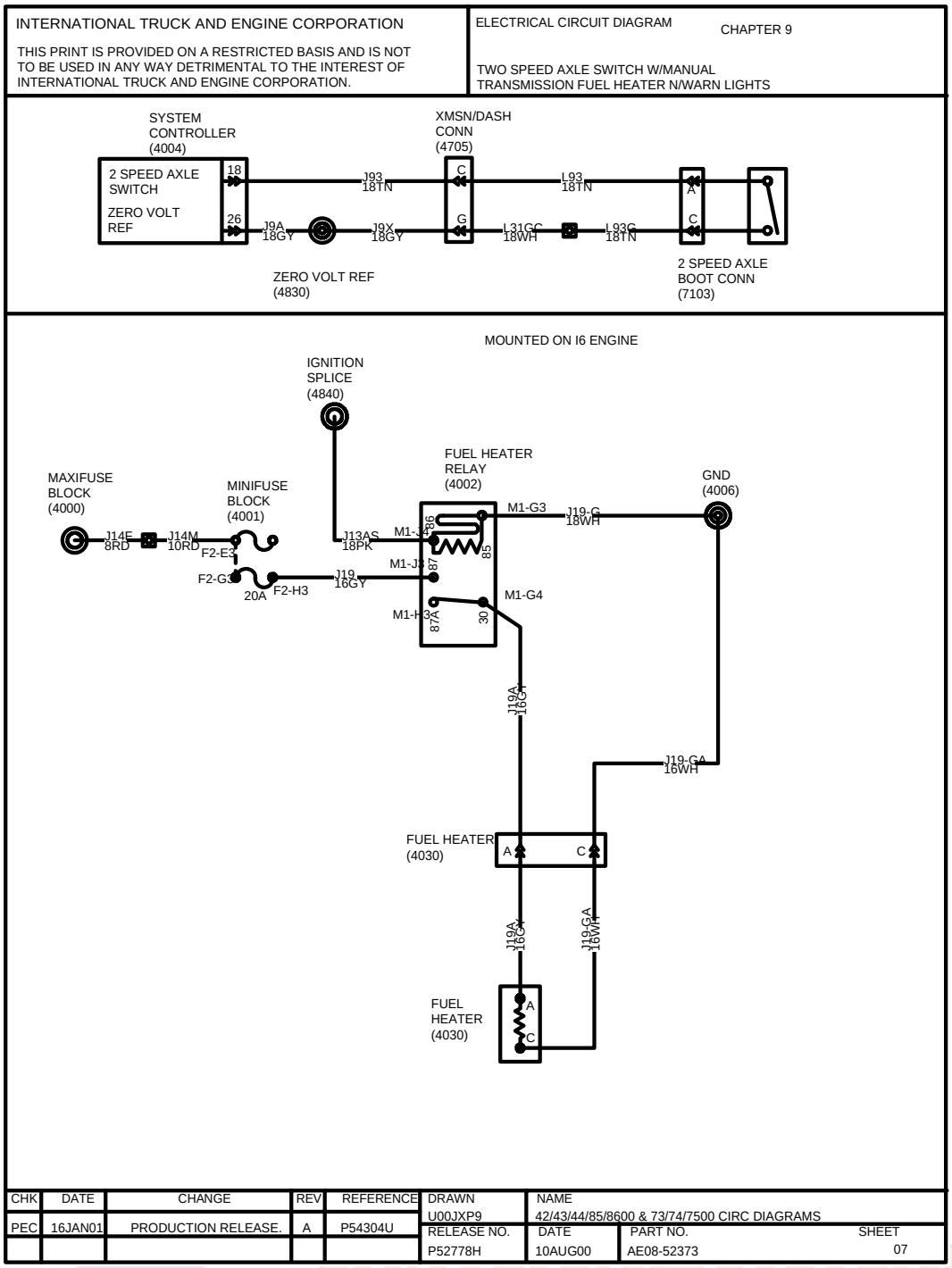

Figure 78 Two Speed Axle Switch W/Manual Transmission Fuel Heater N/Warn Lights

TRUCK HOUSE SAC
Ingenieria del Transporte

ING. WILLIAM DE LA CRUZ OLIVARES

9.8. BRAKE SYSTEM, HYDRAULIC, P. 8

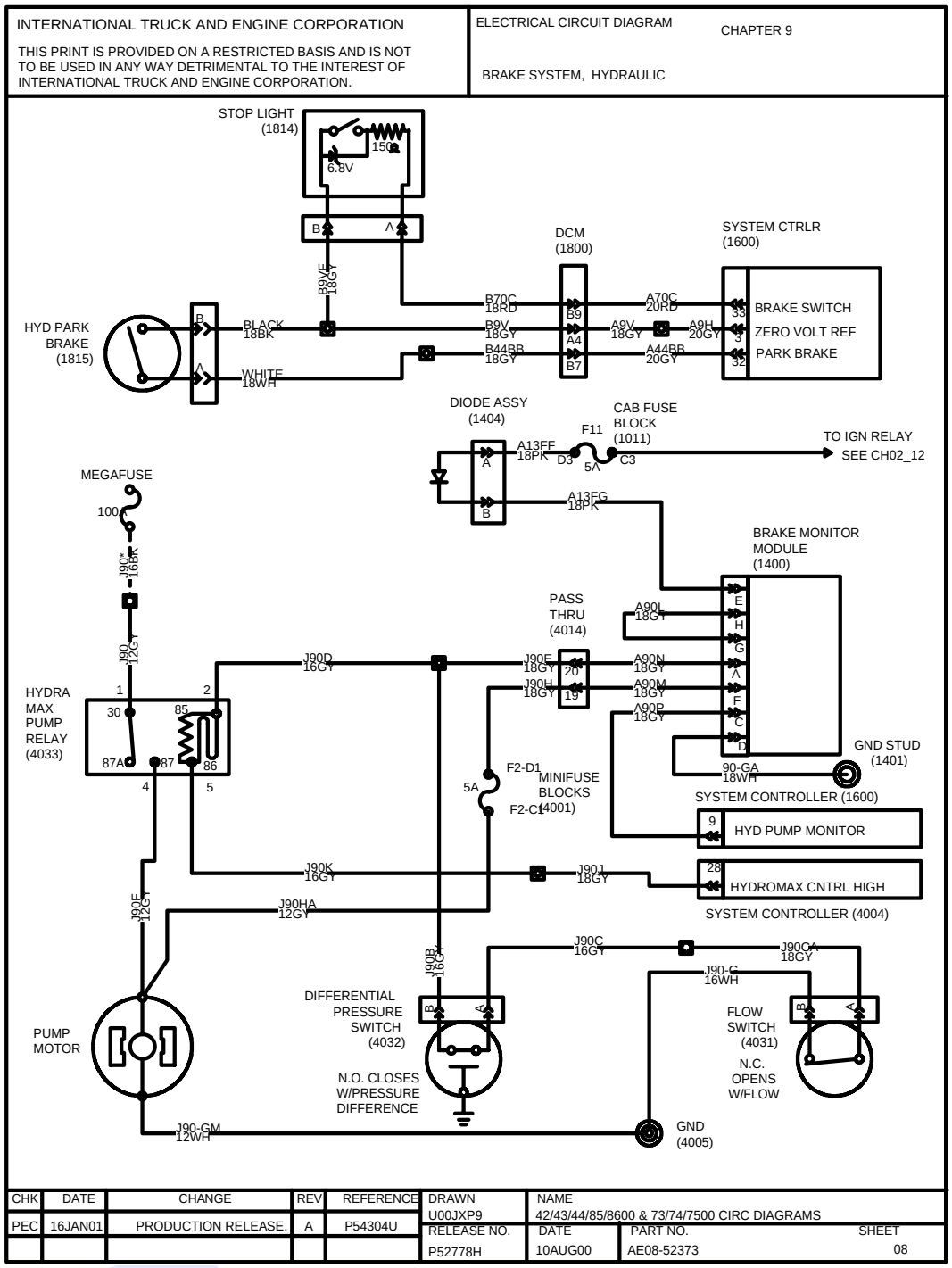

Figure 79 Brake System, Hydraulic

TRUCK HOUSE SAC
Ingenieria del Transporte

ING. WILLIAM DE LA CRUZ OLIVARES

9.9. FUEL TRANSFER PUMP, P. 9

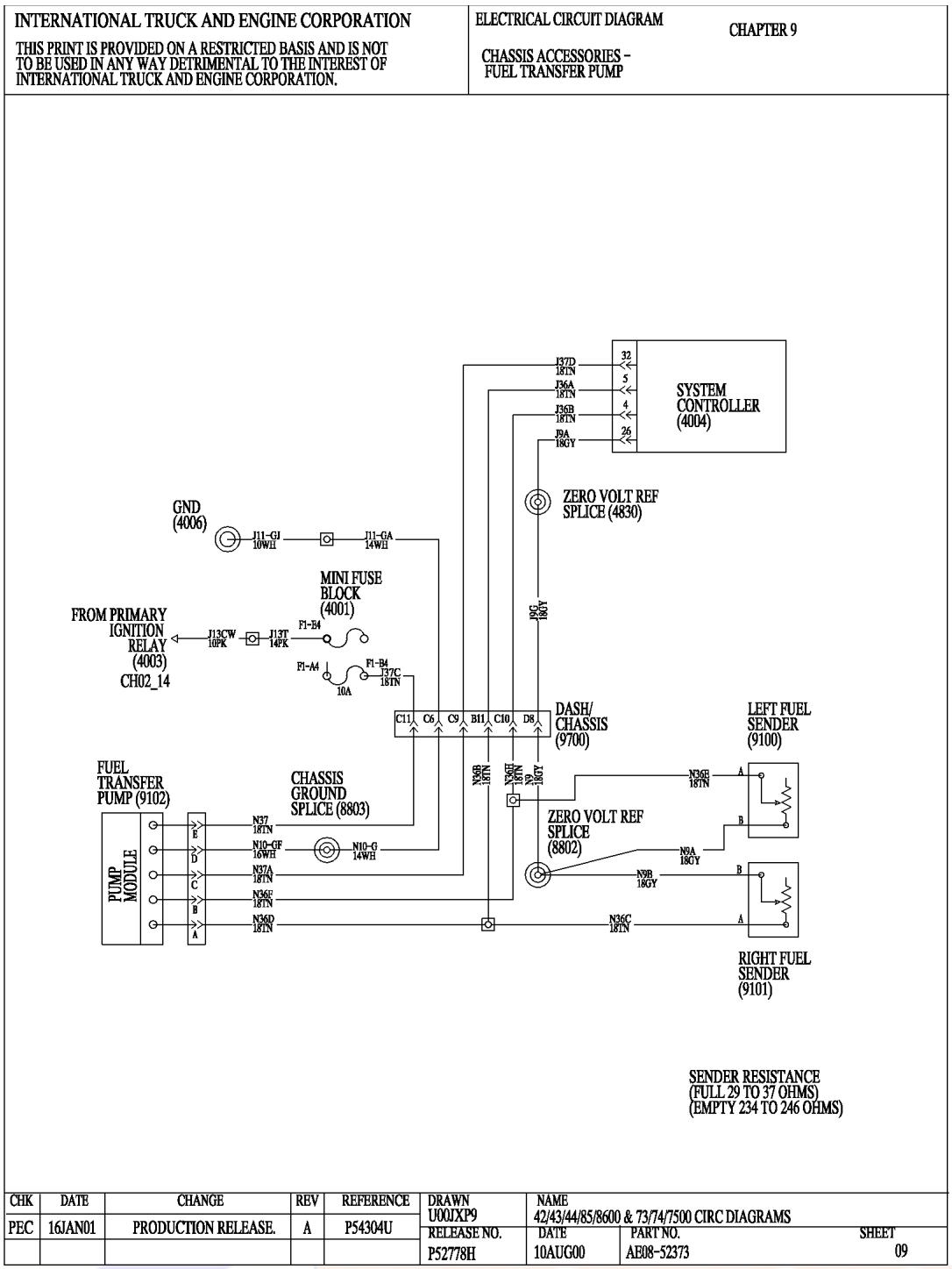

Figure 80 Fuel Transfer Pump

TRUCK HOUSE SAC
Ingenieria del Transporte

ING. WILLIAM DE LA CRUZ OLIVARES

9.10. BACK OF CAB BODY BUILDER AND TRAILER STOP, TAIL, MARKER, P. 10

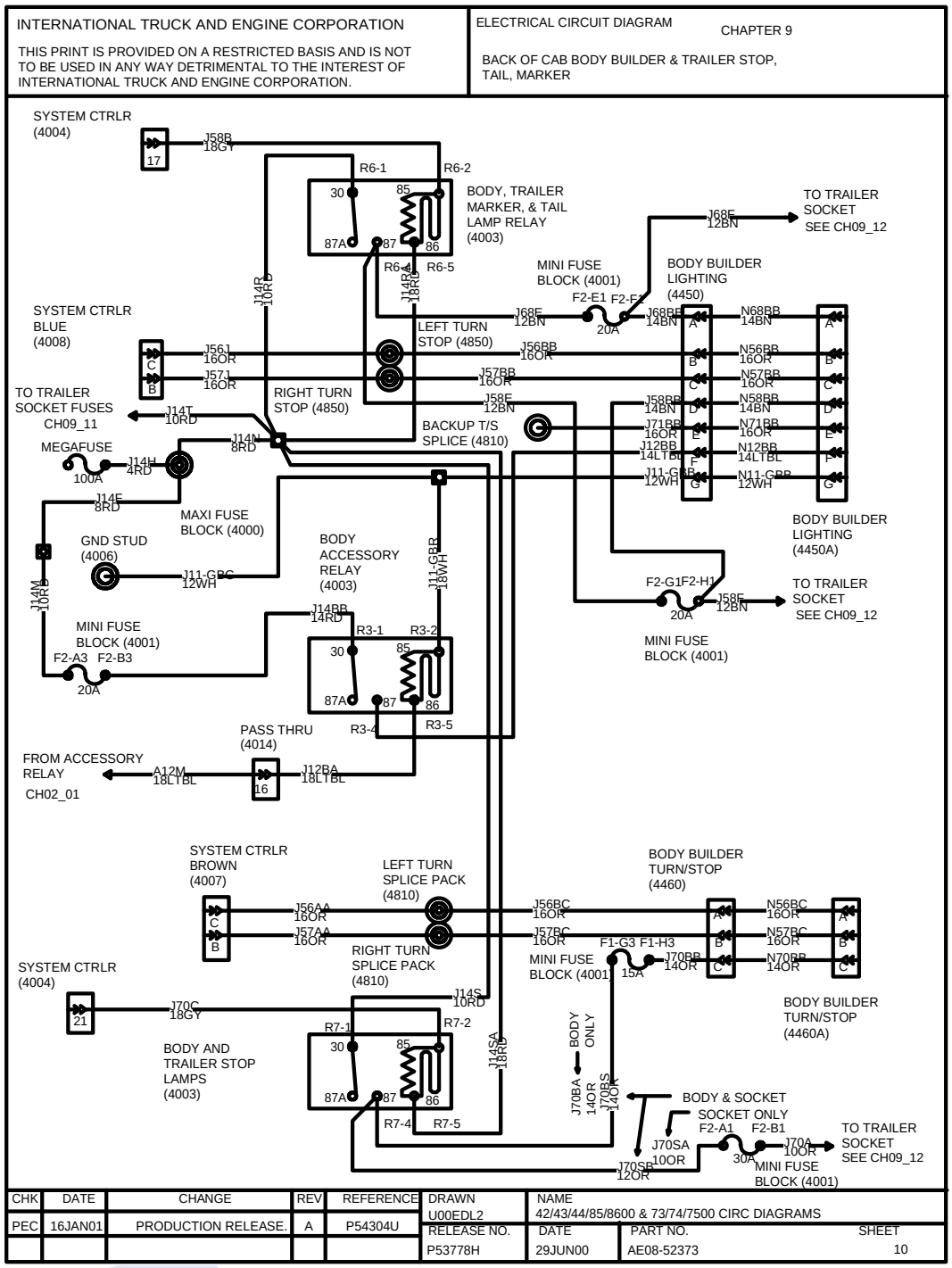

Figure 81 Back of Cab Body Builder and Trailer Stop, Tail, Marker

TRUCK HOUSE SAC
Ingenieria del Transporte

ING. WILLIAM DE LA CRUZ OLIVARES

9.11. BODY BUILDER AND TRAILER TURNS, CENTER PIN ABS, CENTER PIN AUX, P. 11

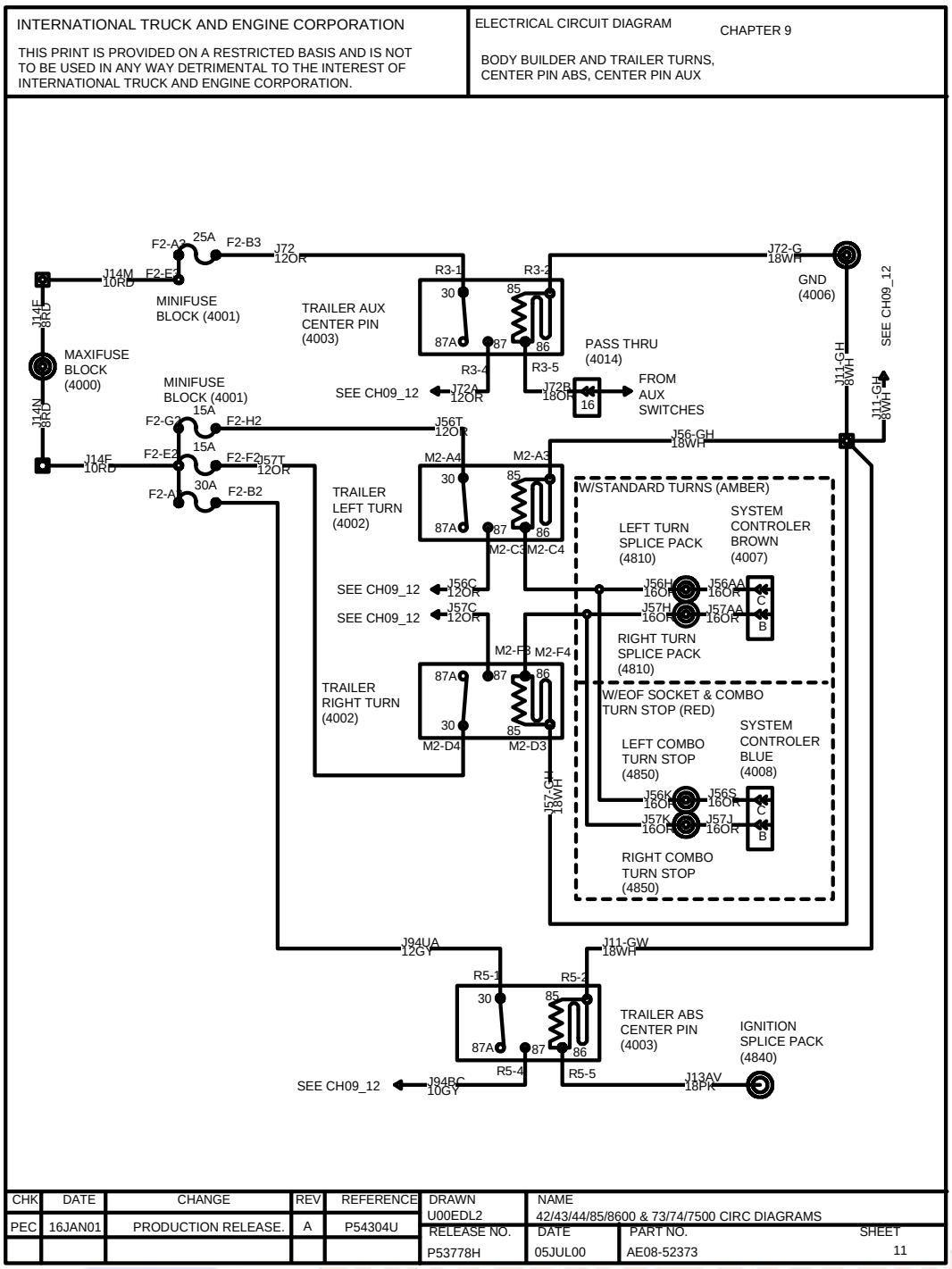

Figure 82 Body Builder and Trailer Turns, Center Pin ABS, Center Pin Aux

TRUCK HOUSE SAC
Ingenieria del Transporte

ING. WILLIAM DE LA CRUZ OLIVARES

9.12. BODY BUILDER AND TRAILER SOCKET BACK OF CAB SOCKETS, P. 12

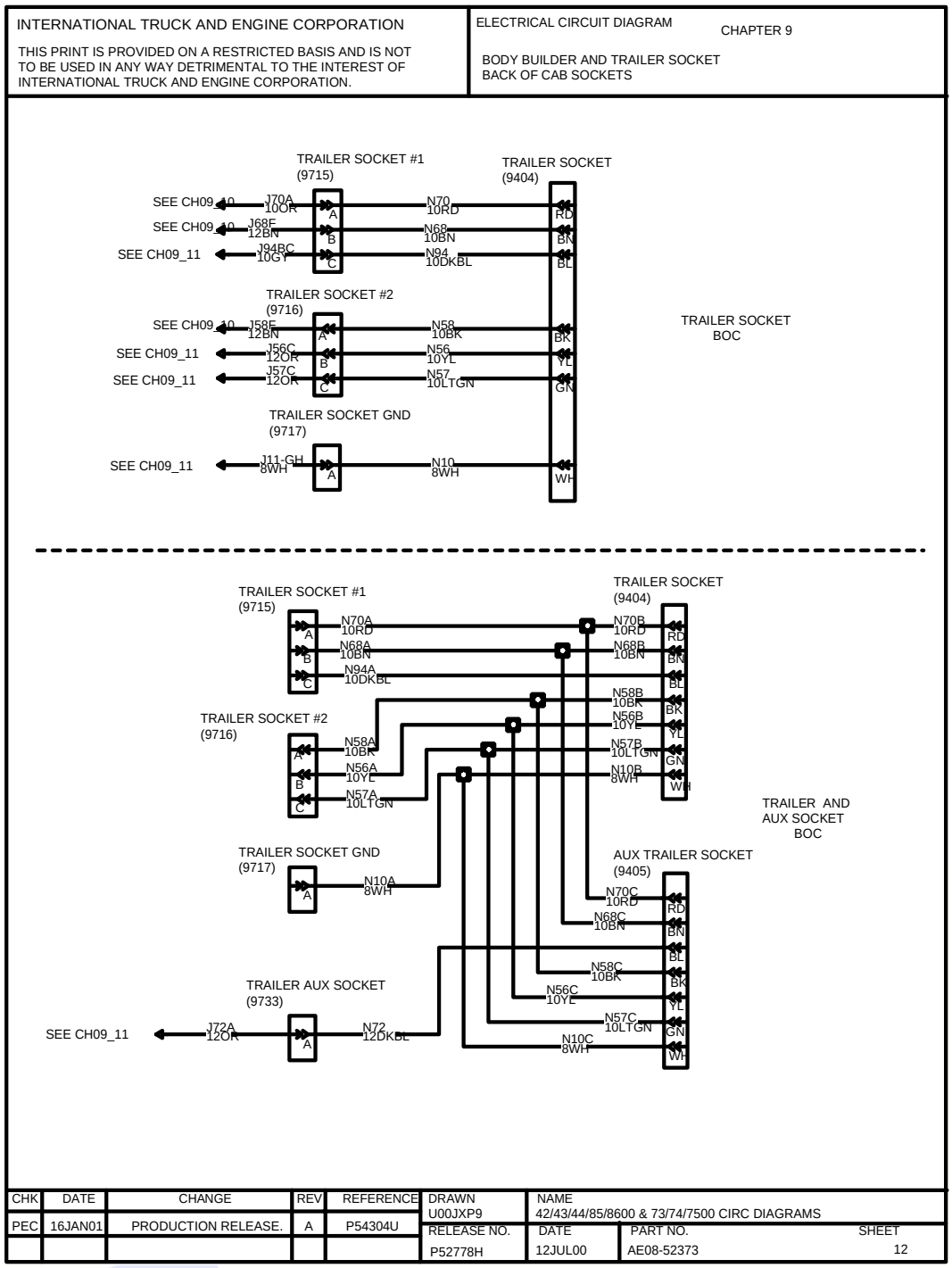

Figure 83 Body Builder and Trailer Socket Back of Cab Sockets

TRUCK HOUSE SAC
Ingenieria del Transporte

ING. WILLIAM DE LA CRUZ OLIVARES

9.13. BODY BUILDER AND TRAILER SOCKET END OF FRAME (EOF) SOCKET AND BODY BUILDER, P. 13

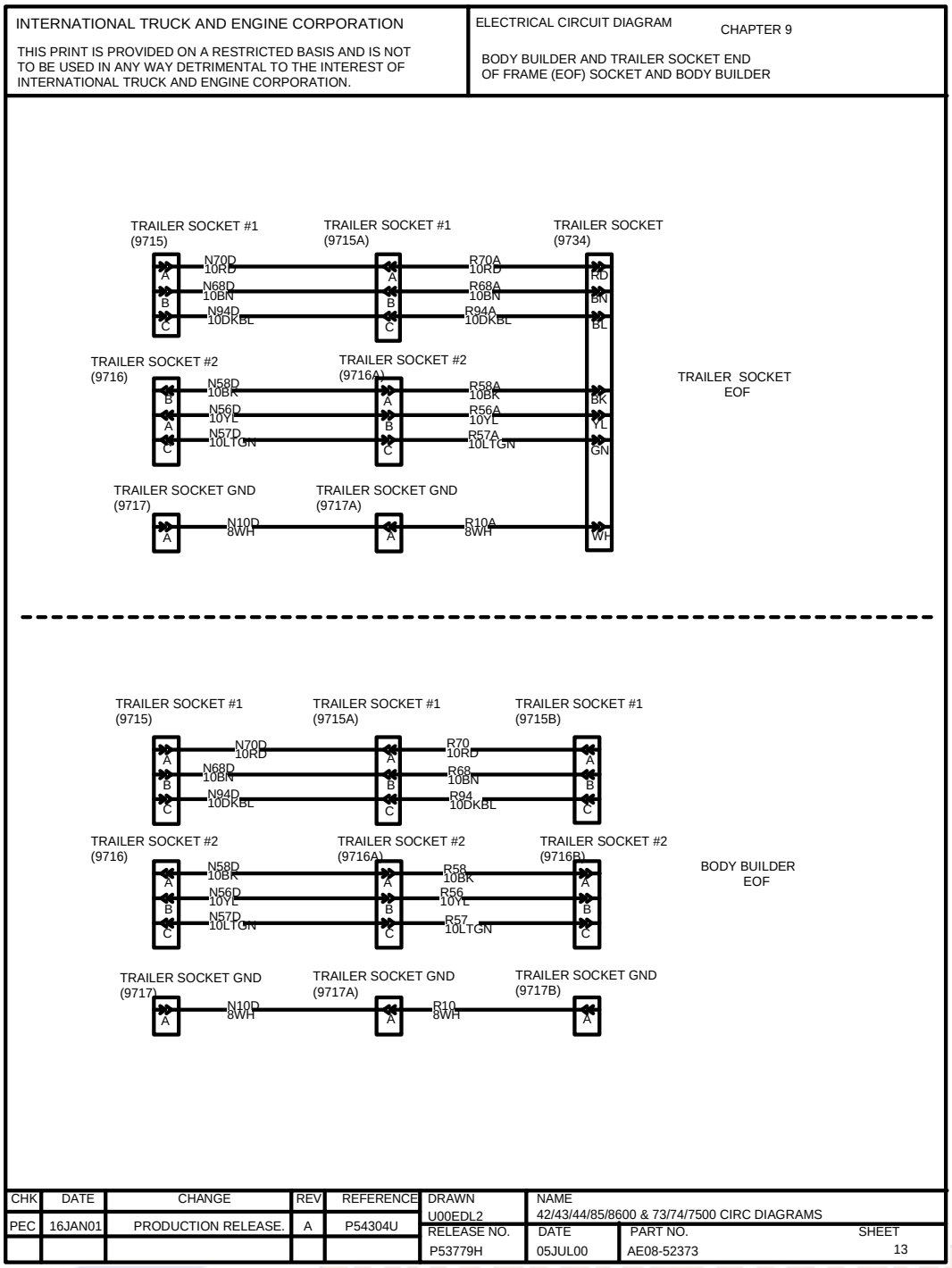

Figure 84 Body Builder and Trailer Socket End of Frame (EOF) Socket and Body Builder

TRUCK HOUSE SAC
Ingenieria del Transporte

ING. WILLIAM DE LA CRUZ OLIVARES

9.14. AIR SOLENOID 4–WAY PACK, P. 14

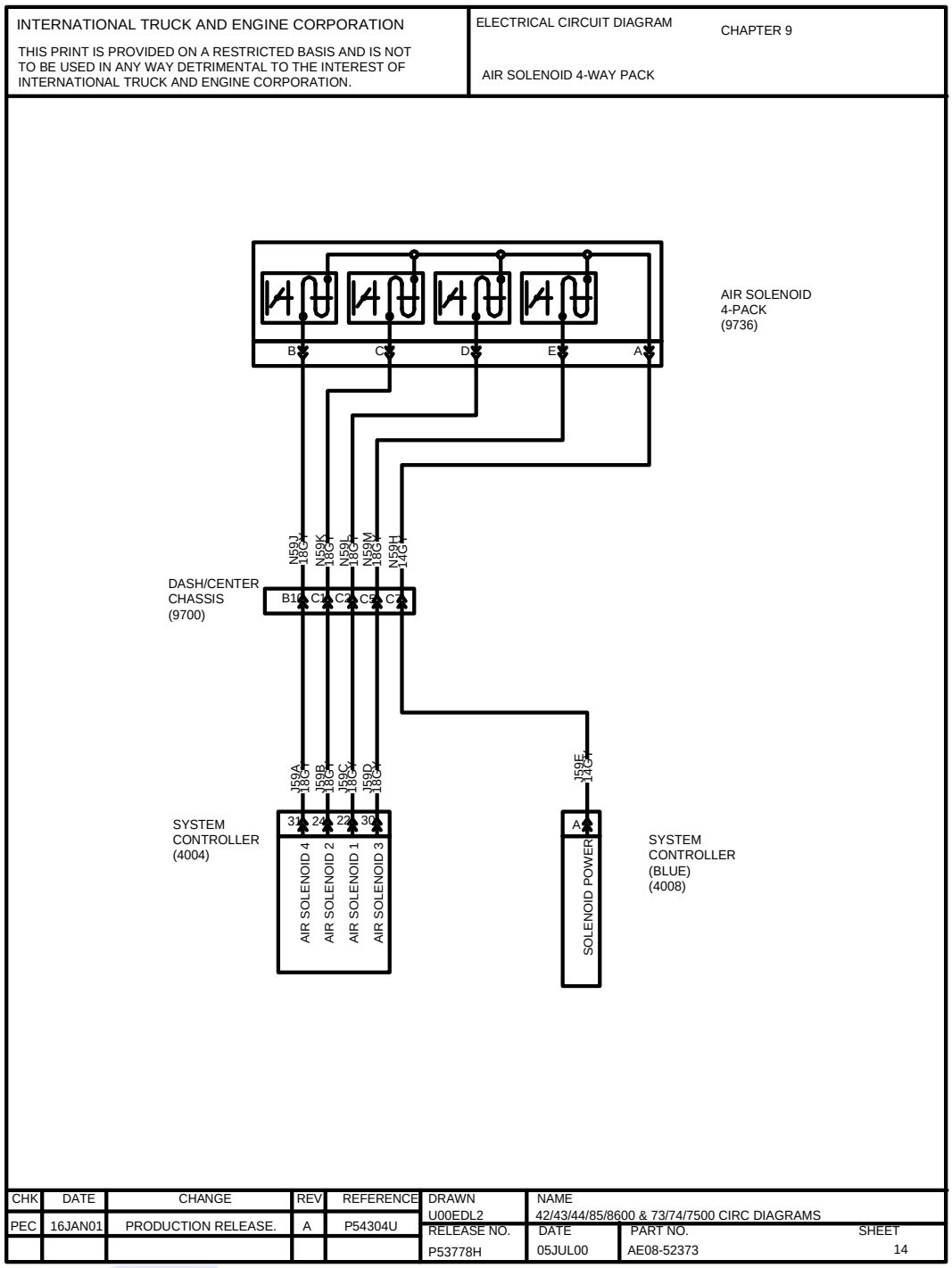

Figure 85 Air Solenoid 4–Way Pack

TRUCK HOUSE SAC
Ingenieria del Transporte

ING. WILLIAM DE LA CRUZ OLIVARES

9.15. REMOTE POWER UNITS, SOLENOID PACKS, REMOTE ENGINE SPEED CONTROLLER, P. 15

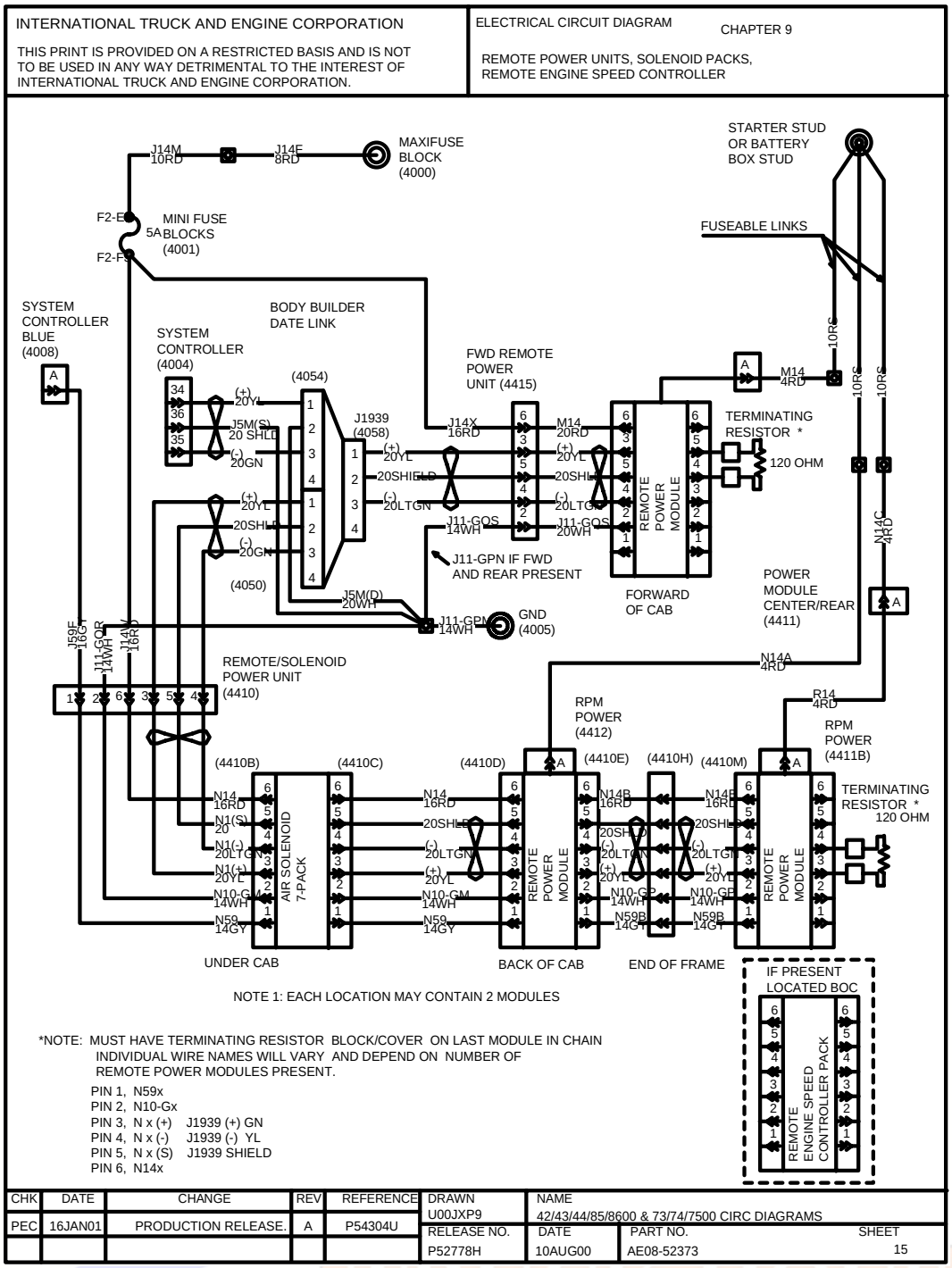

Figure 86 Remote Power Units, Solenoid Packs, Remote Engine Speed Controller

TRUCK HOUSE SAC
Ingenieria del Transporte

ING. WILLIAM DE LA CRUZ OLIVARES

9.16. HYD POWER PARK, P. 16

INTERNATIONAL TRUCK AND ENGINE CORPORATION THIS PRINT IS PROVIDED ON A RESTRICTED BASIS AND IS NOT TO BE USED IN ANY WAY DETRIMENTAL TO THE INTEREST OF INTERNATIONAL TRUCK AND ENGINE CORPORATION.	ELECTRICAL CIRCUIT DIAGRAM CHAPTER 9 CHASSIS ACCESSORIES - HYD POWER PARK

DIAGRAM NOT AVAILABLE

CHK	DATE	CHANGE	REV	REFERENCE	DRAWN	NAME		
PEC	16JAN01	PRODUCTION RELEASE.	A	P54304U	U00EDL2	42/43/44/85/8600 & 73/74/7500 CIRC DIAGRAMS		
					RELEASE NO.	DATE	PART NO.	SHEET
					P52778H	10JUL00	AE08-52373	16

Figure 87 HYD Power Park

TRUCK HOUSE SAC
Ingenieria del Transporte

ING. WILLIAM DE LA CRUZ OLIVARES

9.17. AIR SUSPENSION, P. 17

INTERNATIONAL TRUCK AND ENGINE CORPORATION

THIS PRINT IS PROVIDED ON A RESTRICTED BASIS AND IS NOT TO BE USED IN ANY WAY DETRIMENTAL TO THE INTEREST OF INTERNATIONAL TRUCK AND ENGINE CORPORATION.

ELECTRICAL CIRCUIT DIAGRAM
CHAPTER 9
CHASSIS ACCESSORIES - AIR SUSPENSION

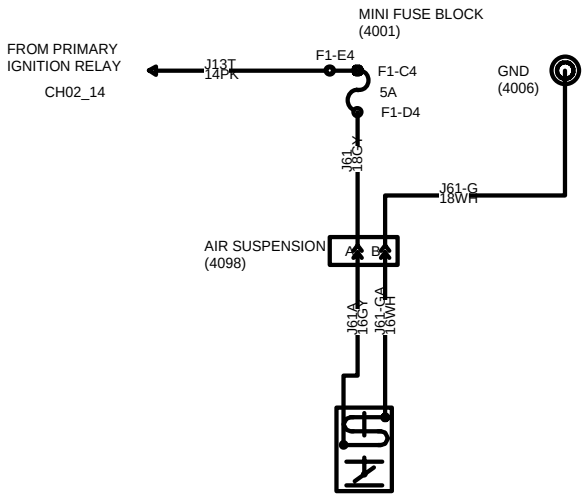

NOTE: 2ND AIR SUSPENSION SOLENOID
IS IN AIR SOLENOID PACK
SEE CH09_14
CH09_15

CHK	DATE	CHANGE	REV	REFERENCE	DRAWN	NAME		
PEC	16JAN01	PRODUCTION RELEASE.	A	P54304U	U00EDL2	42/43/44/85/8600 & 73/74/7500 CIRC DIAGRAMS		
					RELEASE NO.	DATE	PART NO.	SHEET
					P52778H	10JUL00	AE08-52373	17

Figure 88 Air Suspension

TRUCK HOUSE SAC
Ingenieria del Transporte

ING. WILLIAM DE LA CRUZ OLIVARES

9.18. AUX. TRAILER, ACC CONTROLLED, P. 18

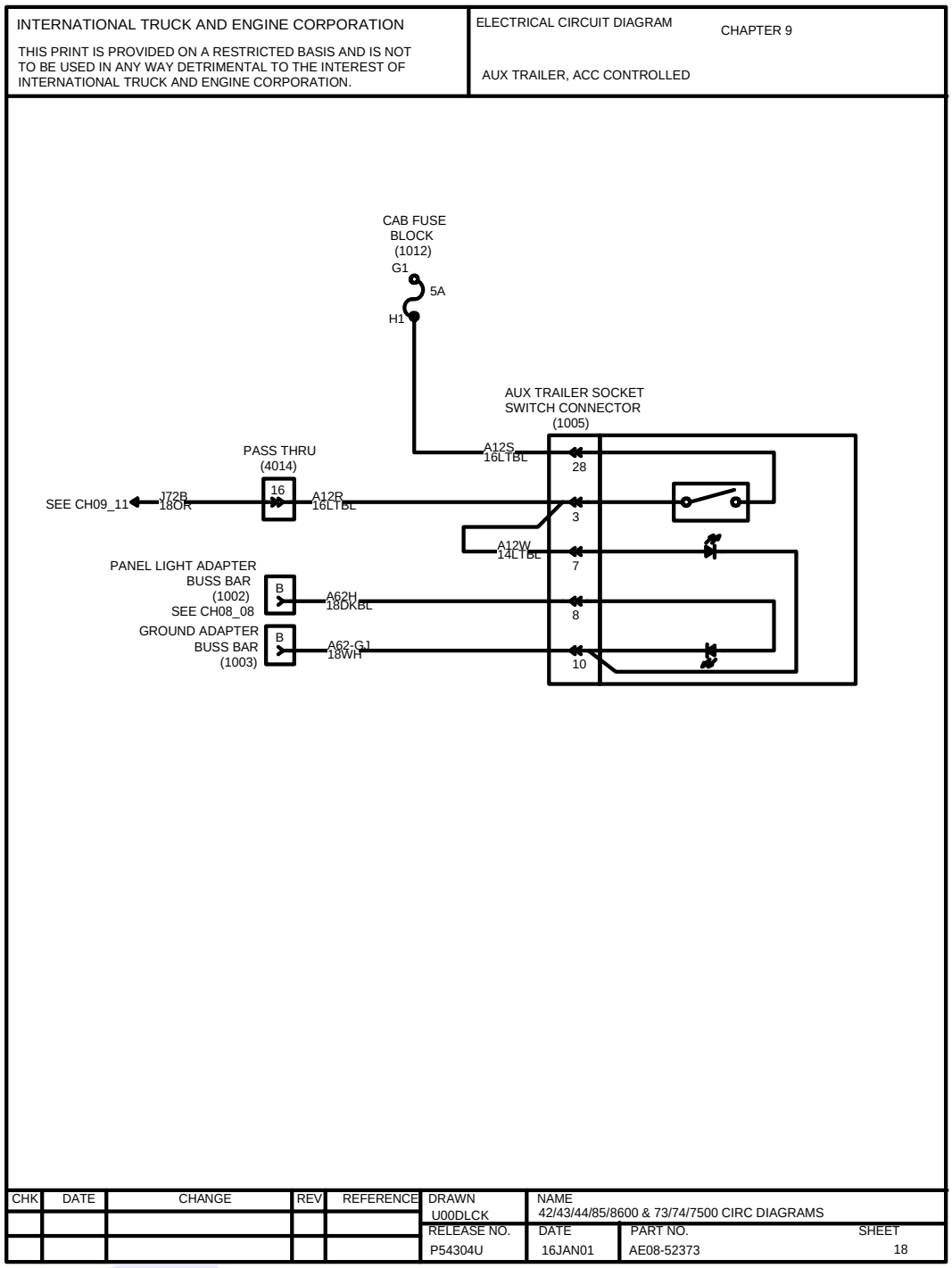

Figure 89 Aux. Trailer, Acc Controlled

TRUCK HOUSE SAC
Ingenieria del Transporte

ING. WILLIAM DE LA CRUZ OLIVARES

9.19. AUX. TRAILER, BTRY CONTROLLED, P. 19

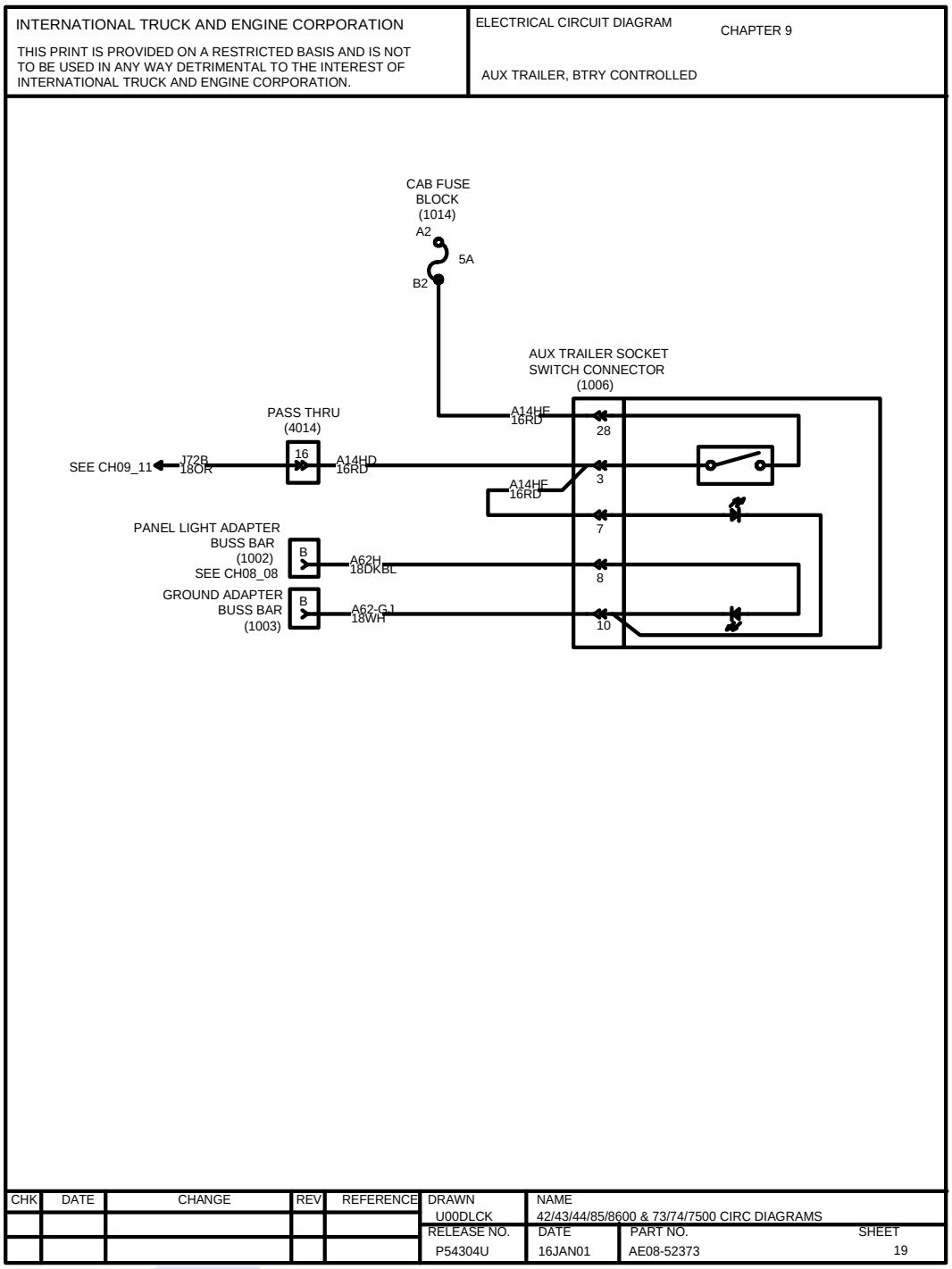

Figure 90 Aux. Trailer, Btry Controlled

TRUCK HOUSE SAC
Ingenieria del Transporte

ING. WILLIAM DE LA CRUZ OLIVARES

10. TRANSMISSIONS (CHAPTER 10)

10.1. ALLISON LCT TRANSMISSION, P. 1

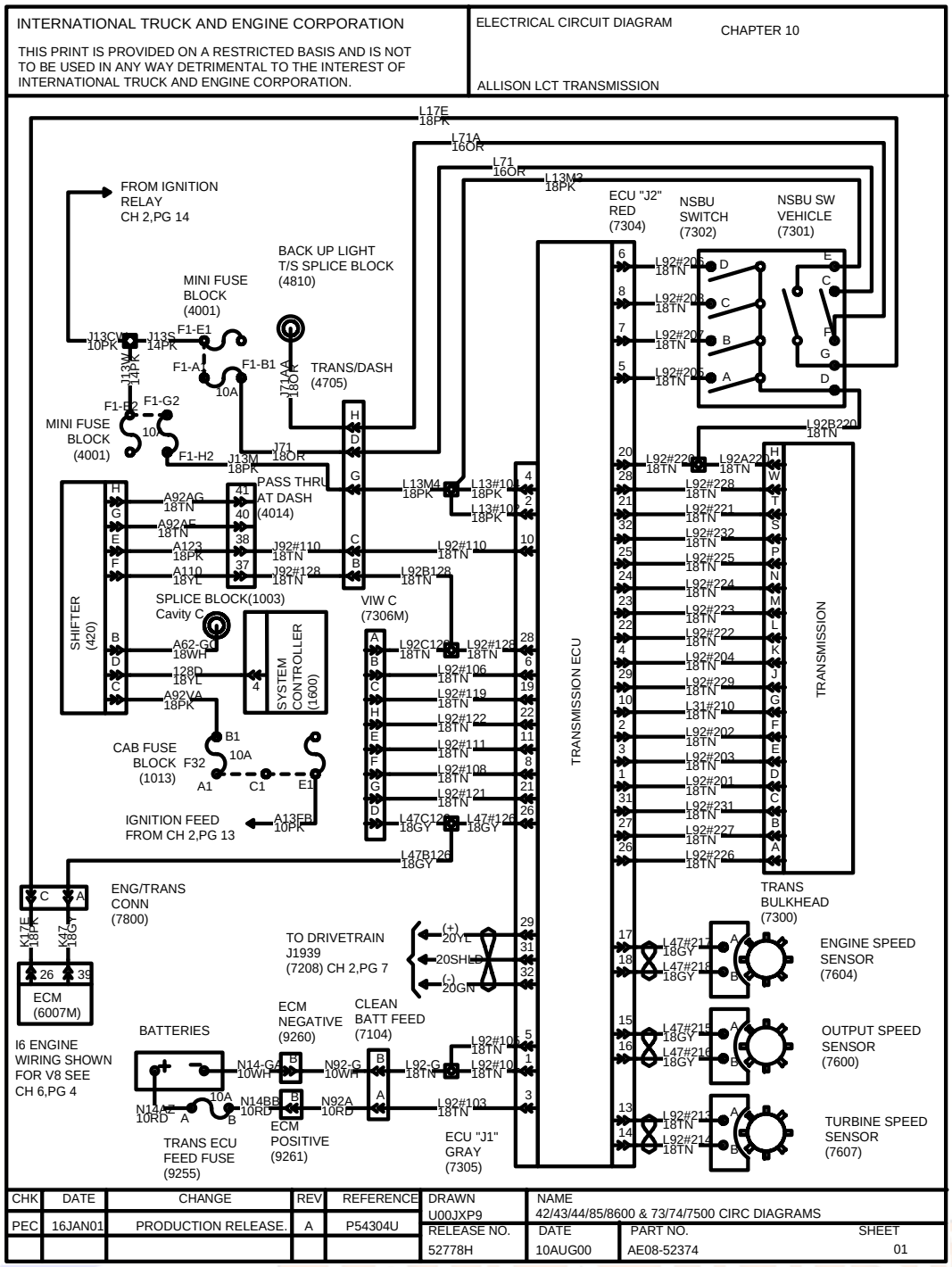

Figure 91 Allison LCT Transmission

TRUCK HOUSE SAC
Ingenieria del Transporte

ING. WILLIAM DE LA CRUZ OLIVARES

10.2. ALLISON MD TRANSMISSION, P. 2

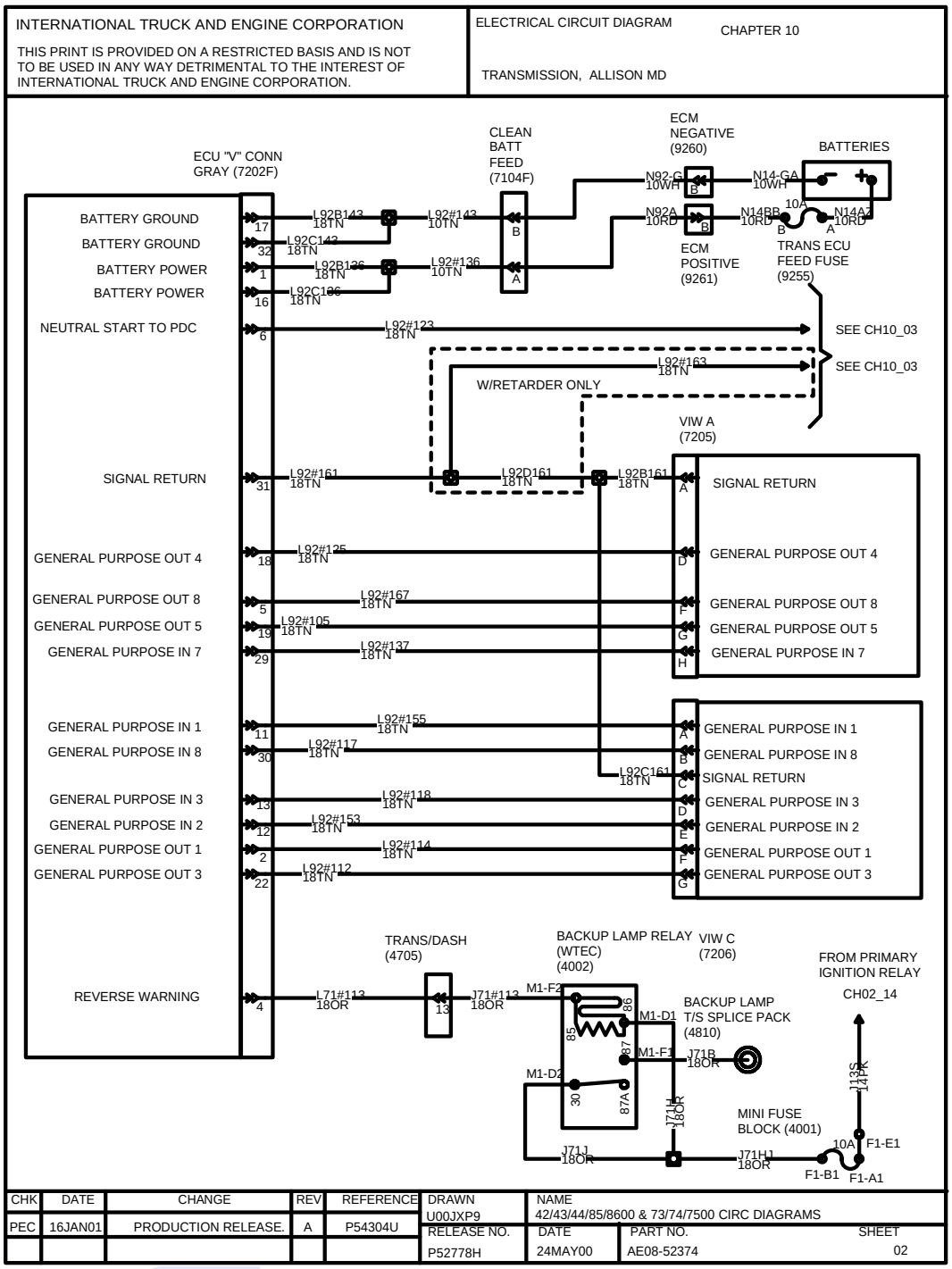

Figure 92 Allison MD Transmission

TRUCK HOUSE SAC
Ingenieria del Transporte

ING. WILLIAM DE LA CRUZ OLIVARES

10.3. ALLISON MD TRANSMISSION (CONT.), P. 3

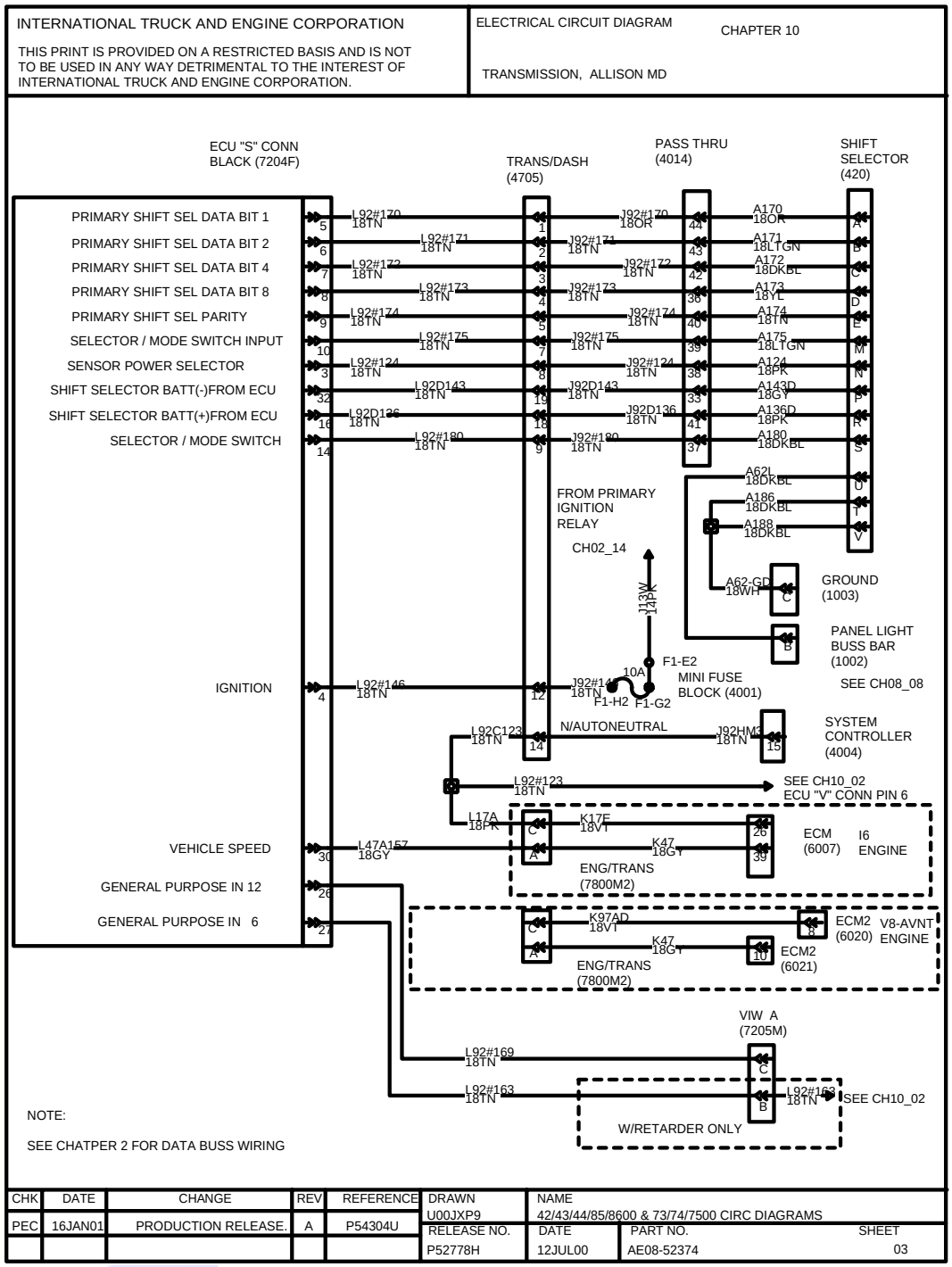

Figure 93 Allison MD Transmission (Cont.)

TRUCK HOUSE SAC
Ingenieria del Transporte

ING. WILLIAM DE LA CRUZ OLIVARES

10.4. ALLISON MD TRANSMISSION (CONT.), P. 4

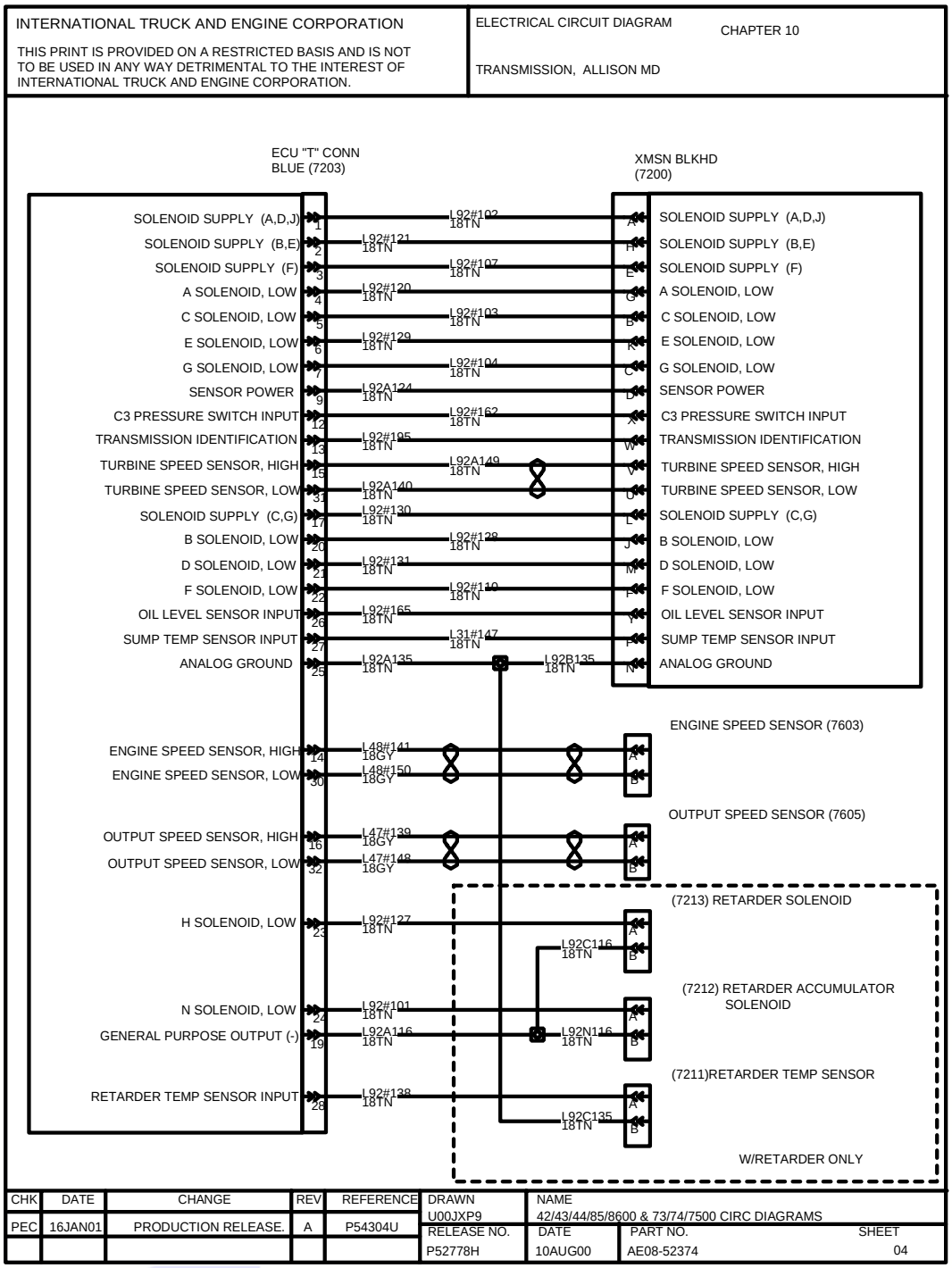

Figure 94 Allison MD Transmission (Cont.)

TRUCK HOUSE SAC
Ingenieria del Transporte

ING. WILLIAM DE LA CRUZ OLIVARES

10.5. TRANSMISSION, WTEC MD W/AUTO NEUTRAL, P. 5

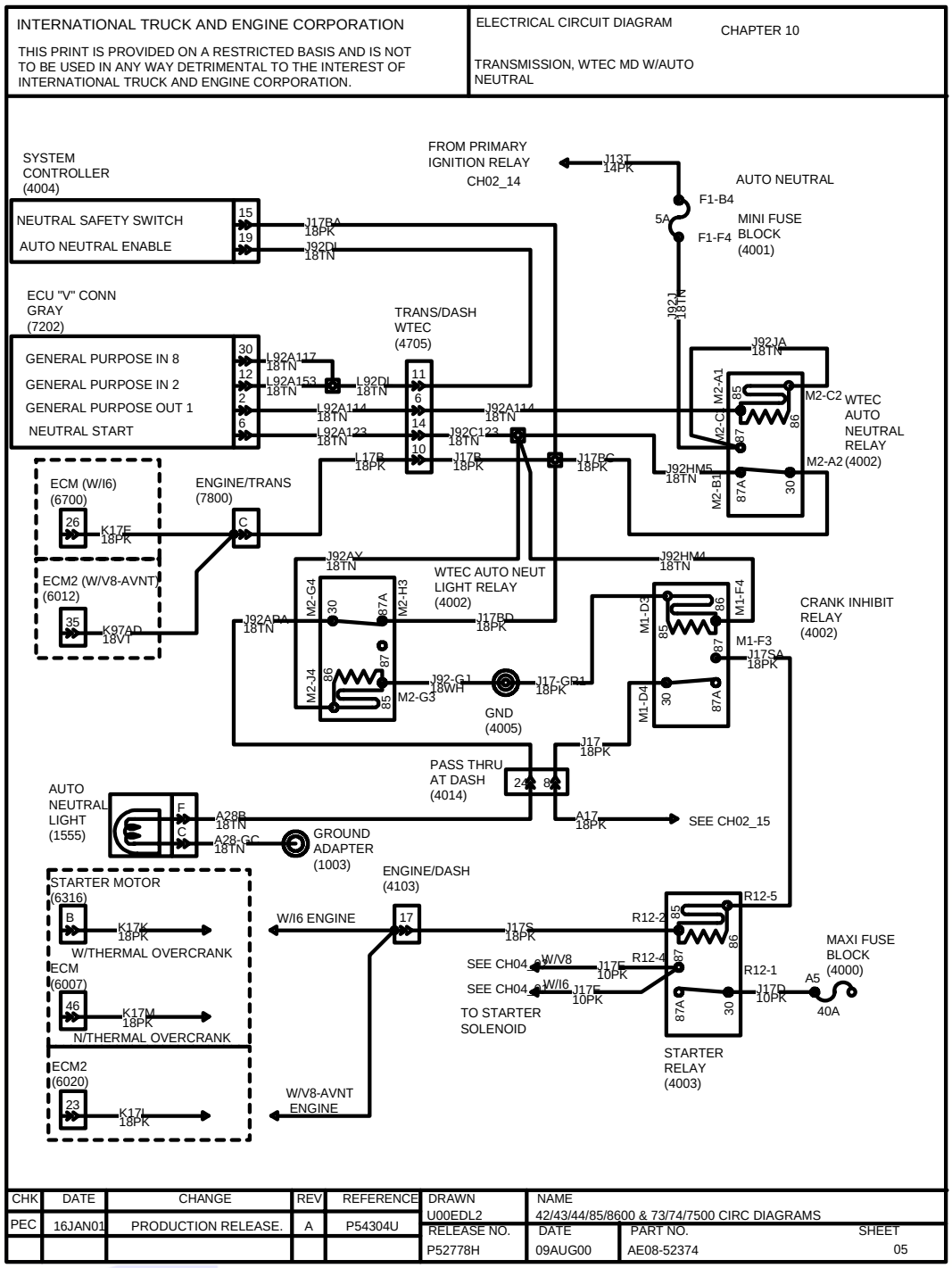

Figure 95 Transmission, WTEC MD W/Auto Neutral

TRUCK HOUSE SAC
Ingenieria del Transporte

ING. WILLIAM DE LA CRUZ OLIVARES

10.6. EATON AUTOSHIFT TRANSMISSION, P. 6

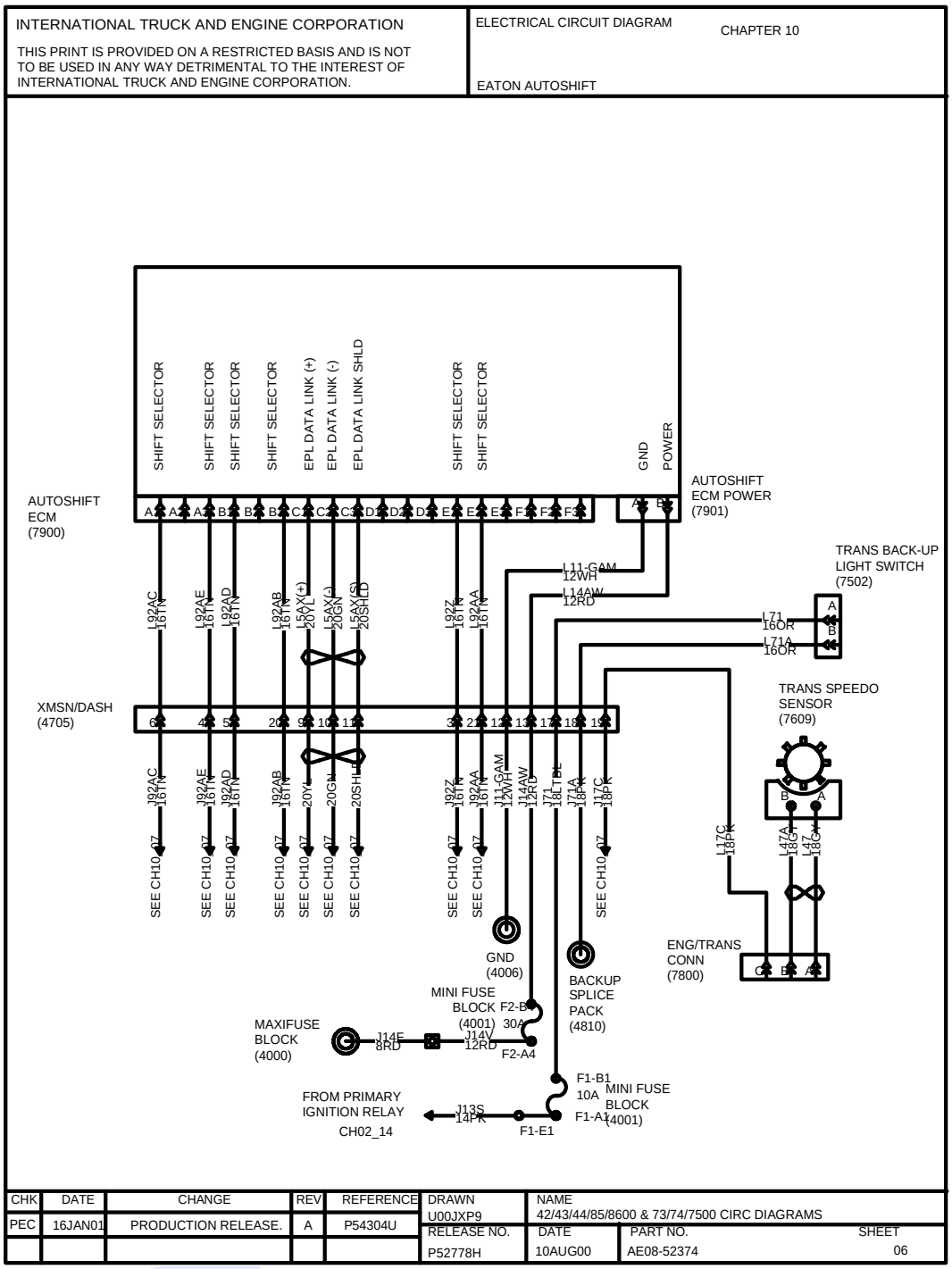

Figure 96 Eaton Autoshift Transmission

TRUCK HOUSE SAC
Ingenieria del Transporte

ING. WILLIAM DE LA CRUZ OLIVARES

10.7. EATON AUTOSHIFT TRANSMISSION (CONT.), P. 7

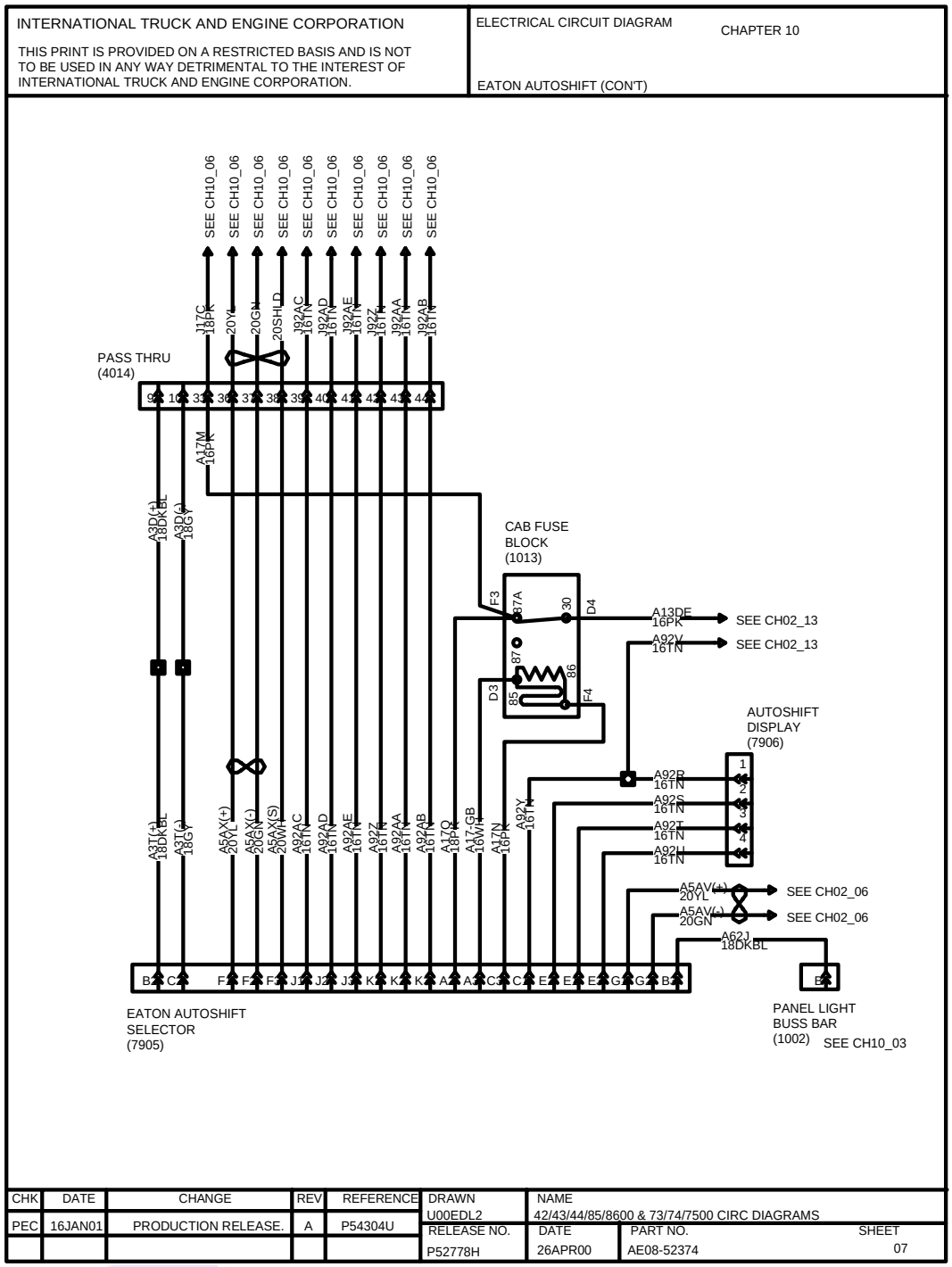

Figure 97 Eaton Autoshift Transmission (Cont.)

TRUCK HOUSE SAC
Ingenieria del Transporte

ING. WILLIAM DE LA CRUZ OLIVARES

11. AIR CONDITIONING (CHAPTER 11)

11.1. HVAC SYSTEMS, P. 1

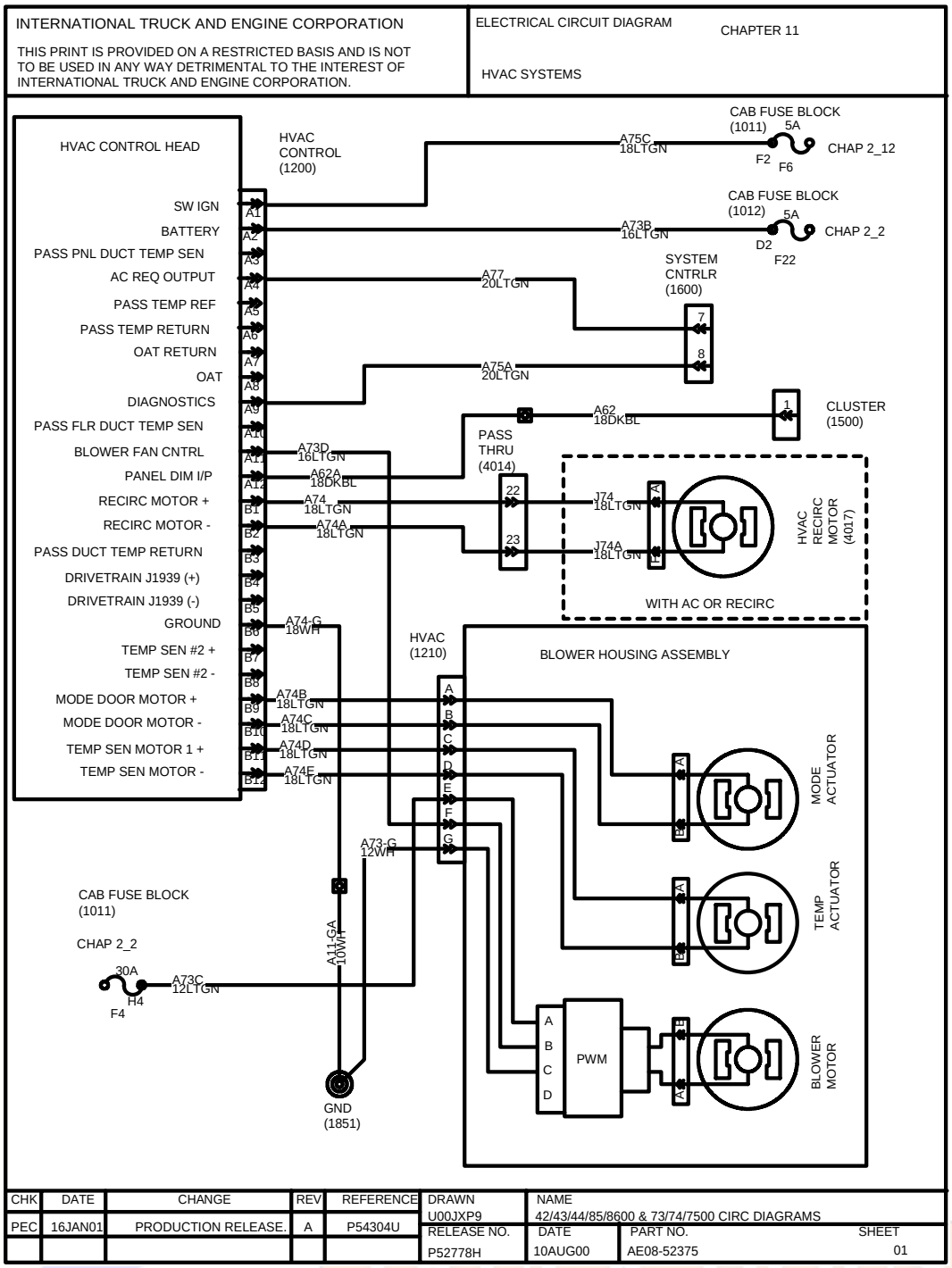

Figure 98 HVAC Systems

TRUCK HOUSE SAC
Ingenieria del Transporte

ING. WILLIAM DE LA CRUZ OLIVARES

11.2. AIR CONDITIONING (ONLY), P. 2

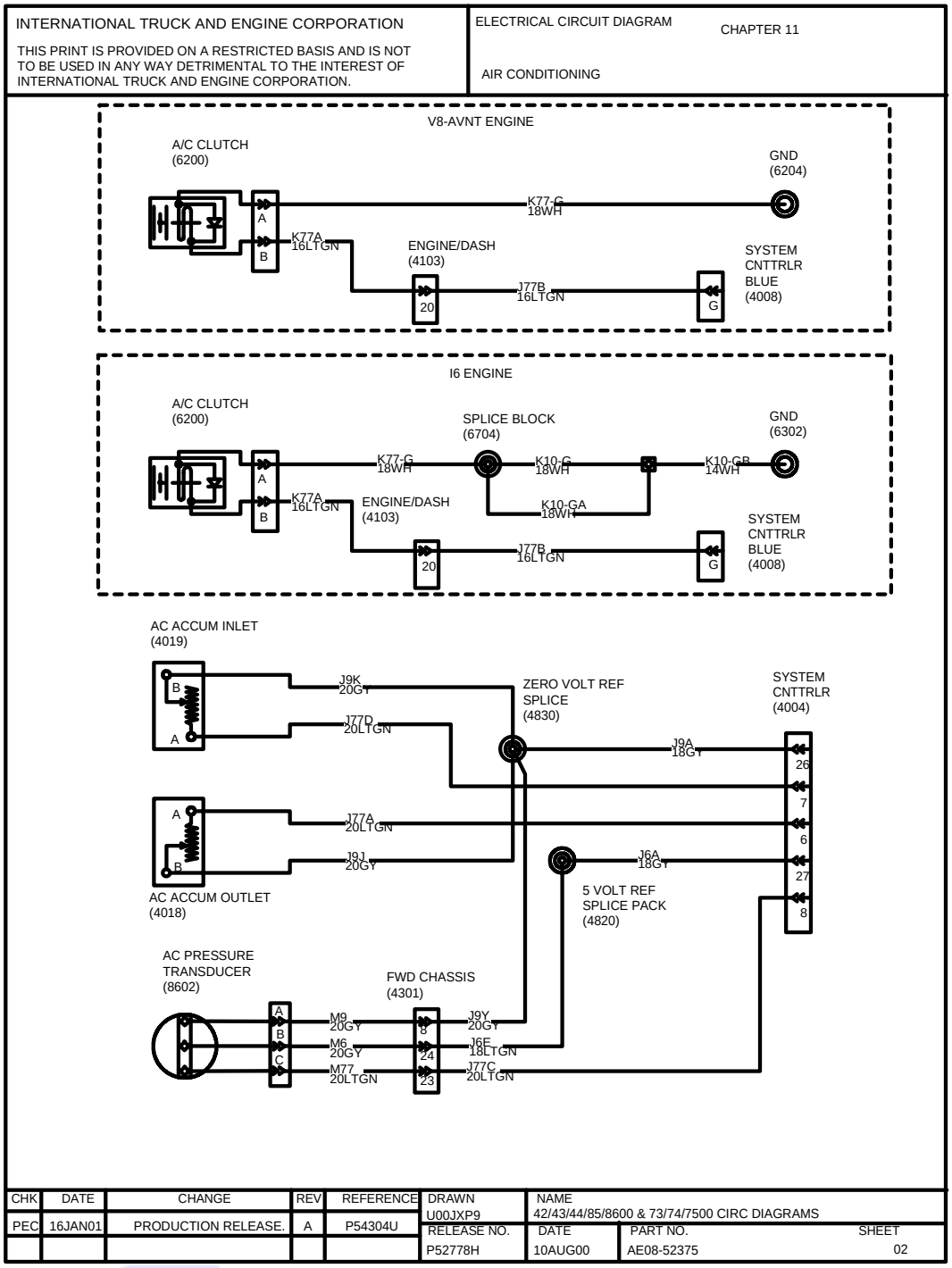

Figure 99 Air Conditioning (Only)

TRUCK HOUSE SAC
Ingenieria del Transporte

ING. WILLIAM DE LA CRUZ OLIVARES