https://truckmanualshub.com/

WORK SHOP MANUAL

12LD Series engines,

cod. 1-5302-460_3rd ed.

12LD 435-2
12LD 435-2/B1
12LD 475-2
12LD 475-2 EPA

LOMBARDINI

SERVICE

Downloaded from www.Manualslib.com manuals search engine

https://truckmanualshub.com/

REGISTRATION OF MODIFICATIONS TO THE DOCUMENT

Any modifications to this document must be registered by the drafting body, by completing the following table.

Drafting body	Document code	Model N°	Edition	Revision	Issue date	Review date	Endorsed
CUSE/ATLO	1-5302-460	50705	**3°**	**2**	9-93	14.06.2007	

PREFACE

- Every attempt has been made to present within this service manual, accurate and up to date technical information.
  However, development on the **LOMBARDINI** series is continuous.
  Therefore, the information within this manual is subject to change without notice and without obligation.

- The information contained within this service manual is the sole property of **LOMBARDINI**.
  As such, no reproduction or replication in whole or part is allowed without the express written permission of **LOMBARDINI**.

Information presented within this manual assumes the following:

1 - The person or people performing service work on **LOMBARDINI** series engines is properly trained and equipped to safely and professionally perform the subject operation;

2 - The person or people performing service work on **LOMBARDINI** series engines possesses adequate hand and **LOMBARDINI** special tools to safely and professionally perform the subject service operation;

3 - The person or people performing service work on **LOMBARDINI** series engines has read the pertinent information regarding the subject service operations and fully understands the operation at hand.

- This manual was written by the manufacturer to provide technical and operating information to authorised **LOMBARDINI** after-sales service centres to carry out assembly, disassembly, overhauling, replacement and tuning operations.

- As well as employing good operating techniques and observing the right timing for operations, operators must read the information very carefully and comply with it scrupulously.

- Time spent reading this information will help to prevent health and safety risks and financial damage.
  Written information is accompanied by illustrations in order to facilitate your understanding of every step of the operating phases.

Downloaded from www.Manualslib.com manuals search engine

https://truckmanualshub.com/

This manual contains pertinent information regarding the repair of LOMBARDINI air-cooled, direct injection Diesel engines type **12 LD 435-2 - 435-2/B1 - 475-2 - 475-2 EPA,** updated 05-03-2007.

TABLE OF CONTENTS

1 GENERAL REMARKS AND SAFETY INFORMATION — P. 7 - 9

GENERAL SERVICE MANUAL NOTES 7
GLOSSARY AND TERMINOLOGY 8
SAFETY REGULATIONS 8-9
WARRANTY CERTIFICATE 7

2 TECHNICAL INFORMATION — 10 - 15

MANUFACTURER AND MOTOR IDENTIFICATION DATA 11
OVERALL DIMENSIONS 15
PERFORMANCE DIAGRAMS 14
TECHINICAL SPECIFICATIONS 12-13
TROUBLE SHOOTING 10

3 MAINTENANCE - RECOMMENDED OIL TYPE - REFILLING — 16 - 19

ACEA Regulations - ACEA Sequences 17
API / MIL Sequences 17
FUEL SPECIFICATIONS 19
International specifications 17
LUBRICANT 17
PRESCRIBED LUBRICANT 18
ROUTINE ENGINE MAINTENANCE 16
SAE Classification 17

4 DISASSEMBLY/ REASSEMBLY — 20 - 31

Alternator 21
Camshaft end play 30
Camshaft timing 30
Center main bearing support, locating bolt 28
Clearance between main journals/crank pins and connecting rod bearings 29
Compression release (optional) 22
Connecting rod big end bearing 26
Connecting rod small end bushing 26
Connecting rod weight 27
CRANKSHAFT 28-29
Crankshaft center main bearing support 28
Crankshaft end play 28
Crankshaft journal radius 28
Crankshaft lubrication ducts 28
Crankshaft timing gear 27
Cylinder 24
Cylinder Head 22
Cylinder roughness 24
Dimensions of camshaft journals and housings 30
Dry air cleaner 21

Downloaded from www.Manualslib.com manuals search engine

https://truckmanualshub.com/

Flywheel ..... page 21
Governor springs with rocker arm 31
How to measure intake/exhaust cam height 30
Hydraulic pump p.t.o. (1P) 31
Injector projection 22
Main bearing and connecting rod big end bearing internal diameter 29
Main bearing housing 29
Main bearing support, PTO-Side 27
Main bearing support, timing gear side 27
Main bearing supports 29
Mechanical speed governor 31
Oil-bath air cleaner 20
Piston 24
Piston - Refitting 26
Piston clearance 26
Piston rings - End gaps 25
Piston rings - Fitting sequence 25
Piston weight 25
Pistons ringis - Clearance between grooves 25
RECOMMENDATIONS FOR DISASSEMBLING AND ASSEMBLING 20
RECOMMENDATIONS FOR OVERHAULS AND TUNING 20
Rocker arm assembly 22
Spring for extra fuel supply at starting 31
Valve guide insertion 23
Valve guides and valve guide housings 23
Valve I Rocker arm clearance 21
Valve seat grinding 24
Valve seats and housings 23
Valve timing without considering timing marks 30
Valves 23

5 LUBRICATION SYSTEM 32- 34

LUBRICATION SYSTEM AND BREATHER RECIRCULATION SYSTEM 32
Oil filter cartridge (external) 33
Oil filter cartridge (internal) 33
Oil preassure relief valve 33
Oil pressure curve at full speed 34
Oil pressure curve at idling speed 34
Oil Pump 33

6 FUEL SYSTEM ..... 35 - 39

Fuel feeding pump 35
Fuel feeding/injection circuit 35
Fuel filter, inside fuel tank 35
Fuel filter, removed from the tank (upon request) 35
How to reassemble injection pump components 36
Injection pump 36
Injection pump/mechanical speed governor timing 37
Injection static advance adjustment 37-38
Injector setting 39
Injector, for EPA engines 39
Injector, for standard engines 38
Test data for injection pump delivery 36

7 ELECTRIC SYSTEM ..... 40 - 42

Alternator battery charger curve (12 V, 18 A) 41
Alternator battery charger curve (12.5 V, 14A) 40
Alternator, 12 V - 18A 41
Alternator, 12.5 V - 14 A 40

Downloaded from www.Manualslib.com manuals search engine

https://truckmanualshub.com/

Characteristic curves for starting motor type Bosch DWL 12 V, 1.7 kW ..... Page 42
Electrical starting layout with battery charging light 40
How to check voltage regulator for proper operation 42
OPTIONAL ELECTRIC EQUIPMENT 41
Starting motor type Bosch DWL 12 V, 1.7 kW 42
Voltage regulator 41

8 SETTINGS ..... 43 - 44

Full speed setting in no-load conditions (standard) 43
Idling speed setting in no-load conditions 43
Injection pump delivery limiting and extra fuel device 43
Injection pump delivery setting 43
Injection pump delivery setting with engine at the torque dynamometer 44
Stop setting 44

9 STORAGE 45

External engine protection 45
Injection systems protection 45
Internal engine protection 45
PROCEDURES TO BE CARRIED OUT BEFORE START THE ENGINE 45
STORAGE 45

10 TORQUE SPECIFICATIONS AND USE OF SEALANT ..... 46 - 47

Table of tightening torques for standard screws (coarse thread) 47
Table of tightening torques for standard screws (fine thread) 47
Table of tightening torques for the main components 46
Use of sealant 46

11 SPECIAL TOOLS 48

Downloaded from www.Manualslib.com manuals search engine

https://truckmanualshub.com/

Notes :

Downloaded from www.Manualslib.com manuals search engine

https://truckmanualshub.com/

WARRANTY CERTIFICATE

- The products manufactured by Lombardini Srl are warranted to be free from conformity defects for a period of 24 months from the date of delivery to the first end user.
- For engines fitted to stationary equipment, working at constant load and at constant and/or slightly variable speed within the setting limits, the warranty covers a period up to a limit of 2000 working hours, if the above mentioned period (24 months) is not expired.
- If no hour-meter is fitted , 12 working hours per calendar day will be considered.
- For what concerns the parts subject to wear and deterioration (injection/feeding system, electrical system, cooling system, sealing parts, non-metallic pipes, belts) warranty covers a maximum limit of 2000 working hours, if the above mentioned period (24 months) is not expired.
- For correct maintenance and replacement of these parts, it is necessary to follow the instructions reported in the documentation supplied with each engine.
- To ensure the engine warranty is valid, the engine installation, considering the product technical features, must be carried out by qualified personnel only.
- The list of the Lombardini authorized dealers is reported in the “Service” booklet, supplied with each engine.
- Special applications involving considerable modifications to the cooling/lubricating system (for ex.: dry oil sump), filtering system, turbo-charged models, will require special written warranty agreements.
- Within the above stated periods Lombardini Srl directly or through its authorized network will repair and/or replace free of charge any own part or component that, upon examination by Lombardini or by an authorized Lombardini agent, is found to be defective in conformity, workmanship or materials.
- Any other responsibility/obligation for different expenses, damages and direct/indirect losses deriving from the engine use or from both the total or partial impossibility of use, is excluded.
- The repair or replacement of any component will not extend or renew the warranty period.

Lombardini warranty obligations here above described will be cancelled if:

- Lombardini engines are not correctly installed and as a consequence the correct functional parameters are not respected and altered.
- Lombardini engines are not used according to the instructions reported in the “Use and Maintenance” booklet supplied with each engine.
- Any seal affixed to the engine by Lombardini has been tampered with or removed.
- Spare parts used are not original Lombardini.
- Feeding and injection systems are damaged by unauthorized or poor quality fuel types.
- Electrical system failure is due to components, connected to this system, which are not supplied or installed by Lombardini.
- Engines have been disassembled, repaired or altered by any part other than an authorized Lombardini agent.

- Following expiration of the above stated warranty periods and working hours, Lombardini will have no further responsibility for warranty and will consider its here above mentioned obligations for warranty complete.

- Any warranty request related to a non-conformity of the product must be addressed to the Lombardini Srl service agents.

GENERAL SERVICE MANUAL NOTES

1 - Use only genuine Lombardini repair parts.
Failure to use genuine Lombardini parts could result in sub-standard performance and low longevity.

2 - All data presented are in metric format.
That is, dimensions are presented in millimeters (mm), torque is presented in Newton-meters (Nm), weight is presented in kilograms (kg), volume is presented in liters or cubic centimeters (cc) and pressure is presented in barometric units (bar).

Downloaded from www.Manualslib.com manuals search engine

https://truckmanualshub.com/

GLOSSARY AND TERMINOLOGY

For clarity, here are the definitions of a number of terms used recurrently in the manual.

- **Cylinder number one:** is the first piston viewed from the «1st P.T.O. side of the engine».
- **Rotation direction:** anticlockwise viewed from the «1st P.T.O. side of the engine».

SAFETY AND WARNING DECALS

- Important remarks and features of the text are highlighted using symbols, which are explained below:

Danger – Attention

This indicates situations of grave danger which, if ignored, may seriously threaten the health and safety of individuals.

Caution – Warning

This indicates that it is necessary to take proper precautions to prevent any risk to the health and safety of individuals and avoid financial damage.

Important

This indicates particularly important technical information that should not be ignored.

SAFETY REGULATIONS

· Lombardini Engines are built to supply their performances in a safe and long-lasting way.
To obtain these results, it is essential for users to comply with the servicing instructions given in the relative manual along with the safety recommendations listed below.

· The engine has been made according to a machine manufacturer's specifications and all actions required to meet the essential safety and health safeguarding requisites have been taken, as prescribed by the current laws in merit.
All uses of the engine beyond those specifically established cannot therefore be considered as conforming to the use defined by Lombardini which thus declines all liability for any accidents deriving from such operations.

· The following indications are dedicated to the user of the machine in order to reduce or eliminate risks concerning engine operation in particular, along with the relative routine maintenance work.

· The user must read these instructions carefully and become familiar with the operations described.
Failure to do this could lead to serious danger for his personal safety and health and that of any persons who may be in the vicinity of the machine.

· The engine may only be used or assembled on a machine by technicians who are adequately trained about its operation and the deriving dangers.
This condition is also essential when it comes to routine and, above all, extraordinary maintenance operations which, in the latter case, must only be carried out by persons specifically trained by Lombardini and who work in compliance with the existing documentation.

· Variations to the functional parameters of the engine, adjustments to the fuel flow rate and rotation speed, removal of seals, demounting and refitting of parts not described in the operation and maintenance manual by unauthorized personnel shall relieve Lombardini from all and every liability for deriving accidents or for failure to comply with the laws in merit.

· On starting, make sure that the engine is as horizontal as possible, unless the machine specifications differ. In the case of manual start-ups, make sure that the relative actions can take place without the risk of hitting walls or dangerous objects, also considering the movements made by the operator.
Pull-starting with a free cord (thus excluding self-winding starting only), is not permitted even in an emergency.

· Make sure that the machine is stable to prevent the risk of overturning.

· Become familiar with how to adjust the rotation speed and stop the engine.

· Never start the engine in a closed place or where there is insufficient ventilation.
Combustion creates carbon monoxide, an odourless and highly poisonous gas.
Lengthy stays in places where the engine freely exhausts this gas can lead to unconsciousness and death.

Downloaded from www.Manualslib.com manuals search engine

https://truckmanualshub.com/

- The engine must not operate in places containing inflammable materials, in explosive atmospheres, where there is dust that can easily catch fire unles specific, adequate and clearly indicated precautions have been taken and have been certified for the machine.
- To prevent fire hazards, always keep the machine at least one meter from buildings or from other machinery.
- Children and animals must be kept at a due distance from operating machines in order to prevent hazards deriving from their operation.
- Fuel is inflammable.
  The tank must only be filled when the engine is off.
  Thoroughly dry any spilt fuel and move the fuel container away along with any rags soaked in fuel or oil.
  Make sure that no soundproofing panels made of porous material are soaked in fuel or oil.
  Make sure that the ground or floor on which the machine is standing has not soaked up any fuel or oil.
- Fully tighten the tank plug each time after refuelling.
  Do not fill the tank right to the top but leave an adequate space for the fuel to expand.
- Fuel vapour is highly toxic.
  Only refuel outdoors or in a well ventilated place.
- Do not smoke or use naked flames when refuelling.
- The engine must be started in compliance with the specific instructions in the operation manual of the engine and/or machine itself.
  Do not use auxiliary starting aids that were not installed on the original machine (e.g. Startpilot').
- Before starting, remove any tools that were used to service the engine and/or machine.
  Make sure that all guards have been refitted.
- During operation, the surface of the engine can become dangerously hot.
  Avoid touching the exhaust system in particular.
- Before proceeding with any operation on the engine, stop it and allow it to cool.
  Never carry out any operation whilst the engine is running.
- The coolant fluid circuit is under pressure.
  Never carry out any inspections until the engine has cooled and even in this case, only open the radiator plug or expansion chamber with the utmost caution, wearing protective garments and goggles. If there is an electric fan, do not approach the engine whilst it is still hot as the fan could also start operating when the engine is at a standstill.
  Only clean the coolant system when the engine is at a standstill.
- When cleaning the oil-cooled air filter, make sure that the old oil is disposed of in the correct way in order to safeguard the environment.
  The spongy filtering material in oil-cooled air filters must not be soaked in oil.
  The reservoir of the separator pre-filter must not be filled with oil.
- The oil must be drained whilst the engine is hot (oil T ~ 80°C).
  Particular care is required to prevent burns.
  Do not allow the oil to come into contact with the skin.
- Make sure that the drained oil, the oil filter and the oil it contains are disposed of in the correct way in order to safeguard the environment.
- Pay attention to the temperature of the oil filter when the filter itself is replaced.
- Only check, top up and change the coolant fluid when the engine is off and cold.
  Take care to prevent fluids containing nitrites from being mixed with others that do not contain these substances since "Nitrosamine", dangerous for the health, can form.
  The coolant fluid is polluting and must therefore be disposed of in the correct way to safeguard the environment.
- During operations that involve access to moving parts of the engine and/or removal of rotating guards, disconnect and insulate the positive wire of the battery to prevent accidental short-circuits and to stop the starter motor from being energized.
- Only check belt tension when the engine is off.
- Only use the eyebolts installed by Lombardini to move the engine.
  These lifting points are not suitable for the entire machine; in this case, the eyebolts installed by the manufacturer should be used.

Downloaded from www.Manualslib.com manuals search engine

https://truckmanualshub.com/

TROUBLE SHOOTING

THE ENGINE MUST BE STOPPED IMMEDIATELY WHEN:

1) - The engine rpms suddenly increase and decrease;
2) - A sudden and unusual noise is heard;
3) - The colour of the exhaust fumes suddenly darkens;
4) - The oil pressure indicator light turns on while running.

TABLE OF LIKELY ANOMALIES AND THEIR SYMPTOMS

The following table contains the possible causes of some failures which may occur during operation.
Always perform these simple checks before removing or replacing any part.

	POSSIBLE CAUSE	TROUBLE									
		Engine does not start	Engine starts but stops	No acceleration	Non uniform speed	Black smoke	White smoke	Oil pressure too low	Oil level increase	Excessive oil consumption	Dripping oil and fuel from the exhaust
FUEL CIRCUIT	Obstructed fuel line	■									
	Clogged fuel filter	■	■	■							
	Air inside fuel circuit	■	■	■							
	Collged tank breather	■	■	■							
	Faulty feed pump	■	■								
	Injector stuck	■									
	Injection pump valve damaged	■									
	Injector not adjusted					■					
	Plunger excessive leakage								■		
	Hardened pump control rod	■		■	■						
	Wrong injection pump delivery setting			■		■					
LUBRIFICATION	Too high oil level				■		■			■	
	Oil pressure valve blocked or dirty							■			
	Worn oil pump							■			
	Air inside oil suction pipe							■			
	Faulty pressure gauge or switch							■			
	Clogged oil suction pipe							■			
ELECTRIC SYSTEM	Battery discharged	■									
	Wrong or inefficient cable connection	■									
	Defective starter switch	■									
	Defective starting motor	■									
MAINTE-NANCE	Clogged air filter	■		■		■					
	Excessive idle operation						■				■
	Incomplete running-in						■				
	Engine overloaded			■		■					
SETTINGS / REPAIR	Advanced injection timing	■									
	Retarded injection timing					■					
	Incorrect governor linkage adjustment	■			■						
	Governor spring broken or unhooked			■							
	Too low idle-speed setting		■		■						
	Worn-out or stuck piston rings						■			■	■
	Worn cylinders						■			■	■
	Worn valve guides						■			■	■
	Valves sticking or damaged	■									
	Worn-out bearings							■			
	Non-sliding speed governor leverage	■	■		■						
	Crankshaft not turning freely					■					
	Damaged cylinder head gasket	■									

Downloaded from www.Manualslib.com manuals search engine

https://truckmanualshub.com/

MANUFACTURER AND MOTOR IDENTIFICATION DATA

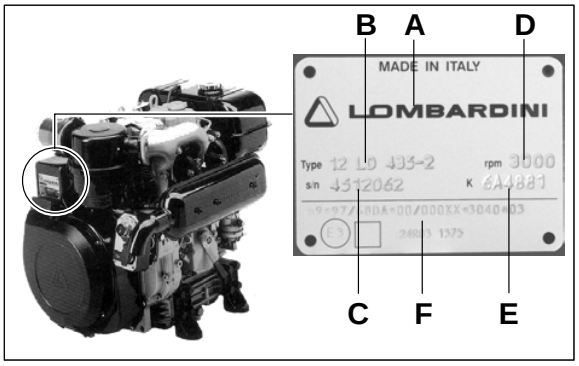

The identification plate shown in the figure can be found directly on the engine.
It contains the following information:

A) Manufacturer's identity
B) Engine type
C) Engine serial number
D) Maximum operating speed
E) Number of the customer version (form K)
F) Approval data

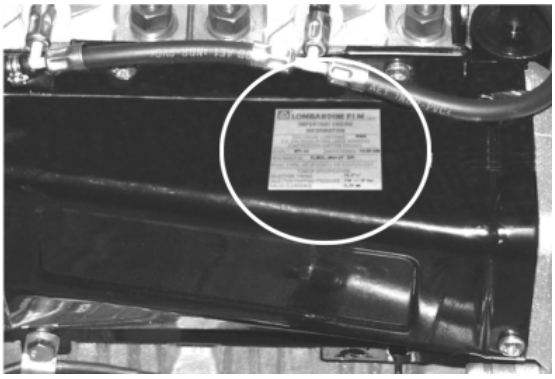

Approval data

The approval reference directives EC are on the engine plate.

The data plate for EPA Standards is applied on the air shroud.

It contains the following information:

1) Current year
2) Engine displacement
3) Rated power, measured in kW
4) EPA family ID
5) Injection timing
6) Injection opening preassure
7) Valve clearance

Downloaded from www.Manualslib.com manuals search engine

https://truckmanualshub.com/

TECHINICAL SPECIFICATIONS

			Engine type, 12LD:			
			435-2	435-2/B1	475-2	475-2 EPA
GENERAL DETAILS						
Operating cycle		Four-stroke diesel				
Cylinders		n°	2 in line			
Bore x stroke		mm	86x75	86x75	90x75	90x75
Displacements		cm^3	871	871	954	954
Compression rate			18.0:1	18.0:1	18.0:1	20.0:1
Intake		Oil bath air cleaner or dry air cleaner				
Cooling		Air (fan integral to the flywheel)				
Crankshaft rotation		Counter-clockwise (1st P.T.O. side)				
Combustion sequenc		Driving shaft degrees	180°			
Timing system		side camshaft, rods and rocker-arms				
Valves		n°	2 per cylinder			
Shaft		Camshaft inside the crankcase				
Tappets		Mechanic				
Fuel injection		Direct, on piston				
Dry weight of engine		kg	80	80	80	80
Maximum tilt while operating		Momentary	35°	35°	35°	35°
Maximum tilt while operating		Up to 1 hour	25°	25°	25°	25°
Combustion air volume at 3000 r.p.m.		l/min	1050	1250**	1150	1150
Cooling air volume at 3000 r.p.m.		l/min	13300	16200**	15500	15500
POWER AND TORQUE						
Maximum operating speed		r.p.m.	3000	3600	3000	3000
Max power	N 80/1269/CEE ISO 1585	kW/CV	14.0/19.0	14.7/20.0	15.8/21.5	-
	NB ISO 3046 IFN		12.7/17.2	13.2/18.0	14.8/20.1	14.8/20.1
	NA ISO 3046 ICXN		11.4/15.5	12.0/16.3	13.5/18.3	13.5/18.3
Maximum torque (NB power)*		Nm/kgm	49.0/5.0	49.0/5.0	57.0/5.8	48.0/4.9
Maximum torque 3rd P.T.O.		Nm/kgm	25.0/2.5	25.0/2.5	25.0/2.5	25.0/2.5
Axial load allowed on crankshaft		Kg	300	300	300	300
CONSUMPTION AT MAXIMUM POWER						
Specific fuel onsumption***		g/kWh - g/CVh	260-191	280-206	245-180	257-189
Oil consumption		kg/h	0,020	0,020	0,025	0,025

* 2000 rpm for 435-2 e 435-2/B1 engines, 2100 rpm for 475-2 engines, 2200rpm for 475-2 EPA engines.
** At 3600 rpm.
*** At NB power.

Downloaded from www.Manualslib.com manuals search engine

https://truckmanualshub.com/

		Engine type, 12LD:			
		435-2	435-2/B1	475-2	475-2 EPA
FUEL SUPPLY CIRCUIT					
Fuel type	Automotive diesel fuel (minimum cetane: 51)				
Fuel supply	Mechanical fuel lift pump, diaphragm type				
Fuel filter, internal					
Filtering surface	cm^2	2400			
Filter capacity	µ	2÷3			
Maximum operating pressure	bar	4			
Fuel filter, external					
Filtering surface	cm^2	460			
Filter capacity	µ	7			
LUBRICATION CIRCUIT					
Type of lubrication	Completely forced				
Circuit supply	Gear pump				
Maximum oil quantity	Including filter (l)	2.7	2.7	2.7	2.7
Maximum oil quantity	Excluding filter (l)	2.5	2.5	2.5	2.5
Oil pressure at min. speed (oil temperature: 120°C)	bar	0,6	0,6	0,6	0,6
Oil filter cartridge, external					
Maximum operating pressure	bar	7			
Maximum combustion pressure	bar	20			
Filter capacity	µ	15			
By-pass valve setting	bar	1.5÷1.7			
Filtering surface	cm^2	730			
Oil filter cartridge, internal					
Maximum operating pressure	bar	4.5			
Filter capacity	µm	70			
By-pass valve setting	bar	0.60÷0.75			
ELECTRICAL SYSTEM					
Alternator, Internal Standard (nominal voltage)	V	12,5			
Alternator, Internal Optional (nominal voltage)	V	12			
Alternator, Internal Standard (nominal current) *	A	14			
Alternator, Internal Optional (nominal current) *	A	18			
Starter motor power (Bosh GF)	kW	1.7			

* (see “Alternator battery charger curve” pages 40÷41)

Downloaded from www.Manualslib.com manuals search engine

https://truckmanualshub.com/

PERFORMANCE DIAGRAMS

12 LD 435-2

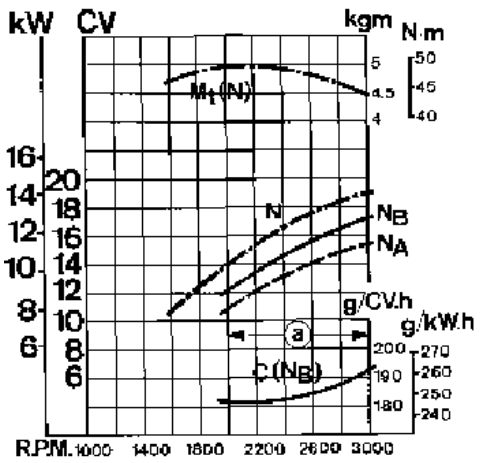

12 LD 435-2 B1

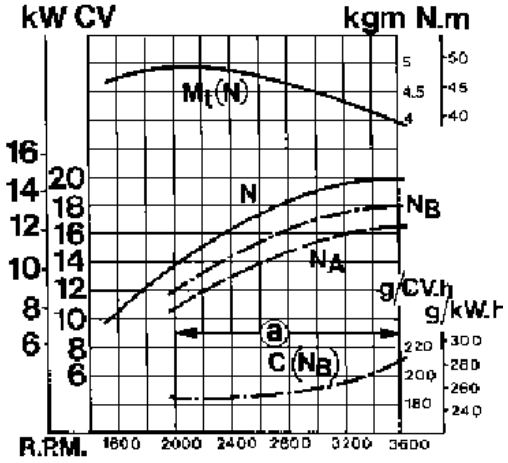

12 LD 475-2

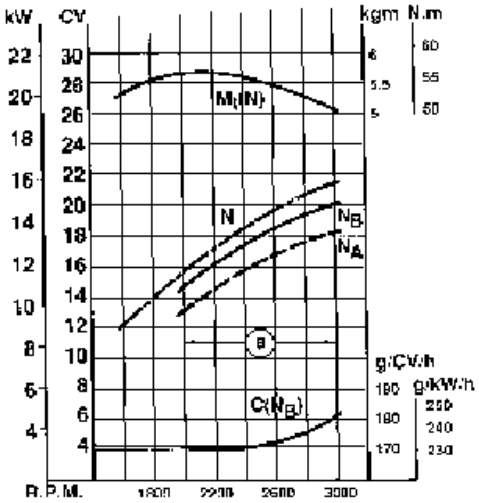

12 LD 475-2 EPA

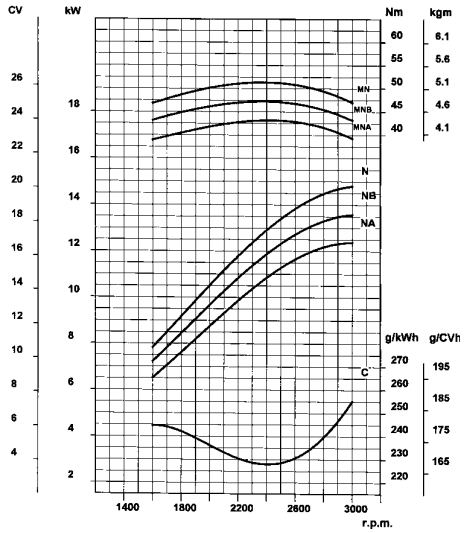

N (80/1269/CEE - ISO 1585) AUTOMOTIVE RATING: Intermittent operation with variable speed and variable load.
NB (ISO 3046 - 1 IFN) RATING WITH NO OVERLOAD CAPABILITY: Continuos light duty operation with constant speed and variable load.
NA (ISO 3046 - 1 ICXN) CONTINUOUS RATING WITH NO OVERLOAD CAPABILITY: Continuos heavy duty with constant speed and constant load.

MN Torque curve (N curve) - **MB** (NB curve) - **MA** (NA curve).
C Specific fuel consumption curve.

The above power values refer to an engine fitted with air cleaner and standard muffler, after testing and at the environmental conditions of 20° C and 1 bar.
Max. power tolerance is 5%.
Power decreases by approximately 1 % every 100 m altitude and by 2 % every 5°C above 20° C.

Note: Consult LOMBARDINI for power, torque curves and specific consumptions at rates differing from those given above.

Downloaded from www.Manualslib.com manuals search engine

https://truckmanualshub.com/

OVERALL DIMENSIONS

12LD 435-2 – 435-2/B1 – 475-2 – EPA

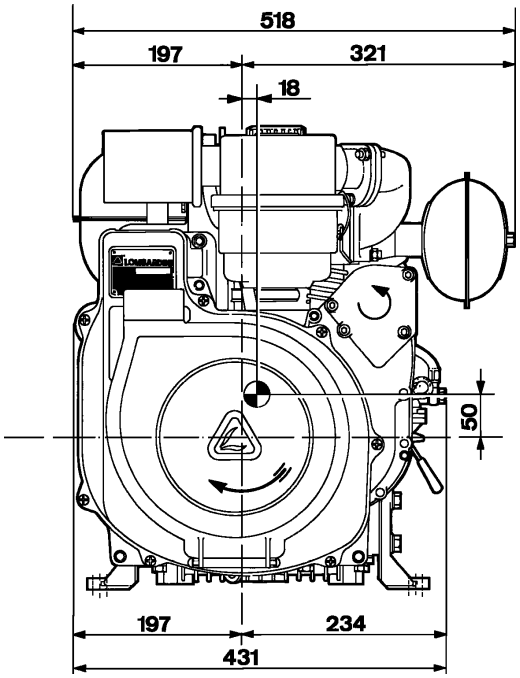

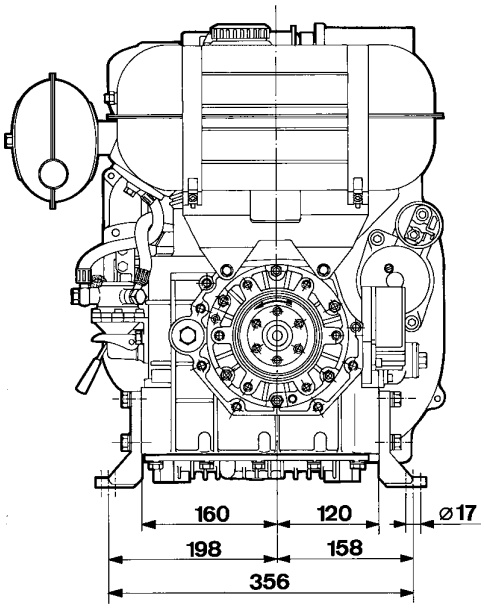

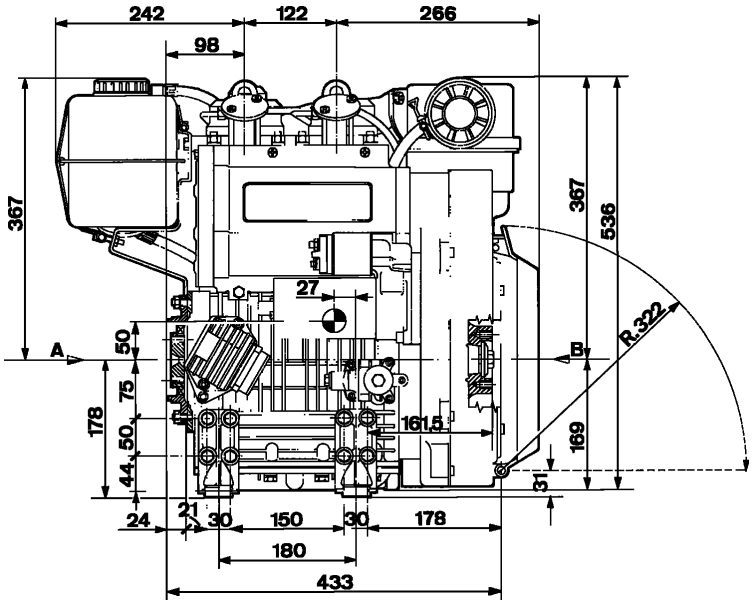

Downloaded from www.Manualslib.com manuals search engine

https://truckmanualshub.com/

ROUTINE ENGINE MAINTENANCE

! Failure to carry out the operations described in the table may lead to technical damage to the machine and/or system

EXTRAORDINARY MAINTENANCE

AFTER THE FIRST 50 WORKING HOURS	Engine oil replacement.	Oil filter replacement.

ORDINARY MAINTENANCE

OPERATION DESCRIPTION			FREQUENCY x HOURS						
			10	125	250	500	1000	2500	5000
CHECK	ENGINE OIL LEVEL		■						
	OIL BATH AIR CLEANER	(***)	■						
	DRY AIR CLEANER	(***)	■						
	FUEL PIPES		■						
	COOLING SYSTEM CLEANING			■					
	VALVE-ROCKER ARMS CLEARANCE ADJUSTMENT	(***)			■				
	SETTING AND INJECTORS CLEANING				■				
	RUBBER INTAKE HOSE (DRY AIR CLEANER - INTAKE MANIFOLD)				■				
	ENGINE OIL RADIATOR CLEANING						■		
	ALTERNATOR AND STARTING MOTOR							■	
	FUEL TANK CLEANING							■	
REPLACEMENT	ENGINE OIL	(*)			■				
	EXTERNAL OIL FILTER	(*)			■				
	FUEL FILTER	(*)			■				
	RUBBER INTAKE HOSE (DRY AIR CLEANER - INTAKE MANIFOLD)	(**)					■		
	FUEL PIPES	(**)						■	
	DRY AIR CLEANER EXTERNAL CARTRIDGE	(***) (°)	AFTER 6 CHECKS WITH CLEANING						
	DRY AIR INTERNAL EXTERNAL CARTRIDGE	(***) (°)	AFTER 3 CHECKS WITH CLEANING						
OVERHAUL	PARTIAL							■	
	TOTAL								■

(*) - **In case of low use: every year.**
(**) - **In case of low use: every 2 years.**
(***) - **The period of time that must elapse before cleaning or replacing the filter element depends on the environment in which the engine operates. The air filter must be cleaned and replaced more frequently In very dusty conditions.**
(°) - **Alternately when the clogging indicator, if present, indicates it's necessary to replace the filter.**

Downloaded from www.Manualslib.com manuals search engine

https://truckmanualshub.com/

LUBRICANT

SAE Classification

In the SAE classification, oils differ on the basis of their viscosity, and no other qualitative characteristic is taken into account.
The first number refers to the viscosity when the engine is cold (symbol W = winter), while the second considers viscosity with the engine at régime.
The criteria for choosing must consider, during winter, the lowest outside temperature to which the engine will be subject and the highest functioning temperature during summer.
Single-degree oils are normally used when the running temperature varies scarcely.
Multi-degree oil is less sensitive to temperature changes.

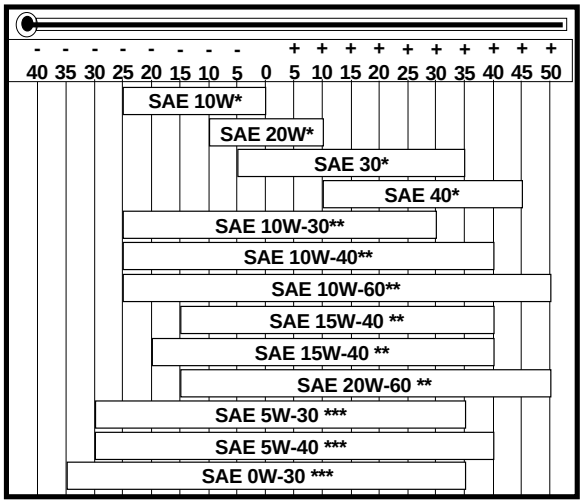

SAE- Grade

** Mineral base*
*** Semi-synthetic base*
**** Synthetic base*

International specifications

They define testing performances and procedures that the lubricants need to successfully respond to in several engine testing and laboratory analysis so as to be considered qualified and in conformity to the regulations set for each lubrication kind.
A.P.I : (American Petroleum Institute)
MIL : Engine oil U.S. military specifications released for logistic reasons
ACEA : European Automobile Manufacturers Association
Tables shown on page 53 are of useful reference when buying a kind of oil.
Codes are usually printed-out on the oil container and the understanding of their meaning is useful for comparing different brands and choosing the kind with the right characteristics.
Usually a specification showing a following letter or number is preferable to one with a preceding letter or number.
An SF oil, for instance, is more performing than a SE oil but less performing than a SG one.

ACEA REGULATIONS - ACEA SEQUENCES

PETROL

A1 =Low-viscosity, for frictions reduction
A2 =Standard
A3 =High performances

LIGHT DUTY DIESEL ENGINES

B1 =Low-viscosity, for frictions reduction
B2 =Standard
B3 =High performances (indirect injection)
B4 =High quality (direct injection)

HEAVY DUTY DIESEL ENGINES

E1 =OBSOLETE

E2 = Standard
E3 = Heavy conditions (Euro 1 - Euro 2 engines)
E4 = Heavy conditions (Euro 1 - Euro 2 - Euro 3 engines)
E5 = High performances in heavy conditions (Euro 1 - Euro 2 - Euro 3 engines)

API / MIL SEQUENCES

	DIESEL										PETROL									
API	CH-4	CG-4	CF-4	CF-2	CF	CE	CD	CC	CB	CA	SA	SB	SC	SD	SE	SF	SG	SH	SJ	SL
MIL						L - 2104 D / E					L - 46152 B / C / D / E									

CURRENT OBSOLETE

Downloaded from www.Manualslib.com manuals search engine

https://truckmanualshub.com/

PRESCRIBED LUBRICANT

AGIP SUPERDIESEL MULTIGRADE 10W40	specifications	**API CF4 / SG ACEA B2 - E2 MIL - L-4165 D/E**

In the countries where AGIP products are not available, use oil API SJ/CF for Diesel engines or oil corresponding to the military specification MIL-L-4165 D/E.
For a temperature of -10°C an oil with a **5W40** viscosity is recommended.
For a temperature of -15°C an oil with a **0W30** viscosity is recommended.

12 LD ENGINES OIL CAPACITY		435-2 435-2/B1	475
OIL VOLUME AT MAX LEVEL (OIL FILTER INCLUDED)	Litres	**2.5**	**2.7**
OIL VOLUME AT MAX LEVEL (WITHOUT OIL FILTER)	Litres	**2.4**	**2.5**

Danger - Attention

- The engine may be damaged if operated with insufficient lube oil.
- It is also dangerous to supply too much lube oil to the engine because a sudden increase in engine rpm could be caused by its combustion.
- Use proper lube oil preserve your engine.
  Good quality or poor quality of the lubricating oil has an affect on engine performance and life.
- If inferior oil is used, or if your engine oil is not changed regularly, the risk of piston seizure, piston ring sticking, and accelerated wear of the cylinder liner, bearing and other moving components increases significantly.
- Always use oil with the right viscosity for the ambient temperature in which your engine is being operated.
  Use the chart when chosing your engine oil.

Danger - Attention

- The used engine oil can cause skin-cancer if kept frequently in contact for prolonged periods.
- If contact with oil cannot be avoided, wash carefully your hands with water and soap as soon as possible.
- Do not disperse the oil in the ambient, as it has a high pollution power.

Downloaded from www.Manualslib.com manuals search engine

https://truckmanualshub.com/

FUEL SPECIFICATIONS

Danger - Attention

- To avoid explosions or fire outbreaks, do not smoke or use naked flames during the operations.
- Fuel vapours are highly toxic. Only carry out the operations outdoors or in a well ventilated place.
- Keep your face well away from the plug to prevent harmful vapours from being inhaled.
- Dispose of fuel in the correct way and do not litter as it is highly polluting.

To achieve optimum performance of the engine, use good quality fuel with certain characteristics:

Cetane number (minimum 51): indicates the ignition quality.
A fuel with a low cetane number may cause problems when starting from cold and have a negative effect on combustion.
Viscosity (2.0/4.5 centistokes at 40°C): this is the resistance to flow and performance may decline if not within the limits.
Density (0.835/0.855 Kg/litre): a low density reduces the power of the engine, and density that is too high increases performance and opacity of the exhaust
Distillation (85% at 350°): this is an indication of the mixture of different hydrocarbons in the fuel.
A high ratio of light hydrocarbons may have a negative effect on combustion.
Sulphur (maximum 0.05% of the weight): high sulphur content may cause engine wear.
In those countries where diesel has a high sulphur content, it is advisable to lubricate the engine with a high alkaline oil or alternatively to replace the lubricating oil recommended by the manufacturer more frequently.

PRESCRIBED LUBRICANT	
Fuel with low sulphur content	**API CF4 - CG4**
Fuel with high sulphur content	**API CF - CD - CE**

The countries in which diesel normally has a low sulphur content are: Europe, North America and Australia.

FUELS FOR LOW TEMPERATURES

It is possible to run the engine at temperatures below 0°C using special winter fuels.
These fuels reduce the formation of paraffin in diesel at low temperatures. If paraffin forms in the diesel, the fuel filter becomes blocked interrupting the flow of fuel.

Fuel can be:	**-**	**Summer**	**up to**	**0°C**
	-	**Winter**	**up to**	**-10°C**
	-	**Alpine**	**up to**	**-20°C**
	-	**Arctic**	**up to**	**-30°C**

For all fuel types, the cetane number cannot be lower than 51.

AVIATION KEROSENE AND RME FUELS (BIOFUELS)

The use of these fuels is allowed. However they may condition the performance of the engine.
The only Aviation fuels that may be used in this engine are: JP5, JP4, JP8 and JET-A if 5% oil is added.
For more information on Aviation fuels and Biofuels (RME, RSME) please contact the Lombardini applications department.

Capacities standard fuel tank	Litres	**15**
As for filters, tanks and special crankcases please refer to LOMBARDINI instructions.		

Downloaded from www.Manualslib.com manuals search engine

https://truckmanualshub.com/

RECOMMENDATIONS FOR DISASSEMBLING AND ASSEMBLING

Important

To locate specific topics, the reader should refer to the index.

- Besides disassembly and reassembly operations this chapter also includes checking and setting specifications, dimensions, repair and operating instructions.
- Always use original LOMBARDINI spare parts for proper repair operations.
- The operator must wash, clean and dry components and assemblies before installing them.
- The operator must make sure that the contact surfaces are intact, lubricate the coupling parts and protect those that are prone to oxidation.
- Before any intervention, the operator should lay out all equipment and tools in such a way as to enable him to carry out operations correctly and safely.
- For safety and convenience, you are advised to place the engine on a special rotating stand for engine overhauls.
- Before proceeding with operations, make sure that appropriate safety conditions are in place, in order to safeguard the operator and any persons involved.
- In order to fix assemblies and/or components securely, the operator must tighten the fastening parts in a criss-cross or alternating pattern.
- Assemblies and/or components with a specific tightening torque must initially be fastened at a level lower than the assigned value, and then subsequently tightened to the final torque.

RECOMMENDATIONS FOR OVERHAULS AND TUNING

Important

To locate specific topics, the reader should refer to the index.

- Before any intervention, the operator should lay out all equipment and tools in such a way as to enable him to carry out operations correctly and safely.
- The operator must comply with the specific measures described in order to avoid errors that might cause damage to the engine.
- Before carrying out any operation, clean the assemblies and/or components thoroughly and eliminate any deposits or residual material.
- Wash the components with special detergent and do not use steam or hot water.
- Do not use flammable products (petrol, diesel, etc.) to degrease or wash components. Use special products.
- Dry all washed surfaces and components thoroughly with a jet of air or special cloths before reassembling them.
- Apply a layer of lubricant over all surfaces to protect them against oxidation.
- Check all components for intactness, wear and tear, seizure, cracks and/or faults to be sure that the engine is in good working condition.
- Some mechanical parts must be replaced *en bloc*, together with their coupled parts (e.g. valve guide/valve etc.) as specified in the spare parts catalogue.

Danger - Attention

During repair operations, when using compressed air, wear eye protection.

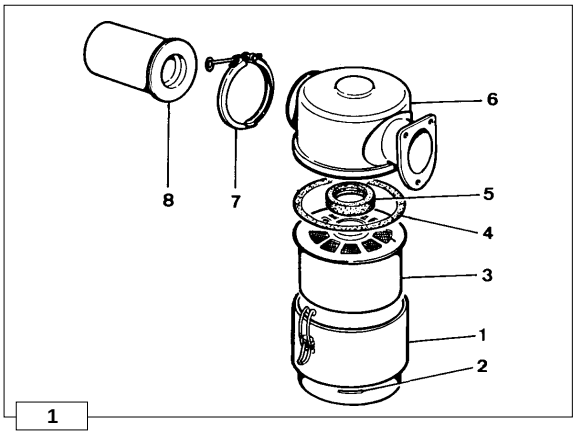

1

Oil-bath air cleaner

Check gaskets and replace if necessary.
Check that flange weld is free of porosity or defective spots.
Carefully clean bowl and filtering element with Diesel oil and blow through with compressed air.
Top up with engine oil to the mark.
When refitting tighten nuts at 25 Nm.
See page 16 for periodic maintenance details.

Components:

1 Bowl
2 Oil level mark
3 Filtering element
4 Seal ring
5 Internal seal ring
6 Cover
7 Clamp
8 Prefilter

Downloaded from www.Manualslib.com manuals search engine

https://truckmanualshub.com/

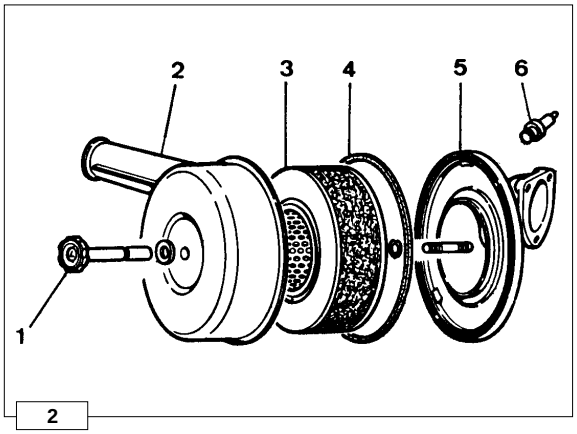

2

Dry air cleaner

1 Hand wheel
2 Cover
3 Cartridge
4 Seal ring
5 Bracket
6 Clogging indicator

Important

Replace cartridge immediately when indicator shows that it's clogged.

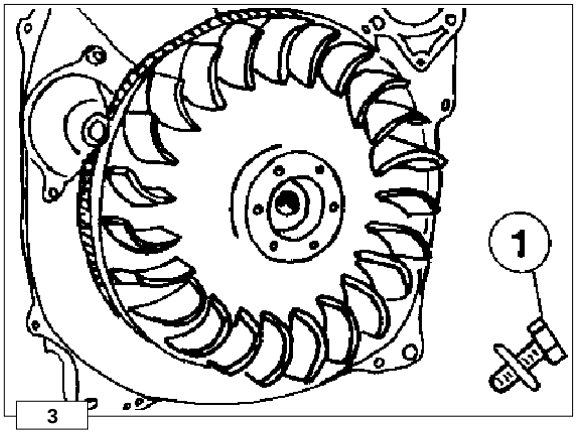

3

Flywheel

Remove flywheel with puller (part N°. 7271-3595-048).
Check starter ring gear and tapered crankshatt mating surfaces.
Unscrew bolt **1** clockwise; when refitting tighten bolt to 180 Nm.

Note: To replace starter ring gear heat it up to 200 + 250°C and rapidly drive it onto the flywheel.

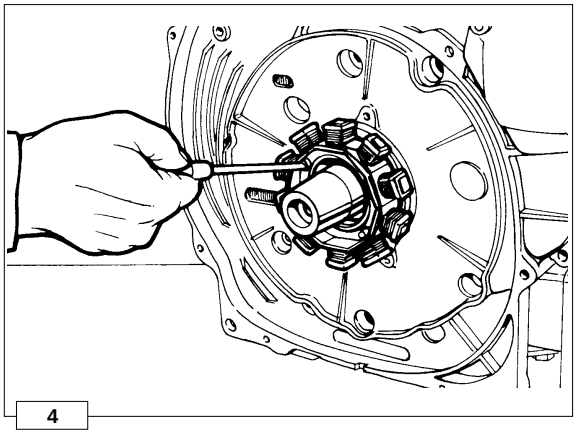
4

Alternator

Remove stator and place it inside the rotor to prevent metal particles from being attracted by the magnets.
When refitting tighten rotor screws and stator bolts at 10 Nm.
See pages 40 and 41 for alternator characteristics.

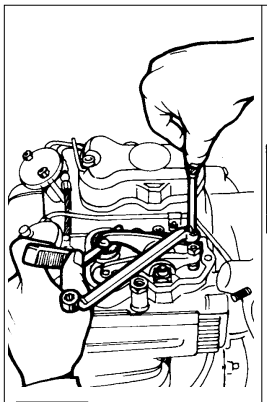
5

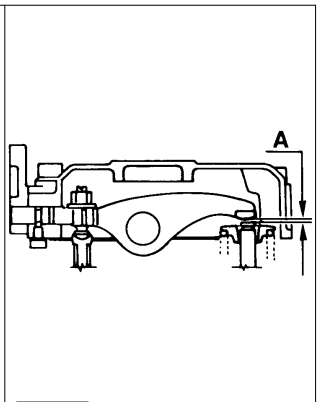

6

Valve / Rocker arm clearance

Caution - Warning

Setting should be performed when the engine is cold.

Remove rocker arm cover and check gaskets for breakage.
Bring each cylin-der piston to top dead center on the compression stroke and set clearance **A** at 0.15 + 0.20 mm.
When refitting tighten cover screws to 20 Nm.

Downloaded from www.Manualslib.com manuals search engine

https://truckmanualshub.com/

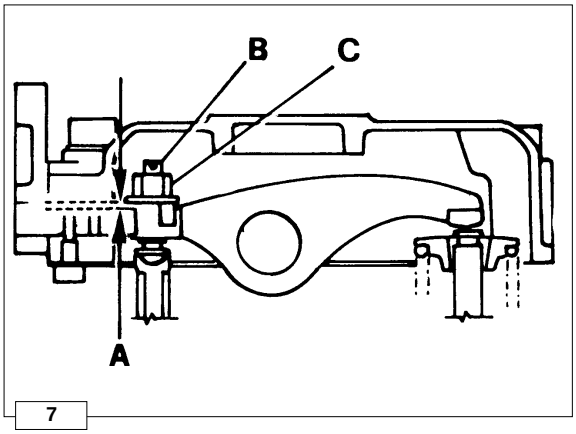

7

Compression release (optional)

Bring piston to top dead center on the compression stroke.
Unscrew rocker arm cover side plug and measure clearance **A**, which must be 0.30÷0.40 mm.
For setting purposes remove rocker arm cover, unscrew lock nut **C** and set clearance **A** by adjusting the screw **B**.

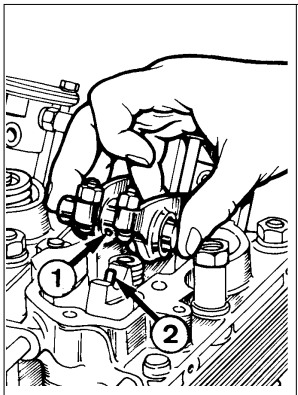

8

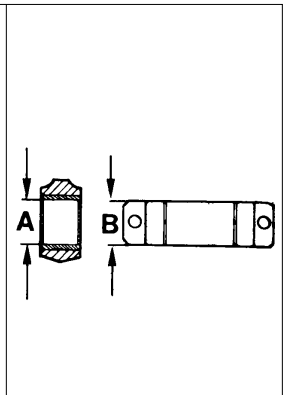

9

Rocker arm assembly

Components:
1 Bore
2 Lubrification tube

Dimensions (mm):
A = 18.032 ÷ 18.050
B = 17.989 ÷ 18.000

If clearance (**A-B**) exceeds 0.135 mm replace shaft and rocker arms.
When refitting check that lubrication tube perfectly matches with the journal bore.
Tighten screws to 25 Nm.

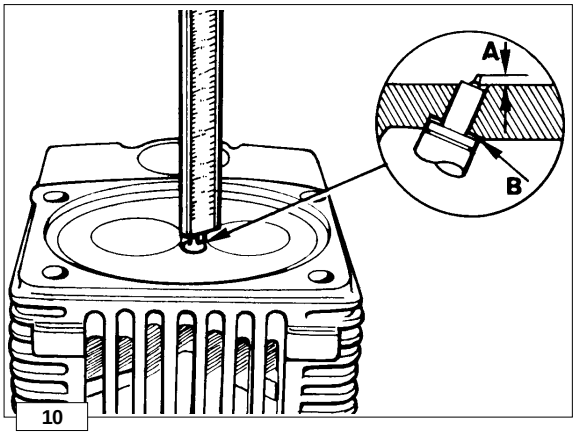

10

Injector projection

The end of nozzle **A** should project 3.0 ÷ 3.5 mm (2,00÷2,50mm for EPA engines) from the cylinder head plane.
Adjust injector projection by means of copper shims **B** measuring 1.5 and 1.00 mm in thickness.

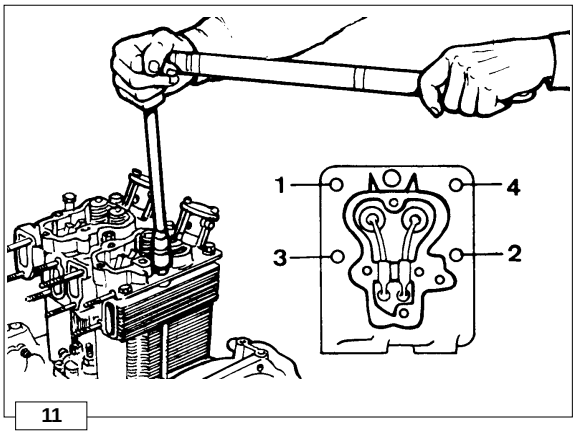

11

Cylinder Head

Important

Do not remove it when hot to avoid deformation.

If cylinder head is deformed level it hot by removing a maximum of 0.3 mm.
When refitting tighten only if sure that rocker arm lubrication tube is well inside its holes and that both heads are in line by fitting the inlet and exhaust manifolds before tightening the cylinder head nuts.
Always replace copper head gasket: see page 26 (picture 32) for choosing the right thickness.
Progressively tighten nuts in the **1**, **2**, **3**, **4** sequence at 50 Nm.

Downloaded from www.Manualslib.com manuals search engine

https://truckmanualshub.com/

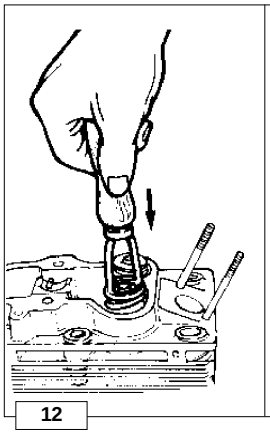
12

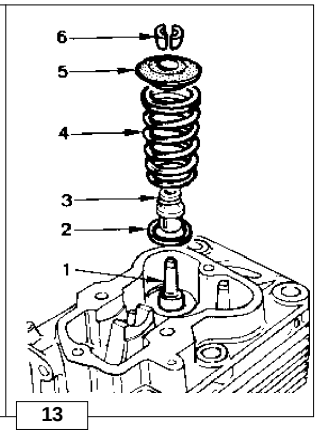

13

Valves

Components:
1 Intake valve
2 Spring seat
3 Valve stem seal
4 Spring
5 Retainer
6 Half collets

To remove half collets firmly press down as shown in the figure.

Important

Valve stem seal 3 must be fitted to the intake valve only.

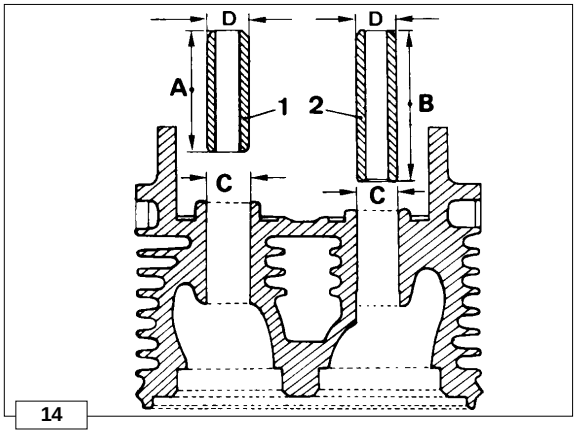

14

Valve guides and valve guide housings

Components:
1 = Exhaust valve guide
2 = Intake valve guide

Ref.	*Dimensions* (mm)
A	42,0
B	53,5
C	14,000÷14,018
D	14,050÷14,060

Valve guides with outside diameter increased by 0.5 mm are also available; in such cases valve guide bore **C** should also be increased by 0.5mm.

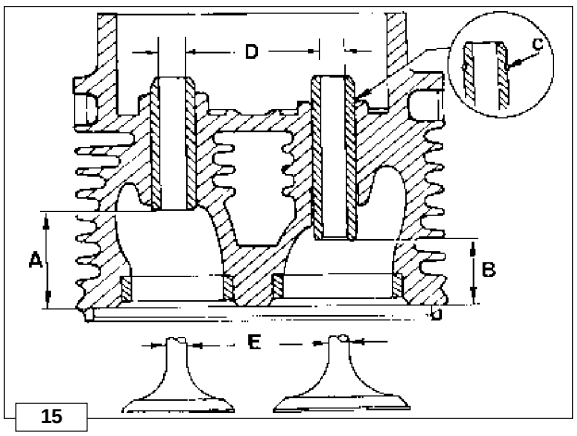

15

Valve guide insertion

Heat cylinder head up to 160 ÷ 180°C
Press guides considering the **A** and **B** distances from the head piane.

Ref.	*Dimensions* (mm)
A	30,80÷31,20
B	24,80÷25,20

Note: If guides are seated with stop ring **C**, first locate the ring in place and then position guides without considering **A** and **B**.

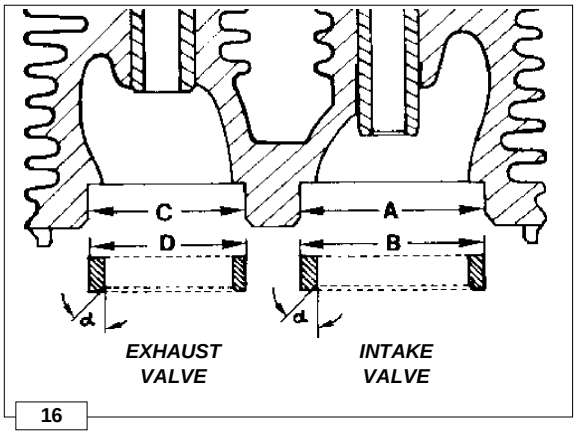

16

Valve seats and housings

Ref.	*Dimensions* (mm)
A	40,000÷40,016
B	40,120÷40,140
C	34,000÷34,016
D	34,120÷34,140

Press valve seats into the housings and cut **α** at 45°.

Downloaded from www.Manualslib.com manuals search engine

https://truckmanualshub.com/

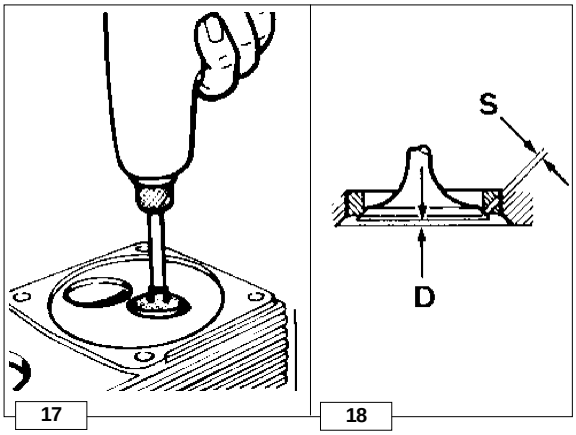

Valve seat grinding

After cutting grind valve seats with fine emery paste in oil suspension.
The sealing surface **S** should not exceed 2 mm.
Valve recess after grinding **D** = 0.75÷1.25 mm; maximum worn limit 1.65 mm.

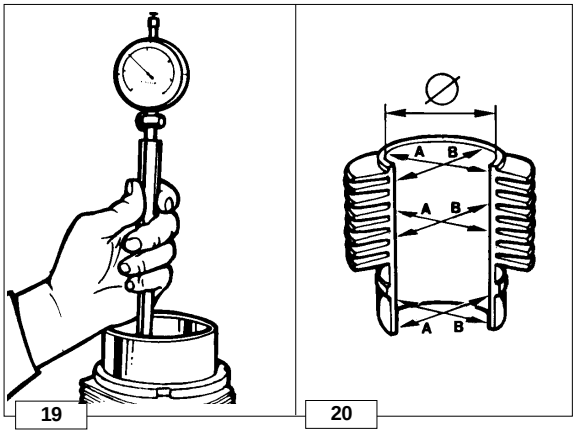

Cylinder

Measure diameter size between two diametrically opposed points at three different heights.

Per 12 LD 435-2 / 435-2B1: ..... Ø = 86,00 ÷ 86,02 mm;
Per 12 LD 475-2 / 475-2 EPA ..... Ø = 90,00 ÷ 90,02 mm.

In case wear exceeds 0.10 mm, bore the cylinder and fit oversize piston and rings.
In case of less wear replace piston rings only.

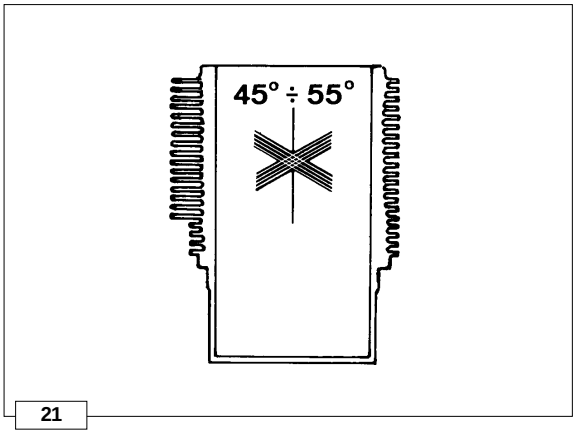

Cylinder roughness

The cylinder should show no blowholes or porosities check for leakage by sealing both ends of the cylinder and preassurizing with compressed air at 4 bar and immerging it in water for 30 seconds.
Fins must be intact.
Cross hatch pattern polishing must range between 45°÷55° and be uniform and clear in both directions.
Average roughness should range between 0.5 and 1 µ.

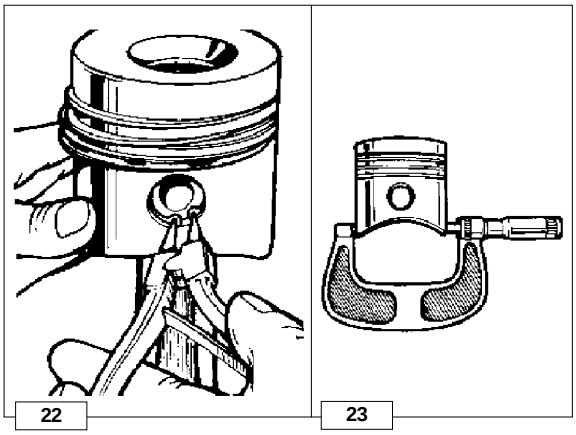

Piston

Remove circlips and remove piston pin.
Remove piston rings and clean grooves.
Measure diameter at 2 mm from the bottom of the piston.

Per 12 LD 435-2 / 435-2B1: ..... Ø = 85,920 ÷ 85,940 mm;
Per 12 LD 475-2 / 475-2 EPA ..... Ø = 89,925 ÷ 89,940 mm.

In case of diameter wear above 0.05 mm replace piston and piston rings.

Note: Oversize pistons of 0.5 and 1.0 mm are available.

Downloaded from www.Manualslib.com manuals search engine

https://truckmanualshub.com/

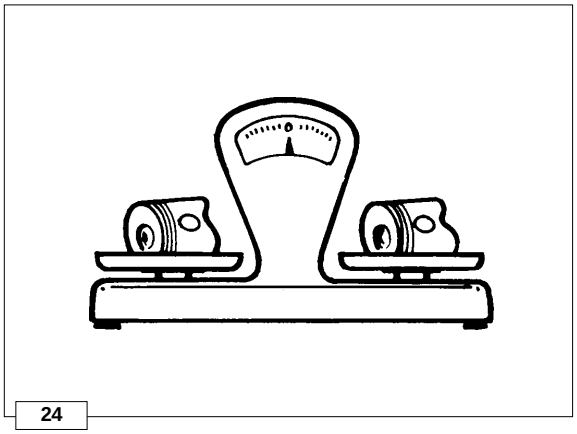

24

Piston weight

Weigh pistons when replacing them in order to avoid unbalance. The difference in weight should not exceed 6 g.

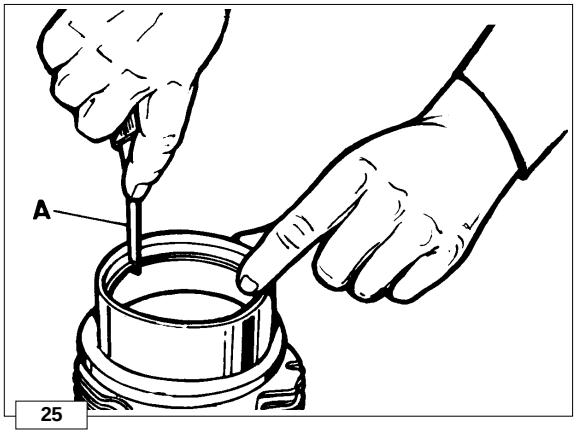

25

Piston rings - End gaps

Place piston rings squarely into the unworn part of the lower cylinder and measure the end gap.

Ref.	*Dimensions* (mm)
A	0,030÷0,050

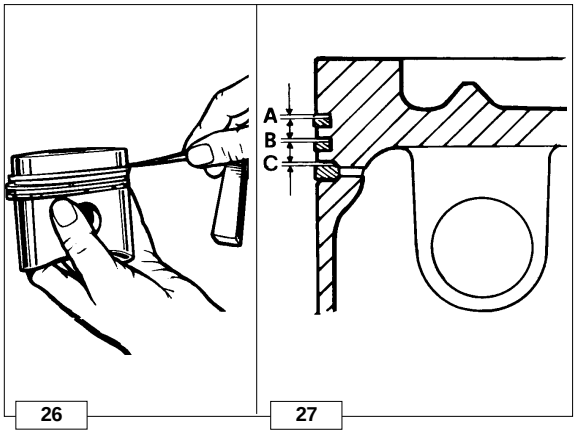

26 27

Pistons ringis - Clearance between grooves

Ref.	*Dimensions* (mm)	*Limit value* (mm)
A	0,060÷0,065	0,12
B	0,030÷0,035	0,07
C	0,020÷0,025	0,05

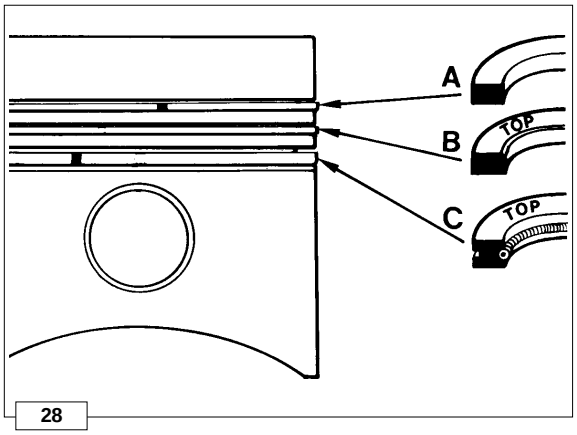

28

Piston rings - Fitting sequence

A = 1 ° Chromium-plated ring
B = 2° Torsional (internal tapered) ring
C = 3° oil control ring

Important

Before fitting the piston into the cylinder stagger the ring gaps at 120°.

Downloaded from www.Manualslib.com manuals search engine

https://truckmanualshub.com/

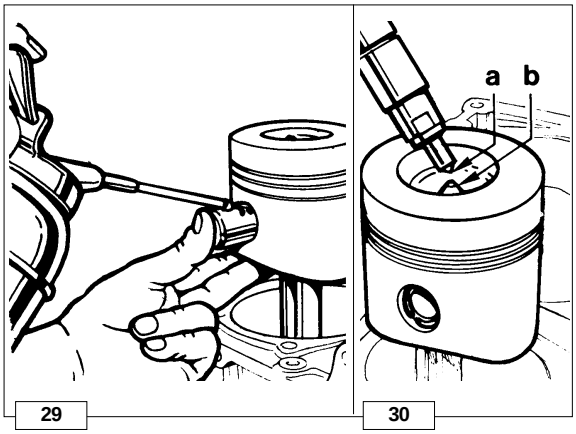

Piston - Refitting

Connect piston to connecting rod in a way that the combustion chamber center **b** is at right angle under nozzle tip **a**.
Lubricate piston pin and introduce it into the piston by exerting pressure with your thumb.
Check that both circlips are well inside their seats.

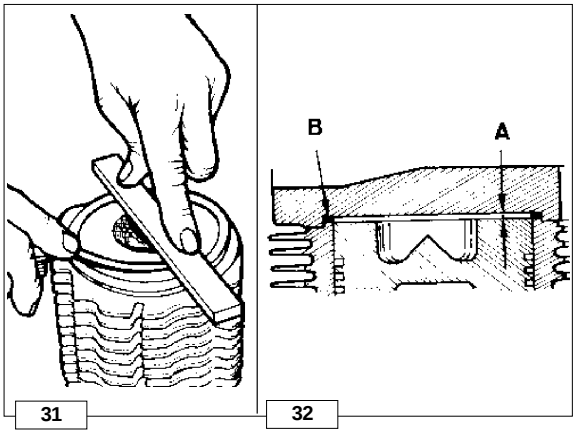

Piston clearance

A = Piston clearance = 0,65÷0,70 mm
0,55÷0,60 mm for EPA engines
B = Copper head gasket

A is determined by placing the piston at top dead center and measuring, with a feeler gauge and straight edge, the distance the piston is below or above the cylinder face.
A copper gasket **B** (available in various thicknesses) is then selected to ensure the clearance is correct.

Gaskets are available in the following thicknesses:

0,45 - 0,50 - 0,55 - 0,60 - 0,65 - 0,70 - 0,75 - 0,80 - 0,85 - 0,90 - 0,95 - 1,00

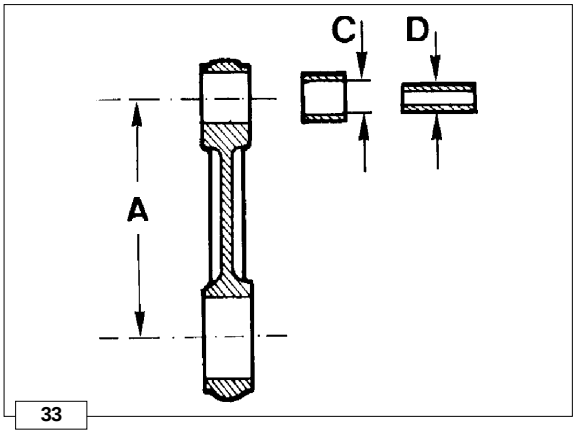

Connecting rod small end bushing

Dimensions and clearance (mm):

A	117,95÷118,05	
C	22,015÷22,025	(with machine bushing in place)
D	21,995÷22,005	
C-D	0,01÷0,03	
	0,07	limit of wear

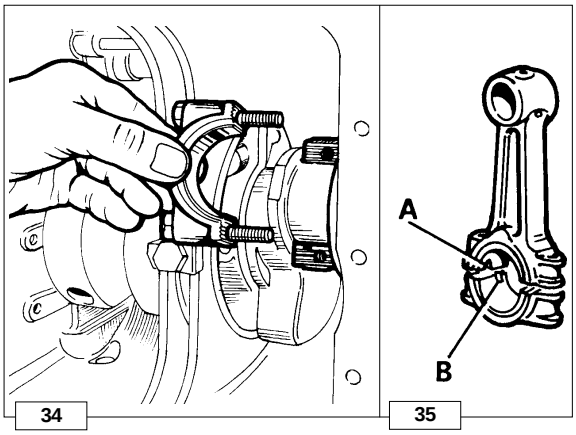

Connecting rod big end bearing

Both centering notches **A** and **B** must be on the same side when refitting.
Tighten bolts to 40 Nm.
See page 29 for dimensions.

Downloaded from www.Manualslib.com manuals search engine

https://truckmanualshub.com/

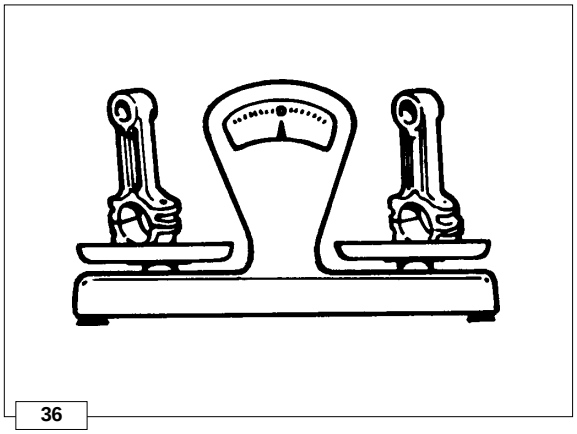

36

Connecting rod weight

Weigh connecting rods when replacing them in order to avoid unbalance.
The difference in weight should not exceed 10 g.

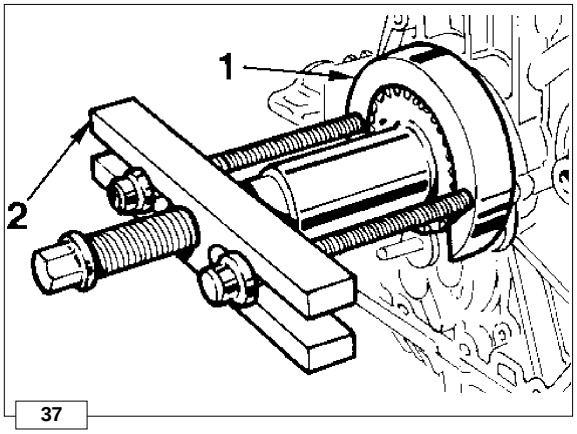

37

Crankshaft timing gear

Use tool **1** (Part N°. 7560-4000-052) and puller **2** (Part N°. 7271-3595-048) to remove the gear.

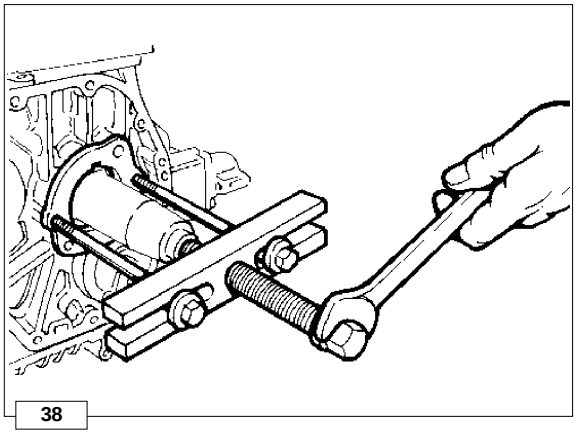

38

Main bearing support, timing gear side

Remove main bearing by means of two M8x1.25 screws with fully threa-ded length of 40 mm or a puller (Part N°. 7271-3595-048).

Note: To avoid deformation it is not recommended to replace the bearing bushing, complete assembly's of bushing and support are available in standard, 0.25 mm and 0.50 mm undersize configurations as spare parts.

See page 29 for dimensions.

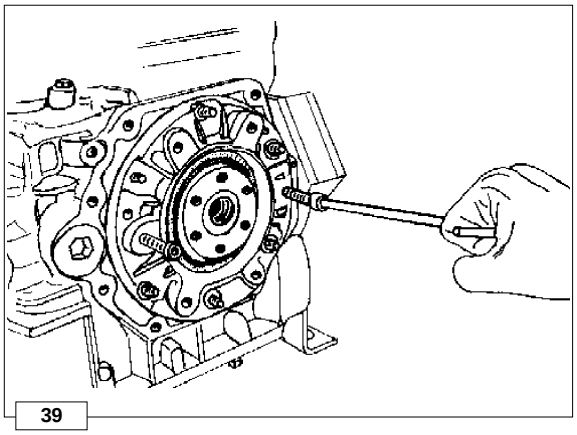

39

Main bearing support, PTO-Side

Remove it by means of two M8x1.25 screws with fully threaded length of 40 mm.
Check oil seal ring and replace if warped, hardened or worn-out.
When refitting, tighten nuts to 25 Nm.
See page 29 for dimensions.

Downloaded from www.Manualslib.com manuals search engine

https://truckmanualshub.com/

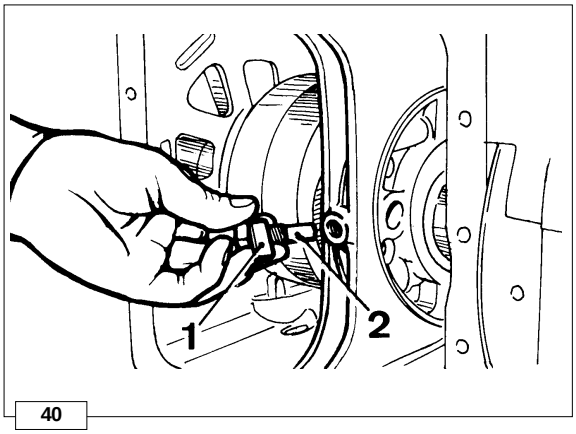

40

CRANKSHAFT

Center main bearing support, locating bolt

Straighten plate **1** and unscrew bolt **2** before removing crankshaft. When refitting, tighten bolt **2** to 30 Nm.

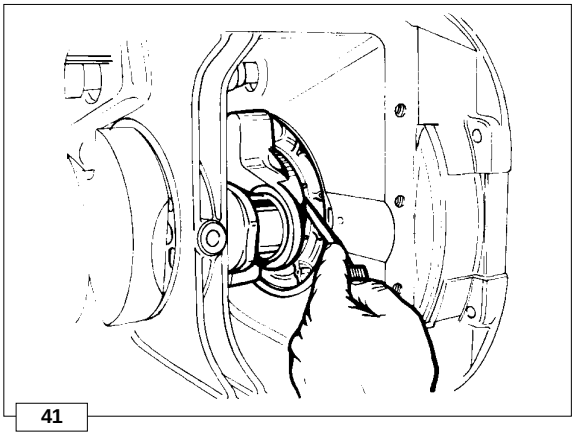
41

Crankshaft end play

When refitting crankshaft check end play be means of a feeler gauge; this value should be 0.08 ÷ 0.38 mm and can be set by changing the thickness of gasket **A** which is located on the flywheel-side main bearings.
Gaskets with thickness of 0,30 ÷ 0,50 mm can be supplied.

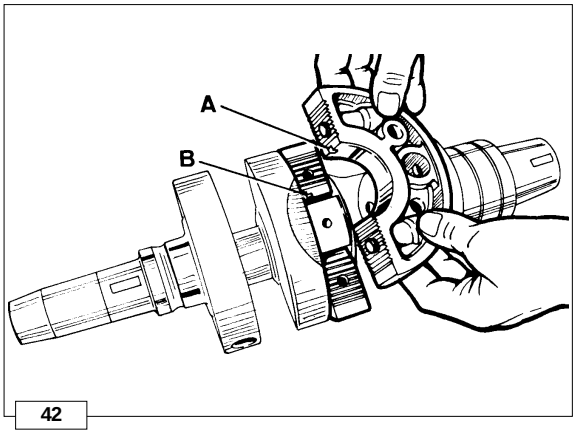

42

Crankshaft center main bearing support

When refitting, both centering notches **A** and **B** must be located on the same side.
Tighten screws to 25 Nm.
See page 29 for dimensions.

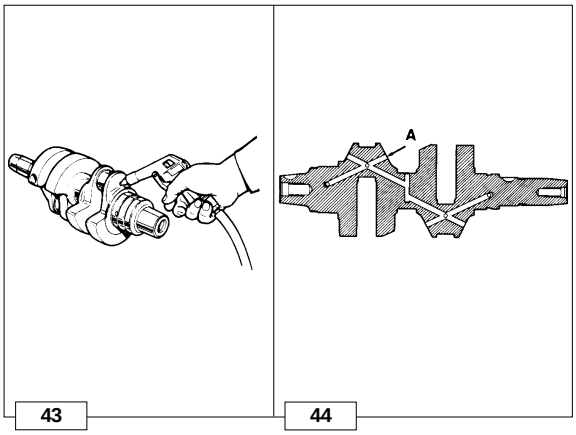

43 44

Crankshaft lubrication ducts

Remove plugs, clean duct **A** with a pointed tool and blow in compressed air. Replace the plugs, and check for sealing.

Crankshaft journal radius

Important

When grinding main journals or crank pins restore the R value to original specification.

The radius **R** connecting journals to shoulders is 2.8 ÷ 3.2 mm.

Downloaded from www.Manualslib.com manuals search engine

https://truckmanualshub.com/

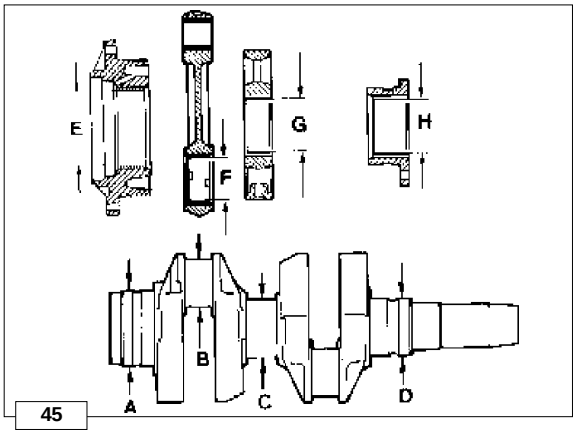

45

Main bearing and connecting rod big end bearing internal diameter

Ref.	*Dimensions* (mm)	*Ref.*	*Dimensions* (mm)
A	71.981÷72.000	E	72.070÷72.090
B	40.004÷40.020	F	40.045÷40.076
C	55.340÷55.350	G	55.404÷55.435
D	54.931÷54.950	H	55.000÷55.020

The above dimensions refer to driven in or tightened bearings.
Both main bearings and connecting rod big end bearings are available with inside diameter size measuring 0.25 and 0.50 mm less than the standard version.

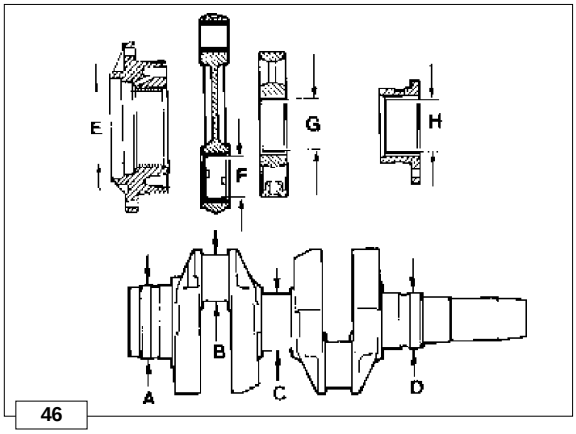

46

Clearance between main journals/crank pins and connecting rod bearings

Ref.	*Dimensions* (mm)	*Limit value* (mm)
E-A	0,070÷0,109	0,195
F-B	0,025÷0,072	0,150
G-C	0,051÷0,095	0,190
H-D	0,050÷0,089	0,180

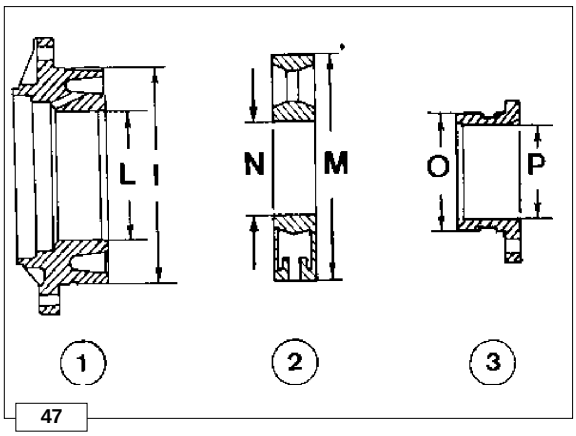

47

Main bearing supports

1 PTO-side
2 Central
3 Timing gear side

Ref.	*Dimensions* (mm)
I	130.000÷130.020
L	76.980÷77.020
M	128.000÷128,018
N	59.074÷59.092
O	75.990÷76.010
P	60.000÷60.020

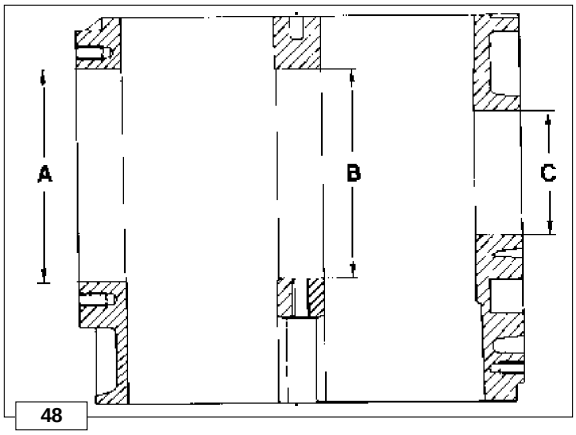

48

Main bearing housing

Ref.	*Dimensions* (mm)
A	130,000÷130,020
B	128,000÷128,020
C	76,000÷76,020

Downloaded from www.Manualslib.com manuals search engine

https://truckmanualshub.com/

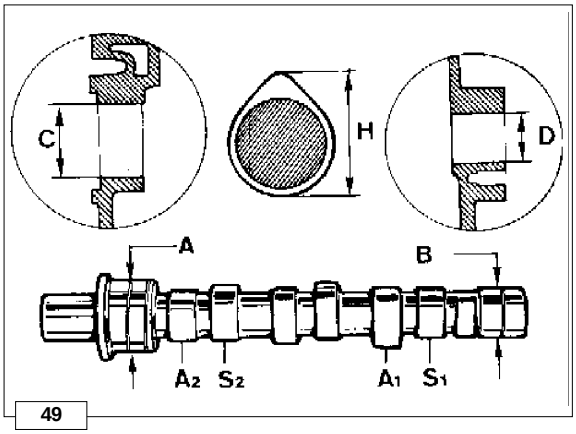

49

Dimensions of camshaft journals and housings

Ref.	*Dimensions* (mm)	*Clearance* (mm)	*Limit value* (mm)
A	41.940÷41.960	0.040÷0.085	0.160
C	42.000÷42.025		
B	27.940÷27.960	0.040÷0.080	0.150
D	28.000÷28.020		

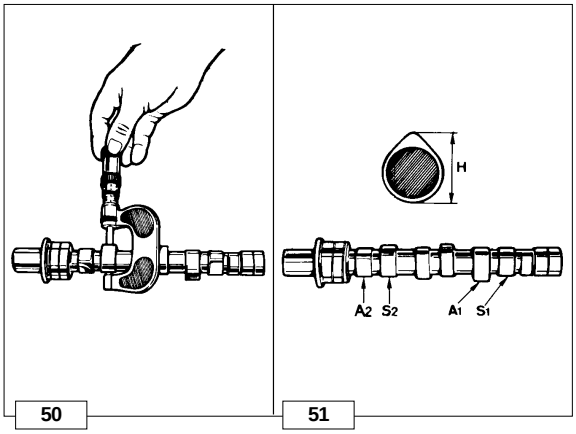

50 51

How to measure intake/exhaust cam height

A = 1st cylinder intake cam
A2 = 2nd cylinder intake cam
S = 1st cylinder exhaust cam
S2 = 2nd cylinder exhaust cam

Exhaust and intake cams feature the same height **H**.

H = 33,62 ÷ 33,65

Replace camshaft if **H** is 0.1 mm below the given value.

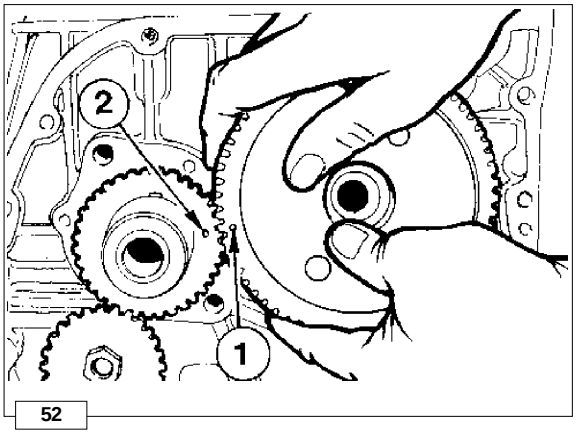

52

Camshaft timing

Fit camshaft gear by making timing mark **1** coincide with timing mark **2** on the crankshaft timing gear.
Tighten camshaft bolt to 60 Nm.

Camshaft end play

End play should be 0.10÷0.26 mm; check by means of a dial gauge pushing or pulling camshaft as required.

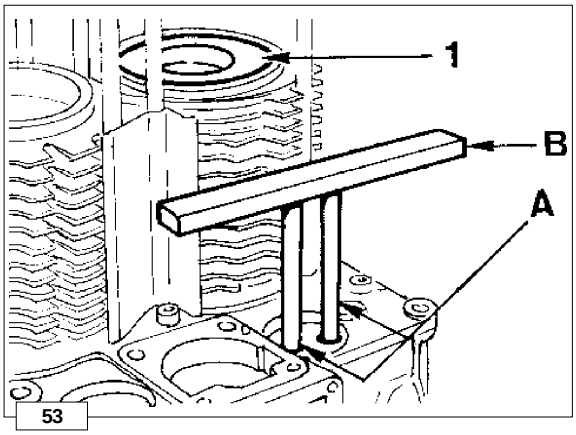

53

Valve timing without considering timing marks

Locate piston **1** (on flywheel side) at the top dead center.
Position two small cylinders **A** of the same height onto the tappets.
Rotate camshaft stopping when cylinder **1** tappets are in overlap position (intake open, exhaust closed).
By means of ruler **B** check that tappets are at the same height.
Engage camshaft gear with crankshaft gear.

Downloaded from www.Manualslib.com manuals search engine

https://truckmanualshub.com/

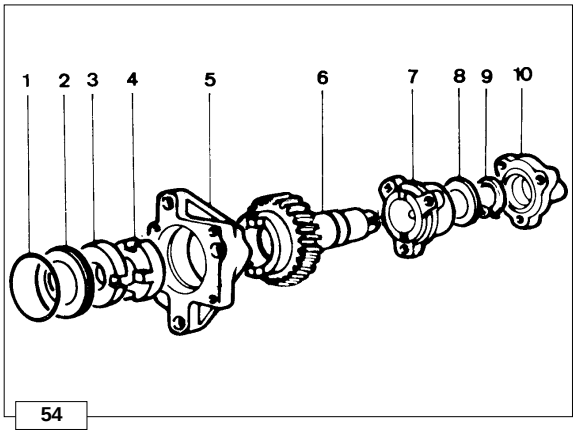

54

Hydraulic pump p.t.o. (1P)

1 Seal ring
2 Centering ring
3 Coupling
4 Half coupling
5 Flange
6 Gear
7 Bracket
8 Thrust washer
9 Stop ring
10 Cover

The maximum torque is 27 Nm corresponding to 7,64 kW at 3000 r.p.m.

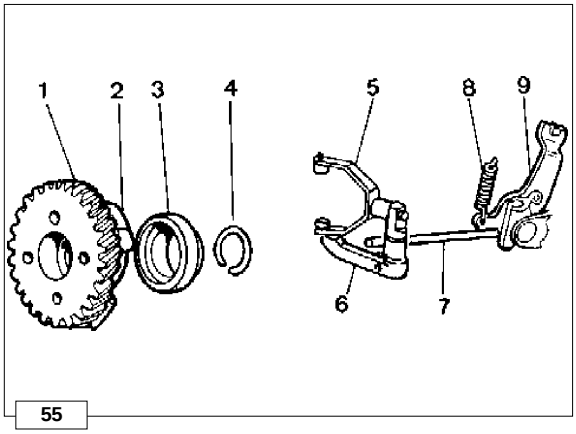

55

Mechanical speed governor

Components:

1 Gear
2 Fly weight
3 Sliding bell
4 Stop ring
5 Yoke
6 Lever
7 Drive rod
8 Governor spring
9 Rack control lever

Weights are moved to the periphery by the centrifugal force and thus axially shift a mobile bell connected to the injection pump rack control lever by a linkage.
A spring placed under tension by the accelerator control offsets the weights centrifugal force.
Balance between the two forces keeps speed at an almost constant level in spite of load variations.
See picture 52 for timing.

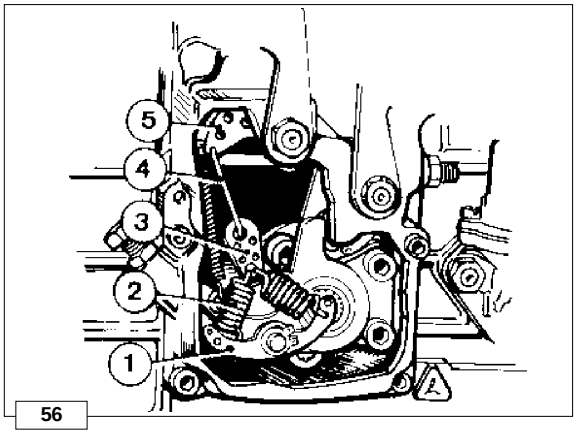

56

Governor springs with rocker arm

Components:

1 Rocker arm for spring anchoring
2 Governor springs
3 Plate
4 Link
5 Lever

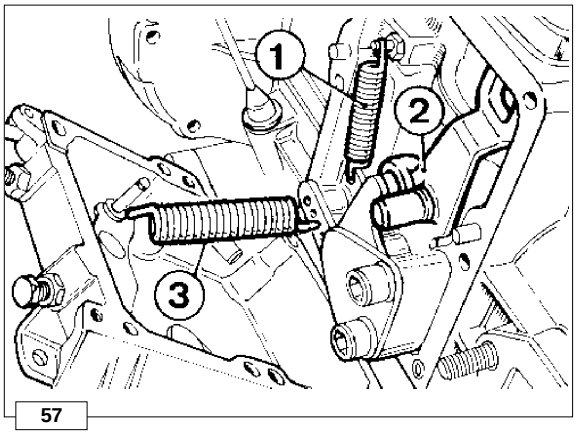

57

Spring for extra fuel supply at starting

Components:

1 Extra fuel spring
2 Injection pump control yoke
3 Governor spring.

The device is operated automatically: when the engine is stopped spring **1** acts on injection pump control yoke **2** providing maximum fuel delivery, until the engine starts and the governor controls the injection pump rack.

Downloaded from www.Manualslib.com manuals search engine

https://truckmanualshub.com/

LUBRICATION SYSTEM AND BREATHER RECIRCULATION SYSTEM

Danger - Attention

- The engine can be damaged if allowed to operate with insufficient oil. It is also dangerous to add too much oil because its combustion may lead to a sharp increase in the rotation speed.
- Use suitable oil in order to protect the engine.
  Nothing more than lubrication oil can influence the performances and life of an engine.
- Use of an inferior quality oil or failure to regularly change the oil will increase the risk of piston seizure, will cause the piston rings to jam and will lead to rapid wear on the cylinder liner, the bearings and all other moving parts.
  Engine life will also be notably reduced.
- The oil viscosity must suit the ambient temperature in which the engine operates.

Danger - Attention

- Old engine oil can cause skin cancer if repeatedly left in contact with the skin and for long periods of time.
  Wear protective gloves to avoid touching used oil.
- If contact with the oil is unavoidable, you are advised to wash your hands with soap and water as soon as possible.
  Dispose of old oil in the correct way as it is highly polluting.

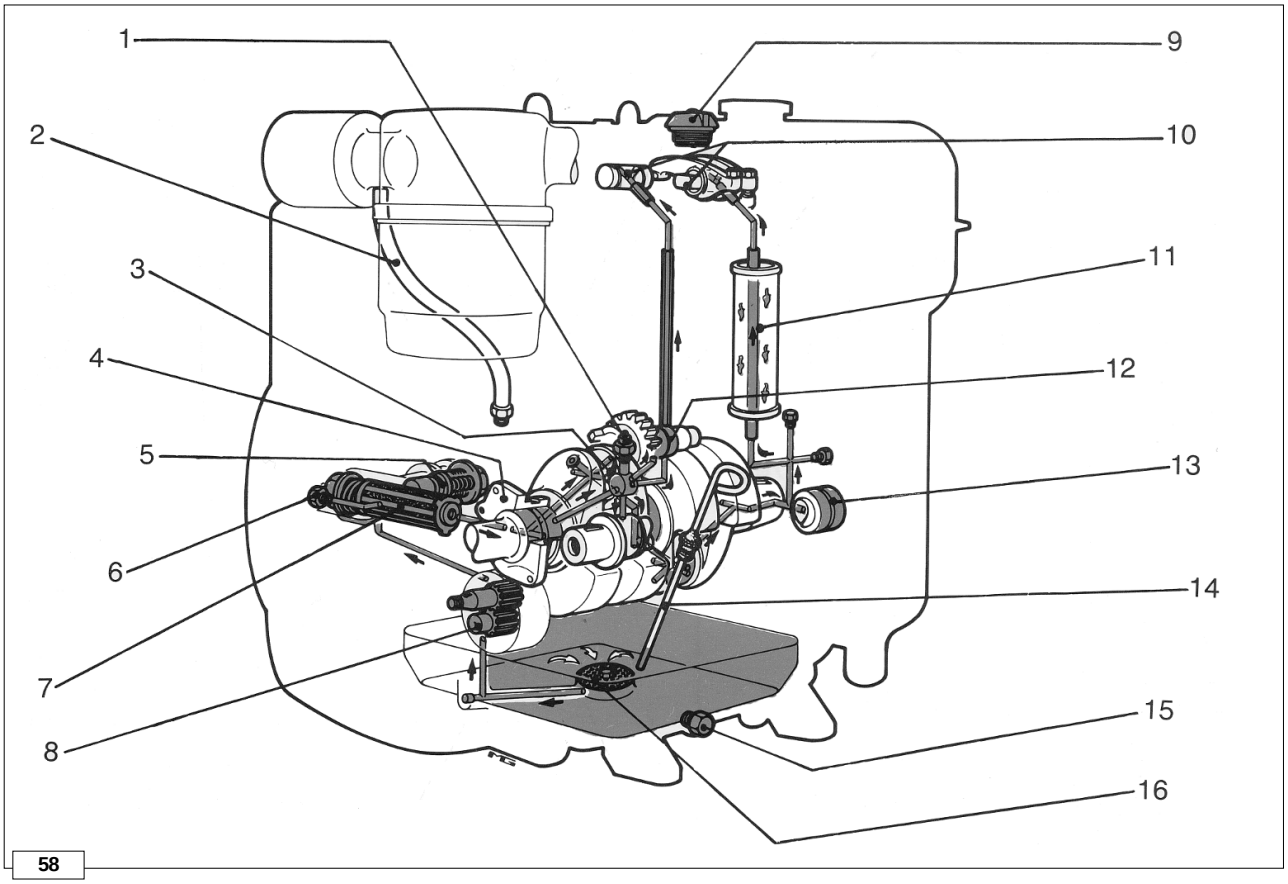

58

***Components*:**

1) Oil pressure switch
2) Breather
3) Connecting rod big and bearing
4) Crankshaft main bearing, gear side
5) Oil preassure relief valve
6) Fitting for preassure gauge
7) Cartridge filter
8) Oil pump
9) Oil fill plug
10) Rocker arm shifts
11) Pushrod protection tube
12) Hydraulic pump gear
13) Camshaft journal on flywheel side
14) Oil dipstick
15) Drain plug
16) Internal filter

Downloaded from www.Manualslib.com manuals search engine

https://truckmanualshub.com/

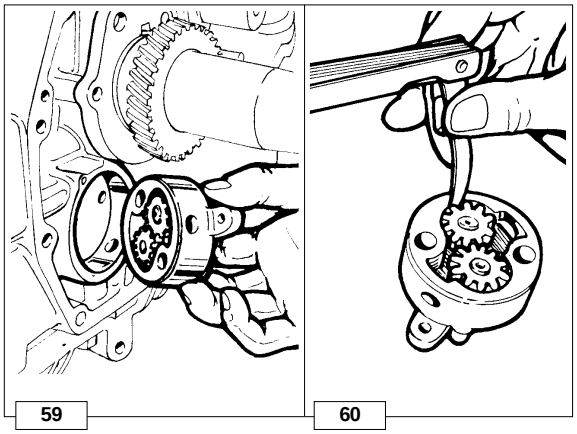

Oil Pump

Check that gear teeth are intact and that clearance between gear edge and pump body does not exceed 0.15 mm.
Further more check that control shaft is free to rotate with end float not exceeding 0.15 mm.
Oil pump delivery at 3000 r.p.m. is 9 liters/min.

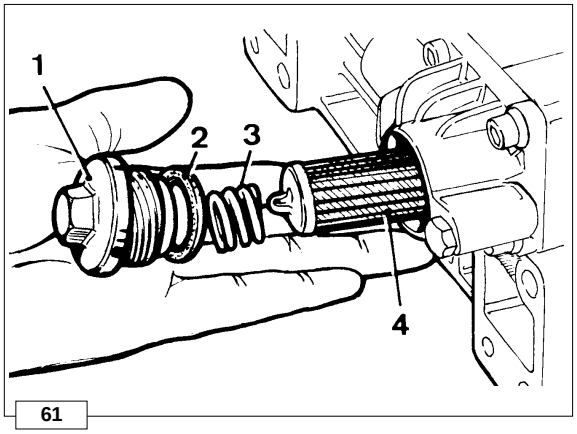

Oil filter cartridge (internal)
Through engine serial n° 4877736

Components:

1 Plug
2 Seal ring
3 Spring
4 Cartridge

Features:
Filtering capacity: ..... 70 µm
By-pass valve opening pressure: ..... 0.60+0.75 bar.
Max. working pressure: ..... 4.5 bar.

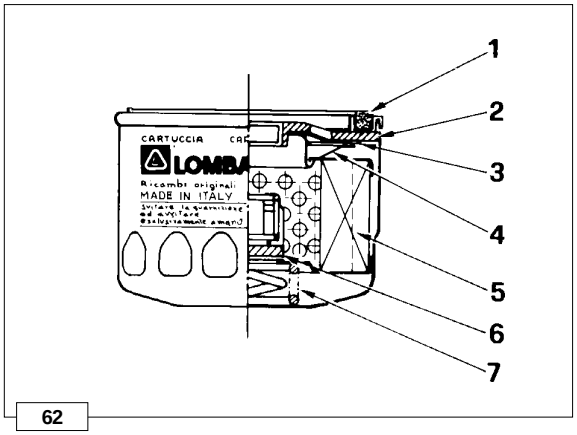

Oil filter cartridge (external)
Starting from engine serial n° 4877736

Components:

1 Gasket
2 Steel shroud
3 Gommino
4 Spring
5 Filtering element
6 Bypass valve
7 Spring

Characteristics:
Maximum operating pressure: ..... 7 bar
Maximum blast pressure: ..... 20 bar
Filtering capacity: ..... 15 µ
By-pass valve setting: ..... 1,5÷1,7 bar
Total filtering surface: ..... 730 cm².

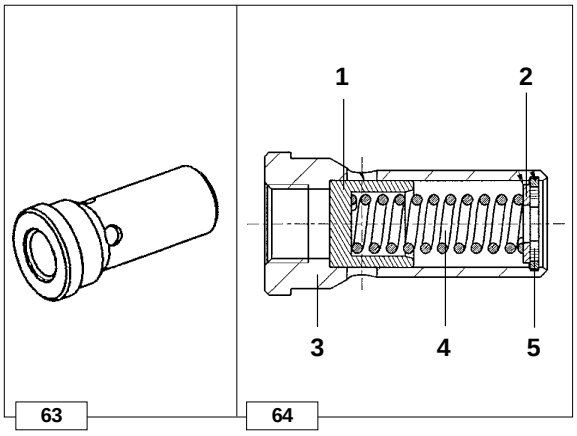

Oil preassure relief valve
(Only for engines with internal oil filter)
Through egine serial n° 4877736:

Details:

1 Piston
2 Washer
3 Valve housing
4 Spring
5 Snap ring

Operating preassure ..... 5 bar.

Downloaded from www.Manualslib.com manuals search engine

https://truckmanualshub.com/

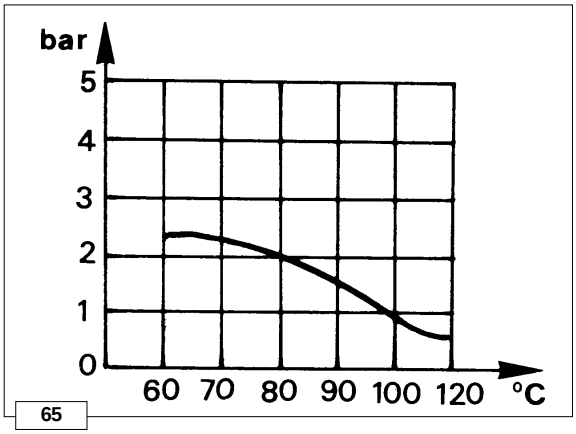

65

Oil pressure curve at idling speed

The curve is obtained at the oil filter level with constant engine speed of 1200 r.p.m. in no-load conditions and at a room temperature of +25°C.
Pressure is given in bar and temperature in centigrade.

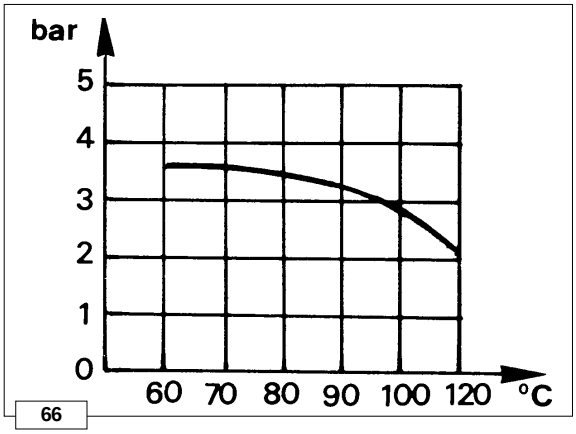

66

Oil pressure curve at full speed

The curve is obtained at the oil filter level with engine working at 3000 r.p.m., at a room temperature of +25°C and at 25,84 HP.
Pressure is given in bar and temperature in centigrade.

Downloaded from www.Manualslib.com manuals search engine

https://truckmanualshub.com/

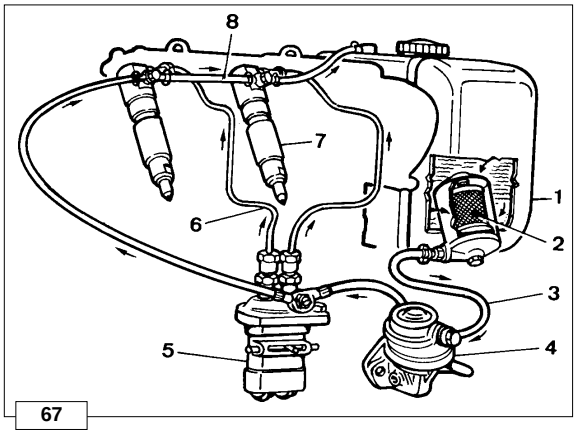

67

Fuel feeding/injection circuit

Components:

1 Tank
2 Filter
3 Fuel feeding tube
4 Fuel feeding pump
5 Injection pump
6 Injection line
7 Injector
8 Injector leak off line and self bleeding system

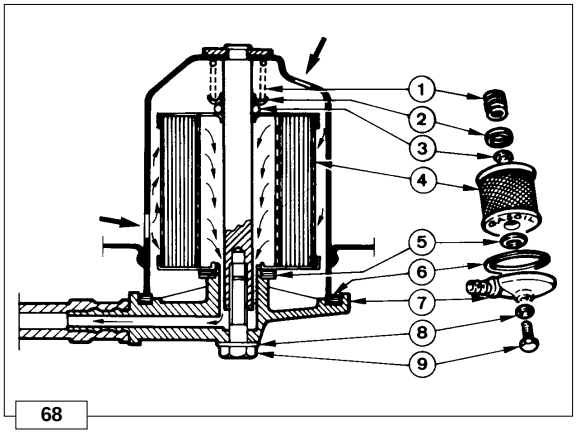

68

Fuel filter, inside fuel tank

Components:

1 Spring
2 Disc
3 Ring
4 Cartridge
5 Gasket
6 Gasket
7 Cap
8 Ring
9 Bolt

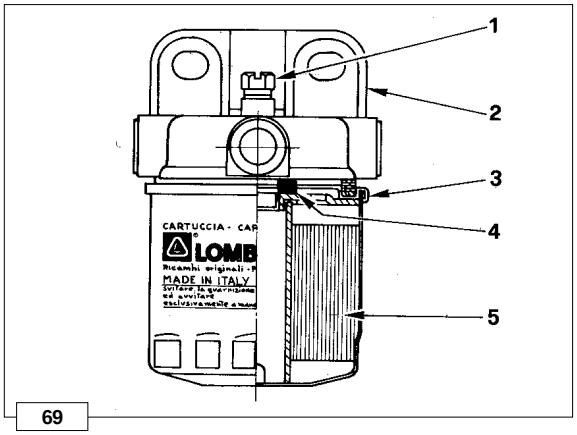

69

Fuel filter, removed from the tank (upon request)

1 Bleeding screw
2 Holder
3 Cartridge
4 Rubber ring
5 Filtering element

Characteristics:
Filtering paper: ..... PF 905
Filtering Surface: ..... 2400 cm^2
Filtering capacity: ..... 2÷3 **µ**
Maximum operating pressure: ..... 4 bar
For maintenance see page 16.

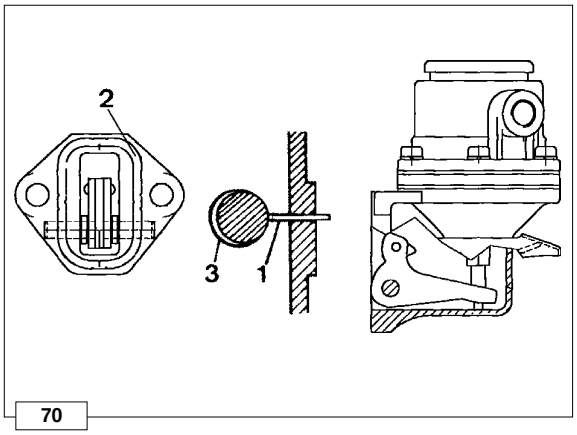

70

Fuel feeding pump

The fuel feeding pump is of the diaphragm type operated by a camshaft eccentric through a drive rod.
It features an external lever for manual operation.

Components:
1 Drive rod : shelf 1,470 ÷ 2,070 mm
2 Gasket
3 Camshaft eccentric

Characteristics:
when the control eccentric rotates at 1500 r.p.m. minimum delivery is 90 l/h while self-regulation pressure is 0.5 ÷ 0.7 bar.

Downloaded from www.Manualslib.com manuals search engine

https://truckmanualshub.com/

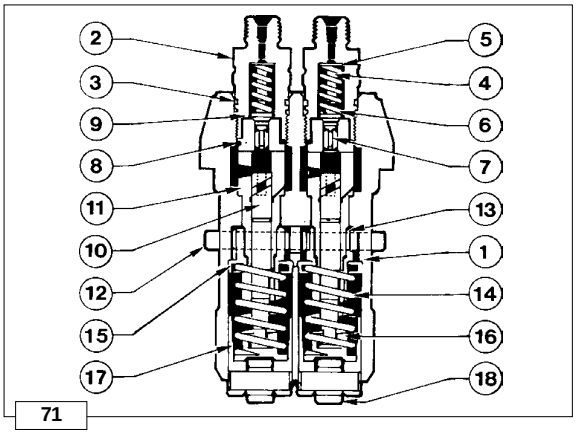

71

Injection pump

Components:

1 Pump body
2 Fitting
3 Seal ring
4 Filler
5 Shim
6 Spring
7 Delivery valve
8 Seat
9 Gasket
10 Plunger
11 Barrel
12 Rack rod
13 Sector gear
14 Spring
15 Upper retainer
16 Lower retainer
17 Tappet
18 Tappet roller

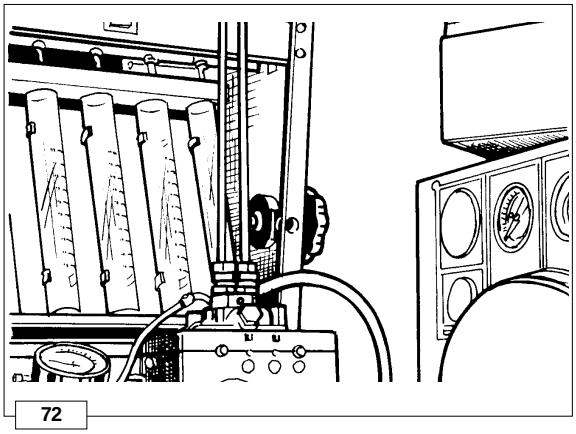
72

Test data for injection pump delivery

Control rod max. force	Rod stroke from max. deliv. point	R.P.M.	Delivery	Max. plunger difference
Newton	mm		mm^3 stroke	mm^3 stroke
0,50	10	1500	23÷26	3
	12	500	4÷8	3
	0	150	57÷65	-
	10	500	10÷14	3

Control rod max. force	Rod stroke from max. deliv. point	R.P.M.	Delivery	Max. plunger difference
Newton	mm		mm^3 stroke	mm^3 stroke
0,50	10	1500	29÷32	3
	12	500	11÷15	3
	0	150	64÷72	-
	10	500	20÷24	3

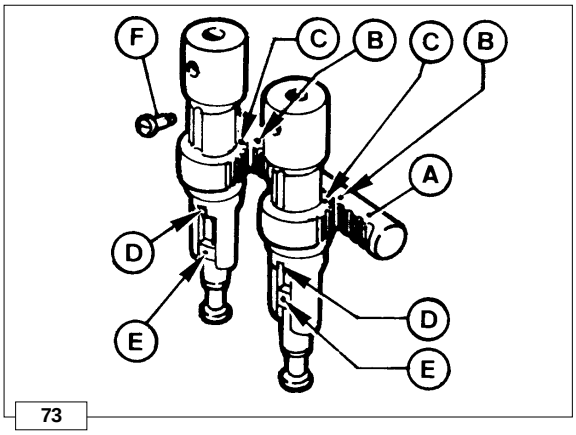

73

How to reassemble injection pump components

After replacing the worn-out components, reassemble the pump as follows:
Introduce sector gears into the pump body by making reference points **C** match with the **B** points on the rack.
Fix barrels with the eccentric screws **F** on the pump body.
Fit valves with seats, springs, tillers and delivery unions tightening them at 35 ÷ 40 Nm.
Fit plungers by making reference points **E** match with the sector gear **D** points.
Fix retainers and springs; lock tappet with special stop.
Check that both plungers have the same delivery by performing the necessary measurements at the test bed; it delivery is not the same set screw **F**.

Downloaded from www.Manualslib.com manuals search engine

https://truckmanualshub.com/

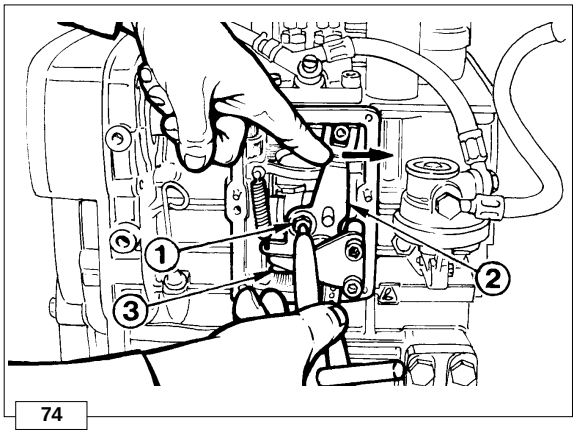

74

Injection pump/mechanical speed governor timing

Loosen screw **1**.
Move injection pump lever **2** to maximum delivery (to the right).
Check that drive rod **3** closes the speed governor; keeping lever **2** pressed to the right the drive rod should have no clearance.
Tighten screw **1**.

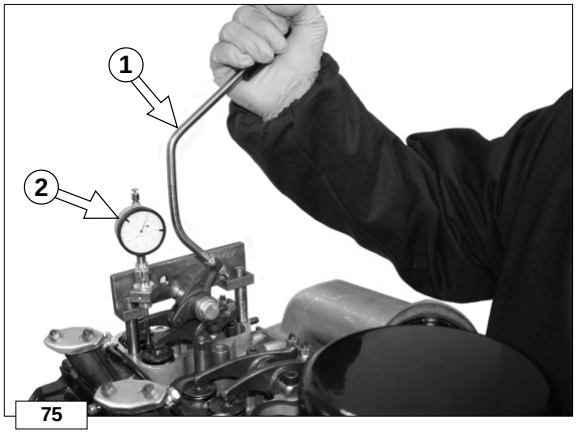

75

Injection static advance adjustment

Assemble the valve lowering tool (serial number 1460-285) on the cylinder head to be checked.
Make sure that the dial indicator tracer is correctly placed on the valve.
Gravity-feed the injection pump.

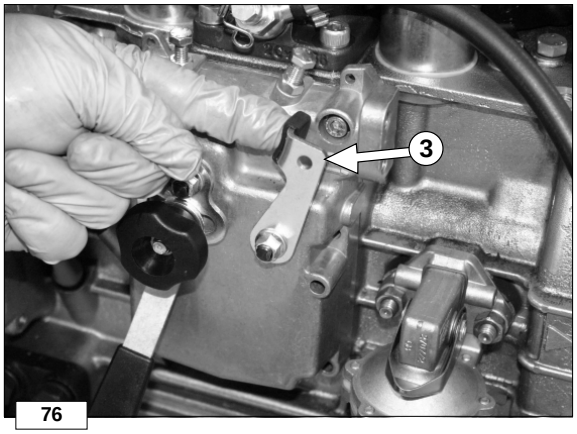

76

Position STOP lever **3** half a stroke so that the delay/supplement mark is excluded.

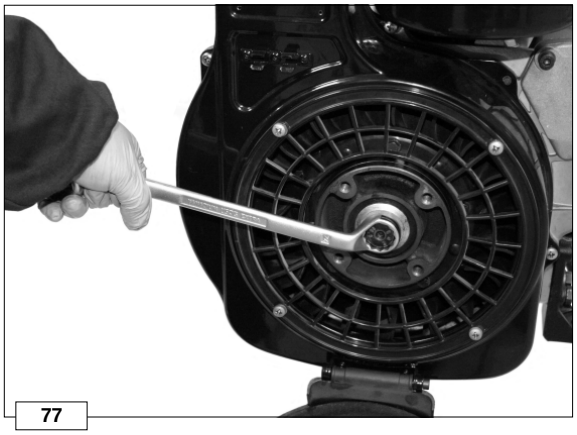
77

By pressing tool lever **1** (pic. 75) on the valve, turn the flywheel, using a spanner, until it meets the piston and the top dead centre of the piston is reached.
By holding down the valve on the piston, reset dial indicator **2** (pic.75).

Downloaded from www.Manualslib.com manuals search engine

https://truckmanualshub.com/

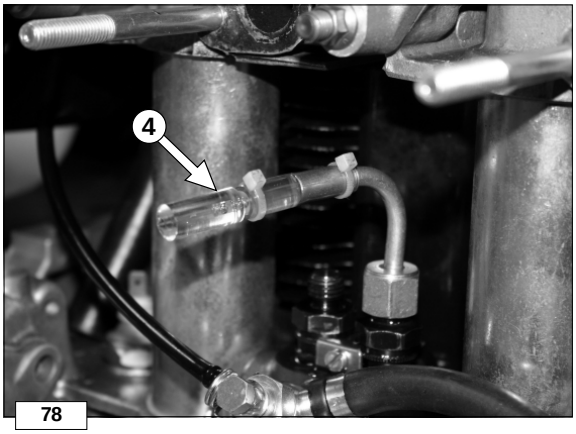

78

Fasten capillary tube **4** on the delivery union of the cylinder on which the valve lowering tool is installed.
Turn the flywheel and alternatively fill the capillary tube until the fuel flows out.
Turn the flywheel clockwise (pic. 77) and, during the compression phase, turn it slowly.
Stop as soon as the fuel starts moving inside the capillary tube.

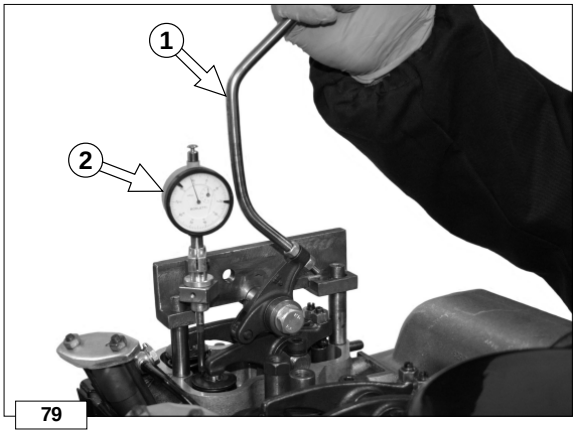

79

Press the valve by turning lever **1** until it meets the piston and using dial indicator **2** read the piston position in millimetres before the TDC. Use the transformation chart to find out the correspondence between the millimeters measured with dial indicator **2** and the degrees.

Engine type	R.p.m.	Advance degrees	Piston lowering value (mm)
12LD435/2	3000	23° ± 1°	22° 3.570 23° 3.894 24° 4.232
12LD435/2-B1	3600	23° ± 1°	22° 3.570 23° 3.894 24° 4.232
12LD475-2	3000	21° ± 1°	20° 2.961 21° 3.258 22° 3.570
12LD475-2 EPA	3000	20° ± 1°	19° 2.676 20° 2.961 21° 3.258

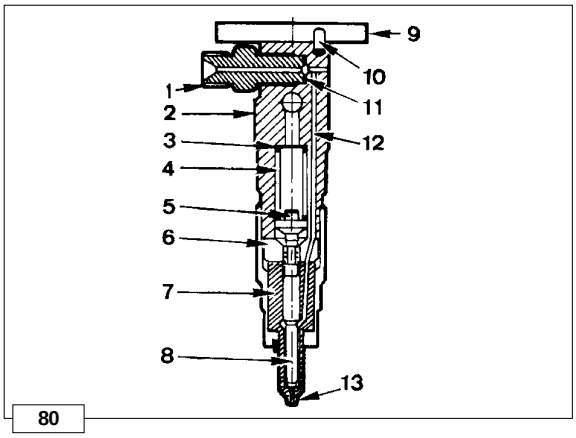

80

Injector, for standard engines

Components:

1 Intake fitting
2 Nozzle holder
3 Shim
4 Spring
5 Pressure rod
6 Intermediate flange
7 Nozzle
8 Needle valve
9 Fixing flange
10 Taper pin
11 Gasket
12 System duct
13 Sump

Downloaded from www.Manualslib.com manuals search engine

https://truckmanualshub.com/

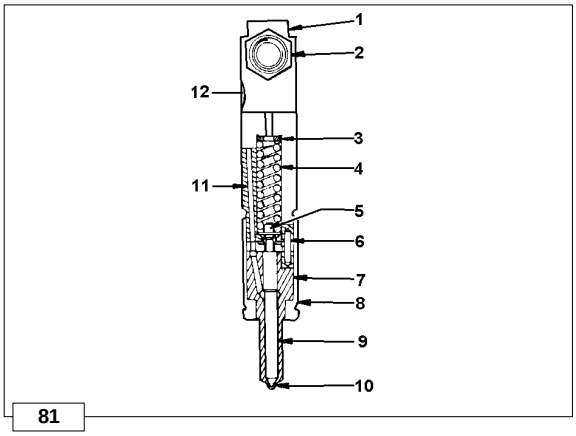

81

Injector, for EPA engines

Components:

1	Injector housing	**7**	Nozzle
2	Intake fitting	**8**	Cup
3	Shim	**9**	Needle valve
4	Spring	**10**	Sump
5	Pressure rod	**11**	System duct
6	Taper pin	**12**	Overflow pipe

When refitting tighten ring **8** nut at 50 Nm.

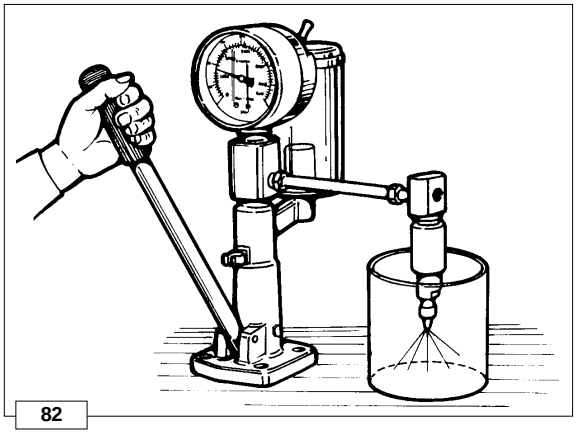
82

Injector setting

Connect injector to a hand pump and check that setting pressure is 210÷220 bar (258÷270 bar for EPA engines); make the required adjustments, if any, by changing the shim over the spring.
When replacing the spring, setting should be performed at a 10 bar greater pressure (220÷230 bar for standard engines, 268÷280 bar for EPA engines) to allow for bedding during operation.
Check needle valve sealing by slowly moving hand pump until approximately 180 bar.
Replace nozzle in case of dripping.

Downloaded from www.Manualslib.com manuals search engine

https://truckmanualshub.com/

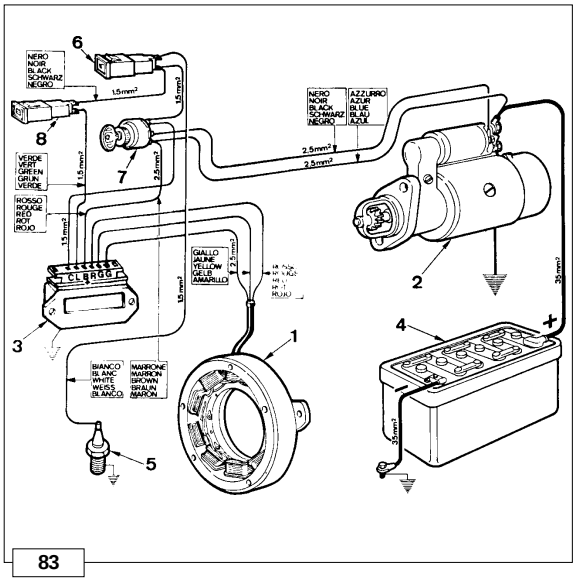

83

Electrical starting layout with battery charging light

Components:

1 Alternator.
2 Starting motor
3 Voltage regulator
4 Battery
5 Pressure switch
6 Oil pressure warning light
7 Key switch
8 Battery charging light

Note: Battery, which is not supplied by Lombardini, should feature 12 V voltage and capacity not below 70 Ah.

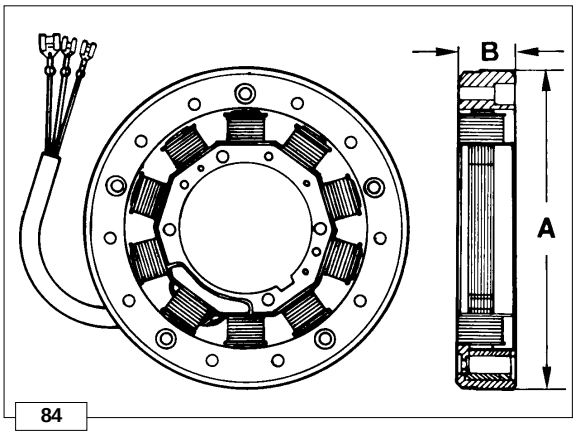

84

12.5 V, 14 A Alternator

Features a fixed armature winding mounted on the air shroud bracket. The rotating permanent magnet inductor is located in the fan spindle.

Dimensions (mm):

A	158,80 ÷ 159,20
B	27,50 ÷ 27,90

Note: Clearance between armature winding and inductor (air gap) should be 0.48 ÷ 0.60 mm.

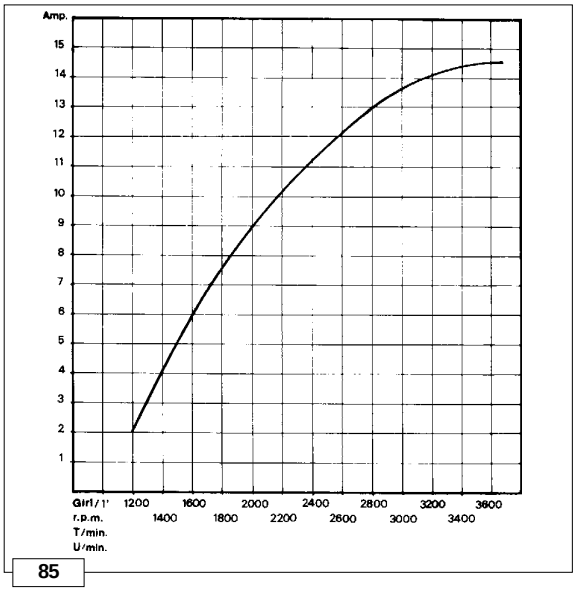

85

Alternator battery charger curve (12.5 V, 14A)

The curve was obtained at room temperature of + 25°C with 12.5 V battery voltage

Downloaded from www.Manualslib.com manuals search engine

https://truckmanualshub.com/

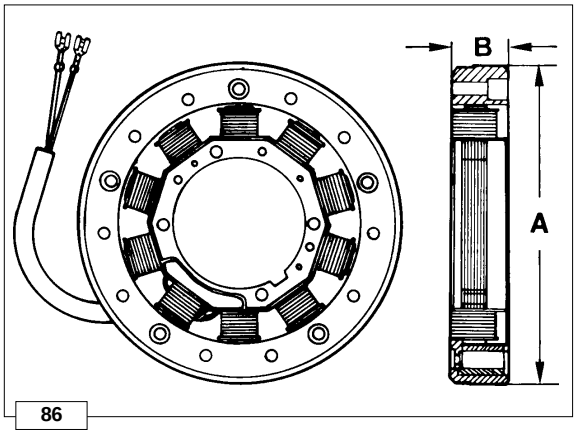

86

OPTIONAL ELECTRIC EQUIPMENT

12 V, 18A Alternator

Only two yellow cables are at output.

Dimensions (mm):

A	B
158÷159,20	27,50÷27,90

Note: Clearance between armature winding and inductor (air gap) must be 0.48 ÷ 0.60 mm.

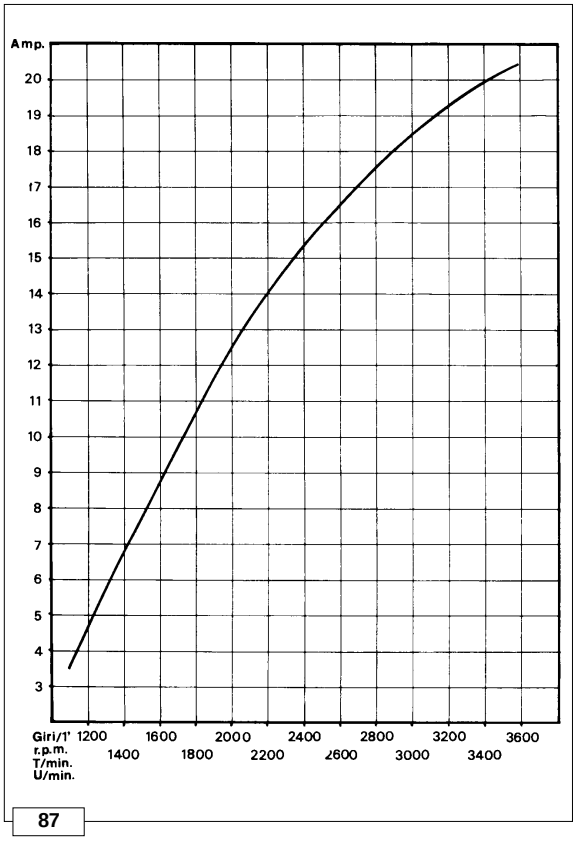

87

Alternator battery charger curve (12 V, 18 A)

This curve is obtained at + 25°C with 12.5 V battery voltage.

Voltage regulator

Type LOMBARDINI, supplied by SAPRISA and DUCA TI: Voltage 12 V, max. current 26A. References for SAPRISA connections with the cor-responding DUCATI connections.

SAPRISA	DUCATI
~	G
R	R
+	B
LE	L
o o⁄	C

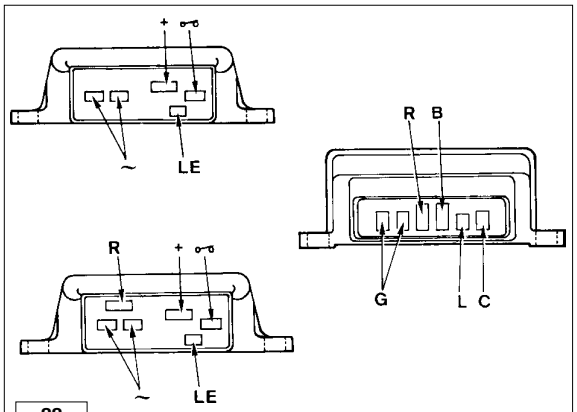

88

To avoid wrong connections 3 different sizes are supplied.

SAPRISA	DUCATI	Connection size (mm)	
		Width	Thickness
~	G	6,25	0,8
R	R	9,50	1,2
+	B	9,50	1,2
Le	L	4,75	0,5
o o⁄	C	6,25	0,8

The voltage regulator fits to both circuits with and without battery charging light; in the latter case connections LE (SAPRISA) and L (DUCA-TI) are not used.

Downloaded from www.Manualslib.com manuals search engine

https://truckmanualshub.com/

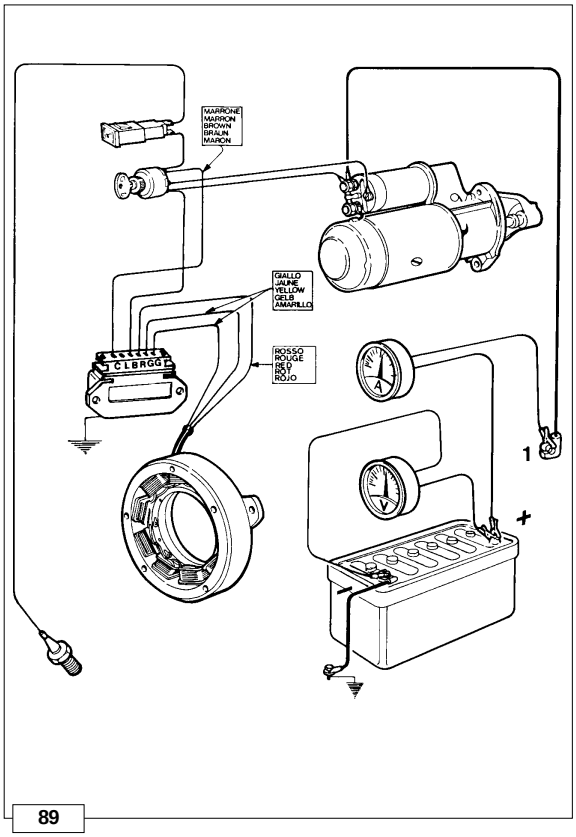

89

How to check voltage regulator for proper operation

Caution - Warning

When the engine is running do not disconnect battery cables or remove the key from the control panel.
Keep regulator away from heat sources since temperatures above 75°C might damage it.
No electric welding on engine or application.

Check that connections correspond to the layout.
Disconnect the terminal from the battery positive pole.
Connect a d.c. voltmeter between the two battery poles.
Fit an ammeter between the positive pole and the **B+** of the voltage regulator (corresponding to ref. **1** in picture 89).
Start a couple of times until battery voltage drops below 13 V.
When battery voltage reaches 14.5 V the ammeter current suddenly drops down to almost zero.
Replace regulator it recharge current is zero with voltage below 14 V.

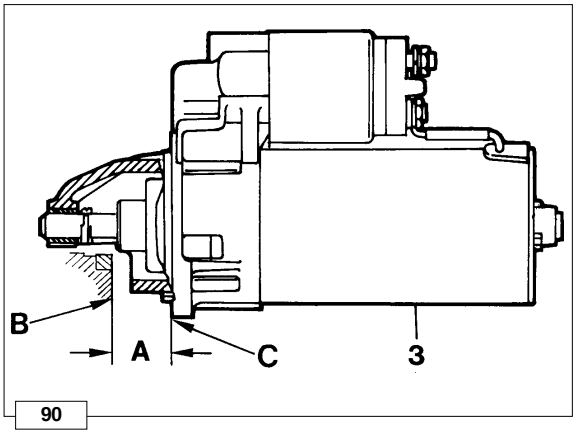

90

Starting motor type Bosch DWL 12 V, 1.7 kW

Important

Flywheel should not project from ring gear plane **B**.

A = 29.5 ÷ 31.5 mm
B = Ring gear plane
C = Flange plane

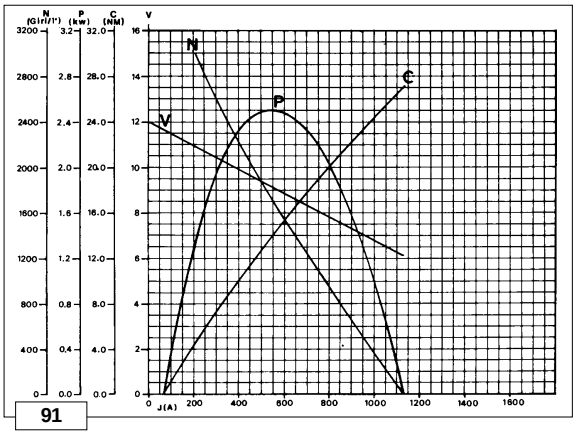

91

Characteristic curves for starting motor type Bosch DWL 12 V, 1.7 kW

Curves were obtained at the temperature of + 20°C with 88 Ah battery.

V = Motor terminal voltage in Volt
P = Power in kW
C = Torque in N/m
N = Motor speed in r.p.m.
J (A) = Absorbed current in Ampere.

Downloaded from www.Manualslib.com manuals search engine

https://truckmanualshub.com/

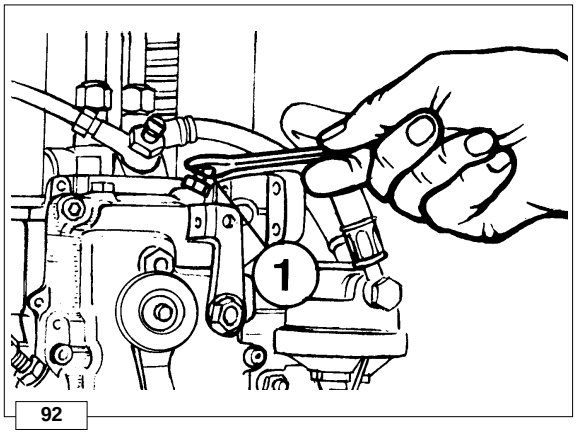

92

Settings

1) Idling speed setting in no-load conditions

After filling with oil and fuel, start the engine and let it warm up for 10 minutes.
Adjust idling speed at 1200÷1300 r.p.m. by turning setscrew **1**; then tighten lock nut.

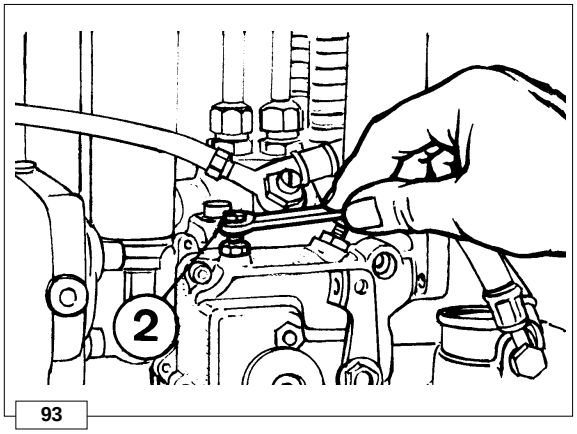

93

2) Full speed setting in no-load conditions (standard)

After setting idle speed turn screw **2** and set full speed in no-load conditions at 3200 r.p.m.; then tighten lock nut.

Note: When the engine reaches the preset power full speed stabilizes at 3000 r.p.m.

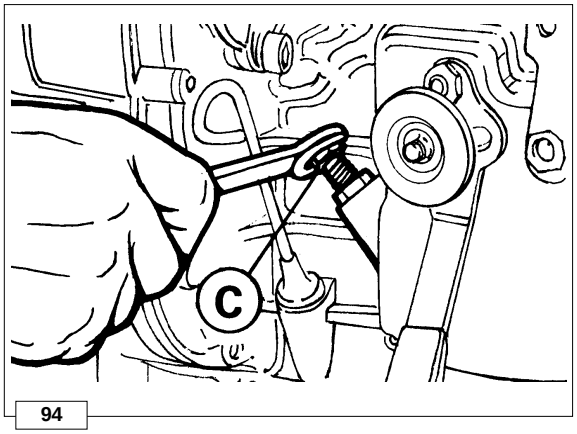

94

Injection pump delivery setting

This setting should be performed at the torque dynamometer, if not setting is only approximate.
The following steps are required:
Loosen delivery limiting device **C** by 5 turns.
Bring engine to full speed in no-load conditions i.e. 3200 r.p.m.
Tighten limiting device until the engine shows a drop in r.p.m.
Unscrew limiting device **C** by 1½ turn.
Tighten lock nut.

Note: If the engine, under full load, generates too much smoke, tighten **C**; if no smoke is observed at the exhaust and the engine cannot reach its full power unscrew **C**.

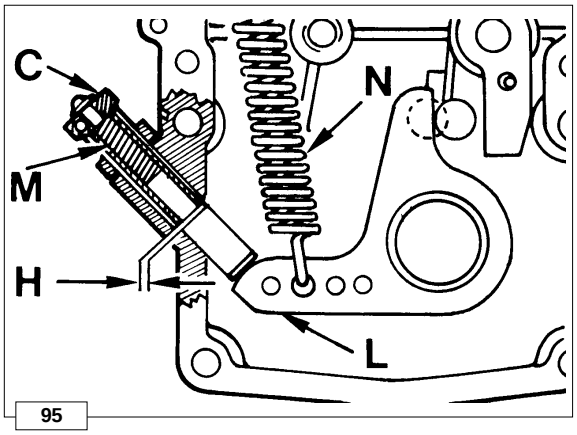

95

Injection pump delivery limiting and extra fuel device

Limiting device **C** limits the injection pump maximum delivery.
It also acts as a torque setting device since spring **N** opposes the resistance of spring **M** inside the cylinder through lever **L**.
The torque setting device allows lever **L** to move over stroke **H** corresponding to 0.15 ÷ 0.25 mm.
This consequently increases injection pump delivery with torque reaching its peak value.

Note: In generator sets and power welders, the torque setting device acts as a delivery limiter only.
It therefore does not feature spring **M** or stroke **H**.

Downloaded from www.Manualslib.com manuals search engine

https://truckmanualshub.com/

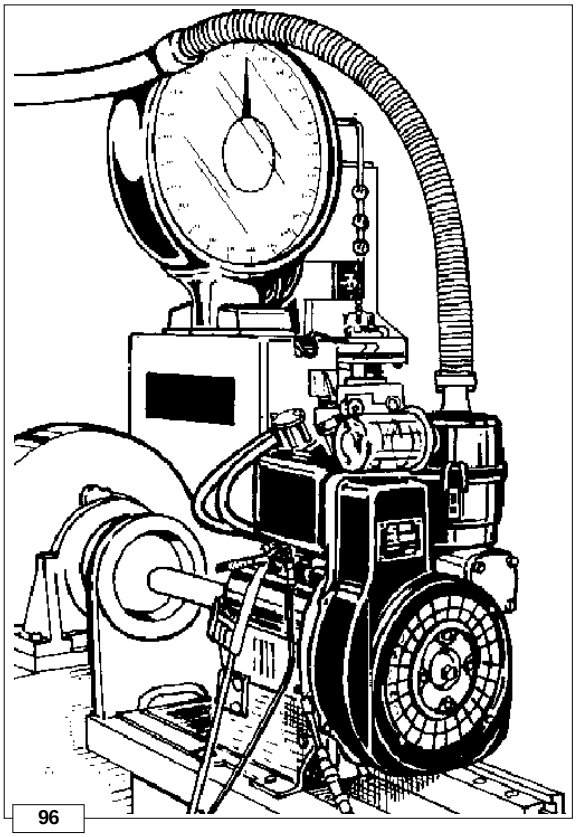

96

Injection pump delivery setting with engine at the torque dynamometer

1) Bring engine to idling speed
2) Unscrew delivery limiting device **C** (see pic. 94)
3) Bring engine to the power and r.p.m. required by the manufacturer of the device.
4) Check that consumption falls within the table specifications (see below).
If consumption is not as indicated change balance conditions at the torque dynamometer by varying the load and adjusting the governor. Under stable engine conditions check consumption again.
5) Tighten limiting device **C** until the engine r.p.m. decreases. Lock the limiting device by means of lock nut.
6) Release brake completely and check at what speed the engine becomes stable.
Speed governor should comply with the requirements of the class indicated by the manufacturer of the device.
7) Stop the engine.
8) Check valve clearance when the engine has cooled down.

Required settings (most requested)

Engine	R.P.M.	Power kW (HP)	Specific fuel consumption	
			Time (sec) per 100 cm3	g/kWh (g/HPh)
12LD435-2	3000	N 13,97 (19)	74-76	290-282 (213-208)
		NB 13,72 (17,3)	91-93	259-254 (191-186)
12LD435-2/B1	3600	N 14,7 (20)	66-68	309-300 (227-221)
		NB 13,23 (18)	78-80	291-283 (214-208)
12LD475-2	3000	N 15,8 (21,5)	73-75	260-253 (191-186)
		NB 14,85 (20,2)	82-84	246-240 (181-177)

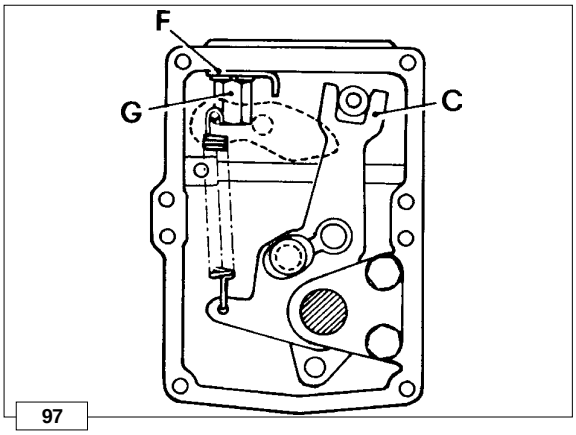

97

Stop setting

1) Completely turn lever **C** counterclockwise and keep it in this posi-tion. Retainer **F** should not be in contact with lever **C**.
2) Unscrew nut **G** and bring retainer **F** in contact with lever **C.**
3) Push retainer **F** so that lever **C** is moved backwards clockwise by 1.0÷1.5 mm.
4) Lock retainer **F** by screwing nut **G.**

Note: Under these conditions no damage can be caused to the injection pump rack rod stops by sudden impacts due to the available electric stops.

Downloaded from www.Manualslib.com manuals search engine

https://truckmanualshub.com/

When the engines are not used for more than 3 months, they have to be protected by performing the operations described:

STORAGE

Internal engine protection:

- Start the engine and heat it.
- Stop the engine.
- Remove the drain plug and let the oil flow completely.
- Replace the oil filter with a new one (screw manually the new filter).
- Clean the oil drain plug and after having assembled a new gasket, tighten it.
- Carry out the oil refilling to the upper level of the rod, using AGIP RUSTIA C (for Countries in which this product is not available find an equivalent product on the market).
- Start for about 10 minutes and verify any possible oil leakage, then stop the engine.

Injection systems protection:

- Empty the fuel tank.
- Replace the fuel filter with a new one.
- Carry out the filling of fuel using 10% of AGIP RUSTIA NT special additives.
- After having performed the air bleeding, start the engine, verify any possible fuel leakage, then stop the engine.

External engine protection:

- Clean the cooling fins of the cylinders and heads.
- Protect the external non-painted surfaces with AGIP RUSTIA 100/F.
- Seal with adhesive tape the intake and exhaust systems
- Coat the engine with a nylon or plastic sheet.
- Keep in a dry place. If possible not in direct contact with the ground and away from high voltage electric lines.

PROCEDURES TO BE CARRIED OUT BEFORE START THE ENGINE

- Remove all protections and coverings.
- Remove the rust preventer from the external part of the engine by means of adequate products (solvent or degreaser).
- Disassemble the injectors and introduce, by means of a bowl, motor oil on the piston crown (no more than 2 cc for every cylinder).
- Remove valve covers and spray motor oil on the valves, then turn the crankshaft manually for a few revolutions.
- Start the engine and heat it for about 10 minutes.
- Remove the drain plug and let the protective oil flow completely.
- Reinsert the drain plug.
- Carry out motor oil refilling to the upper level of the rod using the oil recommended by the manufacturer for a normal engine operation.

Downloaded from www.Manualslib.com manuals search engine

https://truckmanualshub.com/

Table of tightening torques for the main components

POSITION	*Picture N°*	*Diam. and pitch (mm)*	*Torque (Nm)*
Connecting rod	35	8X1,25	40
Injection pump union	71÷73	18X1,5	40
Rocker arm cover	5	8X1,25	20
Central support collar	42	8X1,25	25
Intake manifold	-	8X1,25	25
Exhaust manifold	-	8X1,25	20
Air conveyor	-	6X1,0	6
Throttle cover	-	6X1,0	10
Oil sump	-	8X1,25	28
Oil filter	62	6X1,0	12,5
Oil filter, internal	61	6X1,0	10
Hydraulic pump coupling flange	54, n°5	8X1,25	25
Camshaft gear	52	10X1,5	60
Oil pump gear	59	10X1,5	35
Starting Motor	90	10X1,5	45
Rocker arm shaft	9	8X1,25	25
Air conveyor baffle	-	8X1,25	25
Engine foot	-	10X1,5	40
Fuel feeding pump	70	8X1,25	25
Injection pump	73	8X1,25	25
Oil pump	59	8X1,25	20
Injector nozzle holder	80÷81	6X1,0	10
Crankshaft timing side support	38	8X1,25	25
Crankshaft P.T.O. side support	39	8X1,25	25
Crankshaft central side support	40	10X1,5	30
Hydraulic pump gear holder	54, n°7	8X1,25	25
R.p.m. counter holder	-	8X1,25	25
Fuel tank support	-	8X1,25	40
Cylinder head	11	10X1,5	50
Flywheel	3	16X1,5	180

Use of sealant

POSITION	Type of sealant
Tank bracket vibration dampers	Loctite 270
Oil pump nut or union	Loctite 270
Oil pump gear threading	Loctite 270
Oil filter cartridge nipple	Loctite 270
Oil filter center plate nipple	Loctite 270
Head stud	Loctite 270
Main bearing support fixing stud bolt, flywheel side	Loctite 270
Crankcase stud bolt	Loctite 270
Fuel feeding pump stud bolt	Loctite 270
Blower housing stud	Loctite 270
Tank bracket gasket	Loctite IS 495

Downloaded from www.Manualslib.com manuals search engine

https://truckmanualshub.com/

Table of tightening torques for standard screws (coarse thread)

Resistance class (R)								
Quality/ Dimensions	4.6	4.8	5.6	5.8	6.8	8.8	10.9	12.9
Diameter	R>400N/mm²		R>500N/mm²		R>600N/mm²	R>800N/mm²	R>1000N/mm²	R>1200N/mm²
	Nm	Nm	Nm	Nm	Nm	Nm	Nm	Nm
M3	0,5	0,7	0,6	0,9	1	1,4	1,9	2,3
M4	1,1	1,5	1,4	1,8	2,2	2,9	4,1	4,9
M5	2,3	3	2,8	3,8	4,5	6	8,5	10
M6	3,8	5	4,7	6,3	7,5	10	14	17
M8	9,4	13	12	16	19	25	35	41
M10	18	25	23	31	37	49	69	83
M12	32	43	40	54	65	86	120	145
M14	51	68	63	84	101	135	190	230
M16	79	105	98	131	158	210	295	355
M18	109	145	135	181	218	290	405	485
M20	154	205	193	256	308	410	580	690
M22	206	275	260	344	413	550	780	930
M24	266	355	333	444	533	710	1000	1200
M27	394	525	500	656	788	1050	1500	1800
M30	544	725	680	906	1088	1450	2000	2400

Table of tightening torques for standard screws (fine thread)

Resistance class (R)								
Quality/ Dimensions	4.6	4.8	5.6	5.8	6.8	8.8	10.9	12.9
Diameter	R>400N/mm²		R>500N/mm²		R>600N/mm²	R>800N/mm²	R>1000N/mm²	R>1200N/mm²
	Nm	Nm	Nm	Nm	Nm	Nm	Nm	Nm
M 8x1	10	14	13	17	20	27	38	45
M 10x1	21	28	26	35	42	56	79	95
M 10x1,25	20	26	24	33	39	52	73	88
M 12x1,25	36	48	45	59	71	95	135	160
M 12x1,5	38	45	42	56	68	90	125	150
M 14x1,5	56	75	70	94	113	150	210	250
M 16x1,5	84	113	105	141	169	225	315	380
M 18x1,5	122	163	153	203	244	325	460	550
M 18x2	117	157	147	196	235	313	440	530
M 20x1,5	173	230	213	288	345	460	640	770
M 20x2	164	218	204	273	327	436	615	740
M 22x1,5	229	305	287	381	458	610	860	1050
M 24x2	293	390	367	488	585	780	1100	1300
M 27x2	431	575	533	719	863	1150	1600	1950
M 30x2	600	800	750	1000	1200	1600	2250	2700

Downloaded from www.Manualslib.com manuals search engine

https://truckmanualshub.com/

Special tools and equipment for maintenance

SPECIAL TOOLS	*DESCIPTION*	*Part N°.*
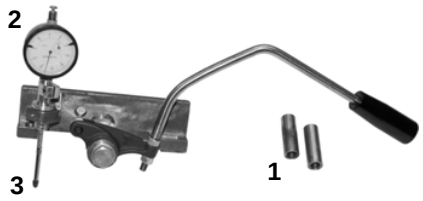	Valve lowering tool for static injection timing check **1** Spacers, h=40mm **2** Dial gauge indicator **3** Dial gauge extension	1460 - 285
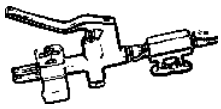	High-preassure pump for static injection timing check	1460 - 273
	Static timing tool	1460 - 024
	Tool for valve stem O-ring assembly	1460 - 108
	Valve ring assembly tool	1460 - 009
	Tool for valve cotters assembly/disassembly	1460 - 113
	Flywheel puller	1460 - 119
	Valve guide seal installation tool	1460 - 047

Downloaded from www.Manualslib.com manuals search engine

https://truckmanualshub.com/

Notes :

Downloaded from www.Manualslib.com manuals search engine

https://truckmanualshub.com/

42100 Reggio Emilia – Italia - ITALY
Via Cav. del Lavoro Adelmo Lombardini, 2 - Cas. Post. 1074
Tel. (+39) 0522 3891 - Telex 530003 Motlom I – Telegr.: Lombarmotor
R.E.A. 227083 - Reg. Impr. RE 10875
Cod. fiscale e Partita IVA 01829970357 - CEE Code IT 01829970357
E-MAIL: atl@lombardini.it
Internet: http://www.lombardini.it

La Lombardini si riserva il diritto di modificare in qualunque momento i dati contenuti in questa pubblicazione.
Lombardini se rèserve le droit de modifier, à n'importe quel moment, les données reportées dans cette publication.
Data reported in this issue can be modified at any time by Lombardini.
Lombardini behält sich alle Rechte vor, diese Angaben jederzeit zu verändern.
La Lombardini se reserva el derecho de modificar sin previo aviso los datos de esta publicación.

Downloaded from www.Manualslib.com manuals search engine