https://truckmanualshub.com/

EN

MECALAC

AS 50

MECALAC

https://truckmanualshub.com/

AS 50

https://truckmanualshub.com/

For decades, MECALAC has been developing and producing high-quality and innovative wheel loaders at the Büdelsdorf site in Northern Germany.

With our articulated loaders, four-wheel steered front loaders and four-wheel steered swing loaders, we are the only manufacturer to offer all concepts for compact loaders. At MECALAC you can choose the best suitable solution for your application.

MECALAC swing loaders are among the most technologically advanced wheel loaders worldwide. At the same time, they are also the safest wheel loaders: Whatever they can load frontally, can also be transported and 90° swiveled without loss of stability, even with the steering at maximum angle.

EXPERIENCE OF YOUR WORKSITE AS 50

https://truckmanualshub.com/

HANDLE YOUR DAILY WORKSITE PROCESS FAST AND EFFICIENTLY - THAT´S WHAT MECALAC SWING LOADERS STAND FOR

The four-wheel steered MECALAC swing loaders featuring a low-torsion, rigid chassis offer the highest stability, maximum agility and efficiency for every worksite. They allow worksite tasks to be completed faster and therefore more productive. The key to productivity is that you can simultaneously drive, steer and swing while performing your daily loading work.

Versatile operation, ease of maintenance and durable components are warrantors for profitability and synonyms for MECALAC swing loaders.

SUMMARY

6

LET´S HAVE A LOOK AT YOUR ADVANTAGES

https://truckmanualshub.com/

8
PERFECT DURING OPERATION

10
PANORAMA CAB

12
TECHNICAL DATA

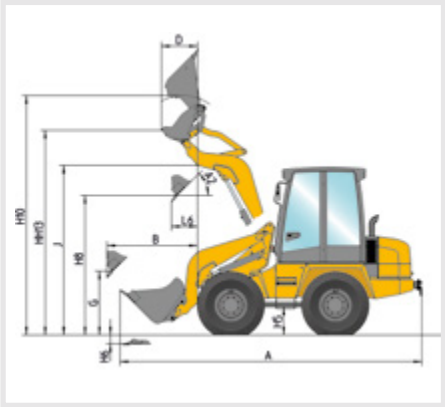

https://truckmanualshub.com/

LET'S HAVE A LOOK AT YOUR + ADVANTAGES

- 2 DOORS FOR EASY ACCESS ON BOTH SIDES
- RIGID CHASSIS
- FOUR-WHEEL STEERING FOR MAX. STABILITY AND EXCELLENT MANOEUVRABILITY
- LOAD-DEPENDENT AXLE SUPPORT
- CHAIN OPERATED SWING SYSTEM WITH CONSTANT AND PRECISE SWING SPEED
- P-KINEMATICS WITH PRECISE PARALLEL LIFTING
- AUTOMATIC DIFFERENTIAL LOCK IN THE FRONT AXLE
- ELECTRO-HYDRAULIC QUICK-COUPLER
- OPTIMAL ACCESS TO ALL SERVICE POINTS
- WIDE RANGE OF ATTACHMENTS

FIRM GRIP ON YOUR WORKSITE WITH FOUR-WHEEL STEERED SWING LOADERS

MECALAC swing loaders are compact, versatile, comfortable, safe, and extremely powerful. Their profitability and their innovative swing system have been the key for long-term market leadership in the swing loader sector which they continue to expand.

Due to the swing system with P-Kinematics, providing an optimized view, and a turning radius of 2,77m only, it is also the most agile loader of its class. Equipped with an auxiliary hydraulics as standard, the AS 50 can be operated with many other attachments in addition to bucket and forks.

https://truckmanualshub.com/

https://truckmanualshub.com/

POWERFUL
PERFECT DURING OPERATION

MECALAC CHAIN OPERATED SWING SYSTEM

The zero-play chain swing system providing constant working speed allows easy, efficient and precise work cycles for high productivity.

+

COMPACT & AGILE

POWERFUL

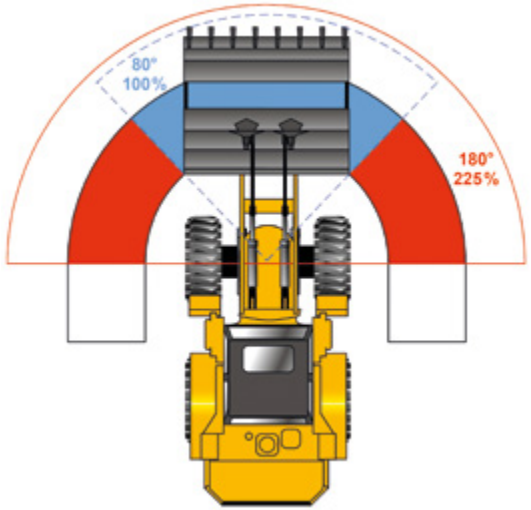

working area swing loader = 125% advantage
working area articulated loader

180° SWING RANGE

https://truckmanualshub.com/

SWIVELLING INSTEAD OF STEERING

The extremely robust and rigid chassis with four-wheel steering is the basis for maximum stability at maximum performance because the footprint remains unchanged at all times. A minimised turning radius ensures optimum agility, even on most confined worksites. The swing range of 180° efficiently expands the working area. Work cycles can be completed faster without steering. Less steering and driving motion reduces ground compaction.

The combination of swing range and four-wheel steering translates to unique flexibility and agility of the loader that lets you complete every task quickly and efficiently. It is the interplay of our MECALAC technologies that distinguishes our loaders and has made them so successful until today.
Flexibility. Performance. Safety.

https://truckmanualshub.com/

COMPACT
PRACTICAL & ROBUST

https://truckmanualshub.com/

MECALAC PANORAMA CAB

The spacious ROPS cabin was designed with regard to function. Thanks to centrally arranged controls, the driver has a full overview at all times. Large tinted glass panes ensure an excellent all-round vision. Two lockable doors allow for access on both sides and can be locked within the loader contour.

A multi-position driver's seat with weight-dependent hydraulic suspensions is a standard feature. The spacious cabin and a heater and fresh air system with external air filter facilitate daily work.

FUNCTIONAL & ERGONOMICAL

https://truckmanualshub.com/

TECHNICAL DATA

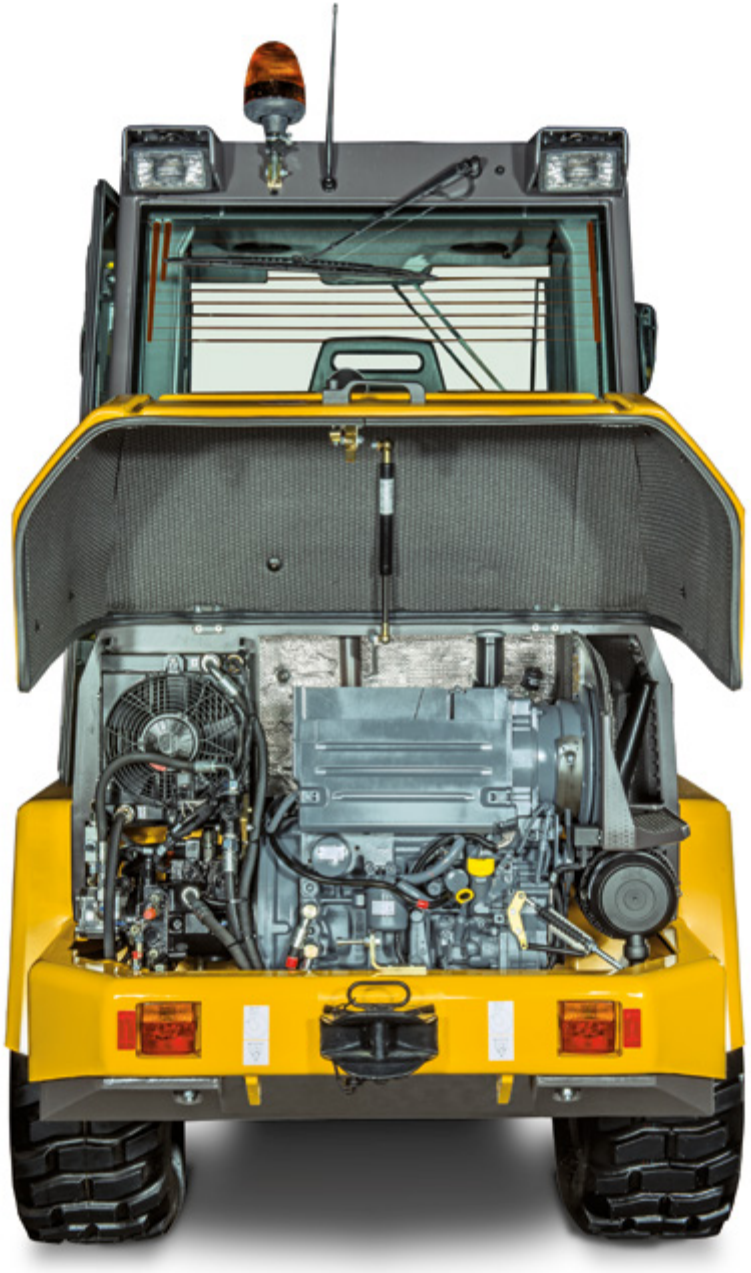

AS 50

OPERATING WEIGHT:	4160 KG
ENGINE POWER:	29.9 KW / 40 HP
BUCKET CAPACITY:	0.50 – 0.80 m³

- LOW-MAINTENANCE SHOVEL ARM
- COMFORTABLE DRIVER'S CAB WITH ROPS SAFETY SYSTEM
- JOYSTICK CONTROLS
- SERVO-ASSISTED WORKING HYDRAULICS
- HIGH-PERFORMANCE, POWER-CONTROLLED, HYDROSTATIC FOUR-WHEEL DRIVE
- FOUR-WHEEL STEERING
- PLANETARY AXLES WITH SELF-LOCKING DIFFERENTIAL IN FRONT
- P-KINEMATICS FOR EXCELLENT VISIBILITY ON ALL WORK TOOLS
- HYDRAULICALLY CONTROLLED QUICK-COUPLER
- WIDE RANGE OF ATTACHMENTS

ENGINE	
Oil/air-cooled Deutz diesel engine 3 cylinders Type D 2011 L03i	
Net power at	2500 min^{-1}
acc. to ISO 9249	40 hp / 29.9 kW
Max. torque at:	1700 min^{-1}
acc. to ISO 9249	130 Nm
Air intake filter: 2 level dry-air filter with safety cartridge	•
Electrical system: Operating voltage:	12 Volt
Battery capacity:	66 Ah
Alternator rating:	60 A

DRIVE	
Hydrostatic drive with automotive control, 2 stages for maximum propulsive force, gear-engage under load, multifunctional lever (joystick) for drive and working hydraulics control	•
Axles: planetary axles with four-wheel steering for maximum flexibility, oscillating rear axle	•
Differential lock: self-engaging, automatic differential lock in front axle	•
Wheels: tire size: optionally:	 12,5-18 15,5/55 R18
Speeds: road gear: field gear:	 0-20 km/h 0-5 km/h
Max. oscillation angle	+/- 10°

https://truckmanualshub.com/

TECHNICAL DATA

BRAKES	
Operating brakes: 1. hydraulically operated drum brake in front axle, acting on all 4 wheels 2. hydrostatic inching brake, acting on all 4 wheels	 • •
Parking brake: Drum brake in front axle, acting on all 4 wheels	•

STEERING	
Hydrostatic four-wheel steering, can be switched to rear axle steering	•
max. steering angle	+/- 35°
Turning radius measured over rear end, R =	2770 mm

HYDRAULIC SYSTEM	
Dual-circuit system with gear pumps 1. working hydraulics circuit (lift/lower, tilt, accessories) and steering (via priority valve); three-fold control valve with primary and secondary protection	•
Max. operating pressure at 2500 min^{-1}:	40 l/min and 230 bar
2. Circuit (swivelling) single control valve with primary and secondary protection	•
Max. operating pressure at 2500 min^{-1}:	20 l/min and 200 bar
Float position for lifting cylinders	
Cylinders: 2 lifting cylinders 1 tilting cylinder 2 swing cylinders	• • •

PERFORMANCE DATA	
Bucket position: Tilting angle Dumping angle, top	 45° 46°
Lifting force:	2400 daN
Breakout force: Thrust force*:	3400 daN 2500 daN
Tipping load:	
Standard bucket, max. turned, straight* Standard bucket, max. turned, 90°-swivelled*	2410 kg 2065 kg
Payload: on forks, max. turned, frontal, even terrain* on forks, max. turned, max. swivelled, even terrain*	 1640 kg 1290 kg
Tipping load according to ISO 14397. Payload according to EN 474-3. * with counterweight	

FILLING CAPACITIES	
Engine with filter	approx. 6 l
Fuel tank	approx. 45 l
Front axle total	approx. 7 l
Rear axle with gearbox	approx. 7.5 l
Hydraulic system with tank	approx. 70 l

CHASSIS	
Rigid, single-frame chassis with rear axle support for maximum stability, especially when working in swivelled position	•
Sealed articulated/oscillated pivot with play-free, chain operated swinging system with constant turning speed and power	•
P-Kinematics in shovel arm for excellent visibility on all work tools	•
Low-maintenance shovel arm	•
Operator's cab with flexible four-point mountings for maximum driver comfort and minimum noise levels	•
The servo-assisted joystick controls are smooth, accurate and long lasting	•

STANDARD FEATURES	
Comfortable operator's cab with ROPS safety feature and 2 lockable doors allowing access from both sides of vehicle	•
Doors open through 180° with safety restraint on machine	•
Tinted windows	•
Electrical wipers front and rear	•
Front and rear screen washers	•
2 external rear-view mirrors	•
Multiply adjustable driver's seat, adjusts to driver's weight	•
Hydraulic suspension	•
Safety belt	•
Sun-blind	•
Heater and fresh air system with external filter	•
Interior lighting	•
Glove-boxes	•
Intuitive modular cockpit with symbolic display components and monitoring LEDs 12v power outlet	•
2 driving lights at front of cab roof	•
2 working lights mounted at back of cab roof Indicators, rear and brake lights	•
Electrically locking hydraulically operated quick-coupler	•
Towing coupling	•
Fastening and lifting points	•
Auxiliary hydraulics 1st circuit	•
Color scheme: yellow	•
Operator's cab, axles and wheels grey	•

https://truckmanualshub.com/

TECHNICAL DATA

OPTIONAL EQUIPMENT	
30 km/h version	o
Tires 15,5/55 R18	o
360° warning light	o
Internal rear-view mirror	o
Reverse warning system	o
Auxilliary hydraulics 2nd circuit	o
Pipe-burst protection system	o
Boom suspension	o
Counterweight	o
Bio-degradable oil fill for hydraulic system	o
Radio	o
Pressureless return line	o
Immobilizer	o
Various attachments possible such as pallet fork, load hook, hydraulic breaker etc.	o

EMISSIONS	
Engine: Emissions according to stage III - EU-RL 97/68	•
Noise emission Sound power level LWA[1] Acoustic power level LpA[2]	 99 dB(A) 78 dB(A)
Vibrations: Vibration total value[3] Effective vibration level[4]	 < 2,5 m/s² < 0,5 m/s²

[1] According to 2000/14/EG
[2] According to ISO 6396
[3] According to ISO/TR 25398
[4] According to ISO/TR 25398

All data based on standard tires.
All data are non-binding.
Changes are reserved without notice.
The order confirmation is exclusively decisive.

https://truckmanualshub.com/

TECHNICAL DATA

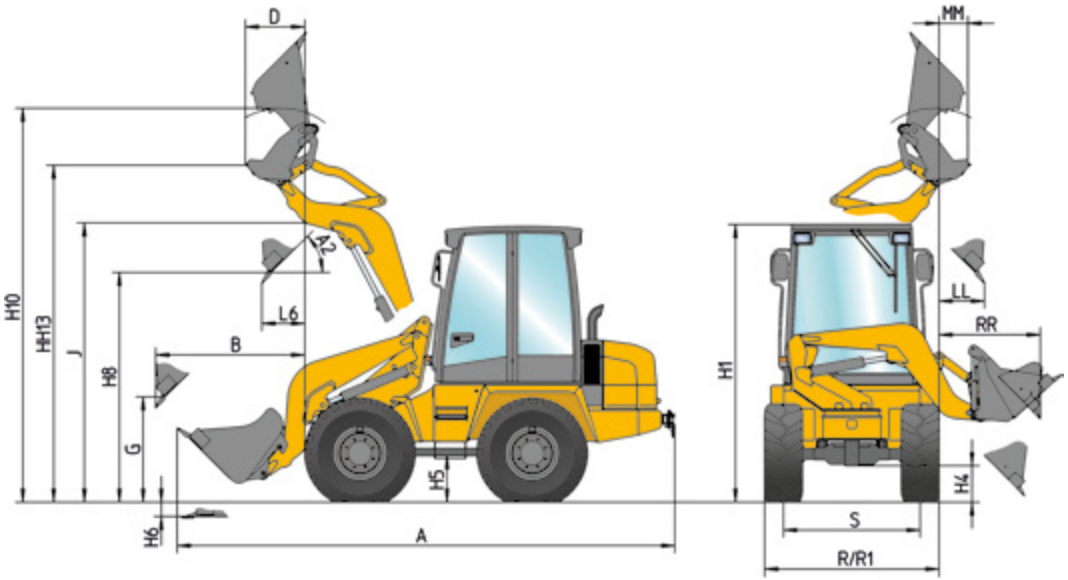

BUCKETS	STD. 0.50 m³	4x1 0.45 m³
A	4865	4820
A2	46°	46°
B	1420	1370
D		340
G	810	825
H1	2550	2550
H4	320	320
H5	400	400
H6	100	85
H8	2490	2470
H10	3775	3615
HH13		3200
J	3030	3030
LL	275	205
L6	460	410
MM		140
RR	1070	1020
S	1290	1290
R	1650	1650
R1	1620	1620

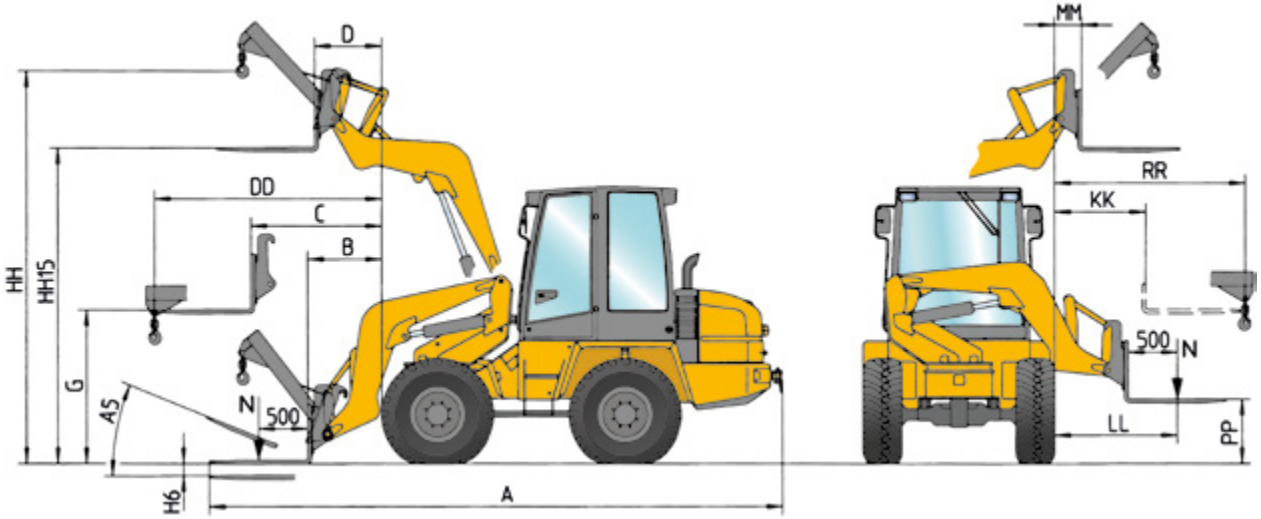

	FORKS	LOAD HOOK
A	5280	4310
A5	21°	
B	705	
C	1155	
D	160	
DD		1770
G	1265	
HH		3510
H6	85	
HH15	2940	
KK	815	
LL	1155	
MM	115	
PP	510	
RR		1410

https://truckmanualshub.com/

AS 50 MECALAC

MECALAC Baumaschinen GmbH
Am Friedrichsbrunnen 2 – D-24782 Büdelsdorf
Tel. +49 (0) 4331/351-319 – Fax +49 (0) 4331/351-470
A company of Groupe Mecalac S.A.
mecalac.com

MK316/EN-04/18 **Design** Les Alchimistes **Layout** Petra Gosienicki **Photo credits** Münchow Industriefoto **Printed by** Kalistene **Non-binding document**