https://truckmanualshub.com/

STC300

STC300 TRUCK CRANE
30 TONS LIFTING CAPACITY

Quality Changes the World

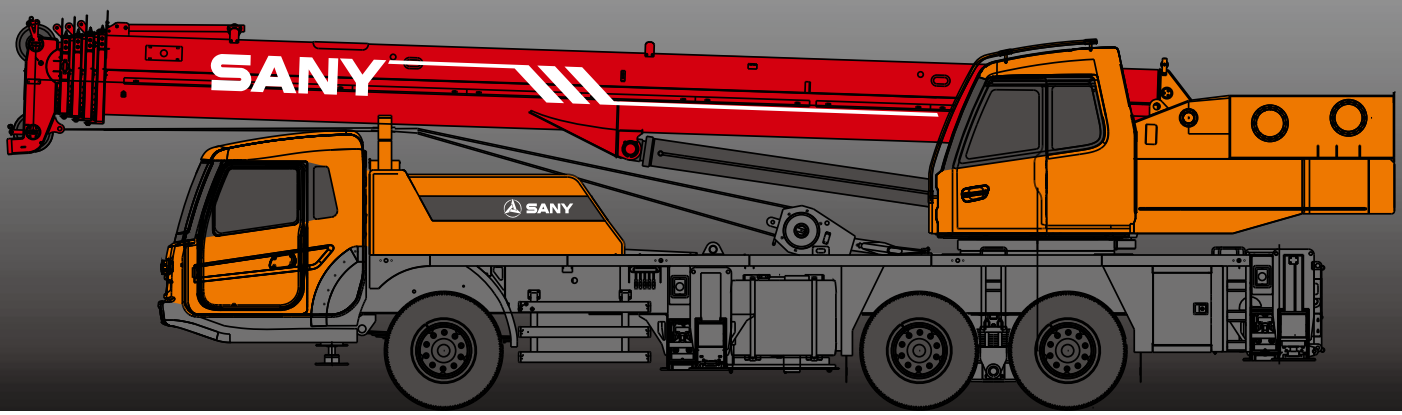

SANY

https://truckmanualshub.com/

SANY Automobile Hoisting Machinery is one of the core business unit of Sany Heavy Industry, mainly engaged in the research and development of high end, mid to large tonnage crane series, including mobile crane, crawler crane, tower crane and loader crane. It has two industrial parks in Ningxiang and Huzhou, since entering the market, the products of Sany Automobile Hoisting Machinery have received worldwide recognition with advanced technology, lean manufacturing, high reliability and excellent service.

https://truckmanualshub.com/

SANY TRUCK CRANE

CONTENT

04 Icon
05 Selling Points
06 Introduction
09 Dimension
10 Technical Parameter
11 Operation Condition
12 Load Chart
14 Wheel Crane Family Map

- Cab
- Hydraulic system
- Control system
- Telescopic system
- Luffing system
- Slewing
- Counterweight
- Safety system
- Hoist system
- Carrier frame
- Outriggers
- Engine
- Transmission system
- Drive/Steer
- Axles
- Tyres
- Brakes system
- Electrical system
- Suspension system
- Telescopic boom
- Lattice jibs
- Superlift devices
- Luffing lattice jib
- winch mechanism:

Excellent and stable chassis performance / chassis system

Double-axle drive is used, providing good tafficability and comfortableness under complex road condition with reliable traveling performance.
Engine has the multimode power output function, which reduces power consumption.

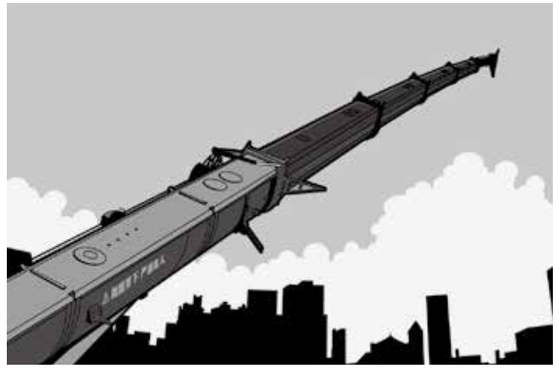

Ultra long and super strong boom system

Five-section boom of high strength steel structure and optimized U-shaped cross section reduces weight significantly with higher safety rates. Jib mounting angles are 0°, 15° and 30°, which ensures fast and convenient change-over between different operating conditions so as to improving working efficiency of the machine.

Highly efficient, stable, energy-saving and adjustable hydraulic system

Hydraulic systemload feedback and constant power control are applied to provide strong lifting capacity and good micro-mobility. Unique steering buffer design is applied to ensure stable braking operation.

Safe, stable, advanced and intelligent electric control system

The adoption of CAN-bus full-digital network control technology ensures stable control signal, simple harness, and high reliability. Timely feedback of data information can achieve the monitoring of the overall working status in real time. The load moment limiter equipping with the comprehensive intelligent protection system is used with accuracy within 3% to provide a comprehensive logic and interlock control, thus ensuring more safe and reliable operation.

https://truckmanualshub.com/

Superstructure

Cab

- It is made of safety glass and anti-corrosion steel plate with ergonomic design such as full-coverage soften interior, panoramic sunroof and adjustable seats etc., and humanized design providing more comfortable and relaxing operation experience. The display of load moment limiter integrates main console and operation display system, which clearly show the data of all operating superstructure conditions for lifting operation.

Hydraulic system

- High-quality key hydraulic components such as main oil pump, rotary pump, main valve, winch motor, and balancing parts etc. are adopted to achieve stable and reliable operation of the hydraulic system.Superior operation performance is guaranteed by accurate parameter matching.
- Main valve has flow compensation, load feedback control function,enabling stable and convenient control of single action and combined action under different operation conditions.
- Winch adopts the variable motor to ensure high operation efficiency. Max. single line speeds of main and auxiliary winches is up to 120r/min which ensures the lifting efficiency take the lead in industry.
- The use of new hydraulic control variable slewing system ensures more stable starting and control of the slewing operation and excellent micro-mobility.

Control system

- CAN-bus instrument: CAN-bus instrument with a combined intelligent control electrical system is used for easy reading of the traveling parameters at any time. The engine fault warning function is appliedto ensure convenient and fast troubleshooting.
- Load moment limiter: The adoption of high intelligent load moment limiter system can
- comprehensively protect lifting operation, ensuring accurate, stable and comfort operation.

Luffing system

- Dead-weight luffing provides more stable luffing operation at low energy loss
- Luffing angle: -2°~ 80°.

Telescopic system

- Five-section boom is applied with basic boom length of 10.5m, fully extended boom length of 39.5m, jib length of8 m and lifting height of fully extended boom length of 40m respectively. Max. lifting height is 48m including jib. It is made of fine grain high-strength steel with U-shaped cross section and with telescopic operation controlled independent by dual- cylinder rope.

Slewing system

- 360° rotation can be achieved with Max. slewing speed of 2r/min, providing stable and reliable operation of the system.

Superstructure

Hoisting system

- The winch adopts the high-pressure automatic variable plunger motor, enabling automatic switch-over between low load high speed mode and high load low speed mode, and ensuring highly efficient operation and stable lifting and lowering of the load.
- One main hook: 320Kg, one auxiliary hook: 90Kg.Wire rope of main winch: left-handed wire rope 16-35W×7-1960USZ, with length of 200m.Wire rope of auxiliary winch: left-handed wire rope 16-35W×7-1960USZ, with length of 105m.

Safety system

- Load moment limiter: Load moment limiter calculation system based on lifting load mechanical model is established using an analytical mechanics method, with rated lifting accuracy up to ±3% through on-line non-load calibration, providing full protection to lifting operation. In case of overload operation, system will automatically issue an alarm to provide safety protection for manipulation.
- Hydraulic system is configured with the balance valve, overflow valve and two-way hydraulic lock etc. components, thus achieving the stable and reliable operation of the hydraulic system.
- Main and auxiliary winches are equipped with over roll-out limiter to prevent over rolling-out of wire rope.
- Boom and jib ends are equipped with height limiters respectively to prevent over-hoisting of wire rope.
- Boom head is equipped with anemometer and press sensor to indicate the working condition of whole crane in real-time, giving an alarm and cutting off the dangerous action automatically.

Counterweight

- Counterweight is 4500kg, no flexible counterweight.

Chassis

Driving cab

- Cab is made of new steel structure self-developed by SANY, featuring excellent shock absorption and tightness, which is configured with swing-out doors at both sides, pneumatically suspended driver's seat and passenger seat, adjustable steering wheel, large rearview mirror, comfort driver chair having a headrest, anti-fog fan, air conditioner, stereo radio, and complete control instruments and meters, providing more comfortable, safe, and humanized operation experience.

Carrier frame

- Designed and manufactured by SANY, anti-torsion box structure is welded by fine-grain high-strength steel plateto provide strong load bearing capacity.

Axles

- Axles 2 and 3 are drive axles and axles 1 is steering axles, axle and wheel differentials are installed in axles 2 and 3. The use of welding process for axle housing provides stronger load bearing capacity.

Engine

- Type: Inline six-cylinder, water cooled, supercharged and inter-cooling diesel engine
- Rated power: 213kW(290ps)/2100(r/min)
- Environment-protection: Emission complies with EuroIII standard
- Capacity of fuel tank: 300L.

https://truckmanualshub.com/

Chassis

Transmission system	■ Gearbox: Manual gearbox is adopted, with 9-gear and large speed ratio range applied, which meets the requirements of low gradeability speed and high traveling speed. ■ Transmission shaft: With optimized arrangement of the transmission shaft, the transmission is stable and reliable. ■ For most optimized transmission, plate flange is used with large transmission torque.
Brakes system	■ Air serve brakes are used for all wheels with dual-circuit brake system applied. Engine is equipped with an exhaust brake.
Suspension system	■ All axles adopt the plate spring suspension systemswith plate spring passed 100,000 fatigue tests and with optimization of performance parameters of the front and rear plate springs appliedto ensure strength and also to provide comfort ridding.
Steering system	■ Hydraulic power mechanical steering systems are applied for axles 1 with unloading valve installed in the steering gear.
Outriggers	■ Four-point supporting of the H-shaped outriggers ensures easy operation and strong stability. They are made of fine-grain high-strength steel sheet. With horizontalsingle-cylinder rope line telescoping for flexible outriggers.
Tyres	■ 11 (number of tyres) - type: 11.00-20-18PR; bias tires are used, featuring with large bearing capacity and durable use.
Electrical system	■ With 2*12V maintenance-free batteries, the crane power can be cut off manually via a mechanical master power switch.

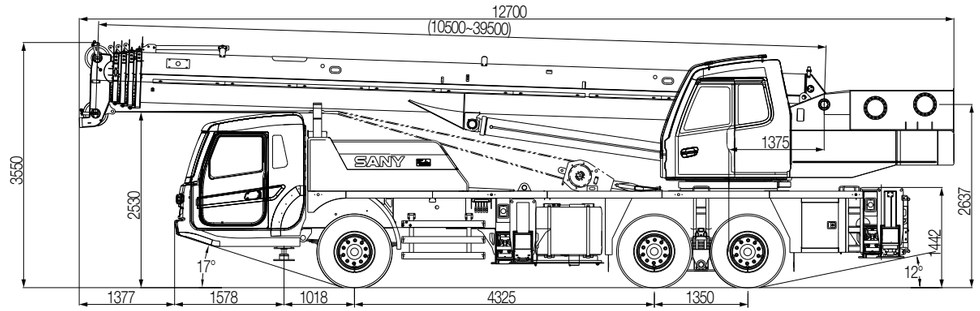

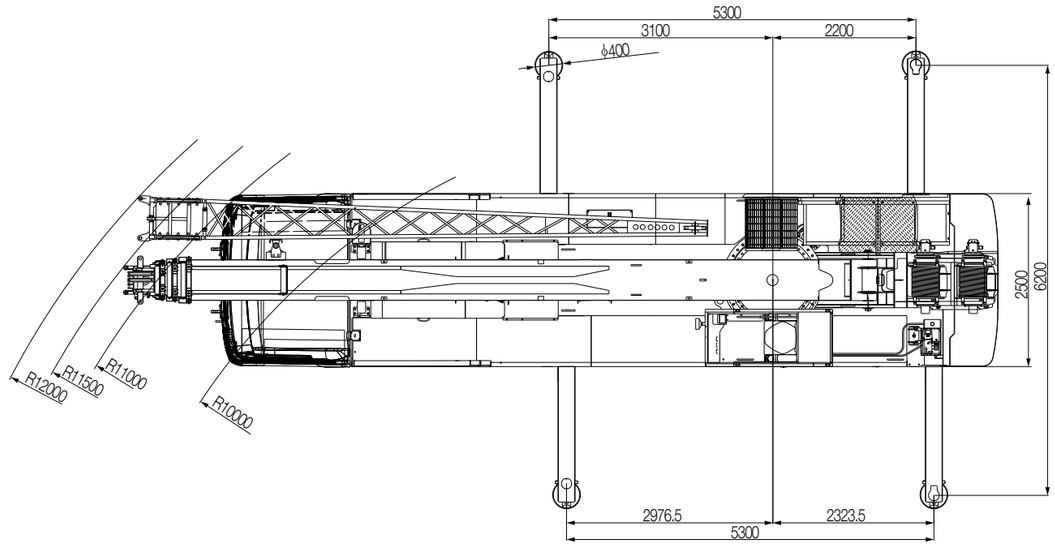

https://truckmanualshub.com/

Type	Item		Parameter
Capacity	Max. lifting capacity		30 t
Dimensions	Overall length		12700mm
	Overall width		2500mm
	Overall height		3550mm
	Axle distance	Axle-1,2	4325mm
		Axle-2,3	1350mm
Weight	Overall weight		33000kg
	Axle load	Axle load-1	7000kg
		Axle load-2,3	26000kg
	Rated power		213kW/ 2100 rpm
	Rated torque		1050N.m/ (1200~1400) rpm
Traveling	Max.traveling speed		80 km/h
	Turning radius	Min.turning radius	11 m
		Min.turning radius of boom head	12.6 m
	Wheel formula		6 × 4
	Min.ground clearance		220 mm
	Approach angle		17 °
	Departure angle		12 °
	Max.gradeability		38%
	Fuel consumption per 100km		≤ 40 L
Main Performance Data	Temperature range		– 30 °c ~ +60 °c
	Min.rated range		3m
	Tail slewing radius of swingtable		3.37m
	Boom section		5
	Boom shape		U-shaped
	Max.lifting moment	Base boom	1078 kN·m
		Full-extend boom	486 kN·m
		Full-extend boom+jib	378kN·m
	Boom length	Base boom	10.5m
		Full-extend boom	39.5m
		Full-extend boom+jib	47.5m
	Outrigger span (Longitudinal×Transversal)		5.3 × 6.2m
	Jib offset		0 °, 15 °, 30 °
Working speed	Max.single rope lifting speed of main winch (no load)		≥120 m/min
	Max.single rope lifting speed of auxiliary winch (no load)		≥120 m/min
	Full extension/retraction time of boom		105 / 120 s
	Full lifting/descending time of boom		45 / 70 s
	Slewing speed		0-2r/min
Aircondition	Aircondition in up cab		Cold and Heating
	Aircondition in low cab		Cold and Heating

STC300 Working Ranges

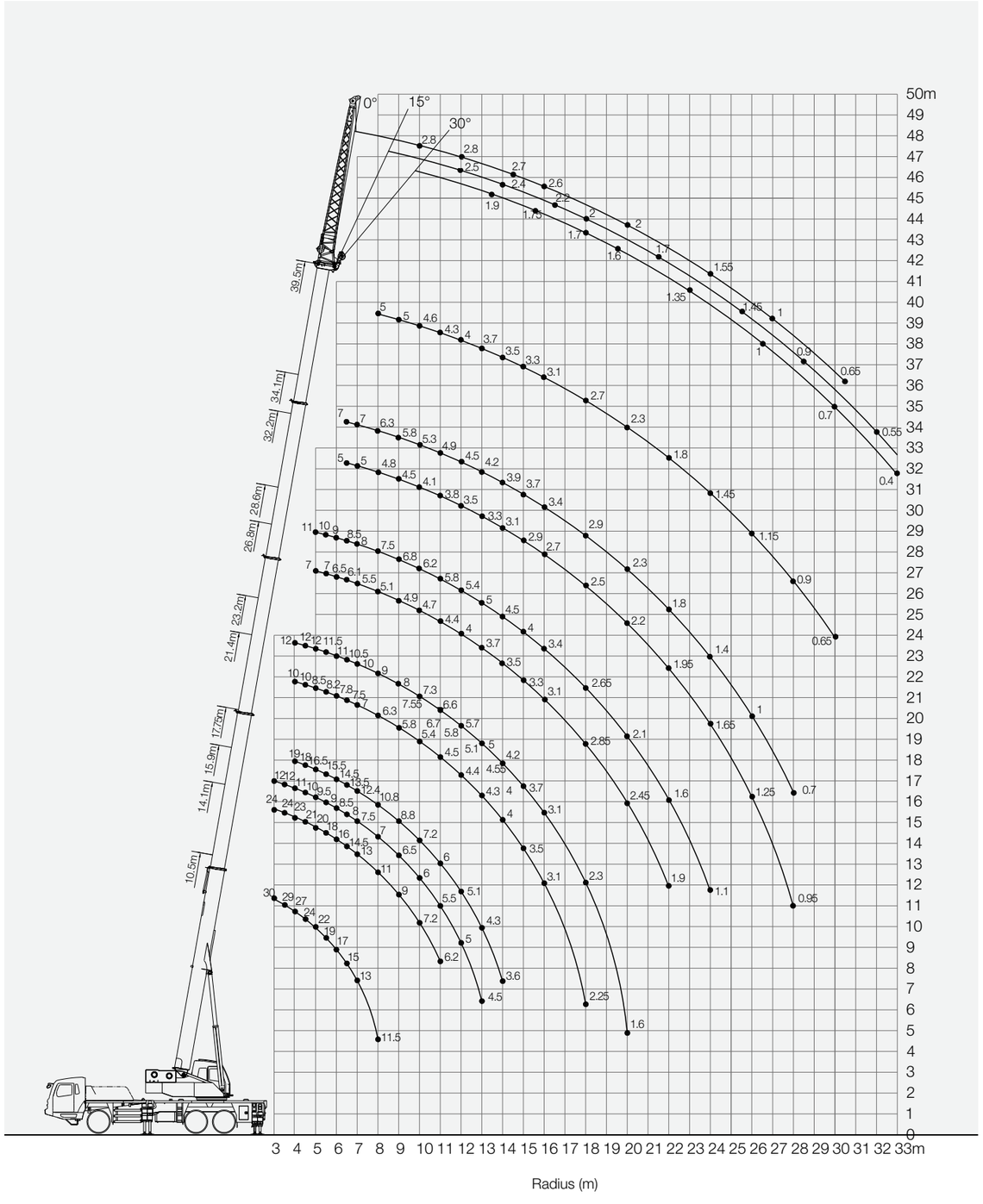

https://truckmanualshub.com/

Unit:Kg

Prerequisites:
① Under large boom operating condition (fully extended boom length / fully extended boom length + jib length), min. length is 10.5m and max. length is 39.5m
② Length of outrigger is 5.3×6.2m
③ 360°rotation is applied
④ Counterweight weight is 4.5 tons

Working range(m)	Main boom											Working range(m)
	10.5m	14.1m	15.9m	17.75m	21.4m	23.2m	26.8m	28.6m	32.2m	34.1m	39.5m	
3	30000	24000	12000									3
3.5	29000	24000	12000									3.5
4	27000	23000	11000	19000	10000	12000						4
4.5	24000	21000	10000	18000	10000	12000						4.5
5	22000	20000	9500	16500	8500	12000	7000	11000				5
5.5	19000	18000	9000	15500	8200	11500	7000	10000				5.5
6	17000	16000	8500	14500	7800	11000	6500	9000				6
6.5	15000	14500	8000	13500	7500	10500	6100	8500	5000	7000		6.5
7	13000	13000	7500	12400	7000	10000	5500	8000	5000	7000		7
8	11500	11000	7000	10800	6300	9000	5100	7500	4800	6300	5000	8
9		9000	6500	8800	5800	8000	4900	6800	4500	5800	5000	9
10		7200	6000	7200	5400	7300	4700	6200	4100	5300	4600	10
11		6200	5500	6000	4500	6600	4400	5800	3800	4900	4300	11
12			5000	5100	4400	5700	4000	5400	3500	4500	4000	12
13			4500	4300	4300	5000	3700	5000	3300	4200	3700	13
14				3600	4000	4200	3500	4500	3100	3900	3500	14
15					3500	3700	3300	4000	2900	3700	3300	15
16					3100	3100	3100	3400	2700	3400	3100	16
18					2250	2300	2850	2650	2500	2900	2700	18
20						1600	2450	2100	2200	2300	2300	20
22							1900	1600	1950	1800	1800	22
24								1100	1650	1400	1450	24
26									1250	1000	1150	26
28									950	700	900	28
30											650	30
Telescopic condition												
I	0	50%	0	100%	0	100%	0	100%	0	100%	100%	I
II	0	0	25%	0	50%	25%	75%	50%	100%	75%	100%	II
III	0	0	25%	0	50%	25%	75%	50%	100%	75%	100%	III
IV	0	0	25%	0	50%	25%	75%	50%	100%	75%	100%	IV
Wire rope ratio	8	8	6	6	4	4	4	4	4	4	3	Wire rope ratio

1. Value specified in table is rated lifting capacity of the crane under the condition that the crane parks on the flat and solid ground under leveling state;
2. Values above the thick solid line are determined by the strength of the crane and below the thick solid line are determined by the stability of the crane;
3. Rated lifting capacity determined by the stability shall comply with ISO4305;
4. Rated lifting capacity in the table includes the weights of lifting hook and hanger (main hook: 320 kg; auxiliary hook: 90 kg)
5. Rated lifting capacity when pulley at boom tip is used can not exceed _3500_kg; after the jib installs, rated lifting capacity of the boom shall be a value that a total is subtracted by the weight of jib (450 kg);
6. If actual boom length and range are both between two values in the table, the larger value is used to determine the lifting capacity;

Unit:Kg

Prerequisites:
① Under large boom operating condition (fully extended boom length / fully extended boom length + jib length), min. length is 10.5m and max. length is 39.5m+8m
② Length of outrigger is 5.3×6.2m
③ 360°rotation is applied
④ Counterweight weight is 4.5 tons

Main boom elevation angle	Main boom 39.5m + Jib 8m			
	Compensation angle0°	Compensation angle 15°	Compensation angle 30°	Main boom elevation angle
78°	2800	2500	1900	78°
75°	2800	2400	1750	75°
72°	2700	2200	1700	72°
70°	2600	2000	1600	70°
65°	2000	1700	1350	65°
60°	1550	1450	1000	60°
55°	1000	900	700	55°
50°	650	550	400	50°

https://truckmanualshub.com/

STC300 TRUCK CRANE

WHEEL CRANE FAMILY MAP

TRUCK CRANE

STC200
Maximum Load Capacity: 20t
Telescopic Boom: 4 Sections, 10.6-33m

STC250
Maximum Load Capacity: 25t
Telescopic Boom: 4 Sections, 10.65-33.5m

STC250H
Maximum Load Capacity: 25t
Telescopic Boom: 5 Sections, 10.5-39.5m

STC300S
Maximum Load Capacity: 30t
Telescopic Boom: 5 Sections, 10.6-40.5m

STC300TH
Maximum Load Capacity: 30t
Telescopic Boom: 4 Sections, 10.6-33.5m

STC300H
Maximum Load Capacity: 30t
Telescopic Boom: 5 Sections, 10.5-39.5m

STC500
Maximum Load Capacity: 50t
Telescopic Boom: 5 Sections, 11.5-43m

STC550
Maximum Load Capacity: 55t
Telescopic Boom: 5 Sections, 11.5-43m

STC600S
Maximum Load Capacity: 60t
Telescopic Boom: 5 Sections, 11.3-43.5m

STC750
Maximum Load Capacity: 75t
Telescopic Boom: 5 Sections, 11.8-45m

STC800S
Maximum Load Capacity: 80t
Telescopic Boom: 5 Sections, 12.2-47m

STC1000
Maximum Load Capacity: 100t
Telescopic Boom: 5 Sections, 13.5-52m

STC1000C
Maximum Load Capacity: 100t
Telescopic Boom: 6 Sections, 13.25-60m

STC1000S
Maximum Load Capacity: 100t
Telescopic Boom: 5 Sections, 12.28-56m

STC1200S
Maximum Load Capacity: 120t
Telescopic Boom: 7 Sections, 12.6-63.5m

STC1300C
Maximum Load Capacity: 130t
Telescopic Boom: 6 Sections, 13.3-60m

STC1600
Maximum Load Capacity: 160t
Telescopic Boom: 6 Sections, 13.4-62m

STC2200
Maximum Load Capacity: 220t
Telescopic Boom: 6 Sections, 14.55-68m

ALL TERRAIN CRANE

SAC1800
Maximum Load Capacity: 180t
Telescopic Boom: 6 Sections, 13.5-62m

SAC2200
Maximum Load Capacity: 220t
Telescopic Boom: 6 Sections, 13.5-62m

SAC2600
Maximum Load Capacity: 260t
Telescopic Boom: 6 Sections, 15.65-73m

SAC3000
Maximum Load Capacity: 300t
Telescopic Boom: 7 Sections, 15.4-80m

SAC3500
Maximum Load Capacity: 350t
Telescopic Boom: 6 Sections, 15.2-70m

SAC6000
Maximum Load Capacity: 600t
Telescopic Boom: 7 Sections, 17.1-90m

ROUGH-TERRAIN CRANE

SRC250
Maximum Load Capacity: 25t
Telescopic Boom: 4 Sections, 9.9-31.5m

SRC350
Maximum Load Capacity: 35t
Telescopic Boom: 4 Sections, 10-31.5m

SRC550
Maximum Load Capacity: 55t
Telescopic Boom: 4 Sections, 11.25-34.5m

SRC550H
Maximum Load Capacity: 55t
Telescopic Boom: 5 Sections, 11.5-43m

SRC750
Maximum Load Capacity: 75t
Telescopic Boom: 5 Sections, 11.8-45m

SRC1200
Maximum Load Capacity: 120t
Telescopic Boom: 5 Sections, 13-49m

https://truckmanualshub.com/

Quality Changes the World

SANY AUTOMOBILE HOISTING MACHINERY

Address: SANY Industrial Park, Jinzhou Development Zone,
Changsha, Hunan, China.
Service Hotline: 4006098318
Email: crd@sany.com.cn
For more information, please visit: www.sanygroup.com

For our consistent improvement in techonology, specifications may change without notice.
The machines illustrated may show optional equipment which can be supplied at additional cost.

Version: 2015.08

Distributed By: