https://truckmanualshub.com/

SERVICE MANUAL

E305C EVO

Crawler Excavator

Part number 48034225
English
June 2016

NEW HOLLAND
CONSTRUCTION

© 2016 CNH Industrial Italia S.p.A. All Rights Reserved.

https://truckmanualshub.com/

NEW HOLLAND CONSTRUCTION

SERVICE MANUAL

E305C EVO Crawler excavators LC version (TIER 3) - LATAM Market

48034225 23/06/2016

EN

Find manuals at https://best-manuals.com

https://truckmanualshub.com/

Contents

INTRODUCTION

Engine..... 10

[10.001] Engine and crankcase 10.1

[10.102] Pan and covers 10.2

[10.106] Valve drive and gears 10.3

[10.101] Cylinder heads 10.4

[10.105] Connecting rods and pistons..... 10.5

[10.103] Crankshaft and flywheel..... 10.6

[10.216] Fuel tanks 10.7

[10.206] Fuel filters 10.8

[10.218] Fuel injection system..... 10.9

[10.250] Turbocharger and lines..... 10.10

[10.254] Intake and exhaust manifolds and muffler 10.11

[10.501] Exhaust Gas Recirculation (EGR) exhaust treatment..... 10.12

[10.400] Engine cooling system 10.13

[10.414] Fan and drive 10.14

[10.310] Aftercooler..... 10.15

[10.304] Engine lubrication system..... 10.16

[10.408] Oil cooler and lines..... 10.17

Hydraulic systems..... 35

[35.000] Hydraulic systems..... 35.1

[35.300] Reservoir, cooler, and filters..... 35.2

[35.104] Fixed displacement pump..... 35.3

[35.106] Variable displacement pump 35.4

[35.102] Pump control valves..... 35.5

[35.359] Main control valve..... 35.6

[35.357] Pilot system 35.7

Find manuals at https://best-manuals.com

[35.355] Hydraulic hand control 35.8
[35.356] Hydraulic foot control 35.9
[35.352] Hydraulic swing system 35.10
[35.353] Hydraulic travel system 35.11
[35.354] Hydraulic central joint 35.12
[35.736] Boom hydraulic system 35.13
[35.737] Dipper hydraulic system 35.14
[35.738] Excavator and backhoe bucket hydraulic system 35.15
[35.360] Hammer and rotating bucket hydraulic system 35.16

Frames and ballasting 39

[39.140] Ballasts and supports 39.1

Tracks and track suspension 48

[48.130] Track frame and driving wheels 48.1
[48.100] Tracks 48.2
[48.134] Track tension units 48.3
[48.138] Track rollers 48.4

Cab climate control 50

[50.100] Heating 50.1
[50.200] Air conditioning 50.2

Electrical systems 55

[55.000] Electrical system 55.1
[55.100] Harnesses and connectors 55.2
[55.525] Cab engine controls 55.3
[55.015] Engine control system 55.4
[55.201] Engine starting system 55.5
[55.301] Alternator 55.6
[55.302] Battery 55.7
[55.202] Cold start aid 55.8

Find manuals at https://best-manuals.com

[55.010] Fuel injection system 55.9
[55.014] Engine intake and exhaust system 55.10
[55.989] Exhaust Gas Recirculation (EGR) electrical system 55.11
[55.012] Engine cooling system 55.12
[55.013] Engine oil system 55.13
[55.640] Electronic modules 55.14
[55.512] Cab controls 55.15
[55.036] Hydraulic system control 55.16
[55.051] Cab Heating, Ventilation, and Air-Conditioning (HVAC) controls 55.17
[55.050] Heating, Ventilation, and Air-Conditioning (HVAC) control system 55.18
[55.416] Swing control system 55.19
[55.417] Travel control system 55.20
[55.530] Camera 55.21
[55.518] Wiper and washer system 55.22
[55.404] External lighting 55.23
[55.514] Cab lighting 55.24
[55.408] Warning indicators, alarms, and instruments 55.25
[55.992] Anti-theft system 55.26
[55.DTC] FAULT CODES 55.27

Booms, dippers, and buckets 84

[84.910] Boom 84.1
[84.912] Dipper arm 84.2
[84.100] Bucket 84.3

Platform, cab, bodywork, and decals 90

[90.150] Cab 90.1
[90.156] Cab windshield and windows 90.2
[90.120] Mechanically-adjusted operator seat 90.3

Find manuals at https://best-manuals.com

https://truckmanualshub.com/

[90.100] Engine hood and panels 90.4

Find manuals at https://best-manuals.com

https://truckmanualshub.com/

Find manuals at https://best-manuals.com

https://truckmanualshub.com/

INTRODUCTION

Find manuals at https://best-manuals.com

https://truckmanualshub.com/

Contents

INTRODUCTION

Foreword - Important notice regarding equipment servicing 3
Safety rules 4
Safety rules - General information 5
Safety rules - Personal safety 6
Safety rules - Cab protective structure 8
Safety rules - Ecology and the environment 9
Torque - Bolt and nut 10
Torque - Special torque settings 11
Basic instructions - Shop and assembly 15
Hydraulic contamination 17
General specification 18
General specification - Main equipment 22
Weight 28
Dimension 30
Conversion factors 33
Consumables 45
Abbreviation 49
Product identification 52
Product identification - Machine orientation 54

Find manuals at https://best-manuals.com

Foreword - Important notice regarding equipment servicing

All repair and maintenance work listed in this manual must be carried out only by qualified dealership personnel, strictly complying with the instructions given, and using, whenever possible, the special tools.

Anyone who performs repair and maintenance operations without complying with the procedures provided herein shall be responsible for any subsequent damages.

The manufacturer and all the organizations of its distribution chain, including - without limitation - national, regional, or local dealers, reject any responsibility for damages caused by parts and/or components not approved by the manufacturer, including those used for the servicing or repair of the product manufactured or marketed by the manufacturer. In any case, no warranty is given or attributed on the product manufactured or marketed by the manufacturer in case of damages caused by parts and/or components not approved by the manufacturer.

The manufacturer reserves the right to make improvements in design and changes in specifications at any time without notice and without incurring any obligation to install them on units previously sold. Specifications, descriptions, and illustrative material herein are as accurate as known at time of publication but are subject to change without notice.

In case of questions, refer to your NEW HOLLAND CONSTRUCTION Sales and Service Networks.

Find manuals at https://best-manuals.com

Safety rules

Personal safety

This is the safety alert symbol. It is used to alert you to potential personal injury hazards. Obey all safety messages that follow this symbol to avoid possible death or injury.

Throughout this manual you will find the signal words DANGER, WARNING, and CAUTION followed by special instructions. These precautions are intended for the personal safety of you and those working with you.

Read and understand all the safety messages in this manual before you operate or service the machine.

DANGER indicates a hazardous situation that, if not avoided, will result in death or serious injury.

WARNING indicates a hazardous situation that, if not avoided, could result in death or serious injury.

CAUTION indicates a hazardous situation that, if not avoided, could result in minor or moderate injury.

FAILURE TO FOLLOW DANGER, WARNING, AND CAUTION MESSAGES COULD RESULT IN DEATH OR SERIOUS INJURY.

Machine safety

NOTICE: *Notice indicates a situation that, if not avoided, could result in machine or property damage.*

Throughout this manual you will find the signal word Notice followed by special instructions to prevent machine or property damage. The word Notice is used to address practices not related to personal safety.

Information

NOTE: *Note indicates additional information that clarifies steps, procedures, or other information in this manual.*

Throughout this manual you will find the word Note followed by additional information about a step, procedure, or other information in the manual. The word Note is not intended to address personal safety or property damage.

Safety rules - General information

Cleaning

Clean the metal parts with cleaning solution that meets the standard and steam cleaning. (except for bearings)

After cleaning, dry well, and inject oil in all parts.

Also inject oil into the bearings after drying.

Inspection

When disassembling parts, check all the parts.

If there are any worn or damaged parts, replace them.

Inspect carefully to prevent initial breakdowns.

Bearing

Replace any loose bearings.

Air dry bearings before installing them.

Needle bearing

When inserting needle bearings, be very careful not to damage them.

Apply grease to the section where the needle bearing will be inserted.

Gear

Check that there is no wear and no damage.

Oil seal, O-ring, gasket

Always install new oil seals, O-rings, and gaskets.

Apply grease to sections where oil seals and O-rings will be inserted.

Shaft

Check that there is no wear and no damage.

Check the bearings and check for damaged oil seals on the shaft.

Service parts

Install NEW HOLLAND CONSTRUCTION genuine service parts.

When placing an order, check the parts catalog. It contains the NEW HOLLAND CONSTRUCTION genuine part numbers.

Any breakdowns arising from the installation of non-genuine parts are not covered by the warranty.

Lubricants (fuel, hydraulic oil)

Use the oil from the specified company or specified in the operator's manual or service Manual.

Any breakdowns arising from any fuel or hydraulic oil other than those specified are not covered by the warranty.

Safety rules - Personal safety

WARNING:

This symbol indicates a precaution.

It gives information concerning the safety of the operator and those in the surroundings.

Read and understand these precautions thoroughly before performing the work.

Always comply with warnings and precautions so as to avoid any accidents.

This section covers information related to overall safety.

Check whether all warning labels are in place.

Additional labels can be ordered from Service Parts.

WARNING:

Read the operator's manual to gain a thorough understanding of machine control operations.

WARNING:

Perform any machine operations from the seating position.

Any other method may cause severe injuries.

WARNING:

Only the one operator is to ride on the machine. No one else is to ride on it.

WARNING:

Check the safety messages in the operator's manual before starting the engine.

Check all the warning labels on the machine.

Check that no one is within the machine’s operating range.

Check the operating methods in a safe location before starting the actual work.

Understand the machine operations well, then operate in compliance with all service-related laws and regulations.

The operator's manual can be purchased at your NEW HOLLAND CONSTRUCTION dealer.

WARNING:

Working with sloppy clothes or clothes with which safety cannot be ensured leads to damage to the machine and injury to the operator.

Always wear clothes that ensures safety.

In order to work more safely, it is recommended to wear additional safety equipment.

Helmet, safety shoes, ear protection, goggles, work clothes, and gloves

WARNING:

Pay careful attention when working with the engine running.

WARNING:

Check hydraulic equipment.

Work according to the procedure.

Do not change the procedure.

WARNING:

Check that there is no one in the surroundings before draining the pressure from hydraulic circuits during machine hydraulic cylinder inspection.

WARNING:

Use gloves when handling high-temperature parts.

WARNING:

Bring the lower parts or attachments in contact with the ground before inspecting or repairing them.

WARNING:

Check that hoses and tubes are securely connected.

If there is any damage to a hose or tube, replace it.

Do not check for oil leaks by hand. Use cardboard or wood.

WARNING:

When removing an attachment pin or other hardened pin, use a hammer that has a soft head.

WARNING:

Wear eye protection when using a hammer to install a pin or when working with a grinder.

At this time, use goggles or eye protectors that meet standards.

WARNING:

Park the machine in a safe location when repairing or inspecting it.

WARNING:

Use work site protection when repairing the machine.

Check the oil, coolant, grease, and tools.

Recover materials and parts as necessary.

Pay enough attention to safety.

WARNING:

Some of the machine's parts are extremely heavy.

Use an appropriate lifting equipment for such parts.

For weights and procedures, see the Service Manual.

WARNING:

Exhaust gases are toxic.

Always provide good ventilation when working indoors or in any other enclosed space.

WARNING:

If the electrolytic battery solution freezes, it may explode.

Safety rules - Cab protective structure

Cab protective structure

Modifying the cab main components is prohibited in order to protect the operator.

Prohibited items

- Modifications that reduce the strength of a platform that has a cab with a protective structure mounted on it. (Actions or modifications that reduce the functionality of the anchoring part at the left-rear of the cab)
- Modifications that effect the strength of the cab with a protective structure.

Modifications prohibited (red part)	All modifications (grinding, welding, drilling holes, removing, etc.) are prohibited.
Modifications permitted under conditions (gray part)	Removal of parts is prohibited. Bar welding and making holes (up to diameter **20 mm** (**0.787 in**)) by drilling are possible.

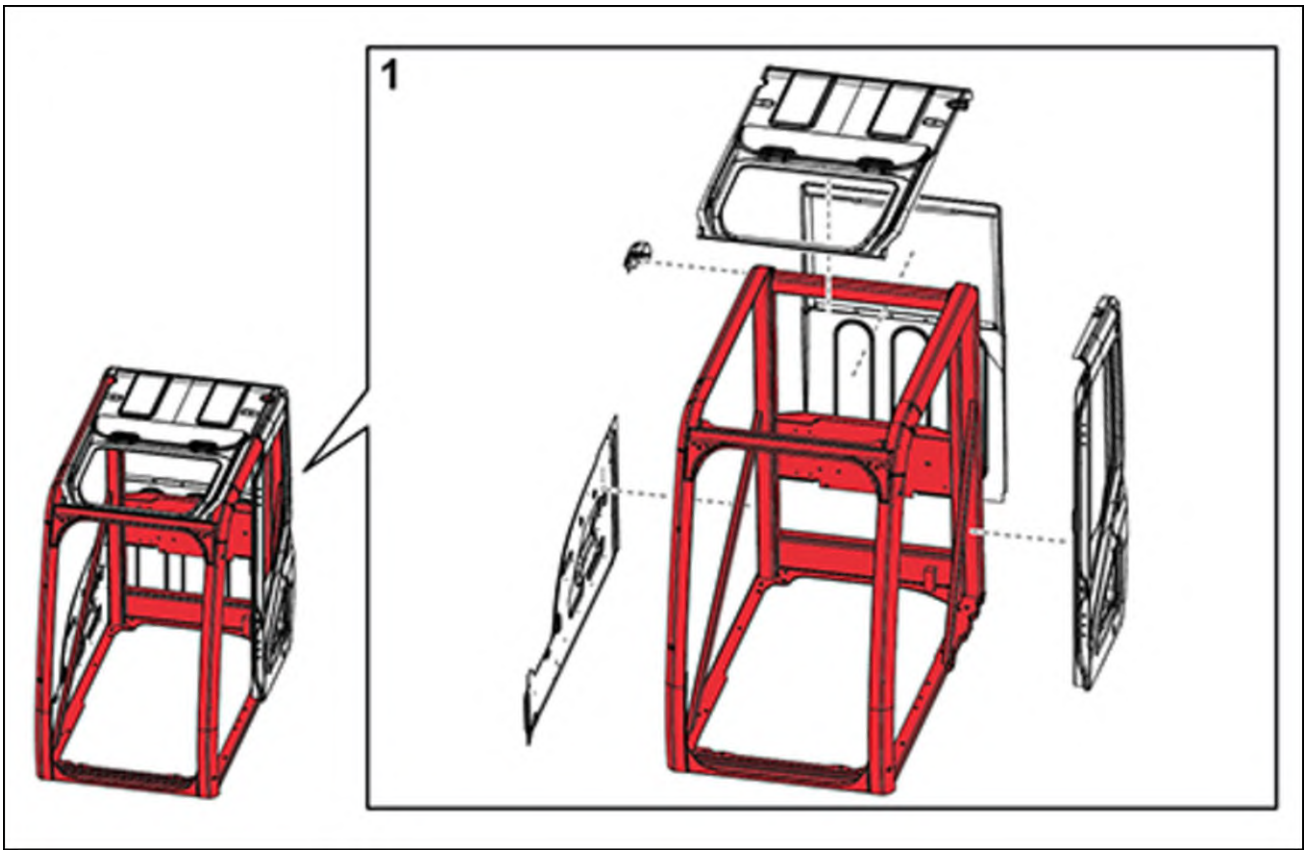

SMPH15CEX6544FA 1

Safety rules - Ecology and the environment

Soil, air, and water quality is important for all industries and life in general. When legislation does not yet rule the treatment of some of the substances that advanced technology requires, sound judgment should govern the use and disposal of products of a chemical and petrochemical nature.

Familiarize yourself with the relative legislation applicable to your country, and make sure that you understand this legislation. Where no legislation exists, obtain information from suppliers of oils, filters, batteries, fuels, anti-freeze, cleaning agents, etc., with regard to the effect of these substances on man and nature and how to safely store, use, and dispose of these substances.

Helpful hints

- Avoid the use of cans or other inappropriate pressurized fuel delivery systems to fill tanks. Such delivery systems may cause considerable spillage.
- In general, avoid skin contact with all fuels, oils, acids, solvents, etc. Most of these products contain substances that may be harmful to your health.
- Modern oils contain additives. Do not burn contaminated fuels and or waste oils in ordinary heating systems.
- Avoid spillage when you drain fluids such as used engine coolant mixtures, engine oil, hydraulic fluid, brake fluid, etc. Do not mix drained brake fluids or fuels with lubricants. Store all drained fluids safely until you can dispose of the fluids in a proper way that complies with all local legislation and available resources.
- Do not allow coolant mixtures to get into the soil. Collect and dispose of coolant mixtures properly.
- The air-conditioning system contains gases that should not be released into the atmosphere. Consult an air-conditioning specialist or use a special extractor to recharge the system properly.
- Repair any leaks or defects in the engine cooling system or hydraulic system immediately.
- Do not increase the pressure in a pressurized circuit as this may lead to a component failure.
- Protect hoses during welding. Penetrating weld splatter may burn a hole or weaken hoses, allowing the loss of oils, coolant, etc.

Battery recycling

Batteries and electric accumulators contain several substances that can have a harmful effect on the environment if the batteries are not properly recycled after use. Improper disposal of batteries can contaminate the soil, groundwater, and waterways. NEW HOLLAND CONSTRUCTION strongly recommends that you return all used batteries to a NEW HOLLAND CONSTRUCTION dealer, who will dispose of the used batteries or recycle the used batteries properly. In some countries, this is a legal requirement.

Mandatory battery recycling

NOTE: *The following requirements are mandatory in Brazil.*

Batteries are made of lead plates and a sulfuric acid solution. Because batteries contain heavy metals such as lead, CONAMA Resolution 401/2008 requires you to return all used batteries to the battery dealer when you replace any batteries. Do not dispose of batteries in your household garbage.

Points of sale are obliged to:

- Accept the return of your used batteries
- Store the returned batteries in a suitable location
- Send the returned batteries to the battery manufacturer for recycling

Torque - Bolt and nut

- Tighten alternating between left and right and top and bottom so that uniform tightening force is applied.

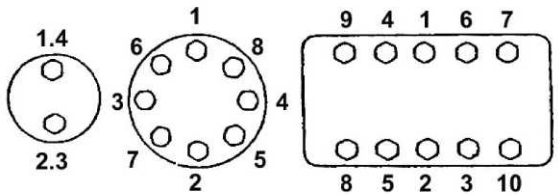

LPIL12CX00005EA 1

- If **LOCTITE®** was used on a removed bolt (there is something white sticking to the bolt when it is removed), clean the old **LOCTITE®** off with cleaning fluid, dry the bolt, then apply 2 - 3 drops of **LOCTITE®** to the thread section of the bolt.

Torque table

Bolt nominal diameter (size)		M6	M8	M10	M12	M14	M16	M18	M20
Hexagon bolt	Wrench	**10 mm**	**13 mm**	**17 mm**	**19 mm**	**22 mm**	**24 mm**	**27 mm**	**30 mm**
	Tightening torque	**6.9 N·m (5.089 lb ft)**	**19.6 N·m (14.456 lb ft)**	**39.2 N·m (28.912 lb ft)**	**58.8 N·m (43.369 lb ft)**	**98.1 N·m (72.355 lb ft)**	**156.9 N·m (115.723 lb ft)**	**196.1 N·m (144.636 lb ft)**	**294.2 N·m (216.991 lb ft)**
Hexagon socket head bolt	Wrench	**5 mm**	**6 mm**	**8 mm**	**10 mm**	**12 mm**	**14 mm**	**14 mm**	**17 mm**
	Tightening torque	**8.8 N·m (6.491 lb ft)**	**21.6 N·m (15.931 lb ft)**	**42.1 N·m (31.051 lb ft)**	**78.5 N·m (57.899 lb ft)**	**117.7 N·m (86.811 lb ft)**	**176.5 N·m (130.180 lb ft)**	**245.2 N·m (180.850 lb ft)**	**343.2 N·m (253.131 lb ft)**

Torque - Special torque settings

Code	Retightening location		Bolt nominal diameter	Wrench	Tightening torque
1*	Travel motor		M24	**36 mm**	**900 - 1051 N·m (663.81 - 775.18 lb ft)**
2*	Drive sprocket		**M20**	**30 mm**	**521 - 608 N·m (384.27 - 448.44 lb ft)**
3*	Take-up roller		**M16**	**24 mm**	**267 - 312 N·m (196.93 - 230.12 lb ft)**
4*	Upper roller		**M20**	**30 mm**	**521 - 608 N·m (384.27 - 448.44 lb ft)**
5*	Lower roller		**M20**	**30 mm**	**521 - 608 N·m (384.27 - 448.44 lb ft)**
6*	Track guard		M24	**36 mm**	**902 - 1049 N·m (665.28 - 773.70 lb ft)**
7	Shoe		**M20**	**30 mm**	**814 - 912 N·m (600.38 - 672.66 lb ft)**
8	Counterweight		M33	**50 mm**	**1862 - 2058 N·m (1373.34 - 1517.90 lb ft)**
9*	Turntable bearing		M24	**36 mm**	**784 - 914 N·m (578.25 - 674.13 lb ft)**
10*	Swing unit		M24	**36 mm**	**784 - 914 N·m (578.25 - 674.13 lb ft)**
11*	Engine	Mount	**M20**	**30 mm**	**289 - 337 N·m (213.16 - 248.56 lb ft)**
12*		Front bracket	**M10**	**17 mm**	**63.8 - 73.6 N·m (47.06 - 54.28 lb ft)**
13*		Rear bracket	**M12**	**19 mm**	**109 - 127 N·m (80.39 - 93.67 lb ft)**
14*	Radiator		**M16**	**24 mm**	**147.2 - 176.6 N·m (108.57 - 130.25 lb ft)**
15*	Hydraulic pump	Flange	**M10**	**17 mm**	**63.8 - 73.6 N·m (47.056 - 54.285 lb ft)**
16*		Pump	**M20**	**17 mm** hexagon socket head	**367 - 496 N·m (270.69 - 365.83 lb ft)**
17*	Hydraulic oil tank		**M16**	**24 mm**	**232.4 - 276 N·m (171.41 - 203.57 lb ft)**
18*	Fuel tank		**M16**	**24 mm**	**232.4 - 276 N·m (171.41 - 203.57 lb ft)**
19*	Control valve		**M16**	**24 mm**	**267 - 312 N·m (196.93 - 230.12 lb ft)**
20*	Center joint	Lock bar	**M16**	**24 mm**	**267 - 312 N·m (196.93 - 230.12 lb ft)**
21*		Joint	**M12**	**19 mm**	**109 - 127 N·m (80.39 - 93.67 lb ft)**
22	Cab		**M16**	**24 mm**	**149 - 173 N·m (109.90 - 127.60 lb ft)**
23	Battery		**M10**	**17 mm**	**19.6 - 29.4 N·m (14.46 - 21.68 lb ft)**

⚠ CAUTION:

- For items marked with *, always apply **LOCTITE® 262™** or the equivalent and tighten to the specified torque. The tightening torque in kgf•m is determined with N· m ÷ 9.8 (lbf· ft ÷ 7.2).

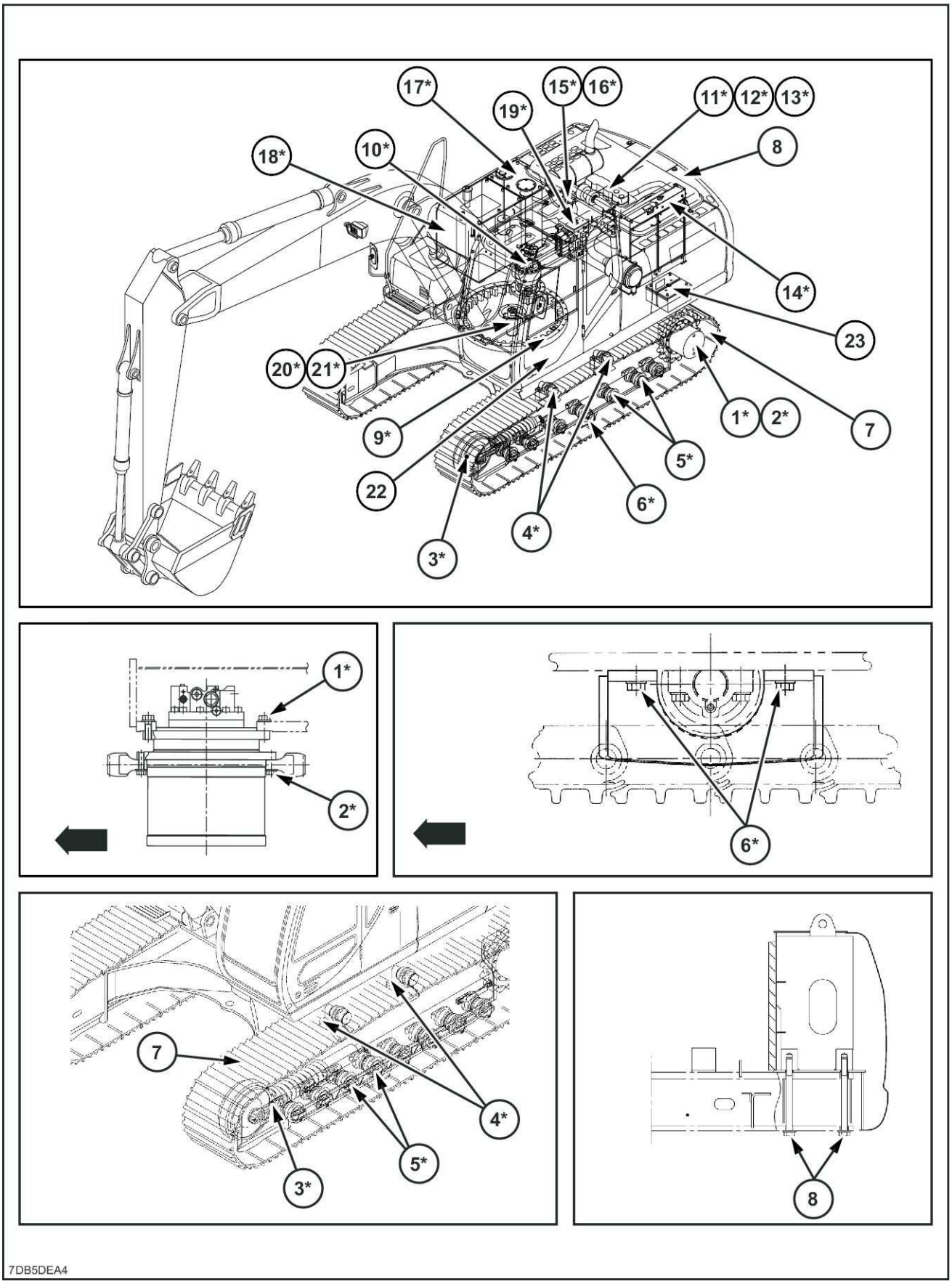
17*
15*
16*
19*
11*
12*
13*
8
18*
10*
14*
23
20*
21*
9*
22
3*
4*
6*
5*
1*
2*
7
1*
2*
6*
7
4*
5*
3*
8
7DB5DEA4

7DB5DEA4 1

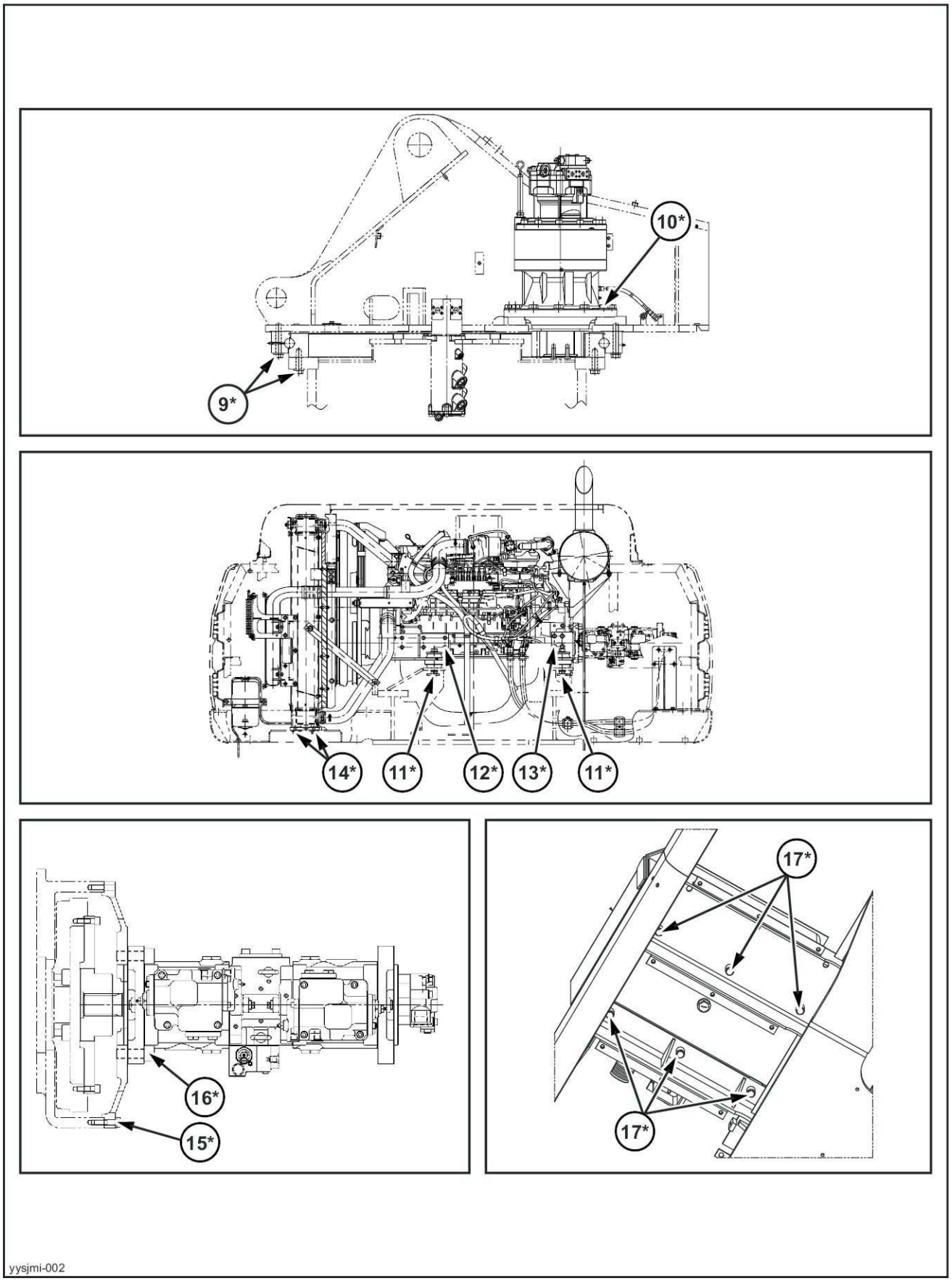

YYSJMI-002 2

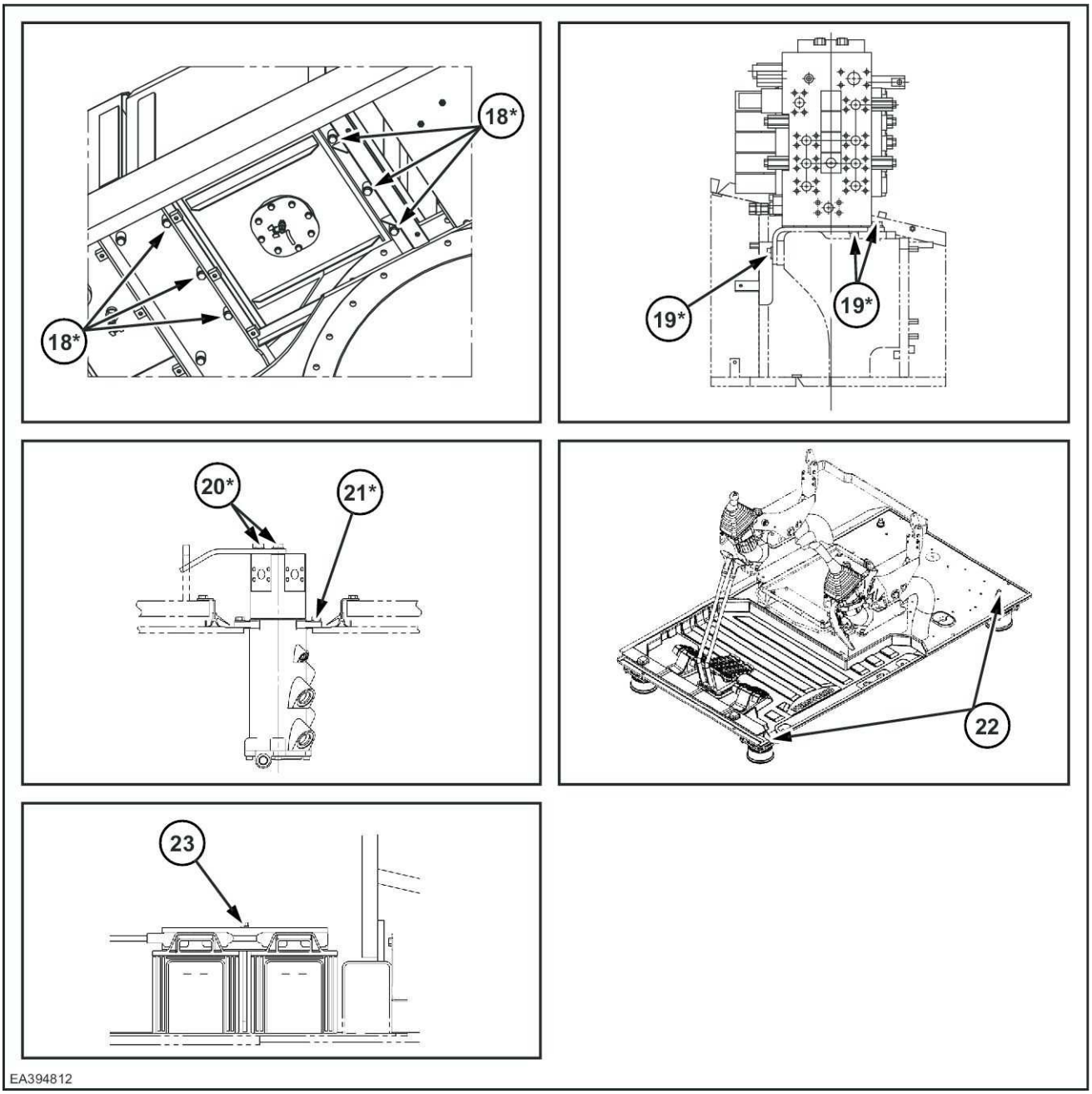

EA394812 3

Basic instructions - Shop and assembly

Shimming

For each adjustment operation, select adjusting shims and measure the adjusting shims individually using a micrometer, then add up the recorded values. Do not rely on measuring the entire shimming set, which may be incorrect, or the rated value shown on each shim.

Rotating shaft seals

For correct rotating shaft seal installation, proceed as follows:

1. Before assembly, allow the seal to soak in the oil it will be sealing for at least thirty minutes.
2. Thoroughly clean the shaft and check that the working surface on the shaft is not damaged.
3. Position the sealing lip facing the fluid.

   NOTE: *With hydrodynamic lips, take into consideration the shaft rotation direction and position the grooves so that they will move the fluid towards the inner side of the seal.*
4. Coat the sealing lip with a thin layer of lubricant (use oil rather than grease). Fill the gap between the sealing lip and the dust lip on double lip seals with grease.
5. Insert the seal in its seat and press down using a flat punch or seal installation tool. Do not tap the seal with a hammer or mallet.
6. While you insert the seal, check that the seal is perpendicular to the seat. When the seal settles, make sure that the seal makes contact with the thrust element, if required.
7. To prevent damage to the seal lip on the shaft, position a protective guard during installation operations.

O-ring seals

Lubricate the O-ring seals before you insert them in the seats. This will prevent the O-ring seals from overturning and twisting, which would jeopardize sealing efficiency.

Sealing compounds

Apply a sealing compound on the mating surfaces when specified by the procedure. Before you apply the sealing compound, prepare the surfaces as directed by the product container.

Spare parts

Only use CNH Original Parts or NEW HOLLAND CONSTRUCTION Original Parts.

Only genuine spare parts guarantee the same quality, duration, and safety as original parts, as they are the same parts that are assembled during standard production. Only CNH Original Parts or NEW HOLLAND CONSTRUCTION Original Parts can offer this guarantee.

When ordering spare parts, always provide the following information:

- Machine model (commercial name) and Product Identification Number (PIN)
- Part number of the ordered part, which can be found in the parts catalog

Protecting the electronic and/or electrical systems during charging and welding

To avoid damage to the electronic and/or electrical systems, always observe the following practices:

1. Never make or break any of the charging circuit connections when the engine is running, including the battery connections.
2. Never short any of the charging components to ground.
3. Always disconnect the ground cable from the battery before arc welding on the machine or on any machine attachment.
   - Position the welder ground clamp as close to the welding area as possible.
   - If you weld in close proximity to a computer module, then you should remove the module from the machine.
   - Never allow welding cables to lie on, near, or across any electrical wiring or electronic component while you weld.
4. Always disconnect the negative cable from the battery when charging the battery in the machine with a battery charger.

   NOTICE: *If you must weld on the unit, you must disconnect the battery ground cable from the machine battery. The electronic monitoring system and charging system will be damaged if this is not done.*
5. Remove the battery ground cable. Reconnect the cable when you complete welding.

⚠ WARNING

Battery acid causes burns. Batteries contain sulfuric acid.
Avoid contact with skin, eyes or clothing. Antidote (external): Flush with water. Antidote (eyes): flush with water for 15 minutes and seek medical attention immediately. Antidote (internal): Drink large quantities of water or milk. Do not induce vomiting. Seek medical attention immediately.
Failure to comply could result in death or serious injury.

W0111A

Special tools

The special tools that NEW HOLLAND CONSTRUCTION suggests and illustrate in this manual have been specifically researched and designed for use with NEW HOLLAND CONSTRUCTION machines. The special tools are essential for reliable repair operations. The special tools are accurately built and rigorously tested to offer efficient and long-lasting operation.

By using these tools, repair personnel will benefit from:

- Operating in optimal technical conditions
- Obtaining the best results
- Saving time and effort
- Working in safe conditions

Hydraulic contamination

Contamination in the hydraulic system is a major cause of the malfunction of hydraulic components. Contamination is any foreign material in the hydraulic oil.

Contamination can enter the hydraulic system in several ways:

- When you drain the oil or disconnect any line
- When you disassemble a component
- From normal wear of the hydraulic components
- From damaged seals or worn seals
- From a damaged component in the hydraulic system

All hydraulic systems operate with some contamination. The design of the components in this hydraulic system permits efficient operation with a small amount of contamination. An increase in this amount of contamination can cause problems in the hydraulic system.

The following list includes some of these problems:

- Cylinder rod seals that leak
- Control valve spools that do not return to neutral
- Movement of control valve spools is difficult
- Hydraulic oil that becomes too hot
- Pump gears, housing, and other parts that wear rapidly
- Relief valves or check valves held open by dirt
- Quick failure of components that have been repaired
- Slow cycle times are slow. The machine does not have enough power.

If your machine has any of these problems, check the hydraulic oil for contamination.

There are two types of contamination: microscopic and visible.

Microscopic contamination occurs when very fine particles of foreign material are suspended in the hydraulic oil. These particles are too small to see or feel. Microscopic contamination can be found by identification of the following problems or by testing in a laboratory.

Examples of problems caused by microscopic contamination:

- Cylinder rod seals that leak
- Control valve spools that do not return to neutral
- The hydraulic system has a high operating temperature

Visible contamination is foreign material that can be found by sight, touch, or odor. Visible contamination can cause a sudden failure of components.

Examples of problems caused by visible contamination:

- Particles of metal or dirt in the oil
- Air in the oil
- Dark or thick oil
- Oil with an odor of burned oil
- Water in the oil

If you find contamination, use a portable filter to clean the hydraulic system.

General specification

Engine

Type		Water-cooled, 4-cycle diesel, 6-cylinder in line, High pressure common rail system (electric control), Turbocharger with air cooled intercooler
Model		ISUZU GH - 6HK1X
Rated flywheel horse power	(SAE J1349, ISO 9249)	**202 kW** (**274.643 Hp**) (**2000 RPM**)
	(ISO 14396)	**212 kW** (**288.240 Hp**) (**2000 RPM**)
Piston displacement		**7.790 L** (**2.05790 US gal**)
Maximum torque	(SAE J1349, ISO 9249)	**989 N·m** (**729.45 lb ft**) (**1500 RPM**)
	(ISO 14396)	**1020 N·m** (**752.313 lb ft**) (**1500 RPM**)
Bore and stroke		**115 mm** (**4.528 in**) x **125 mm** (**4.921 in**)
Voltage		**24 V**
Alternator		**50 A**
Starter		**24 V 5.0 kW**

Hydraulic system

Main pumps		2 variable displacement axial piston pumps with regulating system	
	Max. oil flow		2 x **243 L/min** (**64.19 US gpm**) (**1800 RPM**)
	Working circuit pressure	Boom/Arm/Bucket	**34.3 MPa** (**4975.2 psi**)
			37.3 MPa (**5410.36 psi**) with auto power up
		Swing circuit	**29.4 MPa** (**4264.470 psi**)
		Travel circuit	**34.3 MPa** (**4975.2 psi**)
	Pilot pump	1 gear pump	
	Max. oil flow		**27 L/min** (**7.133 US gpm**)
	Working circuit pressure		**3.9 MPa** (**565.7 psi**)
Control valves		With Boom/Arm holding valve	
		One 4-spool valve for Right track travel, Bucket, Boom and Arm acceleration	
		One 5-spool valve for Left track travel, Auxiliary, Swing, Boom acceleration and Arm	
Swing device			
	Motor	Fixed displacement axial piston motor	
	Brake	Mechanical disc brake	
	Final drive	Planetary gear reduction	
	Turn table bearing	Ball bearing type with internal gear	
	Maximum swing speed	**11 RPM**	
	Swing torque	**92100 N·m** (**67929.47 lb ft**)	
Cylinders		NO. of cylinders – bore X Rod diameter X Stroke	
	Boom	2 x Ø **140 mm** (**5.512 in**) - Ø **95 mm** (**3.740 in**) - **1369 mm** (**53.898 in**)	
	Arm	1 x Ø **150 mm** (**5.906 in**) - Ø **105 mm** (**4.134 in**) - **1569 mm** (**61.77 in**)	
	Bucket	1 x Ø **135 mm** (**5.315 in**) - Ø **90 mm** (**3.543 in**) - **1078 mm** (**42.441 in**)	
Cooling system			
	Fan		Ø **850 mm** (**33.465 in**) with 6-blades
	Radiator capacity		**103.3 kW**
		Fin type	Corrugated fin (wavy type)
		Fin space	**2.0 mm** (**0.0787 in**)
	Long life coolant		Coolant **55 %**, Water **45 %**
	Oil cooler capacity		**58.3 kW**
		Fin type	Corrugated fin (wavy type)
		Fin space	**1.75 mm** (**0.06890 in**)
	Intercooler capacity		**16.7 kW**
		Fin type	Corrugated fin (wavy type)
		Fin space	**2.0 mm** (**0.0787 in**)
	Fuel cooler capacity		**1.9 kW**

		Fin type	Corrugated fin (wavy type)
		Fin space	**2.25 mm** (**0.0886 in**)
Filters			
	Suction filter		105 µm
	Return filter		6 µm
	Pilot line filter		8 µm

Hydraulic controls

Boom/Arm/Bucket/Swing	Pilot pressure control system (ISO control pattern)
Travel	Pilot pressure control system
Work mode select	SP - mode
	H - mode
	Auto - mode
Travel mode select	2 - speed travel
Attachment cushion control	
Hydraulic lock (gate lock, left side tilt console)	

Electrical system

Engine control			
			Dial type throttle control
			One touch idle / Auto deceleration / Auto idle shutdown system
			Emergency stop
Monitor system			
			Message display (Caution, condition, etc…)
			Work mode display (SP, H, Auto)
			Machine condition (Power boost, etc…)
			Alarm display and buzzer
			Water temperature
			Hydraulic oil temperature
			Fuel level
			Diagnosis system
Wire harness			
			Waterproof type connector
Safety			
			Travel alarm
			Double horn
Battery			2 x **12 V 128 A·h** /5HR
Lights			
	Working light	Upper	**24 V 70 W** x 1
		Boom	**24 V 70 W** x 2
		Cab	**24 V 70 W** x 2
	Operator's cab room		**24 V 10 W** x 1

Operator environment

Operator's cab	
	Smooth and round shape design cab, fabricated by press work
	Safety glass for all windows
	Shock-less cab suspension by 4-point fluid mounting
	Sliding front window with auto lock
	Built-in type full-color LCD monitor display
	Membrane switch on monitor display
	Windshield wiper & washer
	AM/FM Radio with auto-tuner
	Floor mat

	Polycarbonate roof hatch & Sun shade	
	Auto air-conditioner	
	Top guard OPG level 1 (in CAB structure)	
	Roll - over protective structure (ROPS)	
Operator's seat		
	Low frequency mechanical suspension with helical springs and double acting hydraulic damper.(Achieves ISO7096 in category EM6)	
	With following features	
	Manual weight adjustment	Backrest angle adjustment
	Seat height adjustment	Adjustable pivoting armrests linked to consoles
	Adjustable headrest	Retractable seat belt
	Adjustable lumbar support	Control consoles adjust independently of seat
Others		
	Rear view mirror (Cab side & Right side)	

Undercarriage

Travel motor		Variable displacement axial piston motor
Brake		Mechanical disc brake
Hydraulic service brake		Brake valve
Final drive		Planetary gear reduction
Travel speeds	High	**5.7 km/h** (**3.54 mph**) (Automatic travel speed shifting)
	Low	**3.3 km/h** (**2.051 mph**)
Drawbar pull		**233 kN** (**52380.484 lb**)
Number of carrier rollers (each side)		2
Number of carrier rollers (each side)		9
Number of shoes (each side)		50
Type of shoe		Triple grouser shoe
Link pitch		**203.2 mm** (**8.000 in**)
Width of shoe		**600 mm** (**23.622 in**) (S.T.D)
Grade-ability		**70 %** (**35 °**)

Mass

Operating mass	**29800 kg** (**65697.754 lb**)
	with **3.18 m** (**10.433 ft**) Arm, **1.3 m³** Bucket, **600 mm** (**23.622 in**) grouser shoe, operator, lubricant, coolant and full fuel tank
Shipping mass	**28400 kg** (**62611.282 lb**)
	Operating mass - (operator mass [**75 kg** (**165.35 lb**)]) + **90 %** of fuel mass + bucket mass [**950 kg** (**2094.391 lb**)])
Counter weight mass	**5300 kg** (**11684.500 lb**)
Ground pressure	**0.057 MPa** (**8.2679 psi**)
	with **3.18 m** (**10.433 ft**) Arm, **1.3 m³** Bucket, **600 mm** (**23.622 in**) grouser shoe

Digging force (with 1.3 m³ Bucket) (ISO 6015)

	[**3.18 m** (**10.4331 ft**)] Arm	[**2.65 m** (**8.6942 ft**)] Arm	[**3.66 m** (**12.0079 ft**)] Arm
Arm digging force	**121.6 kN** (**27336.767 lb**)	**140.2 kN** (**31518.214 lb**)	**109.8 kN** (**24684.022 lb**)
With auto power up	**132.4 kN** (**29764.704 lb**)	**153 kN** (**34395.768 lb**)	**118.7 kN** (**26684.822 lb**)
Bucket digging force	**174.6 kN** (**39251.641 lb**)	**174.6 kN** (**39251.641 lb**)	**174.6 kN** (**39251.641 lb**)
With auto power up	**190.2 kN** (**42758.661 lb**)	**190.2 kN** (**42758.661 lb**)	**190.2 kN** (**42758.661 lb**)

Dimensions

	[**3.18 m** (**10.4331 ft**)] Arm	[**2.65 m** (**8.6942 ft**)] Arm	[**3.66 m** (**12.0079 ft**)] Arm
Overall length (without attachment)	**5580 mm** (**219.685 in**)	**5580 mm** (**219.685 in**)	**5580 mm** (**219.685 in**)
Overall length (with attachment)	**10450 mm** (**411.417 in**)	**10480 mm** (**412.598 in**)	**10470 mm** (**412.205 in**)
Overall height (with attachment)	**3260 mm** (**128.346 in**)	**3340 mm** (**131.496 in**)	**3460 mm** (**136.220 in**)
Cab height	**3090 mm** (**121.654 in**)	**3090 mm** (**121.654 in**)	**3090 mm** (**121.654 in**)
Upper structure overall width	**2890 mm** (**113.780 in**)	**2890 mm** (**113.780 in**)	**2890 mm** (**113.780 in**)
Swing (rear end) radius	**3160 mm** (**124.409 in**)	**3160 mm** (**124.409 in**)	**3160 mm** (**124.409 in**)
Clearance height under upper structure	**1180 mm** (**46.457 in**)	**1180 mm** (**46.457 in**)	**1180 mm** (**46.457 in**)
Minimum ground clearance	**470 mm** (**18.504 in**)	**470 mm** (**18.504 in**)	**470 mm** (**18.504 in**)
Wheel base (Center to center of wheels)	**3980 mm** (**156.693 in**)	**3980 mm** (**156.693 in**)	**3980 mm** (**156.693 in**)
Crawler overall length	**4850 mm** (**190.945 in**)	**4850 mm** (**190.945 in**)	**4850 mm** (**190.945 in**)
Track gauge	**2600 mm** (**102.362 in**)	**2600 mm** (**102.362 in**)	**2600 mm** (**102.362 in**)
Undercarriage overall width [with **600 mm** (**23.622 in**) shoes]	**3200 mm** (**125.984 in**)	**3200 mm** (**125.984 in**)	**3200 mm** (**125.984 in**)
Crawler tracks height	**1040 mm** (**40.945 in**)	**1040 mm** (**40.945 in**)	**1040 mm** (**40.945 in**)

Working ranges

	[**3.18 m** (**10.4331 ft**)] Arm	[**2.65 m** (**8.6942 ft**)] Arm	[**3.66 m** (**12.0079 ft**)] Arm
Boom length	**6150 mm** (**242.126 in**)	**6150 mm** (**242.126 in**)	**6150 mm** (**242.126 in**)
Bucket radius	**1570 mm** (**61.811 in**)	**1570 mm** (**61.811 in**)	**1570 mm** (**61.811 in**)
Bucket wrist action	**176 °**	**176 °**	**176 °**
Maximum reach at GRP	**10500 mm** (**413.386 in**)	**10040 mm** (**395.276 in**)	**10990 mm** (**432.677 in**)
Maximum reach	**10670 mm** (**420.079 in**)	**10220 mm** (**402.362 in**)	**11160 mm** (**439.370 in**)
Max. digging depth	**7100 mm** (**279.528 in**)	**6570 mm** (**258.661 in**)	**7580 mm** (**298.425 in**)
Max. digging height	**10060 mm** (**396.063 in**)	**9930 mm** (**390.945 in**)	**10390 mm** (**409.055 in**)
Max. dumping height	**7090 mm** (**279.134 in**)	**6940 mm** (**273.228 in**)	**7390 mm** (**290.945 in**)

General specification - Main equipment

Lower component

Travel unit

Manufacturer	Nabtesco Corporation
Motor type	Variable displacement piston motor
	Automatic 2-speed switchover with parking brake
Intake amount	**233.4 cm³/rev** (**14.24 in³/rev**)
Operating pressure	**34.3 MPa** (**4975 psi**)
Operating flow	**246 l/min** (**246.000 US gpm**)
Brake torque	**48809 N·m** (**35999.67 lb ft**) min. (including reduction gear)
Relief valve set pressure	**35.8 - 37.8 MPa** (**5192.790 - 5482.890 psi**)
Automatic 2-speed switch over pressure	**26.5 MPa** (**3843.825 psi**)
Reduction gear	
Reduction gear type	Planetary gear 2-stage reduction gear
Reduction ratio	41.8
Dry weight	**405 kg** (**892.872 lb**)

Take-up roller

Weight	**174 kg** (**383.604 lb**)

Upper roller

Weight	**42 kg** (**92.594 lb**)

Lower roller

Weight	**55 kg** (**121.254 lb**)

Recoil spring

Item	Weight	Quantity
Yoke	**39.3 kg** (**86.6417 lb**)	1
Sems B **M16 x 50**	**0.1 kg** (**0.2205 lb**)	4
Threaded rod	**50.7 kg** (**111.7744 lb**)	1
Groove height N M64	**1.9 kg** (**4.1888 lb**)	1
SP pin 10 x 100	**0.1 kg** (**0.2205 lb**)	1
Recoil spring	**106 kg** (**233.690 lb**)	1
Grease cylinder assembly	**41.1 kg** (**90.6100 lb**)	1
Sems B M16 x 65	**0.2 kg** (**0.4409 lb**)	2
Assembly (total)	**240.2 mm** (**9.4567 in**)	
Mounting length of spring	**776 mm** (**30.551 in**)	

Shoe

	Weight or Quantity
600 grouser (shoe)	**1850 kg** (**4078.552 lb**)
Link	1 pair
Shoe	50
Bolt	200
Nut	200
700 grouser (shoe)	**2020 kg** (**4453.338 lb**)
Link	1 pair
Shoe	50
Bolt	200
Nut	200
800 grouser (shoe)	**2185 kg** (**4817.100 lb**)
Link	1 pair

	Weight or Quantity
Shoe	50
Bolt	200
Nut	200

Upper component

Swing unit

Swing motor assembly		
Swing motor		
	Manufacturer	Kawasaki Heavy Industries, Ltd.
	Motor type	Fixed displacement piston motor
		With parking brake
	Intake amount	**158.9 cm³/rev** (**9.70 in³/rev**)
	Operating pressure	**30.4 MPa** (**4410 psi**)
	Operating flow	**246 L/min** (**65 US gpm**)
	Mechanical brake torque	**967 N·m** (**713.223 lb ft**) min.
	Brake off pressure	**3.1 MPa** (**450 psi**) or less
	Relief valve set pressure	**30.4 MPa** (**4410 psi**)
Swing reduction gear		
	Reduction gear type	Planetary gear 2-stage reduction gear
Dry weight		**436 kg** (**961.215 lb**)
Turntable bearing		
	No. of teeth	86
	Weight	**497.8 kg** (**1097.461 lb**)
Counterweight		
	Weight	**5300 kg** (**11684.500 lb**)

Engine-related

Engine

Engine model name	Isuzu 6HK1X diesel engine
Engine type	4-cycle, water-cooled, overhead camshaft type straight cylinder, direct fuel injection type (electronic control)
Number of cylinders-bore-stroke	6 - ∅**115 mm** (**4.53 in**) - **125 mm** (**4.92 in**)
Total displacement	**7.790 L** (**2.058 US gal**)
Compression ratio	17.5
Rated output	**199 - 205 kW** (**270.6 - 278.7 Hp**) / **2000 RPM**
Maximum torque	**989 N·m** (**729.45 lb ft**) / about **1500 RPM**
Fuel consumption ratio	***** **g/kWh** at **1800 RPM**
Engine dry weight	About **640 kg** (**1410.958 lb**)
Engine dimension	L **1382 mm** (**54.4094 in**) - W **992 mm** (**39.055 in**) - H **1164 mm** (**45.8268 in**) (with fan)
Cooling fan	∅**850 mm** (**33.465 in**) - suction type - 6 vanes, plastic and steel
	With bell mouth-type fan guide
Pulley ratio	0.80 (reduction)
Charging generator	**24 V 50 A** AC type
Starter motor	**24 V 5 kW** (**6.8 Hp**) reduction type
Coolant capacity	**14.5 l** (**14.500 US gal**)
Oil pan capacity	Max: **38 L** (**10 US gal**) Min: **28 L** (**7.4 US gal**) (not including oil filter)
Direction of rotation	Right (viewed from fan side)
	Compliant with JISD 0006-2010

Muffler

Manufacturer	Sankei Giken Kogyo Co., Ltd.
Type	D 283.2 x 780 L
Maximum displacement	**45300 L/min** (**11967.0 US gpm**)
Weight	**19 kg** (**41.888 lb**)

Air cleaner (double element)

Manufacturer	Nippon Donaldson, Ltd.
Element (outer)	
Element (inner)	
Weight	**13 kg** (**28.6601 lb**)

Radiator

Manufacturer		T.Rad Co., Ltd.
Oil cooler	Weight	**34 kg** (**74.9572 lb**)
	Oil volume	**16 L** (**4.23 US gal**)
Radiator	Weight	**21.1 kg** (**46.5175 lb**)
	Coolant capacity	**9.4 l** (**9.400 US gal**)
Air cooler	Weight	**18.1 kg** (**39.9037 lb**)
	Capacity	-
Fuel cooler	Weight	**6 kg** (**13.2277 lb**)
	Capacity	**2.1 L** (**0.555 US gal**)
Total weight		**155 kg** (**341.7165 lb**)

Hydraulic device

Hydraulic pump

Manufacturer			Kawasaki Heavy Industries, Ltd.
Main pump			
	Pump type		Double variable displacement piston pump
	Displacement capacity		**136.7 cm³/rev** (**8.342 in³/rev**) x 2
	Operating pressure	Rated	**34.3 MPa** (**4975 psi**)
		Maximum	**37.3 MPa** (**5337.84 psi**)
	Input revolution speed		**1800 RPM**
	Maximum discharge flow		**246 L/min** (**65 US gpm**) x 2 (at Pd = **3.0 MPa** (**435.2 psi**) **1800 RPM**) **243 L/min** (**64.2 US gpm**) x 2 (at Pd = **8.0 MPa** (**1160.4 psi**) **1800 RPM**)
Pilot pump			
	Pump type		Gear pump
	Displacement capacity		**15 cm³/rev** (**0.92 in³/rev**)
	Operating pressure		**3.92 MPa** (**568.596 psi**)
	Maximum discharge flow		**27 L/min** (**7.1 US gpm**) (at **1800 RPM**)
Control method			Hydraulic simultaneous constant output control
			Maximum flow adjustment control through external commands (negative control)
			Maximum flow adjustment control through external command milli-amp (negative control, front side)
			Setting horsepower adjustment control through external command milli-amp
Dry weight			**130 kg** (**286.6009 lb**)

Control-related

Control valve

Manufacturer	KYB Corporation
Maximum flow	**243 L/min** (**64.2 US gpm**) (at **1800 RPM**)
Overload set pressure	**29.4 MPa** (**4264 psi**) boom down
	39.2 MPa (**5686 psi**) boom up/arm/bucket
Main relief set pressure	**34.3 MPa** (**4975 psi**)
(at boosting)	**37.3 MPa** (**5410 psi**)
Foot relief set pressure	**2.55 MPa** (**370 psi**)
Function	Straight travel circuit
	Boom-up/arm 2 pumps internal flow
	Boom and arm load holding circuit
	Boom-down regenerative circuit
	Bucket-close regenerative circuit
	Arm-in forced regenerative circuit
	Swing priority variable orifice
	2 pumps flow
	Variable foot relief
Weight	**200 kg** (**440.925 lb**)

Solenoid valve (5 stack)

Manufacturer	Yuken Kogyo Co., Ltd.	
Valve specifications		
Maximum flow	P→B **25 l/min** (**6.604 US gpm**) Other **5 l/min** (**1.321 US gpm**)	
Rated pressure	**4.5 MPa** (**652 psi**)	
Port size	P.T.B port	**G3/8**
	C1, C2, C3, C4, C5 , ports	**G1/4**
Solenoid specifications		
Operating voltage	DC **20 - 32 V**	
Power consumption	**17 W** max.	
Weight	**6.7 kg** (**14.7710 lb**)	

Valve for left/right operations

Manufacturer		Kawasaki Heavy Industries, Ltd.
Operating pressure		**3.92 MPa** (**569 psi**)
Secondary pressure		**0.64 - 2.45 MPa** (**92.8320 - 355 psi**) primary short type
Operating angle	1,3 port	**19 °**
	2,4 port	**25 °**
Weight		**1.9 kg** (**4.1888 lb**)

Remote control valve for travel operations

Manufacturer	Kawasaki Heavy Industries, Ltd.
Operating pressure	**3.92 MPa** (**568.610 psi**)
Secondary pressure	**0.64 - 2.45 MPa** (**92.8 - 355.4 psi**) primary short type
Operating angle	**12.4 °**
Weight	**4.1 kg** (**9.0390 lb**)

Remote control valve characteristic diagram

Option remote control valve control diagram

Ports 1, 3

A. Secondary pressure [MPa (psi)]
B. Operating torque [Nm (lbf ft)]
C. Push rod stroke [mm (in)]
D. Operating angle [deg.]
1 Secondary pressure
2 Independent operating torque (port 1)
3 Independent operating torque (port 3)

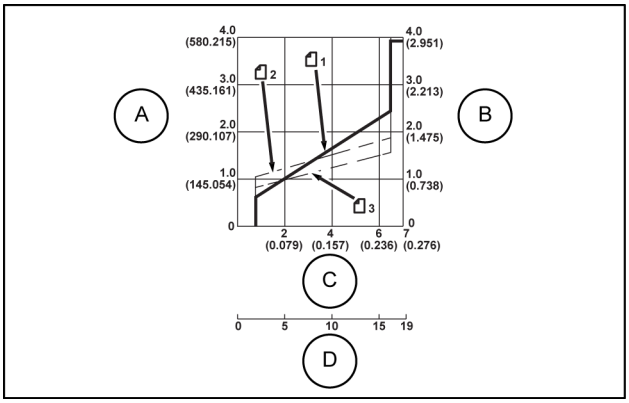

SMIL15CEX7162AB 1

Ports 2, 4

A. Secondary pressure [MPa (psi)]
B. Operating torque [Nm (lbf ft)]
C. Push rod stroke [mm (in)]
D. Operating angle [deg.]
1 Secondary pressure
2 ndependent operating torque

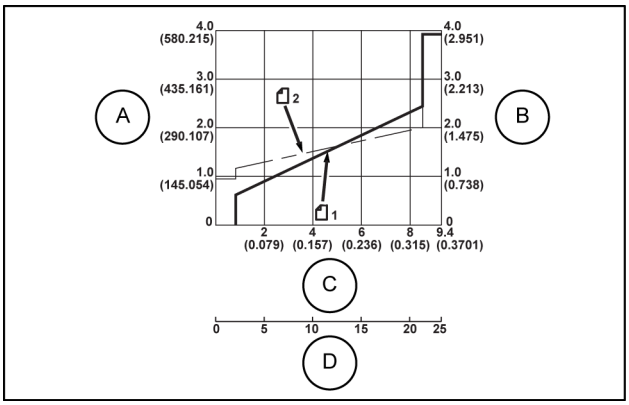

SMIL15CEX7163AB 2

Travel remote control valve control diagram

A. Secondary pressure [MPa (psi)]
B. Push rod stroke [mm (in)]
C. Pedal operating angle [deg.]
1 Secondary pressure

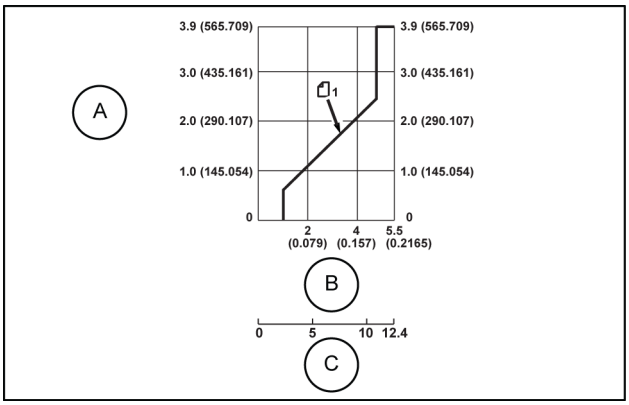

SMIL14CEX0423AB 3

Cushion valve (heat circuit, with shuttle valve)

Manufacturer	KYB-YS CO., LTD
Port size	**G3/8** (A - P ports)
	G1/4 (Q - V ports)
Weight	**12.5 kg** (**27.5578 lb**)

Center joint

Operating pressure	High-pressure passage (ABCD)	**34.3 MPa** (**4975 psi**)
	Drain port (T)	**1.0 MPa** (**145 psi**)
	Pilot port (P)	**3.9 MPa** (**566 psi**)
Flow amount	High-pressure passage (ABCD)	**360 l/min** (**360.000 US gpm**)
	Drain port (T)	**40 l/min** (**40.000 US gpm**)
	Pilot port (P)	**31 l/min** (**31.000 US gpm**)
Port A	Forward right	**G1**

Port B	Forward left	**G1**
Port C	Backward right	**G1**
Port D	Backward left	**G1**
Port T	Drain port	**G1/2**
Port P	Pilot port	**G1/4**
Weight	**55.5 kg** (**122.357 lb**)	

Backhoe attachment

Cylinder

Boom cylinder	
Manufacturer	**KYB Corporation**
Cylinder bore	∅ **140 mm** (**5.512 in**)
Rod diameter	∅ **95 mm** (**3.740 in**)
Maximum retracted length	**1918 mm** (**75.512 in**)
Stroke	**1369 mm** (**53.898 in**)
Weight	**237 kg** (**522.4956 lb**)

Arm cylinder	
Manufacturer	**KYB Corporation**
Cylinder bore	∅ **150 mm** (**5.906 in**)
Rod diameter	∅ **105 mm** (**4.134 in**)
Maximum retracted length	**2286 mm** (**90.000 in**)
Stroke	**1650 mm** (**64.961 in**)
Weight	**350.3 kg** (**772.2793 lb**)

Bucket cylinder	
Manufacturer	**KYB Corporation**
Cylinder bore	∅ **135 mm** (**5.315 in**)
Rod diameter	∅ **90 mm** (**3.543 in**)
Maximum retracted length	**1692 mm** (**66.614 in**)
Stroke	**1078 mm** (**42.441 in**)
Weight	**207 kg** (**456.3569 lb**)

Weight

Divided Weight

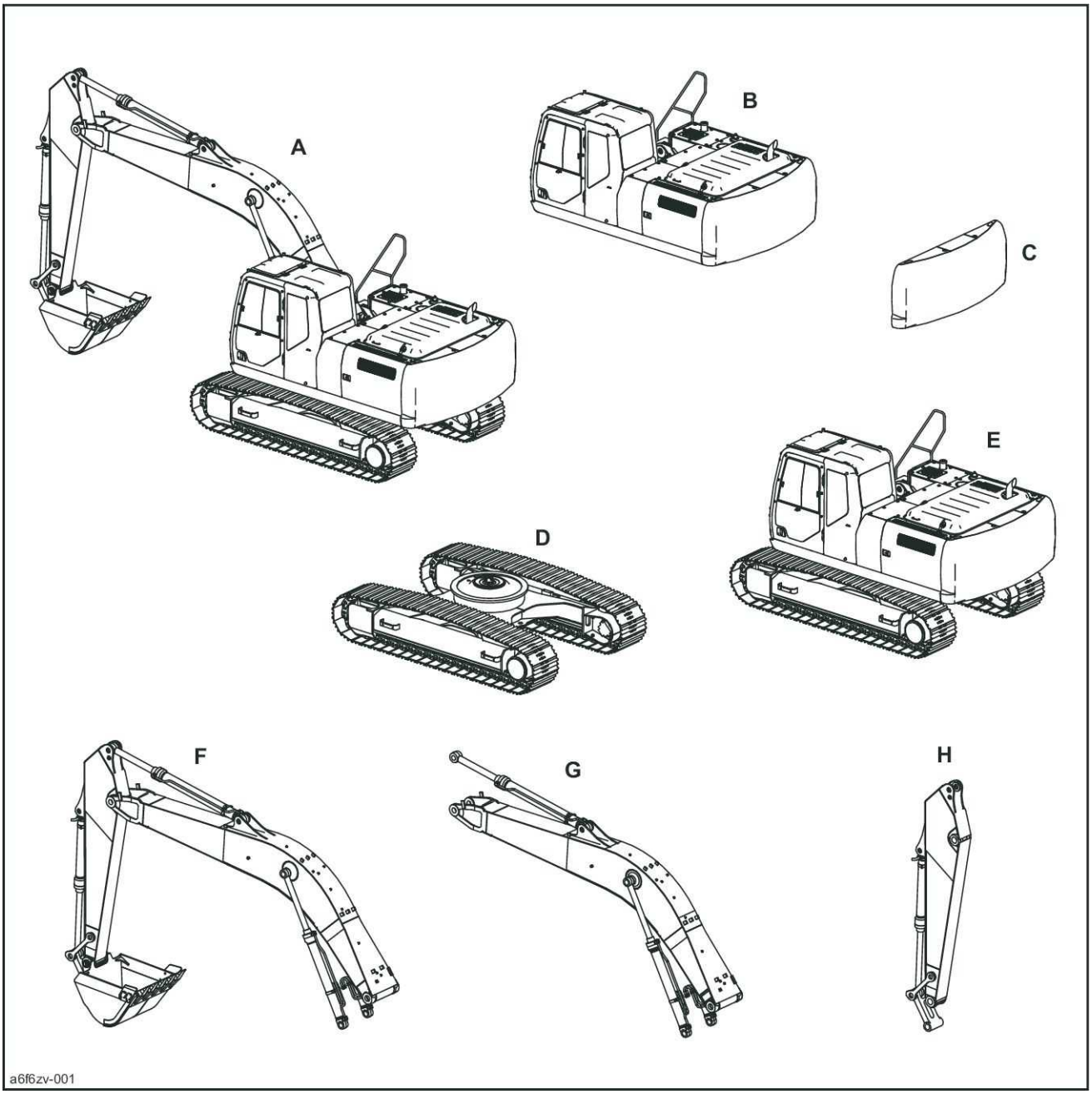

A6F6ZV-001 1

Code	Component name	Weight
A	Operating weight	**29800 kg** (**65697.754 lb**)
B	Upper component (including counterweight and turntable bearing)	**12720 kg** (**28042.800 lb**)
C	Counterweight	**5320 kg** (**11728.592 lb**)
D	Lower component (with grouser shoe)	**11100 kg** (**24471.311 lb**)
E	Main unit weight	**23900 kg** (**52690.481 lb**)
F	Attachments	**5880 kg** (**12963.181 lb**)
G	Boom (including cylinders)	**3300 kg** (**7275.255 lb**)
H	Arm (including cylinders and linkage)	**1630 kg** (**3593.535 lb**)

* The weights displayed are approximate weights.

Stand alone part weight

	Component name	Weight
1	Travel unit	**491 kg** (**1082.470 lb**)
2	Take-up roller	**174 kg** (**383.604 lb**)
3	Upper roller	**42 kg** (**92.594 lb**)
4	Lower roller	**55 kg** (**121.254 lb**)
5	Swing unit (including pinion)	**437 kg** (**963.420 lb**)
6	Turntable bearing	**498 kg** (**1097.902 lb**)
7	Engine (including engine oil)	**647 kg** (**1426.391 lb**)
8	Radiator	**155 kg** (**341.717 lb**)
9	Hydraulic pump	**130 kg** (**286.601 lb**)
10	Fuel tank	**187 kg** (**412.264 lb**)
11	Hydraulic tank	**149 kg** (**328.489 lb**)
12	Control valve	**200 kg** (**440.925 lb**)
13	Center joint	**56 kg** (**123.459 lb**)
14	Boom	**2135 kg** (**4706.869 lb**)

Shoe weight (per side)

	Component name	Weight
1	**600 mm** (**23.62 in**) grouser shoe	**1850 kg** (**4078.552 lb**)
2	**700 mm** (**27.56 in**) grouser shoe	**2020 kg** (**4453.338 lb**)
3	**800 mm** (**31.496 in**) grouser shoe	**2185 kg** (**4817.100 lb**)

Arm weight

	Component name	Weight
1	Standard arm (EM3 HD O1 GB)	**1130 kg** (**2491.224 lb**)
2	Standard arm (EM3 HD O12 GB)	**1135 kg** (**2502.247 lb**)
3	Short arm (EM3 HD O1 GB)	**962 kg** (**2120.847 lb**)
4	Short arm (EM3 HD O12 GB)	**966 kg** (**2129.6655 lb**)
5	Long arm (EM3 O1 PL GB)	**1152 kg** (**2539.725 lb**)
6	Long arm (EM3 O12 PL GB)	**1159 kg** (**2555.158 lb**)

Dimension

Standard arm [3.18 m (10.4331 ft)]

NOTE: *Numbers are subject to change without notice due to design change or other reason.*
The diagrams give values that include the shoe lug height "a" [***26 mm*** *(****1.024 in****)].*

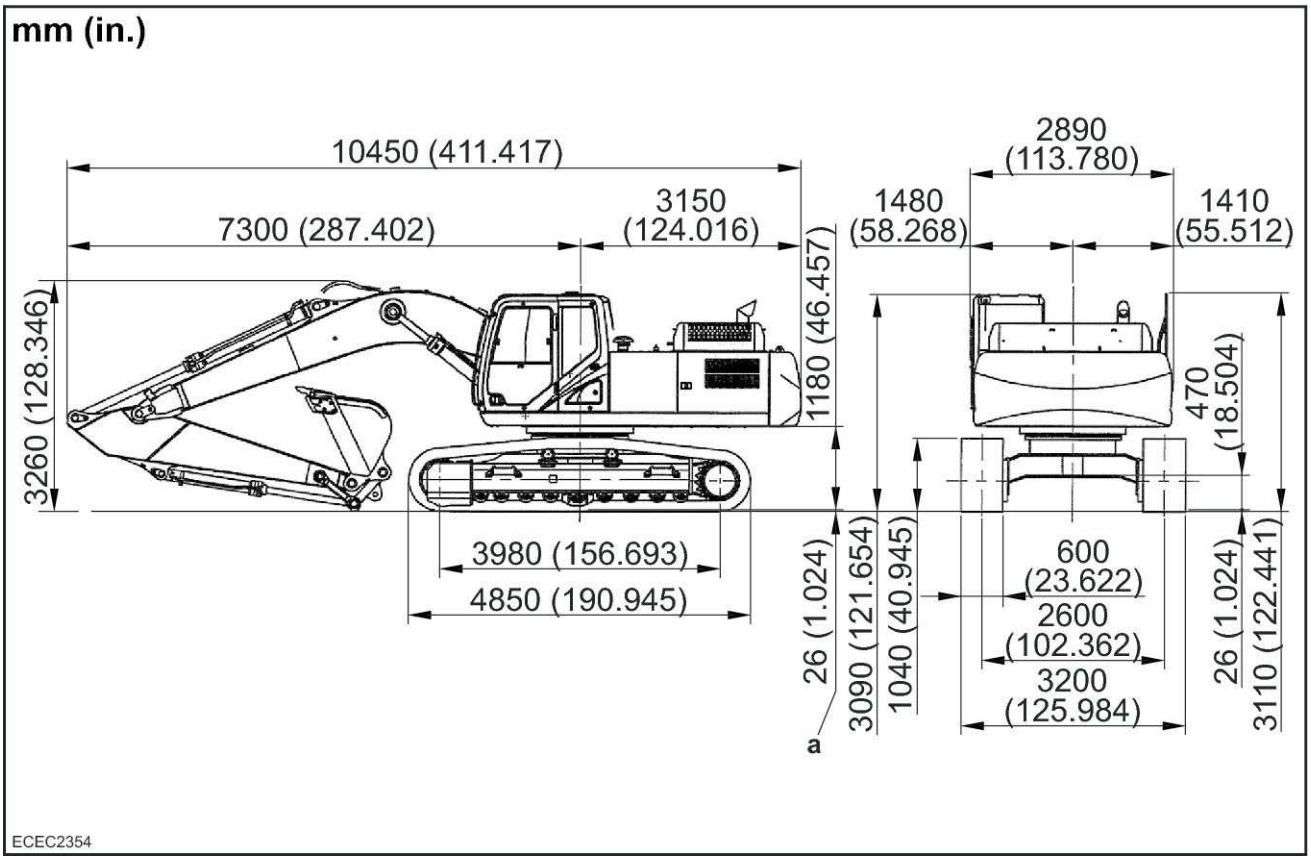

ECEC2354 1

Short arm [2.65 m (8.6942 ft)]

NOTE: *Numbers are subject to change without notice due to design change or other reason.*
The diagrams give values that include the shoe lug height "a" [***26 mm*** *(****1.024 in****)].*

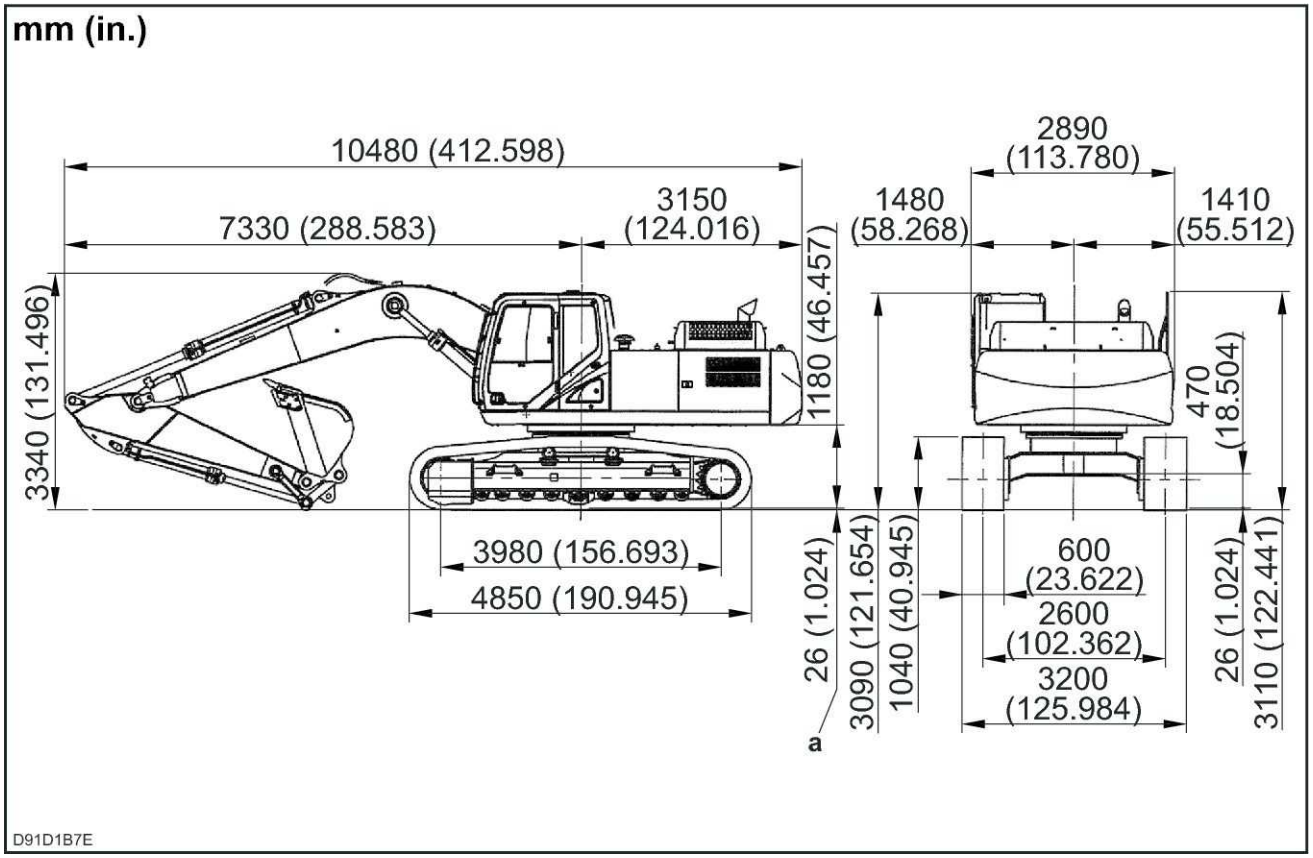

D91D1B7E 2

Long arm [3.66 m (12.0079 ft)]

NOTE: *Numbers are subject to change without notice due to design change or other reason.*
The diagrams give values that include the shoe lug height "a" [***26 mm*** *(****1.024 in****)].*

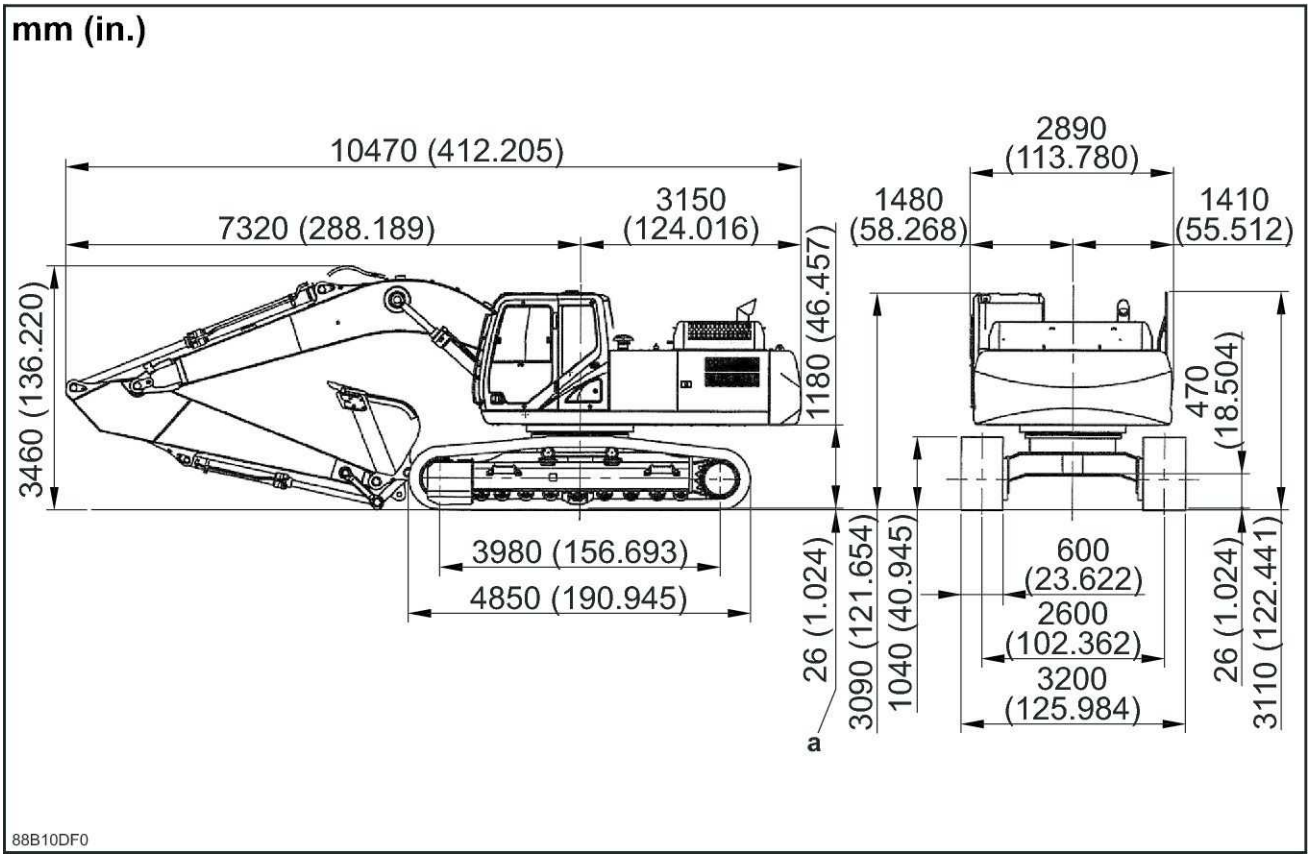

88B10DF0 3

Conversion factors

Unit conversion rate

Gravitational unit	- x → ← ÷ -	SI unit
kgf	9.807	N
lbf	4.448	N
kgf•cm	0.0981	N•m
lbf•ft	1.356	N•m
lbf•in	0.113	N•m
kgf/cm^2	0.0981	MPa
atm	0.1013	MPa
lbf/in^2	0.0069	MPa
mm Hg	133.3	Pa
in Hg	3386	Pa
kgf· m/s	0.00981	kW
lbf•ft/s	0.00136	kW
PS	0.7355	kW
HP	0.746	kW
kgf•m	9.807	J
kcal	4186	J
kgf•s/cm^2	98067	Pa•s
cP	0.001	Pa•s
P	0.1	Pa•s
cSt	1 x 10^{-6}	m^2/s
St	0.0001	m^2/s

Length

Millimeters to inches

mm	In.	mm	In.	mm	In.	mm	In.
1	0.0394	26	1.0236	51	2.0079	76	2.9921
2	0.0787	27	1.0630	52	2.0472	77	3.0315
3	0.1181	28	1.1024	53	2.0866	78	3.0709
4	0.1575	29	1.1417	54	2.1260	79	3.1102
5	0.1969	30	1.1811	55	2.1654	80	3.1496
6	0.2362	31	1.2205	56	2.2047	81	3.1890
7	0.2756	32	1.2598	57	2.2441	82	3.2283
8	0.3150	33	1.2992	58	2.2835	83	3.2677
9	0.3543	34	1.3386	59	2.3228	84	3.3071
10	0.3937	35	1.3780	60	2.3622	85	3.3465
11	0.4331	36	1.4173	61	2.4016	86	3.3858
12	0.4724	37	1.4567	62	2.4409	87	3.4252
13	0.5118	38	1.4961	63	2.4803	88	3.4646
14	0.5512	39	1.5354	64	2.5197	89	3.5039
15	0.5906	40	1.5748	65	2.5591	90	3.5433
16	0.6299	41	1.6142	66	2.5984	91	3.5827
17	0.6693	42	1.6535	67	2.6378	92	3.6220
18	0.7087	43	1.6929	68	2.6772	93	3.6614
19	0.7480	44	1.7323	69	2.7165	94	3.7008
20	0.7874	45	1.7717	70	2.7559	95	3.7402
21	0.8268	46	1.8110	71	2.7953	96	3.7795
22	0.8661	47	1.8504	72	2.8346	97	3.8189
23	0.9055	48	1.8898	73	2.8740	98	3.8583
24	0.9449	49	1.9291	74	2.9134	99	3.8976
25	0.9843	50	1.9685	75	2.9528	100	3.9370

Inches to millimeters

in.	mm	in.	mm	in.	mm	in.	mm
1/64	0.3969	17/64	6.7469	33/64	13.0969	49/64	19.4469
1/32	0.7938	9/32	7.1438	17/32	13.4938	25/32	19.8438
3/64	1.1906	19/64	7.5406	35/64	13.8906	51/64	20.2406
1/16	1.5875	5/16	7.9375	9/16	14.2875	13/16	20.6375
5/64	1.9844	21/64	8.3344	37/64	14.6844	53/64	21.0344
3/32	2.3813	11/32	8.7313	19/32	15.0813	27/32	21.4313
7/64	2.7781	23/64	9.1281	39/64	15.4781	55/64	21.8281
1/8	3.1750	3/8	9.5250	5/8	15.8750	7/8	22.2250
9/64	3.5719	25/64	9.9218	41/64	16.2719	57/64	22.6219
5/32	3.9688	13/32	10.3188	21/32	16.6688	29/32	23.0188
11/64	4.3656	27/64	10.7156	43/64	17.0656	59/64	23.4156
3/16	4.7625	7/16	11.1125	11/16	17.4625	15/16	23.8125
13/64	5.1594	29/64	11.5094	45/64	17.8594	61/64	24.2094
7/32	5.5563	15/32	11.9063	23/32	18.2563	31/32	24.6063
15/64	5.9531	31/64	12.3031	47/64	18.6531	63/64	25.0031
1/4	6.3500	1/2	12.7000	3/4	19.0500	1	25.4000

Feet to meters

ft.	0	1	2	3	4	5	6	7	8	9	ft.
	m	m	m	m	m	m	m	m	m	m	
----		0.305	0.610	0.914	1.219	1.524	1.829	2.134	2.438	2.743	----
10	3.048	3.353	3.658	3.962	4.267	4.572	4.877	5.182	5.486	5.791	10
20	6.096	6.401	6.706	7.010	7.315	7.620	7.925	8.230	8.534	8.839	20
30	9.144	9.449	9.754	10.058	10.363	10.668	10.973	11.278	11.582	11.887	30
40	12.192	12.497	12.802	13.106	13.411	13.716	14.021	14.326	14.630	14.935	40
50	15.24	15.545	15.850	16.154	16.459	16.764	17.069	17.374	17.678	17.983	50
60	18.288	18.593	18.898	19.202	19.507	19.812	20.117	20.422	20.726	21.031	60
70	21.336	21.641	21.946	22.250	22.555	22.860	23.165	23.470	23.774	24.079	70
80	24.384	24.689	24.994	25.298	25.603	25.908	26.213	26.518	26.822	27.127	80
90	27.432	27.737	28.042	28.346	28.651	28.956	29.261	29.566	29.870	30.175	90
100	30.480	30.785	31.090	31.394	31.699	32.004	32.309	32.614	32.918	33.223	100

Meters to feet

m	0	1	2	3	4	5	6	7	8	9	m
	ft.	ft.	ft.	ft.	ft.	ft.	ft.	ft.	ft.	ft.	
----		3.2808	6.5617	9.8425	13.1234	16.4042	19.685	22.9659	26.2467	29.5276	----
10	32.8084	36.0892	39.3701	42.6509	45.9318	49.2126	52.4934	55.7743	59.0551	62.3360	10
20	65.6168	68.8976	72.1785	75.4593	78.7402	82.0210	85.3018	88.5827	91.8635	95.1444	20
30	98.4252	101.7060	104.9869	108.2677	111.5486	114.8294	118.1102	121.3911	124.6719	127.9528	30
40	131.2336	134.5144	137.7953	141.0761	144.3570	147.6378	150.9186	154.1995	157.4803	160.7612	40
50	164.0420	167.3228	170.6037	173.8845	177.1654	180.4462	183.7270	187.0079	190.2887	193.5696	50
60	196.8504	200.1312	203.4121	206.6929	209.9738	213.2546	216.5354	219.8163	223.0971	226.3780	60
70	229.6588	232.9396	236.2205	239.5013	242.7822	246.063	249.3438	252.6247	255.9055	259.1864	70
80	262.4672	265.7480	269.0289	272.3097	275.5906	278.8714	282.1522	285.4331	288.7139	291.9948	80
90	295.2756	298.5564	301.8373	305.1181	308.3990	311.6798	314.9606	318.2415	321.5223	324.8031	90
100	328.0840	331.3648	334.6457	337.9265	341.2073	344.4882	347.7690	351.0499	354.3307	357.6115	100

Miles to kilometers

miles	0	1	2	3	4	5	6	7	8	9	miles
	km	km	km	km	km	km	km	km	km	km	
----		1.609	3.219	4.828	6.437	8.047	9.656	11.265	12.875	14.484	----
10	16.093	17.703	19.312	20.921	22.531	24.140	25.750	27.359	28.968	30.578	10
20	32.187	33.796	35.406	37.015	38.624	40.234	41.843	43.452	45.062	46.671	20
30	48.280	49.890	51.499	53.108	54.718	56.327	57.936	59.546	61.155	62.764	30
40	64.374	65.983	67.592	69.202	70.811	72.420	74.030	75.639	77.249	78.858	40
50	80.467	82.077	83.686	85.295	86.905	88.514	90.123	91.733	93.342	94.951	50
60	96.561	98.170	99.779	101.39	102.998	104.607	106.217	107.826	109.435	111.045	60
70	112.654	114.263	115.873	117.482	119.091	120.701	122.310	123.919	125.529	127.138	70
80	128.748	130.357	131.966	133.576	135.185	136.794	138.404	140.013	141.622	143.232	80
90	144.841	146.450	148.060	149.669	151.278	152.888	154.497	156.106	157.716	159.325	90
100	160.934	162.544	164.153	165.762	167.372	168.981	170.590	172.200	173.809	175.418	100

Kilometers to miles

km	0	1	2	3	4	5	6	7	8	9	km
	miles	miles	miles	miles	miles	miles	miles	miles	miles	miles	
----		0.621	1.243	1.864	2.485	3.107	3.728	4.350	4.971	5.592	----
10	6.214	6.835	7.456	8.078	8.699	9.321	9.942	10.563	11.185	11.806	10
20	12.427	13.049	13.670	14.292	14.913	15.534	16.156	16.777	17.398	18.020	20
30	18.641	19.263	19.884	20.505	21.127	21.748	22.369	22.991	23.612	24.233	30
40	24.855	25.476	26.098	26.719	27.340	27.962	28.583	29.204	29.826	30.447	40
50	31.069	31.690	32.311	32.933	33.554	34.175	34.797	35.418	36.040	36.661	50
60	37.282	37.904	38.525	39.146	39.768	40.389	41.010	41.632	42.253	42.875	60
70	43.496	44.117	44.739	45.360	45.981	46.603	47.224	47.846	48.467	49.088	70
80	49.710	50.331	50.952	51.574	52.195	52.817	53.438	54.059	54.681	55.302	80
90	55.923	56.545	57.166	57.788	58.409	59.03	59.652	60.273	60.894	61.516	90
100	62.137	62.758	63.380	64.001	64.623	65.244	65.865	66.487	67.108	67.729	100

Area

Square inches to square centimeters

in^2	0	1	2	3	4	5	6	7	8	9	in^2
	cm^2	cm^2	cm^2	cm^2	cm^2	cm^2	cm^2	cm^2	cm^2	cm^2	
----		6.452	12.903	19.355	25.806	32.258	38.710	45.161	51.613	58.065	----
10	64.516	70.968	77.419	83.871	90.323	96.774	103.226	109.677	116.129	122.581	10
20	129.032	135.484	141.935	148.387	154.839	161.290	167.742	174.194	180.645	187.097	20
30	193.548	200.000	206.452	212.903	219.355	225.806	232.258	238.710	245.161	251.613	30
40	258.065	264.516	270.968	277.419	283.871	290.323	296.774	303.226	309.677	316.129	40
50	322.581	329.032	335.484	341.935	348.387	354.839	361.290	367.742	374.194	380.645	50
60	387.097	393.548	400.000	406.452	412.903	419.355	425.806	432.258	438.710	445.161	60
70	451.613	458.065	464.516	470.968	477.419	483.871	490.323	496.774	503.226	509.677	70
80	516.129	522.581	529.032	535.484	541.935	548.387	554.839	561.290	567.742	574.194	80
90	580.645	587.097	593.548	600.000	606.452	612.903	619.355	625.806	632.258	638.710	90
100	645.161	651.613	658.065	664.516	670.968	677.419	683.871	690.323	696.774	703.226	100

Square centimeters to square inches

cm^2	0	1	2	3	4	5	6	7	8	9	cm^2
	in^2	in^2	in^2	in^2	in^2	in^2	in^2	in^2	in^2	in^2	
----		0.155	0.310	0.465	0.620	0.775	0.930	1.085	1.240	1.395	----
10	1.550	1.705	1.860	2.015	2.170	2.325	2.480	2.635	2.790	2.945	10
20	3.100	3.255	3.410	3.565	3.720	3.875	4.030	4.185	4.340	4.495	20
30	4.650	4.805	4.960	5.115	5.270	5.425	5.580	5.735	5.890	6.045	30
40	6.200	6.355	6.510	6.665	6.820	6.975	7.130	7.285	7.440	7.595	40
50	7.750	7.905	8.060	8.215	8.370	8.525	8.680	8.835	8.990	9.145	50
60	9.300	9.455	9.610	9.765	9.920	10.075	10.230	10.385	10.540	10.695	60
70	10.850	11.005	11.160	11.315	11.470	11.625	11.780	11.935	12.090	12.245	70
80	12.400	12.555	12.710	12.865	13.020	13.175	13.330	13.485	13.640	13.795	80
90	13.950	14.105	14.260	14.415	14.570	14.725	14.880	15.035	15.190	15.345	90
100	15.500	15.655	15.810	15.965	16.120	16.275	16.430	16.585	16.740	16.895	100

Volume

Cubic inches to cubic centimeters

in^3	0	1	2	3	4	5	6	7	8	9	in^3
	cm^3 (cc)	cm^3 (cc)	cm^3 (cc)	cm^3 (cc)	cm^3 (cc)	cm^3 (cc)	cm^3 (cc)	cm^3 (cc)	cm^3 (cc)	cm^3 (cc)	
----		16.387	32.774	49.161	65.548	81.936	98.323	114.710	131.097	147.484	----
10	163.871	180.258	196.645	213.032	229.419	245.807	262.194	278.581	294.968	311.355	10
20	327.742	344.129	360.516	376.903	393.290	409.678	426.065	442.452	458.839	475.226	20
30	491.613	508.000	524.387	540.774	557.161	573.549	589.936	606.323	622.710	639.097	30
40	655.484	671.871	688.258	704.645	721.033	737.420	753.807	770.194	786.581	802.968	40
50	819.355	835.742	852.129	868.516	884.904	901.291	917.678	934.065	950.452	966.839	50
60	983.226	999.613	1016.000	1032.387	1048.775	1065.162	1081.549	1097.936	1114.323	1130.710	60
70	1147.097	1163.484	1179.871	1196.258	1212.646	1229.033	1245.420	1261.807	1278.194	1294.581	70
80	1310.968	1327.355	1343.742	1360.130	1376.517	1392.904	1409.291	1425.678	1442.065	1458.452	80
90	1474.839	1491.226	1507.613	1524.001	1540.388	1556.775	1573.162	1589.549	1605.936	1622.323	90
100	1638.710	1655.097	1671.484	1687.872	1704.259	1720.646	1737.033	1753.420	1769.807	1786.194	100

Cubic centimeters to cubic inches

cm^3 (cc)	0	1	2	3	4	5	6	7	8	9	cm^3 (cc)
	in^3	in^3	in^3	in^3	in^3	in^3	in^3	in^3	in^3	in^3	
----		0.0610	0.1220	0.1831	0.2441	0.3051	0.3661	0.4272	0.4882	0.5492	----
10	0.6102	0.6713	0.7323	0.7933	0.8543	0.9154	0.9764	1.0374	1.0984	1.1594	10
20	1.2205	1.2815	1.3425	1.4035	1.4646	1.5256	1.5866	1.6476	1.7087	1.7697	20
30	1.8307	1.8917	1.9528	2.0138	2.0748	2.1358	2.1968	2.2579	2.3189	2.3799	30
40	2.4409	2.5020	2.5630	2.6240	2.6850	2.7461	2.8071	2.8681	2.9291	2.9902	40
50	3.0512	3.1122	3.1732	3.2343	3.2953	3.3563	3.4173	3.4784	3.5394	3.6004	50
60	3.6614	3.7224	3.7835	3.8445	3.9055	3.9665	4.0276	4.0886	4.1496	4.2106	60
70	4.2717	4.3327	4.3937	4.4547	4.5157	4.5768	4.6378	4.6988	4.7598	4.8209	70
80	4.8819	4.9429	5.0039	5.0650	5.1260	5.1870	5.2480	5.3091	5.3701	5.4311	80
90	5.4921	5.5531	5.6142	5.6752	5.7362	5.7972	5.8583	5.9193	5.9803	6.0413	90
100	6.1024	6.1634	6.2244	6.2854	6.3465	6.4075	6.4685	6.5295	6.5905	6.6516	100

Gallons (U.S) to liters

U.S-.gal.	0	1	2	3	4	5	6	7	8	9	U.S-.gal.
	liters	liters	liters	liters	liters	liters	liters	liters	liters	liters	
----		3.7853	7.5707	11.3560	15.1413	18.9266	22.7120	26.4973	30.2826	34.0680	----
10	37.8533	41.6386	45.4239	49.2093	52.9946	56.7799	60.5653	64.3506	68.1359	71.9213	10
20	75.7066	79.4919	83.2772	87.0626	90.8479	94.6332	98.4186	102.2039	105.9892	109.7745	20
30	113.5599	117.3452	121.1305	124.9159	128.7012	132.4865	136.2718	140.0572	143.8425	147.6278	30
40	151.4132	155.1985	158.9838	162.7691	166.5545	170.3398	174.1251	177.9105	181.6958	185.4811	40
50	189.2665	193.0518	196.8371	200.6224	204.4078	208.1931	211.9784	215.7638	219.5491	223.3344	50
60	227.1197	230.9051	234.6904	238.4757	242.2611	246.0464	249.8317	253.6170	257.4024	261.1877	60
70	264.9730	268.7584	272.5437	276.3290	280.1143	283.8997	287.6850	291.4703	295.2557	299.0410	70
80	302.8263	306.6116	310.3970	314.1823	317.9676	321.7530	325.5383	329.3236	333.1090	336.8943	80
90	340.6796	344.4649	348.2503	352.0356	355.8209	359.6063	363.3916	367.1769	370.9622	374.7476	90
100	378.5329	382.3182	386.1036	389.8889	393.6742	397.4595	401.2449	405.0302	408.8155	412.6009	100

Liters to gallons (U.S)

liters	0	1	2	3	4	5	6	7	8	9	liters
	U.S.gal.	U.S.gal.	U.S.gal.	U.S.gal.	U.S.gal.	U.S.gal.	U.S.gal.	U.S.gal.	U.S.gal.	U.S.gal.	
----		0.2642	0.5284	0.7925	1.0567	1.3209	1.5851	1.8492	2.1134	2.3776	----
10	2.6418	2.9060	3.1701	3.4343	3.6985	3.9627	4.2268	4.4910	4.7552	5.0194	10
20	5.2836	5.5477	5.8119	6.0761	6.3403	6.6044	6.8686	7.1328	7.3970	7.6612	20
30	7.9253	8.1895	8.4537	8.7179	8.9820	9.2462	9.5104	9.7746	10.0388	10.3029	30
40	10.5671	10.8313	11.0955	11.3596	11.6238	11.8880	12.1522	12.4164	12.6805	12.9447	40
50	13.2089	13.4731	13.7372	14.0014	14.2656	14.5298	14.7940	15.0581	15.3223	15.5865	50
60	15.8507	16.1148	16.3790	16.6432	16.9074	17.1716	17.4357	17.6999	17.9641	18.2283	60
70	18.4924	18.7566	19.0208	19.2850	19.5492	19.8133	20.0775	20.3417	20.6059	20.8700	70
80	21.1342	21.3984	21.6626	21.9268	22.1909	22.4551	22.7193	22.9835	23.2476	23.5118	80
90	23.7760	24.0402	24.3044	24.5685	24.8327	25.0969	25.3611	25.6252	25.8894	26.1536	90
100	26.4178	26.6820	26.9461	27.2103	27.4745	27.7387	28.0028	28.2670	28.5312	28.7954	100

Gallons (Imp.) to liters

Imp.gal.	0	1	2	3	4	5	6	7	8	9	Imp.gal.
	liters	liters	liters	liters	liters	liters	liters	liters	liters	liters	
----		4.5455	9.0909	13.6364	18.1818	22.7273	27.2727	31.8182	36.3636	40.9091	----
10	45.4545	50.0000	54.5455	59.0909	63.6364	68.1818	72.7273	77.2727	81.8182	86.3636	10
20	90.9091	95.4545	100.0000	104.5455	109.0909	113.6364	118.1818	122.7273	127.2727	131.8182	20
30	136.3636	140.9091	145.4545	150.0000	154.5455	159.0909	163.6364	168.1818	172.7273	177.2727	30
40	181.8182	186.3636	190.9091	195.4545	200.0000	204.5455	209.0909	213.6364	218.1818	222.7273	40
50	227.2727	231.8182	236.3636	240.9091	245.4545	250.0000	254.5455	259.0909	263.6364	268.1818	50
60	272.7273	277.2727	281.8182	286.3636	290.9091	295.4545	300.0000	304.5455	309.0909	313.6364	60
70	318.1818	322.7273	327.2727	331.8182	336.3636	340.9091	345.4545	350.0000	354.5455	359.0909	70
80	363.6364	368.1818	372.7273	377.2727	381.8182	386.3636	390.9091	395.4545	400.0000	404.5455	80
90	409.0909	413.6364	418.1818	422.7273	427.2727	431.8182	436.3636	440.9091	445.4545	450.0000	90
100	454.5455	459.0909	463.6364	468.1818	472.7273	477.2727	481.8182	486.3636	490.9091	495.4545	100

Liters to gallons (Imp.)

liters	0	1	2	3	4	5	6	7	8	9	liters
	Imp.gal.	Imp.gal.	Imp.gal.	Imp.gal.	Imp.gal.	Imp.gal.	Imp.gal.	Imp.gal.	Imp.	Imp.gal.	
----		0.2200	0.4400	0.6600	0.8800	1.1000	1.3200	1.5400	1.7600	1.9800	----
10	2.2000	2.4200	2.6400	2.8600	3.0800	3.3000	3.5200	3.7400	3.9600	4.1800	10
20	4.4000	4.6200	4.8400	5.0600	5.2800	5.5000	5.7200	5.9400	6.1600	6.3800	20
30	6.6000	6.8200	7.0400	7.2600	7.4800	7.7000	7.9200	8.1400	8.3600	8.5800	30
40	8.8000	9.0200	9.2400	9.4600	9.6800	9.9000	10.1200	10.3400	10.5600	10.7800	40
50	11.0000	11.2200	11.4400	11.6600	11.8800	12.1000	12.3200	12.5400	12.7600	12.9800	50
60	13.2000	13.4200	13.6400	13.8600	14.0800	14.3000	14.5200	14.7400	14.9600	15.1800	60
70	15.4000	15.6200	15.8400	16.0600	16.2800	16.5000	16.7200	16.9400	17.1600	17.3800	70
80	17.6000	17.8200	18.0400	18.2600	18.4800	18.7000	18.9200	19.1400	19.3600	19.5800	80
90	19.8000	20.0200	20.2400	20.4600	20.6800	20.9000	21.1200	21.3400	21.5600	21.7800	90
100	22.0000	22.2200	22.4400	22.6600	22.8800	23.1000	23.3200	23.5400	23.7600	23.9800	100

Weight

Pounds to kilograms

lbs.	0	1	2	3	4	5	6	7	8	9	lbs.
	kg	kg	kg	kg	kg	kg	kg	kg	kg	kg	
----		0.454	0.907	1.361	1.814	2.268	2.722	3.175	3.629	4.082	----
10	4.536	4.989	5.443	5.897	6.350	6.804	7.257	7.711	8.165	8.618	10
20	9.072	9.525	9.979	10.433	10.886	11.340	11.793	12.247	12.701	13.154	20
30	13.608	14.061	14.515	14.968	15.422	15.876	16.329	16.783	17.236	17.690	30
40	18.144	18.597	19.051	19.504	19.958	20.412	20.865	21.319	21.772	22.226	40
50	22.680	23.133	23.587	24.040	24.494	24.947	25.401	25.855	26.308	26.762	50
60	27.215	27.669	28.123	28.576	29.030	29.483	29.937	30.391	30.844	31.298	60
70	31.751	32.205	32.658	33.112	33.566	34.019	34.473	34.926	35.380	35.834	70
80	36.287	36.741	37.194	37.648	38.102	38.555	39.009	39.462	39.916	40.370	80
90	40.823	41.277	41.730	42.184	42.637	43.091	43.545	43.998	44.452	44.905	90
100	45.359	45.813	46.266	46.720	47.173	47.627	48.081	48.534	48.988	49.441	100

Kilograms to pounds

kg	0	1	2	3	4	5	6	7	8	9	kg
	lbs.	lbs.	lbs.	lbs.	lbs.	lbs.	lbs.	lbs.	lbs.	lbs.	
----		2.205	4.409	6.614	8.819	11.023	13.228	15.432	17.637	19.842	----
10	22.046	24.251	26.456	28.660	30.865	33.069	35.274	37.479	39.683	41.888	10
20	44.093	46.297	48.502	50.707	52.911	55.116	57.320	59.525	61.730	63.934	20
30	66.139	68.344	70.548	72.753	74.958	77.162	79.367	81.571	83.776	85.981	30
40	88.185	90.39	92.595	94.799	97.004	99.209	101.413	103.618	105.822	108.027	40
50	110.232	112.436	114.641	116.846	119.050	121.255	123.460	125.664	127.869	130.073	50
60	132.278	134.483	136.687	138.892	141.097	143.301	145.506	147.710	149.915	152.120	60
70	154.324	156.529	158.734	160.938	163.143	165.348	167.552	169.757	171.961	174.166	70
80	176.371	178.575	180.780	182.985	185.189	187.394	189.599	191.803	194.008	196.212	80
90	198.417	200.622	202.826	205.031	207.236	209.440	211.645	213.850	216.054	218.259	90
100	220.463	222.668	224.873	227.077	229.282	231.487	233.691	235.896	238.100	240.305	100

Weight kilograms to newtons

kgf	0	1	2	3	4	5	6	7	8	9	kg
	N	N	N	N	N	N	N	N	N	N	
----		9.81	19.61	29.42	39.23	49.03	58.84	68.65	78.45	88.26	----
10	98.07	107.87	117.68	127.49	137.29	147.10	156.91	166.71	176.52	186.33	10
20	196.13	205.94	215.75	225.55	235.36	245.17	254.97	264.78	274.59	284.39	20
30	294.20	304.01	313.81	323.62	333.43	343.23	353.04	362.85	372.65	382.46	30
40	392.27	402.07	411.88	421.69	431.49	441.30	451.11	460.91	470.72	480.53	40
50	490.33	500.14	509.95	519.75	529.56	539.37	549.17	558.98	568.79	578.59	50
60	588.40	598.21	608.01	617.82	627.63	637.43	647.24	657.05	666.85	676.66	60
70	686.47	696.27	706.08	715.89	725.69	735.50	745.31	755.11	764.92	774.73	70
80	784.53	794.34	804.15	813.95	823.76	833.57	843.37	853.18	862.99	872.79	80
90	882.60	892.41	902.21	912.02	921.83	931.63	941.44	951.25	961.05	970.86	90
100	980.67	990.47	1000.28	1010.08	1019.89	1029.70	1039.5	1049.31	1059.12	1068.92	100

Newtons to weight kilograms

N	0	1	2	3	4	5	6	7	8	9	N
	kgf	kgf	kgf	kgf	kgf	kgf	kgf	kgf	kgf	kgf	
----		0.1020	0.2039	0.3059	0.4079	0.5099	0.6118	0.7138	0.8158	0.9177	----
10	1.0197	1.1217	1.2237	1.3256	1.4276	1.5296	1.6315	1.7335	1.8355	1.9375	10
20	2.0394	2.1414	2.2434	2.3453	2.4473	2.5493	2.6513	2.7532	2.8552	2.9572	20
30	3.0591	3.1611	3.2631	3.3651	3.4670	3.5690	3.6710	3.7729	3.8749	3.9769	30
40	4.0789	4.1808	4.2828	4.3848	4.4868	4.5887	4.6907	4.7927	4.8946	4.9966	40
50	5.0986	5.2006	5.3025	5.4045	5.5065	5.6084	5.7104	5.8124	5.9144	6.0163	50
60	6.1183	6.2203	6.3222	6.4242	6.5262	6.6282	6.7301	6.8321	6.9341	7.0360	60
70	7.1380	7.2400	7.3420	7.4439	7.5459	7.6479	7.7498	7.8518	7.9538	8.0558	70
80	8.1577	8.2597	8.3617	8.4636	8.5656	8.6676	8.7696	8.8715	8.9735	9.0755	80
90	9.1774	9.2794	9.3814	9.4834	9.5853	9.6873	9.7893	9.8912	9.9932	10.0952	90
100	10.1972	10.2991	10.4011	10.5031	10.6050	10.7070	10.8090	10.9110	11.0129	11.1149	100

Pressure

Weight pounds/square inch to weight kilograms/square centimeter

lbf/in^2	0	1	2	3	4	5	6	7	8	9	lbf/in^2
(psi)	kgf/cm^2	kgf/cm^2	kgf/cm^2	kgf/cm^2	kgf/cm^2	kgf/cm^2	kgf/cm^2	kgf/cm^2	kgf/cm^2	kgf/cm^2	(psi)
----		0.0703	0.1406	0.2109	0.2812	0.3515	0.4218	0.4921	0.5624	0.6327	----
10	0.7030	0.7733	0.8436	0.9139	0.9842	1.0545	1.1248	1.1951	1.2654	1.3357	10
20	1.4060	1.4763	1.5466	1.6169	1.6872	1.7575	1.8278	1.8981	1.9684	2.0387	20
30	2.1090	2.1793	2.2496	2.3199	2.3902	2.4605	2.5308	2.6011	2.6714	2.7417	30
40	2.8120	2.8823	2.9526	3.0229	3.0932	3.1635	3.2338	3.3041	3.3744	3.4447	40
50	3.5150	3.5853	3.6556	3.7259	3.7962	3.8665	3.9368	4.0071	4.0774	4.1477	50
60	4.2180	4.2883	4.3586	4.4289	4.4992	4.5695	4.6397	4.7100	4.7803	4.8506	60
70	4.9209	4.9912	5.0615	5.1318	5.2021	5.2724	5.3427	5.4130	5.4833	5.5536	70
80	5.6239	5.6942	5.7645	5.8348	5.9051	5.9754	6.0457	6.1160	6.1863	6.2566	80
90	6.3269	6.3972	6.4675	6.5378	6.6081	6.6784	6.7487	6.8190	6.8893	6.9596	90
100	7.0299	7.1002	7.1705	7.2408	7.3111	7.3814	7.4517	7.5220	7.5923	7.6626	100

Weight kilograms/square centimeter to weight pounds/square inch

kgf/cm^2	0	1	2	3	4	5	6	7	8	9	kgf/cm^2
	lbf/ in^2(psi)	lbf/ in^2(psi)	lbf/ in^2(psi)	lbf/ in^2(psi)	lbf/ in^2(psi)	lbf/ in^2(psi)	lbf/ in^2(psi)	lbf/ in^2(psi)	lbf/ in^2(psi)	lbf/ in^2(psi)	
----		14.22	28.45	42.67	56.90	71.12	85.35	99.57	113.80	128.02	----
10	142.25	156.47	170.70	184.92	199.15	213.37	227.60	241.82	256.05	270.27	10
20	284.50	298.72	312.95	327.17	341.40	355.62	369.85	384.07	398.30	412.52	20
30	426.75	440.97	455.20	469.42	483.65	497.87	512.10	526.32	540.55	554.77	30
40	569.00	583.22	597.45	611.67	625.90	640.12	654.35	668.57	682.80	697.02	40
50	711.25	725.47	739.70	753.92	768.14	782.37	796.59	810.82	825.04	839.27	50
60	853.49	867.72	881.94	896.17	910.39	924.62	938.84	953.07	967.29	981.52	60
70	995.74	1009.97	1024.19	1038.42	1052.64	1066.87	1081.09	1095.32	1109.54	1123.77	70
80	1137.99	1152.22	1166.44	1180.67	1194.89	1209.12	1223.34	1237.57	1251.79	1266.02	80
90	1280.24	1294.47	1308.69	1322.92	1337.14	1351.37	1365.59	1379.82	1394.04	1408.27	90
100	1422.49	1436.72	1450.94	1465.17	1479.39	1493.62	1507.84	1522.06	1536.29	1550.51	100

Weight kilograms/square centimeter to kilopascals

kgf/cm^2	0	1	2	3	4	5	6	7	8	9	kgf/cm^2
	kpa	kpa	kpa	kpa	kpa	kpa	kpa	kpa	kpa	kpa	
----		98.1	196.1	294.2	392.3	490.3	588.4	686.5	784.5	882.6	----
10	980.7	1078.7	1176.8	1274.9	1372.9	1471.0	1569.1	1667.1	1765.2	1863.3	10
20	1961.3	2059.4	2157.5	2255.5	2353.6	2451.7	2549.7	2647.8	2745.9	2843.9	20
30	2942.0	3040.1	3138.1	3236.2	3334.3	3432.3	3530.4	3628.5	3726.5	3824.6	30
40	3922.7	4020.7	4118.8	4216.9	4314.9	4413.0	4511.1	4609.1	4707.2	4805.3	40
50	4903.3	5001.4	5099.5	5197.5	5295.6	5393.7	5491.7	5589.8	5687.9	5785.9	50
60	5884.0	5982.1	6080.1	6178.2	6276.3	6374.3	6472.4	6570.5	6668.5	6766.6	60
70	6864.7	6962.7	7060.8	7158.9	7256.9	7355.0	7453.1	7551.1	7649.2	7747.3	70
80	7845.3	7943.4	8041.5	8139.5	8237.6	8335.7	8433.7	8531.8	8629.9	8727.9	80
90	8826.0	8924.1	9022.1	9120.2	9218.3	9316.3	9414.4	9512.5	9610.5	9708.6	90
100	9806.7	9904.7	10002.8	10100.8	10198.9	10297	10395.0	10493.1	10591.2	10689.2	100

Kilopascals to weight kilograms/square centimeter

kpa	0	100	200	300	400	500	600	700	800	900	kpa
	kgf/cm^2	kgf/cm^2	kgf/cm^2	kgf/cm^2	kgf/cm^2	kgf/cm^2	kgf/cm^2	kgf/cm^2	kgf/cm^2	kgf/cm^2	
----		1.020	2.039	3.059	4.079	5.099	6.118	7.138	8.158	9.177	----
1000	10.197	11.217	12.237	13.256	14.276	15.296	16.315	17.335	18.355	19.375	1000
2000	20.394	21.414	22.434	23.453	24.473	25.493	26.513	27.532	28.552	29.572	2000
3000	30.591	31.611	32.631	33.651	34.670	35.690	36.710	37.729	38.749	39.769	3000
4000	40.789	41.808	42.828	43.848	44.868	45.887	46.907	47.927	48.946	49.966	4000
5000	50.986	52.006	53.025	54.045	55.065	56.084	57.104	58.124	59.144	60.163	5000
6000	61.183	62.203	63.222	64.242	65.262	66.282	67.301	68.321	69.341	70.360	6000
7000	71.380	72.400	73.420	74.439	75.459	76.479	77.498	78.518	79.538	80.558	7000
8000	81.577	82.597	83.617	84.636	85.656	86.676	87.696	88.715	89.735	90.755	8000
9000	91.774	92.794	93.814	94.834	95.853	96.873	97.893	98.912	99.932	100.952	9000
10000	101.972	102.991	104.011	105.031	106.050	107.070	108.090	109.110	110.129	111.149	10000

Torque

Feet weight pounds to weight kilogram meters

lbf.ft	0	1	2	3	4	5	6	7	8	9	lbf.ft
	kgf·m	kgf·m	kgf·m	kgf·m	kgf·m	kgf·m	kgf·m	kgf·m	kgf·m	kgf·m	
----		0.138	0.277	0.415	0.553	0.692	0.830	0.969	1.107	1.245	----
10	1.384	1.522	1.660	1.799	1.937	2.075	2.214	2.352	2.490	2.629	10
20	2.767	2.906	3.044	3.182	3.321	3.459	3.597	3.736	3.874	4.012	20
30	4.151	4.289	4.428	4.566	4.704	4.843	4.981	5.119	5.258	5.396	30
40	5.534	5.673	5.811	5.949	6.088	6.226	6.365	6.503	6.641	6.780	40
50	6.918	7.056	7.195	7.333	7.471	7.610	7.748	7.887	8.025	8.163	50
60	8.302	8.440	8.578	8.717	8.855	8.993	9.132	9.270	9.409	9.547	60
70	9.685	9.824	9.962	10.100	10.239	10.377	10.515	10.654	10.792	10.930	70
80	11.069	11.207	11.346	11.484	11.622	11.761	11.899	12.037	12.176	12.314	80
90	12.452	12.591	12.729	12.868	13.006	13.144	13.283	13.421	13.559	13.698	90
100	13.836	13.974	14.113	14.251	14.389	14.528	14.666	14.805	14.943	15.081	100

Weight kilogram meters to feet weight pounds

kgf·m	0	1	2	3	4	5	6	7	8	9	kgf·m
	lbf.ft	lbf.ft	lbf.ft	lbf.ft	lbf.ft	lbf.ft	lbf.ft	lbf.ft	lbf.ft	lbf.ft	
----		7.228	14.455	21.683	28.910	36.138	43.365	50.593	57.820	65.048	----
10	72.275	79.503	86.730	93.958	101.185	108.413	115.640	122.868	130.095	137.323	10
20	144.550	151.778	159.005	166.233	173.460	180.688	187.915	195.143	202.370	209.598	20
30	216.825	224.053	231.280	238.508	245.735	252.963	260.190	267.418	274.645	281.873	30
40	289.100	296.328	303.555	310.783	318.010	325.238	332.465	339.693	346.920	354.148	40
50	361.375	368.603	375.830	383.058	390.285	397.513	404.740	411.968	419.195	426.423	50
60	433.650	440.878	448.105	455.333	462.560	469.788	477.015	484.243	491.470	498.698	60
70	505.925	513.153	520.380	527.608	534.835	542.063	549.290	556.518	563.745	570.973	70
80	578.200	585.428	592.655	599.883	607.110	614.338	621.565	628.793	636.020	643.248	80
90	650.475	657.703	664.930	672.158	679.385	686.613	693.840	701.068	708.295	715.523	90
100	722.750	729.978	737.205	744.433	751.660	758.888	766.115	773.343	780.570	787.798	100

Weight kilogram meters to Newton meters

kgf·m	0	1	2	3	4	5	6	7	8	9	kgf·m
	N·m	N·m	N·m	N·m	N·m	N·m	N·m	N·m	N·m	N·m	
----		9.81	19.61	29.42	39.23	49.03	58.84	68.65	78.45	88.26	----
10	98.07	107.87	117.68	127.49	137.29	147.10	156.91	166.71	176.52	186.33	10
20	196.13	205.94	215.75	225.55	235.36	245.17	254.97	264.78	274.59	284.39	20
30	294.20	304.01	313.81	323.62	333.43	343.23	353.04	362.85	372.65	382.46	30
40	392.27	402.07	411.88	421.69	431.49	441.30	451.11	460.91	470.72	480.53	40
50	490.33	500.14	509.95	519.75	529.56	539.37	549.17	558.98	568.79	578.59	50
60	588.40	598.21	608.01	617.82	627.63	637.43	647.24	657.05	666.85	676.66	60
70	686.47	696.27	706.08	715.89	725.69	735.50	745.31	755.11	764.92	774.73	70
80	784.53	794.34	804.15	813.95	823.76	833.57	843.37	853.18	862.99	872.79	80
90	882.60	892.41	902.21	912.02	921.83	931.63	941.44	951.25	961.05	970.86	90
100	980.67	990.47	1000.28	1010.08	1019.89	1029.70	1039.5	1049.31	1059.12	1068.92	100

Newton meters to weight kilogram meters

N·m	0	10	20	30	40	50	60	70	80	90	N·m
	kgf·m	kgf·m	kgf·m	kgf·m	kgf·m	kgf·m	kgf·m	kgf·m	kgf·m	kgf·m	
----		1.020	2.039	3.059	4.079	5.099	6.118	7.138	8.158	9.177	----
100	10.197	11.217	12.237	13.256	14.276	15.296	16.315	17.335	18.355	19.375	10
200	20.394	21.414	22.434	23.453	24.473	25.493	26.513	27.532	28.552	29.572	20
300	30.591	31.611	32.631	33.651	34.670	35.690	36.710	37.729	38.749	39.769	30
400	40.789	41.808	42.828	43.848	44.868	45.887	46.907	47.927	48.946	49.966	40
500	50.986	52.006	53.025	54.045	55.065	56.084	57.104	58.124	59.144	60.163	50
600	61.183	62.203	63.222	64.242	65.262	66.282	67.301	68.321	69.341	70.360	60
700	71.380	72.400	73.420	74.439	75.459	76.479	77.498	78.518	79.538	80.558	70
800	81.577	82.597	83.617	84.636	85.656	86.676	87.696	88.715	89.735	90.755	80
900	91.774	92.794	93.814	94.834	95.853	96.873	97.893	98.912	99.932	100.952	90
1000	101.972	102.991	104.011	105.031	106.050	107.070	108.090	109.110	110.129	111.149	100

Temperature

Fahrenheit to centigrade

°F	°C	°F	°C	°F	°C	°F	°C	°F	°C	°F	°C	°F	°C	°F	°C
-60	-51.1	2	-18.9	56	13.3	114	45.6	172	77.8	230	110	288	142.2	346	174.4
-58	-50	0	-17.8	58	14.4	116	46.7	174	78.9	232	111.1	290	143.3	348	175.6
-56	-48.9	2	-16.7	60	15.6	118	47.8	176	80.0	234	112.2	292	144.4	350	176.7
-54	-47.8	4	-15.6	62	16.7	120	48.9	178	81.1	236	113.3	294	145.6	352	177.8
-52	-46.7	6	-14.4	64	17.8	122	50.0	180	82.2	238	114.4	296	146.7	354	178.9
-50	-45.6	8	-13.3	66	18.9	124	51.1	182	83.3	240	115.6	298	147.8	356	180
-48	-44.4	10	-12.2	68	20	126	52.2	184	84.4	242	116.7	300	148.9	358	181.1
-46	-43.3	12	-11.1	70	21.1	128	53.3	186	85.6	244	117.8	302	150	360	182.2
-44	-42.2	14	-10	72	22.2	130	54.4	188	86.7	246	118.9	304	151.1	362	183.3
-42	-41.1	16	-8.9	74	23.3	132	55.6	190	87.8	248	120	306	152.2	364	184.4
-40	-40.0	18	-7.8	76	24.4	134	56.7	192	88.9	250	121.1	308	153.3	366	185.6
-38	-38.9	20	-6.7	78	25.6	136	57.8	194	90.0	252	122.2	310	154.4	368	186.7
-36	-37.8	22	-5.6	80	26.7	138	58.9	196	91.1	254	123.3	312	155.6	370	187.8
-34	-36.7	24	-4.4	82	27.8	140	60	198	92.2	256	124.4	314	156.7	372	188.9
-32	-35.6	26	-3.3	84	28.9	142	61.1	200	93.3	258	125.6	316	157.8	374	190.0
-30	-34.4	28	-2.2	86	30.0	144	62.2	202	94.4	260	126.7	318	158.9	376	191.1
-28	-33.3	30	-1.1	88	31.1	146	63.3	204	95.6	262	127.8	320	160	378	192.2
-26	-32.2	32	0.0	90	32.2	148	64.4	206	96.7	264	128.9	322	161.1	380	193.3
-24	-31.1	34	1.1	92	33.3	150	65.6	208	97.8	266	130.0	324	162.2	382	194.4
-22	-30.0	36	2.2	94	34.4	152	66.7	210	98.9	268	131.1	326	163.3	384	195.6
-20	-28.9	38	3.3	96	35.6	154	67.8	212	100.0	270	132.2	328	164.4	386	196.7
-18	-27.8	40	4.4	98	36.7	156	68.9	214	101.1	272	133.3	330	165.6	388	197.8
-16	-26.7	42	5.6	100	37.8	158	70.0	216	102.2	274	134.4	332	166.7	390	198.9
-14	-25.6	44	6.7	102	38.9	160	71.1	218	103.3	276	135.6	334	167.8	392	200
-12	-24.4	46	7.8	104	40.0	162	72.2	220	104.4	278	136.7	336	168.9	400	204.4
-10	-23.3	48	8.9	106	41.1	164	73.3	222	105.6	280	137.8	338	170.0	410	210.0
-8	-22.2	50	10.0	108	42.2	166	74.4	224	106.7	282	138.9	340	171.1	420	215.6
-6	-21.1	52	11.1	110	43.3	168	75.6	226	107.8	284	140.0	342	172.2	430	221.1
-4	-20.0	54	12.2	112	44.4	170	76.7	228	108.9	286	141.1	344	173.3	440	226.7

https://truckmanualshub.com/

This as a preview PDF file from **best-manuals.com**

Best Manuals

Download full PDF manual at **best-manuals.com**