https://truckmanualshub.com/

ME1600 Excavator

Operation Manual

AGRISON®

https://truckmanualshub.com/

ME1600

Excavator

Operation &

Maintenance

Manual

https://truckmanualshub.com/

Preface

Respected users:

Thank you for your trust and love for our products. The Agrison brand series farm excavator produced by our Company is a small excavator based on mining operation and li fting loading and unloading operation. The design structure is compact, the dynamic matching is appropriate, the product has good stability and the cost performance is high. It can meet the mining and loading and unloading requirements under the different operating conditions of the plain, hilly and forest areas. It is also suitable for brick and ti le factory, kiln plant, river course, building, dredging and road construction. It is the most ideal construction machine for farmland operation and small engineering.

In order to master the user' s knowledge of the use, adjustment, maintenance, and maintenance of the machine correctly, give full play to the efficiency of the excavator, please read the maintenance manual carefully and earnestly implement the provisions in the operation maintenance manual. For the use and maintenance of the matching engine, please refer to the Engine Service Manual written by the auxiliary engine factory.

The operation section is the technical reference for the driver to use the machine. In the meantime, the driver uses the graphic and text control to guide the driver to use the correct procedure to check, start, operate and stop the machine. The operating techniques outlined in the manual are a basis. If the driver gets the knowledge of machine and function, he can improve his skills and skills.

The maintenance part is a guide book for users to maintain the whole machine. The demo graph is arranged according to the time of maintenance cycle from short to long. The specific maintenance measures for machines and tools are detailed in the Lubrication and Maintenance Periodic Table. Users should maintain the maintenance items according to the requirements of the Lubrication and Maintenance Periodic Table according to the working time of machines.

https://truckmanualshub.com/

Under harsh, dusty or humid working conditions, the number of lubrication should be increased appropriately according to the running condition of the machine.

In order to show some of the structural features of the machine more intuitively, part of the demonstration picture in this manual is set as a structural perspective, so there will be a difference from the appearance of the actual product. As a result of the changes in the mechanical structure and technical parameters of the vehicle caused by the technical improvement and not shown in this manual, please consult the Company for the latest product information of the product.

Before using or maintaining the machine, relevant information should be approved. If necessary, it can be contacted with our technical service station. When purchasing spare parts, please explain the factory date and code of the excavator.

In order to facilitate your use, our Company has established a perfect "Three Guarantees Technology Service Network". If the quality problem appears in the proper use of the small Agrison farm excavator you bought during the warranty period, please contact the Three Guarantees maintenance service station of the local Agrisonexcavator in time.

Because the Company' s product technology is constantly innovating, we reserve the right to interpret and modify this manual. If the actual product is different from the manual picture, take the material as the criterion.

https://truckmanualshub.com/

Content

Security..... 1
Precautions in preparation..... 17
Precautions when starting 20
Safety identification 25
Operational precautions 36
precautions when drawing 45
Operating procedure Prohibited operations 59
Precautions for walking 66
Excavation..... 69
Leveling 70
Prevent rubber caterpillar from falling off..... 75
Hydraulic breaking hammer 78
Notice when stopping 81
Main structural parts of the machine.....82
Matters of attention in transportation..... 84
Precautions for maintenance 87
Operation area preparation..... 90
Precautions for refueling..... 95
Lubricating oil..... 99
Maintenance cycle.....101
Waste disposal..... 161
Common fault and elimination method 162
Main technical specification 166
Schematic diagram of hydraulic system 168
Schematic diagram of electrical system..... 169
List of accessories 170

Security

General precautions

You have the responsibility to follow the safety regulations and laws of the departments concerned, and operate, inspect and maintain machines according to the manufacturer's requirements.

In fact, all accidents sometimes result from failure to comply with basic safety regulations and precautions.

Most accidents can be avoided by identifying potential hazards in advance.

Please read and understand all safety information that describes how to prevent accidents. Do not operate the machine until you know how to operate, check and maintain the machine correctly.

Compliance with all safety regulations

Trained and qualified personnel must be operated, inspected and maintained.

When machine operation, inspection and maintenance are carried out, all rules, regulations, precautions and safety measures must be understood and observed.

Do not operate, check and maintain machines when alcohol, drugs, drugs, fatigue or sleep are not enough.

When the machine is found to be abnormal

In the operation or inspection and maintenance of the machine, if the machine is found to be abnormal (noise, vibration, odor, oil leakage, error alarm, etc.), the sales or service agent should be immediately informed and appropriate measures should be taken. Do not operate the machine until the exception is excluded.

Operating temperature range

In order to maintain the performance of the machine and avoid premature wear, please observe the following operating conditions.

Do not operate the machine if the outdoor temperature is above +45℃ or below -15℃.

If the outdoor temperature exceeds +45℃, the operation of the engine may

overheat, resulting in the decline of the engine's oil capability. Moreover, the hydraulic oil may become very hot, which will cause damage to the hydraulic equipment.

If the outdoor temperature is below -15℃, the rubber parts such as gaskets may harden, causing the machine to wear or damage too early.

If you need to operate the machine outside the above temperature range, please consult your sales or service agent.

Wear suitable clothes and protective equipment

Do not wear loose clothing or adornment that may hang control rods or moving parts. Do not wear clothes that are easily ignited with oil or fuel stains.

According to the requirements of working environment, wear safety shoes, safety helmet, safety glasses, filter mask, thick gloves, ear protectors and other protective equipment. When using a grinder, a crushing hammer, or a compressed air, appropriate protective equipment, such as a safety spectacle and a filter mask, should be worn, because the spattering of metal or other objects may cause serious damage.

When operating the machine, please use the hearing protection device. Exposure to loud noise for a long time can cause hearing loss or even loss.

Installation of fire extinguishers and first aid cases

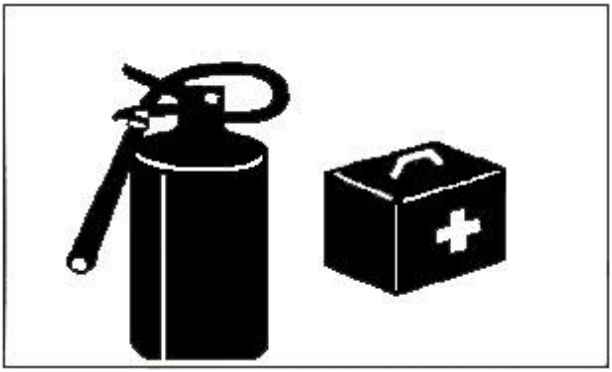

Do a good job of fire and accident preparation

Install fire extinguishers and first-aid boxes and learn how to use them.

Learn how to extinguish and deal with accidents.

Know how to contact emergency assistance and make emergency contact list.

Do not dismantle the safety device

Please ensure that all the protective barriers are installed and firmly installed. Before you operate the machine, please repair or replace the damaged parts.

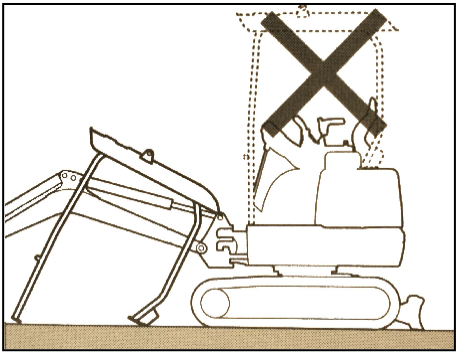

Do not remove any safety devices except for maintenance. Use all safety devices to maintain good working conditions.

Equipped with signaling and signal bearers

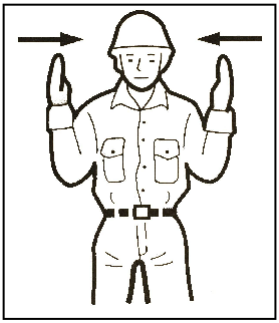

Learn how to use specific job required gestures and identify people responsible for gesturing.

All people must fully understand all the gestures.

The operator must respond to the gesture of the designated person, but must obey any stop gesture at any time.

When the signer signals, he must stand clearly.

Matters of attention when starting or leaving from the driver's seat

When standing up from the driver's seat, reduce the working device to the ground and stop the engine. If you touch any control handle carelessly, it will cause the machine to move and cause serious injury or death.

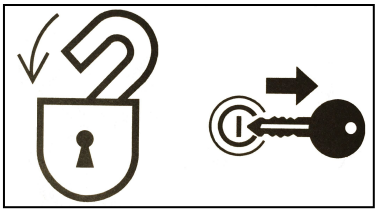

Please pay attention to the control of bulldozers, boom swing and auxiliary hydraulic control. Do not touch these controls.

Before leaving the cab seat, the working device should be lowered to the ground and the engine will be flameout. At the same time, please be sure to pull out the key and carry the key with you, then store it in the designated place.

Avoid fire and explosion hazards

Keep fuel, lubricating oil, grease and antifreeze away from fire sources. Fuel is very flammable and very dangerous.

When dealing with these combustibles, keep away from the lighted cigarettes, matches, lighters and other flame or fire sources.

Do not smoke or open fire when dealing with fuel or fuel system.

Do not leave the job site when fuel or lubricating oil is added.

No fuel cap or gas can be removed when the engine is running or not cooled. Also, do not splash fuel on the hot surfaces or electronic components of the machine.

Clean up the spilled oil or oil immediately.

Check the leakage of fuel and lubricating oil. Please exclude leakage and clean the machine before operation.

When polishing or welding operations, please move inflammable goods to safe place.

Do not cut or weld inside pipes or pipes that contain flammable liquids. Before cutting or welding, please use non flammable solvents to clean thoroughly.

Clean up all the garbage or sundries of the machine. Make sure that there are no

oily rag or other inflammable materials on the machine.

All kinds of solvents or dry chemicals (foam extinguisher) should be disposed according to the procedure of the manufacturer's container. It is carried out in a well ventilated place.

Do not use fuel for cleaning. Non combustible solvents are always used.

Keep all flammable liquids and materials in a safe and well ventilated place.

A short circuit of an electronic system can cause a fire. Check whether the wire connection is loose or damaged every day. Re tighten loose connectors and cable buckles. Repair or replace damaged wires.

A fire caused by a pipe:

Ensure that the hose and pipe buckle, protective device and cushion are firmly secured. If there is any loosening, hoses or pipes will be damaged due to vibration or contact with other components during operation. This may cause high-pressure oil ejection, causing fire or injury.

The exhaust gas from the engine is poisonous

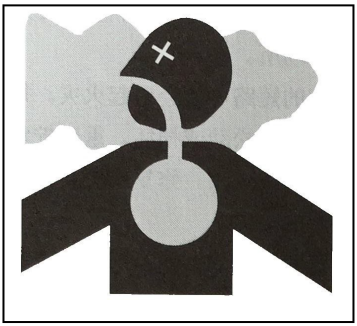

Do not operate the engine in a poorly ventilated enclosure.

If not for natural ventilation should be installed fan, fan, lengthened exhaust pipe or other ventilation devices.

Treatment of asbestos dust

Lung cancer may be caused by inhaling asbestos dust. When dealing with

materials that contain asbestos, the following safety precautions should be taken.

Do not use compressed air for cleaning.

Avoid polishing or grinding parts containing asbestos.

When cleaning, please use vacuum equipment equipped with high efficiency particulate air filter.

If there is no other way to control the dust, please wear the prescribed respirator. When working indoors, please install a ventilation system equipped with polymer filter.

Please do not allow unauthorized personnel to enter the job area while doing homework.

Please strictly abide by the rules and environmental standards applicable to the operation area.

Be careful not to bruise

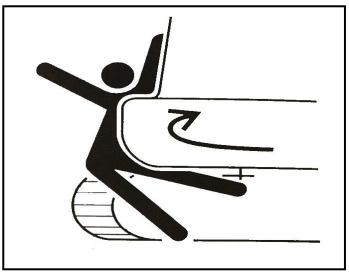

Do not put hands, feet, or other body parts

Between the car and the lower workshop or the caterpillar,

Between the body and the working device or the cylinder and the oil cylinder and

Between the parts of the movement. When the machine moves,

These gap sizes will change and may be made Severe injury or

death.

Use an optional product

Before installing the selection, please consult the Agrison Company. According to the type of annexes or their combinations, the attachment may be exposed to other parts of the driver's cab or machine. Make sure that the selected items are not contacted with other parts before use.

Please do not use the accessories that are not approved by the Agrison Company.

Doing this may jeopardize safety or cause adverse effects on the operation or service life of the machine.

Agrison is not responsible for any injuries, accidents or product damage caused by the use of unauthorized accessories.

Do not remould the machine

Unauthorized transformation of machine will cause injury or death. Never make any unauthorized transformation of any part of the machine.

Safety mark (logo)

In order to ensure the safety of the operators and the workers around the operation area, the following safety signs (marks) should be placed in some parts of the machine. Take this manual to walk around the machine to see the content and location of these safety signs. Review these signs and operation instructions in this manual together with your machine driver.

Safety signs should be kept clean, clear and easy to identify. If any security labels are shedding or damaged and become difficult to identify, please replace them with new labels. Please provide your product serial number when ordering the new logo from Agrison service agency.

When the parts and bodies posted on the safety signs have been replaced, new signs should be posted on the new parts / machines.

Precautions in preparation

Understand the work area

Before starting operation, we should know the operation area to ensure safety.

Check the terrain and ground conditions in the operation area, check the building structure during indoor operation, and take safety measures when necessary.

We must avoid dangers and obstacles such as gutter, underground pipelines, trees, cliffs, overhead lines, or dangerous areas for implementation or landslide.

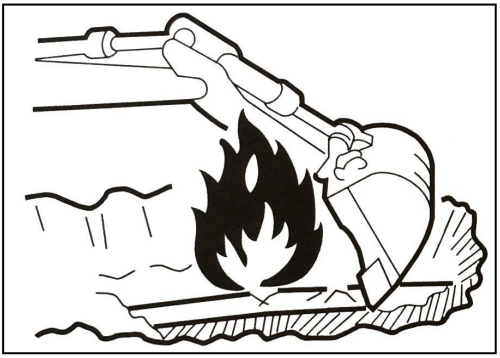

Check the location of buried gas pipe, water pipe and power cable with the administrator. If necessary, consult with the administrator and identify specific safety measures that must be taken to ensure safety.

When we are on the road, we must consider the safety of pedestrians and vehicles.

Use signalling and / or signals. The isolated operation area is not allowed to enter by unauthorized personnel.

When working in shallow water or in shallow water, we should check the depth of water, whether the ground is solid and the speed of water flow.

Check the strength of the bridge

Please check the allowable load when walking on a bridge or structure. If the strength is insufficient, we should strengthen the bridge or structure.

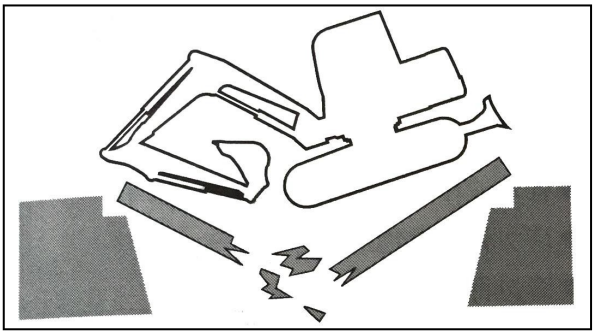

Keep the machine clean all the time

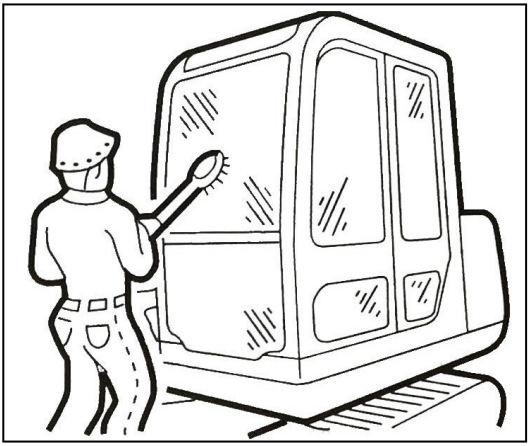

Wipe up lubricating oil, grease, soil, snow or ice to prevent accidents caused by slipping.

Clear all loose objects and unnecessary devices in the machine.

Remove dust, lubricating oil or grease from engine parts to prevent fire.

Clean the operator's seat and remove any unnecessary objects in the machine.

Daily inspection and maintenance

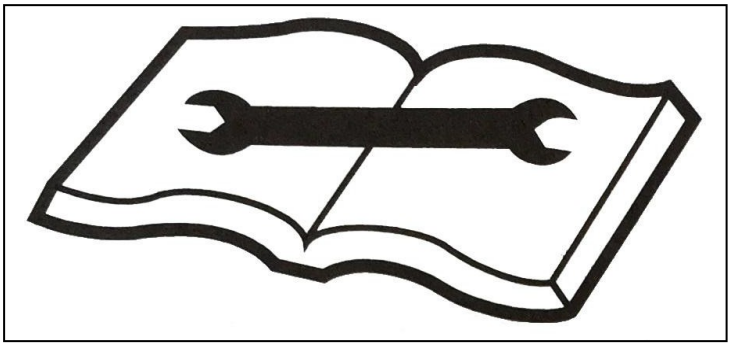

Failure or failure to find or repair the machine will cause accidents.

Before the operation, please make the specified inspection and repair immediately if necessary.

If there is an accident and can not operate or engine failure, please shut down immediately according to the shutdown procedure, and firmly park the machine until the trouble is repaired.

Cautions in the driver's room

Before entering the driver's cab, please remove the dirt and grease from the sole. When the dirt and grease are adhered to the sole, operating machine pedals will cause accidents due to slippage at the foot.

Do not place parts or tools around the driver's seat.

Do not place any plastic bottles in the driver's cab or install any suckers. Plastic bottles or suction cups act as lenses, which may cause fires.

Safety measures for starting

When you are on / off the machine, support your weight by three points of safety posture.

Please do not jump on or adjust the machine. Do not try to go up and down the moving machine.

When the upper and lower cab is opened, please first open the door to the lock-in position, and check and confirm that the door cannot move.

For machine climbing up / down pedals and supporting armrest, support your weight with three safety posture (hands and feet).

Do not use the control rod as a pull hand.

Any unauthorized personnel should leave the area before starting the machine.

By checking the following items, it is sure that it can start safely before starting the machine.

Round the machine for a week, give warning to the maintenance machine personnel and the walking personnel near the machine. After that, no machine can start the machine.

Check whether there is "caution" sign or similar sign on the driver's cab, control or starting switch. If there is, please do not start the engine or touch any joystick.

Bugle the horn and warn the people around the machine.

Sit on the driver's seat, start the engine

Adjust the seat to solid lock.

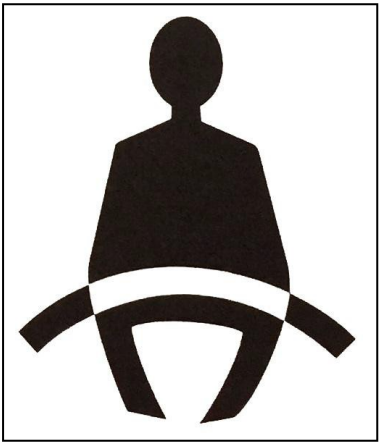

Fasten Safety Belt.

Check whether the parking device is open, and whether all the control rods and pedals are in the middle position.

There is no one near the machine.

The machine can only be started and operated from the driver's seat.

Do not attempt to start the engine by shorting the terminal of the starter.

Use of cross connection cable to start

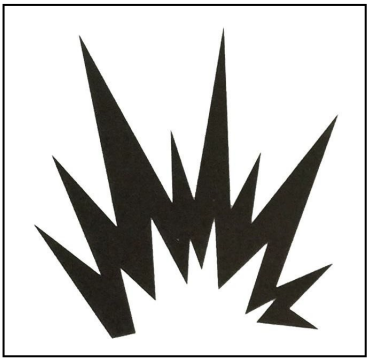

Starting with jumper cable can only be carried out in a recommended way. Improper use of jumper cable will cause battery explosion or unexpected machine action.

Starting engine

After starting the engine, do the following operation and check in the place where there are no personnel or fault. If any failure occurs, shut down according to program and report failure.

Preheat the engine and hydraulic oil.

Check whether the instruments and alarm devices are working normally.

Check if there is any noise.

Test the engine speed control.

Operate the control to ensure that they work normally.

For cold climates

Be careful to freeze ground, pedal and handle. It's slippery.

Do not touch the metal part of the machine with bare hands under severe cold weather. The skin will freeze to the metal and cause serious injury.

Do not use ether or starting fluid on the engine. Starting fluid can cause explosion and serious injury or death.

Preheat the engine and hydraulic oil. If the lever is not preheated, the machine will not respond or move quickly or appropriately, resulting in an accident.

Signage

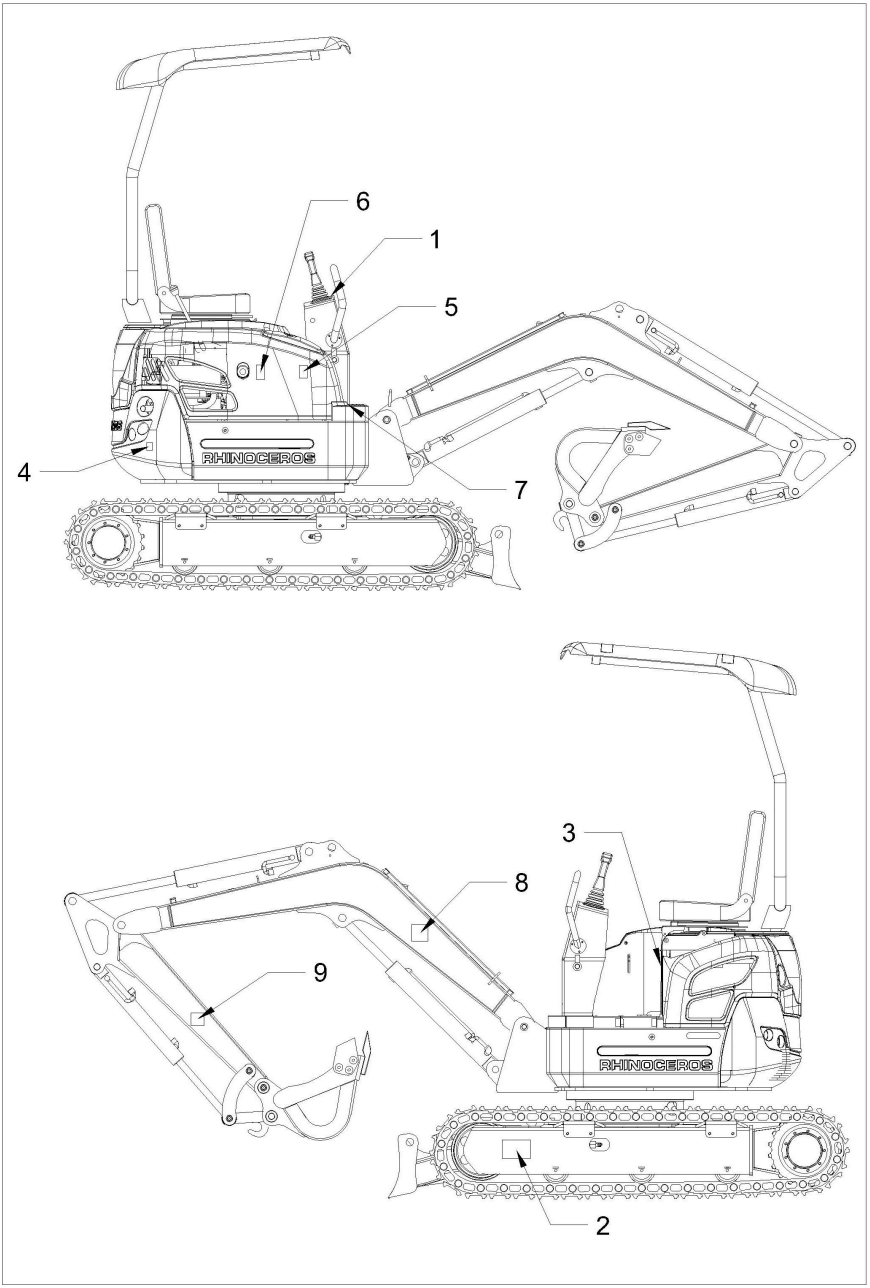

1. Operating device operation

This sign is located in the front of the cab

▲Also check the machine control mode and the label is consistent. If different, before changing the machine, change the label to match the machine control mode.

▲"Not according to this operation may cause casualties.

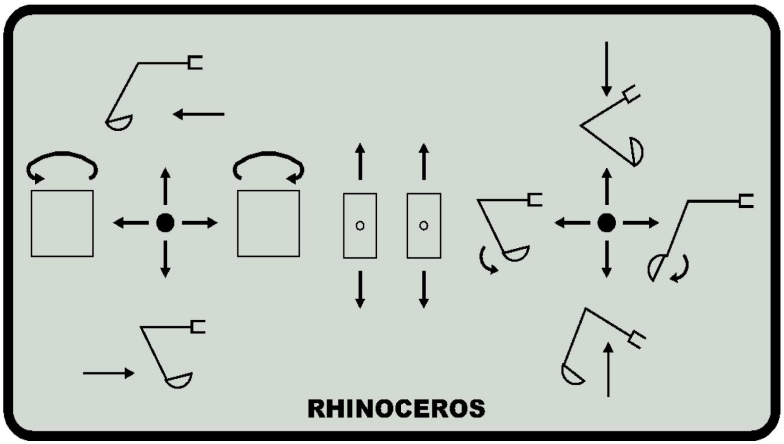

2. Precautions for adjusting the tightness of the crawler

This sign is located on both sides of the caterpillar beam

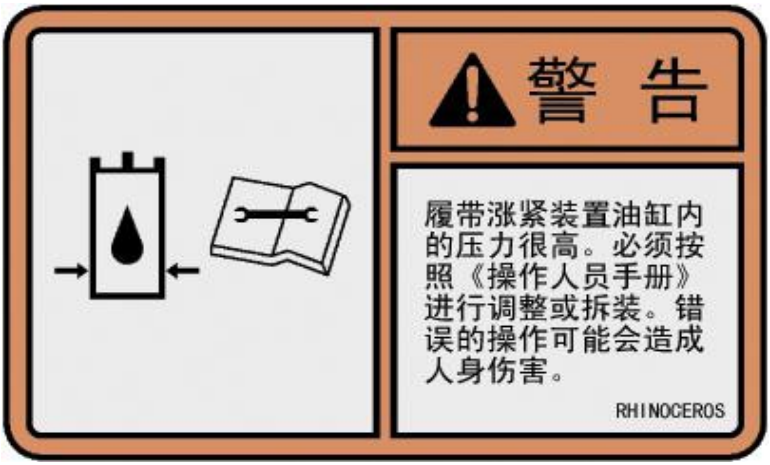

警告	Notice

履带涨紧装置油缸内的压力很高，必须按照《操作人员手册》进行调整或拆装。错误的操作可能会造成人身伤害。	The pressure in the hydraulic cylinder of the track tightener is very high. It must be adjusted or disassembled according to the operator manual. The wrong operation can cause personal injury.

3. Operation warning, loading warning, mobile and operational warning, front window warning, attention to high voltage line, reading instructions, oil lock, height and other warning signs.

This logo is located at the right bottom of the cab

警告

Notice

为防止因误操作而发生人身伤害或死亡事故，在操作机器时，请确认机器的运转状态，以及所显示的运转模式。在确认机器的运转状态时，请注意周边部分， 并缓缓地进行操作。

In order to prevent accidents of personal injury or death due to misoperation, please confirm the operation state and the operation mode of the machine when operating the machine. When confirming the running state of the machine, please pay attention to the peripheral parts and operate slowly.

为了安全进行往（从）运输车上的装卸作业，要严守下列事项：

In order to carry out the loading and unloading operation on the transport vehicle safely, we must strictly observe the following items.

必须使运输车的制动器起作用，轮胎上应加挡块。

We must make the brakes of the transporter work and the blocks on the tires should be added.

装卸板要使用有十分长度、宽度、强度及表面不发滑的钢板。

The loading and unloading boards must be steel plates with a very long length, width, strength and smooth surface.

为了使运输车与车辆中心一致，把装卸板确定固定好。

In order to make the transport vehicle consistent with the vehicle center, the loading and unloading board must be fixed well.

在装卸板下必须加垫块或支柱。

Under the loading and unloading board, the padding or prop must be added.

装卸板的角度为15度以下

The angle of the loading and unloading plate is less than 15 degrees

在平坦而坚硬的场所进行装卸作业。

Loading and unloading operations in a flat and hard place.

金属挂钩

metal hook

装卸板

Loading and unloading board

垫块

Block
挡块
Block
为防止重伤或死亡事故，在移动机器或作业机器前，请遵守下列事项：
In order to prevent serious injury or death accident, following the mobile machine or operation machine, please observe the following items:
请鸣响喇叭，告知周围的人士
Please sound the horn and tell the people around
请确认机械的上方，周围或旋转区域内是否无人
Please confirm whether there is no one in the upper, surrounding or rotating area of the machine.
为了确保前进方向的视野，若有必要，请旋转上部
To ensure the vision of the forward direction, rotate the upper part if necessary.
请在视野不良的地点设置监视人员
Please set up the watchman at a place where the vision is bad
有关上述事项，亦请遵守行驶警告，安装反射镜。
For these matters, please follow the traffic warning and install mirrors.
开闭前窗，或拆装下窗时等要从司机座站立之前，务必将安全锁定杆转至锁定位置。
Before opening or closing the front window or dismounting the window, it is necessary to turn the safety locking lever to the locking position before standing from the driver's seat.
万一不小心触摸作业操作杆，机械将会突然动作，可能会造成重大的人身事故
If we don't touch the operation lever carelessly, the machine will act suddenly, which may cause a major personal accident.。

4. Stay away from the gyration area

This logo is located on the back weight

▲The rotary machine strictly prohibited within the region.

▲"Do not damage or remove the logo from the machine.

5. Fuel identification

This logo is located on the fuel tank

▲"When refueling to turn off the engine, the fuel filler should be far away from all the fire.

6. Notice of fuel oil

注意

Be careful

燃油箱

Fuel tank

在给机器加注燃油或保养燃油系统时，不准吸烟。不准在靠近火焰、火花区加油或保养，加油前，必须停止发动机。在户外加注燃油。

No smoking is allowed when fuel or fuel system is added to the machine. No fuel is allowed near the flame or spark zone, and the engine must be stopped before refueling. Add fuel to the outdoors.

7. The notice of the use of the battery

This logo is located in the cab

Lower right corner of the platform

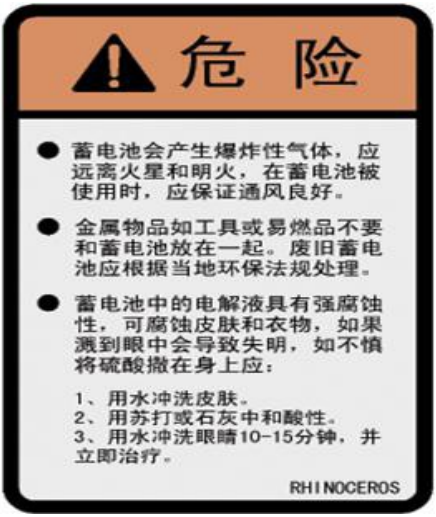

危险 蓄电池会产生爆炸性气体，应远离火星和明火，在蓄电池被使用时，应保证通风良好。 金属物品如工具或易燃品不要和蓄电池放在一起。废旧蓄电池应根据当地环保法规处理。 蓄电池中的电解液具有强腐蚀性，可腐蚀皮肤和衣物， 如果溅到眼中会导致，如不慎将硫酸撒在身上应： 1. 用水冲洗皮肤。 2. 用苏打或石灰中和酸性。 3. 用水冲洗眼睛 10-15 分	**DANGER** **The battery will produce explosive gas, and it should keep away from Mars and open flames. When battery is used, it should ensure good ventilation.** **Metal objects such as tools or inflammable products should not be placed with batteries. Waste batteries should be disposed according to local environmental regulations.** **The electrolyte in the battery is highly corrosive, which can corrode the skin and clothing. If splashing into the eye, it will lead to sulfuric acid splashing on the body.** **1. rinse the skin with water.** **2. use soda or lime to neutralize the acidity.** **3. rinse your eyes for 10-15 minutes and treat**

钟，并立即治疗。	**immediately.**

8. strictly prohibited within the operating range

This sign is located on both sides of the arm

9. Away from the mining range

This sign is located on the sides of the bucket

10. Adjust the tightness of the crawler

This sign is located on both sides of the caterpillar beam

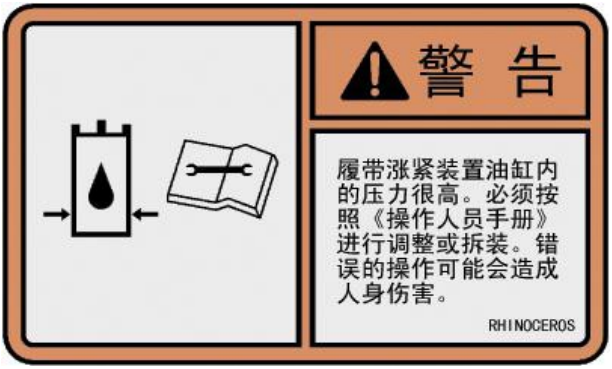

警告 Notice 履带涨紧装置油缸内的压力很高，必须按照《操作人员手册》进行调整或拆装。错误的操作可能会造成人身伤害。 The pressure in the hydraulic cylinder of the track tightener is very high. It must be adjusted or disassembled according to the operator manual. The wrong operation can cause personal injury.

11. The operation of the shovel

This sign is located in the front of the cab

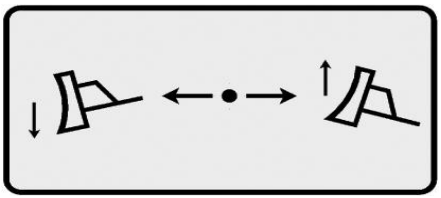

12. Maintenance warning signs of accumulator and accumulator

This logo is located in the upper right corner of the rotary platform

13. Away from the logo of the engine belt

This sign is on the hood

▲"Don't open the hood when the engine is running.

▲"Don't touch the exhaust pipe to prevent burns.

14. Hydraulic oil identification

The logo is located on the hydraulic tank

15. Notice of hydraulic oil tank

The logo is located on the hydraulic tank

危险

DANGER

液压油箱

Hydraulic oil tank

在打开盖前应停止发动机，缓慢地卸下油箱盖，以释放液压油箱压力，防止热 油烫伤。

Before opening the cover, the engine should be stopped, and the lid of the fuel tank can be slowly discharged, so as to release the pressure of the hydraulic tank and prevent the scalding of the hot oil.

16. Precautions for getting off and getting off

This logo is located on the inside of the door

警告

Notice

为了防止受伤，上下车辆时要严守下列事项。

In order to prevent injury, we must strictly observe the following items when we go up and down the vehicle.

上下车应面向车辆

Go up and off should face the vehicle

必须使用踏板、扶手

Must use the pedal, the armrest

应时常用手脚三处以上抓踏扶手、踏板，使身体得到支持。

More than three hands and feet are often used to grasp the armrest and pedals, so that the body can be supported.

不要抓住操作杆或固定杆上下车。

Do not catch the rod or the rod and get off.

不可在移动中上下车辆。

Do not move up and down in the movement.

不要跳上跳下车辆。

Don't jump up and down.

19. Hazard identification of electric shock

This logo is located on the right side of the cab

危险 DANGER 机器应远离高压电源线，如果靠近电源线，机器和地面可能被电击，导致人员 伤亡。 The machine should be away from the high-voltage power line. If it is near the power line, the machine and the ground may be struck by electricity, causing casualties.

20. Antiskid warning signs

This identity is located on the front hood on

21. Keep clear of dangerous area

Operation bar (handle) (ISO) operation description

▲Warning
Check it around before turning.

Note: when you start working, slowly move the handle, check the swing action and the front working device.

The handle structure of this equipment is up to the IS0 standard, and the parts of valves and hoses should not be changed to maintain standard settings.

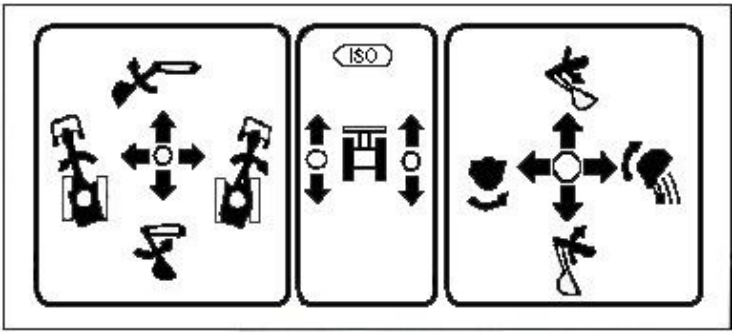

On the right side of the driving operation, with an operating sign
Push the joystick / pedal forward or backward when going straight.

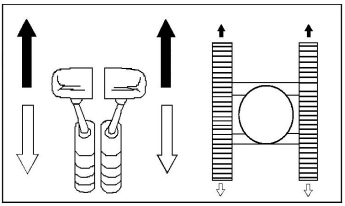

Note: when the moving distance exceeds 2km, the trailer should be towed. When moving within 2km, it should be carried out intermittently: walking for 10 minutes and resting for 5 minutes, otherwise it will cause serious damage to the excavated parts.

When manipulating a crawler forward or backward, the machine revolves by taking the stationary track as a rotary shaft.

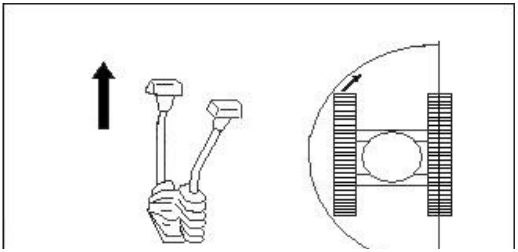

When a track turns forward and another turns back, the machine will revolve around the center point.

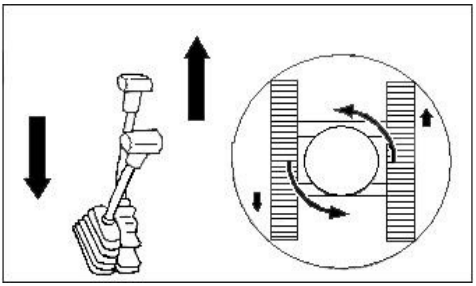

Stop walking - when the joystick returns to the central position, the excavator automatically stops and parks.

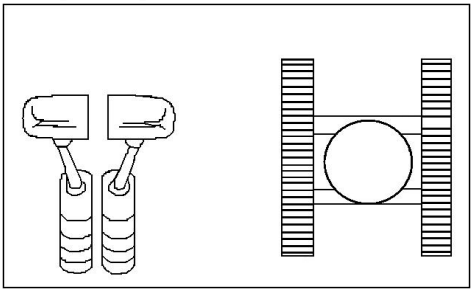

The relation between the movements of the boom, bucket and bucket and the moving direction of the rod is as follows:

Left handle

1.Stick out

2.Pole recovery

3.Gyration

4.Gyration

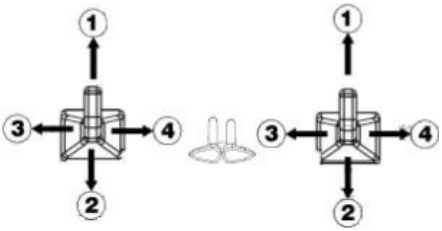

Attention: slewing brake is realized by spring and relieving hydraulic pressure. When the handle is in the middle position or the engine stops, the excavator can turn the brake.

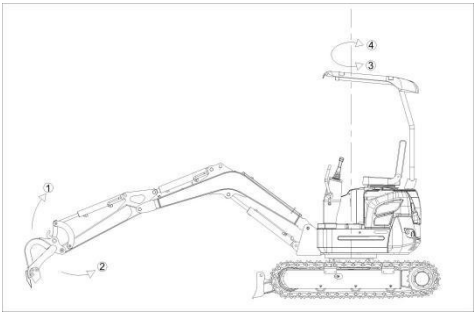

Note: the following phenomenon is not a mechanical failure, but a normal phenomenon of the excavator.

There may be a pause in the action of the bucket.

Because of self weight, the movement of bucket can be accelerated, which may cause insufficient oil supply.

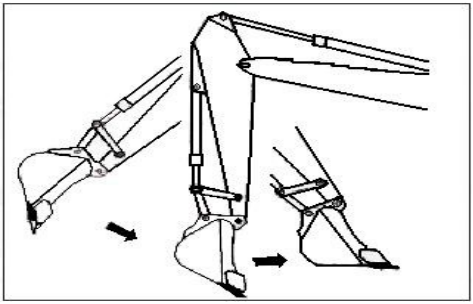

Right handle:

⑤Brachial descent

⑥The arm up

⑦The bucket digging

⑧The bucket dump

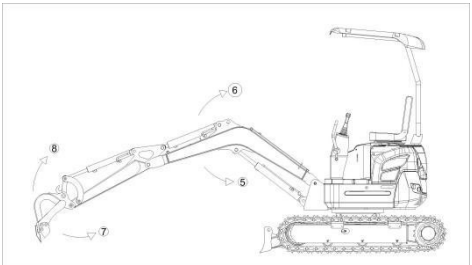

Note: even if a shutdown, the operation handle can still reduce the front device to the ground, set the safety rod in the "unlocking" position, and turn the key switch to the "shut" position.

Precautions for operation

Ensure good sight

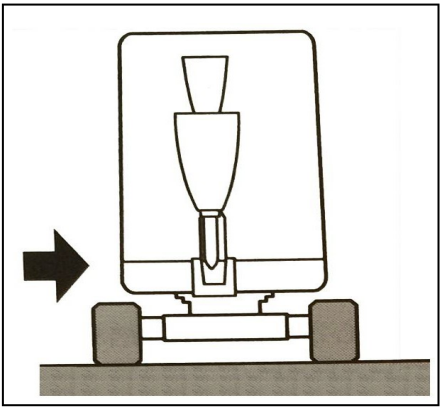

When working in dark places, turn on the work lights and headlights of the machine, and install additional lighting if necessary.

Because bad weather (fog, snow, rain or haze) leads to poor sight, we should stop operating the machine until the sight is better.

Do not carry people on the machine

When a machine walks or operates, no one is allowed to ride on any part of the machine at any time.

Check whether the work area is safe and reliable before operation

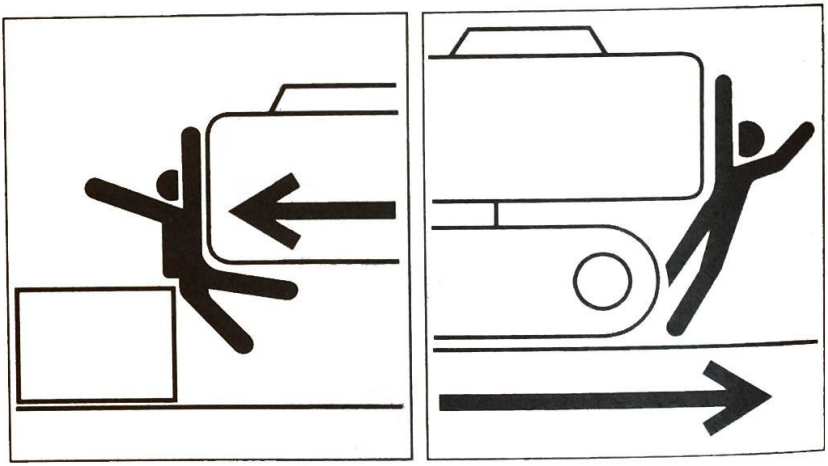

Confirm the performance limit of the machine.

In the road shoulder, narrow place or line of sight obstructed, use signalling.

Do not allow anyone to enter the turning radius and path of the machine.

Express the intention that you want to move by honking the horn.

There is a blind spot in the rear of the machine. Please check the safety of the rear area before you walk back and make sure that the rear is unmanned.

Check the position of the frame (caterpillar) before walking

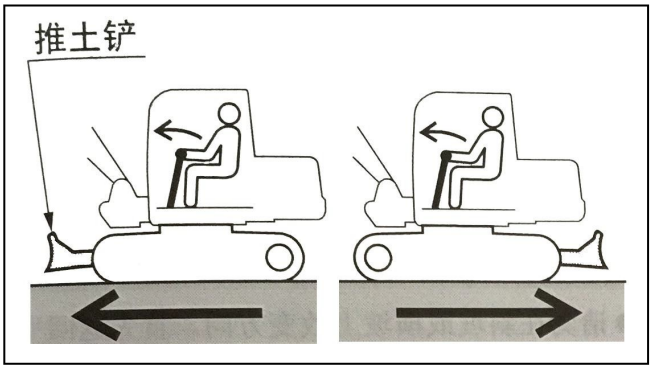

shovel

Before operating the walking joystick / pedal, make sure that the shovel is in front of the driver's seat. Remember, when the shovel is located behind the driver's seat, the operating direction of the walking joystick / pedal must be opposite to the shovel in front of the driver's seat.

Safe walking

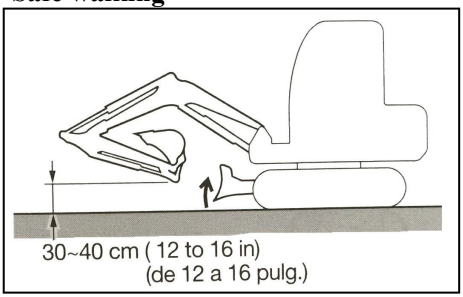

When walking, the bulldozer is raised, and the bucket operation device is lifted according to the above picture, and the bucket is raised to 30 cm to 40 cm above the ground.

Do not turn around when you walk. If you must operate the bucket operation device when walking, the speed should be slow enough, so that you can fully control at any time.

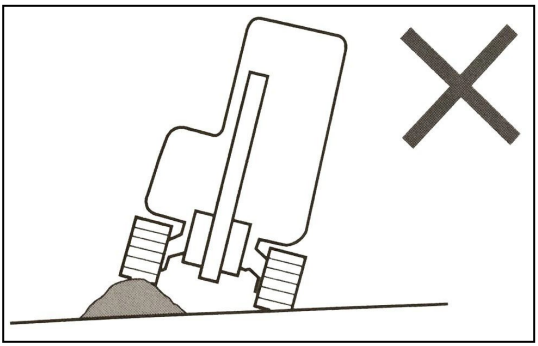

Try to avoid crossing obstacles. If we have to do this, we should keep the bucket

operation device close to the ground and walk slowly. Do not exceed the obstacle that will tilt the machine to 10 degree or greater angle.

On the uneven road, keep walking at low speed, avoid suddenly starting, stopping or changing direction. Otherwise, the working device may contact with the ground, causing the machine to lose balance and damage, or to break the structure in the surrounding area.

Matters of attention walking on a slope

When walking on slopes or ramps, be careful not to overturn or slide down.

Do not walk on the steep slope where the machine can not maintain its stability (the maximum gradient is 30 degrees, the lateral inclination is 10 degrees).

Please note that, based on different working conditions, the actual machine stability will be lower than the above-given value.

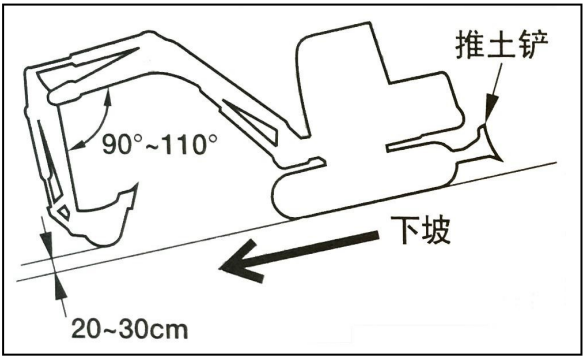

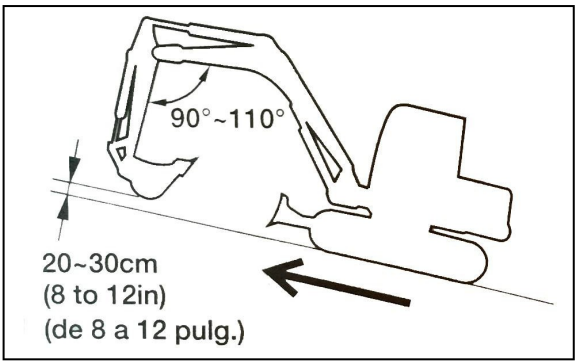

When climbing the mountain, keep the driver's seat on the hillside. When you go down the mountain, keeps the driver’s seat facing the downhill direction. In these two cases, we must pay attention to the ground in front of the machine when we walk.

When walking on the slope, the bucket will be reduced to 20 centimeters to 30 centimeters above the ground. When climbing the steep slope, extend the bucket operation device to the front. In case of emergency, the bucket is lowered to the ground and the machine is turned off.

When driving on slopes or ramps, drive slowly at low speed. Lower the ramp, reduce engine speed.

Please do not reverse the downhill.

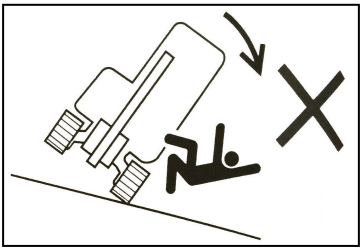

Do not change direction on a slope or a cross slope. First, return to the flat surface, then select another path.

When walking on a gentle slope covered with grass or dead leaves or on wet metal plates or frozen ground, the machine may slip sideways. Make sure that the machine does not stop on the slope.

If the machine is extinguishing on the slope, please return the joysticks to the middle position, then restart the engine.

Be careful to operate a machine on snow or ice

When walking on snow or ice ground, we should drive at low speed to avoid starting, stopping or changing direction.

In snowy areas, objects placed on the shoulders and roadsides are buried in snow and can not be seen. There is also the danger of overturning or bumping objects, so

always operate with care.

If the machine enters thick snow, there will be danger of overturning or burying into the snow. Be careful driving, do not exceed the road shoulder or be trapped in the snow.

For the frozen soil surface, when the temperature rises, the ground will soften, which may cause the machine to overturn and cause the operator to be trapped in the machine.

When parking on unstable ground, down the bulldozer.

Do not move the bucket to the top of the head

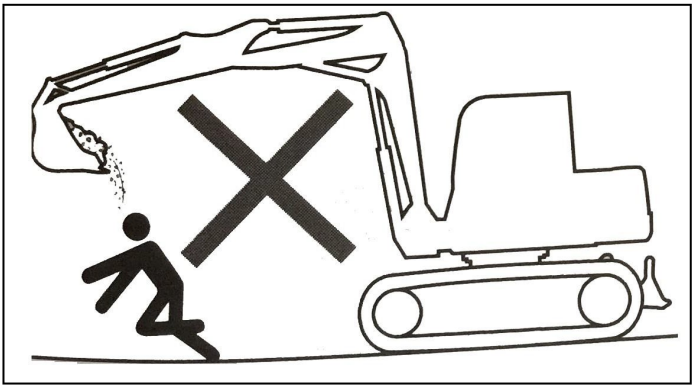

If the bucket is moved to the top of the staff's head, there will be a danger of the scatter of the load or the sudden fall of the bucket.

The safety of the driver should be ensured when loading

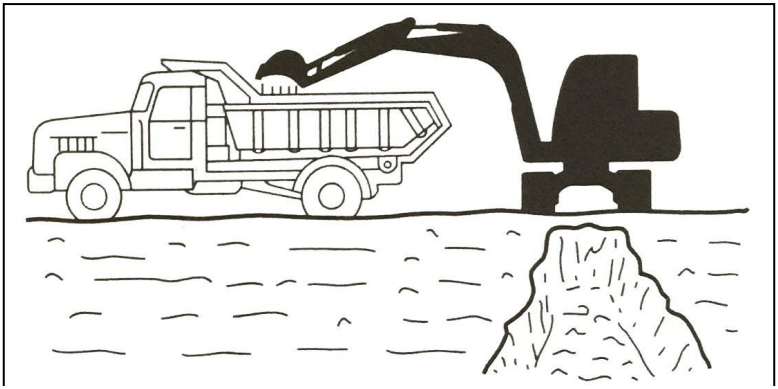

驾驶员到达安全地方之前，请勿装载。

Do not load the driver before reaching the safe place.

切勿在人员或驾驶室上面摆动或停放铲斗。

Do not swing or park the bucket on the staff or cab.

Load from the back of the truck.

Keep safe distance from overhead high voltage cable

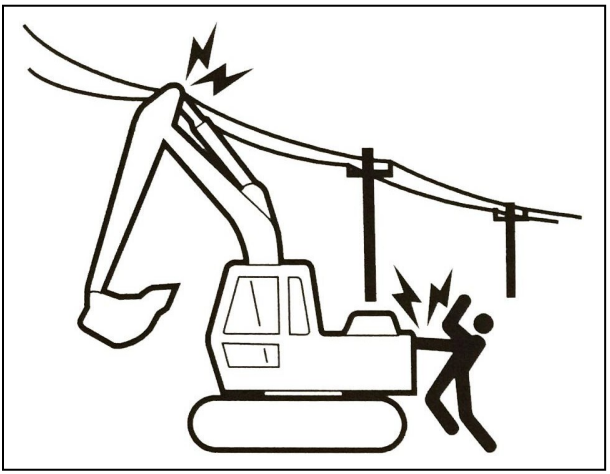

No part or loading material of the machine should be near the high-voltage cable unless all the safety measures required by the local and national institutions have been taken. If the staff is close to the spark that is being discharged, or the machine adjacent to or touching the power supply, there will be danger of electric shock and death.

Always keep the safe distance between the machine and the high-voltage cable.

Before proceeding with operation, please check with local electric power Company about safe operation procedure.

All cables are regarded as high-voltage cables, even if they are known or believed to have been cut off, and the cables are obviously grounded, they are also treated as live cables.

If the machine is too close to the high-voltage wire, use the signalling officer to

issue a warning.

Note that all personnel in the operation area must not be close to the machine or the materials loaded.

Pay special attention to the high pressure cables buried underground.

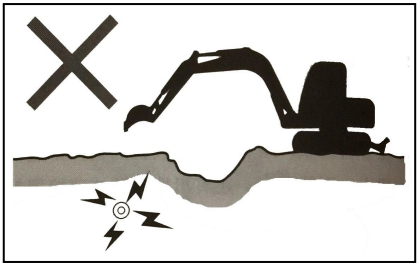

Pay close attention to the conditions of dangerous work

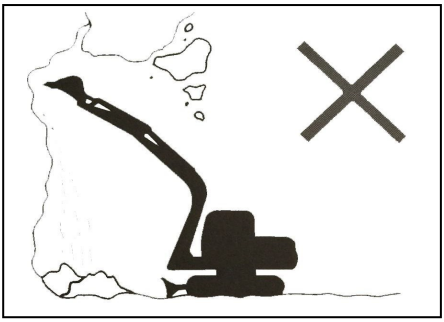

No digging in the high embankment bottom. This may cause ground collapse, so it's dangerous.

Do not operate where it is in danger of falling rocks.

Keep the safe distance between machine and mining field edge. Do not dig the ground in front of the machine.

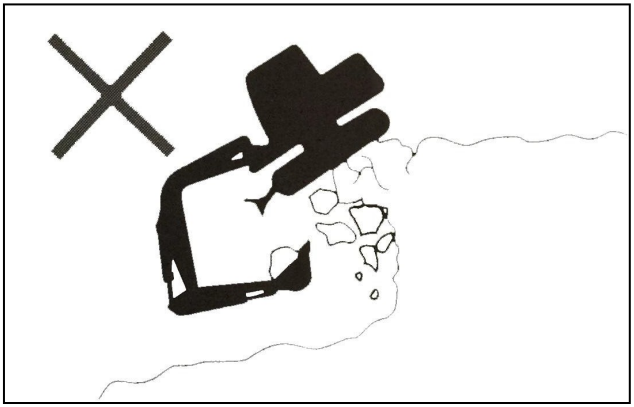

When it is close to the cliff or shoulder work, it is easier to escape when problems arise. In operation, the crawler is at the right angle with the cliff or the shoulder, and the shovel is placed in front of it.

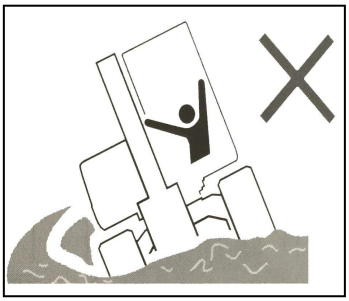

Do not enter the soft ground area. This may cause the machine to tilt due to its weight and cause it to overturn or fall into the ground.

Do not approach unstable ground (cliff, shoulder, deep trench). If the ground

collapses due to the weight or vibration of the machine, it may be dangerous for the machine to fall or overturn.

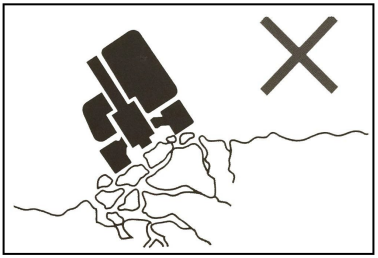

Please remember that the soil is not strong after heavy rain or blasting.

The ground is not strong at the top of the embankment and around the ditch.

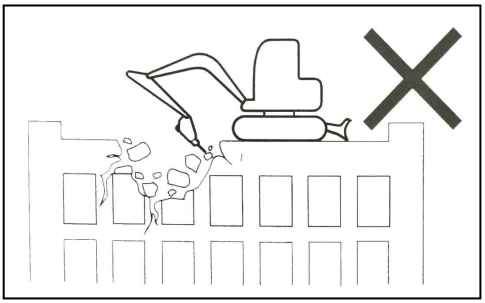

Do not do the dismantling operation under the machine. Because the ground becomes unstable, there may be danger of machine falling.

When working at or from the top of a building or other structure, check the strength and structure before operation. If a building or building collapses, it will cause serious injury or damage.

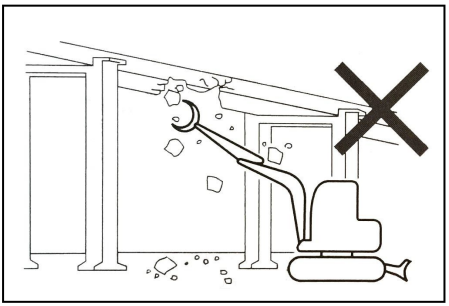

Do not disassemble the top of the head while doing the dismantling operation. There is a danger of breakage, falling or building collapsing, resulting in serious injury or damage.

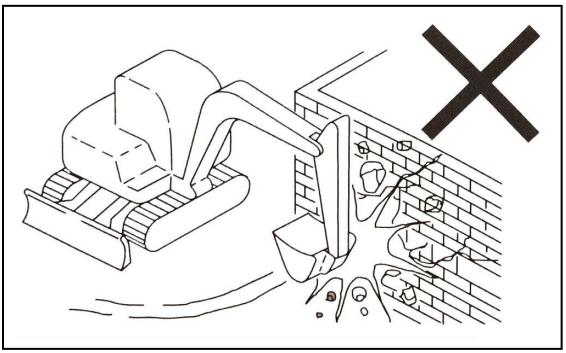

Do not use the impact force of the bucket operation device to do the breaking operation. There is a risk of serious injury due to splashed material debris and damaged bucket operation device.

It's dangerous to operate on the slope

When operating on ramps or ramps, rotating or operating devices may cause instability and overturning of machines. It should be avoided to operate on the slope as far as possible.

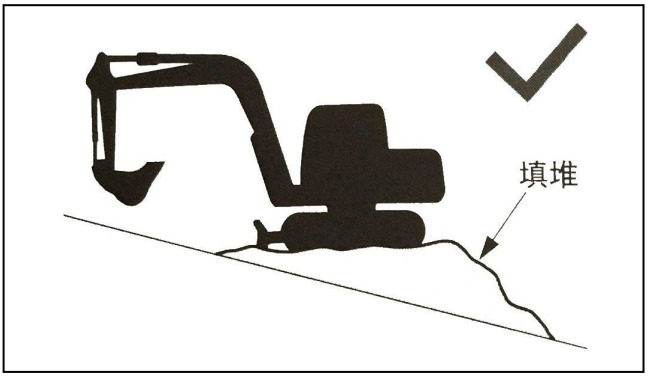

Leveling the operation area.

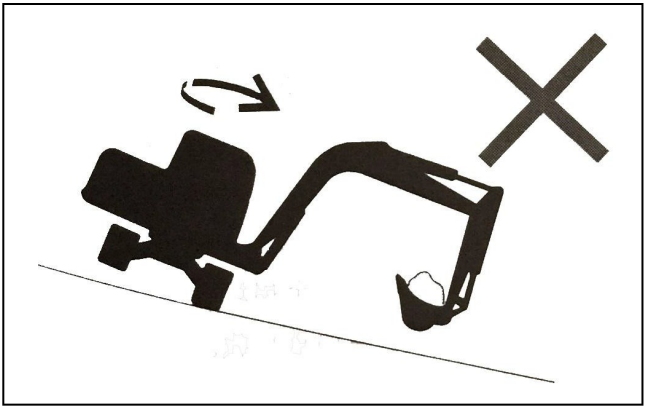

When the bucket is loaded with material, avoid turning to the down hill direction. This will reduce the machine's stability and cause capsizing.

When the bucket has heavy load, do not turn side to side (swing).

It is easier to overturn the machine in the transverse direction than the longitudinal.

Do not turn around when the bucket operation device has heavy load at the end. Especially do not turn side to side on the slope.

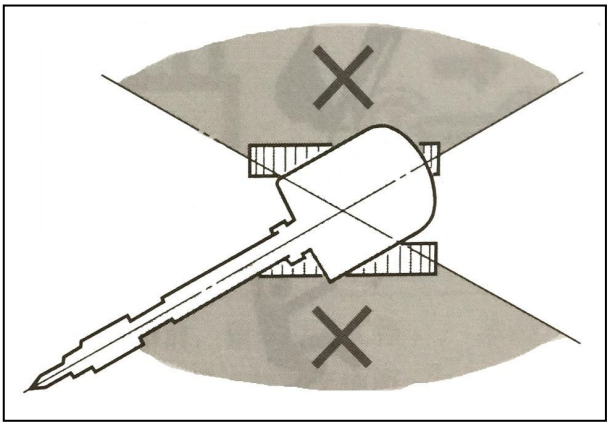

When the machine is equipped with a broken hammer, a grinder or a long rod, the attachments end are heavier than those equipped with standard bucket. To this end the heavy machine, do not allow the bucket rod (boom) toward the down direction or toward the side of the operation of digging machine.

Please pay attention to the top object

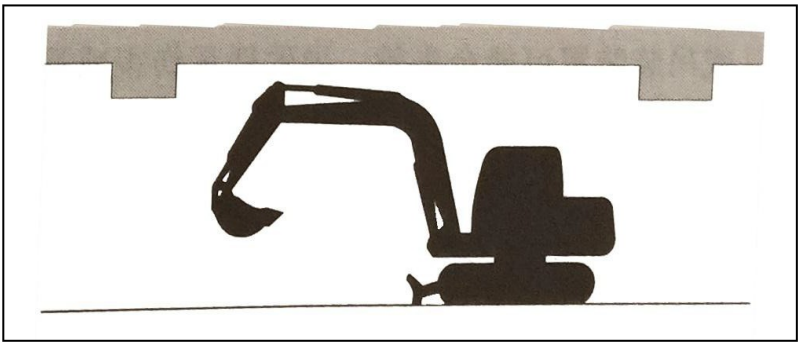

When operating under the bridge, tunnel, cable or indoor, pay attention to the boom or bucket do not hit the top object.

The excavator is not designed for hoisting

This machine is specially designed for mining. Therefore, it has no safety device for crane operation. If excavators are used for hoisting operations, special care must be taken.

https://truckmanualshub.com/

Do not overload in hoisting. Overloading can cause machine overturning, causing serious injury or death.

All rated lifting capabilities are based on stable and flat ground using this machine. For safety lifting operations, we hope that users will have appropriate allowance for specific working conditions. They include loose or uneven ground, non horizontal state, lateral load, dynamic or sudden load, dangerous environment and personnel experience. Operators and other personnel are very familiar with the operation manual before machine operation. They must strictly abide by the safety operation rules of the equipment at any time.

If the chain or hoisting device is not properly connected, the bucket connecting rod or hoisting device may fail, causing serious injury or death.

When the machine is used as a crane, do not attempt to pull out the stump from the ground. In this way, the load safety on the machine is unknown.

Do not allow anyone to stand on or below the lifting object or near the operation area.

Please pay attention to the fly

This machine is not equipped with protective devices to protect operators from flying objects. Do not use this machine when the operator may be hit by a flying object.

Precautions for traction

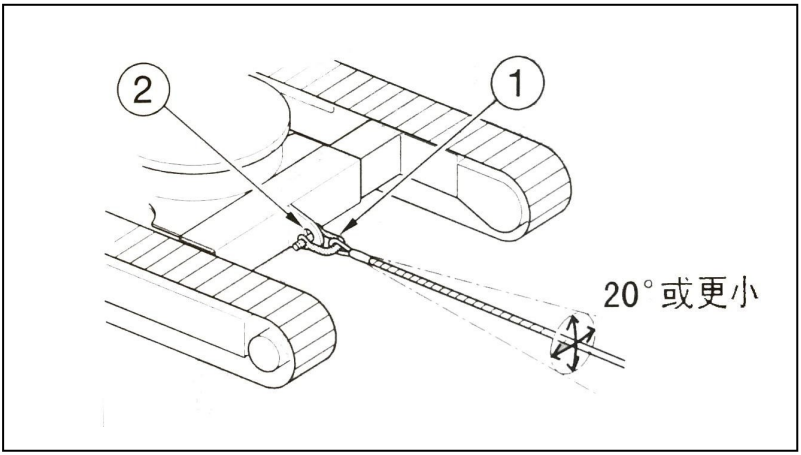

During traction, improper operation, incorrect cable or improper examination will lead to serious injury or death.

If a cable breaks or takes off a meeting, it is dangerous. A wire rope is used to match the traction force.

Do not use, or even damage the cable twist kink.

Do not suddenly increase the load on the cable.

When handling the cable, please put on the safety gloves.

Make sure that there is an operator on the tractive or tractive machine.

Do not make traction on the slope.

Please do not approach the cable when any traction is carried out.

Operating procedure

Prohibited operations

Do not operate on the bedrock (hard or soft).

Do not turn around when you walk. If you must operate the bucket operation device when walking, the speed should be slow enough, so that you can fully control at any time.

Do not use rotary force to disassemble or flatten operation.

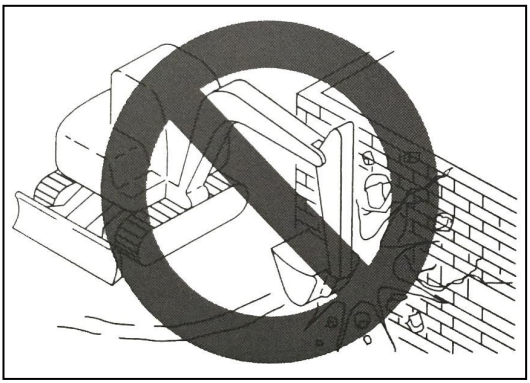

Do not use rotary force to disassemble walls or leveling floors. In addition, do not dig the bucket teeth into the ground. This will damage the bucket operation device.

Do not dig when you walk

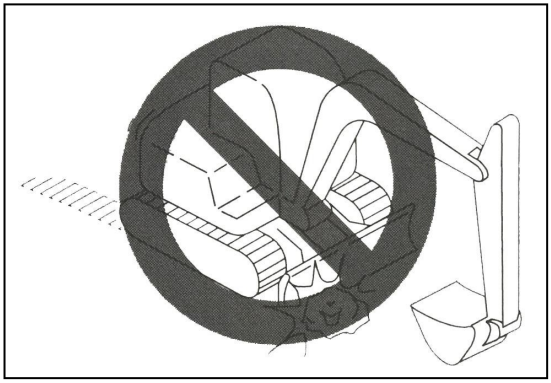

Do not dig the bucket into the ground and use the walking force to excavate.

The use of hydraulic cylinders should be slow

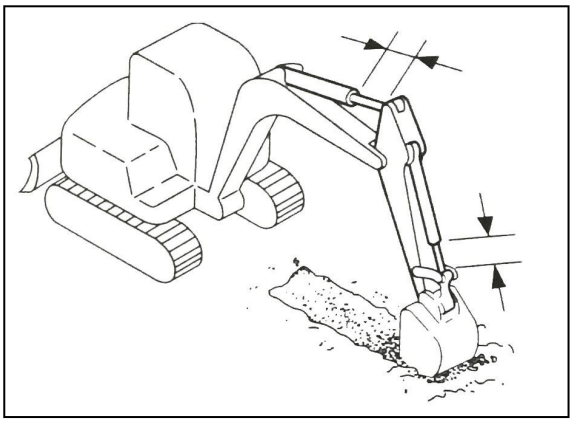

Do not extend the hydraulic cylinder to the head. During the operation, you

should leave some leeway.

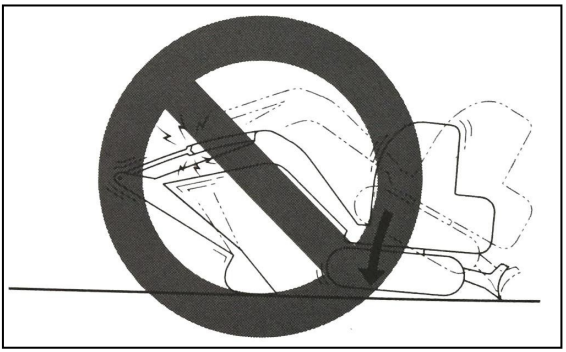

When the body is down and the bucket cylinder is fully extended, do not use the bucket operation device to support the body. Doing this will concentrate the load on the bucket cylinder and damage the bucket cylinder.

Do not use the bucket to push or dig through the heavy bucket.

This will shorten the service life of the bucket operation device. Use liquid pressure to excavate.

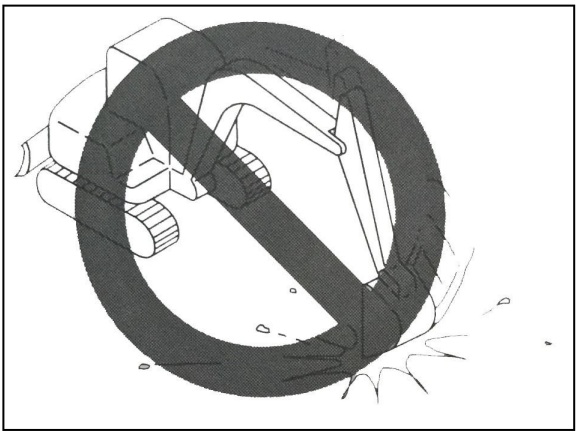

Do not use the sinking force of the machine to perform the operation

Applying additional tension to the machine will shorten its service life. When digging, the hydraulic pressure of the oil cylinder should be shallow, and the stroke must be large.

Excavation of bedrock

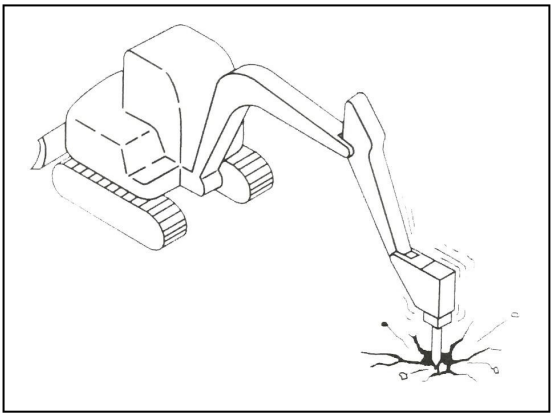

For hard bedrock. Before digging, it is advisable to use broken hammer to break up rock into small pieces. In this way, the damage to the machine can be prevented, so it is more economical.

Attention to the impact of the shovel

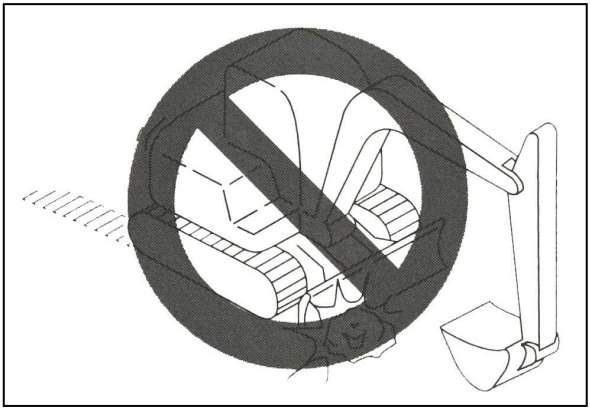

It will damage the bulldozer and earth shovel oil cylinder by pushing the soil shovel to rock.

Take care of the bucket work device

When lifting the bucket operation device, be careful not to make the bucket hit the bulldozer shovel.

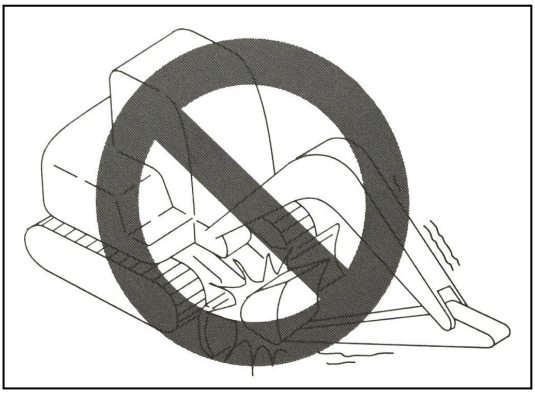

Do not use the shovel as a support

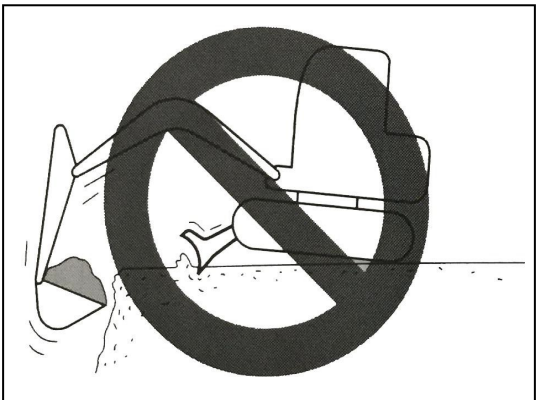

Pay attention to the shovel in excavation

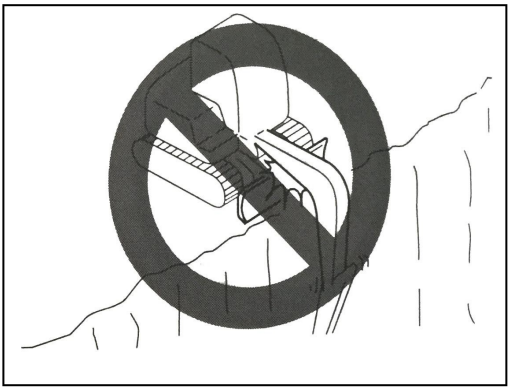

In deep excavation, such as the bulldozer shovel in front, be careful not to cause the boom and bucket to hit the bulldozer shovel.

When operating, try to make the shovel in the rear.

Be careful to use the earth shovel down to dig down

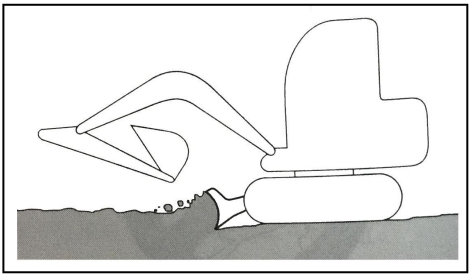

The design of this shovel is used for simple drawing operation. Do not use a earth shovel to dig down. This may damage the shovel and the lower frame.

Operational precautions

Precautions for walking

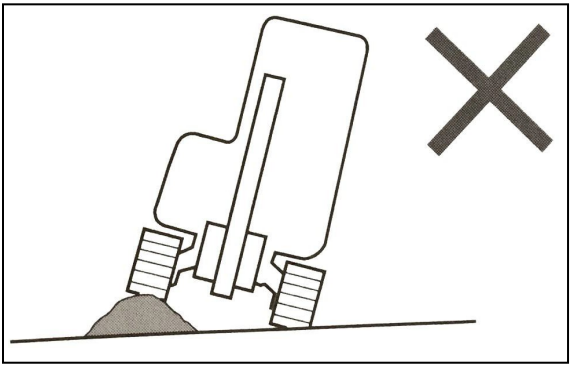

When walking on obstacles (rocks, stump, etc.), it may exert great loads on the body, and may cause damage to them, so as to avoid crossing obstacles. If we have to do this, we should move the bucket operation device near the ground and walk at low speed, so that the center of the track can surmount obstacles.

Attention to high speed walking

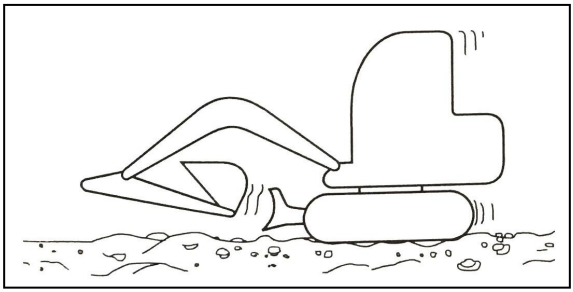

On the uneven road, keep walking at low speed, avoid suddenly starting, stopping or changing direction.

The shovel should be in front of the high speed walk.

Precautions for the use of this machine in water

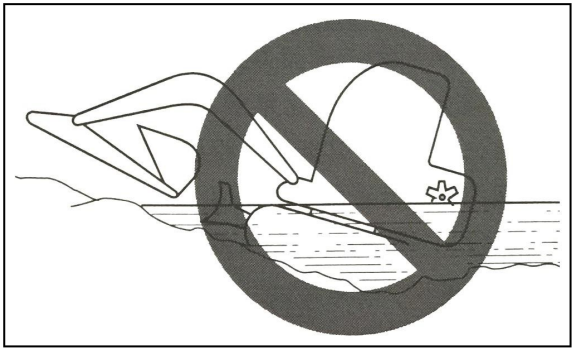

If the rear part of the machine, as shown above, is immersed in the water, the radiator fan will be rotated in the water, resulting in the damage to the fan and the rear part of the machine must not be immersed in the water.

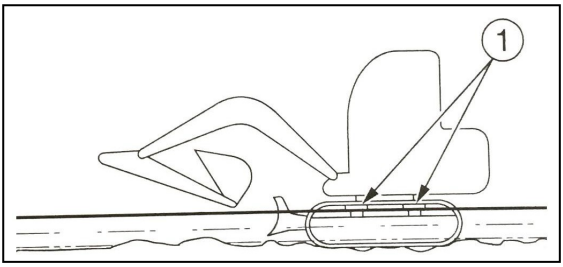

Allow water depth

Only when the water does not exceed the track slip, can the machine be used in the water.

For those that are used for long time in the water, enough oil should be filled until the old oil is squeezed out.

Do not immerse the slewing bearing or main body in water or sand. If it has been submerged, please contact Agrison service agent for inspection.

Out of the mud

If the machine falls into the mud, please follow the following steps.

If a caterpillar falls into the mud

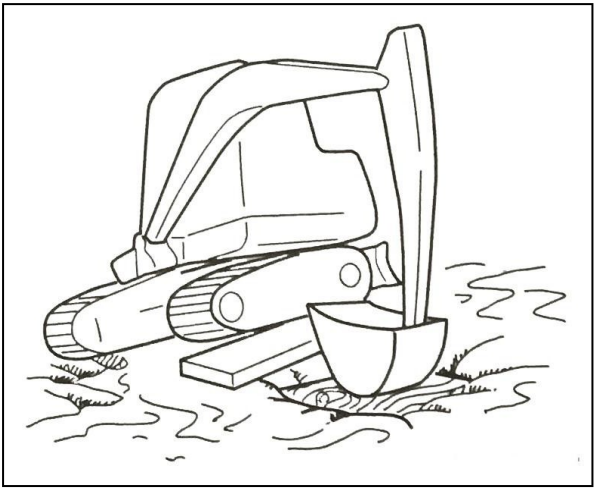

1. Put the bucket into the caterpillar side in the mud.
2. The angle of bucket and boom is set from 90 degrees to 110°.
3. Press the bottom of bucket instead of bucket teeth on the ground.
4. Put a piece of wood or similar object under the raised track.
5. Improve the bucket and slowly drive the machine out of the mud.

If two crawlers fall into the mud

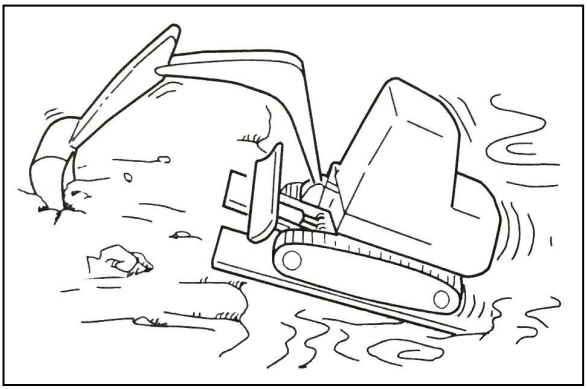

1. Perform the above steps to two tracks from 1 to 4.

2. In front of the machine, the bucket is dug into the ground.

3. When walking forward, pull the rod and move the machine slowly out.

Excavation

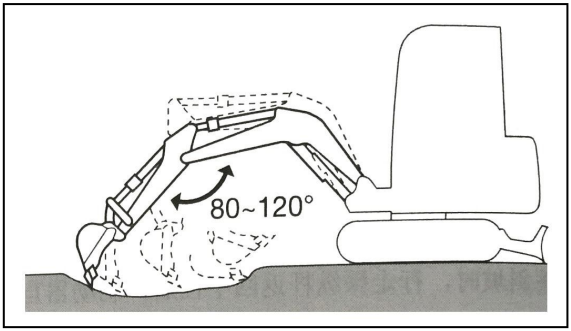

1. the earth shovel is to the opposite side of the excavating area.

2. digging with bucket and bucket, when digging, it should be shallow and long. The digging force is the largest when the angle between the boom and the boom is between 80 and 120 degrees. It is appropriate to use this angle for effective mining.

Dig trenches

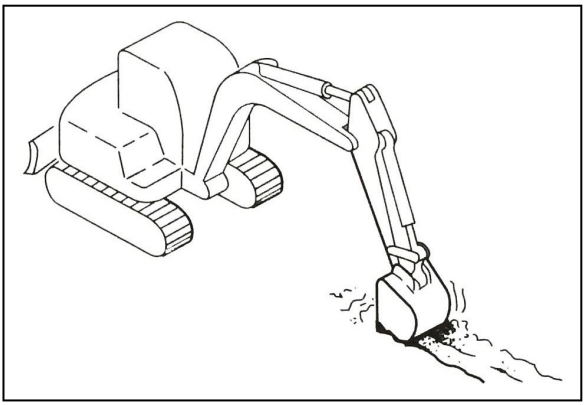

A bucket suitable for digging ditches is installed to adjust the track to parallel to the ditch to be excavated, so as to improve efficiency.

Kuangou dig, dig dug side, after the middle.

Leveling

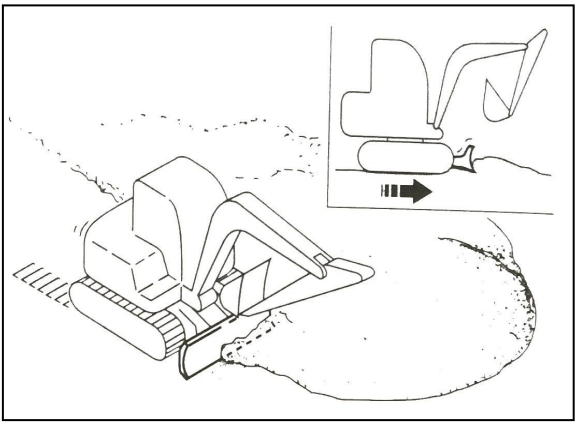

1. The bucket work device is close to the collective.
2. Slowly push the soil away from the side of the pile.
3. When the pile is low, the soil is pushed from the top. If the load is too heavy for the body, it will increase or decrease the adjustment of the bulldozer shovel.

Rubber caterpillar

Because rubber is used, rubber track has inherent weakness, that is, lack of strength. Please abide by the following prohibitions and precautions, so as to prevent track damage or fall off.

Injunction

Do not walk or operate the machine at the following locations:

Walking and turning on rubble, very rough and hard rock, steel beam, scrap iron, or near the edge of the steel plate will damage the rubber track.

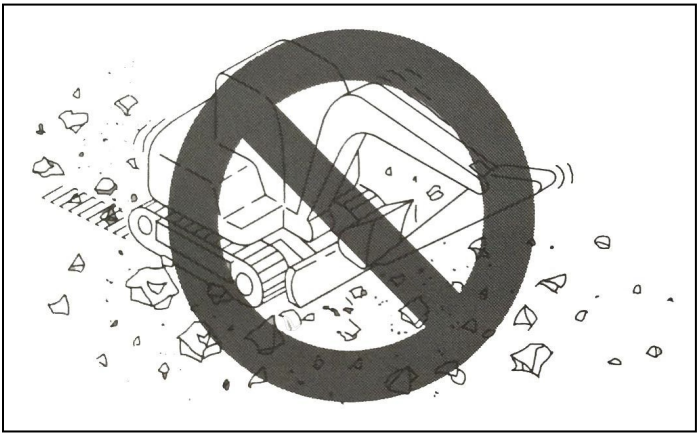

Walking on the river bed or with large amount of pebble can cause the stone to be stuck in the track and damage the track, or cause the track to fall off.

Please do not use this machine at the seaside. Salt may corrode the steel core.

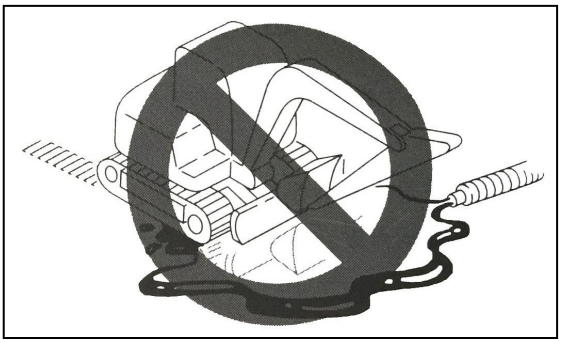

No fuel, lubricating oil, salt or chemical solvent should be attached to the crawler. These substances may corrode the steel track core welding, and lead to rust or spalling. If any of these substances stick to the track, they should be cleaned immediately.

If the machine walks on the irregular surface, such as the newly paved asphalt pavement, exposed to the bonfire or walking on the hot iron plate under the sun, it will cause unconventional wear or damage to the handle.

Do not move the ground where rubber tracks may slip. Otherwise, it may accelerate the handle wear.

Matters needing attention

Please observe the following points when you operate the machine.

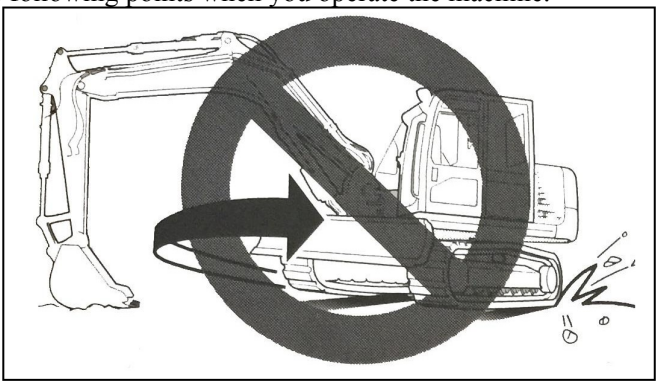

Do not use the bucket operation device to turn the frame down when it rises in

front of the fuselage. Otherwise, it will twist the track at a single point when the load is concentrated in the tracks, resulting in the rapid damage of the track.

Whenever possible, avoid changing the route or turning on the concrete surface as far as possible.

This will wear or damage the rubber caterpillar.

Avoid falling, resulting in strong impact on rubber tracks.

Salt, potassium chloride, ammonium sulfate, potassium sulfate and lime superphosphate will damage the track. If any of these substances are covered with caterpillar, they should be cleaned immediately.

Do not rub the sides of the rubber track against the concrete or the wall.

Don't let the bucket blow on the rubber track to cause track damage.

In winter, we should be very careful on the surface of snow or ice, because the track is easy to slip under such conditions.

Please use rubber track between -25℃ and +55℃.

For long-term storage of rubber track (three months or longer), please store it indoors without exposure to direct sunlight or rain.

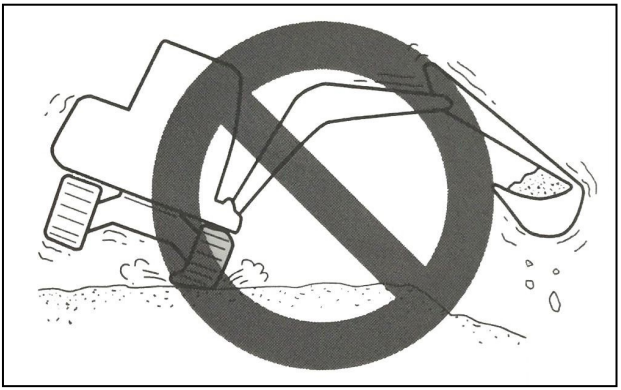

Because the whole handle is made of rubber, rubber track is not as stable as steel track. Be careful when turning and swinging horizontally.

Prevent rubber caterpillar from falling off

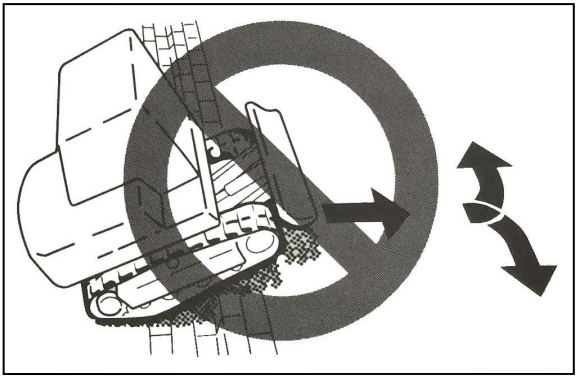

Observe the following precautions to prevent the caterpillar from falling off.

Always maintain the proper strength of the crawler.

When a vehicle has to cross a large step such as a cobblestone or rock, (20 centimeters or deeper), climb up the steps at a right angle, and do not change the route on the steps.

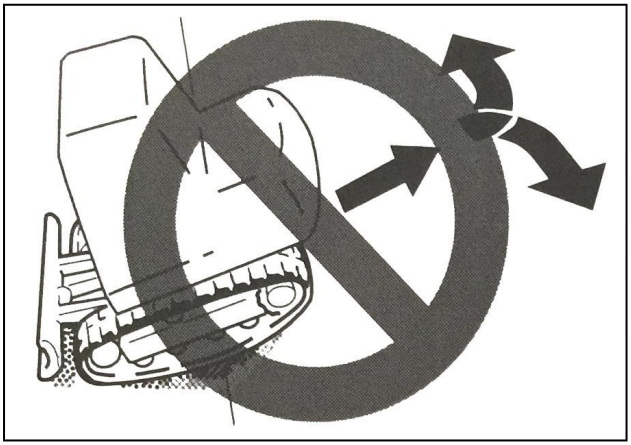

When reversing and climbing, do not change direction at the beginning of the slope.

https://truckmanualshub.com/

Avoid placing a caterpillar on a slope or a prominent part, while another track is placed on a flat surface (the machine inclines at 10 degrees or more). Please walk the two tracks on a flat surface.

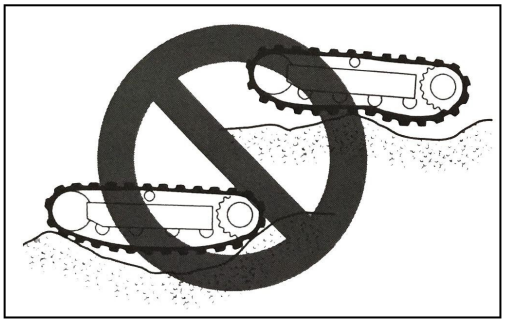

Do not change direction when the track is relaxed as shown in the picture.

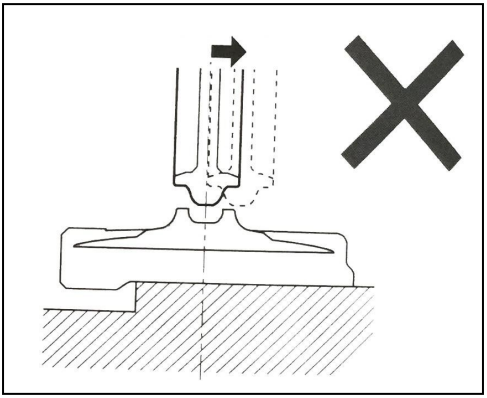

In this case, if the machine moves backward, the rubber track will fall off.

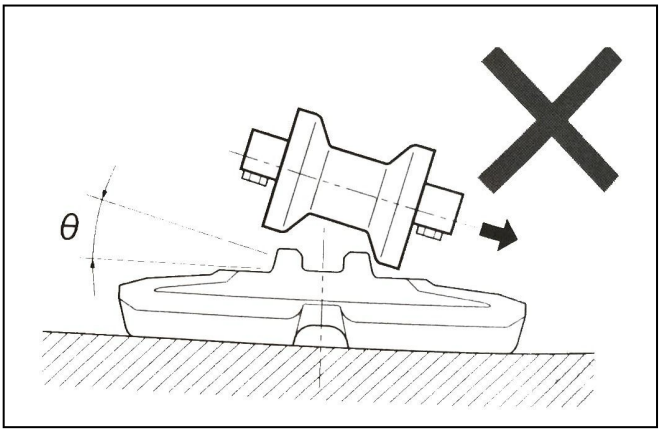

In this case, if the machine rotates, the rubber track will fall off.

Hydraulic breaking hammer

Refer to the manual of hydraulic breaking hammer provided separately for the operation of breaking hammer.

When installing options such as crushing hammer, tilting bucket or grab bucket, please ensure that it is suitable for the machine model being used.

When you choose attachment, please contact your sales or service agent.

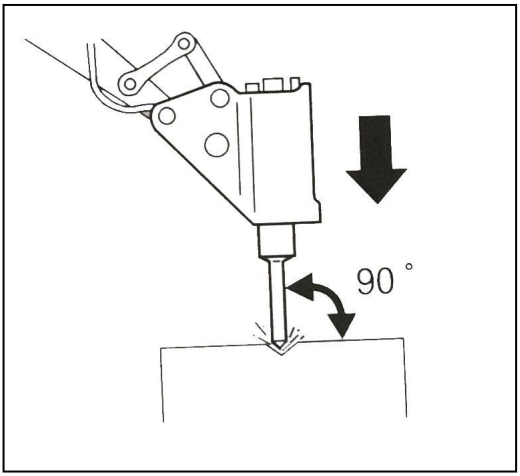

The hammer head is used vertically to the working face for breaking operation.

When broken, the hammerhead should be directed at the object to be broken, so as to avoid hitting the air.

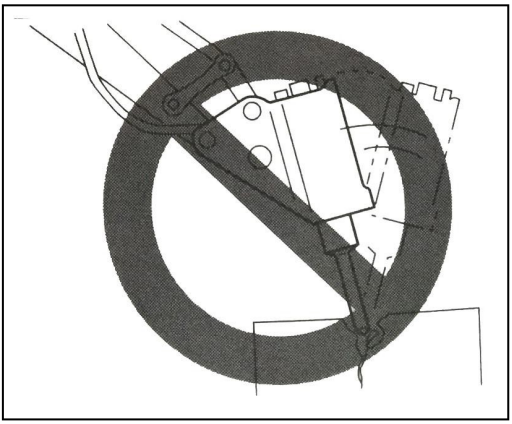

Don't pry it with a hammer, and do not pry when it is broken.

Do not move the hammer when it is broken.

On the same surface, do not continue to impact for more than 30 seconds.

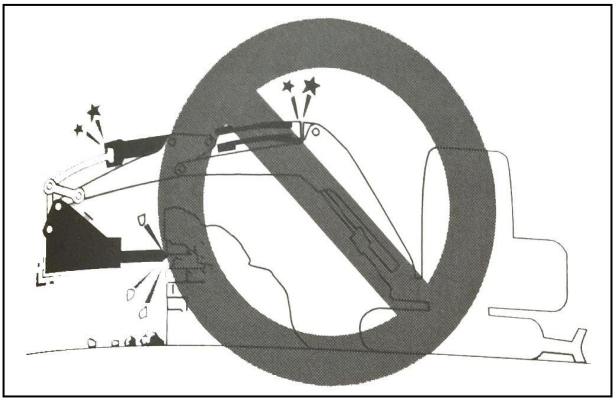

Cylinder full extension or shrink (stroke end point) were not broken. Keep at least 50mm gap.

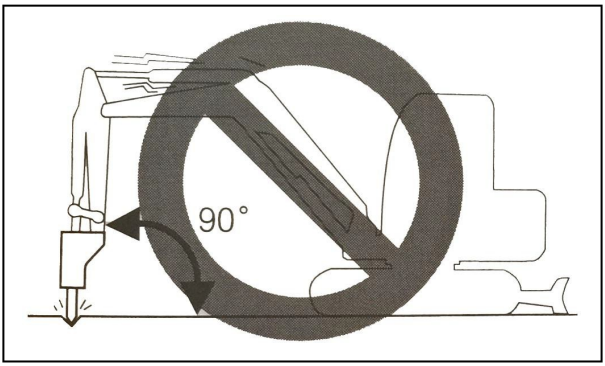

Do not break when the bucket bar is perpendicular to the ground.

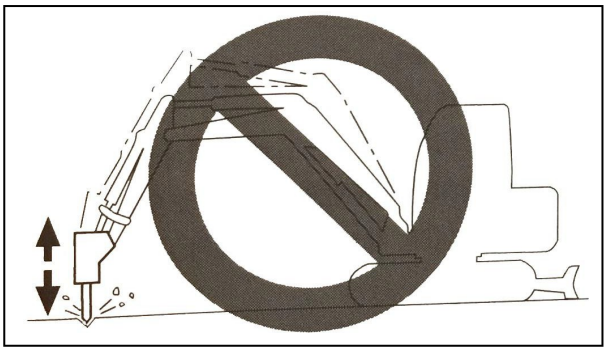

Do not break down by breaking down the hammer itself, breaking the object.

Do not use broken hammer to move the objects or blocks to be broken.

Turn the machine back and forth from time to time to cool the engine.

If the abnormal vibration of the hydraulic tube occurs, it may be the leakage of nitrogen in the accumulating device. Please check it as soon as possible.

Notice when stopping

Safe parking

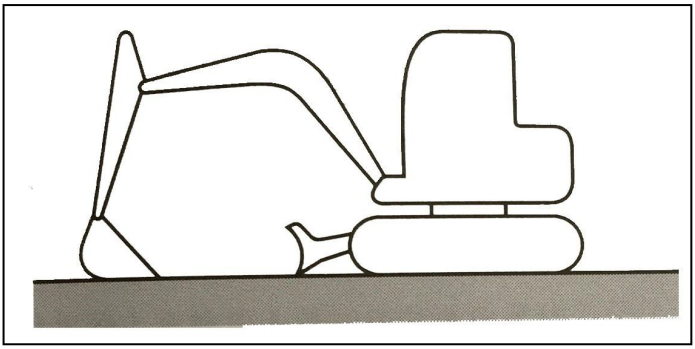

Stop the machine on the flat, solid and safe ground. Set the parking device.

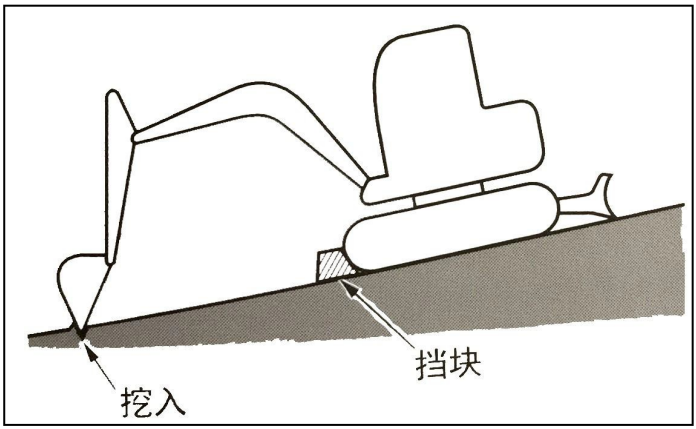

If you have to park or lean on the ramp, stop the machine firmly and prevent the machine from moving.

When parking on the street, we should use grille, warning signs and lights to

make the machine easy to see even at night, so as to avoid collision with other vehicles.

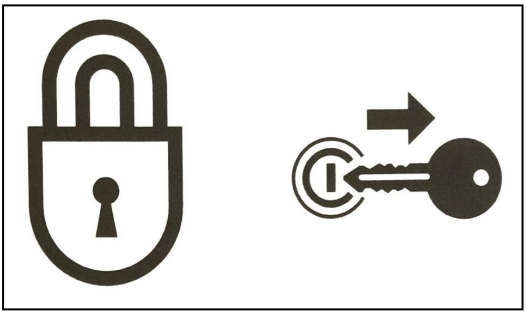

Before leaving the machine, do the following:

Drop the shovel and the shovel down to the ground.

Extinguish the engine, take off the starting key.

Lock the cab and cover, and take the keys.

Main structural parts of the machine

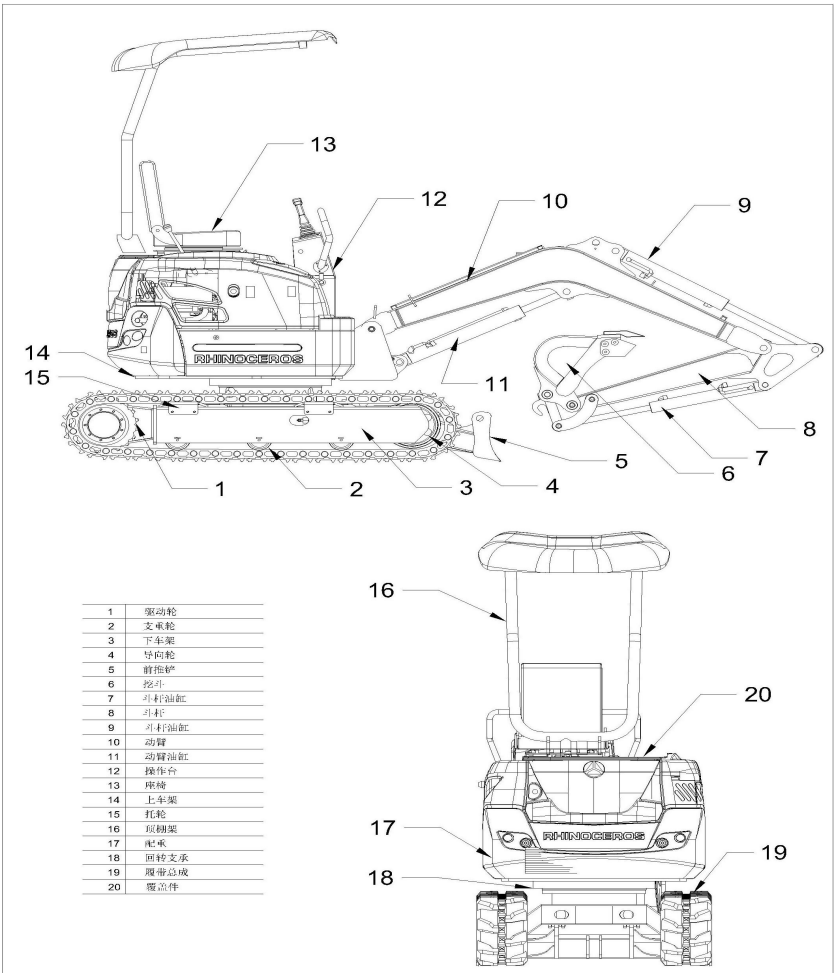

1	驱动轮
2	支承轮
3	下车架
4	导向轮
5	前推铲
6	挖斗
7	斗杆油缸
8	斗杆
9	斗杆油缸
10	动臂
11	动臂油缸
12	操作台
13	座椅
14	上车架
15	托轮
16	顶棚架
17	配重
18	回转支承
19	履带总成
20	覆盖件

1.驱动轮	Driving wheel	12.操作台	Operating table
2.支承轮	Support wheel	13.座椅	Chair
3.下车架	Lower frame	14.上车架	Upper frame
4.导向轮	Guide wheel	15.托轮	Roller
5.前推铲	Front shovel	16.顶棚架	Roof rack
6.挖斗	Bucket	17.配重	Counterweight
7.斗杆油缸	arm cylinder	18.回转支承	Slewing

8.斗杆 9.斗杆油缸 10.动臂 11.动臂油缸	Bucket rod arm cylinder Boom boom cylinder	19.履带总成 20.覆盖件	bearing General caterpillar

Matters of attention in transportation

Safety loading / unloading machine

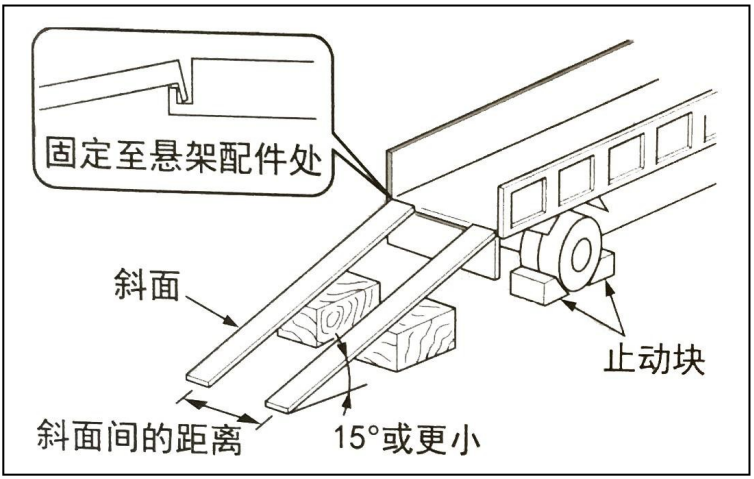

固定至悬架配件处	Fixed to the suspension parts
斜面	Inclined plane
斜面间的距离	The distance between the bevel
15° 或更小	15` or smaller
止动块	Stop block

During loading and unloading, the machine may overturn or drop. Please take the following safety measures:

Choose a solid and smooth floor and keep enough distance from the shoulder.

The inclined plane with enough strength and dimension is fixed to the truck compartment. The slope of the slope must not exceed 15 degrees. If the ramp is bent downward too large, support it with support or support.

Do not use a working device to load and unload the machine. This may cause the machine to overturn or drop.

Keep truck compartment and loading surface clean, no oil, sand, ice, snow and other foreign objects, so as to prevent machine sideslip. Clean the track.

Plug the cart wheel with a wedge to prevent the movement.

When loading and unloading the machine, follow the signal of the signalling member and walk slowly at low speed.

There is no way to change the line on the slope.

Do not swing / swing on the slope. The machine may turn over.

Rotary / compartment of the truck swing, footing may not stable enough, it should be slow.

If it is feasible, lock the door and cover after loading. Otherwise, it may be opened in the course of transportation.

Wedge is used to stabilize the track and then fasten the machine with the truck compartment by means of cables or chains.

Safety hoisting machine

Master and use the correct lifting gesture.

Check lifting equipment every day to see if any parts are damaged or missing, and replace them when necessary.

When lifting, please use a rope that can lift the weight of the machine.

The machine is hoisted according to the procedure described below. Do not operate in any other way, otherwise it may cause the machine to be out of balance.

Do not hoist when there is an operator on the machine.

When lifting, please proceed slowly so as not to overturn the machine.

When hoisting, keep all the staff away from the operation area. Do not move the machine above the top of the head.

Safe transport machine

When transporting machinery, we should understand and comply with

applicable safety regulations, vehicle codes and traffic rules.

We should consider the length, width, height and weight of the truck after loading the machine, so as to select the best transportation route.

Do not suddenly start or stop or drive at high speed during transportation. Otherwise, it will cause the machine to move or lose balance.

Precautions for maintenance

Mark the "do not operate" warning information

When checking or maintaining a machine, if an unauthorized person starts the engine or touches control, it may cause serious injury.

Before maintenance, please turn off the engine and take the key and carry it with you.

危险 请勿操作	

Please mark "do not operate" warning information in the prominent places such as start switches or control rods.

Use the right tools

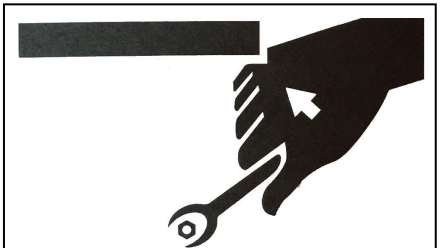

Do not use damaged or poor performance tools or design tools for other purposes. Use the tools that are suitable for the related work.

Regular replacement of safety key components

To ensure that the machine can be safely used in a longer time, it should be regularly refueling and inspected and maintained. To improve safety, replace key parts such as hose and seat belt regularly.

"Replaceable safety key components" refers to parts of aging, wear and functional degradation after reuse, and the performance of such components will change over time. These features can cause serious mechanical damage or personal injury, and it is difficult to judge the remaining life by checking or operating the sense of hand.

If any damage is found when it is visually looked, replace the safety key parts regularly, even though the specified replacement interval has not yet been reached.

Replace the fuel hose regularly. The fuel hose will wear away as time goes on, even though it has not shown any wear symptoms.

The first thing is to find out the wearing symptom is to replace it, no matter how to change the schedule.

To use the machine safely, please carry out inspection and maintenance regularly. The following safety critical components must be changed regularly to enhance safety. Damage to these components will cause serious injuries or fires.

List of security key components

Body	Safety key components of regular replacement	Replacement time
Fueling system	Fuel pipe	Every 2 years

		Fillers on the cover of the fuel tank	
Hydraulic system	Host	Hydraulic pipe (pump outlet)	
		Hydraulic pipe (pump suction port)	
		Hydraulic pipe (rotary motor)	
		Hydraulic pipe (walking motor)	
	Working device	Hydraulic pipe (moving arm cylinder)	
		Hydraulic pipe (pipe of bucket cylinder)	
		Hydraulic pipe (bucket oil cylinder)	
		Hydraulic pipe (swinging cylinder)	
		Hydraulic pipe (soil shovel cylinder)	
		Hydraulic pipe (pilot valve)	
		Hydraulic pipe (auxiliary pipe)	

Explosion-proof lighting

When checking fuel, lubricating oil, coolant or battery electrolyte, please use explosion-proof lamp to prevent fire or explosion. Otherwise, there may be an explosion and serious casualties.

The entry of unauthorized personnel is strictly prohibited

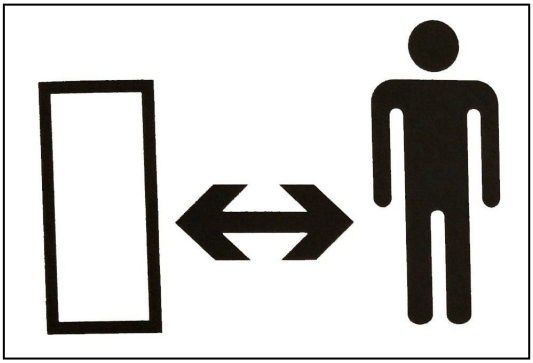

Please do not allow unauthorized personnel to enter the job area while doing homework. Please be careful when grinding, welding or using hammers. You may be injured by the debris that is flying out of the machine.

Operation area preparation

Select the stable and smooth operation area. Ensure proper lighting conditions, such as indoor operation, ventilation should be ensured.

Remove obstacles and dangerous goods. Remove the slippery area.

Keep the machine clean all the time

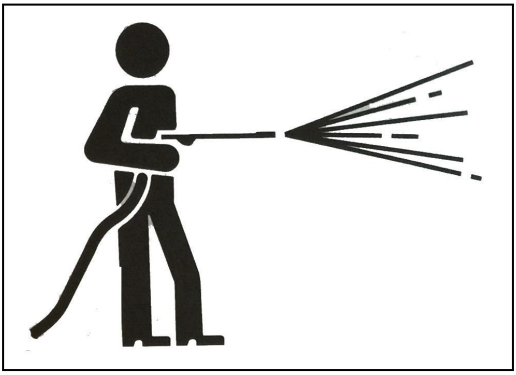

Before maintenance, the machine should be cleaned.

The engine is flameout before cleaning the machine. Cover electrical components to prevent water from water. Electrical components may cause short circuit or fault after being flooded. Do not use water or steam to clean batteries, electronic control components, sensors, connectors or cab.

Extinguish the engine before maintenance

When the machine is running, or the machine is not running, but the engine is running, avoid lubricating or mechanical adjustment.

If we must maintain the engine when running, we should arrange two people to work in teams and keep communicating with each other.

A person must sit on the driver's seat to extinguish the engine immediately if necessary. This person must pay special attention to not touching the control rod and pedal, except when needed.

Another person who performs maintenance must ensure that his body or clothes are away from machine moving parts.

Far away from moving parts

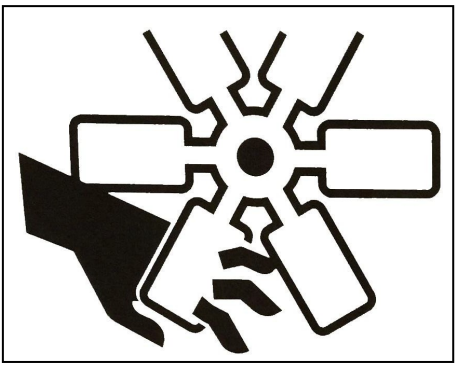

Stay away from all rotating and moving parts. If hand or tool is stuck into rotating or moving parts, it may lead to serious injury or even death.

If a tool or other object is thrown into or inserted into a fan or fan belt, these objects will be blown or chopped. Do not throw anything into or insert into the fan or fan belt.

Fasten the machine or any parts that may fall.

All mobile devices should be landed on the ground or at the lowest location before maintenance or repair.

Fixed caterpillar

If we must operate under the lifting machine or equipment, we always use wood block, Jack or other sturdy and stable support to fix it. Before it is firmly supported, it will not get under the machine or working device. This program is especially important for hydraulic cylinder operation.

Stable working device

When repairing or replacing bucket teeth or side teeth, the working device should be firmly secured to prevent accidental movement of machines.

Open the engine cover or cover to keep it stable

Be sure to fix the hood or lid before making the machine work. Please keep the hood or lid closed when the wind is heavy or when the machine is on the slope.

Put the weight in a stable position

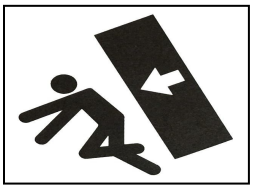

In the process of dismantling or installation, we need to put the heavy objects or accessories on the ground for the time being. Don't let unauthorized personnel close to store such goods.

Precautions for refueling

No smoking or open fire near fuel point.

No fuel cap or gas can be removed when the engine is running or not cooled. Do not scatter the fuel on the high temperature surface of the machine.

Fuel the fuel tank in a well ventilated area.

Do not fill up the fuel tank. There should be room for oil expansion.

The spilled fuel should be cleaned immediately.

Firmly tighten the fuel tank. If the lid of the fuel tank is missing, replace it only with the original one. The use of unlicensed and poorly ventilated fuel tank cover will cause internal pressure in the tank.

Prevent dust from entering

When installing and disassembling components, it should be carried out in areas without dust, cleaning workshops and cleaning parts to prevent dust from entering.

Cleaning surface

When installing and disassembling components, please ensure that the contact surfaces of components are clean. If the sealing groove of the contact surface is damaged, please contact your sales or service agent for repair or disassembly.

The sealing ring and pin

You must use the new parts all removed the sealing ring and pin.

When installing, be careful not to damage or distort the sealing ring.

Sealing ring

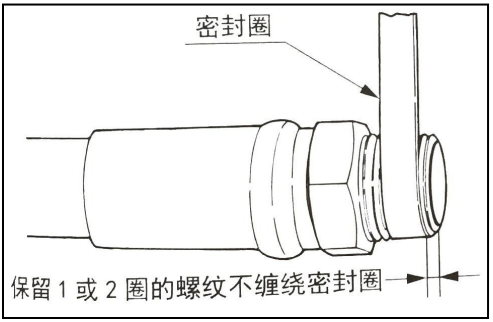

密封圈 保留 1 或 2 圈的螺纹不缠绕密封圈	**Sealing ring** Remain 1 or 2 rings of screws unwinding seal ring

With sealing tape wrapped plug, thread will ring the old tape clean and clean the thread.

Sealing ring for winding thread, in 1 or 2 end plug will not leave around.

No fuel is used for cleaning

Fuel and lubricants are used according to season.

Please refer to the form below, select the appropriate fuel, lubricating oil and grease according to the temperature. No matter whether it has arrived at the appointed time, if the oil becomes too dirty or deteriorated, please replace it.

Do not mix the different brands of oil at the time of refueling. If you want to change the brand, please replace all the fuel / lubricating oil.

Fuel and diesel should meet the following specifications. The table lists the current diesel specifications in the world.

Diesel specification	Place	Diesel specification	Place
GB252	China	BS2869-A1or A2	British
ASTM D975 No.：1-D，S15	U.S.A Canada	ISO 8217DMX	International
Biodiesel			

Biodiesel mixed to B5 ASTM D6751，D7467			
EN590：96	EU		Japan
Biodiesel Biodiesel mixed to B5 ENI4214，EN590		JIS K2204 second — level	

Diesel oil tank

In order to maintain engine performance and service life, always use clean and high quality fuel.

In order to prevent freezing in cold weather, please choose the diesel that is still applicable when the actual temperature is at least 12℃ below the expected minimum outdoor temperature.

Please use a diesel with a value of sixteen or more than 45 or more. When it is used in alpine or high altitude area, it needs sixteen fuel with higher value.

Use sulfur containing volume ratio less than 0.05~0.0015% fuel. (in the US or Canada, the use of ultra-low sulfur fuel) using high sulfur fuel may cause sulfuric acid corrosion of engine cylinder.

The use of kerosene is prohibited. Do not mix kerosene, used engine oil or residual fuel with diesel fuel.

Poor quality fuel will reduce engine performance or cause engine damage. The use of fuel additives is not recommended. Some fuel additives will cause engine performance degradation.

Metal content, such as zinc, sodium, magnesium, silicon and aluminum, must be limited to one millionth of the mass (1 mass ppm) or lower.

Safety measures for using biodiesel, the warranty requirements of engine manufacturers are invalid for machines that do not meet standard or deteriorated biodiesel.

Lubricating oil

API standard: American Petroleum organization; ACEA standard: European Automobile Manufacturers Association.

SAE standard: American Academy of Automotive Engineers

*: if the proportion of walking time in the total operation time is relatively high, the gear oil should be changed before the specified time.

**: please use water (soft water) when you want to use water. Do not use well water or river water. When the outdoor temperature drops below 0℃, add coolant (antifreeze). The mixing ratio is determined according to the instructions of the manufacturer of the coolant.

***: the interval of hydraulic oil changing depends on the type of hydraulic oil being used. When using ordinary anti wear hydraulic oil, hydraulic oil should be changed every 2000 hours.

部位	种类	根据温度选择的种类 -4 14 32 50 68 86 104 ℉ -20 -10 0 10 20 30 40℃	更换时间
油底壳	柴油机燃油 API：CD 级 ACEA：E-3、E-4 或 E-5	SAE 10W-30 SAE 15W-40	头 50 小时后每 250 小时
液压油油箱	抗磨液压油	ISO VG32 ISO VG46 ISOVG68	每 2000 小时 ***
冷却系统	冷却水（水 + 冷却液）** SAE：J814C 或 J1034	50% 冷却液混合物 30% 冷却液混合物	每 1000 小时
行走减速齿轮	齿轮油 API：GL-4	SAE 90	头 250 小时 * 后每 1000 小时。
回转马达齿轮	锂基油脂 EP-2 NLGI 2 号	—	每 50 小时。
回转支承			每 50 小时。
工作装置			每日或每 10 小时。
杆			需要时

部位	冷却水（水+冷却液）

Position 种类 type 油底壳 Oil sump 液压油油箱 Hydraulic oil tank 冷却系统 Cooling system 行走减速齿轮 Walking deceleration gear 回转马达齿轮 Rotary motor gear 回转支承 Slewing bearing 工作装置 Working device 杆 rod 种类 type 柴油机燃油 Diesel fuel 抗磨液压油 Antiwear hydraulic oil	Cooling water (water + coolant) 齿轮油 Gear oil 锂基油脂 Lithium-based grease 根据温度选择的种类 Types based on temperature selection 冷却液混合物 Coolant mixture 更换时间 Replacement time 头 50 小时后每 250 小时 Every 250 hours after the first 50 hours 每 2000 小时 Every 2000 hours 每 1000 小时 Every 1000 hours 每 50 小时 Every 50 hours 每日或每 10 小时 Daily or every 10 hours 需要时 When needed

Maintenance cycle

10 hour daily maintenance

• To pin the arm and the bucket arm and front device in grease (see page 4-13)	•Check whether there are cracks or welding of structural parts (see page 4-19). • check all the operating switches

• check engine oil level (see page 4-14) • check the oil level of the hydraulic oil tank (see page 4-14) • check the leakage of the hydraulic system (see page 4-15) • check fuel oil level (see page 4-16) • inspection of the oil-water separator (see page 4-16) • check the leakage of the fuel system (see page 4-17) Check the cooling system and add coolant as required (see page 4-17). • check the liquid level of the window cleaning fluid (see page 4-17) Check the wear and tear of bucket teeth and side teeth (see page 4-18). Check whether the engine fan belt is cracked or worn, and the tightening force is suitable (see page 4-18).	(see page 4-19) •Check all the external lights, speakers, control indicators and monitor lights (see page 4-19). •Start engine, check engine startup performance, check exhaust color at startup and exhaust color at normal working time, check whether there is noise or not (see page 4-19). • check all operating controls (see page 4-19) •Check bolts and nuts to prevent loosening and loss (see 4 to 20 pages). • check the tightness of track parts, whether there are loose parts, noise or breakage parts (rail links, track boards, supporting sprockets and steering wheels) (see page 4-20). •Clean engine air filter cover (see page 4-20).
50 hours of weekly maintenance	
•Carry out every 10 hours / daily maintenance check (see page 4-21).	• replacement of engine oil and filter cartridge (see page 4-21) Check water tank, oil radiator and air conditioner condenser core (see page 4-21).
•Injection of butter into the shaft socket (see page 4-21) • pour butter into the slewing bearing (see page 4-21), check the fuel tank discharge valve (see page 4-21).	• check the battery liquid and charge (see page 4-22) • Cleaning the fuel tank filling filter (see page 4-22)

100 hour maintenance

•Carry out every 10 hours / daily maintenance and 50 hour maintenance check (see 4-23 pages). •Clean the filter core of the air filter (see page 4-23)	• replacement of hydraulic oil (see page 4-24) • replacement of hydraulic oil filter core (see page 4-24)

200 hour maintenance

•Carry out all 10 hours / daily, 50 hours / weekly and 100 hours maintenance checks (see 4-25 pages).	• replace engine oil and filter cartridge (see page 4-25)

250 hours of monthly maintenance

•Carry out all 10 hours / daily and 50 hour / weekly insurance. Check up (see page 4-26) • discharge impurities from the hydraulic tank (see page 4-26)	•Check the wear and tear of front end work device pin and bushing (see page 4-26). • check the hose clamp of the fuel system (see page 4-26)

500 hours of maintenance per three months

•Carry out all 10 hours / daily, 50 hours / week, 100 hours, 250 hours maintenance check (see 4-27 pages). • replacement of fuel filter core (see page 4-27) • replacement of water tank coolant (see page 4-28)	• replacement of hydraulic oil filter core (see page 4-29) • replacing the air filter cartridge (see page 4-30) •Check the oil level on both sides of the walking deceleration device (see page 4-30).

1000 hours of maintenance per six months

•Carry out all 10 hours / daily, 50 hours / week, 100250500 hours maintenance check (see 4-31 page). •Replacing hydraulic oil and cleaning oil filter (see page 4-32).	•Replacement of walking deceleration device oil (each side) (see page 4-33). • check and adjust the cleaning valve (see page 4-33) • check the loosening of the bolt (see

	page 4-33)

1200 hour maintenance

•Carry out all 10 and 50100 hours of maintenance inspection (see page 4-34).

2000 hours of annual maintenance

•Carry out all daily, 50, 150, 250, 500 and 1000 hour maintenance checks (see 4-34 pages). •Check generator and start motor (see page 4-34) • inspection of all earthquake resistant rubber blocks (see page 4-34)	• Carry out and record the results of each cycle test (see page 4-34). • Inspect machine welding parts to see if there are cracks or damage to open welding or other structural parts (see page 4-34).

4000 hours and two years of maintenance

• important components - periodic replacement (see page 4-35)

10 hours / daily maintenance

Pin, bucket and front pin shaft

1. every 10 hours, the front connection pin is filled with grease.

As shown below, the working device will be on the ground and shut down the engine.

Press grease nozzle and grease gun to grease the specified point.

2. after the filling, the cleaning of the waste oil.

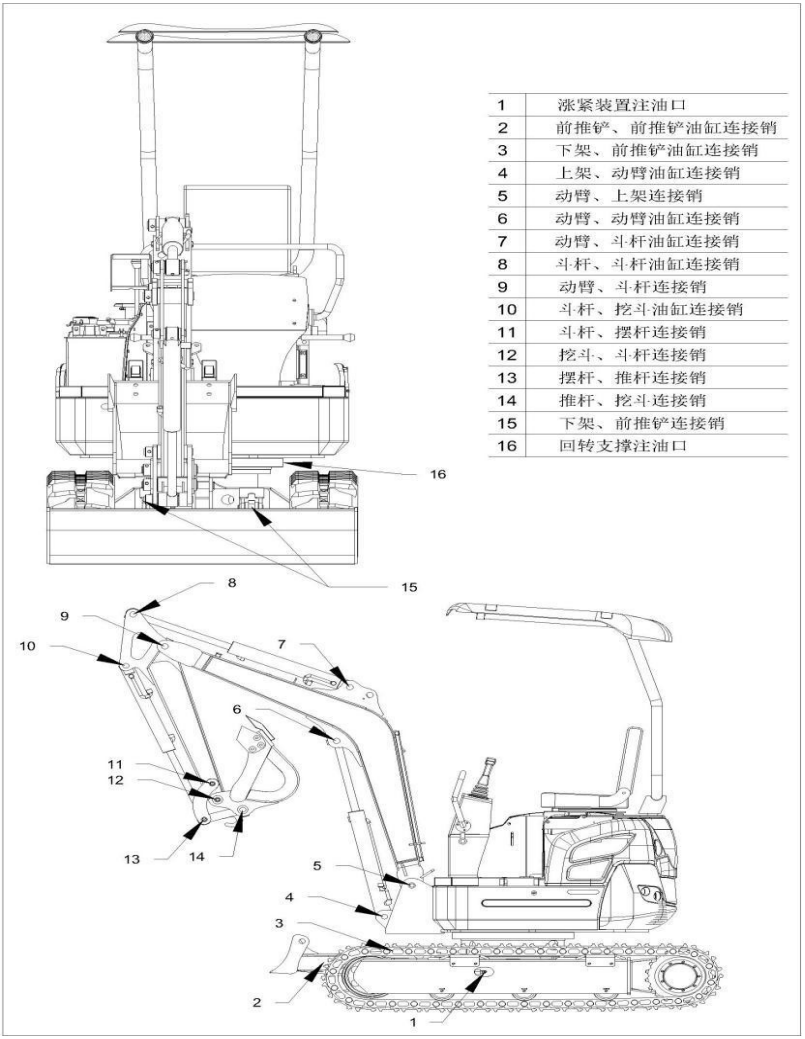

1.Fuel injection port	9.Connecting pin of arm and bucket
2.Front shovel and front shovel cylinder connection pin	10.Connecting pin of bucket and bucket oil cylinder
3.Connecting pin of bottom and front shovel oil cylinder	11.Connecting pin of bucket and swing rod
4.Upper and arm cylinder connecting pin	12.Joint pin of bucket and bucket

5.Connecting pin of arm and upper frame 6.Pin and arm cylinder connecting pin 7.Connecting pin of movable arm and bucket rod oil cylinder 8.Connecting pin of bucket rod and bucket rod oil cylinder	13.Pendulum rod and push rod connection pin 14.Connecting pin of push rod and dug bucket 15.Connecting pin of lower frame and front shovel 16.Revolving support injection port

Check engine oil level

1. Stop the engine and check it in 15 minutes. In this way, the oil can all flow back to the oil sump.

2. Use the oil level gauge to check the engine oil level.

3. Engine oil level should be located between H and L of oil level gauge**.**

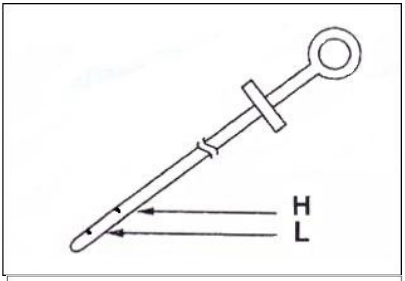

4. The oil can be added from the oil cover.

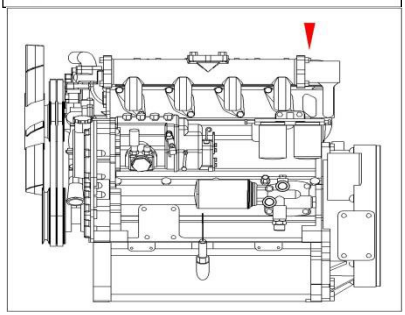

https://truckmanualshub.com/

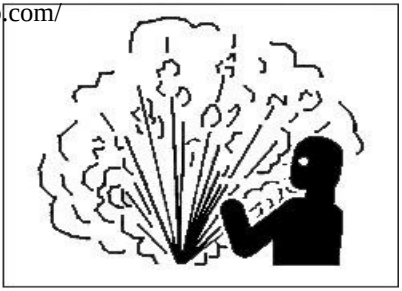

Check the oil level in the hydraulic oil tank

Warning
When the hydraulic oil is working normally, the temperature of the oil rises. Before the maintenance of hydraulic components, we should first reduce the oil temperature. The gas in the hydraulic tank has pressure. First slowly release theplug on the hydraulic oil tank, release the air in the fuel tank, and then remove the filler cap or the upper plate cover safely.

1. The machine is on the level and strong ground, as shown in the figure, extending the small arm to drop the bucket to the ground.
2. Turn off the engine.

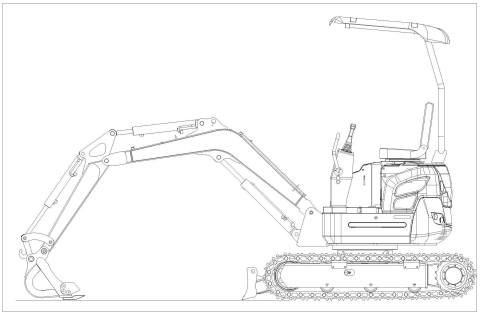

3. After shutdown, switch the start switch to the "open" position, and move all the rod (including the walking rod) several times in the limit position to release the residual hydraulic pressure and then pull out the key.
4. Check the oil level, the oil level marking line is between the required marks, if the lower limit is lower, add hydraulic oil.

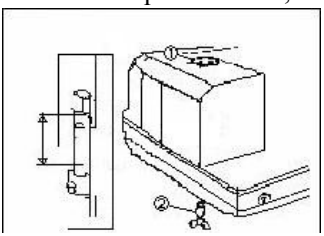

Important
The oil level should not exceed the "H" mark line. Excessive injection will cause equipment damage and oil leakage. The excess oil should be released from the bottom of the tank.

Check the leakage of the hydraulic system

Every day after work, check to make sure that there are any signs of leakage of hoses, hard pipes, joints, cylinders and motors. If there is any, check the leakage and repair.

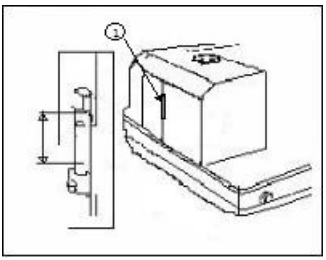

Check fuel oil level

Warning
When adding fuel, special safety precautions should be taken to prevent explosion and fire.

1. Before filling the fuel, make sure that the refueling hose is fixed on the excavator. By observing the oil level, confirm the fuel injection volume, and add fuel to the fuel tank through the tubing, the capacity of the tank is 55 liters.
2. Do not add excess fuel.
3. Tighten the refueling cover after.

Note: if the ventilator hole is blocked, a vacuum is formed in the fuel tank. Fuel can not be fully supplied to the engine. Therefore, keep the respirator hole clean.

4.Check the fuel indicator in the driver's cab for normal operation.

Attention: of course, when the oil reaches 3 liters or less, the fuel level warning light is on.

Note: after the completion of the operation, fuel can be injected and the volume of the tank is 55 liters.

Inspection of oil-water separator

1. Open the hood, check if the container of oil-water separator, water, floats floating red.
2. Release the water when floating to the warning line.
3. Release the water release valve at the bottom of the container.
4. Close the valve carefully after the discharge is finished.
5. Plug on the top of oil-water separator can't be reused. If the plug is loose, replace and tighten.

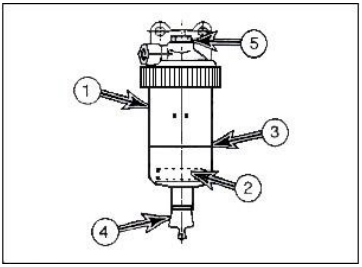

Check the leakage of the fuel system

Check all parts of the engine to make sure that the fuel system is not leaking. If there is oil leakage, check the cause and repair.

Check the cooling system, if necessary, to add coolant

▲**Warning**
Before lifting the lid of the engine, let the engine cool down, so that the lid can be loosened slowly without leaving any residual pressure. When the engine is running, clean the water tank, stand next to the running engine or be careful when working. When working, make sure the

parts are firmly fixed.

Do not easily lift the lid of the water tank, observe the coolant level in the reserve tank.

1. When the engine is cooled, uncover the lid of the water tank and check the liquid level of the coolant. If necessary, add a coolant to the water tank, as shown in the following table. It can be protected by adding coolant.

Ambient temperature	cooling water	Antifreezing fluid
-10℃（15°F）	80%	20%
-15℃（5°F）	73%	27%
-20℃（-5°F）	67%	33%
-25℃（-15°F）	60%	40%
-30℃（-20°F）	56%	44%
-40℃（-30°F）	50%	50%

Check operation table cleaning

1. Check the cleaning situation of the driving workbench. There is no hindrance to the operation view.

2. The operation table is clean and clean. The driver can drive without obstacle.

Note: when cleaning operation workbench, do not flush wiring harness to prevent unnecessary troubles in electrical system. After cleaning, pay attention to the protection of the environment.

Check the bucket teeth and lateral teeth are worn

1. Check the wear of 1 of the bucket teeth each day.

2. Replace the badly worn bucket teeth in time, otherwise the tooth seat 2 will be exposed.

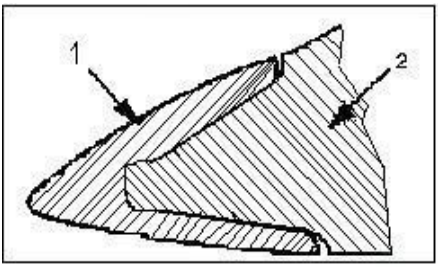

Check whether the engine fan belt is worn or tighten

Important
If the fan belt is too loose, the engine will overheat, and it will not work properly and cause wear. Too tight will cause damage to bearings and belts of pumps, generators.

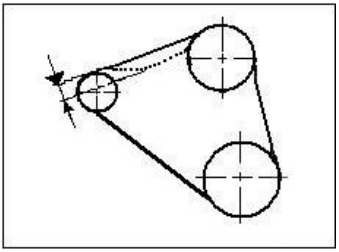

1. check every 10 hours.
2. turn off the engine, in the fan belt the pulley wheel and the generator according to the middle band to check its strength. The pressure is 98 Newton (10kg), and the belt falls.8 - 12 millimeters. As shown in Figure 4 - 18. Adjust the belt when necessary.
3. check whether the engine belt is worn or broken, and whether the joint is damaged. If there is any situation above, replace the new belt.

Adjust the tightness of the belt

Note: if the belt is skewed, adjust it.

1. Release the adjusting bolt and adjusting bolt of the adjusting plate.
2. Tilt generator to adjust the belt rising force.
3. Adjust and tighten the bolts and bolts.
4. Idle the engine for 5 minutes, then re adjust the belt tension.

Inspection of structural fracture and welding crack

When checking and lubricating the machine everyday, check whether there is any damage. Repair or replace before operation.

Check the working status of all external lights, speakers and control indicators.

1. Start the switch to the "open" position and observe the indicator lights.
2. Repair all light bulbs at this time.
3. Press the horn and repair or replace it if there is any trouble.
4. Open and check all the external working lights, replace the damaged bulbs and broken lampshades.

Start the engine, check the starting state, observe the exhaust color at start and run, and check if there is any abnormal noise.

Check the working conditions of all controllers

Important
The hydraulic oil will fully heat up before the operation at low temperature.

Refer to the heating steps in the operation section of this manual. The hydraulic oil is circulate at all components once (including all cylinders, walking motors and rotary motors). The low temperature hydraulic oil in pipes and components need to be heated before working normally. Otherwise, it will damage the hydraulic cylinder and the hydraulic motor.

1. Check the controller at fixed speed.
2. Open the low temperature hydraulic system to start heating up.
3. Remember all slow or abnormal movements. Find out the reason and fix it before you start work.

Check whether there are loose or shedding bolts and nuts

"Check on bolts and nuts"

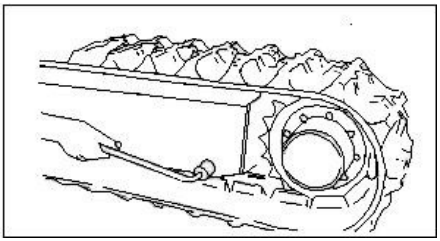

Check whether there are too tight, too loose, worn and damaged components (track links, track boards, supporting wheels, steering wheels, driving wheels).

1. Check every day including all parts of the crawler part for loss, damage or wear. "Caterpillar strength"
2. Top up two crawlers, two motor walking speed test.

Cleaning engine air suction filter

1. Remove the lock spring fixed outer cover.
2. Clean the air filter inside.

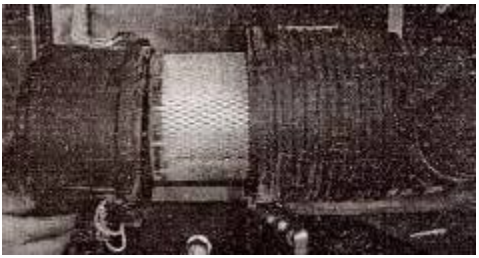

50 hours / weekly maintenance

Carry out all l0 hours / daily maintenance checks

Lubricated Slewing Support

1. Add two or three butter in the nozzle.

2. Lift the bucket 20 centimeters, turn the platform two times, 90 degrees each time, lubricate the slewing bearing.

Fuel tank oil discharge valve

Open the valve at the bottom of the tank to release water and sundries.

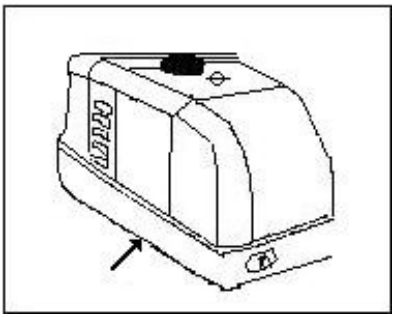

Change oil and filter core

After initial operation for 50 hours, replace oil and filter cartridge, once every 200 hours.

Cleaning oil radiator, water tank and air conditioner condenser

▲Warning
Clean radiator and use high-pressure steam or water to ensure that the relevant personnel are in the proper working position. High pressure can damage the radiator and oil cooler.

1. During the cleaning process, the workers wear appropriate safety products. (Safety, safety shoes, etc.).

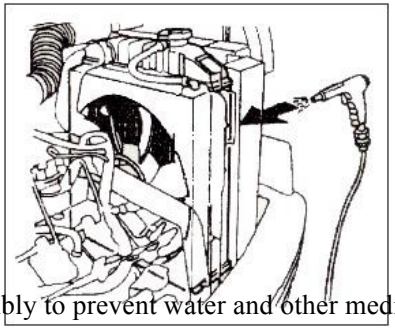

2. Clean the radiator and water from the radiator and water tank with high pressure steam or water. The cleaning should be carried out from the outside of the engine parts and then cleaned from inside to remove dust and debris.

Attention: cover the inlet of the air cleaner assembly to prevent water and other media from entering the engine.

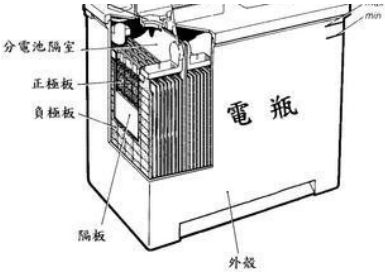

Check the level and state of the battery

Check the state of the battery, "battery".

分电池	Battery separator
通气盖	Ventilatory cover
加水刻度线	Water scale line
电瓶	Battery
正极板	Positive plate
负极板	Negative plate
外壳	Shell

隔板	A partition
分电池隔室	Battery compartment
加水孔	Water filling hole
正极接头	positive terminal
负极接头	negative terminal

Clean up the inlet of the fuel tank

Open the lid of the fuel tank and clean all impurities in the filter.

▲Warning
Be careful when filling or repairing fuel tanks, so as to prevent fire or explosion. Immediately clean up excess spilled oil.

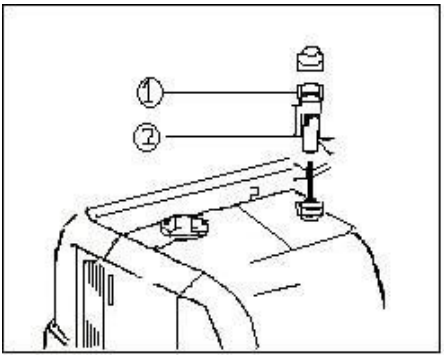

100 hour maintenance

Carry out all 10 hours / daily and 50 hour / weekly maintenance checks.

Filter core for cleaning air filter

▲Warning
Do not clean or move air filters when the engine is running. If we use compressed air to clean parts, we should take appropriate eye protection measures.

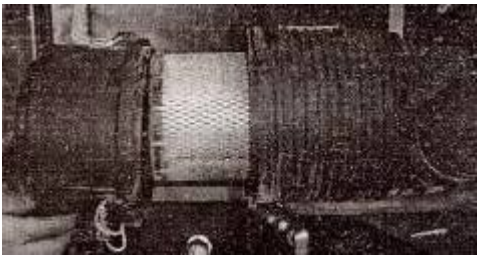

1. Install the air filter parts, take into the cover, and filter parts and components into the air cleaner.

Note: if the indicator board displays "open", the air cleaner must be opened.

Note: replace filter cartridge once every 500 hours / three months.

2. The filter core is cleaned with compressed air from inside and outside. The pressure should not exceed 205kPa (O.2MPa).

3. Clean air filter shell and side cover.

4. Install the air filter and the side cover correctly. Tighten the wing nut with the hand and do not tighten with any tools.

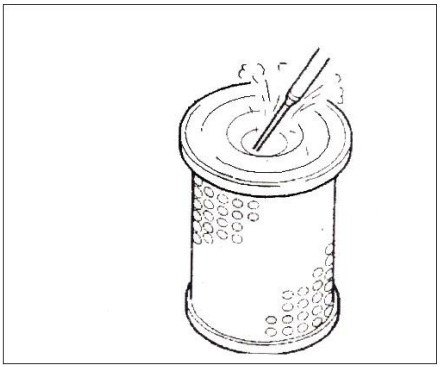

Replacement of hydraulic oil

For the new machine, it will replace the hydraulic oil for the first time after 100 hours, and then it will be carried out every 1000 hours.

Replacement of hydraulic filter core

Warning
After the machine works well, the hydraulic oil is very hot. Before any hydraulic components are maintained, make the hydraulic oil cool down sufficiently. The hydraulic oil tank has air pressure, slowly loosens the screw plug on the hydraulic tank to release the pressure; then it can safely remove the filling cover or

cover plate and remove the water from the tank.

Important
Be sure to clear up the water and spoils at the top of the hydraulic tank, especially the filling ports and the installation ports of the filter elements.

Attention: after the first operation for 100 hours, replace the hydraulic oil filter cartridge and replace it every 500 hours. Refer to the replacement program "replace the hydraulic filter core".

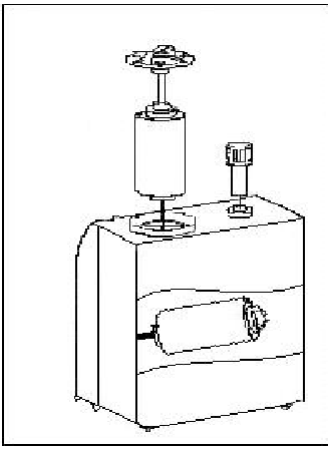

200 hour maintenance

Carry out all 10 hours / daily, 50 hours / weekly and 100 hours maintenance checks.

Change oil and filter core

Attention: first time work is changed after 50 hours, then replace every 200 hours.

▲Warning
When the engine is hot, do not change the engine oil, and cool the engine before changing the oil or filter element.

1. Under the bottom of the oil pan, remove the oil drain plug, drain the oil to the container, install the oil stopper and tighten it.

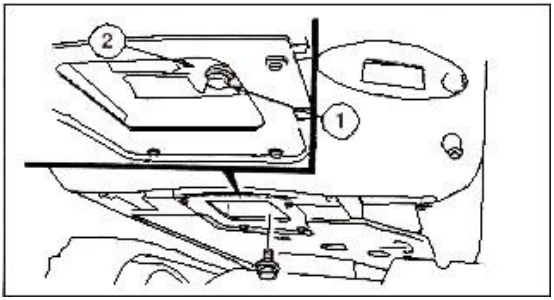

2. Replace the oil filter element. The oil filter element is a rotary installation type, and the filter element is removed.

3. Install the new filter element, use a small amount of oil around the oil filter ring, rotate the filter element until the top contact with the washer, then tighten the 3 / 4 circle.

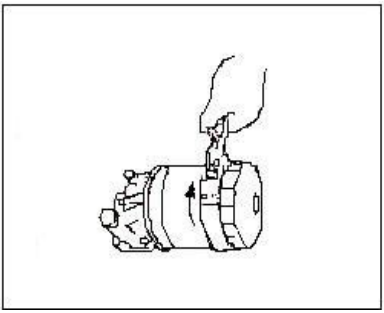

4. The correct type of oil can be selected according to the recommended lubricant list.

5. Engine start, check oil pressure.

6. Engine flameout; check whether there is leakage in the oil filter element.

250 hour / monthly maintenance

Carry out all 10 hours / daily and 50 hour / weekly maintenance checks, and discharge water and impurities from the hydraulic tank.

1. The machine will be fixed on the horizontal plane, and the straightening bucket will put the bucket on the ground.

https://truckmanualshub.com/

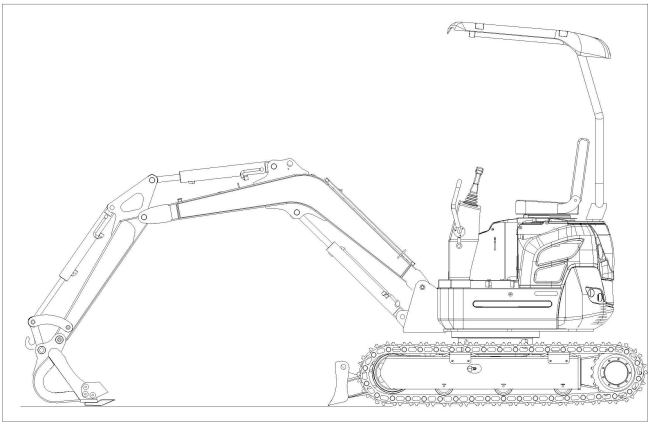

3. After the oil temperature is lowered, loosen the filling cap of the hydraulic oil tank, and drain the oil tank.

4. Slowly release the drain plug at the bottom of the tank. 2. Drain the water and impurities. Then install the oil stopper and tighten it.

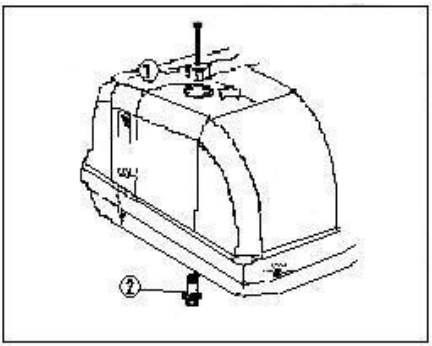

Check the wear and tear of the connecting pin and the axle sleeve of the front work device.

Check the clamping situation of the hose of the fuel system

500 hours / three months maintenance

Carry out all 10 hours / day, 50 hours / week, 100 hours and 250 hours maintenance

check.

Replacement of fuel filter core

▲Warning
After the engine is cooled, the three filter core is replaced. Be careful with the fire and prohibit smoking.

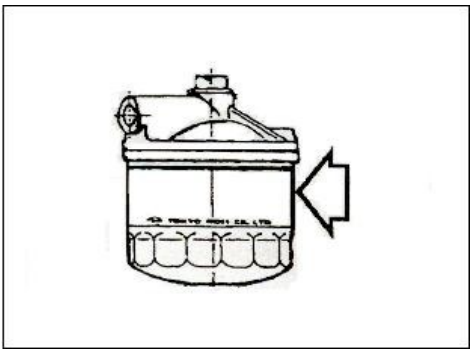

1. Replace the fuel filter core of the engine.
2. Put one at the bottom of the fuel filter small container.
3. Fuel from the filter seat under spin filter shell, remove the fuel filter.
4. After cleaning the top of the filter, install a new fuel filter, and then rotate the fuel filter until the washer contacts with the top; rotate 1 / 2 circles again.

Attention: apply fuel to the fuel filter washer.

Attention: fill the fuel filter hood with clean fuel, which can discharge the air in the fuel system.

5. Start the engine, the engine is running 1-2 minutes after shutdown, check whether there is leakage phenomenon.

Replace the radiator coolant

▲Warning
First, allow the engine to cool down, and then slowly loosen cover, to reduce the internal pressure. During the operation of the engine, the radiator is cleaned. Be careful when working on a running engine. Make sure that the safety rod is in the lock-in position and hang the signs, which remind people that the excavator is being repaired.

If there is no need to remove the radiator cover, observe the coolant level in the storage tank.

1. Open the top of the radiator slowly to relieve pressure.
2. Place a container under the radiator and unscrew the drain valve.
3. The discharge valve is closed after the coolant is discharged.
4. Add the cleaning liquid to the cooling system.
5. Idle engine until the coolant temperature is expressed in "green area" and run for another 10 minutes.
6. The engine is cooled.
7. Discharge the cleaning fluid and fill the system with water.
8. Run the engine again, so that the water will circulate completely.

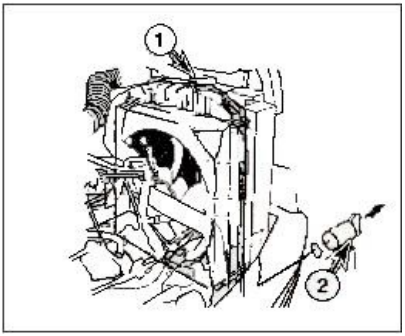

9. Drain all water; fill the sytem with antifreeze that is suitable for ambient temperature. Refer to the coolant configuration table.
10. Do not install radiator cap, run the engine to discharge air, and allow radiator to fill 50mm below the top.
11. Drain the coolant in the reserve tank, release the liquid from the evaporation tank and then pour the new liquid into it.

Replacement of hydraulic oil filter core

Important

Be sure to clear up the moisture and spoils at the top of the hydraulic tank, with special attention to the filling ports and the installation ports of the filter elements.

Attention: after 100 hours' operation, replace the hydraulic oil filter cartridge, then replace it every 500 hours.

1. Slowly loosen plug exhaust, then loosen the filter;
2. Unscrew the bolt, remove the upper cover and the sealing washer, then loosen the nut, and remove the dirty filter element.
3. Remove the original filter core.
4. Install new filter element and O ring, install valve, spring and upper cover.
5. Check the liquid level in the hydraulic tank, and add hydraulic oil when needed.

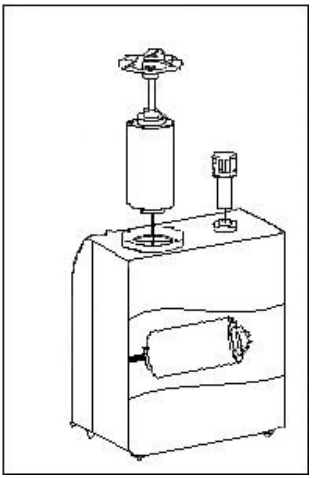

Replacing the air filter cartridge

Change each operation for 500 hours / three months

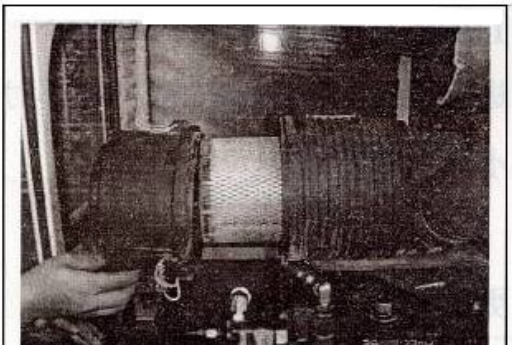

Check the oil level of the walking reducer on both sides of the walking device

▲Warning
After the operation of the machine, the lubricating oil is very hot, cut off all the work system to cool down. Before removing the screw plug on the shell, the bolt should be loosened and the air pressure is released.

Note: after the first operation for 500 hours, drain off the old oil and replace it every 1000 hours.

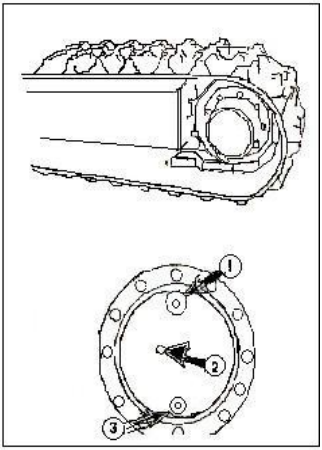

1. Make sure the machine works on a solid level. Remove the old oil from the decelerator.
2. Turn the track until the oil port is at the end of the table.
3. Remove the plug, add oil until the oil level reaches the oil port, the plug is installed.
4. Repeat this step on another walking motor.

1000 hours / six months of maintenance

All 10 hours / day, 50 hours / week, 100 hours, 250 hours and 500 hours for maintenance check.

Replacement of hydraulic oil

▲Warning
After the machine works normally, the hydraulic oil is very hot, so the oil must be cooled before the hydraulic components are repaired. There is pressure in the hydraulic tank, slowly release the plug on the upper part of the hydraulic tank to release pressure, and then the oil tank cover or the upper cover can be safely removed after pressure relief.

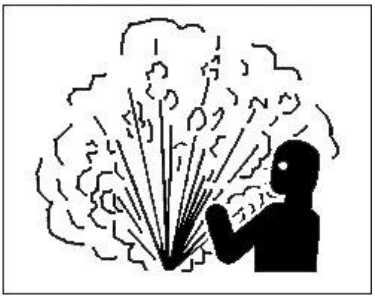

Important
Confirm that the loot or moisture on the hydraulic tank has been cleaned, especially around the liquid filled hole and filter hole.

Attention: according to the type of excavator and the special device installed in the front part of the excavator, such as crusher, etc. Hydraulic oil may need to shorten the replacement period.

Note: after the first job l00 hours. Replace hydraulic oil, then do it every l000 hours.

1. Stop the machine on a solid level. As shown in the picture, the straight arm will put the bucket on the ground.
2. Turn off the starting key and stop.

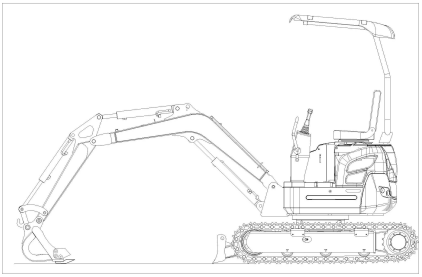

3. Slowly open the tank above and the pressure relief cover to plug. Remove the plug, the old oil is discharged into a capacity of 120 liters in the container.

4. Then install the plug and tighten the

Important
Be careful to spray out the oil when the oil plug is unloaded.

5. Open the top cover ①.

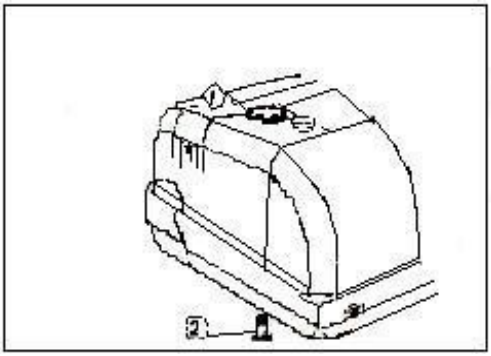

6. Fill the tank and check the oil level with the ruler on the side of the fuel tank.

7. Install the top cover.

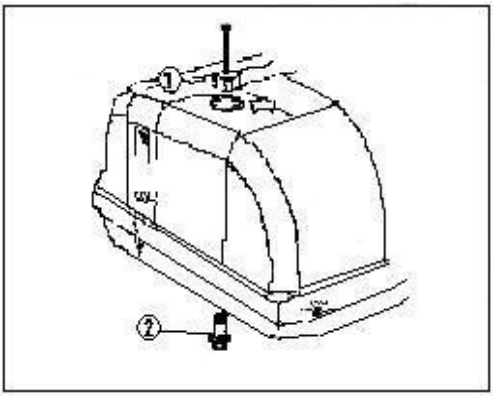

Replace the travel reducer oil (one on both sides)

▲Warning
After the equipment works, the lubricating oil is very hot, and the working system is stopped to cool it. Before the motor shell is removed and the screw plug at

the hole is checked, the screw plug is slowly loosened to relieve the pressure.

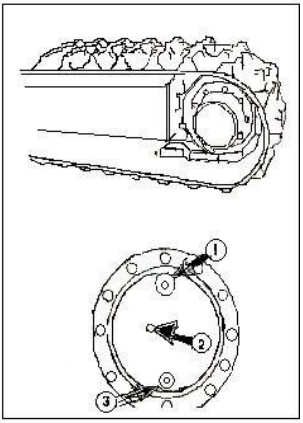

Note: 500 hours after the first work

Drain the old oil and do it every 1000 hours.

Note that the gear box capacity is 0.6 liters, and the oil can not be mixed.

1. The machine is parked on a solid level.

2. Rotate the track until the plug ① to ③, as shown in the drawing.

3. In the plug put a container, remove the plug (① and ③) discharge of oil.

4. Install screw plug ③, then remove the plug at the bottom hole, and injects new oil from hole ① until the oil level reaches hole ②, and install plug (① and ②).

5. Repeat the above steps on another walking motor.

11.77-12.5Nm / 1.27-1.30Kg.m.

Note: the knob two screw torque of 46 - 51Nm / 4.7-5.2Kg.m, 11.77-12.5Nm / 1.27-1.30Kg.m. intermediate plug

Check and adjust the cleaning valve.

Check the bolt torque.

* * by the designated agents to complete heavy Agrison.

1200 hour maintenance

Carry out all 10 hours / daily, 50 hours / weekly and 100 hours maintenance check.

2000 hours per year maintenance

Carry out all routine, 50/150/250/500 and 1000 hours of maintenance check.

Check generator and start motor (completed by Agrison heavy industry designated agent).

Check all rubber shock proof devices

Carry out and record the results of periodic inspection

Check whether there are cracks, welding or damage in welded structure.

4000 hours / two years of maintenance

Important component / periodic replacement

In order to ensure the safety of operation and work, periodic inspection should be carried out, as well as to increase safety and replace the following parts, which are easily worn, heated or fatigued, and should be replaced in a set period even if the parts look good.

Often replace related parts, such as washers, O rings, and only use pure products.

<table>
<tr><th colspan="2">main component</th><th>Periodic replacement parts</th><th>Replacement time</th></tr>
<tr><td colspan="2" rowspan="3">engine</td><td>Fuel hose (oil tank to filter)</td><td rowspan="9">2 years or 4000 hours</td></tr>
<tr><td>Fuel hose (fuel tank to fuel injection pump)</td></tr>
<tr><td>Heating hose (heater connected with engine)</td></tr>
<tr><td rowspan="6">Hydraulic system</td><td rowspan="3">body</td><td>Pump oil suction hose</td></tr>
<tr><td>Pump out of oil hose</td></tr>
<tr><td>Revolving hose</td></tr>
<tr><td rowspan="3">Working devic</td><td>Arm cylinder hose</td></tr>
<tr><td>Bucket cylinder hose</td></tr>
<tr><td>Bucket oil cylinder hose</td></tr>
</table>

	e	Pilot oil hose	

Electrical system

Attention: it is strictly forbidden to dismantle electrical wiring and components, and negotiate with Agrison heavy industry agency before negotiation.

Battery

▲Warning
Before the battery is maintained, make sure that the engine has stopped functioning and the start switch is placed in the "OFF" position. A battery can produce hydrogen. In particular, the uncharged battery has the danger of explosion. Make sure that the flame, combustible matter and sparks are away from the battery, and the electrolyte is diluted sulfuric acid. The battery should be carefully placed, and the electrolyte will cause combustion. When electrolytes are made on clothing or skin, rinse immediately with plenty of water. If the electrolyte is in the eye, rinse immediately with plenty of water and see the doctor as soon as possible. When installing the battery, keep your safety glasses on. When the battery is dismantled, the "pole" or the grounding terminal should be disassembled first, so that the electric spark or arc will be avoided and the explosion will be avoided. When installing the battery, connect the "+" pole to the "pole". To ensure the reliable connection of the terminal.

1. In cold winter, when the engine is started and preheated, the battery consumption is large, and the performance of the battery decreases when the temperature decreases.
2. In a particularly cold weather, the battery can be removed at night and placed in a warm place, which helps to improve the performance of the battery.
3. Check the level of the battery.

Note: the battery installed in the original plant is maintenance free, and the battery liquid only maintains at the right level under normal conditions.

https://truckmanualshub.com/

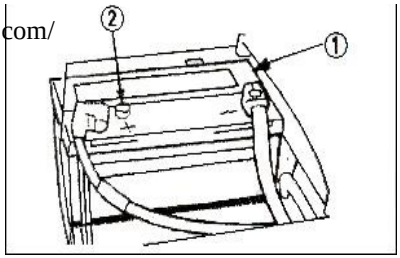

4. Check the charging state of the battery by inspecting the indicator set in the interior and brightness.

- Green: normal
- Black: insufficient charging, check the generator.
- Transparent: electrolyte is not enough, replace with new battery.

Note: the colors displayed vary according to the manufacturer, and refer to the relevant instructions of the battery.

Bucket tooth replacement

▲Warning
Because there may be metal objects flying out, so helmets should be worn when replacing bucket teeth, and gloves and eye protectors should be protected. The bucket is lifted up, and the surface of the bucket is placed firmly on the ground after the arc. The engine is stopped, the control handle is locked, and the bucket tooth is replaced again.

1. Establish a benchmark, often check whether the wear or fracture is expanded, do not allow the bucket teeth to wear seriously, so that the bucket teeth are leaking outside, referring to the picture.

2. Replace the shovel teeth, with a hammer and punch pin and remove lock washer.

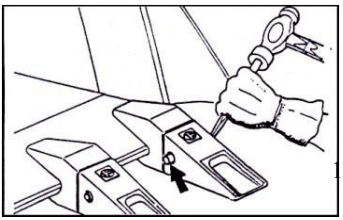

3. After the bucket teeth are removed, use the knife to scrape the bucket seat as far as possible.

4. Insert the new bucket teeth and install the lock pin.

5. Change the bucket teeth and change the lock pin at the same time.

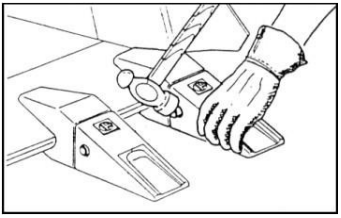

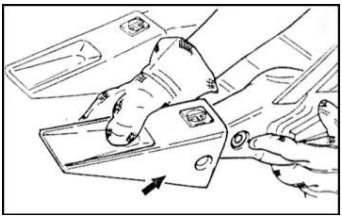

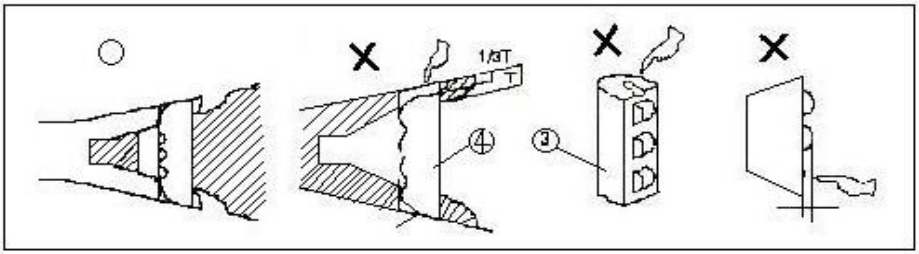

Check the lock pin. Change the lock pin when the following situation exists.

1. When two surfaces are straightened, the lock pin is too short.

2. The rubber caterpillar has a side seam, and the steel ball is easy to slip.

3. Extruded steel ball causes the ball to shrink inside.

Change the bucket O ring

▲Warning
Because metal objects may spatter, gloves, protective glasses and safety helmets should always be worn when replacing pins.

1. Check the O ring of bucket. If there is wear, replace it if necessary.

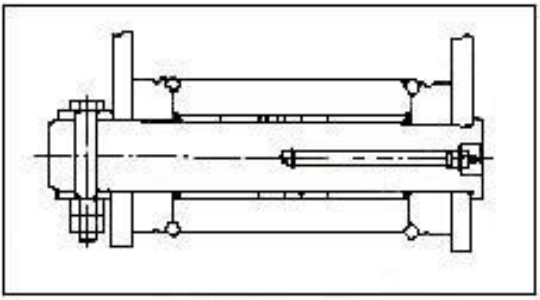

2. Shift the O ring 1 to the bushing 2, then remove the bucket pin 3, and pull out the bucket rod or bucket connecting rod pin.

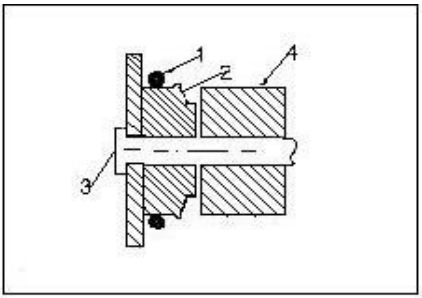

3. Remove the old O type ring, install the new O type ring 1 to the bushing 2, confirm that the O groove and the bucket bushing on the connecting rod 3 have been cleaned up.

4. Aim at the bucket connecting rod and the rod pin hole and install the bucket pin.

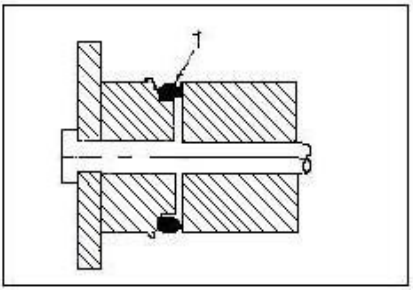

5. Roll O ring 1 into the O slot.

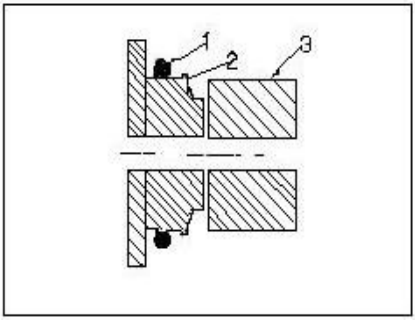

Check the lock pin. Change the lock pin when the following situation exists.

1. When two surfaces are straightened, the lock pin is too short.

2. The rubber caterpillar has a side seam, and the steel ball is easy to slip.

3. Extruded steel ball causes the ball to shrink inside.

Change the bucket O ring

▲Warning
Because metal objects may spatter, gloves, protective glasses and safety helmets should always be worn when replacing pins.

Adjustment method and data

Install a new bucket

1. If the new bucket is installed, the inner ear size of the bucket and the width of the bucket bushing shall be measured.

2. Two dimensions are reduced, that is, the size of the gasket on both sides.

▲Warning
When checking the clearance of the bucket connection, the bucket is in a free state. At other times, the bucket is lowered to the ground or the bucket is fixed with the support block, the engine is stopped, the control mechanism is locked, the Warning card is suspended and the bucket movement is prevented.

A method of adding a gasket when the bucket is installed and replaced.

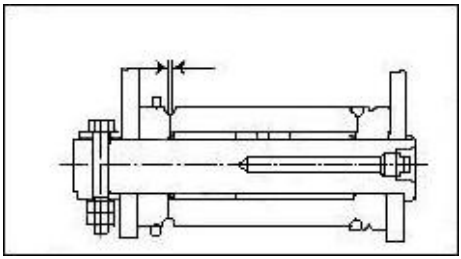

1. When the bucket is connected, the bucket is lifted and the bucket bar extends outward. Reduce the moving arm and make the bucket teeth 50 ~ 100mm away from the ground. This position is convenient for size measurement.
2. After the O ring installation, push the bucket to one side, check the gap between the other side of the bucket and the bucket bushing, the total gap between the inner ear and the bushing section of the bucket should be O.2 O.7mm, which will aggravate the wear and the gap is too large, so the gap is too large, generating too large noise and loose action.
3. Push the bucket to the other side and check the gap again.
4. When adjusting, remove bolts and pins, remove or increase gaskets as required, and use the same number of gaskets on both sides.

Crawler tensioning

▲Warning
A safe measure of a crawler's tightness requires 2 people, one driving a excavator on one side of the track to leave the ground, and the other to measure the size, and must be very careful to guard against the movement or movement of the machine. Open the excavator to a flat floor, if necessary, use support block. The pressure of the track adjustment cylinder is very high, so do not reduce the pressure suddenly. Do not loosen the whole circle at a time, and relieve the pressure slowly. At the same time, the body must be far away from the valve body.

The track chain joint pin and liner wear in normal work, so that the tightness of the crawler is reduced, so periodic adjustment is necessary, and it is also the need of normal work.

1. Check up the tightness on the side of the track.

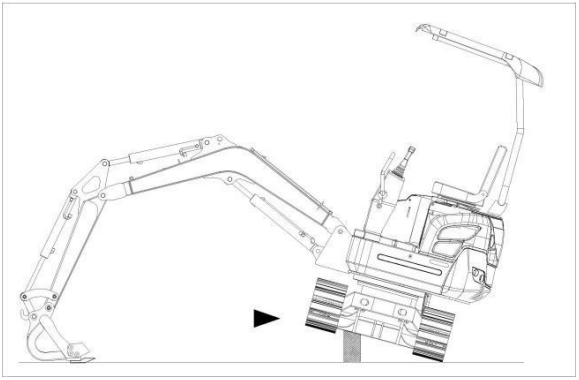

2. Measure the clearance between the maximum outer rim of the wheel and the lowest track of the caterpillar track, and the recommended value is 10 to 20mm (equivalent to a=180 to 190mm).

Note: if there are too much dirt, dust or other substances on the chassis assembly, the measurement is not allowed. Therefore, the chassis should be cleaned before measuring.

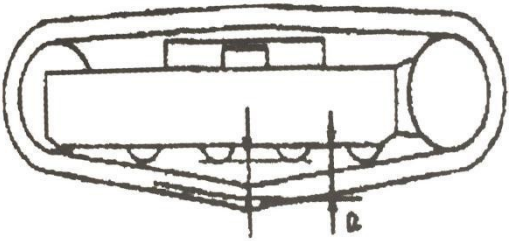

Note: with caterpillar tracks and rubber belt machine, inspection and adjustment steps in the same.

3. If we measure the clearance between the middle supporting wheel and the upper link of the rail link, it should be 20 ~ 35mm.

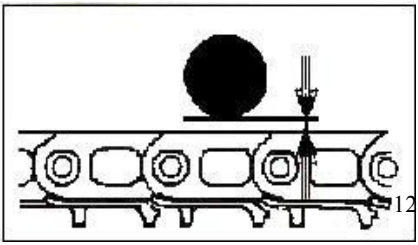

4. The gap between the rubber crawlers is 1520mm.

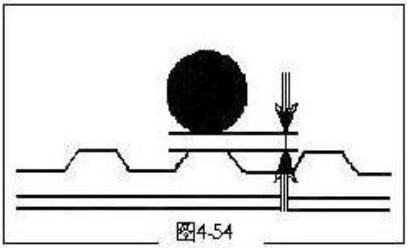

▲Warning
The pressure of the track adjustment cylinder is very high, so do not reduce the pressure suddenly. Do not loosen the whole circle at a time, and relieve the pressure slowly. At the same time, the body must be far away from the valve body.

5. Track tightness adjustment is achieved by installing 1 in the middle part of the chassis side frame. Add butter, increase the length of the tight cylinder, and extend the length of the expansion cylinder. The higher the pressure of the track spring body of the steering wheel is, the higher the pressure is.

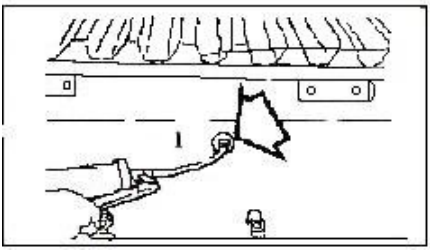

6. If the track does not have enough clearance, it means that the adjustment is too tight. At this time, the steering wheel 3 can be retracked by releasing the butter in

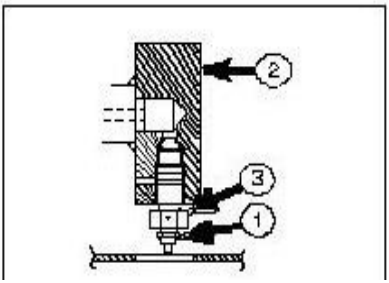

the cylinder.

Attention: adjusting valve torque to 59 - 88N.m/6 - 9Kg/m.

Maintenance under special conditions

Condition	Maintenance requirements
Work in mud, water, or rain	1. Check whether the joint is loose. 2. After work, clear up the mud, rock and gravel on the machine, check whether the welds are damaged, and whether the parts are loose. 3. Complete the daily lubrication and maintenance. 4. If working in acid rain or corrosive substances, rinse the affected parts with clean water.
Work in a particularly dusty or hot environment	1. More frequent cleaning of the intake filter. 2. Wash oil radiator and water tank and remove embedded dust and booty. 3. More frequent cleaning of air and filter cartridges. 4. If necessary, check and clean up the motor and generator.
Working in a rock environment	1. Check whether the chassis and track assembly is damaged or excessive wear. 2. Check whether the joints and bolts are loose or damaged. 3. Further relax the track. 4. Check more frequently whether the bucket or crusher is damaged or excessive wear. 。 5. If necessary, install a top frame and front frame to avoid damage to falling objects.
Work in a particularly cold area	1. Use fuel, hydraulic oil and lubricating oil that are suitable for ambient temperature. 2. Check the antifreeze fluid with the hydrometer to ensure that it has the corresponding antifreeze performance. 3. Confirm the temperature environment of the battery, especially

when it is cold, remove the battery and store it in a warm place at night. 4. Timely move away mud on the body, to prevent the damage to the equipment.

Inspection of bolts and nuts

All fasteners are checked after 50 hours of work and 250 hours after the first work. If there is any loosening or loss, new products should be tightened or added, and torque wrenches must be used.

Important
Clean the fastener before tightening. If the counterweight bolts are loose, negotiate with Agrison heavy industry

Attention: rust, sand, dust and mud should be removed during installation.

When installing, lubricate to reduce wear.

Long-term storage

Condition	Maintenance requirements
Clean	1. Clean the chassis and the caterpillar assembly with a high pressure water gun.
Lubrication	1. Perform all normal lubrication content. 2. Apply a rustproof oil on the surface of the exposed metal parts, such as hydraulic cylinder piston rod and so on. 3. Apply oil to all control connections and control cylinders.
Battery	1. After filling the battery, remove the battery or battery lead and store it.
Cooling system	1. Check whether the liquid level of coolant storage tank is in the normal range. 2. Check the antifreeze level of the antifreeze fluid or coolant every 90 days or 750 hours per hour.

Hydraulic system	1. Refer to the "heating method of hydraulic system" specified in this manual, start the engine once a month.

Treatment of hose

A leak of oil or fuel can cause a fire.

The hose shall not be twisted, bent or impacted.

No twisted, bent or cracked pipes, metal pipes or hoses shall be used, otherwise, it may burst.

Tighten the loosened joint.

Be careful when operating high temperature and high pressure components

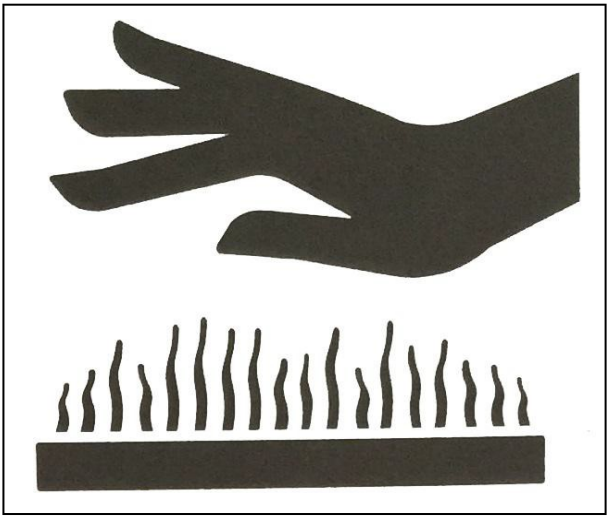

Please turn off the engine and wait for the machine to cool down for further maintenance.

Engines, exhaust pipes, radiators, hydraulic pipes, sliding parts and many other parts of the machine are very hot when the engine just stalls. Touching these parts can cause scalds.

Engine coolant, hydraulic oil and other oils are also under high temperature and

high pressure.

Please be careful when loosening the lid or plug, do not touch hydraulic oil. In this case, the operation of the machine will cause burns or injuries due to the ejection of hot oil.

Be careful when operating a high temperature cooling system

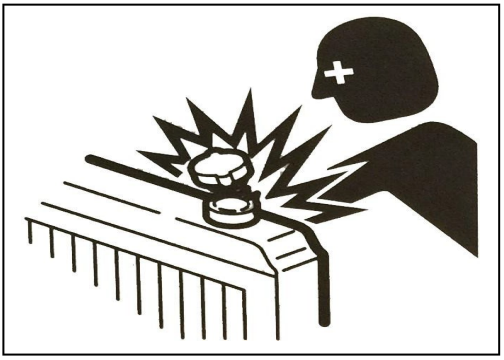

Cooling water, do not remove the radiator cap or drain plug. Flameout the engine and wait until the engine and cooling water cool down. Then slowly release the radiator cover, release the internal pressure, and then take it off.

Be careful of the internal pressure of oil

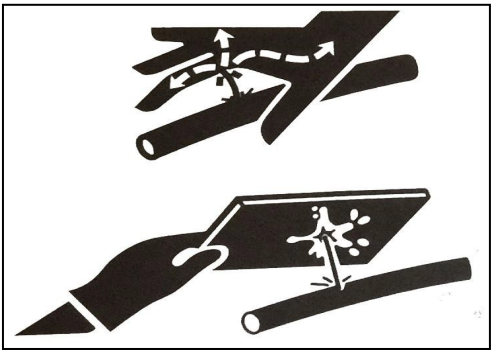

After the engine is extinguished, the pressure in the hydraulic oil pipe will last for a long time.

The internal pressure should be thoroughly discharged before the maintenance operation is carried out.

The high pressure of hydraulic oil can pierce the skin or eyes, cause serious injuries, cause blindness or even death. Remember, the hydraulic oil leaking from the small hole is almost invisible. When checking leakage, you should wear goggles and thick gloves, and use cardboard or glue.

Plywood protects skin from damage caused by hydraulic oil ejection.

If hydraulic oil invades the skin, it will be removed within a few hours by surgeons who are familiar with such injuries.

Before the operation of the hydraulic system, the pressure should be relieved first

Before the hydraulic system is released, the hydraulic oil may be ejected if the lid or filter or pipe is disconnected.

Release the exhaust plug slowly to release the tank pressure.

When removing the plug or screw or disconnecting the hose, it should stand on one side and release it slowly, so as to gradually release the internal pressure and then remove it.

The oil or oil plug may be ejected from the pressure in the motor fuel tank. Please release the oil plug slowly to release the internal pressure.

Please be careful with the splash when you use the hammer

When using hammer, pins or metal chips may splash everywhere. This may cause serious injuries.

When you hammer the hard metal parts such as pins, bucket teeth, side teeth or bearings, please wear protective devices such as goggles and gloves.

When you tap the pin or bucket teeth, make sure that there is no one around.

Watch out for high pressure oil

In track tension device, grease is at high pressure. If the tightening force is adjusted, if the procedure is not specified, the grease relief valve may fly out, leading to injury.

Do not loosen the butter pipe.

Slowly release the butter relief valve. Do not turn it over and over.

Do not place your face, arms, legs or body in front of the grease relief valve.

When the grease relief valve is released, the valve will fail if there is no grease flowing out. Please contact the Agrison service agent for maintenance.

No disassembling caterpillar tightening device

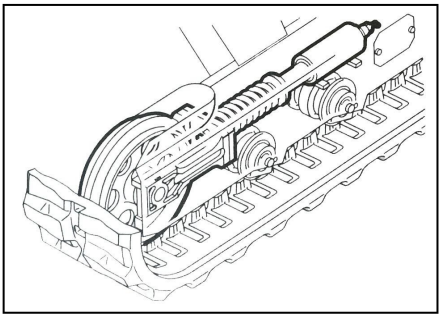

The caterpillar tightening device is equipped with a strong spring. When the track tightened device is broken apart, the spring will pop up, resulting in serious injury. The caterpillar tightening device shall not be dismantled.

Disconnect the battery line

Please disconnect the battery line before carrying out the electronic system operation or welding. First disconnect the negative (-) battery cable. When reconnecting, finally connect the negative pole battery cable.

Please be careful when dealing with the battery

The battery contains sulfuric acid, and it will hurt your eyes or skin if you touch it carelessly.

In case of contact with eyes, rinse immediately with, and quickly seek medical treatment.

If you swallow, you should drink plenty of water or milk and seek medical advice immediately.

If sulfuric acid touches skin or clothing, it should be washed away with plenty of water immediately.

Wearing goggles and gloves should be worn when operating the battery.

The battery can generate flammable hydrogen, which may cause explosion. Keep away from fire sources such as open fires, Mars or kindled cigarettes.

When the electrolyte level is checked, a flashlight is used.

Before checking or handling the battery, ensure that the starting switch is closed to turn the engine out.

Please be careful not to allow metal tools or any metal objects to contact the electrodes and cause short circuits.

When the electrode is loose, the electric spark will be produced. Be sure to tighten it up.

Make sure that the lid of the battery is tightly closed.

When the battery is frozen, do not charge or start over the engine, otherwise it will explode. The frozen battery is heated to 15℃ before use.

Please do not use the battery when the liquid level is lower than the lower limit. Otherwise, it will accelerate the aging of battery and shorten the life of battery. At the same time, it can cause rupture (explosion).

Do not add the distilled water to the upper limit. Otherwise the electrolyte will be leaked out. Contacting the liquid can damage the skin or corrode the machine parts.

Clean the surrounding area of the electrolyte level line with wet cloth and check the liquid level. Do not use dry cloth to clean, otherwise it will cause electrostatic accumulation, combustion or explosion.

Using battery charging line to jump start

When starting the engine with battery charging line, please follow the following correct steps to connect the cable. When cable connection is wrong, it will cause discharge and battery explosion.

Don't let the "machine" and "rescue machine" together.

Don't take the positive battery charging line (+) and negative (-) collision or contact wire clamp machine.

When connecting, first connect the positive part of the battery charging line to the positive (+) terminal. When disconnecting, the negative cable is first disconnected from the negative terminal.

Be sure to firmly connect the wire clip.

Connect the last clamp of the battery charging line to the place away from the battery as far as possible.

When using battery charging line to start the engine, goggles and gloves should

always be worn.

The size of battery charging line and clamp is suitable for battery capacity. Do not use corroded or corroded battery charging line and clamp.

Make sure that the battery of the rescue machine is the same as the battery of the problem machine.

Please entrust a Agrison service agent for welding repair

When welding is necessary, qualified personnel must be carried out in a well-equipped workplace. In order to prevent damage to any part of the machine caused by excessive electric current or electric spark, please observe the following items.

The wiring of the battery should be disconnected before the electric welding.

Do not continue to apply 200V or larger voltage.

The location shall be connected within the range of 1 meters away from the welding part. Do not connect the grounding terminal to the electric control device / instrument or connector.

Ensure that there is no seal ring or bearing between the welding area and the grounding terminal.

Do not connect the grounding terminal to the pin or hydraulic cylinder of the working device.

Before welding to the body, the connector of the electrical control device should be disconnected before operation.

The vibration of the operator

Tests carried out by the machine to the vibration of the operator showed that the vibration of the operator's upper limb was lower than that of 2.5m/s, and the vibration of the body at the seat was lower than that of the 0.5m/s.

https://truckmanualshub.com/

Waste disposal

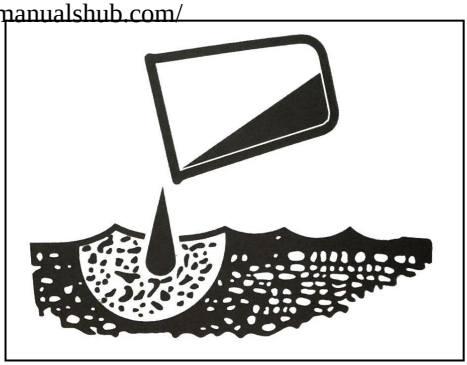

Make sure that the waste oil discharged from the machine is collected in the container. The improper treatment of waste oil will cause harm to the environment.

Please comply with applicable laws and regulations when dealing with hazardous substances such as lubricating oil, fuel oil, coolant, solvent, filter and battery.

Treatment of hazardous chemicals

Direct contact with harmful chemicals can cause serious injury.

The harmful chemicals used in this machine include grease, battery electrolyte, coolant, paint and adhesive.

Please handle hazardous chemicals carefully and properly.

Common faults and elimination method

The problems identified during maintenance should be taken in time to adjust the maintenance of hydraulic or electrical system, and contact the designated suppliers of Agrison heavy industries nearby.

Cause of failure	Solutions
Vehicle powerless	•Check and clean the overload valve of the multiplex valve • check whether the gear pump is leaking and replacing the gear pump •Check whether the hydraulic oil or hydraulic oil filter core is empty or blocked.

Automatic falling of the arm	• check whether the arm cylinder is damaged or not Check whether the multi-channel valve arm stem is in the middle Multi valve arm valve stem wear gap large • one-way valve card or clutter
Whole car without electricity	•Check whether the fuse is broken or loosened • check whether the battery line is loose • check battery relays
The inability of the bucket to move slowly	•Check whether the oil seal of the bucket cylinder is damaged or not •Check whether there is any foreign body or scratch on the valve stem of multi way valve. •Check whether the tubing tubing is blocked
Walking unilateral weakness	•Check the outlet of multi valve valve body • wear and tear of walking motor •Back transfer head oil seal damage internal leakage
How to install the caterpillar	• first before using the shovel and arm of excavator digging machine to support, leave the ground • track the tracks onto the steering wheel, and put the other head on the driving wheel to compress it down. • start digging machine, walking backwards slowly push the side of the handle
The engine does not start	• check whether the diesel pump has oil or air • inspection of diesel pumps • diesel filter core has water or blockage
Engine high temperature	• cleaning the radiator to check the lack of antifreeze • check whether the thermostat is open • check the fan belt
Walk	•Check whether the high and low speed control switch is loose. •Check whether the solenoid valve, thread head, coil and spool are

without high speed	jammed. • check the pressure of the high speed tubing
The inability of the shovel	•Check bucket oil cylinder and oil seal •Check whether the valve stem of the multi-channel valve is stuck in the stagnation
Inability to walk	•Check the overload valve • wear and tear of walking motor •Back transfer head oil seal
Rotary strong one side, weak another side	•Check the rotary motor overload valve • change the main oil pipe of the rotary motor and have the variable • multi valve valve body vent

XN16 系列挖掘机 工作范围

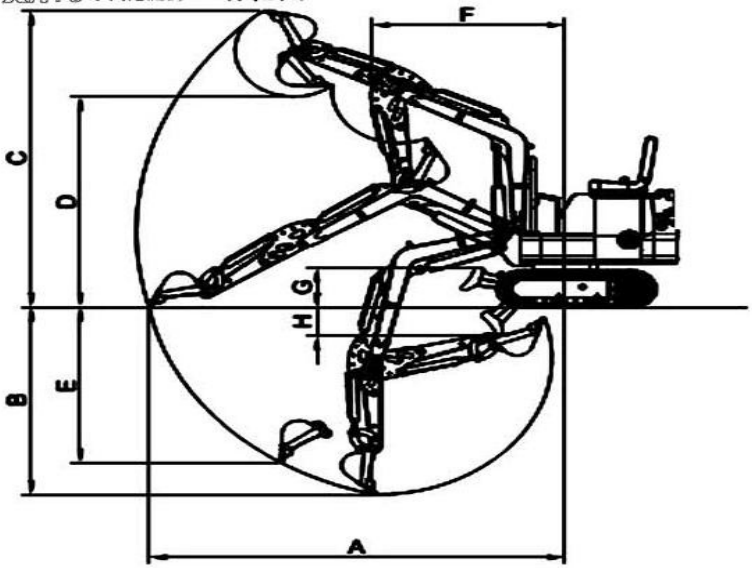

工作范围 单位：mm

A	最大地面挖掘半径	3470
B	最大挖掘深度	2150
C	最大挖掘高度	3275
D	最大卸载高度	2310
E	最大垂直挖掘深度	1740
F	最小回转半径	1440
G	推土铲最大提升高度	260
H	推土铲最大掘地深度	190

工作范围	Scope of work
单位	Company
A 最大地面挖掘半径	Maximum ground mining radius
B 最大挖掘深度	Maximum mining depth
C 最大挖掘高度	Maximum mining height
D 最大卸载高度	Maximum unload height
E 最大垂直挖掘深度	Maximum vertical mining depth
F 最小回转半径	Minimum radius of revolution
G 推土铲最大提升高度	Maximum lift height of earth shovel
H 推土铲最大掘地深度	The maximum digging depth of dozer

https://truckmanualshub.com/

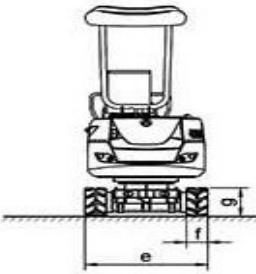

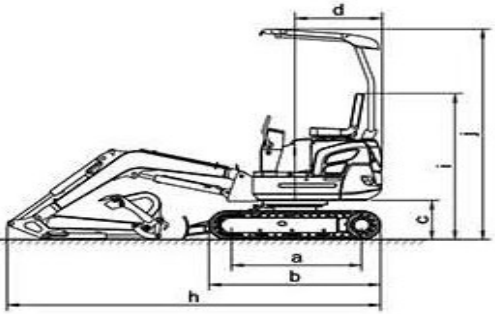

整机尺寸		单位:mm
a	轮距	1130
b	履带总长	1450
c	平台离地间隙	425
d	平台尾端回转半径	740
e	底盘宽度	1120
f	履带宽度	230
g	履带高度	320
h	运输长度	3160
i	座椅到地面高度	1637
j	全车高度	2377

工作范围		单位:mm
A	最大地面挖掘半径	3470
B	最大挖掘半径	3560
C	最大挖掘深度	2150
D	最大挖掘高度	3275
E	最大卸载高度	2310
F	最大垂直挖掘深度	1740
G	最小回转半径	1440
H	推土铲最大提升高度	260
I	推土铲最大掘地深度	190

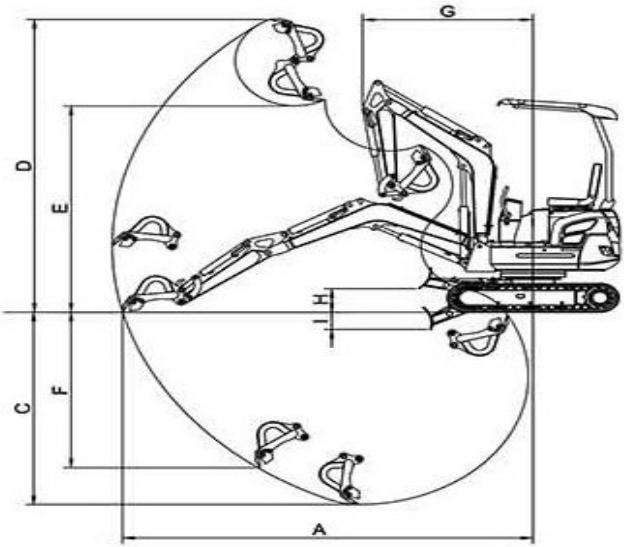

性能参数		
	整机重量kg	1370
	标准铲斗容量m³	0.045
	工作装置形式	反铲
发动机	型号	Yanmar 3TNV70
	排量L	0.854
	额定输出功率/转速kw/r/min	10/2200
	最大扭矩N.m/ r/min	51.9/1600
速度与挖掘力	最大行走速度(高/低)	2.4/1.4
	回转速度rpm	10
	最大爬坡能力	30° (58%)
	铲斗挖掘力kN	11.8
	斗杆挖掘力kN	7.3
	最大牵引力kN	13.5
	接地比压kpa	26.9
	履带材料	橡胶
	履带涨紧装置类型	丝杠涨紧
液压及液体容量	泵型式	齿轮泵
	工作压力Mpa	18
	流量L/min	22
	液压油箱容量L	15.3
	发动机油容量最大（有效）L	2.8（1.3）
	燃油箱容量L	19

单位	https://truckmanualshub.com/
轮距	
蹀带总长	
平台离地问题	
平台尾端回转半径	
底盘宽度	
蹀带宽度	
蹀带高度	
运输长度	
座椅到地面高度	
全车高度	
工作范围	
单位	
最大地面挖掘半径	
最大挖掘半径	
最大挖掘深度	
最大挖掘高度	
最大卸载高度	
最大垂直挖掘深度	
最小回转半径	
推土铲最大提升高度	
推土铲最大掘地深度	
性能参数	
整机重量	
标准铲斗	
标准铲斗容量	
工作装置形式	
反铲	
型号发	
动机排	
量	
额定输出功率	
转速	
最大扭矩	
速度与挖掘力	
最大行走速度	

lengt
h
Platf
orm
off
groun
d
probl
em
Revolving radius of the
tail end of the platform
Chassis width
Step width
The
hei
ght
of
belt
bre
aki
ng
Tra
nsp
ort
len
gth
The height
of the seat
to the
ground Full
vehicle
height
S
c
o
p
e

Company
Maximum ground mining radius
maximum mining radius
Maximum mining depth
Maximum mining height
Maximum unload height
Maximum vertical mining depth
Minimum radius of revolution
Maximum lift height of earth shovel
The maximum digging depth of dozer
performance parameter
Weight
Standard bucket
Standard shovel capacity
Working device form
Backhoe
Model
Engine
displacement
Rated output power
speed
Maximum torque
Speed and digging force
Maximum walking speed
Gyration speed

Schematic diagram of hydraulic system

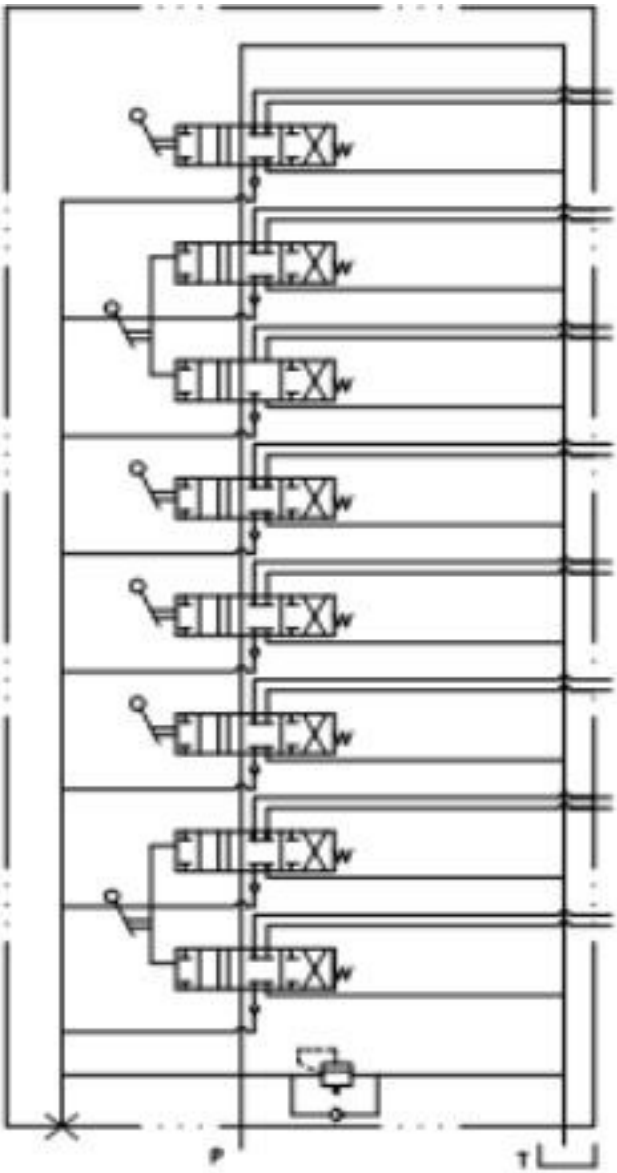

Schematic diagram of electrical system

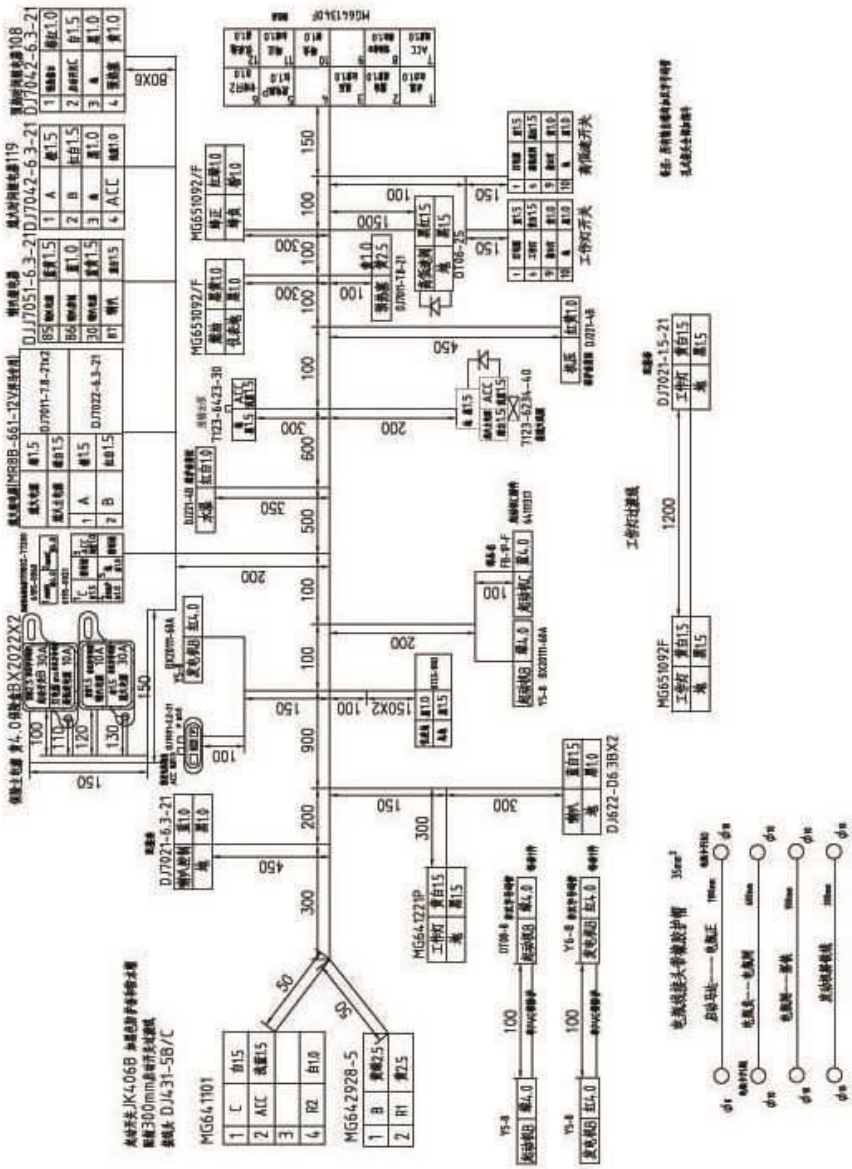

https://truckmanualshub.com/

https://truckmanualshub.com/

Agrison

2098 Hume Highway Campbellfield Victoria Australia 3061

P: 1300 651 830 Fax: 1300 854 830 Intl: + 61 3 9357 8867

contact@agrison.com.au

www.agrison.com.au

*All rights reserved.