https://truckmanualshub.com/

OPERATION MANUAL

SK235SR-2
SK235SRLC-2

APPLICABLE No.

SK235SR-2	YF06-02559~
SK235SRLC-2	YU06-03014~

READ, UNDERSTAND AND FOLLOW ALL SAFETY PRECAUTIONS AND INSTRUCTIONS FOUND IN THIS MANUAL BEFORE OPERATING THE MACHINE.

Book Code No. S2YF00022ZE01

Printed in Japan 2010.11 (KE)
Destination : AUS

Copyright © 2015 Kobelco Construction Machinery Co.,Ltd. All rights reserved. [S2YF00022ZE01] [0731CsCshWbYs]

https://truckmanualshub.com/

Copyright © 2015 Kobelco Construction Machinery Co.,Ltd. All rights reserved. [S2YF00022ZE01] [0731CsCshWbYs]

FOREWORD

FOREWORD ····· **0-3**
GENERAL ····· **0-3**
PERIODIC INSPECTIONS ····· **0-3**
NOTICE ····· **0-3**
KEEP OPERATION & MAINTENANCE MANUAL STORAGE ····· **0-4**
FOR ORDERING ····· **0-5**
EMISSION CONTROL WARRANTY ····· **0-6**

1. SAFETY PRECAUTIONS

1.1 GENERAL SAFETY INFORMATION ····· **1-3**
1.2 SAFETY PRECAUTIONS ····· **1-4**
1.3 WARNING LABELS & DECALS ····· **1-7**
1.3.1 WARNING LABELS & DECALS MAINTENANCE ····· **1-7**
1.3.2 LOCATION OF WARNING LABELS & DECALS ····· **1-7**
1.4 PRE-START SAFETY ····· **1-18**
1.5 SAFETY DURING OPERATION ····· **1-25**
1.6 INSPECTION & MAINTENANCE SAFETY ····· **1-33**
1.7 BATTERY SAFETY ····· **1-39**
1.8 PROHIBITED MACHINE OPERATION ····· **1-41**
1.9 END OF WORK SHIFT SAFETY ····· **1-43**
1.10 TOWING THE MACHINE ····· **1-44**
1.11 ENSURING VISIBILITY ····· **1-45**

2. MACHINE FAMILIARIZATION

2.1 BASIC COMPONENTS OF THE MACHINE ····· **2-3**
2.2 OPERATOR CAB NOMENCLATURE ····· **2-4**
2.3 COMPONENT & CONTROLS NOMENCLATURE ····· **2-5**
2.3.1 GAUGE CLUSTER ····· **2-5**
2.3.2 LOCATION OF SWITCHES AND METERS ····· **2-26**
2.3.3 LEVERS AND PEDALS ····· **2-33**
2.3.4 FUSES & RELAY BOX ····· **2-36**
2.3.5 FUSIBLE LINK (FOR STARTER) ····· **2-38**
2.3.6 MECHATRO-CONTROLLER (CPU), ENGINE CONTROLLER (ECU) ····· **2-39**
2.3.7 HANDLING OF RADIO ····· **2-40**
2.3.8 AIR CONDITIONER ····· **2-47**
2.3.9 HANDLING OF SEAT BELT ····· **2-53**
2.3.10 OPERATOR SEAT ····· **2-54**
2.3.11 ARM REST ADJUSTMENT ····· **2-55**
2.3.12 ADJUSTMENT OF CONTROL LEVER ····· **2-55**
2.3.13 OPERATOR CAB ····· **2-56**
2.3.14 EMERGENCY ESCAPE FROM CAB ····· **2-59**
2.3.15 OTHER EQUIPMENT (ACCESSORY) ····· **2-60**

3. MACHINE OPERATION

3.1 MACHINE OPERATION ····· **3-3**
3.1.1 EVERYDAY CHECK-UP ····· **3-3**

Copyright © 2015 Kobelco Construction Machinery Co.,Ltd. All rights reserved. [S2YF00022ZE01] [0731CsCshWbYs]

3.1.2 CHECKING BEFORE STARTING ENGINE ····· 3-4
3.1.3 ADJUSTING OPERATOR SEAT ····· 3-10
3.1.4 ADJUSTING MIRROR ····· 3-11
3.1.5 CHECKING FUNCTION OF GAUGE CLUSTER ····· 3-12
3.1.6 CHECKING WORK LIGHT ····· 3-12
3.1.7 STARTING ENGINE ····· 3-13
3.1.8 STOPPING MACHINE ENGINE ····· 3-17
3.1.9 INSPECTION AFTER STARTING ENGINE ····· 3-18
3.1.10 MACHINE WARMING-UP ····· 3-20
3.1.11 SELECTION OF WORK MODE AND SWITCHING OF THE ATTACHMENT MODE ····· 3-22
3.1.12 CONTROLS DECAL ····· 3-24
3.1.13 MACHINE OPERATION ····· 3-25
3.1.14 PRACTICES TO IMPROVE EFFICIENCY ····· 3-34
3.1.15 FLAGMAN HAND SIGNALS ····· 3-37
3.1.16 PARKING THE MACHINE ····· 3-43
3.1.17 PRECAUTIONS AFTER OPERATION ····· 3-44
3.1.18 MACHINE OPERATION IN ADVERSE WEATHER CONDITIONS ····· 3-45

4. MAINTENANCE

4.1 GENERAL INFORMATION ····· 4-3
4.2 GENERAL SAFETY & PRECAUTIONS ····· 4-5
4.3 LUBRICANT, FUEL & COOLANT SPECIFICATIONS ····· 4-11
4.4 USE OF BIO-DEGRADABLE OILS ····· 4-13
4.5 MAINTENANCE PARTS ····· 4-14
4.6 TORQUE VALUES FOR SPECIFIED ····· 4-15
4.7 TORQUE SPECIFICATIONS FOR BOLTS & NUTS ····· 4-17
4.8 TORQUE SPECIFICATIONS FOR JOINTS & HYDRAULIC HOSES ····· 4-20
4.9 INSPECTION & MAINTENANCE CHART ····· 4-22
4.10 WHEN REQUIRED ····· 4-26
4.11 PRE-START (EVERY 8 HOURS) INSPECTION & MAINTENANCE ····· 4-34
4.12 50 HOUR (WEEKLY) INSPECTION & MAINTENANCE PROCEDURES ····· 4-36
4.13 120 HOUR INSPECTION & MAINTENANCE PROCEDURE ····· 4-41
4.14 250 HOUR (3-MONTH) INSPECTION & MAINTENANCE PROCEDURE ····· 4-44
4.15 500 HOUR INSPECTION & MAINTENANCE PROCEDURES ····· 4-53
4.16 1000 HOUR (12-MONTH) INSPECTION & MAINTENANCE PROCEDURES ····· 4-64
4.17 2000 HOUR INSPECTION & MAINTENANCE PROCEDURES ····· 4-68
4.18 5000 HOUR INSPECTION & MAINTENANCE PROCEDURE ····· 4-77
4.19 MACHINE STORAGE ····· 4-79

5. TRANSPORTATION

5.1 GROUND TRANSPORTATION ····· 5-3
5.1.1 MACHINE PREPARATION ····· 5-3
5.1.2 LOADING/UNLOADING THE MACHINE ····· 5-5
5.1.3 SECURING THE MACHINE ····· 5-8
5.2 LIFTING MACHINE ····· 5-10
5.3 INSTALLATION AND REMOVAL OF MIRROR FOR SAFETY ····· 5-12

Copyright © 2015 Kobelco Construction Machinery Co.,Ltd. All rights reserved. [S2YF00022ZE01] [0731CsCshWbYs]

6. SPECIFICATIONS

6.1 GENERAL SPECIFICATIONS ····· **6-3**
6.2 SHOE TYPES ····· **6-4**
6.3 WORKING RANGES ····· **6-5**
6.4 BUCKET AND ARM COMBINATIONS ····· **6-7**

7. OPTIONAL EQUIPMENT

7.1 OPERATION OF HYDRAULIC BREAKER AND NIBBLER (FOR 1 PEDAL TYPE) ····· **7-3**
7.1.1 SELECTION OF HYDRAULIC BREAKER AND NIBBLER ····· **7-3**
7.1.2 BEFORE OPERATING BREAKER OR NIBBLER ····· **7-3**
7.1.3 PRECAUTIONS FOR IMPURITY AND HYDRAULIC OIL ····· **7-3**
7.1.4 ATTACHMENT MODE SELECTION AND SELECTOR VALVE ····· **7-3**
7.1.5 SETTING STOP VALVE ····· **7-6**
7.1.6 FLOW RATE CONTROL ····· **7-6**
7.1.7 BASIC OPERATION ····· **7-7**
7.1.8 PROHIBITED WORK IN USE OF BREAKER ····· **7-10**
7.1.9 PERIODIC INSPECTION AND MAINTENANCE INTERVAL ····· **7-13**
7.1.10 REINFORCING ATTACHMENT ····· **7-13**
7.1.11 PROHIBITED WORK IN USE OF NIBBLER ····· **7-14**
7.1.12 PRECAUTION TO BE EXERCISED ON BREAKERS OF DIFFERENT MANUFACTURES ····· **7-16**
7.2 ROTARY MULTI CONTROL VALVE (SAE AND BHL PATTERN) ····· **7-18**
7.3 OPERATION OF DOZER BLADE ····· **7-20**
7.3.1 OUTLINE ····· **7-20**
7.3.2 DOZER BLADE OPERATION ····· **7-20**
7.3.3 PROHIBITED WORK IN USE DOZER BLADE ····· **7-21**
7.3.4 PERIODIC INSPECTION AND MAINTENANCE INTERVAL ····· **7-22**
7.3.5 BLADE DIMENSION ····· **7-23**
7.4 CAB WORKING LIGHT SWITCH ····· **7-24**

8. SPECIAL PROCEDURES

8.1 GENERAL ····· **8-3**
8.2 RELEASING TRAVEL MOTOR BRAKES ····· **8-4**
8.3 RELEASING SWING BRAKE ····· **8-8**
8.4 LOWERING ATTACHMENT WHEN SUDDEN ENGINE FAILURE OCCURS ····· **8-12**
8.5 HYDRAULIC TANK PRESSURE ····· **8-14**

Copyright © 2015 Kobelco Construction Machinery Co.,Ltd. All rights reserved. [S2YF00022ZE01] [0731CsCshWbYs]

https://truckmanualshub.com/

Copyright © 2015 Kobelco Construction Machinery Co.,Ltd. All rights reserved. [S2YF00022ZE01] [0731CsCshWbYs]

FOREWORD

Copyright © 2015 Kobelco Construction Machinery Co.,Ltd. All rights reserved. [S2YF00022ZE01] [0731CsCshWbYs]

Copyright © 2015 Kobelco Construction Machinery Co.,Ltd. All rights reserved. [S2YF00022ZE01] [0731CsCshWbYs]

FOREWORD

WARNING **AVOID INJURY**

Read, understand and follow all safety precautions and procedures found in this manual before attempting any operation, inspection or maintenance of this machine, attachment or systems. Manufacturer cannot anticipate every possible circumstance that might involve a potential hazard. The warnings in this publication and on the product are therefore not all inclusive. If a tool, procedure, work method or operating technique not specifically recommended by manufacturer is used, you must satisfy yourself that it is safe for you and others. You should also ensure that the product will not be damaged or made unsafe by the operation, lubrication, maintenance and/or repair procedures you choose.

GENERAL

- This manual contains procedures to aid the operator gain peak performance through effective, economical operation and maintenance of the machine.
- Before operating the machine, operators must thoroughly read and understand all Safety, Operation and Maintenance instructions found in this manual. Failure to follow the instructions given in this manual may lead to serious injury to persons and or equipment failure.
- Operators and persons working with this machine should continually study this manual until proper Safety, Operation and Maintenance procedures are completely understood.
- This manual describes the basic operating techniques. Skill is gained as the operator utilizes these techniques and perfects them with an actual machine.
- Some illustrated pictures may be different from your machine, as technical improvement is continuous, manuals are periodically updated to reflect these changes.
- This manual may not contain attachments and optional equipment that are available in your area. Please contact an authorized Manufacturer Distributor for any optional attachments required.
- The contents of this manual and operation of the machine are based on the use of genuine manufacturer sourced parts. Use of non-genuine replacement or modified parts is not recommended.
- Materials and specifications are subject to change without notice.

PERIODIC INSPECTIONS

- After delivery of a machine, the Authorized Manufacturer Dealer/Distributor will make periodic service inspections. These inspections will be free of charge to the owner of the machine and will be at time intervals set by Manufacturer. Contact an authorized Manufacturer Dealer/Distributor for any Service related questions not explained in this manual.

NOTICE

- Owing to the policy of continual improvement, changes may be made by Manufacturer to any of its products without any obligation on the part of Manufacturer.

Copyright © 2015 Kobelco Construction Machinery Co.,Ltd. All rights reserved. [S2YF00022ZE01] [0731CsCshWbYs]

https://truckmanualshub.com/

KEEP OPERATION & MAINTENANCE MANUAL STORAGE

For quick reference, keep this manual in the magazine box of right rear of operator's seat.

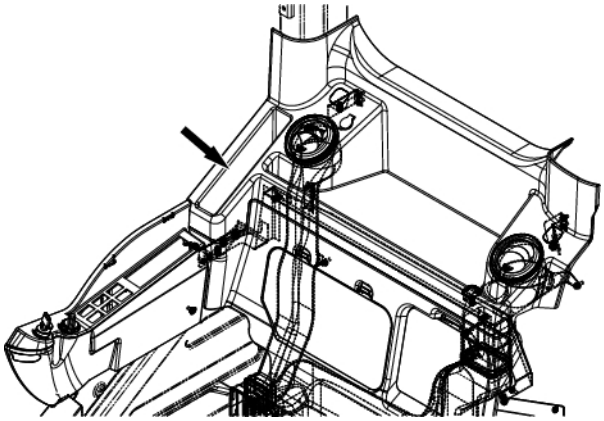

WARNING **READ THIS MANUAL BEFORE OPERATING THE MACHINE**

Most accidents occurring during work are due to non-observance of simple safety norms and elementary precautions.
Many accidents can be avoided if the causes are known and opportune cautions taken beforehand. There is no device or protection, no matter how advanced, that many prove so effective at avoiding accidents as a careful and attentive behaviour.

Copyright © 2015 Kobelco Construction Machinery Co.,Ltd. All rights reserved. [S2YF00022ZE01] [0731CsCshWbYs]

FOR ORDERING

For ordering parts and service, inform an authorized Manufacturer distributor of your machine's Serial Number and Engine Serial Number stamped in the locations, and Hour Meter read, shown on the illustrations below. For future reference, record these Serial Numbers in the spaces provided below:

MACHINE TYPE	MACHINE SERIAL No.	ENGINE SERIAL No.	HOUR METER

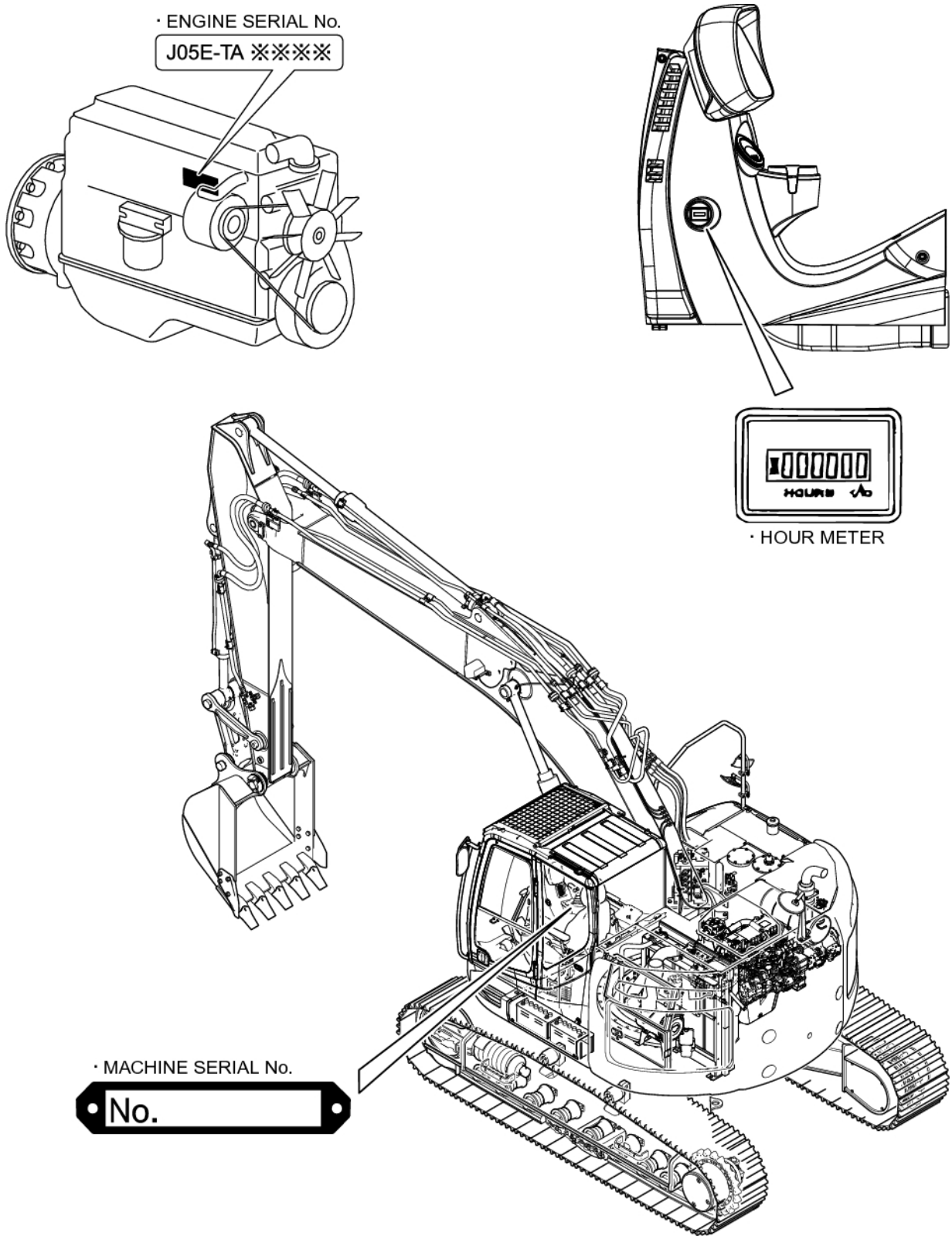

Copyright © 2015 Kobelco Construction Machinery Co.,Ltd. All rights reserved. [S2YF00022ZE01] [0731CsCshWbYs]

EMISSION CONTROL WARRANTY

CALIFORNIA EMISSION CONTROL
WARRANTY STATEMENT
YOUR WARRANTY RIGHTS AND OBLIGATIONS

The California Air Resources Board and HINO are pleased to explain the emission control system warranty on your 2008 engine. In California, new heavy-duty off-road engines must be designed, built and equipped to meet the State's stringent anti-smog standards.
HINO must warrant the emission control system on your engine for the periods of time listed below provided there has been no abuse, neglect or improper maintenance of your engine.

Your emission control system may include parts such as the fuel injection system and the air induction system. Also included may be hoses, belts, connectors and other emission-related assemblies.

Where a warrantable condition exists, HINO will repair your heavy-duty off-road engine at no cost to you including diagnosis, parts and labor.

1. HINO'S WARRANTY COVERAGE

The 2008 and later heavy-duty off-road engines are warranted for a period of five years or 3,000 hours of operation, whichever comes first. If any emission-related part on your engine is defective, the part will be repaired or replaced by HINO.

2. OWNER'S WARRANTY RESPONSIBILITIES

- As the heavy-duty off-road engine owner, you are responsible for the performance of the required maintenance listed in your owner's manual. HINO recommends that you retain all receipts covering maintenance on your heavy-duty off-road engine, but HINO cannot deny warranty solely for the lack of receipts or for your failure to ensure the performance of all scheduled maintenance.
- As the heavy-duty off-road engine owner, you should however be aware that HINO may deny you warranty coverage if your heavy-duty off-road engine or a part has failed due to abuse, neglect, improper maintenance or unapproved modifications.
- Your engine is designed to operate on diesel only. Use of any other fuel may result in your engine no longer operating in compliance with California's emissions requirements.
- You are responsible for initiating the warranty process. The CARB suggests that you present your heavy-duty off-road engine to a HINO dealer as soon as a problem exists. The warranty repairs should be completed by the dealer as expeditiously as possible.

If you have any questions regarding your warranty rights and responsibilities, you should contact at 1-248-442-6868 (Hino's contact).

Copyright © 2015 Kobelco Construction Machinery Co.,Ltd. All rights reserved. [S2YF00022ZE01] [0731CsCshWbYs]

3. EMOSSION WARRANT PARTS

(1) Fuel Metering System

(A)Fuel injection system.

(2) Air Induction System

(A)Intake manifold.

(B)Turbocharger / Supercharger Systems.

(C)Charge Air Cooling Systems.

(3) Exhaust Gas Recirculation (EGR) System

(A)EGR valve body, and carburetor spacer if applicable.

(B)EGR rate feedback and control system.

(4) Miscellaneous items Used in Above Systems

(A)Vacuum, temperature, and time sensitive valves and switches.

(B)Electronic control units, sensors, solenoids, and wiring harnesses.

(C)Hoses, belts, connectors, assemblies, clamps, fittings, tubing, sealing gaskets or devices, and mounting hardware.

(D)Pulleys, belts and idlers.

(E)Emission Control Information Labels.

(F)Any other part with the primary purpose of reducing emissions or that can increase emissions during failure without significantly degrading engine performance.

Copyright © 2015 Kobelco Construction Machinery Co.,Ltd. All rights reserved. [S2YF00022ZE01] [0731CsCshWbYs]

Copyright © 2015 Kobelco Construction Machinery Co.,Ltd. All rights reserved. [S2YF00022ZE01] [0731CsCshWbYs]

1. SAFETY PRECAUTIONS

Copyright © 2015 Kobelco Construction Machinery Co.,Ltd. All rights reserved. [S2YF00022ZE01] [0731CsCshWbYs]

Copyright © 2015 Kobelco Construction Machinery Co.,Ltd. All rights reserved. [S2YF00022ZE01] [0731CsCshWbYs]

1.1 GENERAL SAFETY INFORMATION

WARNING **AVOID INJURY OR DEATH**

Do not operate or perform any maintenance on this machine until all instructions found in this manual have been thoroughly read and understood. Improper operation or maintenance of this machine may cause accidents and could result in serious injury or death. Always keep this manual in storage stored in the place provided on the machine.
If it is missing or damaged, place an order with an authorized dealer/distributor for a replacement.
If you have any questions, please consult an authorized dealer/distributor.

1. Most accidents, which occur during operation, are due to neglect of precautionary measures and safety rules. Sufficient care should be taken to avoid these accidents. Erroneous operation, lubrication or maintenance services are very dangerous and may cause injury or death of personnel. Therefore all precautionary measures, NOTES, DANGERS, WARNINGS and CAUTIONS contained in this manual and on the machine should be read and understood by all personnel before starting any work with or on the machine.
2. Operation, inspection, and maintenance should be carefully carried out, and safety must be given the first priority. Safety messages are indicated using the following safety alert symbols and signal words. The safety information contained in this manual is intended only to supplement safety codes, insurance requirements, local laws, rules and regulations.
3. It is very difficult to forecast every danger that may occur during operation. However, safety can be ensured by fully understanding proper operating procedures for this machine according to methods recommended in this manual.
4. While operating the machine, be sure to perform work with great care to avoid damage to the machine, and accidents from occurring.
5. Continue studying this manual until all Safety, Operation and Maintenance procedures are completely understood by all persons working with the machine.
6. Symbols used in this manual;
   X (symbol): This symbol indicates an unacceptable practice or unsafe condition.
   O (symbol): This symbol indicates an acceptable practice or safe condition.
7. Messages of safety appear in this manual and on the machine. All messages of safety are identified by the words "DANGER", "WARNING" and "IMPORTANT".

a. Indicates an imminently hazardous situation which, if not avoided, will result in death or serious injury.

DANGER

b. Indicates a potentially hazardous situation which, if not avoided, could result in death or serious injury.

WARNING
AVOID INJURY OR DEATH

c. Indicates a potentially hazardous situation which, if not avoided, may result in minor or moderate injury. It may also be used to alert against possible damage to the machine and its components.

CAUTION

d. Special instructions or procedures which, if not correctly followed, may result in serious machine damage.

IMPORTANT

Copyright © 2015 Kobelco Construction Machinery Co.,Ltd. All rights reserved. [S2YF00022ZE01] [0731CsCshWbYs]

1.2 SAFETY PRECAUTIONS

WARNING **AVOID INJURY OR DEATH**

The proper and safe lubrication and maintenance for this machine, recommended by manufacturer, is outlined in this operator's manual for this machine.
Improper performance of lubrication or maintenance procedures are dangerous and could result in injury or death. Read and understand this operator's manual before performing any lubrication or maintenance.

The serviceman or mechanic may be unfamiliar with many of the systems on this machine. This makes it important to use caution when performing service work. Knowledge of the systems and components is important before removal or disassembly of any component.
Because of the size of some of the machine components, the serviceman or mechanic should check the weights noted in this manual. Use proper lifting procedures when removing any components.
The following is a list of basic precautions that must always be observed.

1. Read and understand all Warning plates and labels on the machine before Operating, Maintaining or Repairing this machine.
2. Always wear protective glasses and protective shoes when working around machines.
   In particular, wear protective glasses when using hammers, punches or drifts on any part of the machine or attachments. Use welders gloves, hood/goggles, apron and the protective clothing appropriate to the welding job being performed. Do not wear loose fitting or torn clothing.
   Remove all rings from fingers, loose jewelry, confine long hair and loose clothing before working on this machinery.
3. Disconnect the battery and hang a "Do Not Operate" tag in the Operator's Compartment. Remove key from starter key switch.
4. If possible, make all repairs with the machine parked on a level, hard surface. Block the machine so it does not roll while working on or under the machine. Hang a "Do Not Operate" tag in the Operator's Compartment.
5. Do not work on any machine that is supported only by lift, jacks or a hoist. Always use blocks or jack stands, capable of supporting the machine, before performing any disassembly.
6. Relieve all pressure in air, oil or water systems before any lines, fittings or related items are disconnected or removed. Always make sure all raised components are blocked correctly and be alert for possible pressure when disconnecting any device from a system that utilizes pressure.
7. Lower the bucket, blade (if equipped), or other attachments to the ground before performing any work on the machine. If this cannot be done, make sure the bucket, blade (if equipped) or other attachment is blocked correctly to prevent it from dropping unexpectedly.
8. Use steps and grab handles when mounting or dismounting a machine. Clean any mud, grease, oil or debris from steps, walkways or work platforms before using. Always face the machine when using steps, ladders and walkways. When it is not possible to use the designed access system, provide ladders, scaffolds, or work, platforms to perform safe repair operations.
9. Avoid back injury. Use a hoist when lifting components which weigh 23 kg (50 lb) or more. Make sure all chains, hooks, slings, etc., are in good condition and are the correct capacity. Be sure hooks are positioned correctly. Lifting eyes are not to be side loaded during a lifting operation.
10. To avoid burns, be alert for hot parts and surfaces immediately after stopping the machine such as hot fluids in lines, tubes and compartment covers.
11. Be careful when removing cover plates. Gradually back off the last two bolts or nuts located at opposite ends of the cover or device and carefully pry cover loose to relieve any spring or other pressure, before removing the last two bolts or nuts completely.

Copyright © 2015 Kobelco Construction Machinery Co.,Ltd. All rights reserved. [S2YF00022ZE01] [0731CsCshWbYs]

12. Be careful when removing filler caps, breathers and plugs on the machine. Hold a rag over the cap or plug to prevent being sprayed or splashed by liquids under pressure. The danger is even greater if the machine has just been stopped because fluids can be hot.
13. Always use the proper tools that are in good condition and that are suited for the job at hand. Be sure you understand how to use them before performing any service work.
14. Reinstall all fasteners with the same part number. Do not use a lesser quality fastener if replacements are necessary.
15. Repairs which require welding should be performed only with the benefit of the appropriate reference information and by personnel adequately trained and knowledgeable in welding procedures. Determine type of metal being welded and select correct welding procedure and electrodes, rods or wire to provide a weld metal strength at least equivalent to that of the parent metal. Disconnect battery before any welding procedures are attempted.
16. Do not damage wiring during repair/removal operations. Reinstall the wiring so it is not damaged nor will be damaged in operation of the machine by contacting sharp corners, or by rubbing against some object or hot surface. Do not connect wiring to a line containing fluid.
17. Make sure all protective devices including guards and shields are properly installed and functioning correctly before starting a repair. If a guard or shield must be removed to perform the repair work, use extra caution and replace the guard or shield after repair is complete.
18. Performing maintenance or repair work on the machine with the bucket/attachment raised is hazardous. The bucket/attachment and lift arm could fall and injure or kill a person. Be sure to lower the bucket or attachment to the ground before starting work on the machine.
19. Loose or damaged fuel, lubricant and hydraulic lines, tubes and hoses can cause fires. Do not bend or strike high pressure lines or install parts which are bent or damaged. Inspect lines, tubes and hoses carefully. Do not check for leaks with your hands. Very small (pinhole) leaks can result in a high velocity oil stream that will be invisible close to the hose. This oil can penetrate the skin and cause personal injury. Use a small piece of card-board, wood or metal to locate pinhole leaks.
20. Tighten connections to the correct torque. Make sure that all heat shields, clamps and guards are installed correctly to avoid excessive heat, vibration or rubbing against other parts during operation. Shields that protect against oil spray onto hot exhaust components in event of a line, tube or seal failure must be installed correctly.
21. Do not operate a machine if any rotating part is damaged or contacts any other part during operation. Any high speed rotating component that has been damaged or altered should be checked for balance before reusing.
22. Be careful when servicing or separating the tracks (crawlers). Chips can fly when removing or installing a track (crawlers) pin. Wear safety glasses and long sleeve protective clothing. Tracks (crawlers) can unroll very quickly when separated. Keep away from front and rear of machine. The machine can move unexpectedly when both tracks (crawlers) are disengaged from the sprockets. Block the machine to prevent it from moving.
23. Caution should be used to avoid breathing dust that may be generated when handling components containing asbestos fibers. If this dust is inhaled, it can be hazardous to your health. Components in Manufacture products that may contain asbestos fibers are brake pads, brake band and lining assembles, clutch plates and some gaskets. The asbestos used in these components is usually bound in a resin or sealed in some way. Normal handling is not hazardous as long as air-borne dust which contains asbestos is not generated.

WARNING **AVOID INJURY OR DEATH (In 5. Regard)**

Do not operate this machine unless you have read and understand the instructions in this operator's manual. Improper machine operation is dangerous and could result in injury or death.

Copyright © 2015 Kobelco Construction Machinery Co.,Ltd. All rights reserved. [S2YF00022ZE01] [0731CsCshWbYs]

If dust which may contain asbestos is present, there are several common sense guidelines that should be followed.

a. Never use compressed air for cleaning.
b. Avoid brushing or grinding of asbestos containing materials.
c. For clean up, use wet methods or a vacuum equipped with a high efficiency particulate air (HEPA) filter.
d. Use exhaust ventilation on permanent machining jobs
e. Wear an approved respirator if there is no other way to control the dust.
f. Comply with applicable rules and regulations for the work place.
g. Follow environmental rules and regulations for disposal of asbestos.
h. Avoid areas where asbestos particles may be in the air.

Copyright © 2015 Kobelco Construction Machinery Co.,Ltd. All rights reserved. [S2YF00022ZE01] [0731CsCshWbYs]

1.3 WARNING LABELS & DECALS

Warning labels and decals are affixed to the machine to remind operators and personnel of specific safety precautions in certain areas of the machine. The following are illustrated examples of all warning labels and decals along with their locations.

1.3.1 WARNING LABELS & DECALS MAINTENANCE

- Do not remove the attached warning labels and decals.
- Confirm whether labels can be easily read.
  If words or illustrations are illegible, clean off or replace the labels.
- Use a cloth, water, and detergent to clean the labels. Never use organic solvents or gasoline.
- If labels are damaged, missing or illegible, replace them with new ones.
  Contact our dealer/distributor for new labels.

1.3.2 LOCATION OF WARNING LABELS & DECALS

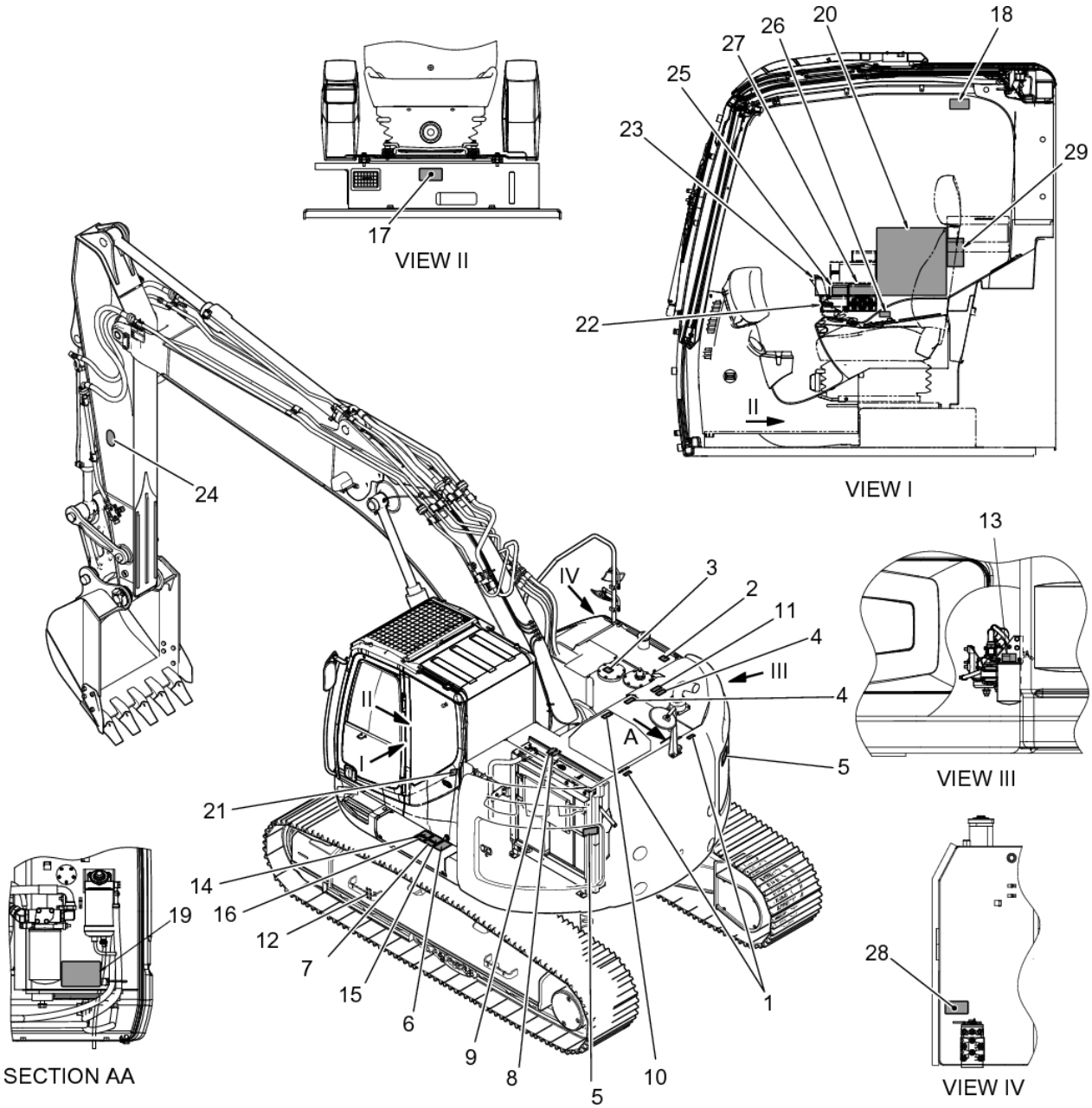

Copyright © 2015 Kobelco Construction Machinery Co.,Ltd. All rights reserved. [S2YF00022ZE01] [0731CsCshWbYs]

1. DO NOT USE COUNTERWEIGHT LIFTING

DO NOT USE COUNTERWEIGHT LIFTING
Located on counterweight.
Part Number - YN20T01221P1 (2REQ'D)
Do not use counterweight lifting eyes to lift whole machine.
Lifting eyes can fall under this load resulting in personal injury.
Refer to operators manual for proper way of lifting machine.

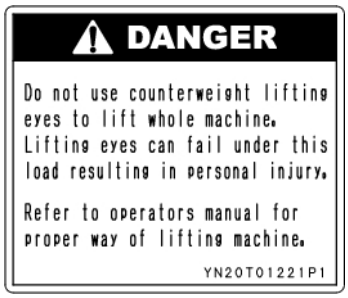

2. WORKING ABOVE GROUND

Located on fuel tank.
Part Number - YN20T01049P1
When servicing or repairing machine, keep surfaces free of oil, water, grease, tools, etc. to avoid possible slipping and/or falling from machine, which can cause personal injury.

3. PRESSUREIZED HOT OIL

Located on top of hydraulic tank.
Part Number - YN20T01405P1
Pressurized hot oil can cause burns.
Depress cap slowly with engine off to relieve hydraulic tank pressure.

Copyright © 2015 Kobelco Construction Machinery Co.,Ltd. All rights reserved. [S2YF00022ZE01] [0731CsCshWbYs]

4. WORKING ABOVE GROUND

Located on engine hood and hydraulic pump cover.
Part Number - ZL11M02708 (3-REQ'D)
There is a danger of falling when working on areas above ground.

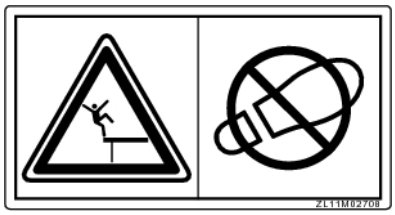

- Do not approach edges.
- Use the appropriate equipment, such as ladders or platform when working above ground. In addition, strap yourself to the proper equipment accordingly.
- Avoid spillage of any oil or grease.
- Do not leave any tools around the working area.
- Use extreme caution to avoid slipping while walking.
- Do not jump on or from the machine. Use the steps and handrails and securely maintain a three point contact while mounting or dismounting at all times.

5. SWING

Located on each side of the rear counterweight.
Part Number - YN20T01003P2 (2-REQ'D)

6. BOOSTER CABLE

Located on battery relay cover.
Part Number - YN20T01015P2
Improper booster cable connections can cause an explosion resulting in personal injury.
Connect booster cables using following prcedure.
1.
Connect booster cable to positive (+) battery terminal of discharged battery. Connect other end of booster cable to positive battery terminal of normal battery.
2.
Connect other booster cable to negative (-) battery terminal of normal battery. Connect other end of booster cable to upper frame of troubled machine.
3.
Start engine and remove booster cables in reverse order.

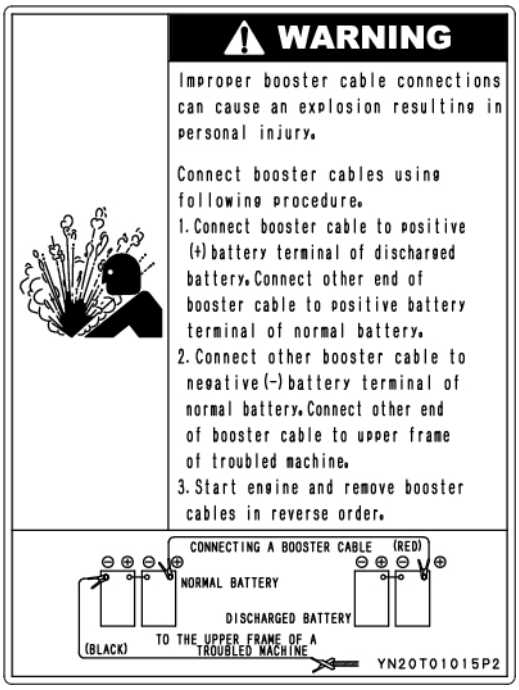

Copyright © 2015 Kobelco Construction Machinery Co.,Ltd. All rights reserved. [S2YF00022ZE01] [0731CsCshWbYs]

7. BATTERY CABLE

Located on battery cover.
Part Number - YN20T01338P1
Electoric hazard may cause injuly when mishanding the cable.
Read operator manual for safe and proper handling.

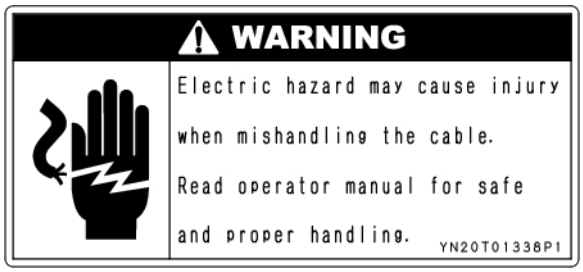

8. HOT COOLANT

Located on top of engine fan shroud.
Part Number - YN20T01010P1
Steam of hot coolant can cause injury or blindness.
Never loosen or open radiator cap when coolant is hot and under pressure.
Before opening radiator cap:
-Cool down engine completely.
-Cover radiator with cloth rag.
-Loosen cap slowly to relieve pressure.

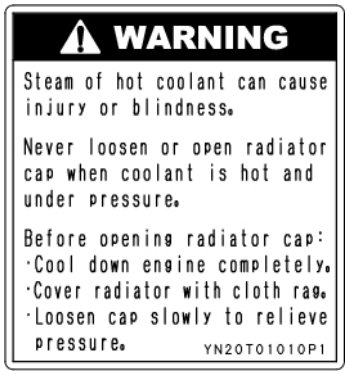

9. ENGINE STOP

Located on top of engine fan shroud.
Part Number - YN20T01009P1
Rotating parts can cause personal injury.
Keep away from fan and belt when engine is running.
Stop engine before servicing.

10. ROTATING & HOT PARTS

Located on engine hood.
Part Number - YN20T01012P1
Rotating engine fan, hot engine parts and drive belt can cause severe injury.
Do not open engine cover or service engine with engine running.

Copyright © 2015 Kobelco Construction Machinery Co.,Ltd. All rights reserved. [S2YF00022ZE01] [0731CsCshWbYs]

11. HOT PARTS

Located on hydraulic pump cover.
Part Number - YN20T01220P1
Engine may be hot which could cause burns.
Do not touch engine until it cools down.

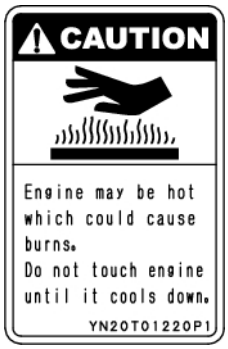

12. ADJUSTING TRACK TENSION

Located on crawler frame.
Part Number - YN20T01813P1 (2REQ'D)

- This work must be done carefully by two people. The operator must operate the machine as instructed by the signals of the partner.
  The crawler belt is changed by lifting one side of the machine at a time. Unexpected lowering or movement of the machine can result in serious injury or death.
  Do not operate the boom, arm or bucket / attachment while removing or installing a crawler belt.
  Follow the instructions provided.
- Grease in track tensioning mechanism is under extreme pressure and can penetrate skin causing severe injury. Keep face and body away from grease fitting area. Do not loosen grease fitting more than one turn. If grease does not release after one turn of the fitting, call our dealer/distributor for assistance.
- Before removing the rubber crawler belt, confirm that the pressure inside the track tensioning cylinder has been completely released. Then turn the sprocket.
- If the procedure on releasing the pressure in the track tensioning cylinder is not followed, grease can penetrate skin causing severe injury. If the tension of rubber crawler belt does not release, call the dealer/distributor for repair service.

Copyright © 2015 Kobelco Construction Machinery Co.,Ltd. All rights reserved. [S2YF00022ZE01] [0731CsCshWbYs]

13. HOT PARTS

Located on engine oil filter bracket.
Part Number - YN20T01867P2
Engine oil filter may be hot which could cause burns.
Do not touch engine oil filter until it cools down.

14. HANDLING BATTERY

Located on battery cover.
Part Number - YN20T01017P1

- Electrolyte is an acid and can cause injuly or blindness if it contact with skin or eyes.
- Wher eye protection and protective clothing when handling or servicing batteries.
- If electrolyte contacts skin or eyes, flush affected areas immediatery with clean water and seek medical attention.

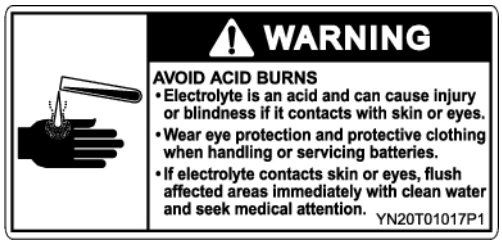

15. PREVENT BATTERY EXPLOSIONS

Located on battery cover.
Part Number - YN20T01001P1

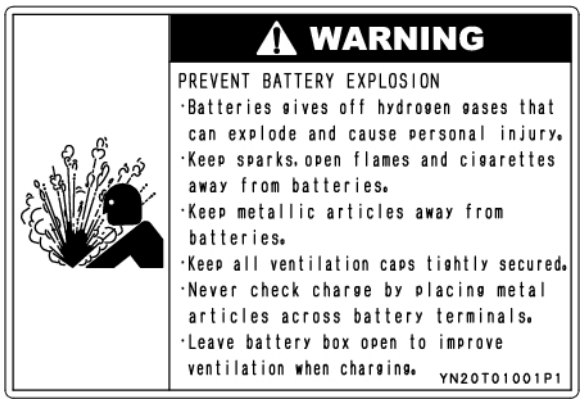

16. HANDLING BATTERY

Located on battery cover.
Part Number - PY20T01069P1

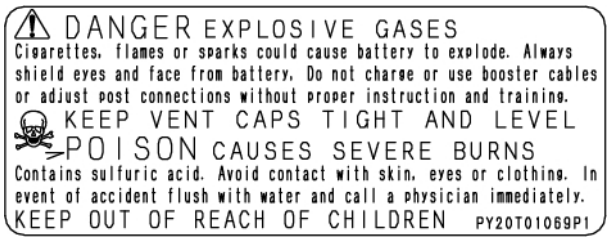

17. DO NOT INSERT HAND IN THE MOVING PART

Located on seat stand.
Part Number - YN20T01339P1
Be careful not to pinch your hand(s) when operating the lever.

Copyright © 2015 Kobelco Construction Machinery Co.,Ltd. All rights reserved. [S2YF00022ZE01] [0731CsCshWbYs]

18. LOCK FRONT WINDOW AT THE HOUSED POSITION

Located inside cab R.H.

Part Number - ZL11M06008

Lock front window at the housed position.

There is always possibility of slipping down of the

housed front window resulting in injury.

19. CAUTION FOR REPLACEMENT OF FILTER

Located on counterweight right rear side.

Part Number - YN20T02100P1

CAUTION

1. Replace the fuel filter according to the filter replacement procedure.
2. Before replacing the filter, clean the filter area. (Especially, the area around the air bleeding plug, and the surface of filter mounting.)
3. When replacing the filter, prevent any dust from getting into the filter.
4. Before installation, do not fill the filter with fuel.
5. Do not reuse the filter and O-ring. Replace them with new ones.

YN20T02100P1

Copyright © 2015 Kobelco Construction Machinery Co.,Ltd. All rights reserved. [S2YF00022ZE01] [0731CsCshWbYs]

20. TRAVEL SPEED, ADJUSTING TRACK TENSION, LEAVING MACHINE, READ OPERATOR MANUAL, POWER BOOST SWITCH, ENGINE STOP, BUCKET TO CAB CONTACT, ELECTRICAL POWER LINES LEAVING MACHINE

Located inside cab R.H.

Part Number - LC20T01187P1

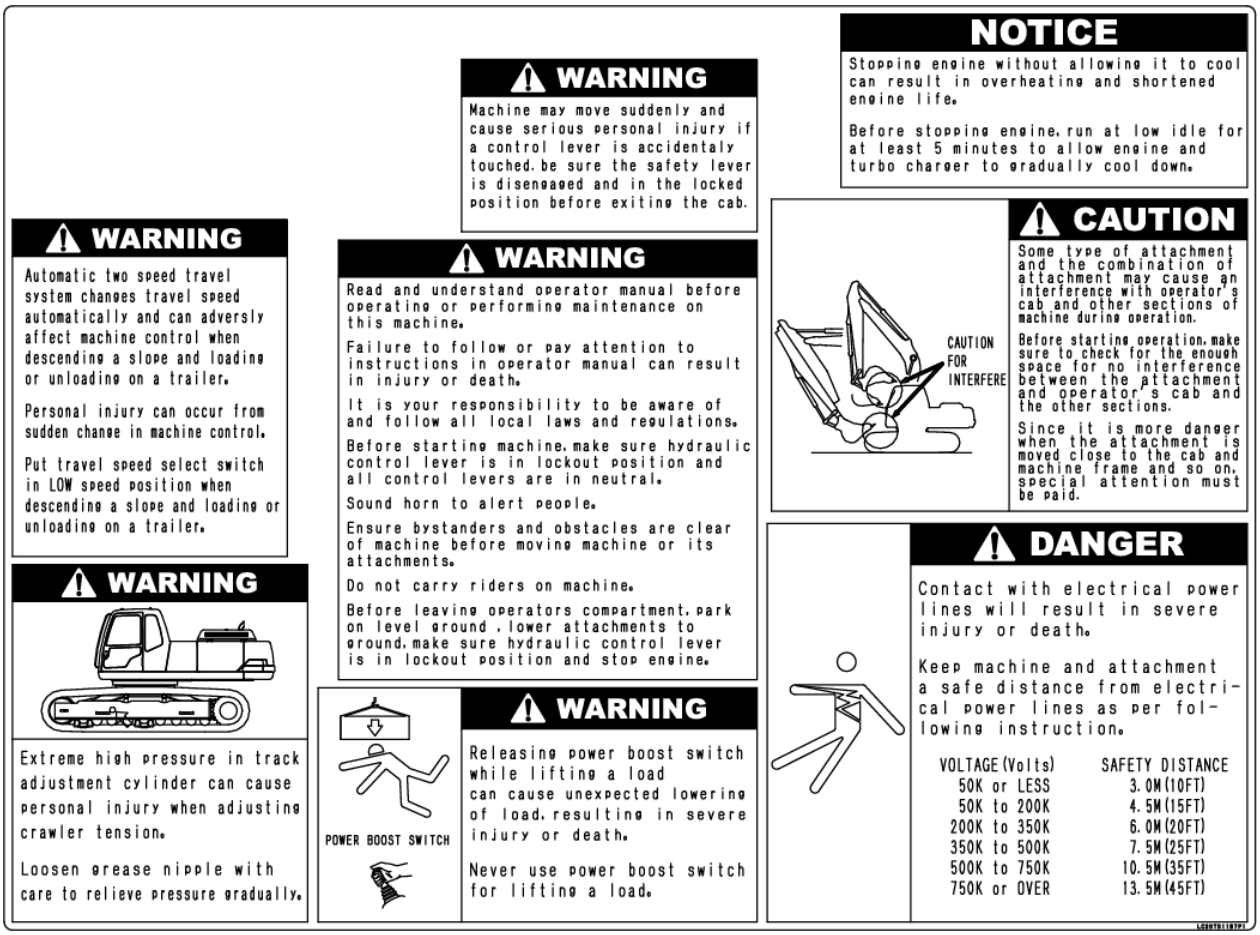

21. SWING BRAKE RELEASE SWITCH

Located on rear cover.

Part Number - YN20T01639P1

While operating swing action, when the parking brake can not be release, set the toggle switch to "RELEASE" position, and the parking brake is released. Usually, this toggle switch should be set to "NORMAL" position and contact our service shop immediately.

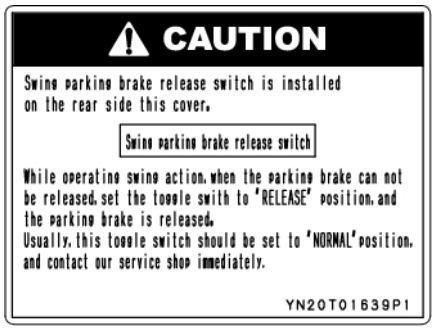

Copyright © 2015 Kobelco Construction Machinery Co.,Ltd. All rights reserved. [S2YF00022ZE01] [0731CsCshWbYs]

22. ATTACHMENT MODE SELECT SWITCH

Located inside cab R.H.

Part Number - YN20T02111P1 (OPT.)

Before starting work, be sure to set the attachment select switch to the proper position.

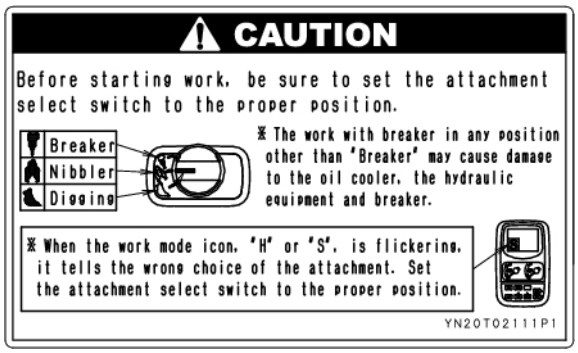

CAUTION

-The work with breaker in any position other than "Breaker" may cause damage to the oil cooler, the hydraulic equipment and breaker.

-When the work mode icon, "H" or "S", is flickering, it tells the wrong choice of the attachment. Set the attachment select switch to the proper position.

23. NIBBLER & HYDRAULIC BREAKER

Located inside cab R.H.

Part Number - YN20T01930P1 (OPT.)

MAINTENANCE

(When using nibbler or breaker)

Contamination and deterioration of hydraulic oil may develop malfunctioning of control valve, early wear and seizure of hydraulic pumps, and consequential damage of entire hydraulic circuit.

Replace filters and hydraulic oil, refering to the following table.

(1)Hydraulic oil change

: Every 1000 hrs.

(2)Hydraulic return filter change

First : 50 hrs

Regular : Every 250 hrs

24. KEEP CLEAR WORKING AREA

Located on arm.

Part Number - YN20T01337P1 (2-REQ'D)

Make sure the area is clear of obstacles and persons before begining the operation of the machine. Always look around before you start the swing operation. Make sure everyone is cleared in your worksite. Sound horn before beginning swing operation.

Copyright © 2015 Kobelco Construction Machinery Co.,Ltd. All rights reserved. [S2YF00022ZE01] [0731CsCshWbYs]

25. OPERATION BY FOOT PEDAL

Located inside cab R.H.

Part Number - PY20T01062P1 (OPT.)

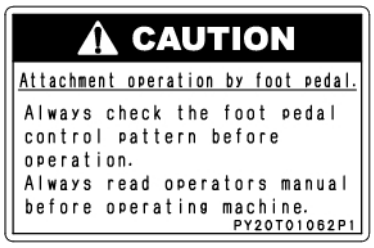

26. NIBBLER & BREAKER OPERATION POSITION

Located inside cab R.H.

Part Number - YT20T01054P1 (OPT.)

27. ROTARY MULTI CONTROL VALVE

Located on cab rear side cover.

Part Number - YN20T01039P1 (OPT.)

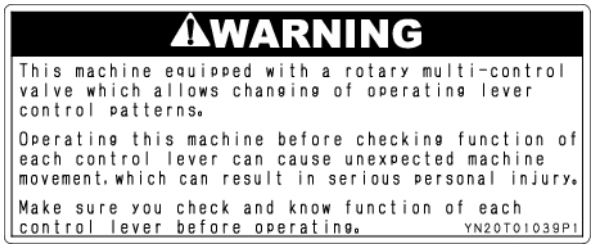

28. ROTARY MULTI CONTROL VALVE

Located on fuel tank

Part Number-YF20T01197P1 (OPT.)

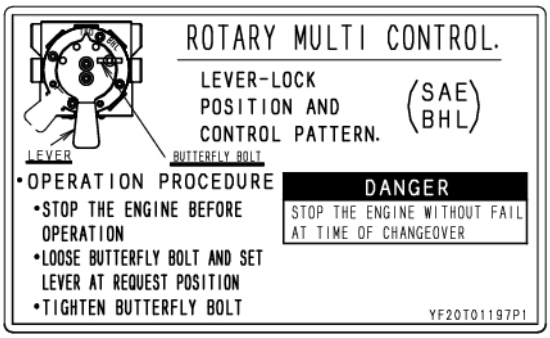

Copyright © 2015 Kobelco Construction Machinery Co.,Ltd. All rights reserved. [S2YF00022ZE01] [0731CsCshWbYs]

29. ENGINE AUTO IDLING STOP

Located inside cab R.H.

Part Number - YN20T01695P1

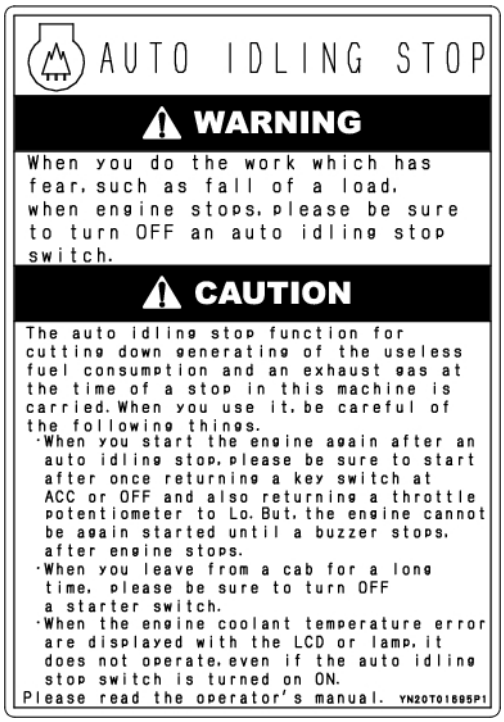

WARNING

When you stand up and or move over the control levers during operation, your body or hand may contact the levers and resulting unexpected movement of attachments or upper machinery.
Make sure to set the safety lock lever for inoperative position before you stand up and move from operators' seat.
Auto idle stop (AIS) system will stop engine and any motive power and may result accident if using machine for lifting work.
Make sure to turn off the AIS system when using machine for lifting work.

CAUTION **Make sure the following cautions when using Auto Idle Stop (AIS) system.**

-After AIS system activates and stops engine, make sure to turn the starter key "ACC" or "OFF" position once, set accelerator dial to Lo speed range then start engine. If AIS system sounds alarm, engine will not be started till the sound will be stopped.
-Make sure to turn the starter key "OFF" position when you leave the machine for a while.
-AIS system will not activate when multi display monitor indicates an error of engine coolant temperature.

Copyright © 2015 Kobelco Construction Machinery Co.,Ltd. All rights reserved. [S2YF00022ZE01] [0731CsCshWbYs]

1.4 PRE-START SAFETY

A. FOLLOW THE RULE

- In operating, inspecting and serving the machine, follow the precaution and procedure for the safety described in this manual.
- Never operate machine when being in poor physical condition, having taken medicine (making sleepy), being under the influence of alcohol and being mentally unstable.
- When working in group and with instruction by flagman, make sufficient previous arrangement about the working contents and operate the machine according to the specified signal.

B. WHEN FAILURE WAS DETECTED

In operating or serving the machine, when the failure of machine (noise, vibration, smell, deviation of instrument, smoke, oil leaking and warning by warning device and multi-display) is detected, contact the person in charge immediately and take a proper measure. Do not operate the machine until the failure is removed.

C. WEAR PROTECTIVE CLOTHING

WARNING **AVOID BURNS**

Work clothing that has come in contact with oil could catch fire. Change clothes immediately.

Wear well fitting safety shoes, hard hat, and working clothes, and put on protective glasses, face shield, ear protection and gloves. When necessary, wear reflective vest.
When operating attachments that produce flying debris, it is strongly recommended to purchase and install protective guards on the machine and close the all window to protect the operator from flying debris. Also the operator and all personnel in the area of the machine should wear protective gear such as safety shoes, hard hat, gloves and face shield or goggles.

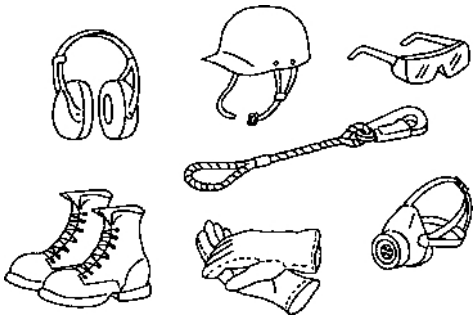

D. PREPARE FOR EMERGENCIES

Have a fire extinguisher and First Aid Kit ready for emergencies. Know how to operate the fire extinguisher and know where the First Aid Kit is located for easy access in case of emergency.

Prepare beforehand the communication means in case of any emergency, and take note of telephone numbers for emergency contact.

Copyright © 2015 Kobelco Construction Machinery Co.,Ltd. All rights reserved. [S2YF00022ZE01] [0731CsCshWbYs]

E. PRECAUTION TO BE TAKEN WITH DEVICES FOR SAFE

- Check that all protective guard and cover, and mirror are installed properly. If the failure is found, repair it immediately.
- Well understand how to use the device for safety.
- Never remove the device for safety and control it so that it always functions correctly.

F. TAG OUT MACHINE DURING MAINTENANCE

Before performing any inspection or maintenance procedures to the machine, post to the operators controls a "DO NOT OPERATE" tag to warn persons not to start the machine. Inform the supervisor and all operators that the machine is under inspection or maintenance and they will be informed when the machine is ready for normal operation.
Order tag P/No. YN20T01320P1

G. ENSURE SAFETY AT THE WORKSITE

- Know the work area! Before operating the machine, carefully survey and record the land and worksite features to prevent the machine from falling or the soil from caving in.
- It is dangerous to allow other personnel to enter into the working area.
  Make the working area off-limits to other people by providing barricades.
  Provide a flagman in working areas with heavy traffic to avoid accidents.

H. ENGAGE SAFETY LOCK LEVER BEFORE LEAVING MACHINE

Before leaving the operator's seat, move the safety lock lever to the "LOCKED" (Up) position. This will not allow operation of any hydraulic controls should they be accidentally moved. If the lever is not set to the "LOCKED" position and hydraulic controls are touched accidentally, the machine may move suddenly resulting in serious injury or death.
Before leaving the machine, lower the bucket to the ground, place the safety lock lever in the "LOCKED" (Up) position, stop the engine and remove the key from the starter key switch.
A. Locked position
B. Unlocked position

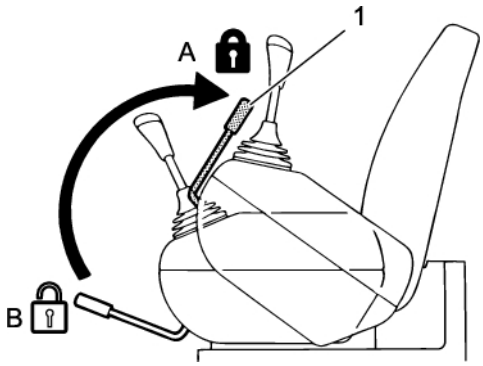

I. SIGNS, SIGNALS & FLAGMEN

Install signs on soft shoulders and ground areas, and have a flagman direct the operation if necessary. The operator should note marks and follow signals from the flagman. All personnel should know the meaning of the signs, marks, and signals. Only one flagman should give the signs and signals.

Copyright © 2015 Kobelco Construction Machinery Co.,Ltd. All rights reserved. [S2YF00022ZE01] [0731CsCshWbYs]

 https://truckmanualshub.com/

J. CLEAN THE MACHINE

Keep the machine clean and free of debris, excess or spilled lubricants, fuel and fluids. Use approved solvents, detergents and water to clean the machine and its components on a regular basis.

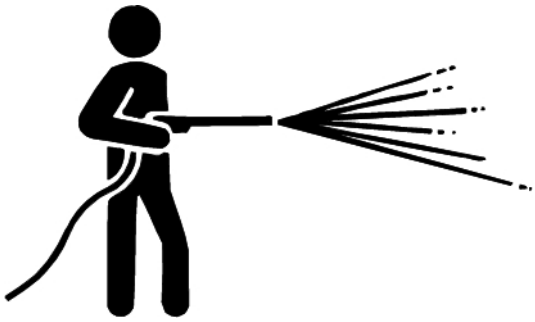

IMPORTANT

Be careful not to allow water to reach electrical components. Serious damage can occur to the electrical system by allowing water to reach the electrical components. Never clean inside of cab, or electrical components with pressurized water or steam.

K. KEEP THE AREA AROUND THE OPERATOR SEAT CLEAN

- When taking the operator's seat, do not fail to remove mud, grease and oil, etc. on the sole of shoes. The sole with mud, grease and oil, etc. might slip on the pedal when operating resulting in accident.
  Do not leave parts and tools in the area around the cab.
- Do not leave plastic bottle inside of the cab and put suction cup on the window glass.
  They may do the same job as lenses introducing the possibility of fire.
- Do not take dangerous substances like combustibles and explosive substances into the cab.
- Do not use radio and cellular phone in the cab in traveling operation and working operation.
- After using the ashtray, put out the fire of matches and cigarettes without fail and close the cover.
- Do not leave cigarette lighter inside of the cab. There is a possibility of fire due to high temperature.

L. HOW TO HANDLE LIFE HAMMER

A life hammer is provided on the right side of cab. In case of emergency, take the life hammer, break the cab glass, and escape from the cab.
In addition, the life hammer is equipped with a cutter on the lever side to cut the seat belt, etc.

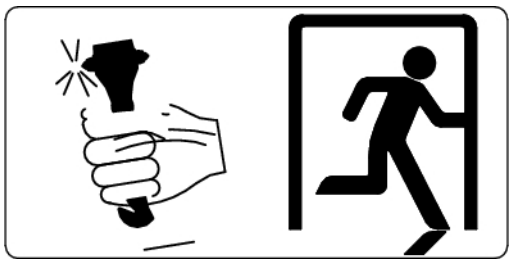

IMPORTANT

For the emergency escape way, see "2.3.11 EMERGENCY ESCAPE FROM CAB" in Chapter 2.

Copyright © 2015 Kobelco Construction Machinery Co.,Ltd. All rights reserved. [S2YF00022ZE01] [0731CsCshWbYs]

M. FIRE PREVENTION

Fire due to Fuel and Oil

There is a possibility of catching fire by bringing fire near inflammables like fuel, oil, antifreeze mixture, window washer, etc.
Follow precaution described below.

- Do not smoke close to the area and do not use the fire near the area.
- Make up shortage of fuel after stopping the engine.
- During making up shortage of fuel and oil, do not leave the place.
- Tighten caps for fuel and oil securely.
- Make sure not to spill out oil on the heated surface and the parts for electric system.
- Store fuel and oil in the specified place and keep out of the area excluding persons concerned.
- After refueling and lubrication, wipe off the spilled out fuel and oil, etc. immediately.
- Move the inflammables to the safe area before carrying out the grinding and welding works of machine.
- Use incombustible washing as wash oil for parts, etc. and do not use light oil and gasoline which might catch fire.
- Do not weld the pipes and tubes containing combustible liquid and do not employ gas cutting.

Fire due to Faulty Electric Wire

The fire may be caused by short-circuit of electric wire.

- Keep all connectors of electric wire clean and fix them securely.
- Check the wire for loosening and damage every day, and tighten loose connectors and clamps for wiring again and replace the damaged wire with new one.

Fire due to Faulty Piping

Check that the clamp, guard and cushion of hose and tube are securely fixed. The loosening may cause the damage of hose due to the vibration during operation and the scrubbing in contact to other parts and is in danger of fire and accident resulting in injury or death due to the spouting out of high pressure oil.

Use Approved Work Lights

Use only approved work lights when performing inspection and maintenance procedures to prevent possible fire or explosion. Certain types of work lights should not be used due to the possibility of ignition of certain flammable gasses and fluids from the machine.

Copyright © 2015 Kobelco Construction Machinery Co.,Ltd. All rights reserved. [S2YF00022ZE01] [0731CsCshWbYs]

Measures to be Taken at the Time when Fire Occurred

When the fire occurred, escape from the machine according to the following way.

- Turn starter key switch off to stop engine.
- Carry out the early fire fighting with extinguisher if the spare time is left.
- Escape from the machine making use of hand rail and step.

N. PRECAUTION TO BE TAKEN AT THE TIME WHEN GETTING ON AND OFF MACHINE

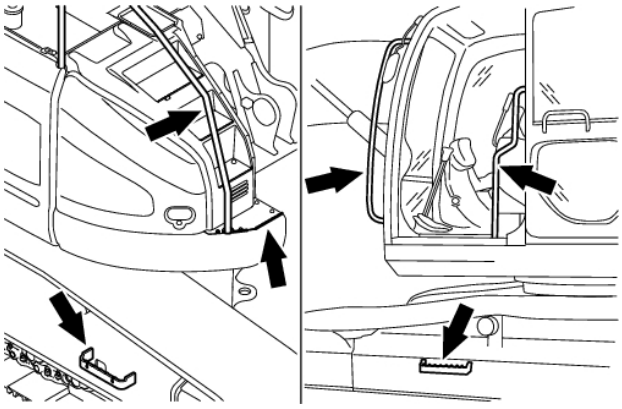

- Getting on and off the machine from the side where the step and hand rail are provided.
- Before getting on and off the machine, check the step and hand rail for damage and loose bolts. If damage and loose bolts are found, repair them.
  And if grease and oil, and mud adhered on the hand rail and step are found, remove them completely.
- When getting on and off the machine, do not fail to use the hand rail, step and crawler shoe faced to the machine and support the body at three points.
  There are many people injured by jumping from the machine. Never jump from the machine.
- Do not get on and off the running machine.
- Do not use control lever and safety lock lever for getting on and off the machine.
- Do not get on and off the machine while holding tools by hand.

O. PERSON ON THE ATTACHMENT IS NOT ALLOWED

Do not ride person on the attachment. There is a possibility of serious injury or death like falling from the machine.

P. PAY ATTENTION TO THE NOISE

The large noise from the surrounding might cause hard hearing and deafness. If it is unavoidably necessary to enter in noisy area for long time, do not fail to wear protectors or earplugs.

Copyright © 2015 Kobelco Construction Machinery Co.,Ltd. All rights reserved. [S2YF00022ZE01] [0731CsCshWbYs]

Q. USE THE PROPER OPTIONAL ATTACHMENT

Use only optional attachments designed for and approved by manufacturer. Read, understand and follow all instructions in the manual accompanying the optional attachment. Use of any optional attachment not approved by manufacturer in writing, can cause serious injury to personnel, damage to the machine and its components and shorten the life of the machine.
Contact an authorized our distributor for optional attachments available for the machine.

R. CAUTION TO MODIFICATION

Machine modification is allowed only when our distributor approves it. Unauthorized modification may cause injury or death.
Unauthorized modification voids the machine warranty.
When any modification is intended, consult with the authorized dealer/distributor.

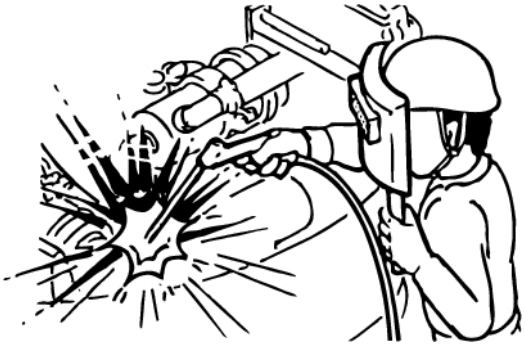

S. PAY ATTENTION TO FALLING MATERIALS AND FLYING DEBRIS

At the site where there is a possibility of falling material and flying debris, provide protective guard on it as required to protect operator from possible risks.

- Provide front guard (in option) on it at the time of hydraulic power breaker work, demolition work, and cutting work.
- In working operation, do not fail tot close the front window and door.
- At the sites like mine and quarry stone, etc. where there is a possibility of falling stone, do not fail to wear head guard (in option).

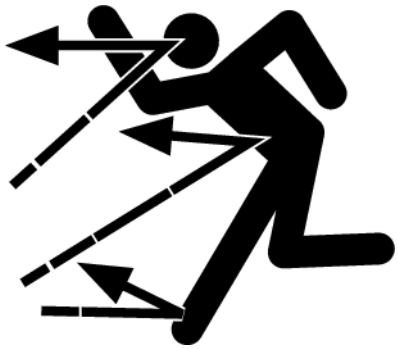

- When working at the site where there is a possibility of falling materials and flying debris, person other than operator must take enough distance from falling stone and flying debris.

T. PERFORM PRE-START INSPECTION

Walk around the machine before starting the machine, perform a PRESTART inspection of the machine and make note of any abnormality. If any problems are found, repair or replace defective components immediately. DO NOT OPERATE THE MACHINE until all problem areas are properly repaired. Always keep the windshield, work lamps, and mirrors clean for good visibility.

Copyright © 2015 Kobelco Construction Machinery Co.,Ltd. All rights reserved. [S2YF00022ZE01] [0731CsCshWbYs]

 https://truckmanualshub.com/

U. ADJUSTMENT OF OPERATOR'S SEAT

Adjust the operator's seat to the body of operator and the working contents, or operator might be tired causing accident.

- When operator changes, adjust the operator's seat without fail.
- In the condition where operator's back is fitted to the seat back, press pedal fully and check that the control lever, pedal and switch can be properly manipulated.

Copyright © 2015 Kobelco Construction Machinery Co.,Ltd. All rights reserved. [S2YF00022ZE01] [0731CsCshWbYs]

1.5 SAFETY DURING OPERATION

A. STARTING ENGINE

When the caution tag "Do not operate" or similar warning is indicated on the control lever or in the area around the cab, do not start engine and do not touch the control lever.

B. PASSENGERS

This equipment is not intended or designed for the transportation of persons. Do not allow persons to ride on the machine. Serious injury or death can result from allowing passengers on or in the machine.

C. SAFETY CHECK IN THE SURROUNDING BEFORE OPERATION

- Check that no one is in the area around the machine.
- Fix the door and window securely even though they are open or closed.
- Adjust the mirror to the position where the operator can see well the rear sight.
  For the adjustment, refer to "Adjusting Mirror" in Chapter 3.
- Check that the alarm system like horn and travel alarm (if equipped) functions properly.

D. FASTEN SEAT BELT

Fasten seat belt so as to prevent receiving heavy blow inside of cab, being thrown out of the cab and being crushed under the machine at the time when the machine turned over. If not fastened, it causes serious injury or death.
Fasten seat belt without fail whenever taking the seat.

- Check the attaching bracket and attaching belt for possible failure before fastening the seat belt.
- Replace seat belt at least every 3 years even though no damage is found.

E. PRECAUTION TO BE TAKEN WHEN STARTING ENGINE

- Lock it with the safety lock lever.
- Sound the horn before starting the engine to alert people that the machine is being started.
- Start engine from the operator's seat.
- Do not short circuit the starter circuit or battery to start the engine. This may cause serious injury or cause damage to the electrical system.

F. CHECK AFTER STARTING ENGINE

Check the machine for proper operation after starting the engine. Slowly cycle attachments, swing, and travel functions in an area with sufficient space, without obstacles and personnel. Failure to do so could result in injury, death or machine damage. If any problems or damage is found on the machine, repair immediately.

G. WARM UP ENGINE AND HYDRAULIC OIL BEFORE OPERATION

Take time to warm up the engine and hydraulic oil especially during cold season. In cold conditions, response of machine control is slow. This may cause injury, death or machine damage.

Copyright © 2015 Kobelco Construction Machinery Co.,Ltd. All rights reserved. [S2YF00022ZE01] [0731CsCshWbYs]

H. CONFIRM OPERATING CONTROL PATTERN

Slowly operate the control levers to confirm the operating patterns in advance. Make sure the operation control pattern is according to the indication plate.

I. CONFIRM TRAVEL DIRECTION

Before starting the machine, check the position of front idler (1). In the proper travel position, the front idler (1) is positioned on the front side and travel motor (2) is on the rear side.

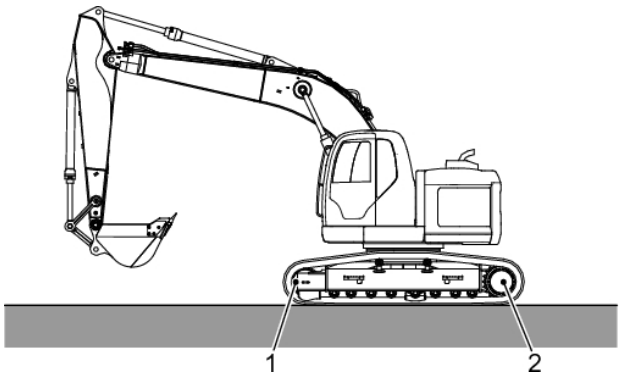

J. PROHIBIT RAPID LEVER OPERATION IN TRAVEL

- The rapid travel operation like urgent start is prohibited.
- The rapid lever change from forward to reverse (from reverse to forward) is not allowed.
- The rapid lever operation like urgent stop from the speed close to the maximum is not allowed.

K. DO NOT HIT CAB WITH ATTACHMENT

Check clearance between bucket and cab before operation. Slowly cycle bucket, check for interference with arm and cab, particularly if a lifting eye is welded on bucket bottom. Exercise care when operating the bucket near the cab.

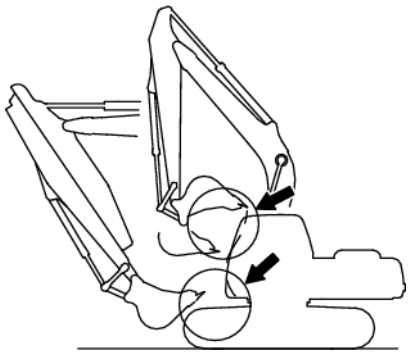

L. PRECAUTION TO BE TAKEN IN TRAVEL

The firm and level ground must be used for traveling. And select the road in straight and large radius curve as much as possible, do not take sharp pivot turn and spin turn. In narrow area, swing the wheel in the opposite direction as many times as possible.

- When running, keep the attachment in the position the height from the ground is 30 to 40 cm (1 to 1.3 ft) as shown in the figure.
- The abrupt control lever operation and pedal operation are not allowed.
- When traveling on rough terrain, travel at slow speed.
- Travel the machine while keeping away from the obstruction as much as possible. If it is unavoidably necessary to get over the obstruction, travel at slow speed while keeping the position of attachment close to the ground.

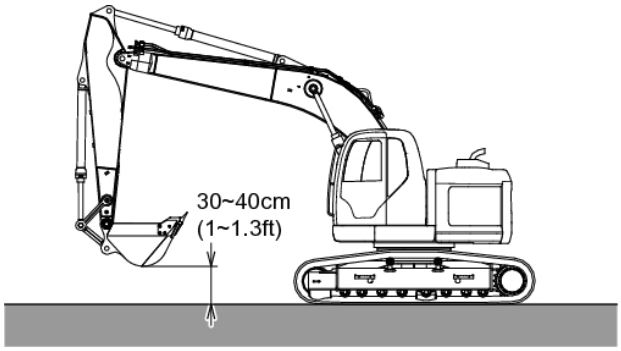

Copyright © 2015 Kobelco Construction Machinery Co.,Ltd. All rights reserved. [S2YF00022ZE01] [0731CsCshWbYs]

M. TRAVELING ON SLOPE

The traveling up and down on a slope 30 degree in angle or more is not allowed because there is a possibility of rollover.

- When traveling up and down on a slope, keep the attachment at the height of 20 to 30 cm (0.7 to 1 ft) from the ground so as to make the urgent stop possible at the time of emergency by putting the attachment down to the ground. And when traveling down the slope, travel at further slow speed.
- Reduce the speed when traveling on the grass and fallen leaves, and wet iron plate because it is easy to skid.

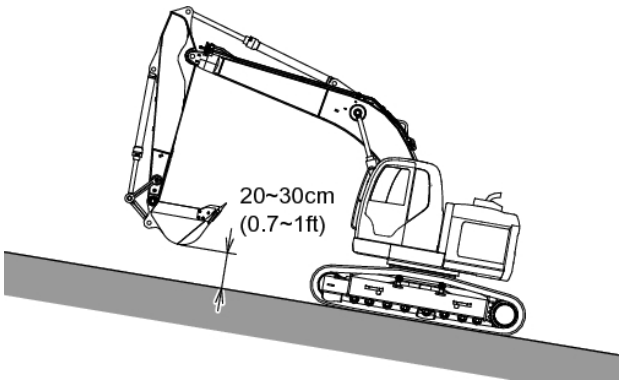

Traveling up on a slope

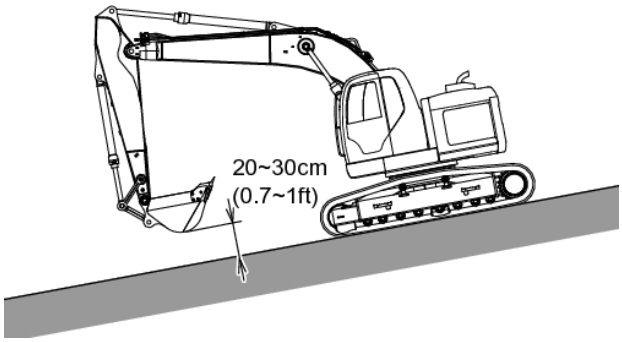

Traveling down on a slope

- When traveling up the slope, extend the front attachment to take the balance while keeping the height at 20 to 30 cm (0.7 to 1 ft) from the ground, and travel at slow speed.

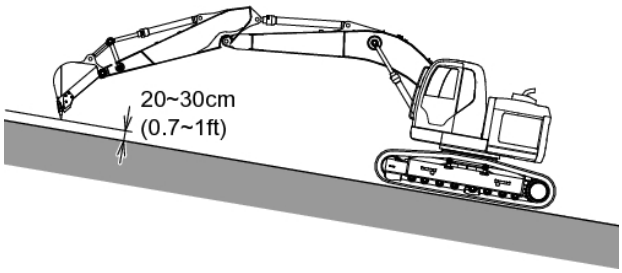

Traveling up on a slope

N. PRECAUTION TO BE TAKEN IN TRAVELING ON THE SLOPE

When traveling on a slope, be careful of turning over and skidding.
Keep the bucket at the height of 20 to 30 cm (0.7 to 1 ft) from the ground in order to make putting it down to the ground at emergency possible. Do not turn the direction and go across on a slope, but go down to the flat space and take a detour-route for safety.

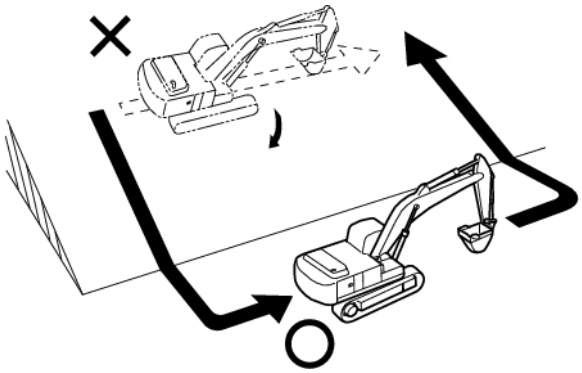

- Do not travel on a slope that the slope angle is 30 degree or over. And do not traverse a slope that the slope angle is 15 degree or over.

Copyright © 2015 Kobelco Construction Machinery Co.,Ltd. All rights reserved. [S2YF00022ZE01] [0731CsCshWbYs]

O. OPERATING ON INCLINES OR SLOPES

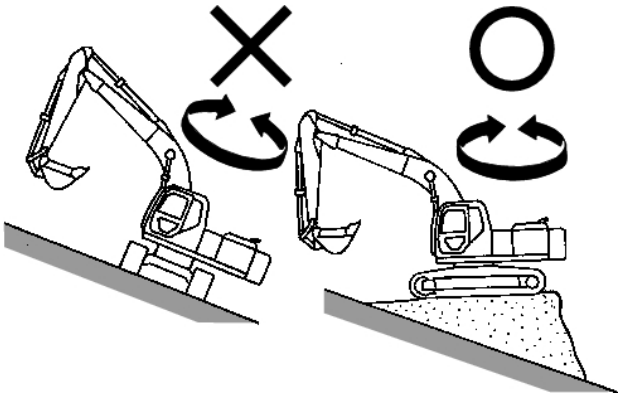

- Operation of this machine on an incline or slope may cause the machine to become unstable or unbalanced. Work up and down inclines or slopes, do not across. Do not swing or turn machine around on a slope. Build a level area for the machine to operate. Operate controls carefully to prevent sudden movements which may cause the machine to slide or rollover.
- When the engine was stalled, put down the bucket on the ground and return every lever to the neutral position, then start the engine again.
- Even if the swing operation is stopped on a slope, the machine might swing by the machine's own weight.
  Operate the machine carefully when you operate the machine on a slope.
  Place the bucket to the ground when you park the machine by necessity on a slope.

P. FROZEN & SNOW COVERED WORK SITES

Use extreme caution when operating the machine on frozen or snow covered work sites. Operate all controls slowly and cautiously to prevent sudden movements such as start/stop/turn, that may cause the machine to unexpectedly shift, slide or move. Even on the slightest slope, when snow is present or work area is frozen can allow a machine to unexpectedly move. Snow on shoulders or snow drifts can be much deeper than expected. The machine can easily become buried under such conditions. Use extreme caution while operating the machine around or in snow.
Be careful for frozen ground that becomes soft along with the increase of ambient temperature.

Q. SWING / TRAVEL FUNCTION

Make sure the swing and travel area of machine is clear of all persons and obstacles before operating swing/travel controls. Sound horn before operating swing/travel machine. If necessary, have a flagman signal operator during operation to prevent injury to persons or damage to obstacles and equipment.

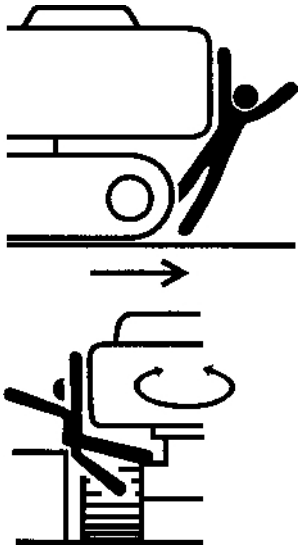

Copyright © 2015 Kobelco Construction Machinery Co.,Ltd. All rights reserved. [S2YF00022ZE01] [0731CsCshWbYs]

R. WORKING AROUND UNDER GROUND UTILITY LINES

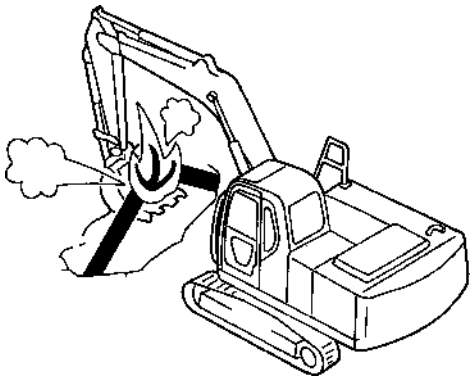

During operation it is likely that you will be working around or near buried utility lines which may include, but are not limited to:

- Electrical Power Line
- Gas Line
- Water Line
- Communication Line: Telephone or Cable Television

Before begining any trenching, drilling or other construction work it is your responsibility to be aware of all such utility lines buried in the area of your project and to avoid them.

ALWAYS have all local utility companies mark the location of their lines.
Check with local authorities for laws, regulations and/or strict penalties requiring you to locate and avoid existing utilities.

S. RESTRICTED WORK AREAS

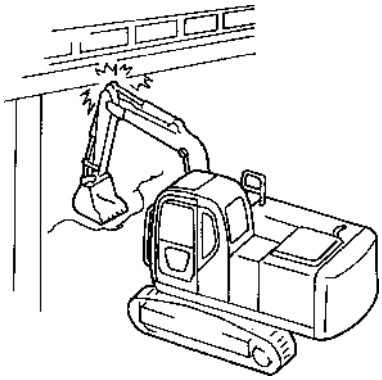

In work sites with limited height and swing / traveling areas such as tunnels, bridges, around electrical power lines, other utilities, or inside structures. Use extreme caution on work sites with limited height and swing/traveling areas such as tunnels, bridges, around electrical power lines, other utilities or inside structure. Keep the machine and its attachment a safe distance to prevent injury, death or damage on equipment or structure.
Use a flagman to guide the operators.

T. DO NOT WORK UNDER PRECIPICE / OVERHANG

Do not dig under the precipice. It may cause falling rocks or loosening of the precipice resulting in injury, death or machine damage.

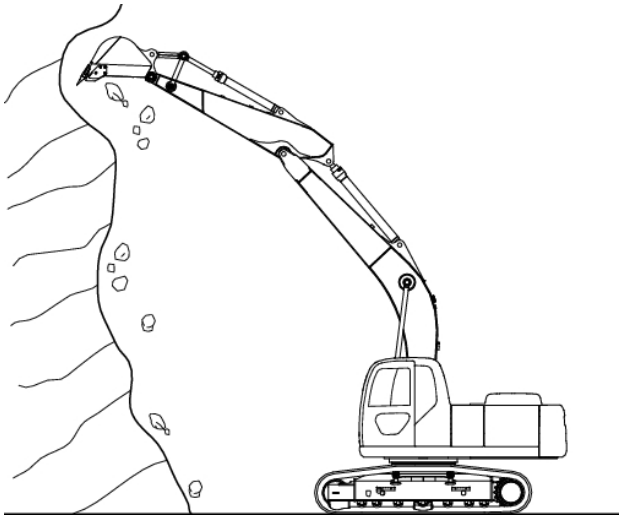

Copyright © 2015 Kobelco Construction Machinery Co.,Ltd. All rights reserved. [S2YF00022ZE01] [0731CsCshWbYs]

U. CHECK THAT NO PERSON IS UNDER THE BUCKET

There is a possibility of accident resulting in injury or death and the damage of machine due to the fall of sand/earth and the direct contact with bucket when the bucket and attachment pass through over the worker and the driver's seat of dump truck. Do not pass the bucket through over person for safety.

V. GROUND STABILITY

Make sure the condition of the work site is stable and capable of supporting the machine weight during operation. Do not operate attachment too close to the machine. Operation of the machine on shoulders or filled areas could cause the machine to become unstable presenting a work hazard. Position the crawler at right angle to shoulder and the travel motors to the rear of the machine, allowing for quick reversal, should the work area become unstable.

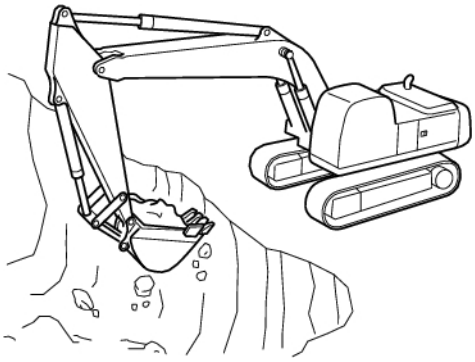

W. LIFTING

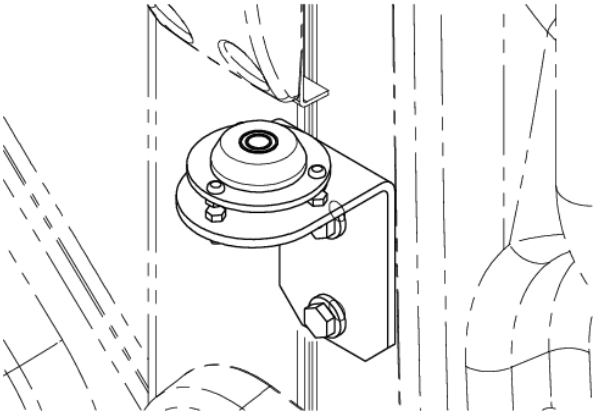

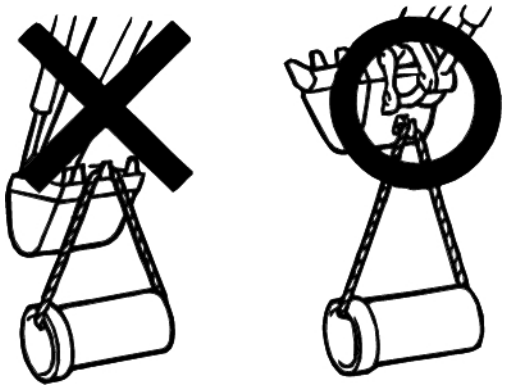

Before operating the machine, make sure the job-site of machine is clear of all persons and obstacles. And park the machine on the hard and level ground. If the machine is equipped with the level gauge, confirm the inclination of the machine with the level gauge. Do not use the tooth of bucket for lifting load. Lift the load with a special lifting device such as hook.

Notice

The machine for Australia equips the level gauge as standard equipment.

Copyright © 2015 Kobelco Construction Machinery Co.,Ltd. All rights reserved. [S2YF00022ZE01] [0731CsCshWbYs]

X. WORKING AROUND UTILITIES

If it is suspected that utility lines such as, gas, water, phone or electrical power are in the work area, contact the local utility authority for line location BEFORE beginning work in the area. Use extreme caution around electrical power lines. Keep a sufficient distance away from electrical lines during operation. See chart below for minimum distances.

LINE VOLTAGE	MINIMUM DISTANCE-m (feet)
0 ~ 50,000	3.0 m (10) or more
50,000 ~ 200,000	4.5 m (15) or more
200,000 ~ 350,000	6.0 m (20) or more
350,000 ~ 500,000	7.5 m (25) or more
500,000 ~ 750,000	10.5 m (35) or more
750,000 ~ 1,000,000	13.5 m (45) or more

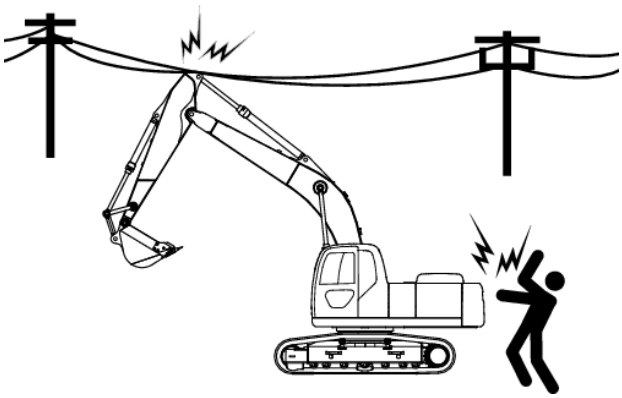

Y. SET LIMITS TO WORKING AREA

Set limits around the working area to avoid collision, injury or death. Check for obstacles and personnel while swinging. Use a flagman to guide the operator whenever necessary.

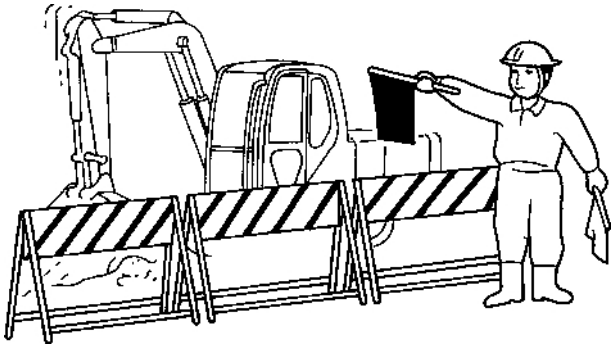

Z. CAUTION FOR WORK IN URBAN AREAS

It is dangerous to allow other personnel to enter into the working area.
Make the working area off-limits to other people by providing barricades.
Provide a flagman in working areas with heavy traffic to avoid accidents.

AA. WORK WITH SUFFICIENT LIGHTING

When working in dark places, turn on the work lamp. And if required, provide additional lighting facilities to assure good visibility.
Stop working when it is impossible to ensure the visual field due to fog, snow or rain.

BB. SLIPPERY OPERATION SURFACE

Use caution when operating machine on boards or steel plates. Boards and steel plates become very slippery when wet.
Pay special attention when working on inclined areas.
Provide a device to prevent skidding and operate with extra care. Piled up tree leaves or branches also may causes skidding.

CC. STRENGTHEN SOFT GROUND

When working on a soft ground or marshy area, the machine may sink.
Be aware that frozen ground becomes soft with the increase of ambient temperature.
Use logs or lumber positioned in the opposite direction of the track to prevent the machine from sinking.

Copyright © 2015 Kobelco Construction Machinery Co.,Ltd. All rights reserved. [S2YF00022ZE01] [0731CsCshWbYs]

DD. LOOSE / UNSTABLE GROUND AFTER RAIN

Be careful for the possibility of machine rollover after rain.

The vibration and weight of the machine could cause shoulder of road or pathway to become loose or unstable.

Inspect the areas where the machine will travel and operate on to assure safe operation is possible. Pay attention for possible loosened precipice/overhang or shoulder of road, and falling rocks. Always pay attention for unexploded dynamite on job sites where dynamite is used.

EE. SAFETY CHECK IN PARKING MACHINES

When the machine is not parked properly, there is a possibility of unexpected overrun, risks due to barbarous act and dangerous movement at the time of the coming start.

Park the machine following the safety parking procedure shown below.

- Park the machine on the firm and level ground to prevent overrun.
- Put the working equipment like bucket and dozer (if equipped) on the ground.
- Secure the safety lock lever to "LOCKED" position.
- Perform the cool-down operation of engine at low idling for 5 minutes.
- Stop the engine by switching the starter key switch off and then take out the key.
- When leaving from the machine, close the window, door of cab and all doors and covers and lock them.

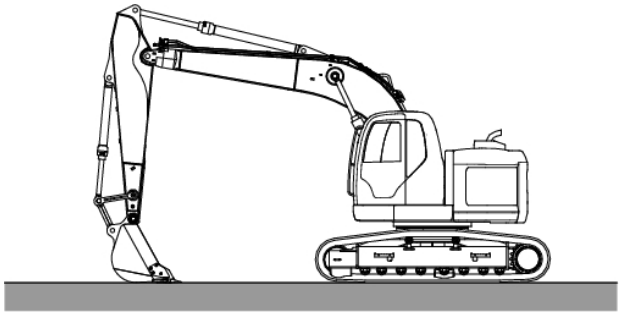

Copyright © 2015 Kobelco Construction Machinery Co.,Ltd. All rights reserved. [S2YF00022ZE01] [0731CsCshWbYs]

1.6 INSPECTION & MAINTENANCE SAFETY

A. READ CAREFULLY OPERATING/MAINTENANCE PROCEDURES

Incorrect maintenance may cause not only damages on the machine, but also injury.
Read and fully understand the maintenance procedures and safety precautions described in the operation and maintenance manual before performing any maintenance in this machine.

B. CONFIRM UNDERSTANDING OF HAND SIGNALS AND COMMUNICATION USED ON JOB SITE

Have a meeting before starting work on the job site. Confirm all workers understand all hand signals, flag signals and other means of communication used on the job site to avoid any accidents or injuries.

C. ORGANIZE AND CLEAN UP WORKING AREA

Organize and clean up the working area.
Remove any obstacles and also remove any grease, oil, paint, broken pieces, etc., from the working area to avoid injury.

D. "TAG-OUT" MACHINE

Before performing any inspection or maintenance procedures to the machine, fill out and post to the operator's controls a "DO NOT OPERATE" tag to warn persons not to start the machine. Also inform the supervisor and all operators that the machine is under inspection or maintenance and they will be informed when the machine is ready for normal operation.

E. TOOLS & EQUIPMENT

Use the proper tools and equipment for the task at hand. Know the proper use of the tools and equipment before starting any inspection or maintenance procedures.

F. PRESSURIZED FLUIDS & LUBRICANTS

Always release pressure from hydraulic reservoir, engine coolant, fuel system and all systems containing pressure before removing any caps or components. Be cautious of hot fluids and gasses from systems on machines that have just been stopped. Allow sufficient time for systems to cool before performing any inspection or maintenance procedures.

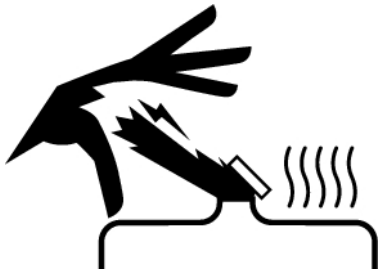

G. AVOID HOT SURFACES & AREAS

Immediately after the machine is operated, the temperature and pressure of the engine coolant, engine oil and hydraulic oil are very high. Burns may result if caps are removed, or oil, water, or filters are changed under these conditions.
Wait until the temperature goes down, before attempting to check fluids or change filters.

Copyright © 2015 Kobelco Construction Machinery Co.,Ltd. All rights reserved. [S2YF00022ZE01] [0731CsCshWbYs]

H. HYDRAULIC PRESSURE

Under normal conditions, all circuits of the hydraulic system are under extreme pressure. When inspecting for leaks, use a small piece of cardboard, wood or metal to locate leaks. Small (pinhole) leaks can be dangerous if contact with skin or eyes is made.
Wear approved safety glasses or face shield, gloves, hard hat, safety shoes and work clothes during all inspection and maintenance procedures. Seek immediate medical assistance if injury occurs.

I. RELIEVE THE HIGH PRESSURE IN FUEL LINE

The engine fuel line generates high pressure in operation. In checking and servicing the fuel line, wait for 30 seconds to start checking and servicing until the internal pressure is released.

J. STOP ENGINE

Do not attempt any MAINTENANCE with engine running. Always stop the engine and allow machine to cool to avoid injury.
Otherwise, there is a possibility of danger that your hand may be caught in the cooling fan or fan belt resulting injury.
If it is unavoidable to operate the engine for inspection or maintenance, carry out the work with two people.
The person seated in the operator's seat should be ready to stop the engine at any time while watching for a signal from the other person.

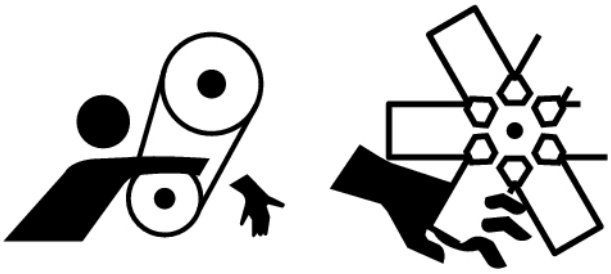

K. VENTILATION PRECAUTIONS

Operation of the machine indoor or in a place with poor ventilation may cause poisoning by gas.
Ventilate any exhaust gas, fuel, cleaning oil, paint or similar articles.
Make sure there is proper ventilation in the working area when the machine is operated indoors. Provide a ventilating fan, if required.

Copyright © 2015 Kobelco Construction Machinery Co.,Ltd. All rights reserved. [S2YF00022ZE01] [0731CsCshWbYs]

L. REMOVING AND INSTALLING ATTACHMENTS, AND STORING ATTACHMENTS

- Remove and install attachments after appointing a man to supervisor in advance.
- The attachment in danger of falling should be stored in the stable condition where supported in order not be fallen. And entry into the stored area of person other than the person concerned is prohibited.

M. USE SUPPORT EQUIPMENT DURING SERVICE

- When machine inspection or maintenance is done under the boom, arm or under the bucket/attachment use proper equipments or blocks to secure the attachment.
- The work in the condition where the crawler is floated by arm and boom causes the danger of falling of the machine if the control lever is shifted unexpectedly or the piping is broken.
  No one is admitted to enter under the unstable machine.

N. WORKING ABOVE GROUND

There is a danger of falling when working on areas above ground.

- Do not approach edges.
- Use the appropriate equipment, such as ladders or platform when working above ground. In addition, strap yourself to the proper equipment accordingly.
- Avoid spillage of any oil or grease.
- Do not leave any tools around the working area.
- Use extreme caution to avoid slipping while walking.
- Do not jump on or from the machine. Use the steps and handrails and securely maintain a three point contact while mounting or dismounting at all times.

O. DO NOT DROP OFF TOOLS AND PARTS

Dropping of any tools and parts in the working area may cause injury or faulty machine operation. Do not leave any tools or articles in the working area or component compartment. Store all tools properly when the work is completed.

Copyright © 2015 Kobelco Construction Machinery Co.,Ltd. All rights reserved. [S2YF00022ZE01] [0731CsCshWbYs]

P. GENERAL GUIDELINES FOR WELDING

Welding work must be performed by a certified welder with sufficient experience. In addition, safety practices must be followed by any personnel involved in such work. Identify all cracks to be repaired or areas to be welded by thoroughly cleaning the suspected surface, remove paint, and check with dye penetrant or magnetic particle testing. The life expectancy of the welded area depends on the work quality and the attention given to details during welding.

- Turn starter key to "OFF" position.
- Remove negative (-) cable from battery terminal to turn off the current.
- Attach welder ground cable with 1 m {3.3 ft} from component being welded.
  If grounding cable is attached near electric parts/connectors, these electric parts/connectors may cause damaging.
- Attach welder ground cable near the weld area. Futhermore, the cable attached are is to be positioned at the same welding area.
- Make sure that neither bearing nor seal are there between the welder ground and the weld area.
- Do not attach the welder ground cable to the near attachment pin and/or cylinder. It causes the damage of plating.
- Remove paint from any surface to be welded. Painted surfaces produce unhealthy gasses when welded.
- Always wear protective clothing appropriate to the welding, and use protective equipment for the welding job.
- Perform work in a well ventilated areas.
- Clear the flammable items and provide the fire extinguisher.

WARNING **AVOID FIRE HAZARDS**

-Provide a fully charged fire extinguisher at all times while performing grinding, heating, or welding.
-Clean oil and/or flammable materials from any surface to be cut.
-Protect all flammable parts and surfaces from sparks and/or flames
Perform work in a well ventilated area.
-Keep sparks and flames away from paint and/or solvent.
-Keep away sparks and flames from cylinder rods, seals, electrical wires, and/or hydraulic hoses.

Q. CRAWLER SHOE TENSION

- Grease in track tensioning mechanism is under extreme pressure and can penetrate skin causing severe injury.
  Keep face and body away from grease fitting area.
- Do not loosen grease fitting more than one turn.
  If grease does not release after one turn of the fitting, call our dealer/distributor for assistance.

Copyright © 2015 Kobelco Construction Machinery Co.,Ltd. All rights reserved. [S2YF00022ZE01] [0731CsCshWbYs]

R. CRAWLER BELT/TRACK TENSION

The grease used to adjust the crawler belt tension is under extreme pressure in the cylinder. Use extreme caution when adjusting crawler belt tension. KEEP FACE, HANDS AND LEGS AWAY FROM THE GREASE FITTING AREA.

Carefully and slowly loosen the grease fitting when lessening crawler belt tension. Never loosen grease fitting more than one complete turn.

See 4-39 for the procedures to adjust the tension of the crawler belt/track.

S. PAYING ATTENTION TO BROKEN PIECES WHEN HAMMERING

Flying debris may cause injury when hammering hard metal parts, such as pin, edge, tooth, bearing, etc.

Wear protective clothes such as protective glasses, safety hat, etc. during maintenance.

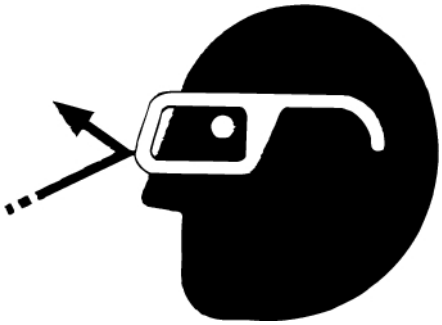

T. PAY ATTENTION TO REFRIGERANT OF AIR-CONDITIONER

- When inhaled refrigerant of air-conditioner carelessly, it will exert deadly effect to the human body.
- Do not bring fire near the area where the air conditioner is serviced and gas is generated.
- Use recovery recycling system to prevent cooling medium from escaping into atmosphere.
- Do not loosen the parts for refrigerant circuit because there is a possibility of loss of eyesight and frostbite by getting refrigerant in eyes and by directly touching it by hand.

U. DO NOT HEAT HYDRAULIC EQUIPMENT OR PIPING

Do not apply heat to hydraulic equipment or piping, such as welding, soldering, heating with torch, etc. Heating of hydraulic components or piping will cause gas expansion, which can easily catch fire and/or explode.

- Do not heat the section close to the tube and hose contained pressurized oil or other flammable materials by welding, soldering and torch.
- If the pressurized tube and hose is heated directly, they may be suddenly cut. When carrying out the welding and soldering works, cover the tube, hose, and other flammable materials with fire-proofed cover for fire prevention.
- Before welding and gas cutting, remove flammable fluid completely with nonflammable solvent.

Copyright © 2015 Kobelco Construction Machinery Co.,Ltd. All rights reserved. [S2YF00022ZE01] [0731CsCshWbYs]

V. AFTER COMPLETION OF MAINTENANCE WORK

Check machine for proper functioning when any maintenance is completed:

- After any maintenance work is completed, operate the engine at low idle, and check for leakages and abnormalities.
- Slowly operate each machine function to confirm proper operation.
- Increase the engine speed gradually, and again check for leakages and abnormalities.
- Operate each control lever carefully for smooth operation.

W. DISPOSE OF WASTE PROPERLY

Dispose of oils, fuel, coolant, solvents, filters, batteries etc. according to federal, state and local codes and regulations regarding hazardous waste disposal. Contact local authorities for proper disposal methods of such materials.

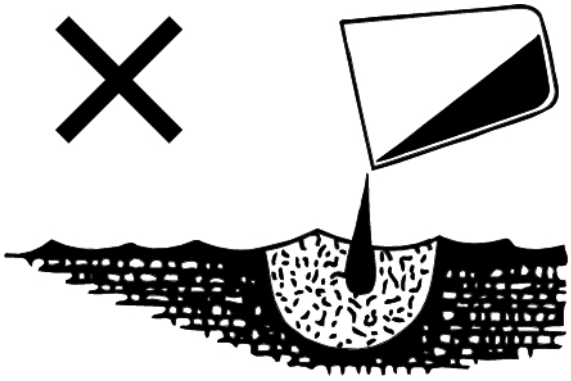

X. OPENING AND CLOSING OF ENGINE HOOD

- Incase that the engine hood is open, do not operate the boom. The attachment collides with the opened hood of engine. As a result, it could cause an accident.
- The opening and closing of the engine hood may be unable to operate depending on the raised boom position. Whenever you need to open the engine hood, place the machine in the parking position.

Copyright © 2015 Kobelco Construction Machinery Co.,Ltd. All rights reserved. [S2YF00022ZE01] [0731CsCshWbYs]

1.7 BATTERY SAFETY

A. BURN PREVENTION

Battery acid or battery explosion can cause serious injuries.
Before you service a battery, always wear face protection, protective gloves and protective clothing.
Batteries contain sulfuric acid. Avoid contact with skin, eyes or clothing.
Antidote:
External: Flush with water.
Internal: Drink large quantity of water or milk. Follow with milk of magnesia, beaten egg or vegetable oil. Call physician immediately.
Eyes: Flush with water for 15 minutes and get prompt medical attention.

B. BATTERY EXPLOSION PREVENTION

- Batteries give off explosive gases. Keep all open flames, sparks and cigarettes away.
- Always securely tighten cell caps.
- Always securely tighten batteries terminals.
- When batteries are charged, remove the batteries from a machine. And charge the batteries in a well ventilated area. At that time, remove cell caps to allow gasses to escape.

- When the battery electrolyte is frozen, the battery can explode, if you try to charge the battery, or you try to jump start and run the engine.
  To prevent the explosion, warm the battery to 16 deg.C or higher.
- When the battery electrolyte is frozen, the battery can explode, if you try to charge the battery, or you try to jump start and run the engine.
  To prevent the explosion, warm the battery to 16 deg.C or higher.

C. REPLACING THE BATTERIES

- Turn the engine start switch to OFF.
- When disconnecting the battery cables, always disconnect the negative (-) cable first. When reconnecting the battery cables, always connect the positive (+) cable first.
- If the metal items (Tools) bridge between the battery positive (+) terminal and the machine, the short circuit occurs and sparks. It causes fire and explosion. Do not place the metal items between the battery positive (+) terminal and the machine.
- Do not invert battery terminals. Connect positive cable ends to positive (+) terminals and negative cable ends to negative terminals (-).
  Connect the negative (-) terminal to the upper-frame of the machine last.

Copyright © 2015 Kobelco Construction Machinery Co.,Ltd. All rights reserved. [S2YF00022ZE01] [0731CsCshWbYs]

D. USING BOOSTER CABLES TO START THE ENGINE

CAUTION

1. Use the same capacity battery of disabled battery for boosting battery.
2. Connect clip of booster cables securely.
3. Check that the safety lock lever is in the locked position.
4. Check that control lever was returned to neutral position.
5. Turn off both starter key switches of normal machine and troubled machine. When the machine is powered on, machine may unexpectedly start and it causes accident.

Procedure:

1. Put attachment on the ground, return all control levers to neutral position and then lock the safety lock lever.
2. Set the starter key switch to "OFF" for both boost vehicle and disabled machine.
3. Connect the booster cable (red) clip to the positive (+) terminal on the battery of disabled machine.
4. Connect the clip from the other end of the positive (+) booster cable (red) to the positive (+) terminal on the battery of boost vehicle.

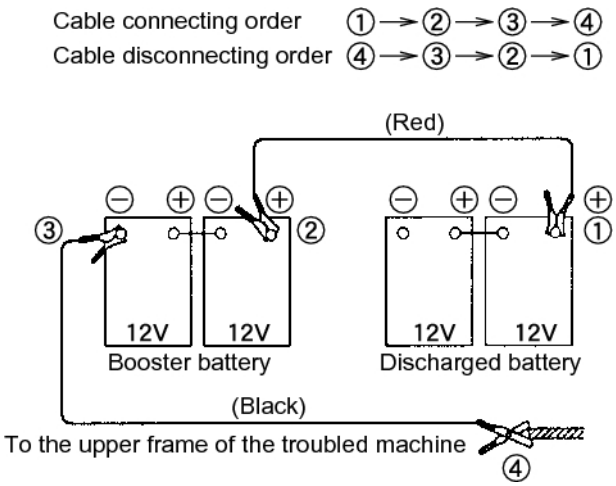

5. Connect the booster cable (black) clip to the negative (-) terminal on the battery of boost vehicle.
6. Finally, connect the clip from the other end of the negative (-) booster cable (black) to the upper frame of disabled machine, away from the battery.
7. Start the engine of boost vehicle, and run it for about 10 minutes at high idle.
8. Start the engine of disabled machine.
9. After starting the engine of disabled machine, remove the booster cables in the reverse order of the above connection order.
10. Check and repair the cause of the problem of the charging system on the disabled machine.

E. DISPOSE OF WASTE PROPERLY

- Turn the engine start switch to OFF.
- When disconnecting the battery cables, always disconnect the negative (-) cable first. When reconnecting the battery cables, always connect the positive (+) cable first.
- If the metal items (Tools) bridge between the battery positive (+) terminal and the machine, the short circuit occurs and sparks. It causes fire and explosion. Do not place the metal items between the battery positive (+) terminal and the machine.
- Do not invert battery terminals. Connect positive cable ends to positive (+) terminals and negative cable ends to negative terminals (-).
  Connect the negative (-) terminal to the upper-frame of the machine last.

Copyright © 2015 Kobelco Construction Machinery Co.,Ltd. All rights reserved. [S2YF00022ZE01] [0731CsCshWbYs]

1.8 PROHIBITED MACHINE OPERATION

The following examples of machine abuse and misuse should never be attempted by even the most experienced operator. Such abuse and misuse of this machine and its attachments can result in serious injury, death, severe equipment damage and shortened service life of the machine. Under no circumstance should any of these operations be attempted. Use common sense and follow proper operation procedures found in this OPERATOR'S MANUAL while operating this equipment.

A. DO NOT USE TRACTIVE FORCE OF THE MACHINE FOR LOADING THE BUCKET ATTACHMENT

Doing so will exert excessive force on the machine structure, front end attachments and could cause severe equipment damage. Use crawlers for normal travel operations only.

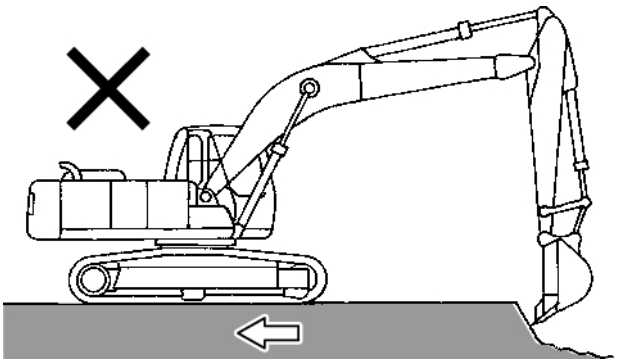

B. DO NOT USE SLEWING FORCE OF THE MACHINE FOR OPERATIONS

Doing so will exert excessive force to the machine structure, front end attachments and shorten life of the slewing system of the machine. Also, serious injury or death could result from such operations.

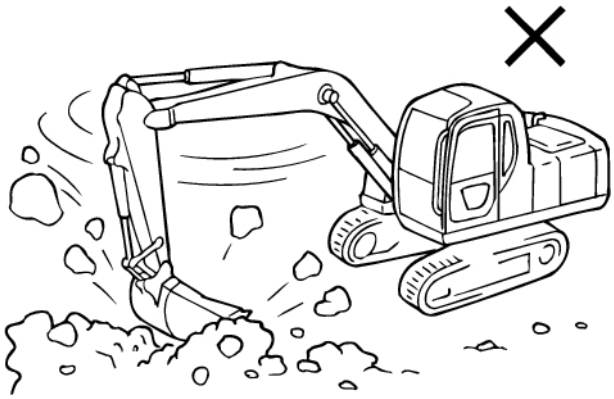

C. DO NOT PERFORM "HAMMERING" OPERATIONS WITH THE BUCKET

Performing operations such as hammering and piling will cause extensive damage to the machine and its components. These types of operations can also result in serious injury or death.

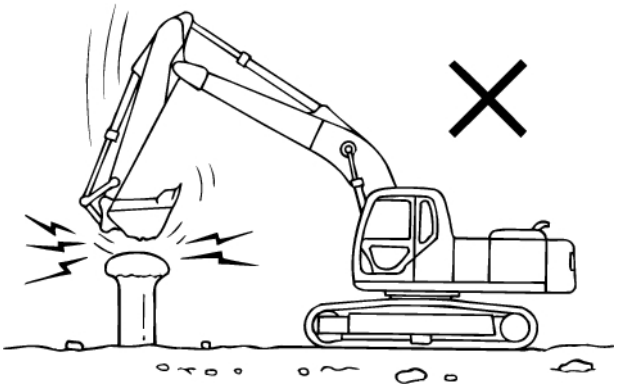

Copyright © 2015 Kobelco Construction Machinery Co.,Ltd. All rights reserved. [S2YF00022ZE01] [0731CsCshWbYs]

D. DO NOT OPERATE BUCKET AND ARM CYLINDERS TO STROKE END REPEATEDLY

Extending the bucket and arm cylinders to stroke end to clean debris from the bucket, will cause impact to the bucket cylinder causing cylinder damage. Use high pressure water or manually remove stubborn material from the bucket.

A. ALLOWANCES

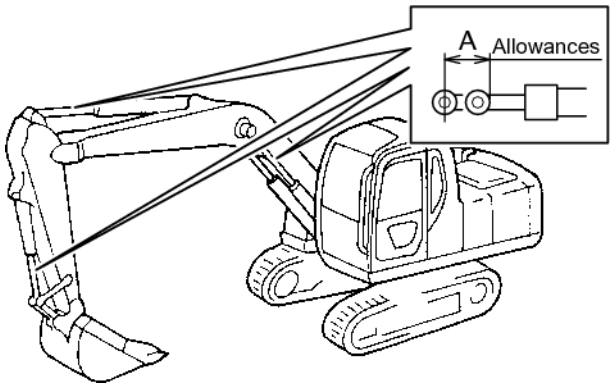

E. DO NOT OVER EXERT THE MACHINE'S CAPACITIES

Know the limitations of the machine and its attachments and operate the machine within those specifications. Do not exceed lift charts. Do not tip or raise the machine to obtain power to move material. This could cause extensive damage to the machine and its components as well as result in serious bodily injury or death.

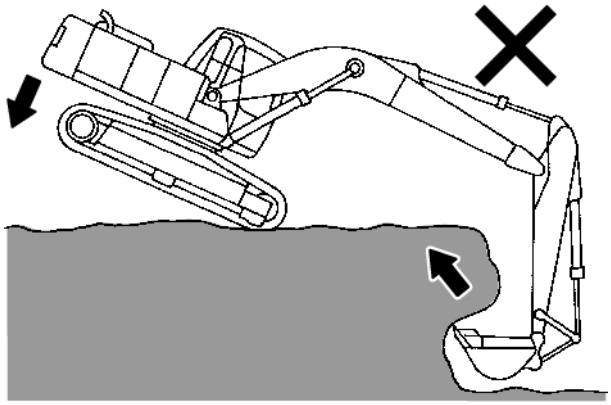

F. DEEP EXCAVATION OPERATION

During deep excavation, be careful in order that the belly sides of boom and bucket cylinder hose do not come into contact with ground. When lowering the boom to the lower limit, be careful in order that the boom does not interfere with crawler shoe.

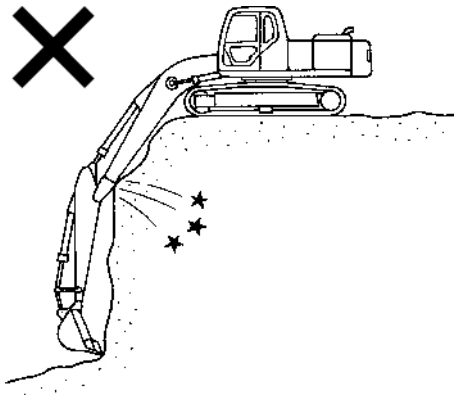

G. DO NOT USE THIS MACHINE FOR ANYTHING OTHER THAN ITS INTENDED PURPOSE

This machine is designed and manufactured for digging, loading and ground leveling operations only. Any other use can exert excessive force to the machine, its components, its systems and result in serious injury or death to the operator and other personnel working in the area of the machine.

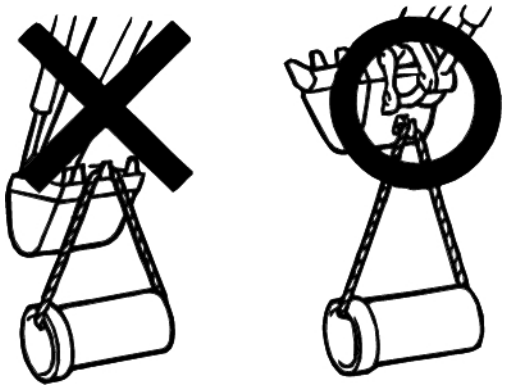

Copyright © 2015 Kobelco Construction Machinery Co.,Ltd. All rights reserved. [S2YF00022ZE01] [0731CsCshWbYs]

1.9 END OF WORK SHIFT SAFETY

Perform all of the following procedures after each shift is complete to insure the machine it in optimal operating condition for the next shift or job site.

1. Move the machine to a firm, level surface.
2. Lower attachment to the ground.
3. Refill fuel tank to full mark to reduce air volume and condensation (moisture). This will decrease the possibility of freezing in the fuel tank rusting due to moisture and other problems associated with start up and operation.
4. Close and secure all windows in place to prevent water or moisture reaching the electrical components of the machine.
5. Thoroughly clean and inspect the machine. Perform lubrication maintenance and repair or replace any problem areas found before restarting the machine.
6. If performing the machine storage in cold climates, it may be necessary to remove the batteries from the machine and store in a warm well ventilated area. Install the batteries in the machine before next start up. This will help prevent premature battery deterioration.
7. Remove key from key switch and lock all doors and access panels.

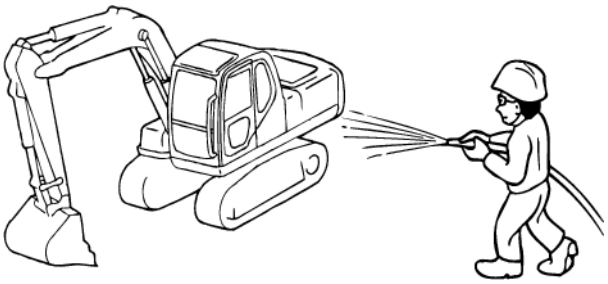

END OF WORK SHIFT SAFETY

Copyright © 2015 Kobelco Construction Machinery Co.,Ltd. All rights reserved. [S2YF00022ZE01] [0731CsCshWbYs]

1.10 TOWING THE MACHINE

1. If the machine should become stuck in soft soil areas it may be necessary to tow the machine. Attach a wire rope or chain, with the capacity to pull the machine out, to the lower frame.
2. Attach other end to the vehicle used to pull the machine. Operate the machine's travel lever in the proper direction while pulling with the other vehicle.

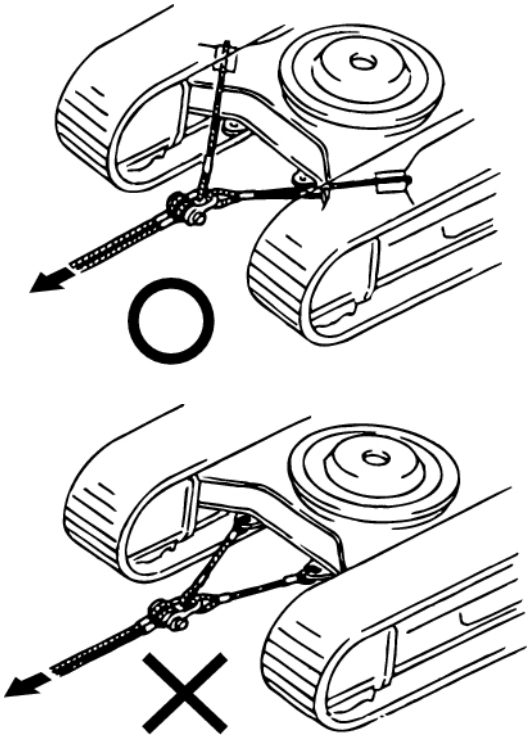

WARNING **AVOID INJURY**

-While towing, do not enter area between the machine and towing vehicle.
-Do not apply a shock load onto the towing rope.
-Do not use eyes on machine lower frame to tow machine.
-Keep the wire rope horizontally, and perpendicular to the crawler frame.
-Tow the machine slowly in low speed mode.
-For the towing of the machine body, provide pads to be applied to the corner of crawler frame to prevent the wire rope and crawler frame from any damages.

IMPORTANT

Do not pull machine utilizing the brackets welded on the lower plates of the undercarriage. These brackets are provided for pulling lightweight objects. See figure for better reference.

Copyright © 2015 Kobelco Construction Machinery Co.,Ltd. All rights reserved. [S2YF00022ZE01] [0731CsCshWbYs]

1.11 ENSURING VISIBILITY

This machine is equipped with mirror and so on to ensure sufficient visibility, but there are areas where are outside the field of vision from the operator. Pay special attention to the invisible area and operate the machine.
When traveling and working in poor visibility area, there is a possibility of injuries and accidents resulting in death because it is hard for operator to see the conditions of obstructions and the work area around the machine. Follow the followings when traveling and working in poor visibility area.

- When right visibility is poor due to attachment, raise the attachment to ensure visibility.
- Clean and adjust mirror at the pre-start inspection to ensure the visibility.
- When rearward visibility monitoring camera (option) is equipped with, clean the lens for clear vision.
- When the visibility can not be ensured sufficiently, provide a flagman in the working areas. Follow the instructions of flagman and pay attention to the signal.
- The signal shall be given by one flagman.
- When working in dark places, turn on the work light. And if required, provide additional lighting facilities to ensure good visibility.
- Stop working when it is impossible to ensure the visual field due to fog, snow or rain.

WARNING

-Be sure to clean mirror before starting operation to ensure good visibility around machine.
If the visibility around machine is not secured sufficiently, it may cause collisions and accidents resulting in injury and death.
-To avoid the damage or break, do not install the mirror and so on to the handrail of cab entrance. If the mirror and so on is installed to the hand rail, the attaching part of handrail is stressed excessively.

CAUTION

-Do not attach the mirrors except the genuine mirrors (A, B, C and D).

Copyright © 2015 Kobelco Construction Machinery Co.,Ltd. All rights reserved. [S2YF00022ZE01] [0731CsCshWbYs]

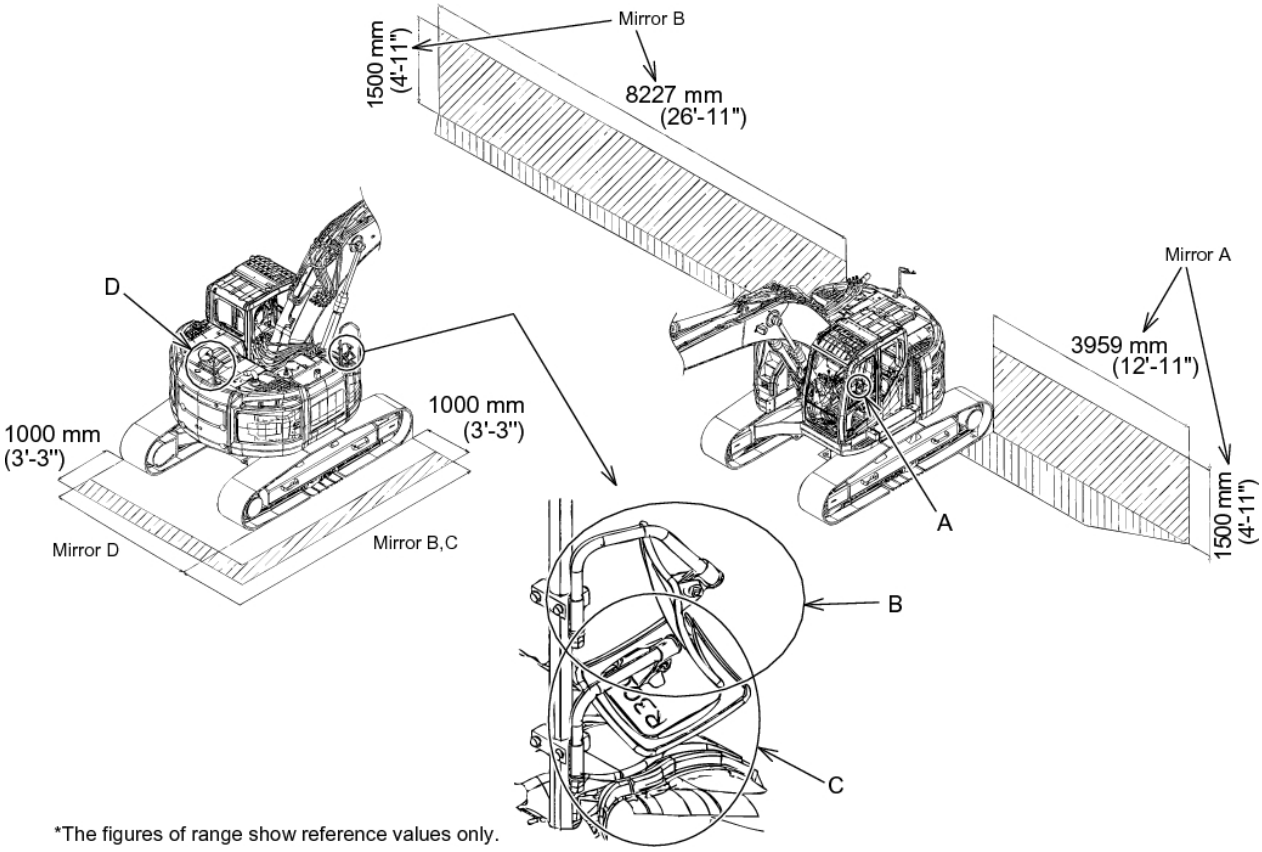

*The figures of range show reference values only.

Copyright © 2015 Kobelco Construction Machinery Co.,Ltd. All rights reserved. [S2YF00022ZE01] [0731CsCshWbYs]

Mirror A

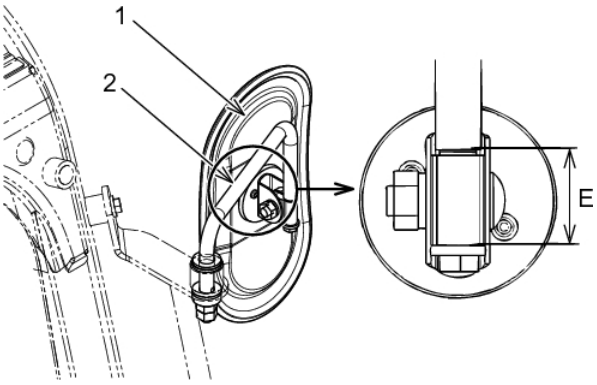

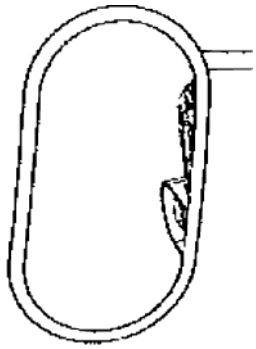

- Adjust the mirror (A) so that the operator can identify the person who stands on the left rear ends of machine (or post of 1.5m high and 30cm in diameter).
- Install the mirror on the small diameter part (E) of the stay shown in the above figure.
- Install the mirror so that the mirror (A) does not come in contact with the stay (1) of the mirror.
- During adjustment, if the movement of the mirror (A) is not smooth, loosen nut (2) of the mirror and adjust it.
  Tightening torque of nut (2) M10: 18.6 to 25.5 N·m (13.7 to 18.8 lbf·ft)
- Adjust mirror so that the machine side shown in the right figure is reflected in the mirror.
- Regarding visible range, refer to previous page.

Mirror B

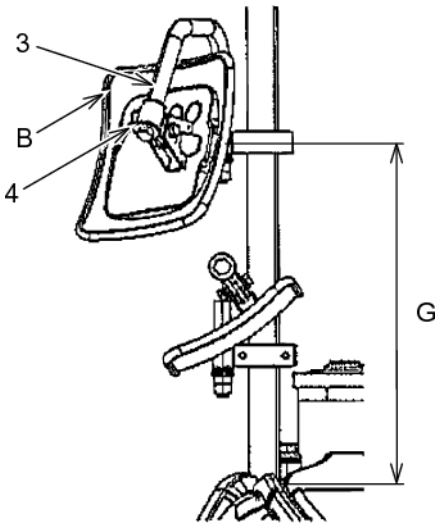

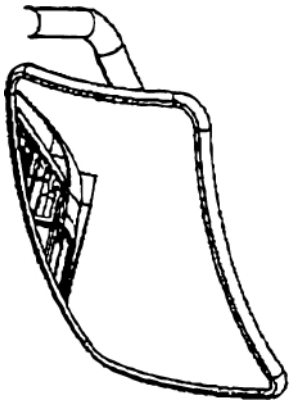

- Adjust mirror so that person who stands on the right rear ends of machine (or post of 1.5m high and 30cm in diameter) can be identified from operator.
- Install mirror on position shown in the figure.
  G : 400 ㎜ {1'-4"}(Reference value)
- Install it so that the mirror (B) does not come in contact with the stay (3) of the mirror.
- If the movement of mirror (B) on adjusting is not smooth, loosen nut (4) of mirror and adjust it.
  Tightening torque of nut (4) M8 : 8.6 to 12.7N·m {6.3 to 9.4lbf·ft}
- Adjust mirror so that the machine side shown in the figure is reflected in mirror.
- Regarding visible area, refer to the shaded range on 1.11.

Copyright © 2015 Kobelco Construction Machinery Co.,Ltd. All rights reserved. [S2YF00022ZE01] [0731CsCshWbYs]

Mirror C

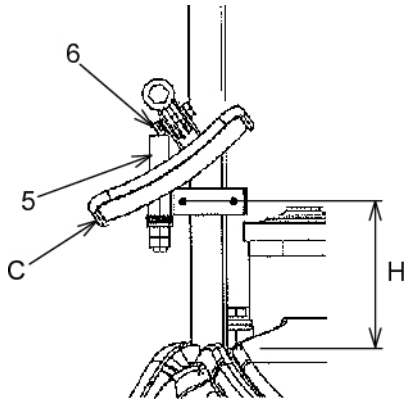

Adjust mirror so that person who stands on the right front of machine (or post of 1.5 m height and 30 cm in diameter) can be identified from operator's seat.

- Install mirror to the position shown in the figure.
  H: 140mm {5.5"} (Reference value)
- Install mirror so that the mirror (C) does not come in contact with the mirror stay (5).
- If the movement of mirror (C) on adjusting is not smooth, loosen nut (6) of mirror and adjust it.
  Tightening torque of nut (6) M8 : 8.6 to 12.7N·m {6.3 to 9.4lbf·ft}
- Regarding visible area, refer to the shaded range on 1.11.

Mirror D

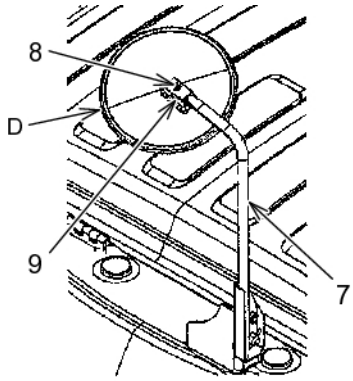

Equipped with normal counterweight

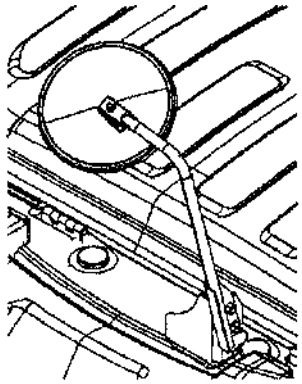

Equipped with additional counterweight

Adjust the mirror so that the ground within the range of 1 m in surroundings behind the machine can be identified from the operator's seat.

- Install mirror to the position shown in the figure.
- Install mirror so that the mirror (D) does not come in contact with the mirror stay (7).
  Tightening torque of nut (8) M8 : 8.6 N·m {6.3 lbf·ft}
- If the movement of mirror (D) on adjusting is not smooth, loosen screw (9) of mirror and adjust it.
  Tightening torque of adjusting screw (9) M5: 2.94 ± 0.98 N·m {2.17 ± 0.72 lbf·ft}
- Regarding visible area, refer to the shaded range on 1.11.

Copyright © 2015 Kobelco Construction Machinery Co.,Ltd. All rights reserved. [S2YF00022ZE01] [0731CsCshWbYs]

2. MACHINE FAMILIARIZATION

Copyright © 2015 Kobelco Construction Machinery Co.,Ltd. All rights reserved. [S2YF00022ZE01] [0731CsCshWbYs]

https://truckmanualshub.com/

Copyright © 2015 Kobelco Construction Machinery Co.,Ltd. All rights reserved. [S2YF00022ZE01] [0731CsCshWbYs]

2.1 BASIC COMPONENTS OF THE MACHINE

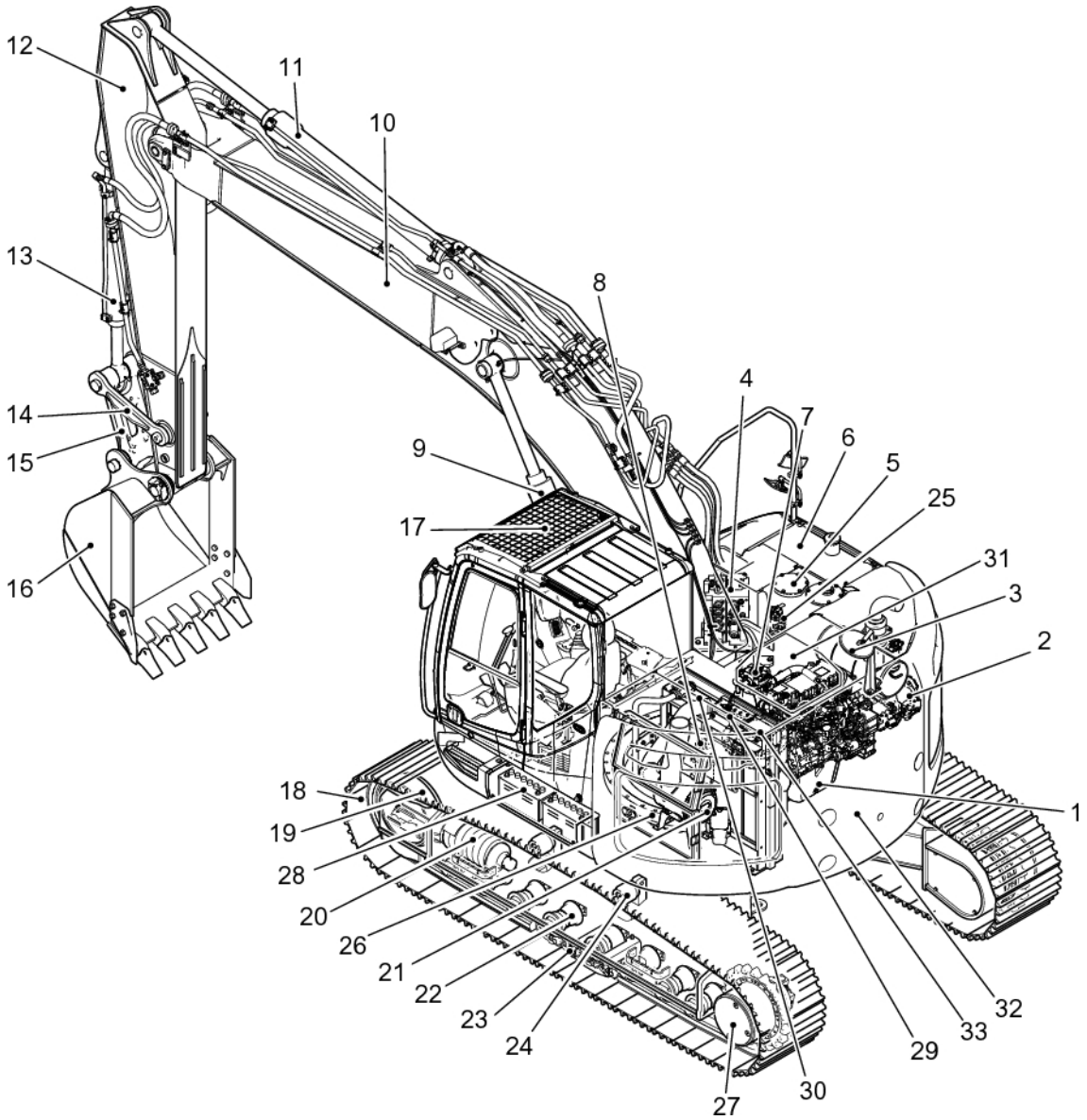

No.	NAME	No.	NAME	No.	NAME
1	HINO Engine	12	Arm	23	Track Guide
2	Hydraulic Pump	13	Bucket Cylinder	24	Upper Roller
3	Engine Muffler	14	Idler Link	25	Rotary Multi-Control Valve (Option)
4	Main Control Valve	15	Bucket Link	26	Slewing Ring
5	Hydraulic Oil Tank	16	Bucket	27	Travel Motor
6	Fuel Tank	17	Operator Cab	28	Battery
7	Swing Motor	18	Track Shoe Assembly	29	Engine Radiator
8	Swivel Joint	19	Track Idler	30	Oil Cooler
9	Boom Cylinder	20	Track Spring	31	Engine Hood
10	Boom	21	Engine Air Cleaner	32	Counterweight
11	Arm Cylinder	22	Lower Roller	33	Inter Cooler

Copyright © 2015 Kobelco Construction Machinery Co.,Ltd. All rights reserved. [S2YF00022ZE01] [0731CsCshWbYs]

 https://truckmanualshub.com/

2.2 OPERATOR CAB NOMENCLATURE

The operator cab nomenclature, see Figure below, points out locations of operator controls of the hydraulic excavator operator cab. Study these areas and locate these components on the machine. Specific information regarding these components are explained on the following pages of this section.

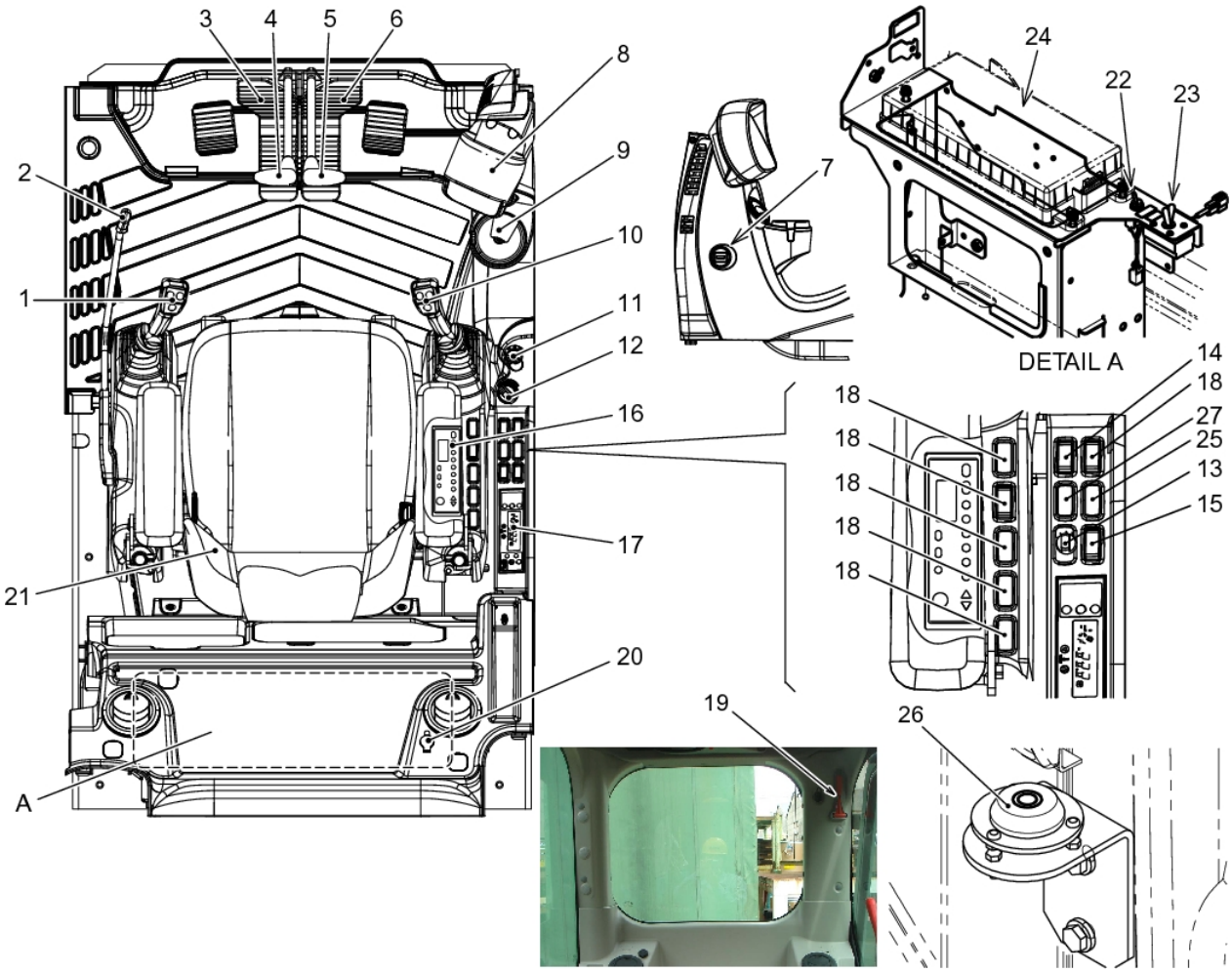

No.	NAME	No.	NAME
1	Left Hand Operator Control Lever (Horn Switch)	15	Conflux/Single Flow Change Switch (Option)
2	Safety Lock Lever (For Hydraulics)	16	Tuner
3	Left Travel Pedal	17	Air Conditioner Control Panel
4	Left Travel Lever	18	Cap (For Opt. Switch)
5	Right Travel Lever	19	Life Hammer
6	Right Travel Pedal	20	24 Volt Power Supply
7	Hour Meter	21	Operator Seat
8	Gauge Cluster	22	Swing Parking Brake Release Switch
9	Cup Holder	23	KPSS Release Switch
10	Right Hand Operator Control Lever (Power Boost Switch)	24	Fuse & Relay Box
11	Starter Key Switch	25	Travel Alarm Switch
12	Throttle Potentiometer	26	Level Gauge
13	Attchment Mode Select Switch (Option)	27	Cab Working Light Switch (Option)
14	Working Light Switch (Boom, Deck)		

Copyright © 2015 Kobelco Construction Machinery Co.,Ltd. All rights reserved. [S2YF00022ZE01] [0731CsCshWbYs]

2.3 COMPONENT & CONTROLS NOMENCLATURE

The following information provides a brief description and function of the components and controls of the hydraulic excavator.
All personnel associated with this machine should read and understand this information BEFORE beginning any work with or on this equipment.

2.3.1 GAUGE CLUSTER

The gauge cluster is made up of gauges (fuel level, engine coolant temperature), various switch panels and multi-display.

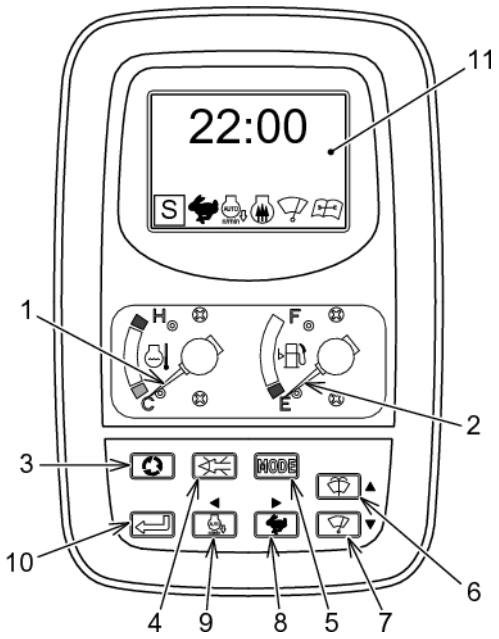

A. METERS
1: Engine Coolant Temperature Meter
2: Fuel Level Meter

B. SWITCH PANELS
3: Screen Change Switch
4: BuzzerStopSwitch
5: KPSS Mode Select Switch
6: Washer Switch
7: Wiper Switch
8: Travel Speed Select Switch
9: Auto Accel Switch
10: Select Switch

C. LCD MULTI-DISPLAY
11: L.C.D Display

CAUTION

-When caution sign was displayed on the multi-display, stop the work immediately and check and service the section in point.
For checking and servicing, refer to the section for the checking and servicing.
-The display on the multi-display does not entirely assure the condition of machine.
-For the maintenance and inspection of machine, the visual checking should be carried out further without completely depending on the display on the multi-display.

Copyright © 2015 Kobelco Construction Machinery Co.,Ltd. All rights reserved. [S2YF00022ZE01] [0731CsCshWbYs]

 https://truckmanualshub.com/

A. METERS

1. COOLANT TEMPERATURE METER

This indicates the temperature of the engine coolant water, and operates when the starter key switch is turned to the "ON" position. The temperature is normal in the white range. If the indicator enters the red range, let the engine low idle until the water cools down and the indicator moves back into the white range.

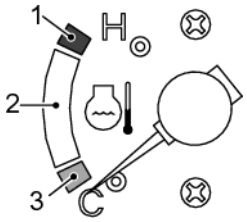

1. RED: Maybe overheated
2. WHITE: Operating condition
3. BLUE: Cold condition, warm up engine and hydraulic oil

2. FUEL METER

This indicates the amount of fuel. F : Full tank is about 330 L {87 gal} This gauge indicates the remaining volume of fuel in the fuel tank. Refuel when the indicator is approaching to the "E" point. Refill the fuel tank with diesel fuel only.

For fuel in use, see "4.3 LUBRICANT, FUEL & COOLANT SPECIFICATIONS".

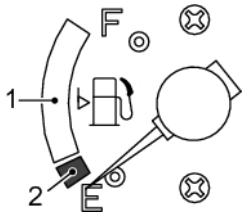

1. WHITE: Operating zone
2. RED: Refill

B. SWITCH PANELS

After starting engine, main screen (1) for operator shown in the figure is usually displayed.

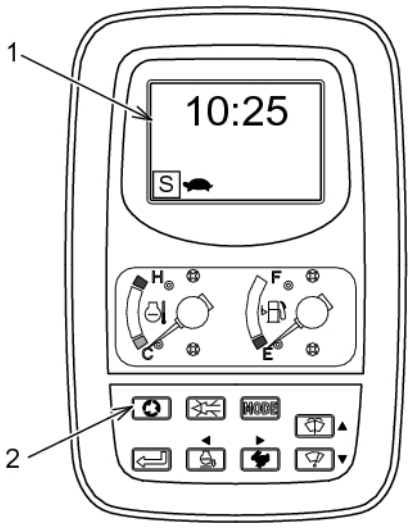

Copyright © 2015 Kobelco Construction Machinery Co.,Ltd. All rights reserved. [S2YF00022ZE01] [0731CsCshWbYs]

1. SCREEN CHANGE SWITCH

After turning starter key switch ON or starting engine, the screen is changed in order of "Time for engine oil change" --> "Time for fuel filter replacement" --> "Time for hydraulic oil filter change" --> "Time for hydraulic oil change" --> "Main screen" each time the screen change switch (2) is pressed.
With this menu, the time range to the recommended change time for the filter and oil in use can be identified.

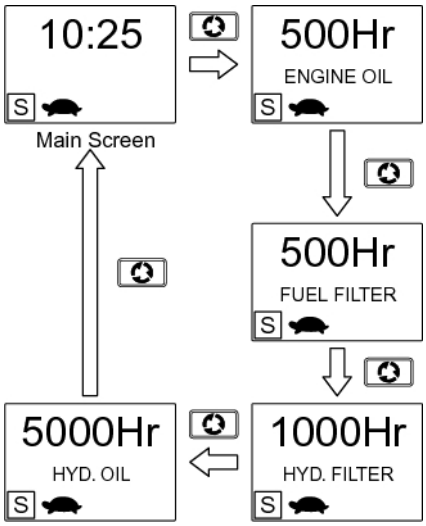

Notice

If the screen change switch is not operated for 30 seconds keeping the screen for maintenance displayed, the screen automatically reruns to the main screen.

2. BUZZER STOP SWITCH

In case where warning is displayed on the multi-display (LCD), press buzzer stop switch (1) and buzzer shown below stops sounding.

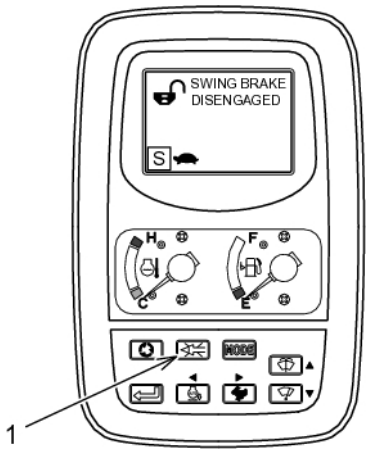

Notice **The level shown in the table is based on the following contents.**

1. This warning shows the condition of personal injury or machine function.
2. This warning shows the change of work mode.
3. This might lead to the failure of machine. Check and service it immediately.

Copyright © 2015 Kobelco Construction Machinery Co.,Ltd. All rights reserved. [S2YF00022ZE01] [0731CsCshWbYs]

 https://truckmanualshub.com/

Priority of group	Level	L.C.D. display	Machine condition	Buzzer sounds				
				Auto stop	Manual stop	Type	Only starter key ON	Engine running
A	1	CPU DATA COMMUNICATION ERROR	Data from the mechatro controller is not received.	—	O	3	O	O
	1	SWING BRAKE DISENGAGED	The swing parking brake switch is turned ON.	O (5 sec.)	O	2	O	O
	1	STOP ENGINE STOP	Engine is stopped after Engine Oil pressure is in low.	O (5 sec.)	—	1	O	—
	1	CPU HYDRAULIC SYSTEM BACK UP MODE	KPSS release switch is switched to "Release" side, this display appears.	O (5 sec.)	O	2	O	O
B	1	SELECTOR VALVE FAILURE	The selector valve (OPT.) malfunction.	—	O	2	—	O
	2	WARM FINISH WARM-UP	After finishing warming up.	O (5 sec.)	—	2	—	O
	3	LOW ENG OIL PRESS.	Low engine oil pressure disconnection.	—	O	2	—	O
	3	HIGH ENG WATER TEMP.	The engine coolant is more than 105°C.	—	O	3	O	O
	3	LOW ENG WATER LEVEL	Coolant level is low.	—	O	3	O	O
	3	CLOGGED AIR FLTR	The air filter is clogged.	—	O	3	O	O
	3	10:25 B013 H	Self diagnosis (sensor, valve etc.).	—	O	3	O	O

Sound of buzzer Type1:continuation, Type2:Beep ON 0.2sec, OFF 0.3sec., Type3:Beep ON 0.5sec, OFF 0.5sec.

Copyright © 2015 Kobelco Construction Machinery Co.,Ltd. All rights reserved. [S2YF00022ZE01] [0731CsCshWbYs]

3. WORK (KPSS) MODE SELECT SWITCH

When engine starts, it is set to "S" mode. Select proper work mode from 2 modes shown below according to the work condition and the purpose. The work mode is switched in order of "S" --> "H" each time the work mode select switch is pressed. The selected work mode is displayed on the left lower corner of multi-display for confirmation.

S : S mode
(for standard work and loading operations)
H : H mode (for heavy duty work)

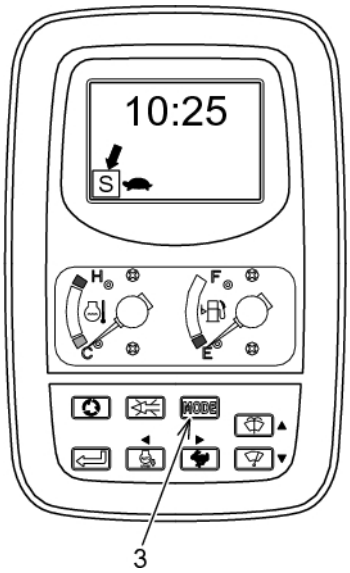

CAUTION

As for the work mode after the engine starts, the mode that was used the last time engine was stopped is automatically set.
Check that the selected mode conforms to the work before starting work.

Notice

For the reference of each "3.1.11 SELECTION OF WORK MODE AND SWITCHING OF THE ATTACHMENT MODE", see Chapter 3.

4. WASHER SWITCH

Press washer switch and washer fluid is sprayed through the nozzle of front window while the switch is being pressed. The washer tank is located on the rear side of cab.

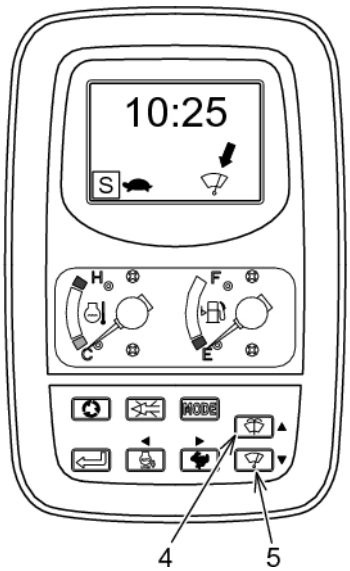

IMPORTANT

Make certain the washer reservoir has washer fluid before operating washer.

Copyright © 2015 Kobelco Construction Machinery Co.,Ltd. All rights reserved. [S2YF00022ZE01] [0731CsCshWbYs]

 https://truckmanualshub.com/

5. WIPER SWITCH

When the wiper switch is operated, the indication of "Intermittent " or "Continuous " appears on the lower part of multi-display.

a. Press it once : Wiper moves intermittently
b. Press it again : Wiper moves continuously
c. Press it once more : Wiper stops moving

6. TRAVEL SPEED SELECT SWITCH

WARNING

Slow speed traveling is necessary to load and unload the machine on to a trailer. During loading or unloading, do not change the travel speed.

The travel speed select switch is located on the gauge cluster switch panel. Each time engine is started, travel speed is automatically set to LOW 1st (turtle) speed. Press the travel speed (rabbit) switch on the gauge cluster, and the speed is changed to the HIGH 2nd and the (rabbit) is indicated on the multidisplay.

LOW (1st) speed : turtle
Set to LOW when moving the machine on a rough or soft road, slope, or in a narrow place, or when powerful tractive force is required.

HIGH (2nd) speed : rabbit
Set to HIGH when moving the machine on flat, hard ground.

Copyright © 2015 Kobelco Construction Machinery Co.,Ltd. All rights reserved. [S2YF00022ZE01] [0731CsCshWbYs]

7. AUTO ACCEL SWITCH

WARNING

When loading or unloading machine on trailer, turn the auto accel switch off.
If it is operated keeping the accel switch on, the engine speed changes suddenly.

When this switch is activated (ON) the auto-accel system activates.
The auto-accel reduces the engine speed to the idle level reducing fuel consumption and noise under the following conditions:
1.
The accel dial position is set over the idle level.
2.
The control lever and/or pedal are not operated for 4 seconds or more.

When the control lever and/or pedal are operated, the engine speed rises back to the accel dial set level gradually, according to the respective operating pilot valve stroke.
Anytime this switch is deactivated (OFF) the engine speed rises to the accel dial set level, independently by other operations.

Copyright © 2015 Kobelco Construction Machinery Co.,Ltd. All rights reserved. [S2YF00022ZE01] [0731CsCshWbYs]

 https://truckmanualshub.com/

8. SELECT SWITCH

This switch is usually set to "OFF", but this switch (8) is available for clock setting, contrast adjustment.

For the how to use select switch, see the following "8.1 Auto Warming Up" to " 8.5 Pump Flow Rate Adjustment (Nibbler mode/ Breaker mode)".

Notice

Press screen change switch (1) during the above adjustment and setting operations and the screen returns to the previous screen.

8.1 Auto Warming Up

1: Screen Change Switch
2: Buzzer Stop Switch
3: Work Mode Select Switch
4: Washer Switch
5: Wiper Switch
6: Travel Speed Select Switch
7: Auto Accel Switch
8: Select Switch

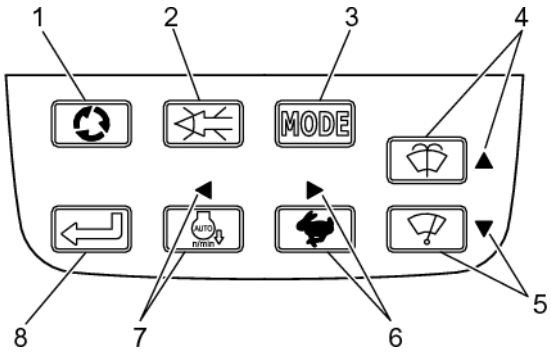

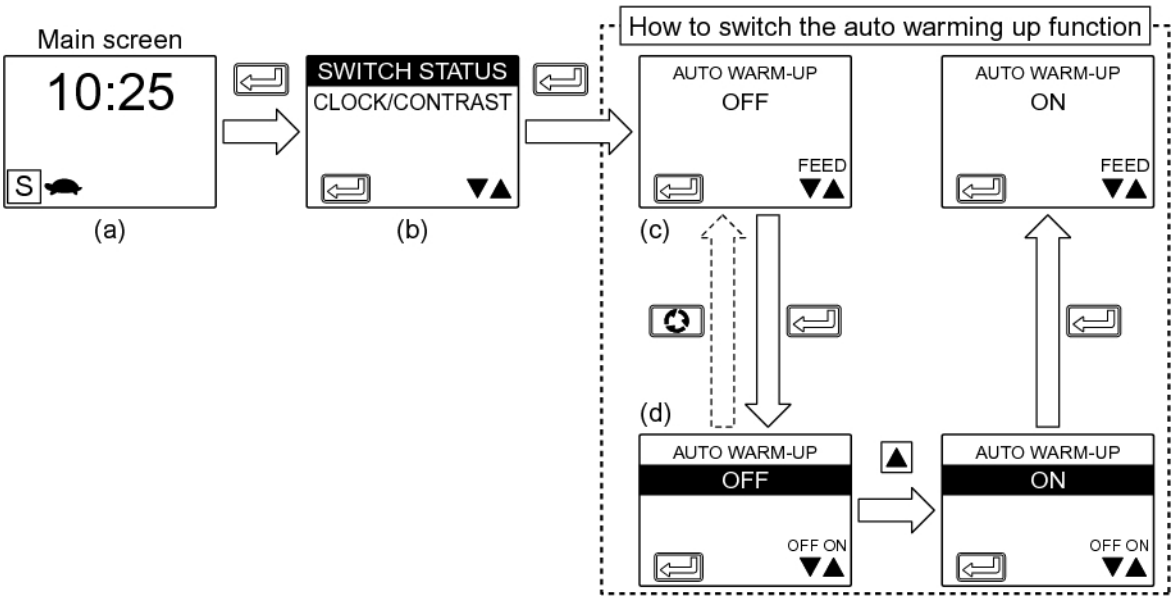

Notice

The procedure in order of No.1 to No.3 shows the initial setting. Once it is set to "Auto warming up", the resetting is unnecessary thereafter.

Copyright © 2015 Kobelco Construction Machinery Co.,Ltd. All rights reserved. [S2YF00022ZE01] [0731CsCshWbYs]

Warming up engine and hydraulic oil

1. Turn starter key switch on, display main screen (a) and press select switch (8) and "CLOCK/CONTRAST" select screen (b) is displayed.
2. Press select switch (8) and the "AUTO WARM-UP OFF" screen (c) is displayed.
3. Press select switch (8) again, and the color of "OFF" portion reverses and the "AUTO WARM-UP OFF" screen (d) is displayed.
4. After switching from "OFF" to "ON" in operation of Washer switch ▲(4), set it by pressing the select switch.
5. Turn starter key switch off once and have the auto warming up setting memorize.
   When the engine is started with starter key and then if it is in low temperature, the automatic warming up operation starts.
   Pull up the safety lock lever to lock it.
6. In warming the engine oil and hydraulic oil, the "AUTO WARM-UP" is displayed on the multi-display.
7. After warming up, the "FINISH WARM = UP" is displayed on the multi-display, the buzzer sounds for about 5 seconds and the warming up is completed.

IMPORTANT

-The warming up operation is forced to stop by turning the auto warming up switch off.
-In warming up operation, the warm-up operation is interrupted tentatively, if control lever is operated. Then the warm-up operation starts again, if the neutral lever condition continues for about 10 seconds.

Copyright © 2015 Kobelco Construction Machinery Co.,Ltd. All rights reserved. [S2YF00022ZE01] [0731CsCshWbYs]

 https://truckmanualshub.com/

8.2 Auto Idling Stop Function

This switch is usually set to "OFF". When the auto idling stop function is selected, the engine stops automatically after an elapse of the specified time with the safety lock lever (1) set to "LOCKED" position (A) during engine operation. This function is effective in saving of fuel and in restraint of exhaust gas by setting auto idling stop function.

Notice

1. After setting safety lock lever to "LOCKED" position (A), the engine changes to "DECEL" speed about 4 seconds later.
2. Buzzer sounds for 5 seconds before engine stops.

Restart the engine after the engine is stopped by

1. Make sure that the buzzer stops sounding.
2. Set the accel potentiometer to low idling position.
3. Return the starter key switch to "ACC" or "OFF" once and restart the engine.

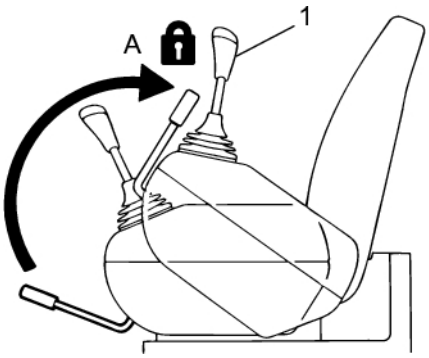

WARNING

When carrying out the work there is a possibility of dropping the load due to stop of engine, make sure to turn the auto idling stop switch OFF.

CAUTION

-When you start the engine again after an auto idling stop, start after once returning a key switch at ACC or OFF and also returning a throttle potentiometer to Lo.
But the engine cannot starts until a buzzer stops, after engine stops.

-When you leave from machine for a while, turn off the starter key switch to prevent from accident.

-Turn the auto idling stop switch off when the following functions are employed. The engine stops and then the function stops, too.
As the safety lock lever is set to "LOCKED" position (A),
a. When desired to warm up the engine,
b. When desired to use air-con,
c. When desired to use work light continuously,

-The auto idling stop switch does not function regardless of the auto idling stop switch set position in the following cases.
a. When the alarm for "HIGH ENG WATER TEMP" or "LOW ENGINE WATER LEVEL" is displayed,
b. When the auto warming up is operated,

Copyright © 2015 Kobelco Construction Machinery Co.,Ltd. All rights reserved. [S2YF00022ZE01] [0731CsCshWbYs]

8.2.1 Auto Idling Stop

1: Screen Change Switch
2: Buzzer Stop Switch
3: Work Mode Select Switch
4: Washer Switch
5: Wiper Switch
6: Travel Speed Select Switch
7: Auto Accel Switch
8: Select Switch

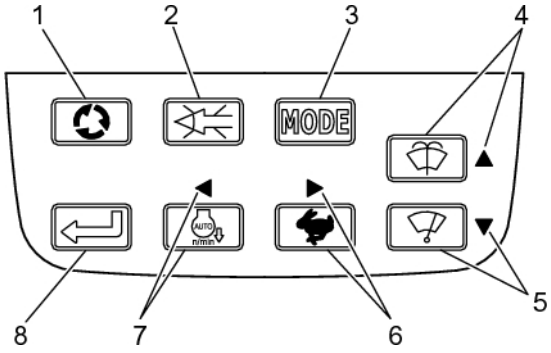

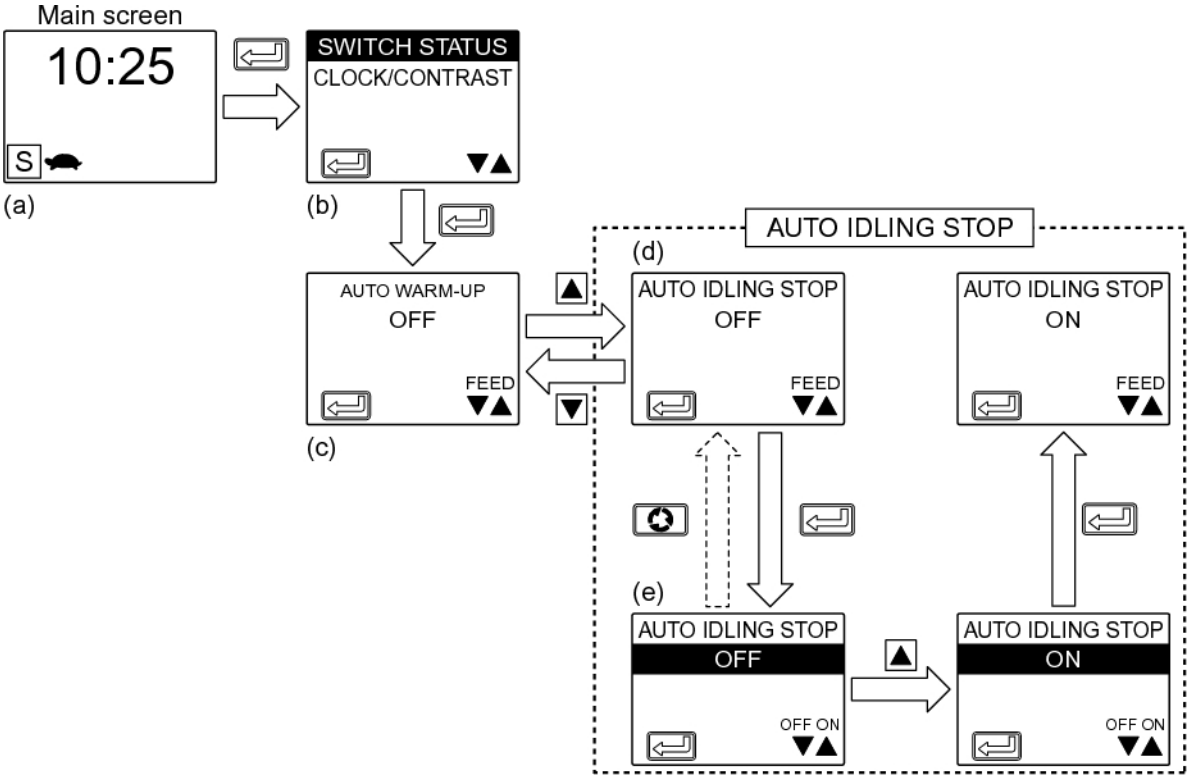

1. Press select switch (8) in main screen (a) for operator and display "SWITCH STATUS CLOCK/CONTRAST" select screen (b).
2. Press select switch (8) again and display "AUTO WARM-UP OFF" screen (c).
3. In operation of FEED ▲(4), the "AUTO IDLING STOP OFF" screen (d) is displayed.
4. In operation of FEED ▲(4), the color of "OFF" portion reverses and the "AUTO IDLING STOP OFF" screen (e) is displayed.
5. Switch from "OFF" to "ON" in operation of FEED ▲(4) and set it by pressing selector switch (8).
6. When auto idling is functioning, the "AUTO IDLING STOP" is displayed on the multi-display.
7. Turn starter key switch off once and store the auto idling stop setting as a memory.

Copyright © 2015 Kobelco Construction Machinery Co.,Ltd. All rights reserved. [S2YF00022ZE01] [0731CsCshWbYs]

 https://truckmanualshub.com/

8.3 Clock Adjustment Switches

1: Screen Change Switch
2: Buzzer Stop Switch
3: Work Mode Select Switch
4: Washer Switch
5: Wiper Switch
6: Travel Speed Select Switch
7: Auto Accel Switch
8: Select Switch

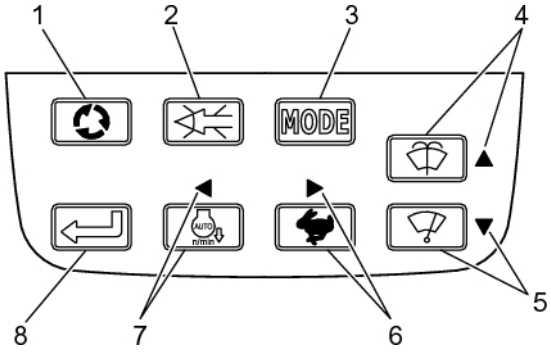

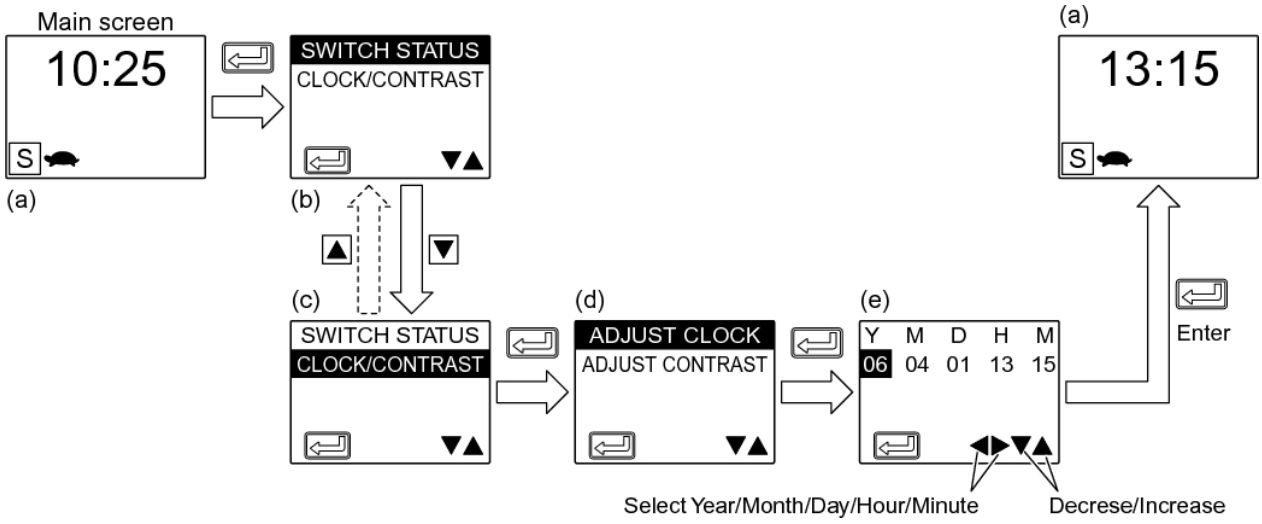

1. Turn starter key switch on and display main screen (a) for operator, and then press select switch (8) and display "SWITCH STATUS CLOCK/CONTRAST" select screen (b).
2. In operations of FEED ▲(4) and FEED ▼(5), move cursor to "CLOCK/CONTRAST" screen (c) and then press select switch (8) and the "ADJUST CLOCK ADJUST CONTRAST" screen (d) is displayed.
3. In operations of FEED ▲(4) and FEED ▼(5), move cursor to "ADJUST CLOCK" and then press select switch (8) and the "ADJUST CLOCK" screen (e) is displayed.
4. Select any of "YoMoDoHoM" in operation of FEED (4) and FEED (5) and vary the values in operations of FEED ▲(4) and FEED ▼(5).
5. After adjustment, press select switch (8) and the adjusted values are stored as memory and time setting is completed, and then the screen returns to main screen (a).

Copyright © 2015 Kobelco Construction Machinery Co.,Ltd. All rights reserved. [S2YF00022ZE01] [0731CsCshWbYs]

8.4 Contrast Adjustment Switches

1: Screen Change Switch
2: Buzzer Stop Switch
3: Work Mode Select Switch
4: Washer Switch
5: Wiper Switch
6: Travel Speed Select Switch
7: Auto Accel Switch
8: Select Switch

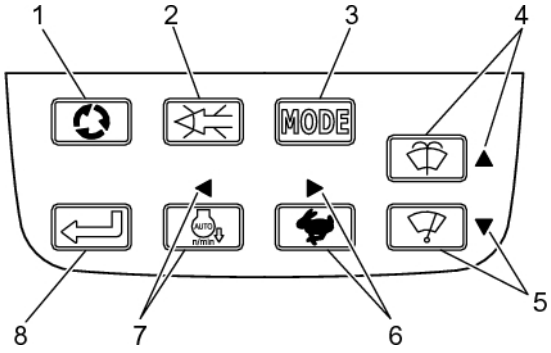

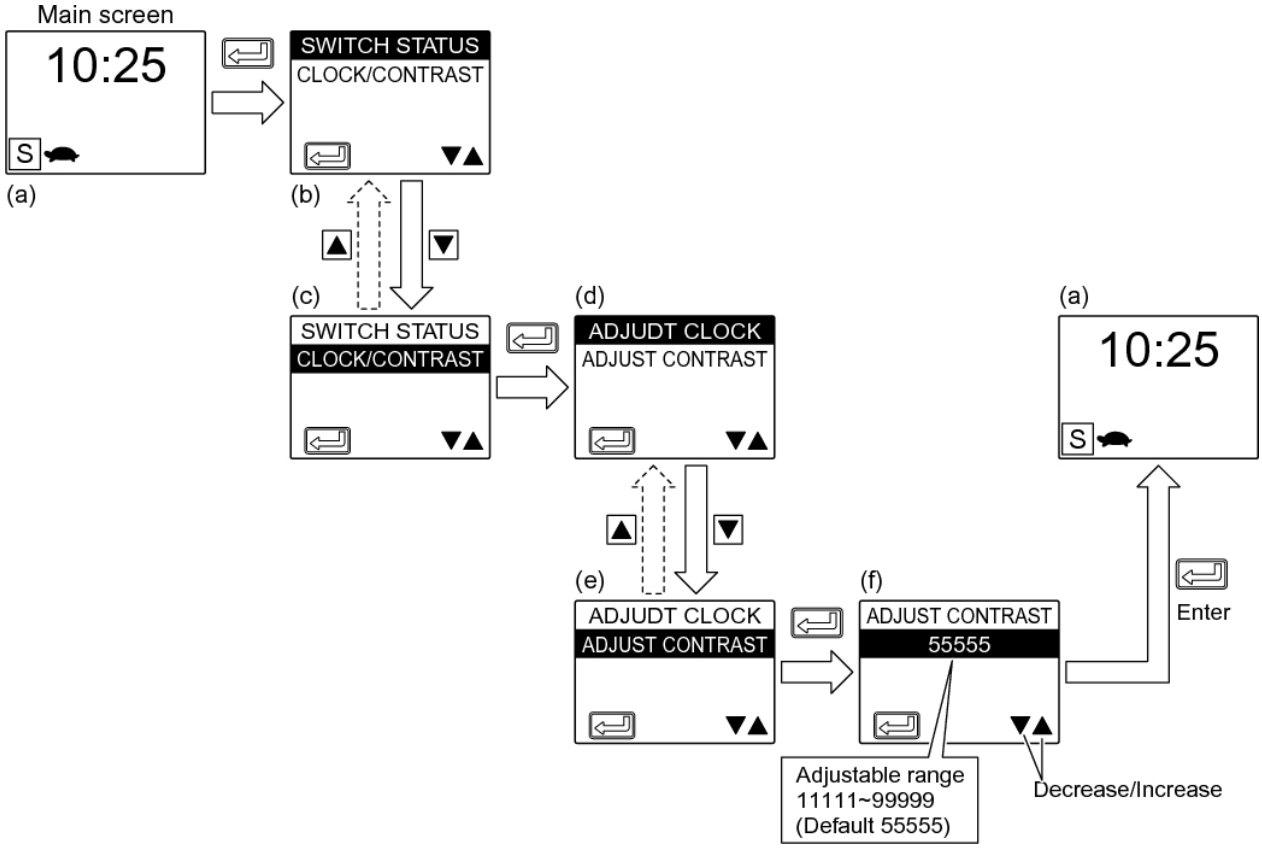

1. Turn starter key switch on and display main screen (a), and press select switch (8) and display "SWITCH STATUS CLOCK CONTRAST" select screen (b).
2. In operations of FEED ▲(4) and FEED ▼(5), move cursor to "SWITCH STATUS CLOCK CONTRAST" screen (c) and then press select switch (8) and the "ADJUST CLOCK ADJUST CONTRAST" screen (d) is displayed.
3. In operations of FEED ▲(4) and FEED ▼(5), move cursor to "ADJUST CLOCK ADJUST CONTRAST" and then press select switch (8) and the "ADJUST CLOCK ADJUST CONTRAST" screen (e) is displayed.
4. Press select switch (8) and the "ADJUST CONTRAST 55555" screen (f) is displayed.
5. Vary the values by pressing the desired figure in operations of FEED ▲(4) and FEED ▼(5). The available setting range is in 9 steps from "11111" to "99999".
   [Example] 11111 (faint) --> 99999 (clear) * The initial set value is 55555.
6. Press select switch (8) and the adjusted values are stored as a memory and the contrast adjustment is completed, and then the screen returns to main screen (a).

Copyright © 2015 Kobelco Construction Machinery Co.,Ltd. All rights reserved. [S2YF00022ZE01] [0731CsCshWbYs]

 https://truckmanualshub.com/

8.5 Pump Flow Rate Adjustment (Nibbelr mode / Breaker mode) (Option)

IMPORTANT

According to some kind of attachment, it is required to change the flow rate for service circuit. Change the flow rate in accordance with the procedure mentioned below.
In this machine, last set flow rate has been stored and the initial flow rate is 200L/min. The adjustment (increase or decrease) of flow rate is changeable by 10L/min step.

1: Screen Change Switch
2: Buzzer Stop Switch
3: Work Mode Select Switch
4: Washer Switch
5: Wiper Switch
6: Travel Speed Select Switch
7: Auto Accel Switch
8: Select Switch
9: Attachment Mode Select Switch

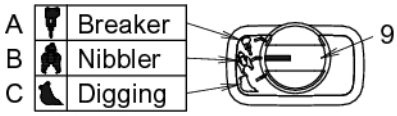

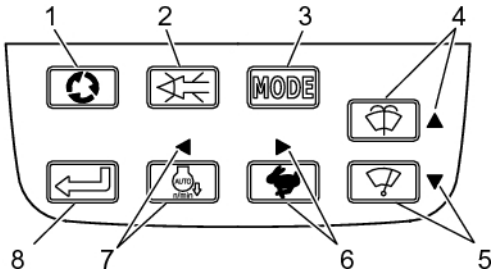

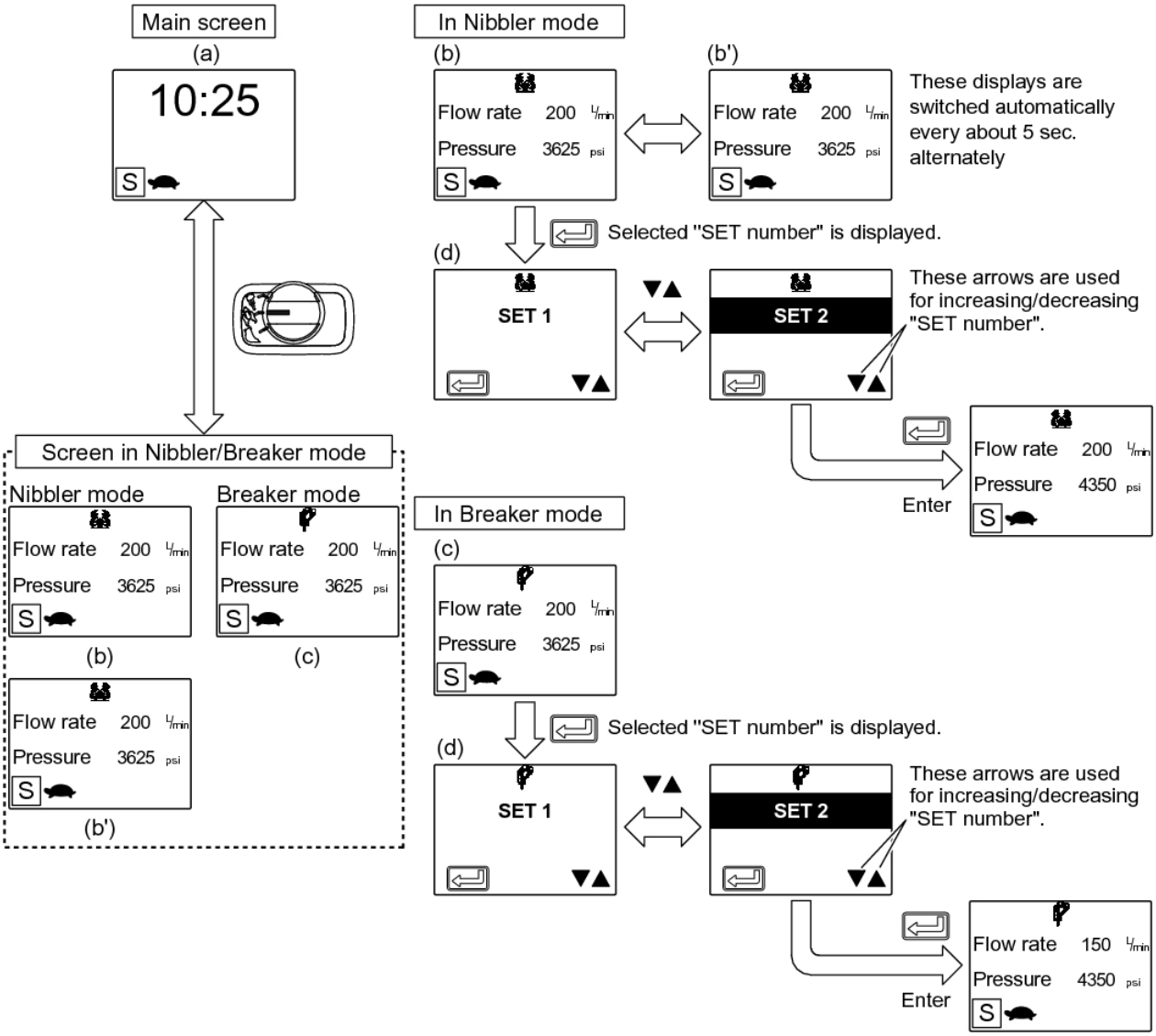

Copyright © 2015 Kobelco Construction Machinery Co.,Ltd. All rights reserved. [S2YF00022ZE01] [0731CsCshWbYs]

1. Turn starter key switch on and display main screen (a).
2. The screen is changed from "Digging" to "Nibbler" to "Breaker" each time the attachment mode select switch (9) is turned when the main screen (a) is displayed.
3. Turn the switch (9) to "B", and "Nibbler mode" screen is displayed. Or turn the switch (9) to "A", and "Breaker mode" screen is displayed.
4. When the nibbler/breaker select screen (b) or (c) is displayed, press the select switch (8) and the value of flow rate reverses to black, and the screen is changed to (d). To increase flow, press the up arrow (4) (washer switch), or to decrease flow, press the down arrow (5) (washer switch).
5. Select the desired setting value and then press select switch (8) and the flow rate is set to the desired value.

Copyright © 2015 Kobelco Construction Machinery Co.,Ltd. All rights reserved. [S2YF00022ZE01] [0731CsCshWbYs]

 https://truckmanualshub.com/

C. LCD MULTI-DISPLAY

CAUTION

When the warning is displayed on the multi-display, stop the work immediately and check failure cause and service the trouble.
For checking and service, refer to the section of "Maintenance".

The gauge cluster processes signals received from various sensors and switches and outputs the signals to LCD display and lamp display, and makes the buzzer sound.
The everyday check should be carried out according to not only the display on the multi-display but also the instructions in section "Maintenance".
LCD display function is roughly divided into the following 5 types.

LCD (Liquid Crystal Display)

1. Main Screen Display for Operator
2. Display in Accordance with Switch Operation
3. Warning Display
4. Nibbler and Breaker Mode Display
5. Display for Maintenance

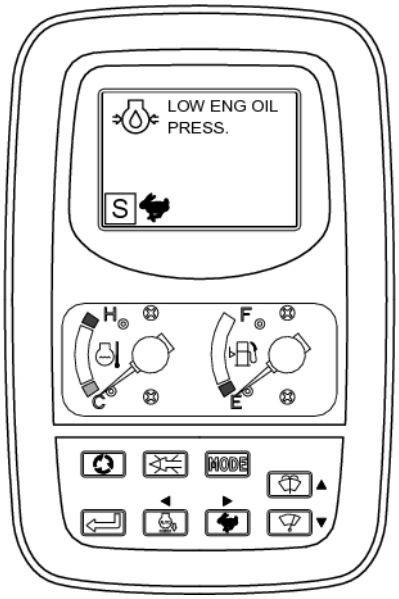

C.1 MAIN SCREEN

After starting engine, usually clock is displayed.

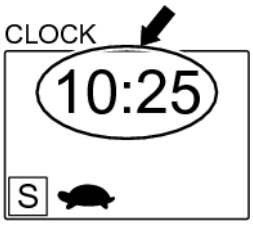

Copyright © 2015 Kobelco Construction Machinery Co.,Ltd. All rights reserved. [S2YF00022ZE01] [0731CsCshWbYs]

C.2 DISPLAY BY SWITCH OPERATION

When using it by selecting switch on the switch panel provided on the gauge cluster, the selected mode is displayed on the lower part of multi-display.

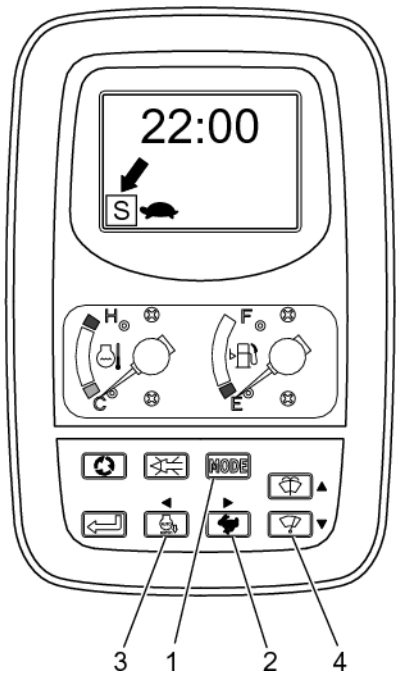

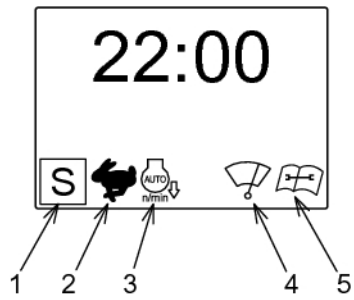

1	KPSS Work Mode Displays (S, H)
2	Travel Speed Displays (,)
3	Auto Accel Display
4	Wiper Displays (Intermittent/Continuation)
5	Failure Displays

1. Work mode display
   The mode changes in order of "S" --> "H" each time the work mode switch (1) is pressed and the selected mode is displayed on the lower corner of multi-display.
2. Travel low speed and high speed display
   The display is changed in icons "turtle" --> "rabbit" --> "turtle" in order each time the travel low and high speed change switch is pressed and the selected mode is displayed.
3. Auto accel display
   Press auto accel switch (3) and the icon "Auto Accel" is displayed to inform that auto accel is functioning.
4. Wiper display screen
   Press wiper switch (4) and the icon "intermittent" is displayed when the wiper motor is running for front window intermittent wiping, and icon "continuous" is displayed when the motor is running for continuous wiping.
5. Screen displayed when trouble occurred
   For details, contact dealer/distributor.

Copyright © 2015 Kobelco Construction Machinery Co.,Ltd. All rights reserved. [S2YF00022ZE01] [0731CsCshWbYs]

 https://truckmanualshub.com/

C.3 DISPLAY FOR MAINTENANCE

This screen displays the remaining time to the end of recommended replacement interval specified for filter/oil. After reaching to the end of replacement interval, check and serve them following to section "Maintenance".

The recommended replacement interval is the accumulated time which is counted by controller when the engine is running.

This menu is available for confirmation of the following items.

The maintenance screen changes each time the screen change switch is pressed.

Replacement Interval

ITEM	DEFAULT
Engine Oil	500 Hr
Fuel Filter	500 Hr
Hydraulic Filter	1,000 Hr
Hydraulic Oil	5,000 Hr

1.
Remaining time display to the engine oil change
This display shows the remaining time to the coming engine oil change.

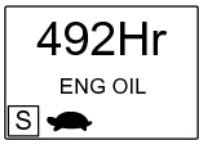

2.
Remaining time display to the coming fuel filter replacement This display shows the remaining time to the coming engine fuel filter replacement.

3.
Remaining time display to the coming hydraulic oil filter replacement
This display shows the remaining time to the coming hydraulic oil filter replacement.

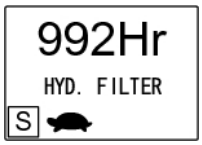

4.
Remaining time display to the coming hydraulic oil change
This display shows the remaining time to the coming hydraulic oil change.

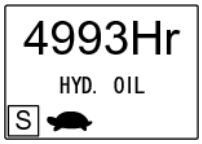

Notice

-The display automatically changes to the main screen, if switch is not operated for 30 seconds.
-For the setting procedure of maintenance time to be performed to the coming oil change in each type and filter replacement, see "2.3.1.C.4 SET PROCEDURE OF MAINTENANCE SCHEDULE".

Copyright © 2015 Kobelco Construction Machinery Co.,Ltd. All rights reserved. [S2YF00022ZE01] [0731CsCshWbYs]

C.4 SET PROCEDURE OF MAINTENANCE SCHEDULE

This machine is equipped with multi-display which makes confirmation of remaining time to the coming replacement/change time of engine oil, fuel filter, hydraulic oil filter and hydraulic oil. When the remaining time reaches to Zero (0), replace or change them and perform the initial setting in the following order.

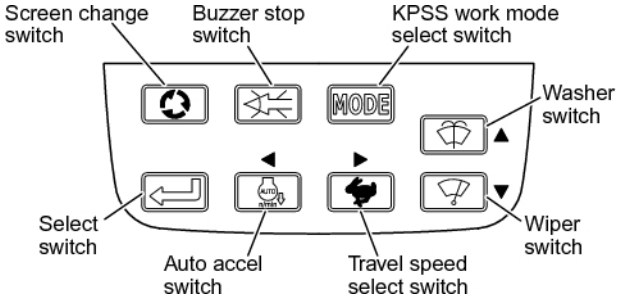

Notice **Interval of replacement of parts is mentioned below.**

Engine oil : 500 Hr
Fuel filter : 500 Hr
Hydraulic filter : 1,000 Hr
Hydraulic oil : 5,000 Hr

Procedure	Operating Procedure	Display on Multidisplay
1	Turn starter key switch on.	KOBELCO → After several seconds, display is changed to clock autmatically. → 10:25 S
2	Press " " switch press once display change switch on the switch panel once. And the clock display changes to the display of remaining time for coming engine oil change.	10:25 S → Press screen change switch once more. → 250 Hr ENGINE OIL S
3	Press " " switch press once select switch once and the display for the engine oil change reverses.	250 Hr ENGINE OIL S → Press select switch once more. → 250 Hr ENGINE OIL ▼▲
4	When required to adjust the interval to the coming change time by 10 hours, press " ▲" switch and the time to the coming engine oil change is added. Press " ▼" switch and the time to the coming engine oil change is reduced.	250 Hr ENGINE OIL ▼▲ → Replacing interval is changed with each pressing of switch. → 500 Hr ENGINE OIL ▼▲
5	When desired to return to the initial set time, press " " buzzer stop switch once. Press " " select switch once and the set time is stored.	500 Hr ENGINE OIL ▼▲ → To set the desired interval, press the select switch → 500 Hr ENGINE OIL S

Notice

1.
After displaying the display for setting by pressing the display change switch, set the respective maintenance time for fuel filter, hydraulic oil filter and hydraulic oil while repeating the procedure 2 to 5.
2.
The engine oil change time is displayed on the multi-display by 500 hours as a warning, but the buzzer does not sound.

Copyright © 2015 Kobelco Construction Machinery Co.,Ltd. All rights reserved. [S2YF00022ZE01] [0731CsCshWbYs]

 https://truckmanualshub.com/

C.5 WARNING DISPLAY

The warning is displayed in order of priority, and when many troubles occurred at the same time, for levels 1 and 2 in order of priority (A) level 1 is displayed in priority to level 2.

WARNING

When these warning are displayed, there is a possibility of serious trouble. Therefore stop the operation immediately, investigate the causes and take a proper measure.

1. WARNING CLASSIFICATION (PRIORITY A)

Displays	Level	Warning Contents	Remedy
CPU DATA COMMUNICATION ERROR	1	Displayed when the mechatro-controller does not send data.	Contact our dealer/distributor for checking and service.
SWING BRAKE DISENGAGED	1	Displayed when the swing parking brake is switched.	
STOP ENGINE STOP	1	Displayed at the time of emergency engine stop due to low engine oil pressure.	
CPU HYDRAULIC SYSTEM BACK UP MODE	1	KPSS release switch is switched to "Release" side, this display appears.	

2. WARNING CLASSIFICATION (PRIORITY B)

Displays	Level	Warning Contents	Remedy
SELECTOR VALVE FAILURE	1	Displayed when the selector valve malfunctions.	The attachment attached on the machine in specification of nibbler and breaker does not correspond to the selected attachment mode. Switch the attachment mode switch to the Proper attachment mode again. Breaker mode: In use of breaker Nibbler mode: In use of nibbler When the select error does not cancelled even though the proper work mode is selected, contact our dealer/distributor for checking and service.
POWER BOOST ON	2	Displayed when the attachment boost switch is on.	In this case, do not use the long arm.
WARM FINISH WARM-UP	2	Displayed when auto warming up was completed.	The warming up of engine and hydraulic oil is finished. Start engine by usual procedure referring to the instruction in page 3-13.

Copyright © 2015 Kobelco Construction Machinery Co.,Ltd. All rights reserved. [S2YF00022ZE01] [0731CsCshWbYs]

Displays	Level	Warning Contents	Remedy
LOW ENG OIL PRESS.	2	• Displayed when the output saving control is in operation because the engine oil pressure is lowered to the specified pressure or less. • Displayed when the wiring is disconnected.	• Stop engine immediately and check oil level for shortage and on the disconnected wiring, and if shorted make up the shortage of specified engine oil referring to the "LUBRICANT, FUEL & COOLANT SPECIFICATIONS" page 4-12 or change it. • Where this warning is displayed and then when the engine does not rotate, there is a possibility of the trouble of disconnection of wiring etc. Contact our dealer/distributor for repair.
HIGH ENG WATER TEMP.	3	Displayed when coolant temperature is raised to the specified temperature or higher.	Stop engine, lower the coolant temperature at low idling of engine speed, and cool down the engine. When the warning does not cancelled after an elapse of several minutes, stop engine and check the coolant level for shortage, fan belt tension for slack and radiator for clogging.
LOW ENG WATER LEVEL	3	Displayed when coolant level of radiator upper tank is lowered.	Stop engine, and after the coolant temperature lowers, open radiator cap and make up the shortage of coolant. Check the radiator sub tank for the shortage, and if short make up the shortage of coolant.
CLOGGED AIR FLTR	3	Displayed when engine output is lowered due to clogging of intake air filter.	Check on filter and clean it, and if necessary replace it with new one.
10:25 B013 H	3	Error code is displayed when trouble occurred on the pressure sensor, proportional valve, etc.	Contact our dealer/distributor for repair.
CHARGE ERROR	4	Battery error. (High voltage/low voltage/poor charge) After engine starts, when the warning does not go out for a while and the warning is given during engine running, it may be caused by poor battery charge.	Inspect the condition where electric equipment is used and check on charging circuit.
LOW FUEL LEVEL	4	Fuel level is the specified level or lower.	Make up the shortage of fuel.
WARM AUTO WARMING UP	5	Displayed when auto warming up is operating.	It is in auto warming up operation. Wait until the warming up is completed.
CHANGE ENG OIL	5	The remaining time to the specified engine oil change is zero (0).	Supply the specified quantity of specified new engine oil.

Copyright © 2015 Kobelco Construction Machinery Co.,Ltd. All rights reserved. [S2YF00022ZE01] [0731CsCshWbYs]

 https://truckmanualshub.com/

2.3.2 LOCATION OF SWITCHES AND METERS

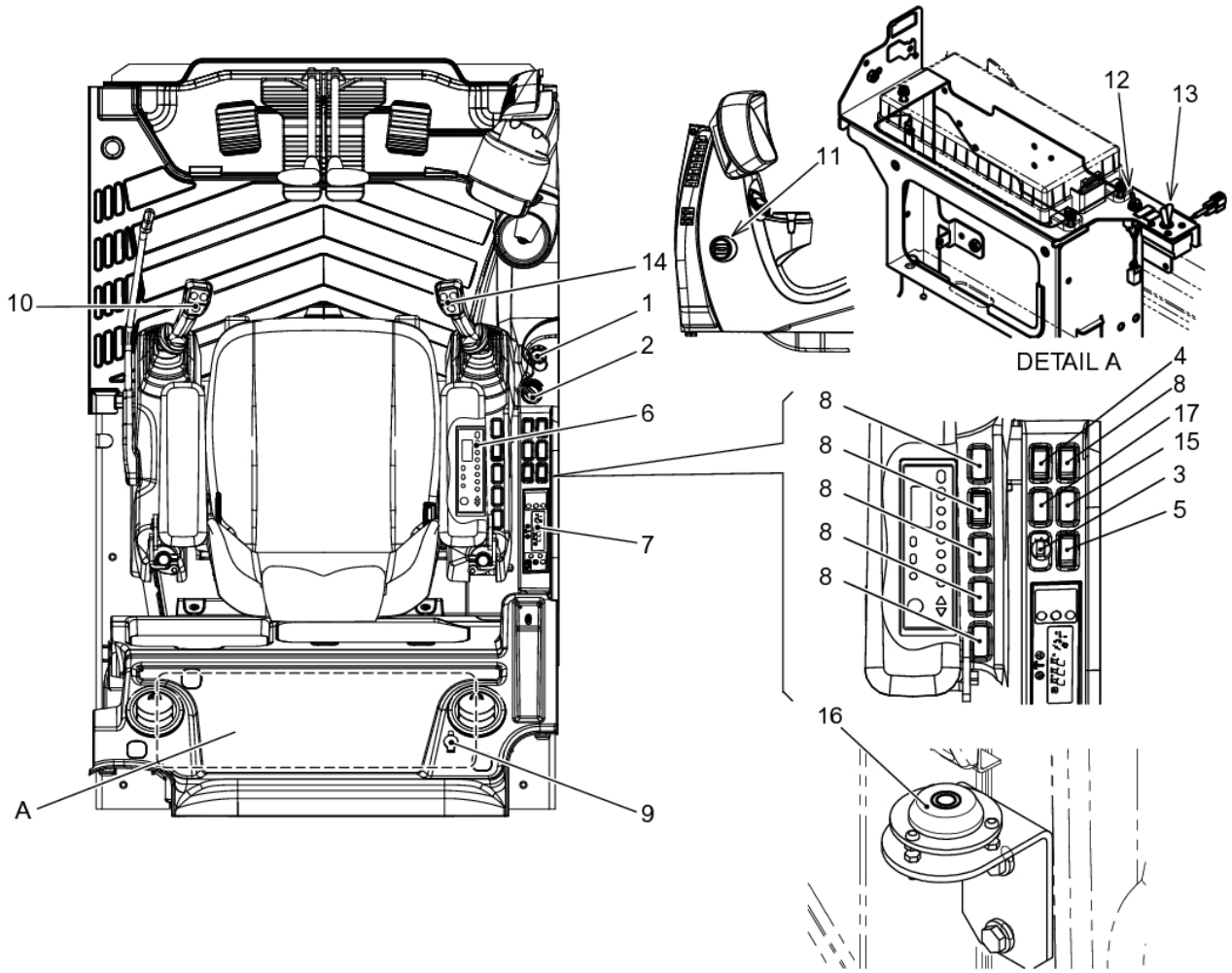

No.	NAME	No.	NAME
1	Starter Key Switch	10	Horn Switch
2	Throttle Potentiometer	11	Hour Meter
3	Attachment Mode Select Switch (Option)	12	Swing Parking Brake Release Switch
4	Working Light Switch (Boom, Deck)	13	KPSS Release Switch
5	Conflux/Single Flow Change Switch (Option)	14	Power Boost Switch
6	Tuner	15	Travel Alarm Switch
7	Air Conditioner Control Panel	16	Level Gauge
8	Cap (For Opt. Switch)	17	Cab Working Light Switch (Option)
9	24 Volt Power Supply		

Copyright © 2015 Kobelco Construction Machinery Co.,Ltd. All rights reserved. [S2YF00022ZE01] [0731CsCshWbYs]

1. Starter Key Switch

The starter key switch is located on the right hand operator console and has 4 operating functions.

- OFF :
  When starter key switch (1) is turned to this position, the engine stops and electrical power to the machine's electrical systems is stopped after approximately 3 seconds.
- ACC :
  With starter key switch (1) in the "ACC" position only the cigarette lighter, tuner and horn will have power.
- ON :
  When starter key switch (1) is in the ON position, electrical power is supplied to all the machine's electrical systems.
- START :
  When starter key switch (1) is turned to this position electrical power is supplied to the starter solenoid causing the starter to start the engine. After engine starts key should be released to go back to the "ON" position.

2. Throttle Potentiometer

The throttle potentiometer (2) is located on the right hand operator console and controls engine RPM. When the throttle potentiometer is rotated to any position it increases or decreases engine rpm and maintains engine at the programed RPM for that particular position on the dial.

- LO (Low idling) :
  The engine speed reduces to the minimum at the position turned to the leftmost.
- HI (High idling) :
  The engine speed rises to the maximum at the position turned to the rightmost.

Copyright © 2015 Kobelco Construction Machinery Co.,Ltd. All rights reserved. [S2YF00022ZE01] [0731CsCshWbYs]

 https://truckmanualshub.com/

3. Attachment Mode Select Switch (Option)

This switch is used for switching the attachment mode.

The screen is changed from "Digging" to "Nibbler" to "Breaker" each time the attachment mode switch (3) is turned to respective position. Depending on the attachment employed, select the applicable mode from "Digging", Nibbler", and "Breaker".

Before the working, confirm whether appropriate attachment had been selected.

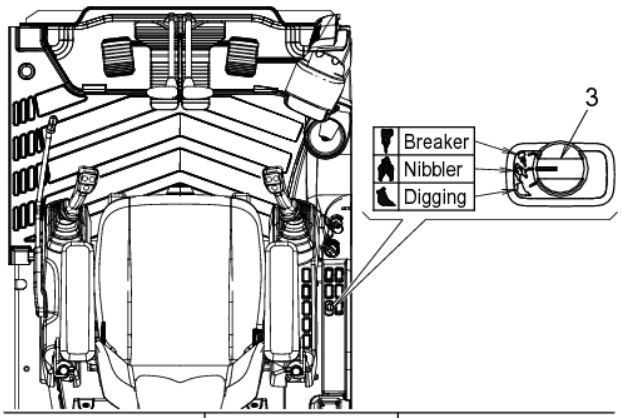

Attachment Mode	Switch Position	Work
Breaker Mode	→	In breaker work
Nibbler Mode	→	In nibbler work
Digging Mode	→	In digging work

CAUTION

When attachment has not been appropriately selected, hydraulic component and attachment are damaged. Select and switch the attachment mode appropriately.

Notice

Refer to "SELECTION OF WORK MODE AND SWITCHING OF THE ATTACHMENT MODE" as described in Chapter 3 to select the suitable attachment mode.

4. Working Light Switch (Boom, Deck)

Press the switch and the work lights on the boom (left) and deck (right) go on.

Press the side without symbol mark and the work lights on the boom (left) and deck (right) go off.

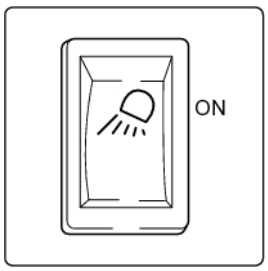

Copyright © 2015 Kobelco Construction Machinery Co.,Ltd. All rights reserved. [S2YF00022ZE01] [0731CsCshWbYs]

5. Conflux/Single Flow Change Switch

This switch is used to switch the single flow and conflux hydraulic circuit.

- Symbol mark (two marks side) :
  Select this side when carrying out the demolition work with the nibbler which requires the conflux flow.
- Symbol mark (one mark side) :
  Select this side when the restriction of the maximum flow rate is required for the work with breaker, etc.

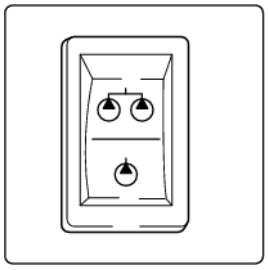

CAUTION

Do not set this switch to nibbler confluxed flow operation position when using breaker.

6. Radio (Tuner)

For the control of radio, see "2.3.7 HANDLING OF RADIO".

7. Air Conditioner Control Panel

For air conditioner control, see "2.3.8 AIR CONDITIONER".

8. Caps

These are used to install switches in option.

9. 24 Volt Power Supply

The 24 volt power supply (1) is located beside the rear side cover.
Four use of common auto accessories such as a fun or other accessories requiring 24 volt (DC) power. Pull cover away from 24 volt power supply and insert 24 volt male socket into power supply. Replace cover after use.

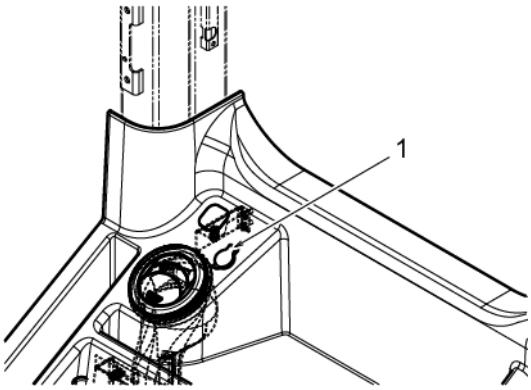

Copyright © 2015 Kobelco Construction Machinery Co.,Ltd. All rights reserved. [S2YF00022ZE01] [0731CsCshWbYs]

 https://truckmanualshub.com/

10. Horn Switch

CAUTION

Always sound horn before starting engine to alert personnel that the machine is going to be operated.

The horn switch is a momentary push grey button located on the operator's left control lever.

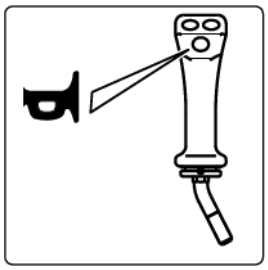

11. Hour Meter

This indicates the total time the engine has run. Even if the excavator is not moving, the meter continues to count as long as the engine is running.

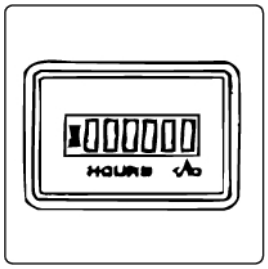

12. Swing Parking Brake Release Switch

Swing parking brake is usually locked. The swing parking brake is released in swing and arm-in operation. When it cannot be unlocked due to trouble, turn toggle switch to "Release lock" (unlock), and the parking brake is released. Then, move machine to safe area immediately and contact our shop.
And return to toggle switch to "NORMAL" position in normal condition.

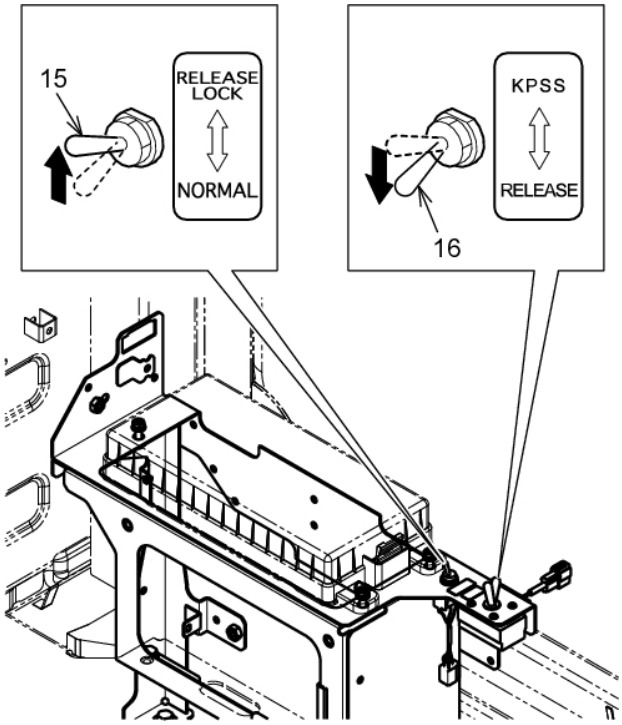

Copyright © 2015 Kobelco Construction Machinery Co.,Ltd. All rights reserved. [S2YF00022ZE01] [0731CsCshWbYs]

13. KPSS Release Switch

When electric system which controls the main pump is failed, one of the error cords of "E012, E013, E022 or E023" is displayed on multi display and the pump flow rate is fixed to minimum flow.
The KPSS release switch is located in controller box behind operator seat. Switch this toggle switch to "RELEASE" position. The "CPU HYDRAULIC SYSTEM BACK UP MODE" is displayed on the multi display.
(Buzzer sounds at the same time as indication is displayed, but buzzer stops in a while.)
When CPU controller is failed, "CPU DATA COMMUNICATION ERROR" is displayed on multi display and the pump flow rate is fixed to minimum flow. Switch this toggle switch to "RELEASE" position as same way mentioned above. In this case, "CPU DATA COMMUNICATION ERROR" is displayed continuously. Then move machine to safe area immediately and contact KOBELCO distributor for service assistance.
And return to toggle switch to "KPSS" position in normal condition.

Notice

Operation of the machine with the KPSS and Swing switches in the release position mode is to be done only temporarily. Make sure to return these switches to their "NORMAL" position after repairing the Mechatronic System.

14. Power Boost Switch

Located on the right hand control lever, this switch should only be used for increased break out force during digging.

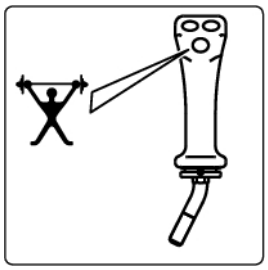

IMPORTANT

Use of it is prohibited where an arm longer than the standard is installed.

15. Travel Alarm Switch

Press symbol mark to be ON, and travel alarm is set to sounding status to warn workmen in the area around machine. When travel lever or pedal is operated, travel alarm sounds.

Switch for travel alarm to set
Switch for travel alarm to release

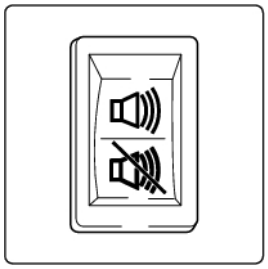

CAUTION

When travel alarm does not sounds even if travel lever (or pedal) is operated, stop engine immediately and contact our dealer/distributor for repair.
The operation with travel alarm failed may cause serious accident resulting in injury and death.

Copyright © 2015 Kobelco Construction Machinery Co.,Ltd. All rights reserved. [S2YF00022ZE01] [0731CsCshWbYs]

https://truckmanualshub.com/

16. Level Gauge (Only for Australia spec.)

Level gauge (Only for Australia spec.)By monitoring this level-gauge, you can learn whether this machine is kept in a horizontal position.

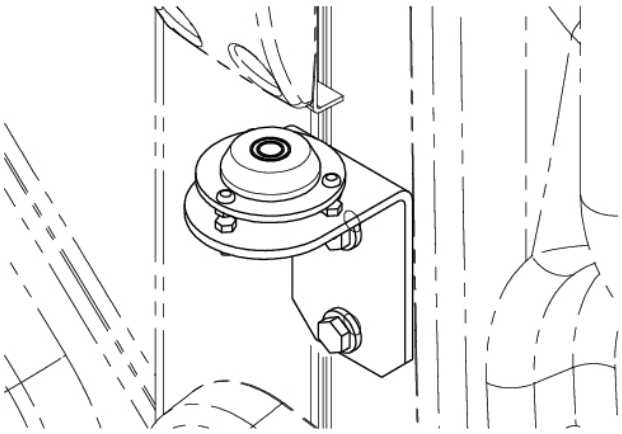

17. Cab Working Light (Option)

To light the cab working light, press the symbol side of this switch.

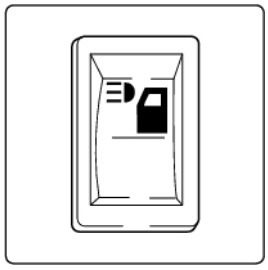

Notice

Regarding how to use the cab working light switch, refer to "7.4 CAB WORKING LIGHT SWITCH".

Copyright © 2015 Kobelco Construction Machinery Co.,Ltd. All rights reserved. [S2YF00022ZE01] [0731CsCshWbYs]

2.3.3 LEVERS AND PEDALS

1. Safety Lock Lever
2. Control lever (ISO Control Pattern)
3. Travel lever

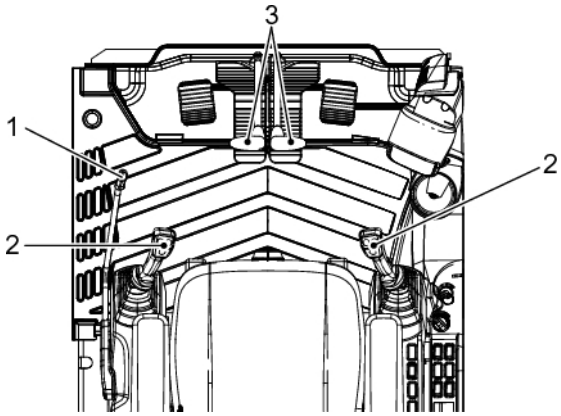

1. Safety Lock Lever

The safety lock lever is provided to prevent any unexpected operation due to the unexpected movement of control levers.

WARNING

-Do not stand up and move during operation or there is a possibility of suddenly being moved by unexpectedly touching and shifting the control lever.
-Raise the safety lock lever to the "lock position" securely.
Make sure that the safety lock lever is held to the locked position shown in the figure.
-When unlocking, do not touch other levers unintentionally. If touches other lever unintentionally, this may cause the danger due to malfunction of machine.
-After completion of work or during transportation, hold the safety lock lever to the "locked position".

Locking Hydraulic System (A)

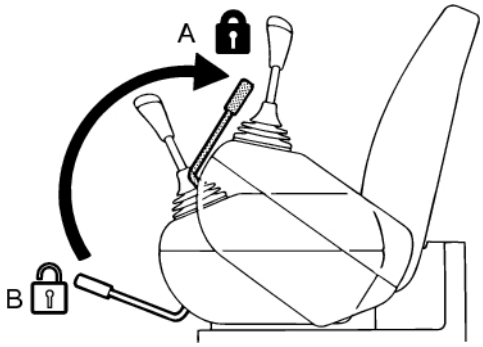

LOCKED (UP) POSITION

When the safety lock lever is set in the "LOCKED (UP) Position" the hydraulic system is shut down.

Copyright © 2015 Kobelco Construction Machinery Co.,Ltd. All rights reserved. [S2YF00022ZE01] [0731CsCshWbYs]

 https://truckmanualshub.com/

Unlocking Hydraulic System (B)

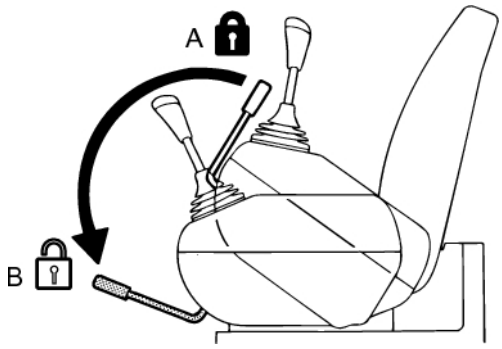

UNLOCKED (DOWN) POSITION

When the safety lever is set to the "UNLOCKED (DOWN) Position" all hydraulic functions are active.

2. Control Levers (ISO Operating Pattern)

These two levers activate each operation as illustrated in the right.

WARNING

-Confirm for safety around the working area. Also ensure that each lever operation is in accordance with the operating pattern indicated on the labels.
-If labels do not match the operator's control pattern, replace them immediately to avoid accidents and/or injury.
-When the contents of label do not accord with the machine movement, replace the label with proper label suited for the machine.

Release the hand and the lever returns to the neutral position, and then the attachment stops moving. And it is possible to perform various operations at the same time.

- Left Control Lever
  (1) Swing Right
  (2) Swing Left
  (3) Arm Out
  (4) Arm In
  N (Neutral):
  Upper structure and arm are held in the position where those are.
- Right Control Lever
  (5) Boom Down
  (6) Boom UP
  (7) Bucket Digging
  (8) Bucket Dumping
  N (Neutral):
  Boom and bucket are held in the position where those are.

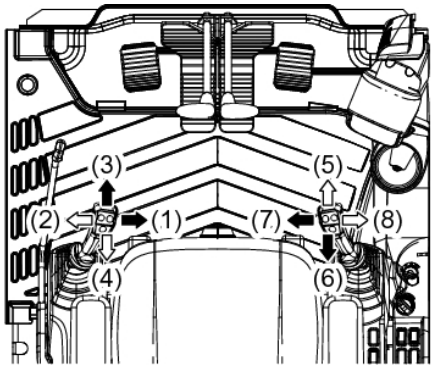

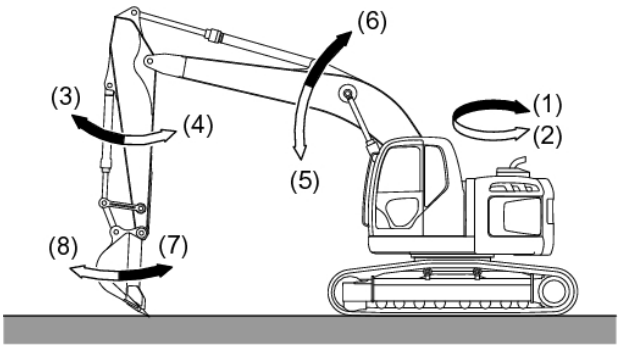

Copyright © 2015 Kobelco Construction Machinery Co.,Ltd. All rights reserved. [S2YF00022ZE01] [0731CsCshWbYs]

3. Left and Right Travel Lever & Pedal

The travel lever & pedal are located in front of operator seat. They are used to move the left or right track of the machine either forward or backward.

WARNING

-Take precaution with the control lever in travel operation. There is a possibility of accident because the attachment is suddenly swung and moved by the unexpectedly touching and shifting the control lever.
-When operating the control lever, make sure the crawler frame direction. When the travel motor is located on the front side, the travel lever functions of the travel levers will be opposite.
-Do not perform the work while putting foot on the pedal. There is a possibility of serious accident resulting in injury and death because the machine starts abruptly by unexpectedly depressing the pedal. Do not put foot on the pedal but of driving with foot on the pedal and changing the direction.
-Pay attention when driving and operating with pedal.

- (a) "Forward"
  Variable speed forward track movement.
- (b) "Backward"
  Variable speed reverse track movement.
- (N) "Center"
  Neutral position.

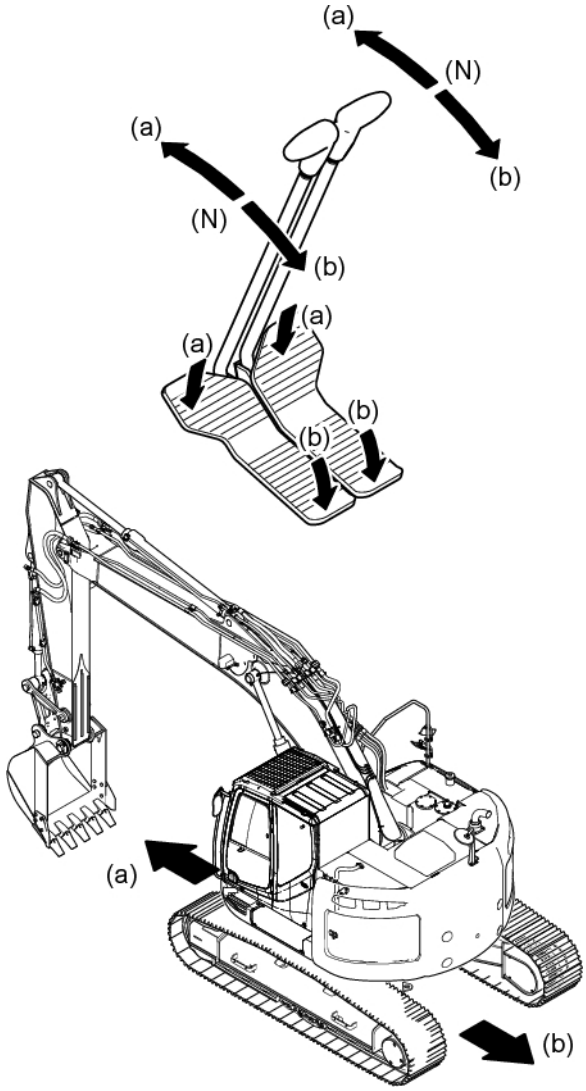

Copyright © 2015 Kobelco Construction Machinery Co.,Ltd. All rights reserved. [S2YF00022ZE01] [0731CsCshWbYs]

 https://truckmanualshub.com/

CAUTION

When travel alarm does not sounds even if travel lever (or pedal) is operated, stop engine immediately and contact our dealer/distributor for repair.
The operation with travel alarm failed may cause serious accident resulting in injury and death.

2.3.4 FUSES & RELAY BOX

CAUTION

Make sure the starter key switch is in the "OFF" position when replacing fuses.

The fuses protect the electrical system from excess current. If operation is not normal, a fuse may be blown. Replace blown or faulty fuses with the spare fuses as follows.
Replace any fuse generating white powder on it or in case that some looseness exists between the fuse and fuse holder.

IMPORTANT

-When replacing a fuse, replace it with one of the same capacity.
-The spare fuses are stored in the back side of fuse box cover.

Replacing Procedure

1. Loosen four machine screws (2) used to install cover (1) located on the rear side of operator seat, and remove cover (1).
2. To remove the cover of fuse box, press lock (4) of cover (3) inward to unlock and then lift it up.
3. When replacing the fuse, remove the fuse from the fuse box with fuse remover.
4. After replacement of fuse, attach the cover securely.

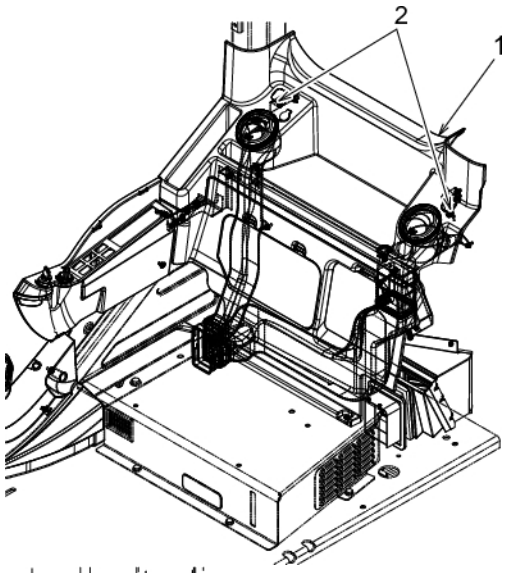

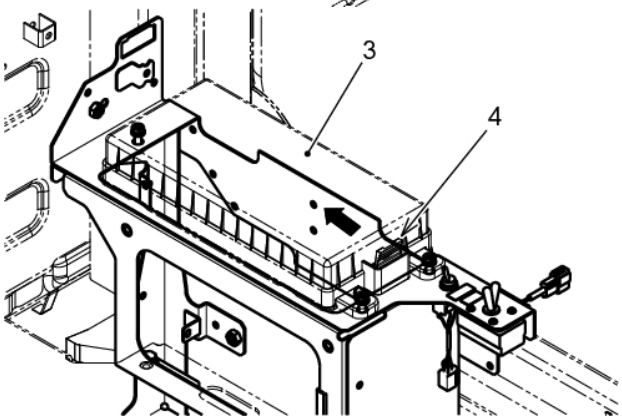

Copyright © 2015 Kobelco Construction Machinery Co.,Ltd. All rights reserved. [S2YF00022ZE01] [0731CsCshWbYs]

Fuses

Follow the procedures below to replace "

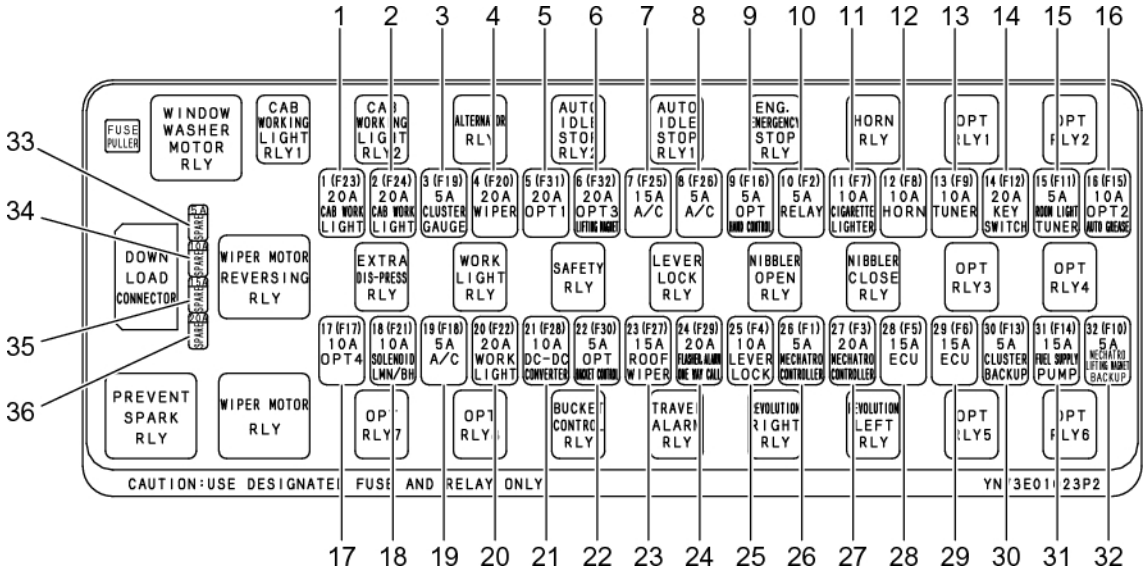

No.	AMPS	FUNCTION	No.	AMPS	FUNCTION
1	20A	Cab Work Light	21	10A	DC-DC Converter
2	20A	Cab Work Light	22	5A	Option (Bucket Control)
3	5A	Gauge Cluster	23	15A	Option (Roof Wiper)
4	20A	Wiper, Washer	24	20A	Flasher, Alarm, One Way Call
5	20A	Option 1	25	10A	Safety Lever Lock
6	20A	Option 3	26	5A	Mechatro Controller
7	15A	Air Conditioner	27	20A	Mechatro Controller
8	5A	Air Conditioner	28	15A	Engine Controller (ECU)
9	5A	Option (Hand Control)	29	15A	Engine Controller (ECU)
10	5A	Relay, Hour Meter	30	5A	Gauge Cluster (Back Up)
11	10A	Cigarette Lighter	31	15A	Fuel Supply Pump
12	10A	Horn, Horn Relay	32	5A	Mechatro Controller (Back Up)
13	10A	Tuner			Lifting Magnet (Back Up)
14	20A	Starter Key Switch	33	5A	Spare
15	5A	Room Lamp, Tuner	34	10A	Spare
16	10A	Option 2 (Auto Grease)	35	15A	Spare
17	10A	Option 4	36	20A	Spare
18	10A	Solenoid Valve			
19	5A	Air Conditioner			
20	20A	Work Light			

Copyright © 2015 Kobelco Construction Machinery Co.,Ltd. All rights reserved. [S2YF00022ZE01] [0731CsCshWbYs]

https://truckmanualshub.com/

2.3.5 FUSIBLE LINK (FOR STARTER)

In case power does not come when the starter key switch is turned "ON", a disconnection of the fusible link is suspected.
Inspect and replace the fusible link.

IMPORTANT

The fusible link is of a fuse wiring of big size provided in the electric wiring

Checking and replacing procedure

1. Remove two attaching screws (2) for the fuse and relay box and remove cover (3).
2. Remove fusible link (1) and check or replace it with new one.
3. After checking or replacement, return battery relay cover (3) to original position, and tighten 4 bolts (2) in position.

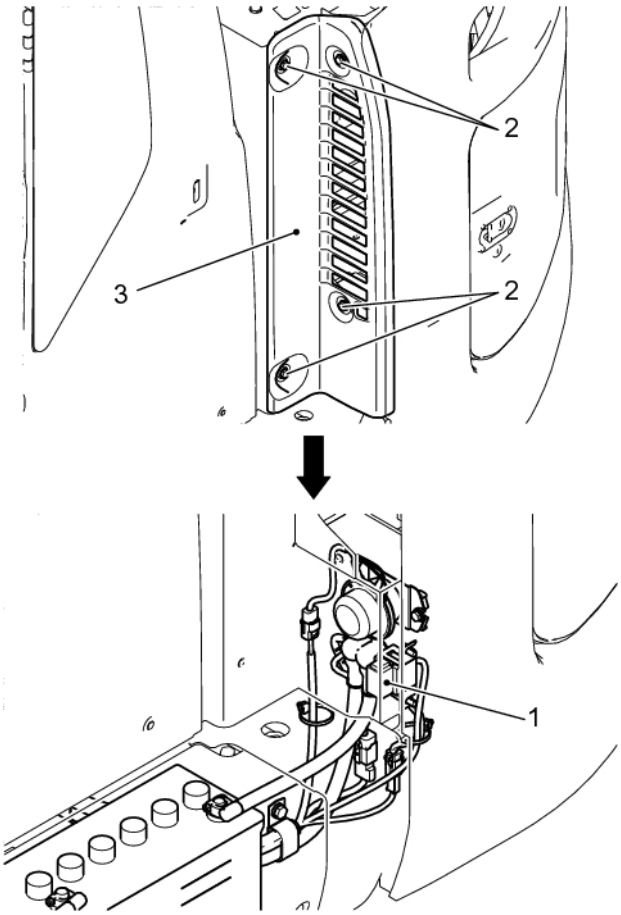

Copyright © 2015 Kobelco Construction Machinery Co.,Ltd. All rights reserved. [S2YF00022ZE01] [0731CsCshWbYs]

2.3.6 MECHATRO-CONTROLLER (CPU), ENGINE CONTROLLER (ECU)

Mechatro-controller and engine controller are positioned at the rear side of operator seat.

1. Mechatro Controller (CPU)
2. Engine Controller (ECU)

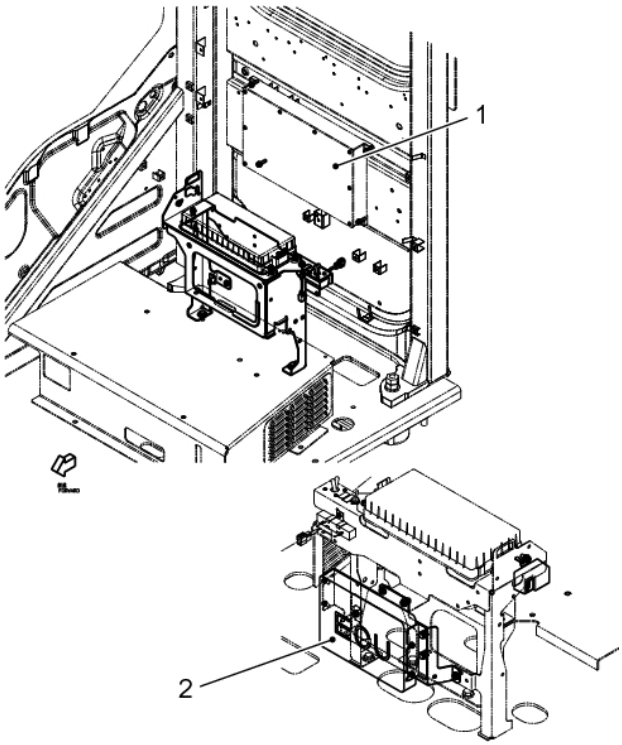

IMPORTANT

-Be careful not to splash water, mud and drinks on the controllers.
-When error occurred on the controller, do not take self-service, but contact our dealer/distributor.

Copyright © 2015 Kobelco Construction Machinery Co.,Ltd. All rights reserved. [S2YF00022ZE01] [0731CsCshWbYs]

 https://truckmanualshub.com/

2.3.7 HANDLING OF RADIO

A. EXPLANATION OF UNITS

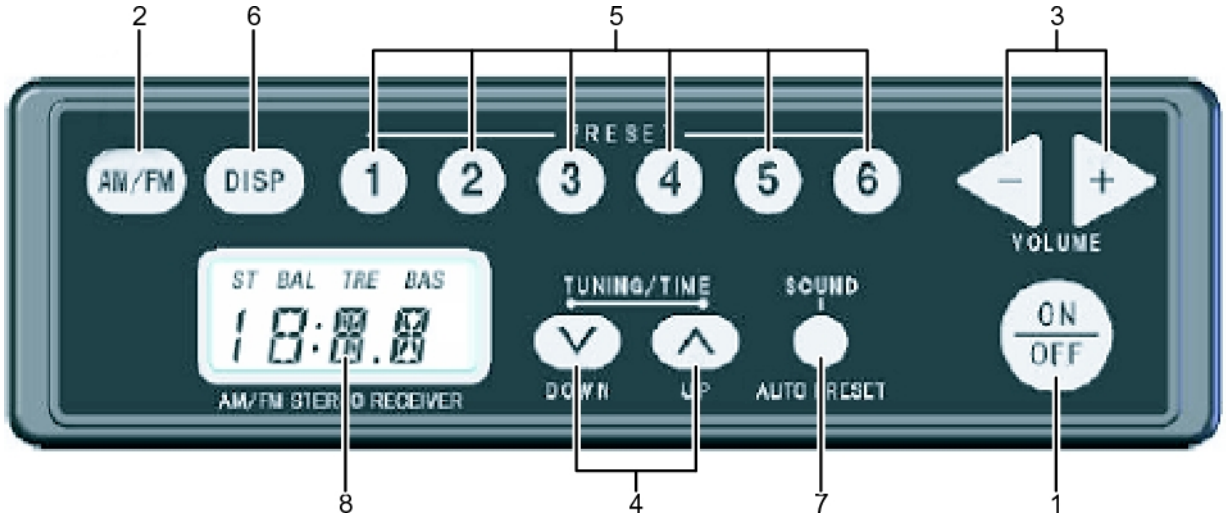

1. Name and How to Use of Each Unit

1. Power switch
2. AM/FM switch key
3. Volume control
4. UP / DOWN key
5. Preset key
6. DISP (display change) key
7. Sound control key
8. Display (Time/frequency)

2. Power control

1. Press the power switch (1) and the power is switched from OFF to ON.
   After displaying the band AM or FM, the frequency or the time is displayed.

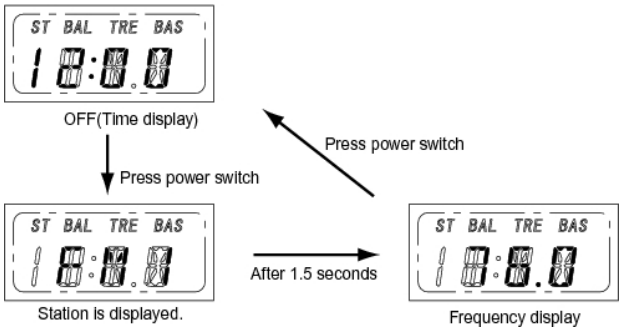

Copyright © 2015 Kobelco Construction Machinery Co.,Ltd. All rights reserved. [S2YF00022ZE01] [0731CsCshWbYs]

3. Display switching

1. To change the display from/to the frequency display to/from the time display, press "DISP" key (6).
   When the time display is changed to the frequency display, firstly the band display appears and then the frequency display appears.

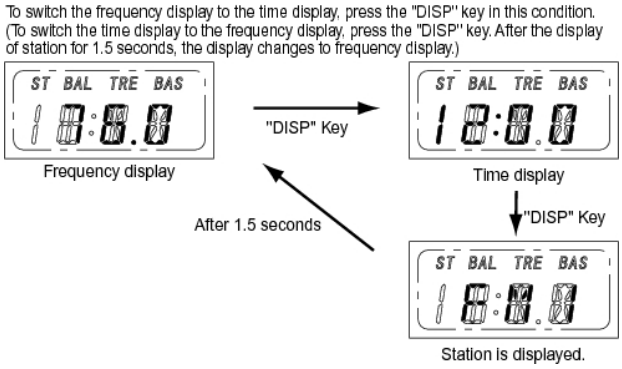

4. Band switching

1. When pressing "AM/FM" key (2) each time, the band display is switched to FM1→FM2→AM in order.
   When the band is switched, the station received before switching is selected.

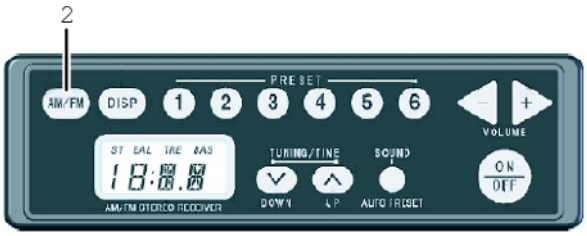

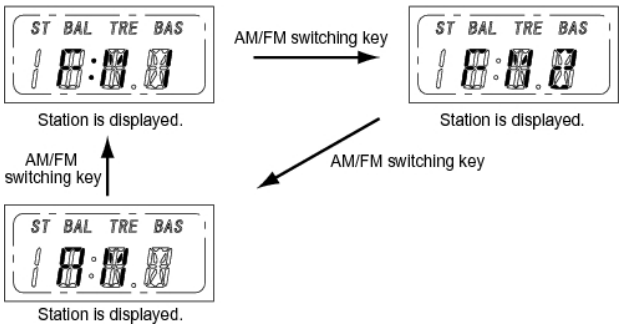

5. How to select station

This radio can select the station by the following three methods.

-Manual tuning

-Auto select station

-Preset memory

Each selecting method is explained below.

Copyright © 2015 Kobelco Construction Machinery Co.,Ltd. All rights reserved. [S2YF00022ZE01] [0731CsCshWbYs]

 https://truckmanualshub.com/

5.1 Manual tuning

1. When pressing "UP" or "DOWN" key, the frequency increases or decreases by one step.
   1 step: AM 9kHz
   1 step: PM 0.1MHz

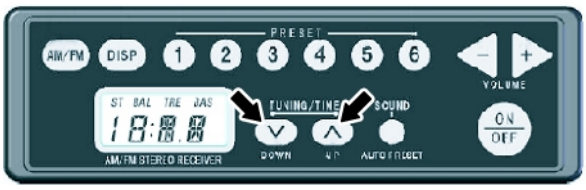

5.2 Auto select station

1. When pressing "UP" or "DOWN" key (Press more than 1 second), the frequency increases or decreases by one step.
2. When the radio waves are received during auto tuning, or when pressing "UP" or "DOWN" key, the auto tuning is interrupted, but the frequency is keeping as it is.

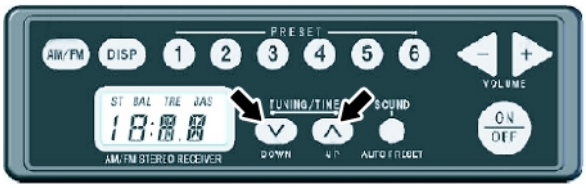

5.3 Preset memory

5.3.1 Auto preset

The good received frequencies are detected, and they can be memorized in 6 memories of preset automatically.

1. Press the tone control key (7) for 1 second or more.
   The desired station starts the presetting.
2. During presetting, the display "A" moves from left to right.
3. After auto presetting, this function can receive the memorized station.

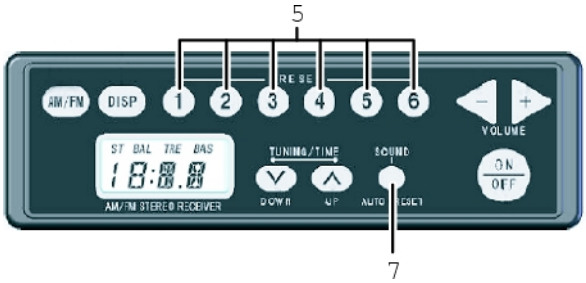

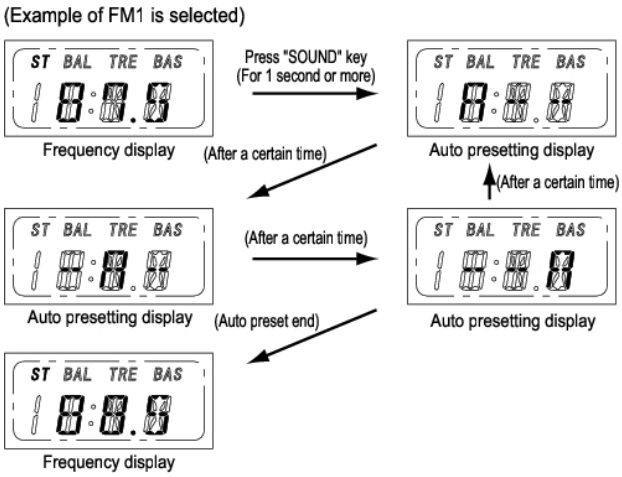

Copyright © 2015 Kobelco Construction Machinery Co.,Ltd. All rights reserved. [S2YF00022ZE01] [0731CsCshWbYs]

5.3.2 Manual preset

Press one of the 6 "PRESET" keys (5) for 1 second or more. The currently received station is memorized in the pushed button of preset No.

1. Press one of the 6 "PRESET" keys (5) for 1 second or more.
2. After 3 flickering of the memorized preset No. display, the frequency is displayed.

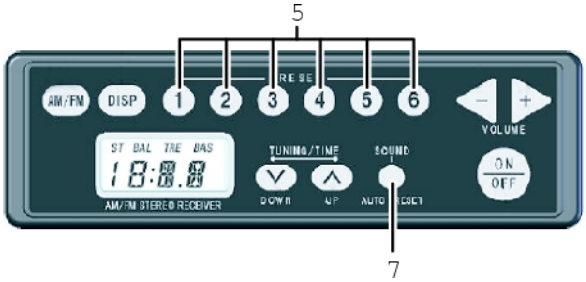

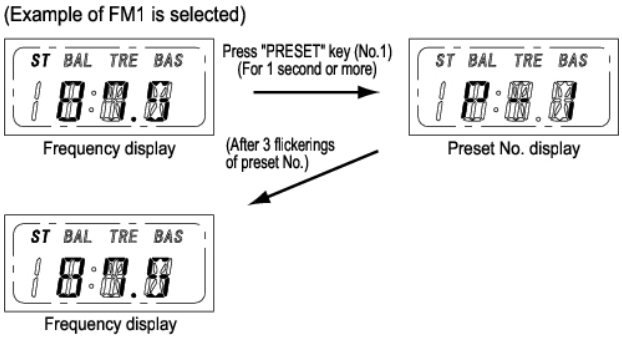

5.3.3 Preset memory

Press one of the 6 "PRESET" keys (5) for 0.5 second or less. And the calling frequency which is memorized in the preset No. and its reception are available by pressing the "PRESET" key.

1. Press one of the 6 "PRESET" keys (5) for 0.5 second or less.
2. After the pressed preset No. is displayed, the display is changed to the frequency which is memorized in the preset No.
3. Receive the required radio station by changed frequency.

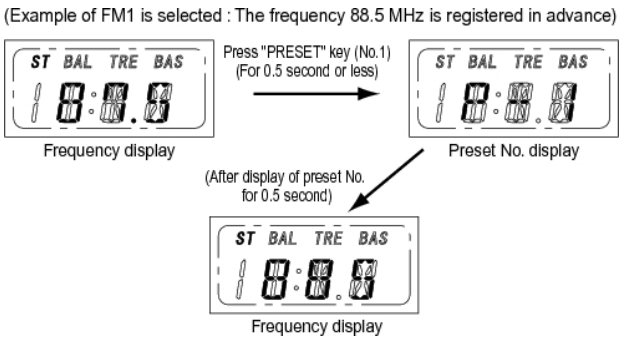

Copyright © 2015 Kobelco Construction Machinery Co.,Ltd. All rights reserved. [S2YF00022ZE01] [0731CsCshWbYs]

 https://truckmanualshub.com/

6. Volume control

1. To turn up the volume level by 1, press the "+" side of volume control key (3). And to turn down the volume level by 1, press the "-" side of volume control key (3). During the operation of volume control key, the level of volume is displayed.
2. Hold the volume control key in the pressed condition, the volume level changes continuously up and down.
3. After operation of the volume control key, the display returns to the frequency or the time display.

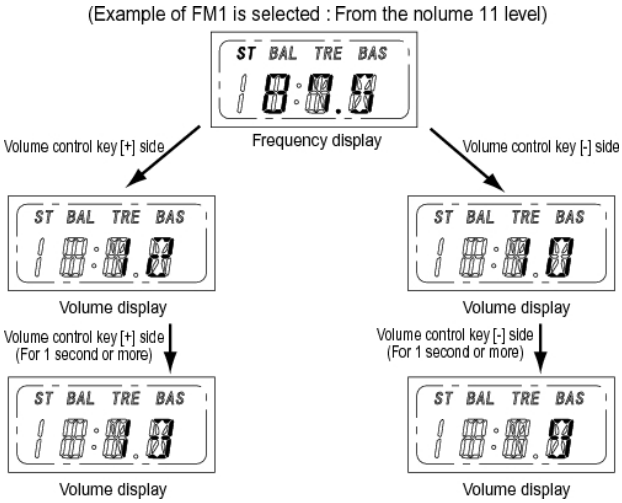

7. Sound control

The "Balance" and "Tone" are adjustable with this key.

-Balance adjustment: "BAL"

To control the volume of right and left speakers.

-Treble adjustment: "TRE"

To control the treble.

-Bass adjustment: "BAS"

To control the bass.

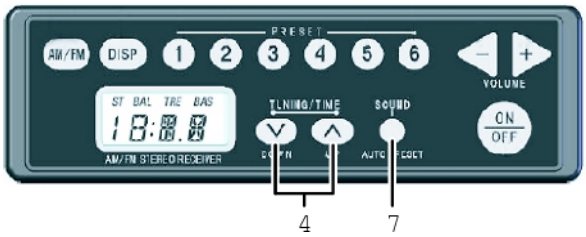

Copyright © 2015 Kobelco Construction Machinery Co.,Ltd. All rights reserved. [S2YF00022ZE01] [0731CsCshWbYs]

7.1 Selection of adjusting item

1. The display changes to "BAL", "TRE", and "BAS" in order whenever "SOUND" control key is pushed. Choose the item that you desire to adjust.

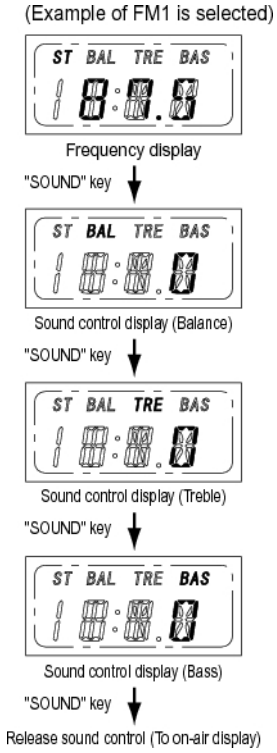

7.2 Balance control

1. To raise the volume of a left speaker, push the "UP" key (4) while "BAL" is displayed. To raise the volume of a right speaker, push the "DOWN" (4) key while "BAL" is displayed.

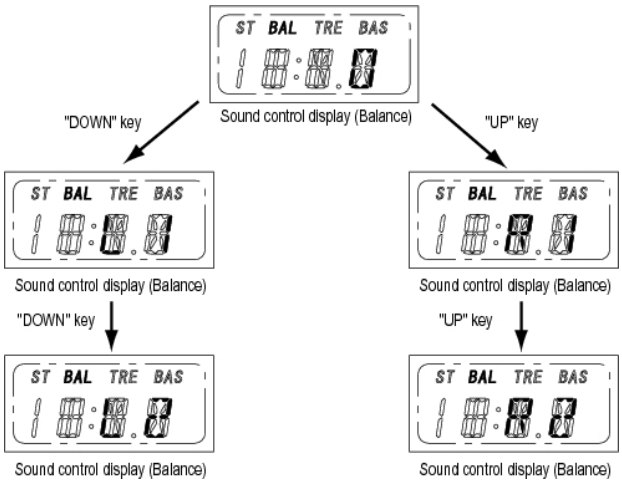

7.3 Treble control

1. To emphasize the treble, push the "UP" key (4) while "TRE" is displayed. To weaken the treble, push the "DOWN" key (4) while "TRE" is displayed.

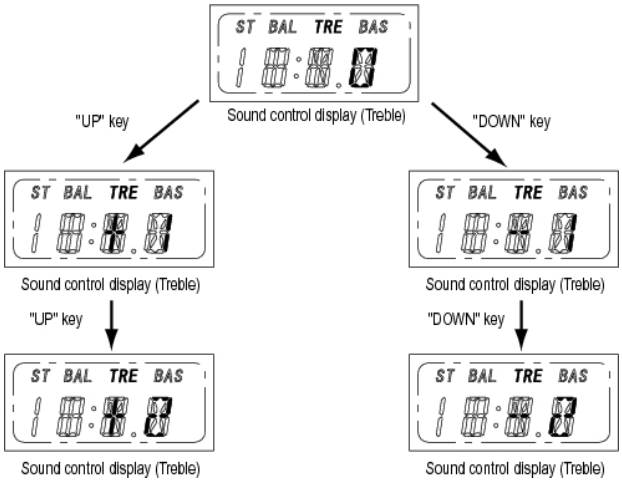

Copyright © 2015 Kobelco Construction Machinery Co.,Ltd. All rights reserved. [S2YF00022ZE01] [0731CsCshWbYs]

 https://truckmanualshub.com/

7.4 Bass control

1. To emphasize the bass, push the "UP" key (4) while "BAS" is displayed.
   To weaken the bass, push the "DOWN" key (4) while "BAS" is displayed.

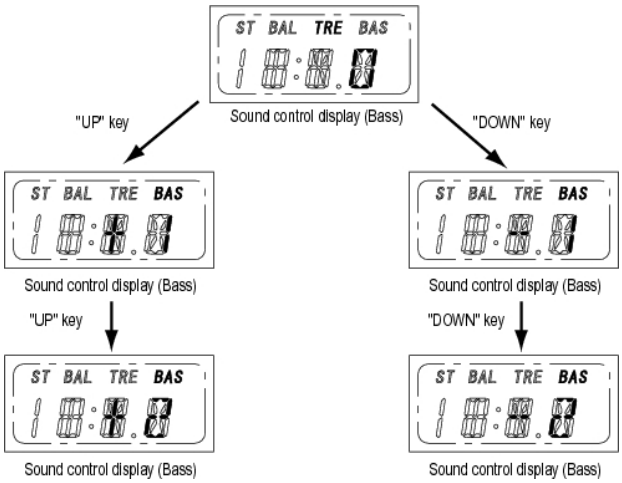

7.5 Time setting

1. Press "DISP" key (6) for 1 second or more while the time is displaying. The "Hour" display flickers.
2. To increase "Hour", press the "UP" key (4). To decrease "Hour", press the "DOWN" key (4).
3. Press "DISP" key (6) again, and the "Minute" display flickers.
4. To decrease "Minute", press the "UP" key (4).
5. Press "DISP" key (6) again, and the time setting is completed.

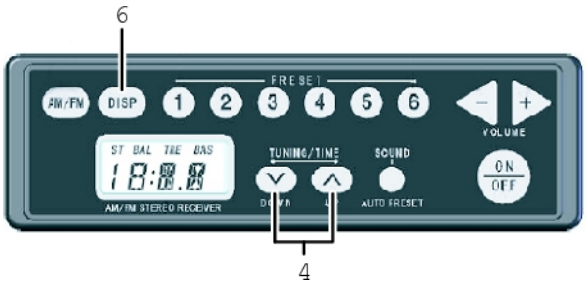

B. ANTENNA

To prevent interference, retract the antenna in before transportation and storing.

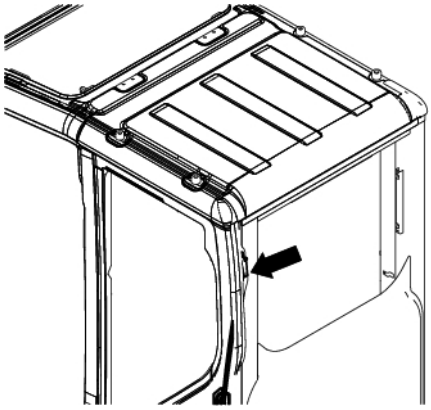

Copyright © 2015 Kobelco Construction Machinery Co.,Ltd. All rights reserved. [S2YF00022ZE01] [0731CsCshWbYs]

2.3.8 AIR CONDITIONER

The air conditioner provides the comfortable indoor atmosphere and freely controls the room temperature and also removes the moisture resulting in prevention of blur on the glasses.
The air conditioner is located under the operator seat and sends out warm air and cool air in the cab.

Grille (Air outlet)
Select air stream in preferable direction by hand.
(A), (B), (C), (D): Air outlet
(E): Solar radiation sensor

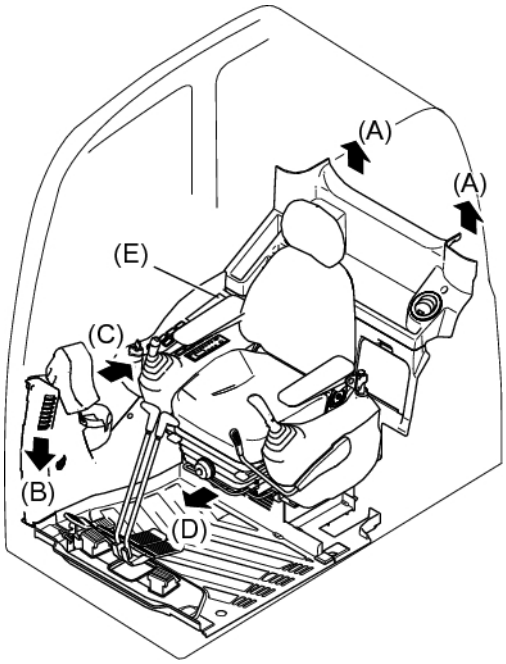

Precaution in Use of Air Conditioner

CAUTION

-When the air conditioner is running-in, start the engine at slow speed. Do not start the air conditioner at high speed. This might cause failure of air conditioner.
-Pay attention to the control panel and solar radiation sensor (E) so as not to splash water on them. The entry of water in the control panel and solar radiation sensor might cause unexpected failure. And do not bring fire near the air conditioner.
-Keep the solar radiation sensor clean to have the auto function of air conditioner achieved sufficiently. And do not place the things which may interrupt the function of sensor on the surroundings.

Copyright © 2015 Kobelco Construction Machinery Co.,Ltd. All rights reserved. [S2YF00022ZE01] [0731CsCshWbYs]

 https://truckmanualshub.com/

Control Panel Description

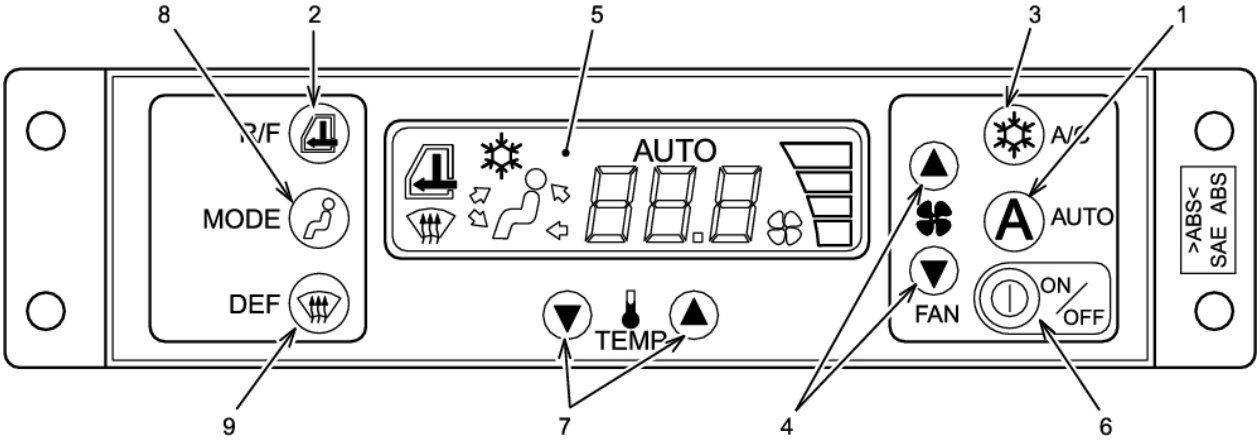

No.	NAME	No.	NAME
1	Auto Control Switch	6	Power Switch
2	Fresh and Recirculate Air Selector Switch	7	Temperature Setting Switch (C degrees <-- --> F degrees Selector Switch)
3	Compressor Switch		
4	Fan Speed Selector Switch	8	Air Outlet Mode Selector Switch
5	LCD Display	9	Defroster Switch

Notice

-The LCD display indicates temperature, air outlet mode, compressor ON - OFF, AUTO, recirculate and fresh air and fan speed.
-Each switch, FAN mark of blower, and TEMP mark are illuminated green at night.

A. FUNDAMENTAL USE

Before turning air-condition on, close doors of cab and windows to achieve the best performance.

1. Press control switch "AUTO" (1) to control air capacity and blower outlet automatically, and set the temperature in the range from 18.5C degrees (65.3F degrees) to 31.5C degrees (88.7F degrees). The outlet temperature, outlet opening and fan speed are adjusted automatically so that indoor temperature of cab comes closer to the set temperature.
2. Select proper mode manually through recirculate and fresh air capacity selector switch (2) and compressor switch (3) ON - OFF.
3. Select preferable fan speed manually through fan speed selector switch (4) when fan speed, selected through auto control, is not preferable.
   The indicator lamp of "AUTO" in LCD display goes out. Press "AUTO" switch to retune to automatic climate control.

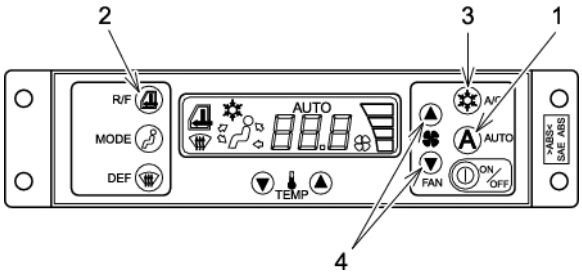

Copyright © 2015 Kobelco Construction Machinery Co.,Ltd. All rights reserved. [S2YF00022ZE01] [0731CsCshWbYs]

B. CONTROL PANEL FUNCTIONS

1. Main Power Switch and Display

a. LCD display is illuminated (5) when the climate control-AC is operating.
When the climate control-AC is stopped, LCD will be tuned off.

b. Press main power switch (6), and all functions for the climate control-AC switch ON or OFF.
Each time when this switch is pressed, the function switches ON and OFF. When switched ON, the climate control-AC starts operating at the point set before switching OFF (when it is set to "AUTO", in auto mode; if NORMAL is selected, then in normal mode).

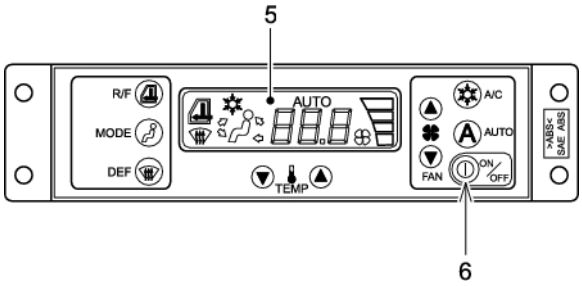

2

IMPORTANT

The key switch will switch air-conditioner OFF, but the operating condition just before switching off may not be restored when the key switch is turned ON again.

2. Auto Control Switch and Display

a. Press the main power switch (6) to activate the climate control-AC and the LCD display (5) will illuminate.

b. Press control switch AUTO (1), and fan speed and air outlet are automatically controlled, and "AUTO" indicator lamp on LCD display is illuminated.

c. When the main power switch (6) is OFF, the system will retain the previous setting in memory.
Therefor, when the main power switch is pressed again, the climate control AC will come on in the auto control mode. In the auto mode, the fan speed and air outlet openings are operated automatically

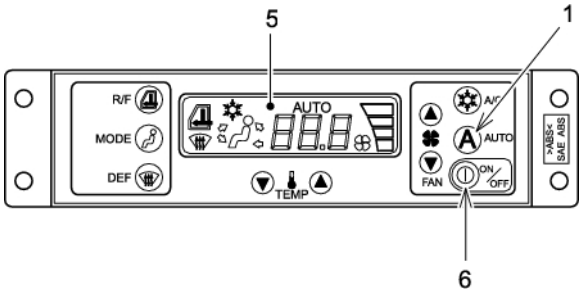

Copyright © 2015 Kobelco Construction Machinery Co.,Ltd. All rights reserved. [S2YF00022ZE01] [0731CsCshWbYs]

 https://truckmanualshub.com/

3. Temperature Setting Switch and Display

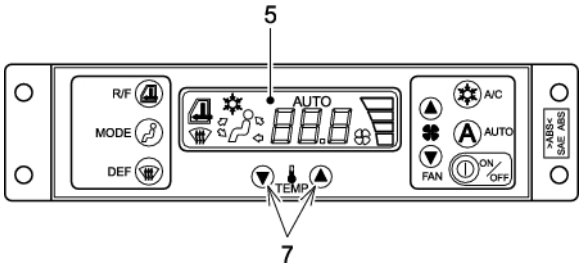

a. The set temperature is indicated in digits on LCD display (5). Temperatuer set range is 18.5C degrees (65.3F degrees) to 31.5C degrees (88.7F degrees).
b. Press the two temperature set switches (7) simultaneously for 5 seconds to change the display from Centigrade (C degrees) to Fahrenheit (F degrees) or viceversa in the LCD display.
   (Eg.) 25C degrees --> 77F degrees or 77F degrees --> 25C degrees
c. Press temperature set switch DOWN or UP to change the set temperature.
   The temperature goes up or down by 0.5C degrees (0.9F degrees) in graduation.
   The set temperature may be raised or lowered by continued pressing of the switch.
d. The set temperature 18.5C degrees (65.3F degrees) is the lowest cooling temperature, and 31.5C degrees (88.7F degrees) is the highest heating temperature.
   Control beyond either of these limits is not possible.

4. Air Outlet Mode Selector Switch and Display

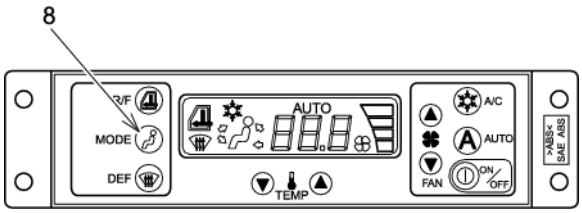

(1) Air outlet position is indicated by the arrow on LCD display.
(2) Press air outlet mode switch (8) in the condition where auto display light is on, and the display mode is fixed, "AUTO" indicator lamp on LCD display goes out, and "AUTO" control of air outlet opening is released.
   Press it again, and the level is changed to VENT --> BILEVEL --> FOOT --> FACE

LCD Display				
Air Outlet Opening	Vent	Bi-level	Foot	Face
Air Outlet Direction	Upper half of body	Upper half of body, foot	Foot, front glass	Upper half of body (Front)

Copyright © 2015 Kobelco Construction Machinery Co.,Ltd. All rights reserved. [S2YF00022ZE01] [0731CsCshWbYs]

5. Defroster Switch and Display

a. Press defroster switch (9), defroster indicator lamp will be displayed (5).

b. Press air outlet mode selector switch (8), and it returns to air outlet mode just before pressing defroster switch.

c. Press defroster switch (9) in the condition where AUTO display is lighting up, "AUTO" indicator lamp on LCD display (5) goes out and the auto control of air outlet opening is released.

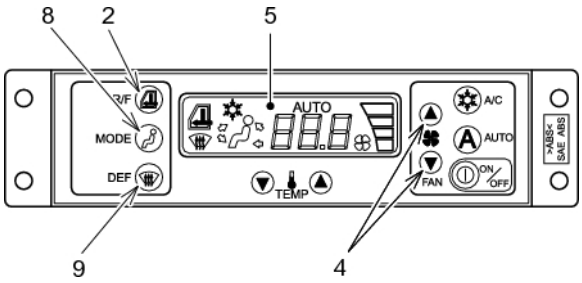

6. Recirculate and Fresh Air Selector Switch and Display

a. Suction (fresh air intake) mode is indicated on LCD display (5).

b. Each time recirculate and fresh air capacity selector switch (2) is pressed, the mode is switched to air recirculate or fresh air intake.

A: Air Recirculation

B: Fresh Air Intake

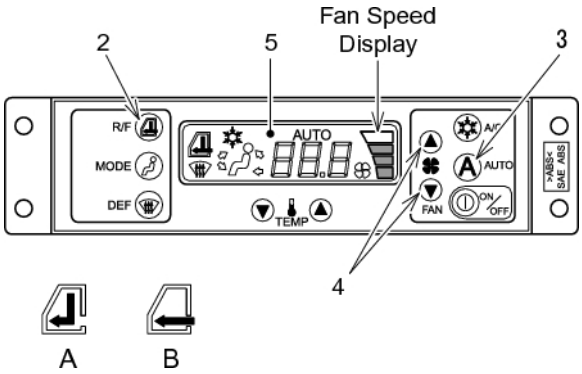

7. Compressor Switch and Display

Press compressor switch (3) in the condition where mark on LCD display is unlit, compressor starts operating and indicator lamp of mark on LCD display (5) goes on.

Press it again, and compressor turns off, and indicator lamp of mark on LCD display (5) goes out.

8. Fan Speed Selector Switch and Display

When it is set to MANUAL mode, fan speed on LCD display is as follows.

DISPLAY	FAN SPEED
LCD 1 lamp is lit up.	Low
LCD 2 lamps are lit up.	Mediun
LCD 3 lamps are lit up.	High
LCD 4 lamps are lit up.	Max

LCD Display				
Fan Speed	Low	Mediun	High	Max.

Press UP or DOWN of fan speed selector switch, and auto control of fan speed is released, and "AUTO" indicator lamp on LCD display (5) goes out.

Copyright © 2015 Kobelco Construction Machinery Co.,Ltd. All rights reserved. [S2YF00022ZE01] [0731CsCshWbYs]

 https://truckmanualshub.com/

9. Setting Temperature Display Switching Function from/to F degrees to/from C degrees

The setting temperature display can be switched from/to F degrees to/from C degrees.

While the fan is operating, press "▼" and "▲" switches (7) simultaneously for 5 seconds or more, and the display is switched form/to Fahrenheit to/from Celsius. (But the unit is not displayed.)

	LC (Liquid crystal) display
Celsius (°C)	18.0~32.0
Fahrenheit (°F)	63~91

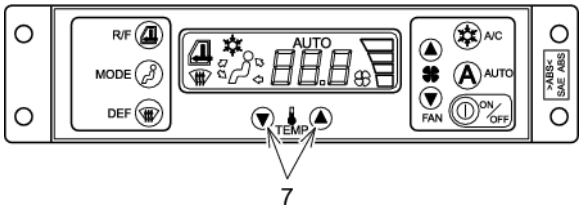

10. Treatment of Season In and Off

(1) Season in

Contact our dealer/distributor for checking and service of air conditioner before air-cooling season (season in) so that the air conditioner is used in good condition for a long time.

(2) Season off

Operate air conditioner for several minutes once a week in the period of out of season (season off).

The operation maintains the air conditioner in good condition preventing short of oil in each part of compressor.

Copyright © 2015 Kobelco Construction Machinery Co.,Ltd. All rights reserved. [S2YF00022ZE01] [0731CsCshWbYs]

2.3.9 HANDLING OF SEAT BELT

WARNING

Install the seat belt properly or the fundamental performance may not be achieved.
-Make sure that there is no abnormality on the belt attaching bracket and bolts before fastening the belt.
-Check attaching bolts which are used to secure the belt to the seat for loosening and tighten loose bolts again.
-Do not fail to fasten the belt during operation.

How to Fasten Seat Belt

1. Since this seat belt is equipped with take-up motion, the adjustment of length is unnecessary.
2. Check that the seat belt (1) is not twisted, and pull the seat belt out.
3. When fastening seat belt, pull it out a little longer than the required length and insert it into buckle until clicking sound is heard. Release hand, and the length is automatically adjusted and the buckle is locked.

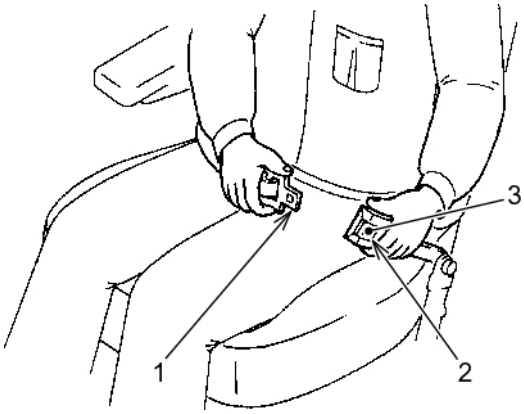

How to Unfasten Seat Belt

1. Press the red button (3) of the buckle (2), and the belt (1) is unfastened.

Copyright © 2015 Kobelco Construction Machinery Co.,Ltd. All rights reserved. [S2YF00022ZE01] [0731CsCshWbYs]

https://truckmanualshub.com/

2.3.10 OPERATOR SEAT

The operator seat incorporates several adjustment mechanisms to insure operator comfort, ease of operation and operator safety. The adjustment areas are as follows.

WARNING

When adjusting the operator seat, pay attention to hands in order not to be caught between handle and seat.

A. Operator Weight Adjustment
Rotate the adjustment knob (1) until weight close to the operator's weight is at the top end of the dial. (Not equipped in Asia.)
B. Seat Height Adjustment
1.
Pull height adjustment lever (2) up to raise or lower rear of seat.
2.
Push height adjustment lever (2) down to raise or lower front of seat.
C. Seat Reclining Adjustment
1.
Pull reclining adjustment lever (3) up to set desired reclining angle.
2.
Release reclining adjustment lever to lock seat in position.
D. Seat Front to Back Adjustment
Pull up on seat adjustment bail (4) and move seat forward or backward to desired position
E. Arm Rest Adjustment
Lower arm rest (5) and with finger, turn adjustment wheel until arm rest is in desired position.
To fine-adjust the angle of arm rest, turn control dial (8).
F. Head Rest Adjustment
1.
Move head rest (6) forward or backward to desired reclining angle.
G. Lumber Support (7)
It is possible to adjust the force which is supporting the lumber in 5 steps by turning the knob in counterclockwise. With turning the knob in counterclockwise the supporting force is raised and returns to the condition before adjustment at 6th step.

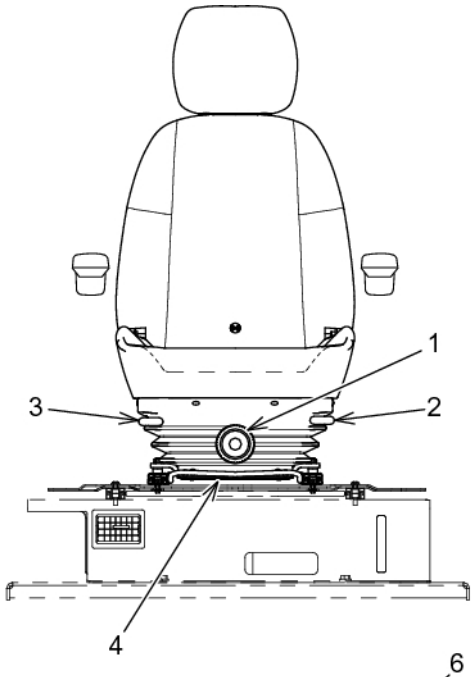

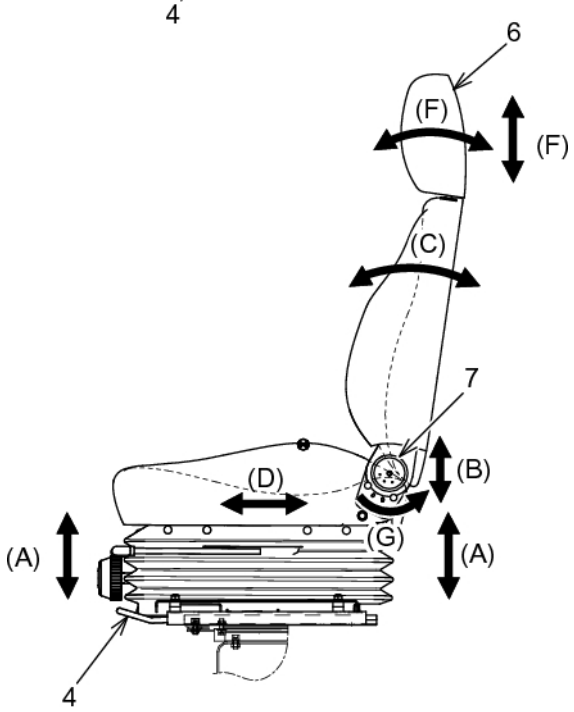

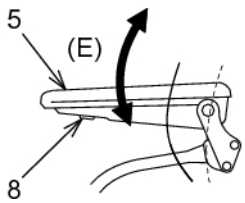

Copyright © 2015 Kobelco Construction Machinery Co.,Ltd. All rights reserved. [S2YF00022ZE01] [0731CsCshWbYs]

2.3.11 ARM REST ADJUSTMENT

The height of right/left arm rests is adjustable in 4 steps.

1. Open the clamp (1) in the direction of arrow.
2. Push the protruded pin (2).
3. Slide the armrest up and down to adjust the height of armrest.

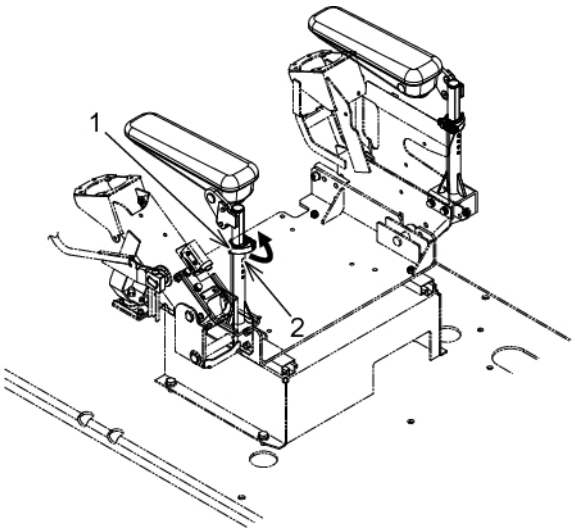

2.3.12 ADJUSTMENT OF CONTROL LEVER

The height of right/left control stand is adjustable in 3 steps.

1. Remove bolt (1).
2. Adjust the height of hole on plate (2) to your easy to operate position and tighten plate (2) to the fixing position with bolt (1).
3. Similarly, adjust stand height on the other side by procedure 1) and 2).

   A : Low position
   B : Middle position
   C : High position

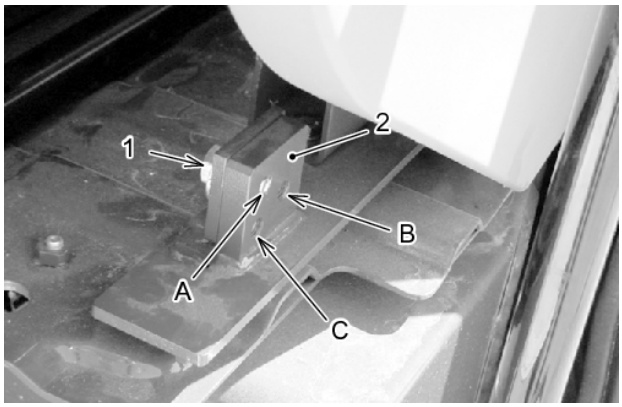

Copyright © 2015 Kobelco Construction Machinery Co.,Ltd. All rights reserved. [S2YF00022ZE01] [0731CsCshWbYs]

 https://truckmanualshub.com/

2.3.13 OPERATOR CAB

WARNING

When necessary to leave from the operator seat, lock the safety lock lever.
After the control lever is unexpectedly touched without the safety lock lever locked, this may cause serious accident resulting in injury and death.

A. Cab Door Lock

This is used to fix door in the condition where the door is open.

1. Push door against catch (1) and door is fixed.
2. When necessary to open the door, push down lever (2) on the left side of operator seat and the catch is released.
3. When necessary to fix the door, fix door to the catch securely.

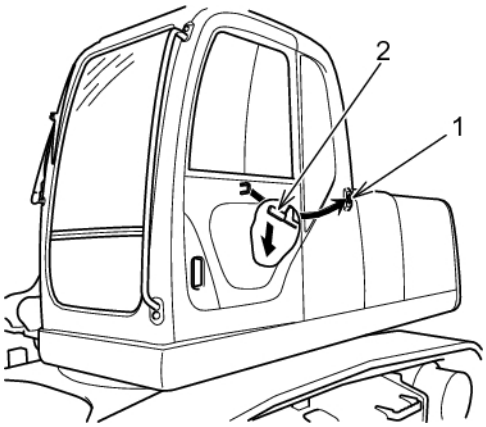

CAUTION

In operation, lock the door securely even if it is on either open side or close side. When not locked, the door may be open unexpectedly and this might cause the injury. And also it may cause the failure of machine.

B. Releasing Door Lock from Inside of Cab

When necessary to open the door from the inside of cab, pull lever (3) by hand and the door opens.

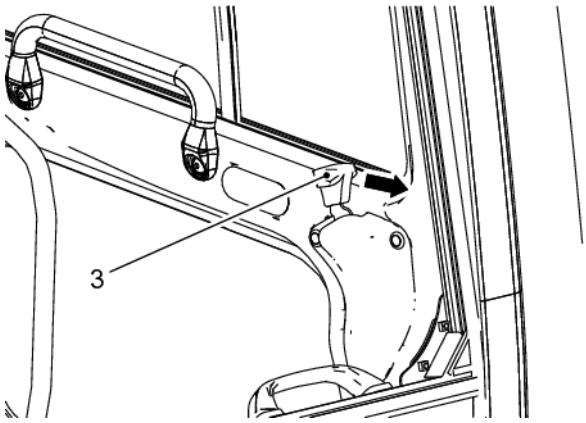

Copyright © 2015 Kobelco Construction Machinery Co.,Ltd. All rights reserved. [S2YF00022ZE01] [0731CsCshWbYs]

C. Opening and Closing Front Window

WARNING

-The front window should be opened and closed in the condition where the machine is parked in level and locked securely. If the lock is released in the forward tilting position of machine there is a possibility of falling of the front window.
-When closing the front window, the closing speed increases due to the weight of front window. Hold and close it by both hands securely.
-When storing the front window in, pull up the safety lock lever to the "LOCKED" position and stop the engine.

1.
Park the machine on the level ground, put the bucket on the ground, pull up the safety lock lever to the locked position and stop the engine.

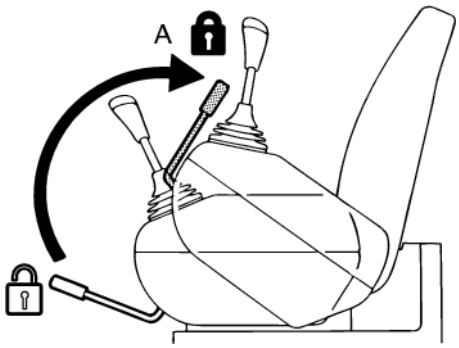

2.
Push lock lever (4) on the upper center part of window (upper) right and release the lock.

3.
Hold and push up the handle on the upper and lower parts of the front upper window. After the front upper window reached to the end on the rear side of roof, it is locked automatically. And then make sure that it is locked securely.

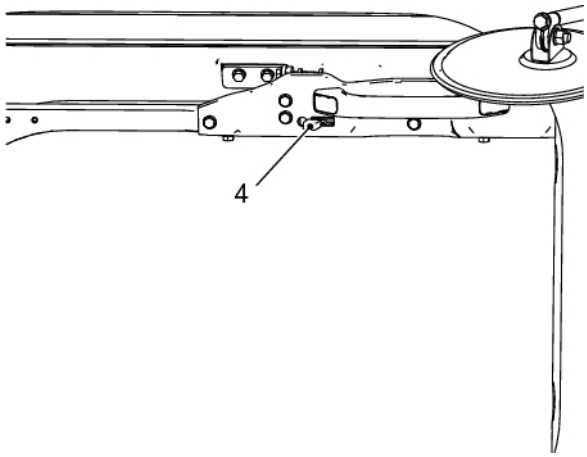

4.
When closing the front upper window, close it by the reverse procedure of that in above items 2.to 3.

5.
When closing the front window, push the upper sides of front window forward and lock it securely.

CAUTION

To prevent from catching your hand between windows, open and close the front window slowly. The work in no locking and incomplete locking conditions might cause injury.

Copyright © 2015 Kobelco Construction Machinery Co.,Ltd. All rights reserved. [S2YF00022ZE01] [0731CsCshWbYs]

https://truckmanualshub.com/

D. Removing & Storing Lower Front Window

1. After placing upper front window in ceiling, hold lower front window by hands and remove it from window frame.
2. Store the removed lower front window in holder (5) on the left rear side of cab securely.

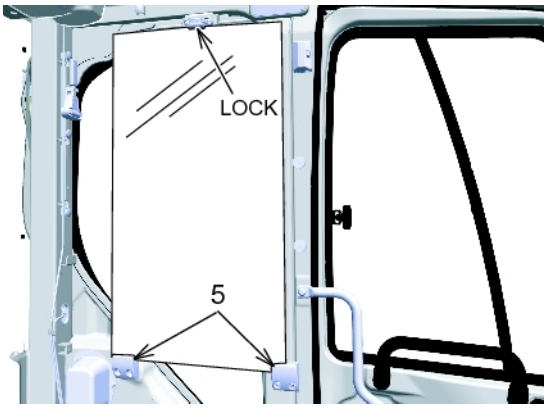

E. Cab Room Lamp

a. Turn cab lamp "ON" by pushing the lamp switch way up.
b. The lamp goes out at the neutral position.
c. Turn "OFF" by pushing switch all the down ward.

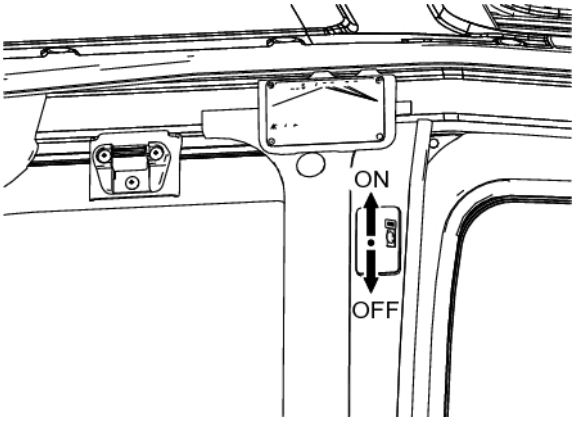

Copyright © 2015 Kobelco Construction Machinery Co.,Ltd. All rights reserved. [S2YF00022ZE01] [0731CsCshWbYs]

2.3.14 EMERGENCY ESCAPE FROM CAB

If it is impossible to open the cab door in an emergency, escape from the cab by the following way.

1.
Open the front window and escape through the front window.

2.
If it is impossible to open the front window, break the front window glass by using life hammer (1) provided on the right rear side of cab.

3.
If the front window is unavailable to escape, break the rear window glass by using life hammer (1).

Notice

For how to open the front window, see item "Opening and closing front upper window".

CAUTION

Pay attention to the broken pieces so as not to be injured when breaking the window glass.

IMPORTANT

Labels (2) indicating the emergency exit are affixed on the rear windows.

4.
If it is impossible to use rear windows for escape, open and escape from the skylight.

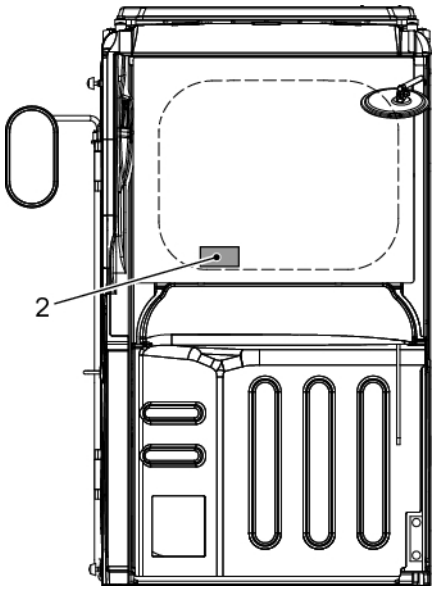

REAR INSIDE OF CAB

Copyright © 2015 Kobelco Construction Machinery Co.,Ltd. All rights reserved. [S2YF00022ZE01] [0731CsCshWbYs]

 https://truckmanualshub.com/

2.3.15 OTHER EQUIPMENT (ACCESSORY)

A. Tool Box

Use this box for tools and accessory.
This box is located on the right front side of machine.
Release lock (1) of the cover with starter key and support it with stay (2).
After using tools, release the stay and close the cover, and then lock it with starter key.

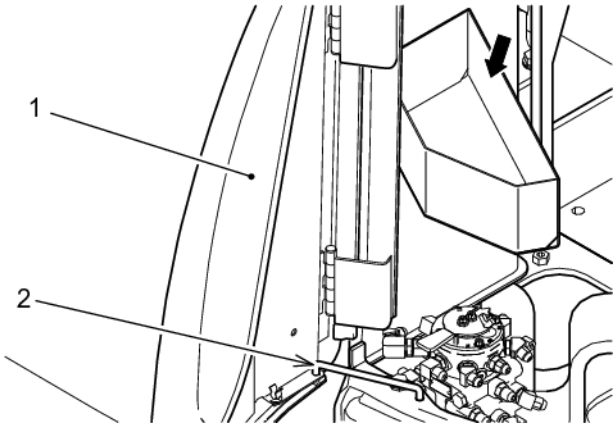

B. Grease Gun Holder

This is provided on the inside of cover on the left rear side of machine. When the gun is not used, put it on this holder.

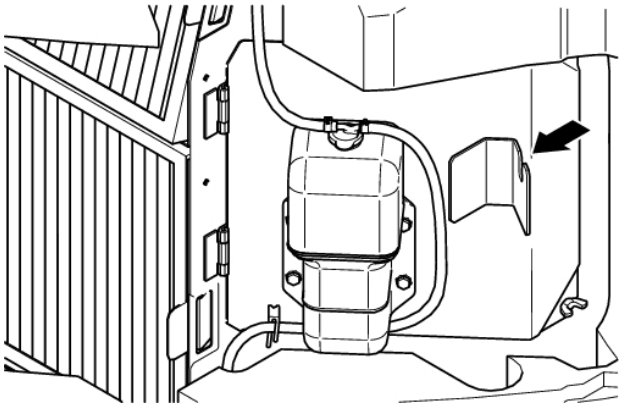

C. Cup Holder

This is provided on the right side console in the cab.
This is used to put drinks, etc. in.

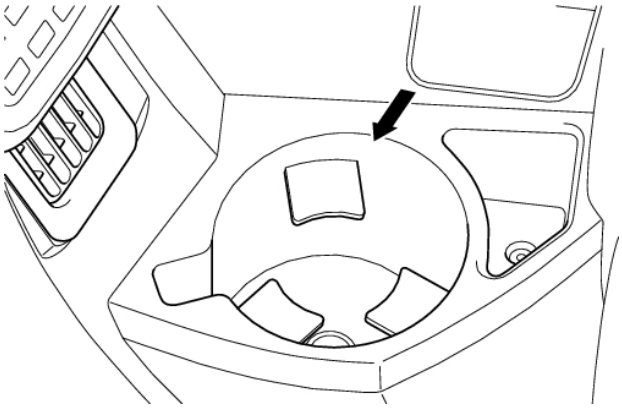

Copyright © 2015 Kobelco Construction Machinery Co.,Ltd. All rights reserved. [S2YF00022ZE01] [0731CsCshWbYs]

3. MACHINE OPERATION

Copyright © 2015 Kobelco Construction Machinery Co.,Ltd. All rights reserved. [S2YF00022ZE01] [0731CsCshWbYs]

Copyright © 2015 Kobelco Construction Machinery Co.,Ltd. All rights reserved. [S2YF00022ZE01] [0731CsCshWbYs]

3.1 MACHINE OPERATION

3.1.1 EVERYDAY CHECK-UP

A. Daily Inspection

Before starting the engine, walk around the machine to check for any loose nuts and bolts, any oil, fuel or coolant leakage, and the condition of attachment and hydraulic system.
Check for any looseness in the electrical wiring and for any accumulated material (leaves, dirt , etc.). Repair and clean as necessary.

WARNING

The deposit of combustible, fuel leakage and oil leakage in heated area around the engine, muffler and battery may cause fire of machine. Check the area sufficiently, and if the abnormality is found, repair it or contact our dealer/distributor.

1. Check the engine for any oil, fuel or coolant leakage. Repair as required.
2. Check the area around the engine and radiator for any accumulated material and remove as required.
3. Check the hydraulic equipment, hydraulic oil tank, hoses, and joints for oil leakage, and repair as required.
4. Check the travel system, such as the crawler, idlers, and sprockets, for any damage or wear, and the bolts for looseness.
5. Check the attachments, cylinders, linkages and hoses for any cracks, wear or looseness and repair as required.
6. Check the door, cover, steps and handrails for damage, and the bolts for looseness. Repair and tighten bolts as required.
7. Verify that the gauges and the monitor panel (gauge cluster) function properly.
8. Check rear view mirror for abnormality, and if abnormality is found, repair it.
   Clean the surface of mirror and adjust the angle so that the rear sight is visible from the operator seat.
9. Check seat belt and attaching metal for possible damage and if damaged, replace it with new one.

Copyright © 2015 Kobelco Construction Machinery Co.,Ltd. All rights reserved. [S2YF00022ZE01] [0731CsCshWbYs]

3.1.2 CHECKING BEFORE STARTING ENGINE

The following checkup should be performed once before the first engine startup in a day.

A. Checking Coolant Level for Shortage and Making Up

WARNING

-Do not open radiator cap if not required.
Check coolant level of the reserve tank (1) when engine is cooled down.
-Never remove radiator cap when engine is hot. Allow engine to cool down before removing radiator cap.

CAUTION

The coolant level check switch is provided on the upper part of radiator upper tank.
When the engine is running and the engine switch is on, if warning is displayed on the multi-display, loosen the radiator cap and supply coolant to the neck of radiator.

1. Open left side door and check coolant level of reserve tank (1).
2. Open side door of radiator with starter key and check that the coolant level is in the range of FULL (A) - LOW (B) of reserve tank. If shorted, remove filler cap (2) of reserve tank and supply to FULL (A) level.
3. After supply, tighten the cap securely.
4. When the reserve tank is empty, after checking it for oil leak check radiator coolant level for shortage, and if shorted, first supply coolant to the engine and then to the reserve tank.
5. Close the side door on the left side face of machine and lock it with starter key.

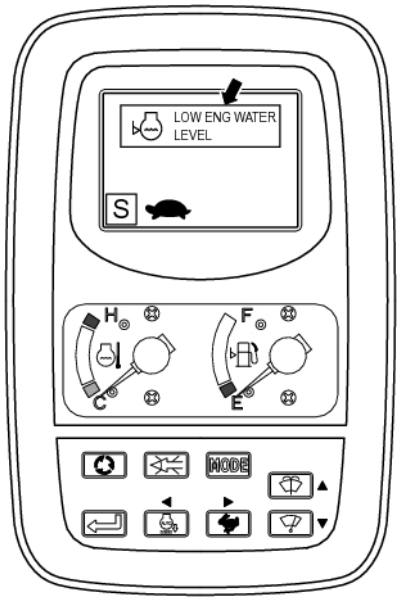

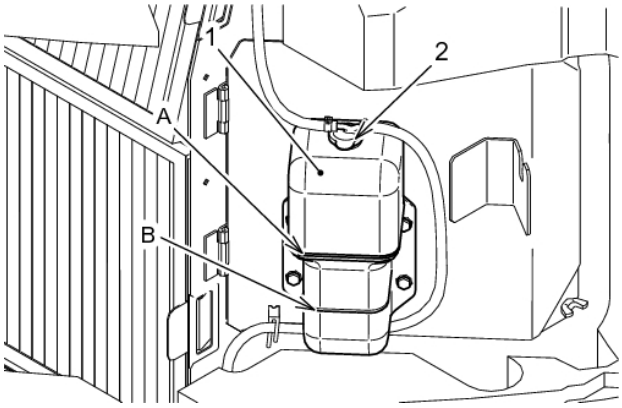

Copyright © 2015 Kobelco Construction Machinery Co.,Ltd. All rights reserved. [S2YF00022ZE01] [0731CsCshWbYs]

B. Checking Oil Level of Engine Oil Pan and Making Up

WARNING

Immediately after engine is stopped, there is a possibility of getting burn with heated parts and oil. Start working after the temperature is not hot.

IMPORTANT

-Make sure the machine is on firm level when checking engine oil level.
-Always make sure to check engine oil level before starting the engine.
-Keep the engine to standstill for at least 30 minutes, when checking engine oil level after working.

1. Release catch of bonnet, open engine hood on the rear side of machine and lock it with stay.
2. Pull out oil level gauge (G) and wipe oil with a clean cloth.
3. Insert oil level gauge (G) in oil pan fully.
4. When the level is in the range of H - L of oil level gauge (G) it is proper. If the level is insufficient for L level, make up engine oil for the shortage through oil filler cap (F). If the oil is contaminated and deteriorated, change it ahead of schedule without depending on the periodic change interval. For oil in use, refer to "4.3 LUBRICANT, FUEL & COOLANT SPECIFICATIONS" in Chapter 4.
5. When oil level is higher than H level, connect drain hose (H) to engine drain plug (P), and drain excess engine oil. And be sure to check oil level again.
6. If the oil level is proper, insert level gauge (G) securely, close engine hood and lock it with starter key.

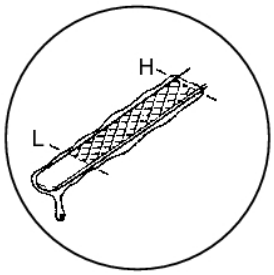

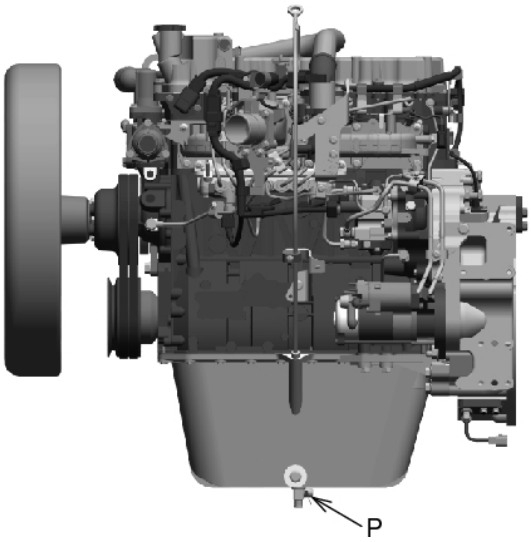

Copyright © 2015 Kobelco Construction Machinery Co.,Ltd. All rights reserved. [S2YF00022ZE01] [0731CsCshWbYs]

C. Checking Fuel Level and Making Up

WARNING

-Use diesel fuel only and stop engine before refilling.
-Do not overflow fuel while refilling. It may cause damage to the fuel system and cause oil spouting. Clean up all spilled fuel to prevent fire.
-Dispose of all hazardous waste in accordance with government environmental laws and regulations.

IMPORTANT

-It is possible to operate machine for 2 days (8 hours a day) in general use when the tank is full. Be sure to fill it up to the brim after the work in 2nd day was finished. But do not supply with fuel to the level more than necessary (to the top end of tank). There is a possibility of overflowing because the fuel expands as the outside air temperature rises.
-Use specified diesel oil for fuel.
This engine is equipped with electronic control high pressure fuel injection system to obtain the features like excellent fuel consumption and emission in clean condition. This system requires the parts in high precision and high lubricating ability. Therefore if low viscosity fuel in low lubricating ability is used, the durability may be notably lowered.

1. Check fuel level with fuel gauge by turning starter switch on. The fuel level is low when the fuel gauge reads close to E point.
2. Stop engine with starter key, remove filler cap (1) of fuel tank and make it up with fuel making sure of the level.
   When strainer is fitted to filler port, do not remove the strainer for making up.
3. When dirt is adhered on strainer (2), take out the strainer and clean it with light oil or air gun, and then fit it to filler port again.
4. Refer to "4.3 LUBRICANT, FUEL & COOLANT SPECIFICATIONS" in Chapter 4.
   -Fuel tank capacity: 330 L (87 gal)
5. After refueling, tighten filler cap (1) securely.

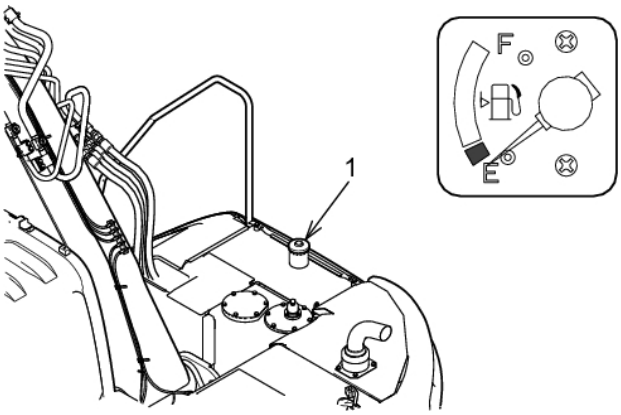

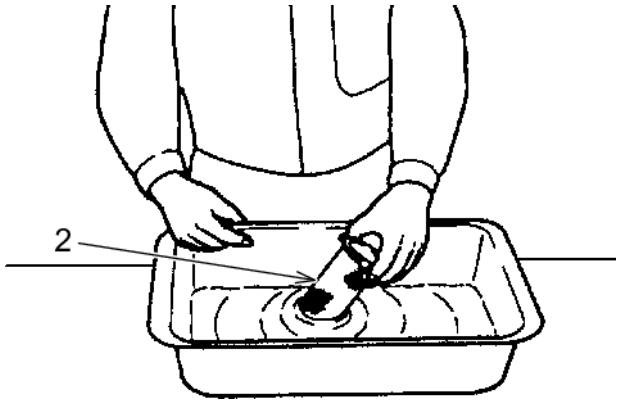

Copyright © 2015 Kobelco Construction Machinery Co.,Ltd. All rights reserved. [S2YF00022ZE01] [0731CsCshWbYs]

D. Fuel Pre-Filter Drain

The fuel pre-filter isolates water that mixes in with the fuel. The case is equipped with a float (3). When water accumulates, the float rises. When the float rises to the level line, drain water.

1. The fuel pre-filter (1) is installed in front of counterweight on the right rear side of machine.
2. Open side door on the right side.
3. Put container for drain oil under drain hose (2).
4. Loosen the air bleed plug (4).
5. Loosen the drain plug (5) to drain water.
6. When the float comes down to the bottom, close the drain plug (5) and the air bleed plug (4).
7. Check that fuel is not leaking.
   Drain water whenever the float rises to the level line, regardless of inspection time.

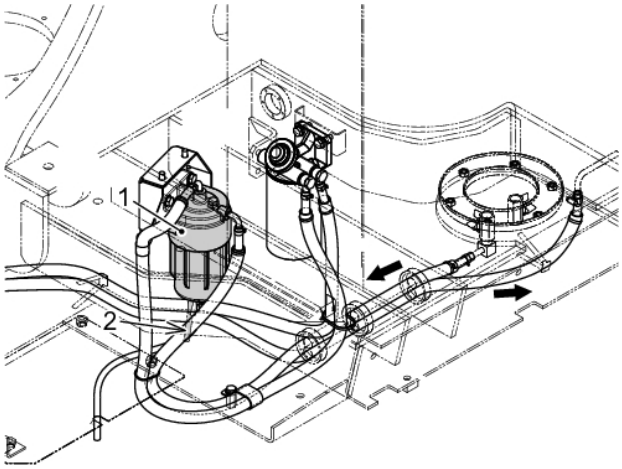

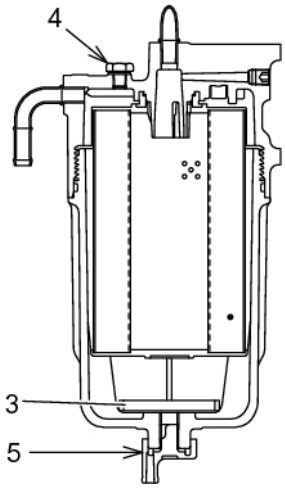

E. Checking Radiator, Oil Cooler and Filter

1. Using starter key, unlock side door on left side of counterweight, and open it.
2. By visual check, check mud, dust and leaves which contaminate filters (1) and (2).
3. When filter is contaminated heavily, refer to "4.14 250 HOUR (3-MONTH) INSPECTION MAINTENANCE PROCEDURE" for Radiator and oil cooler debris screen.

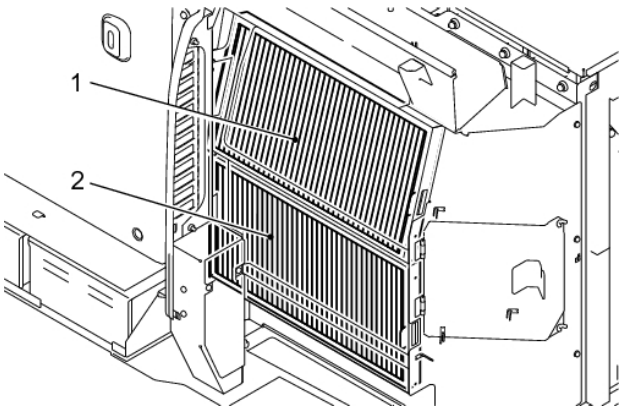

Copyright © 2015 Kobelco Construction Machinery Co.,Ltd. All rights reserved. [S2YF00022ZE01] [0731CsCshWbYs]

F. Check Hydraulic Oil Level

WARNING

It is very danger because the inside of hydraulic tank is heated and pressurized.
When removing filler port plug, stop engine and remove breather top end cap (1) and then release pressure from hydraulic oil tank by pressing the valve head.
For safe operation on inclines, the hydraulic oil level must be maintained between "Proper Level" and "Upper Limit" mark.

Checking

1.
The hydraulic tank is installed on the right side.
2.
Move the machine to firm level ground and set it in the hydraulic oil level check position.

Hydraulic Oil Level Check Position

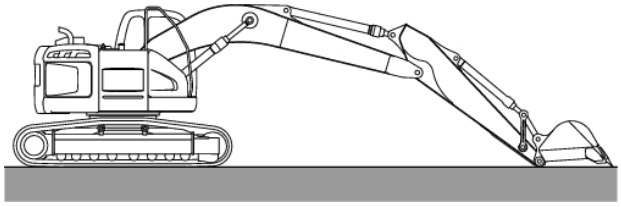

3.
Check the oil level through sight level gauge (G) provided on the side of the hydraulic tank. Hydraulic oil level should be between H and L. Oil level varies depending on oil temperature. Check the oil level referring to the followings.

・Before starting :
"L" level oil temp. 10 to 30 C degree (50 to 86 F degree)
・Normal operation :
"H" level oil temp. 50 to 80 C degree (122 to 176 F degree)

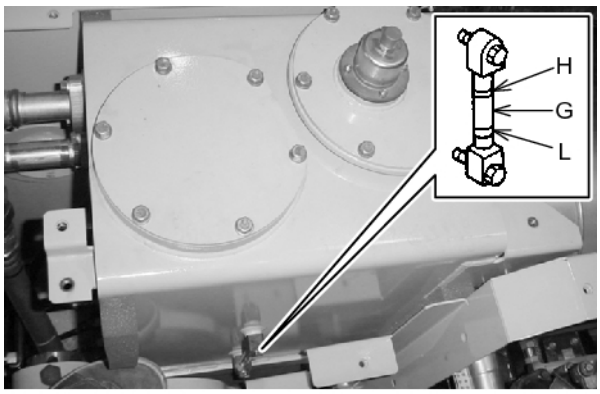

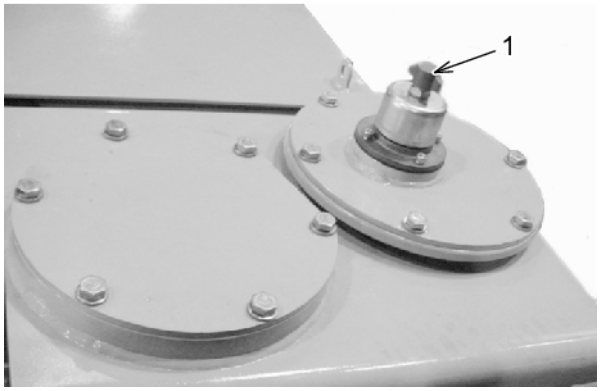

IMPORTANT

Avoid overfilling. It causes damages on hydraulic equipment or oil spouting.

Notice

For make up procedure of hydraulic oil, refer to section "4.18.A Change Hydraulic Oil" in Chapter 4.

Copyright © 2015 Kobelco Construction Machinery Co.,Ltd. All rights reserved. [S2YF00022ZE01] [0731CsCshWbYs]

G. Checking Belt Tension

WARNING

Rotating parts can cause injury.
Keep away from fan and belt when engine is running.
Stop engine before servicing.

Check the fan and alternator belt for insufficient tension, wear, and damage. Insufficient belt tension may cause battery charge failure, engine overheating, or abnormal belt wear. If too much tension is applied to the belt, the bearings or belt may be damaged prematurely.
Apply a force of 98 N {22 lb} to the center of belt between pulleys, and measure the belt deflection. The table below shows normal condition.

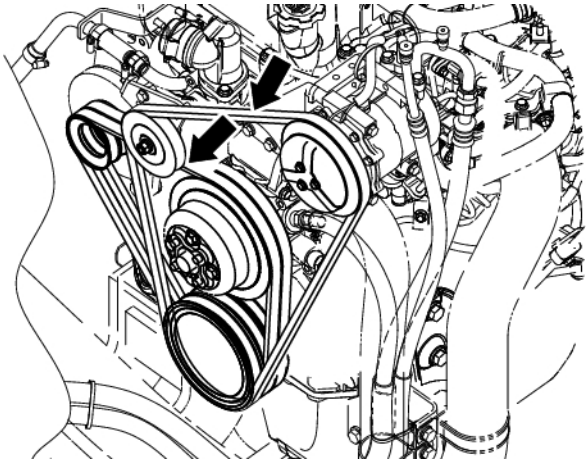

Belt	When new belt replaced mm (in)	When inspected mm (in)	Force N (lbf)
Alternator, Fan	8 to 10 mm (0.31 to 0.39")	10 to 12 mm (0.39 to 0.47")	98 (22)
Air-conditioner	6 to 7 mm (0.24 to 0.28")	7 to 8 mm (0.28 to 0.31")	28 (6.3)

IMPORTANT

-When replace with new belt, there is a lack of initial adaptability of the belt. Run the engine at idling speed for about three or five minutes. After that, adjust the belt tension again.
-New belts get complete initial elongation after being run about two hours.
-When you replace V-belts which are two in on set, make sure to replace both of them.

See the section "4.14 250 HOUR (3-MONTH) INSPECTION & MAINTENANCE PROCEDURE" for details on the inspection and adjustment procedure for the belt.

Copyright © 2015 Kobelco Construction Machinery Co.,Ltd. All rights reserved. [S2YF00022ZE01] [0731CsCshWbYs]

3.1.3 ADJUSTING OPERATOR SEAT

WARNING

-Adjust the operator seat before starting operation or at the time when operator was changed.
-Be careful not to put hands between handle and seat stand.

Adjust the operator seat position so that the control lever, each control pedal and switch can be easily manipulated in the condition where operator takes seat and has his back fitted to the back seat.

Notice

For adjustment of operator seat, see "2.3.10 OPERATOR SEAT".

Copyright © 2015 Kobelco Construction Machinery Co.,Ltd. All rights reserved. [S2YF00022ZE01] [0731CsCshWbYs]

3.1.4 ADJUSTING MIRROR

WARNING

Before any working, make sure that the mirrors are correctly adjusted. If the mirror position is incorrectly adjusted, the best all-around operator view is not obtained. This can result in serious injury, death, or machine damage.

Three rear view mirrors are equipped at left side of cab, hand rail and on the counterweight. Adjust all mirrors so that the area in the blind spot may decrease most when sitting on the driver's seat.

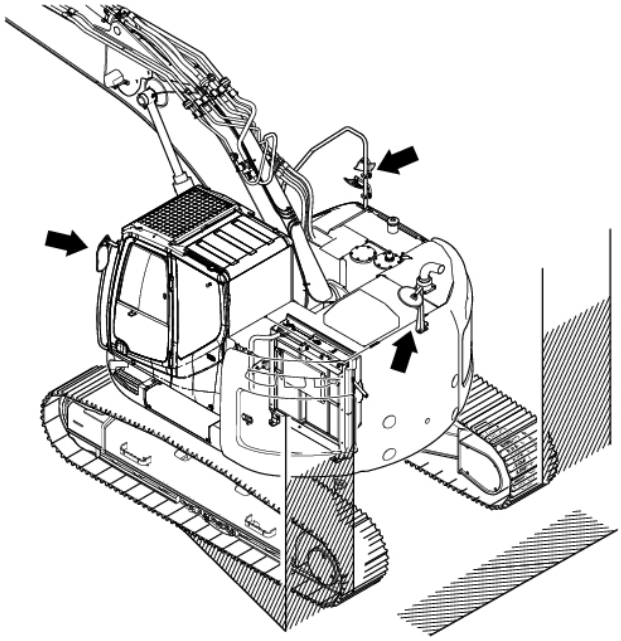

IMPORTANT

Regarding adjusting mirror position, refer to "1.11 ENSURING VISIBILITY".

Copyright © 2015 Kobelco Construction Machinery Co.,Ltd. All rights reserved. [S2YF00022ZE01] [0731CsCshWbYs]

3.1.5 CHECKING FUNCTION OF GAUGE CLUSTER

Before starting the engine, check the warning display and gauge according with the following procedures:

1. Make sure the safety lever is in the "LOCKED" (Up) position.
2. Make sure all control levers are in the "NEUTRAL" position
3. Insert starter key and start engine.

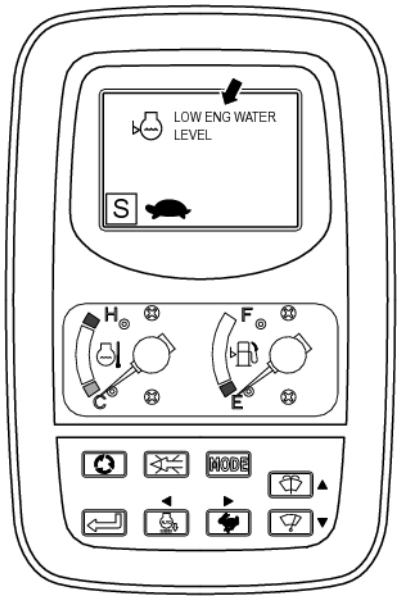

CAUTION

When starting engine, if warning is displayed on the multi-display, stop engine immediately and contact our dealer/distributor.

3.1.6 CHECKING WORK LIGHT

While the key position in the starter key switch is being "ON" position, turn on the work light switch to check the lightening of work light.
If it does not lighten, presumably the light bulb is burned out or electrical wire is broken.
Contact our dealer/distributor for repair.

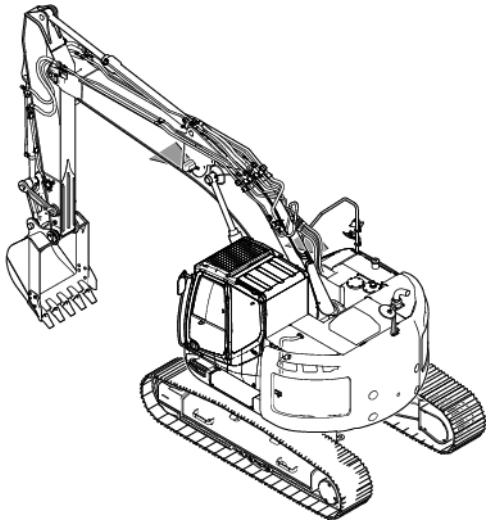

Copyright © 2015 Kobelco Construction Machinery Co.,Ltd. All rights reserved. [S2YF00022ZE01] [0731CsCshWbYs]

3.1.7 STARTING ENGINE

WARNING

After making sure that no one is stayed and no obstruction is left around the machine, sound horn and start the engine.

CAUTION

-This machine is equipped with auto idling stop function to save the fuel consumption and exhaust gas at the time when the engine is stopping.
-When auto idling switch is on, if the engine is running the engine stops after an elapse of the specified time from when the safety lock lever is pulled up.
-After the auto idling stops, when necessary to restart the engine, start the engine after returning the starter key switch to "ACC" or "OFF" once and the throttle potentiometer to the low idling position. But it is impossible to start the engine again until the buzzer stops sounding after the engine stops.
-When necessary to leave from the operator seat for a long time, turn starter key switch off.
-When the engine coolant temperature error is displayed on the gauge cluster, the auto idling does not function even if the auto idling switch is on.

IMPORTANT

-Do not hold the starter key switch in the START position for more than 15 seconds. If the engine does not start, return the starter key switch to the OFF position, wait 30 seconds, and then try it again.
-When starting engine, if warning is displayed on the multi-display, stop engine immediately and identify the cause, and then repair it if necessary.

Copyright © 2015 Kobelco Construction Machinery Co.,Ltd. All rights reserved. [S2YF00022ZE01] [0731CsCshWbYs]

A. Start-Up Under Normal Conditions

1. Make sure that safety lock lever (1) is set to the "LOCKED" (Up) position.
   A. Locked (Up) Position
   B. Unlocked (Down) Position
2. Make sure all control levers are set to the "NEUTRAL" position.
3. Set throttle potentiometer (2) to low idling position.
4. Turn the starter key (3) to "ON" position, and confirm the operating condition of multi-display.
5. Turn the starter key switch (3) to the START position to start the engine and release after starting the engine.
6. Release the starter key switch immediately after the engine starts.
   The starter key switch will return to the "ON" position by itself.

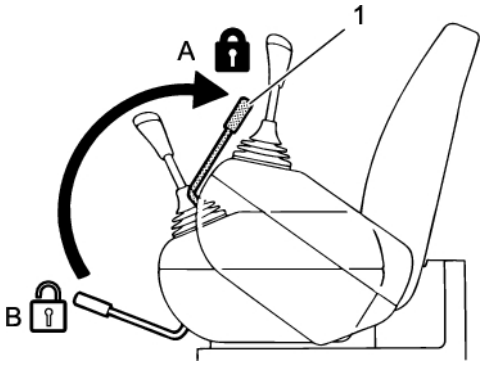

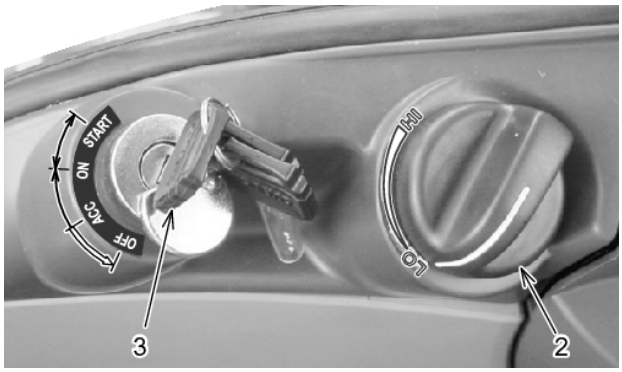

B. Start Up in Cold Conditions

In cold weather, due to the increase in oil viscosity and decrease in battery performance, starting the engine may be difficult. Use the preheater to start the engine easily under these conditions.

1. Turn and hold starter key switch (1) to "ON" position
2. If engine coolant temperature gauge points out to 10 degree or less, this machine starts to preheat the glow plug automatically.
3. Start the engine by the procedure 3. to 6. explained in the section "Startup in ordinary temperature" within 5 seconds or less after completion of preheating.
4. After engine starts, to prevent the occurring of white smoke exhaust, the preheating continues and stops automatically.

Notice

For the engine start procedure with auto warming up system, see "2.3.1.B.8.1 Auto Warming Up".

Copyright © 2015 Kobelco Construction Machinery Co.,Ltd. All rights reserved. [S2YF00022ZE01] [0731CsCshWbYs]

C. Using Booster Cables

Observing the following precautions when using booster cables to start a disabled machine.

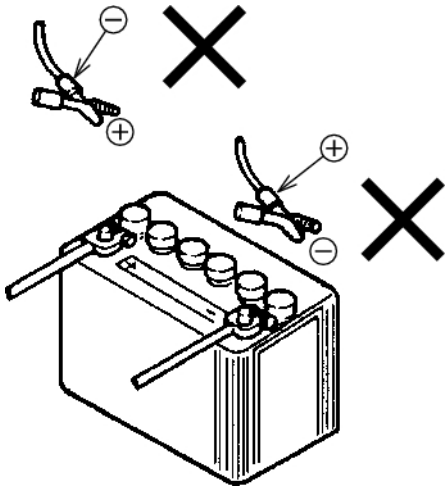

WARNING **AVOID BATTERY HAZARDS**

-Flammable gas (hydrogen gas) is generated in the battery. Do not allow sparks or flames to come in contact with batteries to avoid triggering an explosion.
-Do not allow the vehicle or machine used for boosting to touch metal to metal with the disabled machine.
-Wear hard hat, approved safety glasses or face shield rubber, gloves and other safety equipment when working with batteries.
-Do not allow the booster cable clips to come in contact with each other once connected to a battery.
-The negative cable, when connected to the upper frame of disabled machine, may arc causing sparks. Connect the booster cable to a ground surface in the engine compartment as far as possible from the battery.
-If the battery fluid is frozen, do not attempt to start the disabled machine. Either allow batteries to thaw and then charge or replace the batteries.
-Follow the order indicated in the next page for connecting or disconnecting the booster cables.

IMPORTANT

-Use the battery of which the capacity is equivalent to that of the machine in out of order for the machine in normal condition.
-Select suitable size for the booster cables and clips according to battery size.
-Do not use booster cables that are damaged, i.e., broken insulation, damaged clamps or damaged by corrosion.
-Connect clip securely.
-Check that the safety lock lever is to the locked position.
-Check that control lever has returned to neutral position.
-The starter key switches on both machines in normal condition and out of order must be held in off condition. When the power was connected, it may unexpectedly start and cause accident.

Notice

Follow the order indicated in the section "3.1.7.D Connecting / Disconnecting Booster Cables".

Copyright © 2015 Kobelco Construction Machinery Co.,Ltd. All rights reserved. [S2YF00022ZE01] [0731CsCshWbYs]

D. Connecting / Disconnecting Booster Cables

Make sure the starter key switch is in the OFF position before connecting the booster cables.
Proceed as follows to connect and disconnect the booster cables.

WARNING **AVOID EXPLOSION**

-Wrong connection of booster cables may cause explosion of the batteries. Pay special attention while connecting and disconnecting the booster cables.
-The starting system of this machine is 24 volts. Therefore the boost battery voltage in use should be 24 volts.
The application of high voltage employed for welding machine, etc. to start the engine may cause damage to the electric system.

1. Put attachment on the ground, return all control levers to neutral position and then lock the safety lever.
2. Set the starter key switch to "OFF" for both boost vehicle and disabled machine.
3. Connect the booster cable (red) clip to the positive (+) terminal on the battery of disabled machine.
4. Connect the clip from the other end of the positive (+) booster cable (red) to the positive (+) terminal on the battery of boost vehicle.
5. Connect the booster cable (black) clip to the negative (-) terminal on the battery of boost vehicle.
6. Finally, connect the clip from the other end of the negative (-) booster cable (black) to the upper frame of disabled machine, away from the battery.
7. Start the engine of boost vehicle, and run it for about 10 minutes at high idle.
8. Start the engine of disabled machine.
9. After starting the engine of disabled machine, remove the booster cables in the reverse order of the above connection order.
10. Check and repair the cause of the problem of the charging system on the disabled machine.

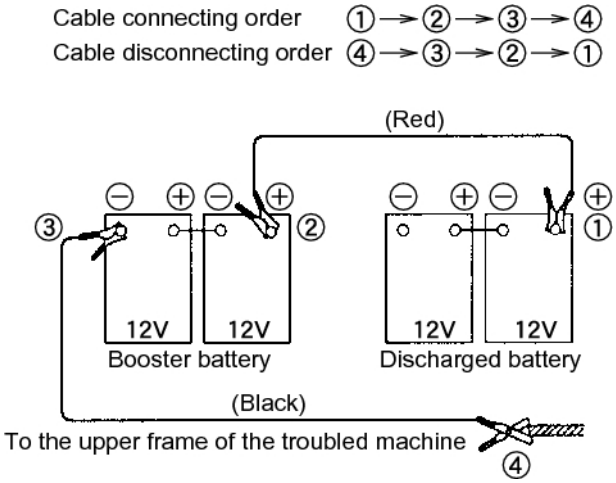

Copyright © 2015 Kobelco Construction Machinery Co.,Ltd. All rights reserved. [S2YF00022ZE01] [0731CsCshWbYs]

3.1.8 STOPPING MACHINE ENGINE

Run the engine for at least 5 minutes at low speed before stopping.

IMPORTANT

Avoid damage to engine. Stopping the engine while running at high speed will cause damage from increased engine temperature affecting seals and oil.

1. Place the attachment on the ground before stopping the engine.
2. Place the safety lock lever in the "LOCKED" (up) position before leaving the cab.
3. Turn the throttle potentiometer (1) all the way forward to "LO" speed position for 5 minutes to lower the coolant temperature.
4. Turn the starter key switch (2) to OFF to stop the engine.
5. Remove the starter key switch (2).

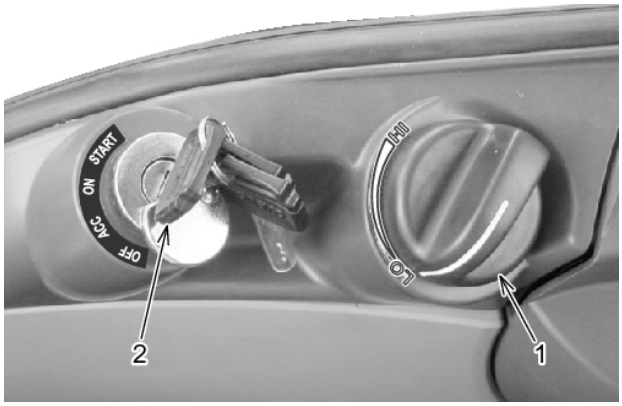

3

Copyright © 2015 Kobelco Construction Machinery Co.,Ltd. All rights reserved. [S2YF00022ZE01] [0731CsCshWbYs]

3.1.9 INSPECTION AFTER STARTING ENGINE

Check and ensure the following items after starting the engine.

WARNING

-Careless movement of any control levers may cause unexpected movement of the machine. Set the safety lock lever to the "locked"(up) position before leaving the cab.
-Make sure the swing area of machine is clear of people and obstacles before operating. Know the position of the travel motors before starting traveling and sound horn before starting operation.

A. Safety Lock Lever

1. With the engine running, set the safety control lever to the "LOCKED" (up) position.
2. Move all control levers.
3. Make sure the all functions do not operate when the safety control lever is in the "LOCKED" (up) position.
4. Move the travel control levers to make sure the machine does not move.

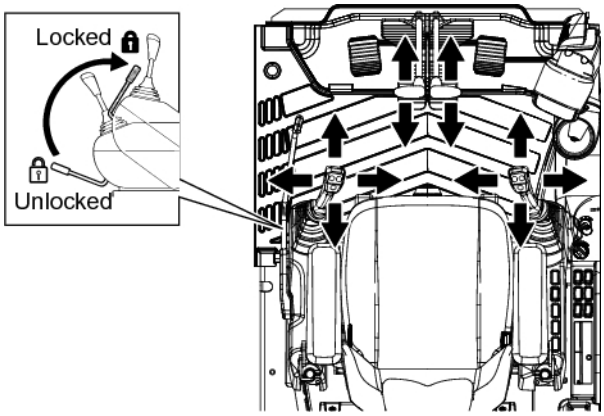

WARNING **AVOID INJURY OR DEATH**

If any improper operation is found, stop the engine immediately. Contact the dealer/distributor and have the machine repaired to avoid any unexpected machine movement.

Copyright © 2015 Kobelco Construction Machinery Co.,Ltd. All rights reserved. [S2YF00022ZE01] [0731CsCshWbYs]

B. Checking Function of Engine and Multi-Display

CAUTION

When warning was displayed on the multi-display, stop the engine immediately and investigate the cause of error.

1. Check leak for oil and water around the engine.
2. Check that warnings of battery charge and engine hydraulic pressure are disappeared, and the readings of engine coolant temperature meter (1) and fuel level meter (2) are correct.
3. Check that exhaust sound and exhaust color and vibration are normal.

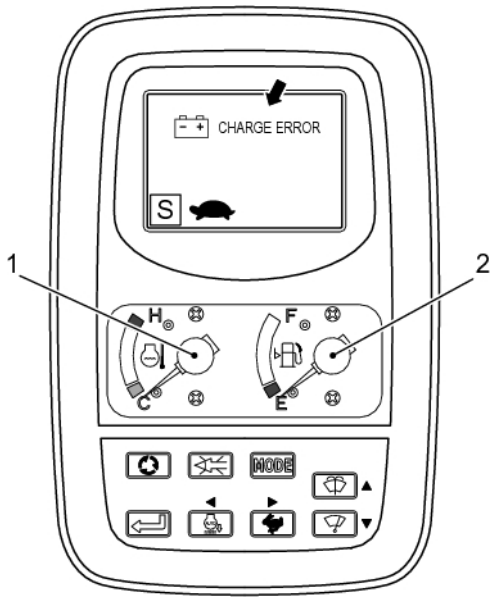

IMPORTANT

-Check the exhaust gas color (After warming-up and at no-load)
Colorless or light blue : Normal
Black : Abnormal, incomplete combustion
White : Abnormal, oil combustion due to oil loss by way of piston ring or valve guides
-Due to cold weather in winter the smoke may appear white. Be careful not to get confused.

Copyright © 2015 Kobelco Construction Machinery Co.,Ltd. All rights reserved. [S2YF00022ZE01] [0731CsCshWbYs]

3.1.10 MACHINE WARMING-UP

WARNING

-The proper hydraulic oil temperature for this machine is about 50 C degrees.
The abrupt operation when the hydraulic oil temperature is 25 C degrees or less may cause serious trouble for hydraulic equipment. Warm up the hydraulic oil before starting the work.
-The operation of attachment with insufficient warming-up makes the reaction of attachment to the control lever slower and may move the attachment against the purpose of operator. Do not fail to perform the warming-up.
Especially in cold weather, the sufficient warming-up is necessary.

Perform the warming-up by the following procedure.

A. Engine Warm-Up

IMPORTANT

-The revolution up of engine while idling may cause failure and trouble to the engine. Do not revolution up the engine while idling.
-In warning-up the engine, turn auto idling stop function switch OFF.

1. Allow the engine to run for 5 minutes under no load conditions with throttle potentiometer (1) at "LO" idle position.
2. When the pointer of engine coolant temperature (2) moves and points to the range in white, the warming-up of engine is completed.

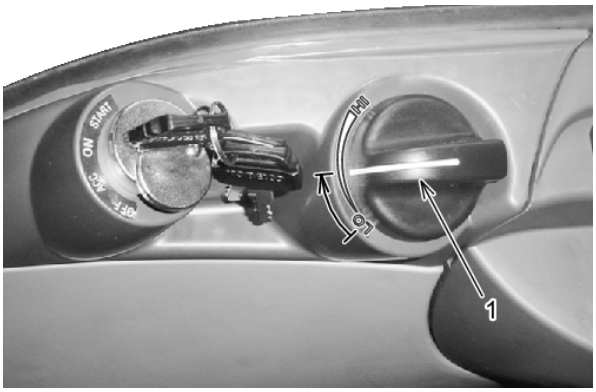

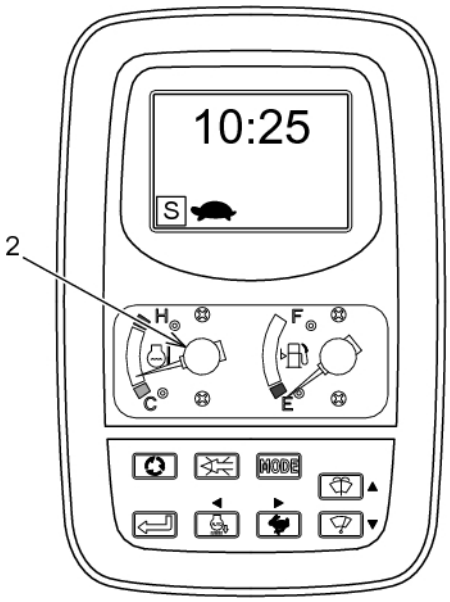

Notice

For the engine start procedure with auto warming-up system, see "2.3.1.B.8.1 Auto Warming Up".

Copyright © 2015 Kobelco Construction Machinery Co.,Ltd. All rights reserved. [S2YF00022ZE01] [0731CsCshWbYs]

B. Warming Up Hydraulic Oil

1.
Make sure that safety lock lever (1) is set to the "UNLOCKED (DOWN)" position.

2.
Move throttle control to "HI" idle position.

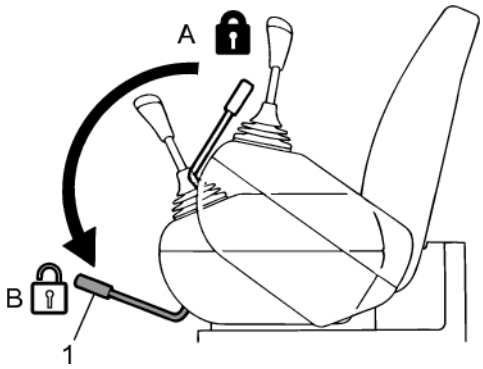

3.
Move right control lever slowly to the stroke end of bucket digging side, and execute relief action for about 2 minutes. And then extend and/or retract the rod of each cylinders several times slowly for the purpose of circulating of warm hydraulic oil.

Operate Bucket Dig and Dump Overrelief repeatedly.

4.
When the machine warming up is not sufficient, move the control lever to the stroke end of bucket digging side, and execute more 2 minutes relief operation.
And then extend and/or retract the rod of each cylinders several times slowly for the purpose of circulating of warm hydraulic oil.
Also operate swing and travel slowly and circulate the warm hydraulic oil.

Operate each the Boom and Arm.

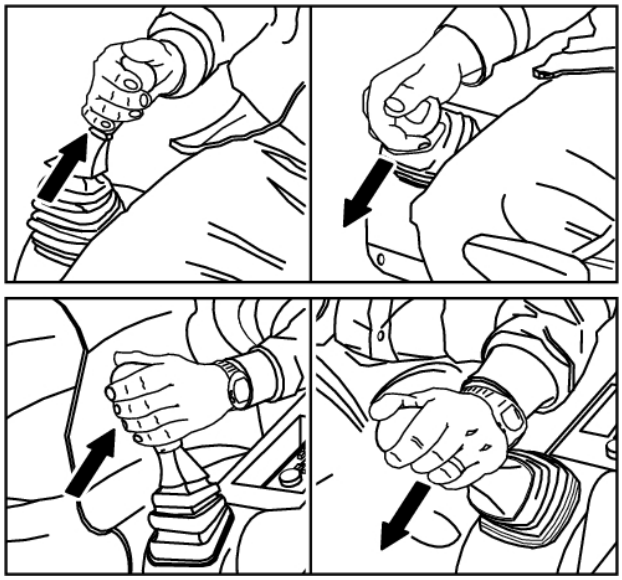

CAUTION

While operating the machine with cold hydraulic oil, the operator may experience slow or unexpected movement of functions.
Damage to the hydraulic components may result due to the cold oil not providing adequate lubrication.

Notice

For the hydraulic oil warming procedure with auto warming-up system, see "2.3.1.B.8.1 Auto Warming Up".

Copyright © 2015 Kobelco Construction Machinery Co.,Ltd. All rights reserved. [S2YF00022ZE01] [0731CsCshWbYs]

3.1.11 SELECTION OF WORK MODE AND SWITCHING OF THE ATTACHMENT MODE

1. Selection of Work Mode

Press the work mode select switch (1) in order, and "S" "H"

Two modes of "S" and "H" are switched alternately each time the work mode switch (1) is pressed.

Select the appropriate work mode depending on the working condition and the work purpose.

The selected mode is displayed on the left lower corner of the multi-display.

The mode after the engine starting is always the start from "S" mode.

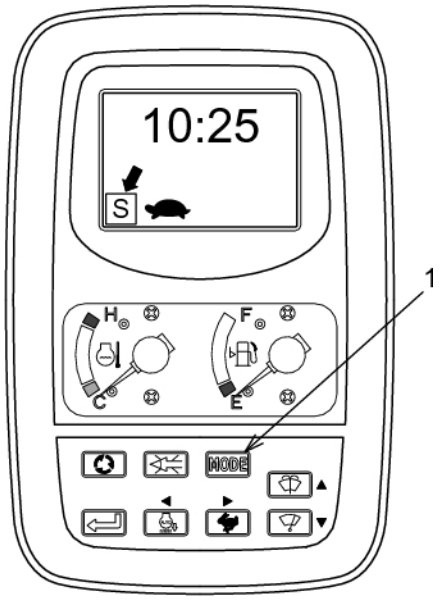

S mode

"S mode" is suitable for standard digging and loading works and is in saving fuel consumption and is in good balance to the workload.

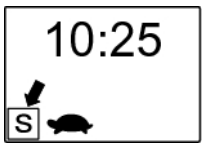

H mode

"H mode" is suitable for heavy duty digging work which gives priority to the workload at the high speed.

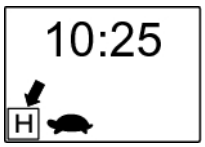

Copyright © 2015 Kobelco Construction Machinery Co.,Ltd. All rights reserved. [S2YF00022ZE01] [0731CsCshWbYs]

2. Switching of The Attachment Mode

The screen is changed from "Digging" to "Nibbler" to "Breaker" each time the attachment mode switch is turned to respective position.

Depending on the attachment employed, select the applicable mode from "Digging", "Nibbler", and "Breaker".

Before the working, confirm whether appropriate attachment had been selected.

Attachment Mode	Switch Position	Displays of Multi-Display	Selection of Attachment
Breaker Mode		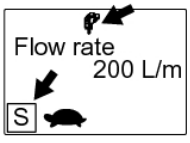 Breaker mark is displayed. As fuel consumption mode, "S" or "H" is displayed on the left lower corner of the multi-display.	Select single flow when the attachment like a breaker requires single flow circuit
Nibbler Mode		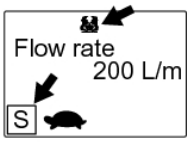 Nibbler mark is displayed. As fuel consumption mode, "S" or "H" is displayed on the left lower corner of the multi-display.	Select conflux flow when the attachment like a nibbler requires conflux flow circuit
Digging Mode		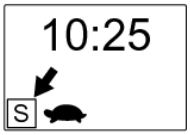 Normal display is indicated As fuel consumption mode, "S" or "H" is displayed on the left lower corner of the multi-display.	Select in case of digging

Regarding the explanation for the attachment and hydraulic circuit, refer to the chapter 7 "HYDRAULIC BREAKER AND NIBBLER".

CAUTION

-Select the attachment mode appropriately when you use the breaker or nibbler. Confirm the position of attachment mode switch and the screen of multi display closely.

-Turn the attachment mode switch to a correct position when the switch position is improper. Match the attachment mode to the attachment that is used from now.

-Select the breaker mode absolutely when you work with breaker. If the machine is operated with mode other than breaker mode, hydraulic component and breaker are damaged.

-Lower the attachment to the ground and confirm safety before you change the attachment mode. Especially, the load that is held by the nibbler falls during changing from the nibbler working to the breaker mode, and this is very dangerous.

-When "H" or "S" of the fuel consumption mode is flickering, this shows that the selection of attachment mode is improper.

Copyright © 2015 Kobelco Construction Machinery Co.,Ltd. All rights reserved. [S2YF00022ZE01] [0731CsCshWbYs]

3.1.12 CONTROLS DECAL

A. Operating Pattern

The operating and travel controls of this machine are factory set to ISO standard operating patterns for optimum performance of the machine and its systems.

WARNING

Check and make sure that operating pattern control matches the decal provided inside the right side window.

B. Operating Pattern Decal

Figure is a representation of the "CONTROLS" decal located on the right side window inside the operator cab. Study this decal and understand the directions each control can be operated and the functions associated with each movement of particular control. Detailed instructions for each control and its functions are explained on the following pages of this section. Should this decal become damaged or missing, install new decal KOBELCO Part Number YT20T01072P1.

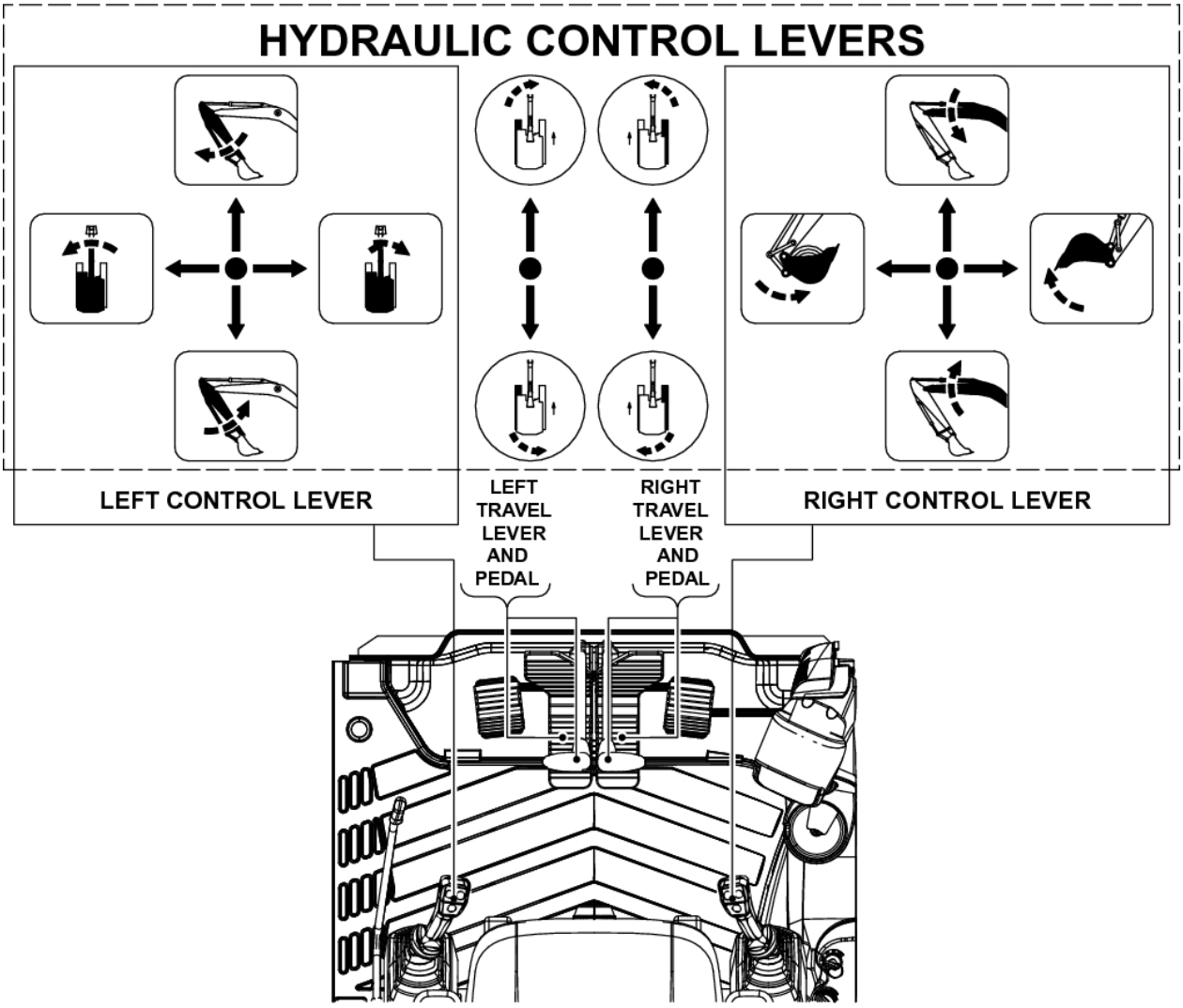

Copyright © 2015 Kobelco Construction Machinery Co.,Ltd. All rights reserved. [S2YF00022ZE01] [0731CsCshWbYs]

3.1.13 MACHINE OPERATION

The following instructions are aimed at providing an operator with the basic function of each hydraulic control. Use these instructions, and practice with a machine, will allow a given operator to become more efficient in the operation of this equipment. Each operator must read thoroughly, understand, and follow these basic instructions along with all safety precautions found in this manual and on the machine before operating this equipment.

A. Caution In Machine Operation

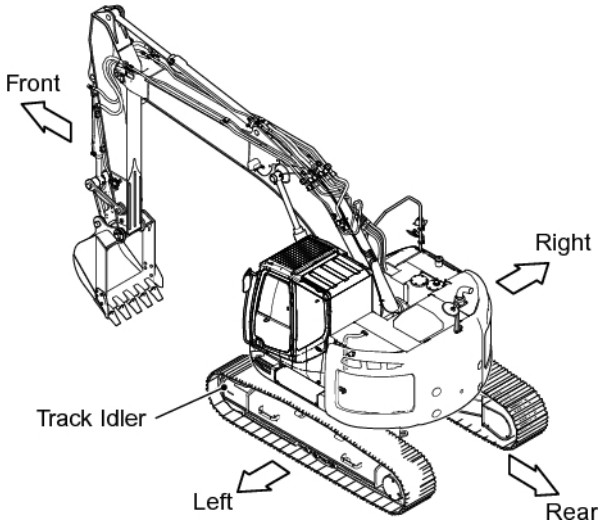

WARNING

-Before start traveling, see around the machine for safety and sound horn.
-Do not permit for people to gain access to the machine.
-If the operation of control lever in auto accel operation could cause abrupt increase of engine speed. Pay attention to the operation.

CAUTION

-The display on the multi-display does not completely ensure the condition of equipment. The daily check should follow not only the display on multi-display but also the instructions in the Manual.
-When abnormality was detected in operation, stop the machine immediately and take proper measure.
-Do not operate the machine until the abnormal section is repaired and recovered. The operation in abnormal condition may cause serious accident.

Copyright © 2015 Kobelco Construction Machinery Co.,Ltd. All rights reserved. [S2YF00022ZE01] [0731CsCshWbYs]

B. Machine Travel

WARNING

-Identify the travel motor position before traveling. When the travel motor is positioned on the front side the traveling operation reverses.
The normal traveling for the machine is that the travel motor is on the rear side and the track idler is on the front side.
-Sound horn to warn workers in the site.

F : Forward
N : Neutral (Stop)
R : Reverse

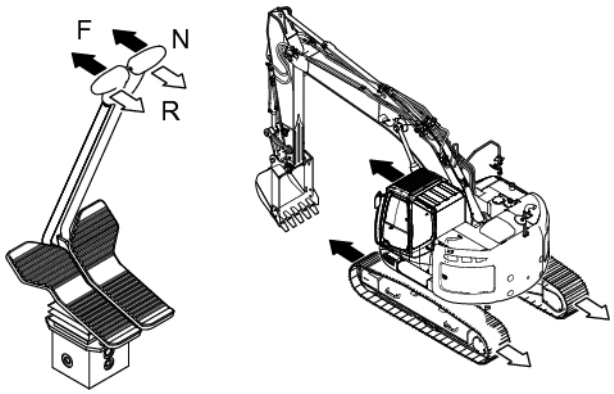

B.1 Forward/Reverse Travel

1. Make sure the safety lock lever is in the "UNLOCKED" (down) position. Operate the boom, arm, and bucket control levers to raise the attachments from the ground.
2. To move the machine forward, push both (right and left) travel levers toward the front of machine. To move the machine in reverse, pull back both travel levers. Travel speed changes depending on how far you push or pull the levers.

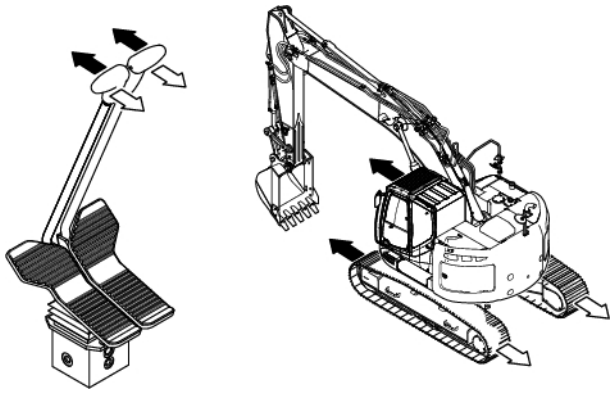

Forward/Reverse Travel

WARNING

Do not move the travel speed switch during traveling. And change the travel speed in low (1st) speed when the machine is running on the downhill, and is loading/unloading on/from trailer. The sudden change of machine stability may cause accident resulting in injury and death.

Notice

When the travel alarm is installed, the travel alarm sounds by shifting the control lever with the travel alarm switch turned "ON" to inform workers around the machine of the movement in travel operation.

Copyright © 2015 Kobelco Construction Machinery Co.,Ltd. All rights reserved. [S2YF00022ZE01] [0731CsCshWbYs]

B.2 Pivot Turn

- Push the left travel lever toward front of machine to turn machine RIGHT.
- Push the right travel lever toward front of machine to turn machine LEFT.
- Pull the left travel lever back to turn machine LEFT in reverse.
- Pull the right travel lever back to turn machine RIGHT in reverse.

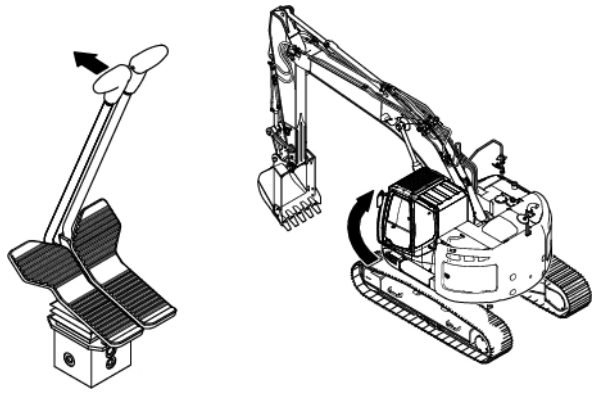

Pivot Turn

B.3 Counter Rotating Machine (Spin Turn)

To counter rotate machine to the left, pull left travel lever back and push right travel lever forward.

To counter rotate machine to the right, pull right travel lever back and push left travel lever forward.

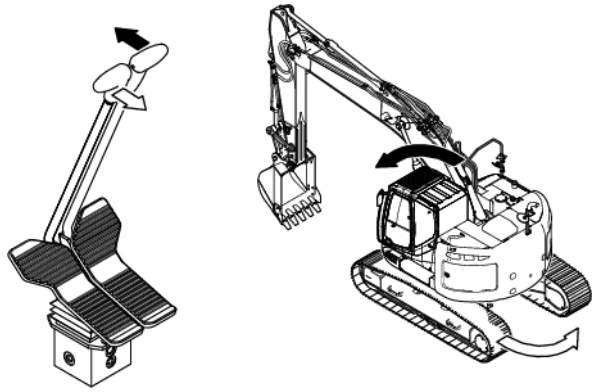

Counter Rotating Machine

C. Changing Travel Speed (1st, 2nd Speed)

The travel speed change (1st, 2nd speed) switch (1) on the switch panel is available to change the travel speed from/to low speed (1st speed) to/from high speed (2nd speed).

When starting engine, the switch is automatically set to low speed (1st speed).

The mode is changed in order of turtle (1st speed) --> rabbit (2nd speed) --> turtle (1st speed) --> rabbit (2nd speed) each time the switch is pressed.

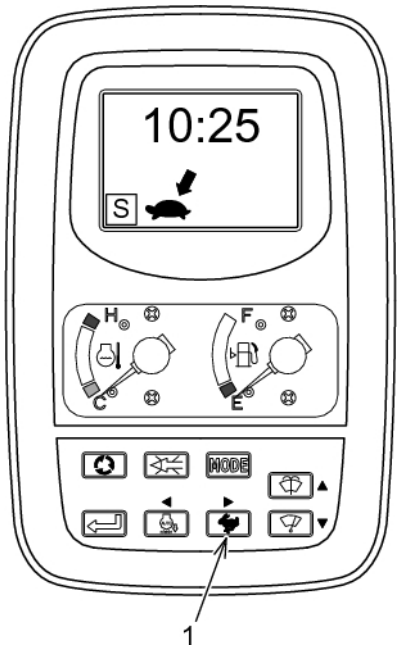

1. Take travel position during the engine being in operation.
2. Travel with travel lever or pedal.
3. The icon "turtle" is displayed for 1st speed and rabbit for 2nd speed.

Copyright © 2015 Kobelco Construction Machinery Co.,Ltd. All rights reserved. [S2YF00022ZE01] [0731CsCshWbYs]

D. Travel Stop

WARNING

Do not stop the machine suddenly, but stop it after slow traveling.
Return the right and left travel levers (1) to neutral (N) position. The machine stops traveling.

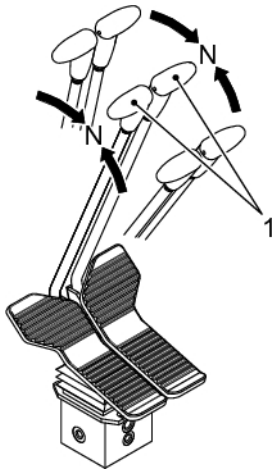

Copyright © 2015 Kobelco Construction Machinery Co.,Ltd. All rights reserved. [S2YF00022ZE01] [0731CsCshWbYs]

E. Machine Operation in Water

IMPORTANT

Be careful not to immerse the slewing bearing, slewing pinion and swivel joint into the water or mud. If the machine is operated in water or mud, the slewing bearing and others may be worn abnormally. If water or mud comes up to the slewing bearing level, put grease in slewing bearing unit the old grease comes out. If water or mud goes higher than the upper frame level, contact the dealer/distributor for cleaning or repair.

1. Make certain travel motor location is known before performing any travel operation.
2. Travel on firm, level surfaces as much as possible.
3. When traveling on rough terrain, travel in SLOW speed with engine at a low idle.
4. Travel with the travel motors in back of the machine for long distance travel.
5. When traveling or operating machine on snow or icy surfaces, clean track shoes frequently to prevent clogging. This will help keep the machine from sliding unexpectedly.
6. Keep a safe distance from stationary objects and electrical power lines.
7. Be aware of load capacities of bridges and road shoulders. Reinforce if necessary.
8. Use decking or plating to protect road surfaces as much as possible. Be careful when turning or spinning machine on asphalt pavement.
9. Do not allow large or heavy objects to strike travel motors.
10. Do not travel over large objects such as boulders rocks etc.
11. If necessary to travel or operate machine in a river or other water, the bed must be firm and water current slow. Water must not be deeper than indicated in the chart in.
12. On soft ground or mud the machine can sink. Stay constantly aware of undercarriage position.

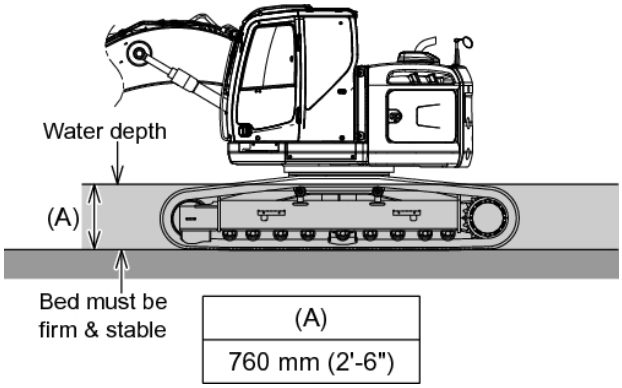

3

Copyright © 2015 Kobelco Construction Machinery Co.,Ltd. All rights reserved. [S2YF00022ZE01] [0731CsCshWbYs]

F. Getting Out of Soft Ground

WARNING **AVOID INJURY**

Attempting to free a machine that is stuck can be hazardous. Avoid operating on soft ground. The machine operator must be careful to avoid injury to himself and others while attempting to free the machine.

If possible, avoid traveling on a soft ground. Avoid getting caught in the mud. In the event that the machine gets caught in the mud, get out of it as follows.

F.1 One Crawler Belts/Tracks Get Caught in Mud

When either side of crawler belts/tracks gets caught in the mud, lay logs or boards on the mud to form a base. Operate the boom and arm to form an angle between boom and arm of about 90 to 110 degrees and push on the ground with the bottom of the bucket to lift the machine body up to climb on the logs or boards.

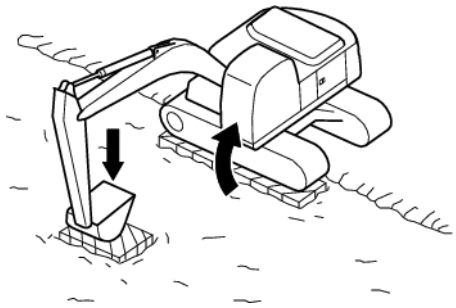

F.2 Both Crawler Belts/Tracks Get Caught in Mud

When both sides of crawler belts / tracks get caught in mud and the machine does not move due to skidding, provide logs and boards, as described in the above section. Using the bucket, dig into an area of the hard ground. Then move the bucket control to pull the machine toward the hard ground.
If this is not possible, get expert help to free the stuck machine.

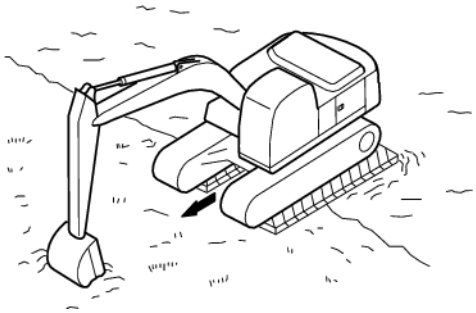

If the machine will not travel due to being stuck in mud, sand, gravel or on soft ground, lift each crawler belt / tracks off the ground by placing the bucket on the ground and pushing the boom and arm against the ground. Raise the crawler belt / track a small distance off the ground. Scrape the mud, sand, or gravel off the crawler belts / tracks.
This material may be cleared by rotating the crawler belts / tracks in forward and reverse with the crawler belt / track raised.

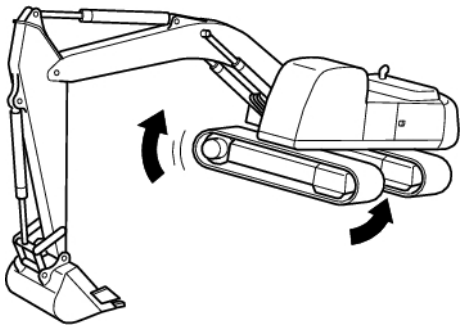

CAUTION

Operate the machine at the operator's seat. Do not allow any person to come near the machine.

Copyright © 2015 Kobelco Construction Machinery Co.,Ltd. All rights reserved. [S2YF00022ZE01] [0731CsCshWbYs]

G. Machine Attachment & Swing Controls

The following instructions are to be used with hoe bucket attachment only. If other attachments are being used, consult the operator's manual for the particular attachment.

WARNING

Read, understand and follow all safety precautions during all operations of this machine and its attachment(s).

G.1 Boom Operation

Operation of the boom is performed by pushing and pulling the R.H. control lever forward and backward. Boom speed is determined by how far the lever is activated.

1. Pulling R.H. control lever BACK raises boom.
2. Pushing R.H. control lever FORWARD lowers boom.
3. Returning R.H. control lever to the neutral (center) position stops operation of the boom.

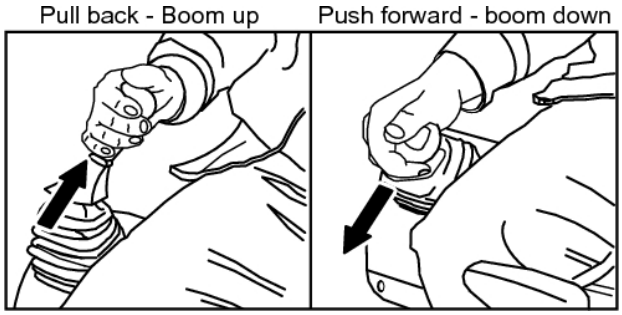

G.2 Arm Operation

Operation of the arm is performed by pushing or pulling the L.H. control lever forward and backward. Arm speed is determined by how far the lever is activated.

1. Pushing the L.H. control lever FORWARD moves the arm out.
2. Pulling the L.H. control lever BACK moves the arm in.
3. Returning the L.H. control lever to the neutral (center) position, stops operation of the arm.

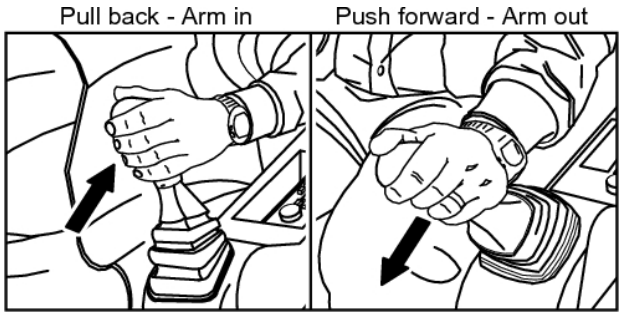

G.3 Bucket Operation

Operation of the bucket is performed by moving the R.H. control lever to the right or left.

1. Moving the R.H. control lever to the LEFT operates the bucket IN (digging).
2. Moving the R.H. control lever to the RIGHT operates the bucket OUT (dumping).

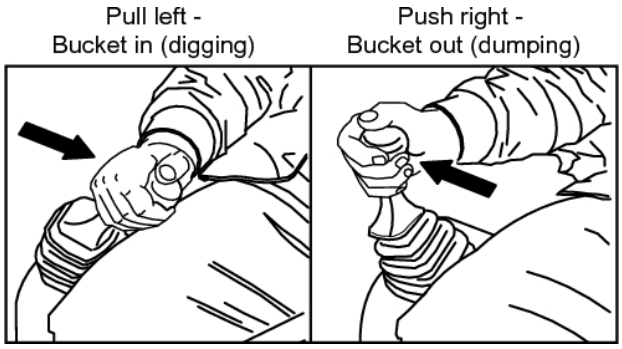

Copyright © 2015 Kobelco Construction Machinery Co.,Ltd. All rights reserved. [S2YF00022ZE01] [0731CsCshWbYs]

WARNING

Be careful when operating certain attachments close to the cab. Certain attachments can hit and damage cab. Stop attachment a safe distance away from cab to avoid damage or injury.

G.4 Swing Operation

IMPORTANT

Use swing flashers during swing operations.

Swing operation is performed by moving the L.H. control lever to the right and left. Swing speed is determined by the amount the lever is moved.

1. Moving the L.H. control lever to the LEFT swings the machine to the left.
2. Moving the L.H. control lever to the RIGHT swings the machine to the right.
3. Returning control to the neutral (center) position stops swing.

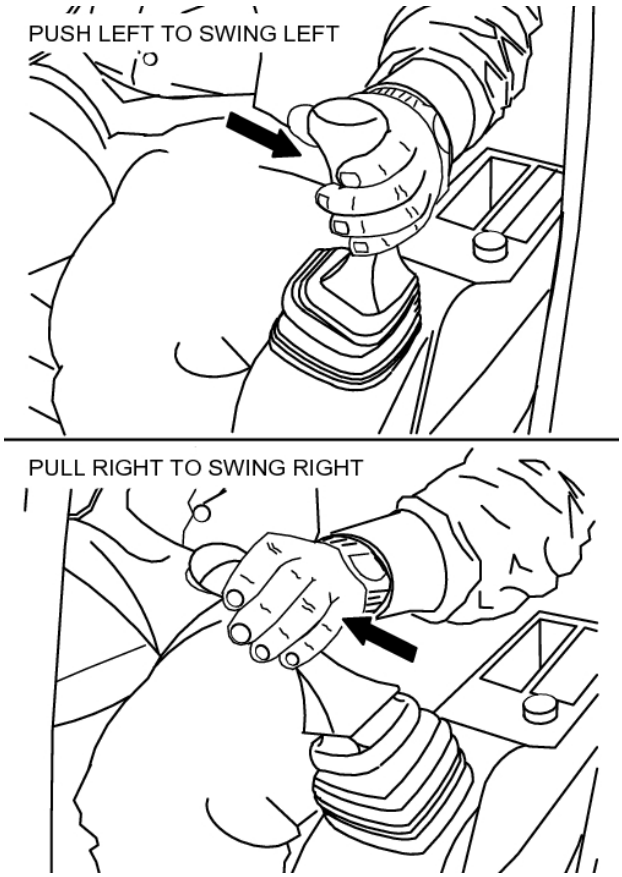

WARNING

Make certain area is clear of obstacles and persons before beginning swing operation of the machine. Sound horn before beginning swing operations.

Copyright © 2015 Kobelco Construction Machinery Co.,Ltd. All rights reserved. [S2YF00022ZE01] [0731CsCshWbYs]

H. Using Power Boost

The power boost switch is located on top of the R.H. operator control. It is a momentary switch which is activated by depressing with the thumb. This system is designed for use during bucket digging operations when extra "Break-Out" power is required to allow the bucket to break through a dig.

1. Operate the bucket in (digging) control. While bucket is digging, depress the power boost switch with right thumb. This will increase bucket digging power by approximately 15%.

IMPORTANT

If the power boost switch is left depressed while performing other hydraulic operations the operator will experience slower operation of the hydraulic functions. While power boost switch is depressed the power boost icon "ON" will be displayed on the gauge cluster display.

Copyright © 2015 Kobelco Construction Machinery Co.,Ltd. All rights reserved. [S2YF00022ZE01] [0731CsCshWbYs]

3.1.14 PRACTICES TO IMPROVE EFFICIENCY

A. Use Arm in Action

Operate the bucket at shallow depths and use the arm in action to fill the bucket. Setting the bucket too deep will decrease the machine's efficiency.

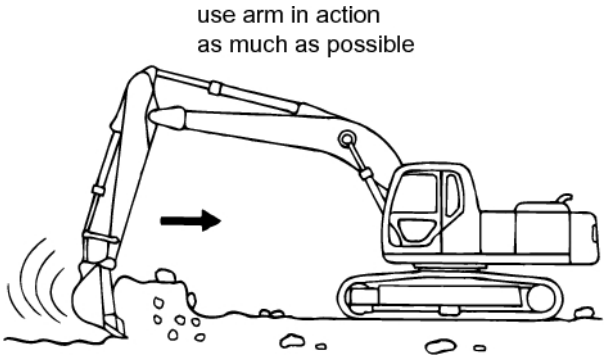

B. Operate Boom Smoothly

Always begin and end boom operation slowly with smooth, careful movement of the control lever. Do not perform sudden starts and stops of the boom as this creates unnecessary stress on the machine and its components.

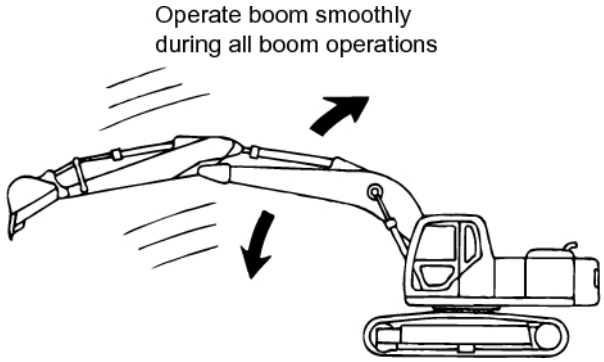

C. Bucket Teeth Direction

Always point bucket teeth in the direction the machine will be digging to reduce digging resistance and the possibility of bucket teeth damage.

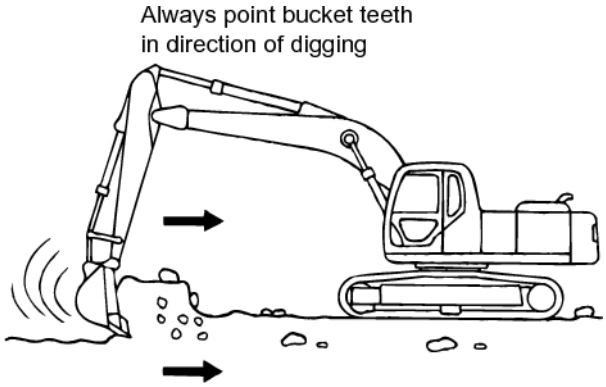

D. Maximum Digging Force Position

The attachment will provide maximum digging force when the arm and boom are at 90 to 110 degrees of each other.

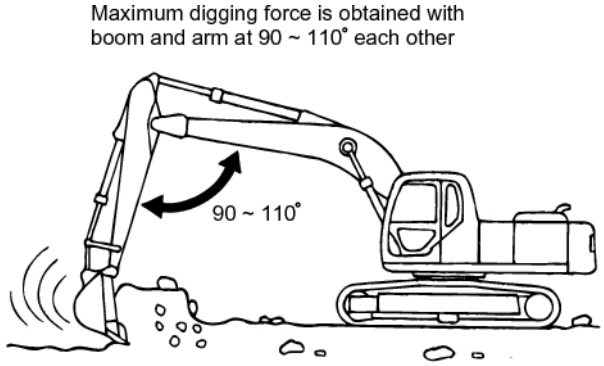

Copyright © 2015 Kobelco Construction Machinery Co.,Ltd. All rights reserved. [S2YF00022ZE01] [0731CsCshWbYs]

E. Cleaning Sand & Soil from Bucket

Operate arm to a near level position and bring the bucket to a dumping position. If sand and soil do not fall out, move the bucket lever right and left a few times.

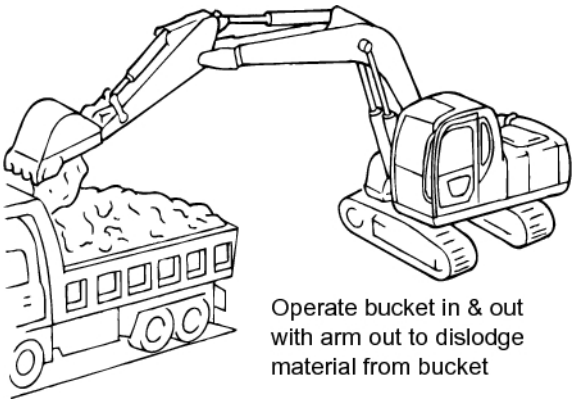

CAUTION

Avoid shaking out soil using shocks at the end of the bucket cylinder stroke.

F. Stop Swing Motion Early

To stop slewing action, release the swing lever before you get to your final point of digging or dumping.

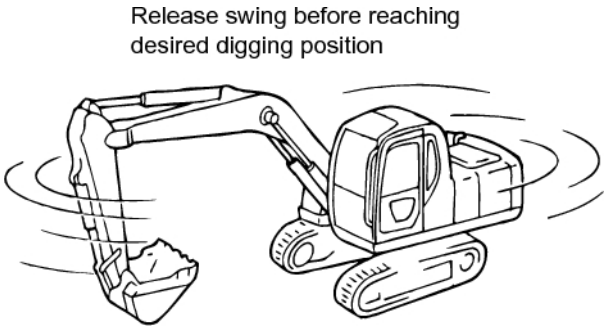

Copyright © 2015 Kobelco Construction Machinery Co.,Ltd. All rights reserved. [S2YF00022ZE01] [0731CsCshWbYs]

G. Back Filling & Leveling

For back filling and leveling work after digging, move the bucket back and forth horizontally.

IMPORTANT

Do not push or pull material with the bucket like a bulldozer when using the machine to level material.

1. In leveling ground toward machine, pull the arm gently, lift the boom a little and when the arm has passed the vertical point, lower the boom gently and manipulate the machine so the bucket moves horizontally.
2. For leveling ground away from machine, reverse operation in step 1 above.
3. In the above operation, bucket motion may be used together with the boom. By controlling the action of the boom work lever, you can dig a slope- like, slope facing operation.
4. Never travel with attachment touching the ground. Severe structural damage could occur.

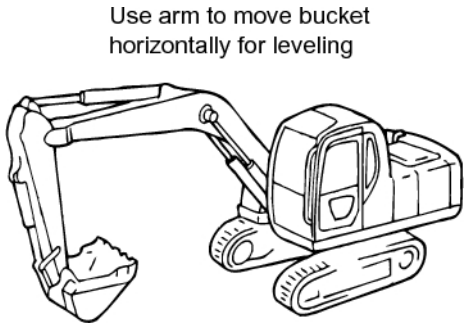

H. Operating The Shovel

Digging with the shovel differs slightly from digging with backhoe.

1. Using the arm cylinder, scrape the ground.
2. Scrape the ground at 2 to 3 degrees to improve draining in areas near the groundwater level.
3. Be careful not to bump the reversed bucket into the cab.
4. The excavating power during shovel operations is less than that during backhoe operations.
5. If machine bucket is equipped with a lifting eye, check to make sure that the eye will clear arm with bucket cylinder in full extended (full dump) position.

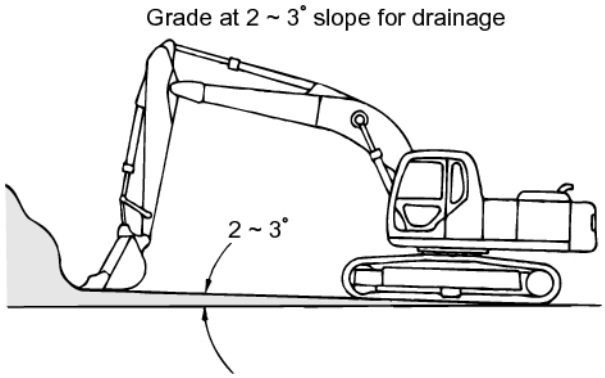

CAUTION

When the 2.94 m (9'-8") arm is used, do not reverse the bucket. If the bucket is reversed, the bucket bumps against arm by shoveling and it results damaging attachment.

Copyright © 2015 Kobelco Construction Machinery Co.,Ltd. All rights reserved. [S2YF00022ZE01] [0731CsCshWbYs]

3.1.15 FLAGMAN HAND SIGNALS

The following is a compilation of the hand signals to be used when a flagman is required for excavator operation. All personnel associated with the operation of the excavator should know these signals and their meaning before attempting to operate this machine.

A. Raise Load Vertically

Face machine operator, raise right forearm vertical, with index finger pointing up and move hand in a small circular motion.

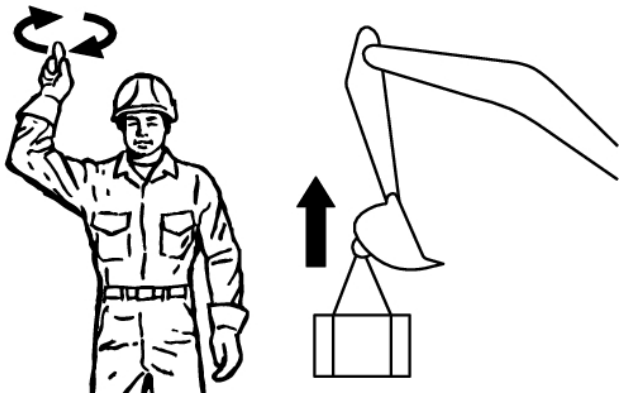

B. Lower Load Vertically

Face machine operator, extend right arm down, point index finger down and move hand in a small circular motion.

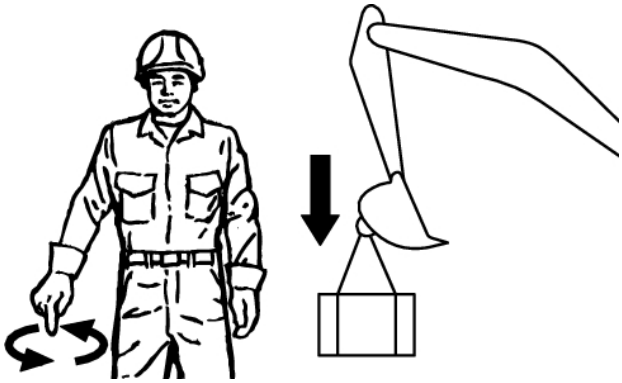

C. Move Load in Horizontally

Face machine operator, extend right arm toward operator with hand facing operator and move hand in direction of movement required.

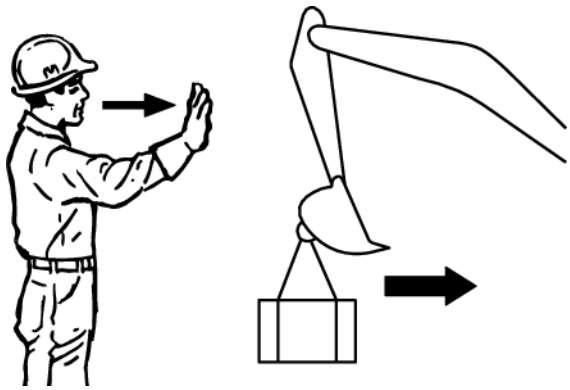

Copyright © 2015 Kobelco Construction Machinery Co.,Ltd. All rights reserved. [S2YF00022ZE01] [0731CsCshWbYs]

D. Move Load Out Horizontally

Face machine operator, extend right arm toward operator with back of hand facing operator and move hand in direction of movement required.

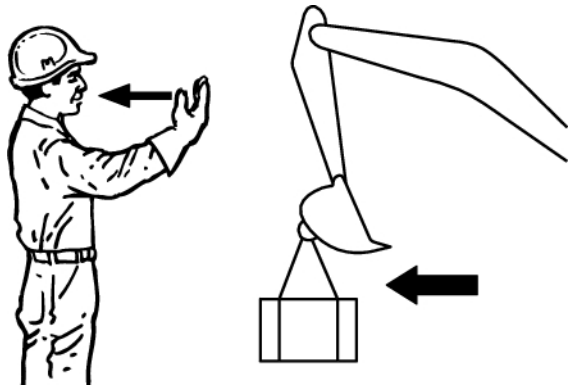

E. Raise Boom

Face machine operator, extend right arm out horizontally from shoulder, make a fist with thumb up.

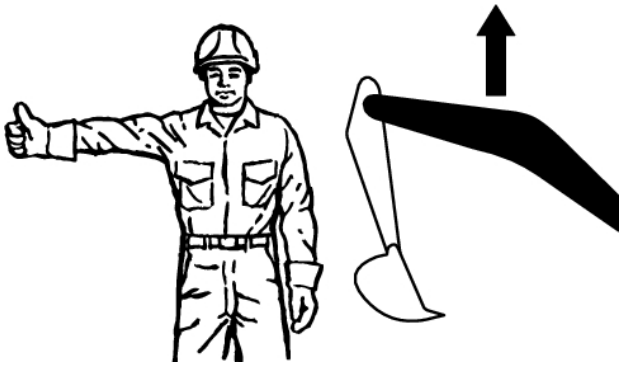

F. Lower Boom

Face machine operator, extend right arm out horizontally from shoulder, make a fist with thumb down.

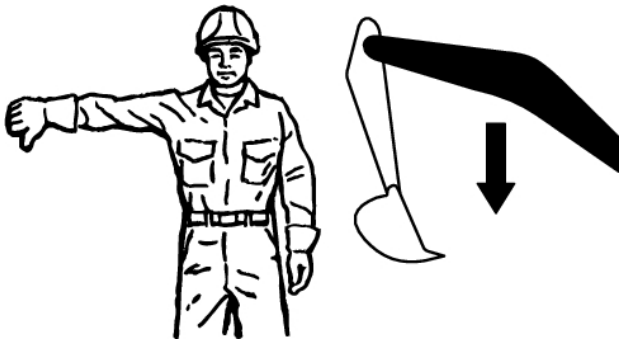

G. Swing Left

Face machine operator, extend right arm out horizontally from shoulder, make a fist with index finger pointing in swing direction.

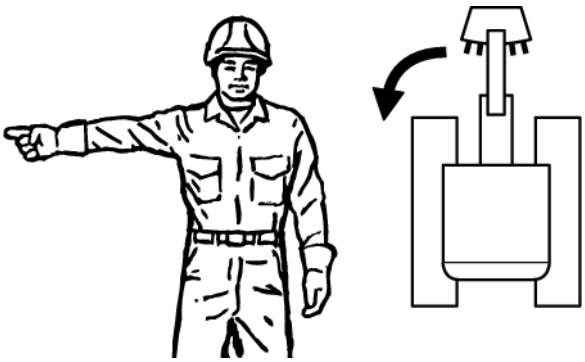

Copyright © 2015 Kobelco Construction Machinery Co.,Ltd. All rights reserved. [S2YF00022ZE01] [0731CsCshWbYs]

H. Swing Right

Face machine operator, extend left arm out horizontally from shoulder, make a fist with index finger pointing in swing direction.

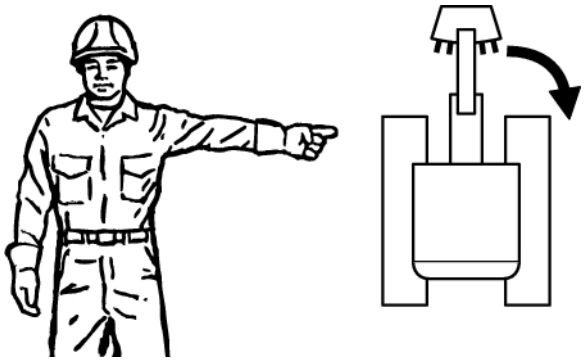

I. Arm In

Face machine operator, bend at elbows with arms facing operator, make fists and point thumbs in toward each other.

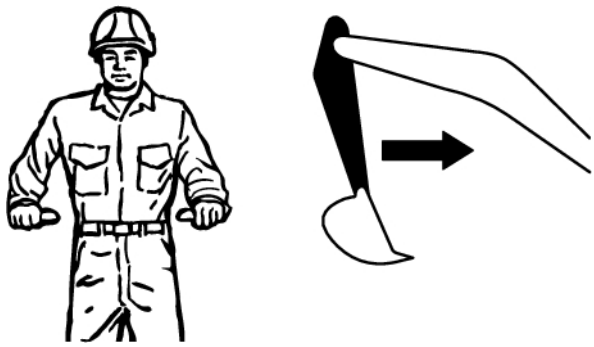

J. Arm Out

Face machine operator, bend at elbows with arms facing operator, make fists and point thumbs out away from each other.

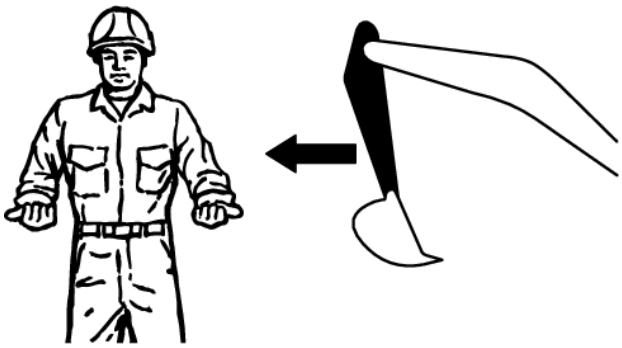

K. Counter Rotate Left

Face machine operator, place right hand on top of hard hat, bend left arm at elbow to the right, make a fist with left hand with index finger pointing out and rotate hand in a reverse circular motion.

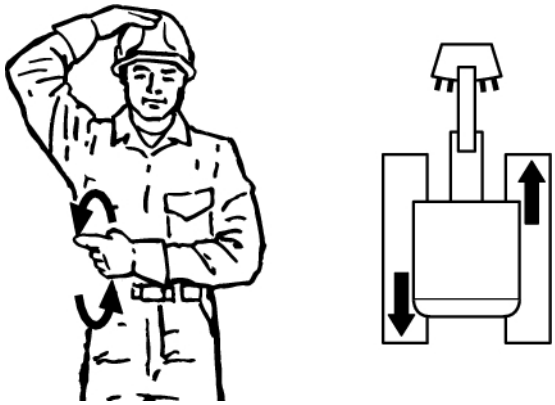

Copyright © 2015 Kobelco Construction Machinery Co.,Ltd. All rights reserved. [S2YF00022ZE01] [0731CsCshWbYs]

L. Counter Rotate Right

Face machine operator, place left hand on top of hard hat, bend right arm at elbow to the left, make a fist with right hand with index finger pointing out and rotate hand in a forward circular motion.

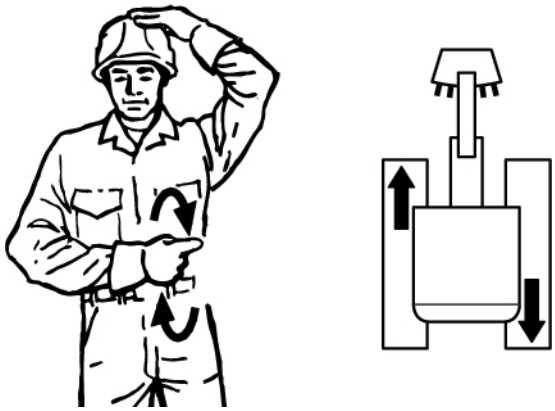

M. Travel Forward

Face machine operator, bend both elbows in, make fists and rotate fists one over the other in a reverse circular motion.

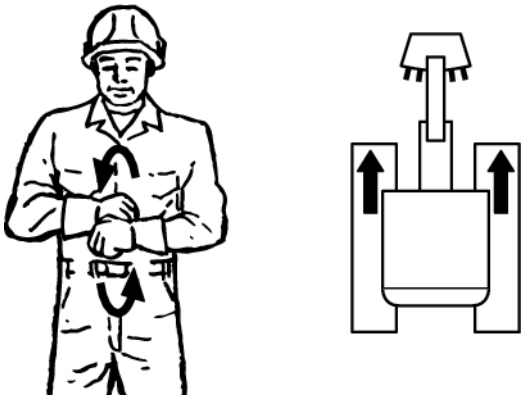

N. Travel Reverse

Face machine operator, bend both elbows in, make fists and rotate fists one over the other in a forward circular motion.

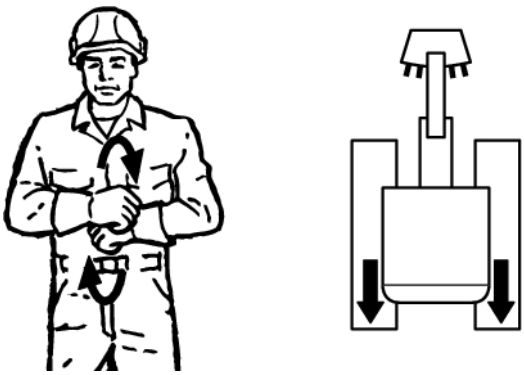

O. Close Bucket (Bucket In or Dig)

Face machine operator, hold left hand in, closed and stationary, hold right hand in, make a fist with index finger pointing toward left hand and move right hand in a small reverse circular motion.

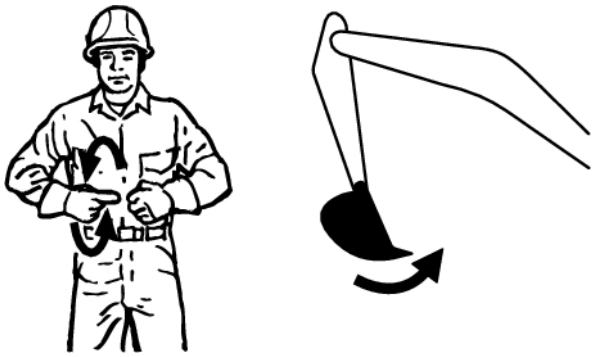

Copyright © 2015 Kobelco Construction Machinery Co.,Ltd. All rights reserved. [S2YF00022ZE01] [0731CsCshWbYs]

P. Open Bucket (Bucket Out or Dump)

Face machine operator, hold left hand in, open and stationary, hold right hand in, make a fist with index finger pointing toward left hand and move right hand in a small forward circular motion.

Q. Turn Left

Face machine operator, raise right forearm up, make fist with right hand and hold stationary, bend left arm in, make fist with left hand and rotate left fist in a small reverse circular motion.

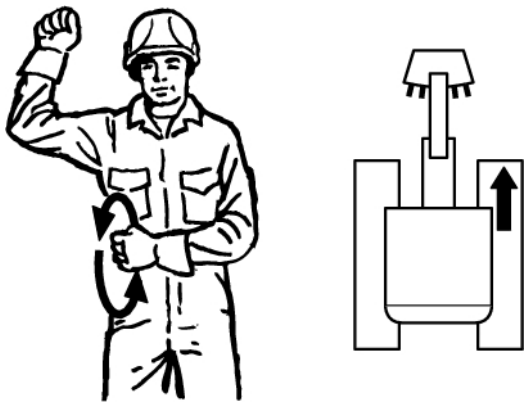

R. Turn Right

Face machine operator, raise left forearm up, make fist with left hand and hold stationary, bend right arm in, make fist with right hand and rotate right fist in a small forward circular motion.

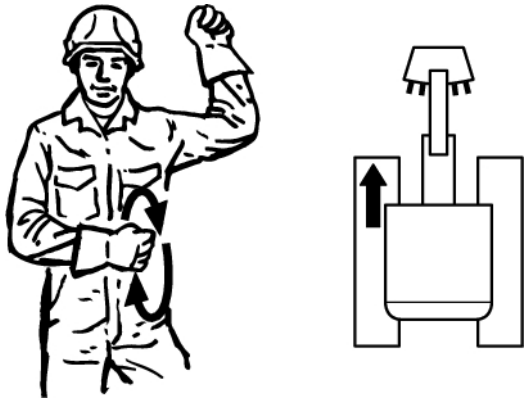

S. Move This Much

Face machine operator, raise both forearms up, hands open and facing each other , move hands in laterally indicating how far to go.

Copyright © 2015 Kobelco Construction Machinery Co.,Ltd. All rights reserved. [S2YF00022ZE01] [0731CsCshWbYs]

T. Move Slowly

Face machine operator, raise left arm out horizontally toward right shoulder with hand open and facing down, point right index finger up toward open left hand and rotate right hand in a reverse circular motion. (Raise load slowly is illustrated.)

U. Stop

Face machine operator, raise left arm out horizontally from shoulder with hand open and facing down, move arm in a horizontal motion back and forth.

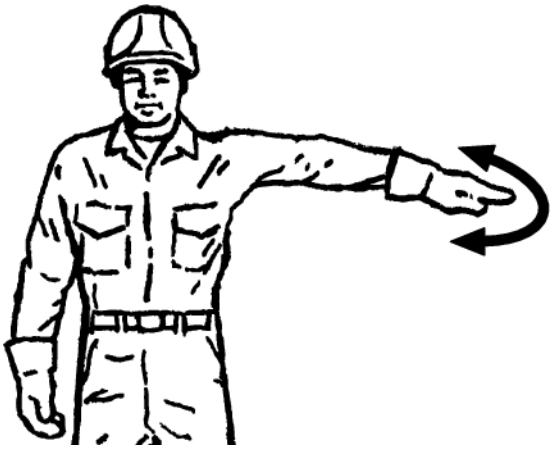

V. Emergency Stop

Face machine operator, raise both arms out horizontally from shoulders with hands open and facing down, move arms in a horizontal motion back and forth.

W. Stop Engine

Face machine operator, right arm at side, draw left thumb or index finger across throat.

Copyright © 2015 Kobelco Construction Machinery Co.,Ltd. All rights reserved. [S2YF00022ZE01] [0731CsCshWbYs]

3.1.16 PARKING THE MACHINE

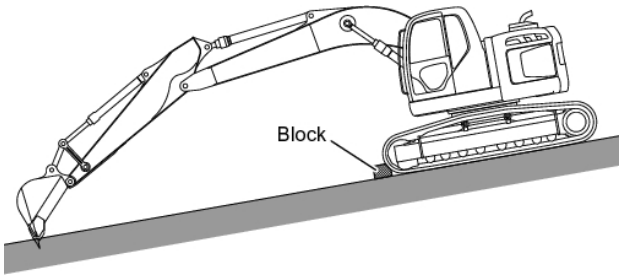

WARNING **AVOID INJURY**

-Always park the machine on a hard level, surface.
-When parking on a slope is unavoidable, position the machine as shown in the figure. Block the crawler track, dig bucket teeth into ground, lower dozer blade (if equipped) to the ground. This will help prevent machine movement.
-Set the safety lock lever to the "locked" (up) position to avoid any unexpected machine movement.
-Stop the engine before leaving the cab.
-If the machine is to be parked on a road way, move the machine to the shoulder to allow passing of traffic. Also post reflective warning signs and markers at a distance from the machine to safely warn motorists. Refer to local code and regulations regarding the posting of work area warnings and markers.

1.
Place both travel levers (1) into the "NEUTRAL" position.

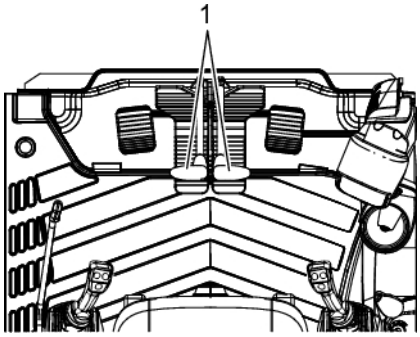

2.
Turn throttle dial (2) to low idling position and cool down for about 5 minutes.
3.
Put bucket on the ground holding the bucket bottom level.
4.
Set starter key switch (3) to "OFF" position and stop the engine, and then pull out the starter key.

Copyright © 2015 Kobelco Construction Machinery Co.,Ltd. All rights reserved. [S2YF00022ZE01] [0731CsCshWbYs]

5.
Pull up safety lock lever (4) to "LOCKED (UP)" position.
6.
When necessary to leave from the machine, close windows, cab door and each door, and then lock it.

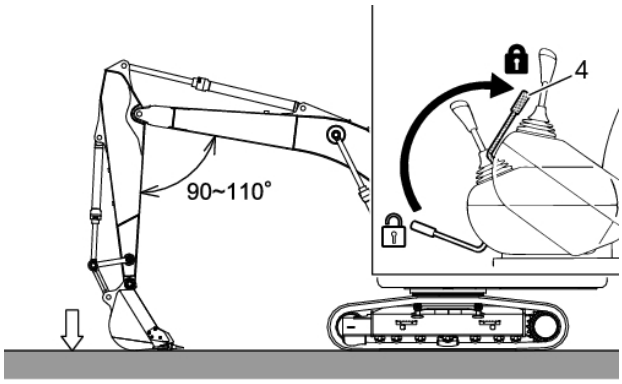

3.1.17 PRECAUTIONS AFTER OPERATION

Check engine coolant level, engine oil pressure and fuel level for shortage through the use of multi-display.

1. If warnings of engine coolant and engine oil pressure are displayed, move the machine to a safe place and stop the engine. And then repair it according to applicable procedure in Chapter 4 "INSPECTION & MAINTENANCE CHART".
2. Check for any oil or coolant leakage. Check the attachment, exterior, and travel system components. If leakage and damage are found, repair it immediately according to applicable procedure in Chapter 4 "INSPECTION & MAINTENANCE CHART".
3. Fully refill with fuel. However, do not overfill (to the top of the tank) to avoid overflowing due to fluid expansion under normal temperature.
4. Remove mud, etc., stuck to the traveling components.

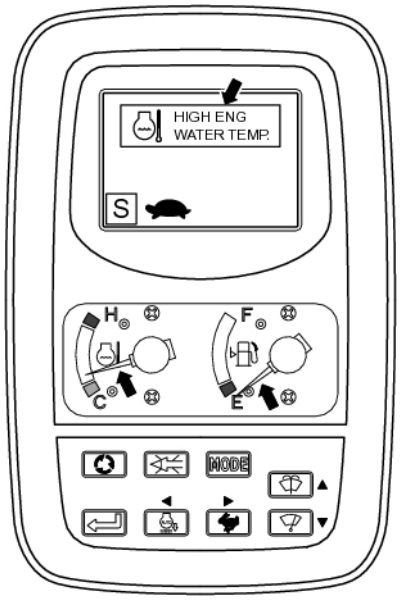

Copyright © 2015 Kobelco Construction Machinery Co.,Ltd. All rights reserved. [S2YF00022ZE01] [0731CsCshWbYs]

3.1.18 MACHINE OPERATION IN ADVERSE WEATHER CONDITIONS

1. Operation in Extreme Cold

a. Follow procedures in the section "3.1.7.B Start Up in Cold Conditions" as starting engine may be difficult due to extremely cold temperatures

b. Use an engine oil, hydraulic oil and diesel fuel designed for use in cold climates. See maintenance section, "4.3 LUBRICANT, FUEL & COOLANT SPECIFICATIONS" for reference. Also, keep battery fully charged.

c. Make certain to perform machine warm-up procedures as described in the section "3.1.7 STARTING ENGINE" to prevent premature wear or damage to pumps, motors and other components.

d. Make certain that the engine coolant mixture is sufficient to keep the machine safe. Take into consideration wind chill factors when mixing coolant ratios.

e. Keep battery terminals free of ice and snow. Ice and snow could cause the terminals to short circuit and cause extensive damage to the machine systems. Check the battery electrolyte (acid) level frequently and fill as necessary with distilled water. If the machine will be left outside overnight, it is recommended to remove the batteries and store in a warm area.

IMPORTANT

In regard to above c.:
In extremely frigid climates, covering the radiator is a method to aid the machine warm-up. IF NECESSARY TO MAINTAIN OPERATING TEMPERATURES, COVER THE OUTER EDGES OF THE RADIATOR, LEAVING AN OPENING IN THE CENTER PART OF THE COVER - THUS AVOIDING FAN OVERLOADING. Keep a close watch on the gauge cluster for warning icons during operation. It may be necessary to use a coolant heater, fuel heater, engine heater jacket, and/or additional battery power to aid engine starting.

In regard to above d.:
Mix coolant to a protection temperature of 5C degrees (9F degrees) lower than the machine will experience during operation, storage or transport.

Copyright © 2015 Kobelco Construction Machinery Co.,Ltd. All rights reserved. [S2YF00022ZE01] [0731CsCshWbYs]

2. Operation in Extreme Heat

a. Use an engine oil, hydraulic oil and fuel oil designed for use in hot climates. Also, keep battery fully charged.
b. Clean radiator, oil cooler and debris screen often to prevent damage or overheating of the machine.
c. Keep all belts properly tensioned.
d. Make certain that the engine coolant mixture is sufficient to keep the machine safe.
e. If the machine becomes overheated, idle the machine to help cool the engine, turn engine "OFF" and check coolant level. After filling to proper level the machine continues to over heat, stop engine, allow to cool, drain and flush entire cooling system and refill with the proper mixture of fresh, clean coolant.
f. Check the battery electrolyte (acid) level frequently and fill as necessary with distilled water.
g. Keep a close watch on the gauge cluster for warning icons during operation. Avoid unnecessary low speed running of the engine during operation. During slow, or no work periods, place throttle potentiometer in "LO" idle position.

CAUTION

In regard to above b.:
Do not allow dirt and debris to accumulate in the radiator fins, oil cooler fins or debris screen.

3. Operation in High Altitudes

a. Due to low atmospheric pressure at high altitudes, a decrease in engine power will be experienced. Be aware of this fact when placing machine under heavy load in high altitude climates.
b. Keep close watch on the engine temperature gauge to avoid overheating of the engine.

4. Operation in Sandy and Dusty Areas

a. Check the engine air cleaner elements frequently in sandy or dusty conditions.
b. When air cleaner restriction lamp is lit, change filters immediately regardless of time intervals.
c. Service fuel filter, water separator, and all hydraulic filters frequently.

5. Operation at Seashore or Salty Climate

a. Thoroughly wash machine daily to help avoid corrosion of machined areas, electrical components and cylinder rods.
b. Frequently check all mounting hardware for proper tightness. Torque to proper value to aid in preventing salt from entering the machine systems.

6. Operation in Humid Climate

a. In climates with high humidity, thoroughly wash the machine daily and coat all bare surfaces with an oil based lubricant to help prevent corrosion.

Copyright © 2015 Kobelco Construction Machinery Co.,Ltd. All rights reserved. [S2YF00022ZE01] [0731CsCshWbYs]

4. MAINTENANCE

Copyright © 2015 Kobelco Construction Machinery Co.,Ltd. All rights reserved. [S2YF00022ZE01] [0731CsCshWbYs]

Copyright © 2015 Kobelco Construction Machinery Co.,Ltd. All rights reserved. [S2YF00022ZE01] [0731CsCshWbYs]

4.1 GENERAL INFORMATION

WARNING

Read, understand and follow all safety precautions contained in this manual before performing any inspection or maintenance procedures on this machine, it's systems or components.

IMPORTANT

For the adjustment, disassembling and repair of the engine, reduction gear and electronic equipment (controller, etc.), contact the dealer/distributor.

A. It is recommended, that an inspection and maintenance schedule be developed and maintained on a regular basis for this machine. Developing and maintaining such a schedule helps to keep the machine in optimum operating condition.

B. The information contained in this section gives the proper procedures for performing inspection and maintenance functions for this machine. Use these procedures when performing inspection and maintenance as they will guide the technician step by step for each procedure. Also, refer to the inspection and maintenance charts for general service interval recommendations.

C. Lubrication and maintenance intervals are determined by the hour meter. If performing lubrication and maintenance according to calendar time is preferred, the hour meter reading must correspond to the lubrication and maintenance period (8 H, 50 H, 120 H, 250 H, 500 H, 1000 H, 2000 H, 5000 H, etc.) in calendar time; then calendar time can be used. Items for which service time cannot be specified are explained in the section WHEN REQUIRED.

Copyright © 2015 Kobelco Construction Machinery Co.,Ltd. All rights reserved. [S2YF00022ZE01] [0731CsCshWbYs]

 https://truckmanualshub.com/

IMPORTANT

The inspection and maintenance charts provided in this section give only general time intervals. It may be necessary to develop a custom schedule to perform machine maintenance at more frequent intervals based on the work conditions such as severe applications, work in dusty or humid circumstances, etc.
See "4.9 INSPECTION & MAINTENANCE CHART".

D. Use only specified oils, fluids, lubricants, filters and replacement parts to keep machine in optimum operating condition. Use the oils and greases with the specified viscosity depending on the ambient temperature.
Store containers of oils, fluids and grease indoors in appropriate location. This will prevent contamination from dust, water, etc.

Dispose of Waste Properly

Copyright © 2015 Kobelco Construction Machinery Co.,Ltd. All rights reserved. [S2YF00022ZE01] [0731CsCshWbYs]

4.2 GENERAL SAFETY & PRECAUTIONS

WARNING

-Do not attempt any other inspection or maintenance procedures other than those specified in the manual.
Carry them out parking the machine at a flat and conveniently situated place.
-Do not attempt any MAINTENANCE with engine running. Stop the engine and allow machine to cool to avoid injury.

A. WEAR SAFETY EQUIPMENT TO AVOID INJURY

WARNING

Wear hard hat, safety goggles or face shield, work gloves, safety shoes and well fitting work clothes when performing inspection and maintenance procedures on this machine.

B. KEEP MACHINE CLEAN

Thoroughly clean machine before performing inspection and maintenance procedures. It is easier and safer to locate problems, perform maintenance and also reduce the risk of hydraulic system contamination when machine is clean.

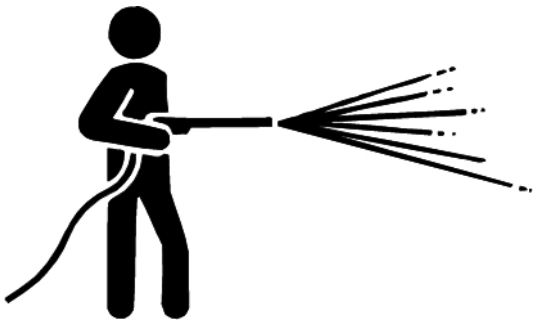

C. CONFIRMATION FOR HOUR-METER

Read the hour-meter daily, and check with the scheduled maintenance book. See "4.9 INSPECTION & MAINTENANCE CHART" for better reference. Proceed with any maintenance as required.

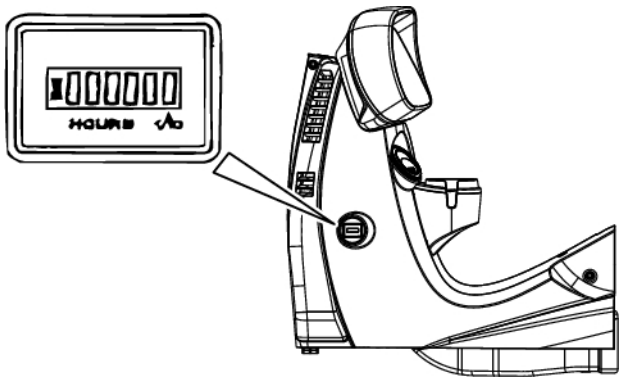

Copyright © 2015 Kobelco Construction Machinery Co.,Ltd. All rights reserved. [S2YF00022ZE01] [0731CsCshWbYs]

D. STOP ENGINE

Do not attempt any MAINTENANCE with engine running. Always stop the engine and allow machine to cool to avoid injury.
Otherwise, there is a possibility of danger that your hand may be caught in the cooling fan or fan belt resulting injury.
If it is unavoidable to operate the engine for inspection or maintenance, carry out the work with two people. The person seated in the operator's seat should be ready to stop the engine at any time while watching for a signal from the other person.

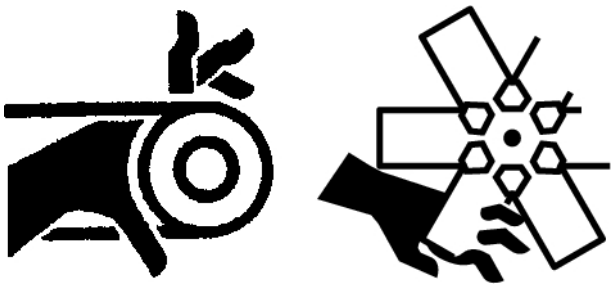

E. TAG-OUT MACHINE

Before beginning any inspection or maintenance procedures, secure a "DO NOT OPERATE" tag (P/N: YN20T01320P1) to the operator's console to inform the operator that the machine will be inoperable for inspection and maintenance. This tag will help prevent accidental starting of the machine.

F. OBSERVE PRECAUTIONS

Start the inspection and maintenance work fully understanding the contents of safety precautions indicated on the machine labels.

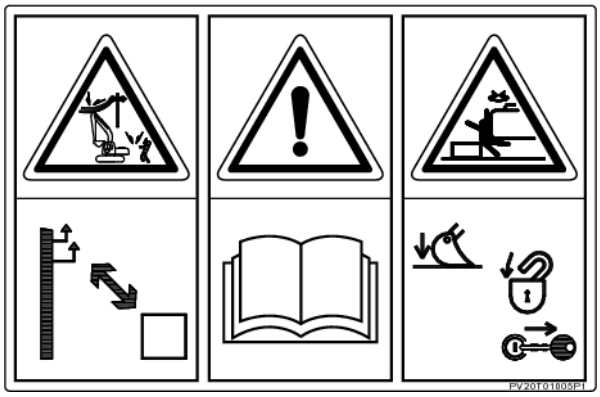

G. HOT SURFACES & FLUIDS

Wear the proper safety equipment when working around hot areas. Do not change oils, engine coolant or filters immediately after machine has been stopped. Allow machine to cool down before performing maintenance procedures.

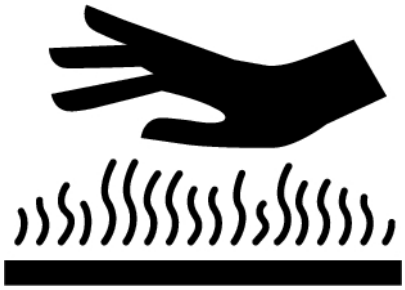

Copyright © 2015 Kobelco Construction Machinery Co.,Ltd. All rights reserved. [S2YF00022ZE01] [0731CsCshWbYs]

H. WARM ENGINE OIL

Engine oil should have a temperature of between 20 to 40C degrees {68 to 104 F degrees} before the oil is changed.

If necessary run engine until the oil is warm within the recommended oil change temperature.

I. PRESSURIZED SYSTEM HAZARDS

Release the internal pressure before removing the hydraulic system or fuel system, piping or coupling of the cooling system or other related parts to which internal pressure is applied.

See "4.2.S RELEASING INNER PRESSURE IN HYDRAULIC SYSTEM" to release internal pressure.

J. PREVENT CONTAMINATION

Always cap or plug lines when hydraulic components are removed to help prevent hydraulic system contamination that can be caused by dirt, dust and debris entering a line or port.

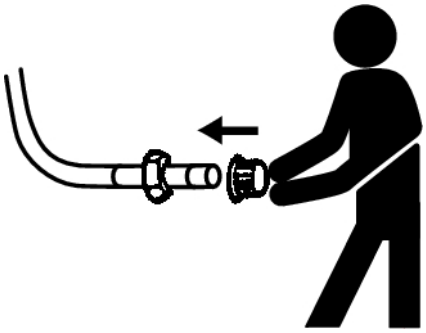

4

IMPORTANT

Do not allow hydraulic line or component to become contaminated. This could cause severe system damage. Contact an authorized dealer/distributor to obtain the proper caps and plugs to be used on this machine.

K. INSPECT WASTE OILS AND FILTERS

Before disposal, inspect all waste oils, fluids and filters for debris and foreign matter.

It is recommended to cut open the oil filters to determine any abnormal wear.

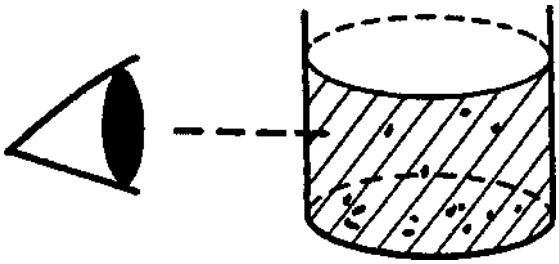

L. CAUTION FOR OIL FILLING

When a strainer is provided on the filling port, do not remove it while refilling fuel, oil or fluid.

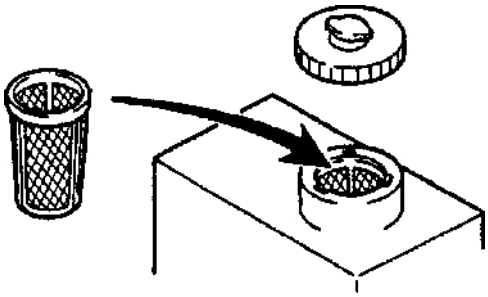

Copyright © 2015 Kobelco Construction Machinery Co.,Ltd. All rights reserved. [S2YF00022ZE01] [0731CsCshWbYs]

M. DISPOSAL OF HAZARDOUS WASTE

Dispose of waste oils, fluids, lubricants, filters and other hazardous waste properly.

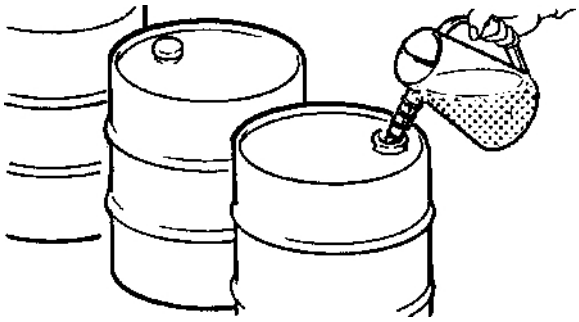

WARNING **CONTAMINATION HAZARDS**

Dispose of all hazardous waste in accordance with government environmental laws and regulations.

N. SEALS AND O-RINGS

After removing the O-ring or gasket, clean the seal surface, and replace with a new one. Always replace seals and O-rings with new parts.

Never reuse a seal or O-ring during reassembly of components. Lubricate all new seals with the appropriate oil before installation.

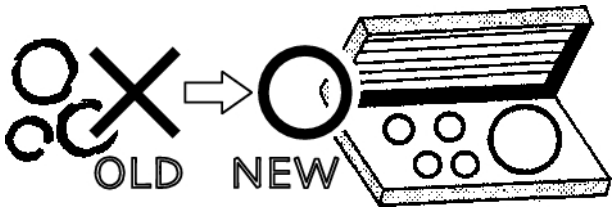

O. USE SUPPORT EQUIPMENT DURING SERVICE

When machine inspection or maintenance is done under the boom, arm or under the bucket/attachment use proper equipments or blocks to secure the attachment.

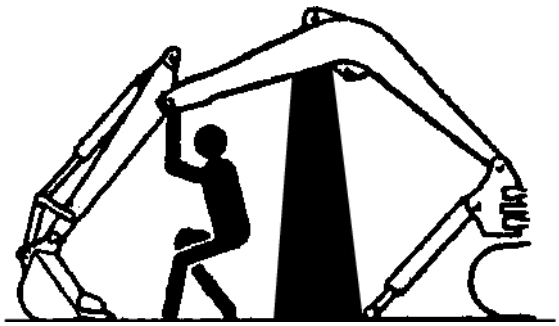

P. CAUTION WHILE CHANGING BUCKET/ATTACHMENT

WARNING

Do not insert your finger, hand or arm into the pin bore.
The alignment must be carried out visually or by using a tool.

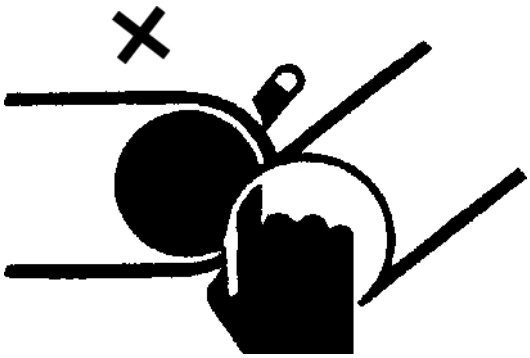

Copyright © 2015 Kobelco Construction Machinery Co.,Ltd. All rights reserved. [S2YF00022ZE01] [0731CsCshWbYs]

Q. OPERATION IN DUSTY CONDITIONS

When the machine is operated in dusty operating conditions, do the following.

- Frequently check the lamp for the air cleaner clogging. Clean the air cleaner element ahead of the specified period.
- Clean the radiator core ahead of the specified period to prevent it from clogging.
- Clean and replace the fuel filter element ahead of the specified period.
- Clean the electric equipment, especially starter and generator, to not allow deposit of dust on them.

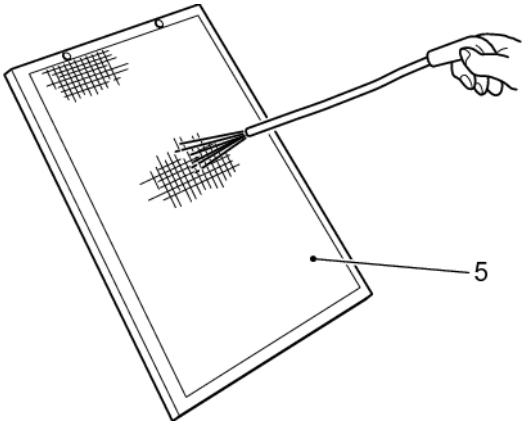

R. CLEANING PARTS

Use only approved cleaning solvents and proper equipment to clean parts.

WARNING

Do not use gasoline, diesel fuel or other flammable solvents to clean parts.
Clean parts in a well ventilated area.

Copyright © 2015 Kobelco Construction Machinery Co.,Ltd. All rights reserved. [S2YF00022ZE01] [0731CsCshWbYs]

S. HYDRAULIC TANK PRESSURE

Always release the internal pressure of the hydraulic tank before performing inspection or maintenance procedures.

1. Remove cap (A) and push "DOWN" valve (B) to release air pressure in the reservoir.

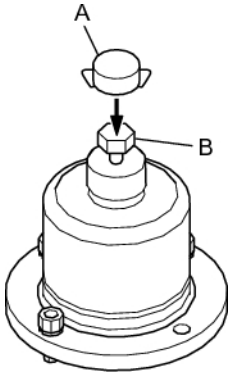

WARNING

Gasses from hydraulic tank may be hot.
Wear safety equipment to avoid injury.

T. WELDING SAFETY

1. Turn starter key switch to "OFF" position. Wait 4 seconds for electrical power to disconnect.
2. Remove negative (-) cable from battery terminal.
3. Attach welder ground cable with 1 m {3'3"} away from component being welded.
4. Make sure welder ground is not located at a seal or bearing. Do not locate welder ground at seal or bearing.
5. Make sure that no bearings or seals separates the welder ground and the weld area.

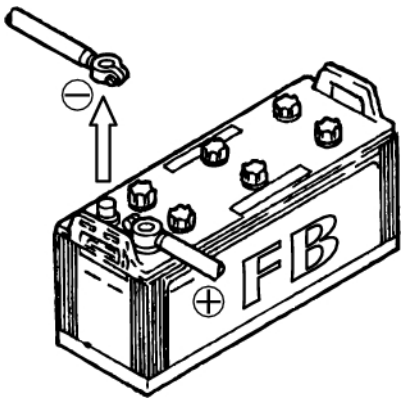

Copyright © 2015 Kobelco Construction Machinery Co.,Ltd. All rights reserved. [S2YF00022ZE01] [0731CsCshWbYs]

4.3 LUBRICANT, FUEL & COOLANT SPECIFICATIONS

The following chart provides information on the specification of oils, grease, fuels and coolant to be used in various climates and working conditions.

Components	Type of Lubricant	Capacities (When changed)	Climete Zone -22 -4 14 32 50 68 86 104 °F / -30 -20 -10 0 10 20 30 40 °C	Specified Lubricant
Hydraulic oil tank	Hydraulic oil	126 Liters (33 Gal) 230 Liters (61 Gal) [Hydraulic system]	ISO VG46	(KOBELCO BRAND) Long life hydraulic oil KW5046 (20 L) P/No. KAP2421R157D9
			ISO VG32	(KOBELCO BRAND) Long life hydraulic oil KW5032S (20 L) P/No. KAP2421R157D7
Engine oil pan	Engine oil [JASO DH-1]	[Total volume] 20.5 Liters (5.4 Gal) [H level] 18.0 Liters (4.8 Gal) [L level] 15 Liters (4.0 Gal)	SAE 10W-30	(KOBELCO BRAND) JASODH-1 P/No. KAPYN01T01053D1 (20 L)
			SAE 15W-40	SAE 15W-40
Swing motor reduction unit	Gear oil	7.0 Liter (1.8 Gal)	EXTREME GEAR OIL SAE #90	(KOBELCO BRAND) A.P.I clssification for "service GL-4" P/No. KAPSPG90020
Travel motor reduction unit		4.5 Liter X 2 (1.2 Gal X 2)		
Swing motor reduction unit (Housing)	EP grease	1.4 kg (3.1 lbs)	EP GREASE	(KOBELCO BRAND) Extreme pressure multipurpose grease No.2*2
Attachment pins		16 places	EP GREASE	
Slewing ring gear		1 place	EP GREASE	
Track tension Adjustment		2 places	EP GREASE	
Operating lever (Pilot valve)		As required	EP GREASE	
Swing gear		11.3 kg (24.9 lbs)	EP GREASE	
Fuel tank	Diesel fuel	330 Liters (87 Gal)	ASTM D-975 No.2	ASTM D-975 Grade 2-D
			ASTM D-975 No.2	
			ASTM D-975 No.1	ASTM D-975 Grade 1-D
Radiator (Reserve tank)	Engine coolant (Antifreeze)	7.4 L [Total volume 22 L]	50% Mixture	(KOBELCO BRAND) [If commercial coolant is used, the mixing rate should conform with the specified.*1] P/No. KAPLLC95-20 (20 L)

4

Copyright © 2015 Kobelco Construction Machinery Co.,Ltd. All rights reserved. [S2YF00022ZE01] [0731CsCshWbYs]

IMPORTANT

Handling method of long life hydraulic oil
When changing and replenishing hydraulic oil, make sure to use oil specified by KOBELCO.
The use of unspecified hydraulic oil or the use of mixed oil causes deterioration of oil resulting in shortening life of oil.
The above hydraulic oil change time is 5,000 hours.
Specified oil :
Maker : Shell
Brands : Shell Tellus Oil S46
Shell Tellus Oil ST32
Be sure to select hydraulic oil adaptable to the ambient temperature.

IMPORTANT

-When the oil leak and damage are found in the lower roller, upper roller and front idler, contact our dealer/distributor for repair.
-Use ASTM D-975 No.2 oil for fuel without fail.
This engine is equipped with electric control high pressure fuel injection system to obtain the features like excellent fuel saving and emission in good condition. This system requires the parts in high precision and high lubricating ability. Therefore if low viscosity fuel in low lubricating ability is used, the durability may be notably lowered.

WARNING **AVOID ANTIFREEZE / COOLANT FIRE HAZARD**

Antifreeze/Coolant is flammable. Direct contact with hot surfaces of flames may cause the Antifreeze/Coolant to burn. Repair leaks immediately and dispose of used Antifreeze/Coolant promptly and in accordance with government environmental regulation.

Notice

*1 : L.L.C means "Long Life Coolant"
*2 : Cartridge part number KAPG0420D1 (400 g × 20). Pail can part number KAPG1601D1.

Notice **LLC [KOBELCO GENUINE ANTIFREEZE / COOLANT]**

The cooling system is filled long life coolant LLC which is KOBELCO Genuine Antifreeze / Coolant specified by KOBELCO for this machine. KOBELCO Genuine Antifreeze / Coolant protects the cooling system from harmful corrosives while providing superior cooling performance necessary for emissions compliant engines for up to 2 years or 2000 hours of operation. KOBELCO Genuine Antifreeze / Coolant also protects the engine from freezing in cold climate regions. Use of coolant other than KOBELCO Genuine Antifreeze / Coolant is not recommended and may result in poor machine performance and possible damage to the engine and cooling system. KOBELCO Genuine Antifreeze / Coolant is specified for all machines operating in all regions including areas where cold temperatures or freezing is not normally expected.

Copyright © 2015 Kobelco Construction Machinery Co.,Ltd. All rights reserved. [S2YF00022ZE01] [0731CsCshWbYs]

4.4 USE OF BIO-DEGRADABLE OILS

When using Bio-degradable Oil (BIO OIL), refer to the following information.

A. Recommended Oil

Maker	Mobil
Brand	MOBIL EAL Envirosyn 46H

B. Precaution for the Use of Oil

1. When filling the former machine in which mineral oil is charged with BIO oil, try to flush the machine three times.
   The mineral oil will be left in the circuit of the machine without flushing, resulting in the reduction of effect of biodegradation ability.
2. When you use BIO OIL, slewing and travel parking brake performance will be reduced because of lower friction factor of BIO OIL compared to that of mineral oil.

C. Flushing Procedure

1. Drain mineral oil from the hydraulic tank completely.
2. Drain mineral oil from the cylinder completely.
3. Fill hydraulic oil tank with new BIO oil.
4. After starting engine, move every cylinder 10 strokes respectively.

CAUTION

The abrupt operation may cause burning of seal because of trapped air in the cylinder.
Try to operate first 4 strokes slowly at engine low idling to charge hydraulic oil in the entire cylinder.

5. Idle travel motor right and left for about 3 minutes.
6. Repeat swing operation 10 rotations.
7. Drain BIO oil from hydraulic tank completely.
8. Drain BIO oil from each cylinder completely.
9. Fill hydraulic tank with new BIO oil. Similarly, repeat the procedure 4. to 9. two times.
10. For hydraulic oil in final condition, analyze the hydraulic oil and be sure of amount of remaining mineral oil.

D. Bio Oil Change Interval

The BIO oil change interval is 2,000 hours.
For the changing procedure, refer to the section "4.18.A Change Hydraulic Oil".

Copyright © 2015 Kobelco Construction Machinery Co.,Ltd. All rights reserved. [S2YF00022ZE01] [0731CsCshWbYs]

4.5 MAINTENANCE PARTS

A. Filters & Elements, and Bucket

Replace parts, such as filters and elements, during the periodical maintenance or before the service life.

The machine can be used economically if the parts are changed properly and timely.

When you place an order of parts, confirm the parts number on parts manual.

System	Part Number	Parts Name	Q'ty	Replacement Interval
Hydraulic oil tank	YN52V01016R600	Return filter element kit (STD. Breaker)	1	After 50 hours (first change) Every 1000 hours (from 2nd change) (Breaker specification : Every 250 hours)
	(ZD11G19000)	(O-ring)	1	
	YN50V00025F4	Suction strainer	1	Every 2000 hours
	ZD11G20000	(O-ring)	1	
Air cleaner	YN11P00029S003	Element (Outer)	1	After 6 times of cleaning or one year whichever comes first
	YN11P00029S002	Element (Inner)	1	For machines equipped with W (double) element the inner element must be replaced together with the outer element. Replace the inner element with new one.
Engine oil filter	VH156072190A	Cartridge	1	After 50 hours (first change)Every 500 hours
Fuel filter	VHS234011860A	Cartridge	1	Every 500 hours
Air conditioner	YN50V01015P3	Air-con filter (Outer)	1	Every 10 times cleanings When heavy clogging of filter occurs, clean or replace
	YN50V01014P1	Air-con filter (Inner)	1	
Pilot line filter	YN50V00020F1	Line filter	1	Every 2000 hours (Cleaning)
Bucket (STD)	2412N289D11	Side cutter	1	When required
	2412N289D21	Side cutter	1	
	ZS13C24070	Bolt	8	
	ZN13C24019	Nut	8	
	B12N0006F1	Tooth assy	5	

IMPORTANT

Items enclosed in parenthesis ( ) are the parts to be changed at the same time.

Copyright © 2015 Kobelco Construction Machinery Co.,Ltd. All rights reserved. [S2YF00022ZE01] [0731CsCshWbYs]

4.6 TORQUE VALUES FOR SPECIFIED

Follow the table below and tighten or retighten every bolt and nut. Check for any loose or missing bolts or nuts before daily operation and during periodical inspections. Retighten or supply new parts for missing ones as required.

Size (M)	Q'ty	Opposing flats mm	Location	Tightening torque N•m {lbf•ft}	Recommended sealant
M5	5	–	• Sending unit mounting (fuel tank)	• 1.96±0.2 {1.4±0.14}	
M6	4	10	• A/C condenser mounting	• 9.7±1.0 {7.2±0.7}	
M8	4	13	• Water subtank mounting	• 19.6±2.0 {14±1.5}	Apply Loctite #572
	4	13	• Muffler mounting (Nut-Upper)	• 10.8±1.0 {8.0±0.7}	
	4	13	• Muffler mounting (Nut-Lower)	• 8.8±0.8 {6.5±0.6}	
	4	13	• Condenser mounting bracket	• 23.5±1.96 {17.3±1.4}	
M10	6	17	• Swivel joint dust cover mounting	• 14.7±1.5 {10.8±1.1}	Apply Loctite #572
	2	17	• Slewing grease bath inspection cover mounting	• 29.4±2.9 {21.6±2.2}	Apply Loctite #572
	16	17	• Floor plate rubber mounting	• 46.5±4.6 {34±3.4}	
	4	17	• Air cleaner mounting	• 39.2±3.9 {30±2.8}	Apply Loctite #242
	3	17	• Engine oil filter mounting	• 46.1±4.9 {34±3.6}	Apply Loctite #262
	8	17	• Power take-up bracket mounting	• 64.7±6.4 {47±4.3}	Apply Loctite #262
	12	17	• Hydraulic oil tank cover mounting	• 46.5±4.6 {34±3.4}	
	2	17	• Lower frame grease cover mounting	• 10.8±0.98 {8.0±0.7}	
	6	17	• Fuel tank bottom cover mounting	• 46.5±4.6 {34±3.4}	
	3	17	• Engine mounting	• 64.7±6.5 {47±4.3}	Apply Loctite #262
M12	4	19	• Engine mounting	• 115±12 {84.8±8.8}	Apply Loctite #262
	3	19	• Swivel joint mounting	• 107.8±10.8 {79.5±7.9}	Apply Loctite #262
	6	19	• Cab mounting	• 80±8 {59±5.9}	
	3	19	• Muffler bracket mounting	• 108±10 {79.5±7.4}	Apply Loctite #262
	8	19	• Travel motor cover mounting	• 83.4±8.4 {61.5±6.2}	Apply Loctite #262
M14	8	22	• Engine mounting	• 172±17 {127±13}	Apply Loctite #262
M16	56	24	• Travel motor mounting	• 279±29 {206±21}	Apply Loctite #262
	4	24	• Fuel tank mounting	• 191±19 {141±14}	Apply Loctite #262
	4	24	• Floor plate rubber mounting nut	• 191±19 {141±14}	
	4	24	• Hydraulic tank mounting	• 191±19 {141±14}	Apply Loctite #262
	6	14	• Power take-up coupling mounting	• 210~230 {155~170}	
	2	24	• Engine mounting	• 279±28 {206±121}	Apply Loctite #271
	4	24	• Idler & Idler adjust setting bolt	• 279±29 {206±21}	Apply Loctite #262
	60	24	• Sprocket mounting	• 279±29 {206±21}	Apply Loctite #262
M18	2	27	• Engine mounting	• 225.6±22.6 {166±17}	Apply Loctite #271
	8	27	• Track guide mounting	• 397±39 {293±29}	Apply Loctite #262
	72	27	• Lower roller mounting	• 397±39 {293±29}	Apply Loctite #262
M20	4	30	• Upper roller mounting	• 539±54 {398±40}	Apply Loctite #262
	4	17	• Hydraulic pump mounting	• 431±43.1 {318±32}	Apply Loctite #262
	204	30	• Shoe bolt mounting	• 853±27.2 {629±20}	
	34	30	• Slewing bearing outer race mounting	• 490±49 {362±39}	Apply Loctite #262
	36	30	• Slewing bearing inner race mounting	• 564±56 {416±41}	Apply Loctite #262
	15	17	• Swing reduction unit mounting	• 539±54 {398±40}	Apply Loctite #262
M24	8	36	• Side cutter mounting	• 980±50 {723±37}	
	3	36	• Counterweight mounting (ADD Weight)	• 872±49 {643±36}	Apply Loctite #262

Copyright © 2015 Kobelco Construction Machinery Co.,Ltd. All rights reserved. [S2YF00022ZE01] [0731CsCshWbYs]

Size (M)	Q'ty	Opposing flats mm	Location	Tightening torque N•m {lbf•ft}	Recommended sealant
M36	4	55	• Counterweight mounting	• 2.94±0.29kN•m {2,169±214}	Apply Loctite #262
5/8-18UNF	2	19	• Idler adjuster grease nipple mounting	• 59±10 {44±7.4}	

CAUTION

The counterweight attaching bolts may be loosened by hitting the counterweight against solid obstructions during swing operation.
How to check:
Strike the bolt head or nut by hand hammer lightly and find the looseness by catching dull sound. Tighten bolts and nuts again if necessary.

Copyright © 2015 Kobelco Construction Machinery Co.,Ltd. All rights reserved. [S2YF00022ZE01] [0731CsCshWbYs]

4.7 TORQUE SPECIFICATIONS FOR BOLTS & NUTS

The following torque specifications are provided for use when actual torque value of a fastener is not known.
Check the machine for loose bolts and nuts daily before starting work and at the scheduled maintenance interval. Replace missing bolts and nuts with equal specification as the original parts. Contact the dealer/distributor for assistance if necessary. Tighten loose and replacement nuts and bolts to the specification given in the specific manual section or in the chart below.
Refer to the below table for proper tightening of bolts.

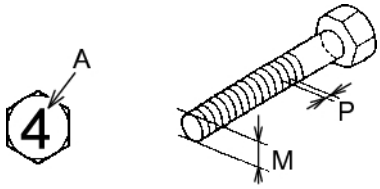

IMPORTANT

-The torque values in the table do not apply for all bolts used with plastic covers. For the tightening torque for such bolts, consult with dealer/distributor. Over-tightening may cause for damage on the parts to be fixed.
-Check if the torque is specified in a specific section of this manual. If provided, use the torque in the specific section.
-Metric hardware with thread size diameter of M5 or greater have a number on the top of the bolt indicating the strength of the bolt.

Copyright © 2015 Kobelco Construction Machinery Co.,Ltd. All rights reserved. [S2YF00022ZE01] [0731CsCshWbYs]

1. Metric coarse thread standard tightening torque values. Tighten all bolts and nuts to proper torque values.

Metric Coarse Thread (Not plated)

Torque value Unit : N•m {lbf•ft}

Classification		4.8T		7T		10.9T	
Nominal size		No lubrication	Oil lubrication	No lubrication	Oil lubrication	No lubrication	Oil lubrication
M6	P=1	4.4±0.5 {3.2±0.4}	3.7±0.4 {2.7±0.3}	9.6±1.0 {7.1±0.7}	8.1±0.8 {6.0±0.6}	17.4±1.8 {12.8±1.3}	14.7±1.5 {10.8±1.1}
M8	P=1.25	10.7±1.1 {7.9±0.8}	9.0±0.9 {6.6±0.7}	23.5±2.0 {17.3±1.5}	19.6±2.0 {14.5±1.5}	42.2±3.9 {31.1±2.9}	35.3±3.9 {26.0±2.9}
M10	P=1.5	21.6±2.0 {15.9±1.4}	17.9±1.8 {13.2±1.3}	46.1±4.9 {34.0±3.6}	39.2±3.9 {28.9±2.9}	83.4±8.8 {61.5±6.5}	70.6±6.9 {52.1±5.1}
M12	P=1.75	36.3±3.9 {26.8±2.9}	31.4±2.9 {23.2±2.1}	79.4±7.8 {58.6±5.8}	66.7±6.9 {49.2±5.1}	143±15 {105±11}	121±12 {89.2±8.9}
M14	P=2	57.9±5.9 {42.7±4.4}	49.0±4.9 {36.1±3.6}	126±13 {92.9±9.6}	106±10 {78.2±7.4}	226±20 {167±15}	191±19 {141±14}
M16	P=2	88.3±8.8 {65.1±6.5}	74.5±6.9 {55.0±5.1}	191±20 {141±15}	161±16 {119±12}	343±39 {253±29}	284±29 {209±21}
M18	P=2.5	122±12 {90.0±8.9}	103±10 {75.8±7.2}	265±29 {195±21}	226±20 {167±15}	481±49 {355±36}	402±39 {297±29}
M20	P=2.5	172±17 {127±13}	144±14 {106±10}	373±39 {275±29}	314±29 {232±21}	667±69 {492±51}	559±59 {412±44}
M22	P=2.5	226±20 {167±15}	192±20 {142±15}	500±49 {369±36}	422±39 {311±29}	902±88 {665±65}	755±78 {557±58}
M24	P=3	294±29 {217±21}	235±29 {173±21}	637±69 {470±51}	520±49 {383±36}	1160±118 {856±87}	941±98 {694±72}
M27	P=3	431±39 {318±29}	353±39 {260±29}	941±98 {694±72}	765±78 {564±58}	1700±167 {1250±123}	1370±137 {1010±101}
M30	P=3.5	588±59 {434±44}	490±49 {361±36}	1285±127 {948±94}	1079±108 {796±80}	2300±235 {1700±173}	1940±196 {1430±145}
M33	P=3.5	794±78 {586±58}	667±69 {492±51}	1726±177 {1270±131}	1451±147 {1070±108}	3110±314 {2290±232}	2610±265 {1930±195}
M36	P=4	1030±98 {760±72}	863±88 {637±65}	2226±226 {1640±167}	1863±186 {1370±137}	4010±402 {2960±297}	3360±333 {2480±246}

Copyright © 2015 Kobelco Construction Machinery Co.,Ltd. All rights reserved. [S2YF00022ZE01] [0731CsCshWbYs]

2. Metric fine thread standard tightening torque values. Tighten all bolts and nuts to proper torque values.

Metric Fine Thread (Not plated)

Torque value Unit : N•m {lbf•ft}

Classification		4.8T		7T		10.9T	
Nominal size		No lubrication	Oil lubrication	No lubrication	Oil lubrication	No lubrication	Oil lubrication
M8	P=1.0	11.3±1.1 {8.3±0.8}	9.5±1.0 {7.0±0.7}	24.5±2.0 {18.1±1.5}	20.6±2.0 {15.2±1.5}	44.1±3.9 {32.5±2.9}	37.3±3.9 {27.5±2.9}
M10	P=1.25	22.6±2.0 {16.7±1.5}	18.7±1.9 {13.8±1.4}	48.1±4.9 {35.5±3.6}	41.2±3.9 {30.3±2.9}	87.3±8.8 {64.4±6.5}	73.5±6.9 {54.2±5.1}
M12	P=1.25	39.2±3.9 {28.9±2.9}	33.3±2.9 {24.6±2.1}	85.3±8.8 {62.9±6.5}	71.6±6.9 {52.8±5.1}	154±16 {114±12}	129±13 {95.2±9.6}
M16	P=1.5	92.2±8.8 {68.0±6.5}	77.5±7.8 {57.2±5.8}	196±20 {145±15}	169±17 {125±13}	363±39 {268±29}	304±29 {224±21}
M20	P=1.5	186±19 {137±14}	155±16 {114±12}	402±39 {297±29}	333±29 {246±21}	726±69 {535±51}	608±59 {448±44}
M24	P=2	314±29 {232±21}	265±29 {195±21}	686±69 {506±51}	569±59 {420±44}	1240±118 {915±87}	1030±98 {760±72}
M30	P=2	637±59 {470±44}	530±49 {391±36}	1390±137 {1030±101}	1157±118 {853±87}	2500±255 {1840±188}	2080±206 {1530±152}
M33	P=2	853±88 {629±65}	706±70 {521±52}	1860±186 {1370±137}	1550±155 {1140±114}	3350±334 {2470±246}	2790±275 {2060±203}
M36	P=3	1070±108 {789±80}	892±88 {658±65}	2330±226 {1720±167}	1940±196 {1430±145}	4200±422 {3100±311}	3500±353 {2580±260}

Copyright © 2015 Kobelco Construction Machinery Co.,Ltd. All rights reserved. [S2YF00022ZE01] [0731CsCshWbYs]

4.8 TORQUE SPECIFICATIONS FOR JOINTS & HYDRAULIC HOSES

A. Ors Joint (O-Ring Sealing Type)

	Nominal Size	Wrench Size (mm)	Torque Value N•m {lbf•ft}
Hose mouth ring and coupling	1–14 UNS	30	137±14 {101±10}
		32	
	1–3/16–12 UN	36	177±18 {130±13}
		41	206±21 {152±15}
	1–7/16–12 UN	41	206±21 {152±15}
		46	

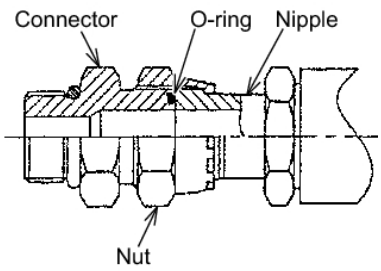

B. Nuts & Sleeve

Tube Size O.D. × Thickness (mm)	Wrench Size B (mm)	Torque Value N•m {lbf•ft}
10 × 1.5	19	49±9.8 {36±7}
15 × 2.0	27	118±12 {87±9}
18 × 2.5	32	147±15 {108±11}
22 × 3.0	36	216±22 {159±16}
28 × 4.0	41	275±27 {202±20}
35 × 5.0	55	441±44 {325±33}

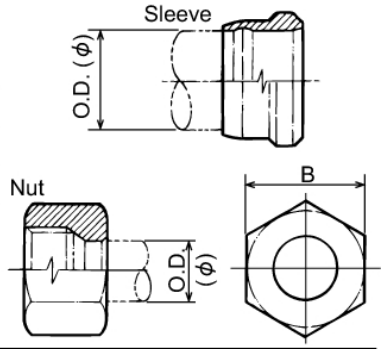

C. Joints for Piping

Nominal Screw Size (PF)	Wrench Size (mm)	Torque Value N•m {lbf•ft}
1 / 8	14	15±2 {11±1.5}
1 / 4	19	36±2 {27±1.5}
3 / 8	22	74±5 {54±4}
1 / 2	27	108±9.8 {80±7}
3 / 4	36	162±9.8 {119±7}
1	41	255±9.8 {188±7}
1 – 1 / 4	50	392±40 {289±30}
1 – 1 / 2	55	485±49 {358±36}

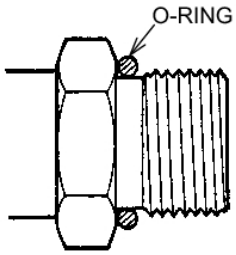

D. Hydraulic Hoses

Nominal Screw Size (PF)	Wrench Size (mm)	Torque Value N•m {lbf•ft}
1 / 8	14	15±2.0 {11±1}
1 / 4	19	29±4.9 {22±4}
3 / 8	22	49±4.9 {36±4}
1 / 2	27	78±4.9 {58±4}
3 / 4	36	118±9.8 {87±7}
1	41	137±15 {101±11}
1 – 1 / 4	50	167±15 {123±11}

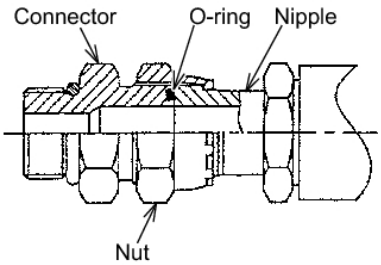

Copyright © 2015 Kobelco Construction Machinery Co.,Ltd. All rights reserved. [S2YF00022ZE01] [0731CsCshWbYs]

E. Split Flange

Size	Working Pressure MPa {kgf/cm²} 20.6 {210}		Working Pressure MPa {kgf/cm²} 41.2 {420}	
	Torque Value N•m {lbf•ft}	Bolts Size (M)	Torque Value N•m {lbf•ft}	Bolts Size (M)
3 / 4	33.9±5.6 {25±4.1}	10	39.5±5.6 {29±4.1}	10
1	42.4±5.6 {31±4.1}	10	62.2±5.6 {46±4.1}	12
1 – 1 / 4	55.1±7.1 {41±5.2}	10	93.3±8.4 {69±6.2}	14
1 – 1 / 2	70.6±8.4 {52±6.2}	12	169±11 {125±8.1}	16
2	81.9±8.4 {60±6.2}	12	282±11 {208±8.1}	20

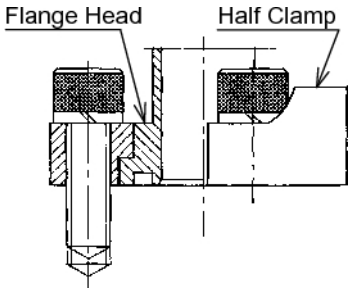

IMPORTANT

These tightening torques are available in the case of tightening without lubricant.

4

Copyright © 2015 Kobelco Construction Machinery Co.,Ltd. All rights reserved. [S2YF00022ZE01] [0731CsCshWbYs]

4.9 INSPECTION & MAINTENANCE CHART

Follow the chart below for recommended intervals of regular inspection and maintenance procedures. Perform inspection and maintenance according to the calendar time or operation time shown by the hour meter, whichever comes first.
See the inspection and maintenance procedure mentioned below for details.

Symbols and their meanings :

□ : Necessary regular inspection item to hour meter

*1 : Only first replacing is performed

O : inspection and/or maintenance is needed

Notice

See "4.3 LUBRICANT, FUEL & COOLANT SPECIFICATIONS" for detail specification for lubricant, coolant, fuel and etc.
LLC: KOBELCO genuine antifreeze/coolant.

System	Maintenance to Perform		When required	Interval (Hours on Hourmeter) 8H	50H	120H	250H	500H	1,000H	2,000H	5,000H	Lubricant, etc. (Replacing part)	REF. ITEMS
Engine	Engine oil	Check oil level		O								Engine oil	3.1.2B
		Change			*1 (First)			O					4.15.A
	Change oil filter				*1 (First)			O				Cartridge	4.15.A
	Fuel filter	Drain		O								Element	3.1.2.D
		Change						O					4.15.B
	Air cleaner elements	Check/ clean		When warning is indicated on multidisplay or every 250 HOURS.			O					Outer element (When outer element is changed, inner element must be replaced without fail)	4.14.F
		Change				After 6 times of cleaning or one year whichever comes first			O			Outer, inner element	
	Coolant level and cleaning of cooling system	Check level		O									3.1.2.A
		Change/ cleaning								O		LLC	4.17.A
	Hoses in cooling system						O						4.14.D
	Checking and cleaning of radiator/ oil cooler core/intercooler and filter			O			O						3.1.2.E 4.14.G
	Check belt tensioner	Check		O									3.1.2.G
		Adjust			*1 (First)		O						4.14.A
	Radiator cap	Clean	O										4.10.A
	Checking for rubber hose of intake system					O							4.13.C
	Checking of engine mount bracket for tightening								O				4.16.B

Copyright © 2015 Kobelco Construction Machinery Co.,Ltd. All rights reserved. [S2YF00022ZE01] [0731CsCshWbYs]

IMPORTANT

When the machine works at dusty site, clean the filter and the core of radiator often. Clean the filter and core depending on their dirt.

System	Maintenance to Perform	When required	Interval (Hours on Hourmeter)								Lubricant, etc. (Replacing part)	REF. ITEMS
			8H	50H	120H	250H	500H	1,000H	2,000H	5,000H		
Engine	*2 Checking and adjustment of valve clearance			*1 (First)			O					—
	*2 Checking and adjustment of compression pressure							O				—
	*2 Checking of intake and exhaust manifold for tightening			*1 (First)				O				—
	*2 Checking of oil pan and other accessories for tightening			*1 (First)				O				—
	*2 Checking of installing turbo charger for tightening			*1 (First)	O							—
	*2 Checking of turbo charger rotor and impeller for rotating					O						—
	*2 Checking of turbo charger rotor for looseness						O					—
	*2 Checking of turbo charger for lubrication		O					O				—
	*2 Checking and cleaning of stator brush and commutator							O				—
	*2 Checking of oil pan and for intrusion of water and fuel				O							—
	*2 Checking of fan mounting bolt for tightening			O								—
	*2 Checking of thermostat for function							O				—
	*2 Checking of starter for function						O					—
	*2 Checking of stability, exhaust color and noise		O									—
	*2 Checking of heater plug/intake air heater (Starting aid)						O					—
	*2 Checking of alternator for function							O				—
	*2 Checking of each pipe joint for tightening				O							—
	*2 Checking of exhaust pipe and muffler for installation looseness and damage				O							—
	*2 Checking and cleaning of alternator brush (If equipped)							O				—
	Checking leakage of fuel system		O									—
	Checking engine oil leakage		O									—
	Check engine electrical		O									—

IMPORTANT

Contact our dealer/distributor for checking and adjustment shown by asterisk *2.

Copyright © 2015 Kobelco Construction Machinery Co.,Ltd. All rights reserved. [S2YF00022ZE01] [0731CsCshWbYs]

System	Maintenance to Perform			When required	Interval (Hours on Hourmeter)								Lubricant, etc. (Replacing part)	REF. ITEMS
					8H	50H	120H	250H	500H	1,000H	2,000H	5,000H		
Fuel system	Fuel tank	Check/fuel level			O									3.1.2.C
		Drain water and deposits				O								4.12.B
		Clean cap and strainer							O					4.15.D
Hydraulic system	Hydraulic tank	Hydraulic oil	Check oil level		O								Hydraulic oil	3.1.2.F
			Change							O 1000H (Breaker)		O		4.18.A
		Suction strainer	Clean								O		Strainer	4.17.D
		Return filter				*1 (First)		O (Breaker attachment)		O			Element	4.16.A
	Air breather filter									O			Element	4.16.B
	Check for oil leaks				O									3.1.1.A
	Check hoses/lines				O									3.1.1.A
	Pilot line filter		Clean								O			4.17.G
Upper frame	Swing reduction oil level & fill		Check oil level				O						Extreme gear oil SAE #90 GL-4	4.13.A
			Change						*1 (First)		O			4.17.B
	Grease slewing ring								O					4.15.E
	Check grease in slewing ring grease bath										O		EP grease	4.17.F
	Check slewing brake				O									—
	Greasing of control lever push rod and universal joint								O				EP grease	4.15.G
	Check bolts/torque (Slewing ring)								O					4.15.F
	Check bolts/torque (Counterweight)					*1 (First)		O						4.6
	Grease swing reduction unit										O			4.17.E
Lower frame	Travel reduction unit oil level & fill		Check oil level				O						Extreme gear oil SAE #90 GL-4	4.13.B
			Change						*1 (First)		O			4.17.C
	Adjust track tension					O								4.12.C
	Check for oil leaks				O									3.1.1.A
	Check lines for damage				O									3.1.1.A
	Check steps & handrails				O									3.1.1.A
	Check frame structure				O									3.1.1.A
	Check tracks & links				O									3.1.1.A
	Check sprocket wear				O									3.1.1.A

Copyright © 2015 Kobelco Construction Machinery Co.,Ltd. All rights reserved. [S2YF00022ZE01] [0731CsCshWbYs]

System	Maintenance to Perform			When required	Interval (Hours on Hourmeter)								Lubricant, etc. (Replacing part)	REF. page #
					8H	50H	120H	250H	500H	1,000H	2,000H	5,000H		
Lower frame	Check idler wear				O									3.1.1.A
Lower frame	Check roller wear				O									3.1.1.A
Lower frame	Check track tension				O									3.1.1.A
Attachment	Grease for pins				*3 O (50H)			O	O				EP grease	4.11.A
Attachment	Grease bucket pins				*3 O (50H)			O						4.11.A
Attachment	Reversing backhoe bucket			O										4.10.F
Attachment	Bucket clearance			O										4.10.G
Attachment	Check bucket teeth and side cutters			O										4.10.E
Attachment	Check bolts/torque				O									—
Electrical	Battery	Battery electrolyte				O								4.12.A
Electrical	Battery	Battery maintenance				O								4.12.A
Electrical	Battery	Voltage check								O				4.16.C
Electrical	Inspect all wiring				O									3.1.1.A
Electrical	Check switches/light				O									—
Accessories	Air conditioner	Check A/C Refrigerant							O					4.15.H
Accessories	Air conditioner	Check A/C condenser and clean		O										4.14.G
Accessories	Air conditioner	Filter	Clean					O						4.14.E
Accessories	Air conditioner	Filter	Change			After 10 times cleaning is done								4.14.E
Accessories	Check wiper washer fluid level			O										4.10.B
Accessories	Check frame structure				O									3.1.1.A
Accessories	Check bolts/torque				O									4.6~4.7
Accessories	Seat belt		Check		O									2.3.9
Accessories	Seat belt		Change								O (3 years)			2.3.9

Notice

***3: All attachment has to be lubricated every 8 hours for the first 50 hours of operation.**

Then the attachment should lubricated every 250 hours of operation.
Next it should lubricated every 500 hours of operation, but the lubrication around bucket has to be applied every 250 hours.

Copyright © 2015 Kobelco Construction Machinery Co.,Ltd. All rights reserved. [S2YF00022ZE01] [0731CsCshWbYs]

4.10 WHEN REQUIRED

Thoroughly read and understand the Section 1 "SAFETY PRECAUTIONS" of this MANUAL before operating or servicing the machine.

A. Cleaning or Replacement of Radiator Cap

WARNING

To avoid being burned, be careful when removing the radiator cap. Coolant is under high pressure when hot.
-Do not remove the radiator cap when the system is hot.
-Allow enough time for the machine to cool down before removing the radiator cap.

IMPORTANT

A loose radiator cap will let hot steam and coolant escape from the cooling system. Allow the radiator cap/cooling system enough time to cool before tightening the loose cap.

1. After the radiator cap/cooling system has cooled so it can be touched with a bore hand, slowly loosen the cap (1) to release the pressure.
   After all pressure is released, remove the radiator cap.
2. Check the cap for damage or contamination.
   Clean it and/or replace it if needed.
3. Securely tighten the cap.

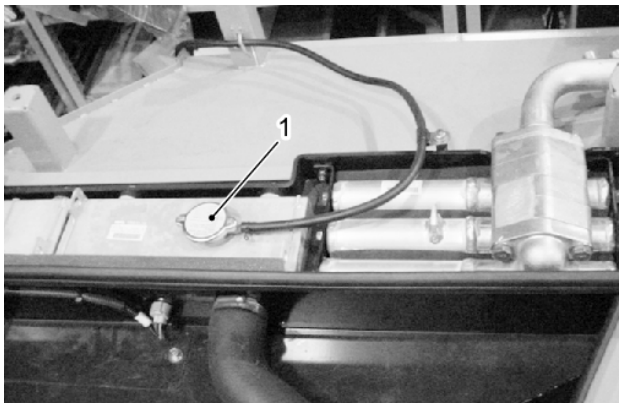

B. Checking and Replacing Wiper Blade

Check wiper blade for wear and damage, replace it if necessary.

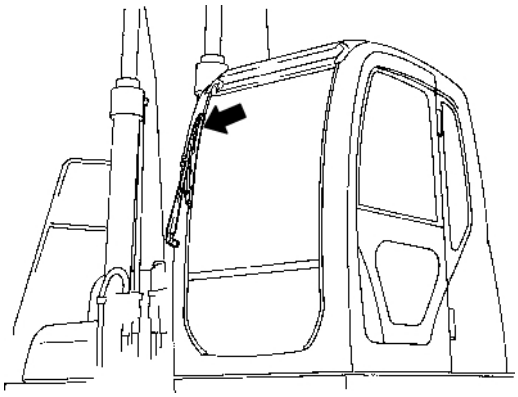

Copyright © 2015 Kobelco Construction Machinery Co.,Ltd. All rights reserved. [S2YF00022ZE01] [0731CsCshWbYs]

C. Wind Washer Fluid Reservoir

IMPORTANT

The use of wiper without washer fluid discharged may cause damage to the motor equipped with the washer fluid reservoir.

Washer fluid reservoir (1) is located under of floor plate in cab.

1. Remove floor mat.
2. Check washer fluid level of washer fluid reservoir (1).
3. When washer fluid level was short, remove the cap and fill up the short of washer fluid.
4. Reinstall floor mat to the original position.

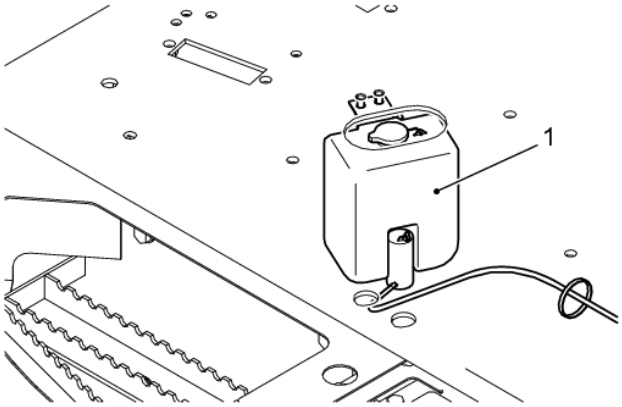

D. Replacement of Bucket

CAUTION **AVOID INJURY**

-Replace the bucket on firm level ground. Pay close attention to safety.
-The abrupt operation of front attachment is strictly prohibited because it may cause the danger.
-When aligning the pin bores, do not insert your finger into the bores. It may cause severe injury. Align the bores visually or by using a tool.
-Hold the removed bucket in the stable condition.

A: Bucket Boss

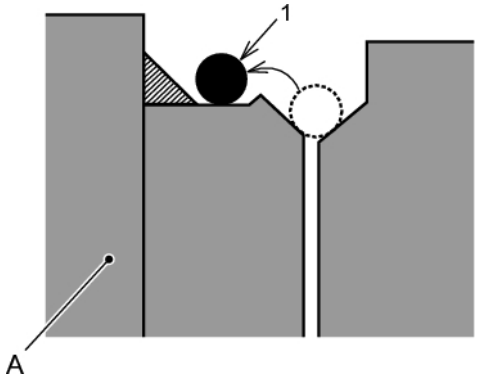

Copyright © 2015 Kobelco Construction Machinery Co.,Ltd. All rights reserved. [S2YF00022ZE01] [0731CsCshWbYs]

D.1 Removal of Bucket

1. Move the machine to a firm, level surface and rest the bucket on the ground, making certain the bucket is stable.
2. Roll O-rings (1) onto the bucket boss. After removing the pins, get them back to the original position.
3. Extend retaining ring (2), and remove pin (3) and pull pins (4), (5) out, and then remove bucket (6).

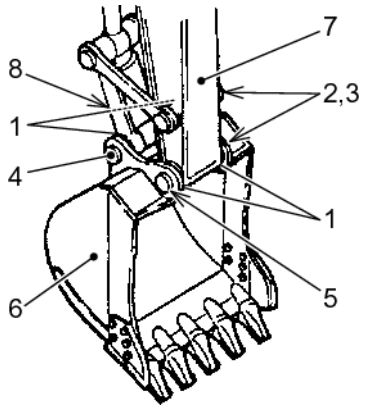

IMPORTANT

-Keep the pins free from any sand, dirt and other contaminants when removed.
-Do not damage the dust seals on both ends of arm (7) and bucket/bucket link (8).

D.2 Installing Bucket

1. Clean each pin and pin hole and grease sufficiently.
2. Move the bucket cylinder to match the pin bores or the bucket (6) and bucket link (8) with each other, then insert the pin (4).
3. Raise the boom and slightly raise the bucket from the ground.
4. Align bucket (6) with the pin hole of arm (7) moving arm (7), and insert pin (5).
5. Insert pin (3) and fix retaining ring (2).
6. Fit O-ring (1) to the normal position.
7. Apply grease on the grease nipples for respective pin until the grease comes out through the gap between pins and bore.

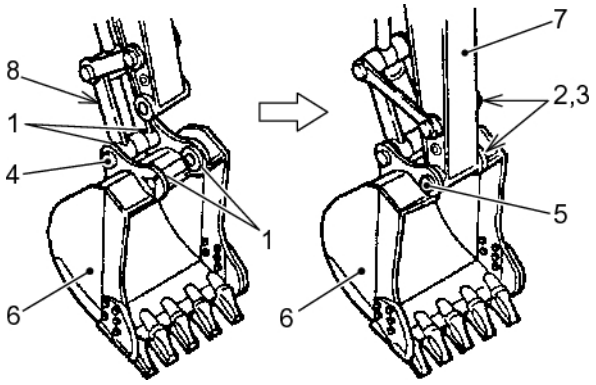

IMPORTANT

Replace the O-ring (1) if it is cracked or has lost elasticity, with a new one.

Copyright © 2015 Kobelco Construction Machinery Co.,Ltd. All rights reserved. [S2YF00022ZE01] [0731CsCshWbYs]

E. Check for Abrasion/Damages on Tooth Point & Side Cutter

CAUTION

When replacing the tooth point and side cutter, apply a safety block to the bottom face of the bucket.

Check for wear and looseness of the bucket tooth points. Tooth point life cannot be determined only by the number of operating hour; operating conditions must also be considered.

A: Safety Block

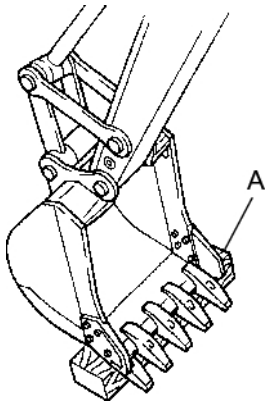

1. Adapter Nose
2. Tooth Point
3. Rubber Lock
4. Locking Pin
5. Side Cutter
6. Bolt
7. Nut

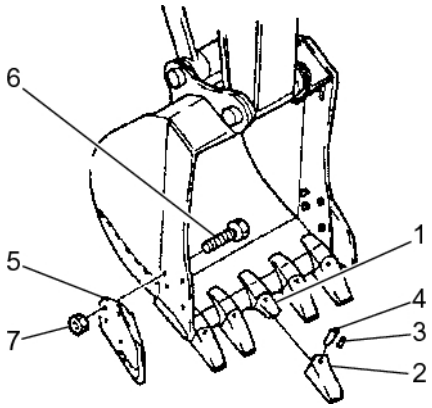

4

Copyright © 2015 Kobelco Construction Machinery Co.,Ltd. All rights reserved. [S2YF00022ZE01] [0731CsCshWbYs]

E.1 Replacing the Tooth Points

WARNING

Wear, goggles, safety shoes, hard hat, work clothes and work gloves to perform inspection and maintenance on this machine.

Replace the bucket tooth in the following cases.
-When little holes appear on the tooth point.
-When the edge lines of the tooth point are worn.

1. Using a hammer and punching tool, hammer out the lock pin (4). Be careful not to damage the rubber lock (3).
2. Inspect the lock pin (4) and rubber lock (3). Replace them if the lock pin (4) is too short or the rubber lock (3) is in poor condition.
3. Clean the surface of the adapter nose (1) with a putty knife to remove the adhered soil.
4. Fit the tooth point (2) onto the adapter nose (1).
5. Push the rubber lock pin (3) in the hole of the adapter nose (1).
6. Hammer the locking pin (4) until it is aligned with the point surface.

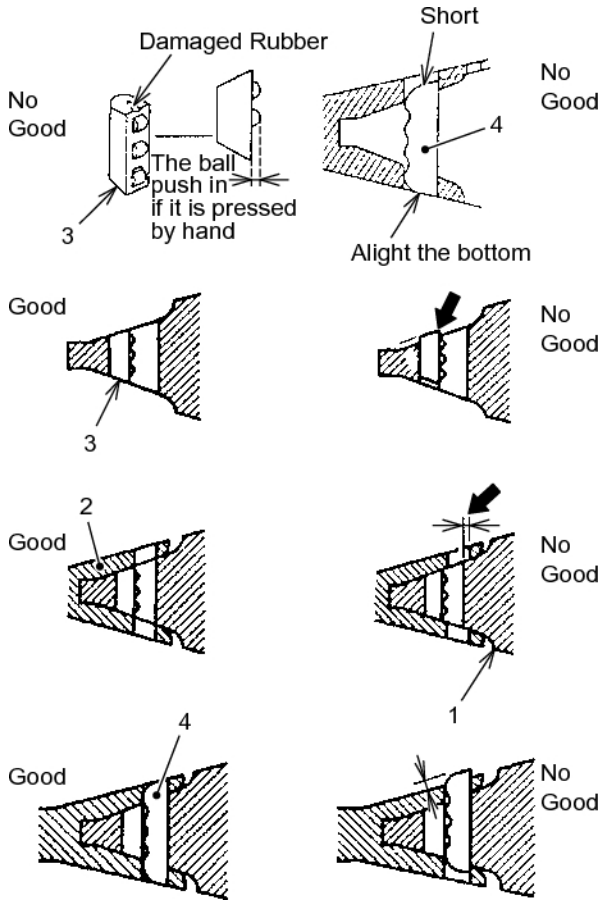

Copyright © 2015 Kobelco Construction Machinery Co.,Ltd. All rights reserved. [S2YF00022ZE01] [0731CsCshWbYs]

E.2 Replacing the Side Cutters

WARNING

Wear, goggles, safety shoes, hard hat, work clothes and work gloves to perform inspection and maintenance on this machine.

1. Remove all sand and soil adhering around the bolts. Use an acetylene torch to cut off the bolts, then remove the side cutter.
2. Clean the mounting face and install a new side cutter. When replacing the side cutter, replace the bolts and nuts with new ones. Tightening torque: 930 to 1030 N-m {680 to 760 lbf-ft}
3. After tightening the nuts, spot-weld them.

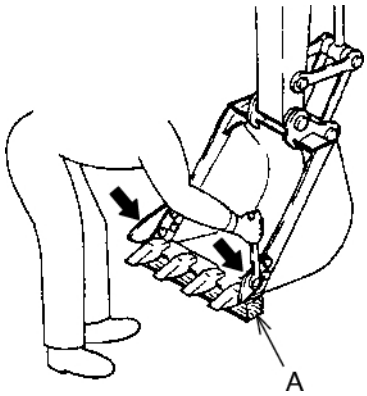

A: Safety Block

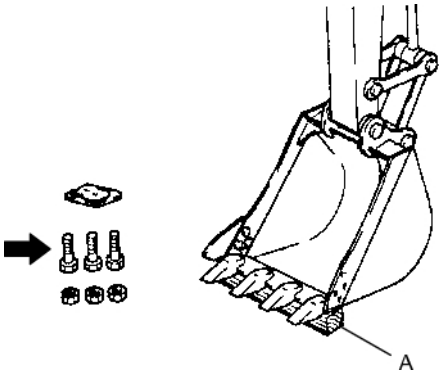

IMPORTANT

The delay in changing the side cutter from the specified interval may cause damage to bucket. Early replacement is recommended.

Copyright © 2015 Kobelco Construction Machinery Co.,Ltd. All rights reserved. [S2YF00022ZE01] [0731CsCshWbYs]

F. Reversing Backhoe Bucket

The backhoe bucket which is reversed 180 degrees is available for shoveling work. When working in team, follow the signals exactly and pay particular attention to the safety.

1.
Move the machine to a firm level surface and place the bucket on the ground, making certain that the bucket is stable.
2.
Roll "O-rings" (1) onto the bucket bosses.
3.
Remove retaining ring and pin for bucket pin (2) and for link pin (3). And remove bucket pin (2) and link pin (3).

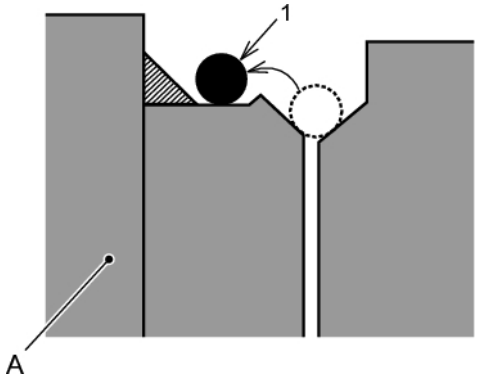

A: Safety Block

4.
Rotate arm 180 degrees with the arm slightly raised (B) and bucket in place, and lower the arm again and the pin bore position is changed.
5.
Clean pins for each part and pin bores and then apply grease sufficiently.
6.
Fit O-ring (1) in place
7.
Align each pin bore, and insert pin. After inserting pin, fix the pin with retaining ring and pin.
8.
After attaching, rotate bucket softly to the stroke end in engine low idling condition and check that there is no interference of each section.

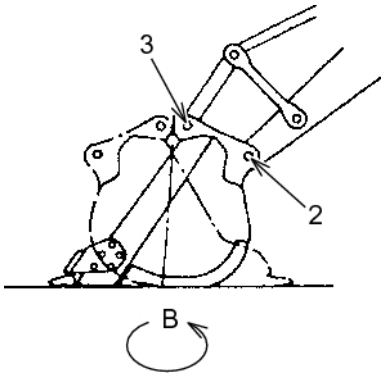

CAUTION

-Be careful about the use of bucket for shoveling work because the bucket operation is reversed when compared to that for the work with backhoe.
-When the 2.94 m (9'-8") arm is used, do not reverse the bucket. If the bucket is reversed, the bucket bumps against arm by shoveling and it results damaging attachment.

Copyright © 2015 Kobelco Construction Machinery Co.,Ltd. All rights reserved. [S2YF00022ZE01] [0731CsCshWbYs]

G. Adjusting Bucket Mount Gap

CAUTION

-Unexpected movement of attachment, while adjusting the bucket mounting gap is quite dangerous. Place the bucket on the ground in a stable condition, and set the safety lock lever to "LOCKED" position, then stop the engine.
-If the clearance of the bucket is not properly adjusted, galling may occur on the contact faces of the bucket and arm, resulting in abnormal noise and damage of the shaft and O-ring.

Bucket Standard Clearance
A: Bucket Clearance Adjusting Mechanism:
1.2 mm (0.05 inch) or less

B: Bucket Boss

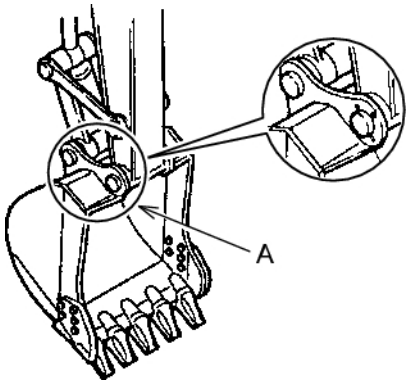

1. Place the bucket in stable condition on the ground.
2. Move O-ring (1) from the regular position to the bucket boss position.
3. Swing rightward slightly and press the arm top end against the bucket right side. (On this side, there is not looseness adjustment mechanism.)
4. Move safety lock lever to "LOCKED" position and stop engine.
5. Measure clearance (A) between bucket and arm boss. In the event that the measured value is 1.2 mm or more, carry out the adjustment.
6. Three bolts (2) on the clearance adjustment section contain five shims (3) (1 mm in thickness) in average. Loosen each bolt and eliminate sheets of shims equivalent to the clearance.
7. Tighten each bolt (2) to the specified torque equally.
   Tightening torque: 250 to 308 N-m {184 to 197 lbf-ft}
8. Return O-ring (1) in place.

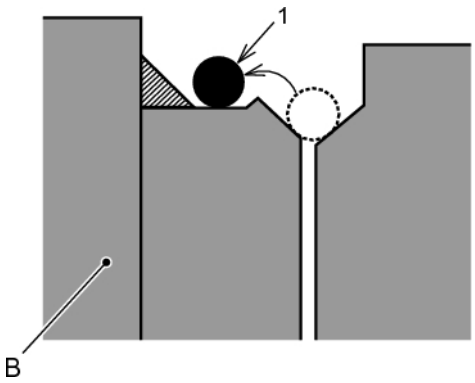

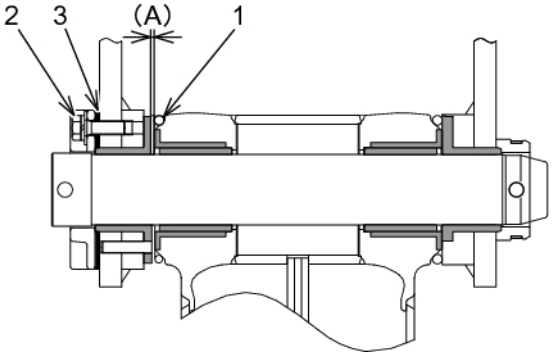

Copyright © 2015 Kobelco Construction Machinery Co.,Ltd. All rights reserved. [S2YF00022ZE01] [0731CsCshWbYs]

4.11 PRE-START (EVERY 8 HOURS) INSPECTION & MAINTENANCE

Thoroughly read and understand the "1.SAFETY PRECAUTIONS" of this MANUAL before operating or servicing the machine. The following inspection and maintenance shall be carried out before starting/after starting and after work.
For the following checking and service items, refer to Chapter 3 "MACHINE OPERATION".

-3.1.1-A	Daily Inspection
-3.1.2-A	Checking Coolant Level for Shortage and Making UP
-3.1.2-B	Checking Oil Level of Engine Oil Pan and Making UP
-3.1.2-C	Checking Fuel Level and Making Up
-3.1.2-D	Fuel Filter Drain
-3.1.2-E	Check Radiator, Oil Cooler and Filter
-3.1.2-F	Check Hydraulic Oil Level
-3.1.2-G	Checking Belt Tension
-3.1.5	Checking Function of Gauge Cluster
-3.1.6	Checking Work Light

A. Attachment Lubrication

Wipe all grease nipples and apply grease until the grease comes out through the gap of pin. Grease gun is provided inside of side door on the left side of machine.

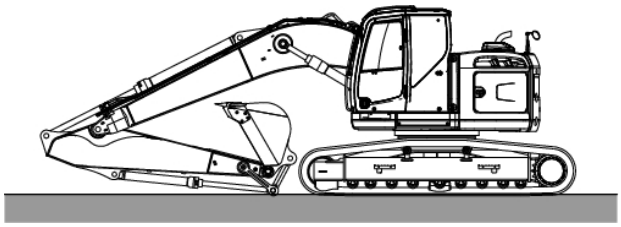

Notice **Greasing**

1.
All attachment has to be lubricated every 8 hours for the first 50 hours of operation.
2.
Then the attachment should be lubricated every 250 hours of operation.
3.
Next it should be lubricated every 500 hours of operation, but the lubrication around bucket has to be applied every 250 hours.
4.
If attachment is sank in water, it is recommended to lubricate it every 8 hours.

Copyright © 2015 Kobelco Construction Machinery Co.,Ltd. All rights reserved. [S2YF00022ZE01] [0731CsCshWbYs]

1. Boom cylinder head pins (1).
2. Boom foot pin (2), (3).
3. Boom cylinder rod pins (4), (5).
4. Arm cylinder head pin (6).
5. Boom foot (Center) pin (7).

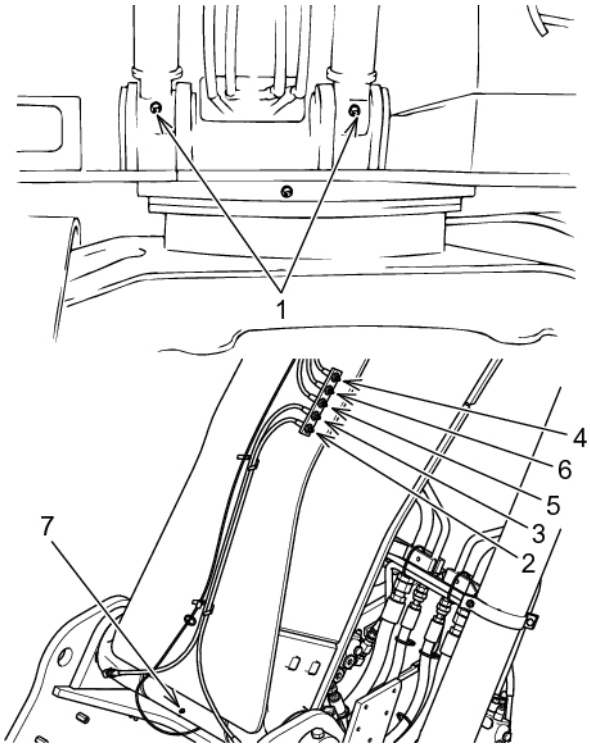

6. Arm cylinder rod pin (8).
7. Arm to boom pin (9).
8. Bucket cylinder head pin (10).

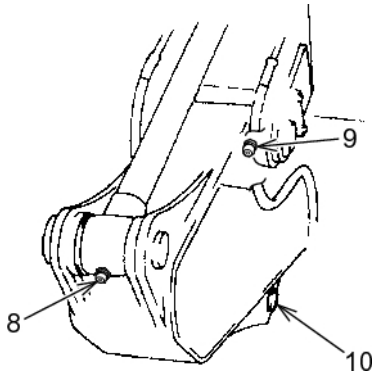

9. Bucket link pins (11).
10. Bucket cylinder rod pin (12).
11. Idler link to arm pin and arm to bucket pin (13).
12. Arm top pin (14).

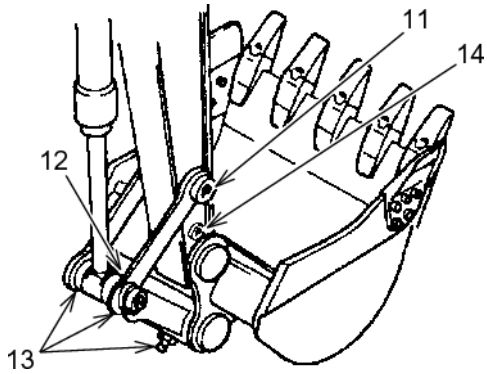

Copyright © 2015 Kobelco Construction Machinery Co.,Ltd. All rights reserved. [S2YF00022ZE01] [0731CsCshWbYs]

 https://truckmanualshub.com/

4.12 50 HOUR (WEEKLY) INSPECTION & MAINTENANCE PROCEDURES

Thoroughly read and understand the "1.SAFETY PRECAUTIONS" of this MANUAL before operating or servicing the machine.
Perform together with "4.11 PRE-START (EVERY 8 HOURS) INSPECTION & MAINTENANCE".

A. Batteries

WARNING

-Wear hard hat, approved safety glasses or face shield, gloves and other safety equipment when working with batteries.
-Flammable gas (hydrogen gas) is generated in the battery. Do not allow sparks or flames to come in contact with batteries to avoid triggering an explosion.
-Battery fluid has strong acid. It corrodes metal very rapidly. If it adheres on skin or enters into eye, it causes for a burn or blindness. At such case, immediately wash skin or eye with lots of water, and ask a doctor to treat it as soon as possible.
-Stop the engine and carry out maintenance and checking service for the battery.
-Remove battery terminal from grounding side (negative terminal) first, and conversely fit the terminal to the grounding side last.
-Do not put tools and hardware on protective cover installed on the battery upper section.
There is a hazard of explosion because the short-circuit may catch fire.

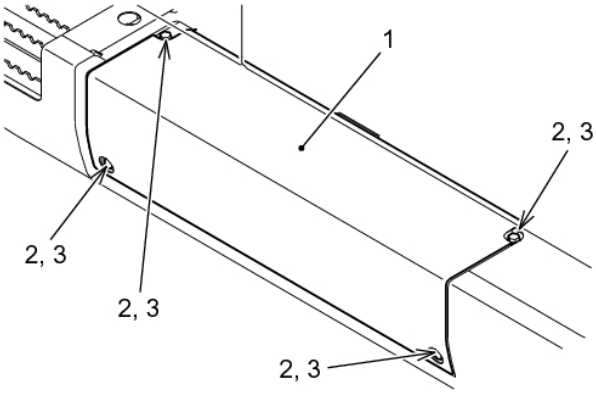

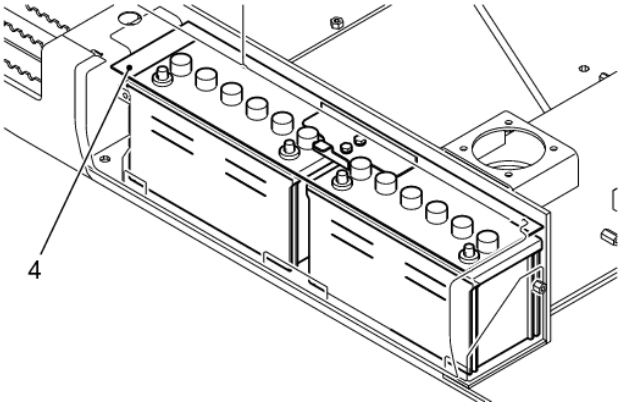

Copyright © 2015 Kobelco Construction Machinery Co.,Ltd. All rights reserved. [S2YF00022ZE01] [0731CsCshWbYs]

A.1 Checking Battery Liquid Level

1. Loosen attaching bolts (2) with washers (3) for battery cover (1) at left side of machine, and remove the cover.
2. Remove protective rubber cover (4) for battery.
3. Remove battery cell caps (5) and visually inspect electrolyte (acid) level. Proper level is 10 to 15 mm (0.4 to 0.6 inch) above cell plates.
4. Clean vent of battery caps (5) and tighten cap (5) securely.
5. Attach protective rubber cover (4) with nut (1) and washer (2).
6. Tighten bolts (2) with washers (3), and install battery cover (1).
   A: Battery
   B: Upper
   C: Lower
   D: Cell Plates

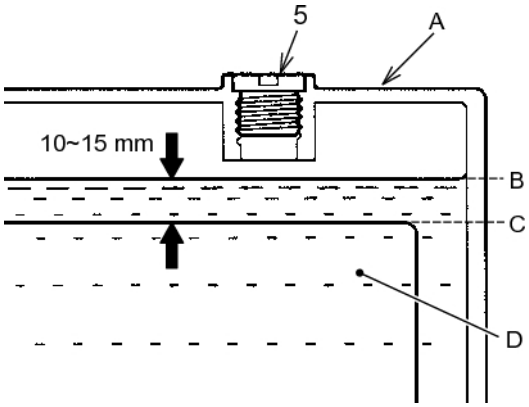

Notice

-Clean battery terminal and apply grease or commercial lube oil rust preventive spray.
-Call in licensed specialty company for the disposal of used battery.
-Be careful not to use the old battery together with new battery. It may reduce the service life of battery. Therefore replace two batteries together with new ones if required to replace.

A.2 Measuring Specific Gravity of Battery Liquid

Since the specific gravity of battery liquid varies with respect to the liquid temperature, keep the specific gravity within the range specified in the table.
When the specific gravity is lower than the lower limit, it is necessary to charge the battery.

Ambient Temperature

Charge	20C degrees (68F degrees)	0C degrees (32F degrees)	-10C degrees (14 degrees)
100 %	1.31	1.29	1.28
90 %	1.29	1.28	1.26
80 %	1.28	1.26	1.25
75 %	1.27	1.25	1.24

Notice

Do not measure the specific gravity of battery immediately after operation, but measure it at ambient temperature.

Copyright © 2015 Kobelco Construction Machinery Co.,Ltd. All rights reserved. [S2YF00022ZE01] [0731CsCshWbYs]

Precaution for Operation in Cold District

1. Pay attention to thermal insulation for battery. The drop in temperature may cause freezing of the battery liquid, or the capacity is significantly reduced.
2. Charge battery earlier in the live time.

B. Fuel Tank Drain

Loosen the drain valve (1) to drain the water and deposits in an empty container.
Since the water is deposited during the night, it is effective to drain before starting up the engine in the morning.
A: Open
B: Close

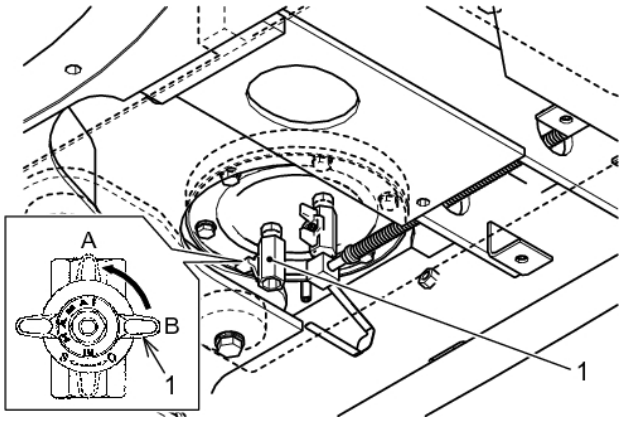

WARNING

Clean up all spilled fuel.
Fuel oil is highly flammable. Spilled fuel can cause fires.

1. Swing the upper structure of the machine so that the drain valve (1) under the fuel tank comes to midway between the crawler shoes of left and night. Place bucket to the ground and stop the engine.
2. Place an empty container under the drain valve (1) to catch the fuel discharged.
3. Open drain valve (1) and discharge water and sediment deposited on the bottom. In this time, be careful not to be showered by flushed fuel.
4. Close drain valve (1) when clean fuel was discharged.

Copyright © 2015 Kobelco Construction Machinery Co.,Ltd. All rights reserved. [S2YF00022ZE01] [0731CsCshWbYs]

C. Track Tension

WARNING

Support lower frame with suitable blocks.

1.
Operate swing, arm, bucket and boom controls until machine is set up as shown in.
2.
In center of track, measure the distance between the bottom of frame rails and surface of shoe.
3.
Perform steps 1 and 2 on right track.
4.
To increase track tension, set machine as shown in figure and with grease gun inject extreme pressure No.2 grease into idler adjustment grease nipple (1) until proper tension is reached. Perform this procedure on both tracks.

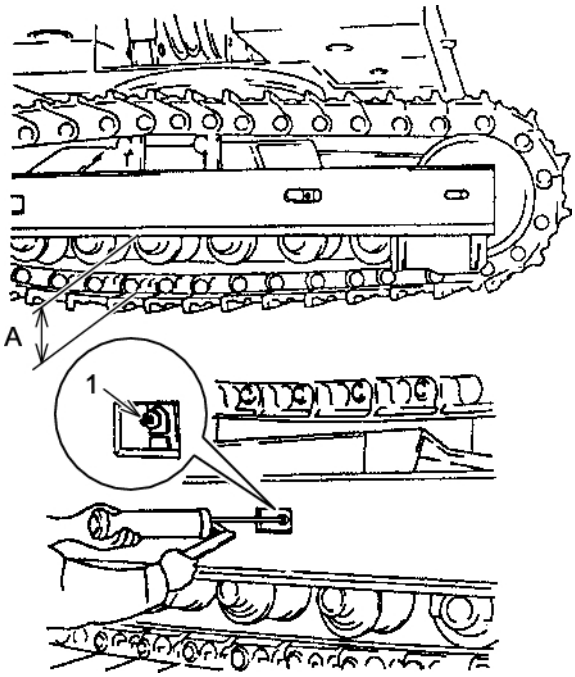

Slack:
Proper Tension (A): 320 to 350 mm (12.6 to 13.8 inches)

IMPORTANT

After injecting grease, operate the travel control forward and reverse for the track being adjusted. This will balance the tension between the idler and the sprocket. Then remeasure as shown in figure.

5.
To decrease track tension, set machine up as shown in figure.
6.
Carefully loosen the adjusting grease nipple (1) to allow grease to escape.
7.
Tighten grease nipple (1), measure track tension as shown in figure.
Tightening torque: 49 to 69 N-m (36.6 to 51.4 lbf-ft)
8.
If necessary, perform steps 5 through 7 on other track.

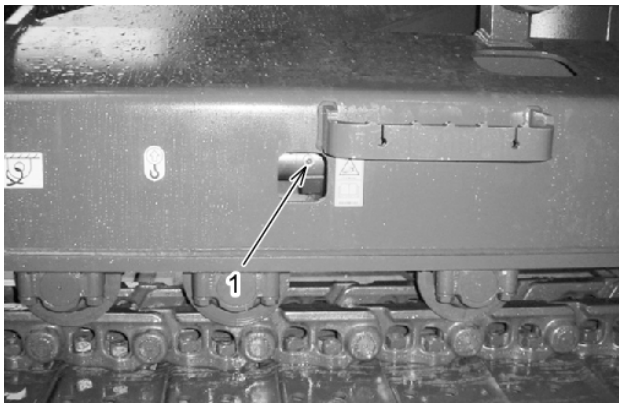

Copyright © 2015 Kobelco Construction Machinery Co.,Ltd. All rights reserved. [S2YF00022ZE01] [0731CsCshWbYs]

 https://truckmanualshub.com/

WARNING

Grease in track tensioning mechanism is under extreme pressure and can penetrate skin causing severe injury. Keep face and body away from grease nipple area. Never loosen grease nipple more than one complete turn. If grease does not release after one turn of the nipple, call an authorized KOBELCO service dealer for assistance.

Copyright © 2015 Kobelco Construction Machinery Co.,Ltd. All rights reserved. [S2YF00022ZE01] [0731CsCshWbYs]

4.13 120 HOUR INSPECTION & MAINTENANCE PROCEDURE

Thoroughly read and understand the "1.SAFETY PRECAUTIONS" of this MANUAL before operating or servicing the machine.
Perform together with daily and 50-hour inspection and maintenance.

A. Swing Motor Reduction Oil

WARNING

Never change oils on a machine that has just finished working. Allow machine to cool first until oils and fluids are warm not hot.

1. Before checking, find level place, place bucket on the ground, stop engine and move safety lock lever to "LOCKED" position.
2. Check gear oil level with the level gauge (1).
3. If the reading of level gauge (1) is within the specified range, it is in proper level. Remove plug (2) and make up short of specified gear oil through the inlet.
   For specified gear oil, refer to the section "LUBRICANT, FUEL & COOLANT SPECIFICATIONS".
4. Clean filling plug (2) with light oil, and wind seal tape on tube (3) and install plug securely.
   Tightening torque: 49.4 to 60.4 N-m {36 to 45 lbf-ft}

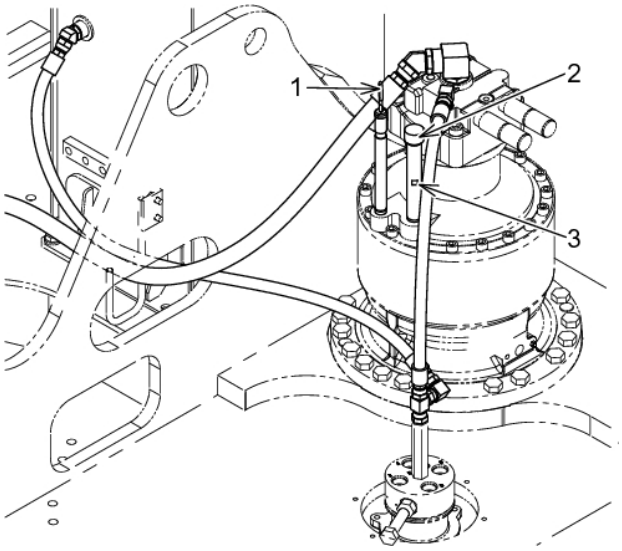

4

Copyright © 2015 Kobelco Construction Machinery Co.,Ltd. All rights reserved. [S2YF00022ZE01] [0731CsCshWbYs]

B. Travel Reduction Unit Oil

WARNING

-Travel reduction unit could be under pressure. Carefully loosen plug and remove slowly filled air pressure. Where the plug was loosened abruptly, there is the danger of spouting out of plug and oil. Do not face the plug to prevent from flying plug etc.
-Never change oils on a machine that has just finished working. Allow machine to cool first until oils and fluids are warm not hot.

1. Before checking, find level place, stop machine locating plug (1) bottom, and move safety lock lever to "LOCKED" position.
2. Remove level plug (2) and check for short of oil level and contamination. If the oil level is to the top side of level plug, it is in proper level. If shorted, remove fill plug (3) and make up short of specified gear oil. For specified gear oil, refer to the section "LUBRICANT, FUEL & COOLANT SPECIFICATIONS".
3. Clean level plug (2) and fill plug (3) with light oil, and then attach it in place.
4. Similarly check on the travel reduction unit on the other side.

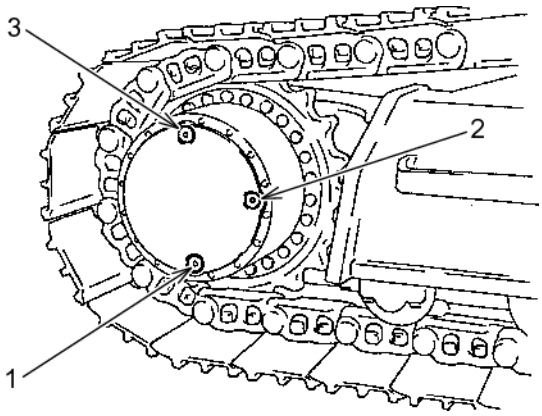

Copyright © 2015 Kobelco Construction Machinery Co.,Ltd. All rights reserved. [S2YF00022ZE01] [0731CsCshWbYs]

C. Checking for Intake Rubber Hose

WARNING

-Don't touch the rubber hose to avoid burns.
Immediately after stopping the machine or during the operation, the temperature of the rubber hose is very high.
-When the rubber hose is replaced, fill the inlet of air intake with clean cloth to prevent the dust from entering.

C.1 Checking rubber suction hose for air cleaner

1. Check the rubber hose (1) for damage, deterioration and for looseness of band (2).
2. Replace the damaged or deteriorated rubber hose (1) and the band (2) at the same time with new parts.

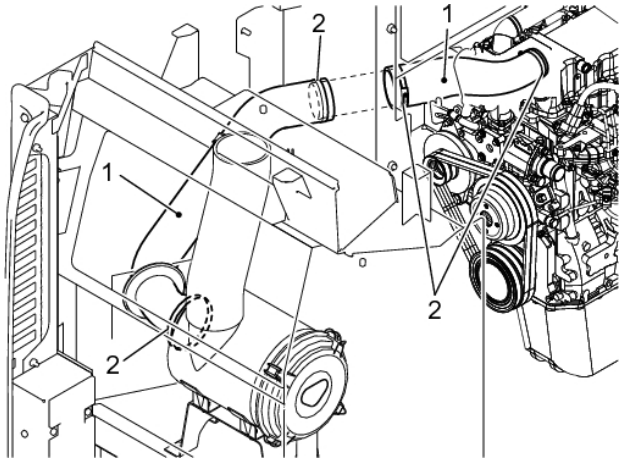

C.2 Checking rubber hose for intercooler

1. Check the rubber hose (1) for damage, deterioration and for looseness of band (2).
2. Replace the damaged or deteriorated rubber hose (1) and the band (2) at the same time with new parts.

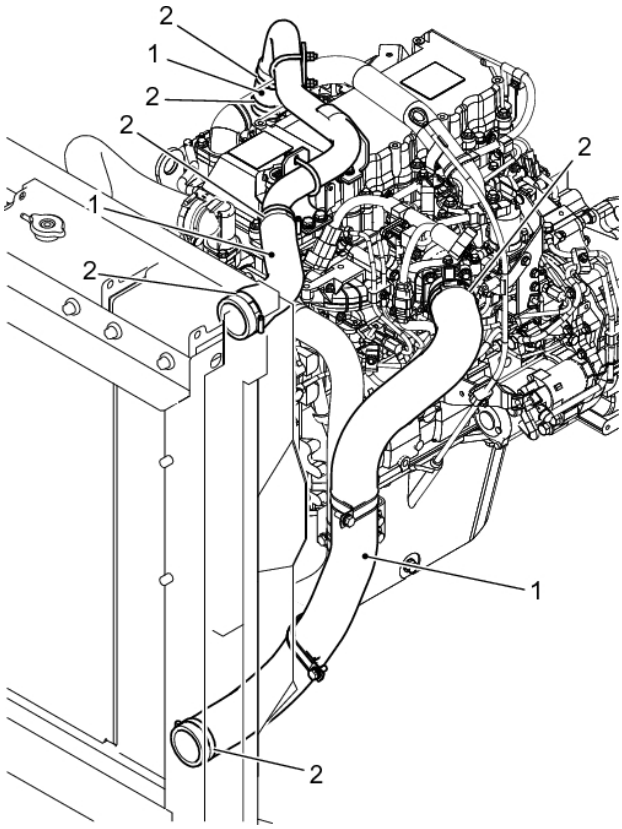

Copyright © 2015 Kobelco Construction Machinery Co.,Ltd. All rights reserved. [S2YF00022ZE01] [0731CsCshWbYs]

4.14 250 HOUR (3-MONTH) INSPECTION & MAINTENANCE PROCEDURE

Thoroughly read and understand the "1.SAFETY PRECAUTIONS" of this MANUAL before operating or servicing the machine.
Perform together with daily, 50-hour and 120-hour inspection and maintenance.

A. Fan, Alternator, A/C Belt Wear and Tension

WARNING

Rotating parts can cause injury. Keep away from fan and belt when engine is running. Stop engine before servicing.

This machine is equipped with belts for alternator, fan and air-con.
Check these belts for wear and damage and check the belt tension for slack, and adjust it properly in order to maintain the engine in high performance and the specified service life.
Check the tension of belt by pressing on the center of belt by thumb. If the deflection is within the range shown in the table, it is in normal tension.

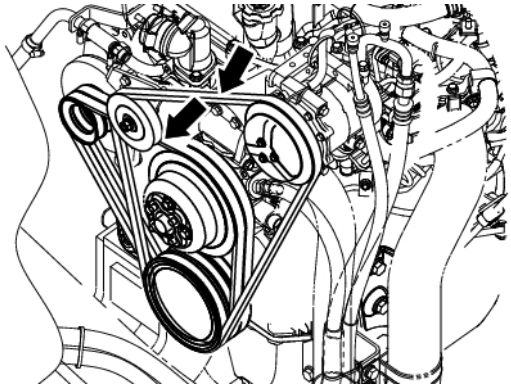

Belt	When new belt replaced mm (in)	When inspected mm (in)	Force N (lbf)
Alternator, Fan	8 to 10 mm (0.31 to 0.39")	10 to 12 mm (0.39 to 0.47")	98 (22)
Air-conditioner	6 to 7 mm (0.24 to 0.28")	7 to 8 mm (0.28 to 0.31")	28 (6.3)

IMPORTANT

-When replace with new belt, there is a lack of initial adaptability of the belt. Run the engine at idling speed for about three or five minutes. After that, adjust the belt tension again.
-New belts get complete initial elongation after being run about two hours.
-When you replace V-belts which are two in on set, make sure to replace both of them.

B. Adjustment for Alternator and Fan Belt

IMPORTANT

Be careful of the alternator and fan belts so that grease and oil are not adhered. The service life may be shortened due to slipping with oil.

Copyright © 2015 Kobelco Construction Machinery Co.,Ltd. All rights reserved. [S2YF00022ZE01] [0731CsCshWbYs]

1. Release bonnet catch, open engine hood and support it with stay.
2. Loosen attaching nut (1) and adjusting nut (2) slightly and adjust the belt tension.
3. Loosen adjusting bolt (3), adjust the alternator and fan belts to the specified tension, and tighten attaching nut (1) and adjusting nut (2).
   Tightening torque:
   Through bolt (2): 83 N-m (61 lbf-ft)
   Fixing nut (1): 51 N-m (38 lbf-ft)
4. After adjustment, start engine and run it at low speed for about 5 minutes.
5. Release the stay which is supporting hood, close engine hood and lock bonnet catch.

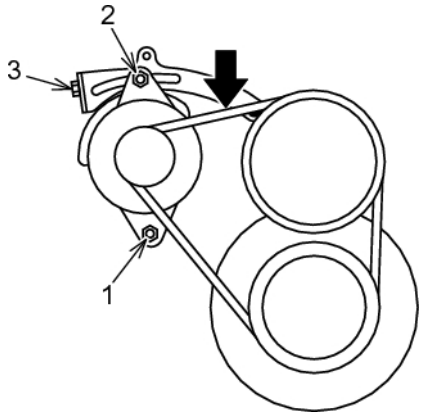

C. Air Conditioning Compressor Belt

WARNING

Rotating parts can cause injury. Keep away from fan and belt when engine is running. Stop engine before servicing.

IMPORTANT

The improper belt tension may have the performance of compressor lower resulting in the damage of belt and compressor.

1. Release bonnet catch, open engine hood and support it with stay.
2. Loosen nut (1) for idle pulley slightly and adjust the belt tension while turning the adjusting bolt (2), and then tighten nut (1).
   Tightening torque: 41.2 to 51.0 N-m (30.4 to 37.6 lbf-ft)
3. After adjustment, start engine and run it at low speed for about 5 minutes.
4. Release the stay which is supporting hood, close engine hood and lock bonnet catch.

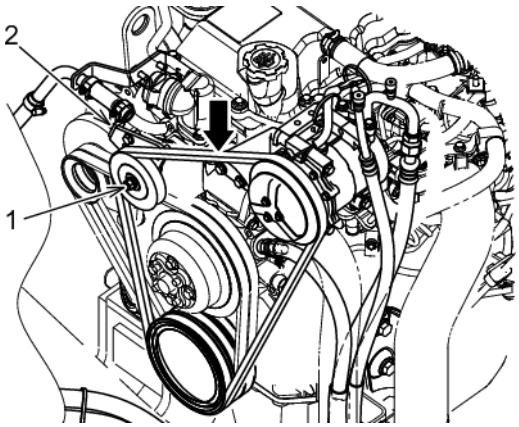

Copyright © 2015 Kobelco Construction Machinery Co.,Ltd. All rights reserved. [S2YF00022ZE01] [0731CsCshWbYs]

D. Checking the Radiator Hoses

The hose replacement before trouble occurs provides economical and good maintenance. The hose replacement before the hose is damaged will result in cutting costs and minimize the unexpected interruption of work. Replace the hose (2) and clamp (1) immediately if the crack, permanent set in fatigue and water leakage is found. The immediate replacement could protect engine from serious failure like overheating, etc.

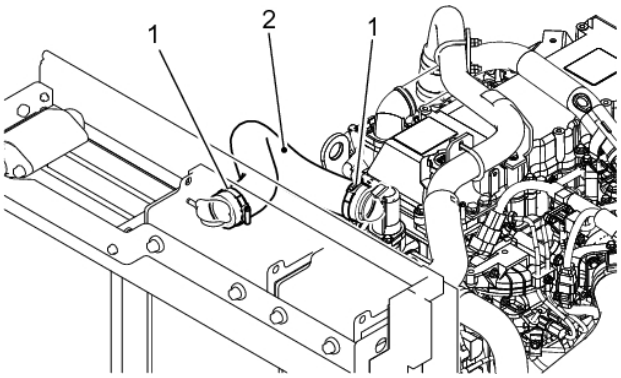

WARNING

Wear goggles, safety shoes, hard hat, work cloths and work gloves to perform inspection and maintenance on this machine.

Copyright © 2015 Kobelco Construction Machinery Co.,Ltd. All rights reserved. [S2YF00022ZE01] [0731CsCshWbYs]

D.1 Check

1. Release bonnet catch, open engine hood and support it with stay.
2. Check the hoses (2) for coolant leak due to loose clamps (1) or cracked and worn hoses.
3. Tighten loose clamp (1) again, and replace the hose (2) on which crack and permanent set in fatigue were found by the following procedure.

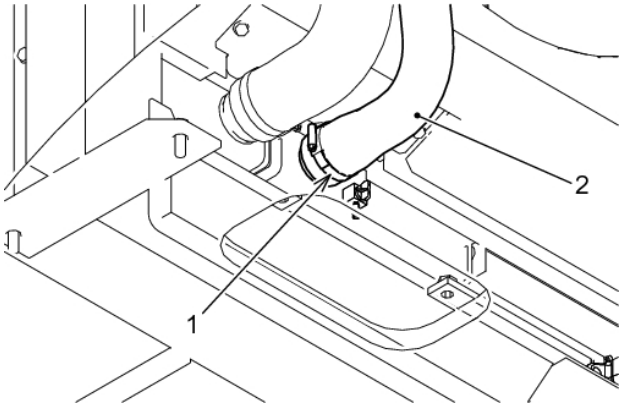

D.2 Replacing the Radiator Hoses

WARNING

Avoid being burned by hot liquid and steam. Do not loosen the radiator cap when the coolant is hot. The cooling system is under pressure. Stop the engine and allow enough time for system to cool.

1.
Loosen 2 bolts on the under cover of lower of radiator, and remove under cover.
2.
Loosen radiator cap slowly and be sure that the pressure is released. And then push the cap in and loosen the pushed cap by turning further and remove it.
3.
Loosen drain valve (3) until the radiator coolant level is lower than the replacing hose (2) and drain coolant in container.

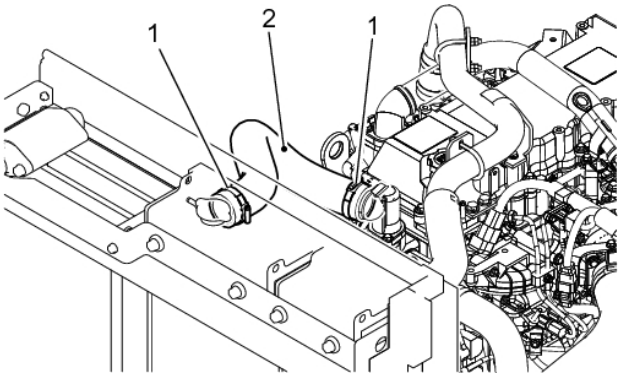

4.
Loosen clamp (1), remove damaged hose (2) and replace the hose with new one.
5.
Tighten drain valve.
6.
Fill coolant in radiator and then fill reserve tank with coolant.
7.
After filling up, tighten radiator cap securely.
8.
Release the stay which is supporting hood, close engine hood and lock bonnet catch.
9.
Return the under cover to original place.

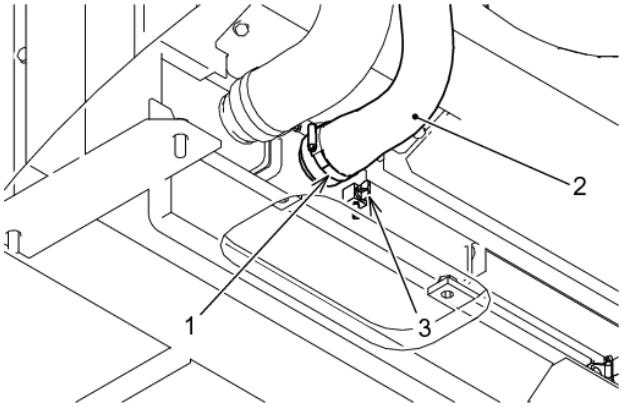

Copyright © 2015 Kobelco Construction Machinery Co.,Ltd. All rights reserved. [S2YF00022ZE01] [0731CsCshWbYs]

E. Air-Conditioner Filters Service

WARNING

The flying debris due to compressed air may cause accident resulting in injury or death.
Wear safety goggles and respirator when cleaning the filters of air-conditioner.

Cleaning recirculate and fresh air filters
Recirculate air filter : Every 500 hours
Fresh air filter : Every 250 hours

Replacing inside and outside air filters
Recirculation air filter : After cleaning about 10 times
Fresh air filter : After cleaning about 10 times

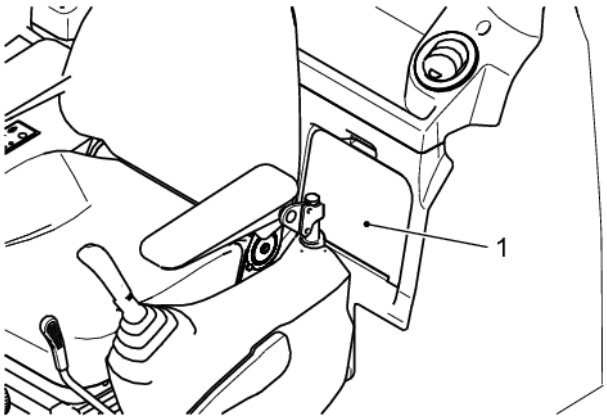

IMPORTANT

The maintenance time shows the reference value. Clean them earlier than the specified time in case where being used in dusty area.

E.1 Removing Fresh Air Filter

1. Catch cover (1) on the left rear side of operator seat and pull it this side.
2. Catch handle grip of fresh air filter (2) through opening from which cover (1) is removed and pull it out upward.

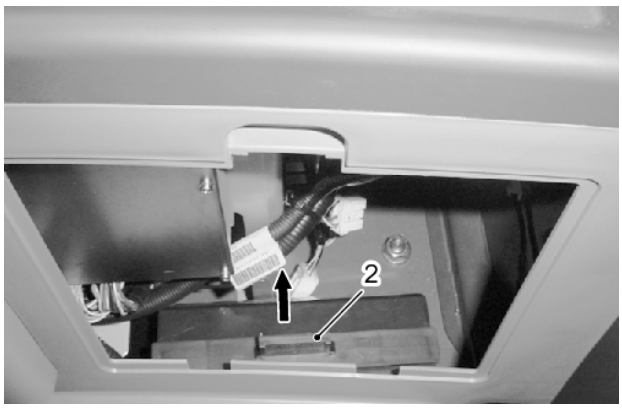

Copyright © 2015 Kobelco Construction Machinery Co.,Ltd. All rights reserved. [S2YF00022ZE01] [0731CsCshWbYs]

E.2 Removing Recirculation Air Filter

1. The recirculation air filter (3) is placed on the left side under the operator seat.
2. Turn over floor mat, catch handle grip of recirculation air filter (3) and pull it out forward.

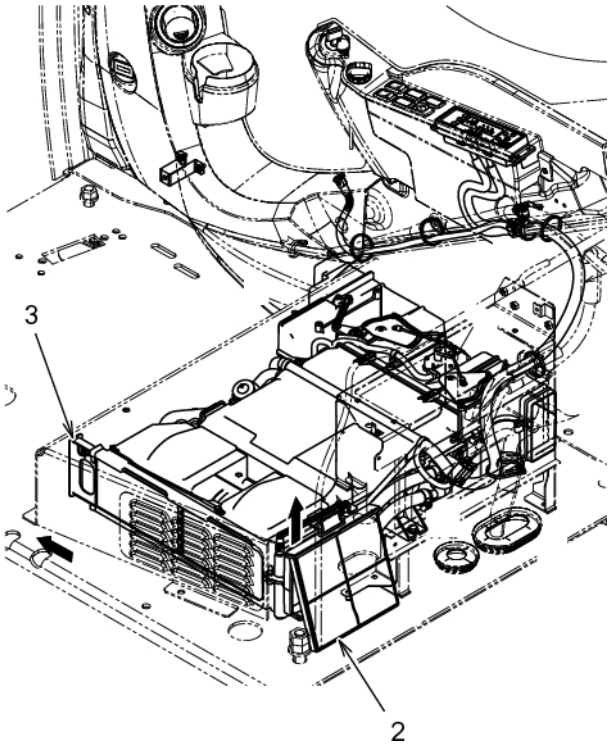

E.3 Cleaning

Clean recirculation and fresh air filters.

Clean recirculation and fresh air filters by air blowing

E.4 Attaching Procedure

Attach recirculation and fresh air filters after cleaning or for replacement by the reverse procedure of the removal.

IMPORTANT

Insert the recirculation air filter directing the UP side upward.

Copyright © 2015 Kobelco Construction Machinery Co.,Ltd. All rights reserved. [S2YF00022ZE01] [0731CsCshWbYs]

F. Air Cleaner Maintenance

CAUTION

-Direct contact of the body with compressed air, steam and high pressure water can cause injury. Wear protective glasses, mask, safety cap, safety shoes, etc., to avoid injury.
-Stop engine first and clean and replace the air cleaner element.

IMPORTANT

-Fro machines equipped with double element and the inner element (6) must be replaced together with the outer element (3). Do not fail to replace the inner element (6) with new one.
-When cleaning outer element, do not remove inner element to avoid dust getting into engine air intake.

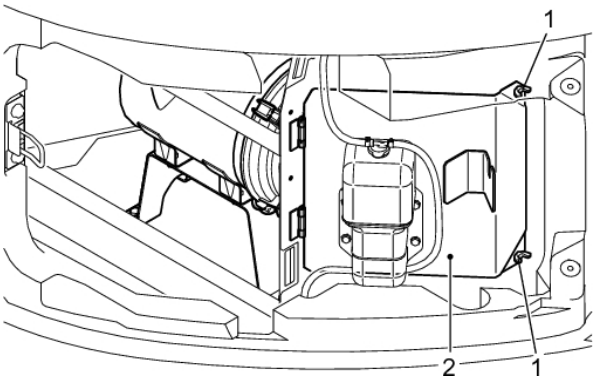

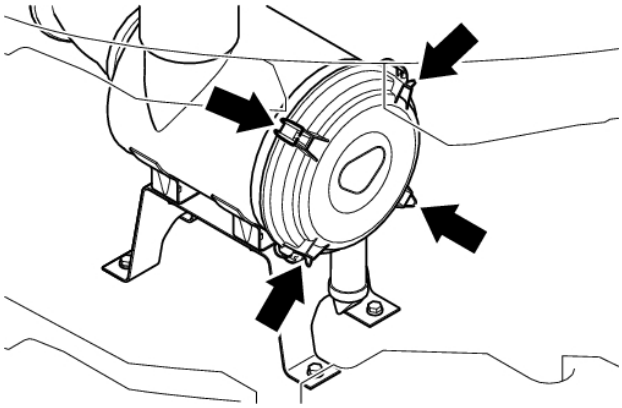

F.1 Cleaning or Replacement of Outer Element

Cleaning and replacement of outer element.
Cleaning :
When warning is indicated on multidisplay or every 250 HOURS.
Replacement :
After 6 times of cleaning or one year whichever comes first.

1. Using starter key, open side door at left side of counterweight. Loosen wing bolts (1) at duct part, and open the air cleaner access door (2).
2. Remove 4 clamps (4) on the cover and pull out outer element (3).
3. Clean the inside of air cleaner housing
4. To clean the outer element, blow compressed air (less than 0.2 MPa {29 psi}) up and down along the folds of the filter element interior to remove clogged dust or other contaminants.

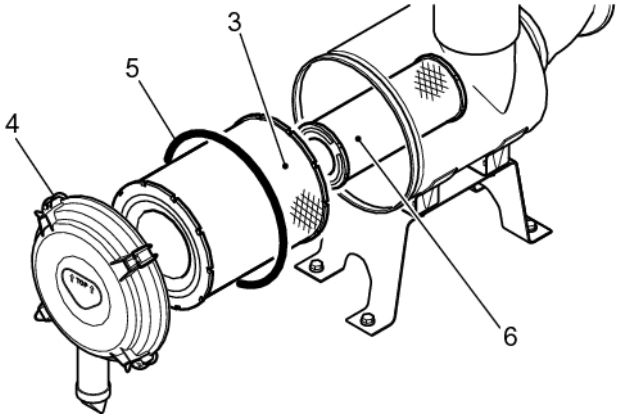

IMPORTANT

Do not reuse the element with damaged folds, gasket and/or seal.
Do not heavily tap the element not hit it to anything else for cleaning.

Copyright © 2015 Kobelco Construction Machinery Co.,Ltd. All rights reserved. [S2YF00022ZE01] [0731CsCshWbYs]

5. After cleaning, check on element (3) and if pin hole and excessively thinned part were found, replace it with new one.
6. In the reverse order of step 1, close the door (2) at the duct part and tighten wing bolt to fix the door. And lock the side door.

CAUTION

O-ring (5) is attached around the rim of cover, do not lose this O-ring.
The water intrusion due to loss of O-ring (4) may cause failure of engine.

F.2 Replacement of Inner Element

1. Remove outer element (3) first and then remove inner element (6).
2. Cover air outlet side with clean cloth or sealing tape to prevent intrusion of dust.
3. Clean inside of body and remove the cover attached in item 2.
4. Fit new inner element (6) to connector.
5. Install outer element (3), fit O-ring (5) to cover and install cover with clamp (4).

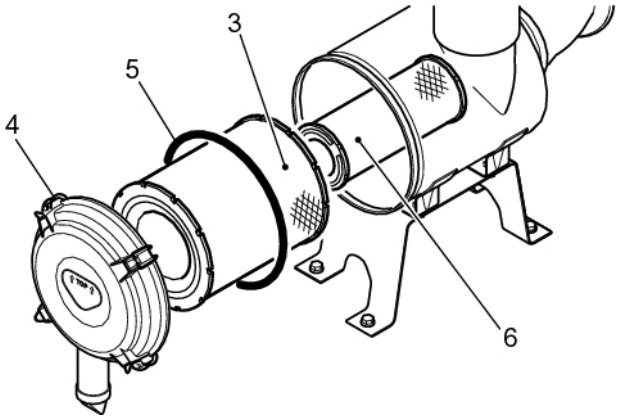

IMPORTANT

Install the air filter so that "ARROW" position mark is faced upward.

G. Radiator and Oil Cooler Debris Screen

WARNING

Hot fluids and surfaces can burn. Wear goggles, safety shoes, hard hat, work clothes, and work gloves to perform inspection and maintenance on this machine.

IMPORTANT

-Direct contact of the body with compressed air, steam and high pressure water can cause injury.
Wear protective glasses, mask, safety cap, safety shoes, etc., to avoid injury.
-First remove filters (2) (3) from machine and clean them. If the filters are cleaned on the machine, dust and dirt enter into duct and engine room.
-If tearing of filter is found or clog of dirt can not be removed, replace the filter.
-If deformation of filter flame (made of Aluminum) is found, replace filter with new one.
-When compressed air or jet water is used for cleaning the filter, don not damage the filter by getting too close to screen.

Copyright © 2015 Kobelco Construction Machinery Co.,Ltd. All rights reserved. [S2YF00022ZE01] [0731CsCshWbYs]

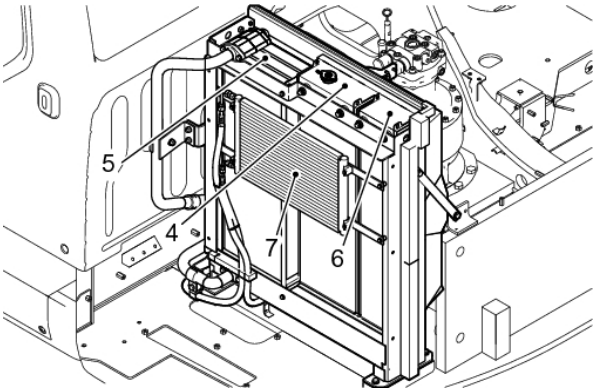

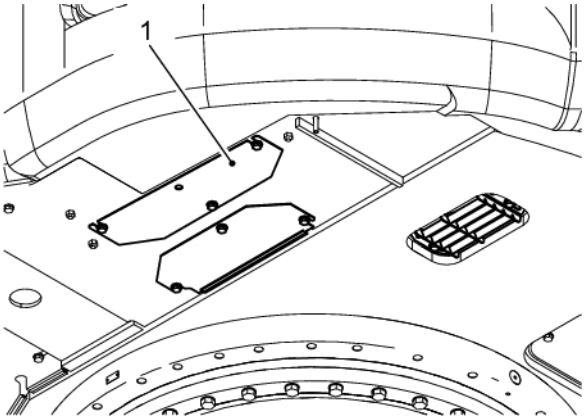

1. Open engine hood with starter key.
2. Using starter key, and open the door at the left side of the counterweight.
3. Remove the access covers (1) which are installed under the radiator.
4. Push lever of filter (2) towards front side of machine to remove the filter. And clean the filter (2).
5. Remove another filter (3) according to the procedure same as the above-mentioned.

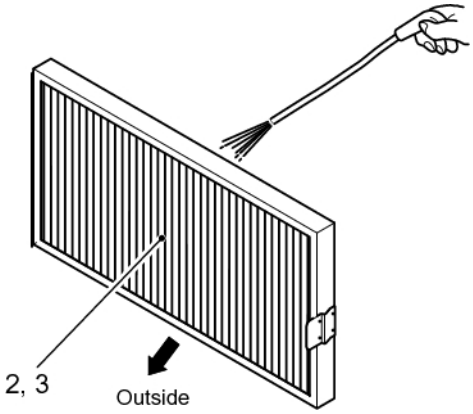

6. Check filter (2) (3), radiator (4), oil cooler (5), intercooler (6) and condenser (7) for clogging.
   When mud, dust and dead leaves are found, clean them off depending on the degree of dirt.
7. Remove dust, mud and other dirt from their cores and fins using compressed air (0.2 MPa) or water.
8. Push the filter (3) toward machine front and fix the filter (3) with lever.
9. Fix filter (2) by the method same as the above-mentioned.
10. Close the door at the left side of the counterweight, and lock the door. Then reinstall radiator lower access covers (1).

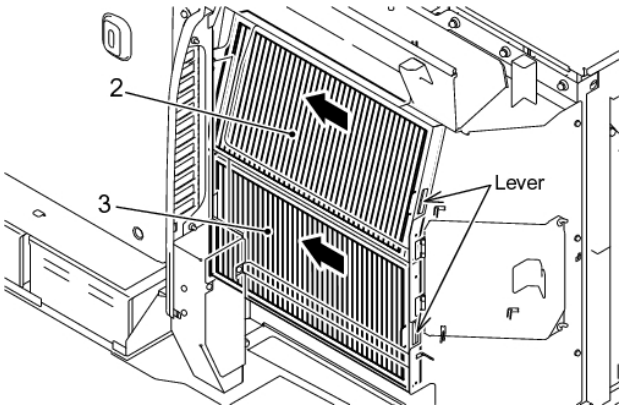

Copyright © 2015 Kobelco Construction Machinery Co.,Ltd. All rights reserved. [S2YF00022ZE01] [0731CsCshWbYs]

4.15 500 HOUR INSPECTION & MAINTENANCE PROCEDURES

Thoroughly read and understand the "1.SAFETY PRECAUTIONS" of this MANUAL before operating or servicing the machine.
Perform together with daily, 50-hour, 120-hour and 250-hour inspection and maintenance.

A. REPLACING ENGINE OIL AND ENGINE OIL FILTER

Wear the proper safety equipment when working around hot areas. Do not change oils, engine coolant or filters immediately after machine has been stopped.
Allow machine to cool down before performing maintenance procedures.

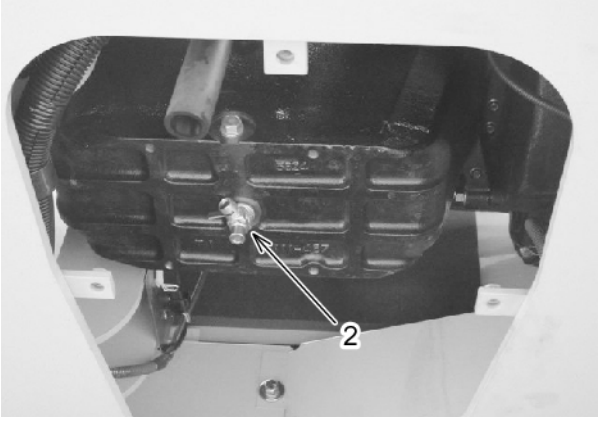

WARNING

Do not touch the heated section during operation or immediately after being stopped. There is a hazard of scalding.
Do not touch the heated section.

IMPORTANT

-Check the waste oil. If there are metal chips or powder mixed in the oil, contact KOBELCO distributor.
-Replace it at 50 hours operation for the first use of new machine.
-Replace engine oil filter simultaneously with the engine oil change.

Copyright © 2015 Kobelco Construction Machinery Co.,Ltd. All rights reserved. [S2YF00022ZE01] [0731CsCshWbYs]

1.
Loosen 4 bolts for undercover under the engine, remove under cover, and then open engine hood.
2.
Prepare container for drain oil.
Container: 25 L (6.6 gal) or more
3.
Clean around oil filler cap (1), remove cap, loosen drain valve (2) of engine oil pan (2), and then drain engine oil.
4.
Tighten drain valve (2) securely.

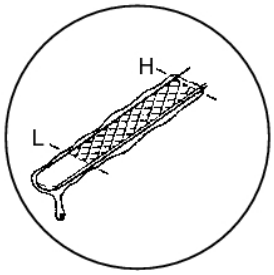

CAUTION

The engine and muffler stay hot after stopping engine.
Allow enough time for the engine to cool before inspection or maintenance to avoid being burned.

5.
Remove oil filter (3) with filter wrench and replace it with new one.
Filter wrench parts No. : 2421R171

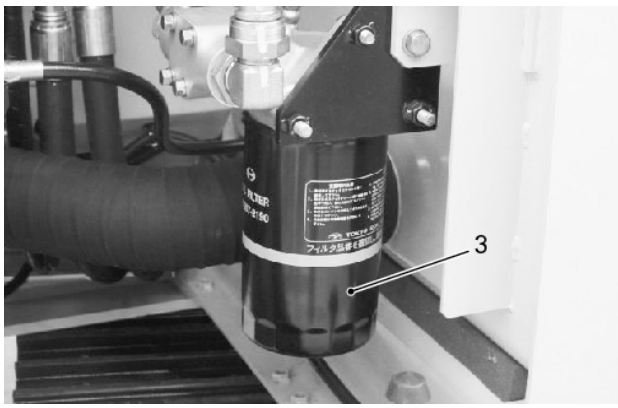

IMPORTANT

In this machine, the engine oil filter is located at the separate position from engine. And the engine oil filter is placed on the inside of door on the machine right rear side. When the filter is replaced, do not fail to carry out idling operation for several minutes so as to reach the oil into engine.

IMPORTANT

Dispose of all hazardous waste in accordance with government environmental regulations.

Copyright © 2015 Kobelco Construction Machinery Co.,Ltd. All rights reserved. [S2YF00022ZE01] [0731CsCshWbYs]

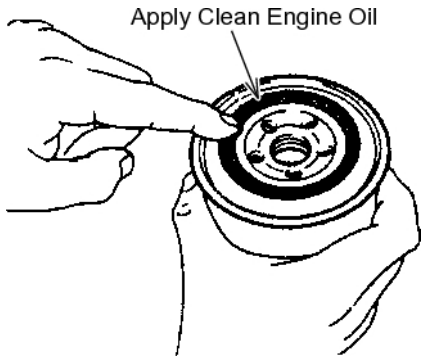

6.
Remove dust, mud, etc. from seal surface of oil filter.
7.
Fill new filter with engine oil, apply engine oil to gasket and fit it in place turning the filter by hand to the position where it is in contact with the filter seal surface.
8.
Tighten it 3/4 to 1 turn with filter wrench.
9.
Fill it with specified engine oil through oil filler cap (1) referring to the section "4.3 LUBRICANT, FUEL & COOLANT SPECIFICATIONS" in Chapter 4.
10.
Attach oil filler cap (1).
11.
Check that the reading of oil level gauge (4) is between upper limit and lower limit, crank engine and start the engine. Stop engine after idling for several minutes and check the oil level after about 10 minutes, and if the level is low, fill oil pan with the specified engine oil.
12.
Check oil filter attaching face for oil leak.
13.
Attach cover in place under engine and close engine hood.

B. Replacing Fuel Filter

The fuel filter is placed on the area where the inside of door on the machine right rear.

1.
When replacing the fuel filter, clean the area of filter up.
2.
Prepare container for drain oil.
3.
Close fuel cut valve (A) placed on the halfway of fuel filter line.

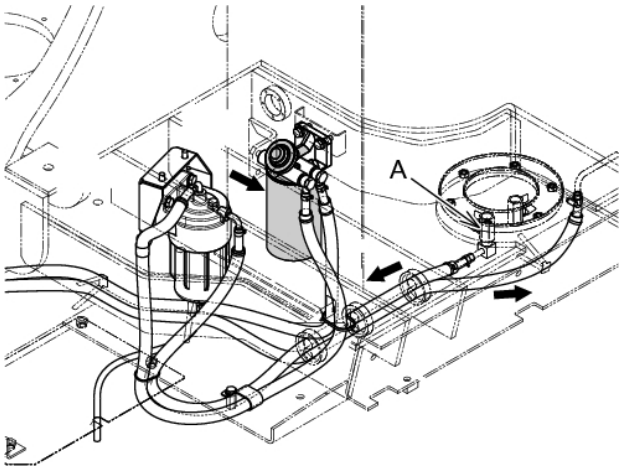

Copyright © 2015 Kobelco Construction Machinery Co.,Ltd. All rights reserved. [S2YF00022ZE01] [0731CsCshWbYs]

4.
To avoid the dust entering into the fuel line, clean the area around the air bleeder plug (1) in advance.

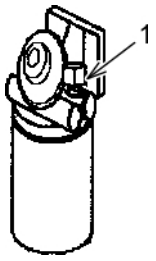

5.
Remove the element (2) with the wrench (3) for oil filter.
-Wrench for oil filter (3) : Parts number 2421R171
6.
Clean dirt and foreign matter from the attaching surface.

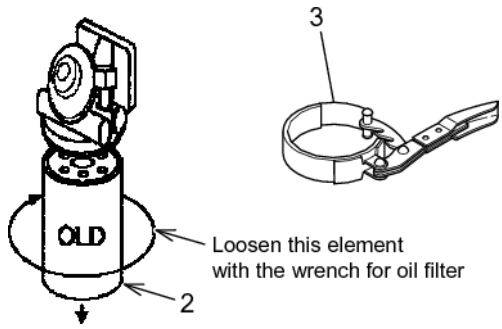

7.
Apply clean engine oil or light oil to new O-ring (4) thinly and set it to sealing face on element upper surface.
8.
Turn the element (2) until the new O-ring (4) comes into contact with the filter head (5) then tighten an extra three quarters turn by the filter wrench (Parts number: 2421R171).

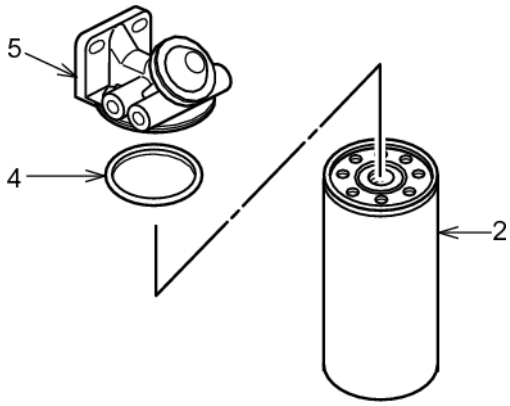

CAUTION

-Do not reuse element and O-ring.
-Clean the area of filter and replace it. (Especially, clean the area of the air bleeding plug and mating surface of the filter.)
-Replace the O-ring with new O-ring in the element kit.
-When replacing the filter, do not enter dust into the filter.
-Fit O-ring with care to prevent damage.
-Check that O-ring is in contact with sealing face exactly.
-Do not fill the filter with fuel in advance of assembling, to prevent foreign matter from entering into the fuel.

Copyright © 2015 Kobelco Construction Machinery Co.,Ltd. All rights reserved. [S2YF00022ZE01] [0731CsCshWbYs]

9.
Position the fuel cut valve (A) of fuel line to "OPEN".
10.
Bleed air according to the air bleeding procedure for fuel system.

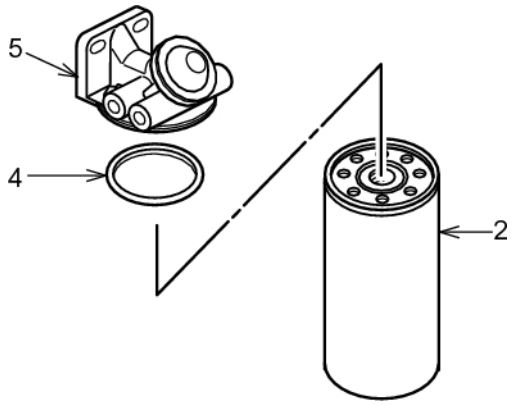

IMPORTANT

Dispose of all hazardous waste in accordance with government environmental regulations.

Copyright © 2015 Kobelco Construction Machinery Co.,Ltd. All rights reserved. [S2YF00022ZE01] [0731CsCshWbYs]

C. Replacing Pre-Filter

The pre-filter is placed on the area where the inside of door on the machine right rear.

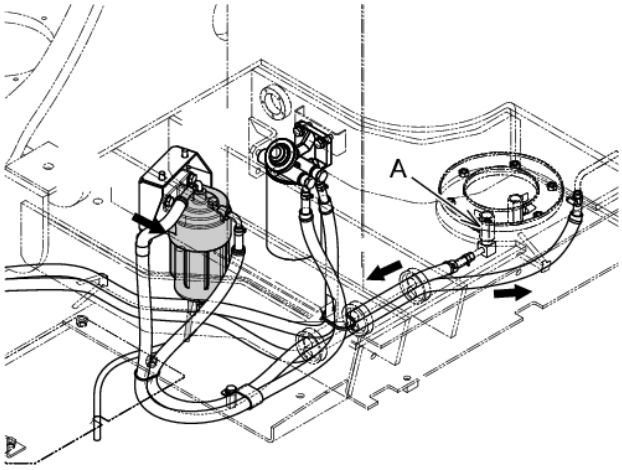

1.
Prepare container for drain oil.
2.
Close fuel cut valve (A) placed on the halfway of fuel filter line.
3.
Loosen air bleeder plug (1) and drain valve (2) and drain fuel from fuel pre-filter.
4.
Fit the specified filter wrench to the lower side of stiffening ribs and remove case (3).
Parts number: 2421R171
5.
Remove drain valve (2).

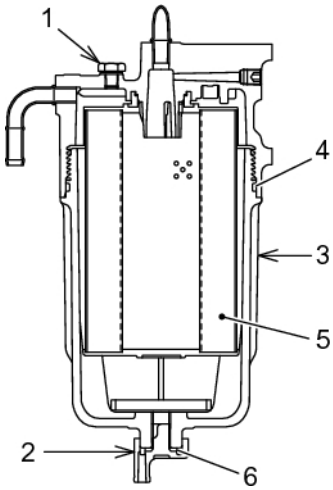

6.
Remove dirt and foreign matter from attaching surface.
7.
Apply light oil to new O-rings (4), (6) thinly, set it to case (3) and replace it with new element (5).
8.
Fit case (3) to filter head by hand securely and tighten it with filter wrench (Parts number: 2421R171).

CAUTION

-Do not reuse the element. Replace old O-rings.
-Be careful not to damage the O-rings by twisting.
-Check to see if the O-rings firmly contact to the sealing surface.

9.
Tighten air bleeder plug (1) and drain valve (2) and position the fuel cut valve (A) of fuel line to "OPEN".
10.
Bleed air according to the air bleeding procedure for fuel system.

Copyright © 2015 Kobelco Construction Machinery Co.,Ltd. All rights reserved. [S2YF00022ZE01] [0731CsCshWbYs]

D. Bleeding Air from the Fuel System

After replacing the fuel filter or if you have run out of fuel, air might have entered the fuel system and a simple supply of fuel cannot start the engine. Bleed the air according to the following procedure:

WARNING

-Be sure to drain the fuel into a container to ensure safety and keep the ground clean.
-Wipe away all spilled fuel before starting up the engine.
After engine has started, check for fuel leaks.

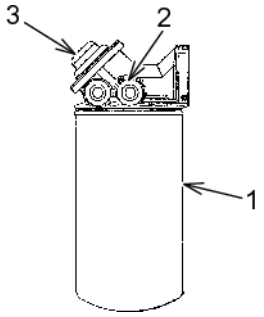

1. Place a container to receive drained fuel under the fuel filter (1).
2. Loosen the air bleeder plug (2) and send fuel pumping the priming pump (3). Put the rag to the air bleeder plug to absorb drained fuel.
3. Pump the priming pump (3) until the fuel without bubbles comes out from the air bleeder plug (2).
4. Tighten the air bleeder plug (2) if the fuel without bubbles comes out from the air bleeder plug. (Tightening torque : 2±0.2 N-m {1.4±0.1 lbf-ft})
5. Pump the priming pump (3) again more than 20 times.
6. After air bleeding is completed, wipe off any leaked fuel. Run the engine and check for fuel leakage.

E. Cleaning Fuel Tank Cap and Strainer

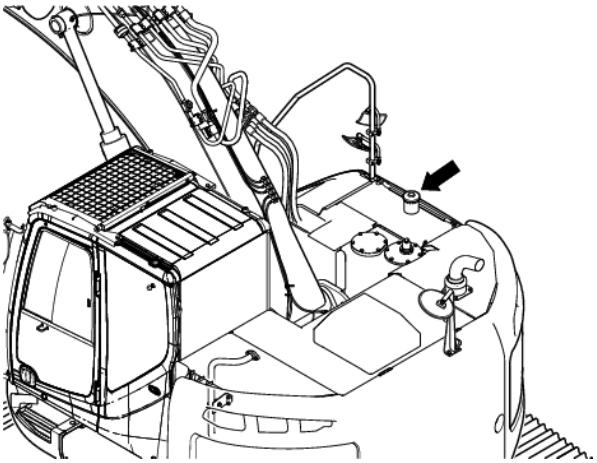

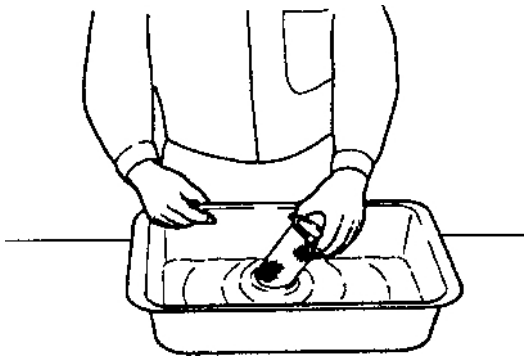

1. Remove cap with starter key.
2. Check cap seal for damage, and if damaged replace it with new one.
3. Clean strainer with light oil and attach it in place. If damaged, replace it with new one.
4. Attach cap and lock it with starter key.

Copyright © 2015 Kobelco Construction Machinery Co.,Ltd. All rights reserved. [S2YF00022ZE01] [0731CsCshWbYs]

F. Greasing the Slewing Ring

1. Locate the grease nipple at the front of the slewing ring.
2. Using grease gun filled with general purpose EP grease (Section "4.3 LUBRICATION, FUEL & COOLANT SPECIFICATIONS".), lubricate slewing ring with several shots from grease gun.
3. Slew machine 90 degrees right, and repeat step 2. See level on frame.
4. Continue to slew machine at 90 degrees increments and lubricating slewing ring until ring has been completely greased.

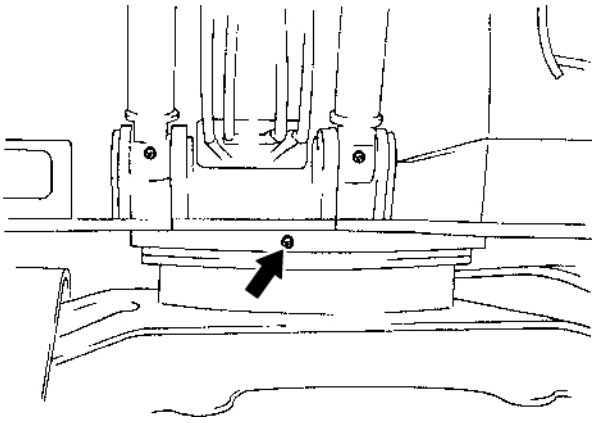

Notice

Using grease gun, lubricate through grease nipple unteill the grease comes out from bearing seal when the direction of the slewing bearing is changed at every 90 degrees.
(Grease amount : Max. 40 cc / 1 grease nipple)

G. Checking Slewing Ring Fitting Bolts for Loosening

Check that bolts (1), (2) securing slewing ring are not loosened. If loosened, remove bolts (1), (2) once, apply Loctite #262 or equivalent, and tighten them again.

Location	Torque specification N·m (lbf·ft)
Inner race	564 ± 56 (416 ± 41)
Outer race	490 ± 49 (362 ± 36)

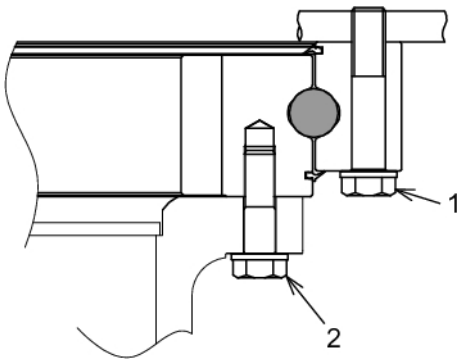

Alternately tighten bolts (1), (2) facing each other in order.

Notice

Since the tightening of slewing ring requires special tools, contact our dealer/distributor for assistance.

Copyright © 2015 Kobelco Construction Machinery Co.,Ltd. All rights reserved. [S2YF00022ZE01] [0731CsCshWbYs]

H. Lubricating Push Rod of Control Lever With Grease

Remove rubber boot of pilot valve and apply a small amount of grease to the push rod and top end (2) of rotation sliding section.

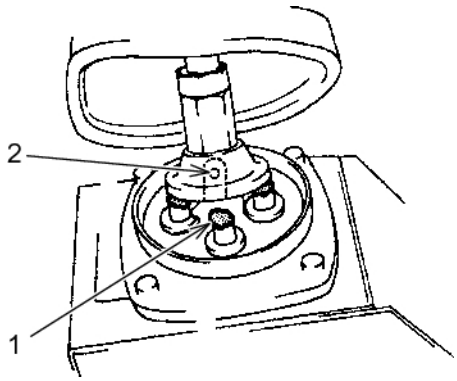

Removing Boot

1. Turn rubber boot inside out. And using cross recessed screwdriver, loosen 2 bolts (3).
2. Release hooks (6 peaces) of rubber boot.

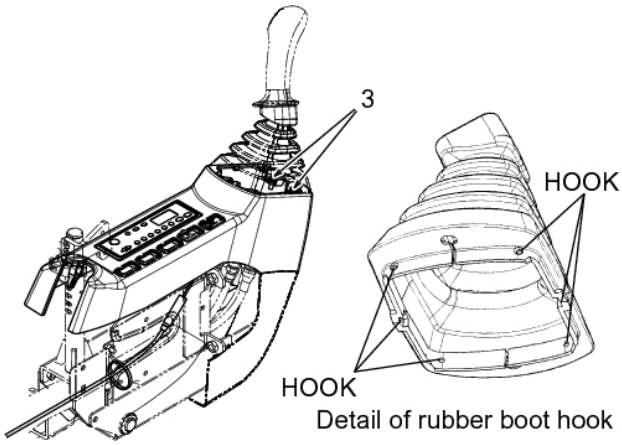

4

Copyright © 2015 Kobelco Construction Machinery Co.,Ltd. All rights reserved. [S2YF00022ZE01] [0731CsCshWbYs]

I. Checking the Air-Conditioner Refrigeran

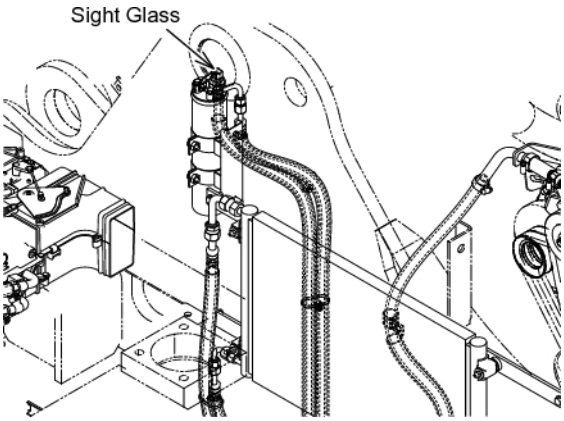

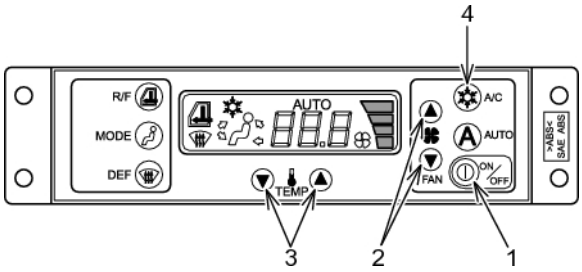

WARNING

-Do not loosen parts in the refrigerant circuit because there is a hazard of losing sight by getting coolant in eyes and being frostbitten hands by touching it.
-The inhaling of refrigerant gas has serious influence on human body.
And do not bring fire near the area where refrigerant gas is produced.

IMPORTANT

When filling or changing refrigerant, confirm the type of refrigerant and use refrigerant in the specified type.
-Refrigerant type and quantity:
R-134a: 910 g to 1010 g (2.0 to 2.21 lbs)
The use of unspecified refrigerant may cause damage of equipment.

I.1 Checking

1. Start the engine. Set the engine speed to the middle speed position.
2. Set the machine to the conditions shown below when checking the refrigerant.
   (1)Air conditioner switch (1) : ON
   (2)Fan switch (2) : HI position (Maximum)
   (3)Temp. adjustment switch (3) :
   Lower temp position
   -Door/Window : Close
   -Compressor switch (4) :
   ON (The lamp lit up)
3. Follow the procedure below and check the refrigerant volume by looking through the sight glass (inspection window) on the upper part of the receiver dryer. See right table for better reference.
   -Figure (A) :
   Shows that the refrigerant volume is proper.
   -Figure (B) :
   Shows that the refrigerant is over charged.

Refrigerant volume	Description
A Proper ○	After the air conditioner is turned ON, little bubbles appear. The refrigerant becomes transparent, then turns a light milky white.
B Overcharged ×	After the air conditioner is turned ON, no bubbles appear.
C Insufficient ×	After the air conditioner is turned ON, bubbles appear continuously.

Bubbles..... Refrigerant gas is mixed with refrigerant fluid.
No Bubbles.... Whole refrigerant becomes fluid and transparent.
Cloudy..... Refrigerant is separated from oil. The fluid becomes a light milky white.

Copyright © 2015 Kobelco Construction Machinery Co.,Ltd. All rights reserved. [S2YF00022ZE01] [0731CsCshWbYs]

This will make both high and low pressure extreme and exert a bad influence on the pressure switch operation and the air conditioning system.
-Figure (C) :
Shows that the refrigerant is insufficient. Have the refrigerant recharged at your KOBELCO distributor.

IMPORTANT

-Keep the air conditioner ready for use all year round.
Operate the air conditioner at least once every week for several minutes to rotate the compressor regardless of the season. This will prevent the refrigerant gas from leaking from the compressor sealing.
-When oil comes out from the pipe joint, contact our dealer/distributor because it is a sign of gas leaking.
-Follow the following regulations to conserve global environment.
1. Do not release refrigerant which is sealed in this unit in to atmosphere.
2. Extract the sealed refrigerant from unit when disposing this unit.

Copyright © 2015 Kobelco Construction Machinery Co.,Ltd. All rights reserved. [S2YF00022ZE01] [0731CsCshWbYs]

4.16 1000 HOUR (12-MONTH) INSPECTION & MAINTENANCE PROCEDURES

Thoroughly read and understand the "1.SAFETY PRECAUTIONS" of this MANUAL before operating or servicing the machine.
Perform together with daily, 50-hour 120-hour, 250-hour and 500-hour inspection and maintenance.

A. Replacing Return Filters

The return filter needs delicate treatment because they role important part for removal of contaminant in hydraulic oil to and preventing trouble of hydraulic component to maintain long service life.

WARNING

-Use extreme caution when removing the cover. The oil is under high pressure when hot.
Stop engine first, remove breather cap, press valve, release the pressure from tank, and then remove cover.
-Immediately after operation, there is a hazard of getting burn because oil is hot. The filter should be replaced after being cooled.

Notice

-Long-life return filter is used.
Place an order of return filter element kit,
P/No. YN52V01016R600.
-Change the hydraulic tank return filter on a new machine after the first 50 hours of engine operation then change every 1,000 hours
And for specification for breaker, replace return filter by every 250 hours.

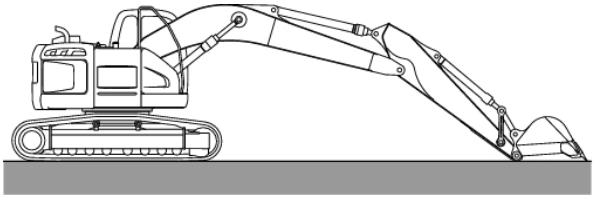

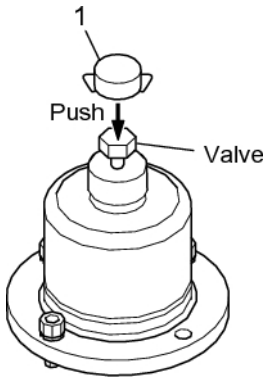

Copyright © 2015 Kobelco Construction Machinery Co.,Ltd. All rights reserved. [S2YF00022ZE01] [0731CsCshWbYs]

1. Park machine on firm level ground in the hydraulic level checking position, stop engine and move safety lock lever to "LOCKED" position.
2. Remove breather cap (1) on the upper surface of hydraulic tank and release pressure from hydraulic tank by pressing valve several (5 to 7) times.
3. Loosen 6 mounting bolts (2) of tank upper cover, remove cover (3).
4. Remove spring (4) and element assy (A) from tank.
5. Remove "O-ring" (5) of cover (3).
6. Disassemble element assy (B) while turning the handle.
   Disassembling parts ..... (B), (C), (D), (E), (F)
7. Replace "O-ring" (C) of check valve (B).
8. Replace packing (F) of plate (E).
9. Replace element, and assemble element assy (A) disassembled in procedure "6." again.
10. Attach element by the reverse procedure of that shown in items "3." and "4.".
11. Attach cover (3) with bolts (2).
    Tightening torque: 41.9 to 51.1 N-m (30.9 to 37.7 lbf-ft)
12. Start engine, put the machine on hydraulic oil level check position while moving each operating lever, and check hydraulic oil level

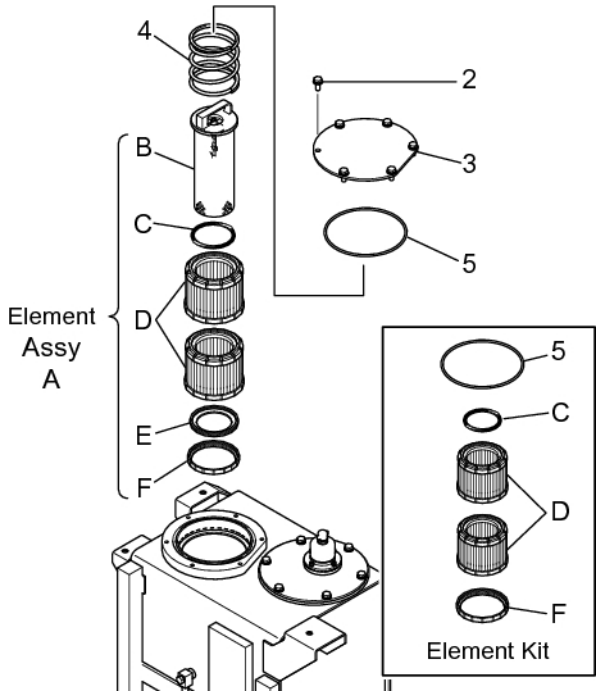

Copyright © 2015 Kobelco Construction Machinery Co.,Ltd. All rights reserved. [S2YF00022ZE01] [0731CsCshWbYs]

B. Replacement of Air Breather Element

CAUTION

The components of machine stay hot after stopping engine.To avoid burn by the gush of high temperature hydraulic oil, allow enough time for the engine and hydraulic oil to cool before inspection or maintenance.

REPLACING THE ELEMENT

1. Park the machine on firm and level ground, and extend the bucket cylinder, retract the arm cylinder, and lower the bucket to the ground as shown the right figure.
2. To release the inner pressure of hydraulic oil tank, remove the breather cap (1) located on the tank, and push the valve several times (5 to 7 times).
3. After removing the breather cap (1), remove the seal (2), the nut (3), and the seal (4) in order.
4. Rotate the cover (5) in a counterclockwise and remove the cover. And then remove the element (6).
5. Install the new element (6) and install the cover (5) along the groove.
6. Do not enter the water and dirt into the air intake and exhaust between the cover (5) and the body (7).
7. Install the seal (4) on the cover (5) and tighten the nut (3), and set the seal (2).
8. Rotate the breather cap (1) in a clockwise tightly by hand. And then install the breather cap (1).

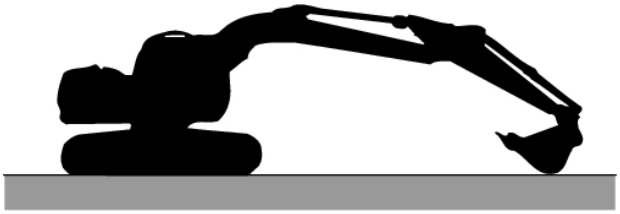

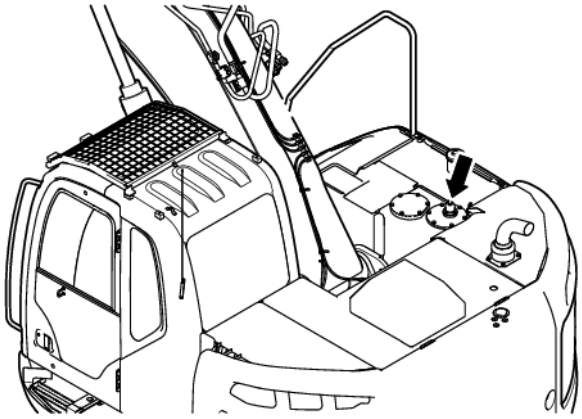

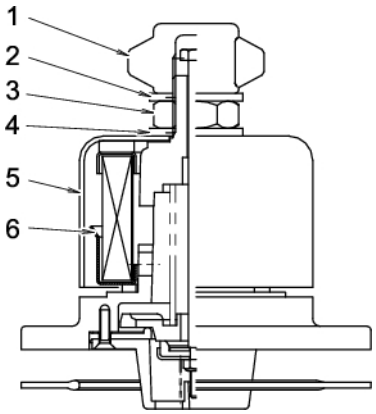

CAUTION

To avoid the breakage of bolts, do not tighten the nut (3) too much.Tightening torque [Nut (3)]: 10 to 14N·m

IMPORTANT

-To keep the hydraulic oil clean and to extend the life span of hydraulic components, replace the filter element at regular intervals.
-Replacement of element a 1000 hours interval is a guideline. If the machine is operated in very dusty conditions, change the oil filter at a reduced hour interval.

Copyright © 2015 Kobelco Construction Machinery Co.,Ltd. All rights reserved. [S2YF00022ZE01] [0731CsCshWbYs]

C. Checking Engine Mounting Bracket for tightening

1. Check the engine mounting bracket (1) and the rubber mount (2) for damage, deterioration and for looseness of bolt (3) and nut (4).
2. If damage or deterioration is found on mount bracket (1) or rubber mount (2), please contact our dealer/distributor for replacing.
3. Regarding tightening torque of bolt (3) and nut (4), refer to Section "4.6 TORQUE VALUES FOR SPECIFIED".

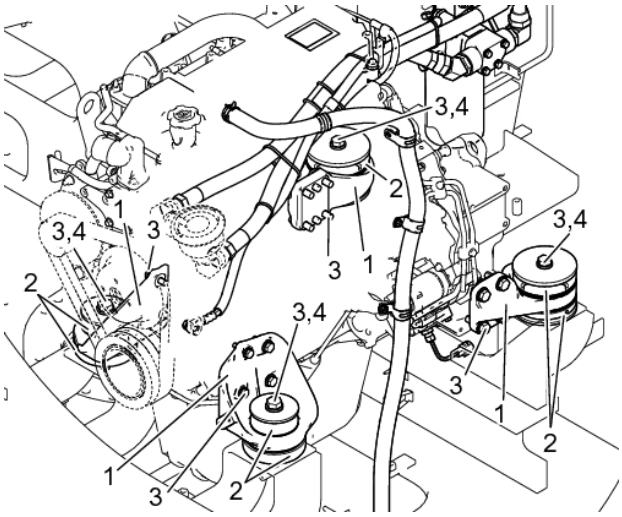

D. Checking Voltage

WARNING

-Wear hard hat, approved safety glasses or face shield, gloves and other safety equipment when working with batteries.
-Flammable gas (hydrogen gas) is generated in the battery. Do not allow sparks or flames to come in contact with batteries to avoid triggering an explosion.
-Battery fluid has strong acid. It corrodes metal very rapidly. If it adheres on skin or enters into eye, it causes for a burn or blindness.
At such case, immediately wash skin or eye with lots of water, and ask a doctor to treat it as soon as possible.
-Stop the engine and carry out maintenance and checking service for the battery.
-Remove battery terminal from grounding side (negative terminal) first, and conversely fit the terminal to the grounding side last.
-Do not put tools and hardware on protective cover installed on the battery upper section.
There is a hazard of explosion because the short-circuit may catch fire.

1. Measure the voltage of battery and if the measured value does not reach the specified voltage, recharge or replace battery.

Notice

-Clean battery terminal and apply grease or commercial lube oil rust preventive spray.
-Call in licensed specialty company for the disposal of used battery.
-Be careful not to use the old battery together with new battery. It may reduce the service life of battery. Therefore replace two batteries together with new ones if required to replace.

Copyright © 2015 Kobelco Construction Machinery Co.,Ltd. All rights reserved. [S2YF00022ZE01] [0731CsCshWbYs]

4.17 2000 HOUR INSPECTION & MAINTENANCE PROCEDURES

Thoroughly read and understand the "1.SAFETY PRECAUTIONS" of this MANUAL before operating or servicing the machine.
Perform together with daily, 50-hour 120-hour, 250-hour, 500-hour and 1000-hour inspection and maintenance.

A. Changing Engine Coolant

WARNING

Avoid being burned by hot liquid and steam. Do not loosen the radiator cap when the coolant is hot. The cooling system is under pressure. Stop the engine and allow enough time for system to cool.
Engine anti-freeze/coolant liquid is flammable and can cause injury.
-Keep anti-freeze /coolant liquid away from flames and sparks.
-Avoid contact with eyes and skin. If anti-freeze/coolant contacts eyes or skin, immediately wash with clean water for several minutes and seek medical treatment.

IMPORTANT

Use clean soft water for coolant in which lime deposit is not produced.
The water is corrosive in engine operating temperature. The coolant at the time of shipment is mixed with 50% of "Long Life Coolant" to protect the cooling system from rusting and freezing.
-Non-amine antifreeze mixture is used for this machine.
-Change coolant ahead of the specified period when it was dirty and/or bubbling.

1.
Find firm level ground, place bucket on the ground, stop engine, and move safety lock lever to the "LOCKED" position
2.
Using starter key, open engine hood and hold it with stay.
3.
Loosen radiator cap (1) slowly, check that the pressure is released completely, push cap in, and remove the cap by loosening it further.
Prepare hose for pouring water.

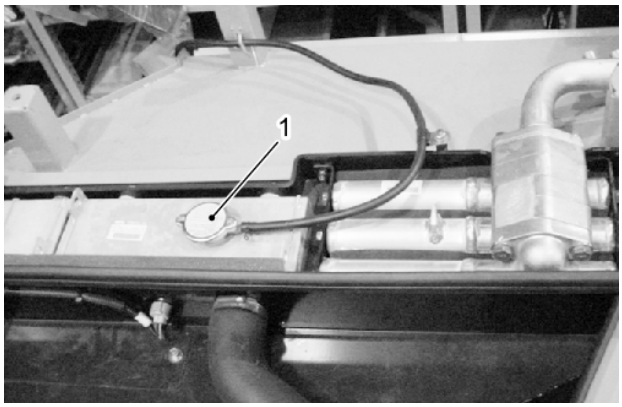

Copyright © 2015 Kobelco Construction Machinery Co.,Ltd. All rights reserved. [S2YF00022ZE01] [0731CsCshWbYs]

4.
Remove undercover under the radiator, and prepare container for coolant under drain valve (2) and drain plug (3) on the engine side face.
5.
After draining, close drain valve (2) and drain plug (3) and fill it with clean soft water.
6.
Open drain valve (2) and drain plug (3), and operate engine by low idling, and wash it with flowing water for 10 minutes.
During washing with the aid of flowing water, regulate the pouring water volume and discharging water volume to keep the radiator in full condition.
During water flowing, maintain a continual watch for the disconnection of pouring water hose from the radiator water filling port.

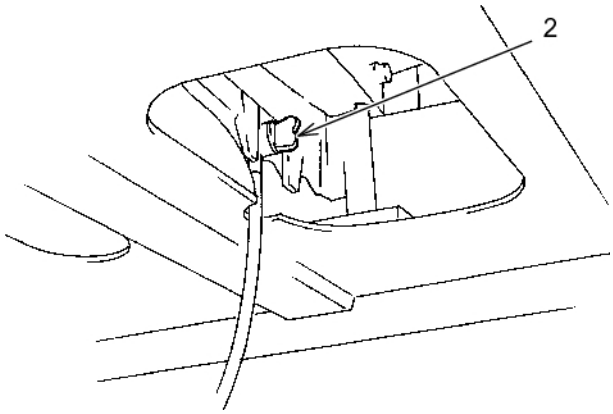

7.
After flowing water washing, stop engine and stop pouring water, and then after discharging water, close drain valve (2) and drain plug (3).
8.
After discharging water, clean it with cleaning solution. Regarding to how to use cleaning solution, follow the instructions in "Instruction Manual" for the cleaning solution in use.
9.
After cleaning, open drain valve (2) and drain plug (3) and discharge water completely, and then close the drain valve and drain plug and feed soft clean water close to the feed water port.
10.
After water is fed close to feed water port, open drain valve (2) and drain plug (3) and continue flowing water washing until clean water is discharged.
During water flowing washing, regulate the pouring water volume and discharging water volume to keep the radiator in full condition.
11.
When clean water is discharged, stop engine and close drain valve (2) and drain plug (3). And then feed "Long Life Coolant" in proper concentration until it is overflowed from the filling port.

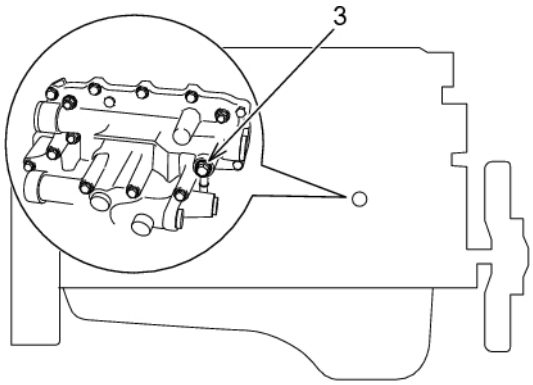

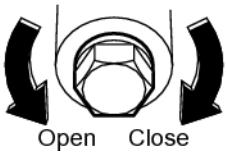

Copyright © 2015 Kobelco Construction Machinery Co.,Ltd. All rights reserved. [S2YF00022ZE01] [0731CsCshWbYs]

12.
Run engine by low idling for 5 minutes to remove air contaminated in coolant and continue low idling operation for 5 minutes further.
(During this operation, leave the cap of filling port removed.)

13.
Discharge coolant from reserve tank (4) and clean inside of the reserve tank and fill tank with "Long Life Coolant" in proper concentration to the mid point of FULL(A)-LOW(B) marks.

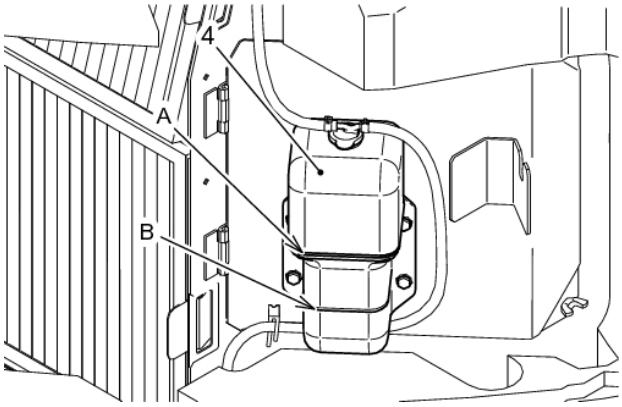

14.
Stop engine, and after 3 minutes pour soft clean water in radiator to the edge of radiator filler cap, and then tighten radiator cap.
15.
Replace the support of stay, close engine hood and lock hood with starter key.

Copyright © 2015 Kobelco Construction Machinery Co.,Ltd. All rights reserved. [S2YF00022ZE01] [0731CsCshWbYs]

B. Changing Oil in Swing Reduction Unit

WARNING

-Immediately after operation, there is a hazard of getting burn because oil is hot. Start working after being cooled.
-Swing reduction unit could be under pressure, carefully loosen plug and remove slowly till air pressure is released.

- Container for drain oil: 8 L {2.1 gal} or more
- Changing oil quantity: 7 L {1.8 gal}

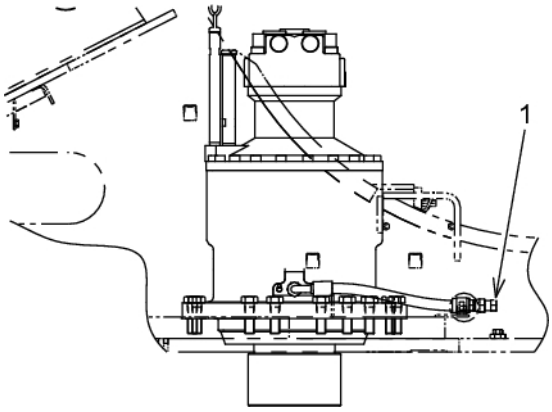

IMPORTANT

Change the swing reduction unit oil on a new machine after the first 500 hours of engine operation then change every 2000 hours.

1. Prepare container for drain oil.
2. Remove drain plug (1) on the rear lower side of swing reduction unit and drain oil in container.
3. Clean drain plug (1) with light oil, dry it with drain plug.
   Tightening torque: 73.1 to 82.9 N-m {54 to 61 lbf-ft}
4. Remove fill plug (2), and fill with the specified gear oil in the specified quantity referring to "4.3 LUBRICANT, FUEL & COOLANT SPECIFICATIONS".
5. When the reading is within the specified range of level gauge (3), it is normal level.
6. Clean filling plug (2) with light oil, and wind seal tape on tube (4) and install plug securely.
   Tightening torque: 48.5 to 60.4 N-m {36 to 45 lbf-ft}

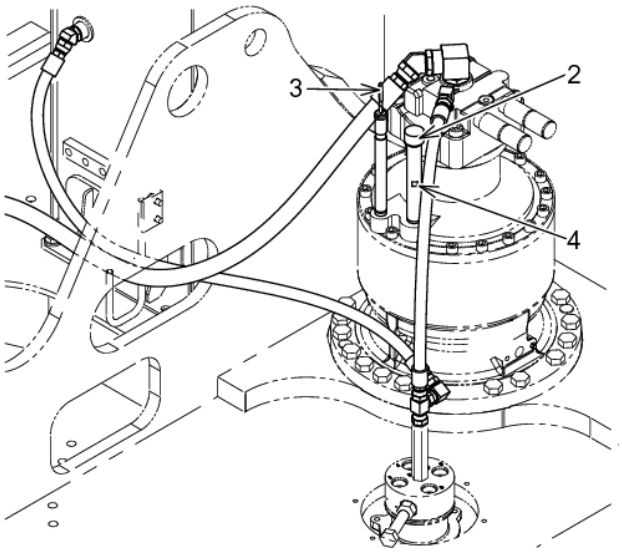

Copyright © 2015 Kobelco Construction Machinery Co.,Ltd. All rights reserved. [S2YF00022ZE01] [0731CsCshWbYs]

IMPORTANT

-Check the metal chips and powder in the drained oil. If the oil includes such contaminant, contact our dealer/distributor for repair.
-Dispose of all hazardous waste in accordance with government environmental regulations.

C. Change Oil in Travel Motor Reduction Units

WARNING

-Immediately after operation, there is a hazard of getting burn because oil is hot.
Start working after being cooled.
-Travel reduction unit could be under pressure, carefully loosen plug and remove slowly till air pressure is released.

- Container for drain oil: 12 L {3.2 gal} or more
- Changing oil quantity: Right and left 4.5 L {1.2 gal} each

IMPORTANT

Change the travel reduction units oil on a new machine after the first 500 hours of engine operation then change every 2000 hours.

1. Position the machine directing drain lug (1) downward and stop engine.
2. Remove drain plug (1), level plug (2) and fill plug (3) and drain oil in container.
3. After draining oil completely, clean drain plug (1)
   with light oil and attach it in place.
4. Fill with the specified oil in the specified quantity through hole for fill plug (3) until the oil overflowed from level plug (2) referring to the section "4.3 LUBRICANT, FUEL & COOLANT SPECIFICATIONS".
5. Clean level plug (2) and fill plug (3) with light oil and attach it in place.
6. Similarly, change oil of travel reduction unit on the other side.

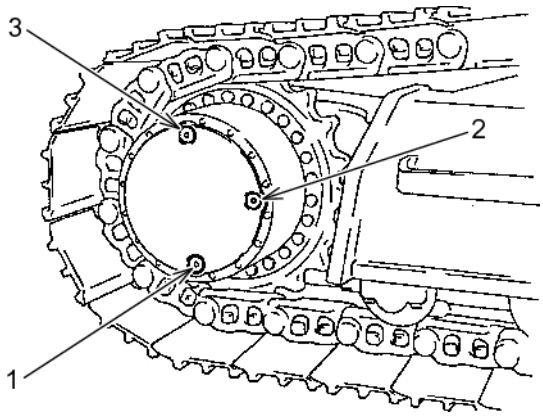

IMPORTANT

-Check the metal chips and powder in the drained oil. If the oil includes such contaminant, contact our dealer/distributor for repair.
-Dispose of all hazardous waste in accordance with government environmental regulations.

Copyright © 2015 Kobelco Construction Machinery Co.,Ltd. All rights reserved. [S2YF00022ZE01] [0731CsCshWbYs]

D. Cleaning Suction Strainer

WARNING

-Use extreme caution when removing the cover.
The oil is under high pressure when hot. Stop engine first, remove breather cap, press valve, release the pressure from tank, and then remove cover.
-Immediately after operation, there is a hazard of getting burn because oil is hot.
The service should be done after being cooled.

1.
Park machine on firm level ground in the hydraulic level checking position, stop engine.
2.
Move safety lock lever to "LOCKED" position.
3.
Clean the surface around hydraulic tank to prevent intrusion of foreign matter.

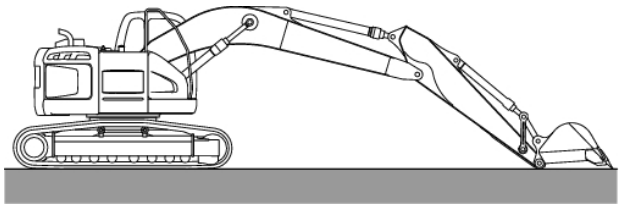

4.
Remove breather cap (1) on the upper surface of hydraulic tank and release pressure from hydraulic tank by pressing valve (A) several (5 to 7) times.
5.
Loosen 6 mounting bolts (2) of tank upper cover, remove cover (3).

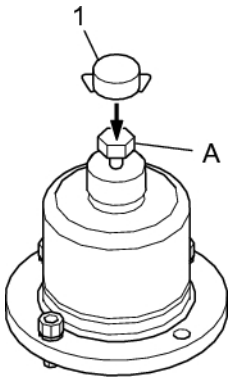

IMPORTANT

Do not drop bolt or others into the tank during the work.

Copyright © 2015 Kobelco Construction Machinery Co.,Ltd. All rights reserved. [S2YF00022ZE01] [0731CsCshWbYs]

6.
Take out suction strainer (4).
7.
Clean strainer with light oil or washings, dry it and check strainer for damage. If damaged, replace the strainer with new one.
8.
Check O-rings (5) and (6) on the bottom of strainer for wear and damage. If worn or damaged, replace the strainer with new one.
9.
Insert strainer (4) into suction tube.
10.
Install cover (3) with bolt (2).
Tightening torque: 41.9 to 51.1 N-m (30.9 to 37.7 lbf-ft)

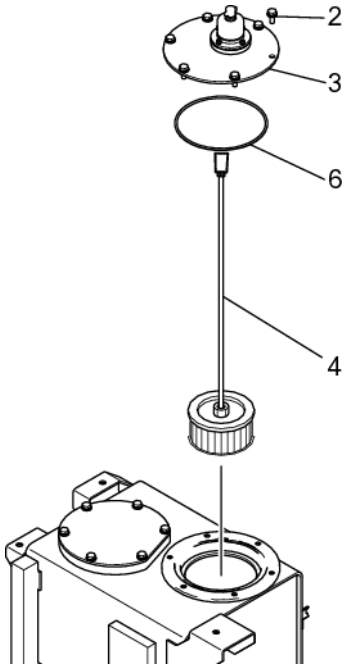

11.
Start engine and operate it by low idling for several (5 to 7) minutes. Operate each cylinders and swing, and then return the machine to the hydraulic level checking position. Stop the engine and check the oil level, if the level is low, make up the oil.

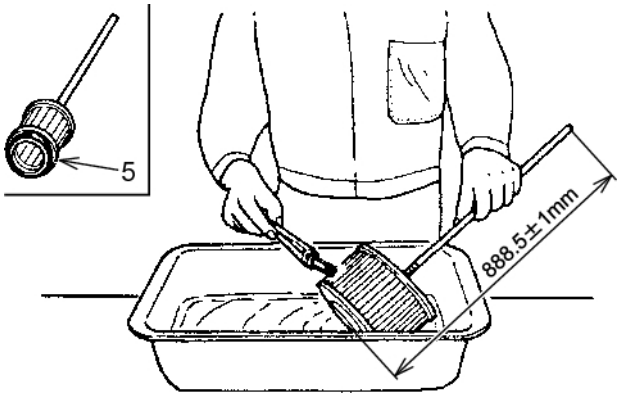

E. Swing Reduction Lubrication

WARNING

Immediately after operation, there is a hazard of getting burn because oil is hot.
Start working after being cooled.

1. Park machine on firm level ground, and place the attachment to the ground. Stop engine and move safety lock lever to "LOCKED" position.
2. Grease the swing reduction unit through the grease fitting (1) with about 300 cc grease (about 3/4cartridge). Continue to fill the grease until the excess grease comes out of relief valve (2).

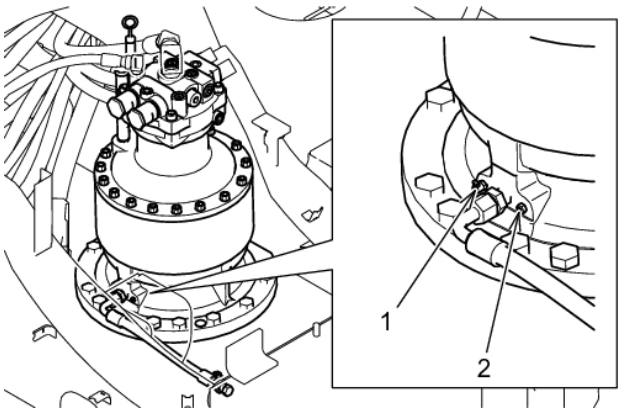

Copyright © 2015 Kobelco Construction Machinery Co.,Ltd. All rights reserved. [S2YF00022ZE01] [0731CsCshWbYs]

F. Checking Swing Bearing Teeth

IMPORTANT

The deterioration of grease may cause damage of pinion shaft and swing bearing of swing reduction unit.

If the grease is white due to moisture content, and the viscosity of grease is lowered, replace the grease with a new one. Also, if the grease is contaminated with a large amount of water, replace the grease. In that case, contact our dealer/distributor.

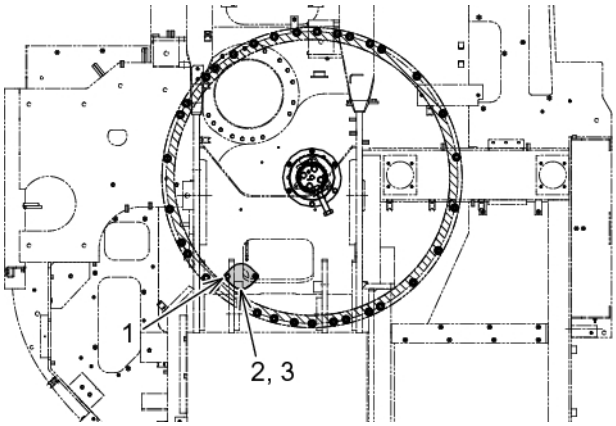

1. Loosen bolt (1) on the front side of upper structure and remove cover (2) and packing (3) for checking.
2. After checking bearing gear, replace packing (3) with new one. After cleaning, apply Loctite #572 for prevention from water intruding.
3. Grease may be cloudy due to slight contamination of water, but there is no malfunction if the viscosity is high. When water is there, loosen bolts (4) and spring washers (5) on the lower side of lower frame, remove cover (6) and packing (7) and drain water.

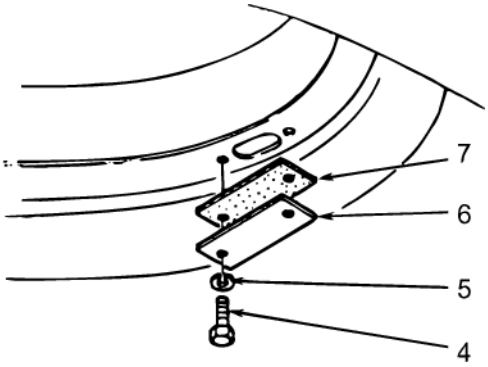

Copyright © 2015 Kobelco Construction Machinery Co.,Ltd. All rights reserved. [S2YF00022ZE01] [0731CsCshWbYs]

G. Cleaning of Pilot Line Filter

CAUTION

Immediately after operation, there is a hazard of getting burn due to hot hydraulic oil gushed. Clean the filter after being cooled.

Carry out the replacement of filter after completely releasing internal pressure from hydraulic system.

1. Open side cover on the pump side, remove hose (1), connector (2) and line filter (3), clean line filter with light oil, and attach line filter (3) in place.

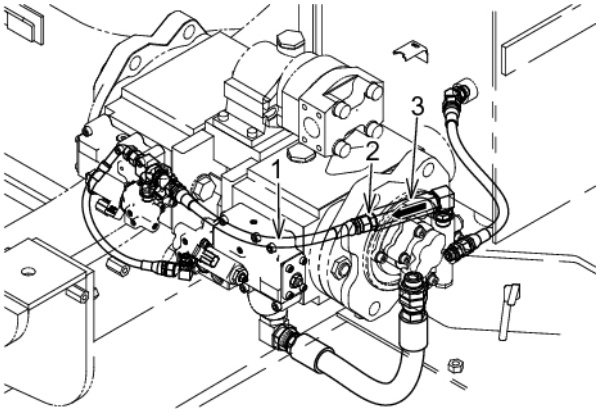

Copyright © 2015 Kobelco Construction Machinery Co.,Ltd. All rights reserved. [S2YF00022ZE01] [0731CsCshWbYs]

4.18 5000 HOUR INSPECTION & MAINTENANCE PROCEDURE

Thoroughly read and understand the "1.SAFETY PRECAUTIONS" of this MANUAL before operating or servicing the machine.
Perform together with daily, 50-hour 120-hour, 250-hour, 500-hour and 1000-hour inspection and maintenance.

A. Change Hydraulic Oil

WARNING

-Use extreme caution when removing the cover. The oil is under high pressure when hot.
Stop engine first, remove breather cap, press valve, release the pressure from tank, and then remove cover.
-Immediately after operation, there is a hazard of getting burn because oil is hot. The filter should be replaced after being cooled.

IMPORTANT

Since the deterioration of hydraulic oil with the breaker installed is larger than that of normal bucket digging work, service it referring to the section "Checking and service" for hydraulic breaker.

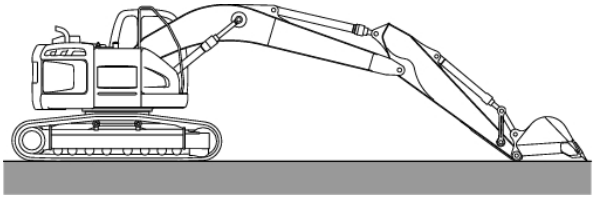

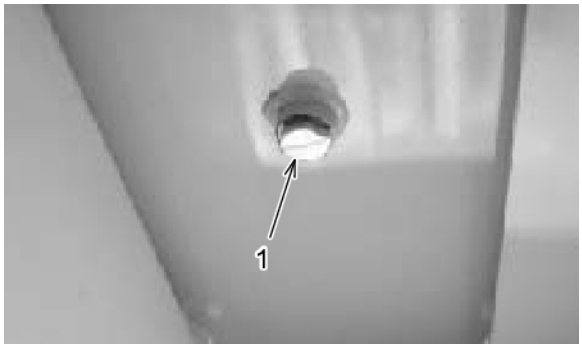

- Container for drain oil: 126 L {33 gal} or more
- Changing oil quantity: 126 L {33 gal}

1.
Park machine on firm level ground, swing upper structure so that drain plug (1) on the lower section of hydraulic tank is positioned to the mid point of right and left track shoe.
2.
Retract arm cylinder and bucket cylinder, place bucket and blade (when installed) on the ground and stop engine.
3.
Move safety lock lever to "LOCKED" position.

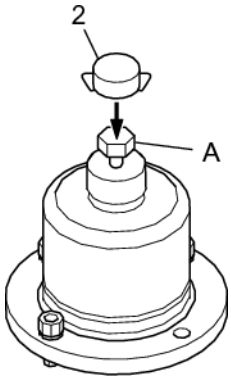

A: Valve

Copyright © 2015 Kobelco Construction Machinery Co.,Ltd. All rights reserved. [S2YF00022ZE01] [0731CsCshWbYs]

4.
Clean the surface around hydraulic tank to prevent intrusion of foreign matter.
5.
Remove breather cap (2) on the upper surface of hydraulic tank and release pressure from hydraulic tank by pressing valve (A) several (5 to 7) times.
6.
Loosen 6 mounting bolts (3) of tank upper cover, remove cover (4).
7.
Drain the hydraulic oil into container using oil pump.

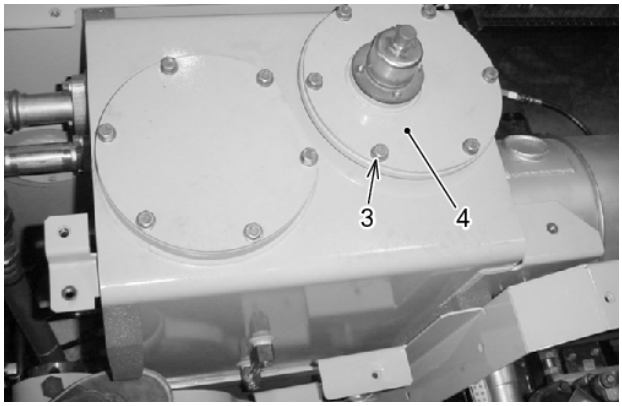

IMPORTANT

-Do not drop bolt or others into the tank during the work.
-Dispose of all hazardous waste in accordance with government environmental regulations.

8.
Place container for drain oil under drain plug (1) of the hydraulic tank bottom.
9.
Loosen drain plug (1) on the bottom of hydraulic tank slowly and drain hydraulic oil completely.
10.
Clean drain plug (1) and install it in place.
Tightening torque: 98 to 118 N-m (72 to 87 lbf-ft)

11.
Fill hydraulic tank with hydraulic oil through filler port.
Fill with hydraulic oil watching the level gauge (5) for oil level.
12.
Attach filler port cover (4) with 6 bolts (3).
Tightening torque: 41.9 to 51.1 N-m (30.9 to 37.7 lbf-ft)
13.
Start engine and operate it by low idling for several (5 to 7) minutes. Operate each cylinders and swing, and then return the machine to the hydraulic level checking position. Stop the engine and check the oil level, if the level is low, make up the oil.

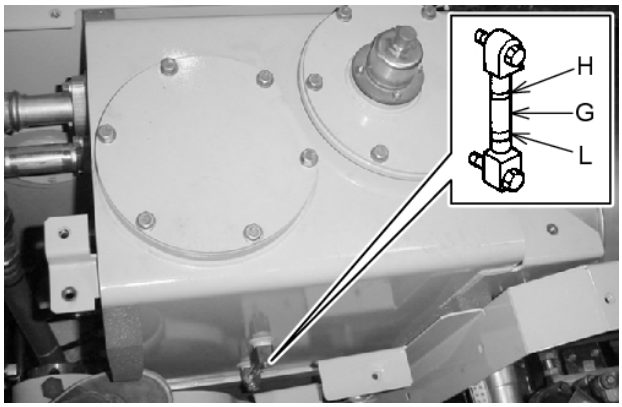

Copyright © 2015 Kobelco Construction Machinery Co.,Ltd. All rights reserved. [S2YF00022ZE01] [0731CsCshWbYs]

4.19 MACHINE STORAGE

A. Machine Storage

The following procedure applies when the machine is to be stored for a mouth or more.

1. Perform all inspection and maintenance procedures as previously described in this section.
2. Thoroughly clean the machine, inspect for damaged or worn parts and components and replace or repair all damaged or worn parts.
3. Completely fill fuel tank with fresh, clean fuel to aid in preventing condensation of moisture inside the fuel tank.
4. Move machine to an indoor location for storage.
5. Operate bucket and arm completely "IN" extending cylinders. Then lower boom until attachment is resting on the floor.
6. Coat cylinder rods with a heavy coat of grease to prevent corrosion during storage.
7. Remove batteries and store in a well ventilated, warm area.

CAUTION

Protect CPU and all electrical components from water and steam when cleaning the machine.

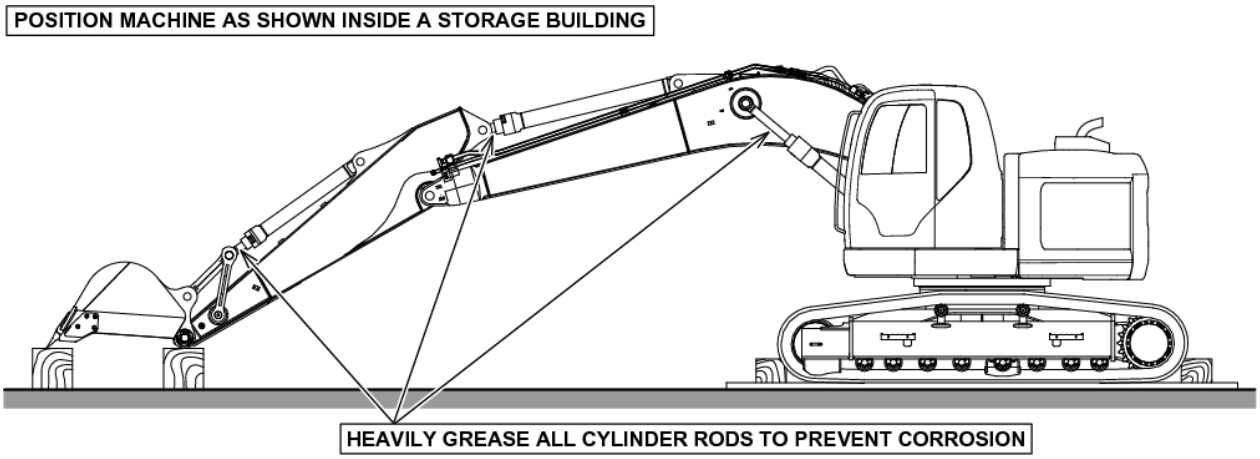

B. Care During Storage

1. Every 30 days during storage, it will be necessary to start and run the machine to circulate the fluids through the systems. Before starting clean cylinder rods and after running re-grease cylinder rods.

Note

Run and operate machine for approximately 1 hour to allow all fluids to circulate well and reach normal operating temperatures.

Copyright © 2015 Kobelco Construction Machinery Co.,Ltd. All rights reserved. [S2YF00022ZE01] [0731CsCshWbYs]

C. Strage Up After

1. Perform all Inspection and maintenance procedures as described in this section before bringing machine out of storage for normal operation.
2. Remove drain plugs from travel motor and slewing gear reduction units to drain off any moisture which may have accumulated during storage.
3. Carefully and closely inspect all hydraulic hoses after long periods of storage for signs of deterioration. Replace all hoses showing these signs.

Copyright © 2015 Kobelco Construction Machinery Co.,Ltd. All rights reserved. [S2YF00022ZE01] [0731CsCshWbYs]

5. TRANSPORTATION

Copyright © 2015 Kobelco Construction Machinery Co.,Ltd. All rights reserved. [S2YF00022ZE01] [0731CsCshWbYs]

Copyright © 2015 Kobelco Construction Machinery Co.,Ltd. All rights reserved. [S2YF00022ZE01] [0731CsCshWbYs]

5.1 GROUND TRANSPORTATION

5.1.1 MACHINE PREPARATION

1. Know the total weight, length, width and height of the machine being transported.
2. Know route to be traveled. Investigate bridges, overpasses, height of road signs on route.
3. Obtain any permits required from proper government agencies for machine transportation.
4. Use only a trailer with a rated capacity sufficient to transport the machine.
5. Make certain trailer has ramps or a ramp is available for loading and unloading the machine.

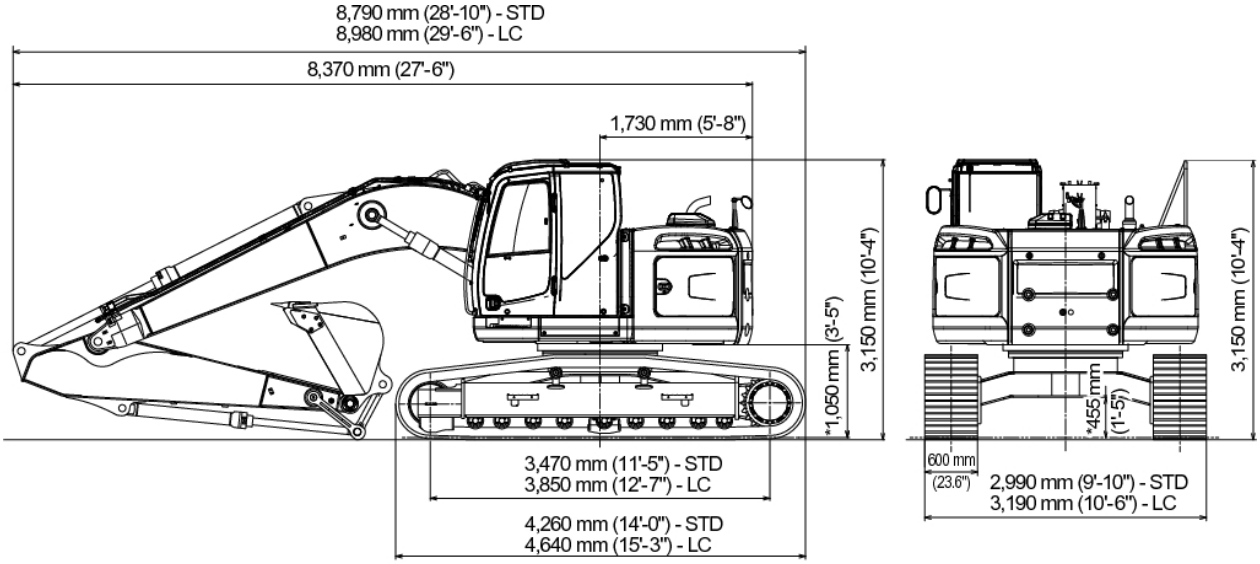

Marked * dimensions do not include height of shoe lug.
Dimensions and weights are 2.94 m (9'-8") Arm, 0.80 m3 (1.05 cu.yd) Bucket and 5.65 m (18'-6") Boom.

Machine Model		Weight		
		600 mm (23.6") Shoe	700 mm (27.6") Shoe	800 mm (31.5") Shoe
SK235SR-2	kg (lb)	24,300 (53,580)	24,500 (54,020)	24,800 (54,680)
SK235SRLC-2	kg (lb)	24,900 (54,900)	25,200 (55,570)	25,400 (56,010)

5

Copyright © 2015 Kobelco Construction Machinery Co.,Ltd. All rights reserved. [S2YF00022ZE01] [0731CsCshWbYs]

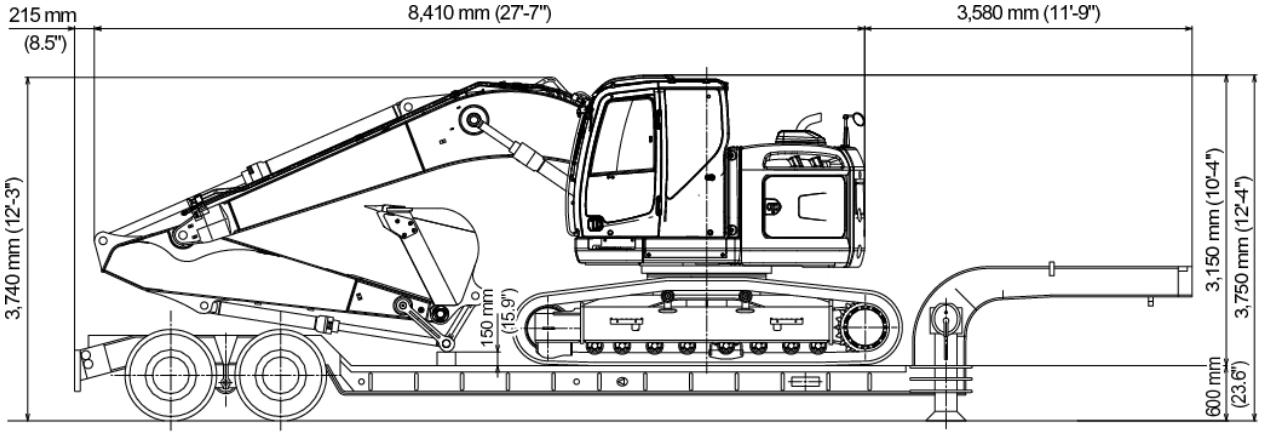

YF15Z00169P1

CAUTION

When the long arm 2.94 m (9'-8") equipped machine is transported, remove the bucket as shown in the above figure to limit the overall height of the machine within 3.8 m (12'-6").

Copyright © 2015 Kobelco Construction Machinery Co.,Ltd. All rights reserved. [S2YF00022ZE01] [0731CsCshWbYs]

5.1.2 LOADING/UNLOADING THE MACHINE

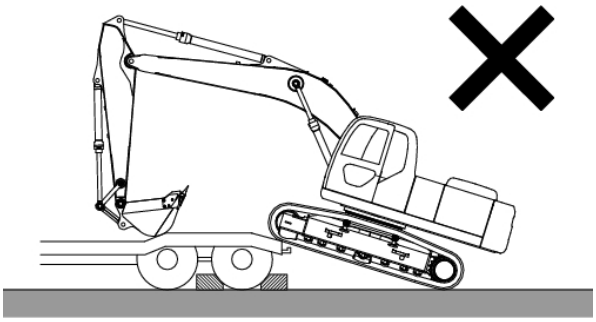

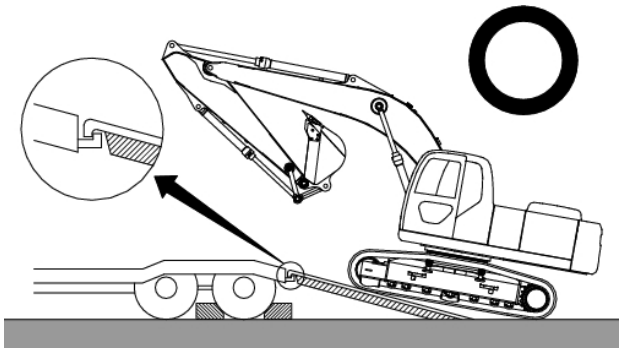

WARNING

-The machine loading and unloading work should be carried out on the firm and level ground.
-Use ramps which have sufficient width, length, thickness and strength.
-Slow speed traveling is necessity to load and unload the machine.
-It is hazardous to use the attachment for loading and unloading the machine. Do not use the attachment for loading and unloading.
-Use only the traveling controls when the machine is on the ramp.
-Be prepared for a change in the machine position as the machine travels up or down the ramp. The machine may rock forward or rearward as the machine center of gravity changes when traveling on the ramp or on the border between the track/trailer and the ramp.
-Turn auto accel switch off surely. The operation with the auto accel switched on may cause sudden engine speed change.
-Remove mud, etc. of the crawler track link of machine surely to prevent skidding.
And remove water, snow, grease oil, etc. surely.
-Do not change the course on the ramps to prevent rolling over. Return to ground or trailer's bed once and change the traveling direction.

A. In Cases where Making Use of ramps

1.
Load machine on firm and level ground.
2.
Do not fail to put blocks to the tire of trailer to prevent machine from moving.
3.
The width and height of the loading area (earthen bank or loading platform ramp) must be high enough to match the trailer and wide enough to match the width of the machine and trailer, or wider.
4.
Make sure the machine position is aligned to ramps before traveling up the ramps, and travel slowly with the dozer (if equipped), raised position. The arm and boom held at angle shown in the figure, and the dozer equipped and attachment lowered as much as possible but do not interfere with trailer bed. And travel

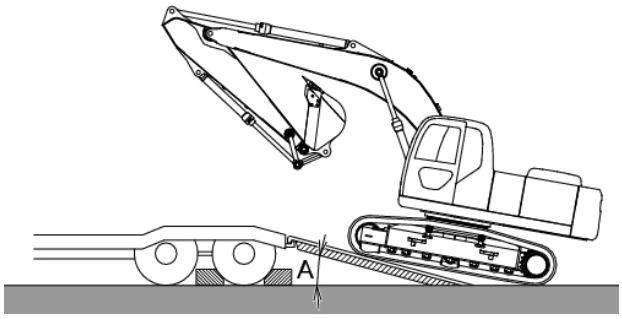

5

Copyright © 2015 Kobelco Construction Machinery Co.,Ltd. All rights reserved. [S2YF00022ZE01] [0731CsCshWbYs]

slowly.
A. The ramp slope should be 15 degrees or less

5.
Since machine is tend to be unstable when going over the rear wheel, travel slowly and carefully.

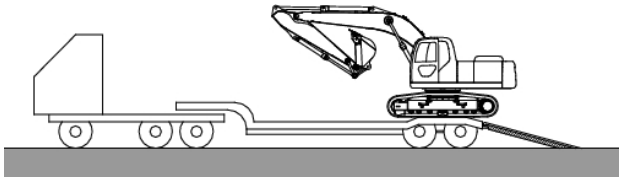

6.
Since the machine is bent-forward when traveling over the rear wheel, travel forward slowly to the required position giving particular attention to the attachment so as not to touch the bed of trailer.

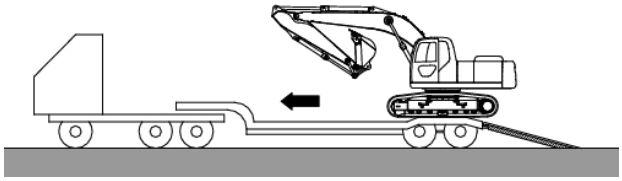

WARNING

To prevent the arm and bucket cylinder(s) from any damage, you are advised to follow the following instructions.
Do not have the arm and/or bucket cylinder fully extended to a "RAMP OVER CENTER" situation. This allows sudden and abrupt contact of the arm or bucket to a trailer deck, ramp or the ground.
This can result in internal mechanical contact, which can stretch the cylinder rod(s).

7.
After arriving to the required position, turn the upper structure 180 degrees slowly.
8.
After positioning, lower attachment softly.

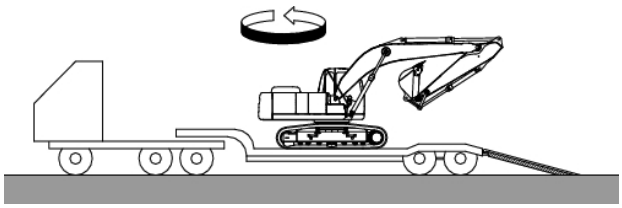

Copyright © 2015 Kobelco Construction Machinery Co.,Ltd. All rights reserved. [S2YF00022ZE01] [0731CsCshWbYs]

B. Use of Platform or Earth Banking

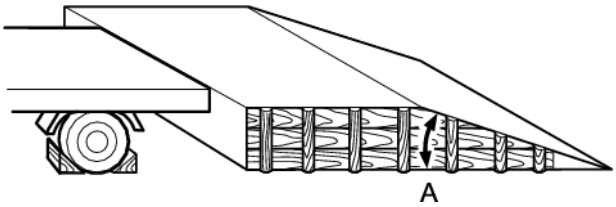

1.
Make the width of the earth banking (raising the ground level) enough to the machine width.
2.
Make the earth banking strong enough in order no to turn over the machine during loading/unloading due to broken side slope of the earth banking.
If necessary, provide some supporting posts to reinforce both side of the banking.
3.
The height of the platform or banking must correspond to that of the base of truck/trailer.
4.
At loading the machine, climb up to the truck/trailer from front end of the machine for the case of the machine with attachment, and from back end for the machine without attachment.
5.
Set the machine at the prescribed position on the truck/trailer.
A. 15 degrees or less

C. Loading Machine without Front Attachment

When loading the machine the front attachment is removed, direct counterweight upward direction on the slope.

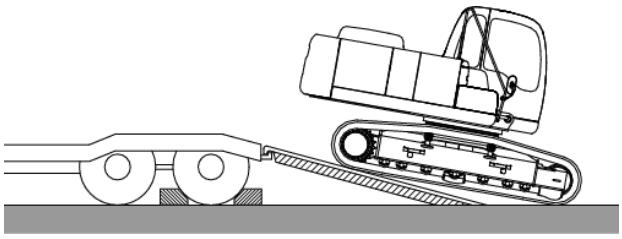

5

Copyright © 2015 Kobelco Construction Machinery Co.,Ltd. All rights reserved. [S2YF00022ZE01] [0731CsCshWbYs]

5.1.3 SECURING THE MACHINE

IMPORTANT

-Retract the antenna of radio during transport. And remove mirror when required. Keep the removed parts surely.
-To protect the bucket (attachment) cylinder from damage during transport, place a wood block at the end of the bucket link to keep the cylinder from contact with the truck bed.

After the machine is loaded and positioned, fix the machine by the following procedures.

1. Move the safety lock lever to the "LOCKED" position
2. Turn all switches off and remove the engine starter key.
   Lock all covers and the cab door.
3. Position blocks at the front and rear of the crawler belts and secure them. This will prevent the machine from moving during transport.
4. Position a block under the excavator arm to support during shipping.
5. Tie down the machine using rigging sufficient for safe transport.

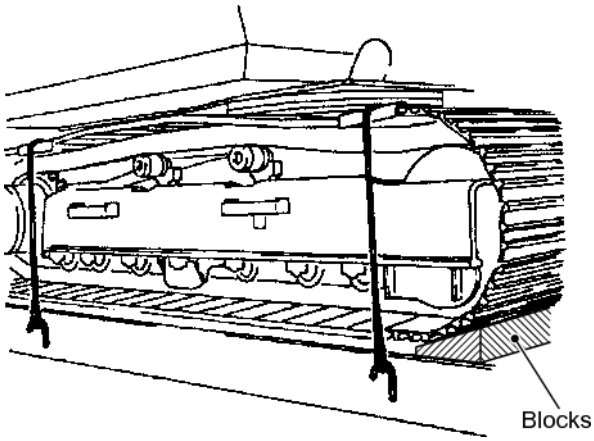

A. Unloading the Machine

WARNING **AVOID INJURY OR DEATH**

-Slow speed traveling is necessity to load and unload the machine.
-Be prepared for a change in the machine position as the machine travels up or down the ramp. The machine may rock forward or rearward as the machine center of gravity changes when traveling on the ramp or on the border between the track/trailer and the ramp.

1.
Load and unload machine on firm and level ground.
2.
Do not fail to put blocks to the tires of trailer to prevent machine from moving.
Accord the distance of two ramps with that of centers of crawlers and incline ramps at angle of 15 degrees or less (A).
3.
Remove chain or wire rope which is used to fix the machine.

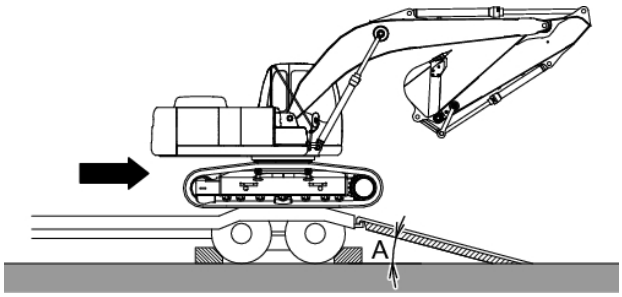

Copyright © 2015 Kobelco Construction Machinery Co.,Ltd. All rights reserved. [S2YF00022ZE01] [0731CsCshWbYs]

4.
Start engine.
5.
Move safety lock lever to "UNLOCKED" position.
6.
Press travel speed change switch of switch panel on gauge cluster and change the speed to low speed.
Check that travel speed is set to low speed by watching display.

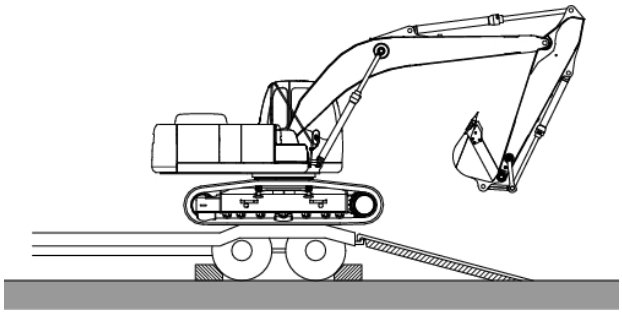

7.
Raise attachment and travel slowly with placing attachments as shown in figure.
8.
Park the machine horizontally on the rear end of trailer and then stop it.
9.
Set arm and boom to angle 90 to 110 degrees and travel down slowly from trailer to ramps. In this time, the bucket position should be close to ground.

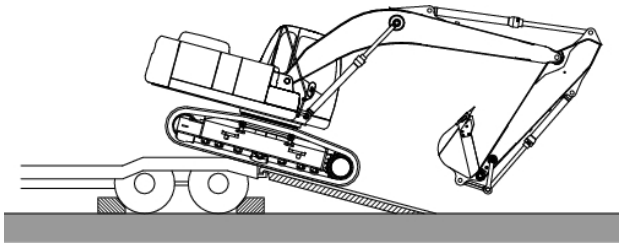

WARNING

To prevent the arm and bucket cylinders from any damage, you are advised to follow the following instructions.
Do not have the arm and/or bucket cylinder fully extended to a "RAMP OVER CENTER" situation. This allows sudden and abrupt contact of the arm or bucket to a trailer bed, ramp or the ground.
This can result in internal mechanical contact, which can stretch the cylinder rod(s).

10.
Travel down on ramps slowly while operating boom and arm softly until the machine passes through the ramps completely.

Copyright © 2015 Kobelco Construction Machinery Co.,Ltd. All rights reserved. [S2YF00022ZE01] [0731CsCshWbYs]

5.2 LIFTING MACHINE

The following procedures are for lifting the machine, as built by KOBELCO CONSTRUCTION MACHINERY CO., LTD. These procedure do not take into account modifications made to the machine that affect machine weight or center or gravity.

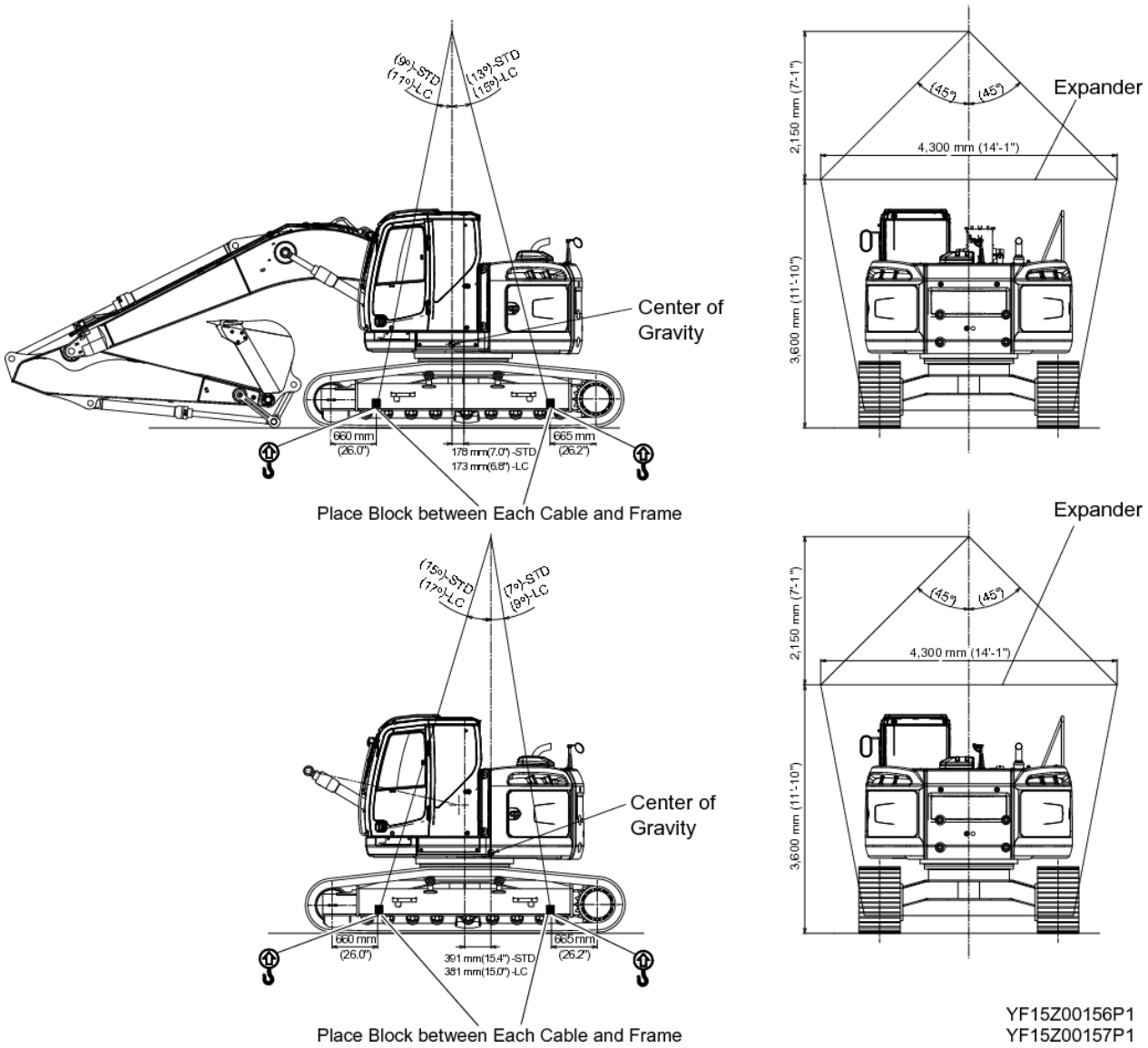

WARNING

-Wire rope or chain used for lift the machine must be of sufficient weight lifting capacity for this machine.
-Improper lifting method or rope/chain rigging may cause unexpected movement or slip of the machine when lifted, resulting in serious injury or death or damage to the machine.
-When lifting the machine operate the controls, slowly and smoothly avoiding any sudden/fast control movement for safety of people involved and lift rigging.
-When the machine is lifted with assistance of one or more workers operation signals/communication must be understood by all involved to avoid injury or death.
-During the machine lift procedure, keep people away from the area, especially the area under the machine.

Copyright © 2015 Kobelco Construction Machinery Co.,Ltd. All rights reserved. [S2YF00022ZE01] [0731CsCshWbYs]

IMPORTANT

This lifting up procedure is applicable for machines in standard specification.
The lifting procedure differs for each attachment type and each machine in option. In such cases, contact our dealer/distributor.

Carry out the lifting work on firm level ground.

1. Position the machine as shown in the figure.
2. Position the boom to the front of machine.
3. Stop the engine and move safety lock lever to "LOCKED" position. Get off machine. Check the operator's seat and area for any loose item, tools, etc. that could fall or cause a problem or injury during the procedure and remove or secure them.
4. Stop the engine and remove starter key, and get off the machine.
5. Use wire rope and expander of sufficient length to prevent interference with the machine body when lifting up machine. Cover wire rope with cloth to protect machine from damaging if necessary.
6. Pass through wire ropes between 1st and 2nd lower rollers on both front and rear sides of machine as shown in figure.
7. Lift up machine with an angle of two wire ropes adjusted within the range of 25 to 30 degrees slowly.
8. After working, stop machine once and lift machine again slightly after machine has stabilized.

Copyright © 2015 Kobelco Construction Machinery Co.,Ltd. All rights reserved. [S2YF00022ZE01] [0731CsCshWbYs]

5.3 INSTALLATION AND REMOVAL OF MIRROR FOR SAFETY

Mirror locations are shown in figure.
When the machine needs repairing or transportation, follow the next procedures.

WARNING

-Be sure to clean mirror before starting operation to ensure good visibility around machine.
If the visibility around machine is not secured sufficiently, it may cause collisions and accidents resulting in injury and death.
-To avoid the damage or break, do not install the mirror and so on to the handrail of cab entrance. If the mirror and so on is installed to the hand rail, the attaching part of handrail is stressed excessively.

CAUTION

-Do not attach the mirrors except the genuine mirrors (A, B, C and D).

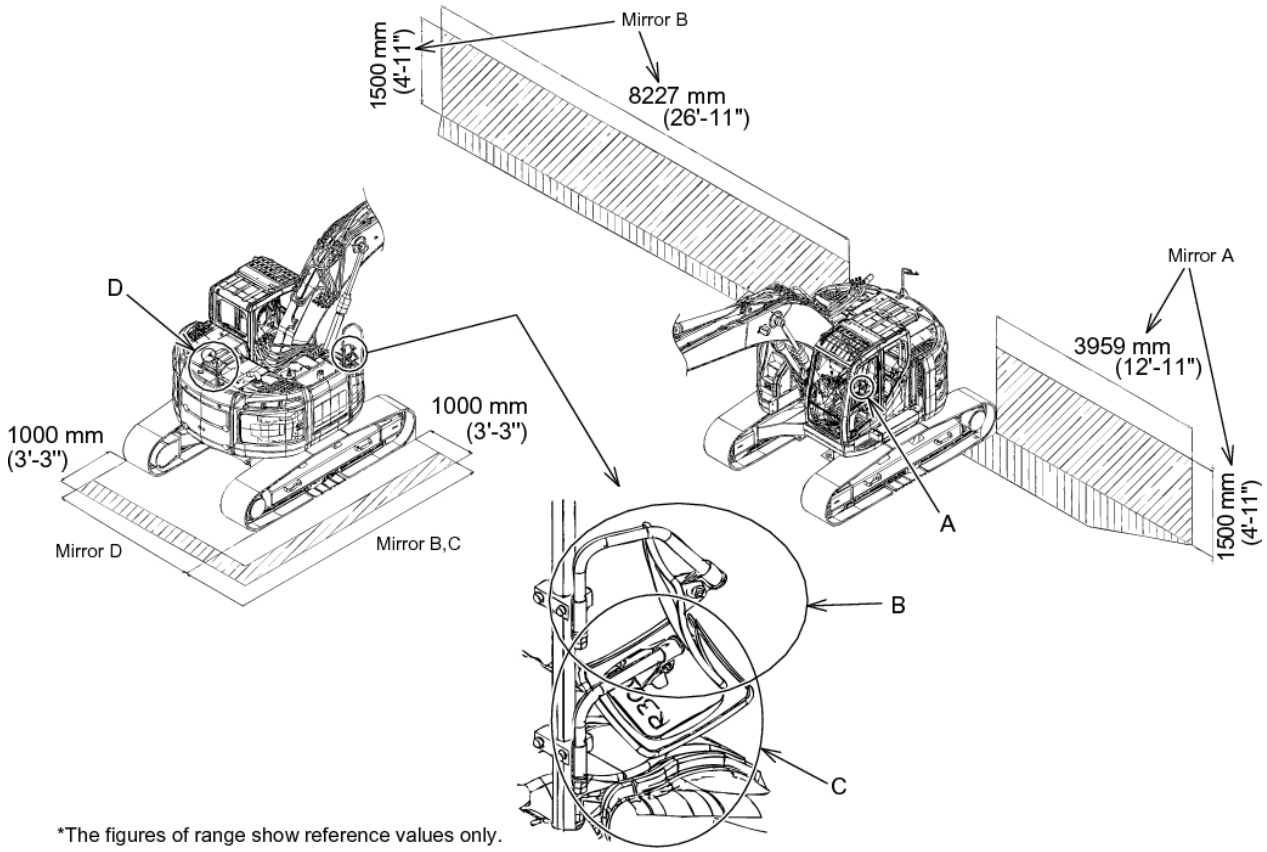

IMPORTANT

When the machine is shipped, the both side mirrors of the right frame and the cab, mirror were removed. Install them according to the next procedures.

Copyright © 2015 Kobelco Construction Machinery Co.,Ltd. All rights reserved. [S2YF00022ZE01] [0731CsCshWbYs]

Mirror A

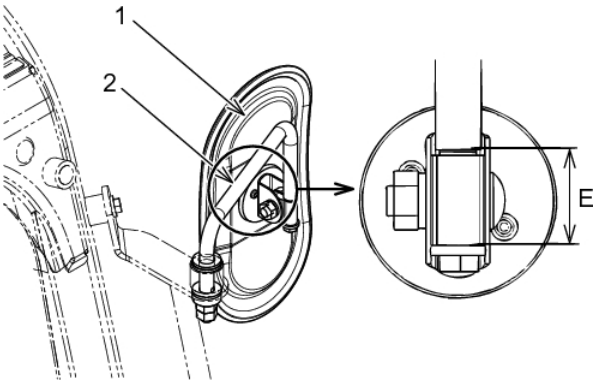

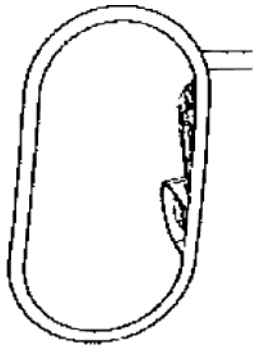

- Adjust the mirror (A) so that the operator can identify the person who stands on the left rear ends of machine (or post of 1.5m high and 30cm in diameter).
- Install the mirror on the small diameter part (E) of the stay shown in the above figure.
- Install the mirror so that the mirror (A) does not come in contact with the stay (1) of the mirror.
- During adjustment, if the movement of the mirror (A) is not smooth, loosen nut (2) of the mirror and adjust it.
  Tightening torque of nut (2) M10: 18.6 to 25.5 N·m (13.7 to 18.8 lbf·ft)
- Adjust mirror so that the machine side shown in the right figure is reflected in the mirror.
- Regarding visible range, refer to previous page.

Mirror B

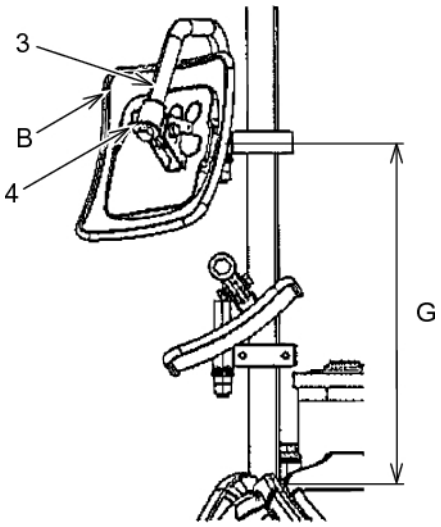

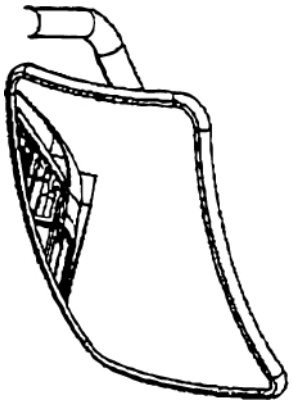

- Adjust mirror so that person who stands on the right rear ends of machine (or post of 1.5m high and 30cm in diameter) can be identified from operator.
- Install mirror on position shown in the figure.
  G : 400 ㎜ {1'-4"}(Reference value)
- Install it so that the mirror (B) does not come in contact with the stay (3) of the mirror.
- If the movement of mirror (B) on adjusting is not smooth, loosen nut (4) of mirror and adjust it.
  Tightening torque of nut (4) M8 : 8.6 to 12.7 N·m {6.3 to 9.4 lbf·ft}
- Adjust mirror so that the machine side shown in the figure is reflected in mirror.
- Regarding visible area, refer to the shaded range on 5.3.

Copyright © 2015 Kobelco Construction Machinery Co.,Ltd. All rights reserved. [S2YF00022ZE01] [0731CsCshWbYs]

Mirror C

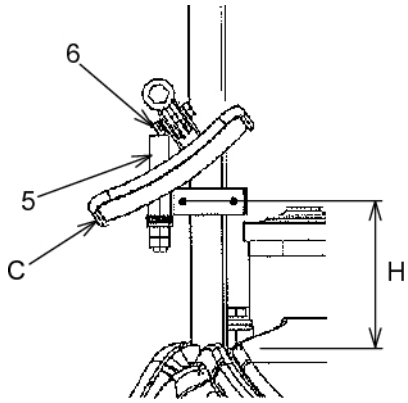

Adjust mirror so that person who stands on the right front of machine (or post of 1.5 m height and 30 cm in diameter) can be identified from operator's seat.

- Install mirror to the position shown in the figure.
  H: 140mm {5.5"} (Reference value)
- Install mirror so that the mirror (C) does not come in contact with the mirror stay (5).
- If the movement of mirror (C) on adjusting is not smooth, loosen nut (6) of mirror and adjust it.
  Tightening torque of nut (6) M8 : 8.6 to 12.7 N·m {6.3 to 9.4 lbf·ft}
- Regarding visible area, refer to the shaded range on 5.3.

Mirror D

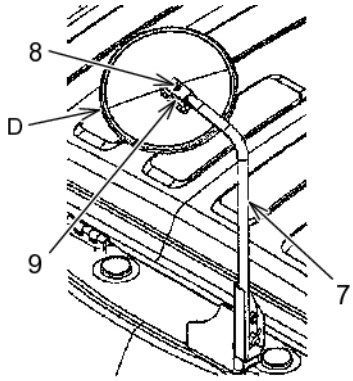

Equipped with normal counterweight

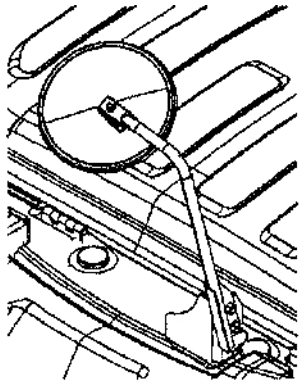

Equipped with additional counterweight

Adjust the mirror so that the ground within the range of 1 m in surroundings behind the machine can be identified from the operator's seat.

- Install mirror to the position shown in the figure.
- Install mirror so that the mirror (D) does not come in contact with the mirror stay (7).
  Tightening torque of nut (8) M8 : 8.6 N·m {6.3 lbf·ft}
- If the movement of mirror (D) on adjusting is not smooth, loosen screw (9) of mirror and adjust it.
  Tightening torque of adjusting screw (9) M5: 2.94 ± 0.98 N·m {2.17 ± 0.72 lbf·ft}
- Regarding visible area, refer to the shaded range on 5.3.

Copyright © 2015 Kobelco Construction Machinery Co.,Ltd. All rights reserved. [S2YF00022ZE01] [0731CsCshWbYs]

6. SPECIFICATIONS

Copyright © 2015 Kobelco Construction Machinery Co.,Ltd. All rights reserved. [S2YF00022ZE01] [0731CsCshWbYs]

Copyright © 2015 Kobelco Construction Machinery Co.,Ltd. All rights reserved. [S2YF00022ZE01] [0731CsCshWbYs]

6.1 GENERAL SPECIFICATIONS

	Item	Unit	SK235SR-2	SK235SRLC-2
	Working Weight	kg	24,300 (53,580)	24,900 (54,900)
	Bucket Heaped	m^3 (cu·yd)	0.8 (1.05)	
	Engine Maker	-	HINO MOTORS J05E-TA Water-cooled, 4 cycle 4 cylinder direct injection type diesel engine with intercooler turbo-charger	
	Engine Output-Rating	kW/min^{-1}	118 / 2,000	
A	Overall Length	mm (ft-in)	8,790 (28-10)	8,980 (29-6)
B	Overall Height	mm (ft-in)	3,170 (10-5)	
C	Overall Width of Crawler	mm (ft-in)	2,990 (9-10)	3,190 (10-6)
D	Width of Crawler Shoe	mm (inch)	600 (23.6)	
E	Height to Top Cab	mm (ft-in)	3,170 (10-5)	
F	Ground Clearance of Under Carriage	mm (ft-in)	455* (1-5)	
G	Radius of Rear End	mm (ft-in)	1,730 (5-8)	
H	Overall Length of Crawler	mm (ft-in)	4,260 (14-0)	4,640 (15-3)
I	Center Distance of Tumblers	mm (ft-in)	3,470 (11-5)	3,850 (12-7)
J	Ground Clearance of Rear End	mm (ft-in)	1,050* (3-5)	
	Ground Pressure	kPa (psi)	53	49
	Swing Speed	min^{-1} (rpm)	11.8 (11.8)	
	Travel Speed [Low (1st)/High (2nd)]	km/h (mph)	3.4 / 5.5 (2.1 / 3.4)	
	Gradeability	% (deg)	70 (35)	

IMPORTANT

The "GENERAL SPECIFICATIONS" are described the standard machine that the boom length of 5.65 m (18'-6") and the arm length of 2.94 m (9'-8") is installed.
* Marked dimensions are not included height of shoe lug.

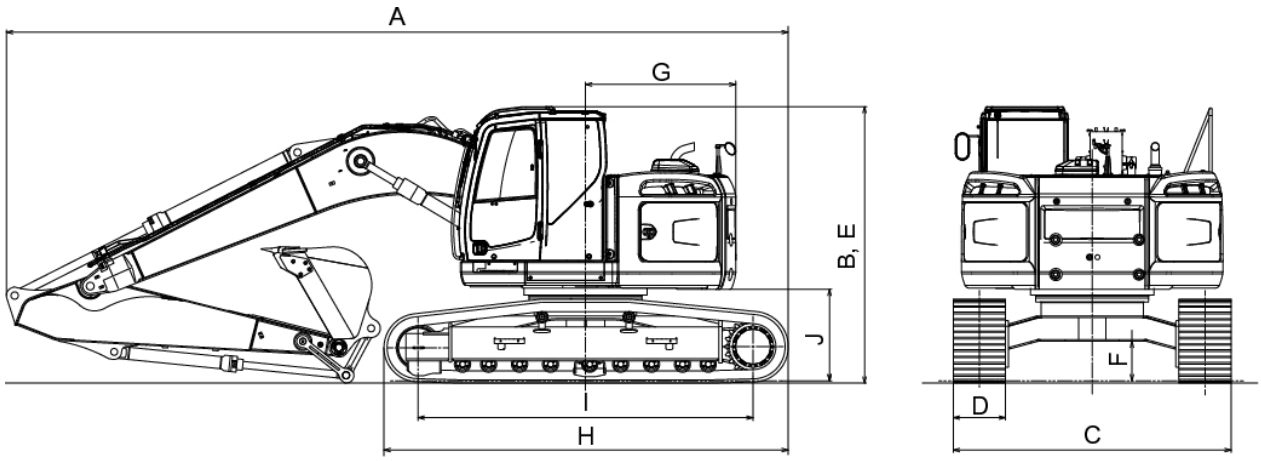

Copyright © 2015 Kobelco Construction Machinery Co.,Ltd. All rights reserved. [S2YF00022ZE01] [0731CsCshWbYs]

6.2 SHOE TYPES

A. SK235SR-2

Type			Grouser Shoes		
			600 mm (23.6")	700 mm (27.6")	800 mm (31.5")
Use			For Soft Soil (Standard)	For Soft Soil (Standard)	For Soft Soil (Standard)
Specifications	Working Weight	kg	24,300	24,500	24,700
	Height to Top Cab	mm	3,170	3,170	3,170
	Ground Clearance of Undercarriage	mm	455*	455*	455*
	Overall Length of Crawler	mm	4,640	4,640	4,640
	Overall Width of Crawler	mm	2,990	2,990	2,990
	Ground Pressure	kPa	49	43	38

B. SK235SRLC-2

Type			Grouser Shoes		
			600 mm (23.6")	700 mm (27.6")	800 mm (31.5")
Use			For Soft Soil (Standard)	For Soft Soil (Standard)	For Soft Soil (Standard)
Specifications	Working Weight	kg	24,900	25,200	25,400
	Height to Top Cab	mm	3,170	3,170	3,170
	Ground Clearance of Undercarriage	mm	455*	455*	455*
	Overall Length of Crawler	mm	4,640	4,640	4,640
	Overall Width of Crawler	mm	3,190	3,190	3,190
	Ground Pressure	kPa	53	46	41

IMPORTANT

-Do not employ shoes other than 600 mm (23.6") grouser shoe on rough ground (site covered with much rocks and gravels).
The traveling and digging works on the rough ground may cause bent of shoe, looseness of shoe bolt, etc. and also damage of under carriage (link, roller, etc.).
-The attachment is with the arm of 2.94 m (9'-8") and bucket "SAE heaped" of 0.8 m3 (1.05 cu-yd) attached.
-Marked * dimensions do not include height of shoe lug.

Copyright © 2015 Kobelco Construction Machinery Co.,Ltd. All rights reserved. [S2YF00022ZE01] [0731CsCshWbYs]

6.3 WORKING RANGES

A. Backhoe Attachment

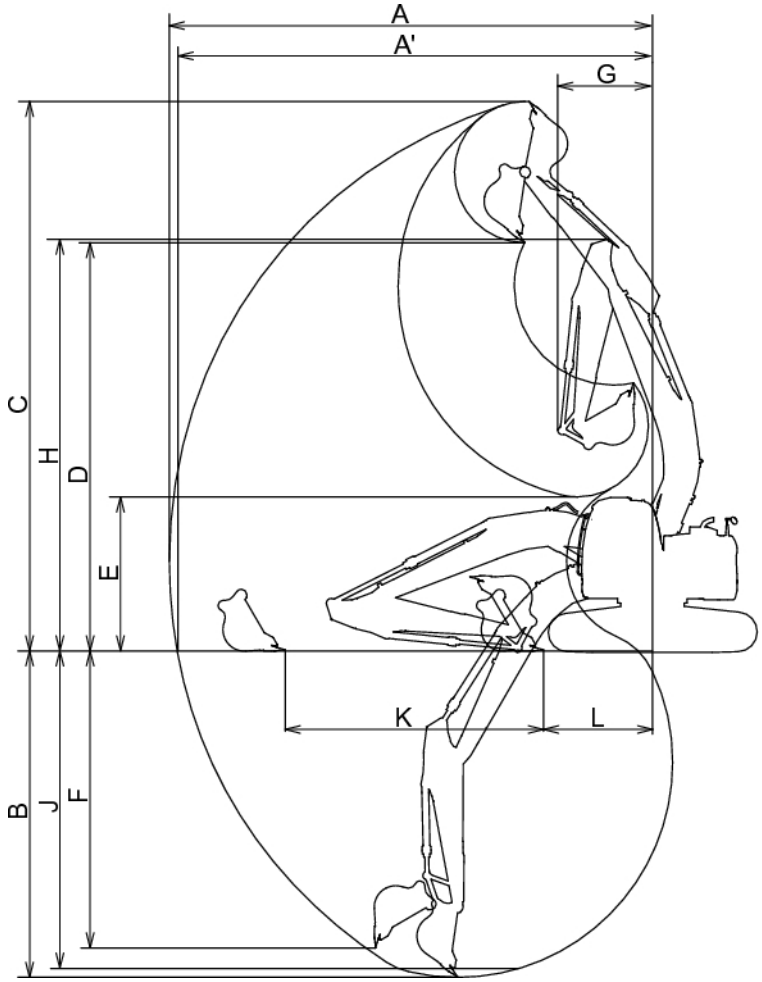

Unit : mm

Item	Attachment		2.4 m (7'-10") Arm + 0.93 m³ (1.22 cu•yd) Bucket	2.94 m (9'-8") Arm + 0.80 m³ (1.05 cu•yd) Bucket	3.33 m (10'-11") Arm + 0.70 m³ (0.92 cu•yd) Bucket
A	Maximum digging reach		9,370 (30-9)	9,850 (32-3)	10,240 (33-7)
A'	Maximum digging reach at ground level		9,180 (30-1)	9,680 (31-9)	10,070 (33-0)
* B	Maximum digging depth		6,110 (20-1)	6,650 (21-9)	7,040 (23-1)
* C	Maximum digging height		10,820 (35-6)	11,210 (36-9)	11,550 (37-11)
* D	Maximum damping clearance		7,940 (26-1)	8,330 (27-3)	8,670 (28-5)
* E	Minimum damping clearance		3,790 (12-5)	3,140 (10-3)	2,870 (9-5)
* F	Max. vertical wall digging depth		5,520 (18-1)	6,050 (19-10)	6,660 (21-10)
G	Minimum swing radius		2,180 (7-2)	1,930 (6-4)	2,370 (7-9)
* H	Height at min. swing radius		8,440 (27-8)	8,400 (27-6)	8,420 (27-7)
* J	8 feet level digging depth		5,910 (19-5)	6,470 (21-3)	6,880 (22-7)
K	Horizontal digging stroke at ground level	Stroke	4,080 (13-5)	5,270 (17-3)	5,660 (18-7)
L		Minimum	2,920 (9-7)	2,220 (7-3)	2,220 (7-3)

IMPORTANT

Marked * dimensions do not include height of shoe lug

Copyright © 2015 Kobelco Construction Machinery Co.,Ltd. All rights reserved. [S2YF00022ZE01] [0731CsCshWbYs]

B. Face Shovel Attachment

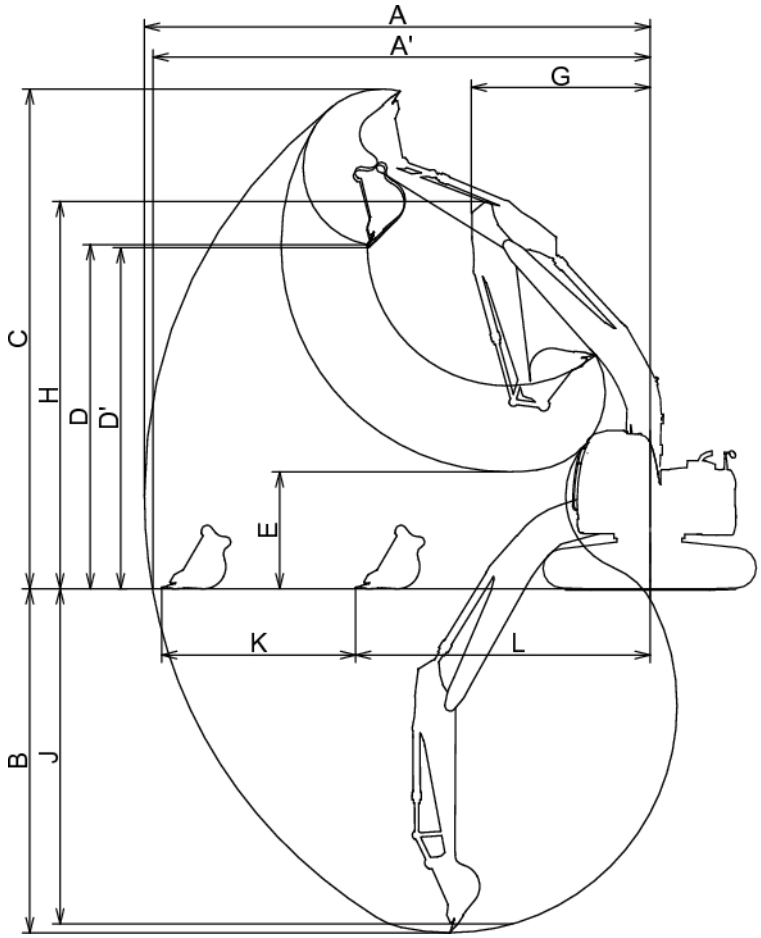

Unit : mm

Item			Attachment: 2.4 m (7'-10") Arm + 0.93 m³ (1.22 cu•yd) Bucket	3.33 m (10'-11") Arm + 0.70 m³ (0.92 cu•yd) Bucket
A	Maximum digging reach		9,480 (31-1)	10,350 (33-11)
A'	Maximum digging reach at ground level		9,300 (30-6)	10,190 (33-5)
* B	Maximum digging depth		6,230 (20-5)	7,160 (23-6)
* C	Maximum digging height		10,930 (35-10)	11,670 (38-3)
* D	Maximum damping clearance		8,070 (26-6)	8,800 (28-10)
* D'	Maximum damping clearance (45°)		7,110 (23-4)	2,750 (9-0)
* E	Minimum damping clearance		3,680 (12-1)	7,520 (24-8)
G	Minimum swing radius		2,180 (7-2)	2,370 (7-9)
* H	Max. height at min. slewing radius		8,440 (27-8)	8,420 (27-7)
* J	8 feet level digging depth		6,040 (19-10)	7,000 (23-0)
K	Horizontal digging stroke at ground level	Stroke	3,040 (10-0)	4,780 (15-8)
L		Minimum	6,100 (20-0)	5,230 (17-2)

IMPORTANT

Marked * dimensions do not include height of shoe lug

Copyright © 2015 Kobelco Construction Machinery Co.,Ltd. All rights reserved. [S2YF00022ZE01] [0731CsCshWbYs]

6.4 BUCKET AND ARM COMBINATIONS

A. Front Attachment Variation

(1) Outline

This machine is equipped with attachments in various types in order to comply with various operations.

- When large capacity bucket is used, it should be used in combination of short arms to secure the stability of machine and not to be forced to operate machine, front section and each cylinder.
- When long boom and arm are used, conversely combine with the small capacity bucket.

Type	Bucket (m^3) (cu•yd)		Outside width of bucket (mm)		Number of teeth	Can be turned over		Weight	Arm		
	SAE (Heaped)	SAE (Struck)	With side cutters	Without side cutters		2.4, 3.33 m Arm	2.94 m Arm		2.4 m	2.94 m	3.33 m
Hoe Bucket	0.51 (0.67)	0.39 (0.51)	870	770	3	Yes	No	520	○	○	○
	0.70 (0.92)	0.52 (0.68)	1,080	980	5	Yes	No	630	○	○	◎
	0.80 (1.05) STD	0.59 (0.77)	1,160	1,060	5	Yes	No	630	○	◎	△
	0.93 (1.22)	0.67 (0.88)	1,330	1,230	5	Yes	No	710	◎	△	×
	0.80 (1.05) Side pin type	0.59 (0.77)	1,160	1,060	5	Yes	No	660	○	○	△
Breaker	—	—	—	—	—	—	—	—	○	○	○
Nibbler	—	—	—	—	—	—	—	—	○	○	○

CAUTION

-If any other bucket except for the backhoe bucket is turned over and used for excavation, damage to the arm and bucket may occur.
-Do not operate the power boost switch when a long arm is installed.
-When the 2.94 m (9'-8") arm is used, do not reverse the bucket. If the bucket is reversed, the bucket bumps against arm by shoveling and it results damaging attachment.

IMPORTANT

◎ : Standard combination
○ : General operation; Excavation or loading of sand, gravel, and clay
△ : Light operation; Mainly loading of loose gravel (e.g., cultivation or loading of sand or gravel)
× : Prohibited combination; KOBELCO's warranty does not cover any damages resulting from theses combinations. Do not use these combinations.

Install only genuine attachment recommended by KOBELCO on the machine. KOBELCO is not liable for any damages to the machine or attachment arising from the installment of attachment other than the specified attachments.

Copyright © 2015 Kobelco Construction Machinery Co.,Ltd. All rights reserved. [S2YF00022ZE01] [0731CsCshWbYs]

https://truckmanualshub.com/

Copyright © 2015 Kobelco Construction Machinery Co.,Ltd. All rights reserved. [S2YF00022ZE01] [0731CsCshWbYs]

7. OPTIONAL EQUIPMENT

Copyright © 2015 Kobelco Construction Machinery Co.,Ltd. All rights reserved. [S2YF00022ZE01] [0731CsCshWbYs]

Copyright © 2015 Kobelco Construction Machinery Co.,Ltd. All rights reserved. [S2YF00022ZE01] [0731CsCshWbYs]

7.1 OPERATION OF HYDRAULIC BREAKER AND NIBBLER (FOR 1 PEDAL TYPE)

7.1.1 SELECTION OF HYDRAULIC BREAKER AND NIBBLER

When installing a hydraulic breaker or nibbler to the machine, select the optimal breaker or nibbler taking the matters into consideration such as stability, hydraulic system pressure, required hydraulic oil volume.

7.1.2 BEFORE OPERATING BREAKER OR NIBBLER

- Consult with your Dealer for the additional piping work and reinforcement for the arm to install the breaker or nibbler to the machine.
- When using the breaker or nibbler, fully understand and peruse the operation manual of its manufacturer and the PROHIBITED WORK IN USE OF BREAKER" page 7-10 for the work mentioned in this MANUAL, in order to get full performance of them paying attention to damages on the machine and hydraulic breaker or nibbler.

7.1.3 PRECAUTIONS FOR IMPURITY AND HYDRAULIC OIL

When the hydraulic breaker or nibbler is removed after its installation, apply a blinding plug to the stop valves attached on the tip of arm and openings on the hydraulic pipings for the hydraulic breaker or nibbler to prevent them from invasion of dust, water, etc.
Before the operation, check the looseness on the clamps which are fixing the piping for attachment, and the leakage on connections of tubes and hoses.

7.1.4 ATTACHMENT MODE SELECTION AND SELECTOR VALVE

A. Selection of Attachment Mode
In accordance with the attachment which is equipped, it is necessary to change the attachment mode.

CAUTION

・Select the attachment mode appropriately when you use the breaker or nibbler. Confirm the position of attachment mode switch and the screen of multi display closely.
・Turn the attachment mode switch to a correct position when the switch position is improper. Match the attachment mode to the attachment that is used from now.
・Select the breaker mode absolutely when you work with breaker. If the machine is operated with mode other than breaker mode, hydraulic component and breaker are damaged.
・If the selection of attachment mode is not correct, it causes defective operation and the breakdown of the machine.
・When "H" or "S" of the fuel consumption mode is flickering, this shows that the selection of attachment mode is improper.

Copyright © 2015 Kobelco Construction Machinery Co.,Ltd. All rights reserved. [S2YF00022ZE01] [0731CsCshWbYs]

The attachment mode is always decided according to the position of the attachment mode switch.
Before the working, confirm whether proper attachment had been selected.

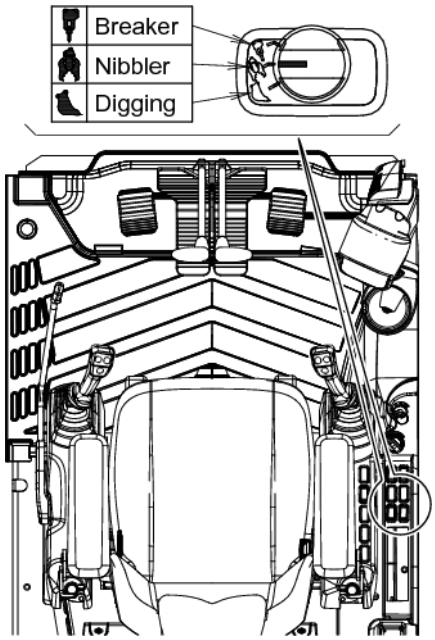

Attachment Mode	Switch Position	Displays of Multi-Display	Selection of Attachment
Breaker Mode		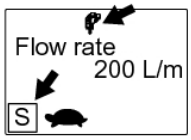 Breaker mark is displayed. As fuel consumption mode, "S" or "H" is displayed on the left lower corner of the multi-display.	Select single flow when the attachment like a breaker requires single flow circuit
Nibbler Mode		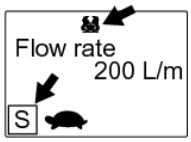 Nibbler mark is displayed. As fuel consumption mode, "S" or "H" is displayed on the left lower corner of the multi-display.	Select conflux flow when the attachment like a nibbler requires conflux flow circuit
Digging Mode		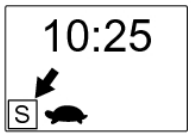 Normal display is indicated As fuel consumption mode, "S" or "H" is displayed on the left lower corner of the multi-display.	Select in case of digging

CAUTION

・Select breaker mode absolutely when you work with breaker. If the machine is operated with mode other than breaker mode, hydraulic component and breaker are damaged.
・Lower the attachment to the ground and confirm safety before you change the attachment mode. Especially, the load that is held by the nibbler falls during changing from the nibbler working to the breaker mode, and this is very dangerous.
・When "H" or "S" of the fuel consumption mode is flickering, this shows that the selection of attachment mode is improper.

Copyright © 2015 Kobelco Construction Machinery Co.,Ltd. All rights reserved. [S2YF00022ZE01] [0731CsCshWbYs]

Work mode and hydraulic circuit

Attachment	Attachment mode	Hydraulic circuit	Set pressure of overload relief valve
ATT of single flow circuit like breaker	Breaker mode	Return circuit does not pass through control valve automatically.	When shipping: 24.5 MPa (3550 psi)
ATT of conflux circuit like nibbler	Nibbler mode	Return circuit pass through control valve automatically.	When shipping: 24.5 MPa (3550 psi)

IMPORTANT

-When the breaker is installed, make sure to select the breaker mode, because the return circuit should return the oil to the return filter directly without passing through the control valve.
Select the breaker mode absolutely when you work with breaker.
-The overload relief valve is set to 24.5 MPa (3550 psi) when shipping from factory.
In some cases, the adjustment is required depending on the attachment, contact our dealer/distributor.

B. Switching Selector valve

The selector valve (1) is used to change the flowing route of hydraulic oil.
Since the flow is automatically changed according to the selected attachment mode, the switching to proper attachment mode is required depending on the attachment in use.
Switch the attachment mode referring to the section "Attachment Mode Selection" in page 7-4.

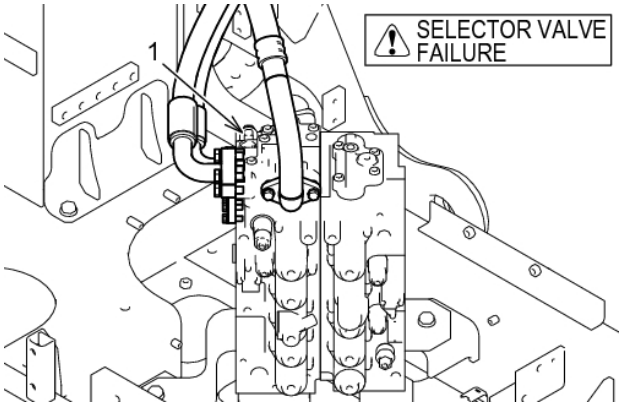

Attachment mode	Mechatro controller output	Hydraulic circuit	Mechatro controller input	
	Selector switching valve	Piping	Selector switching valve FB	Selector detecting pressure FB
Digging / Nibbler	OFF	Nibbler	OFF	OFF
Breaker	ON	Breaker	ON	ON

CAUTION

When the "SELECTOR VALVE FAILURE" is displayed on the multi-display, there is a possibility that the output and input signal of the mechatro-controller is different from the above-mentioned table.
Turn the attachment mode select switch to the required attachment mode again. When the "SELECTOR VALVE FAILURE" does not disappear even if proper attachment mode is selected, since it is suspected that it is caused by electrical failure, contact our dealer/distributor.

Copyright © 2015 Kobelco Construction Machinery Co.,Ltd. All rights reserved. [S2YF00022ZE01] [0731CsCshWbYs]

7.1.5 SETTING STOP VALVE

Stop valve (1) on arm top end is used to stop hydraulic oil flowing.

Free : Hydraulic oil flows
Stop : Hydraulic oil stops flowing

Before removing attachment, set stop valve to "STOP" position.

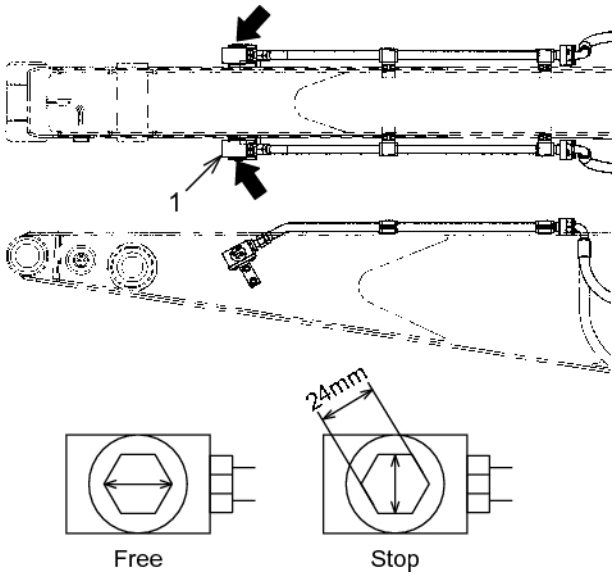

Tools used

Stop Valve	Location	Tools
(1)	Arm	Spanner (24 mm)

7.1.6 FLOW RATE CONTROL

The flow rate of service circuit may be changed according to attachment in use.
For the flow rate setting procedure, see the applicable item in "2.3.1.B.8.6 Pump Flow Rate Adjustment (A mode/ B mode)".

Copyright © 2015 Kobelco Construction Machinery Co.,Ltd. All rights reserved. [S2YF00022ZE01] [0731CsCshWbYs]

7.1.7 BASIC OPERATION

This machine is provided with breaker or nibbler single circuit and nibbler and breaker conflux flow circuit.
To use breaker or nibbler, select circuit appropriate to the specification through switch (1) on the rear side of driver's seat.

A. Breaker and Nibbler Selector Switch

CAUTION

Do not set this switch to nibbler combined flow operation position when using breaker.

Specification	Switch Position	Circuit
Breaker		Single flow
Nibbler		Conflux flow

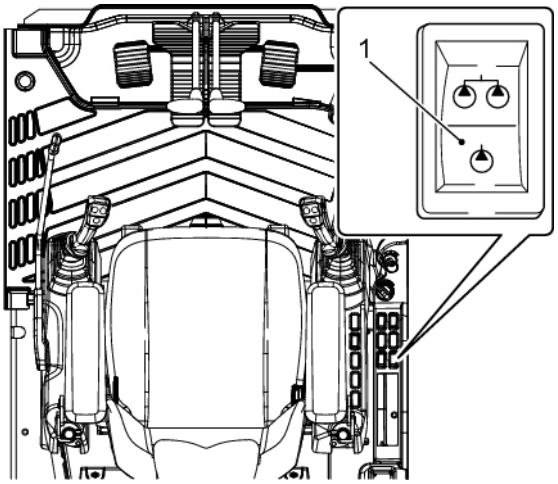

IMPORTANT

When nibbler a little flow rate requires is used, operate it in "Breaker" condition.

Copyright © 2015 Kobelco Construction Machinery Co.,Ltd. All rights reserved. [S2YF00022ZE01] [0731CsCshWbYs]

B. Operating Pedal

Release pedal lock on the right front side of driver's seat to operate pedal.

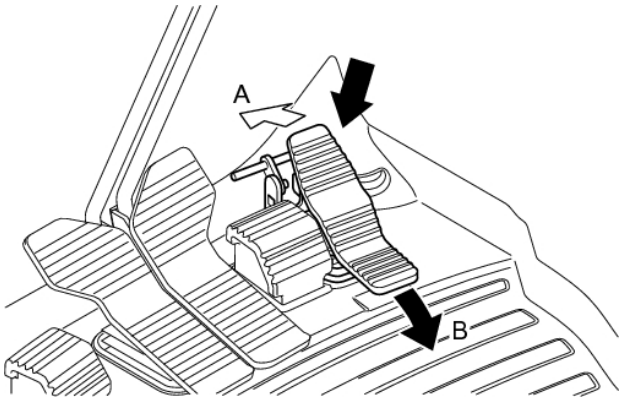

CAUTION **ATTACHMENT OPERATION BY FOOT PEDAL**

Always check the foot pedal control pattern before operation.
Always read operator's manual before operating machine.

-Oil flow

The relation between the pedal position and the direction of oil flow is shown in right figure.

-Nibbler (Crusher)

When the toe side (A) of pedal is depressed, oil flows into left piping of attachment. And the heel side (B) of pedal is depressed, oil flows right piping of attachment. (In case of BREAKER, pedal operation is only toe side.)

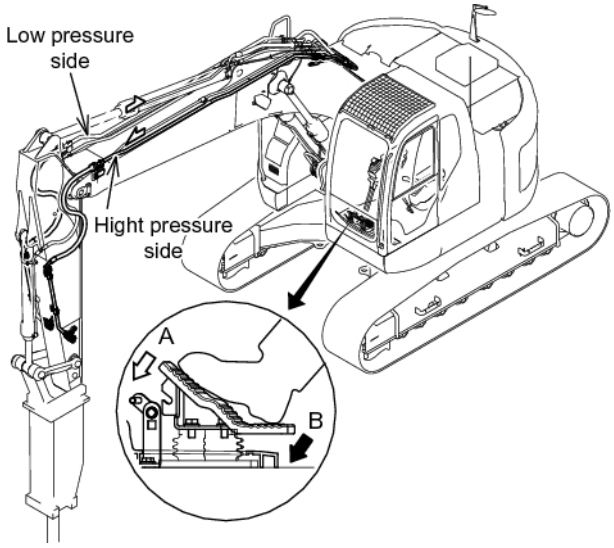

Breaker		Nibbler	
Foot pedal depressing section	Operation	Foot pedal depressing section	Operation
Depess toe section (A)	Breaker starts operation	Depess toe section (A)	Nibbler close
Pedal in neutral position	Breaker stops operation	Depess heel section (B)	Nibbler open

WARNING

Do not leave the machine with engine running.

Copyright © 2015 Kobelco Construction Machinery Co.,Ltd. All rights reserved. [S2YF00022ZE01] [0731CsCshWbYs]

C. Pedal Lock Device

This device is used to lock control pedal.
Move pin (1) forward and the pedal is unlocked.
Move pin (1) rearward and the pedal is locked.

A Position ..... Locked
B Position ..... Unlocked

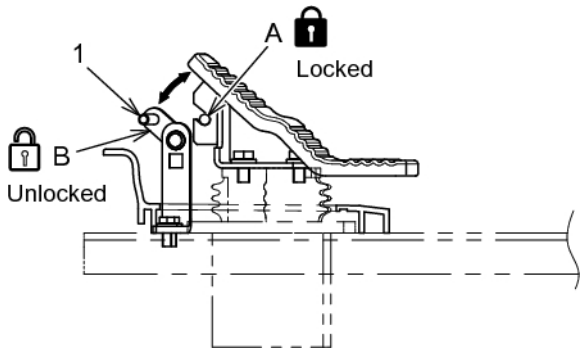

WARNING

make sure to set the pedal lock to "LOCKED" position while the breaker or nibbler is not used.
Unexpected contact with UNLOCKED position of pedal may cause severe injury or death.
Do not put foot on the pedal except at the time of operation using pedal.

Copyright © 2015 Kobelco Construction Machinery Co.,Ltd. All rights reserved. [S2YF00022ZE01] [0731CsCshWbYs]

7.1.8 PROHIBITED WORK IN USE OF BREAKER

The following safety precautions should be used in conjunction with all other safety precautions found in this MANUAL.

WARNING

Read, understand and follow all safety precautions and operating procedures found in this manual before operating the machine or any attachment.

A. Do Not Use Lewing/Swing Force

Do not use the swing force of the machine for pushing or sliding objects. This will cause premature failure of the attachment and other machine components.

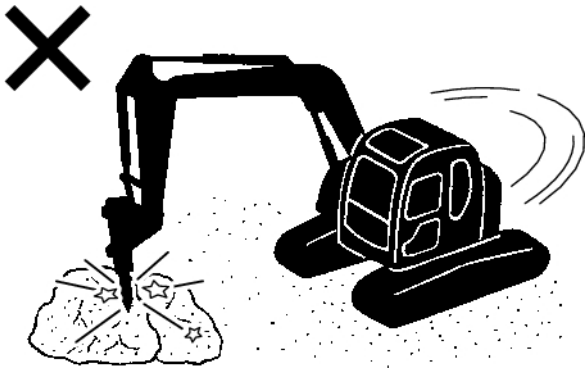

B. Do Not Pry and Break Forcibly

Do not use the breaker to pry and break rock and concrete. This may damage the hydraulic breaker, and the excavator boom, arm and hydraulic cylinders.

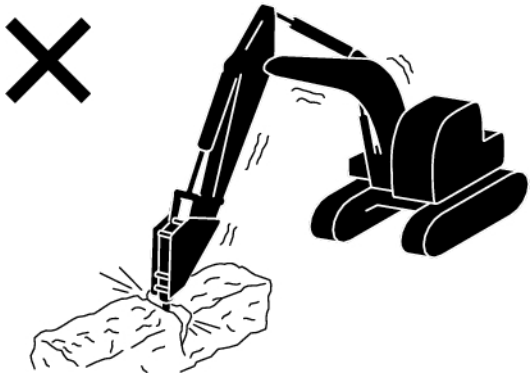

C. Arm In Vertical Position

The arm should not be operated in the vertical position to prevent the hydraulic cylinder from vertical shocks.

This may damage the rod seal and piston and cause oil to leak from those sections.

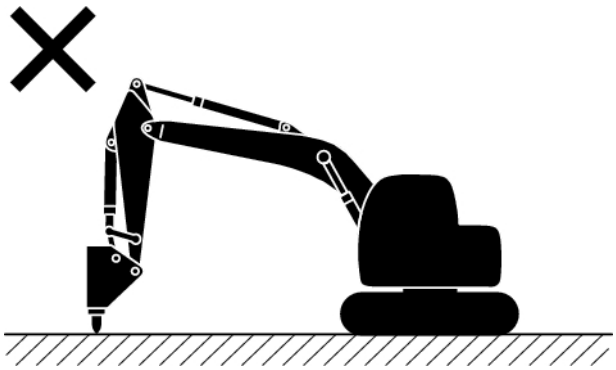

Copyright © 2015 Kobelco Construction Machinery Co.,Ltd. All rights reserved. [S2YF00022ZE01] [0731CsCshWbYs]

D. Cylinders

Do not operate boom, arm or bucket cylinders at stroke ends when using a breaker attachment.
Doing this can cause undue load on the cylinder rods and result in damage.

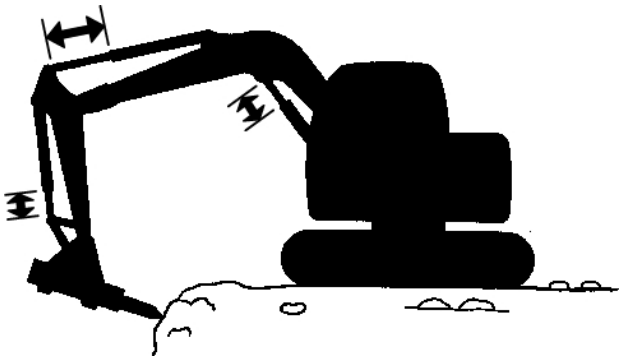

E. Use for Intended Purpose

Use the attachment only for its intended purpose. If not used in accordance with the manufacturers instructions, the excessive pressure exerted on the boom, arm and frame structure of the machine will cause premature failure of the components.

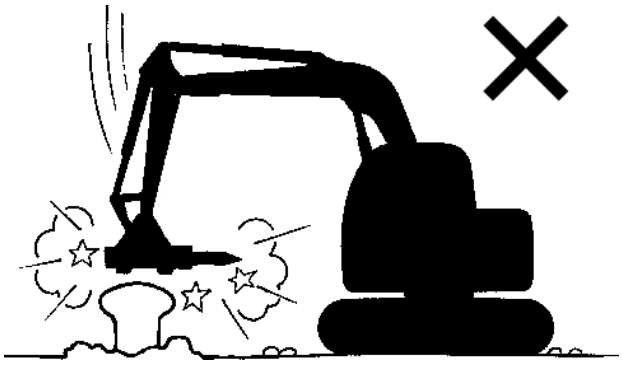

F. Avoid Continuous Operation

Operate the nibbler/breaker in 1 minute intervals. Operation for longer than 1 minute at a time can cause high oil temperatures and the accumulators, cylinder seals and possibly pump damage.

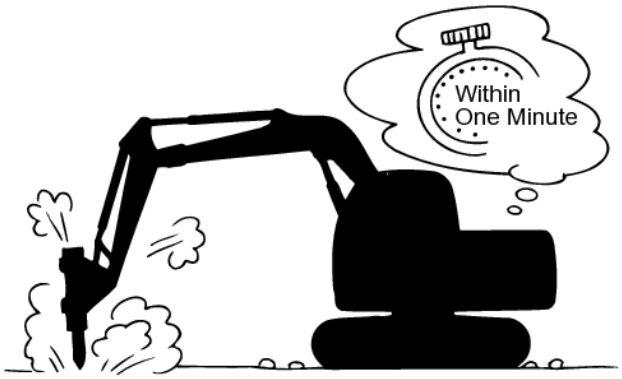

G. Hose Surge

Should the hydraulic hoses begin to surge or vibrate abnormally during operation of a breaker or nibbler, immediately stop operation and contact our dealer/distributor for assistance.
This problem often is a result of damaged accumulators and can also result in valve failure.

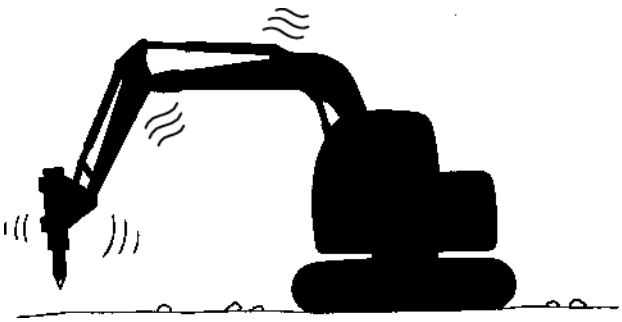

Copyright © 2015 Kobelco Construction Machinery Co.,Ltd. All rights reserved. [S2YF00022ZE01] [0731CsCshWbYs]

H. Do Not Use Dropping Force

Do not use the dropping force of the attachment to break or drive objects. This will cause extensive damage to the attachment and machine structure.

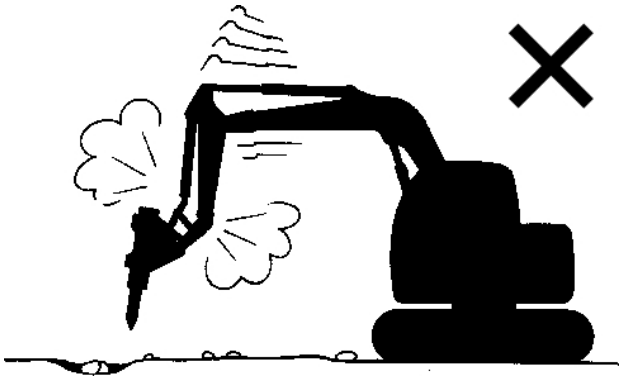

I. Do Not Lift

Do not use an optional attachment to lift or transport objects or material.
Doing so can cause extensive damage to the attachment, the machine structures or cause injury or death due to slipping or dropping of load due to improper attachment.

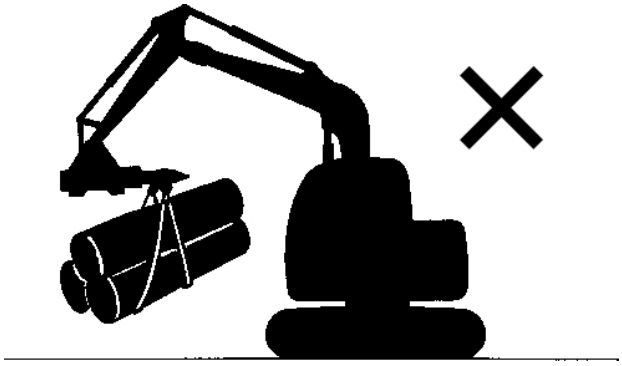

J. Do Not Work Underwater

The breaker is rusted, and results in damage of sealing.
Consequently contamination with rust, dust and water enter into hydraulic oil. This causes damage of hydraulic equipment.

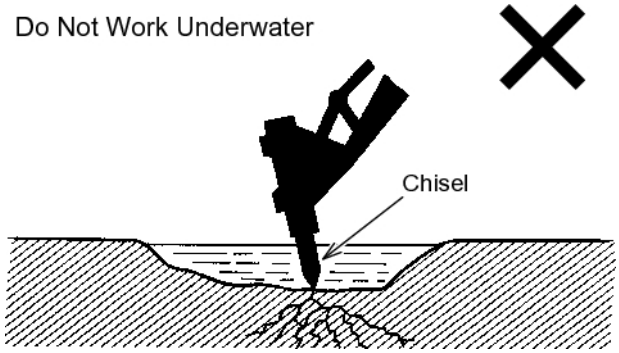

K. Working Ranges

The balance on the machine becomes unstable at the positions shown in the right figure involving a possibility of turning over the machine. Do not carry out breaker work in this position.

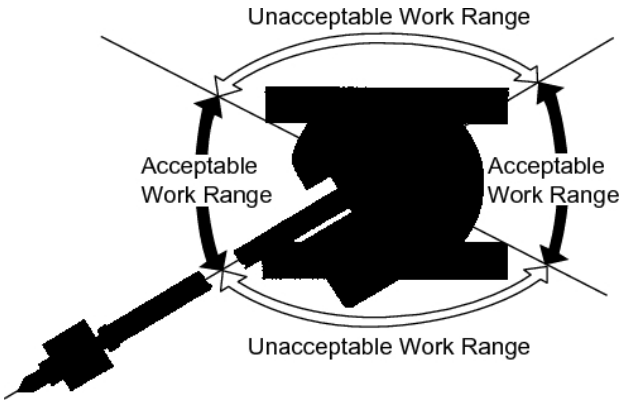

Copyright © 2015 Kobelco Construction Machinery Co.,Ltd. All rights reserved. [S2YF00022ZE01] [0731CsCshWbYs]

L. Do Not Hit Chisel Against Boom

To avoid interference of chisel with boom, operate control lever of arm and boom carefully.

M. Precaution When Lifting Up Machine

Unnecessary machine lifting up is not allowed. It may cause damage of attachment.

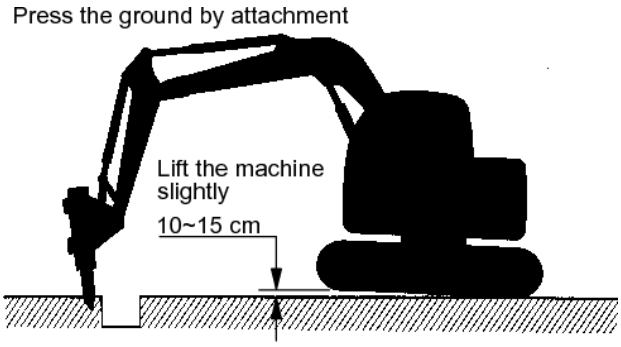

7.1.9 PERIODIC INSPECTION AND MAINTENANCE INTERVAL

Contamination and deterioration of hydraulic oil may cause function problems with control valves, early wear and possible seizure of the hydraulic pump leading to break down of the machine hydraulic system.

Operation of breaker accelerates the deterioration of hydraulic oil compared to normal earth moving operation with bucket. Replace filters and hydraulic oil as indicated in following table. Prepare and update a maintenance record following example provided.

Component	Location	Replacement interval		
		First	2nd replacement	Regular
Hydraulic oil	Hydraulic tank	-	-	Every 1000 hours
Return filter element kit (P/No. YN52V01016R600	Hydraulic tank	50 hours	250 hours	250 hours

7.1.10 REINFORCING ATTACHMENT

When operating machine with proper breaker and nibble attached, in case of the arm which is made in factory, reinforcement of arm is not required. But when operated in special application, contact our dealer/distributor.

Copyright © 2015 Kobelco Construction Machinery Co.,Ltd. All rights reserved. [S2YF00022ZE01] [0731CsCshWbYs]

7.1.11 PROHIBITED WORK IN USE OF NIBBLER

The wrong nibbler operating method may cause damage of attachment and excavator or result in dangerous work condition. To prevent these trouble, learn correct and safety operating method. The precaution during operation is explained here with operative examples including similar behavior to prevent trouble.

A. Do Not Strike the Object with Nibbler

The hitting and striking the nibbler against object will give undue force to nibbler, machine, boom, arm, link and so on resulting in damage.

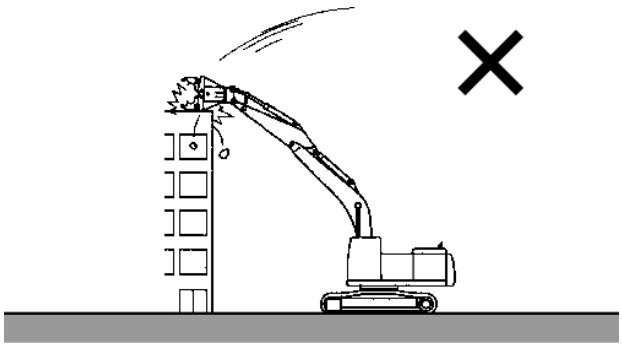

B. Do Not Pry and Pull Nibbler during Holding Object

Do not pry and pull nibbler which is holding building and structure partly.

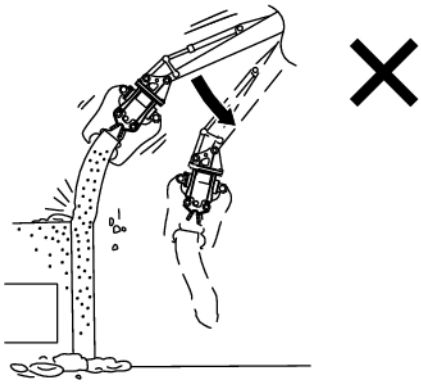

C. Do Not Swing the Machine during Holding Object

Do not pull down building and structure by the swing force during holding object.

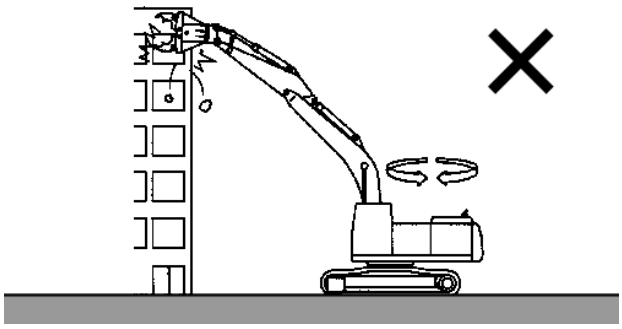

D. Do Not Hold Object Obliquely

Select machine position and holding position so that nibbler opening does not hold breaking object obliquely.

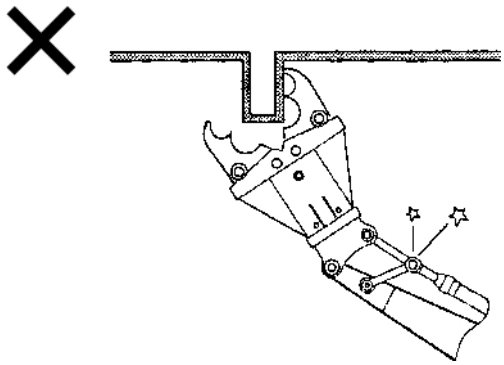

Copyright © 2015 Kobelco Construction Machinery Co.,Ltd. All rights reserved. [S2YF00022ZE01] [0731CsCshWbYs]

E. Do Not Travel while Nibbler is Holding Object

Do not pull building and structure by the use of traveling force while nibbler is holding the top side of object.

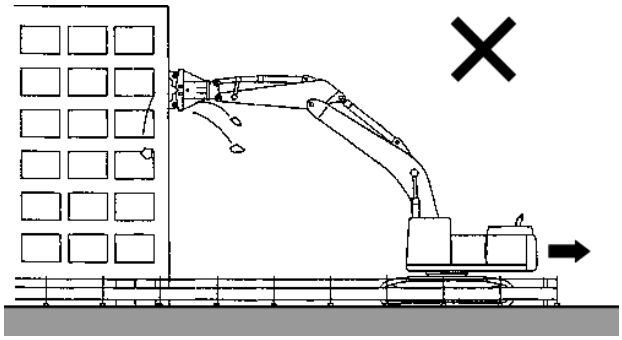

F. Attention to the Falling Debris

Take position to prevent from debris.

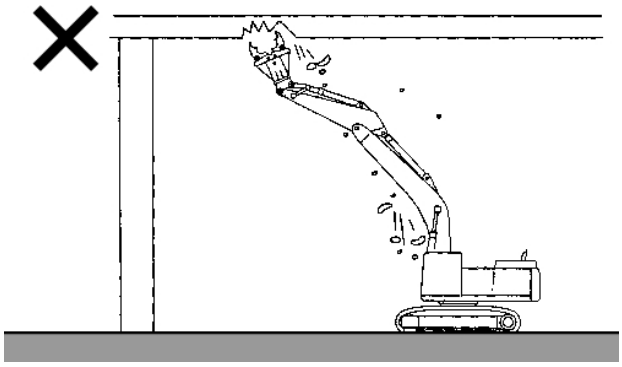

CAUTION

The guard (3 faces) is provided for demolition machine.
When standard machine is employed as machine for demolition work, replace the cab with 3 faces protected cab.

G. Cylinder Stroke with Sufficient Allowance

When carrying out the demolition work with hydraulic cylinder rod moving to the stroke end, the hydraulic cylinder may be damaged. Do not operate nibbler with hydraulic cylinder rod moving to the stroke end.
Especially the operation of cylinder with the bucket cylinder moved to the stroke end may cause damage of cylinder, link and rod pin.

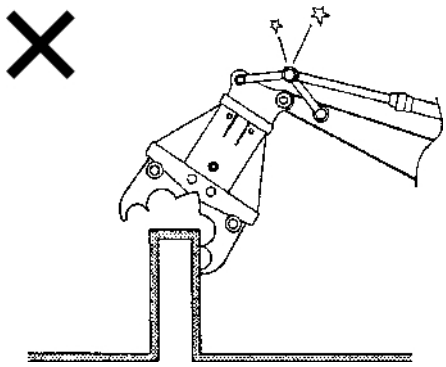

H. Prohibiting Work Facing Sideways

Do not operate the attachment over the sides of the machine. It may cause rollover of machine. And do not operate the machine abruptly but operate it slowly.

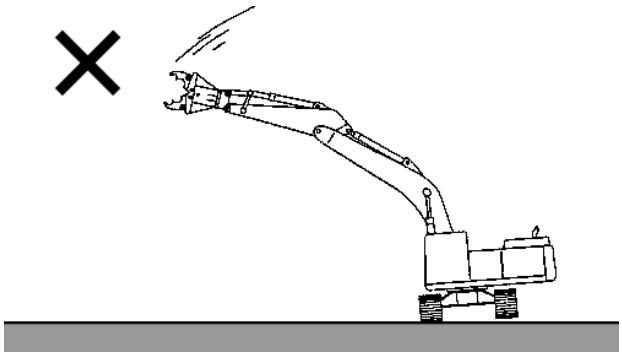

Copyright © 2015 Kobelco Construction Machinery Co.,Ltd. All rights reserved. [S2YF00022ZE01] [0731CsCshWbYs]

I. Move Arm Slowly at stroke End of Cylinder

When lowering the arm rapidly, and the cylinder rod reaches to stroke end rapidly too, and the impact damages the arm cylinder. Operate the attachment slowly to avoid the abrupt approach to stroke end of arm cylinder.

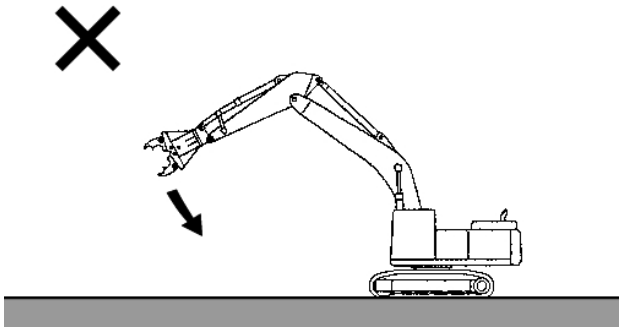

7.1.12 PRECAUTION TO BE EXERCISED ON BREAKERS OF DIFFERENT MANUFACTURES

There are some differences between manufactures as to the piping to breakers and the handling of breakers. For this reason, consult with the manufacturer when mounting a breakers in the field.
The following is a summary of how breakers should be handled that is extracted from manufacture's catalog use and operation manuals.

IMPORTANT

This is a general outline of how breakers should be use and may differ with excavator models. Always contact the breaker manufacture before field mounting.

1. Placing High and Low Pressure Accumulators

N P K
T O K U
K R U P P
They must be placed basically (depending upn models)

O K A D A
FURUKAWA
Check the osillation of the pulsation of the breaker pressure and if pulsation is large, always install acculators.

2. Standard of Judgment on the Installation of Accumulators

High pressureside :
Measure the plus oscillation by pressure on the high pressure side of the breaker at the inspection port for the pump's delivery pressure by actuation the breaker at the full revbolution of the engine in mode H and set the maximum pressure difference to within 20 % of the excavator's system pressure 34.3 MPa {350 kgf/cm2(4,980 psi).
In case it exceeds 20 %, install a high pressure accumulator.

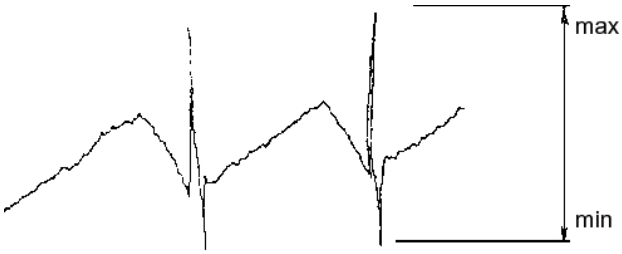

Max. - Min. < system press × 20%

IMPORTANT

The pulse oscillation is 34.3 MPa {350 kgf/cm2} x 20 % = 6.9 MPa {70 kgf/cm2(1,000 psi). Therefore, if it is more than this level, and accumulator must be installed.

Install accumulator referring to the result of verification test.

Copyright © 2015 Kobelco Construction Machinery Co.,Ltd. All rights reserved. [S2YF00022ZE01] [0731CsCshWbYs]

Low pressure side :
Measure the inlet pressure of the line filter on the breaker side by actuating the breaker at full engine revolution in the H mode, and in case the maximum pressure exceeds 5.4 MPa {55 kgf/cm2} (780 psi), install a low pressure accumulator.
Max. < 5.4 MPa {55 kgf/cm} (780 psi)
Regarding the capacity and the charge pressure of accumulators, contact the breaker manufacturer before installation.

3. Installation of a Relief Valve

N P K —— Installation is not necessary. (Contact the breaker manufacture as it is necessary depending upon modesl.)

T O K U
K R U P P
O K A D A
FURUKAWA
— Installation is necessary. A relief valve is specified by each breaker manufacturer. Since the method of pressure setting of the relief valve differes with breaker manufacuturers, install a relief valve according to the manufacurer's instructions.

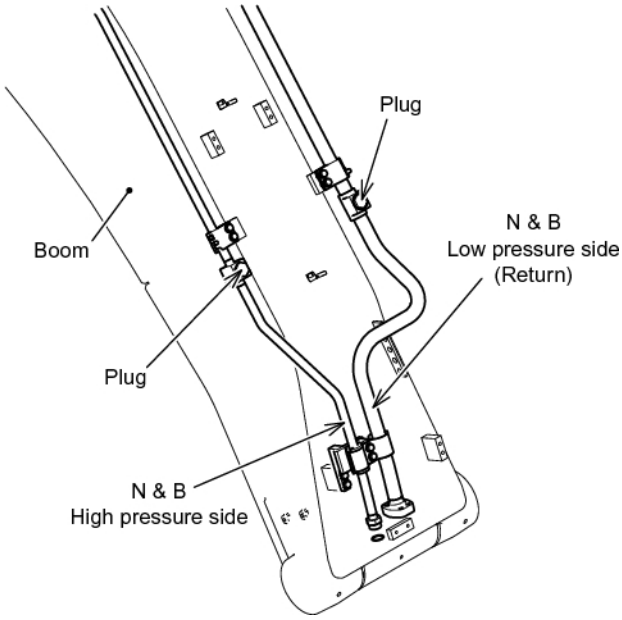

Copyright © 2015 Kobelco Construction Machinery Co.,Ltd. All rights reserved. [S2YF00022ZE01] [0731CsCshWbYs]

7.2 ROTARY MULTI CONTROL VALVE (SAE AND BHL PATTERN)

CAUTION

Make sure you know the location and function of each control before operating.

This machine is factory equipped with the control pattern.

Note

With this control pattern, functions must correspond to the labels located inside of cab.

DANGER

Stop the engine without fail at time of change over.

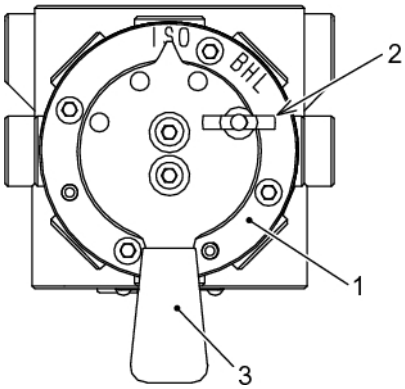

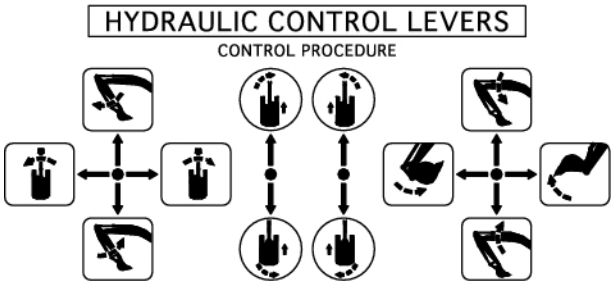

SAE PATTERNS

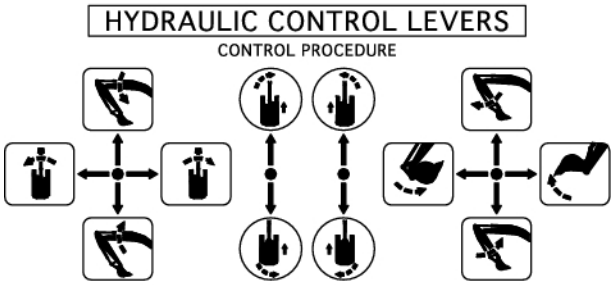

BHL PATTERNS

The patterns of operation are changeable from / to "SAE" to / from "BHL" position with the lever on the multi control valve (1) .

A. Lever of Rotary Multi-Control Valve

1. Park the machine in condition of parking posture, and stop the engine. And shift safety lock lever to "Locked position".
2. Using starter key to unlock doors, Then open door for radiator and air cleaner at left side of machine.
3. Remove butterfly bolt (2), and shift the lever (3) to required arrow marked position.
4. After setting the control pattern, tighten butterfly bolt (2) to fix lever (3) with hand. Never use tools.
5. Close the doors and lock it.

Copyright © 2015 Kobelco Construction Machinery Co.,Ltd. All rights reserved. [S2YF00022ZE01] [0731CsCshWbYs]

6. Operate the attachment and make sure that the control lever pattern is adjusted to the desired one.

CAUTION

Stop engine, and move the lever to each operation position once every 500 hours.
Make sure to return the lever to the position of former operation pattern.

Copyright © 2015 Kobelco Construction Machinery Co.,Ltd. All rights reserved. [S2YF00022ZE01] [0731CsCshWbYs]

7.3 OPERATION OF DOZER BLADE

7.3.1 OUTLINE

Blade is attached on lower frame with pin, and is used for backfilling and leveling after digging works by operating dozer cylinder through the aid of dozer control lever in cab and moving blade up and down.

7.3.2 DOZER BLADE OPERATION

WARNING

Read, understand and follow all safety precautions and operation procedures found in this manual before operating the machine or any attachment.

LEVER CONTROL (1)	BLADE MOTION
PUSH LEVER FORWARD (A)	BLADE DOWN
PULL LEVER BACKWARD (B)	BLADE UP
NEUTRAL (C)	HOLD

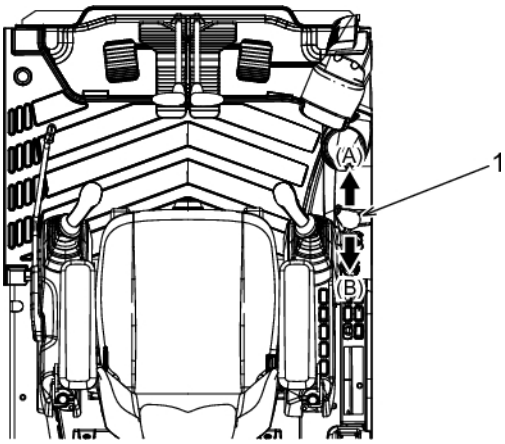

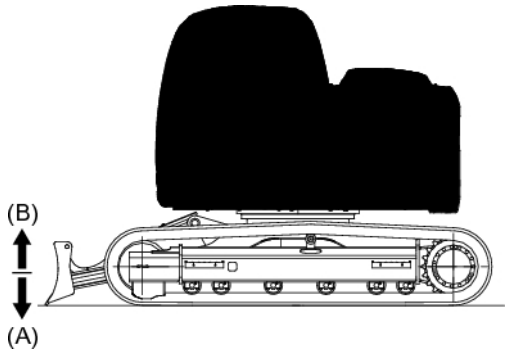

1. Start machine and place the safety lock lever in the "UNLOCKED" (down) position.
2. Move throttle control to the "HI" idle position.
3. Using boom, arm and bucket controls set the attachment to desired position.
4. Pull the blade control lever to lift up the blade.
5. Push the blade control lever forward to lower the blade.

WARNING

Always place attachments on the ground and lock up the safety lever before leaving the cab.

Copyright © 2015 Kobelco Construction Machinery Co.,Ltd. All rights reserved. [S2YF00022ZE01] [0731CsCshWbYs]

7.3.3 PROHIBITED WORK IN USE DOZER BLADE

A. DEEP EXCAVATION OPERATION

During deep excavation with the dozer blade in front, the boom cylinder could come in contact with the dozer blade.
Place the dozer blade in the back of the machine for deep excavations, unless the working area does not permit it.

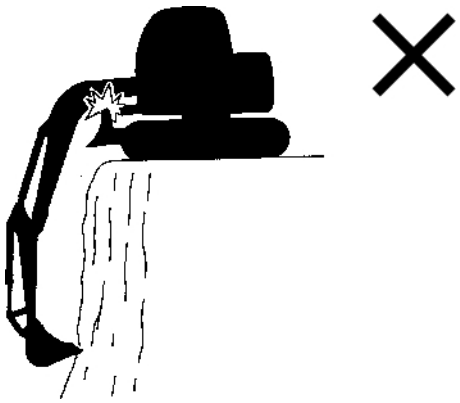

B. ATTACHMENT TRAVEL POSITION.

When moving the attachment into the travel position, do not hit the dozer blade with the bucket/attachment.

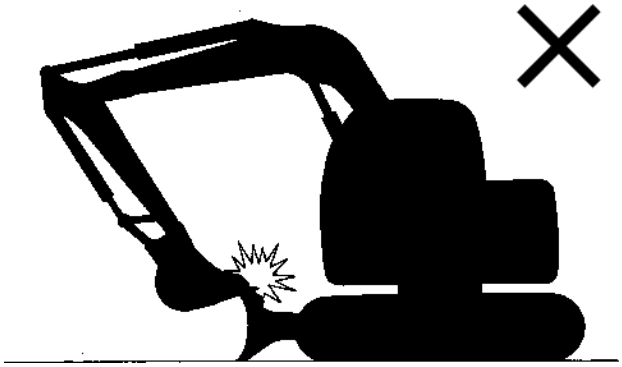

C. AVOID DISLODGING OBSTACLES WITH BLADE.

Do not strike any obstacles such as large rocks.
The dozer blade may be damaged.

D. DO NOT SUPPORT MACHINE WITH BLADE AT ONE END.

When the dozer blade is used as an outrigger, do not support the machine at one end of the dozer blade.
Make sure the support at both ends.

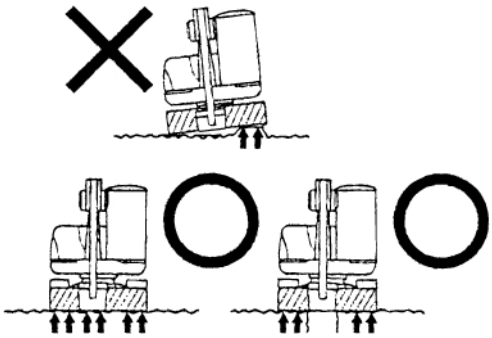

Copyright © 2015 Kobelco Construction Machinery Co.,Ltd. All rights reserved. [S2YF00022ZE01] [0731CsCshWbYs]

7.3.4 PERIODIC INSPECTION AND MAINTENANCE INTERVAL

Check and service the component of dozer blade with reference to the following table.

COMPONENT	WHEN REQUIRED	Interval (Hours on Hourmeter)		Lubricant, etc. (Replacement part)	REF. page #
		Pre-start inspection or every 8 hours	Every 3 months or 250 hours		
Grease dozer blade pin		○ (Until 50Hr)	○	EP grease	7-20
Inspection for oil leak and damage of dozer cylinders and hoses	○				–
Inspection for damage of dozer blade	○				–

Note

Location of lubrication points.
Lubricate all grease nipples in the figure.
-Blade foot pin (2 places)
-Dozer cylinder rod head (each 2 places)

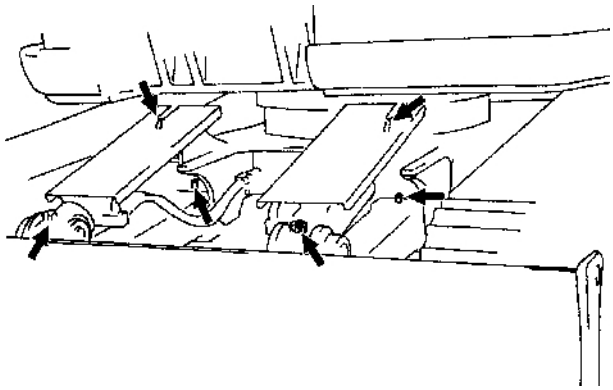

Copyright © 2015 Kobelco Construction Machinery Co.,Ltd. All rights reserved. [S2YF00022ZE01] [0731CsCshWbYs]

7.3.5 BLADE DIMENSION

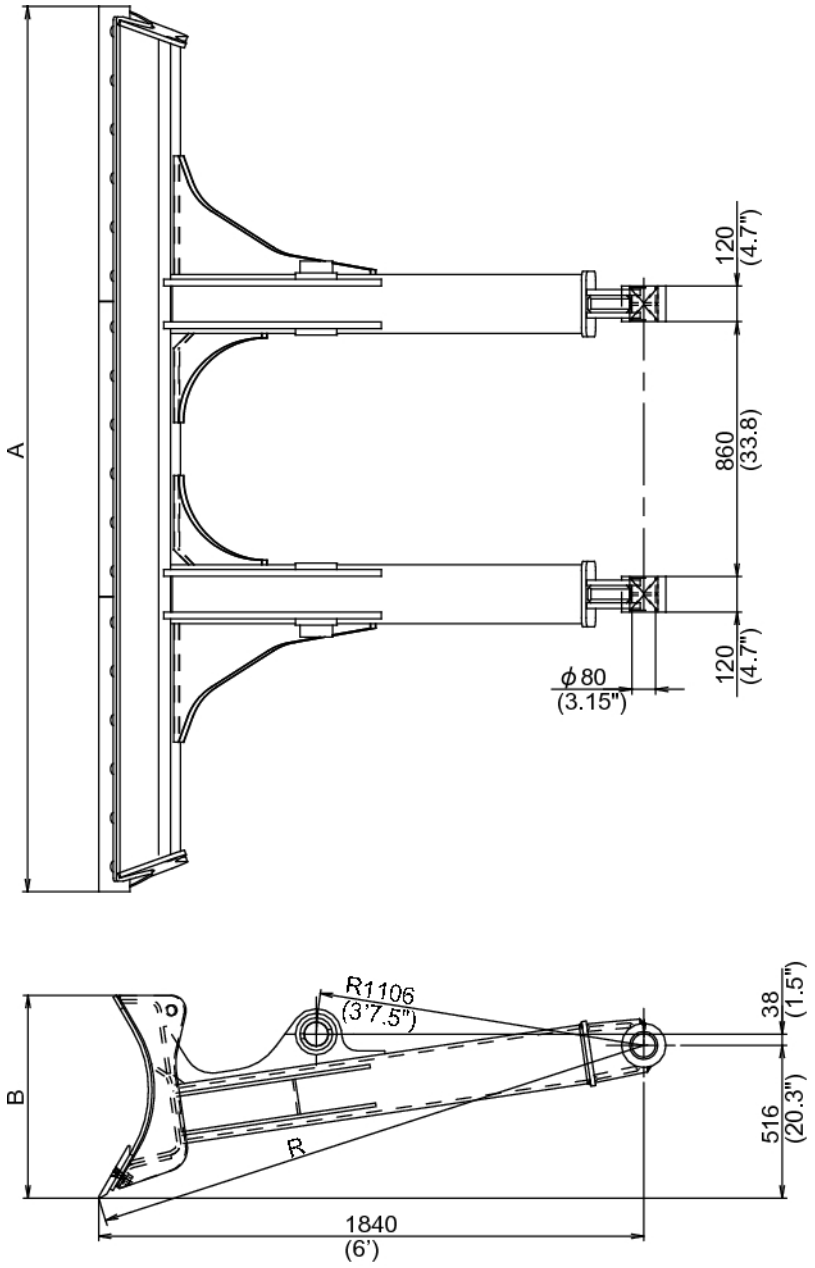

YN51B00011F1

No.	NAME	BLADE OF STD UNDERCARRIAGE	BLADE OF LC UNDERCARRIAGE
A	Blade Width mm (ft-in)	2990 (9-10)	2990 (9-10)
B	Blade Height mm (inch)	684 (2-3)	684 (2-3)
R	Distance From Dozer Attaching Pin Center To Blade End mm (ft-in)	1910 (6-3.2)	1910 (6-3.2)

Copyright © 2015 Kobelco Construction Machinery Co.,Ltd. All rights reserved. [S2YF00022ZE01] [0731CsCshWbYs]

7.4 CAB WORKING LIGHT SWITCH

When working in the poor visibility condition, light the cab working light. To light the cab working light, press the symbol side of this switch (1).
-Press the symbol side: The light is ON.
-Press the blank side: The light is OFF.

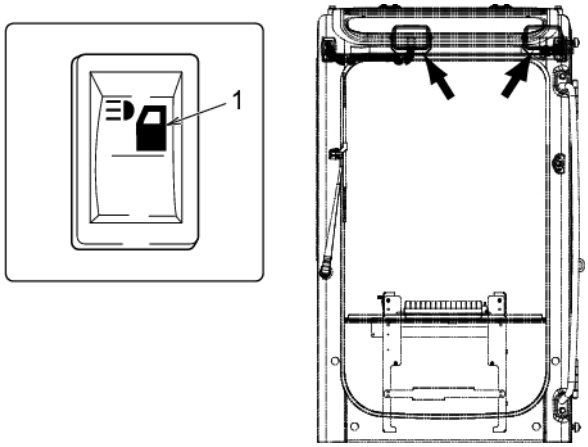

Copyright © 2015 Kobelco Construction Machinery Co.,Ltd. All rights reserved. [S2YF00022ZE01] [0731CsCshWbYs]

8. SPECIAL PROCEDURES

Copyright © 2015 Kobelco Construction Machinery Co.,Ltd. All rights reserved. [S2YF00022ZE01] [0731CsCshWbYs]

Copyright © 2015 Kobelco Construction Machinery Co.,Ltd. All rights reserved. [S2YF00022ZE01] [0731CsCshWbYs]

8.1 GENERAL

The SK235SRLC-2 machine incorporates automatically applied spring brake systems in the travel motors and swing motors. These systems will automatically engage the brakes when engine is stopped making it impossible to move the machine.
This section contains the required procedures for releasing the travel motor brakes, the swing motor brake and lowering the attachment to the ground should sudden engine failure be experienced.

WARNING

Make certain chock blocks are secure at front and rear of each track before attempting to release brakes.
Never stand in the path of the tracks when releasing brakes.

WARNING

Read, understand and follow all safety precautions and procedures found in this manual before attempting any operation, inspection, maintenance or repair of this machine, attachment or any of its systems.

WARNING

The procedures found in this section should be performed by a well trained experienced service technician who is familiar with the KOBELCO SK235SRLC-2 machines.

Copyright © 2015 Kobelco Construction Machinery Co.,Ltd. All rights reserved. [S2YF00022ZE01] [0731CsCshWbYs]

8.2 RELEASING TRAVEL MOTOR BRAKES

A. Tools and Equipment Required

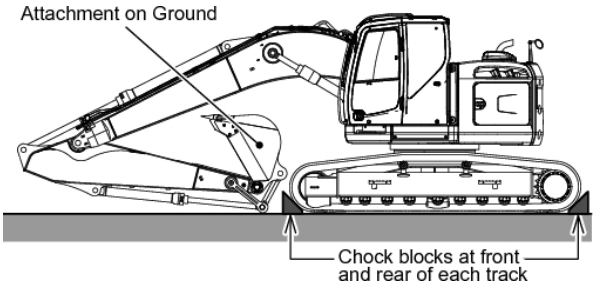

Fig. 8-1

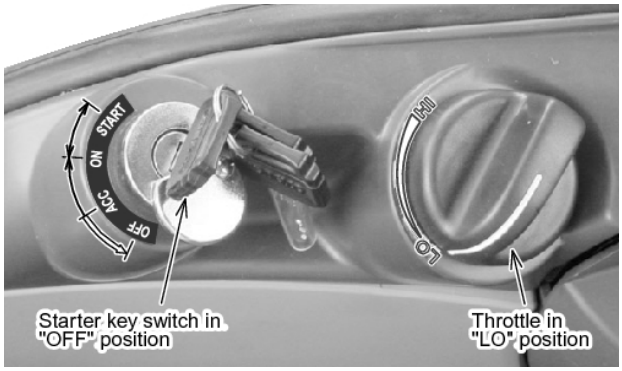

Fig. 8-2

1. Four chock blocks.
2. One 12 mm allen wrench.
3. One 8 mm allen wrench.
4. Two 6 liter (1.6 Gal) capacity drain pans.
5. One M10-1.5 x 30 mm lifting eyes.
6. Overhead lifting device capable of lifting and holding 45 kg (100 lb).
7. Torque wrench 70 to 77 N-m {52 to 57 lbf-ft} capacity or better.
8. Thread sealant (For drain and check/fill plugs).
9. Rubber or soft faced mallet.

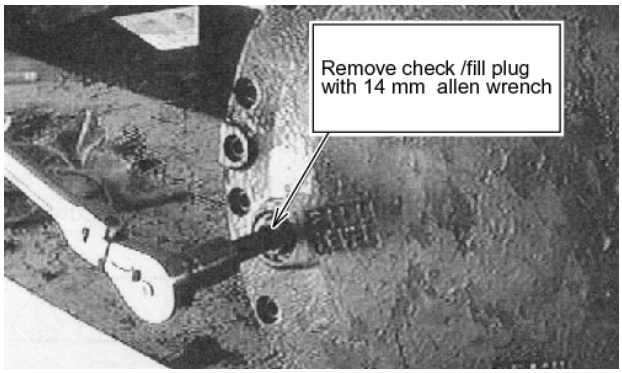

Fig. 8-3

Copyright © 2015 Kobelco Construction Machinery Co.,Ltd. All rights reserved. [S2YF00022ZE01] [0731CsCshWbYs]

B. Procedures

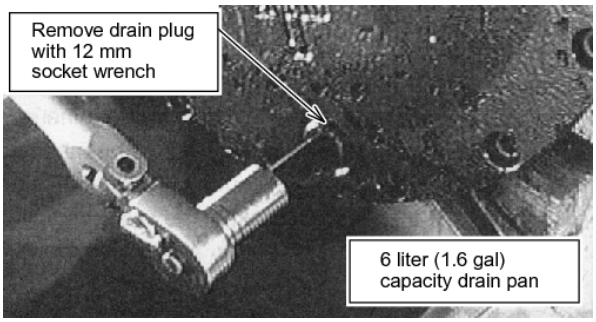

Fig. 8-4

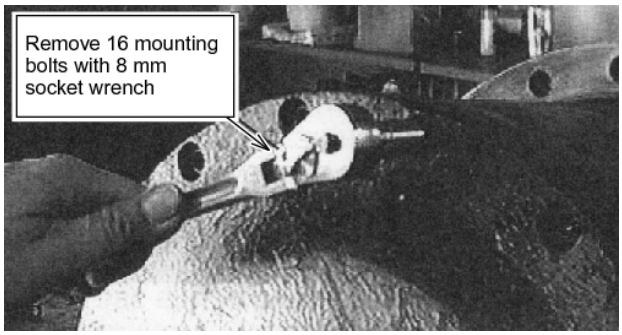

Fig. 8-5

1. Place chock blocks at front and rear of each track to prevent machine from moving when brakes are released. See Fig.8-1.
2. Lower attachment to ground. See "8.4 LOWERING ATTACHMENT WHEN SUDDEN ENGINE FAILURE OCCURS" for proper procedures. See Fig.8-18.
3. Turn key switch "OFF" and remove key. See Fig. 8-2.
4. Remove check/fill plug from each travel motor using the 12 mm socket head wrench. See Fig. 8-3.
5. Place a clean 6 liter (1.6 Gal) capacity drain pan under each travel motor drain plug and remove drain plug using the 12 mm socket head wrench. See Fig. 8-4.
6. After all of the gear oil has drained, cover the drain pans to prevent contamination and move them to an area away from the machine.
7. Remove the fifteen plate mounting bolts from the travel motor reduction unit cover plates. See Fig. 8-5.
8. Remove the two bolts from the bossed areas and install the two M10-1.5 × 30 mm lifting eyes into each of these holes. See Fig. 8-6.
9. Attach the overhead lifting device to the lifting eyes and remove most of the slack from the chain or cable.
10. Using a rubber mallet, gently strike the edge of the cover plate to help release plate from housing.
11. After cover plate has release from housing, carefully move cover away from machine with lifting device.

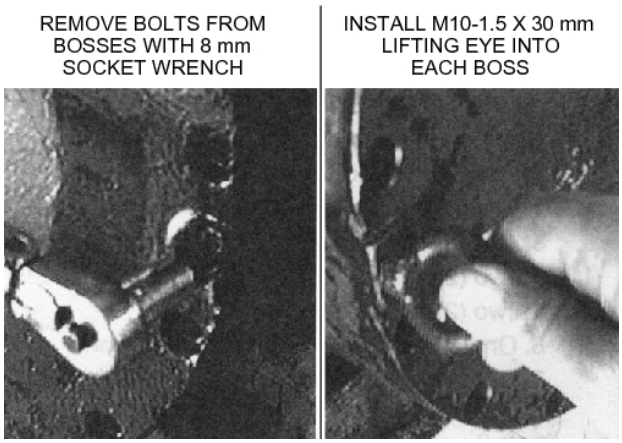

Fig. 8-6

CAUTION

-Be careful not to damage lip of cover plate. Any damage to the lip could result in a gear oil leak.
-When removing the following components it will be necessary to have a clean area free of dirt and grit to lay these components.

Copyright © 2015 Kobelco Construction Machinery Co.,Ltd. All rights reserved. [S2YF00022ZE01] [0731CsCshWbYs]

12. Remove the thrust plate and sun gear. See Fig. 8-7.

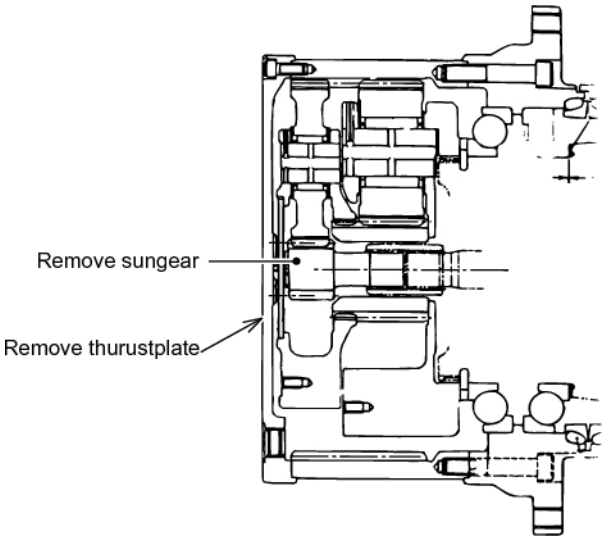

Fig. 8-7

13. Attach the overhead lifting device to the M10 lifting eye and remove most of the slack from the cable or chain. See Fig. 8.8.
14. Carefully by hand work the planetary gear assembly free from the housing. See Fig. 8.8.

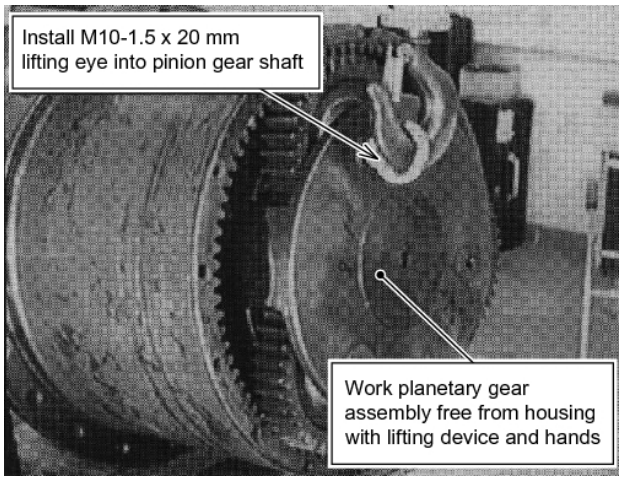

Fig. 8-8

CAUTION

Be aware of and protect hands from pinch areas when removing and installing planetary gears or any other component which may cause personal injury.

Copyright © 2015 Kobelco Construction Machinery Co.,Ltd. All rights reserved. [S2YF00022ZE01] [0731CsCshWbYs]

15. Install cover plates onto housings and tighten all bolts securely.
16. Install fill and drain plugs into cover plates and replace gear oil into travel reduction units through fill/ check port to proper level.
17. After steps 4 through 16 have been performed on both travel reduction units, the machine may be towed to an area where repairs can be made.
18. After repairs are made reinstall the "drive gear" in reverse order.
    Use the following torque specifications for bolts and plugs.
    Tightening torque :
    (Cover bolts) 69.7 to 77 N-m {51 to 57 lbf-ft}
    (Plugs) 149 to 165 N-m {110 to 122 lbf-ft}

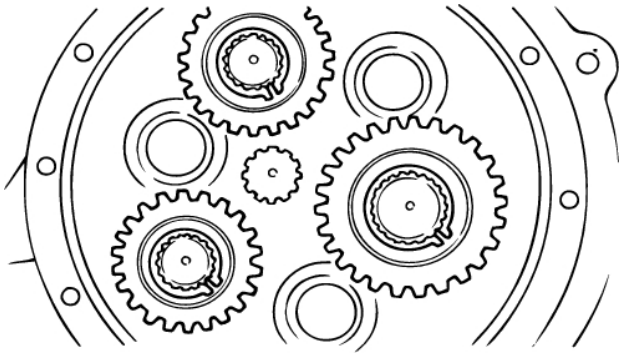

Fig. 8-9

Copyright © 2015 Kobelco Construction Machinery Co.,Ltd. All rights reserved. [S2YF00022ZE01] [0731CsCshWbYs]

8.3 RELEASING SWING BRAKE

WARNING

Make certain that the attachment is on the ground to help prevent sudden rotation of the upper structure before attempting to release the swing brake.
Refer to "8.4 LOWERING ATTACHMENT SUDDEN ENGINE FAILURE OCCURS".

KOBELCO highly recommends the use of a hydraulic hand pump to release the swing brake manually when the engines fails to start. Refer the Fig. 8-13 to use the proper fitting connector on P port. Remove the hose and install the proper connector on P port. Install the hydraulic hand pump and apply hydraulic pressure as follows:
SK235SRLC-2 ... 28.5 MPa {413 psi}

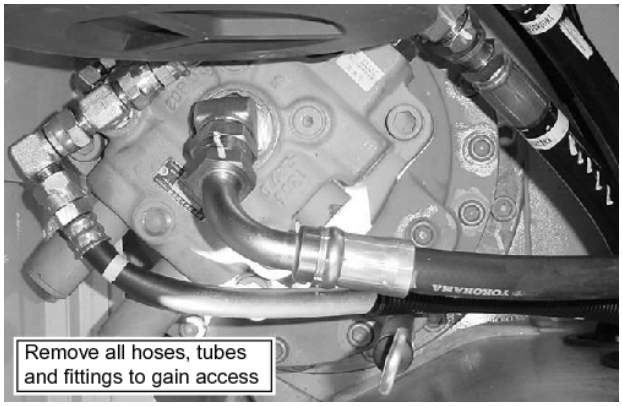

Fig. 8-10

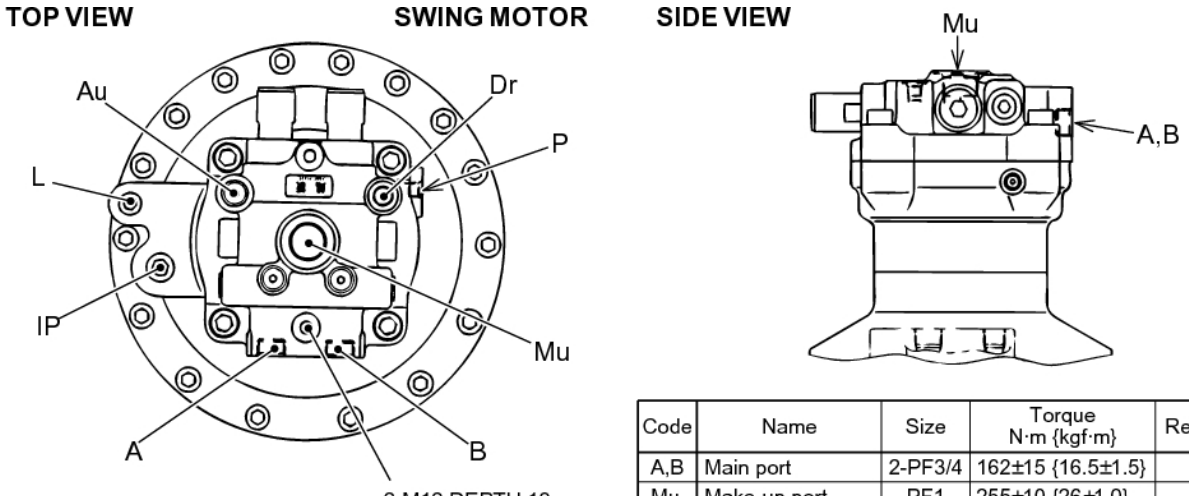

Code	Name	Size	Torque N·m {kgf·m}	Remarks
A,B	Main port	2-PF3/4	162±15 {16.5±1.5}	
Mu	Make-up port	PF1	255±10 {26±1.0}	
Dr	Drain port	PF3/8	73.5±5 {7.5±0.5}	
P	Brake release port	PF1/4	36.3±2 {3.7±0.2}	
L	Gear oil level port	PT1/2	65 {6.6}	
IP	Gear oil filling port	PT3/4	98 {10}	
Au	Air bleed	PF1/4	29 {3}	

Fig. 8-11

CAUTION

In highly contaminated environments it is recommended to remove the whole swing motor assembly, if a hydraulic hand pump is not available. Refer to the shop manual for special instructions or contact your KOBELCO distributor for assistance. When the swing motor is removed, make sure to use caps and plugs on hoses, tubes and fittings to protect the hydraulic system from any contamination. Also, a cover must be used to protect the swing reduction unit. If this approach is taken, and the swing reduction unit becomes contaminated, make sure to flush and clean the swing reduction unit. Refer to page 4-11 for proper oil and component capacity.

Copyright © 2015 Kobelco Construction Machinery Co.,Ltd. All rights reserved. [S2YF00022ZE01] [0731CsCshWbYs]

If a hydraulic hand pump is not available, and the contamination can be controlled easily, then proceed to the next page for specific instructions on a different alternative to release the swing parking brake.

CAUTION

Use safety protection such as: hard hat, working gloves, safety shoes and safety glasses when needed to perform this job.

A. Tools & Equipment Required

1. Handtools required for removal of hydraulic tubes, hoses and fittings.
2. Plugs and caps for tubes, hoses and fittings.
3. 10 mm allen wrench.
4. 5 mm allen wrench.
5. Two M12-1.75 x 26 mm lifting eye.
6. Overhead lifting device capable of lifting and holding 100 kg (220 lb).
7. Plenty of clean, dry shop rags and/or paper towels.
8. 14 mm allen wrench.
9. 441 N-m {325 lbf-ft} torque wrench.

B. Procedures

1. Lower attachment to ground. Refer to previous page for proper procedures in lowering the attachment.
2. Remove all hoses and tubes from the swing motor top plate and swing valve to gain access to the top plate mounting bolts. See Fig. 8-10.
3. Install the proper plugs and caps onto hoses, tubes and fittings to avoid the possibility of contamination entering the hydraulic system. See Fig. 8-12.

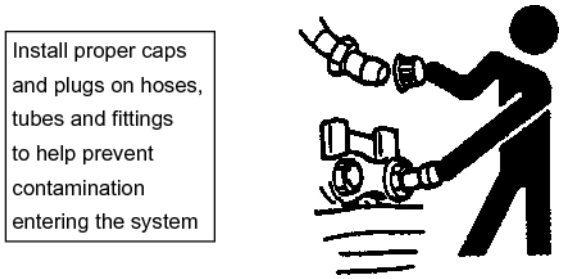

Fig. 8-12

CAUTION

Use only plugs and caps designed to properly seal the specific hose, tube or fitting they are to be installed on.

Copyright © 2015 Kobelco Construction Machinery Co.,Ltd. All rights reserved. [S2YF00022ZE01] [0731CsCshWbYs]

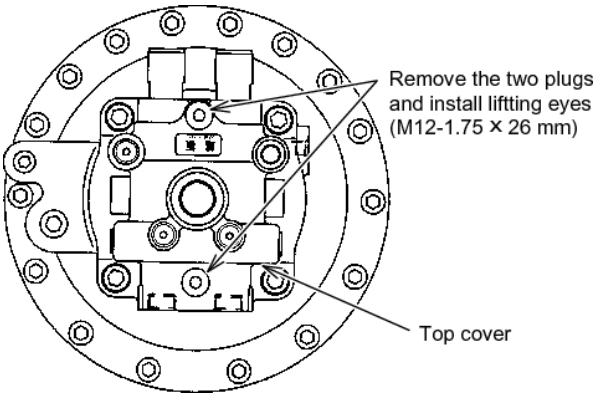

Fig. 8-13

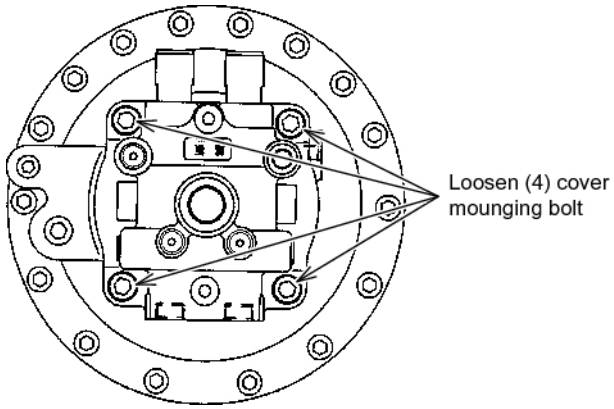

Fig. 8-14

4. Remove two plugs, as indicated in Fig. 8-13, and install 2 x M12-1.75 x 14 mm eye bolts.
5. Loosen the four top plate mounting bolts with the 14 mm allen wrench. See Fig. 8-14.
6. Remove two top plate mounting bolts from corners opposite of each other.

Note

Place a large quantity of clean, dry shop rags around the swing motor to help catch any overflow of hydraulic oil from the removal of the top plate.

7. Attach overhead lifting device to the lifting eyes and remove most of the slack from the cable or chain.
8. Carefully remove the remaining two bolts from the top mounting plate.
9. Using the overhead lifting device, carefully lift the swing motor top cover with swing shockless valve assembly and away from the swing motor.

Note

The top plate will raise from spring pressure as the last two bolts are removed. Some movement of the upper frame may be experienced as the spring tension is released.

CAUTION

Do not allow any dirt or debris to enter the swing motor or settle on the top plate.

Copyright © 2015 Kobelco Construction Machinery Co.,Ltd. All rights reserved. [S2YF00022ZE01] [0731CsCshWbYs]

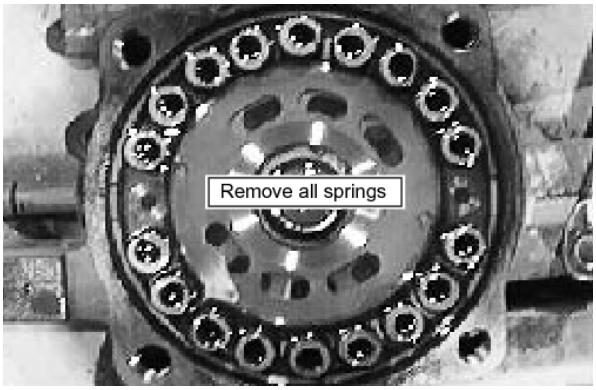

Fig. 8-15

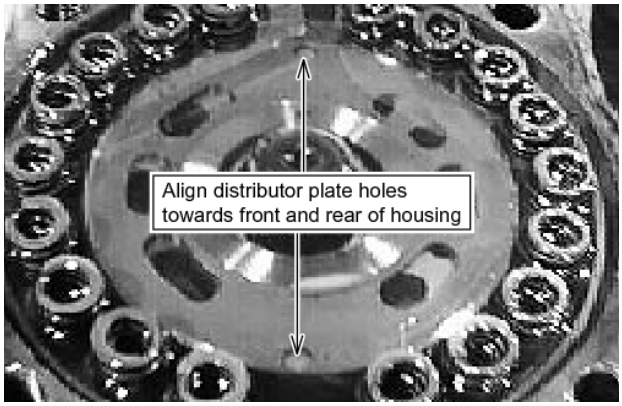

Fig. 8-16

10. Carefully remove all brake springs and place in a container filled with fresh, clean hydraulic oil. Then, seal the container to prevent contamination. See Fig. 8-15.
11. Align the holes of the distributor plate in the swing motor until they are located toward the front and back of the swing motor housing. See Fig. 8-16.

12. Carefully place the top plate over the swing motor and align the dowel pins of the top plate with the holes in the distributor plate. See Fig. 8-17.
13. Carefully and slowly lower the top plate into position on the swing motor and install, by hand, the four top plate mounting bolts.
14. After the machine upper structure is positioned for towing, remove cover again and reinstall the swing brake springs. Repeat steps 11~13 to lock the upper frame into position for proper transportation.

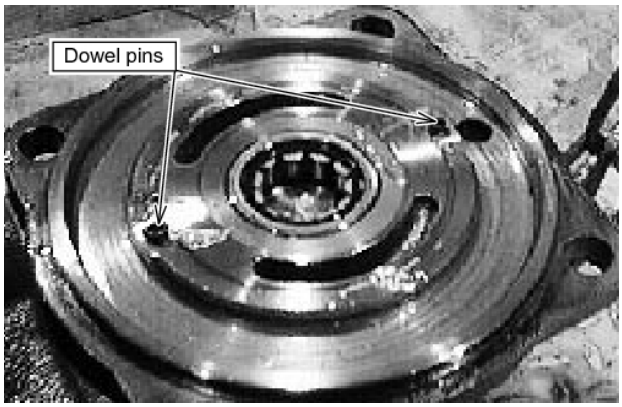

Fig. 8-17

CAUTION

Make certain the top plate dowel pins and the distributor plate holes mesh together.

CAUTION

Avoid oil spills. Use containers, rags, and / or paper towels to contain any oil leakage. Dispose all waste oils, fluids lubricants and other hazardous waste properly, according to government regulations.

Copyright © 2015 Kobelco Construction Machinery Co.,Ltd. All rights reserved. [S2YF00022ZE01] [0731CsCshWbYs]

8.4 LOWERING ATTACHMENT WHEN SUDDEN ENGINE FAILURE OCCURS

A. How to Lower Attachment - Fig. 8-18

The port relief valve is used to return the oil remaining in the cylinder to the hydraulic tank to protect the piping when the pressure inside of piping rises higher than the set pressure owing to the external load exerted on the cylinder, and also may be used as a measures to lower attachment when the engine stops owing to trouble, etc.

After loosening lock nut of port relief valve as adjuster screw is loosened the set pressure gradually falls. When the set pressure decreases lower than the hold pressure of cylinder currently holding attachment, the above hold pressure opens the poppet, the plunger moves rightward and the continuity from P to R is made.

Note

Before loosening adjuster screw, mark those positions, and after bringing down attachment to the ground, tight-en adjuster screw to the marked positions.

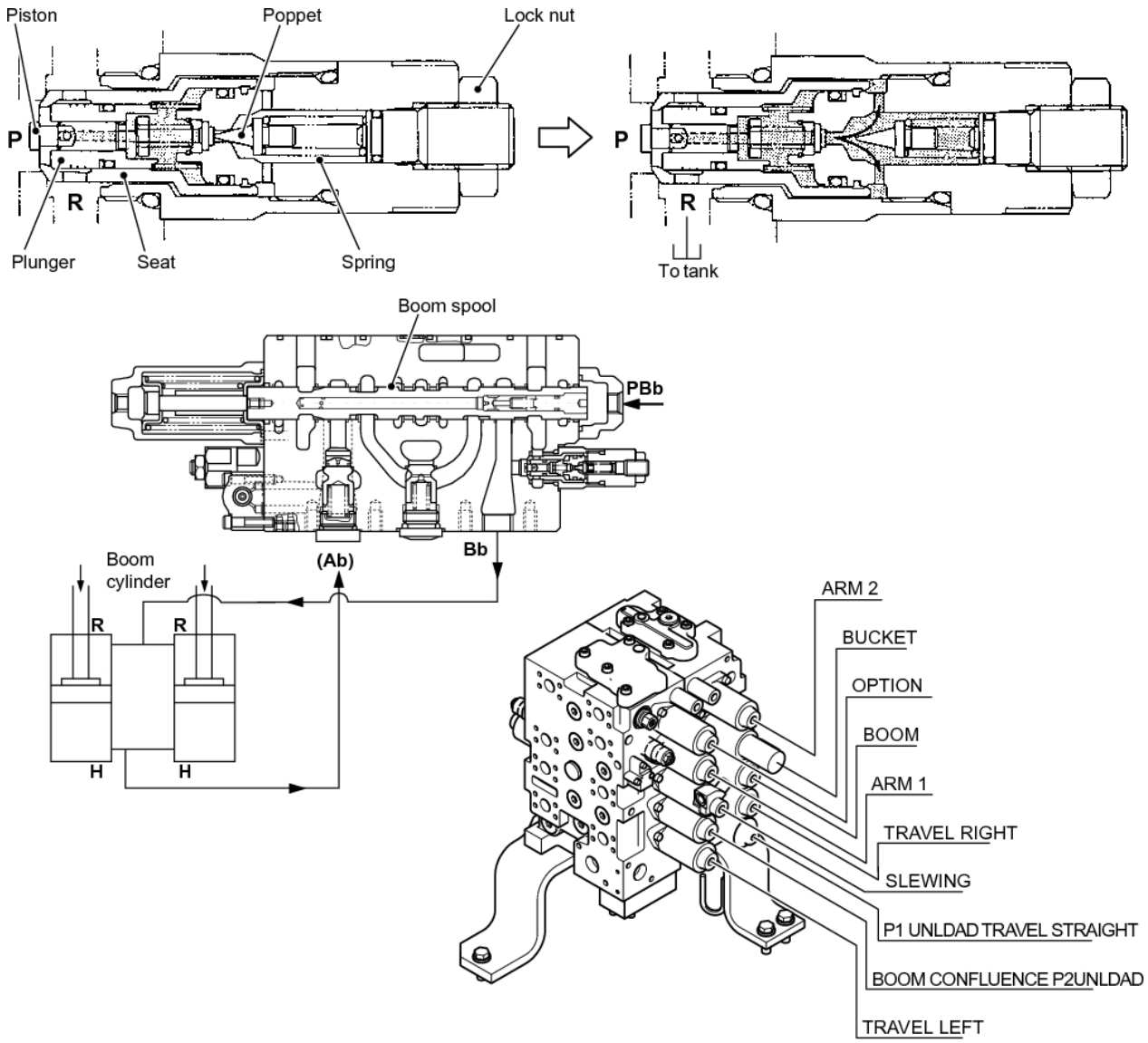

Fig. 8-18

Copyright © 2015 Kobelco Construction Machinery Co.,Ltd. All rights reserved. [S2YF00022ZE01] [0731CsCshWbYs]

B. How to Lower Attachment - Fig. 8-19

When engine stops because of troubles, the relief valve incorporated in the holding valve mounted on the boom cylinder head side is available to lower attachment.

As shown in the figure, after loosening lock nut of stop valve as setscrew is loosened, the poppet is opened and then the oil remaining in the boom cylinder head side returns to the tank through T port enabling attach-ment to be lowered.

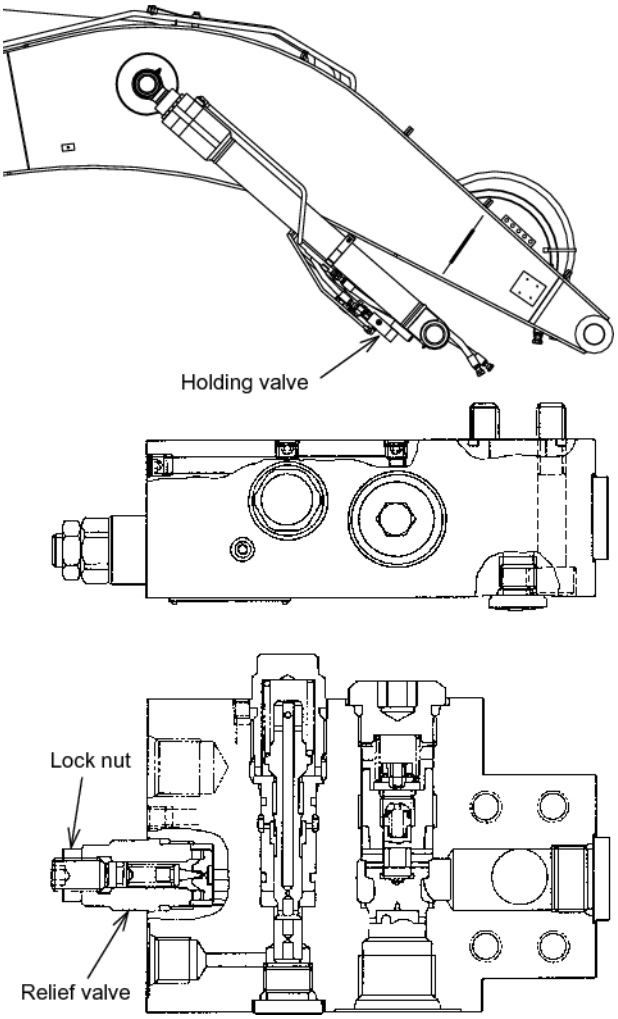

Fig. 8-19

Note

Before loosening adjuster screw, mark those positions, and after bringing down attachment to the ground, tight-en adjuster screw to the marked positions.

CAUTION

Be careful when lowering attachment. Do not stand un-der boom.

Copyright © 2015 Kobelco Construction Machinery Co.,Ltd. All rights reserved. [S2YF00022ZE01] [0731CsCshWbYs]

8.5 HYDRAULIC TANK PRESSURE

How to release air pressure remaining in the hydraulic tank.
After engine stops, the air pressure remaining in the hydraulic tank.
Can be released by pushing valve on the air breather rubber cap several times (5 to 7 times). Air breather mounted on the upper part of hydraulic tank.

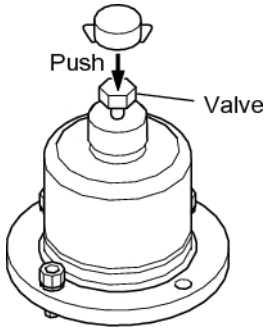

Copyright © 2015 Kobelco Construction Machinery Co.,Ltd. All rights reserved. [S2YF00022ZE01] [0731CsCshWbYs]