https://truckmanualshub.com/

HANGCHA

1t-3.5t R Series Internal Combustion Counterbalanced Forklift Truck

SERVICE MANUAL

HANGCHA GROUP CO., LTD.

Jun. 2011 5th EDITION

https://truckmanualshub.com/

Foreword

The manual is the introduction of structure, working principle and serving of 1t-3.5t R series internal combustion counterbalance forklift truck.

For safety and performance of truck, all in charge of operation, maintenance and management must read and comprehend this manual well.

The manual also applies to container fork-lift trucks.

It is forbidden anybody without training and qualification to maintain.

Our product design will update and perform better, so the content in this manual may be not the same as the forklift you owned.

If you have any questions please keep touches with HANGCHA GROUP CO., LTD. sales department or let the agents know.

© Jun. 2011 5th edition HANGCHA GROUP CO., LTD.

https://truckmanualshub.com/

Content

Foreword
Ⅰ. Power System 1
1. Engine for Forklift 1
2. NISSAN K21、K25 gasoline 3
3. C240 PKJ-30 Diesel 12
4. TD27AA diesel 14
Ⅱ. Hydrodynamic transmission,torque converter 17
1. Summary 17
2. Data 18
3. Working principles 19
4. Structure 21
5. Notice about installation and usage 30
6. Cause and solutions 30
Ⅲ. Driving axle 31
1. Date 31
2. Trouble diagnoses and corrections 31
3. Assembly and disassembly of driving axle 32
4. Axle shaft and wheel hub 33
5. Bearing adjusting 34
Ⅳ. Steering axle 36
1. General specifications 36
2. Trouble diagnoses corrections 36
3. Steering axle 38
4. Kingpin and steering spindle. 38
5. Wheel bearing adjustment 38
Ⅴ. Steering system 39
1. Data 39
2.Trouble diagnoses 39
3. Summarize 40
4. Install steering system 42
Ⅵ. Brake system 43
1.Trouble and diagnoses and corrections 43
2. Summary 44
Ⅶ.Hydraulic system 48
1. Data 48
2. Trouble diagnoses and corrections 50
3. Main pump 52
4. Control valve 55
5. Hydraulic piping 57

https://truckmanualshub.com/

Ⅷ.Lifting system ····· 59
1. Assemble debugging data ····· 59
2. Trouble diagnoses and corrections ····· 60
3. Summary ····· 63
4. Removal and adjustment ····· 69
5. Disassembly and installation of lifting jack ····· 73
6. Disassembly and installation of tilting cylinder ····· 74
7. Noticing proceeding of debugging ····· 75
Ⅸ.Electrical system ····· 77

HANGCHA

Ⅰ. Power System

1. Engine for Forklift

Engine / Parameter	Gasoline	
	K21(Japan)	**K25(Japan)**
Rated output kW	37	44
Rated rotate speed r/min	2300	2500
Max. torque N·m / Speed r/min	142/1600	179/1600
Service weight kg	158	161
Forklift truck model	CPQ10/15/18N- RW21 CPQD10/15/18N- RW21	CPQ20/25/30/35N -RW22 CPQD20/25/30/35N -RW22 CPQD20/25/30/35N - RW22A CPQD20/25/30/35N- RW22B

Engine / Parameter	Diesel	
	C240PKJ-20	C240PKJ-30
Rated output kW	35	35
Rated rotate speed r/min	2500	2500
Max. torque N·m / Speed r/min	139/1800	139/1800
Service weight kg	252	252
Forklift truck model	CPC10/15/18N -RW9 CPCD10/15/18N -RW9 CPC20/25/30/35N -RW9 CPCD20/25/30/35N-RW9 CPC20/25/30/35N-RW9B CPCD20/25/30/35N-RW9B	CPC10/15/18N-RW10 CPCD10/15/18N-RW10 CPC20/25/30/35N-RW10 CPCD20/25/30/35N-RW10 CPC20/25/30/35N-RW10B CPCD20/25/30/355N-RW10B

Engine / Parameter	Gasoline	LPG single fuel	Diesel
	BY491GP（Baiyang）	IMPCO GM3.0L	A498BT1-1
Rated output kW	38	50	36.8
Rated rotate speed r/min	2600	2500	2400
Max. torque N·m / Speed r/min	161/1800-2200	189 /1600	186/1600～1800
Forklift truck model	CPQ(D)10/15/18N-RW7 CPQ(D)20/25/30N-RW7	CPQD20/25N-RW26-Y CPQD30/35N-RW26-Y	CPCD20/25N-RW27 CPCD30/35N-RW27

https://truckmanualshub.com/

HANGCHA

Engine / Parameter	Diesel	Diesel (YANMAR)	
	TD27AA（NiSSAN）	4TNE92-HRJ	4TNE98-BQFLC
Rated output kW	38.5	32.8KW	44.3KW
Rated rotate speed r/min	2300	2450	2300
Max. torque N·m / Speed r/min	160/2300	149.4 / 1600	206 /1700
Service weight kg	243	194	194
Forklift truck model	CPCD20/25N -RW15A CPCD30/35N -RW15A	CPCD10/15/18N-RW32 CPCD20/25N-RW32 CPCD30/35N-RW32	CPCD20/25N-RW33 CPCD20/25N-RW33B CPCD20/25N-RW33M CPCD30/35N-RW33 CPCD30/35N-RW33B CPCD30/35N-RW33M

Specifications, structure and maintenance methods for engine see ENGINE MAINTENANCE MANUAL.
Specifications, structure and maintenance methods for model TD27AA engine see 《KEY COMPONENTS IMPORTED FROM NISSAN SERVICE MANUAL》.

Check value of end gas after maintaining engine, and the value must be according to following figure:

Engine power (kW)	CO (g/kW•h)	HC (g/kW•h)	NO_2 (g/kW•h)	PT(particle) (g/kW•h)
18≦P<37	5.5	1.5	8	0.8
37≦P<75	5	1.3	7	0.4

HANGCHA

2. NISSAN K21、K25 gasoline

2.1 Specification

Specification				Gasoline	
Model				K21	K25
Type				Water cooled, four cycle, in-line overhead valve type	
Cylinder: No. —stroke mm				4 — 89	4 — 89
Displacement L				1.982	2.472
Direction of rotation				Clockwise cooling fan	
Firing order				1-3-4-2	
Valve clearance mm		Intake(Hot)		0.38	
		Exhaust(Hot)		0.38	
Cooling System				Water-cooled, forced circulation	
Lubrication System				Forced Lubrication	
Main component	Carburetor model			210030-41	210030-42
	Fuel pump			Film-type	
	Air clear			Paper element	
	Oil pump			Gear type	
	Oil filter			Paper element	
	Water pump			Centrifugal	
	Thermostat			Wax-pellet type	
	Standard clearance of switchboard			0．35-0．45	
	Spark plug	Type		FR2A-D	
		Plug gap(mm)		0.8～0.9	
	Generator	Type		A7T03371	
		Voltage V		12	
		current A		35	
	Starter	Type		M000T65381 (Planetary gear type)	
		Voltage V		12	
		Output power kW		1.2	
	Governor	Type		Pneumatic	
		Speed control system		By controlling mix. tare amount	
		Operation of control mechanizing		By suction negative pressure	
		Max. Engine speed under no-laden		3600 r/min	
		Max. Engine speed under laden		3000 r/min	
	Battery	Type		/	
		Capacity V-A·h		12-60	
		Full charge specific gravity at 20^0C		1.28	
Reference data	Engine oil capacity L			3.7	
	Coolant volume L			3.5	

https://truckmanualshub.com/

2.2K21/K25 Maintenance

2.2.1 Retighten cylinder head bolts

When the engine is cold, retighten should be made in the sequence shown.

·T: 68.6 N·m

·In two steps.

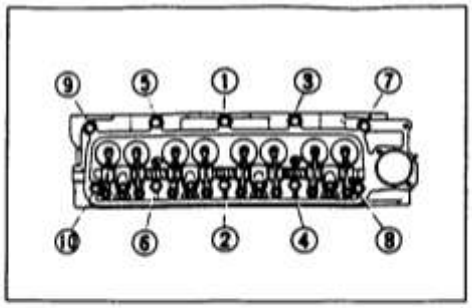

2.2.2 Adjusting intake and exhaust valve clearance

1） Start engines and warm it up sufficiently.
Then turn off engine.

2） Remove valve rocker cover.

3） Rotate crankshaft.

Set No.1 cylinder in top dead center on its compression stroke and then adjust valve clearance.

① ② ③ ⑤

Set NO.4 cylinder in top dead center on its compression stroke, and adjust valve clearance.

④ ⑥ ⑦ ⑧

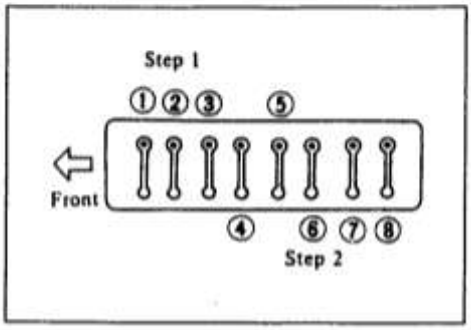

Valve clearance (Hot)

Intake & exhaust: 0.38mm

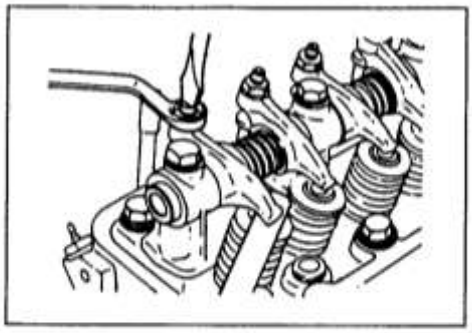

2.2.3. Checking and Adjusting Fan Belt for Tension

1） Visually inspect for cracks, fraying, wear or lubricity.
The belt should not touch the bottom of the pulley groove.

2） Check belt deflection by pushing midway between pulleys.
Fan belt deflection:11mm～13mm
Pushing force:：98N

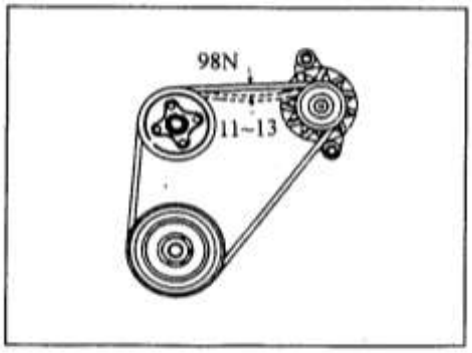

2.2.4. Changing engine oil and oil filter

1) Start engine and warm up engine sufficiently, then stop engine.

2) Remove oil filler cap and oil pan drain plug, and allow oil to drain.

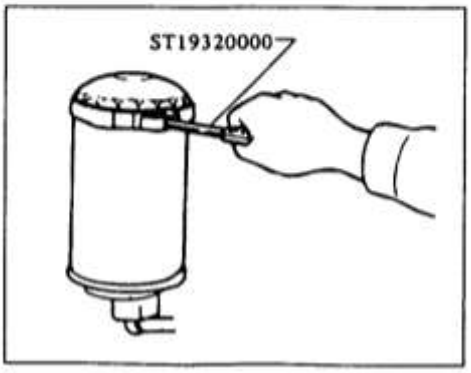

WARNING:

Be careful not to burn yourself, as the engine oil may be hot.

• Milky oil indicates the presence of cooling water and finds the cause, takes corrective measure.

• Oil with extremely low viscosity indicates dilution with gasoline.

https://truckmanualshub.com/

3) Clean and install oil pan drain plug with washer.
Oil pan drain plug: 29N·m～39N·m
4) Using tool remove oil filter.
5) Wipe oil filter mounting surface with a clean rag.
6) Smear a little engine oil on rubber gasket of new oil filter.
7) Install new oil filter. Hand-tighten ONLY.
Don't use a wrench to tighten the filter.
8) Refill engine with new recommended engine oil, referring to Recommended Lubricants.
Check oil level with dipstick.
Oil capacity: 3.6 L。
9) Start engine, check area around drain plug and oil filter for any sign of oil leakage.
If any Leakage is evident, these parts have not been properly installed.
10) Warm up engine sufficiently.
Then stop engine and wait a few minutes. Check oil level. If necessary, add engine oil.
When checking oil level, park the forklift on a level surface.

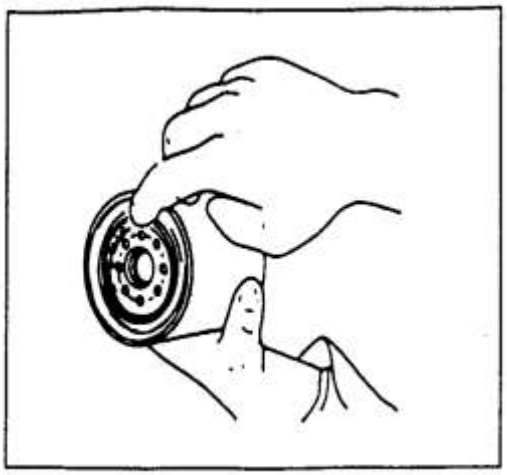

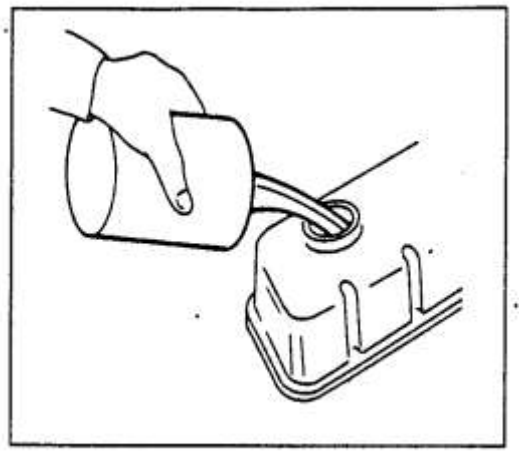

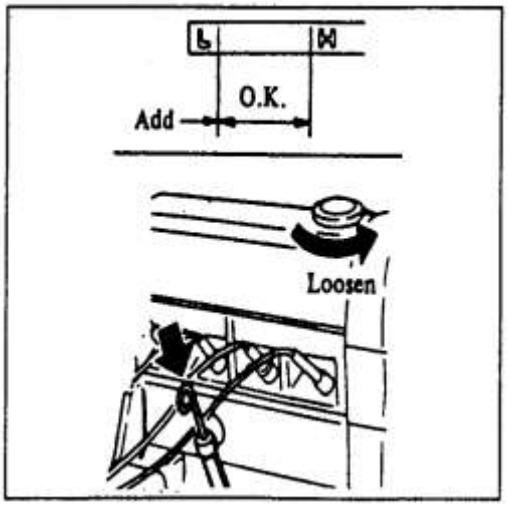

2.2.5. Changing Engine Coolant

⚠ WARNING:

To avoid the danger of being scalded, never attempt to change the coolant when the engine is hot. When using anti-freeze coolant, mix the anti-freeze coolant with water.

2.2.6. Cleaning Radiator Outside

Clean outside of radiator with dry compressed air.

2.2.7. Checking cooling System, Hoses and Connections.

Check hoses and fittings for Lose connections or deterioration.
Retighten or replace if necessary.

https://truckmanualshub.com/

2.2.8. Checking Engine Compression Pressure

1） Warm up engine sufficiently, then stop engine.

2） Remove all spark plugs.

3） Properly attach a compression tester to spark plug hole in cylinder being tested.

4） Set carburetor throttle valve at fully open position.

5） Crank engine and red gauge indication.

·Run engine at about 250r/min

·Engine compression measurement should be made as quickly as possible.

Compression pressure:

	K21	K25
Standard	1.23kPa	1.27kPa

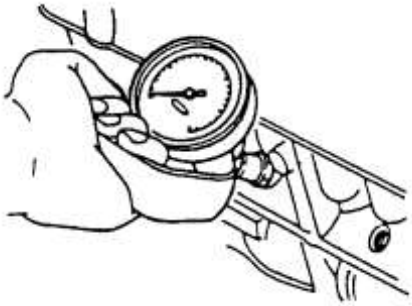

6).Cylinder compression in cylinders should not be less than 80% of the highest reading.

If cylinder compression in one or more cylinders is low, pour a small quantity of engine oil into cylinders through the spark plug holes and retest compression.

·If adding oil helps the compression pressure, piston rings may be worn or damaged.

·If pressure stays low, valve may be sticking or seating improperly.

·If cylinder compression in any two adjacent cylinders is low, and if adding oil does not help the compression, there is leakage pass on the gasket surface.

Oil and water in combustion chambers can result from this problem.

2.2.9. Cleaning or Replacing Air Cleaning Filter (Dry paper type)

It is necessary to clean the element or replace it at the recommended interval, and more frequent maintenance should do in other dirty operating conditions.

2.2.10. Cleaning or Replacing Fuel Stained Element

The fuel strainer element should be checked, cleaned or replaced periodically.

2.2.11. Checking Fuel lines

Check fuel lines for proper attachment, leaks, cracks, damage, loose connections, chaffing and deterioration. If necessary, replace any damaged or defective parts.

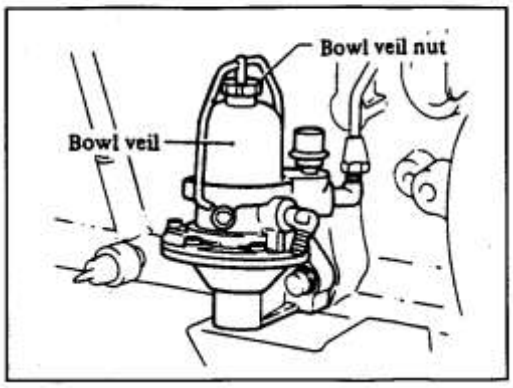

2.2.12 Checking carburetor

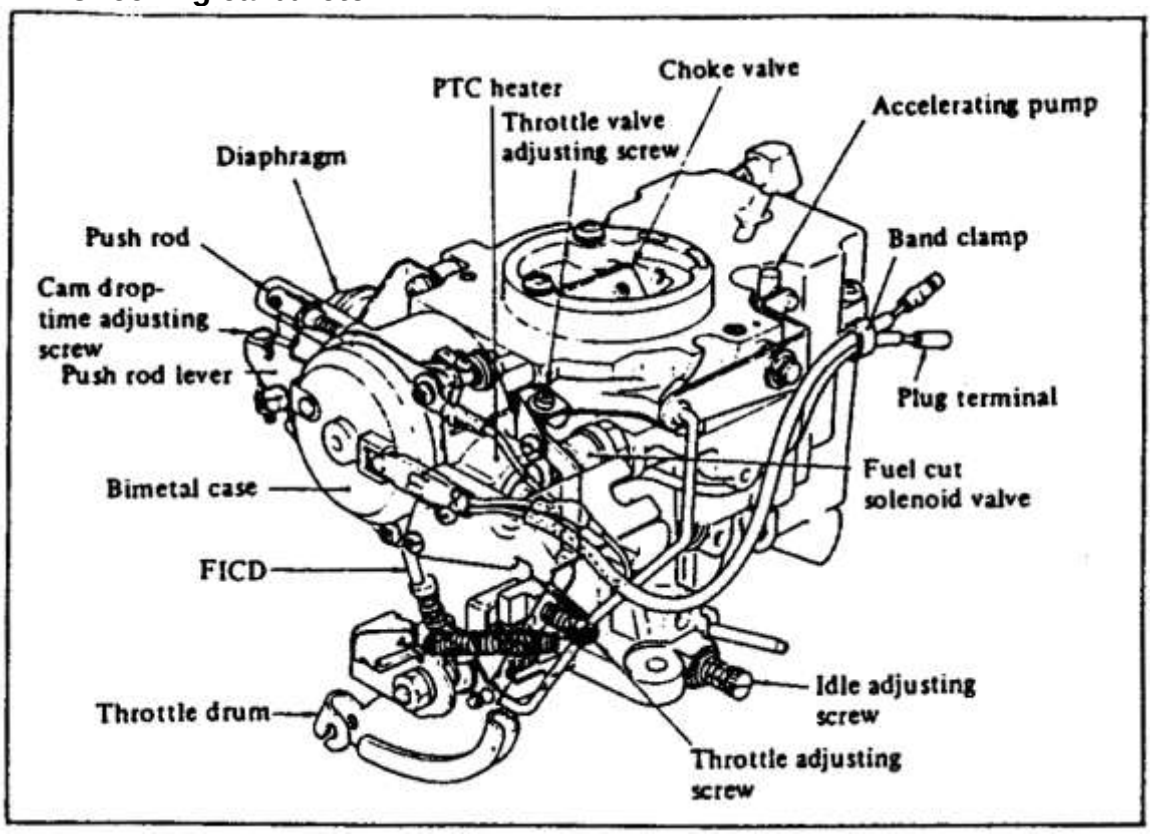

1） Checking Linkage And Valve

·Remove air horn. Visual check dirt and linkage of interior carburetor, visual check wear or damage of connecting parts..

·Check throttle valve shaft for wear by moving it by hand. It must not moved(no free play).

·Check operation (opening and closing) of throttle valve and choke valve.

Maintenance

·If carburetor is excessively soiled, disassemble and clean.

·If linkage is excessively worn, bent or damaged, replace with new one.

·If throttle valve shaft is excessively bent, replace with new one.

2） Checking Auto-choke Mechanism

·Visually check auto-choke mechanism for deformed linkage, etc.

·Before starting engine, depress accelerator pedal one time.

·After starting engine, ensure engine speed decreases to specified idle rpm.

	Choke valve	Throttle valve	Cam lever and fast idle cam
Ambient temperature 20^0C	Fully closed	Fast idle position	Differs with ambient temperature. During engine starts: 1st or 2nd ratchet position afte1 warm-up: 3rd or 4thrachet position
After warm-up	Fully open	Idle position	Clearance exists

https://truckmanualshub.com/

3） Checking Bimetal

·Start engine. Touch bimetal case to ensure it is hot (Simple check method)

·Using circuit tester, check bimetal for continuity. Continuity must exist.

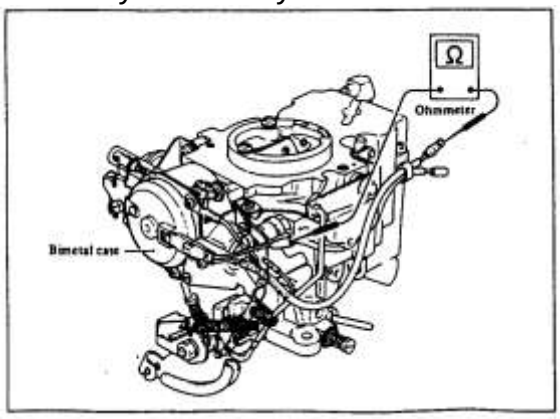

4） Checking thermo wax

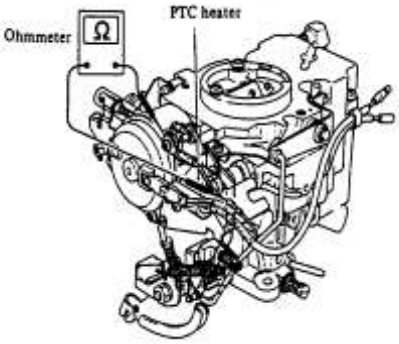

Ensure PTC heater becomes hot when engine is started.(Simple check method)

- Using circuit tester check TPC for continuity must exist.

5） Choke Valve

Inspection: Ensure clearance does not exist between

fast idle cam and cam lever when choke valve is closed by hand.

Adjustment: Adjust cam drop-time adjusting screw until choke valve is close completely.

Cam drop-time adjusting screw is properly adjusted at the factory before delivery. Do not attempt to adjust it in the field unless necessary.

2.2.13 Check and replace spark plug.

1） Disconnect spark plug wire at boot.

2） Remove spark plugs with spark plug wrench.

3） Clean plugs in sand blast cleaner.

4） Inspect insulator for cracks or chips, gasket for damage or deterioration and electrode for wear or burning.

If the are excessively worn, replace with new spark plug.

5） Check spark plug gap.

Spark plug type: FR2A-D

T: 20 N·m～29N·m

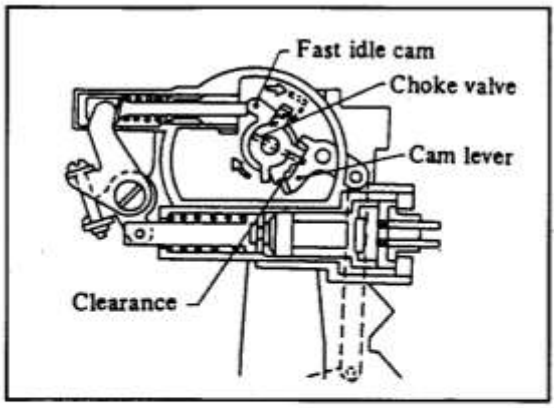

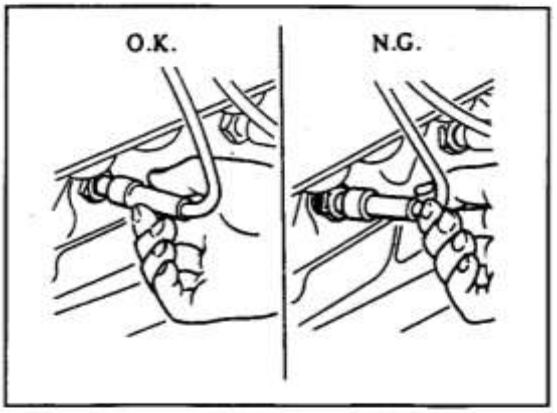

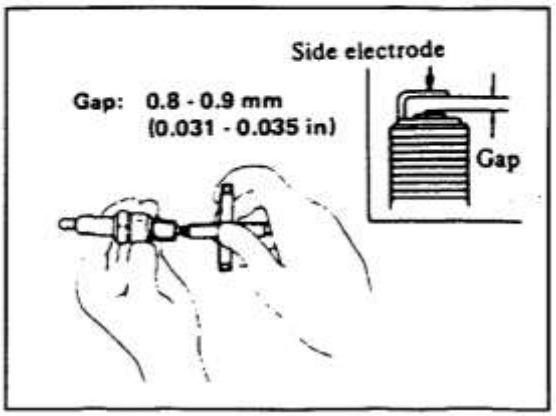

https://truckmanualshub.com/

2.2.14 Checking Distributor

1） Inspection Ignition coil

Use circuit tester, measure primary coil resistance between terminals ①and ② ,and measure secondary coil resistance between terminals ①or② and secondary terminal.

Primary coil resistance:0.9Ω～1.2 Ω

Secondary coil resistance:20kΩ～29 kΩ

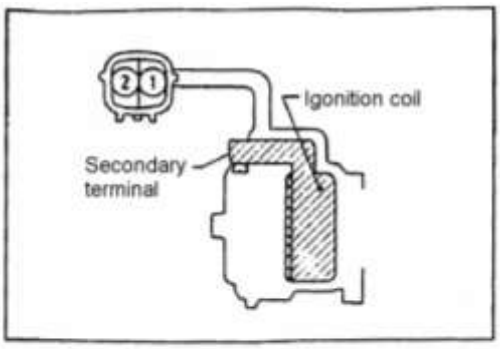

2） Pickup assembly

·Using circuit tester, measure pickup coil resistance.

Specifications:

420Ω～540Ω

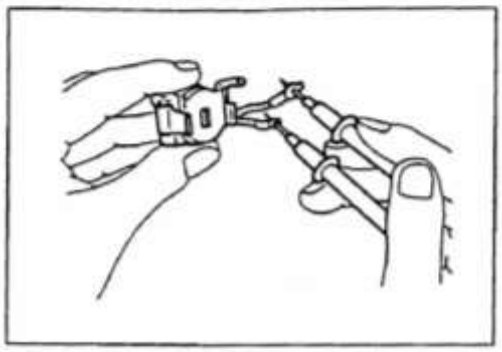

·Ensure tester pointer deflects when moving standard screwdriver's blade near pickup coil's iron core.

3） Carbon contacts

If spherical surfaces of all contacts are worn, replace with new cap assembly.

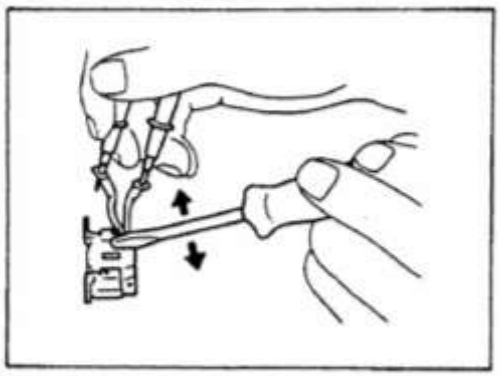

4） Cap rotor

Check for cracks or damage

5） Signal rotor

Check for bends or damage.

6） Vacuum control

Using vacuum pump, apply vacuum to diaphragm. Linkage must be attracted.

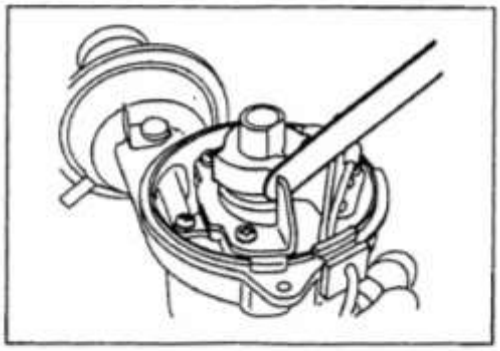

7） Inspection after reassemble

Measure air gaps between signal rotor and pickup assembly.

Specifications: 0.35mm～0.45mm

8） Cleaning Distributor Inside

Blow dust off inside of distributor with dry compressed air.

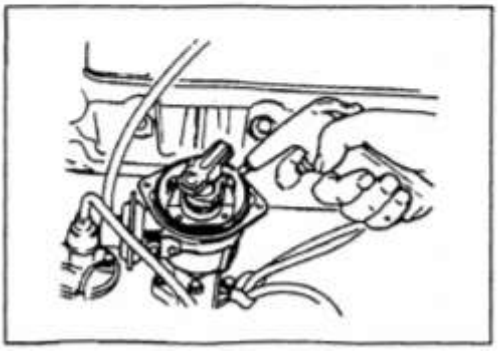

HANGCHA

2.2.15 Checking and adjusting idle-rpm and ignition timing

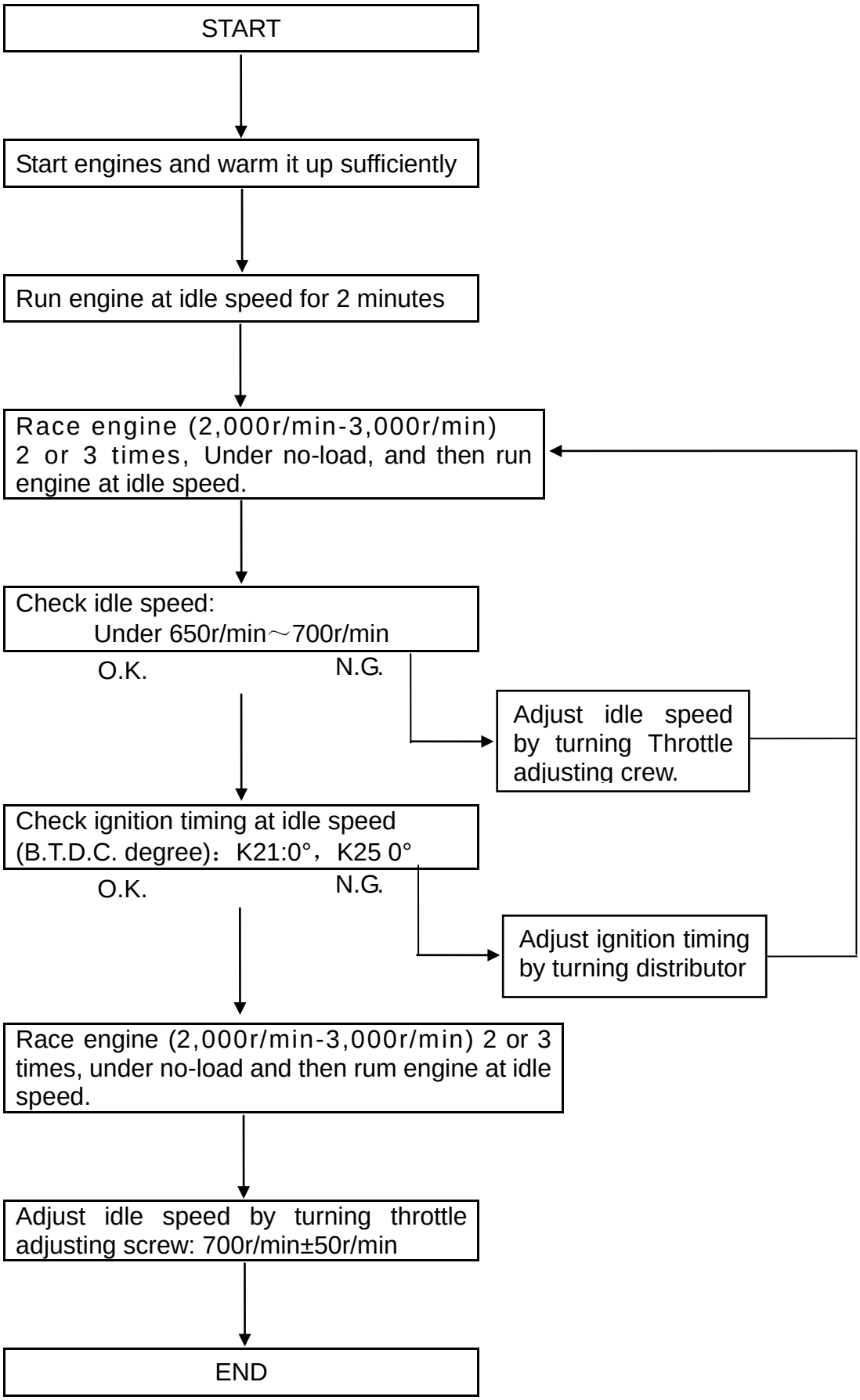

https://truckmanualshub.com/

CAUTION:

1) Don't attempt to screw the idle adjusting screw down completely.

Doing so could cause damage to tip, which in turn will tend to cause malfunctions.

2) Make sure that the following parts are in good order.

·Ignition system

·Engine oil and coolant levels

·Valve clearance

·Float level at idling speed

Set shift lever in "Neutral" position.

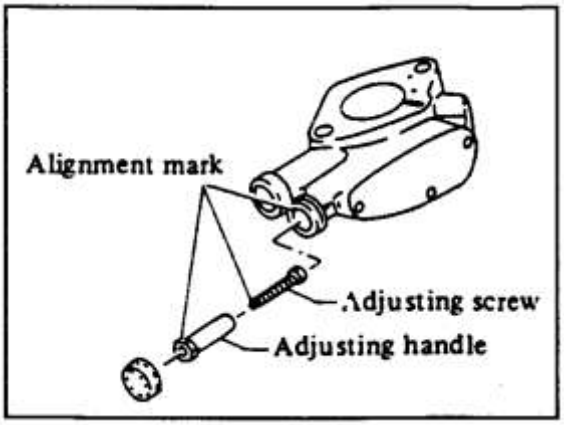

2.2.16 Adjusting Maximum Engine Speed Under No-Load

1） Shift F-R control lever into neutral.

2） Run engine and set carburetor throttle valve at fully open position Check engine speed.

Maximum engine speed under no-load:3600 r/min

3） If engine speed is not within the specified range, adjust it by turning governor-adjusting handle.

HANGCHA

3. C240 PKJ-30 Diesel

3.1 Specifications

Item \ Model			C240 PKJ(ISUZU)
Type			Water-cooled, four cycle, in-line overhead valve, swirl chamber type
No. Of cyclingdrs-bore×stroke			4-86×102mm
Piston displacement L			2.369
Compression ratio			20
Rated power/rotate speed			35 kW/2500 r/min
Max. Torque/rotate speed			139 N·m/1800 r/min
Min. Rotate speed under no load			700 rpm
Min. Fuel consumption ratio			0.39 g /W·h
Direction of rotation			Clockwise from cooling fan end
Firing order			1-3-4-2
Cooling system			Water-cooled
Lubrication system			Forced lubrication
Main component	Injection nozzles		Bosch throttle type
	Air cleaner		Paper element
	Oil pump		Cycloid type
	Water pump		Swirl type
	Thermostat		Wax-pellet type
	Generator	Voltage/Current	12V/35A
		Generating type	AC, silicon rectifier
	starter	Voltage	12V
		Output power	2kW
	Oil volume		6.1L API CD or better
	Valve clearance		0.45mm
	Nozzle inj. pressure		120kg/cm^2
	Injection timing		BTDC9°

3.2C240 Diesel Maintenance

3.2.1 Retighten Cylinder Head Bolts

When engine is cold, retighten should be made in the sequence shown twice

·T: 79 N·m～97 N·m

·Two steps：First 55 N·m～68 N·m

Second 79 N·m～97 N·m

3.2.2 Adjusting Intake and Exhaust Valve Clearance

Making as 2.2.2

Valve clearance (Hot): Intake & exhaust: 0.45 mm

3.2.3 Checking And Adjusting Fan Belt

Fan belt deflection: 8 mm～12 mm

Pushing force: 98N

3.2.4 Changing Engine Oil and Oil Filter

Refer to 2.2.4

Oil Capacity: 6.1 L

3.2.5 Changing engine coolant

See. 2.2.5

3.2.6 Cleaning radiator outside

See 2.2.6

3.2.7 Checking cooling system, hoses and connections

See 2.2.7

3.2.8 Cleaning or replacing air cleaning filter

See 2.2.9

3.2.9 Remove water from the fuel

Water should be drain when the bobber gets to the alert draining line

1） Loosen the drain plug at the lower top of the fuel filter;

2） Drain the fuel in the fuel body together with the mixed water；

3） Be sure to tighten the drain plug on completion of draining.

3.2.10 Fuel system air bleeding

·The entry of air into the fuel system will cause hard engine starting or engine mal function.

·When once the servicing such as emptying the fuel tank, air bleeding for the water segregator, or the fuel filter element change etc. Is done, be sure to conductor air bleeding.

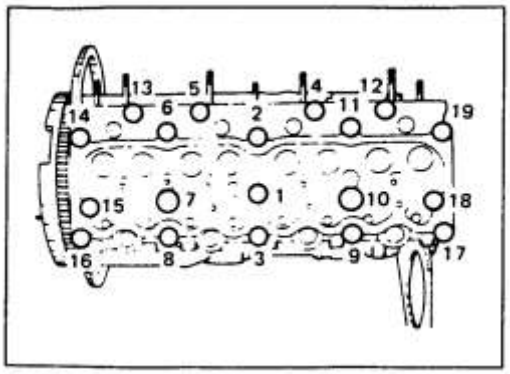

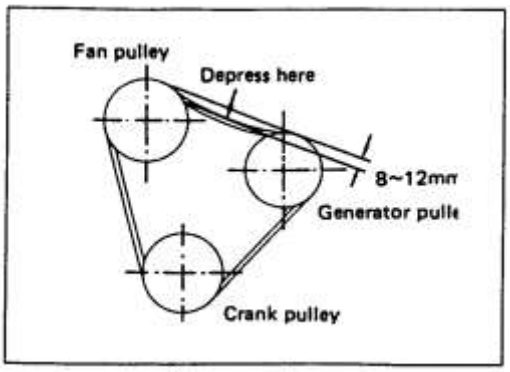

https://truckmanualshub.com/

Bleeding procedure:

1） Loosen the bleeding screws on the fuel injection pump.

2） Loosen the feed pump knob.

3） Depressing the pump knob until no bubbles are visible in the flowing fuel from the loosened bleeding screws.

4） Tightening two bleeding screws and feed pump knob.

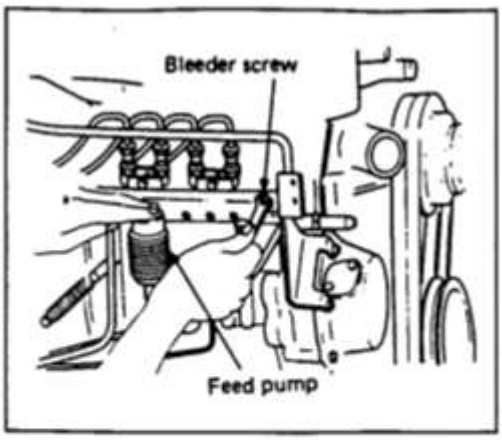

3.2.11 Fuel filter element change

1） Loosen the fuel filter by hand or using wrench counterclockwise. Discard the fuel filter element.

2） Wipe oil filter mounting surface with a clean rag.

3） Smear a little engine oil on rubber gasket of new oil filter.

4） Fill a little fuel into the fuel filter, this helps the air bleeding.

5） Turn in the new fuel filter until the filter gasket comes into contact with its sealed face.

6） Use a filter wrench to turn the fuel filter by additional 2/3 of a turn.

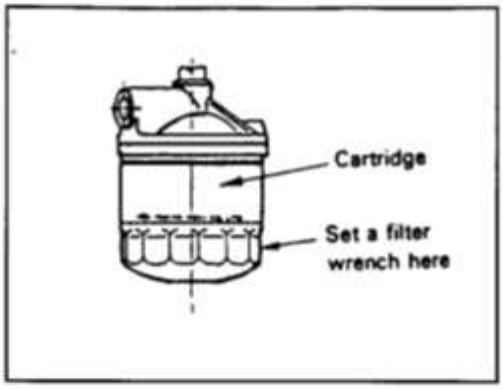

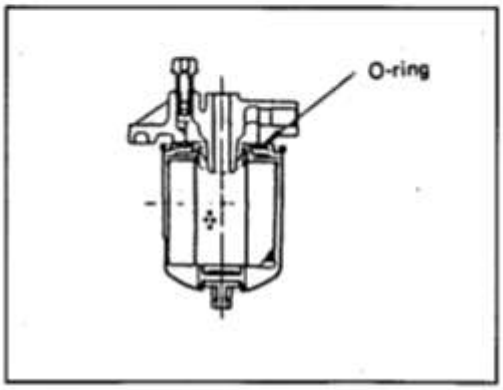

4. TD27AA diesel

4.1 The maintenance of TD27AA diesel

TD27AA diesel requests a high quality for the maintenance of Air cleaner and the fuel filter and the filtering of diesel.

4.4.1 Cleaning and changing the air cleaner

Dry paper model

The filter must be cleaned and changed in the maintenance schedule, if the motor is working in the dusty environment, the air cleaner should be cleaned and changed in time.

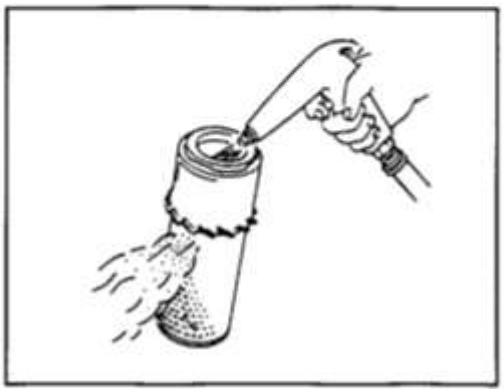

https://truckmanualshub.com/

4.4.2 Checking the oil filter

Checking and changing the oil filter

1. Remove the censor's head of oil filter.
2. Loosen the valve to drain the fuel.
3. Remove the sensor of oil filter or draining valve.
4. Remove the oil filter.
5. Connect the censor of oil filter to the new oil filter.
6. Fix the new oil filter.

You can only tighten the oil filter by hand.

7. Connect the censor's head.
8. Remove the air from the fuel system.

Fuel removing system, see 4.1.4

Draining water

1. The water should be drained in schedule, and it should be drained even the buzzer alarm.
2. Remove air from the fuel system.
3. There must have a container under the oil filter.

4.1.3 Filtering the diesel oil

The oil should be filtered strictly before they are added into the oil container.

4.1.4 Remove the air of fuel

The air should be removed absolutely .To avoid splash of oil, the seat of the motor and pump should be wrapped by a piece of cloth.

If the motor can't work after air removing, loosen the eject pipe, shake the star-up motor until the fuel overflows from the eject pipe. Tighten the nut of the eject pipe.

If the motor operates unstably, run twice or third times in high speed.

Without air vent screw

Method A:

Move the priming pump up and down until you can feel the sudden clear adding pressure.

Method B:

1. Loosen injection pump bleeder screw/or disconnect return hose and priming.
2. Make sure that fuel overflows at bleeder screw/tube end, then tighten it/connect hose.

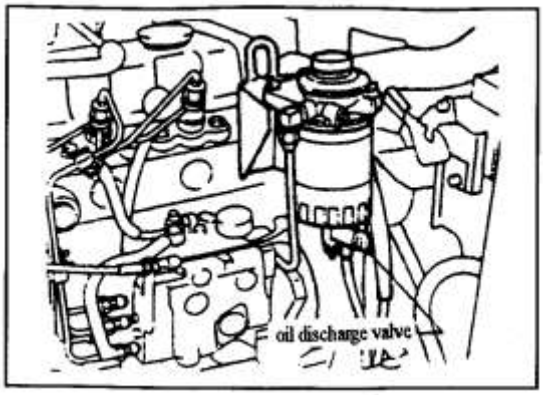

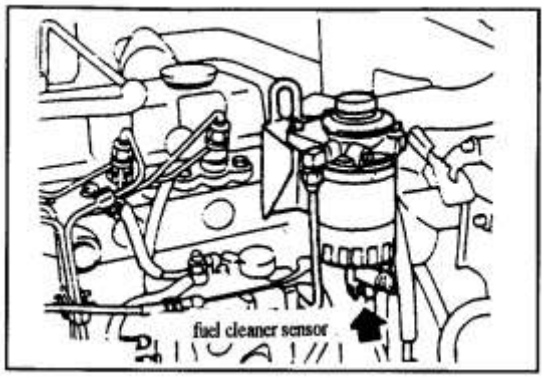

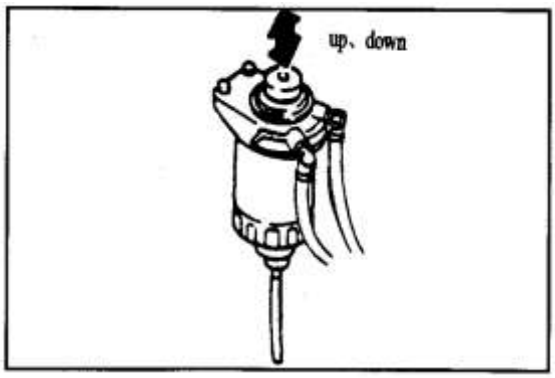

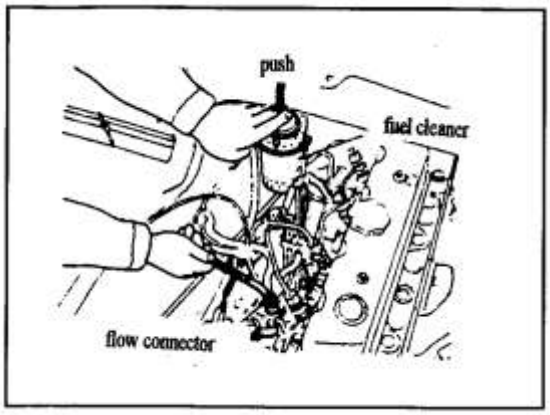

https://truckmanualshub.com/

With air vent screw

Method A:

1. Loosen the air vent screw
2. Move the priming pump up and down until no further air bleed comes out of the air vent screw.
3. Tighten the air vent screw.
4. Move the priming pump up and down until there is suddenly more resistance in the movement.

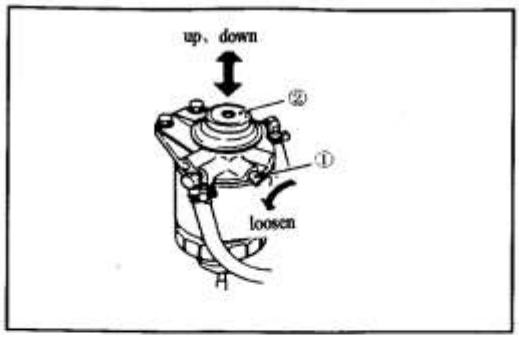

Method B:

1. Loosen the air vent screw.
2. Move the priming pump up and down until no further air bleed comes out of the air vent screw.
3. Tighten the air vent screw.
4. Loosen injection pump bleeder screw/or disconnect return hose and priming.
5. Make sure that fuel overflows at bleeder screw/tube end, then tighten it/connect hose.

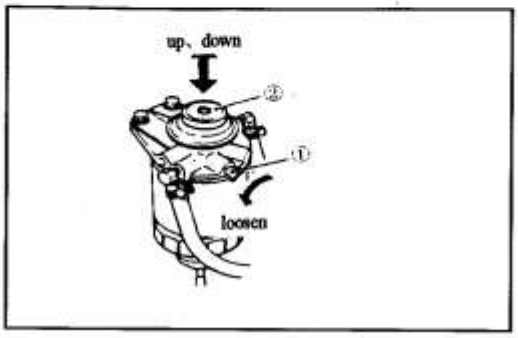

Checking Priming Pump

Before checking priming pump, make sure that fuel filter is filled with fuel.

1. Disconnect fuel return hose. Place a suitable container beneath hose end.
2. Pump priming pump and check that the fuel .Overflows from the hose end. If not, replace priming pump.

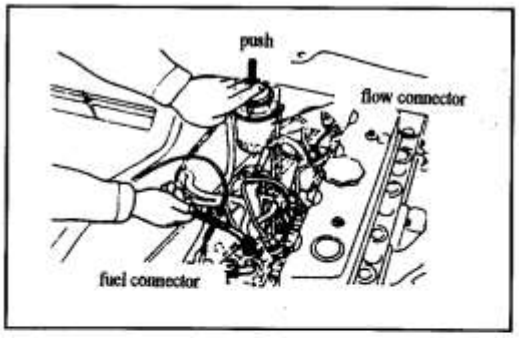

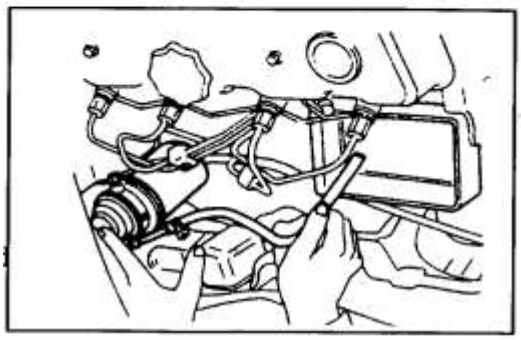

https://truckmanualshub.com/

Ⅱ. Hydrodynamic transmission,torque converter

Hydrodynamic transmission,torque converter for CPCD20/25/30/35N-RW15A,CPQD20/25/30/35N-RW22A see《*import NISSAN MOTOR CO.,LTD SERVICE MANUAL FOR THREE MAIN COMPONENT*》.

CPCD20/25/30/35N-RW1B, CPCD20/25/30/35N-RW6B, CPCD20/25/30/35N-RW9B, CPCD20/25/30/35N-RW13B、CPQD20/25/30/35N-RW22B, CPCD20/25/30/35N-RW33B see *import OKAMURA(Japan) MOTOR CO.,LTD SERVICE MANUAL FOR TRANSMISSION*》.

CPCD20/25/30/35N-RWE33M see《2~3.5 TON TRANSMISSION AND DRIVE AXLE》.

The others see as follows:

1. Summary

YQX18, YQX25, YQX30 model hydrodynamic transmission gear box consists of hydrodynamic torque converter and power shift which has two shifts(forward/reverse) transmission box.(Fig 2-3).

It has virtues as follows:

① Hydrodynamic transmission gear-box has automatic adaptability for hydrodynamic transmission output, it can change it’s output torque and rotation speed according to the external load;

② It can absorb and remove the impact liberation that the engine and external load brings to the transmission system;

③ Inching valve, cushion valvecan make the truck to move a little when the engine in either low speed or high speed, make the operation easy、convenient, steady starting, reduce the labor intension of operators.

https://truckmanualshub.com/

HANGCHA

2. Data

Models		YQX18	YQX25	YQX30
Hydrodynamic torque converter	Type	Single stage、Two-phrase、Three-element		
	Model	YJH265		
	Max. torque converter ratio K_0	3		
	Diameter of circulating chamber D(mm)	265		
	Max efficiency η max	0.79		
Transmission ratio	Forwards	19.2065	15.3652	17.4972
	Backwards	19.2065	15.3652	17.4972
Hydrodynamic power clutch	Clutch disc diameter(out)× diameter(in)× thickness	125mm× 81mm× 2.7mm		
	Clutch disc area	71cm^2		
	Adjusted pressure	1.1 MPa ~1.4MPa		
Reduction transmission	Reduction gear	Helical bevel gear		
	Reduction ratio	2.5	2	2.1
Differential	Reduction gear	Straight bevel gear		
	Differential gear	Straight bevel gear		
	Reduction ratio	5.7	5.7	6.182
Mass (kg)		160	165	185
Total gear ratio (F/R) i		19.2065	15.3652	17.4972
Oil capability (L)		7		
Using oil type		6# Hydrodynamic power transmission oil		
overall dimension（length×width×height）mm× mm× mm		740×470×450		830×470×450

3. Working principles

3.1 Hydrodynamic transmission gear-box power transmit

Gear-box transmission sketch, see fig. 2-1, torque converter is driven by engine through a elastic plate 1, it rotates the impeller wheel 4, in this way, the fluid flows at high speed into the turbine wheel 2 and rotates the turbine wheel. Stator wheel make the torque converter effective, through turbine shaft 5, it transmit the torque to input shaft assembly 11. When at forward gear ratio, reverse clutch at idle motion, transmit order is that 11→7→20→19→12→13, drives the differential 15 to output the torque. When at reverse gear ration, onward clutch at idle motion, transmit order is that 11→10→18→21→20→19→17→12→13, drives the differential 15 to output the torque. Onward and reverse clutch are controlled by shift control valve. Oil pump 6 is inner-mesh gear pump, it is driven by engine through impeller wheel, oil pump supply the oil for the system, after hydrodynamic torque converter works, the oil flows into the radiator , then into gear-box-lubrication clutch disc、bearings and gears.

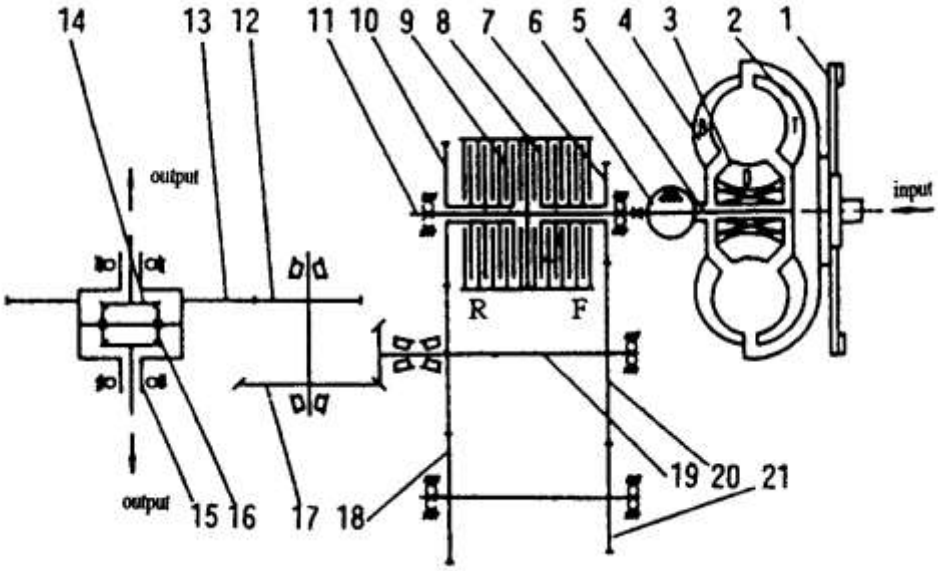

Fig. 2-2 YQX18/25/30 model hydrodynamic transmission gear box sketch

1 elastic plate	2 turbine wheel	3 stator wheel	4 impeller wheel
5 turbine shaft	6 oil pump	7 gear(forward gear ratio)	
8 clutch disc	9 septa	10 gear(reverse gear ratio)	
11 input shaft assembly		12 gear shaft	13 gear ring
14 half-axle gear	15 differential assembly		16 planet gear
17 helical bevel gear		18 idler shaft	19 output shaft
20 output gear	21 idler wheel		

HANGCHA

3.2 hydraulic oil pipe system (see fig 2-2)

After the engine starts, oil-supply pump absorbs the oil from the tank (on the bottom of gear-box) through the oil strainer, the oil flows into the control valve, then separate itself into two parts, the one part for hydrodynamic power clutch, the others for the torque converter.

The oil for hydrodynamic power clutch flows into main-pressure valve (pressure at 1.1MPa ~1.4MPa), then separate itself into two parts, the one part into inching valve and shift-control valve, the others into
overflow valve(pressure at 0.5MPa ~0.7MPa) and supply for the blade wheel of torque converter. The oil, from the torque converter, is cooled when passing through the radiator, then it lubricates the hydrodynamic power clutch, at last, the oil comes back into the tank.

When at idle motion, the oil route, from the shift-control valve to clutch, is closed. At this time , the main-pressure valve is opened, the oil absolutely flows into the torque converter through the overflow valve, when the shift control valve is at the position of forward gear ratio or the reverse gear ratio, the oil route, from the slide valve to onward clutch or the reverse clutch, is connected to make the clutch do its work respectively; when the one clutch works, the other clutch's disc and septa are separated, the cooling oil lubricate it and take the heat away; when the inching pedal works through operating the inching valve, some or a majority of oil, from the clutch, comes back into the tank through the inching valve lever, at this time, the oil circle of the torque converter is the same as at the idle motion.

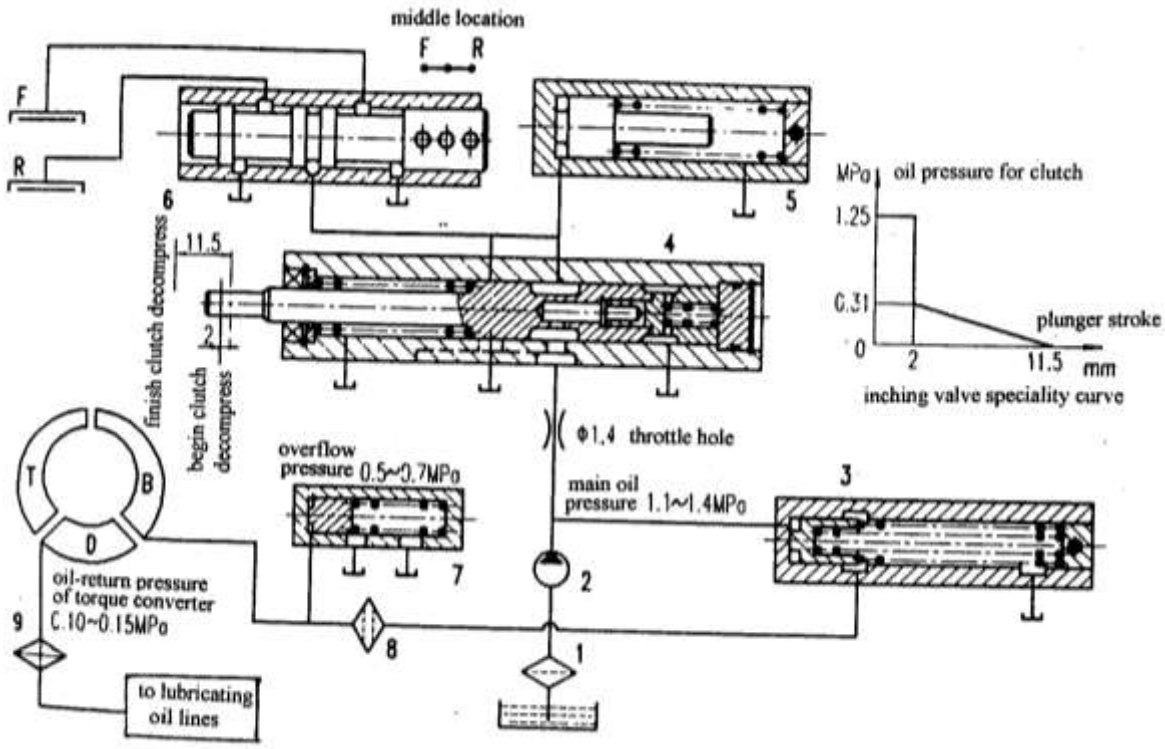

1 oil strainer	2 oil pump	3 main-adjustment-pressure valve	
4 inching valve	5 buffer valve	6 shift-control valve	7 relief valve
8 oil strainer	9 cooling device		

Fig.2-2 oil route for YQX18/25/30 model hydrodynamic power transmission gear box

https://truckmanualshub.com/

4. Structure

4.1 Hydraulic transmission

4.1.1 Structure Introduction

Structure of hydraulic transmission gearbox,see Fig.2-3. There are 3 types of hydraulic transmission gearbox to select: YQX(D)15 type,YQX(D)25 type,YQX(D)30 type. Hydraulic transmission gearbox consists of hydraulic torque converter, gear-box, reduction & differential. Power from engine is converted by hydraulic torque converter 13, and then the power is transmitted from turbine to clutch assembly 6 of gearbox. gearbox consists of clutch assembly 6, Shaft 11,output gear 12, idler Shaft 9, Cover control valve5,Inching valve 14, Charging pump 4 etc.

Reduction is consisted of output shaft 10, spiral bevel gear 16, gear shaft 1 etc., Two ends of gear shaft is supported by tapered roller bearing 2. There equips with adjusting shims to both ends to adjust bevel gear imprint, backlash and bearing clearance. After passing reduction, power from transmission gearbox slows down and generates differential from differential assy. 15, and transmits to wheel through axle shaft gear and half shaft. 8 is transmission gearbox shell body, where installs gear shift, shifting clutch, reduction gear and differential.

Gearbox body plays the same role as tank besides used for installs the input and output shaft, the oil strainer Ⅰ in the bottom of it, filtrate the oil flowing to the oil-supply pump, pipe oil strainer Ⅱ、oil-add cover and oil leveler on the top of the shell-body cover.

4.1.2 Disassembly, assembly sequence

Disassemble hydraulic transmission gearbox as followed:

A）Open oil drain plug, discharge oil out.

B）Take out hydraulic torque converter 13.

C）Disassemble differential assy 15, case and control valve assy 5,oil-supply pump 4, torque converter shell assembly 3,clutch assembly 6, 14 inching valve assembly

D）Open Cover,Bearing 17, take off Shaft,Final Pinion 1, screw bevel gear 16, And decomposition tapered roller bearing 2

E）Remove the support flake 7, the Take out output shaft 10 and shaft out all the parts;

F）Remove other parts, components.

Assembling procedures:

Please assemble with opposite procedures of disassembly.

https://truckmanualshub.com/

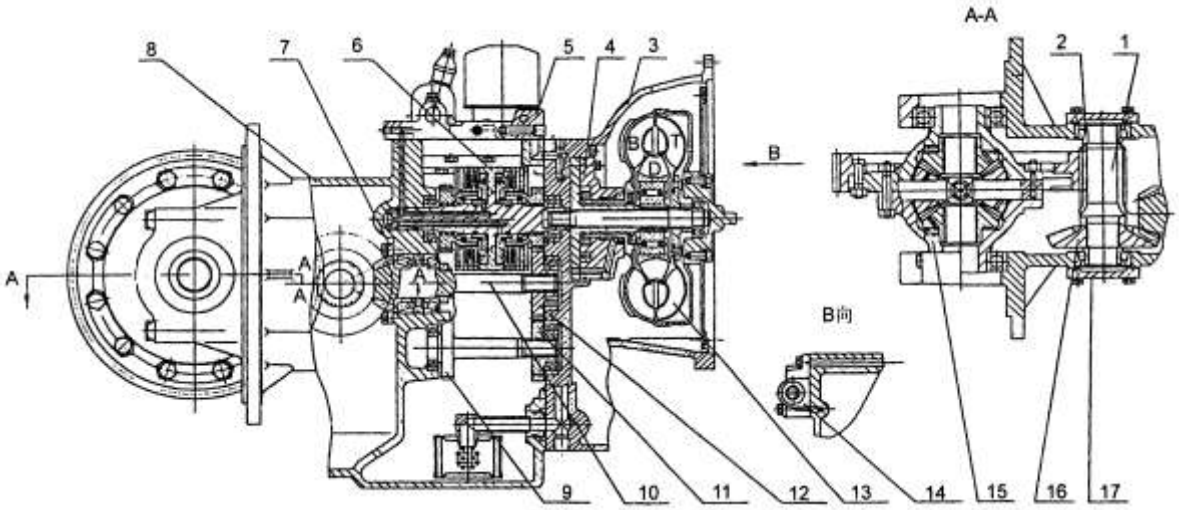

1 Shaft,Final Pinion	2 tapered roller bearing	3.torque converter shell assy
4 oil-supply pump	5 case and control valve assy	6 clutch assy
7 support flake	8 shell body	9 idler shaft
10 output shaft	11 idler wheel	12 output gear
13 hydraulic torque converter	14 inching valve assy	15.differential assy
16 screw bevel gear	17 Cover,Bearing	

Fig 2-3 hydrodynamic transmission gear-box

4.2 Torque converter (see Fig.2-4)

Torque converter Mainly by the impeller wheel、turbine wheel、stator wheel and other components.

Impeller wheel is driven by input shaft, the fluid impacts blades of the turbine wheel along with blades of the impeller wheel by the effect of centrifugal effect (mechanical energy is converted into fluid kinetic energy), transmit the torque to output shaft, fluid, flows out of the turbine, change it's direction by the effect of the stator wheel, so a part of the fluid comes back to the impeller wheel at a definite angle. At this time, there has a conversed-effect torque to drive the stator wheel, so as to make the output torque increased than the input torque, when the rotation speed is increasing and near the input rotation speed, the fluid's flow angle begins to decrease; the torque of the input shaft decreases. At last, the fluid flows into blades of the stator wheel on the conversed direction, make the original conversed torque have a conversed effect, hence, the output torque is less than the input torque, for preventing this to happen, the clutch in the stator can rotate freely when above things happens.

This kind of the converted torque mode can ensure high-efficiency、steady operation.

YJH265 torque converter is welded together,can not break down.

The torque converter in the transmission device connects to the fly wheel of the engine through the elastic plate; it goes with the rotation of the engine. The inner torque converter is full of the oil, driving gears connects to the impeller wheel by using the spline, so as to drive the oil-supply pump, supply oil for the torque converter and hydrodynamic power gear box. The turbine wheel connects to the turbine shaft by using the spline, transmits the power to the gearbox through the turbine shaft.

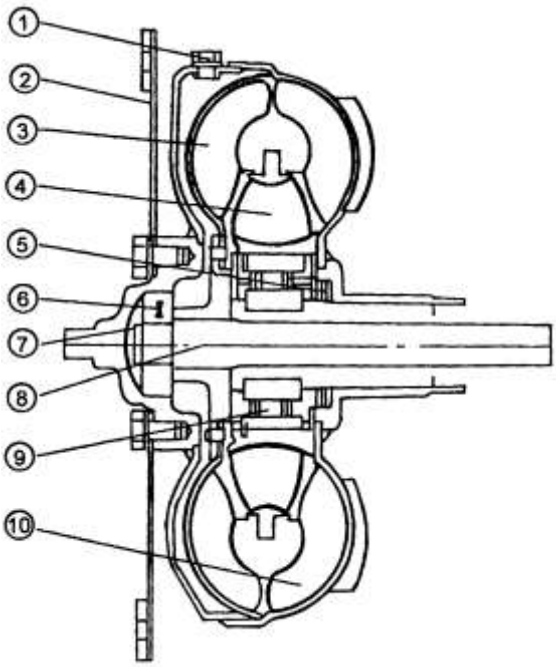

1.drain plug
2.elastic plate
3.turbine wheel
4.stator wheel
5.bearing, thrust ball
6.bearing, ball
7.snap ring
8.turbine shaft
9.one-way clutch
10.impeller wheel

Fig.2-4 Torque converter

4.3 Oil-supply pump (Refer to fig.2-5)

Oil-supply pump is installed on the torque converter body. Driving gear 9 is connected to the impeller wheel, driven by engine, it mesh with the driven gear 11 and supply oil for the torque converter、hydrodynamic gear box.

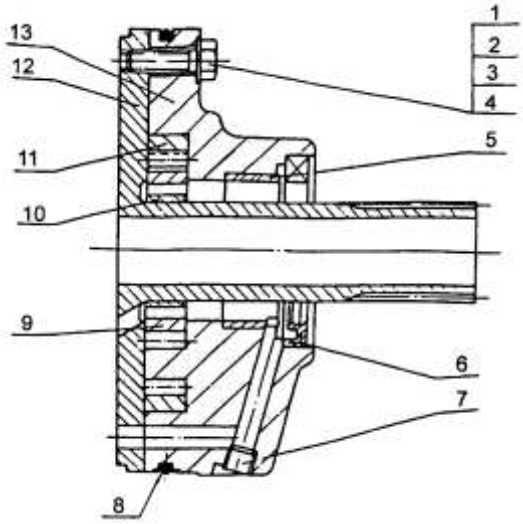

1 straight pin	2 bolt M8×35	3 bolt M8×25	4 ring
5 sleeve	6 oil seal	7 threaded plug	8 o-ring
9 driving gear	10 sleeve	11 driven gear	12 stator seal
13 pump housing			

Fig. 2-5 oil-supply pump

4.4 Inching valve

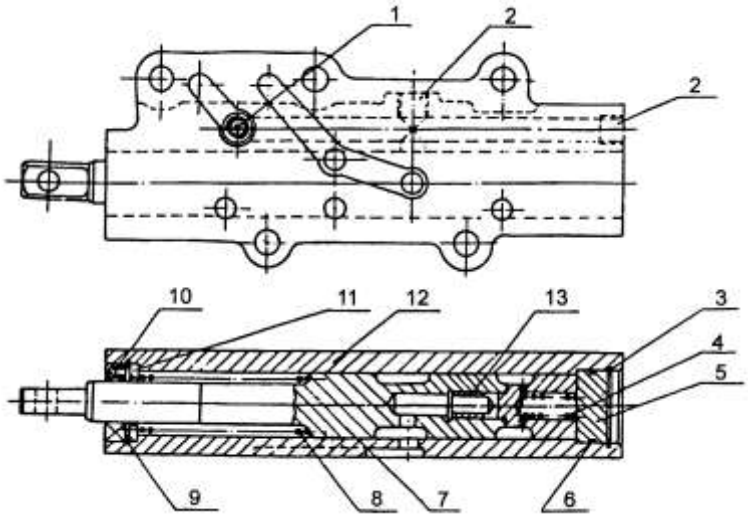

1 threaded plug	2 threaded plug	3 elastic snap for hole	4 spring
5plug6 o-ring	7 inching valve lever	8 spring	9 elastic snap for hole
10 oil seal11 block	12 inching valve body	13 inching-slide valve	

Fig. 2-6 inching valve

Inching valve is installed outside the gear box. Inching valve lever 7 is connected to the inching pedal lever, when put foot down, inching valve lever moves to the right side, so it reduces the oil pressure for clutch, make the truck inching moving by slide the clutch disc.

4.5 Hydrodynamic clutch (Refer to fig.2-7)

4.5.1 Summarizer

Wet and multi-blade hydrodynamic clutch is installed on the input shaft of the hydrodynamic gear box, assign the pressure oil to the forward or reverse clutch through the control valve, so the truck can travel in forward or reverse direction. All the gears in the gear box is the mesh-always gear. Every clutch of the YQX30 model clutch assembly consists of 4 interphase-installed septa 18 、4 disc 19 and a piston 2. Every clutch of the YQX18 model clutch assembly consists of 3 interphase-installed septa 18、3 disc 19 and a papilionaceous plate, a piston 2 (YQX18 model clutch assembly is different from the YQX25/30 clutch only for this) . The ring 17 installed in the outer rounder of the piston, o-ring 3 in the input shaft, for ensuring be airproof when the piston is working. When at idle motion, the piston does not work, the septa separates from the disc. When change over the gear ration, the pressure oil makes the piston、septa and disc impacted, transmit the power from the torque converter to the forward-gear-ratio gear or the reverse gear 6 depending on friction.

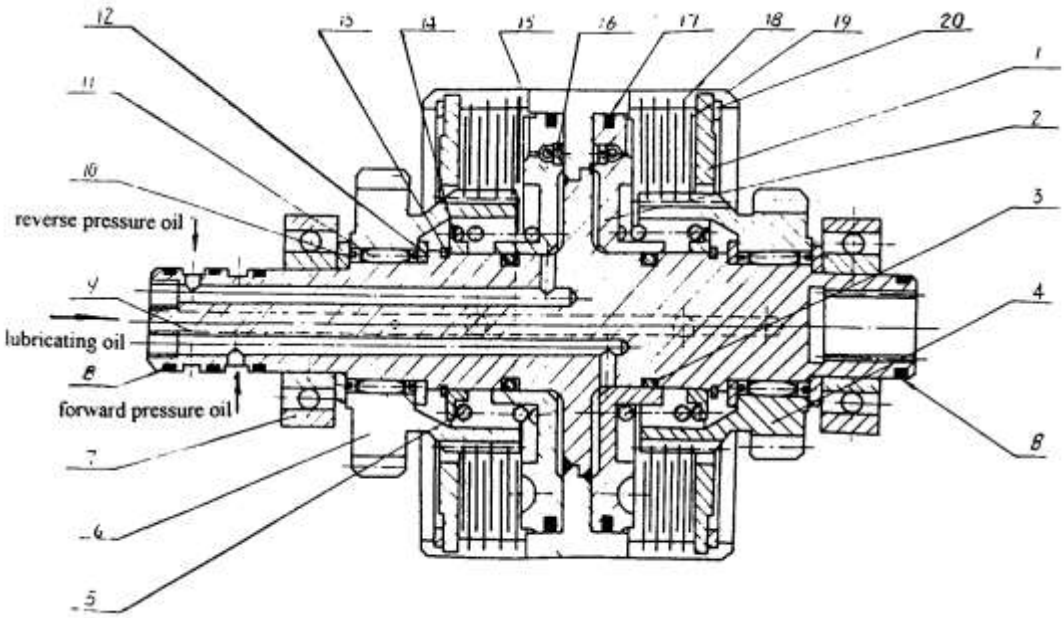

1 plate 2 piston 3 O-ring 4 forward-gear -ratio gear 5 backhaul spring 6 reverse gear 7 bearing 8 ring (A) 9 input shaft assembly 10 restrain ring (A) 11 needle bearing 12 restrain ring(A) 13 elastic snap ring for shaft 14 spring seat 15 steel ball 16 plug 17 ring (A) 18 septa 19 disc 20 clip ring

Fig 2-7 hydrodynamic power clutch

4.5.2 Disassembly, assembly sequence

① Take off the bearings 7 on the left and right sides;

② Separately take off the forward-gear-ratio gear 4、reverse-gear-ratio gear 6、disc 19、septa 18;

③ Separately compress the spring 5, take off the snap ring 13, remove the piston 2 and spring 5.

Assembling procedures is contrary to those of disassembly.

NOTE:

- Flush the piston cavity of the input shaft assembly、oil route, clean the other parts except the disc.
- Replace the ring(A)、(B) if it is damaged.
- Replace the snap ring.
- Replace the disc if it is overly abraded or bend.
- Restrained ring(A)、(B) should face to gears.
- After assembled, rotate the gears, it should be freely rather than locked.

4.6 Reduction transmission and differentials

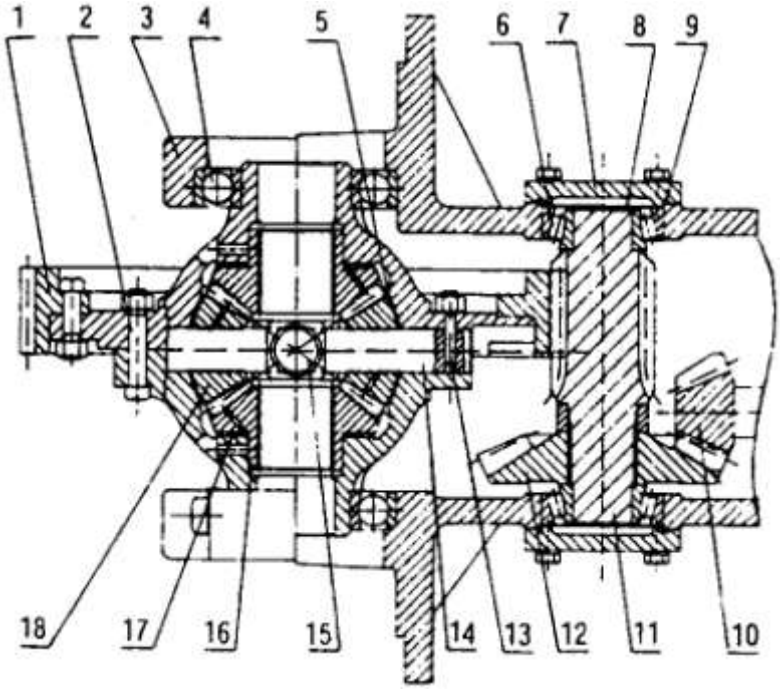

1. Gear ring	2. Bolt	3. Bearing holder	4. Ball bearing
5. Thrust washer	6. Taper roller bearing	7. Bearing cover	8. gasket
9. “O” ring	10. Output shaft	11. Pinion	12. Helical bevel gear
13.Column pin	14. Gear shaft Ⅰ	15. Gear shaft Ⅱ	16. Semi-axle gear
17. Gasket	18. Planetary gear		

Fig.2-8 Reduction gear ,Differential

4.6.1 Reduction gear (as shown in Fig.2-8)

Reduction gear is in the front of transmission, which reduces the speed of output shaft of transmission and increase the torque from output shaft to differential; reduction gear is mainly composed by a small helical bevel gear on the output shaft，a big helical bevel gear and a small gear shaft，the big helical bevel gear is fixed in a small gear shaft through spline, two ends of small gear shaft are all holden by taper roller bearing and adjusted gap by shim.

4.6.2 Differential（as shown in Fig.2-8 ）

Differential is installed on front hull by bearing holder through ball bearing on both ends, which front end connect with axle carriage. Differential carriage is divided into left and right half, which is composed of two semi-axle gears and four planetary gears. Thrust ring is put between differential carriage and gears in order to have a clearance between pairs of gears. Planetary gear is holden by gear shaft I,II. Gear shaft I is secured to differential carriage by columnar pin, and gear loop 1 is secured to differential carriage byream bolt .

The power from transmission transmits to wheel through semi-axle gear and semi-axle when it is reduced to come into differential driving by differential.

4.6.3. Remove differential（as shown in Fig.2-8）

① Take down bolts securing bearing seat of differential.

② Take down the section of differential from transmission.

③ Loose and take down bolt 2 and column 13, detach differential left hull from right

hull.

④ Take respectively down thrust washer 5, gear 14, planetary gear18, semi-axle gear 16, washer 17, gear shaft 15 etc.

Caution：Be sure to lay adjust shim dividually and not to be mixed up.

4.6.4 Remove reduction gear（as shown in Fig.2-8）

① Loose and take down the fixing bolts of two ends of bearing cover 7.

② Gently tap the front of pinion 11 near helical bevel gear.

③ Take down bearing 6, pinion 11, helical bevel gear 12.

Caution：Be sure location of adjust shim 8, and adjust shim of both ends should be lay dividually and not be mixed up.

4.6.5 Assembly

Assemble in the reverse order of removal, but be sure:

a. Prevent each fixing connecting face and gear tooth surface from knocking to be damaged.

b. Apply working faces of parts such as bearing, gear, seal ring and relatively movement parts with a little gear oil to prevent them from coming into being instant dry friction while early running.

c. Each part should be assembled correctly.

d. Each part should be running smoothly to prevent it from getting stuck.

e. Be sure to tighten firmly each joint bolt.

4.7. Case and control valve

Case and control valve is installed inside the shell of gear box. It consists shell body case 1 and control valve 3. There are a gearlever shaft 2 and an overflow valve 4 installed on the shell body case, keep the oil pressure for torque converter between 0.5MPa ~0.7MPa, prevent the air erode.

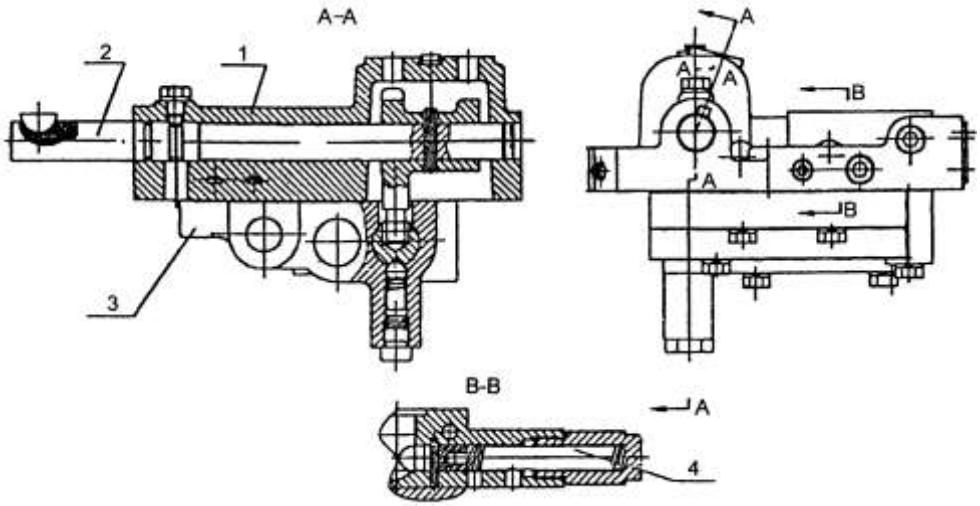

1.shell body 2. gearlever shaft 3.assembly of control valve 4.overflow valve

Fig. 2-9 case and control valve

The assembly of control valve consists Main pressure valve 10、Buffer valve 15、shift-control valve 1etc. See Fig. 2-10.

https://truckmanualshub.com/

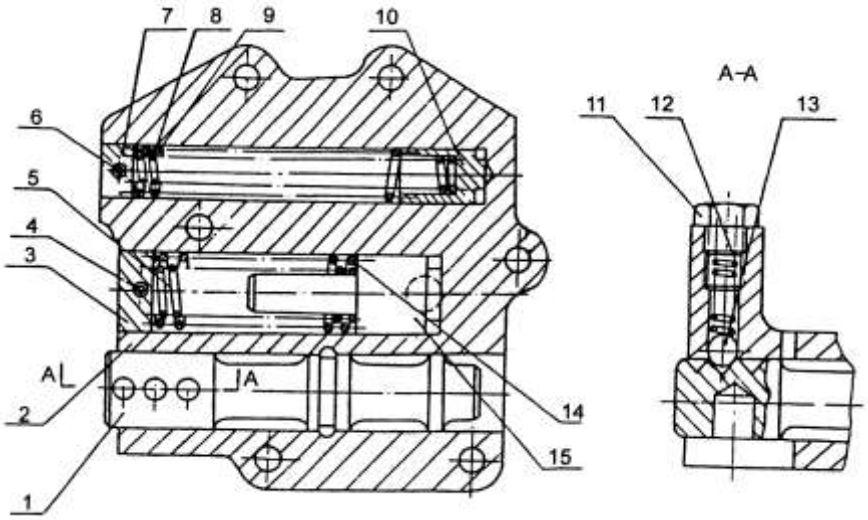

1 slide valve	2 valve body	3 plug	4 flexible straight pin 4×40		5 spring
6 flexible straight pin 4×35		7 plug	8 spring	9 spring	10 piston
11 drain plug	12 spring	13 steel ball	14 spring	15 valve core	

Fig. 2-10 control valve

Main pressure valve: also called fixed pressure valve, the oil pressure for controlling the hydrodynamic clutch is at 1.1MPa ~1.4MPa, assigns the oil to the relief valve, then to torque converter.

Buffer valve: also called adjustment valve, between the inching valve and the shift-control valve. When the control valve is all opened, the buffer valve begins to work, for reducing the impact when the hydrodynamic clutch is connecting.

Shift-control valve: assign the pressure oil to the forward or reverse clutch, so as to make the gear box change the gear ratio.

HANGCHA

Structure of Automatic shift valve（used for automatic shift type）

	1t-1.8t	2t-2.5t	3t-3.5t
Automatic shift hydraulic transmission gearbox	YQXD18HA YQXD18E YQXD18H1 YQXD18HB （the same of all except connect shell）	YQXD25A YQXD25A YQXD25H YQXD25H1 YQXD25G1（the same of all except connect shell）	YQXD30A YQXD30A YQXD30H YQXD30H1 YQXD30G1（the same of all except connect shell）
similarities and differences	Electrical shift compare with YQX18	Electrical shift compare with YQX25	Electrical shift compare with YQX30
characteristic	Automatic shift valve: Electrical shift		

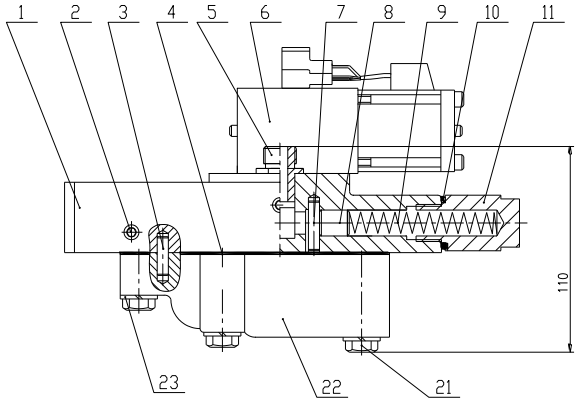

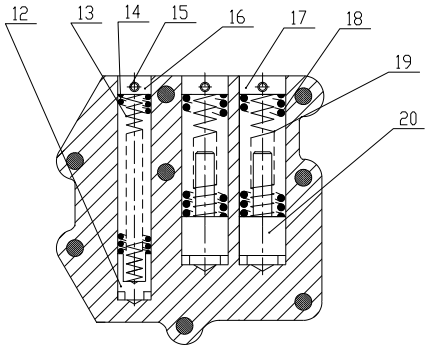

1. Shell body cover	2.interior hex bolt of taper pipe		3.pin
4.paper gasket	5.tube tie-in	6. electromagnetic shift valve	
7.pin	8.small piston	9.spring	10.combine seal
11. relief valve cover	12.piston	13.small spring of fixed pressure valve	
14.big spring of fixed pressure valve		15. elasticity columnar pin	
16. round plug of fixed pressure valve		17. round plug of control valve	
18. big spring of control valve		19. small spring of control valve	
20.reel	21.bolt	22.shell body	23.gasket
24. interior hex bolt of taper pipe			

HANGCHA

5. Notice about installation and usage

5.1 Before installation, first clean oil of oil seal on surface of hydraulic gearbox, to avoid leaking when working, no disassemble freely hydraulic gearbox.

5.2 To avoid affecting precision of installation and usage must prevent every installation surfaces, torque converter and out gear knocking.

5.3 Guarantee no more than 0.15mm runout for installation hole of engine flywheel, no more than 0.1mm for flywheel end surface, no more than 0.2mm for installation end surface of flywheel, no more than or equal to Φ0.1mm for location position of 2 location pins on installation surface.

5.4 Truck control mechanism must guarantee correct stroke of inching valve lever, and secure location. Inching valve lever can return its initial location when operator loosens pedal. Inching valve characteristic graph,see Fig.2, inching valve lever can move together with brake pedal, must guarantee cut off the oil to clutch before braking ,and the stroke of inching valve lever is equal to or more than 14mm(less than 22mm) ,when shifting, close inching valve first ,and then shift.

5.5 When hoisting, keep level, ensure gearbox and reduction gearbox calm, and avoid torque converter sliding out.

5.6 Prohibit changing oil system of the gearbox. To ensure gearbox work regularly, lubricate well, the circular oil of gearbox can not be used for other purpose, and the oil should accord with required trademark.

5.7 Keep work oil clean and no other impurity, replace new oil after 50 hours usage for new truck, and after every 1000 hours,or reuse after long depositing.

5.8 Fill in work oil, run at neutral shift for5 minutes, then check oil height, and the height should be within the specified range.

5.9 New hydraulic gearbox should breaking in 50 hours after it is installed,and the load is no more than 70% in breaking in process, note oil temperature ,oil pressure and bolts loosen or not usually, replace new oil after breaking in .

6. Cause and solutions

Faults	Causes and remedy
Efficiency deceased and oil temperature too high	1. Friction discs seized or worn out. Check friction discs for agglutination, uneven contact or warp. 2. Insufficient oil for torque converter. Check oil pump for worn part and check the oil level. 3. Bearing damaged. Replace the bearing. 4. Check lubricant line for blocking. 5. One-way clutch of torque converter seizure. Replace the torque converter.
Oil leakage	1. Sealing washer wear. Replace the worn sealing washer. 2. Ageing or damage of rubber parts. Replace the parts. 3. Parts damaged and cracks. Replace.
Clutch pressure low and excessive vibration	1. Oil level too low. Check oil level and refill oil to proper level. 2. Sealing ring on clutch shaft and piston worn out or joint jammed when assembling. Replace sealing ring and pay attention to joint when assembling. 3. Oil pump worn. Replace oil pump. 4. Oil strainer blocked. Clean or replace. 5. Check if the inching valve spool returns.

Ⅲ. Driving axle

1. Date

Driving axle type	Full floating, axle and truck body direct install, front wheel driving
Tire pressure	$(7\pm0.2)\times10^5$Pa
Wheel hub rotation starting torque at hub blot	10 N～29 N
Axial play of wheel bearing mm	less 0.08

2. Trouble diagnoses and corrections

condition	Probable cause	Corrective action
Abnormal noises	·loose driving axle and body connecting blots. ·loose wheel nut ·worn or damaged wheel hub bearing. ·wheel hub bearing not properly adjusted. ·worn axle shaft spliner. ·insufficient lubrication	Tighten. Tighten. Replace. Adjust. Replace. Lubricate.
Unstable driving	·loose wheel nut. ·deformed wheel. ·worn or damaged wheel hub bearing. ·loose driving axle and body connecting blots. ·wheel hub bearing not properly adjusted. ·improper tire pressure.	Tighten. Replace. Replace. Tighten. Adjust. Adjust.
Oil leakage	·worn or damaged axle shaft oil seal. ·final drive improperly installed. ·loose drain plug.	Replace Replace gasket. Tighten.

https://truckmanualshub.com/

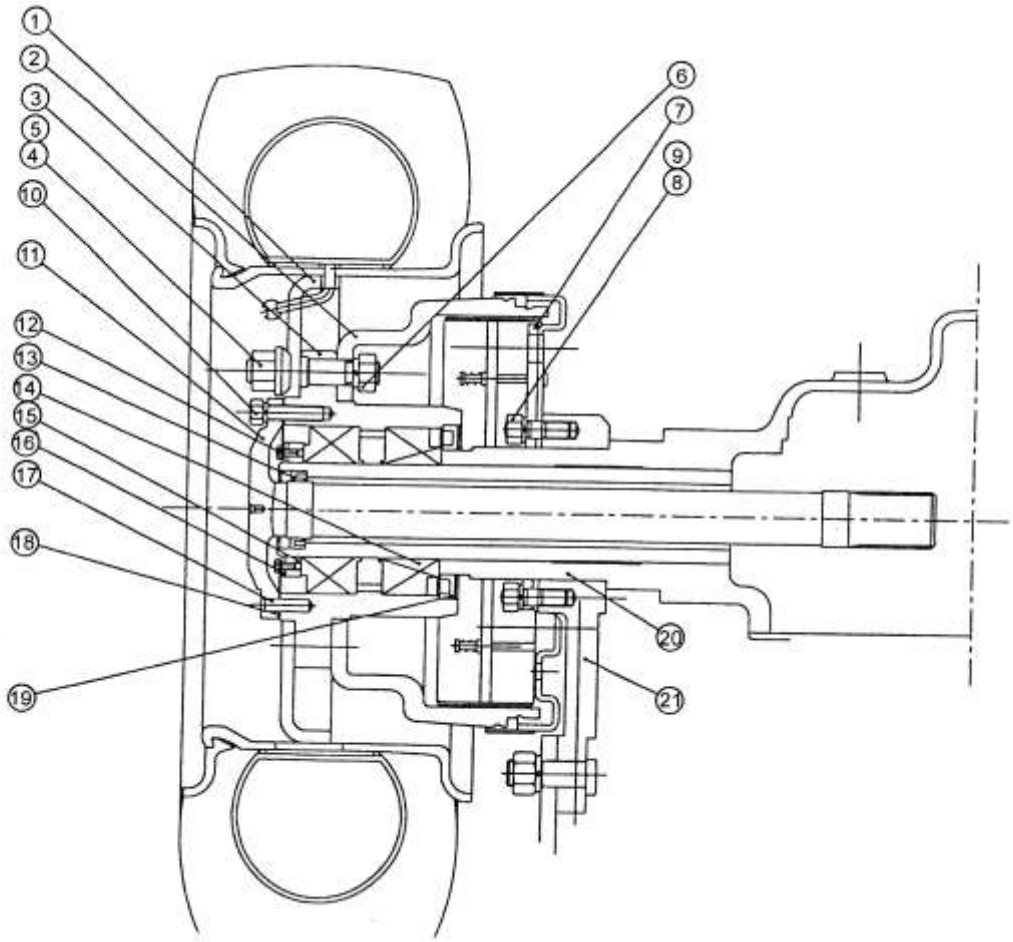

1. Wheel rim	2. Brake drum	3. Hub	4. Nut
5. Hub nut	6. Nut	7. Brake device	8. Washer
9. Bolt	10. Differential side shaft nut		
11. Differential side shaft		12. Bolt	13. Oil seal
14.Tapered roller bearing		15. Adjusting nut	16. Lock nut
17. Pin	18. Paper mat	19. Oil seall	20. Axle shell
21.support sleeve			

3. Assembly and disassembly of driving axle

WARNING
Be careful when removal and installation driving axle as it is heavy.

Raise front end of forklift truck and support frame with wooden blocks.

1) Remove mast assembles.
2) Slightly raise axle with a hoist and place wooden blacks under differential gear carrier and transmission case.
3) After placing a pan under axle case, loose oil plug, drain oil from axle case.
4) Disconnect brake nuts from left and right cylinders.(see fig.3-1)。

CAUTION：plug brake tube openings to prevent oil from flowing out.

https://truckmanualshub.com/

5) Disconnect brake cable at hand brake lever.
6) Remove front wheels.
7) Remove axle shaft.
8) Support driving axle with wire ropes and lifting device.
9) Remove bolts securing axle mounting bracket to frame.(see fig.3-2).
10) Remove nuts securing axle case to differential gear carrier.(see fig.3-3).
11) Remove driving axle assemble.

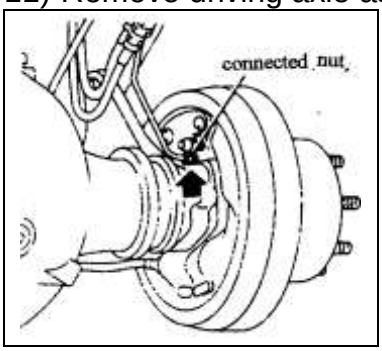

Fig.3-1

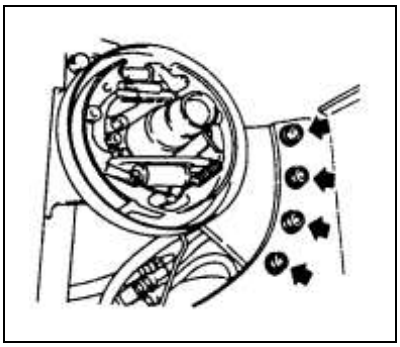

Fig.3-2

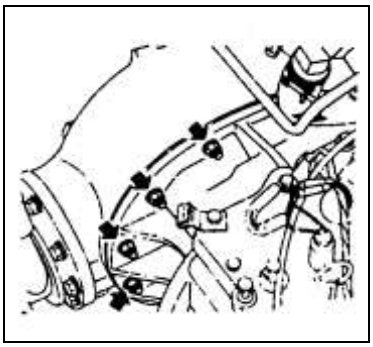

Fig.3-3

13)Remove brake drum，remove wheel hub.
14) Remove axle mounting bracket and brake component from axle tube.
15) Remove oil seal from axle tube.
16) To install driving axle assemble in the reverse order of removal. Observe the following:
① When installing axle mounting bracket and brake component, apply a coat of calcium grease to axle tube.
② Apply 1/3～2/3 of volume of calcium grease to wheel hub，then install them on axle tube.
③ Install oil seal with its part number facing to the inside of forklift truck.
④ Attach seal tape (PVC, white)to drain plug then installed after cleaned it.
⑤ Replenish axle case with gear oil. Tighten vent plug after clearing.

GL-5 85W/140	Gear oil (L)	2.8	1t-1.8t hydro-transmission forklift
		6	1t-1.8t mechanical-transmission forklift
		3.2	2t-3.5t hydro-transmission forklift except RW15A
		8	2t-3.5t mechanical-transmission forklift
APIGL-5 80W/90	(L)	3.2	Only type N-RW15A、QN- RW11A lift truck

Vent plug should clear instantly to prevent pressure inside of wheel hub from rising.

4. Axle shaft and wheel hub

Remove

1） Raise the front end of forklift truck and support frame with wooden blocks.
2） Remove front wheel and axle shaft.
3） Remove lock nuts, lock washers, snap ring, felt ring, adjusting nut. Use special tools.

https://truckmanualshub.com/

4） Remove brake drum(refer to Fig.3-4)；
If brake drum is difficult to remove: a. Remove adjusting hole plug. Then with flat-blade screwdriver extend adjusting hole, turn adjusting ratchet wheel by 10 notches. To contract brake shoe lining(refer to Fig.3-5). b. evenly tapping on brake drum with brass bar or wooden mallet.

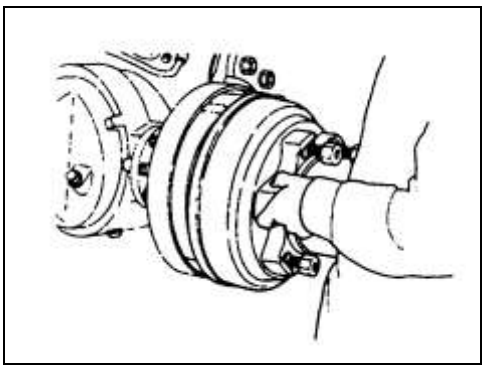

Fig.3-4

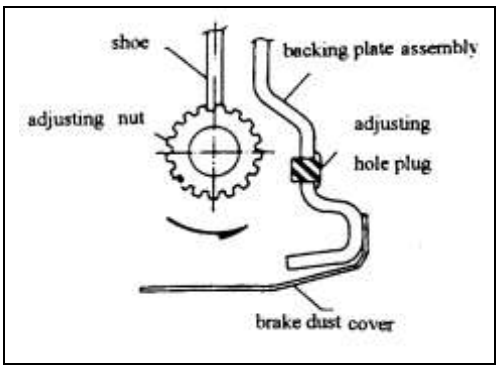

Fig.3-5

5） Remove wheel hub, be careful not to drop bearing inner race.
6） Remove oil seal and inner bearing as an assembly by evenly tapping on periphery of seal with a wooden mallet and brass bar.
7） Remove bearing outer race from wheel hub by evenly tapping on its periphery with a wooden mallet.
CAUTION：Be careful not to damage oil seal and outer race.

Inspection

Stepped wear or cracks on axle shaft splines	replace
Seized, scratched, noisy or rusted bearing or improper rotation of rollers	Replace
Cracked or damage wheel hub	Replace
Damaged oil seal felt ring.	replace

Installation
Install reverse order of removal.

5. Bearing adjusting

1） Lubricate on taper roller bearing.
2） Tighten roller bearing lock nut in wheel hub until wheel hub can no longer be rotated with one hand.
3） From that position, turn back lock nut approx. 60^0.
4） Turn back wheel hub two or three rotations so that bearing settles down.
5） Again tighten lock nut until it can no longer be rotated with one hand; then turn back approx.60^0.
6） Install snap ring and settles down felt ring, install lock washer so as to set its hole in the pin of snap ring. Screw lock nut.
7） Turn wheel hub back and forth two or three rotations to see if rotation starting torque is within specifications. Rotation starting force：10N～29N (refer to Fig.3-6)；

https://truckmanualshub.com/

8） Measure axial play of wheel hub to see if it is within specification. Axial play is less than 0.10mm (refer to Fig.3-7).

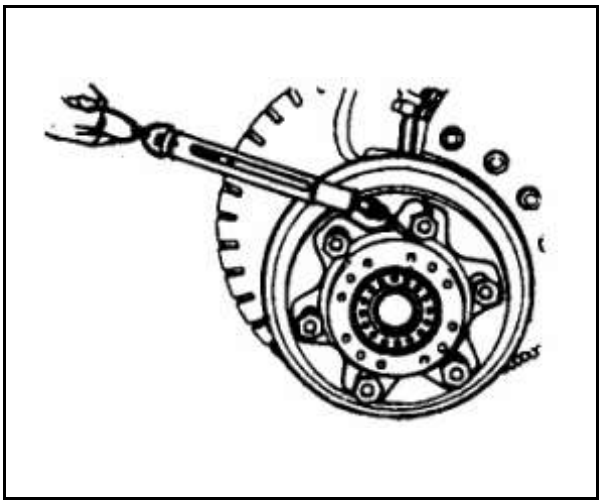

Fig.3-6

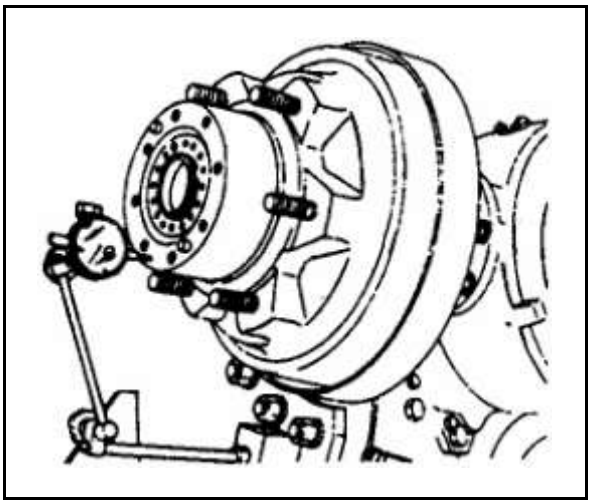

Fig.3-7

HANGCHA

Ⅳ. Steering axle

1. General specifications

Axle body type	Center-pivoted, turn around type		
Turning angle	Inside turning angle	1-1.8 t	79.5°
		2-3.5 t	77.8°
	Outside turning angle	1-1.8 t	56°
		2-3.5 t	54.3°
Tyre pressure	0.7MPa		

Axle centre

Vertical play(mm)	0～0.5
Adjusting shim for end shaft of axle	0.5,1.0,1.6
thickness(mm)	N163-220020-000

Kingpin

Kingpin axial play(mm)	Less than 0.20
Kingpin adjusting washer	
thickness(mm)	Part No.
0.10,0.30,0.70	N163-220012-000

wheel hub bearing

Pre-tighten	Tighten steering spindle nut until drive wheel hub no longer rotates with one hand. Then loose 1/8～1/6 rotations. Or wheel hub bolt force is10～29.8N
Axial play(mm)	Less than 0.10

2. Trouble diagnoses corrections

condition	Probable cause	Corrective action
Unstable driving	·loose wheel nut ·wheel bearing out of adjustment ·improperly adjusted shims. ·faulty steering system.	tighten adjust adjust refer to turning system section
Noises	·insufficient lubrication ·loose bolts and nut ·improperly adjusting shim for axle end Shaft. ·damaged joint bearing at two ends of rod.	Apply calcium grease tighten adjust replace

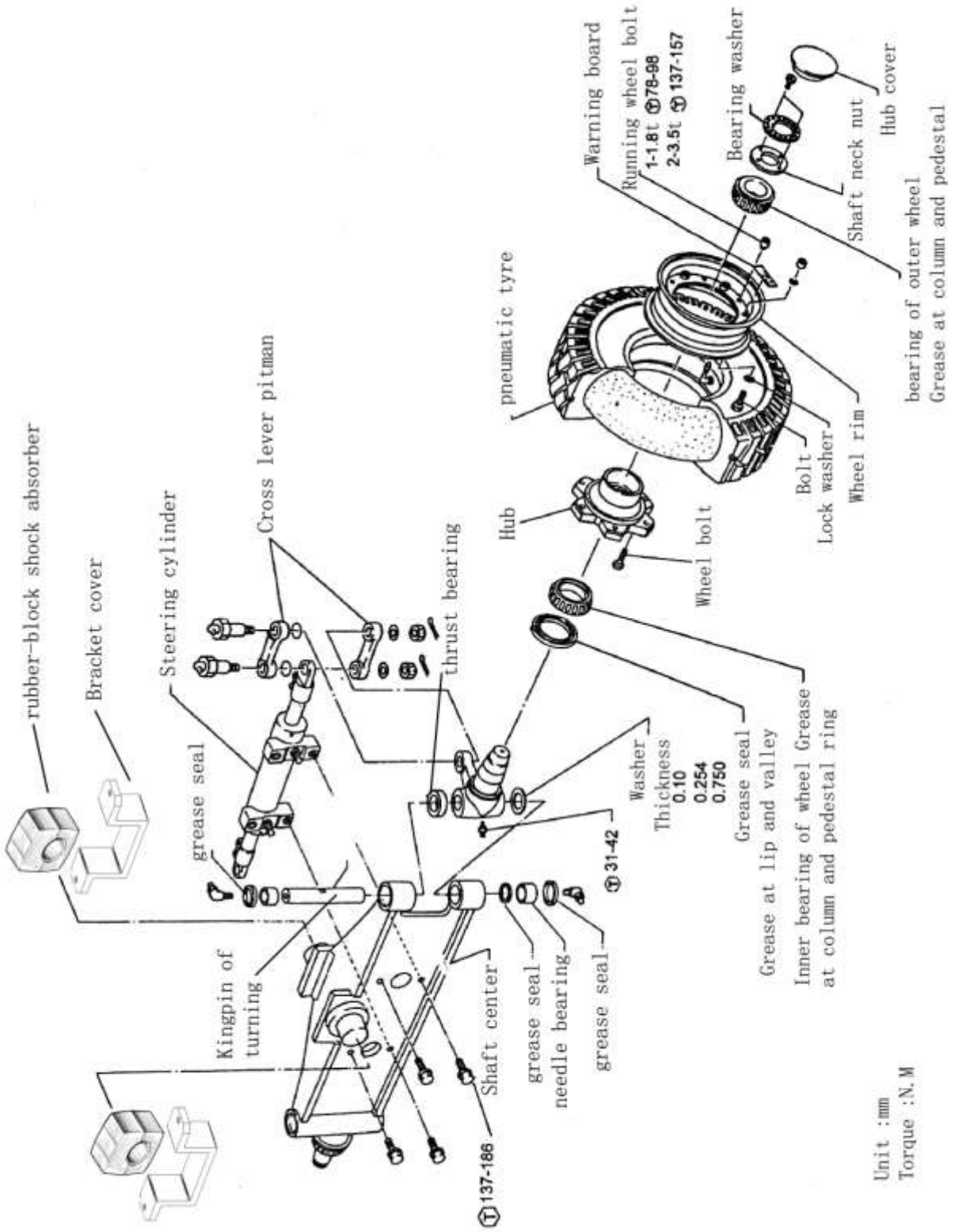

Notice：Replace rubber-block shock absorber between 3000 ～ 3500 hour.

https://truckmanualshub.com/

3. Steering axle

Remove wheel hub

1) Jack up and support forklift truck body with wooden blocks.
2) Remove tire.
3) Remove hubcap.
4) Remove steering spindle nut.
5) Pull off hub assembles.
6) Remove bearing inner race.。

Caution：a. Not to drop bearing inner race. b. Be careful not to damage oil seal.

4. Kingpin and steering spindle.

1) Remove rod.
2) Loose lock bolts.(see fig.4-2)；
3) Remove grease nipples on kingpin.
4) Remove kingpin.

caution：Hold kingpin to prevent it from dropping. (See fig.4-3).

5) Take off spindle, thrust bearing and shim.

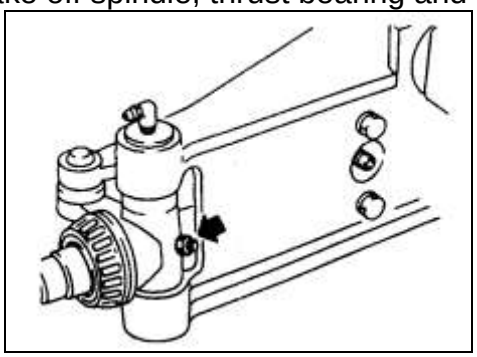

Fig. 4-2

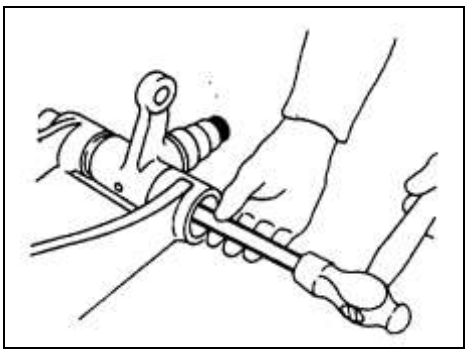

Fig. 4-3

INSPECTION：

1). Replace spindle if cracked.
2). Replace bearing if its rollers or roller surfaces are rusted or nicked.
3). Replace steel sleeve if it distortion, out of round, cracked.
4). Replace thrust bearing and dust cap if them damaged.。

Installation

To install, reverse the order of removal. Careful observes the following.

1) Always insert kingpin from lower side.
2) Install thrust bearing, set the tighten-ring below the support and loosen-ring. Pack all grease between dust proof inside, loosen-ring, and tighten-ring.
3) Adjust axial play to specification with shims. Axial plays less than 0.15mm.
4) The character of seal tape faces outside. Apple grease to roller of roller bearing, also apply grease between lip and groove of seal tape.
5) Pack all grease nipples with a sufficient of grease.

5. Wheel bearing adjustment

1) Slowly rotate hub. Tighten steering spindle nut until it can no longer be rotated with one hand.
2)From that position, turn back steering spindle nut 1/6～1/4 rotation. Measure hub bolt force is 10N～30N.
3) Make sure that hub rotates smoothly and that its axial play is within specification. Axial play is less than 0.12mm.

HANGCHA

Ⅴ. Steering system

1. Data

Steering system type			Change direction rear wheel with power steering	
			2t、2.5t、3t、3.5t	1t、1.5t、1.8t
cycloidal rotor full hydrostatic power steering gear		Model	530-1322	/
		Displacement ml/r	100	/
		Type of connection	Inner spline	Inner spline
		Features	Open center ,low torque	Open center ,low torque
Steering cylinder	Cylinder diameter mm		Φ65	Φ50
	Piston diameter mm		Φ40	Φ30
	stroke mm		195	160
Wheel diameter mm			Φ360	Φ360

2.Trouble diagnoses

condition	Probable cause	Corrective action
Failure to rotate steering wheel	Damaged or trouble of oil pump	replace
	Divide value is clogged or damaged.	Clean or replace
	Damaged hose or connector, block lines	Replace or clean
High effort for steering	Divide value pressure too low.	Adjust pressure.
	Air in oil lines.	Remove air
	The steering fails to turn to its natural position, broken lock spring or insufficient spring pressure	Replace spring flat
	Too much internal leakage in steering cylinder.	Check piston for sealing
Track travel zigzag or wobbly	Too much oil flow to steering cylinder.	Adjust divide value.
normal noise	Oil is not sufficient in oil tank.	Add oil.
	Suction piping or filter clogged.	Clean or replace
leakage	Damaged sealing of oriented bush of steering cylinder or hose or connector.	replace

HANGCHA

3. Summarize

Steering system is composed of full hydrostatic power steering gear and steering cylinder.

3.1 Full hydrostatic power steering gear assemble(refer to Fig.5-1)

Full hydrostatic power steering gear assemble include cyclical full hydrostatic power steering gear, column and steering wheel. Column and steering wheel can be adjust 8°back or forth to fit all driver.

When engine stops running, rotate steering wheel with 1kg force slightly, after leaving hands, steering wheel should be return 10° auto backing boardically.

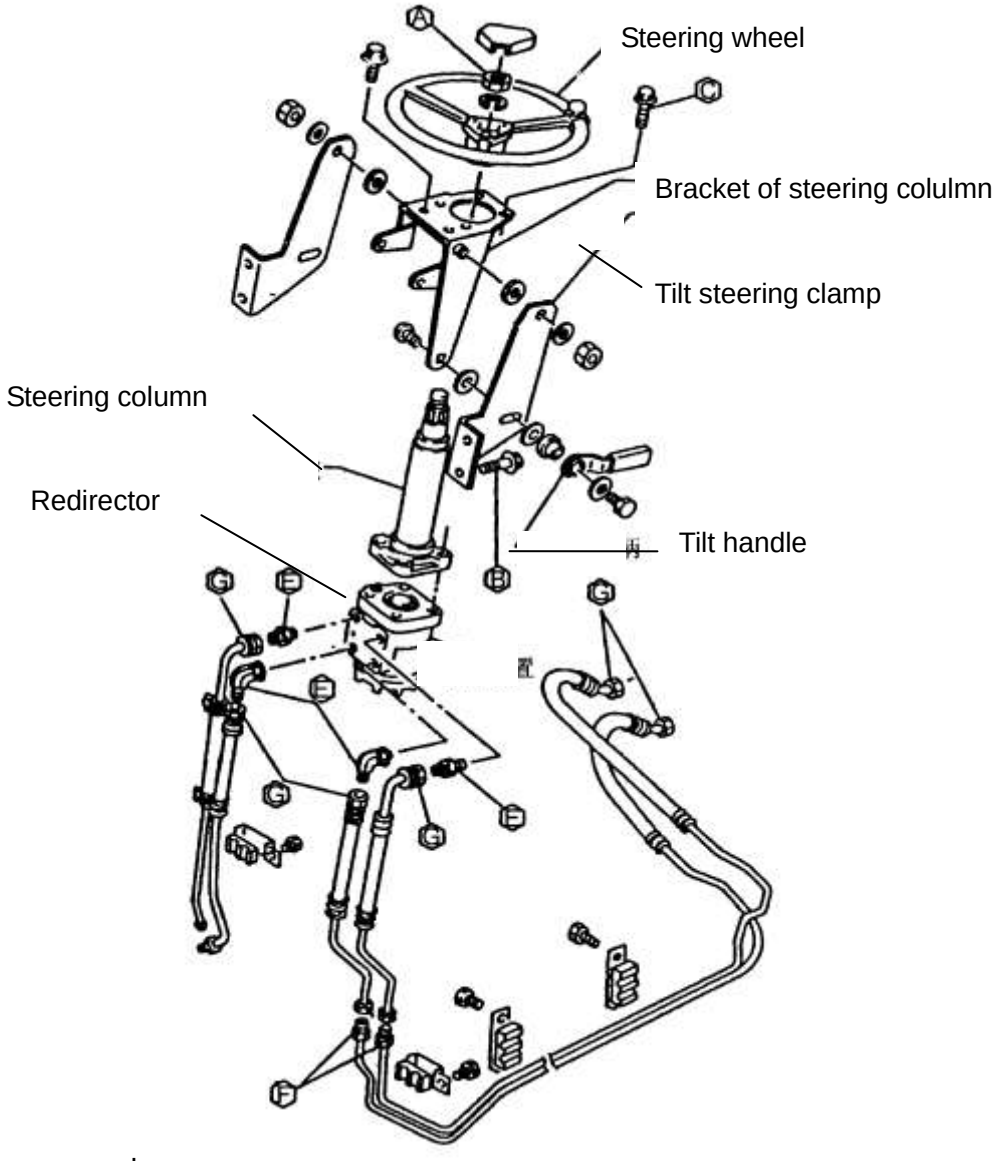

Fig. 5-1 steering wheel

3.2 Full hydrostatic power steering gear(refer to Fig.5-2)

When power steering ,pressure oil flows from valve disk and valve sleeve pair to rotary-stator valve pair , then drive rotary to rotate followed as steering wheel, and drive oil entering into left or right cavity of cylinder, and drive steering tire to turn by piston rod .

When the engine stops running, the pump does not supply oil, and the steering action will be realized manually by turning the steering wheel to move valve spool, valve guide, coupling block , and to actuate he rotor to feed oil into steering cylinder, in this case, rotor and stator act as a hand pump, making manual steering possible.

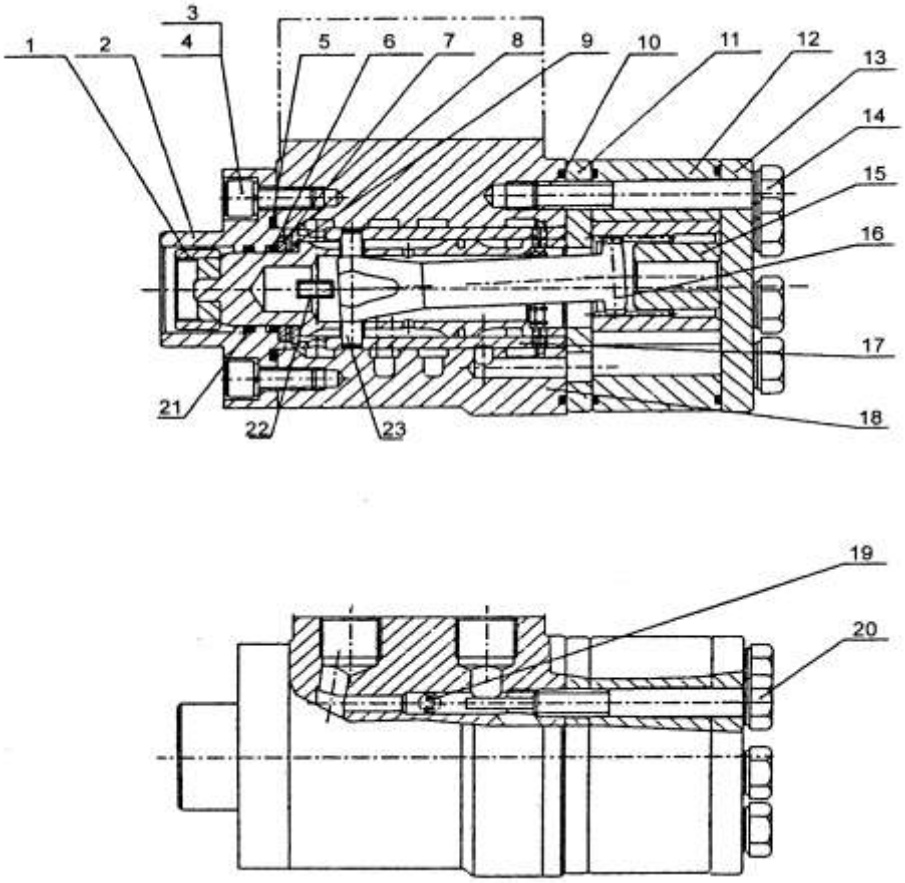

Fig. 5-2 cycloidal rotor full hydrostatic power steering gear

1. Connected block (inner spline connection ,none) 2. Front cover 3. Screw
4. Spring 5. O-ring 6. X-ring 7. Stop ring 8. Thrust bearing 9. Slip ring
10. O-ring 11. diaphragm 12. Rotary-stator pari 13. Rear cover
14. Bolt 15. Stop block 16. Couple axle 17. Valve disk valve sleeve pair
18. Shell 19. Steel ball 20. Stop bolt

https://truckmanualshub.com/

3.3 Steering cylinder(refer to Fig.5-3)

Steering cylinder is of double-acting piston type. The two end of piston is connected with steering spindle through rod. The oil from full hydrostatic power steering gear makes piston rod move left and right so as to turn truck lift and right.

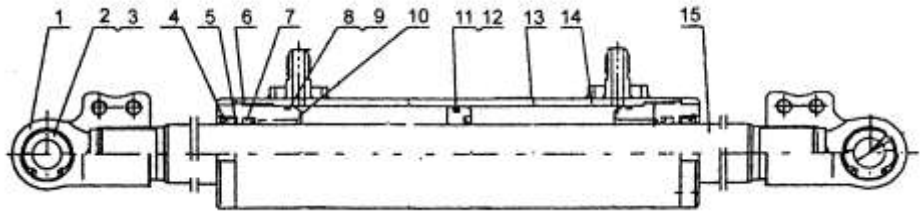

1. Earbob 2. Elastic stop ring for hole 3. Plain radial bearing 4. Round wire snap ring

5.Dustproof ring 6.O-ring 7. Seal ring 8. Protected ring 9.O-ring 10. Guide sleeve

11.O-ring 12. Glyd Ring 13. Scutcheon 14. Cylinder 15. Piston rod

Fig. 5-3 steering cylinder

4. Install steering system

Careful observe the following:

1） Hydraulic tie-in, blots and piping must be cleaned while installing.

2） Check oil lines arrangement for properness, whether it is reverse order of steering direction or not, refer to steering system .

3） Steer wheel to end left and right to make sure whether it is equably of steering force and smooth of steering.

4） Jack up rear wheel and steer slowing wheel left and right and repeat it. Bleed air of hydraulic lines and cylinder.

When engine stops running, rotate steering wheel with 1kg force slightly, after leaving hands, steering wheel should be return 10° autobacking boardically.

Ⅵ. Brake system

1.Trouble and diagnoses and corrections

condition	Probable cause	Corrective action
Insufficient brake force	• Oil leakage in brake lines. • Air in brake lines. • Water or oil on linings. • Uneven wear or contact of brake linings. • Improper functioning of master cylinder or wheel cylinder. • Clogged oil lines.	Correct and replenish. Bleed air. Clean or replace. Grind or replace. Correct or replace. Clean.
Unequal braking (forklift truck veers to one side)	• Uneven tire pressure. • Brake out of adjustment. • Water or oil on brake linings. • Foreign particles in brake drum. • Deteriorated lining surface. • Improper contact of linings. • Worn lining. • Worn, warped, rusted or damaged brake drums. • Improper operation of wheel cylinder. • Improper sliding shoes. • Loose back plate blots. • Warped back plates. • Improperly adjusted wheel bearing. • Clogged oil lines.	Adjust. Adjust. Clean or replace. Clean. Grind or replace. Grind or correct. Replace. Correct or replace. Correct or replace. Adjust. Tighten or replace. Replace. Adjust or replace. Clean.
Brake dragging	• No free play of brake pedal. • Improper shoe sliding. • Improper operation of wheel cylinder. • Faulty piston cup. • Weak or broken return springs. • Clogged master cylinder returns port. • Clogged oil lines. • Wheel bearing out of adjusting.	Adjust. Adjust. Adjust or replace. Replace. Replace. Clean. Clean. Adjust or replace.
Brake noise.	• Lining surface harden or foreign particles on it. • Warped back plates or loosed blots. •Brake shoes warped or improper install. • Worn linings. • Loose wheel bearing.	Repair or replace. Repair or replace. Repair or replace. Replace. Repair.

2. Summary

The brake system is the front two-wheel braking type consisting of a master cylinder, brakes and brake pedal.

2.1 master cylinder

The 2t-3.5t master cylinder contains a valve seat, check valve, return spring, primary cup, piston and secondary cup, which are kept in place with stop washer and stop wire. The exterior of the cylinder is protected from dust by means of a rubber dust cover. The piston is actuated through the push rod by operation of the brake pedal. First, as the brake pedal, the push rod pushes the piston forwards. The brake fluid in the cylinder flows back to the reserve tank through the return port until the primary cup blocks up the return port. After the primary cup passes the return port, the brake fluid in the cylinder is pressurized and opens the check valve, flowing through the brake lines to the wheel cylinder. Thus, each wheel cylinder piston is forced outwards. This brings the brake shoes into contact with the wheel drum and slows or stops the lift truck.. Meanwhile, the cavity caused behind the piston is filled with brake fluid led through the return port and inlet port to lubricate the piston. When the brake pedal is released, the piston is forced back by the return spring. At the same time, the brake fluid in each wheel cylinder is pressurized by the force of the brake shoe return spring, thus returning into the master through the check valve. With the piston in its original position, the fluid in the cylinder flows into the reserve tank through the return port. The brake fluid in the brake lines and wheel cylinders has a residual pressure proportioned(about 0.04MPa) to the set pressure of the check valve, which makes each wheel cylinder piston cup securely seated to prevent oil leakage and eliminates of vapor lock developing when the lift truck is sharply braked.

Brake principle of brake master cylinder of 1t-1.8t forklift is similar.

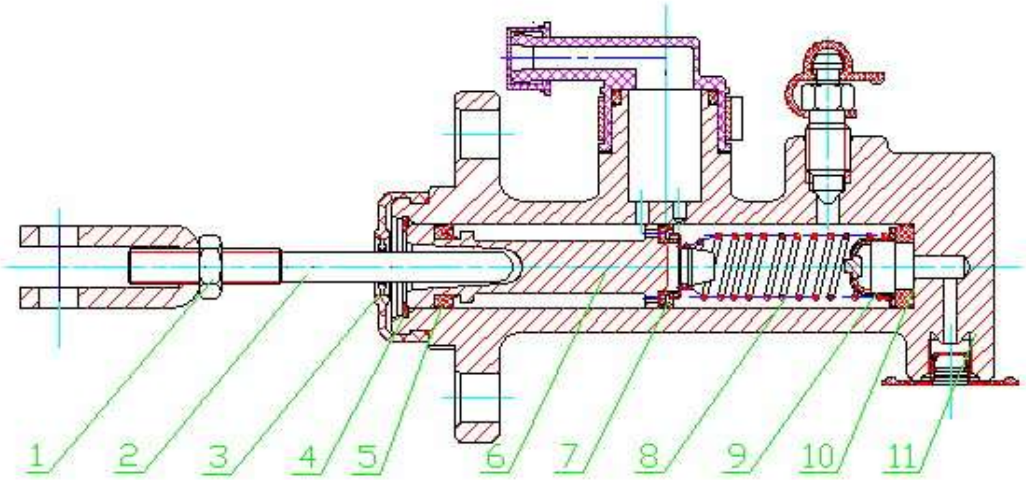

1. Lock nut 2. Rod 3. Duct cover 4. Light spring 5. Gasket ring 6. Piston
7. Primary cup 8. Spring 9. Raffinate valve 10. Valve seat 11. Cylinder body

Fig. 6-1 Master cylinder

https://truckmanualshub.com/

2.2 Brake

1t-1.8t ,3t-3.5t forklift right hand structure, please see fig. 6-2, 2t-2.5t structure of forklift hand brake is similar to 3t-3.5t.

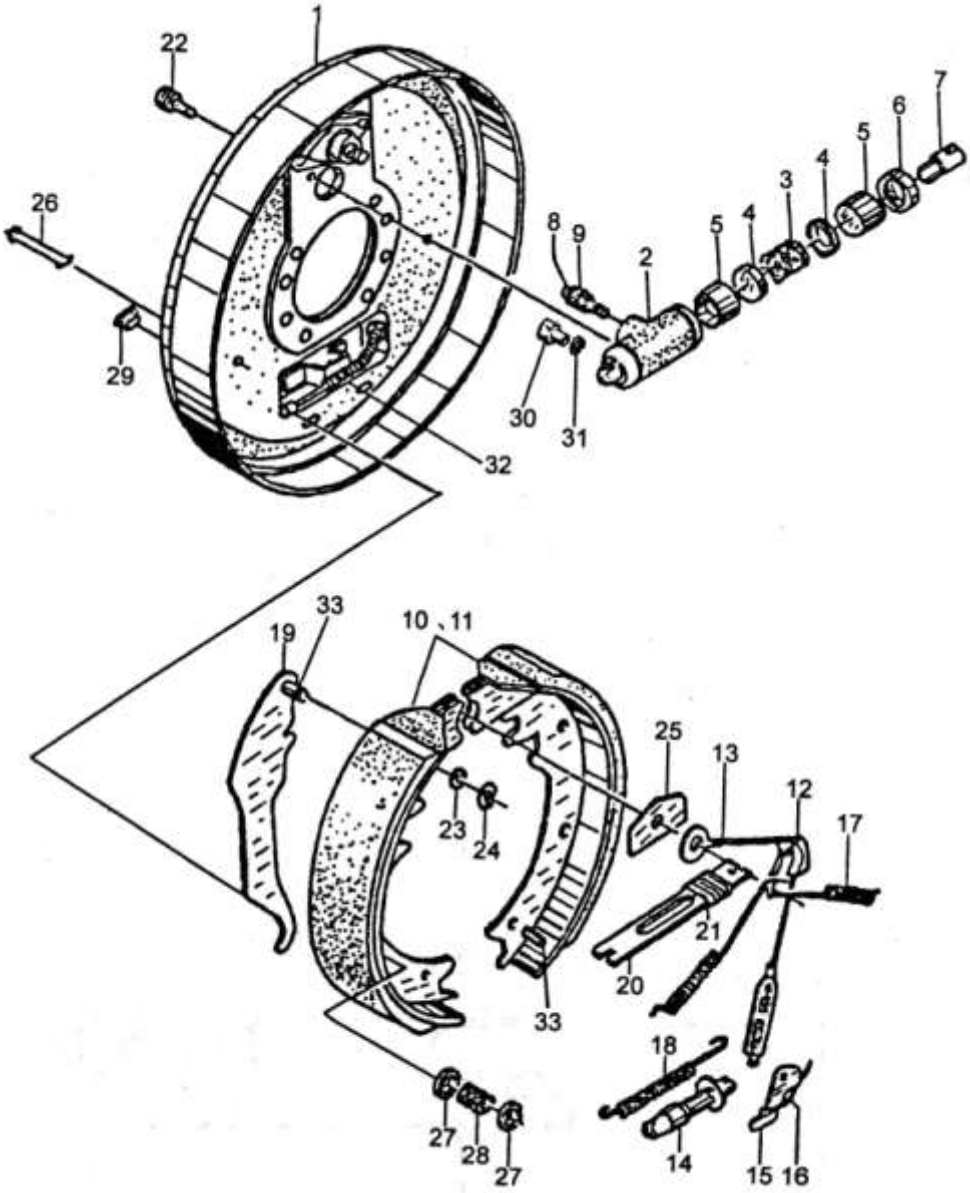

1. Brake mount bracket	2. Wheel cylinder body	3. Cylinder return spring	4. Rubber cap
5.Piston	6.Cylinder dust cover	7. Push rod	8.Air bleeder cap
9.Air bleeder screw	10. Brake shoe assemble (front)		
11. Brake shoe assemble (rear)		12. Guider	13. Adjuster cable
14.Adjusting bolt	15. Pawl	16.Spring	17. Brake shoe return spring
18.Return spring	19.Parking brake rod	20.Strut level	21.Spring
22.Bolt	23.Washer	24.Snap ring	25.Guider
26.Spring support rod	27.Spring bracket	28.Spring	29.Plug
30.Oil connector	31.Bush	32.Brake steel cable	33.pin

Fig. 6-2 1t～1.8t,3t～3.5t forklift truck right brake

https://truckmanualshub.com/

2.3 Replace brake shoe:

1) Place the forklift truck on level concrete.
2) Start engine and raise carriage about 100mm.
3) Place chocks behind rear wheels to prevent movement of forklift truck.
4) Loosen wheel nuts two or three turns each.
5) Tilt mast fully backward, and place a wooden block under each side of outer mast.

WARNING：

Do not allow wooden blocks to touch front tires.

6) Tilt mast forward until front tires are raised from surface.
7) Support forklift truck by putting additional wooden blocks under each side of front-end frame.
8) Stop engine.
9) Remove wheel tire nuts and brake drum. Remove half-shaft, lock nut, and washer.
10) Remove wheel hub and brake drum.
11) Replace brake shoes with new ones.
12) Install brake drum.
13) Adjust shoe to drum clearance: rotate wheel counterclockwise and at the time press down brake pedal several times.
14) Take out every padding block：take out according to reverse procedures when inserting.
15) Make sure no person or obstacle is around forklift, then operate forklift in reverse at 2km/h to 3km/h, set foot on brake pedal 2～3 times.
16)

2.4 Hand brake device

The hand brake device adopts a hand-pulling soft brake wire cable device. It makes use of auto-assist pressure linings type brake together with foot brake. Only when parking truck, use the hand brake. If it occurs for foot brake malfunction, use hand brake to stop the truck.

Make sure that drive system is working normally before adjusting hand brake.

1) Adjust nut B to make the length is 68mm, and then lock nut B.
2) Adjust nut A to adjust hand brake pull force, the pull force of point P in Q direction is in the range of 147N～196N when locking hand lever.
3) After adjusting hand brake lever correctly, loosen hand brake lever, make sure brake loose completely.
4) Make sure hand brake device work normally.

Notice: wipe lithium lubricating grease on guide rail C, and do it usually.

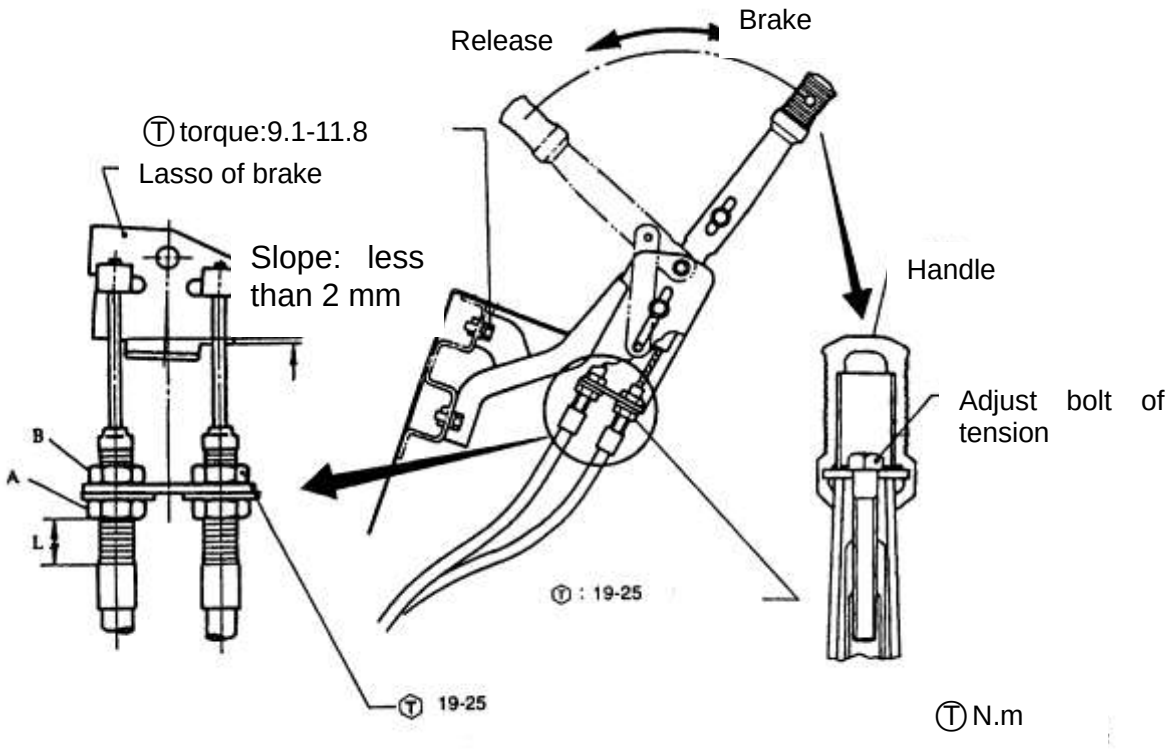

Fig. 8-3 hand brake

https://truckmanualshub.com/

Ⅶ.Hydraulic system

1．Data

Main pump

1t-1.8t

Model	CBT-F425-AFH6L	CBT-F425-AFΦ	CBHZG-F25-ALφ	CBHZ-F25-ALH6
type	gear			
driving	Engine power take off type: gear			
displacement(ml/r)	25			
speed(r/min)	500～3000	400～3500	500～3000	
Output pressure (Rated/Max.)MPa	20/25			

2t-3.5t

Model	CBHZG-F26.5-ALΦL，CBHZB-F28.2-ATΦ，CBHZG-F30-ALφL，CBHZ-F30-ALΦ，CBHZG-F32-ALφL，CBHZ-F32-ALH6L，CBHZG-F32 –ALΦ，CBT-F432-AFH6L，CBHZ-F32-ALH6，，CBHZB-F32-ATΦ
type	gear
driving	Engine power take off type: gear
displacement(ml/r)	26.5， 28.2， 30， 32
speed(r/min)	400～3500
Output pressure (Rated/Max.)MPa	20/25

https://truckmanualshub.com/

Control valve

1t-1.8t

Model		N030-611100-000(2 spools) N030-611200-000(3 spools) N030-611300-000(4 spools)
type		Double-slide valve, with overflow divided valve and tilt-lock valve
Adjusting pressure MPa		14.5(can lift 110% of rated load, cannot lift 125% rated load)
Rated flow rate L/min		65
Divide valve	pressure MPa	8.8±0.25
	Flow rate L/min	8±1

2t-3.5t

Model		R163-611100-000((2 spools) R163-611200-000(3 spools) R163-611300-000(4 spools)
type		Double-slide valve, with overflow divided valve and tilt-lock valve
Adjusting pressure MPa		17.5(can lift 110% of rated load, cannot lift 125% rated load)
Rated flow rate L/min		65
Divide valve	pressure MPa	8.8±0.25
	Flow rate L/min	12±1

https://truckmanualshub.com/

2. Trouble diagnoses and corrections

Main pump

trouble	Probable cause	Corrective action
No oil from oil pump	Low oil level in tank.	Add oil to specified level.
	Clogged suction pipe or strainer.	Clean oil line and tank. If oil is dirty, change.
Low discharge pressure on oil pump.	Worn bearing, damaged backup ring and O-ring.	Replace faulty parts.
	Maladjusted relief valve.	Readjust to specified pressure using pressure gauge.
	Air in oil pump.	Retighten suction side pipe. Add oil in oil tank. Check pumps oil seal. Do not operate pump until bubbles in tank disappear.
Noisy oil pump	Cavitation due to crushed suction hose or clogged strainer.	Adjust or replace crushed hose and clean strainer.
	Air being sucked from loose suction side joint.	Retighten each joint.
	Cavitation due to too high oil viscosity.	·replace with new oil having proper viscosity for temperature at which pump is to be operate. ·to operate when oil temperature is normal.
	Bubbles in hydraulic oil.	Determine cause of bubbles and remedy.
Oil leaking from oil pump	Faulty oil seal on pump, faulty O-ring or worn sliding surfaces on pump.	Replace faulty parts.

https://truckmanualshub.com/

Control valve

Trouble	Probable cause	Corrective action
Pressure of relief valve is not steady or too low.	Loose of pressure-adjust screw.	Readjusted and retighten.
	Distorted or damaged pressure-adjust spring.	Replace.
	Worn or blocked relief valve core.	Replace or clean.
	Pump abated.	Examine and repair pump.
Fork tilt forward when control lever is used while engine is off.	Worn or damaged tilt lock valve.	Replace valve core and tilt lock valve as an assembly.
	Broken tilt locks spring.	Replace spring.
	Damaged tilt valve plunger O-ring.	Replace O-ring.
Mast is unstable when tilting forward.	Malfunctioning tilt relief valve.	Replace tilt relief valve assembly.
Lowering distance of mast is big when spool valve is in the centre.	Valve body and spool valve is worn and clearance between them is too great.	Replace spool valve with specified clearance.
	Spool valve is not in centre.	Keep being in the centre.
	Cylinder seal abated.	Examine and repair cylinder.
	Taper valve is worn or blocked by dirt.	Replace or clean taper valve.
Spool valve is not return neutral position.	Damaged or distorted reposition-spring.	Replace spring.
	Dirt exist between valve body and spool valve.	Clean.
	Blocked control device.	Adjusted.
	Not coaxial parts at reposition	Reinstall.，be coaxial
Leakage	Damaged O-ring.	Replace.
	Faulty seal of joint.	Check and retighten.
	Loose seal plate.	Clean seal plate and retighten blots.
	Loosed lock-nut of relief valve and connect-nut between plate and plate.	Tighten.

3. Main pump

3.1 W21 main pump

1-1.8t **W21** main pump is a gear type consisting of a pump body, pump cover, a pair of gear, bearing and seal ring. This pump uses pressure-balance type bearing and a special lubrication method so as to get the minimum clearance of the gear flank. Since the pump body and cover are made of aluminum alloy, they are light and rigid. The drive gear and driven gear are integrated with their respective shafts, which are held against the pump body with bearing. The bearing, made of special material, serves both as bearing for each shaft and as side plates for the gear flank.
At the drive shaft side, an oil seal is press-fitted into the pump body to provide oil tightness performance. Oil tightness between pump body and pump cover is secured with a packing of a special shape.

Main pump maintenance remove (refer to Fig.7-1)

f. Hold the pump in a vice lightly and remove blot 12.
g. Remove pumps cover 1 and remove seals 8, 9, 10 and 11.
h. Remove forward end-cover 7, 8, 9, 10 and 11.
i. Remove bearing 3, 4 and gear 5, 6 from pump body 2. If remove bearing difficult, you can press gear.
j. For the convenience of correct reassemble, it is to put the disassembled parts as shown in Figs.7-1.

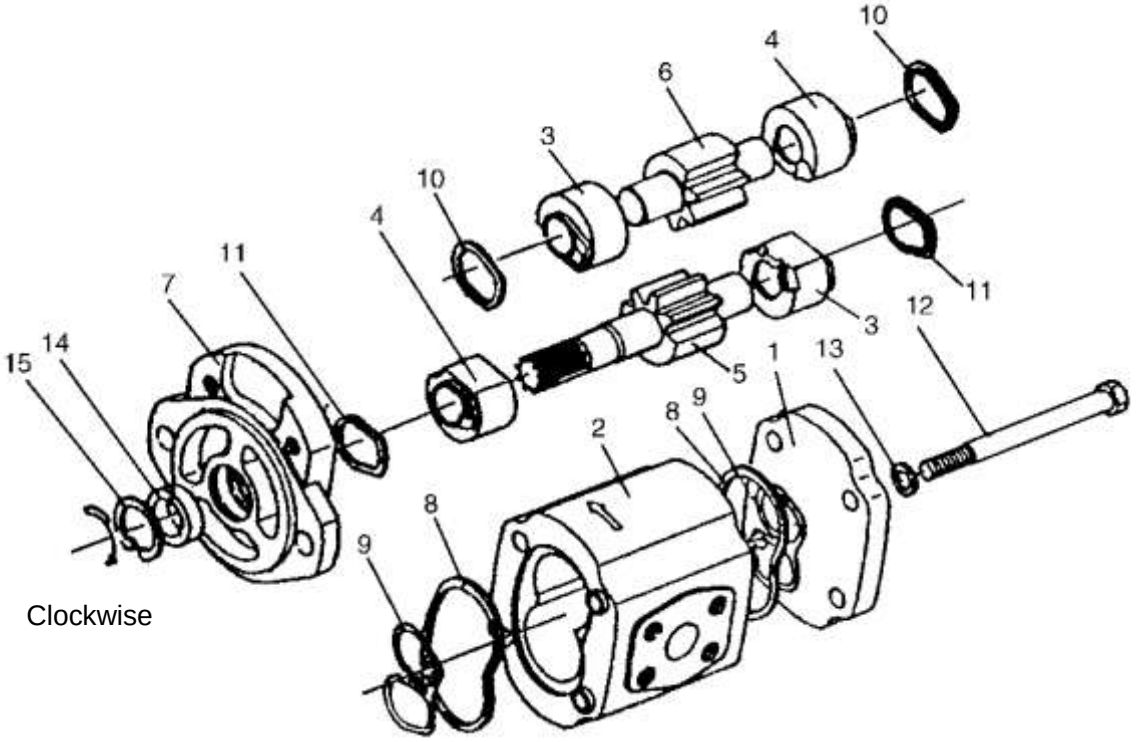

Fig. 7-1 clockwise gear pump

1.End cover	2. Gear plate	3. Bearing	4. Bearing	5. Driving gear
6. Driven gear	7. Front end cover	8. Seal ring	9. Seal ring	10. Seal ring
11. Seal ring	12. Bolt	13. Lock washer	14. Oil seal	15. Snap ring

The main pump of 1t-1.8t G26 is the same as the above mentioned pump, just the direction of turning is not the same.

https://truckmanualshub.com/

3.2 2t-3.5t main pump

2t-3.5t hydraulic system adopts CBHZG model gear pump. Gear pump CBHZG is an external gear pump with axial interval self-compensation and radial hydraulic balance. By using special structure, low noise comparing with those in symmetry. backing boarderials used in the parts effectively improve the performance and make it reliable, i.g, DU sleeve in bearing, double metal backing boarderial of side plate, AL. alloy die casting of front and rear cover, extruding AL. alloy of middle section, etc.

CHBZG left rotation see fig.7-2, right rotation see fig.7-3. The difference of counter-clockwise and clockwise pump is 3 shape backing plate. The direction of them is different.

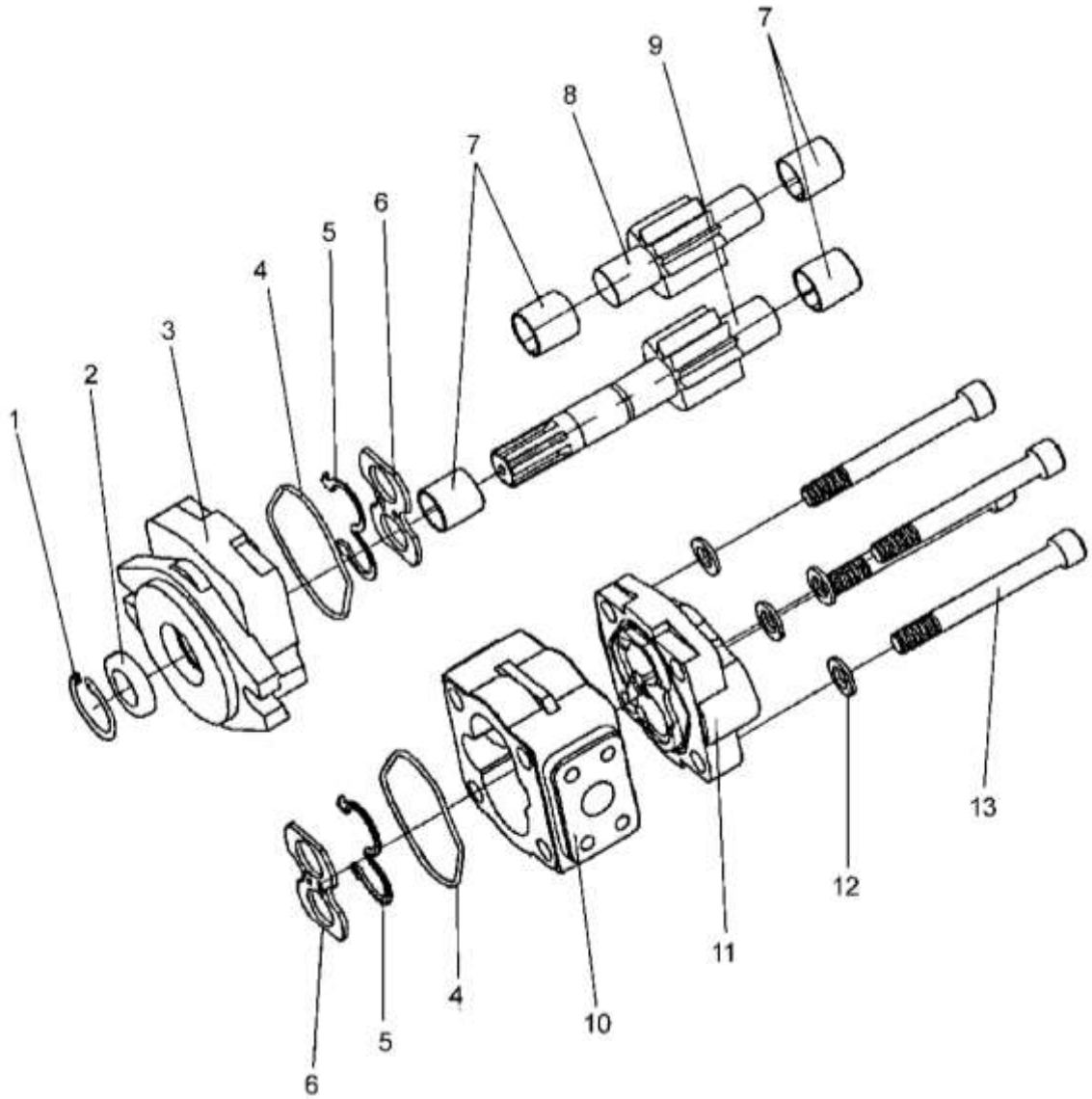

Fig. 7-2 CBHZG counterclockWise rotation gear pump (left)

1. Snap ring	2. Oil seal	3. Mounting flange	4.Seal plate
5. 3 shape backing plate		6. Pressure plate	7. Bush
8. Driven gear	9. Drive gear	10. Gear plate	11. End cover
12. Washer	13. Mounting bolt		

https://truckmanualshub.com/

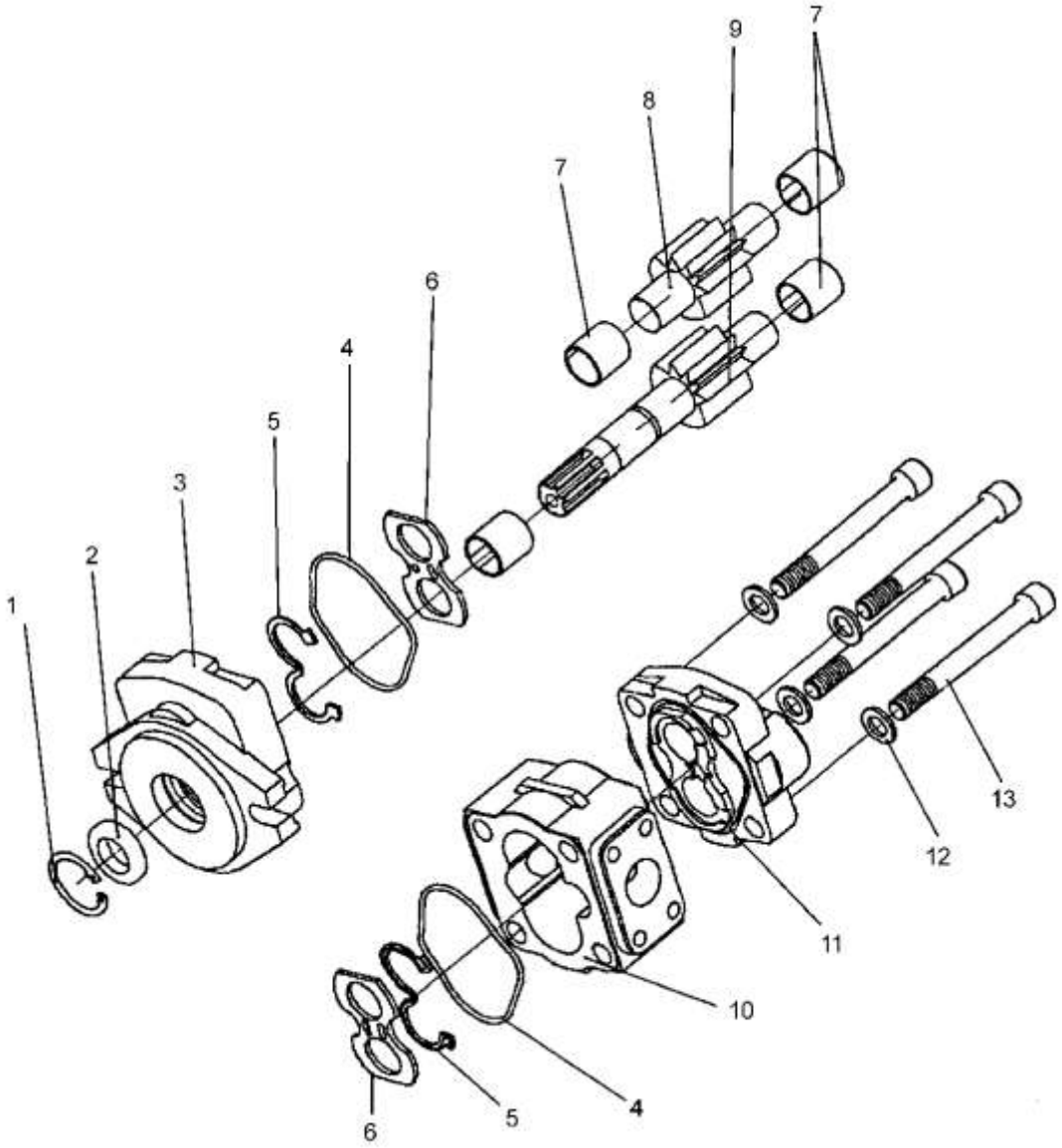

Fig. 7-3CBHZG clockwise (Right) rotation gear pump

1. Snap ring	2. Oil seal	3. Mounting flange	4.Seal plate
5. 3 shape backing plate		6. Pressure plate	7. Bush
8. Driven gear	9. Drive gear	10. Gear plate	11. End cover
12. Washer	13. Mounting bolt		

4. Control valve

Two pieces type control valve consists of four pieces of valve body, two plungers, a relief valve and a divided valve. Four pieces of valve body are assembled with three blots and nuts. Tilting plunger is fitted by tilting lock-self valve. According to requirement of work device, it is capable to add combined lock vale and rotating valve.

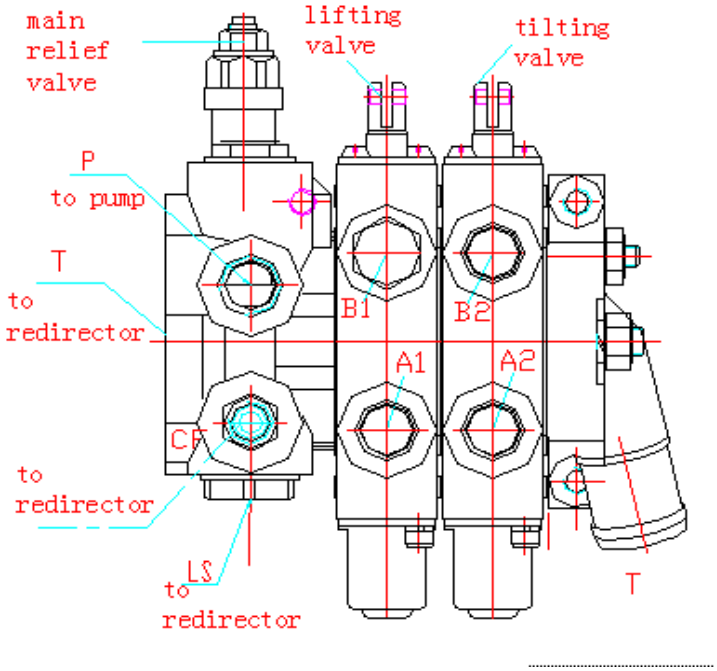

Fig.7-4 Control valve for 1t～3.5t forklift truck

4.1 Main relief valve and flow dividing valve

Main relief valve is a pilot valve; it is used for limiting the maximum pressure of system. Main relief valve disk is not opened in normal condition. When the truck works at overload condition, or hydraulic system faults come, the system pressure is up to the set value of main relief valve ,the pilot valve disk firstly opens, and then control valve disk opens to make system pressure not increase continuously, so, it ensure system safe.

Steering relief valve is a directly operated type valve. Its set value is lower than main relief valve, when steering system occurs faults or load is too big, pressure is up to set value by spring, and pressure overcome spring and friction force to open relief valve. So it ensures steering system safe.

One end of pilot valve disk connects with oil inlet of steering valve, and the other end connects with steering valve outlet(signal port), so it make the pressure difference keep invariableness, pilot valve supply proper oil flow according to the rotated speed of steering wheel by driver.

Extra oil flows to supply other working devices via control valve. This device can improve system efficiency, reduce oil temperature, improve experimental environment of system

https://truckmanualshub.com/

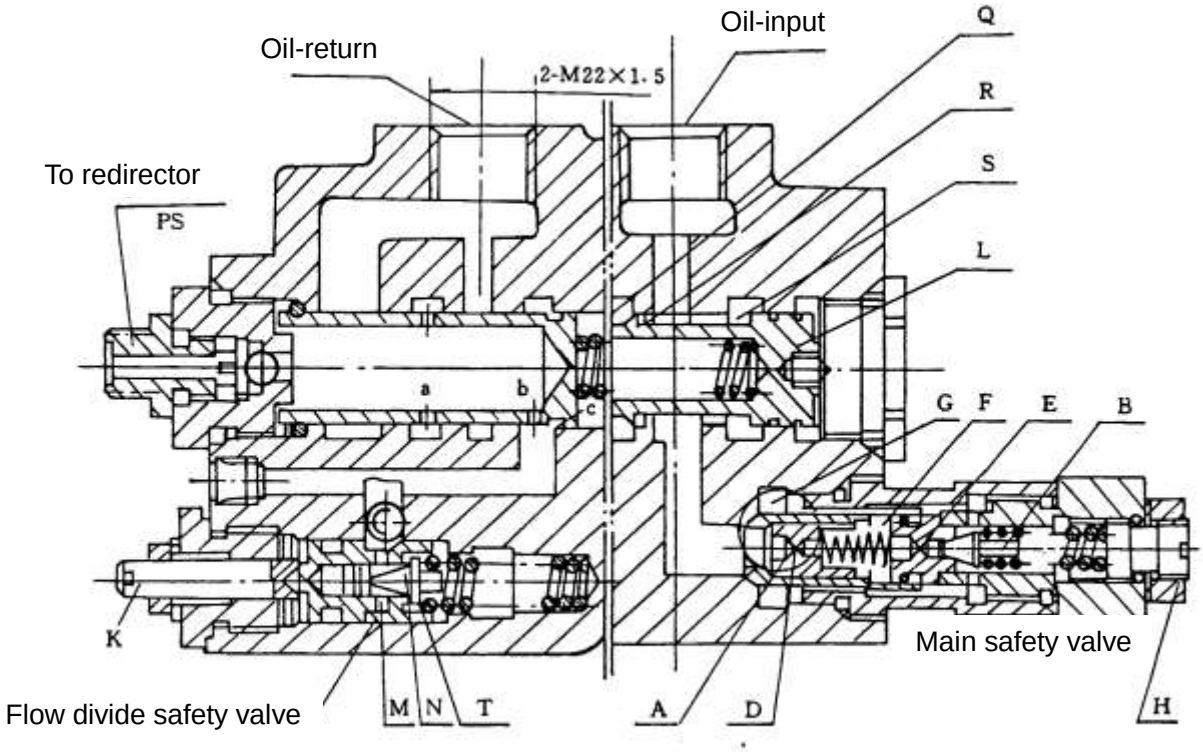

Fig. 7-5

4.2 Adjusting the pressure of the main relieve valve

The pressure of the main relieve valve is all ready adjusted in the factory, and it can't be adjusted generally. The following is an example of 3t truck to specify how to adjust the pressure.

(1). Put 125 percent of the rated load (3750kg) on the forklift stable.

(2).Step the accelerated pedal to the end, control the lift pole, if the forklift can get the height of

0mm-300mm, the main relieve valve is all right. Otherwise, adjust it as step (3).

(3).If the forklift can't work, enhance the pressure main relieve valve, remove the front soleplate, loosen the tightening nut of the main relieve valve, screw the adjusting nut clockwise to enhance the pressure of the main relieve valve. If the height of lift is higher than 300mm, screw the adjust nut anti-clockwise to reduce the pressure.

(4).Step the accelerated pedal to the end to make the forklift in the height range of 0mm-300mm. Otherwise, adjust it as step (3).

(5).Retighten the tightening nut, fix it on the front soleplate.

Warning:

·The load should be put stably.

·Don't adjust if the pressure is already adjusted correctly.

4.3 Operation of tilt lock valve

Tilting lock valve is fitted by lock-self valve to prevent vibration owing to back pressure inside tilt cylinder and avoid casualty because of miss-operation. According to common structure, it can operate tilt spool to tilt forward after engine is

https://truckmanualshub.com/

off, but using the tilt lock valve, when engine is off, it cannot tilt mast forward even push the lever of operation valve, the structure is shown as Fig. 7-6.
Connector of valve body: “A”,“B” connects separately with frond and rear house of tilt cylinder piston. When pulling out spool, high pressure oil (P) enters connector “A”, oil in rear house returns to oil tank (T), in this time mast is in tilting backward.

When pulling tilting spool, high pressure oil enters connector “B”, by high pressure oil, lock valve in spool works to make “A” to connect with low pressure. When engine is off or stop, lock valve in spool cannot work without high pressure oil, so that connector “A” can not connect low pressure line and mast cannot tilt forward, also there is not back pressure in tilt cylinder.

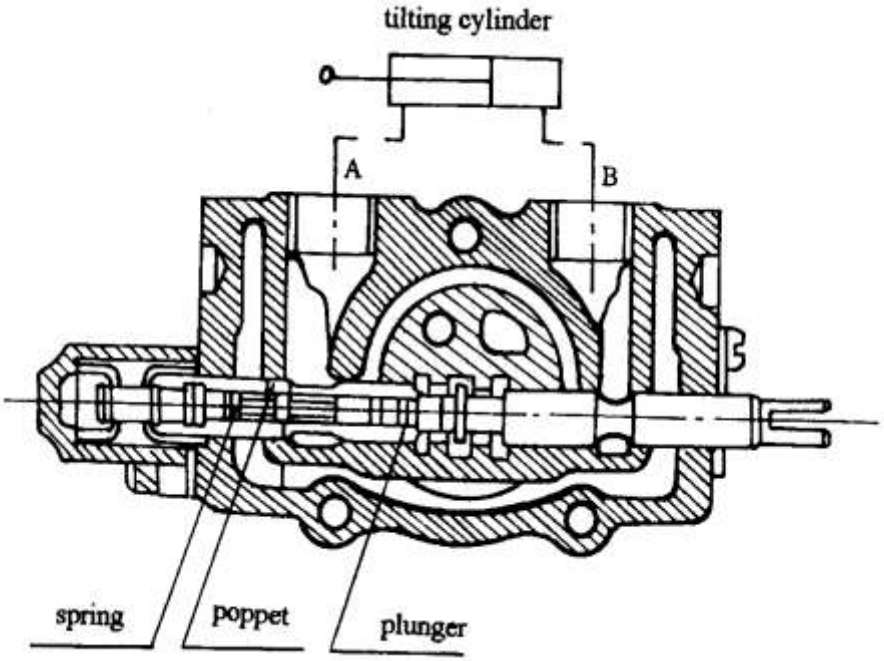

Fig. 7-6

5. Hydraulic piping

The high pressure oil from main pump goes to control valve and divide it to two parts by priority valve inside control valve: one of them preferentially goes to steering gear control steering cylinder, excess part goes to lifting cylinder or tilting cylinder. When lifting and tilting spool is in neutral, high pressure oil return oil tank directly from pass way. When pulling lifting spool, high pressure oil goes by throttle valve and then push piston rod under lifting cylinder piston. When pushing lifting spool, it is that bottom of lifting cylinder piston connects with low pressure line and then piston rod drops by deadweight and weight of cargo. In this time, oil from lifting cylinder goes by unidirectional speed limiting valve so as to control the falling speed. When operating tilting spool, high pressure oil goes to front house of tilting cylinder and another connects with low pressure line so as to make mast tilt forward or backward.
The cut off valve is used under right lifting cylinder, its function is to prevent goods falling suddenly when oil pipe is busting.

HANGCHA

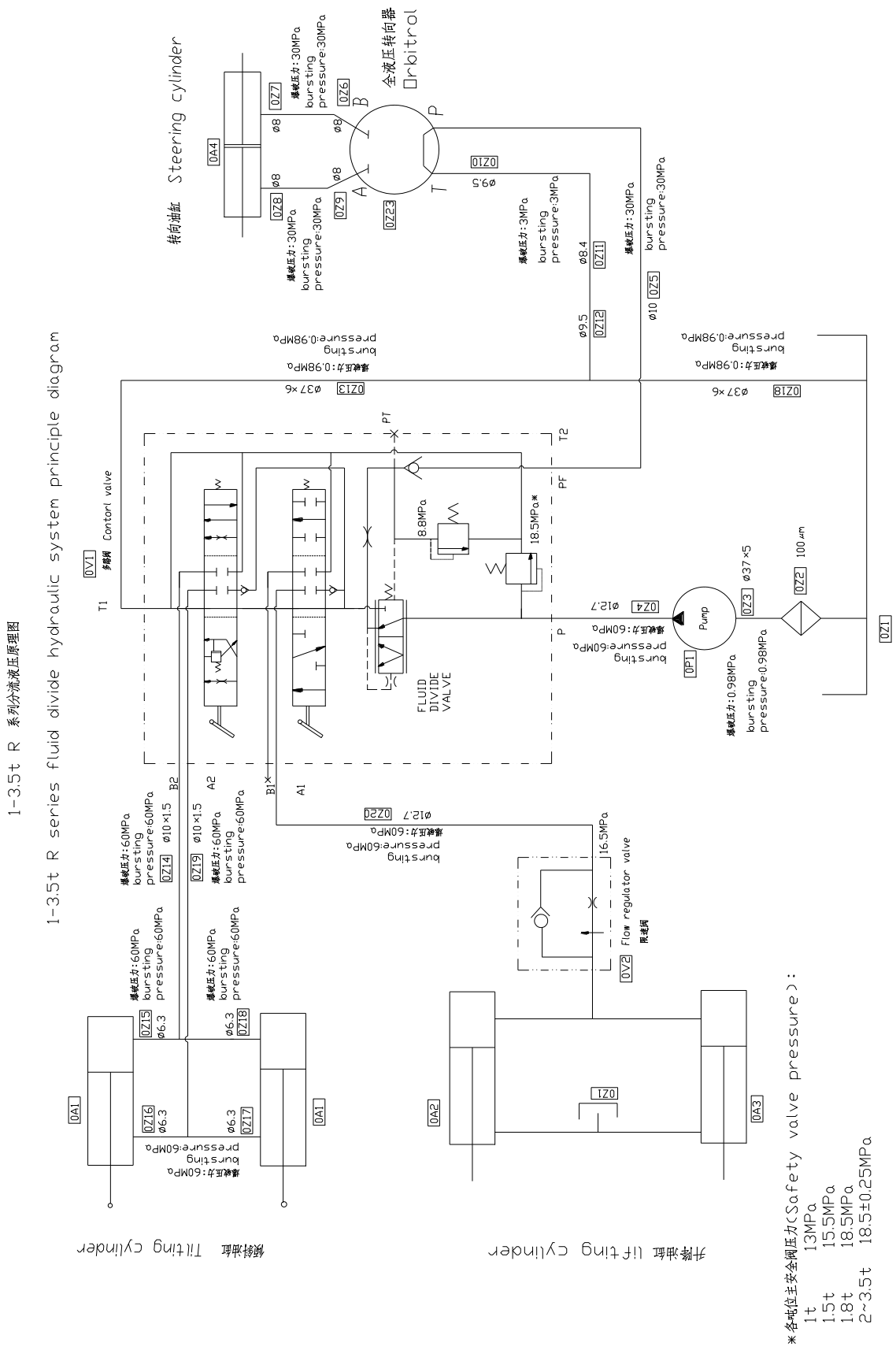

Fig. 7-7 Schematic figure of hydraulic system

Ⅷ.Lifting system

1. Assemble debugging data

Debugging data Double mast and triple mast

Mast type		Standard type and lifting height of 2～4 meter	Lifting height >4～5 meter	Lifting height > 5～6 meter
Mast tilt angle	Forward	6°	6°	3°
	Backward	12°	6°	6°
Fork arm carrier roller		Adopt combination roller and side roller if rated capacity is less than 3 .5t.		

Inspection and adjustment

Place	Assembly clearance (mm)	Repair clearance(mm)
Mast to lift roller	0.1～0.8	0.2～1
Shims	0.5,1.0,2.0	
Mast to back up metal	0.1～0.8	0.2～1
Shims	0.5,1.0,2.0	
Inner mast to carriage side roller	0.1～0.6	0.2～1
Shims	0.5,1.0,1.5	
Lift chain deflection	25～30 mm	

Tightening torque

Place	Model or Lifting capacity	N·m
Lift chain lock nut	1-1.8t	193-257(M16)
	2～3.5t	245-314(M20)
Mast support cap blot	1-1.8t	124-165(M14)
	2～3.5t	176-216(M18)
Tilt cylinder lock nut	1-1.8t	89-118(M14)
	2～3.5t	
Lift cylinder bolt(top)	1-1.8t	76-107(M12)
	2～3.5t	
Lift cylinder bolt(bottom)	1-1.8t	22-30(M8)
	2～3.5t	
Lift cylinder fixing bolt(cylinder light bolt)	1-1.8t	76-107(M12)
	2～3.5t	

Basic model mast weight

Model(truck)	1t	1.5 t	1.8t	2t	2.5t	3t	3.5t
Weight(mast) kg	531	531	540	575	644	721	820

https://truckmanualshub.com/

2. Trouble diagnoses and corrections

Condition	Probable cause	Corrective action
Fork arm carrier or mast tilt by itself.	1.Tilt cylinder and ring abraded excessively	Replace piston ring tilt cylinder.
	2. The hydraulic control valve spring is inoperative.	Replace it.
The fork arms carrier moves up and down sluggishly.	1. Caused by piston jamming or bent piston rod.	Replace the faulty parts.
	2. Too much dirt is accumulated in the cylinder.	Strip it down and clean.
Forks are lifted or lowered non-smoothly.	1. Carriage bracket assembly out of adjustment.	Adjust clearance with thrust metal and carriage side roller.
	2. Insufficient clearance between inner and outer masts or rollers and mast.	Adjust clearance with rollers.
	3. Biting foreign backing boarderials between moving part.	Remove foreign backing boarderials.
	4. Insufficient lubrication.	Apply grease on contact surfaces of sliding parts.(butter)
	5. Bent carriage bracket assembly.	Repair or replace.
Forks are lifted unevenly	1. Lift chains out of adjustable.	Adjust lift chains.
Lift roller does not rotate	1. Grease stiffened or dirt accumulated on lift roller and mast sliding surfaces.	Clean and lubricate lift rollers.
	2. Improperly adjusted lift roller.	Adjust.
Excessive mast noise	1. Insufficient lubrication.	Lubricate.
	2. Improperly adjusted lift roller, side roller and back-up metal.	Adjust.
	3. Rubber pad on lower of outer mast is useless for container fork lift truck.	By adjusting shims and rubber pad, piston rod is in touch with bottom of cylinder body after inner mast is in touch with rubber pad.

https://truckmanualshub.com/

Condition	Probable cause	Corrective action
Insufficient lift power or no lift movement.	1. Excessive wear occurs between the oil pump body and gears, causing too much clearance.	Replace the worn parts or the oil pump.
	2. The lifting jack piston Yx-ring has worn, resulting in excessive inner leaks.	Replace Yx-ring.
	3. Springs of the multiple control valve and its relief valve are inoperative oil leaks.	Replace.
	4.Excessive wear occurs of the hydraulic control valve, resulting in excessive oil leaks.	Replace.
	5. Oil leaks occur between the hydraulic control valve sections.	Dismantle for regrinding the joint surfaces and reassemble the valve.
	6. Leakage occurs in the hydraulic pipe.	Tighten the joint nuts and inspect the seal for damage.
	7. The hydraulic oil temperature is too high. Oil viscosity is too low and the rate is insufficient.	Change the wrong hydraulic oil or stop operation for reducing the oil temperature. Find out the reasons for high oil temperature and eliminate the trouble.
	8. The load carried is beyond the designed capacity.	Observe the lifting capacity limit.

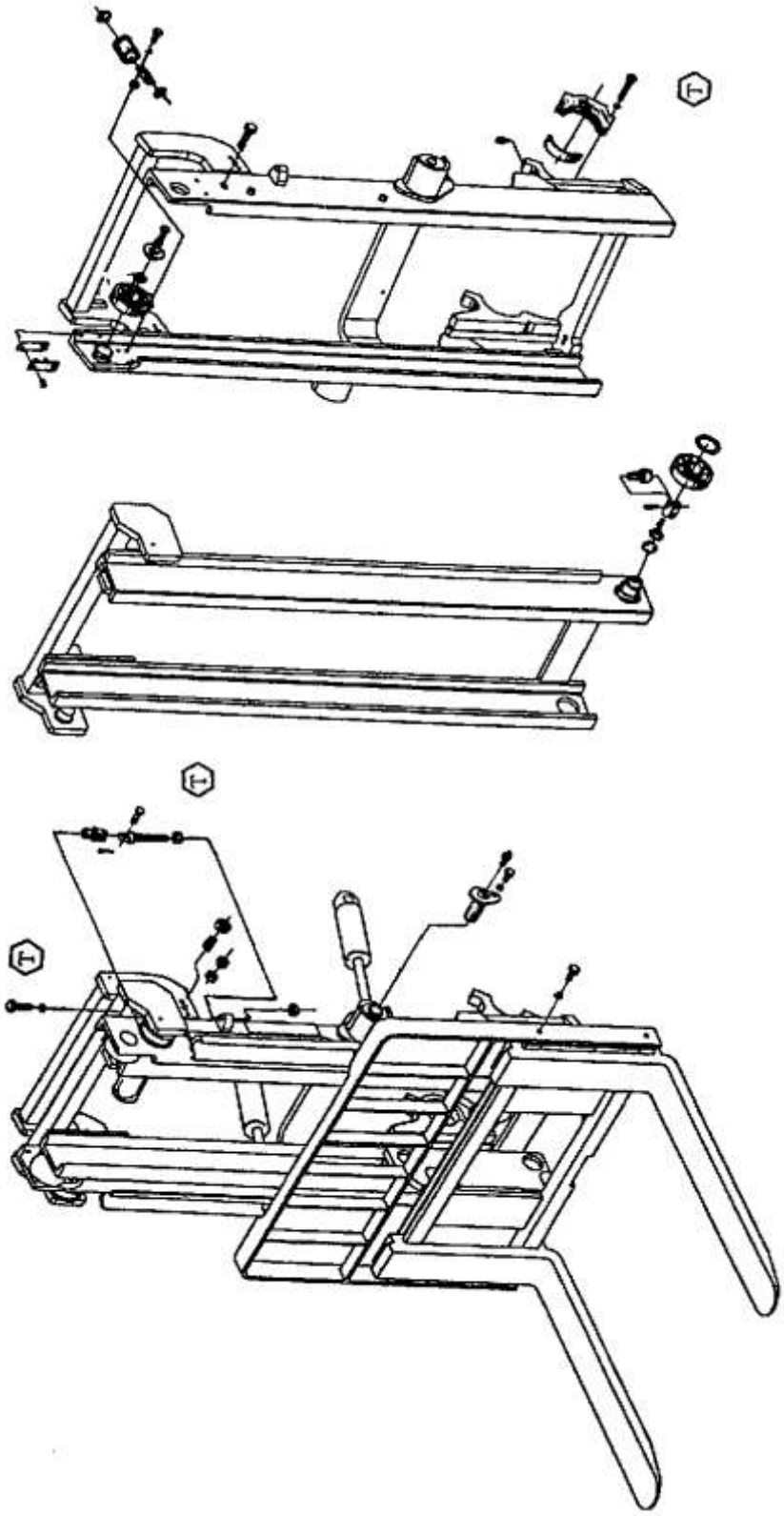

N30M300-000000-000 Lifting Mast assembly

Ⓣ Tightening torque See foregoing table

https://truckmanualshub.com/

3. Summary

The lifting system is composed of inner and outer mast, fork arm carrier, fork arm, load backrest, chain, roller, lifting jack, and tilt cylinder, etc. Oil line system, hydraulic pressure system and it compose fork lift truck work equipment. This equipment is performing framework of load and unload. Commonly common masts have simple mast, Double mast and Triple mast class mast framework type. Fork lift truck what is made in our company backing boardch Double high visibility mast, Double full free lift mast (including container mast), Triple full free lift mast, mast framework adopted is CL model juxtaposition roller type.

3.1 Double high visibility mast

Double mast is composed of outer mast which can't lift and inner mast which can lift. Lifting jack bottom is fixed on outer mast below cross beam, oriented with pin. Piston rod extremity is joined with upper cross beam of inner mast; cylinder body is fixed on outer mast fixation board with U-bolt. Commonly free lift range is 100mm~130mm, which is difference with different tonnage. Two lifting jacks (Fig.8-5 is right) are laid out back of outer mast to realize high visibility; two lifting jacks are laid outside of outer mast.

Fork arm is hung on fork arm carrier by hook. Roller, combined roller (side roller is installed middle of roller outside) and side roller (It is adopted combined roller in 1-1.8 tonnage forklift truck) is installed on fork arm carrier. Combined roller is installed on below of inner mast.

Pressure oil from hydraulic control valve is entered into lifting jack by unidirectional speed limiting valve, forced piston and piston rod rising, thereby forced inner mast rising. At the same time one end of lifting chain on inner mast is fixed on outer mast, the other is joined with fork arm carrier. Fork arm carrier and fork arm is rising with inner mast rising to realize aim of lifting goods.

It is basis model that our company offers forklift truck which lift 3 meter high. It is especial model that our company offers forklift truck which lift height else (2~6 m).

3.2 Double full free lift mast (including container mast)

Double full free lift mast (Fig.8-2) is also composed of inner mast, outer mast, fork arm carrier, and etc, is also belong to high visibility mast. It is different from common standard type mast that two postpose long lifting jacks are both pole stopper type cylinder. One piston rod is hollow, hole of piston rod is dypassed for hydraulic pressure oil flowing into free lifting jack. End of piston rod in two long lifting jacks is joined with upper branch of inner mast. Besides, short lifting jack who is installed middle of inner mast is named as free lifting jack. Free lifting jack is also pole stopper type cylinder.

Fork arm can rising or falling when height go beyond 1400mm, because inner mast don't rising when free lifting jack rising or falling. There are different specifications in this series of height, 2.5m, 2.7 m, 3 m, 3.3m, 4 m and etc. Free lifting height is commonly about 1050~2100mm.

When lowest height of mast ≥2200mm, lift height is 3m, full free lift height is about 1500mm. It can work inside container，mast which include side-shift is named container fork lift truck mast (see Fig.8-3). Side shift cylinder of container fork lift truck mast can be side shifting only when goods don't placed appropriate position. In another condition, side cylinder should set center.

Structure of left and right lifting cylinder of more than or equal to 3 t, see fig.8-7, fig.8-8;

Structure of left and right lifting cylinder of less than or equal to 2.5 t，see fig.8-9, fig.8-10.

HANGCHA

3.3 **Triple full free lift mast**

Triple full free lift mast(fig.8-4 is composed of outer mast, middle mast, and inner mast, middle mast and inner mast can flex. There are different specifications in this series of height, 4m, 4.3m, 4.5m, 4.8m, 5m, 5.5m, 6m, 6.5m, 7m, etc. It is different from double full free mast that mostly it includes middle mast, and its two postpose long lifting jacks are both piston type cylinder

(fig.8-5), and its oil system rather complex than oil system of double full free mast. Free lift cylinder structure see fig.8-6.

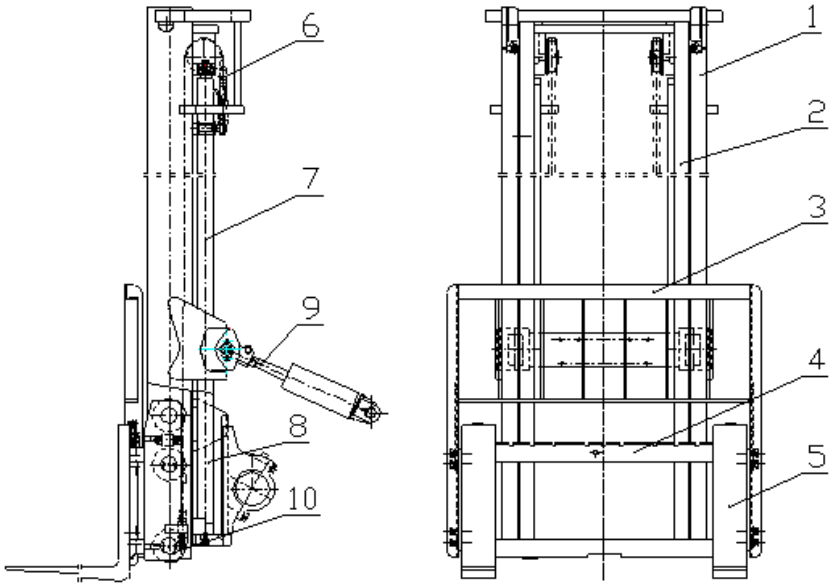

Fig. 8-1 Double stage wide view mast

1. Outer mast 2. Inner mast 3. Load-backrest 4. Fork arm carrier

5. Fork arms 6.Chain 7.Left lifting cylinder 8.Right lifting cylinder

9. Tilting cylinder 10.Roller

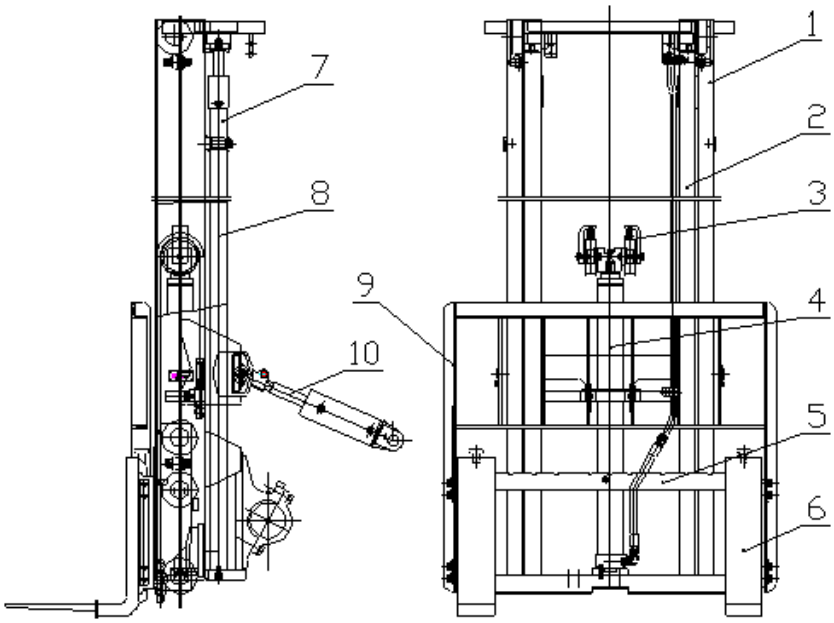

Fig.8-2 Double grade full free lifting mast

1.Outer mast 2. Inner mast 3. Chain 4. Free lifting cylinder 5. Fork arm carrier

6. Fork arms 7.Left lifting cylinder 8.Right lifting cylinder 9. Load-backrest 10. Tilting cylinder

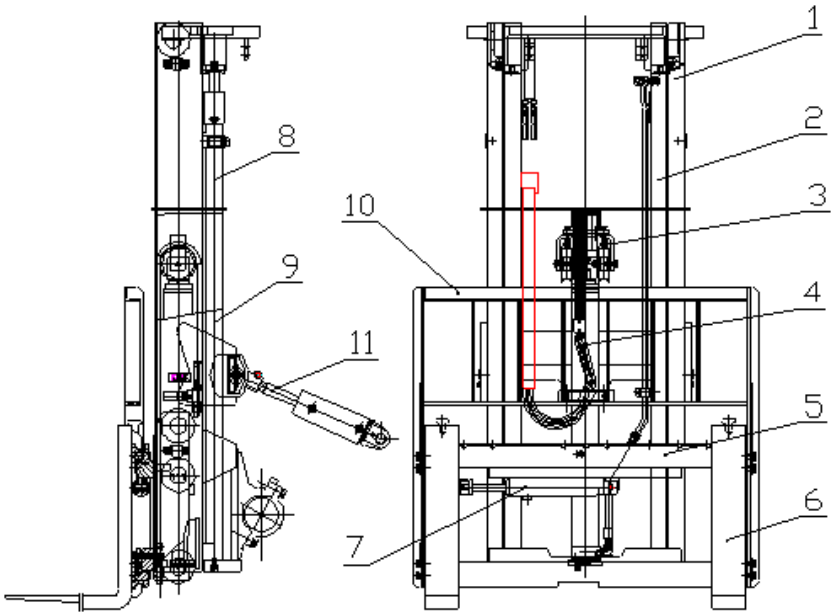

Fig.8-3 Containers forklift mast

1.Outer mast 2. Inner mast 3. Chain 4. Free lifting cylinder 5. Fork arm carrier 6. Fork arms 7. Side move cylinder 8.Left lifting cylinder 9.Right lifting cylinder 10. Load-backrest 11. Tilting cylinder

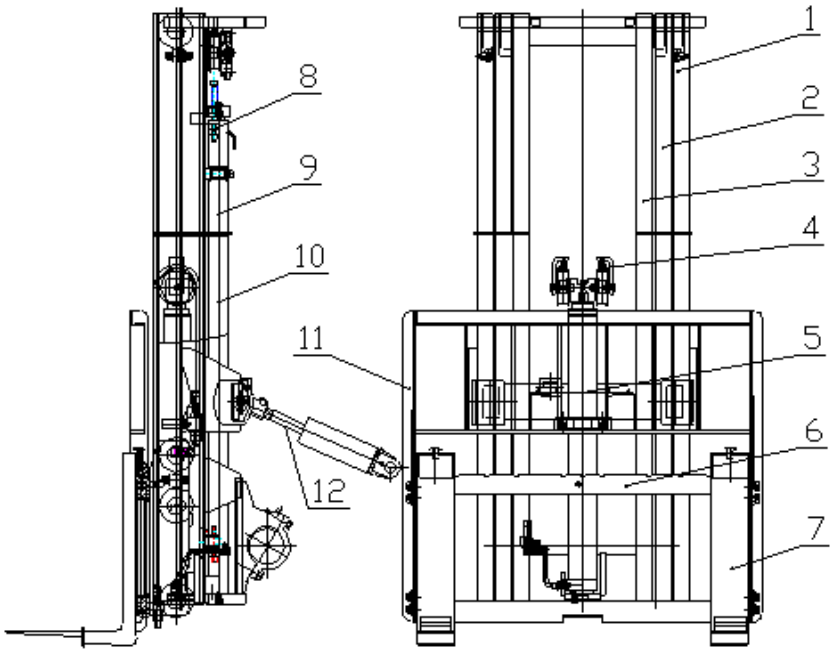

Fig.8-4 3 grade full free lifting mast

1.Outer mast 2. Middle mast 3. Inner mast 4. Front cylinder chain 5. Free lifting cylinder 6. Fork arm carrier 7. Fork arms 8. Chain 9.Left lifting cylinder 10.Right lifting cylinder 11. Load-backrest 12. Tilting cylinder

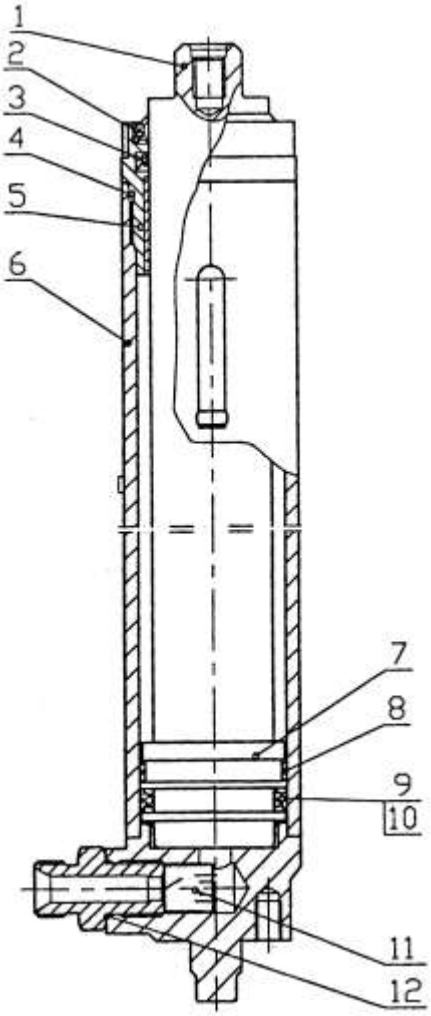

Fig.8-5 Lifting cylinder

(Used in fig.10-1, 10-4)

1. Piston 2. Dustproof ring 3. Gasket ring 4. O-ring 5.Guide sleeve 6.Cylinder 7. Piston 8.Support ring 9.Protect ring 10.gasket ring 11.Oil nozzle assembly(without left lifting cylinder)12 .O-ring

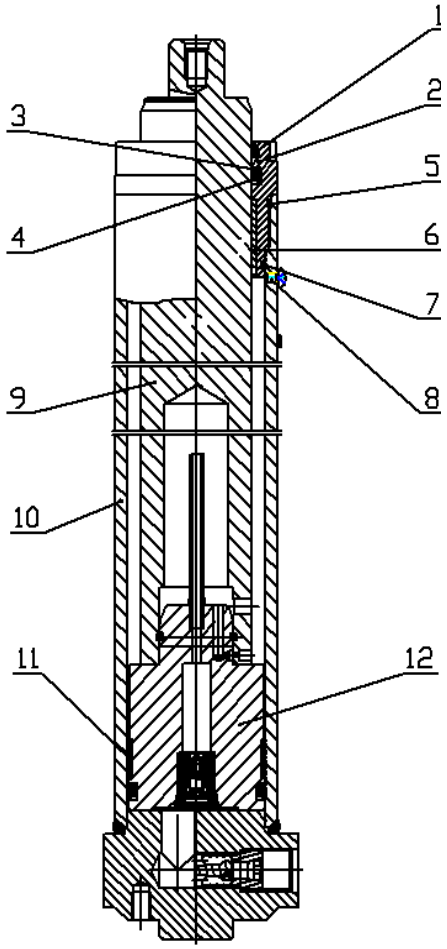

Fig. 8-6 Free lifting cylinder

(Used in fig.10-4)

1. Dustproof ring 2. Cylinder cover
3. Protect ring 4. ISI ring 5.O-ring
6. Compound bushing 7.O-ring
8. Bolt 9. Piston rod 10. Cylinder
11. WR Wearing ring 12. Piston

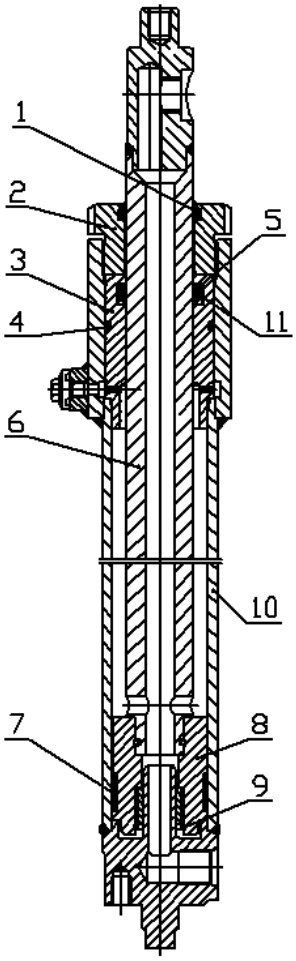

Fig.8-7 Lifting cylinder (left)

(used in fig.8-2, 8-3)

1.dustproof ring 2.Cylinder cover
3. Guide sleeve 4.O-ring
5. Stop piece 6. Plunger rod assembly
7. Support ring 8. Piston
9.Check ring 10. Cylinder 11. ISI ring

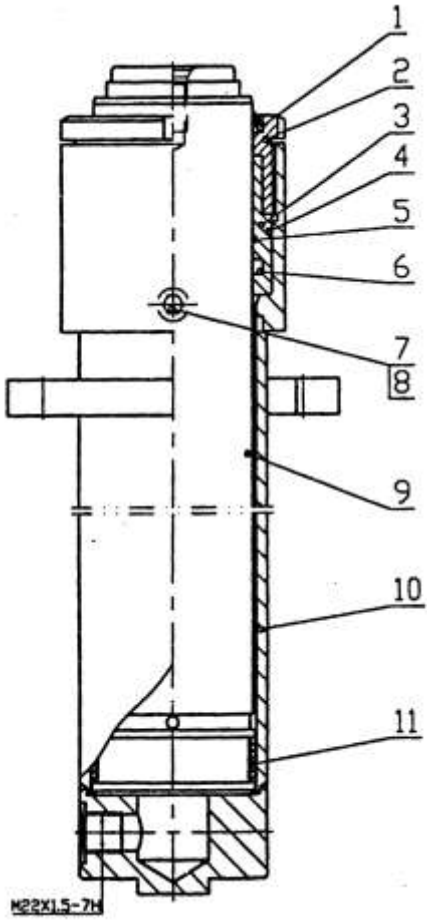

Fig. 8-8 free lifting cylinder

(used in 8-2、8-3)

1. Dustproof ring 2. Cylinder cover
4. Guide sleeve 4.O-ring
5. O-ring 6.seal ring 7.O-ring
8.deflation plug 9. Piston rod 10 cylinder
11. Support ring

More than or equal to 3t cylinder

https://truckmanualshub.com/

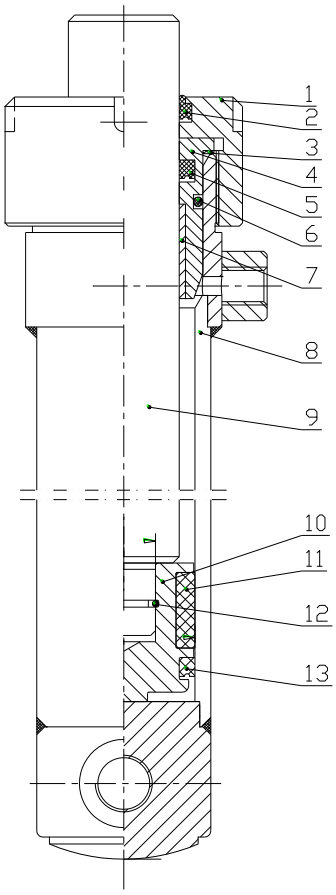

Fig.8-9
Lifting cylinder (left)
(used in fig.10-2,10-3)

1. Cylinder cover 2.dustproof ring
3. Adjusting washer 4. Guide sleeve
5.ISI-ring 6. O-ring 7.compound sleeve
8. Cylinder 9. Piston rod 10.piston
11.support ring 12.OSI-ring

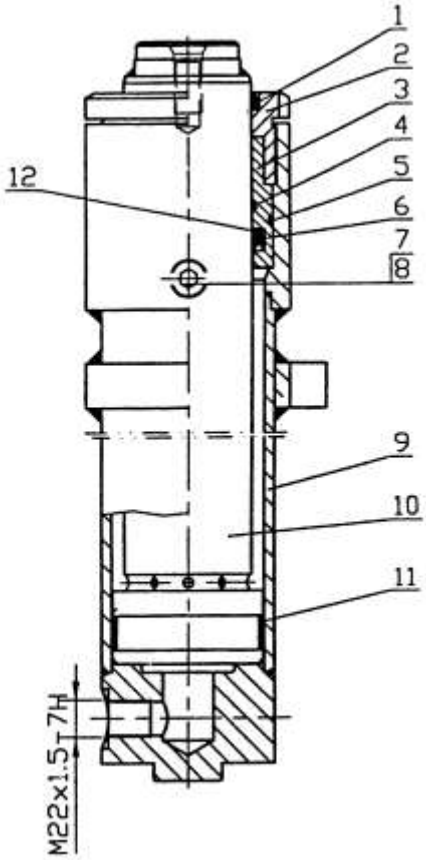

Fig. 8-10 free lifting cylinder
(used in 8-2、8-3)

1. Dustproof ring 2. Cylinder cover
3.Guide sleeve 4.O-ring
5.O-ring 6.seal ring 7.deflation plug
8. O-ring 9. Cylinder assembly
10. Plunger rod 11. Support ring
12. Stop ring

Less than or equal to 2.5t cylinder

https://truckmanualshub.com/

4. Removal and adjustment

WARNING

Be careful when removing and installing the forks, carriage and mast as they are heavy.

4.1 Remove forks and mast assembly

1）Unlock fork lock pins by pulling them and move forks to cutout portion in the middle of carriage bracket assembly.

2）Pull lower portion of fork to remove its lower jaw and lift it out.

WARNING

a. Keep hands and feet away from forks when removing and installing forks carefully, keep feet and hands clear.

b. Do not remove forks from the end of the fork bar. Severe injury can result if the fork is dropped.

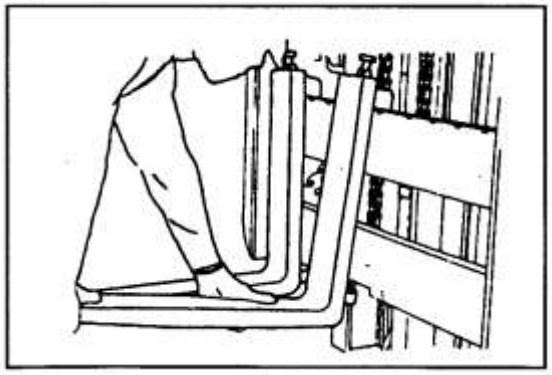

1）Attach wire ropes to carriage bracket assembly and lift carriage bracket assembly up with a lifting device.

2）Remove chain attaching nuts, and detach chains from carriage bracket assembly.

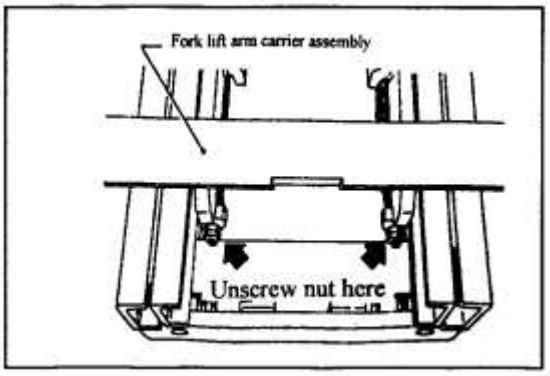

3）Remove carriage bracket assembly from inner mast.

4）Detach high pressure hose, lift hose and low pressure hose.

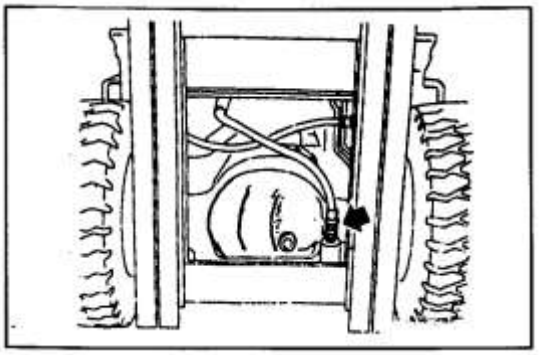

5）Support mast assembly with wire ropes.

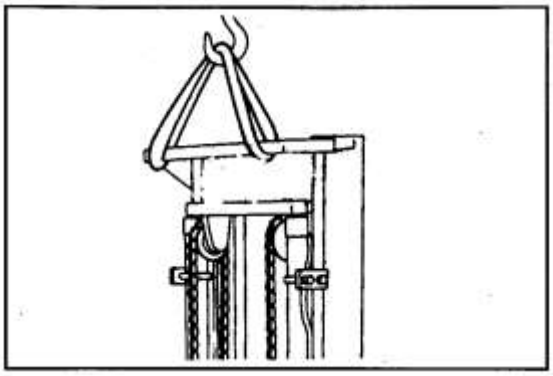

6）Pull out tilt cylinder pivot pin.

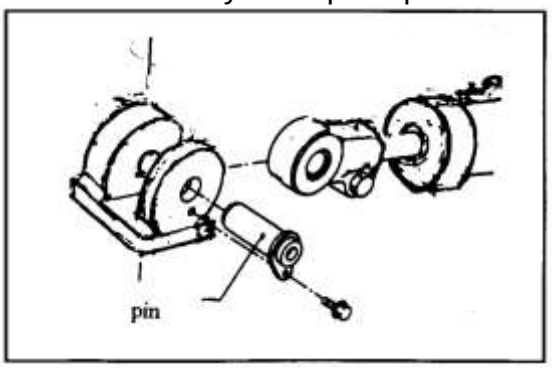

7）Remove mast support caps.

https://truckmanualshub.com/

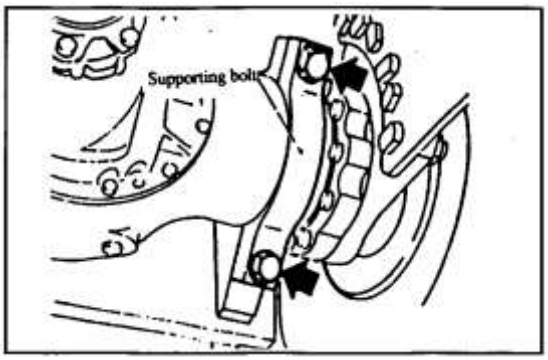

8） Remove mast assembly.

9） To install mast assembly, reverse order of removal.

4.2 Disassembly

WARNING

Be careful when disassembling the masts as they are heavy.

Remove lifting jack

1） Place mast flat on ground. Remove lifting jack attaching bolts-bolts and tighten screw.

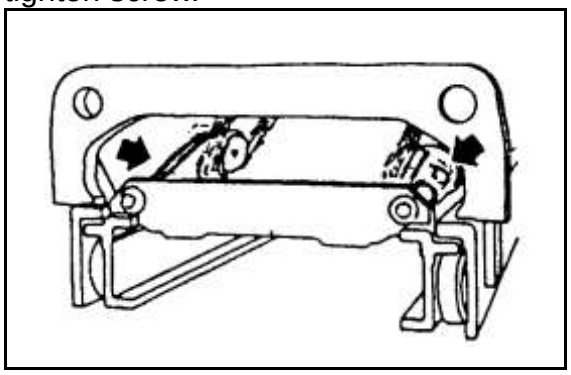

2） Slide inner mast, then remove lifting cylinders.

Remove roller

1） Slide inner mast out until rollers are exposed and remove little rollers with bearing puller. Make two pieces of round board about 10mm thick and their diameter are Φ53 and Φ58, covered on the seat of roller. Then remove the compound roller and main roller with bearing puller.

2） Unclench rollers carefully if no bearing puller or rollers would be smashed.

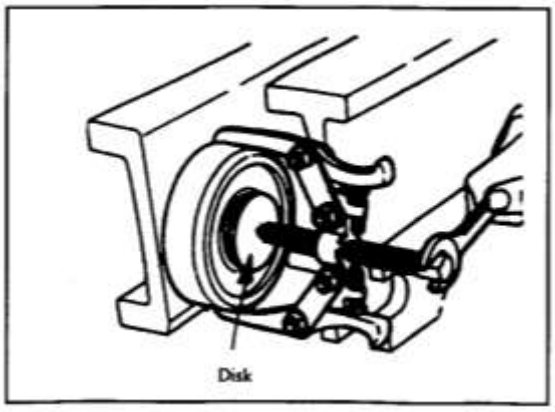

Remove inner mast

Attach wire rope to middle of inner mast and slide it out with a lifting device.

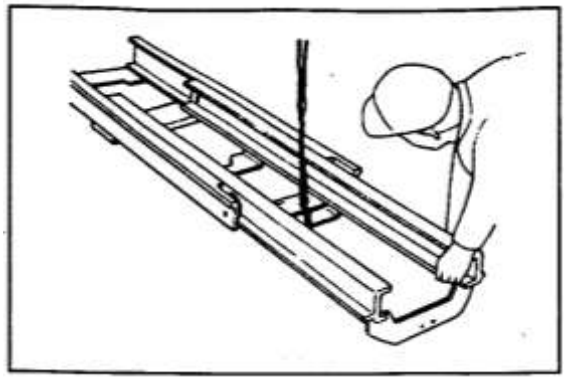

INSPECTION

1） Check lift rollers, roller shafts, and associated parts for wear or damage.

2） Replace damaged parts as required.

4.3 Assembly and adjustment

WARNING

Be careful when assembling the masts as they are heavy.

Lift roller

Slide inner mast into outer mast and securely attach lift rollers.

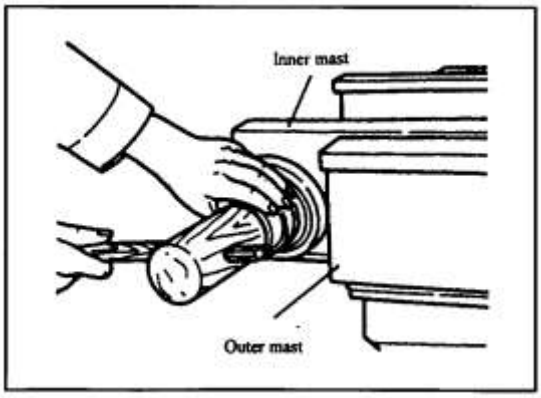

Lift roller-to-mast clearance adjustment

1） Set roller pitch of inner and outer masts to “L” dimension. Then proceed with the following adjustment.

Dimension “L” unit：mm

Model or tonnage / Max.lift height (mm)	III grade 3 t	II grade 2t～2.5t
2500～3300	368	328
3600	388	348
4000	418	378
4500	443	403

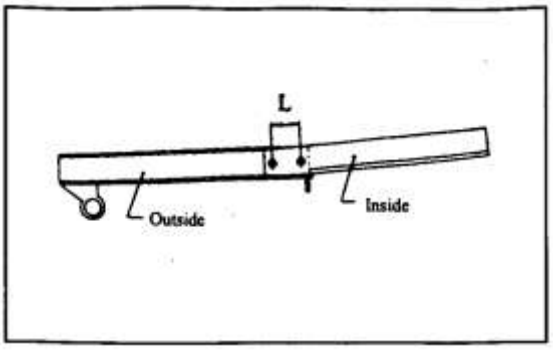

2） Adjustable range “A” with shims:

a. Dimension:0.1mm～0.6mm.(≤2 t)

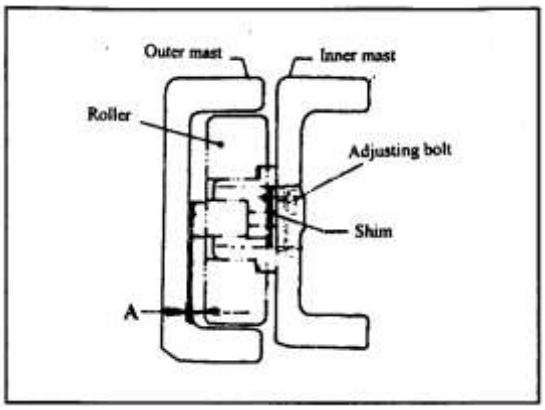

b. Dimension:0mm～0.5mm (2.5t～3 t).One or two may not using rubber pad; Dimension:0.1～0.6mm if no rubber pad.

Orientation pin ensure that side roller is vertical to inner mast track.

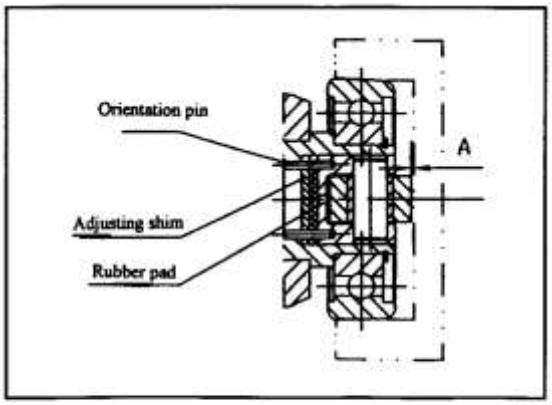

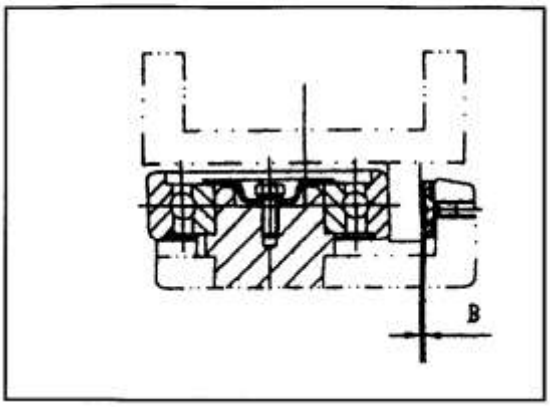

3） It is suitable that clearance of roller and outer mast is about 0.8mm～1mm. Clearance can’t adjustable. Replace it if roller wear too much.

4） Apply lubrication (butter) to interface of inner mast and outer mast, interface of roller and mast. To prevent sand from entering, it is decided whether to apply lubrication or not in the area where sand blown by wind heavily.

https://truckmanualshub.com/

Clearance of back up metal and mast steel

Adjust clearance “B” to 0.1mm～0.8mm with shims, which may not use. Thickness of shim is 0.5mm or 1mm.

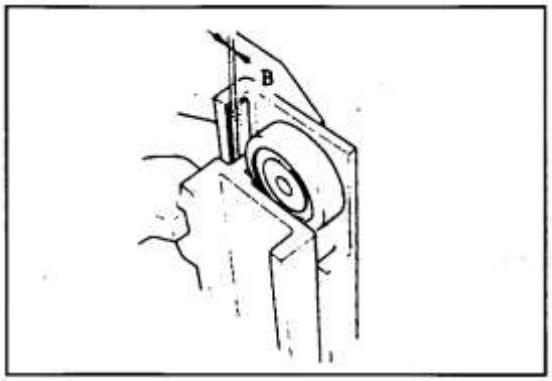

Apply a coat of grease to back-up metals. Install mast and lifting jack on forklift truck. Connect circle tube and high-pressure tube.

4.4 Left and right cylinder height adjustment.

1） Install left and right lifting jack on mast, pin must be installed into orientation hole of outer mast lower cross beam.

2） Install upper of piston rod on inner mast. Inner mast lay evenly in the direction of left, right, upper and lower. If it is not even, please adjust by putting washer between hole of cylinder support and upper end of piston rod.

3） Installs U-bolt onto cylinder, hand-tighten nuts and lock it with two tighten nuts. Screws down tighten bolt and nuts to avoiding loosing.

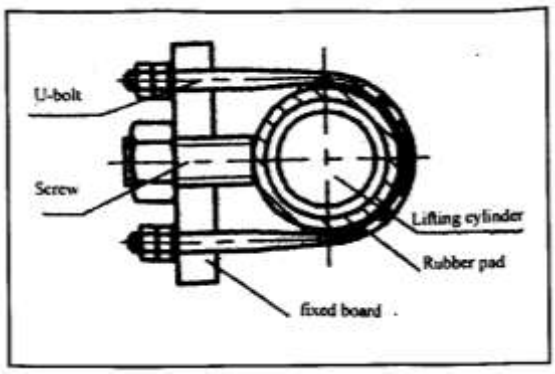

4.5 Lifting chain adjustment

Installs fork arm carrier on inner mast, and install lifting chain, then install two nuts on end of every side. With mast set straight up, lower carriage completely. Temporarily adjust clearance of carriage to 74mm-76mm above ground. If necessary, adjust with chain adjusting nut.

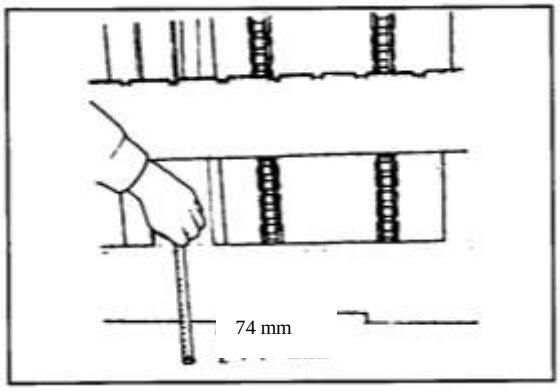

To adjust tension of lift chain, lower lifting jack until fork is on the ground ,and adjust chain adjusting nut (three every side) so that dimension C will be as listed below when the middle portion of chain is pressed by a finger.

Dimension C: 25mm~30 mm

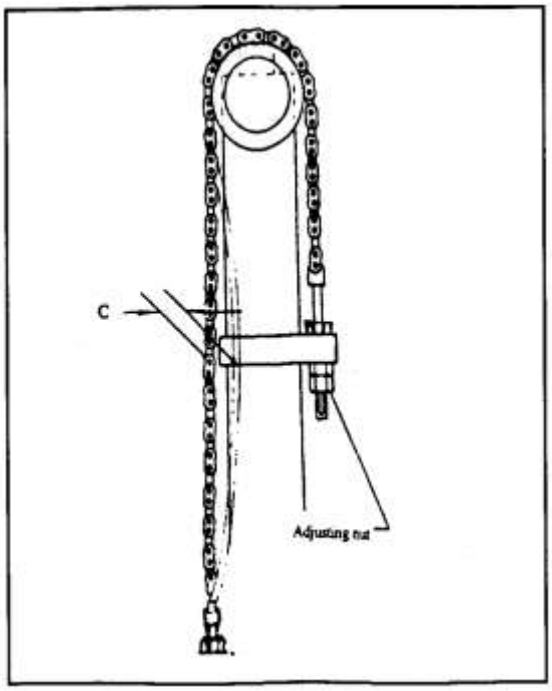

4.6 Clearance of fork arm carrier assembly and rollers adjustment

1） Measure inside width “A” between inner masts. Make measurements at the top, bottom and center (cross beam) sections.

https://truckmanualshub.com/

2） Measure right and left pitches,B,B′,B" of carriage side roller, carriage roller and thrust metal.

3） Calculate A-B, A-B′and A- B".Each result shows clearances between each roller and inner mast. Adjust shims of each roller evenly on the left and right and make clearances, between smallest part of inner mast and carriage side roller.

A – B = 0.2mm～1 mm

A - B′ = 0.1mm～0.8 mm

A - B "= 0.1mm～0.8 mm

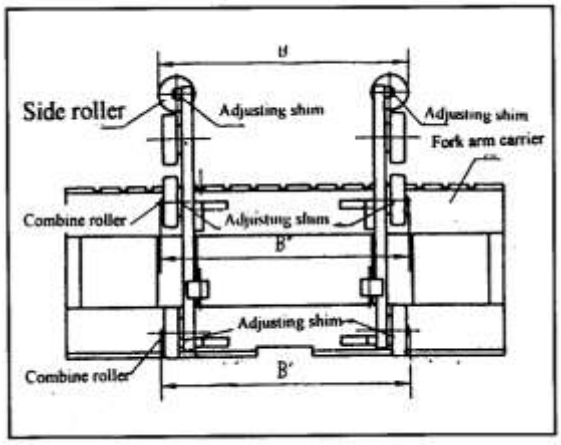

Shims

0.5 mm 1 mm

a. Number of shims must be the same on the right and left sides, when using shims.
b. After clearance adjustment, push carriage assembly to see if it operates properly.

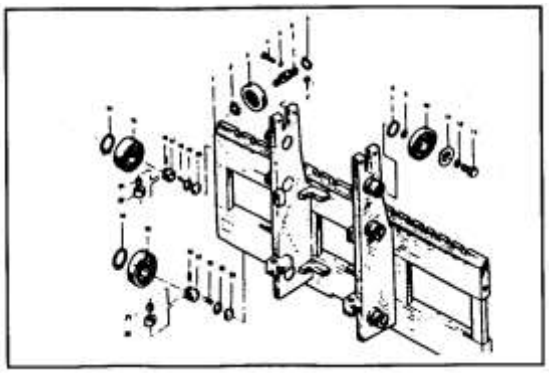

5. Disassembly and installation of lifting jack

WARNING

Keep body away from equipment

1） Turn out engine, then make lifting jack falling into lowest condition that lower of piton rod is touched bottom of cylinder body so as to oil flowing back tank completely.
2） Unscrew piston rod and bolt.
3） Disconnect circle oil pipe, remove high pressure tubes.
4） Remove U-bolt of outer mast fixation board and tighten skew of other side.
5） Remove chain of outer mast.
6） Attach wire rope to inner mast and remove left and right lifting jack with a lifting device.

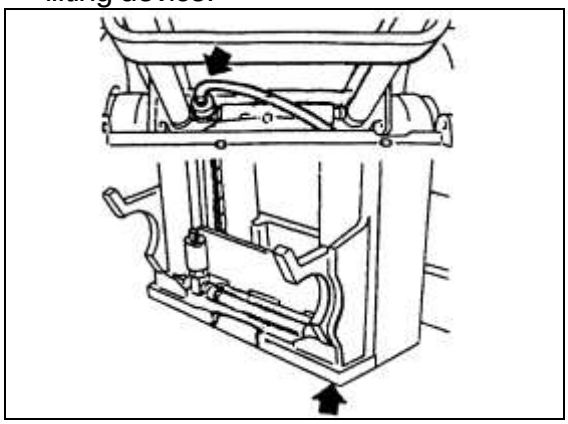

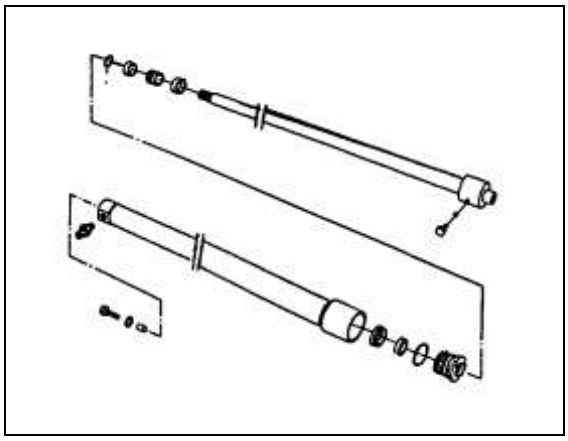

https://truckmanualshub.com/

5.1 Disassembly

Rated capacity is less than 2.5 t

Remove cylinder head and guiding bush

Rated capacity is more than 3 t

Removes tighten skew and nylon stopper, then remove cylinder head.

1） Remove dust gasket ring.

2） Remove Y-ring with screwdriver.

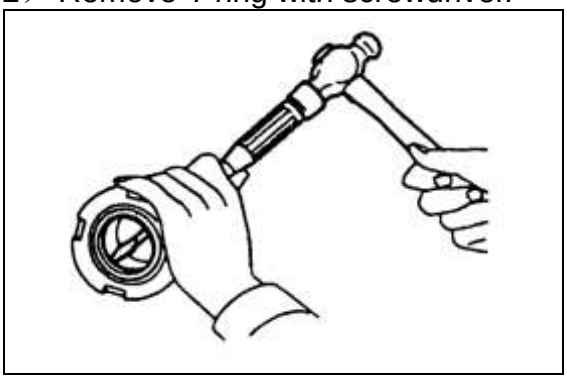

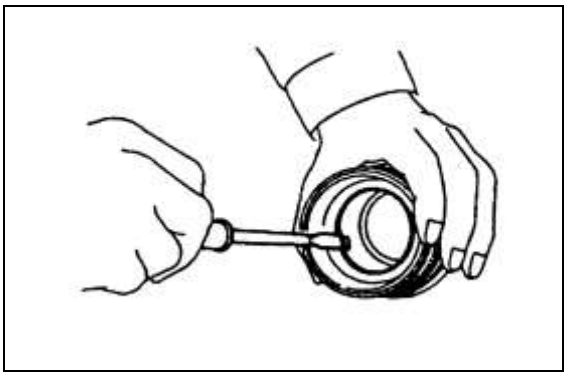

CAUTION： Please not use dust gasket ring removed, O-ring, Y-ring again, must replace.

3） Draw out piston rod , remove Y-ring on end of piston.

5.2 Install and replace faulty parts.

1） Cleanup parts with clean oil before installation.

2） Then cleanup guiding bush and piston with hydraulic pressure oil the same as oil box trademark.

3） Dust or dunghill doesn’t drop into lifting jack.

4） The order of installation is reverse the order of disassembly.

5） Install Y-ring on piston.

6） Install piston rod assembly into clean cylinder body.

CAUTION：The end of cylinder body mast slick and clean, installation must set center, avoid scratching Y-ring.

7） Install replacing dust gasket ring and Y-ring in guiding bush and cylinder head.

NOTICE： Apply hydraulic pressure grease which trademark is the same as tank on guide sleeve installed gasket ring

8） Rip cylinder head into piston rod, screw down cylinder body.

6. Disassembly and installation of tilting cylinder

WARNING

Noticing proceedings when removing cylinders.

·Attach wire rope to outer mast, avoiding mast fall down after removing tilting cylinder.

·Keep body away from equipment, no standing under the fork arm carrier.

1） Lay down fork arm carrier completely.

2） Remove bolt on the left and right bracket of outer mast, moreover pull axis out.

3） Remove oil pipe to the inlet of tilting cylinder.

4） Remove bolt on the bracket of Chassis, and pull pin out, then move tilting cylinder.

5） The order of installation is reverse the order of disassembly.

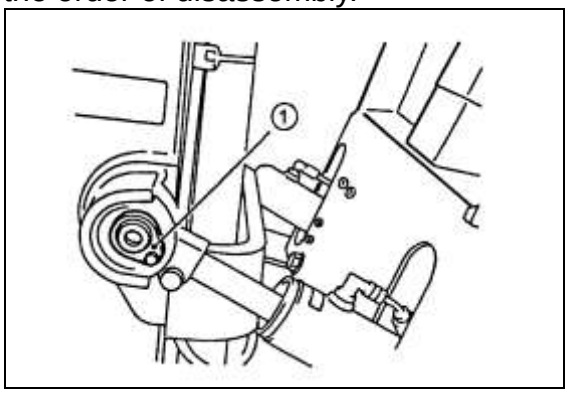

https://truckmanualshub.com/

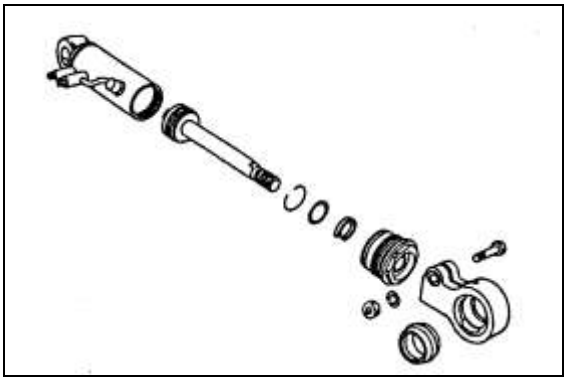

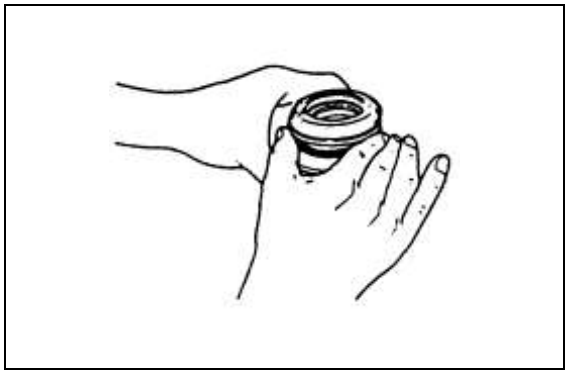

6.1 Disassembly of parts

1) Squeeze tilting cylinder with pliers, then pull piston rod come-and-go as opening of inlet and outlet on the tilting cylinder, so remaining oil is discharged tilting cylinder.

2) Screw earring bolts 2 loosely, and screw earring 1 out.

3) Remove cylinder head guiding bush 3;

4) Draw out piston rod assembly 4 (see as follows).

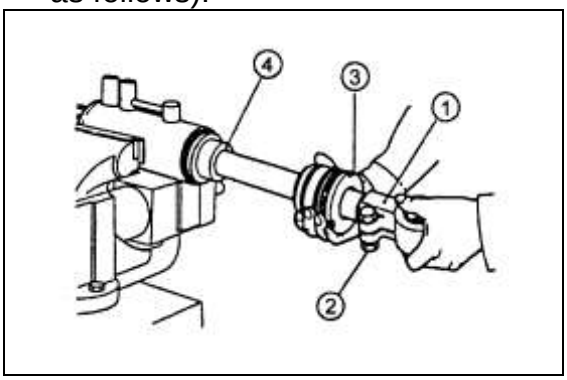

5) Remove all dust gasket rings, O-ring and Y-ring.

6) Remove dust gasket ring in the cylinder head. Means is the same as discharging of dust gasket ring in the cylinder head of lifting jack (see disassembly and installation of lifting jack).

7) Remove O-ring outside in the guiding bush.

8) Remove O-ring and Y-ring in the inner hole of guiding bush (see Fig. disassembly and installation of lifting jack).

CAUTION： No using dust gasket ring and Y-ring removed.

6.2 Install tilting cylinder after replacing ring

The order of installation is reverse to the order of disassembly, but should notice follow proceedings：

1） Lubricate parts with clean hydraulic pressure oil.

2） Avoid dust and oil dirty dropping into tilting cylinder.

3） Avoid scratching the end of cylinder body, and inlet and outlet for oil.

4） Push piston rod to cylinder body when setting center, especially avoid scratching Y-ring.

5） Before installing guiding bush, wipe hydraulic pressure oil backing boardched with employment oil trademark in the middle of O-ring and Y-ring in the inner hole of guiding bush.

6） Don’t scratch O-ring outside in the guiding bush when installing.

7） Remember install nylon stopper and tighten screw after screw cylinder head.

7. Noticing proceeding of debugging

1） Adjust Forward and BackWard of the mast

Place fork lift truck on the level ground, operate control lever to realize that

https://truckmanualshub.com/

mast inclined forward or backWard extremely. As assembly debugging data required, adjust combined screw thread length till according with data of BackWard. Then lock earring ring close.(please see foregoing table if you want know tightening torque of M10 bolt)

2）Adjust installation position of left and right lifting jack again

a. Adjust washer in the middle of piston rod and inner mast bracket if one lifting jack is not synchronization with the others when rising or falling, and if one lifting jack is different height from the others.

b. Loose two nuts on the U-bolt. Mast is not rise and lower until relative position of U-bolt and lifting jack is suitable. Then screw down nuts and tightening screw on the U-bolt. Thus lifting jack can be used longer and wear of piston rod can be reduced.

3）Please see foregoing table if you want know tightening force of bolt or screw. Please refer to common bolt tightening torque prescribed in our company if you want know other tightening force of bolt or screw.(refer to OPERATION AND MAINTAIN MANUAL backing boardched with it).

https://truckmanualshub.com/

Ⅸ.Electrical system

WARNING：

Before starting to work on any parts of electrical system, remove rings and jewelry to prevent an accidental short circuit, and turn off ignition switch and then disconnect battery ground cable.

DESCRIPTION

Cables are covered with color-coded vinyl for easy identification. In the wiring diagram, colors are indicated by one or two alphabetical letters.

It is recommended that the battery be disconnected before performing any electrical service.

CABLE COLORS

Cable colors are indicated by one or two alphabetical letters:

B: black, BR: brown, G: green, L: blue, LG: Light green, R: red, W: white, Y: yellow, S: gray, P: purple

The main cable is generally coded with a single color. The others are coded with a two-tone color as below: B/W Black with white stripe G/Y: Green with yellow stripe

INSPECTION

Inspect all electrical circuit, referring to wiring diagrams. Circuits should be tested for continuity or short circuit with a conventional test lamp or circuit tester. Before inspecting circuit, ensure that：

1. Each electrical component part or cable is securely fastened to its connector or terminal.
2. Each connection is firmly in place and free from rust and dirt.
3. No cable covering shows any evidence of cracks, deterioration or other damage.
4. Each terminal is a safe distance away from any adjacent mental parts.
5. Each cable is fastened to its proper connector or terminal.
6. Wiring is kept away from any adjacent parts with sharp edges.
7. Wiring is kept away from any rotating or moving parts.
8. Cables between fixed portions and moving parts are long enough to withstand shocks and vibrations.
9. The wiring keeps a safety distance with the high temperature thing such as the vent-pipe.

Control box

Component removal

1. Turn key switch "OFF";
2. Press lock buckle on control box and open the cover;
3. Remove fuse and relay from box.

INSPECTION:

If fuse is broken, replace with new one. Refer to figure as follow:

a. If fuse is blown, be sure to eliminate cause of problem before installing new fuses.
b. Never use fuse higher than specified rating.
c. Check the fixed bracket of fuse. If rust and dirt appears, polish with crocus paper till fixed bracket and interface is becoming new. Fuse fixed bracket contacted abnormally can increase pressure drop and heat; even make the circuit work abnormally.

https://truckmanualshub.com/

Fuse location

Fuse identification

Location		Capacity	Component
1	Lighting	20A	Headlight, width lamp
2	Horn	10A	Horn
3	Brake lamp	10A	Brake lamp
4	Reverse lamp and flasher	10A	Steering lamp and reverse lamp
5	Meter	10A	Meter and indicator lamp
6	Fuel cut off	10A	Fuel cut off switch and preheat controller
7	Standby	10A	For alarm lamp
8	Standby	20A	For cab

Fusible links

A melting fusible links can be watched or touched easily, if it is not uncertain of melting, use multimeter or lamp to test.

Note ：

① If fusible links is melted, maybe because of short circuit(current is too high). No matter which reason, please check and eliminate fault.

②Fusible links can cause heat, do not enlace with adhesive tape . do not put fusible near other rubber or wiring assembly.

Lighting System

Bulb Specifications

Lamp	W
Headlight	12V-55W
Small headlight Steering lamp Width lamp	12V-21W 12V-10W
Combined back lamp Brake and width lamp Steering lamp Reverse lamp	12V-21W/5W 12V-21W 12V-10W
Combined meter Floodlight Caution light	12V-2W 12V-2W

https://truckmanualshub.com/

Location of light

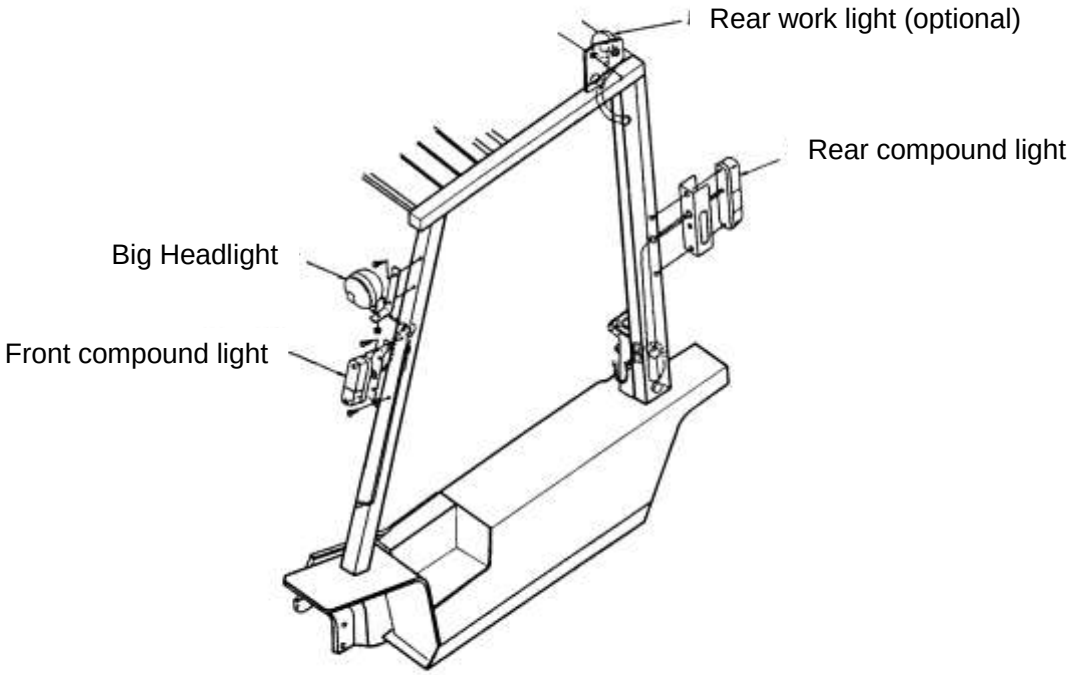

LIGHT SWITCH

DISASSEMBLE

1. Remove the assembled instrument.
2. Remove knob、ring nut & spacer.
3. Disconnect wiring terminal.

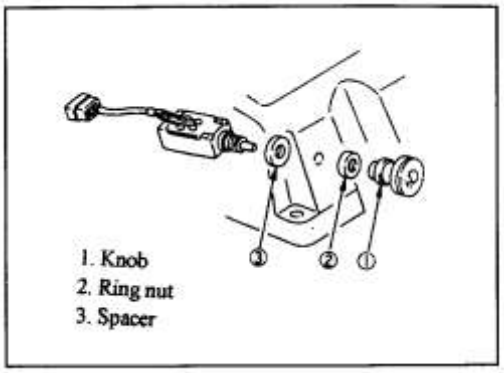

Connector / Location	1	2	4	5
O(off)	×			
I(small light)	×	×		×
II(big light)	×		×	×

https://truckmanualshub.com/

TURN SIGNAL LAMP SWITCH
REMOVAL

1. Remove assembled instrument.
2. Remove bolt，disconnect wiring terminal。
3. Fixing sequence is opposite to removing sequence.

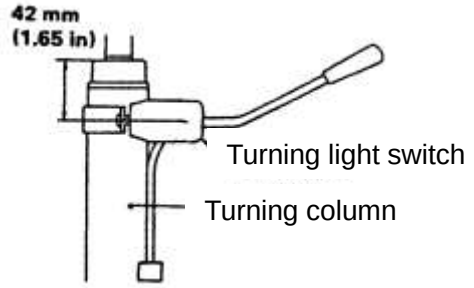

After installing turn signal lamp switch ,insure the distance between turn signal lamp switch and top of steering column is 42mm.

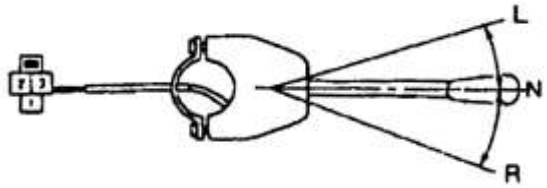

Location of switch	Junction point
L	1-3
N	No continuity
R	1-2

Front headlight

Disassembly

1. Remove securing nuts of the big-little lamp.
2. Take apart the wiring connector.
3. Remove bolt、lens, then replace faulty bulb with new one.
4. Assembly is the opposite procedures.

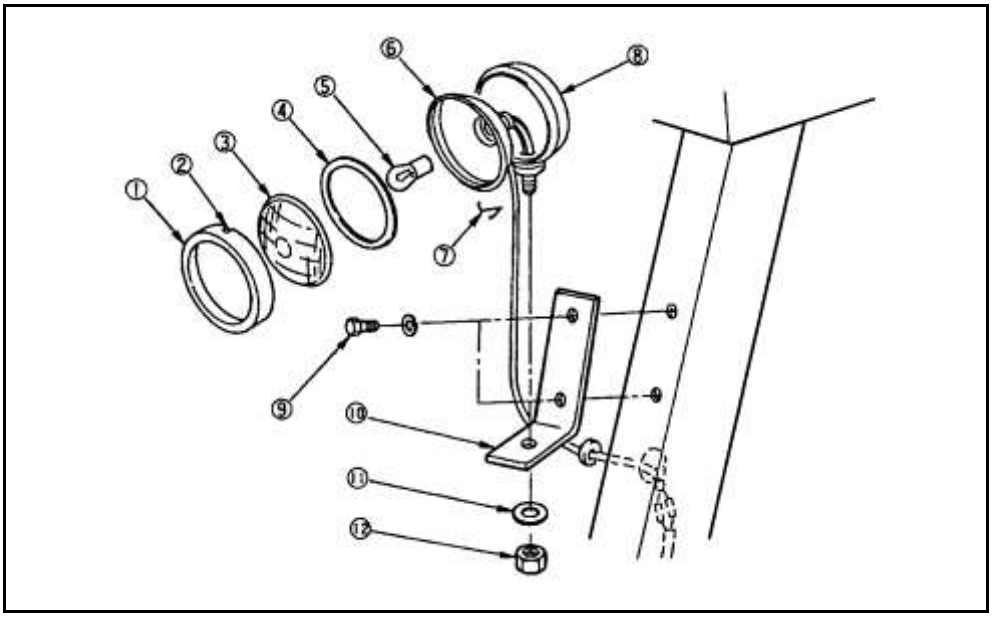

Front combination lamp
Disassembly and assembly

1. Remove fixing bolt of bracket.
2. Disconnect the wiring connector.
3. Remove bolt、astigmatism glass, then replace faulty bulb with new one.
4. Assembly is the opposite procedures.

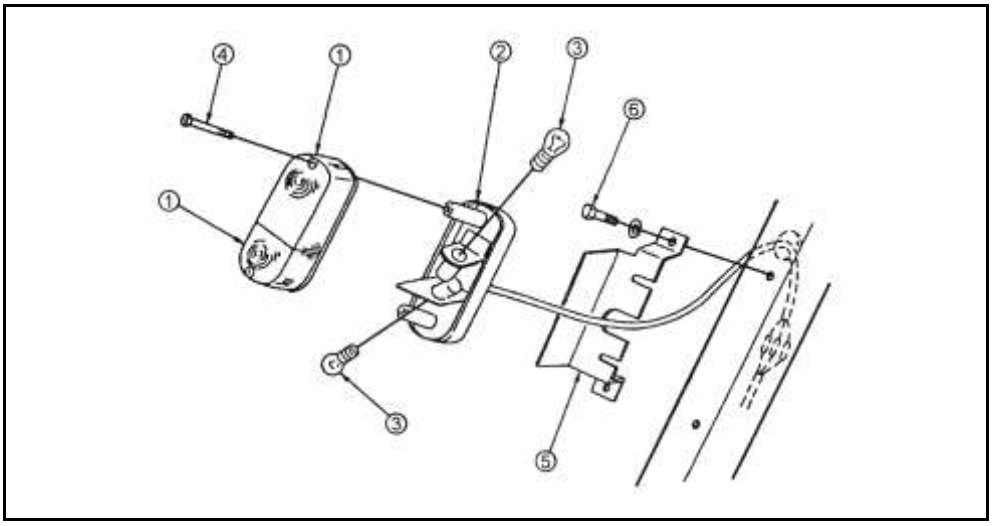

REAR COMBINATION LAMP

1. Remove fixing bolt of bracket.
2. Disconnect the wiring connector.
3. Remove bolt、astigmatism glass, then replace faulty bulb with new one.
4. Assembly is the opposite procedures.

Instrument, sensor and relay

Inspect whether relay circuit is on, connect or disconnect coil with proper voltage(supplied by battery), and then use multimeter(with ohm) to check whether contactor is on.

Disassembly and installation
Combination meter assembly

1. Remove 4 fixed bolt from meter crust. Notice that when installing and removing ,please make instrument surface tilt an angle to avoid damaging the screw thread of fixed parts on truck.
2. Take out wiring harness from sleeve, and then instrument can be brought out.
3. There is transparent plastic cover to cover, so it can prevent dust and water, and it is fixed by 6 plastic clip buckle, please press down plastic buckles lightly to take out plastic cover when removing.
4. To install, reverse removal procedures.

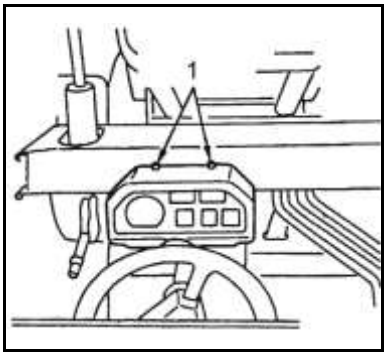

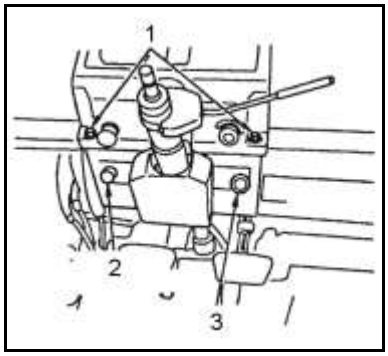

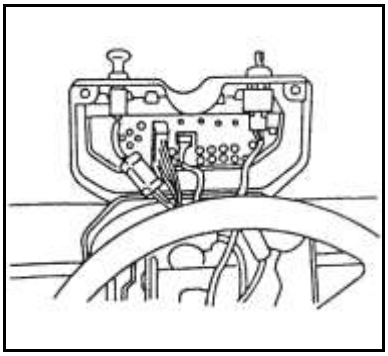

1 .Fastening bolt of meter shell 2. Flameout lever 3. Rear work light switch

Fuel meter, temperature meter, hour meter and alarm lamp

1、 Remove fastening bolt on meter plate, then separate meter plate and meter shell.
2、 Remove fastening bolt on front protect hood, then separate front protect hood and meter plate.
3、 Remove meter plate
4、 Remove fastening bolt from PC plate, then remove meters.
5、 Remove alarm lamp from PC plate (all alarm lamp can be removed from compound meter individually).
6、 To install, reverse disassembly procedures.

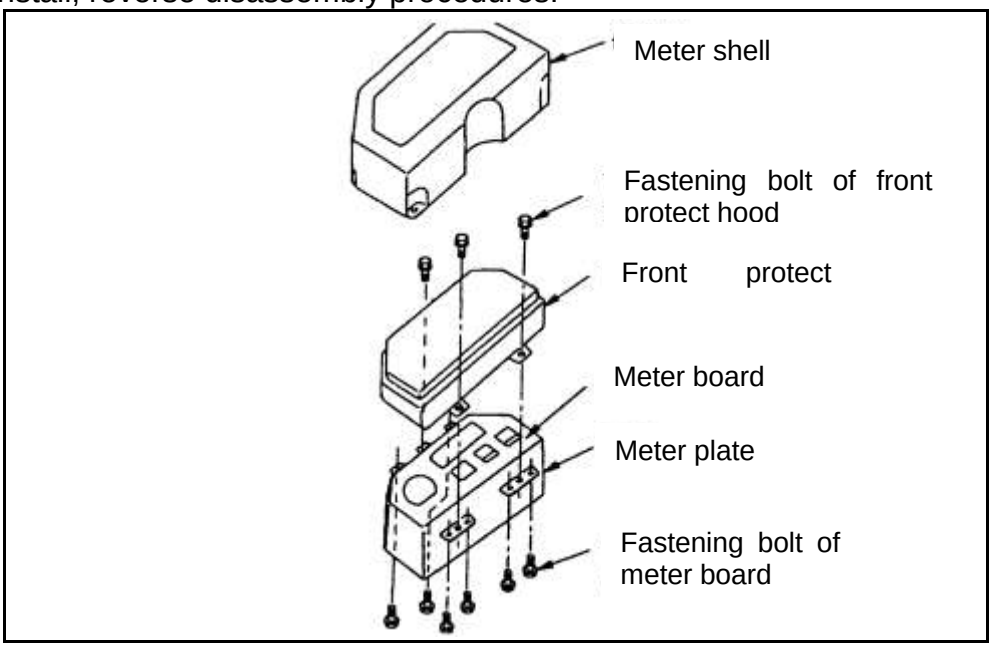

Key (start) switch

1、Remove combination meter.
2、Disconnect connector of wring.
3、Remove nuts, washers, spacers and instrument plate.
4、To install, reverse removal procedures.

Adjust ledge of switch to proper length when installing.

Inspect

Use multimeter (with ohm) to check key switch wether it is on at each position.

https://truckmanualshub.com/

Switch position	Terminal
OFF	OFF
ON	B1-B2-Acc on
START	B1-B2-Acc-C-R2 on

Location of switch / Terminal	OFF	ON	START
1(B2)		O	O
2(Acc)		O	O
3(C)			O
4(R2)			O

REVERSE BUZZER

1.Remove the wiring terminal， then unscrew the bolt.
2.To install, reverse removal procedure**.**

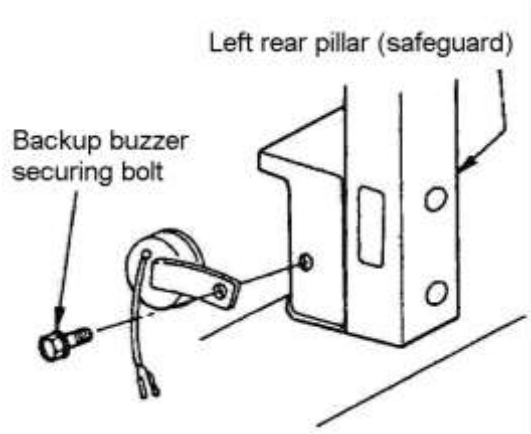

HORN

REMOVAL AND INSTALLATION
1.Disconnect horn harness connector.
2.Remove bolt and horn.
3.To install, reverse removal procedure.

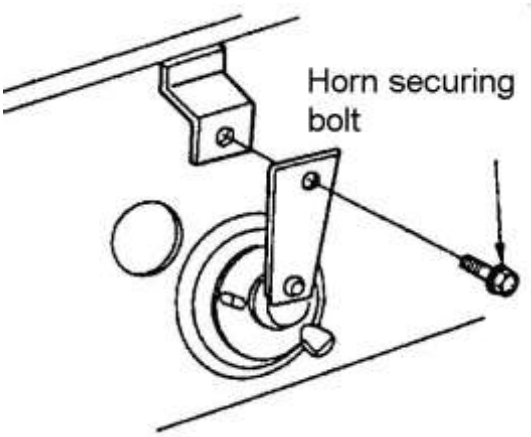

https://truckmanualshub.com/

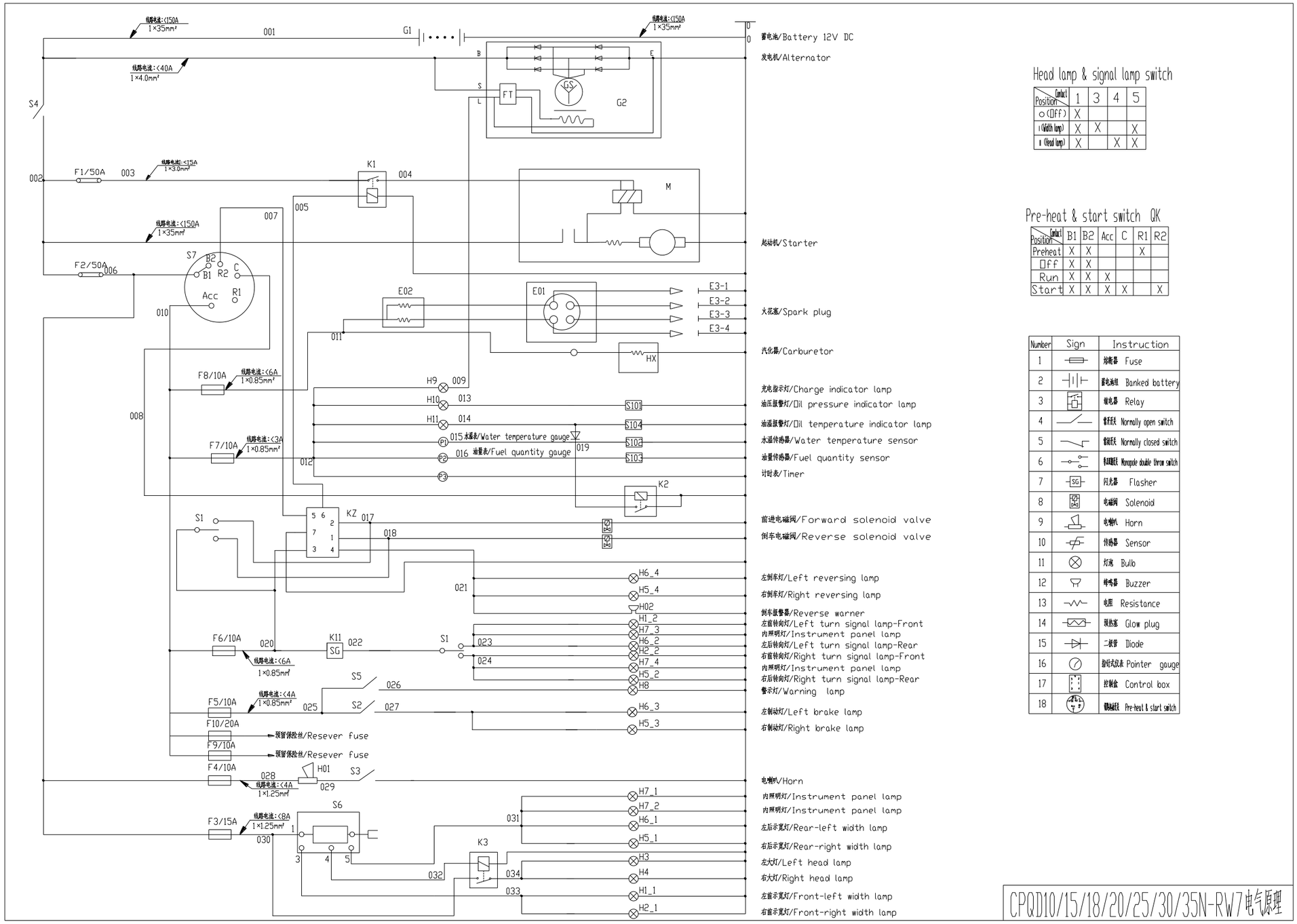

Head lamp & signal lamp switch

Position \ Contact	1	3	4	5
o (Off)	X			
I (Width lamp)	X	X		X
II (Head lamp)	X		X	X

Pre-heat & start switch QK

Position \ Contact	B1	B2	Acc	C	R1	R2
Preheat	X	X			X	
Off	X	X				
Run	X	X	X			
Start	X	X	X	X		X

Number	Sign	Instruction
1		熔断器 Fuse
2		蓄电池组 Banked battery
3		继电器 Relay
4		常开开关 Normally open switch
5		常闭开关 Normally closed switch
6		单刀双掷开关 Monopole double throw switch
7	SG	闪光器 Flasher
8		电磁阀 Solenoid
9		电喇叭 Horn
10		传感器 Sensor
11		灯泡 Bulb
12		蜂鸣器 Buzzer
13		电阻 Resistance
14		预热塞 Glow plug
15		二极管 Diode
16		指针式仪表 Pointer gauge
17		控制盒 Control box
18		预热起动开关 Pre-heat & start switch

Fig.1 CPQD10/15/18/20/25/30N-RW7 electrical system schematic diagram

https://truckmanualshub.com/

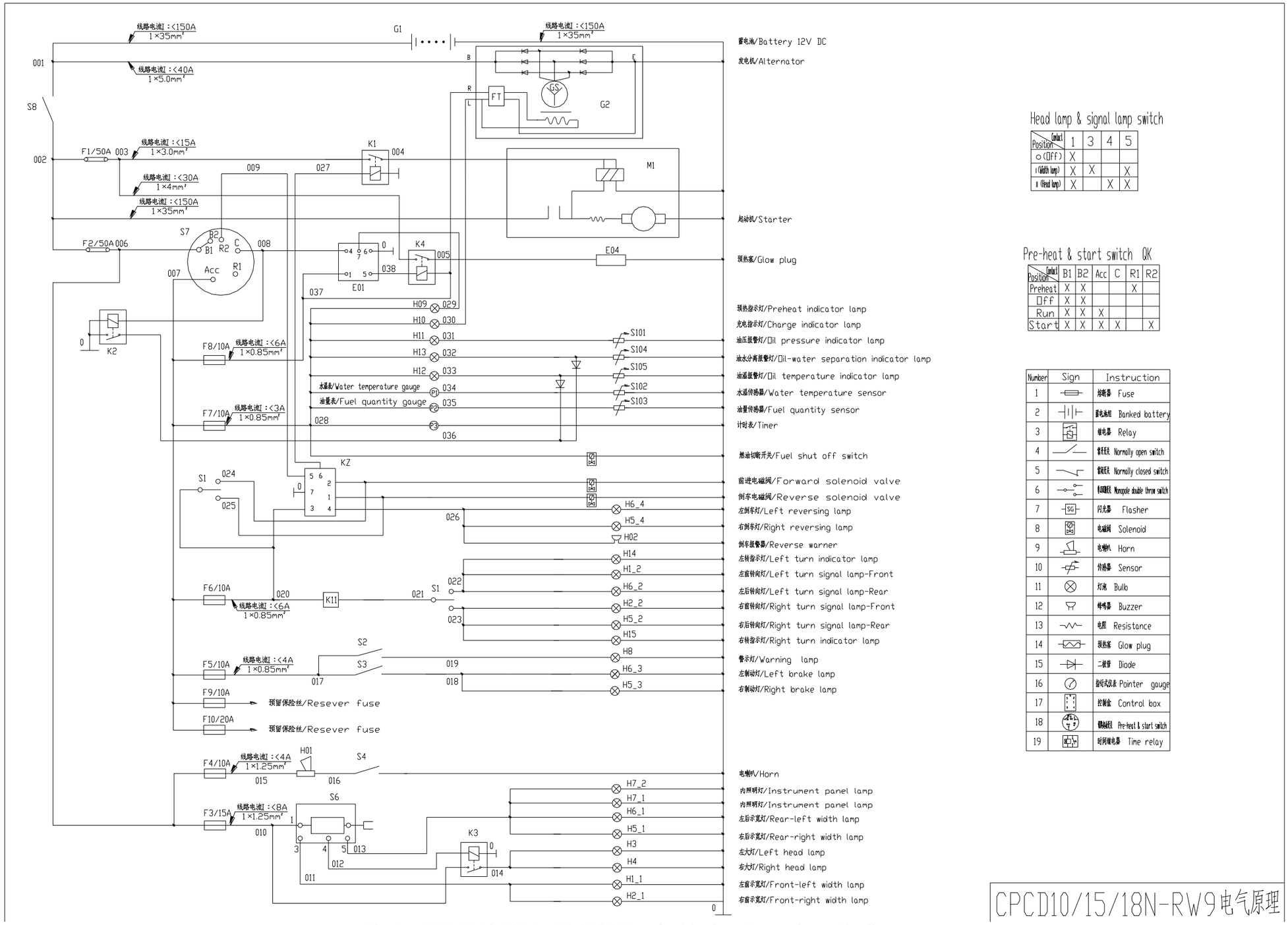

Head lamp & signal lamp switch

Position \ Contact	1	3	4	5
o (Off)	X			
I (Width lamp)	X	X		X
II (Head lamp)	X		X	X

Pre-heat & start switch QK

Position \ Contact	B1	B2	Acc	C	R1	R2
Preheat	X	X			X	
Off	X	X				
Run	X	X	X			
Start	X	X	X	X		X

Number	Sign	Instruction
1		熔断器 Fuse
2		蓄电池组 Banked battery
3		继电器 Relay
4		常开开关 Normally open switch
5		常闭开关 Normally closed switch
6		单刀双掷开关 Monopole double throw switch
7	SG	闪光器 Flasher
8		电磁阀 Solenoid
9		电喇叭 Horn
10		传感器 Sensor
11		灯泡 Bulb
12		蜂鸣器 Buzzer
13		电阻 Resistance
14		预热塞 Glow plug
15		二极管 Diode
16		指针式仪表 Pointer gauge
17		控制盒 Control box
18		预热启动开关 Pre-heat & start switch
19		时间继电器 Time relay

CPCD10/15/18N-RW9电气原理

Fig.2 CPCD10/15/18N-R W9/W10 electrical system schematic diagram

https://truckmanualshub.com/

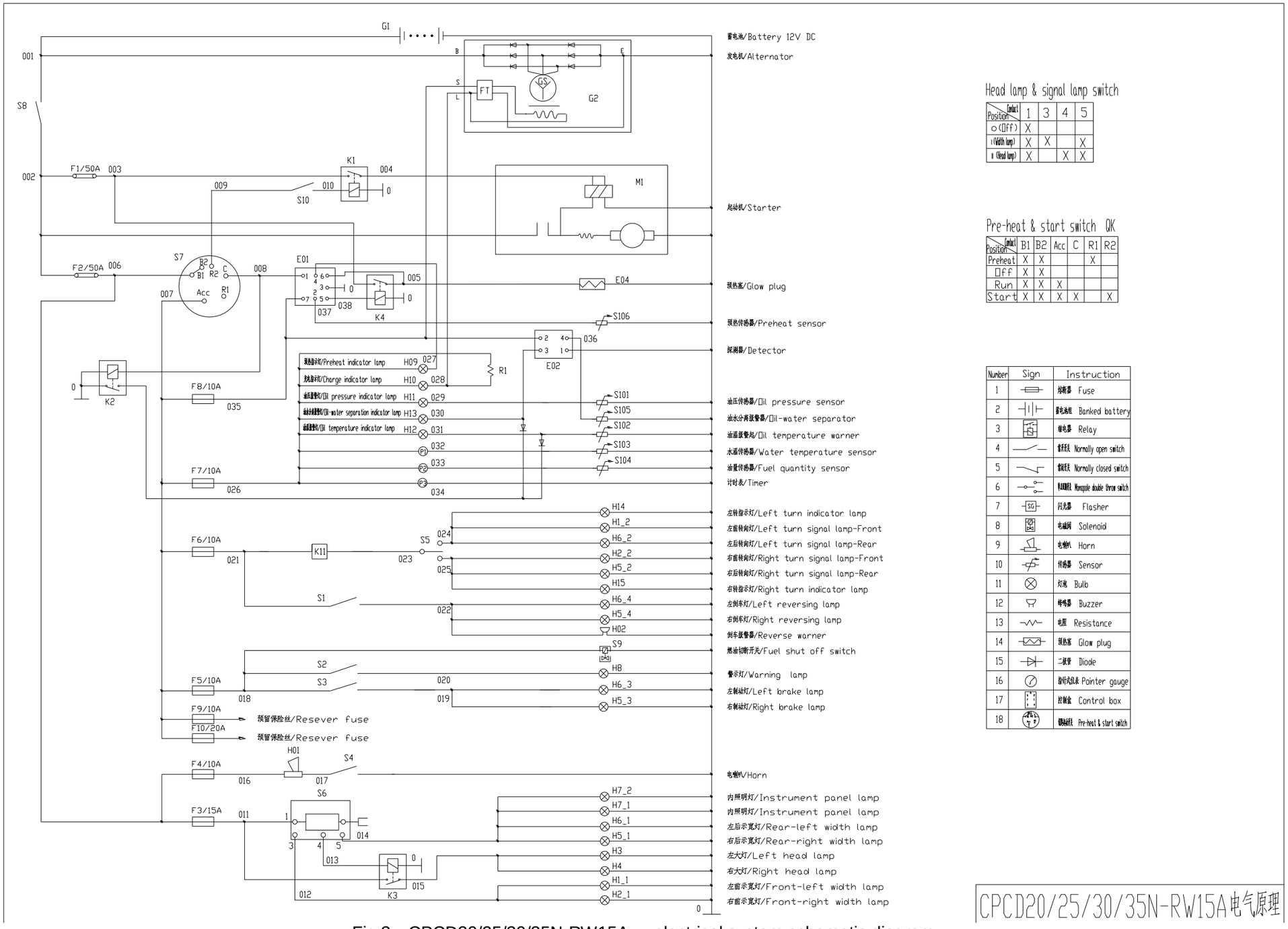

Head lamp & signal lamp switch

Position \ Contact	1	3	4	5
o (Off)	X			
I (Width lamp)	X	X		X
II (Head lamp)	X		X	X

Pre-heat & start switch QK

Position \ Contact	B1	B2	Acc	C	R1	R2
Preheat	X	X			X	
Off	X	X				
Run	X	X	X			
Start	X	X	X	X		X

Number	Sign	Instruction
1		熔断器 Fuse
2		蓄电池组 Bankedbattery
3		继电器 Relay
4		常开开关 Normally open switch
5		常闭开关 Normally closed switch
6		单刀双掷开关 Monopole double throw switch
7	SG	闪光器 Flasher
8		电磁阀 Solenoid
9		电喇叭 Horn
10		传感器 Sensor
11		灯泡 Bulb
12		蜂鸣器 Buzzer
13		电阻 Resistance
14		预热塞 Glow plug
15		二极管 Diode
16		指针式仪表 Pointer gauge
17		控制盒 Control box
18		钥匙开关 Pre-heat & start switch

CPCD20/25/30/35N-RW15A电气原理

Fig.3 CPCD20/25/30/35N-RW15A electrical system schematic diagram

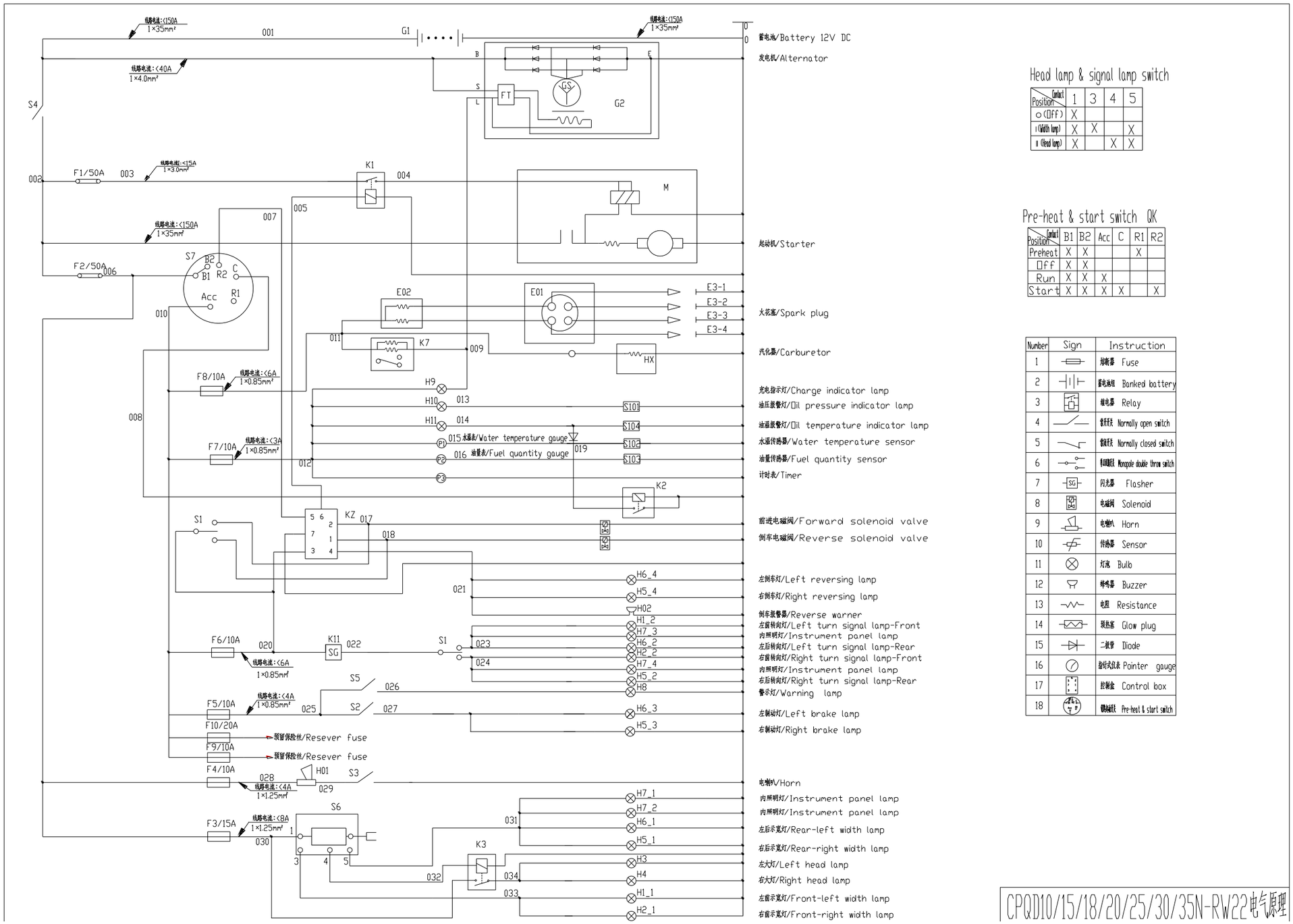

Head lamp & signal lamp switch

Position \ Contact	1	3	4	5
o (Off)	X			
I (Width lamp)	X	X		X
II (Head lamp)	X		X	X

Pre-heat & start switch QK

Position \ Contact	B1	B2	Acc	C	R1	R2
Preheat	X	X			X	
Off	X	X				
Run	X	X	X			
Start	X	X	X	X		X

Number	Sign	Instruction
1		熔断器 Fuse
2		蓄电池组 Banked battery
3		继电器 Relay
4		常开开关 Normally open switch
5		常闭开关 Normally closed switch
6		单刀双掷开关 Monopole double throw switch
7	SG	闪光器 Flasher
8		电磁阀 Solenoid
9		电喇叭 Horn
10		传感器 Sensor
11		灯泡 Bulb
12		蜂鸣器 Buzzer
13		电阻 Resistance
14		预热塞 Glow plug
15		二极管 Diode
16		指针式仪表 Pointer gauge
17		控制盒 Control box
18		预热开关 Pre-heat & start switch

CPQD10/15/18/20/25/30/35N-RW22电气原理

Fig.4 CPQD10/15/18N-RW21、CPQD20/25/30/35N-RW22 electrical system schematic diagram

https://truckmanualshub.com/

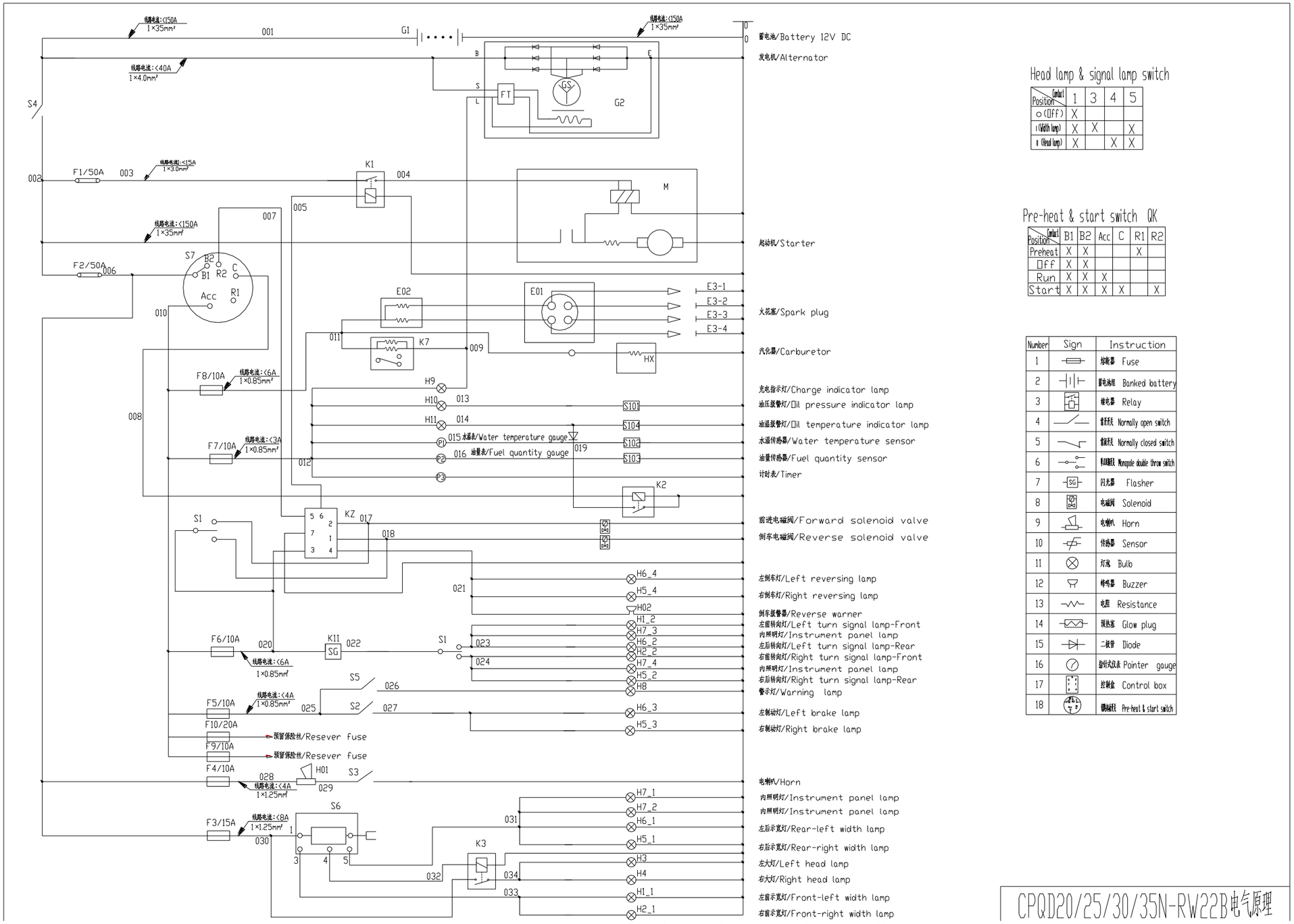

Head lamp & signal lamp switch

Position \ Contact	1	3	4	5
o (Off)	X			
I (Width lamp)	X	X		X
II (Head lamp)	X		X	X

Pre-heat & start switch QK

Position \ Contact	B1	B2	Acc	C	R1	R2
Preheat	X	X			X	
Off	X	X				
Run	X	X	X			
Start	X	X	X	X		X

Number	Sign	Instruction
1		熔断器 Fuse
2		蓄电池组 Banked battery
3		继电器 Relay
4		常开开关 Normally open switch
5		常闭开关 Normally closed switch
6		单刀双掷开关 Monopole double throw switch
7		闪光器 Flasher
8		电磁阀 Solenoid
9		电喇叭 Horn
10		传感器 Sensor
11		灯泡 Bulb
12		蜂鸣器 Buzzer
13		电阻 Resistance
14		预热塞 Glow plug
15		二极管 Diode
16		指针式仪表 Pointer gauge
17		控制盒 Control box
18		预热开关 Pre-heat & start switch

Fig.5 CPQD20/25/30/35N-RW22B electrical system schematic diagram

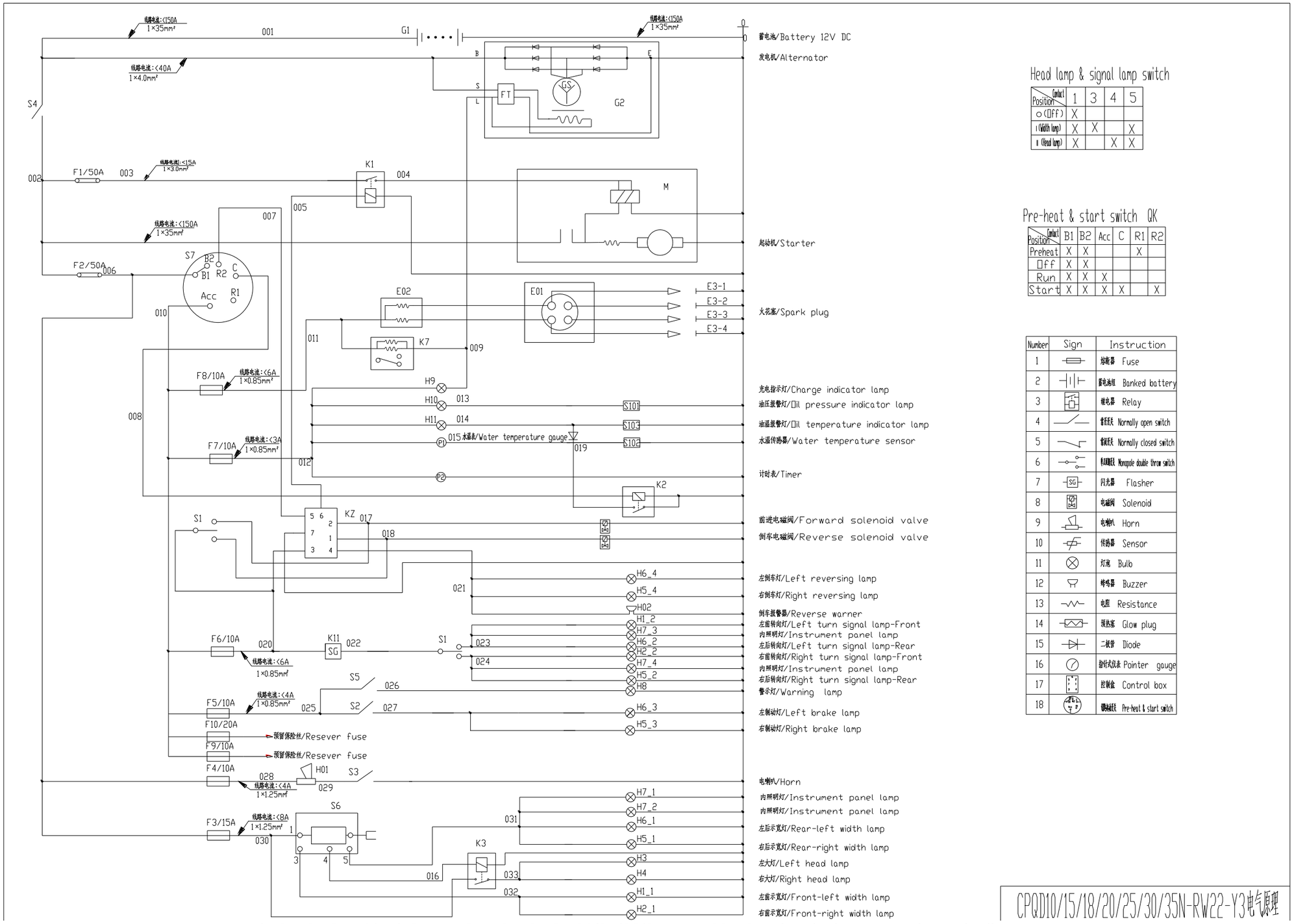

Head lamp & signal lamp switch

Position \ Contact	1	3	4	5
o (Off)	X			
I (Width lamp)	X	X		X
II (Head lamp)	X		X	X

Pre-heat & start switch QK

Position \ Contact	B1	B2	Acc	C	R1	R2
Preheat	X	X			X	
Off	X	X				
Run	X	X	X			
Start	X	X	X	X		X

Number	Sign	Instruction
1		熔断器 Fuse
2		蓄电池组 Banked battery
3		继电器 Relay
4		常开开关 Normally open switch
5		常闭开关 Normally closed switch
6		单刀双掷开关 Monopole double throw switch
7		闪光器 Flasher
8		电磁阀 Solenoid
9		电喇叭 Horn
10		传感器 Sensor
11		灯泡 Bulb
12		蜂鸣器 Buzzer
13		电阻 Resistance
14		预热塞 Glow plug
15		二极管 Diode
16		指针式仪表 Pointer gauge
17		控制盒 Control box
18		预热起动开关 Pre-heat & start switch

Fig.6 CPQD10/15/18N-RW21-Y3、CPQD20/25/30/35N-RW22-Y3 electrical system schematic diagram

https://truckmanualshub.com/

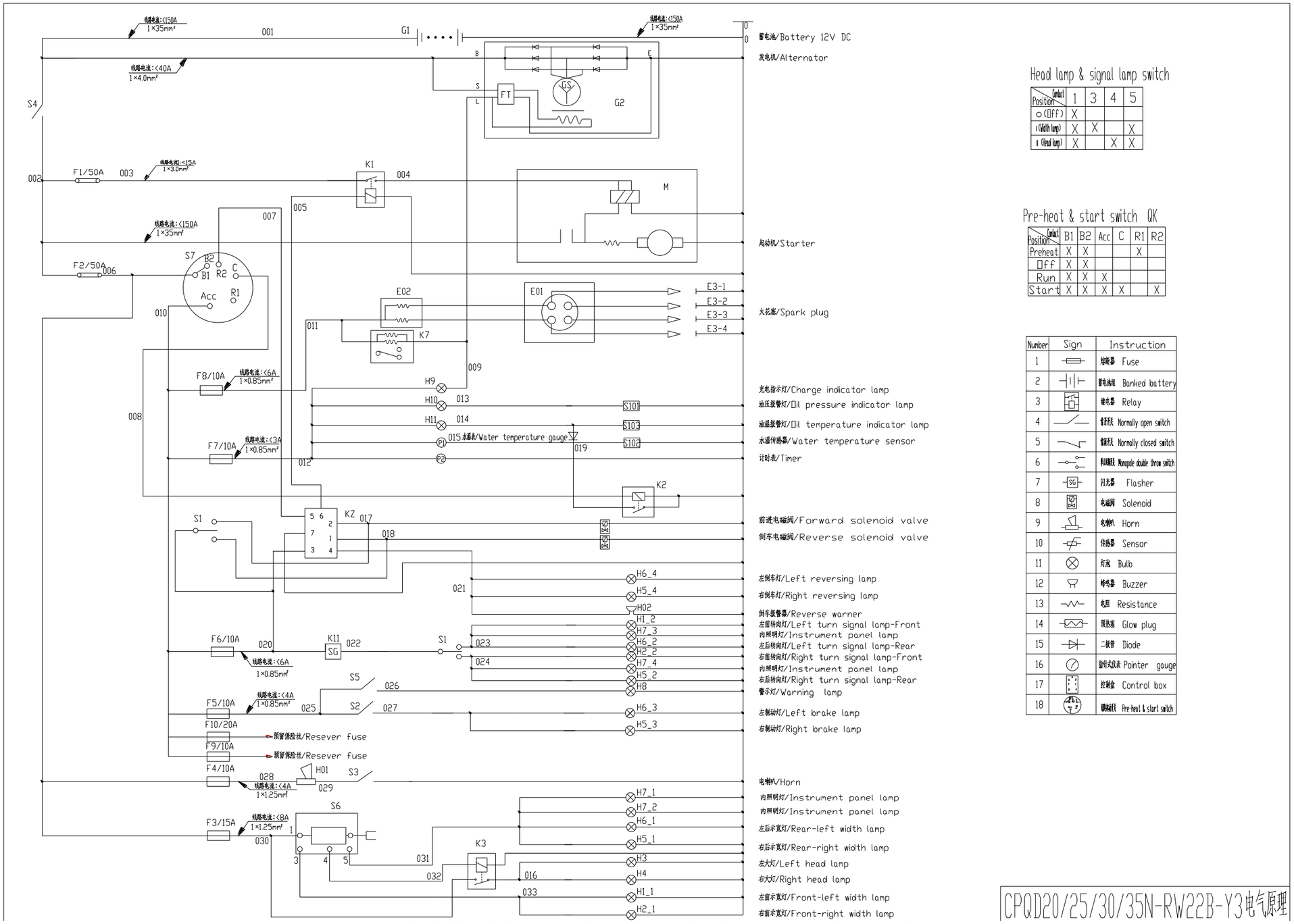

Head lamp & signal lamp switch

Position \ Contact	1	3	4	5
o (Off)	X			
I (With lamp)	X	X		X
II (Head lamp)	X		X	X

Pre-heat & start switch QK

Position \ Contact	B1	B2	Acc	C	R1	R2
Preheat	X	X			X	
Off	X	X				
Run	X	X	X			
Start	X	X	X	X		X

Number	Sign	Instruction
1		熔断器 Fuse
2		蓄电池组 Banked battery
3		继电器 Relay
4		常开开关 Normally open switch
5		常闭开关 Normally closed switch
6		单刀双掷开关 Monopole double throw switch
7		闪光器 Flasher
8		电磁阀 Solenoid
9		电喇叭 Horn
10		传感器 Sensor
11		灯泡 Bulb
12		蜂鸣器 Buzzer
13		电阻 Resistance
14		预热塞 Glow plug
15		二极管 Diode
16		指针式仪表 Pointer gauge
17		控制盒 Control box
18		预热起动开关 Pre-heat & start switch

Fig.7 CPQD20/25/30/35N-RW22B-Y3 electrical system schematic diagram

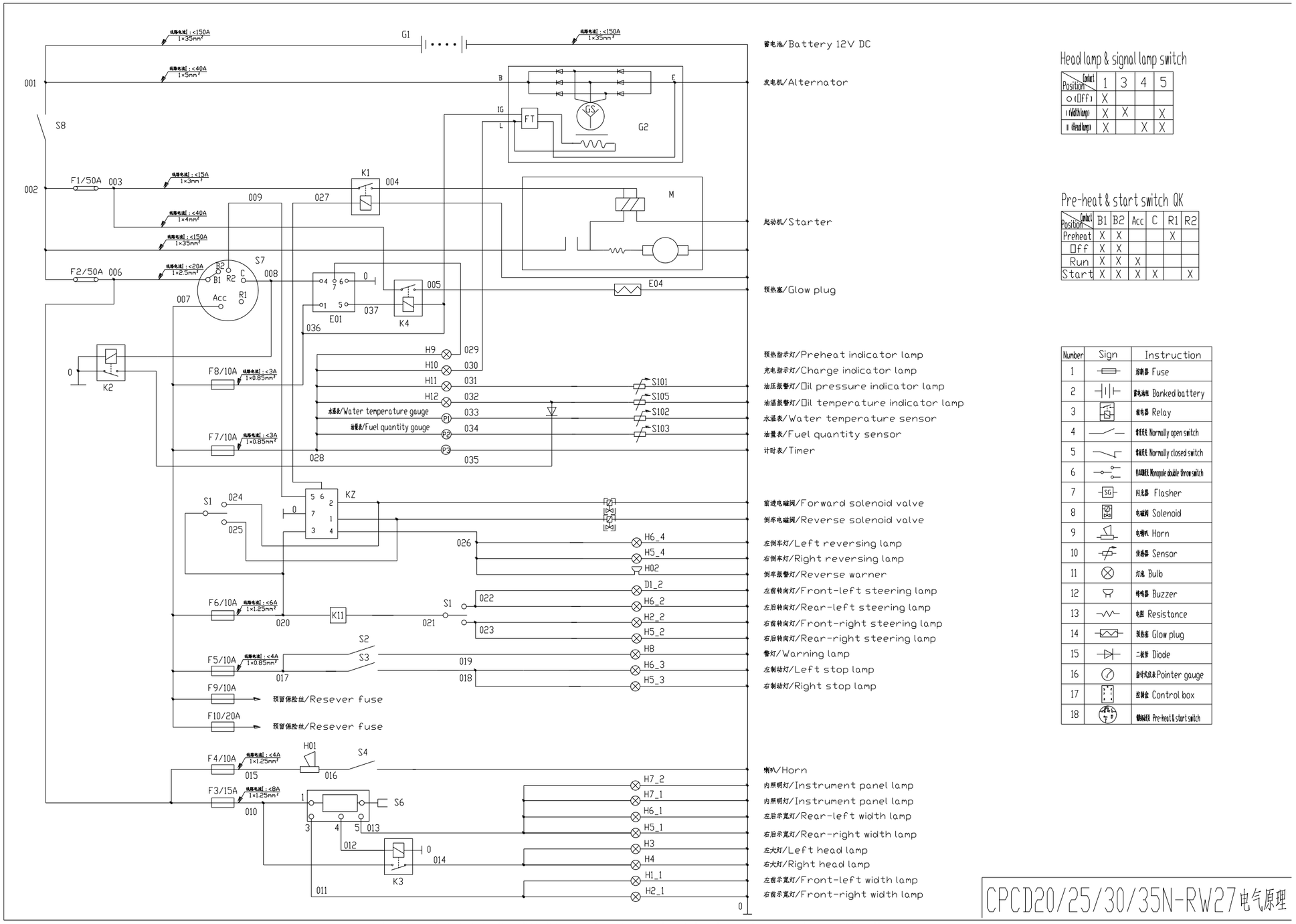

Head lamp & signal lamp switch

Position \ Contact	1	3	4	5
0 (Off)	X			
I (Width lamp)	X	X		X
II (Head lamp)	X		X	X

Pre-heat & start switch QK

Position \ Contact	B1	B2	Acc	C	R1	R2
Preheat	X	X			X	
Off	X	X				
Run	X	X	X			
Start	X	X	X	X		X

Number	Sign	Instruction
1		熔断器 Fuse
2		蓄电池组 Banked battery
3		继电器 Relay
4		常开开关 Normally open switch
5		常闭开关 Normally closed switch
6		单刀双掷开关 Monopole double throw switch
7		闪光器 Flasher
8		电磁阀 Solenoid
9		电喇叭 Horn
10		传感器 Sensor
11		灯泡 Bulb
12		蜂鸣器 Buzzer
13		电阻 Resistance
14		预热塞 Glow plug
15		二极管 Diode
16		指针式仪表 Pointer gauge
17		控制盒 Control box
18		预热开关 Pre-heat & start switch

CPCD20/25/30/35N-RW27电气原理

Fig.8 CPCD20/25/30/35N-RW27 electrical system schematic diagram

https://truckmanualshub.com/

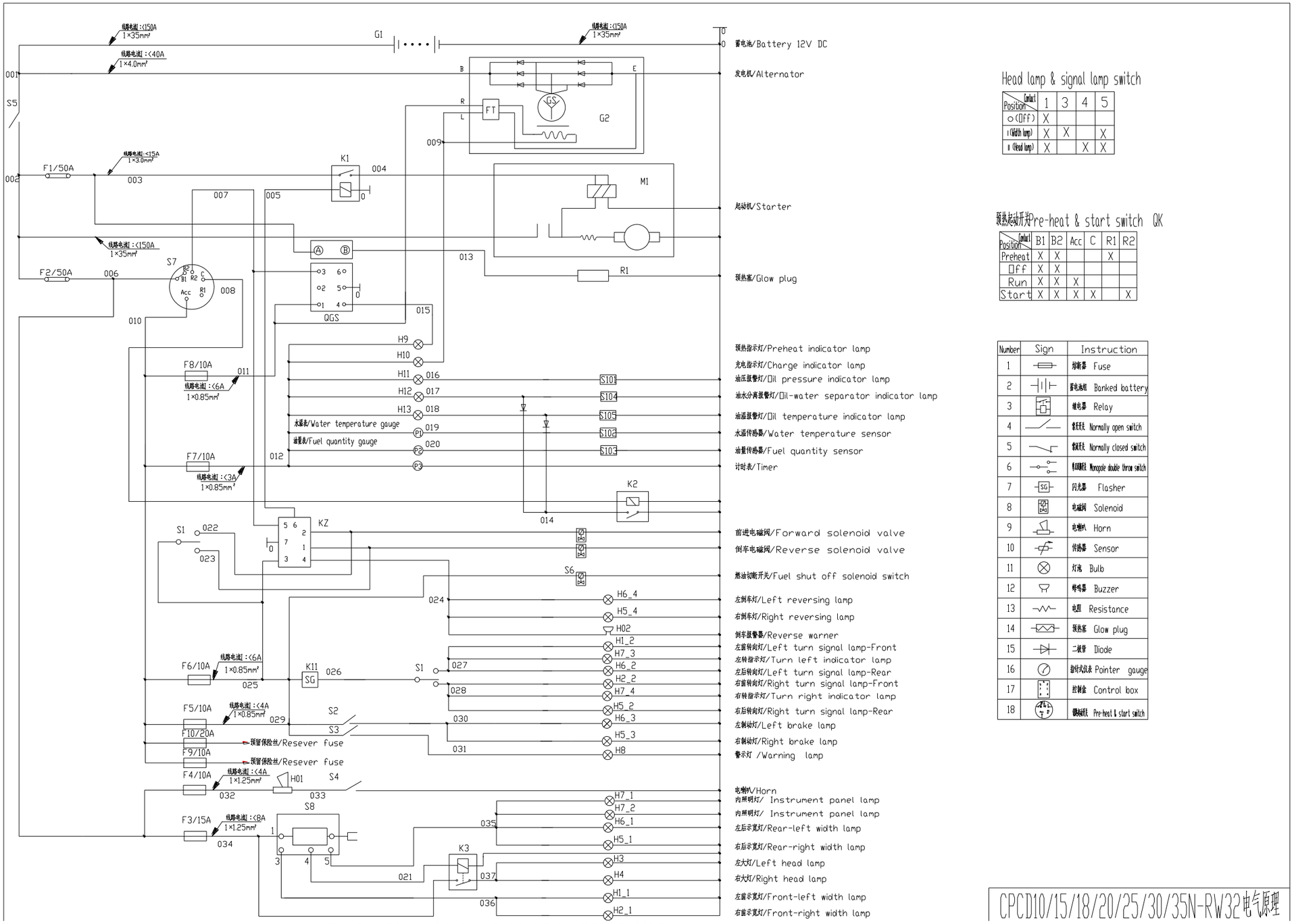

Head lamp & signal lamp switch

Position \ Contact	1	3	4	5
o (Off)	X			
I (Width lamp)	X	X		X
II (Head lamp)	X		X	X

预热起动开关 Pre-heat & start switch QK

Position \ Contact	B1	B2	Acc	C	R1	R2
Preheat	X	X			X	
Off	X	X				
Run	X	X	X			
Start	X	X	X	X		X

Number	Sign	Instruction
1		熔断器 Fuse
2		蓄电池组 Banked battery
3		继电器 Relay
4		常开开关 Normally open switch
5		常闭开关 Normally closed switch
6		单刀双掷开关 Monopole double throw switch
7	SG	闪光器 Flasher
8		电磁阀 Solenoid
9		电喇叭 Horn
10		传感器 Sensor
11		灯泡 Bulb
12		蜂鸣器 Buzzer
13		电阻 Resistance
14		预热塞 Glow plug
15		二极管 Diode
16		指针式仪表 Pointer gauge
17		控制盒 Control box
18		预热起开关 Pre-heat & start switch

CPCD10/15/18/20/25/30/35N-RW32电气原理

Fig.9 CPCD10/15/18/20/25/30/35N-RW32 electrical system schematic diagram

https://truckmanualshub.com/

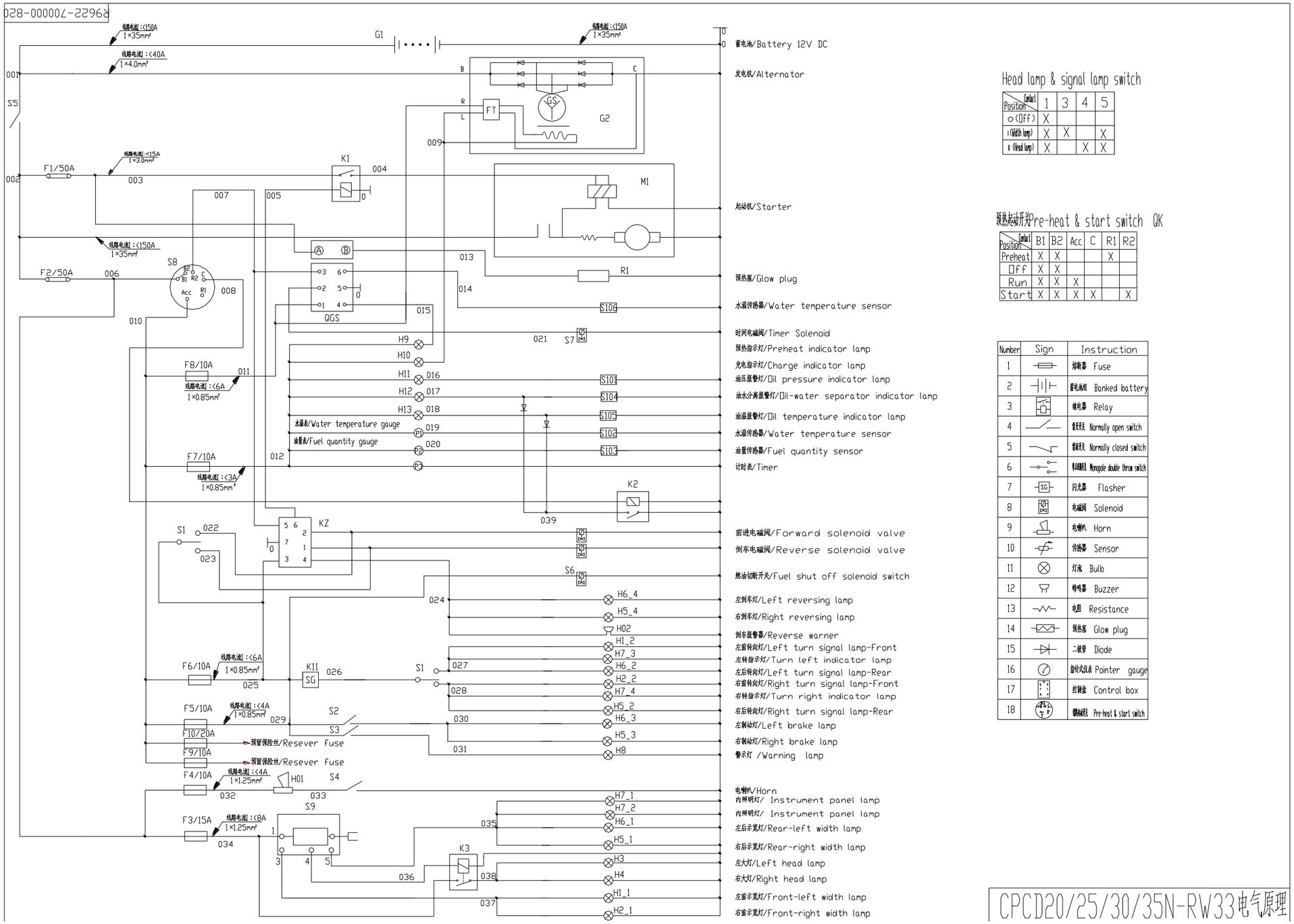

Head lamp & signal lamp switch

Position \ Contact	1	3	4	5
o (Off)	X			
I (Width lamp)	X	X		X
II (Head lamp)	X		X	X

预热起动开关 Pre-heat & start switch QK

Position \ Contact	B1	B2	Acc	C	R1	R2
Preheat	X	X			X	
Off	X	X				
Run	X	X	X			
Start	X	X	X	X		X

Number	Sign	Instruction
1		熔断器 Fuse
2		蓄电池组 Banked battery
3		继电器 Relay
4		常开开关 Normally open switch
5		常闭开关 Normally closed switch
6		单刀双掷开关 Monopole double throw switch
7		闪光器 Flasher
8		电磁阀 Solenoid
9		电喇叭 Horn
10		传感器 Sensor
11		灯泡 Bulb
12		蜂鸣器 Buzzer
13		电阻 Resistance
14		预热塞 Glow plug
15		二极管 Diode
16		指针式仪表 Pointer gauge
17		控制盒 Control box
18		预热起动开关 Pre-heat & start switch

Fig.10 CPCD20/25/30/35N-RW33 electrical system schematic diagram

https://truckmanualshub.com/

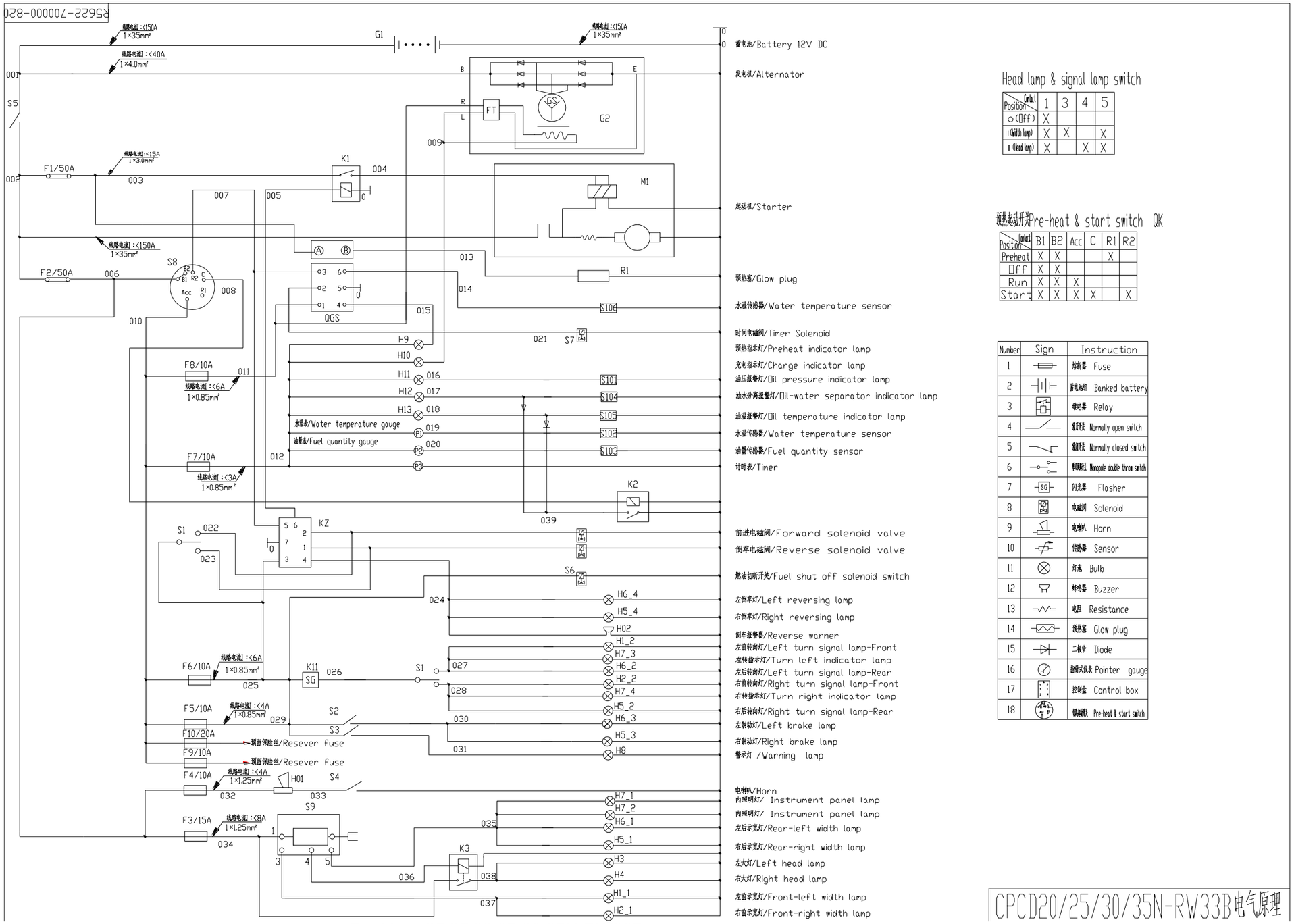

Fig.11 CPCD20/25/30/35N-RW33B electrical system schematic diagram

https://truckmanualshub.com/

HANGCHA GROUP CO. , LTD.

- Address For: OVERSEAS USERS
- Manufacturing Site: 88 Donghuan Road, LinAn Economic Development Zone, Hangzhou, P.R. of China ■ ZIP:311305
- Registered Address：398 Shi Qiao Road, Hangzhou, P.R. of China ■ ZIP:310004
- Fax: 0086-571-88926789 0086-571-88132890
- Web: http://www.hcforklift.com
- E-mail: sales@hcforklift.com