https://truckmanualshub.com/

BODY BUILDER INSTRUCTIONS

Mack Trucks

Axle and Suspension
PI / CHU, AN / CXU, GR / GU, TD
LR, TE / MRU
Section 6

Introduction

This information provides design and function, specification and procedure details for axles and suspension for MACK vehicles.

Note: We have attempted to cover as much information as possible. However, this information does not cover all the unique variations that a vehicle chassis may present. Note that illustrations are typical but may not reflect all the variations of assembly.

All data provided is based on information that was current at time of release. However, **this information is subject to change without notice**.

Please note that no part of this information may be reproduced, stored, or transmitted by any means without the express written permission of MACK Trucks, Inc.

Contents:

- “Axle”, page 3
- “Liftable Axles”, page 3
- “Clearance Rear Wheels and Axles”, page 6
- “Axle Alignment”, page 7
- “Rear Axle Literature”, page 18
- “Rear Suspension”, page 19
- “Alignment and Adjustments”, page 20
- “U-Bolt Torque”, page 27
- “Air Suspension Height, Adjustment”, page 28
- “Ride Height and Pinion Angle Specifications”, page 29

All Rights Reserved

https://truckmanualshub.com/

Axle and Suspension

Special Tools

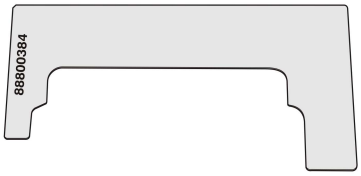

T0070273

88800384
Ride Height Gauge

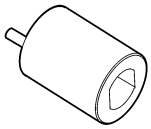

W0001815

J-44544
Ride Height Adjustment Socket

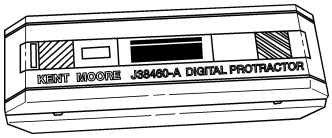

W7000708

J-38460–A
Digital Protractor, Includes **J-38460–25**
Quick Disconnect Adapter

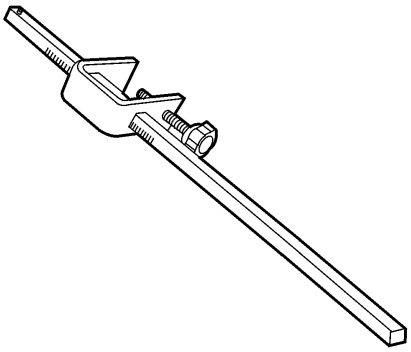

W0001960

J-44684 Ride Height Gauge

All Rights Reserved

https://truckmanualshub.com/

Axle

The following section details the various axles. Included is design and function, specification and procedure information.

Liftable Axles

Liftable axles (tags and pushers) can be added to increase the load-carrying capacity of a vehicle. When one or more liftable axle(s) are installed on a newly manufactured vehicle prior to the vehicle being delivered to the ultimate customer, the installer must ensure that the GAWR/GVWR, tire, rim and inflation pressure information is updated on an addendum to the incomplete vehicle document or vehicle certification label, as applicable.

DANGER

Non-steer liftable axles MUST NOT be added to vehicles equipped with the MACK Road Stability Advantage (RSA) system, as doing so will adversely affect performance of the system. Every effort must be made to avoid adding a non-steer liftable axle on a vehicle equipped with the MACK RSA system. If a non-steer liftable axle must be added, the RSA system must be disabled by having a qualified technician replace the Bendix® Advanced EC-80™ ECU (ABS control unit with ESP®) with a Bendix® Premium EC-80™ ECU (ABS control unit without ESP®).
Additionally, if a MACK factory-installed liftable axle must be removed from an RSA-equipped chassis, the stability system must also be disabled by having a qualified technician replace the Advanced EC-80™ electronic control unit (ECU) with a Premium EC-80™ ECU.
Failure to disable the RSA system on a vehicle to which a non-steer liftable axle has been added will result in serious vehicle braking and performance issues, including unnecessary system interventions. These interventions could lead to a loss of vehicle control.
In addition to disabling the system, any cab labels, such as WARNING and CAUTION labels relating to the Bendix® ABS-6 Advanced with ESP® (the basis for the MACK RSA system) located on the sun visor must be removed and notations must be made to the operator’s manuals so that the vehicle operator has a clear understanding of which ABS options are installed on the vehicle.

CAUTION

If liftable axles (tags or pushers) are being added to a chassis equipped with the MACK Road Stability Advantage (RSA) system, and it is desired to keep the RSA system active, the liftable axle(s) must be self-steer type axles. The self-steer liftable axle(s) service brakes MUST NOT be activated by modulated air pressure or service brake air pressure from the anti-lock braking system. Currently, the only chassis having the RSA system approved for adding self-steer liftable axles are chassis used in heavy-haul tractor applications.

Liftable Axle – Location

Installing a liftable axle requires tapping into the air system to supply air for various functions such as the lift axle air suspension, up and down air bags and lift axle brakes. The axle installer is responsible for ensuring that the air brake system continues to comply with the requirements of FMVSS/CMVSS 106, Brake Hoses, and 121, Air Brake Systems, as applicable (requirements for stopping distance, park brake grade holding ability, etc.), after the liftable axle(s) is installed.

Note: Some chassis are available as “liftable axle ready” from the factory with the necessary piping, gauges and regulators required for easy installation of the liftable axle(s).

This section includes general information on installing liftable axles on MACK chassis. For more detailed information concerning axle selection, application and specifications, contact the specific axle manufacturer, or refer to the axle manufacturer's service literature.

Note: When a liftable axle is installed on a chassis, front and rear axle alignment must be checked and adjusted as necessary.

All Rights Reserved

https://truckmanualshub.com/

The following example explains how to use the U.S. Federal Bridge Formula Table to locate a liftable axle on a chassis. The four axle dump truck in the following example is intended for a gross vehicle weight rating of 29,000 Kg (64,000 lb). The vehicle is equipped with an 8,165 Kg (18,000 lb) front axle, and a tandem rear axle of adequate capacity to carry the legal limit of 15,400 Kg (34,000 lb).

The U.S. Federal Bridge Formula Table shows that the spread between the centerline of the front steer axle and the centerline of the rearmost axle of the tandem for this four axle truck must be 0.01 Km (33 ft) In this configuration, the chassis will carry 8165 Kg (18,000 lb) on the front steer axle and 20,865 Kg (46,000 lb) on the rear tandem axles 8,165 + 20,865 = 29,030 Kg (18,000 + 46,000 = 64,000 lb).

Legally, however, only 15,400 Kg (34,000 lb) allowable on the rear axles for vehicles that operate on the national network of highways. For this chassis to legally carry 46,000 lb on the rear axles, a 5,443 Kg (12,000 lb) pusher axle must be added 15,400 + 5,443 = 20,843 Kg (12,000 + 34,000 = 46,000 lb). To properly locate the pusher axle, refer to the U.S. Federal Bridge Formula Table. For a three axle group (pusher axle plus tandem axles), the spread between the centerline of the pusher and the centerline of the rearmost axle of the tandem must be 13.5 ft. However, to ensure that the chassis configuration satisfies the U.S. Federal Bridge Formula, all groups of two or more axles on the chassis must be checked and verified to ensure that axle distance requirements are met.

Distance in meters (feet) between the extremes of any group of 2 or more consecutive axles	Maximum Load (Pounds) kg		
	2 Axles	3 Axles	4 Axles
1.22 (4)	34,000		
1.52 (5)	34,000		
1.83 (6)	34,000		
2.13 (7)	34,000		
2.44 (8) and less	34,000	34,000	
2.44 (8) and more	38,000	42,000	
2.74 (9)	39,000	42,500	
3.05 (10)	40,000	43,500	
3.35 (11)		44,000	
3.66 (12)		45,000	50,000
3.96 (13)		45,500	50,500
4.27 (14)		46,500	
4.57 (15)		47,000	52,000
4.88 (16)		48,000	52,500
5.18 (17)		48,500	53,500
5.49 (18)		49,500	54,000
5.79 (19)		50,000	54,500
6.10 (20)		51,000	55,500
6.40 (21)		51,500	56,000
6.71 (22)		52,500	56,500
7.01 (23)		53,000	57,500
7.32 (24)		54,000	58,000
7.62 (25)		54,500	58,500
7.93 (26)		55,500	59,500
8.23 (27)		56,000	60,000
8.53 (28)		57,000	60,500
8.84 (29)		57,500	61,500
9.14 (30)		58,500	62,000
9.45 (31)		59,000	62,500
9.75 (32)		60,000	63,500
10.06 (33)			64,000
10.36 (34)			64,500
10.67 (35)			65,500
10.97 (36)			66,000+

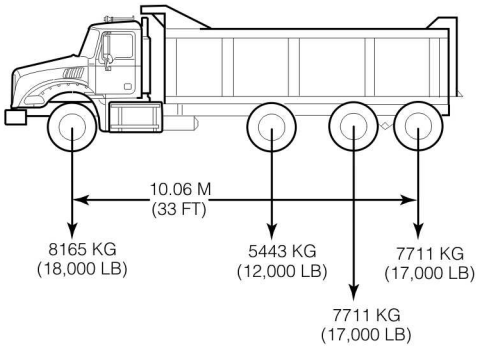

001297c

W9032331

Applying U.S. Federal Bridge Formula to Liftable Axle Location

Note: The Federal Motor Carrier Safety Regulations can be found on the FMCSR website at http://ops.fhwa.dot.gov/freight/sw/brdgcalc/calc_page.htm

All Rights Reserved

https://truckmanualshub.com/

Liftable Axle – Clearances

After selecting the proper location for the liftable axle, make sure there is sufficient clearance between:

- The driveshaft and liftable axle in both the extreme up and down positions — Allow at least 31.75 mm (1.25 in) clearance between the driveshaft and the liftable axle subassembly.
- Tires (laterally, fore and aft, and vertically) — There should be sufficient clearance between the liftable axle tires and all frame and other components so that there is no interference in both the extreme up and down positions.
- Air springs (if applicable) — When inflated to their maximum diameter. Additionally, sufficient clearance must exist between the ground and the liftable axle subassembly, tires, and other components when the axle is in the raised position.

Additionally, sufficient clearance must exist between the ground and the liftable axle subassembly, tires, and other components when the axle is in the raised position.

Liftable Axle – Mounting

Mounting and installation instructions are generally supplied by the specific axle manufacturer. For specific mounting information (such as frame drilling, cutting, hardware selection, etc.), refer to Section 7 for body mounting information.

Liftable Axle – Crossmember Location

Liftable axles should be installed in a way that allows axle loading to be transmitted into a crossmember, and not directly into the frame side rails. In general, crossmembers should be located in the area where the liftable axle front hanger bracket assemblies are attached to the frame.

Because of the many variations in frame design, the location of crossmembers on different vehicles may also vary. If necessary, a crossmember may be added to the chassis if there is no crossmember in the vicinity of the liftable axle installation. Unless it supports a center bearing, a crossmember may be moved the width of the crossmember mounting gusset to bring the member closer to the liftable axle front hanger brackets. Distance between crossmembers, however, must not exceed 60 in.

For more detailed information concerning crossmember placement and liftable axle installation, refer to Section 7 for body mounting information.

Notes

All Rights Reserved

https://truckmanualshub.com/

Clearance Rear Wheels and Axles

Sufficient clearance must be maintained to allow full vertical movement of the rear axles and tires as the vehicle travels over rough terrain or uneven surfaces.

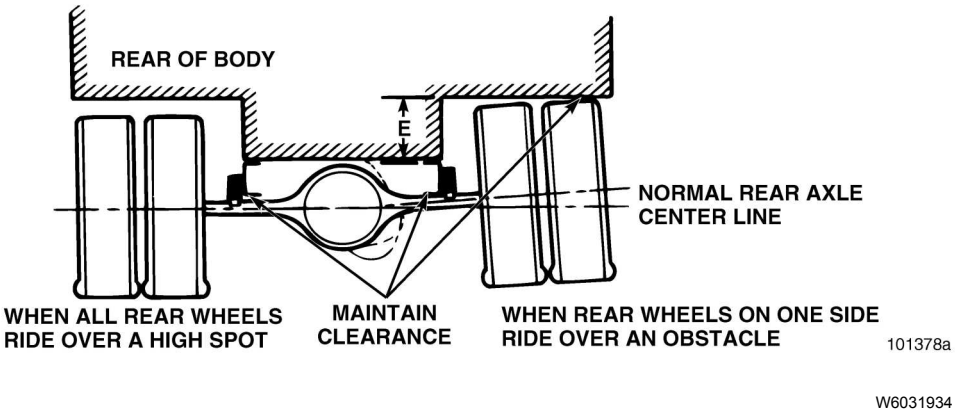

Allow Clearance for Vertical Movement of Rear Axles and Tires

Notes

All Rights Reserved

https://truckmanualshub.com/

Axle Alignment

The following specifications are being furnished to inform the field of the latest MACK axle alignment specifications.

Note: For vehicles equipped with the MACK RSA (Road Stability Advantage) program (Bendix® ABS-8 Advanced with ESP® [Electronic Stability Program]), any adjustments to vehicle alignment require recalibration of the steering angle sensor. For information, refer to the **Bendix® Service Data Sheet (SD-13- 4869)**. This data sheet can be obtained by visiting the Bendix® website at **http://www.bendix.com/media/documents/products_1/absstability/truckstractors/134869.pdf**.

Caster

The rearward or forward tilt of the steer axle kingpin, in reference to the vertical plane, is measured in degrees. Caster is positive when the steering axis is tilted rearward and is negative when the tilt is forward.

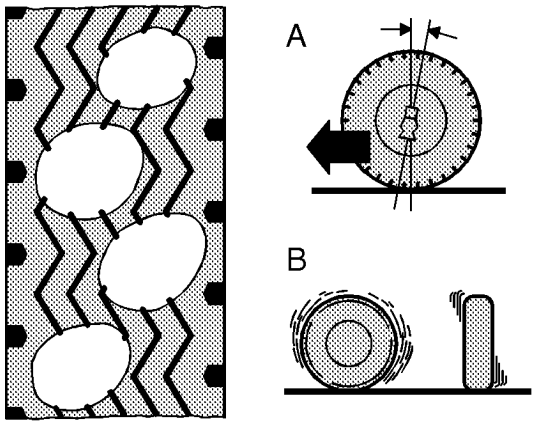

T1006460

A. Caster Angle
B. Imbalance

All measurements must be taken with the vehicle in an unloaded condition, and the steering axle and drive axle(s) on a level surface.

Right hand and left hand caster readings should not vary by more than 0.5° (1 mm/m) from side to side (cross caster). Do not bend the axle or otherwise try to adjust to adjust the caster angle. Caster shims may be used to correct caster.

Note: On chassis equipped with AIRTEK® front axles, it is critical that caster be measured with the vehicle at the correct ride height. For information on measuring and adjusting ride height, and for any other information concerning the AIRTEK® front axle, refer to the Hendrickson Technical Procedure Manual, AIRTEK® Service Instructions for MACK Vehicles, manual No. 17730-250.
Reference file at:
http://www.hendrickson-intl.com/getattachment/eeaa8aa6-5e0a-4502-ad76-25be7aa6b822/17730-250—AIRTEK—Mack-Tech-Procedure.aspx,.pdf

All Rights Reserved

https://truckmanualshub.com/

Caster Specifications	
Single Non-Driving Front Axle — Power Steering	
LR, TE / MRU	4° to 6°
AN / CXU, PI / CHU, GR / GU, TD	3° to 5°
Single Non-Driving Front Axle — Manual Steering	
All models except those equipped with Arvin-Meritor™	1° to 3°
All models except those equipped with Arvin-Meritor™ (Excluding PI / CHU)	0° to 2°
PI / CH models equipped with Arvin Meritor™	1° to 3°
AIRTEK®	
Left Side	3° to 5°
Right Side	3° to 5°
Cross Caster	0.5°
Single Front Driving Axle (Except Marmon-Herrington (MT23) after January 1, 1995	3°30’ to 5°30’ (3.5° to 5.5°)
Marmon-Herrington Front Driving Axle (MT23) After January 1, 1995	2°30’ to 4°30’ (2.5° to 4.5°)
Twin Steer	
Front Driving Axle	3°30’ to 5°30’ (3.5° to 5.5°)
Non-Driving Front-Front Axle	4° to 6°
Non-Driving Rear-Front Axle	4°30’ to 6°30’ (4.5° to 6.5°)

Notes

All Rights Reserved

https://truckmanualshub.com/

Wheel Camber

The angle formed by the inward or outward tilt of the wheel referenced to the vertical plane. Camber is positive when the wheel is tilted outward at the top and is negative when the wheel is tilted inward at the top.

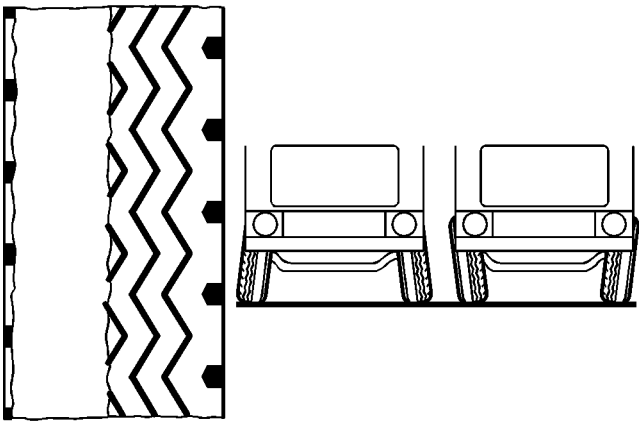

Tire Wear Due to Incorrect Camber

Camber Specifications	
Vehicles built after January 1, 1995 (with MACK Front Axles)	
Mack Non-Driving Front Axles	
FXL 12, 14.6, 18, 20 and 23 (FATYPM-V)	+1/4° ± 7/16° (+0.25° ± 0.43°)
FAW 10.5, 12 and 14.3	0° ± 7/16° (0° ± 0.43°)
FA(W) 18 and 20	+1/4° ± 7/16° (+0.25°± 0.43°)
FA23	3/4° ± 7/16° (0.75°± 0.43°)
Hendrickson (FATYPM-H)	-1/4° ± 7/16° (-0.25°± 0.43°)
Eaton or Dana (FATYPM-D)	Left: +1/4° ± 7/16° (+0.25°± 0.43°) Right: 0° ± 7/16° (0° ± 0.43°)
Meritor or Rockwell (FATYPM-R)	-1/4° ± 7/16° (-0.25°± 0.43°)
Driving Front Axles	
Arvin Meritor™	0° to 0°30’ (0° to 0.5°)
FABCO (SDA23, 20B, 18B and 16)	0°15’ to 0°45’ (0.25° to 0.75°)
Marmon-Herrington (MT23)	0°24’ to 0°36’ (0.4° to 0.6°)

Loading the axle will cause the camber to decrease. Right hand and Left hand camber readings should not vary by more than 0.5° from side to side (cross camber). Do not bend the axle or otherwise try to adjust the camber angle. If the camber angle is found out of specification, notify the axle manufacturer.

All Rights Reserved

https://truckmanualshub.com/

Straight Forward Position

The thrust angle of the left hand road wheel is set to the 1st drive axle and must be 0°± 0.02°. This is the straight ahead position and prepares the vehicle for wheel toe measurement.

Toe Angle

Toe angle is the angle of the horizontal lines drawn through the wheels of the same axle. The angle can also be measured at the tire's front and rear tread center at a distance above the ground equal to the tire's rolling radius.

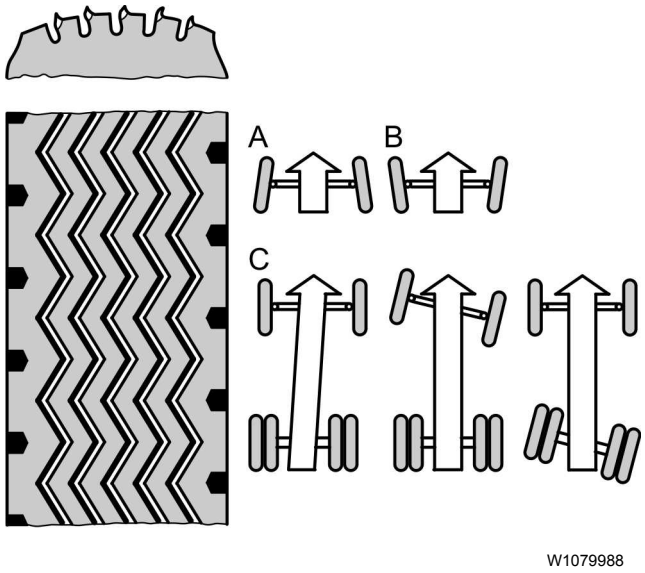

Toe Angle / Thrust Angle

A. Toe-in
B. Toe-out
C. Out-of-line axle

Toe-in is to be set and adjusted in the normal vehicle unloaded configuration. Toe should be checked at the tire's front and rear tread center at a distance above the ground equal to the tire's rolling radius. It may also be checked with equipment that senses the difference between left and right hand thrust angles.

The specification for toe-in is to be: 1/16"± 1/32" (.06"± .03") or .08° ± .04 (.04° to .12°) or 1.5 mm/m ± .75 mm/m.

When adjusting toe, insure the clamp bolt is in the vertical position and behind the tie rod. Improper orientation could result in a loss of adjustment.

All Rights Reserved

https://truckmanualshub.com/

Toe Specifications	
FAW 10.5, 12, 14.3, FA(W)18, 20, FA23, FXL12, 14.6, 18, 20	1/16” ± 1/32” (0.06” ± 0.03”) or 0.08° ± 0.04° or 1.5 mm/m ± 0.75 mm/m
AIRTEK® 12, 13.2 and 14.6 front axles	1/16” ± 1/32” (0.06” ± 0.03”) or 0.08° ± 0.04° or 1.5 mm/m ± 0.75 mm/m
Arvin-Meritor™, Eaton/Dana non-driving front axles	1/16” ± 1/32” (0.06” ± 0.03”) or 0.08° ± 0.04° or 1.5 mm/m ± 0.75 mm/m
Arvin-Meritor™ and Marmon Herrington front driving axles	1/16” ± 1/16” (0.06” ± 0.06”) or 0°4’ ± 0°4’ (0° to 0°8’) or 0.07° ± 0.07° (0° to 0.14°) 1.5 mm/m ± 1.5 mm/m
FABCO front driving axles (SDA23, 20B, 18B and 16)	1/16” ± 1/16” (0.06” ± 0.06”) or 0°4’ ± 0°4’ (0° to 0°8’) or 0.07° ± 0.07° (0° to 0.14°) 1.5 mm/m ± 1.5 mm/m

Wheel Toe (Self-steer Axles Only)

Toe–in is to be set and adjusted in the normal vehicle unloaded configuration. Toe should be checked at the tire’s front and rear tread center at a distance above the ground equal to the tire’s rolling radius. The toe-in should measure 2.35 mm/m + 0.85 mm/m (0.092”+0.033”). When adjusting toe, insure the tie rod clamps have remained in the original orientation. As a check, the clamp bolt must be in the vertical position and behind the tie rod. Improper orientation could result in a loss of adjustment.

All Rights Reserved

https://truckmanualshub.com/

Axle Perpendicularity (Thrust Angle) Requirement

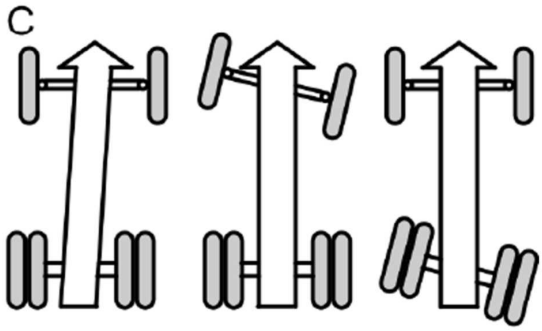

W6114032

C. Out of line axle

Suspension	mm (in.)	deg
Maxlite	1.4 mm (0.55)	±0.04
Twin Y	1.4 mm (0.55)	±0.04
AL402/461	1.4 mm (0.55)	±0.04
Primaax Tandem (6x4)	1.4 mm (0.55)	±0.04
Primaax Tri-Drive (8x6)	1.4 mm (0.55)	±0.04
Neway AD	1.4 mm (0.55)	±0.04
Single Multileaf	2.8 mm (0.11)	±0.08
m-Ride	1.4 mm (0.55)	±0.04
Hendrickson RT	2.8 mm (0.11)	±0.08
Hendrickson RS	2.8 mm (0.11)	±0.08
Hendrickson HN	2.8 mm (0.11)	±0.08
Hendrickson HaulMaax	2.8 mm (0.11)	±0.08
Camelback	4.5 mm (0.18)	±0.26
Camelback	4.5 mm (0.18)	±0.26
Camelback	4.5 mm (0.18)	±0.26
Camelback	4.5 mm (0.18)	±0.26
Mack Walking Beam	2.8 mm (0.11)	±0.08
Mack Walking Beam	2.8 mm (0.11)	± 0.08
Chalmers	2.8 mm (0.11)	± 0.08
Ridewell	2.8 mm (0.11)	± 0.08

Note: For suspensions not documented in the above table, refer to the manufacturer's instructions.

All Rights Reserved

https://truckmanualshub.com/

Bogie Wheelbase

Bogie wheelbase side-to-side variation of 3.3 mm (1/8") is to be held on MACK taperleaf suspensions — ST34 and ST38, all four spring suspensions, Neway and MACK air suspensions, and Chalmers suspensions

A tolerance of 6.4 mm (1/4") bogie wheelbase side-to-side variation is to be held on all MACK SS/SW suspensions with camelback springs or walking beams equipped with rubber shock insulators. This tolerance also includes Hendrickson beam and Ridewell suspensions.

CAUTION

Bogie wheelbase variation may be caused by a broken spring leaf. Prior to proceeding, VERY CAREFULLY inspect all spring leaves to ensure that NONE are cracked or broken. Be especially careful to inspect behind the spring clips (U-bolts). Rust streaks originating from this area are an indicator of broken spring leaves. Also, wear at the shock insulator caps in the T-slot area would be a sign of broken leaves. If a cracked or broken leaf is found, replace the spring assembly before making any additional measurements.

Chassis Wheelbase

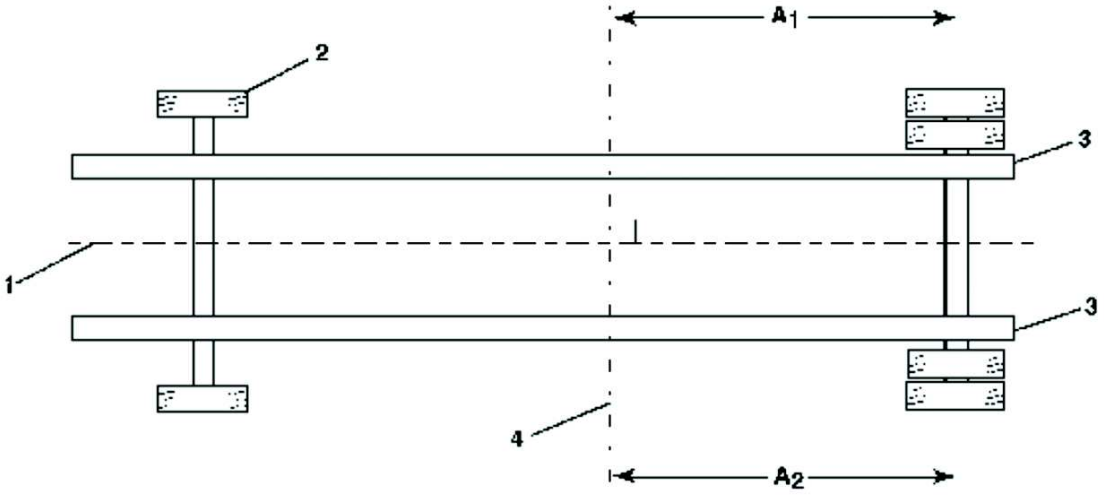

Figure 5 — 4 x 2 Chassis — A1 = A2 with a Tolerance of No More Than 1/8 Inch (3.3 MM)

1. Chassis Centerline 2. Front Axle	3. Frame Rail 4. Perpendicular Datum

W6114033

All Rights Reserved

https://truckmanualshub.com/

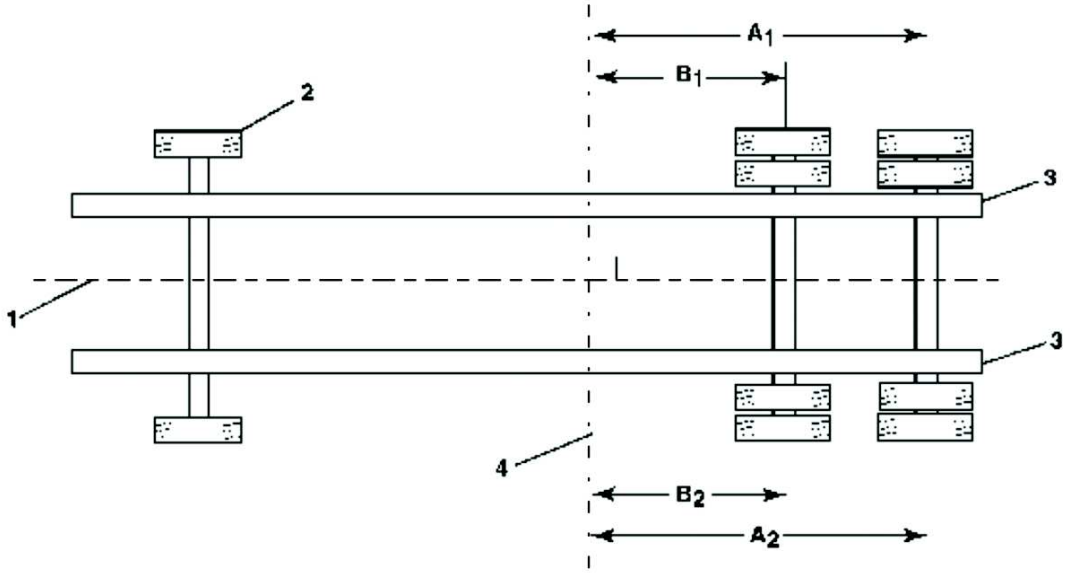

Figure 6 — 6 x 4 Chassis — A1 = A2, B1 = B2 with a Tolerance of No More Than 1/8 Inch (3.3 MM)

1. Chassis Centerline 2. Front Axle	3. Frame Rail 4. Perpendicular Datum

W6114035

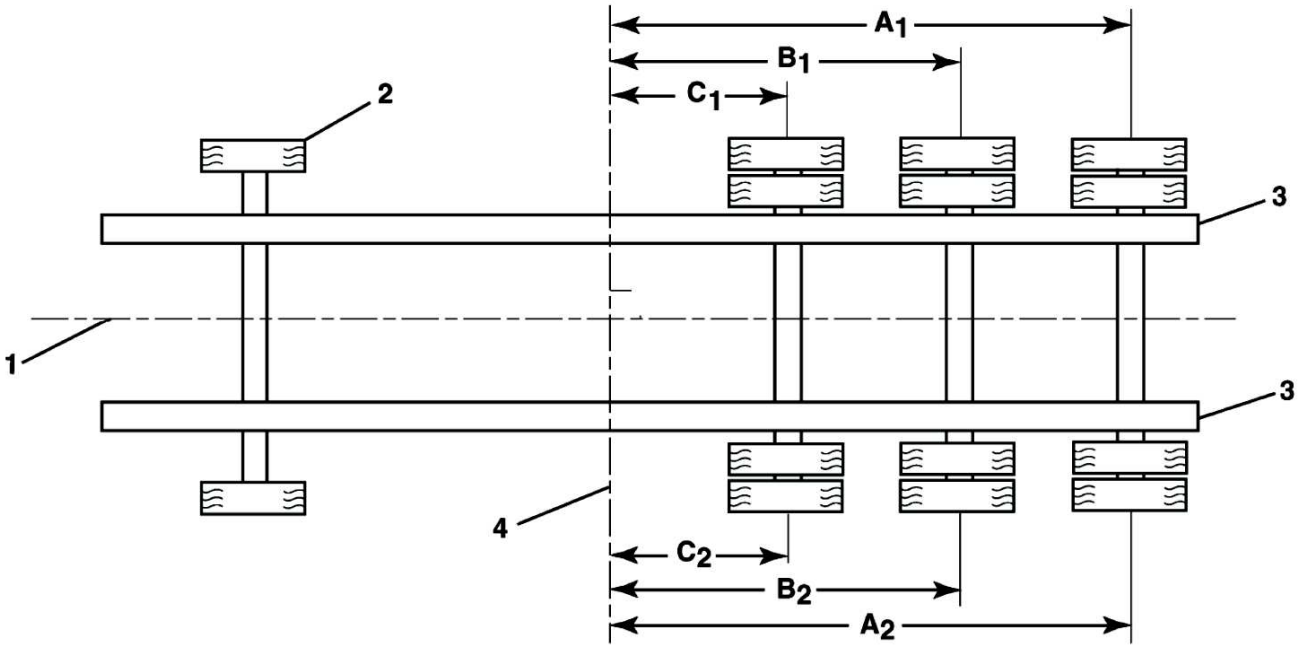

Figure 7 — 8 x 6 Chassis — A1 = A2, B1 = B2, C1 = C2 with a Tolerance of No More Than 1/8 inch (3.3 MM)

1. Chassis Centerline 2. Front Axle	3. Frame Rail 4. Perpendicular Datum

W6112858

All Rights Reserved

https://truckmanualshub.com/

Tolerance Bands for Scrub Angle

Suspension	mm (in.)	deg
Maxlite	1.4 mm (0.55)	±0.04
Twin Y	1.4 mm (0.55)	±0.04
AL402/461	1.4 mm (0.55)	±0.04
Primaax Tandem (6x4)	1.4 mm (0.55)	±0.04
Primaax Tri-Drive (8x6)	1.4 mm (0.55)	±0.04
Neway AD	1.4 mm (0.55)	±0.04
Single Multileaf	2.8 mm (0.11)	±0.08
m-Ride	1.4 mm (0.55)	±0.04
Hendrickson RT	2.8 mm (0.11)	±0.08
Hendrickson RS	2.8 mm (0.11)	±0.08
Hendrickson HN	2.8 mm (0.11)	±0.08
Hendrickson HaulMaxx	2.8 mm (0.11)	±0.08
Camelback	4.5 mm (0.18)	±0.26
Camelback	4.5 mm (0.18)	±0.26
Camelback	4.5 mm (0.18)	±0.26
Camelback	4.5 mm (0.18)	±0.26
Mack Walking Beam	2.8 mm (0.11)	±0.08
Mack Walking Beam	2.8 mm (0.11)	± 0.08
Chalmers	2.8 mm (0.11)	± 0.08
Ridewell	2.8 mm (0.11)	± 0.08

Note: For suspensions not documented in the above table, refer to the manufacturer's instructions.

All Rights Reserved

https://truckmanualshub.com/

Axle Alignment

The following specifications have been established for axle alignment on a MACK vehicle under chassis only conditions in or- der to achieve the optimum in tire wear and subsequent customer satisfaction. Before taking measurements, always drive the vehicle back and forth in a straight line four or five times. Where distance is limited, at least the length of the chassis should be traveled. This operation must be performed to ensure that the suspension has not taken a set.

Axle Centering

The steer axle should be centered on the chassis within ± 4 mm (0.156 in). All axles must be centered on the chassis ± 4 mm (0.156 in). The maximum side to side difference from the front drive axle to other drive axles (off tracking) is 8 mm (0.312 in). If the axle is not centered, check the transverse torque rod length (if equipped) and torque rod spacers.

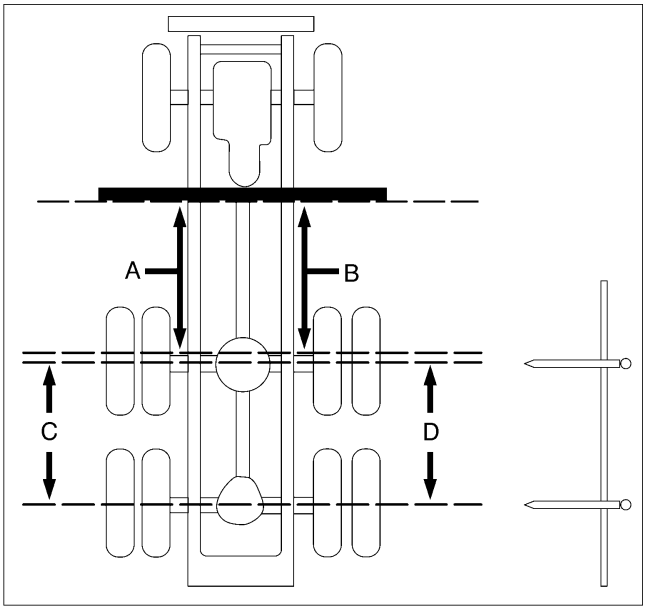

W7001407

Fig. 2 Front drive axle alignment

Notes

All Rights Reserved

https://truckmanualshub.com/

Centering Rear Axles (Chassis Equipped with SS Suspensions)

To center rear axles equipped with SS suspensions, a measurement must be made between the frame and the brake drums on each axle. A convenient extension straightedge can be made from a straight piece of steel bar stock and attached to the frame rail with magnets. With a tape measure, measure from the straightedge to the brake drum at the three designated points shown in the illustration below.

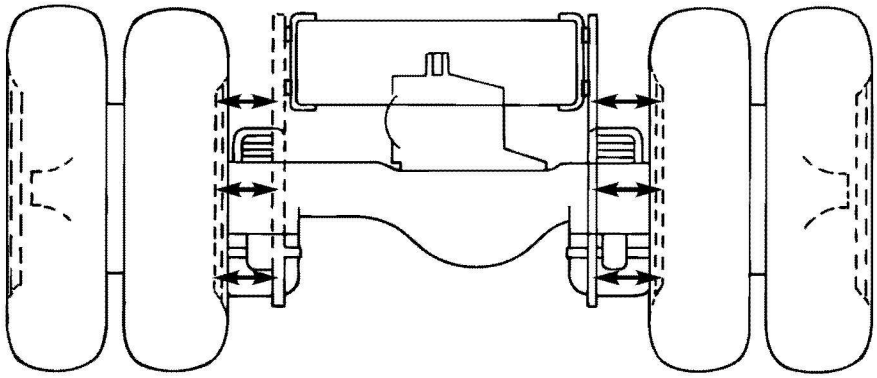

W6078915

The maximum allowable difference between the measurements taken at the front-rear and rear-rear brake drums to the straightedge must not exceed 1/4 in (6.4 mm), whether or not the chassis is equipped with a transverse torque rod.
The maximum allowable difference between the left- and right-hand sides on the same axle, front-rear or rear-rear must not exceed 1/4 in (6.4 mm) if the chassis is equipped with a transverse torque rod, or 12.7 mm (1/2 in) if the chassis is NOT equipped with a transverse torque rod.

Centering Rear Axles (Chassis Equipped with AL Suspension and Fixed-Length Transverse Torque Rods)

The first step in proper axle alignment is verifying that the rear axles are properly centered on the chassis. Before any alignment measurements are taken, the chassis should be driven back and forth in a straight line several times to allow the suspension to move into its normal operating position. To verify that the rear axles are centered, perform the following steps:

1 With the chassis parked on a level surface, block the front wheels to prevent the vehicle from moving, then release the parking brakes. (Air system pressure should be between 110 to 130 psi when performing these procedures.)

2 Measure the ride height. Ride height gauges are available to accurately measure chassis ride height. Refer to “Air Suspension Height, Adjustment”, page 28 for information on using the gauges and measuring ride height.

3 After the ride height has been checked and/or adjusted, determine if the axles are centered by measuring from the outside of the frame rail to the inside edge of the spring clip (U-bolt) (Dimension “A” in the illustration below). The maximum allowable side-to-side difference on any one axle is 6.34 mm (1/4 in). Washer spacers can be added or removed from either side of the torque rod in order to obtain the correct axle positioning.

4 After axle centering is verified or corrected, exhaust the air from the suspension and verify that no interference exists between the frame rail and any spring clip (U-bolt).

All Rights Reserved

https://truckmanualshub.com/

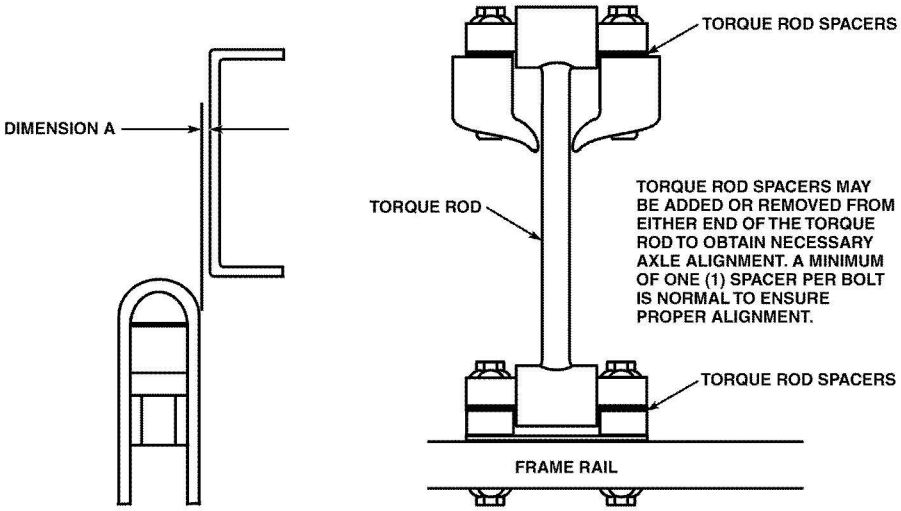

W6078909

Note: Beginning approximately 3/19/01, a change in the spring seat and spacer resulted in a ride height dimension change from 5-1/4″ to 4-7/8″ on MAXAIR™ 40 air suspensions. Suspensions having a ride height of 4-7/8″ are identified by an “X” marking on the spring cap. Always look for the “X” marking before adjusting ride height. Refer to service information in Function Group 7 for information on using the gauges and measuring ride height.

Rear Axle Literature

Printed copies of the rear axle literature are no longer available from the axle suppliers. Therefore, MACK is unable to supply this printed literature to its dealers.

Service manuals for many of the supplier’s rear axles are now available from the official web sites Dana Corporation and Meritor.

To review and download rear axle literature, please visit:

http://www.dana.com

http://www.meritor.com/customer/northamerica/lod/defau lt.aspx

All Rights Reserved

https://truckmanualshub.com/

Rear Suspension

The following section details the various suspensions. Included is design and function, specification and procedure information.

Note: HENDRICKSON, PRIMAAX, and QUIK-ALIGN are either registered trademarks or trademarks of (i) Hendrickson USA, L.L.C. in the United States, and (ii) Hendrickson International Corporation outside the United States.

Basic Description

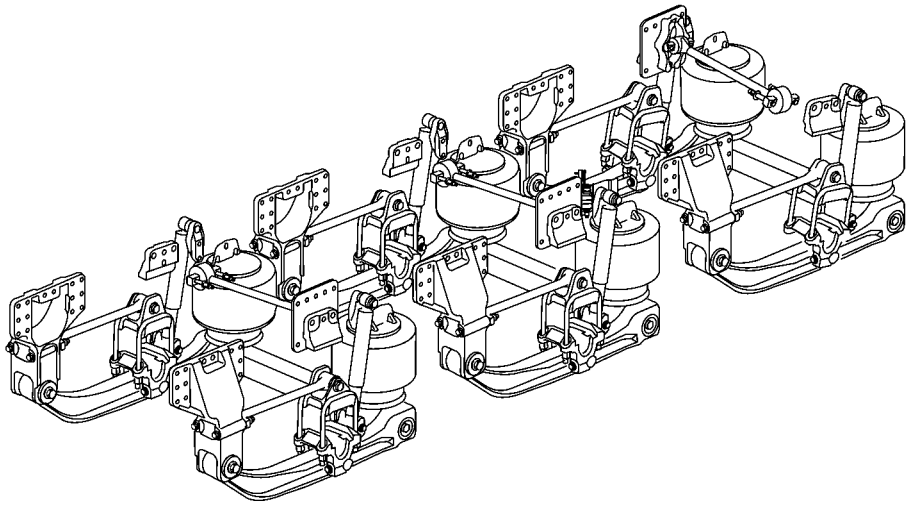

W7001454

This publication is intended to acquaint and assist maintenance personnel in the preventive maintenance, service, repair and rebuild of the Mack Tridrive suspension system.

Note: Use only genuine Hendrickson parts for servicing this suspension system.

Notes

All Rights Reserved

https://truckmanualshub.com/

Ride Height Adjustment, Mack Tridrive

The Mack Tridrive suspension is equipped with a height control valve located on the middle axle. The height control valve is not supplied by Hendrickson, although it is a required component. Hendrickson is not responsible for components supplied by the vehicle manufacturer. For assistance with inspection, maintenance and rebuild instructions on these components, refer to the vehicle manufacturer.

Lateral Alignment

1 Use a work bay with a level floor. Drive the vehicle slowly, straight ahead. Try to slacken or loosen the suspension as the vehicle is positioned. End with all wheels positioned straight ahead. Try to roll to a stop without the brakes being used. Do not set the parking brake. Chock the front wheels of the vehicle.

2 Measure from the outside of the frame rail to the rim flange of the inner tire. Record the measurement.

3 Measure the same distance on the opposite side of the same axle. Record the measurement.

4 Subtract the two measurements to get a difference between the two. If the difference is greater than 1/8 in.(3 mm) it will be necessary to correct the lateral alignment. Adding or removing shims that are located between the transverse torque rod and frame rail accomplishes this. A general rule of thumb is to use a shim with a thickness that is half of the difference between the two measurements.

The mounting fasteners used with the straddle mount transverse torque rods are furnished by the vehicle manufacturer. It is important to check the locknuts for proper torque during preventive maintenance service intervals. Follow the vehicle manufacturer's specifications for tightening torque values. All torque rods need to be inspected for looseness by one of the following methods:

- **Method 1:** For Tractor applications only with brakes applied, slowly rock the empty vehicle with power while a mechanic visually checks the action at both ends.
- **Method 2**: With the vehicle shut down, a lever check can be made with a long pry bar placed under each rod end and pressure applied.

Visually inspect torque rod bushings for torn or shredded rubber, for bent, cracked, or broken torque rods, and also for end hubs that have an elongated "oval" shape. Any of these conditions require component replacement. Rod ends can be renewed by pressing out the worn bushing, and installing a replacement bushing. In the event of structural damage, the entire torque rod assembly should be replaced. The torque rods are made to a specified length or a two-piece transverse torque rod can be cut and welded to the desired length (if available).

Note: Hendrickson recommends the use of Grade 8 bolts and Grade C locknuts be used for all torque rod attachments.

All Rights Reserved

https://truckmanualshub.com/

Axle Pinion Angle

Drive axle pinion angles are established by the vehicle manufacturer. The suspension axle brackets called out in “Pinion Angle Chart”, page 37 are machined to specific angles to meet the vehicle manufacturer specified requirements. If it is necessary to fine tune the pinion angle, first verify that the suspension is at the proper ride height (see “Ride Height Adjustment, Mack Tridrive”, page 20). Install a digital protractor on the axle housing. Check that the pinion angle is within the specified range (see “Ride Height and Pinion Angle Specifications”, page 29).

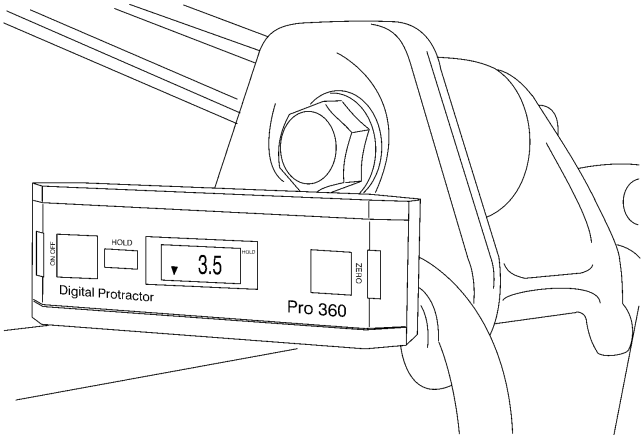

W7001406

Fig. 1 Digital Protractor J-38460-A

Notes

All Rights Reserved

https://truckmanualshub.com/

Rear Axle Alignment Inspection

Proper alignment is essential for maximum ride quality, performance, and tire service life. The recommended alignment procedure is described below. This procedure should be performed if excessive or irregular tire wear is observed, or any time the QUIK-ALIGN connection is loosened or removed.

1 Use a work bay with a level floor. Drive the vehicle slowly, straight ahead. Try to slacken or loosen the suspension as the vehicle is positioned. End with all wheels positioned straight ahead. Try to roll to a stop without the brakes being used.

2 Chock the front wheels of the vehicle. Do not set the parking brake.

3 Verify that the proper ride height is set (see “Ride Height and Pinion Angle Specifications”, page 29).

4 If axle alignment equipment is not available, using "C" clamps, securely clamp a six-foot piece of STRAIGHT bar stock or angle iron across the lower frame flange. Select a location for the angle iron as far forward of the drive axle as possible, where components will not interfere.

5 Accurately square the straight edge to the frame using a carpenter's square.

6 Using a measuring tape, measure from the straight edge to the forward face of the front drive axle arms at the centerline on both sides of the vehicle, **A** and **B**. If both sides measure within the vehicle manufacturer's specifications, alignment of the front drive axle is acceptable.

7 If the front drive axle is within specification, proceed to check the rear drive axle.

8 Using a trammel bar, measure from spindle center to spindle center on both sides of the vehicle, **C** and **D**. If both sides measure within the vehicle manufacturer's specifications, alignment of the rear drive axle is acceptable.

9 If the trammel bar measurement is not within specifications, perform the correct alignment procedure.

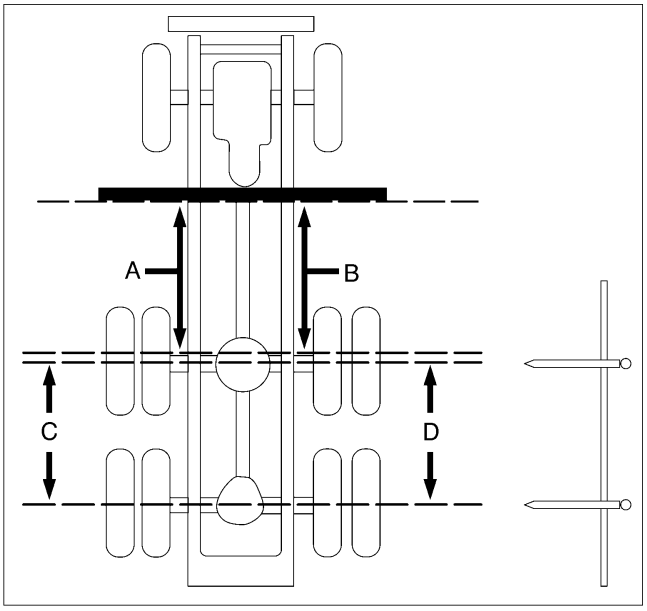

W7001407

Fig. 2 Front drive axle alignment

All Rights Reserved

https://truckmanualshub.com/

Alignment Instructions

Note: Use a new QUIK-ALIGN pivot bolt kit for any axle alignment or disassembly of the QUIK-ALIGN connection. This ensures that the proper clamp load is applied to the connection, so that the joint will not slip in service.

Note: The Eccentric collars (with the square drive feature) are located on the outboard side of the frame hangers with the concentric collars on the inboard side. The total range of fore/aft axle adjustment is 25 mm (1.0 in).

Note: A suspension equipped with eccentric QUIK-ALIGN collars on the outboard sides of the axle can be adjusted. Contact the vehicle manufacturer for specifications.

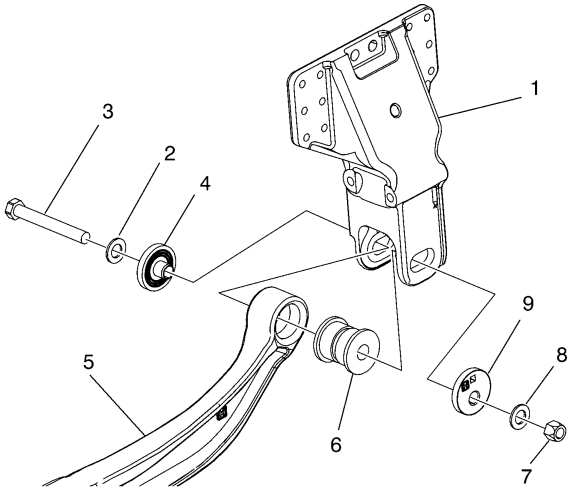

1 Frame hanger
2 1” Dacromet washer
3 1” Dacromet pivot bolt
4 QUIK-ALIGN concentric collar
5 Support beam
6 Pivot bushing
7 1” Dacromet pivot bolt locknut. Tightening torque 712–780 Nm (525–575 ft-lb)
8 1” Dacromet washer
9 QUIK-ALIGN eccentric collar

1. To allow the axle to move freely, it is important to have all 1" QUIK-ALIGN pivot bolt locknuts snugged tight, approximately 136 Nm (100 ft-lb) on the axle that is being aligned. This will hold the eccentric flanged collar in place against the hanger face and within the adjustment guide, but loose enough to permit the eccentric flanged collar to rotate freely.

2. The ¾" longitudinal torque rod to frame hanger fasteners must be loose to allow the axle to move during the alignment process. All other suspension fasteners must be tightened to their specified torque values.

All Rights Reserved

https://truckmanualshub.com/

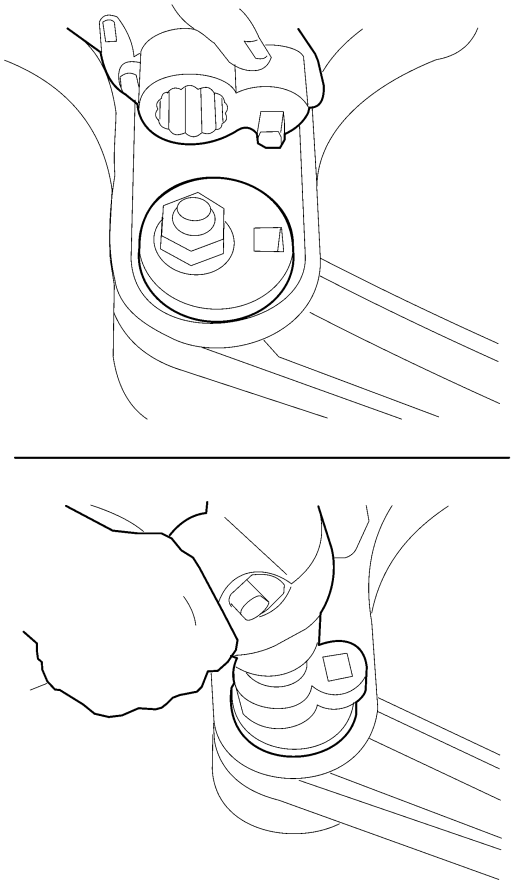

W7001409

Rotate the QUIK-ALIGN eccentric collar

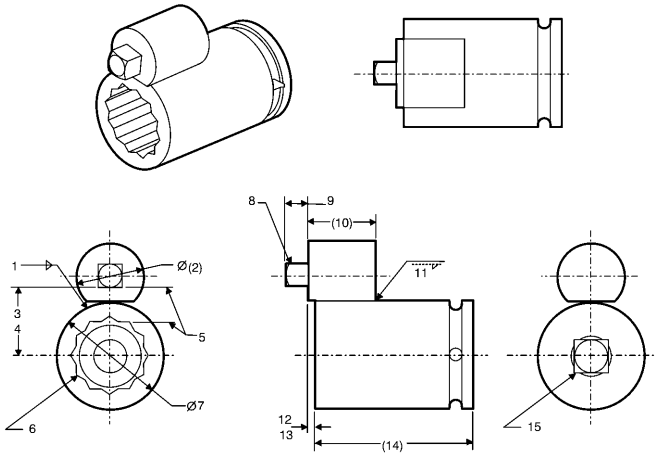

W7001436

3. Use a QUIK-ALIGN socket tool and impact gun, or a ½" square drive breaker bar to rotate the QUIK-ALIGN eccentric collar to align the axle. A 90° rotation of the QUIK-ALIGN collar, from the nominal position, will move the axle up to a maximum of 13 mm (½ in) forward or rearward.

Note: If the axle can be adjusted on both sides, begin the adjustment on the side that is furthest out of specification.

All Rights Reserved

https://truckmanualshub.com/

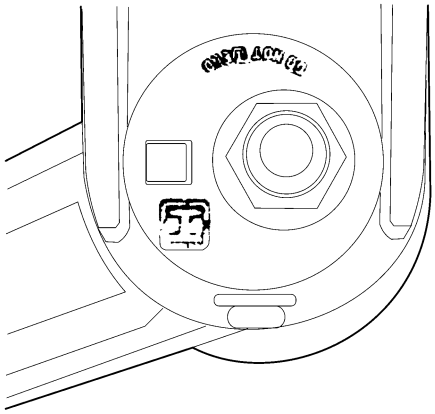

W7001410

Axle full forward position

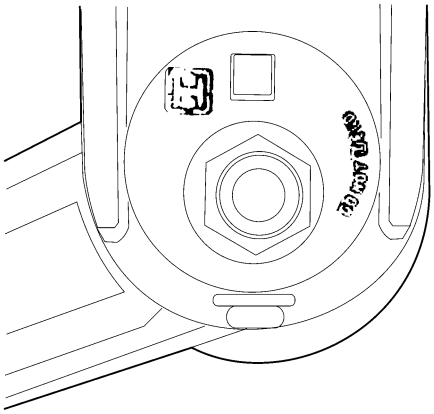

W7001412

Axle center position (nominal)

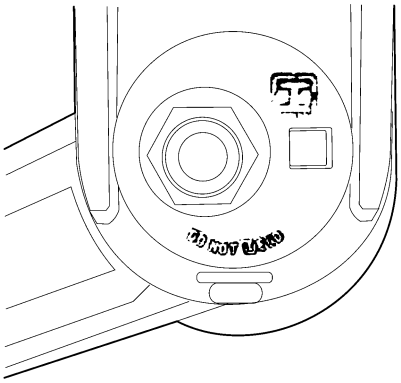

W7001411

Axle full aft position

4. The nominal position of the QUIK-ALIGN collars is for the axle to be in the centered position. The square drive on the QUIK-ALIGN collars will be in the centered (12 o'clock) position.

DANGER

Do not assemble the QUIK-ALIGN joint without the proper fasteners. Use only Hendrickson Dacromet Plus XL plated fasteners to sustain the proper clamp force. Failure to do so can cause loss of vehicle control, property damage or serious personal injury or death.

DANGER

Ensure that the QUIK-ALIGN fasteners torque value is sustained as recommended in the tightening torque specifications section (“Hendrickson Recommended Torque Specifications”, page 35). Failure To do so can cause loss of vehicle control resulting in personal injury, property damage or serious personal injury or death.

Note: Prior to tightening the 1" QUIK-ALIGN locknuts to torque specifications, it is mandatory that the vehicle is at the proper ride height.

All Rights Reserved

https://truckmanualshub.com/

5. Once the correct axle alignment is achieved, use a calibrated torque wrench to tighten the 1" QUIK-ALIGN locknuts to 712–780 Nm (525–575 ft-lb) torque to complete the alignment.

6. Re-check the ride height and the axle alignment to verify that it is within specifications (“Rear Axle Alignment Inspection”, page 22).

7. Check the pinion angles with a digital protractor. Refer to the vehicle manufacturer specifications for the required pinion angles (see page 21).

8. If the pinion angles are within vehicle manufacturer's specifications, fill the gap between the longitudinal torque rod bar pin and the frame hanger with shims. Tighten the ¾" longitudinal torque rod as per vehicle manufacturer's specifications.

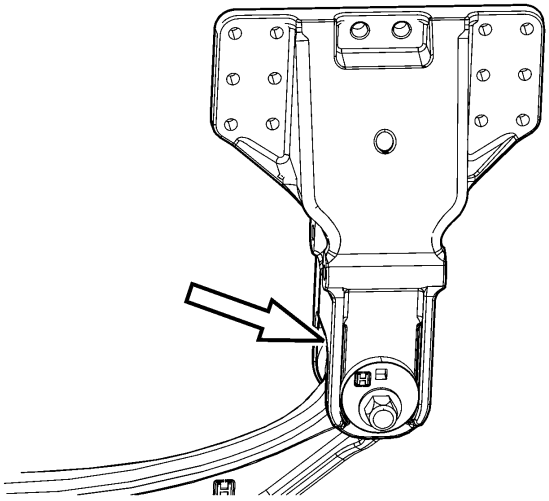

W7001456

Add or remove shims to maintain or adjust pinion angle.

9. If it is necessary to fine tune the pinion angle, it is possible to increase or decrease the pinion angle by using one of the following procedures.

Pinion Angle Adjustments for Less Than 1.5°

Install or remove shims between the longitudinal torque rod and the frame hanger to achieve the recommended pinion angle. To increase the pinion angle, install shims, and to decrease the pinion angle, remove shims. A general rule of thumb is, 1/8" change in the shim pack thickness will increase or decrease the pinion angle by ½ degree.

Pinion Angle Adjustments for More Than 1.5°

It will be necessary to replace the bottom cap and the longitudinal torque rod with a bottom cap and the longitudinal torque rod that will achieve the desired pinion angle (see “Pinion Angle Chart”, page 37).

10. After pinion angle adjustment, use a calibrated torque wrench to tighten the ¾" longitudinal torque rod to frame hanger fasteners per vehicle manufacturer's specifications.

11. Following the alignment of the axles, move the vehicle back and forth several times prior to removing the straight edge from the frame, and recheck measurements to confirm adjustments.

12. Repeat steps in “Alignment Instructions”, page 23 until the correct alignment and pinion angle are achieved.

All Rights Reserved

https://truckmanualshub.com/

U-Bolt Torque

Tighten the U-Bolt locknuts evenly and torque to 475–542 Nm (350-400 ft-lb) in the proper sequence.

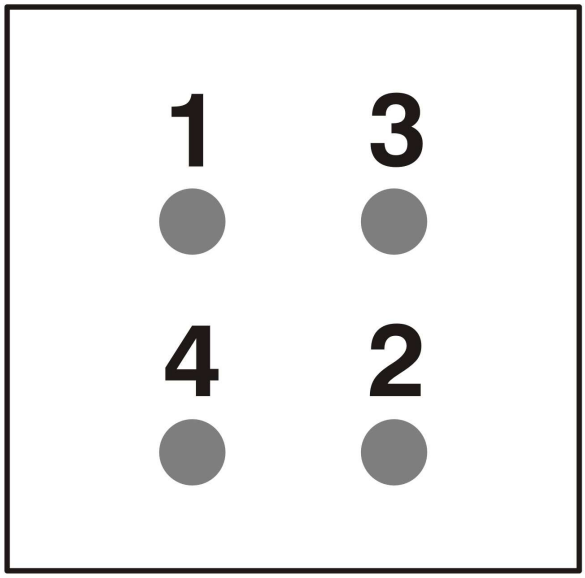

W7001397

Torquing Sequence

Notes

All Rights Reserved

https://truckmanualshub.com/

Air Suspension Height, Adjustment

Procedure:

DANGER

Do not attempt to repair or service this vehicle without sufficient training, the correct service literature, and the proper tools. Failure to follow this could make the vehicle unsafe and lead to serious personal injury or death.

CAUTION

The MACK air suspension is set at the factory. Changing the ride height will affect the driveshaft angles and may cause driveline vibration and/or shorten component life. **Ride height adjustments must be performed in accordance with all documented service procedures.**

Note: After a suspension component replacement an alignment should be performed.

Note: Use special tool **J-44544**.

This document provides procedures for adjusting the air suspension.

1. Prepare the vehicle for the ride height calculation as follows:

- Park the vehicle on a level surface (the front wheels must be pointed straight ahead).
- Free and center all suspension joints by slowly moving the vehicle back and forth twice without using the brake. When coming to a complete stop, make sure the brakes (parking and service) are released.
- Chock the front wheels.

Note: Measurements must be performed on an unloaded vehicle.

2. Check all tires for proper inflation. Adjust tire air pressure to tire manufacturer's specifications.
3. Using the dash mounted rear suspension air dump switch release the air in the rear air spring, or disconnect the leveling rod from the leveling valve so that the pressure is released from the air springs.

WARNING

Avoid personal injury. BEFORE releasing air pressure from air springs, BE SURE neither your hand nor another persons hand, etc., is in a position where it could be pinched between components when the frame/suspension drops.

4. Start the engine and allow the air system to attain normal operating pressure of 827 kPa (120 psi). Turn off the engine.
5. Fill the rear air springs with air using the dash mounted switch or reconnect the actuator rod to the load leveling valve lever.

Ensure the air system is at normal operating pressure of
827 kPa (120 psi).

6. Measure the size of the frame.

Note: The ride height measurement is dependent on frame size.

7. Measure the distance from the floor to the center of the axle.
8. Measure the distance from the bottom edge of the frame to the floor.
9. The difference in the two measurements is the ride height. Verify that the vehicle is at the correct ride height per Table A.

All Rights Reserved

https://truckmanualshub.com/

Table A – Frame Height and Ride Height Measurements

Frame Height mm (in.) including frame type	Ride Height mm. (in.) (unloaded)
266 (10.47) RRH-200	210 ± 5 (mm), 8.27 ± .2 (in)
300 (11.81) RRH–180	193 ± 5 (mm), 7.6 ± .2 (in)

10. Adjust the ride height (if required).

11. Loosen the fastener securing the load leveling valve to the frame. Use the ride height adjustment socket wrench to adjust the valve so the ride height is within specification. The suspension ride height is changed by turning the load leveling valve clockwise (to raise) or counter-clockwise (to lower). Tighten the fastener securing the load leveling valve to the frame to 175 ± 30 Nm (129± 22 ft-lb).

W7081225

12. Re-check the ride height to confirm the accuracy of the leveling valve adjustments.

13. Using the dash mounted rear suspension air dump switch release the air in the rear air spring, or disconnect the leveling rod from the leveling valve so that the pressure is released from the air springs.

WARNING

Avoid personal injury. BEFORE releasing air pressure from air springs, BE SURE neither your hand nor another persons hand, etc., is in a position where it could be pinched between components when the frame/suspension drops.

14. Start the engine and allow the air system to attain normal operating pressure of 827 kPa (120 psi). Turn off the engine.

15. Fill the rear air springs with air using the dash mounted switch or reconnect the actuator rod to the load leveling valve lever.

Ensure the air system is at normal operating pressure of 827 kPa (120 psi).

16. Re-check the ride height.

If the ride height measurement is not within the specifications. Check the leveling valve and other suspension components for wear of damage.

17. Apply the parking brake.

18. Remove the wheel chocks.

Ride Height and Pinion Angle Specifications

Note: HENDRICKSON, PRIMAAX, and QUIK-ALIGN are either registered trademarks or trademarks of (i) Hendrickson USA, L.L.C. in the United States, and (ii) Hendrickson International Corporation outside the United States.

Note: Use only Genuine Hendrickson parts for servicing this suspension system.

This information covers specifications for ride height and pinion angle, including suspension applications and torque specifications.

All Rights Reserved

https://truckmanualshub.com/

Suspension Applications

Suspension Configuration	Maximum GAWR Metric Ton (lb)	Maximum GCW Metric Ton (lb)	Axle Spacing mm (in.)	Required Number of Parking Chambers	Available Axles	
					Models	Metric Ton (lb)
4x2	9 (20,000)	80 (160,000) **(1)**	N/A	TWO	Eaton Meritor	10 (23,000)
6x4	17 (38,000)		1320 (52)	TWO (1st Axle)	Eaton Meritor	18 (40,000)
	18 (40,000)		1320 (52)	FOUR		
	18 (40,000)		1524 (60)	FOUR		

(1) GCW (Gross Combination Weight) rating can be reduced by vehicle operating applications, engine horsepower/torque, axle type/model, axle ratio, and/or vehicle tire size.

Torque Specifications

Location	Diameter	Grade	Torque
U-Bolts for Suspension	M20	10.9	STD 38K 6X4 540 ± 75 Nm (400 ± 55 ft-lb)
Air Spring to Frame	M12	8.8	70 ± 10 Nm (52 ± 8 ft-lb)
Air Spring to Pedestal	M12	8.8	70 ± 10 Nm (52 ± 8 ft-lb)
Torque Rod to Frame-Mounted Bracket	M16	10.9	275 ± 45 Nm (203 ± 33 ft-lb) Re-torque after one minute
Torque Rod to Axle Housing	M16	10.9	275 ± 45 Nm (203 ± 33 ft-lb) Re-torque after one minute
Shock Absorber Bracket to Frame	M14	10.9	175 ± 30 Nm (130 ± 22 ft-lb)
Shock Absorber to Bracket (Upper and Lower)	M16	8.8	220 ± 35 Nm (162 ± 25 ft-lb)
Bracket for Load Leveling Valve to Frame	M14	10.9	175 ± 30 Nm (130 ± 22 ft-lb)
Load Leveling Valve Control Arm to Lever on Valve and Air Spring Pedestal	M6	8.8	10 ± 1.5 Nm (7 ± 1 ft-lb)
Trailing Blade Hanger Bracket to Frame	M14	10.9	175 ± 30 Nm (130 ± 22 ft-lb)
	M20	10.9	540 ± 90 Nm (398 ± 66 ft-lb)
Trailing Blade Fastener to Trailing Blade Hanger	M22	10.9	750 ± 75 Nm (553 ± 55 ft-lb)
Trailing Blade to Axle	M18	10.9	440 ± 40 Nm (325 ± 30 ft-lb) Re-torque after one minute

All Rights Reserved

https://truckmanualshub.com/

Pinion Angle Specifications

Table A – Pinion Angle Specifications (for Angles Measured on Axle Housing)

Frame Height mm (in.)	Bogie Spread mm. (in.)	Ride Height mm (in.) (unloaded) H1	Ride Height mm (in.) (unloaded) H2	Pinion Angle (°) (front drive axle)	Pinion Angle (°) (rear drive axle)
Meritor NG14X (MT-40–A14*D) — RTS1857D Meritor RT-40–145 — RT1857SM Meritor RT-40–145G — RT1850SM					
266 (10.47)	1320 (52)	210 ± 5 (8.3 ± .2)	311.3 ± 9 (12.25 ± .35)	3.5 ± 1°	11.5 ± 1°
RRH–200	1524 (60)	210 ± 5 (8.3 ± .2)	311.3 ± 9 (12.25 ± .35)	3.5 ± 1°	9.5 ± 1°
300 (11.81)	1320 (52)	193 ± 5 (7.6 ± .2)	294.3 ± 9 (11.5 ± .35)	3.5 ± 1°	11.5 ± 1°
RRH–180	1524 (60)	193 ± 5 (7.6 ± .2)	294.3 ± 9 (11.5 ± .35)	3.5 ± 1°	9.5 ± 1°
Dana 404 — RT1850SE					
266 (10.47)	1320 (52)	210 ± 5 (8.3 ± .2)	307.3 ± 9 (12.1 ± .35)	3.0 ± 1°	10.5 ± 1°
RRH–200	1524 (60)	210 ± 5 (8.3 ± .2)	307.3 ± 9 (12.1 ± .35)	3.0 ± 1°	9.0 ± 1°
300 (11.81)	1320 (52)	193 ± 5 (7.6 ± .2)	290.3 ± 9 (11.4 ± .35)	3.0 ± 1°	10.5 ± 1°
RRH–180	1524 (60)	193 ± 5 (7.6 ± .2)	290.3 ± 9 (11.4 ± .35)	3.0 ± 1°	9.0 ± 1°
Dana DST 40 — RTS1850A, Dana DSH 40 — RTS1850C, Dana DST 41 — RTS1850D					
266 (10.47)	1320 (52)	210 ± 5 (8.3 ± .2)	307.3 ± 9 (12.1 ± .35)	3.0 ± 1°	7.0 ± 1°
RRH–200	1524 (60)	210 ± 5 (8.3 ± .2)	307.3 ± 9 (12.1 ± .35)	3.0 ± 1°	6.0 ± 1°
300 (11.81)	1320 (52)	193 ± 5 (7.6 ± .2)	290.3 ± 9 (11.4 ± .35)	3.0 ± 1°	7.0 ± 1°
RRH–180	1524 (60)	193 ± 5 (7.6 ± .2)	290.3 ± 9 (11.4 ± .35)	3.0 ± 1°	6.0 ± 1°
Dana D40–170 — RTS1873A					
266 (10.47)	1320 (52)	210 ± 5 (8.3 ± .2)	307.3 ± 9 (12.1 ± .35)	3.0 ± 1°	10.5 ± 1°
RRH–200	1524 (60)	210 ± 5 (8.3 ± .2)	307.3 ± 9 (12.1 ± .35)	3.0 ± 1°	8.5 ± 1°
300 (11.81)	1320 (52)	193 ± 5 (7.6 ± .2)	290.3 ± 9 (11.4 ± .35)	3.0 ± 1°	10.5 ± 1°
RRH–180	1524 (60)	193 ± 5 (7.6 ± .2)	290.3 ± 9 (11.4 ± .35)	3.0 ± 1°	8.5 ± 1°
Meritor NG14X (MT–40–A14*C) — RTS1857C					
266 (10.47)	1320 (52)	210 ± 5 (8.3 ± .2)	311.3 ± 9 (12.6 ± .35)	3.5 ± 1°	3.0 ± 1°
RRH–200	1524 (60)	210 ± 5 (8.3 ± .2)	311.3 ± 9 (12.6 ± .35)	3.5 ± 1°	3.0 ± 1°
300 (11.81)	1320 (52)	193 ± 5 (7.6 ± .2)	294.3 ± 9 (11.5 ± .35)	3.5 ± 1°	3.0 ± 1°
RRH–180	1524 (60)	193 ± 5 (7.6 ± .2)	294.3 ± 9 (11.5 ± .35)	3.5 ± 1°	3.0 ± 1°
266 (10.47) RRH–200	1320 (52)	160 ± 5 (6.3 ± .2)	249.2 ± 9 (9.8 ± .35)	2.0 ± 1°	5.5 ± 1°

All Rights Reserved

https://truckmanualshub.com/

Table A (Continued) – Pinion Angle Specifications (for Angles Measured on Axle Housing)

Frame Height mm (in.)	Bogie Spread mm. (in.)	Ride Height mm (in.) (unloaded) H1	Ride Height mm (in.) (unloaded) H2	Pinion Angle (°) (front drive axle)	Pinion Angle (°) (rear drive axle)
Meritor RT40–160 — RT1873SM					
266 (10.47)	1320 (52)	210 ± 5 (8.3 ± .2)	308.1 ± 9 (12.13 ± .35)	3.0 ± 1°	11.5 ± 1°
RRH–200	1524 (60)	210 ± 5 (8.3 ± .2)	308.1 ± 9 (12.13 ± .35)	3.0 ± 1°	10.0 ± 1°
300 (11.81)	1320 (52)	193 ± 5 (7.6 ± .2)	291.1 ± 9 (11.46 ± .35)	3.0 ± 1°	11.5 ± 1°
RRH–180	1524 (60)	193 ± 5 (7.6 ± .2)	291.1 ± 9 (11.46 ± .35)	3.0 ± 1°	10.0 ± 1°
Industry (Meritor and Dana) Axles 4X2 — RAD-A2T RS1045SM, RS1057SM, RSS1057, RSS1045, RS0930SM					
266 (10.47) RRH-200	NA	210 ± 5 (8.3 ± .2)	311.3 ± 9 (12.6 ± .35)	3.5 ± 1°	NA
6X2 — RADT-A4T					
266 (10.47) RRH-200	1200 (47.25)	210 ± 5 (8.3 ± .2)	311.3 ± 9 (12.25 ± .35)	3.5 ± 1°	NA
300 (11.81) RRH–180	1200 (47.25)	193 ± 5 (7.6 ± .2)	294.3 ± 9 (11.58 ± .35)	3.5 ± 1°	NA
Mack Axle 4X2 and 6X4					
266 (10.47)	1320 (52)	210 ± 5 (8.3 ± .2)	281.5 ± 9 (11.08 ± .35)	2.0 ± 1°	2.0 ± 1°
RRH–200	1524 (60)	210 ± 5 (8.3 ± .2)	281.5 ± 9 (11.08 ± .35)	2.0 ± 1°	2.0 ± 1°
300 (11.81)	1320 (52)	193 ± 5 (7.6 ± .2)	264.5 ± 9 (10.41 ± .35)	2.0 ± 1°	2.0 ± 1°
RRH–180	1524 (60)	193 ± 5 (7.6 ± .2)	264.5 ± 9 (10.41 ± .35)	2.0 ± 1°	2.0 ± 1°

All Rights Reserved

https://truckmanualshub.com/

Table B – Pinion Angle Specifications (for Angles Measured on Pinion Shaft End or Yoke Face)

Frame Height mm (in.)	Bogie Spread mm. (in.)	Pinion Angle (°) (front drive axle)	Pinion Angle (°) (rear drive axle)
Meritor NG14X (MT–40–A14*D) — RTS1857D Meritor RT-40–145 — RT1857SM Meritor RT-40–145G — RT1850SM			
266 (10.47)	1320 (52)	3.0 ± 1°	12.0 ± 1°
RRH–200	1524 (60)	3.0 ± 1°	10.0 ± 1°
300 (11.81)	1320 (52)	3.0 ± 1°	12.0 ± 1°
RRH–180	1524 (60)	3.0 ± 1°	10.0 ± 1°
Meritor NG14X (MT–40–A14*C) — RTS1857C			
266 (10.47)	1320 (52)	3.0 ± 1°	3.5 ± 1°
RRH–200	1524 (60)	3.0 ± 1°	3.5 ± 1°
300 (11.81)	1320 (52)	3.0 ± 1°	3.5 ± 1°
RRH–180	1524 (60)	3.0 ± 1°	3.5 ± 1°
266 (10.47) RRH–160	1320 (52)	1.5 ± 1°	6.0 ± 1°
Note: For all Dana axles and not listed Meritor axles, the angle values specified for measurement on the axle housing are the same when measured on the pinion shaft end or yoke face.			

Notes

All Rights Reserved

https://truckmanualshub.com/

Rear Suspension Specifications

6x4

Capacity	20 865 kg (46,000 lb)
Axle Configuration	Tandem
GVW Approval	36 287 kg (80,000 lb)
GCW Approval	81 647 kg (180,000 lb)
Site Travel Rating	27 216 kg (60,000 lb)
Axle Travel	203 mm (8 in)
Ground Clearance	273 mm (10.75 in.)
Lift Axles	Approved
Ride Heights	216 mm (8.5 in.), 254 mm (10 in.)
Engine Torque Restrictions	None
Axle Spacing	1320 mm (52 in.) to 1842 (72.5 in.)

8x6

Capacity	34 473 kg (76,000 lb)
Axle Configuration	Tri-Drive
GVW Approval	36 287 kg (80,000 lb)
GCW Approval	81 647 kg (180,000 lb)
Site Travel Rating	27 216 kg (60,000 lb)
Axle Travel	± 90 mm (± 3.5 in.)
Ground Clearance	262 mm (10.3 in.)
Lift Axles	Not Approved
Ride Heights	216 mm (8.5 in.), 254 mm (10 in.)
Engine Torque Restrictions	None
Axle Spacing	1370 mm (54 in.) to 1524 (60 in.)

Note: PRIMAAX® is intended for vocational and heavy-haul vehicle applications including, but not limited to: truck, tractor, dump, front discharge mixer, refuse, logging, platform, fire/rescue, specialty and vehicles equipped with outriggers as approved by Hendrickson and vehicle manufacturer.

All Rights Reserved

https://truckmanualshub.com/

Hendrickson Recommended Torque Specifications

	Component	Quantity*	Size	Torque Nm	Torque ft-lb
Frame Hanger**		16	¾" -10 UNC	475–542	350-400
Longitudinal Torque Rod	A. To Forward Hanger Mount**	4	¾"-16 UNF	373–441	275-325
	B. To Rear Top Pad Mount	2	7/8"-14 UNF	712–780	525-575
Beam Assembly	A. QUIK-ALIGN Bushing	2	1" -8 UNC	712–780	525-575
	B. Center D-pin Bushing	4	¾"-16 UNF	373–441	275-325
	C. Cross Brace End Cap	2	7/8"-9 UNC	712–780	525-575
U-Bolt Locknuts		8 per axle	¾"-16 UNF	510±35	376±26
Shock	A. Upper Mount Locknuts	2	¾"-10 UNC	237–271	175-200
	B. Lower Mount Locknuts	2	5/8"-11 UNC	271–305	200-225
Upper Shock Bracket to Frame**		4	5/8"-11 UNC	271–305	200-225
Air Spring Assembly	A. To Frame**	2	5/8"-11 UNC	271–305	200-225
	B. Lower to Cross Brace	4	½"-13 UNC	27–41	20-30
Axle Stop to Frame**		6	5/8"-11 UNC	271–305	200-225

Note: *Quantities shown are per axle. Double for tandem, triple for tridem.

Note: **All hardware highlighted in gray in the matrix denotes items not shown on illustration. For torque requirements see vehicle manufacturer. Torque values listed above apply only to fasteners supplied by Hendrickson. If non-Hendrickson fasteners are used, follow torque specification listed in vehicle manufacturer's service manual.

Note: See “U-Bolt Torque”, page 27 in this publication for re-torque intervals.

All Rights Reserved

https://truckmanualshub.com/

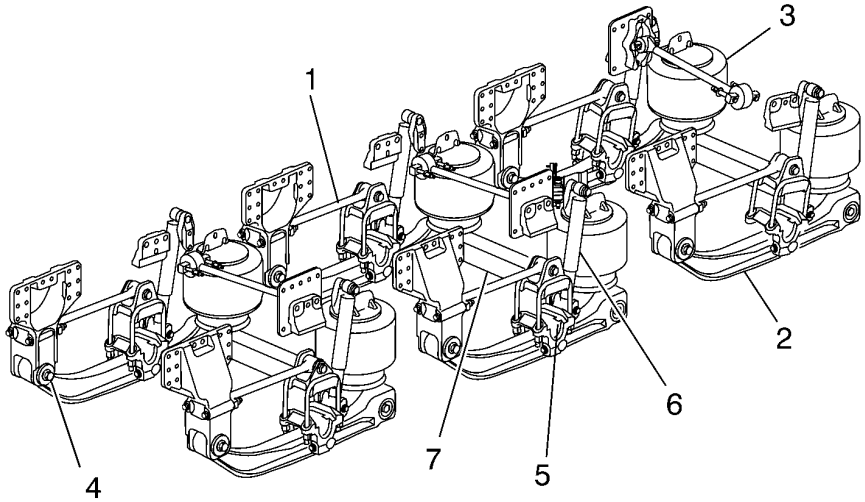

W7001453

1 **Torque Rods**

* Three-rod configuration reduces axle stress, welding and complexity

* Maintains axle position and pinion angle throughout axle travel

* Premium rubber bushings help increase service life

* Designed for optimum wheel end clearance and articulation

2 **Support Beams**

* Rugged forged design for peak loading and greater durability

* Robust rubber bushing designs help improve service life and eliminate lubrication requirements

3 **Air Springs**

* Large volume, low frequency design for improved ride

* Equalize load between axles in uneven terrain

4 **QUIK-ALIGN®**

* Allows for easy axle alignment without shims

* Reduces maintenance time and helps extend tire life

5 **Axle Connections**

* D-pin axle connection eliminates torsional axle stress for reduced maintenance and increased joint integrity

* Integrated axle stop contact pads reduce axle stress

* Maintains clamp load to reduce the need for re-torque

* Axle welding eliminated for reduced axle stress

6 **Heavy-duty Shock Absorbers**

* Positioned and tuned for optimum damping characteristics

* Protects air springs from over extension

7 **Cross Beams**

* Seamless drawn fabrication technology forms a robust torsion system with forged support beams, improving stability

* Integrated air spring mounts

* Increased ground clearance versus similar air ride suspensions

Note: Contact Hendrickson or vehicle manufacturer for applications that may exceed GVW/GCW approval ratings

Note: Site Travel Rating - Operators using vehicles equipped with liftable pusher or tag axles (6x4) must not exceed published ratings. Ratings are limited to no more than five percent of vehicle operation at a speed not to exceed five mph. Liftable pusher or tag axles should be raised (or unloaded) to improve vehicle maneuverability in off-road use or when vehicle is empty. Site travel ratings are consistent with specifications and must not be exceeded.

Note: Axle travel may be limited by vehicle manufacturer; axle stop settings may restrict suspension's articulation.

All Rights Reserved

https://truckmanualshub.com/

Pinion Angle Chart

8.5” Ride Height Drive Axle					
	Bottom Cap		Longitudinal Torque Rod		
Pinion Angle	**Part No.**	**Mack Part No.**	**Length**	**Part No.**	**Mack Part No.**
2.5 degree	60556–025	20755197	530 mm	64981–530	85109197
6 degree	60556–060	20774070	530 mm	64981–530	85109197
8 degree	60556–120	20755202	550 mm	64981–550	85109198
10 degree	60556–100	20755199	575 mm	64981–575	85109199
10.5 degree	60556–105	20755200	575 mm	64981–575	85109199
11 degree	60556–110	20774408	575 mm	64981–575	85109199
11.5 degree	60556–115	20755201	575 mm	64981–575	85109199
12 degree	60556–120	20755202	575 mm	64981–575	85109199
13 degree	60556–130	20774071	575 mm	64981–575	85109199
13.5 degree	60556–135	20774407	575 mm	64981–575	85109199

Notes

All Rights Reserved