https://truckmanualshub.com/

COMBiLiFT
LiFTING INNOVATION

Dear Customer,

Thank you for choosing us and showing your faith in the Combilift range of products. With this Combilift Product you now own a machine designed by our team of experienced engineers using the most up to date design techniques and technology with the sole aim of producing a machine that is efficient, reliable, safe and the right tool for your businesses material handling needs. The Combilift product possesses a vast range of multi-functional application possibilities that makes it one of the leading products in the material handling industry.

Combilift Ltd

The Purpose of this operators Manual

This Manual contains all of the information you will require to operate your Combilift product safely and efficiently. It is essential that this manual remain with the machine at all times. It is essential that the operator read this manual before attempting to operate the Combilift.

Always follow all safety instructions laid out in this manual

All instructions, prohibitive or otherwise, found in this manual should be adhered to at all times. They are there to protect your life and the lives of others.

Always perform the Daily Inspection as indicated in this manual and follow the guidelines on service intervals.

www.combilift.com

https://truckmanualshub.com/

Preface

This manual has been written to provide the operator of the Combilift product with information in order to ensure that the Combilift is operated in a safe and efficient manner. It does not take precedence over any local or nationally applicable laws or regulations with regard to the operation of lift trucks. If you are unsure, contact your local authorities in order to determine what tests and training courses must be completed in order to be fully qualified in the operation of this type of material handling equipment.

The information within has been arranged in a manner to ensure the safe operation of the machine. As can be seen the general principles of safe operation are presented before how the machine actually operates. It is essential that the operators spend time familiarising themselves not only with the machine, but with the information contained in this manual also.

Throughout this manual there are a number of instructions that have been highlighted in a number of ways. These instructions must be followed at all times as they indicate warnings and advice, that if not heeded can result in damage to the truck, product, or property. In the worst case failure to adhere to the warnings and advice can result in serious injury and even death.

The table of contents overleaf shows the structure of the information contained in this manual and makes for easier location of information.

https://truckmanualshub.com/

Contents

Section 1: Operating Instructions & Conditions 1-1
1.1: Understand the Capacity of your Lift-Truck 1-1
1.2: Centre of Gravity (COG) 1-1
1.3: Load Chart 1-3
1.4: Serial Plate 1-3
1.5: Operator Qualification and Responsibilities 1-4
1.6: Warning Decals 1-5

Section 2: Machine Layout & Operator Controls 2-1
2.1: Machine Overview and Components 2-1
2.2: Operator Controls & Display Layout 2-2
2.3: Operator Controls & Display Descriptions 2-3
2.4: Hydraulic Lever Functions 2-9

Section 3: Safe Operation 3-1
3.1: Entering and Exiting the Operator Cabin 3-1
3.2: Starting the Engine 3-1
3.3: Moving 3-2
3.4: Parking 3-4
3.5: Loading & Unloading the Truck 3-5
3.6: Travelling Safely with a Load 3-7
3.7: Fuel Handling & Storage 3-8
3.8: Battery Charging 3-9
3.9: Front Wheel Alignment 3-10
3.10: Driving Position 3-10
3.11: Bridge Plates and Dock Boards 3-10
3.12: Lifting the Machine 3-10

https://truckmanualshub.com/

Section 4: Maintenance & Service Information 4-1
4.1: Daily/Preoperational Inspection..... 4-1
4.2: Daily Inspection Sheet 4-5
4.3: Initial Service – Conducted at 100 hours of Operation..... 4-6
4.4: Maintenance Schedule 4-7
4.5: Engine Oil and Engine Oil Filter (Service Interval = 250Hours) 4-8
4.6: Engine Coolant (Service Interval = 2000Hours) 4-10
4.7: Hydraulic Oil and Filters 4-11
4.8: Accessory Drive V- Belt..... 4-14
4.9: Mast Maintenance (Service Interval = 250Hours)..... 4-14
4.10: Cleaning & Greasing Mast Carriage Channels..... 4-15
4.11: Mast Carriage Alignment / Wear Pad Adjustment Procedure 4-15
4.12: Fuel Filtration – Diesel (Service interval = 500 Hours) 4-18
4.13: Air Filter Element (Clean Every 100hrs, Replace Every 500hrs) 4-19
4.14: Grease Point Chart 4-20
4.15: Diesel Particulate Filter (DPF)..... 4-20

Section 5: Technical Information & Circuit Diagrams 5-1
5.1: Towing the Combilift..... 5-1
5.2: Mechanical Brake Release..... 5-2
5.3: Checking the Charge Pressure 5-2
5.4: Valve Chest Pressure Settings 5-3
5.5: Fuse Box 5-5
5.6: Relay Layout..... 5-6
5.7: Steering & Hydraulic Functions Circuit 5-7
5.8: Hydraulic Drive Circuit 5-8
5.9: Electric Circuit – Kubota Diesel 5-9
5.10: Electric Circuit – GM LPG 5-12
5.11: Electric Circuit – GM LPG (Tier IV) 5-15
5.12: Colour Codes for Electric Circuits..... 5-18
5.13: PLC Details..... 5-19
5.14: PLC Diagnostics 5-22

Section 6: Appendices 6-1
6.1: Appendix A: Certified LPG Engine Emission Control Warranty 6-1
6.2: Appendix B: General Engine Warranty..... 6-2
6.3: Appendix C: Warranty Registration 6-2

https://truckmanualshub.com/

Section 1: Operating Instructions & Conditions

1.1: Understand the Capacity of your Lift-Truck

The basic function of a lift truck is to lift, move and place materials. It operates on the seesaw principle - two weights on opposite sides of a fulcrum. In this case, the load on the forks must be balanced by the weight of the Combilift. The location of the centre of gravity of both the Combilift and the load is a major factor.

1.2: Centre of Gravity (COG)

The centre of gravity of any object is the single point about which the object is balanced in all directions. Every object has a centre of gravity. When the lift truck picks up a load, the truck and load have a new, combined centre of gravity.

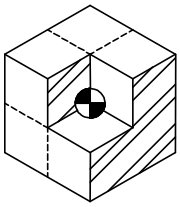

The Combilift has moving parts that change its centre of gravity. The centre of gravity moves forward and back as the mast is extended and retracted and also as the mast is tilted backwards and forwards. The centre of gravity also moves up and down as the mast moves up and down.

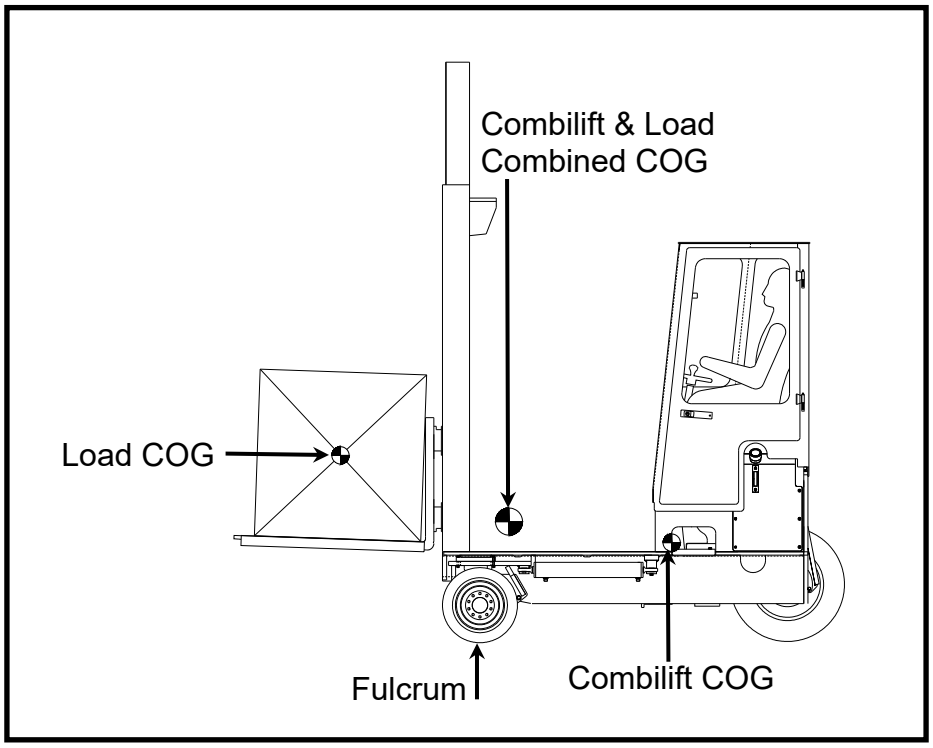

https://truckmanualshub.com/

The centre of gravity and therefore stability is also affected by the size, weight, shape and position of the load; the height to which it is raised; extension of mast forward and backward; tilt and side shift. Truck movement such as acceleration, braking, turning and uneven surfaces will also affect truck stability.

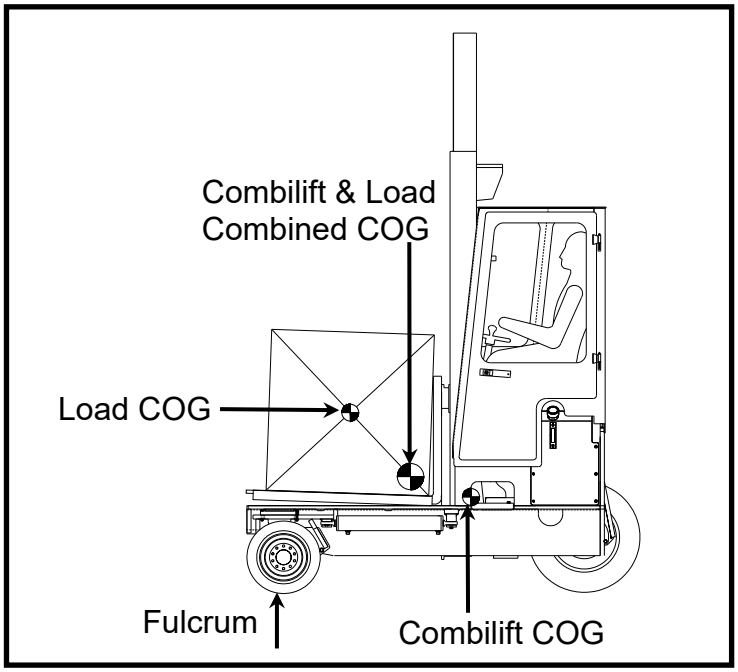

To keep the lift truck stable, the centre of gravity must stay within the area of the lift truck represented by a triangle drawn between the three wheels. If the centre of gravity moves forward of the triangle front, the lift truck will tip forwards. If it moves outside the right or left of the triangle the truck will tip to the side.

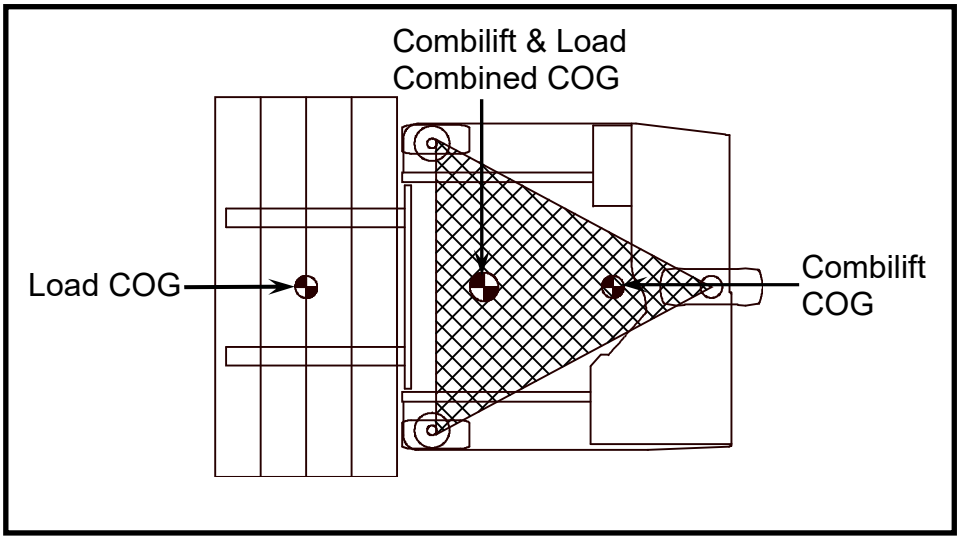

https://truckmanualshub.com/

1.3: Load Chart

The rated capacity of the truck is illustrated on a load chart located inside the cabin. The load centre is determined by its centre of gravity and is measured from the front face of the forks to the centre of gravity of the load. It is assumed that the centre of gravity in the vertical direction is no greater than the specified horizontal load centre.

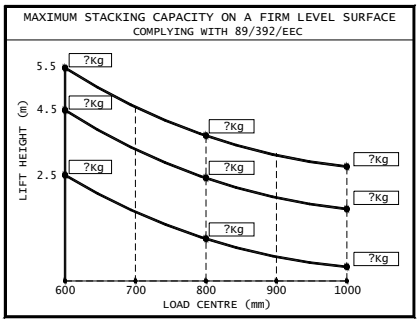

It is the responsibility of the operator to determine that the weight of the load to be handled is not greater than the capacity shown on the load chart. The operator **must not** handle any load that is greater than the capacity shown.

1.4: Serial Plate

The Serial Plate is located inside the operator's cabin on every Combilift truck. Please ensure that you are aware of the location of the serial plate on your truck. It is engraved with a number of details, which are required by law. These are:

- The model of the truck
- The serial number of the truck
- The trucks rated Capacity
- It's unladen weight
- It's date of manufacture
- The manufacturers name and address.

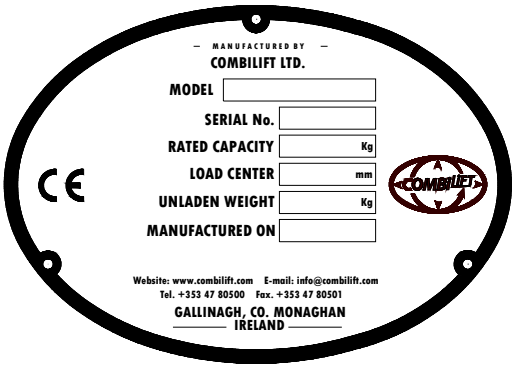

Metric Serial Plate

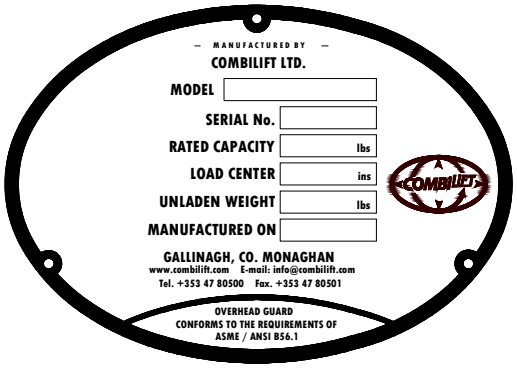

Imperial Serial Plate

This plate should not be removed by anyone. If lost order a replacement from Combilift immediately.

https://truckmanualshub.com/

1.5: Operator Qualification and Responsibilities

- The operator of the Combilift must be qualified to operate the truck through successful completion of a training program delivered by Combilift Driver training personnel or a Combilift authorised training organisation.
- Operators shall be aware of all local authority regulations and laws regarding the qualification of material handling equipment operators.
- No one shall operate the truck if impaired due to intoxication or drug reaction.
- Always ensure that the truck is in good working order before commencing work. This is achieved by performing the pre-use inspection. The inspection is to be carried out at the beginning of the working day or at the start of each shift.
- It is the operators responsibility to perform the pre-use inspection before each shift. The Inspection and how it should be conducted is covered later in this publication.
- Operation of the truck controls is only permitted when the operator is sitting on the operators seat in the cabin with the seatbelt buckled and the cabin door closed and latched securely.
- Never place any part of the body outside the confines of the cabin when operating the truck.
- Diagnosis and repair of the truck shall be performed by trained competent technicians unimpaired by intoxication or drug reaction.
- Unless authorised and trained to do so, the operator must not attempt any repairs, but report defects immediately. When authorised to perform maintenance work and/or repairs, ALWAYS ensure that the appropriate Health and Safety regulations are strictly adhered to.
- Report any operational problems that may develop, (damaged pallets, ground surface breaking up etc.) which could not only reduce safety but also cause damage to the truck.
- Never attempt to exceed your truck's handling capacity and take all precautions to ensure the safety of others as well as yourself. In no circumstances should counterweights be added to increase capacity.
- Stop working and switch off if for any reason, the truck becomes unsafe or defective. Remove the key and place an 'out of order' sign in a prominent place on the truck.
- Prohibit unauthorised and untrained people from accessing the starting key and operating of the truck.
- The operator is responsible for visually monitoring the work area of the truck and preventing anyone from entering the area without permission. If a person enters the area while the truck is in operation, the operator shall stop the truck and instruct the person to leave the work area until the truck has been stopped. The person may then approach the machine in full view of the operator.

https://truckmanualshub.com/

- Personnel being trained, educated, instructed or participating in a general training program may only work on or with the machine under constant supervision of an experienced supervisor.
- Work on the machine‘s electrical equipment may only be carried out by an electrician or by trained persons under the direction and supervision of an electrician.
- Work on the chassis, brakes and steering system may only be performed by trained, specialised personnel.
- Only trained, specialised personnel with specific knowledge of and experience in hydraulics may work on hydraulic units.
- If the mast mechanism malfunctions or becomes stuck in a raised position, operate the mast control lever to eliminate any slack in the chains. DO NOT go under the elevated parts of the truck to attempt to carry out repairs.

Warning

Every forklift operator must be trained in accordance with the rules provided by the relevant local Health and Safety Authority (HSA). Employers must ensure that each powered industrial truck operator is competent to operate a powered industrial truck safely, as demonstrated by the successful completion of the relevant training as specified by the relevant local authority. Operating a powered industrial truck without the proper training can cause serious injury or death.

1.6: Warning Decals

There are a number of different decals located around the Combilift. These decals have different functions. Some indicate warnings - such as nip points or moving parts, and some provide important information to the operator, such as grease point locations. It is important to study what each one means and where they are located

https://truckmanualshub.com/

1.7: Work Place Operating Conditions

Warning

Workplace situations are constantly changing. Check the work area before beginning each shift. If in doubt, consult with the relevant supervisor. Failure to observe new workplace conditions can lead to serious injury or death.

Operators must be aware of special situations in their workplace in order to avoid forklift accidents. Even if an operator works in the same area every day, there could be changes that affect safety, such as:

- Contractors doing maintenance
- Wet areas
- Overhead repair work

Be on the lookout for anything that might present a hazard such as:

- Potholes
- Pedestrian traffic
- Very narrow aisle ways
- Overhead obstructions
- Poor lighting making it hard to see hazards
- Wet, oily, or rough terrain
- Other equipment or vehicles operating in the area

Remember: Do not block any of the following safety critical items/areas with the truck or the materials being handled:

- Electrical panels
- Fire exits
- Emergency stop buttons
- Aisle ways
- Fire extinguishers/hoses

Ground Surface:
Floor, road and yard surfaces should be of adequate load capacity, firm, smooth and level. Approaches to kerbs, railway crossings etc. should also be firm, smooth and adequately ramped to prevent possible displacement.

Aisle Dimensions:
Aisles should be arranged to eliminate corners, angles, inclines, steep ramps, narrow passages and low ceilings. When operating in guided aisles ensure that the mast is retracted fully before entering the aisle. Enter the aisle slowly to reduce the impact on rollers and guide rails.

https://truckmanualshub.com/

Headroom:
Structures over aisles, which may be potential obstacles should be defined and marked with a conspicuous colour. Low doorways should be marked with their clearance limits.

Power Lines:

Warning

Always be aware of overhead electrical power cables. Always remain a safe distance from overhead power lines as an electric arc can occur even when approaching an electric line. This poses a high risk, not only for the operator but for other personnel nearby.

If contact with a live electric source occurs:

- Do not leave the truck until the electricity has been disconnected and a qualified technician directs the operator to leave the machine.
- If possible, drive the truck away from the danger area.
- Warn any people around the truck not to get any closer and not to touch the truck.
- Arrange to have the power turned off.

The following table outlines the minimum clearance distance that must be observed when working in the vicinity of power lines.

Nominal Voltage	Clearance Distance
Up to 1000 V	1 metre (1.1 yards)
Over 1 kV up to 110 kV	3 metres (3.3 yards)
Over 110 kV up to 220 kV	4 metres (4.4 yards)
Over 220 kV up to 380 kV	5 metres (5.5 yards)
Unknown nominal voltage	5 metres (5.5 yards)

Operating in Hazardous Areas:
Standard trucks are not equipped to operate in cold stores, flammable or explosive areas, corrosive atmospheres or areas containing a high degree of dust contamination. Sparks from the exhaust or electrical system or hot parts can ignite explosions and fires.

- Do not attempt to lift or place a load in a poorly lit area where vision is obscured or reduced.
- Do not work in enclosed spaces where flammable materials, explosive vapours, or combustible dust are found.
- Stay clear of flammable materials such as hay, straw, paper and cardboard.
- Park the truck only in areas free of flammable materials.

https://truckmanualshub.com/

- Diesel engine exhaust emissions are toxic in concentrated amounts. Do not operate the truck in enclosed spaces or inadequately ventilated spaces.
- Wear appropriate personal protective equipment (breathing filter, protective suit) for protection against specific dangers, e.g. poisonous gases, corrosive steam, poisonous surroundings, etc.

Gradients:

- When differences in levels exist, gradient ramps should be provided, having smooth, gradual level changes at the top and bottom to prevent shocks to the load or fouling of the forks.
- Do not drive across, turn or stack on gradients.
- Correct gradient procedure should be followed at all times.
- Do not park on a gradient. In an emergency apply the parking brake and chock the wheels - but do not leave the truck unattended.
- Always approach an incline straight on, and keep forks and /or load facing uphill at all times.

Adverse Weather Conditions:

There are a number of weather conditions for which extra care must be taken.

- High Winds: Do not raise the mast in winds that are greater in speed than 50km/hr as this can have serious effects on the stability of the machine.

- Electrical Storms: Always discontinue operation of the truck in the event of an approaching electrical storm due to the associated risks of lightning.

- Extreme Temperatures: These forklift trucks are designed for use in ambient temperatures ranging from -40°C (-40°F) to +40°C (+104°F) if the correct hydraulic oils and greases are used. If the temperature falls below or rises above this range discontinue operation of the machine in order to prevent damage to various components. For operation outside these temperatures, please consult your Combilift partner as special modifications and lubricants are required.

Oil, Fuel and Coolant:

Any leaking or spilled oil, fuel or coolant must be cleaned up immediately and the source of the leak repaired to avoid:

- Environmental hazards
- Fire hazards
- Slip hazards
- Personal injury hazards

https://truckmanualshub.com/

Do not attempt to perform repairs to the hydraulic system until any residual hydraulic pressure has been relieved.
Observe the valid safety and environmental regulations for the respective product when handling oil, grease and other chemical substances. Do not service the truck immediately after operation. Wait until hot surfaces have cooled and can be touched comfortably. Smoking and open flames are prohibited during fuelling.

Exhaust Emissions:
Never allow the truck to remain stationary in confined spaces with the engine running. Diesel engine exhaust fumes are harmful. Do not inhale exhaust. When performing service and inspection work in an enclosed space, vent the exhaust out of the area.

Warning

Breathing diesel engine exhaust exposes you to chemicals known to the State of California to cause cancer and birth defects or other reproductive harm.

- Always start and operate the engine in a well-ventilated area.
- If in an enclosed area, vent the exhaust to the outside.
- Do not modify or tamper with the exhaust system.
- Do not idle the engine except as necessary.

For more information go to www.P65warnings.ca.gov/diesel.

Dock Boards (Bridge Plates)
Dock boards are designed and maintained so that one end contacts the dock (or loading platform) and the other end contacts the transport vessel. When you load or unload the transport vessel the dock board must be locked in place to prevent it from rocking or sliding. Dock boards must have a high friction surface designed to reduce the possibility of people or trucks slipping.

If using dock boards on loading docks:

- Never exceed the carrying capacity marked on portable or powered dock boards.
- Portable dock boards must be secured in position, using anchors or other devices that prevent slipping.

https://truckmanualshub.com/

Trailers and Rail Cars

1. Before you load or unload a trailer, or rail car, make sure it does not move unintentionally:
    - Set the brakes
    - Chock the wheels

2. In addition to setting the brakes and chocking the wheels, if a semi-trailer is not coupled to a tractor, make sure that all four corners are supported to prevent upending or corner dipping.

3. Maintain a safe distance from the edge of ramps, platforms, or other similar working surfaces.

4. Never attempt to move a trailer with the Combilift truck.

https://truckmanualshub.com/

Section 2: Machine Layout & Operator Controls

It is essential before you start operating the Combilift to be familiar with the main components and controls of the machine, their function and where they are located. Figure 2.1 below indicates all of the major components of the Combilift and figure 2.2 on the following page indicates all of the operator controls.

2.1: Machine Overview and Components

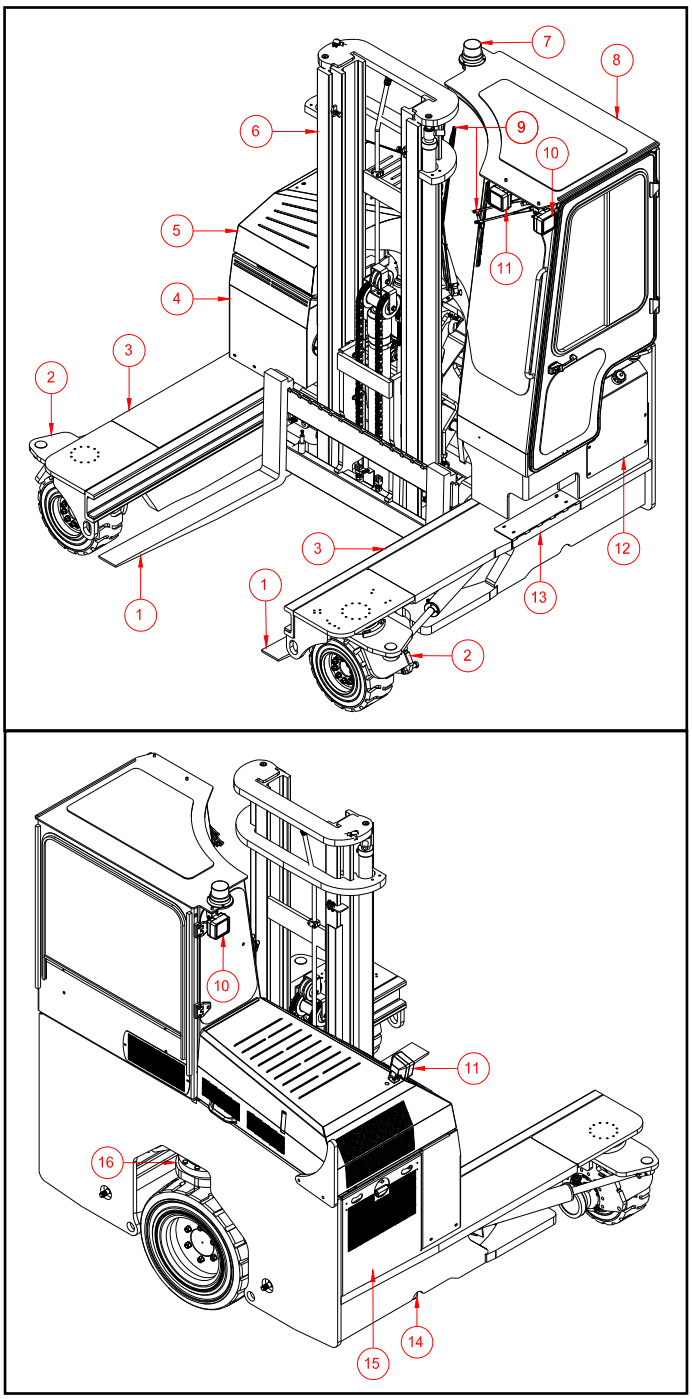

Component List

1. Forks
2. Front Swivels
3. Platforms
4. Hydraulic Tank
5. Bonnet
6. Mast
7. Flashing Beacon
8. Operator Cabin
9. Wipers
10. Side Work Lights
11. Front Work Lights
12. Diesel Tank / LPG Cylinder
13. Step
14. Exhaust
15. Radiator Access Panel
16. Rear Swivel

Figure 2.1: Machine Components Layout

https://truckmanualshub.com/

2.2: Operator Controls & Display Layout

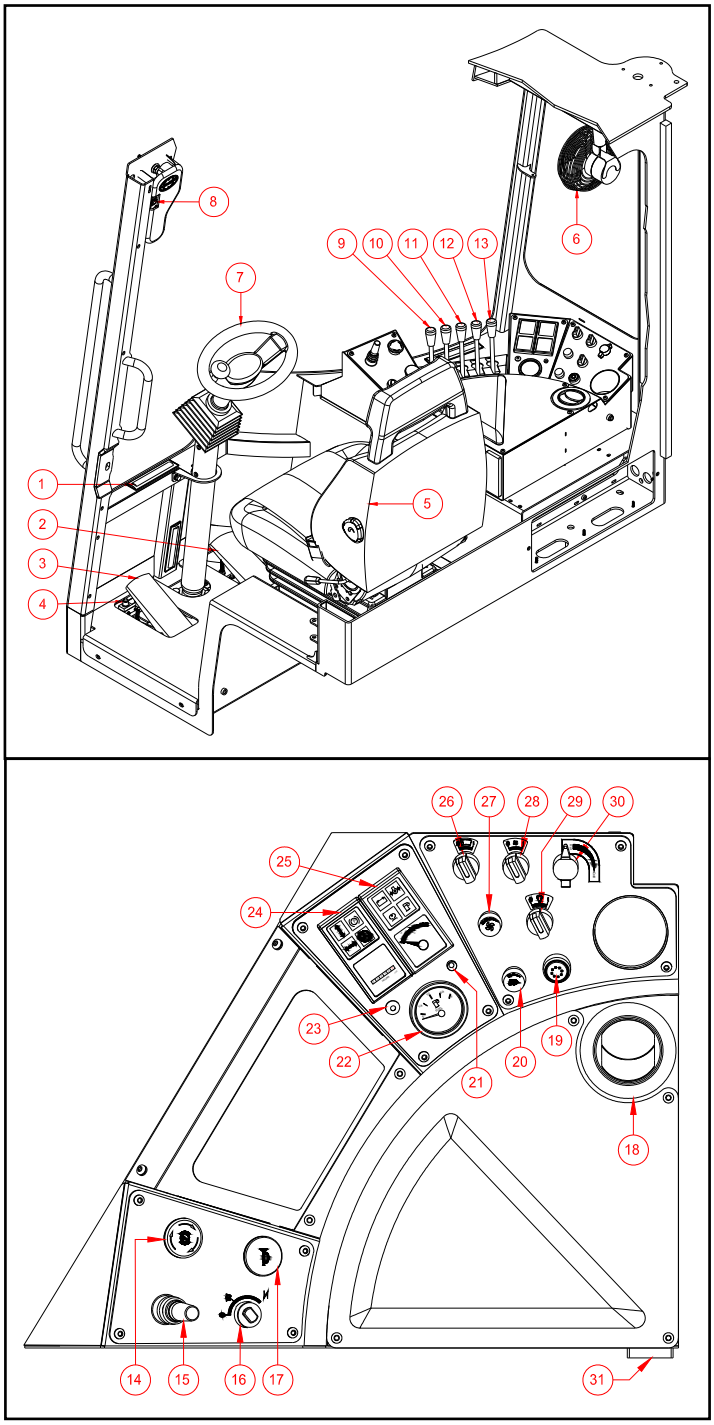

Controls List

1. Closable Air Vent
2. Accelerator Pedal
3. Inch/Brake Pedal
4. Brake Pedal Switch
5. Adjustable Suspension Seat
6. Cooling Fan
7. Steering Wheel
8. Front Left Wiper Switch
9. Lift Control Lever
10. Reach Control Lever
11. Tilt Control Lever
12. Side Shift Control Lever (If Fitted)
13. Auxiliary Function Control Lever
14. Parking Brake
15. Direction Selection Switch
16. Ignition Switch
17. Horn Button
18. Heater Vent
19. Interior Light Switch
20. Heater Fan Switch
21. Guide Roller Indicator Light
22. Fuel Gauge (Diesel Only)
23. Engine Management Light
24. Hour Meter
25. Temperature Gauge
26. Work Light Switch
27. Cooling Fan Switch
28. Front Right Wiper Switch
29. Drive Cut-out Override
30. Heater Temperature Control
31. Fuse Box

Figure 2.2: Machine Controls Layout

https://truckmanualshub.com/

2.3: Operator Controls & Display Descriptions

Now that the layout of the operator controls has been identified, the next step is to detail how the controls function.

Ignition Switch:

- This is a three-position key switch located on the dash, which isolates the electrical system when in the off position.

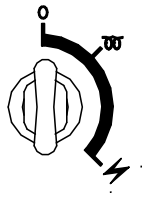

Parking Brake Switch

- The parking brake switch is the red button located on the dash
- To APPLY the brake, depress the button. The button will lock in the depressed position.
- To RELEASE the brake, rotate the button clockwise. It should pop up into its normal position
- The Machine will NOT drive with the parking brake on

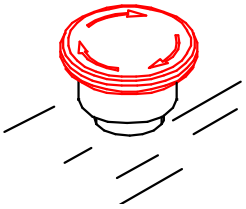

Direction Control Lever

- The directional control lever is the 5-postion lever located on the dash. It can be set to forward, reverse, left, right, or neutral.
- In order to select a direction of travel, push the lever in the desired direction.
- Always return the lever to the neutral position when the truck is not moving

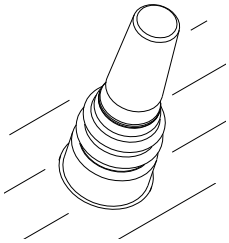

> **Note**
>
> The truck will NOT start unless the direction control lever is in the neutral position.

Horn Button

- The horn Button is the push button located on the dash next to the parking brake.
- To operate the horn, depress the button.

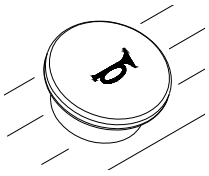

Light Switch:

- This is a three position rotary switch located on the dash
- Position 0 – Lights Off
- Position 1 – Front Lights On
- Position 2 – Front & Side Work Lights On

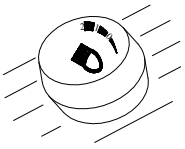

https://truckmanualshub.com/

Water Temperature gauge

- This gauge Monitors the temperature of the engine cooling system
- The truck must not be operated if the gauge pointer moves to the red area as this indicates a fault in the cooling system

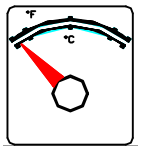

Hour Meter

- The hour meter records how many hours the truck has been operating for in hours and tenths of an hour.
- Use meter to determine maintenance intervals

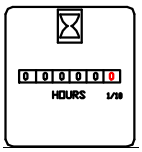

Oil Pressure Indicator Light

- When the key switch is in the 'ON' position, with the engine at rest, the oil pressure indicator is illuminated.
- If the indicator is illuminated when the engine is 'running' then this indicates low engine oil pressure and/or insufficient oil in the sump.

Note

Do **NOT** run engine if oil pressure indicator is illuminated.

Battery Charge Indicator Light

- This charging lamp indicates whether the alternator is charging the system or not. With the key switch turned ON and the engine not running, this red charge lamp should illuminate.
- If the charging lamp remains illuminated with the engine running, it indicates a malfunction of the charging system or associated components.

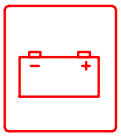

Pre-Heat Indicator Light – (diesel engines)

- The Pre-heat indicator is a lamp connected to the glow plugs on the diesel engine.
- When operating in cold conditions, wait until the pre-heat indicator extinguishes before attempting to start engine

https://truckmanualshub.com/

Low fuel level indicator light

- The low-level indicator light illuminates whenever the fuel level on the truck reaches a certain level.
- On LPG engines a buzzer will also sound.
- Whenever the light illuminates the truck should be refuelled immediately.

> **Note**
> ALWAYS adhere to all safety precautions for refuelling the truck.
> (See Section 3)

Parking Brake Indicator Light

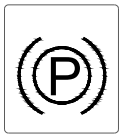

- The Parking Break indicator light indicates whether the brake is “ON” or “OFF”

Mode Indicator Lights

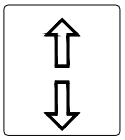

Normal Mode

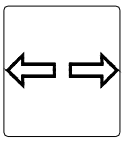

Sideward Mode

- The Mode indicator lights indicate which mode of travel the machine is in.
- If the machine is in normal mode, then the normal mode indicator light will illuminate.
- If the machine is in sideward mode, then the sideward mode indicator light will illuminate.
- Note: Modes of travel are covered in more detail in section 3 of this manual.

Carousel Indicator Light

- The carousel indicator light is only used when the machine is in sideward mode.
- When the front wheels are steered in to a certain position, the carousel indicator light will illuminate. It is at this point that the carousel mode is activated and the machine can turn on its own axis.
- To deactivate the carousel the operator simply steers the wheels out of the carousel position.

Fuel Lever Indicator (Diesel Only)

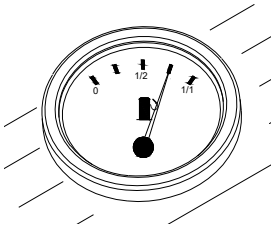

- The fuel level indicator displays how much diesel is in the diesel tank.
- This gauge located on the dash (see figure 2 item number 22)

https://truckmanualshub.com/

Drive Cutout Override Button (Optional)

- This optional feature uses a push button switch, which is connected to a sensor on high-lift Triplex masts.
- When the mast is above 3.5m (138”) high, the machine will not drive.
- To re-commence driving the operator must either:

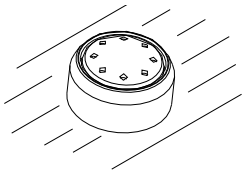

  - Lower the forks of the machine using the lift control lever

    OR

  - Press the drive cutout override button located on the dash.

Wiper Switches

- There are 2 wiper switches on the machine.
- The front left hand wiper switch shown opposite is located in the top left hand corner of the cabin. See Item 8 in figure 2 on page 2-2.
- This rocker switch activates the wiper by flipping it to the on position.

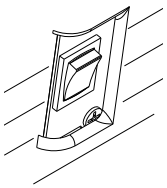

- The front right hand wiper switch shown opposite is located on the dash. See Item 28 in figure 2 on page 2-2.
- The 2 position rotary switch activates the wiper by turning it to the on position.

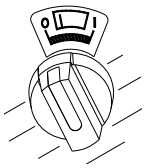

Cooling Fan Switch

- This is a 2 position rotary switch located on the dash.
- Turning it to the on position activates the cooling fan located in the top right hand side of the cabin.

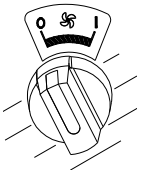

Interior Light Switch

- This is a 2 position rotary switch located on the dash.
- Turning it to the on position activates the interior light located in the top right hand side of the cabin.

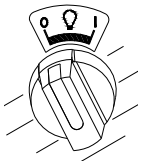

Heater Switch (Optional)

- This four position rotary switch located on the dash allows the operator to select between off, low, medium or high fan speeds.

Heater Temperature Control (Optional)

- To increase cabin temperature, turn anti-clockwise.
- To decrease cabin temperature, turn clockwise.

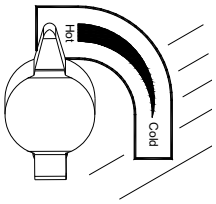

https://truckmanualshub.com/

Inch / Brake Pedal

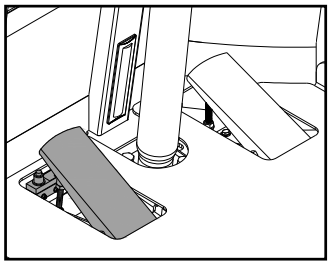

- The Inch / Brake pedal is the pedal on the floor on the left hand side of the steering Column as shown in the diagram opposite.
- The combined Brake/Inching Pedal has two functions:
  - Stops drive to slow the machine down.
  - Permit slow speed, for precise manoeuvring of the truck in confined spaces.

Note:

When the Inch / brake pedal is fully depressed for 3 seconds or more the parking brake will be engaged and the machine brought to a complete stop.

Accelerator Pedal

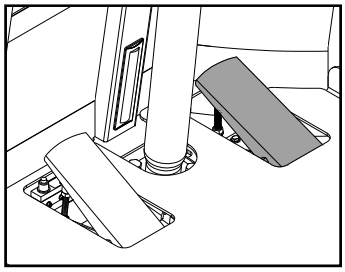

- The accelerator pedal is located on the floor on the right hand side of the steering column.
- The accelerator pedal provides the operator control of the truck speed.
- To INCREASE truck speed, DEPRESS pedal.

Steering Wheel / Column

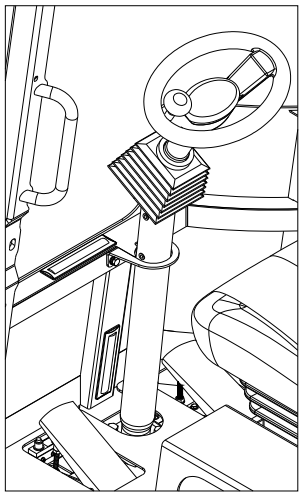

- All models have both front and rear-end steering.
- When in forward mode the front wheels are fixed and the rear wheel steers the truck.
- Rear-end steering allows sharper turns in confined areas but demands greater driver care when turning.
- When in sideward mode, the rear wheel is fixed and the front wheels steer the truck.
- When driving forwards, turn steering wheel clockwise to turn truck clockwise, turn steering wheel anti clockwise to turn truck anti clockwise.
- When driving in reverse, turn steering wheel clockwise to turn truck anti clockwise, turn steering anti clockwise to turn truck clockwise.
- When driving in sideward mode, turning the steering wheel clockwise will turn truck clockwise. Turning the steering wheel anti clockwise to turn truck anti clockwise.
- The same is true for travel in either direction when in sideward mode.
- The steering wheel is also equipped with a spinner knob for easier steering.
- The angle of the steering column is adjustable to increase driver comfort.
- To adjust the angle of the steering column, loosen the locking handle on the side of the column by turning the handle clockwise.
- Adjust the steering column to the desired angle.
- To lock the steering column in position turn the locking handle anticlockwise until tight.

https://truckmanualshub.com/

Seat Adjustment

- It is the responsibility of the Operator to ensure that the seat is adjusted according to operator weight, height etc before operating the truck.
- ALWAYS report any malfunctioning of the seat adjustments immediately.
- ALWAYS wear the seat belt provided.
- DO NOT adjust the seat when vehicle is in operation.
- Keep clear of moving parts.
- Authorised & competent personnel should carry out Installation & Maintenance only

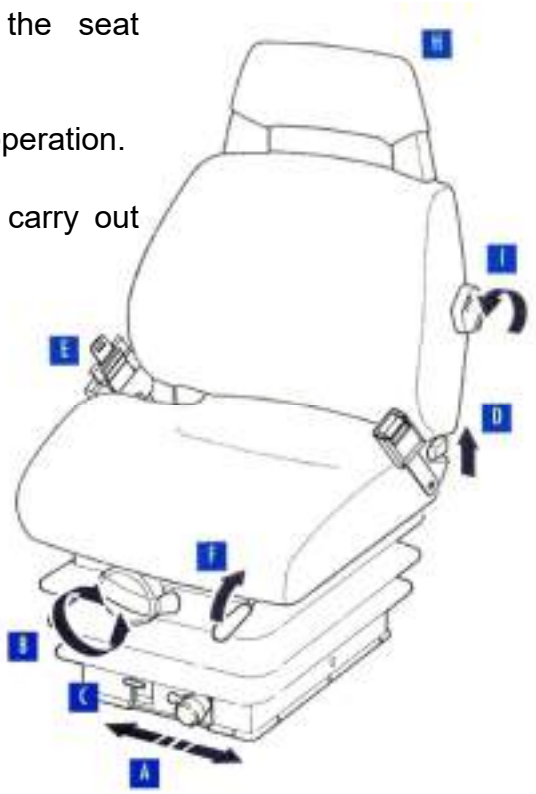

A Upstop Adjustment

B Height Adjustment – Depending on operator weight, rotate knob clockwise, to increase, and anti-clockwise to reduce suspension stiffness.

C Using the height adjustment knob 'B', adjust the yellow ride indicator 'C' to the middle of the green area when seated.

D Backrest angle adjustment

E Seat belt

F Horizontal Adjustment (Slide rails)

H Backrest Extension

I Lumbar Support adjustment (5 positions)

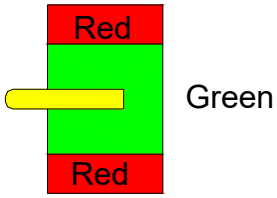

Battery Isolator Key Switch

- This switch is used to disconnect power from the battery in the event of an emergency.
- The switch is located inside the access panel on the right hand side of the Combilift. (See diagram below)
- It can be accessed without removing the panel through the access hole provided
- When the Combilift is not in use turn switch to 'OFF' position, by turning switch ANTI-CLOCKWISE.
- The Combilift will not start unless the switch is returned to the 'ON' position, by turning the switch CLOCKWISE

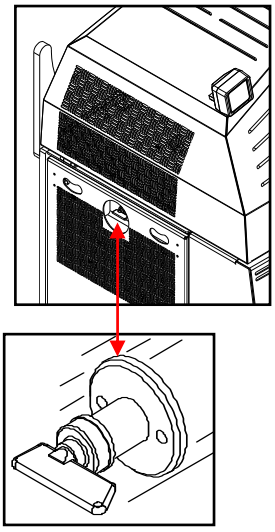

https://truckmanualshub.com/

Engine Fault Light – Tier 2/3/4 LPG Only (Orange Light On Dash)

- If this light comes on it means the engine control unit (ECU) has detected a problem with the engine.
- If the light is on and the engine is running smoothly you can drive the truck. However, it should be checked at the earliest convenience. If the engine is running poorly the truck should not be driven.
- The ECU will store the fault information that will allow the fault to be diagnosed when the ECU is connected to a PC.

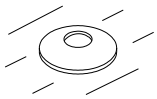

90° Light – Optional (Green Light On Dash)

- This light illuminates when the swivels are in the 90° position (sideward mode) indicating that it can be driven in a guided aisle.

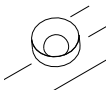

2.4: Hydraulic Lever Functions

Lift Control Lever (Lever Closest To Operator)

- The lift control lever controls the lift function of the Mast.
- To raise the forks, PULL the lever BACK
- To lower the forks, PUSH the lever FORWARD

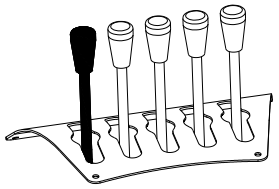

Reach Control Lever (2nd Lever From Operator)

- The reach control lever controls the movement function of the mast carriage.
- To extend the mast carriage forward, PUSH the lever FORWARD
- To retract the mast carriage backwards, PULL the lever BACKWARDS

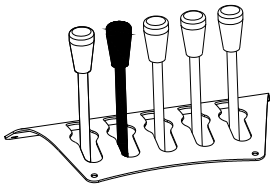

Mast Tilt Lever (3rd Lever From Operator)

- Allows the operator to tilt the Mast forward and backward
- To tilt the mast forward, PUSH the lever FORWARD
- To tilt the mast backward, PULL the lever BACKWARDS

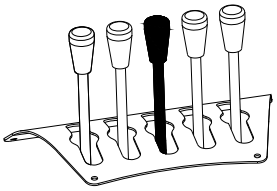

Mast Side Shift Lever - Optional (4th Lever From Operator if fitted. If not fitted see Auxiliary lever description below)

- The side shift control lever moves the mast left and right
- To move the mast right, PUSH the lever FORWARD
- To move the mast left, PULL the lever BACKWARDS

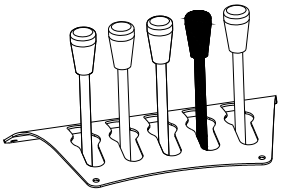

https://truckmanualshub.com/

Auxiliary Function Lever (4th or 5th Lever From Operator Depending on Mast Side Shift Option)

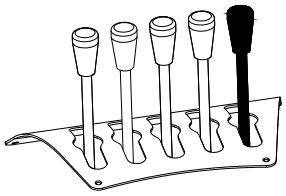

- This lever controls the flow of oil to an attachment when fitted.
- On trucks fitted with attachments providing more than one function, the truck may be fitted with a button on the fourth function lever. Operators must acquaint themselves with the operation of these special provisions before using the truck.
- Combilift have a number of standard functions that can be fitted to the truck and operated via the auxiliary function lever. These include:

  - Fork Positioner / Side shift / Telescopic Forks / Lift Drop Forks

- Take time to familiarise yourself with the auxiliary functions on the Combilift and how they are operated by the auxiliary lever

Warning

Adding an attachment to a Combilift will alter the rated capacity of the machine. A load chart must be obtained from Combilift Ltd for any attachment that is fitted to indicate this change in capacity

Warning

ONLY attachments that have been approved by Combilift engineers may be fitted to Combilift Trucks

https://truckmanualshub.com/

Section 3: Safe Operation

Many people are under the impression that driving a lift truck is like driving any other vehicle. This is not the case. Lift trucks are designed for the purpose of lifting, and moving heavy loads in confined spaces. For this reason it is essential that operators are trained to operate the machines correctly and to ensure that they always operate the machine in a safe and controlled manner. This section looks at how the machine should be operated.

3.1: Entering and Exiting the Operator Cabin

When entering or exiting the cabin of the Combilift, the three point contact method should always be used. The three point contact method is when an operator has three of their four limbs (hands & feet) in contact with the truck. **Never** jump in to or out of the truck. There are a number of handgrips as well as footstep(s) provided to allow easy and safe access to the operator cabin. **DO NOT** use the steering wheel as a handgrip. When in the cabin of the Combilift, ALWAYS wear the seat belt provided.

3.2: Starting the Engine

Diesel Engine

- Ensure that the parking brake is applied and the directional control lever is in the neutral position.
- Insert the key into the ignition switch and turn clockwise to the preheat position. The charge indicator lamp must light up.
- Depress the accelerator.
- Turn the ignition key further clockwise to the “Start” position. After the engine starts, release the ignition key which will return automatically to the ON position.
- Check that all the indicator lamps are extinguished and that all gauges are registering correctly.

LP Gas System

- Open the valve on the LPG tank.
- Ensure that the parking brake is applied and that the directional control lever is in the neutral position.
- Insert the key into the ignition switch and turn clockwise to the ‘ON’ position. The charge indicator lamp must light up.
- Turn the ignition key further clockwise to the ‘start’ position.
- As soon as the engine starts, release the ignition key, which will automatically return to the ‘ON’ position.
- Check that all warning lamps are extinguished and that all gauges are registering correctly

https://truckmanualshub.com/

Note

The truck will NOT start unless the directional control lever is in the neutral position.

Note

The starter must not be operated continuously for more than 30 seconds. If the engine does not start, return the key to the 'OFF' position and wait 10 seconds before trying again.

Note

When the machine is started the wheels will remain in whatever position they were in when the machine was stopped until the operator selects a direction of travel on the directional control lever

3.3: Moving

Because the Combilift is capable of multi directional travel it is important to be aware of how the truck moves and how to drive it in a safe manner.

Important

The Combilift has two different modes of travel. These are:

Normal Mode: The front wheels are parallel to the platforms. Steering is performed by the Rear Swivel.

Sideward Mode: The front wheels are at 90° to the platforms. Steering is performed by the Front Swivels.

Moving Forward

- Select forward on the directional control lever.
- Depress the brake/inching pedal fully
- Look around to make sure your way is clear
- Release the parking brake and sound the horn
- Slowly release the brake/ inching pedal
- As the truck starts to move, depress the accelerator pedal to increase speed
- To stop depress the inching pedal fully.

(**Note**: If the machine is already in sideward mode, wait for the wheels to realign. Once the wheels are in position continue as per the instructions.)

https://truckmanualshub.com/

Moving Backward

- Select reverse on the directional control lever.
- Depress the brake/inching pedal fully
- Look around to make sure your way is clear
- Release the parking brake and sound the horn
- Slowly release the brake/ inching pedal
- As the truck starts to move, depress the accelerator pedal to increase speed
- To stop depress the inching pedal fully

Changing Mode

The Combilift will automatically realign the wheels when a direction of travel is selected that requires the machine to change from one mode to the other. In order to change mode:

- Bring the machine to a complete stop.
- Apply the Parking Brake
- Select the direction you wish to travel in that is requires the machine to be in the other mode of travel.
- As the wheels start to realign depress the accelerator pedal lightly to speed up the operation.
- Once the mode change operation has finished and the light has illuminated in the dash follow the normal driving instructions for that mode of travel

Moving Left (Sideward Mode)

- Select left on the directional control lever.
- Depress the brake/inching pedal fully
- Look around to make sure your way is clear
- Release the parking brake and sound the horn
- Slowly release the brake/ inching pedal
- As the truck starts to move, depress the accelerator pedal to increase speed
- To stop depress the inching pedal fully

Moving Right (Sideward Mode)

- Select reverse on the directional control lever.
- Depress the brake/inching pedal fully
- Look around to make sure your way is clear
- Release the parking brake and sound the horn
- Slowly release the brake/ inching pedal
- As the truck starts to move, depress the accelerator pedal to increase speed
- To stop depress the inching pedal fully

https://truckmanualshub.com/

3.4: Parking

When parking the Combilift always ensure that one of the two recommended parking methods are used to ensure the safety of the operator and others. There are two recommended methods for parking your Combilift. One is called the Attended parking method, for cases where the operator needs to exit the machine but will be no more than 25 feet (7 metres) away. The other is the Unattended parking method, for cases where the operator must exit the machine but will be further than 25 feet away

The Attended Parking Procedure

- Bring machine to a complete stop.
- Once stopped, apply the parking brake and set the directional control lever to the neutral position.
- Lower the forks till they are on the ground and tilt the mast forward.
- If loaded, retract the mast and rest the load on the platforms of the machine.
- Leave the engine running
- Remove the seatbelt from its retainer and exit the Combilift by using the three – point contact method
- Stay within 25 feet (7 metres) of the machine at all times.

The Unattended Parking method

- Bring machine to a complete stop.
- Once stopped, apply the parking brake and set the directional control lever to the neutral position.
- Lower the forks till they are on the ground and tilt the mast forward.
- If loaded, retract the mast and rest the load on the platforms of the machine.
- Turn off the machine.
- Remove the seatbelt from its fastener and exit the Combilift by using the three – point contact method as discussed earlier.
- Chock wheels if on an incline
- Turn off LP supply on LP gas machines

https://truckmanualshub.com/

3.5: Loading & Unloading the Truck

This section provides information on the correct way to pick up a load and set down a load. There are a number of safety guidelines that should be adhered to at all times when lifting or placing loads.

- NEVER try to lift a load that the weight of which is not known
- ALWAYS consult the capacity chary for your truck before lifting a load.
- Avoid sudden and jerky movements

Adjusting the Load Forks

Forks should be spaced as far apart as the load being moved will allow. Both forks should always be the same distance from the centre of the fork carriage.
To adjust:

- Raise forks approximately 25mm (1”) off the floor.
- Apply parking brake and switch off engine.
- Lift up the keeper pin and slide the forks along the carriage.
- When the forks are set to the desired position ensure that the keeper pin is engaged in a slot on the top of the fork carriage bar.

Loading in Normal Mode

- Lower/raise forks to the required height.
- Enter the centre of the load.
- Drive as close to the load as possible.
- Extend mast to secure load if not already extended
- Apply parking brake.
- Lift load.
- Tilt rearward to secure load.
- Raise load above platform height.
- Retract mast fully
- Double fork load if necessary until load is tight against face of forks.
- Lower forks until load is just above platform height. Rest the load on the platforms where possible

Placing a Load in Normal Mode

- Drive the front of the machine as close to the placing area as possible.
- Apply parking brake.
- Lower/raise the forks to the required height.
- Extend mast.
- Lower load.
- Tilt forward.
- Retract mast if operating in confined spaces.
- Drive rearward until machine is clear of load

https://truckmanualshub.com/

Loading in Sideward Mode

- Retract the mast fully.
- Drive the front of the machine as close to the load as possible.
- Drive until the machine is at the centre of the load.
- Apply parking brake.
- Lower/raise the forks to the required height.
- Extend mast.
- Lift load.
- Double fork load if necessary until load is tight against face of forks. (See section on “double forking”)
- Tilt rearward to secure the load.
- Raise load above platform height.
- Retract mast fully.
- Lower forks until load is just above platform height. Rest the load on the platforms where possible.

Placing a Load in Sideward Mode

- Drive the front of the machine as close to the placing area as possible.
- Apply parking brake.
- Lower/raise the forks to the required height.
- Extend mast.
- Lower load.
- Tilt forward.
- Retract mast fully.
- Release parking brake.
- Continue to drive in the sideward direction.

Stacking

- Slowly approach stack with load retracted and tilted backwards.
- Stop at face of stack, select neutral and apply parking brake.
- Elevate load until clear of stack top. Operate accelerator pedal to ensure that engine speed is sufficient to prevent stalling and to give the required lifting speed.
- Extend mast until load is above the stack.
- Tilt mast to vertical position and lower load onto stack.
- Retract mast fully and lower forks to 150mm (6”) above ground before moving off.

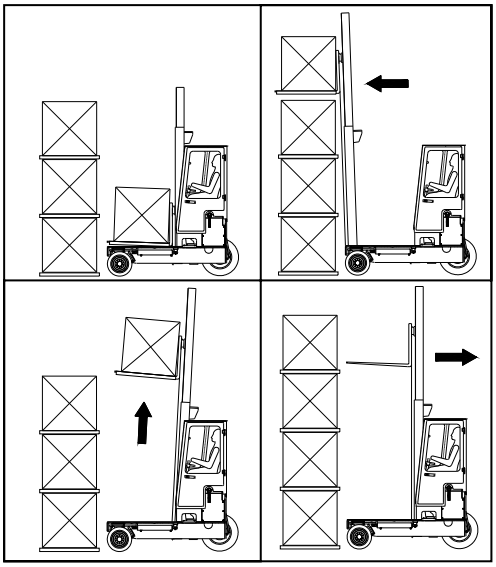

https://truckmanualshub.com/

De Stacking

- Approach stack with mast retracted and in vertical position.
- Stop at face of stack, select neutral and apply parking brake.
- Elevate forks to permit entry into pallet.
- Extend mast and enter the pallet with the forks.
- Elevate load until clear of stack and tilt mast backwards to stabilise load. Operate accelerator pedal to ensure that the engine speed is sufficient to prevent stalling.
- Retract mast fully and lower load to 150mm (6”) above ground, or where possible on to the platforms

Double Forking a Load

If it is not possible to engage forks fully when lifting a load it will be necessary to move the load closer to the front of the machine before lifting.

Note

The lift capacity of the Combilift is reduced if the forks are not fully engaged

To Double Fork a Load:

- Raise the load slightly and retract the mast sufficiently to bring the load closer to the machine.
- Lower the load ensuring that it is still properly supported
- Extend the mast again until the load is against the fork face.
- The load is now ready to be lifted.

3.6: Travelling Safely with a Load

- When travelling with a load always keep the load as low as possible.
- Have the load resting on the platforms of the Combilift whenever possible.
- Try to avoid sudden and erratic movements with the machine. Accelerate and brake as smoothly as possible.
- When approaching a junction or corner, slow down, sound the horn and proceed only when you are sure that your path is unobstructed.
- Remember to turn slowly and in the unlikely event of a tip over follow the procedure illustrated below.

https://truckmanualshub.com/

3.7: Fuel Handling & Storage

General

- The facilities for storing and handling liquid fuels of all kinds MUST be strictly in accordance with all current regulations.

WARNING

Adequate fire fighting equipment must be readily available in the refuelling area at all times.

SAFETY RULES

No smoking, naked lights or other sources of ignition should be permitted in the vicinity of the refuelling area and signs to this effect should be clearly posted and free from obstructions at all times. Litter and other readily ignitable materials should not be permitted to accumulate or be stored in the area.

Refuelling - Diesel

- Trained and authorised personnel should carry out refuelling at designated points only.
- Before refuelling the truck, switch off the engine, apply brakes and vacate truck.
- If a pump appliance is not available, fuel MUST be stored and transported in clean, uncontaminated and approved containers. Containers MUST comply with current regulations and be clearly labelled.
- When refuelling the truck, always ensure that the hose nozzle or the can pourer is making good electrical contact with the tank filler tube to prevent the accumulation of a hazardous charge of static electricity. Exercise adequate care to prevent fuel spillage or over-filling.
- After refuelling the truck, replace the tank filler cap and ensure that it is securely fitted and leak free. Clean up any spillage using non-combustible absorbent material before restarting the engine.

Note

Where Diesel Particulate Filters (DPF) are fitted Diesel Fuels with a maximum sulphur content of 15ppm (parts per million) MUST be used.
Diesel Fuels specified to EN 590 or ASTM D975 S15 are Strongly Recommended.

https://truckmanualshub.com/

Refuelling - L.P. Gas

- Trained and authorised personnel should carry out recharging and changing L.P. Gas containers at designated points only.
- LP Gas trucks should not be refuelled or stored near underground entrances, lift shafts or any other place where leakage could collect in a potentially dangerous gas pocket.
- Trucks equipped with exchangeable fuel containers should ALWAYS ensure that the service valve on the container is closed and all gas in the connecting hoses used BEFORE disconnecting the quick release coupling.
- All reserve containers should be stored with the service valves closed and on racks arranged such that the container is in the same relative position as when installed on the truck.
- Careless handling of gas containers can result in serious accidents. Extreme care should be exercised at all times when transporting containers to ensure that they are not dropped or damaged.
- Containers should always be transported in the vertical position to ensure that the pressure within the container is in the form of vapour, not liquid.
- Damage such as dents, scrapes or gouges in the container may materially weaken the structure of the container and render it unsafe for use.
- All containers should be checked regularly for dents, scrapes and gouges in the pressure vessel section.
- Also Check for:
  - Damage to the various valves and the liquid level gauge.
  - Debris in the relief valve.
  - Deterioration, damage or loss of flexible seals in the filling or servicing connections.
  - Indications of leakage at valves or threaded connections i.e. Signs of frost on fittings and hoses usually signify a leak.
  - Any defective or damaged container should be removed from service immediately.
  - Any leaking container should be moved immediately to a safe distance from the truck, free from all ignition leaks.

3.8: Battery Charging

- Batteries contain sulphuric acid and generate explosive gases when being charged. Trained and authorised personnel only must charge them in designated, well-ventilated areas.
- In the event of an accident flush acid away from the eyes and/or skin using plain water and obtain medical attention immediately.
- Check level of electrolyte in each battery cell and top-up if necessary, using only clean distilled water. Bring level up to markers.

NOTE
A smear of petroleum jelly applied to clean terminals will offer protection against acid corrosion

https://truckmanualshub.com/

WARNING

Protective clothing and goggles should be worn and particular care taken not to come into contact with or spill electrolyte when checking its level.
Keep the battery clean and dry, and terminals free from corrosion. Check that the ventilation holes in battery caps are clear.
Temperature must not exceed of 38° C (100° F) during charging.
Smoking and the use of naked lights in the charging area are strictly prohibited.

3.9: Front Wheel Alignment

- If the front wheels are out of alignment select Right/Left mode with the direction selection switch.
- Wait for the wheels to finish aligning then turn the steering wheel to fully extend both front steering cylinders. Hold this position for a few seconds.
- Select Forward/Reverse mode on the direction selection switch and wait for the wheels to finish aligning.
- Check the front wheel alignment. Both front wheels should be aligned parallel to the platforms.

Note

Do not attempt to correct the wheel alignment by adjusting the front master steering cylinder rod end before trying the procedure outlined above.

3.10: Driving Position

- Only operate controls from the correct driving position and do not operate any control until you are certain of its function.

3.11: Bridge Plates and Dock Boards

- Bridge plates and dock boards must have an adequate safety factor to support a loaded truck and be secured when in use to prevent accidental movement.
- Do not exceed the maximum permissible load, which must be clearly marked on all bridge plates and dock boards.
- The sides of bridge plates, and where possible dock boards, must be raised to minimise the possibility of the truck being driven over the edge.
- The surface of the above equipment must be of a slip resistant substance.
- Drive slowly when crossing bridge plates and dock boards.

3.12: Lifting the Machine

- Lift the machine only when necessary.
- Check machine weight before lifting
- Use only the two lifting points on the mast and ensure that the mast is fully retracted and tilted back before lifting.

https://truckmanualshub.com/

Section 4: Maintenance & Service Information

4.1: Daily/Preoperational Inspection

There are a number of items indicated on the maintenance chart that must be performed on a daily basis. These checks are essential in keeping the truck in optimum working condition. These and a number of other checks form what is known as the daily inspection or preoperational inspection of the lift truck.

In many countries, it is required by law for the operator to perform the daily inspection and for the company to have a written record of these checks. Contact your local authorities in order to find out what regulations are in place regarding daily inspections of industrial equipment of this nature.

The daily inspection must be carried out at the start of the working day before the machine commences operation. Alternatively if your company operates a multi shift system the checks should be carried out at the beginning of each shift. The inspection can be broken into 3 sections:

- **The Visual Checks**
- **The Engine Checks**
- **The Operational Checks**

The details of the Inspection should be recorded on a Checklist like the one provided (page 4-6) and a record of these inspections should be kept on file within your company's records.

<u>The Visual Checks</u>

The visual checks are performed by walking around the truck and visually inspecting each of the following items:

Warning

Before attempting any checks ensure that you are wearing the correct safety equipment, i.e. gloves, safety boots, eye protection in form of safety glasses or a full-face shield.

- **Overall condition** – Look for scrapes, dents, and other signs of damage. Watch for missing or loose nuts and bolts. Check underneath the machine for signs of leaking fuel, engine coolant, or oil.

- **Tyres and wheels** – Check that all the wheel nuts are present and tight. Look for cuts in the tyres or foreign objects in the rubber. Also look for Plastic straps, wire, and other debris caught between the wheel and the wheel motor.

Note: Always wear gloves when checking the tyres to avoid injury on sharp pieces of debris.

https://truckmanualshub.com/

- **Forks** – Check that the Forks have no signs of excessive wear or cracking. Check that both locating pins are in place and operational.

- **Mast** – Check for twisting and distortion in the channels. Look for signs of cracking and check that there are no missing or loose bolts. Check the mast chains for wear, missing links and pins. Make sure that the chains are of equal tension and are adequately lubricated. **DO NOT place your hands inside the mast at any stage to check the chains tension.** Press on the chains with a long stick or screwdriver. Check around the lift and tilt cylinders for signs of leakage. Also check all the hoses attached to the mast for signs of leaking oil.

- **Operator Cabin / Overhead Guard** – look for signs of damage and cracking to the overhead guard. Report any signs of damage immediately to your supervisor.

The Engine Checks (service interval = Daily)
These are a series of checks that ensure that the engine of the truck is in good working order.

- **Check All the Fluid levels** – i.e. the engine oil, the engine coolant, and the hydraulic oil level. Do not operate the truck if any of these fluids are below the minimum allowable level.

- **Check the radiator and oil cooler** – Make sure that no leaves, dust or other debris have built up on, or between, the radiator and oil cooler.

- **Check all the belts and hoses** – Check that all of the belts and hoses are in good condition. Look for visible signs of wear and fray.

- **On diesel machines** – check the tank for signs of leakage or corrosion. Ensure that the filler cap is on correctly

- **On LPG machines**, the fuel tank needs to be checked regularly.

  - Check the tank for scrapes, dents and other damage.
  - Check that the tank is located on the locator pin.
  - Check the restraining straps
  - Check hosing and connections for leaks – **Use a soapy water solution. NOT your hands. LP Gas can cause severe burns.**
  - Check that the tank fits inside the profile of the machine.

Warning

Always wear appropriate protective clothing such as gloves and face shield when checking LP tanks and fittings. LP can cause frostbite when released, due to its very low temperature.

https://truckmanualshub.com/

The Operational Checks (service Interval = Daily)
These checks are performed in order to ensure that every part of the Combilift functions correctly and in a safe manner. The checks are performed as follows:

- **Check the seat belt** – Enter the cabin using the three point contact method. Make sure that the seat belt functions correctly. Check for any cuts or fraying along the belt and that it secures correctly into the retainer. **Always wear the seat belt provided when you are driving the Combilift.**

- **Check the seat** – All Combilift machines come with adjustable air suspension seats. The operator must ensure that the seat is correctly adjusted for their individual height and weight. Instructions on how to set the seat are in the operators' manual.

- **Turn on the Machine –** Insert the key into the ignition and turn the key to the "On" position. This will allow power to flow through the electrical system. Several lights should illuminate in the dash.

- **Test the horn** – the horn button is on the dash to the right hand side of the operator. The Truck should not be operated if the horn is not functioning. Depress the button to test the horn.

- **Starting the engine** - Ensure that the Parking brake is applied by depressing the large red button on the dash. Also ensure that the directional control lever is in the Neutral position. Turn the key to the start position to start the engine and then release the key. It will return to the on position.

- **Listen** – Listen to the engine for a few seconds before driving off. Be alert for any strange sounds or noises from the engine. Also be on the look out for any strange odours that may indicate a problem such as a very strong smell of gas or burning. If you detect anything, which is not normal, stop the machine immediately and investigate the problem.

- **Check the Dash** – look at the dash and make sure that the warning lights are all extinguished. The only light that should be on after the engine is started should be the parking brake. Should any other lights be illuminated, stop the machine and report the fault to your supervisor. A full list of all the gauges, indicators and controls along with each function can be found in section 2 of this manual.

- **Check the mast functions** – After checking that there is adequate space and headroom perform the checks on the mast functions. Raise and lower the mast making sure that the operation is smooth and controlled. Extend the mast forward and then retract it. Again watch for any signs of sticking. Tilt the mast fully forwards and backwards. Then test any auxiliary function that may be fitted to **Your** Combilift.

https://truckmanualshub.com/

- **Check the Brakes** – With the parking brake still applied, select forward on the directional control lever. Keeping both feet away from the pedals, sound the horn, and release the parking brake. The machine should start to move slowly forward. Depress the inching pedal fully. The machine will stop. Release the pedal and the machine will move off again. Then reapply the parking brake and the machine will stop. If either brake is not working do not operate the machine and report the fault to your supervisor. In the highly unlikely event of neither brake working, the machine can be stopped by switching off the engine. Make sure that you have adequate space to perform this test and that it is performed on a level surface.

- **Check the Directional Control Lever** – With the engine running and the parking brake applied, select forward mode. Sound the horn and release the parking brake. The machine should move forward. Depress the inching pedal to stop the machine. Sound the horn, select reverse on the directional control stick and release the inching pedal. The machine should now travel backwards. Depress the inching pedal to stop the machine and apply the parking brake. Select left travel on the directional control lever. The wheels will start to realign for sideward mode. When the wheels are fully in position, sound the horn and release the parking brake. The machine should now travel to the left. Depress the inching pedal to stop the machine, select right travel on the directional control lever, sound the horn and release the inching pedal. The machine should now travel to the right.

- **Check the steering** – Set the steering wheel to the most comfortable position for driving by use of the adjustment lever on the right hand side of the column. With the engine running and the parking brake applied, turn the steering wheel fully clockwise and counter-clockwise. The steering should move easily in either direction, and not seem excessively stiff or loose. Perform this check in both normal mode and sideward mode.

On completion of the inspection the operator should:

- Report any defect immediately to the supervisor / appropriate person
- Never operate a lift truck that is in need of repair
- Repairs should only be performed by authorised personnel

In order to keep a record of these daily inspections it is advised that a daily inspection checklist like the one provided on the next page should be used when performing the checks. A copy of this checklist should be kept on file at all times in order to keep track of the machines service history as well as any faults that occur.

Note

Remember, in most countries, it is against the law NOT to perform these checks or keep a record of the inspections.

https://truckmanualshub.com/

Customised Handling Solutions

Operators Daily Inspection Sheet

Model: _____ Serial No: _____

Date: _____ Shift No: _____

Inspect the Combilift before each shift. Should the Combilift be found to require servicing or if during the operation the Combilift malfunctions or becomes unsafe, stop the truck and report the situation immediately to the designated authority. DO NOT operate the Combilift or attempt to service it. Servicing is only to be conducted by a qualified technician.

Mark the Appropriate Box with **X** OK **Machine OK** [ ] **Service Required**

		Mon		Tues		Wed		Thurs		Fri		Sat		Sun	
Visual Checks	**Damage** *Bent, Dented or Broken Parts*	OK		OK		OK		OK		OK		OK		OK	
	Leaks *Tank, Valves, Fittings, Hoses*	OK		OK		OK		OK		OK		OK		OK	
	Tires *Chunks missing, Loose wheel nuts*	OK		OK		OK		OK		OK		OK		OK	
	Forks *Bent, Damaged or Worn*	OK		OK		OK		OK		OK		OK		OK	
	Mast (inc. Chains) *Damage, Signs of bending, loose chains*	OK		OK		OK		OK		OK		OK		OK	
	Overhead Guard *Damage, Cracking*	OK		OK		OK		OK		OK		OK		OK	
	Engine *Smell, Belts tight and in good condition*	OK		OK		OK		OK		OK		OK		OK	
	Engine Oil level *Signs of damage or leaking*	OK		OK		OK		OK		OK		OK		OK	
	Coolant Level *Acceptable Range*	OK		OK		OK		OK		OK		OK		OK	
	Hydraulic Oil Level *Acceptable Range*	OK		OK		OK		OK		OK		OK		OK	
	Radiator & Oil Cooler *Build up of leaves, dust or debris*	OK		OK		OK		OK		OK		OK		OK	
	Hoses *Good Condition, No signs of wear*	OK		OK		OK		OK		OK		OK		OK	
	Fuel Tank / LPG Cylinder *Signs of damage or leaking*	OK		OK		OK		OK		OK		OK		OK	
Operational Checks	**Safety Equipment** *Horn, Operator Restraint, Reversing Bleeper*	OK		OK		OK		OK		OK		OK		OK	
	Engine *Starts and runs OK, no unusual noise*	OK		OK		OK		OK		OK		OK		OK	
	Mode change *Wheels realign smoothly, no sticking*	OK		OK		OK		OK		OK		OK		OK	
	Travel *No unusual Noise, Smooth changes*	OK		OK		OK		OK		OK		OK		OK	
	Steering *No excessive play or restriction in either mode*	OK		OK		OK		OK		OK		OK		OK	
	Inching Pedal *Stops travel, smooth deceleration*	OK		OK		OK		OK		OK		OK		OK	
	Parking Brake Functions and releases	OK		OK		OK		OK		OK		OK		OK	
	Hydraulic Controls Forks-Lift/lower, mast-in/out, tilt, Aux functions	OK		OK		OK		OK		OK		OK		OK	
	Hour Meter Reading														
	Operator Initials														
	Supervisors Initials														

Notes (regarding repair, etc): _____

_____

_____

https://truckmanualshub.com/

4.3: Initial Service – Conducted at 100 hours of Operation

The initial service is conducted at this interval to ensure that the truck is optimum working condition upon leaving the factory. In order to complete the initial service the following task must be completed.

- Change engine oil & oil filter.
- Replace fuel filter.
- Check fan belt tension and adjust if required.
- Replace hydraulic suction filter (located at rear of hydraulic tank)
- Replace return filter (located on top of the hydraulic tank)
- Check hydraulic oil level.
- Check coolant level.
- Check the machine for hydraulic, coolant and fuel leaks.
- Clean air filter element (replace if necessary).
- Check all mast carriage-bearing lock nuts are tight.
- Check all bolts and fittings are tight.
- Check radiator, and if necessary, clean fins
- Grease all points indicated on grease point chart
- Torque all wheel nuts (see note below for torque settings).
- Check mast chains; lubricate and adjust if required.

Note

All grease points indicated on the grease point chart MUST be greased weekly using EP2 Grease

Note

All wheel nuts should be checked daily and torqued every 250 hours:
Front Wheel nuts (210Nm or 155ft/lbs)
Back Wheel nuts (300Nm or 220ft/lbs)

Note

Maintenance, replacement, or repair of the emission control devices and systems may be performed by any non-road engine repair establishment or individual.

Note

See Appendix A for ‘California Engine Emission Control Warranty Statement’ regarding owners ‘Warranty Rights and Obligations’.

See Appendix B for General Engine Warranty Statement.

https://truckmanualshub.com/

4.4: Maintenance Schedule

In order to keep the Combilift in optimum working condition it is necessary to service the truck at regular intervals. The Chart below details the intervals (in hours of machine operation) at which maintenance tasks should be performed

Action		Service Interval (Hrs)			
		Daily	*250*	*500*	*2000*
Check Engine Oil		●			
Change Oil Filter Cartridge			●		
Change Engine Oil			●		
Change Air Filter Cartridge (clean every 100hrs)				●	
Change Air Filter Cartridge				●	
Change Diesel Engine Glow plugs					●
Change LPG engine Spark Plugs					●
Check Engine Mounts				●	
Check Engine Mount Bolts				●	
Check Engine Idling Speed				●	
Change Both Diesel Fuel Filters				●	
Engine Belts	Check for Wear	●			
	Check Tension	●			
Check Cooling Fan		●			
Check Radiator		●			
Check Engine Coolant Level		●			
Change Coolant in Cooling System					●
Check Oil Cooler		●			
Check Hydraulic Oil Level		●			
Change Hydraulic Oil					●
Change Hydraulic Suction Filter Cartridge				●	
Change Hydraulic Return Filter Cartridge				●	
Change Hydraulic In-Tank Strainer Filter					●
Check Battery Electrolyte levels			●		
Check Swivel Bearings (Slew Rings)				●	
Check Mast Carriage Bearings				●	
Check Mast Carriage Wear Pads & Alignment				●	
Check Mast Bearings		●			
Check Mast Chains		●			
Lubricate & Adjust Mast Chains			●		
Grease Mast Channels			●		
Grease Mast Carriage Channels			●		
Check Wheel Nuts		●			
Torque Wheel Nuts			●		
Check Hydraulic Hoses for Leaks		●			
Check Hydraulic Hoses for Signs of Wear		●			

Grease All Points Indicated on the Grease Point Chart <u>Weekly</u>

Note

Maintenance, replacement, or repair of the emission control devices and systems may be performed by any non-road engine repair establishment or individual.

https://truckmanualshub.com/

4.5: Engine Oil and Engine Oil Filter (Service Interval = 250Hours)

The engine oil used in the Combilift should have the correct temperature range for the ambient temperature in which the machine is to be operating. Temperature affects the viscosity of the oil and therefore it's lubricating properties. All Combilift trucks leave the factory with a special, high multi-grade oil in the engine and this can be used all year round except in very cold climates.

Recommended Engine Oil Specification:

Diesel: API – CF (See notes at 4.15: if diesel particulate filter is fitted)
SAE 15W40 – All Temperatures
SAE 10W30 – All Temperatures

LPG: API – SJ/CF
SAE 10W30 – All Temperatures
SAE 15W40 – Above -18°C (0°F)

Note

If a diesel particulate filter (DPF) is fitted to the truck then API CJ-4 engine oil **MUST** be used.

In order to change the oil and oil filter, the following steps should be taken:

1) If possible use an oil extractor to suck the used oil from the engine. Follow the instructions supplied with the extractor. The dipstick is located on the back of the engine as shown in the image below.

2) If an oil extractor is not available extend the mast carriage forward in order to gain access to the oil drain plug under the engine.

3) Position a suitable container beneath the Oil drain plug (see point 10 for the volume of oil in the engine).

4) Remove the oil filler cap (on top of the engine) and the drain plug and allow the system time to drain completely

5) Once the system has drained completely, dispose of the used oil in a safe and responsible manner.

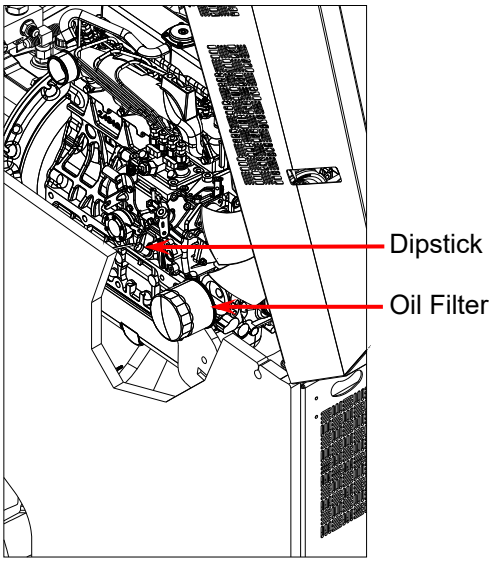

https://truckmanualshub.com/

Note

Do not pour fluids into the ground, down a drain or into a stream, pond or lake. Observe relevant environmental protection regulations when disposing of oil, coolant, fuel, electrolyte and other harmful waste

6) Remove the engine oil filter located on the back of the engine as indicated in the diagram in the previous page. The filter is accessed by lifting the bonnet as shown in the diagram.
7) Apply some engine oil to the new oil filter cartridge before fitting and smear the o-ring seal with some oil.

8) Install the new engine oil filter cartridge, ensuring that the O-ring seal is correctly placed. Only use a genuine Combilift component.

9) Reinstall the drain plug and tighten appropriately.

10) Fill the engine with the appropriate volume of oil ensuring that the oil with the correct temperature range is used. The Volume of oil required is:
    a. Kubota Diesel Engine: 9.5 Litres / 2.5 US Gallons
    b. GM LPG engine: 4.7Litres / 1.24 US Gallons

11) Check the oil level on the dipstick. Ensure that the oil level is at the upper notch on the dipstick.

https://truckmanualshub.com/

4.6: Engine Coolant (Service Interval = 2000Hours)

CAUTION: Explosive release of fluids from pressurised cooling system can cause serious burns. Shut off engine. Only remove filler cap when cool enough to touch with bare hands. Slowly loosen cap to relieve pressure before removing completely.

All Combilift IC engine powered trucks leave the factory with a mixture of 50% water to 50% coolant additive (***Glysantin® G64® from 02/2018)*** in the cooling system. This provides protection against corrosion and overheating and prevents freezing down to -37°C (-34.6°F). If greater frost protection is required, the coolant additive concentration can be increased up to 60% (frost protection to -52°C (-61.6°F)). Any greater proportion of coolant will decrease the frost protection and also the anti-corrosive properties.

Note

It is advised **not to mix** different coolant additives.
See www.combilift.com/coolant for a list of approved coolant products.

The cooling system must be monitored regularly. This includes checking the concentration of the antifreeze. The concentration of antifreeze to water must never be allowed fall below 35% as the protective effects fall away rapidly below this concentration.

Coolants must be completely replaced when repairs are performed on the cooling system. Rinse out the cooling system before filling with new coolant. A mixture of clean water with 15% of the new approved coolant is recommended for rinsing.

Note

Cooling System Capacity = 16 Litres / 4.2 US Gallons

Note

Do not pour fluids into the ground, down a drain or into a stream, pond or lake. Observe relevant local environmental protection regulations when disposing of oil, coolant, fuel, electrolyte and other harmful waste.

https://truckmanualshub.com/

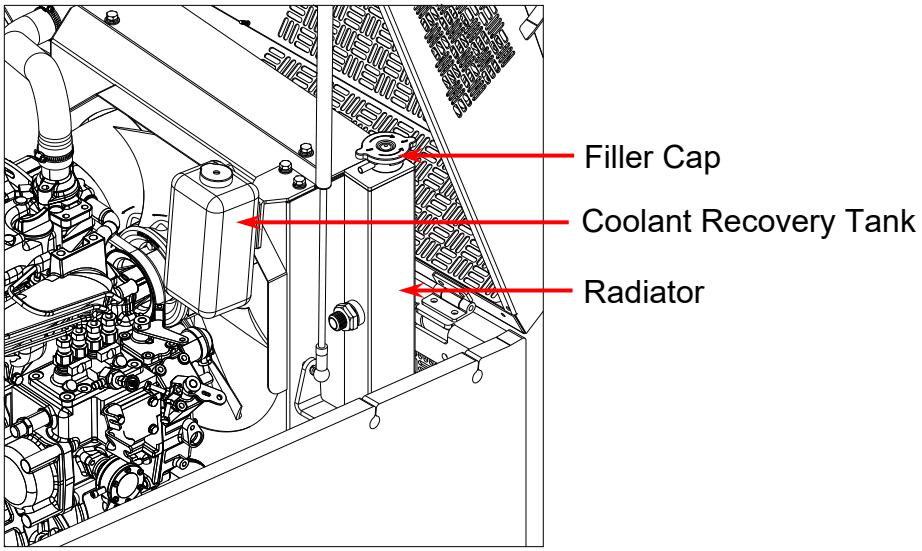

To drain the cooling system, remove the filler cap from the top of the radiator and the pipe / bung from the bottom of the radiator. The bung is located on the front of the radiator and can be accessed by removing the radiator access panel on the right hand side of the truck.

4.7: Hydraulic Oil and Filters

The hydraulic oil used in the Combilift should conform to the International Standard ISO G344 HV grade oils with improved viscosity / temperature characteristics. It should also have the correct temperature range for the ambient temperature in which the machine is being operated. If the operating temperature is outside the standard range, the standard oil should be replaced with the correct grade.

Ensure that the correct type of oil is used in the relevant ambient temperature. The table below indicates a number of commercially available oils and the temperature ranges that they are suitable for:

AMBIENT OPERATING TEMPERATURE	**Low Range -20°C to25°C -4°F to 77°F**	**Standard Range -10°C to35°C 14°F to 77°F**	**High Range 0°C to45°C 32°F to 113°F**
Castrol: Hyspin	AWH 32	AWH 46	AWH 68
B.P. Bartran	HV 32	HV 46	HV 68
Esso: Univis	N 32	N 46	N 68
Mobil	13 M	15 M	16 M
Shell: Tellus oil	T32	T46	T68
Texaco	HDZ 32	HDZ 46	HDZ 68

Note

The Sequence in which the brand names are listed does not signify any grading as to their quality or preference.

https://truckmanualshub.com/

Note

The machine is supplied with an AWH46 hydraulic fluid when leaving the factory. Please check if this is suitable for the ambient temperature in which the machine is to be operated.

Note

Before adding hydraulic oil, ensure that all cylinders are retracted and fill to upper level on the hydraulic oil level gauge.
The capacity of the hydraulic tank is 60 Litres / 15.8 US Gallons
The capacity of the entire hydraulic system is 80 Litres / 21 US Gallons

There are 3 separate hydraulic filters in the hydraulic system that must be replaced at certain intervals. These filters are:

1. **The Suction Filter**
2. **The Return Filter**
3. **The In-Tank Strainer Filter**

The locations of these filters are shown in the following diagrams.

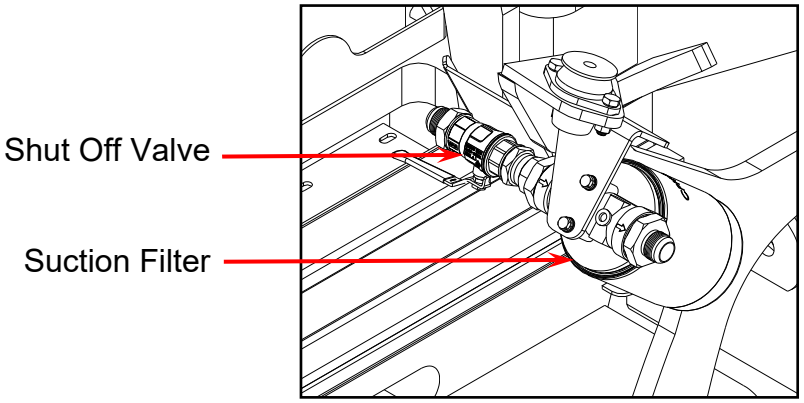

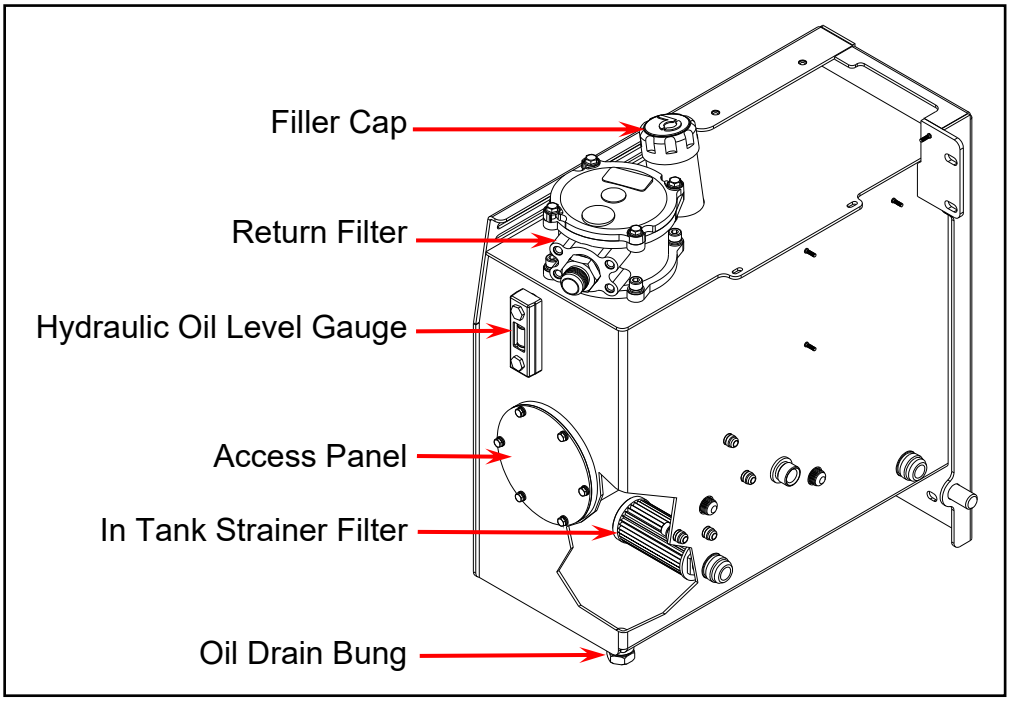

https://truckmanualshub.com/

Suction Filter: (Service Interval = 500Hours)
The suction filter is located on the engine bracket below the front engine mount as shown in the diagram above. It must be replaced initially after 100 hours and then at intervals of every 500 hours (or 8 months depending on which occurs first).

To replace the Suction Filter:
1. Use the reach lever in the cabin to extend the mast carriage in order to gain access to the suction filter.
2. Close the shut-off valve between the tank and the filter.
3. Place a container under the filter to catch excess oil.
4. Loosen and remove the old filter cartridge.
5. Partially fill the new filter cartridge with hydraulic oil of the same grade as that in the system.
6. Smear some oil on the O-ring seal on top of the filter cartridge.
7. Tighten the new filter cartridge onto the filter housing by hand.
8. Only use a genuine Combilift component.

Return Filter: (Service Interval = 500 Hours)
The return filter, located on the top of the hydraulic tank must be replaced at intervals of every 500 hours (or 8 months depending on which occurs first).

To replace the Return Filter:
1. Loosen the four bolts on the lid of the filter housing.
2. Turn the lid clockwise and lift in order to gain access to the filter element.
3. Remove the retaining spring from the top of the filter element
4. Remove the old filter element and replace with the new filter element. Only use a genuine Combilift component.
5. Fit the retaining spring into the top of the filter element and refit the housing lid and turn anticlockwise up to bolts.
6. Tighten the four bolts onto the lid.

Hydraulic Oil & In-Tank Strainer Filter: (Service Interval = 2000 Hours)
The hydraulic oil and in-tank strainer filter, located in the bottom rear left hand side of the tank, must be replaced at intervals of every 2000 hours (or 24 months depending on which occurs first). The strainer filter can only be accessed when the hydraulic tank has been drained.

To replace the Hydraulic Oil & In-Tank Strainer Filter:
1. Drain the hydraulic oil tank through the drain port in the bottom of the tank
2. Remove the access panel from the left hand the side of the tank.
3. Insert your hand into the tank and remove the filter by rotating it anti-clockwise.
4. Fit the new strainer filter. Only use a genuine Combilift component.
5. Refit the access panel, remembering to correctly fit a new O-ring seal.
6. Fill the tank to half way up the sight glass on the hydraulic oil gauge with hydraulic oil of the same grade as the oil that was drained from the tank.

https://truckmanualshub.com/

Volume of oil required to fill tank to half way up the gauge sight glass: 80 litres / 84.5 quarts

4.8: Accessory Drive V- Belt

The v-belt drives accessories such as the water pump, the fan and the alternator. The belt is located on the engine as shown and checked as follows:

Check the belt tension: Perform this check when the engine IS NOT running. Apply a force of 98Nm to the longest stretch of belt between two pulleys. Ensure that the deflection (**x**) is no more than 9mm (0.35in) for diesel engine trucks and 13mm (0.5in) for LPG engine trucks. See figure 4.7 on the following page. If the belt deflects more than the permissible amount it must be tightened. This is done by loosening the alternator bolts and rotating the alternator away from the engine.

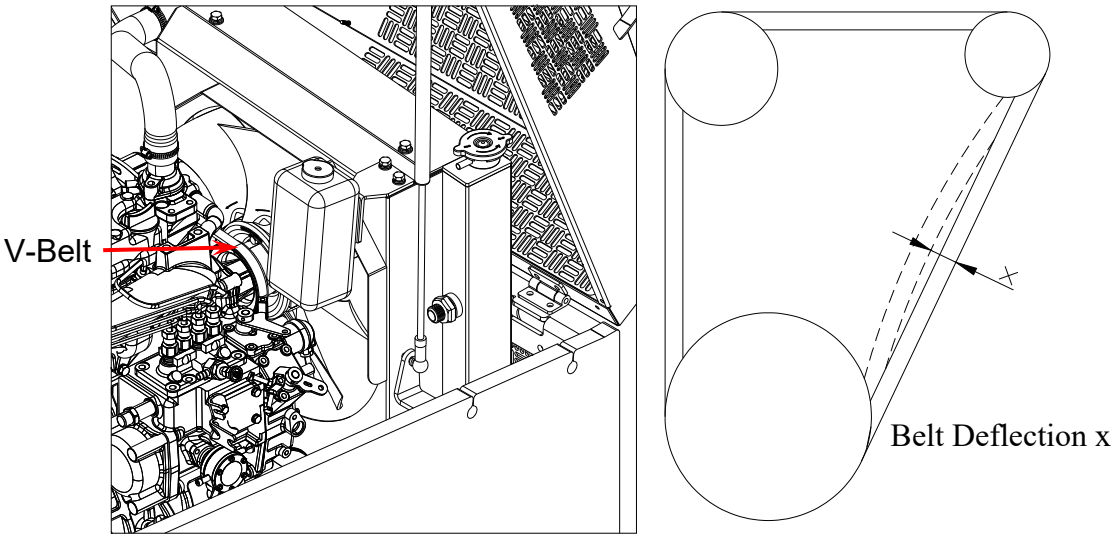

Figure 4.7

Check the belt condition: Inspect the condition of the belt. Be on the lookout for signs of damage and wear. If the belt is damaged replace it immediately. Also check if the belt has sunk deeply into the pulley as this indicates excessive wear. Again replace the belt immediately if this is the case.

4.9: Mast Maintenance (Service Interval = 250Hours)

Mast chains should be checked for elongation periodically and adjusted as required. The chains must be adjusted so that the upper mast stops never come into contact with each other and the lower mast stops never come into contact with each other. Adjust all chains evenly. An interval of 250 hours can be taken as a typical value, under normal working conditions.

Periodic lubrication of the mast chains is required to ensure maximum life span is achieved. Use SAE 20 oil in cold conditions and SAE 40 oil in warm conditions. Frequency of lubrication depends largely on operating conditions.

https://truckmanualshub.com/

A lubrication interval of 250 hours can be taken as a typical value, under normal working conditions.

Periodic lubrication of the mast channels is required to ensure maximum life span is achieved. All roller surfaces must be greased periodically where the fork carriage bearings and mast section bearings run. The frequency of this operation is at the discretion of the user and essentially depends upon the working conditions. A lubrication interval of 250 hours can be taken as a typical value, under normal working conditions. For this purpose use graphite grease, avoid spray greases.

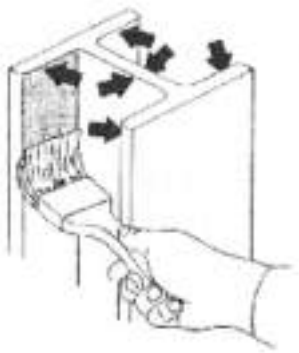

Additional Mast Maintenance (Contact Combilift for further information)

- Replacement of hydraulic cylinder seals.
- Replacement of chains.
- Replacement of bearings.

4.10: Cleaning & Greasing Mast Carriage Channels

The mast carriage channels must be cleaned (if necessary) and greased (**only on the vertical (side) surfaces)** periodically where the wear pads run. The frequency of this operation is at the discretion of the user and essentially depends upon the working conditions and the workplace. A lubrication interval of about 250 hours can be taken as a typical value, under normal working conditions. For this purpose use EP2 grease.

4.11: Mast Carriage Alignment / Wear Pad Adjustment Procedure

1. Check that the mast carriage cylinders are securely fastened. Check that the M24 castle nuts on the carriage cylinders are tight before commencing the mast carriage alignment/wear pad adjustment procedure.

2. Fully extend the mast carriage then bring it back in by approximately 50mm. Raise the mast until the bottoms of forks are approximately 0.5m above head height. This allows access to the mast carriage wear pad locking nuts and adjustment bolts. Prop up the fork carriage using a suitable support to prevent it from dropping. Do not allow access to the machine controls while working under on the mast.

https://truckmanualshub.com/

Warning

Failure to support the fork carriage and block access to the fork controls while working under the mast could result in serious injury or death.

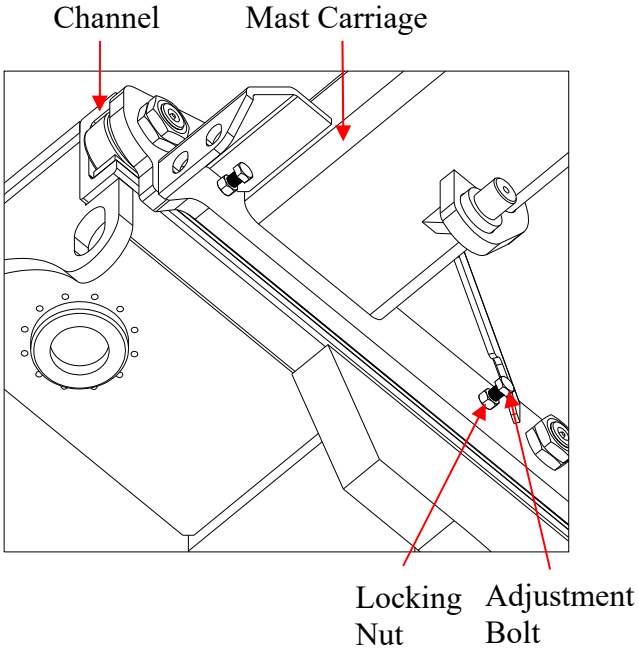

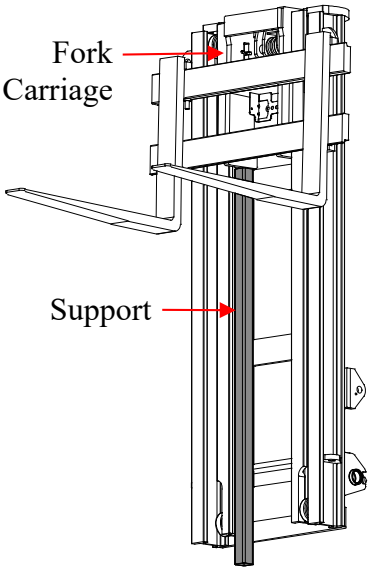

3. Loosen the locking nuts a couple of turns, then loosen the adjustment bolts a couple of turns. There are 4 wear pads on the mast carriage, 2 at the front and 2 at the back. Ensure that the nuts and bolts are loosened off at all 4 wear pads.

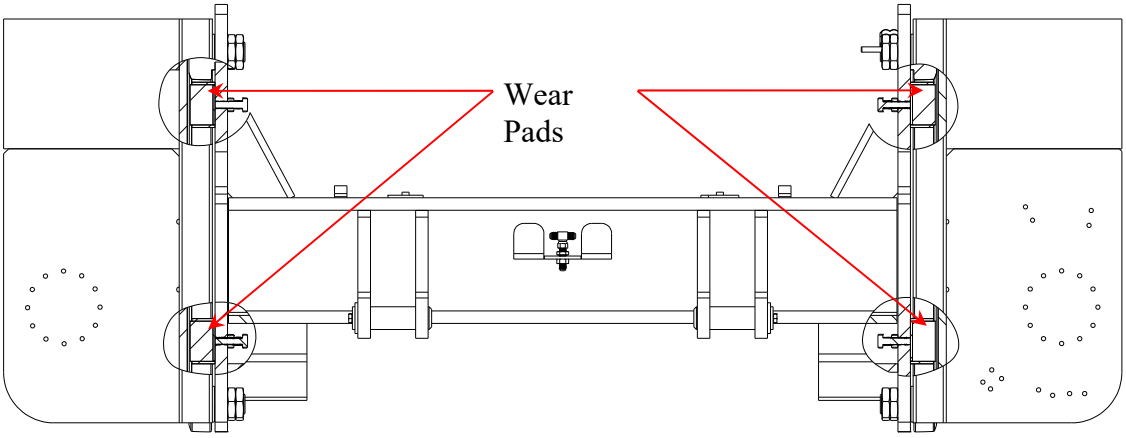

4. Measure the distance **(x)** between the mast carriage side plate and the channel at the front of the machine on both sides of the truck. The distance **(x)** must be equal on both sides. Turn the front wear pad adjustment bolts clockwise to push the wear pads up against the channels. Adjust the wear pads until the distance (x) is equal on both sides.

https://truckmanualshub.com/

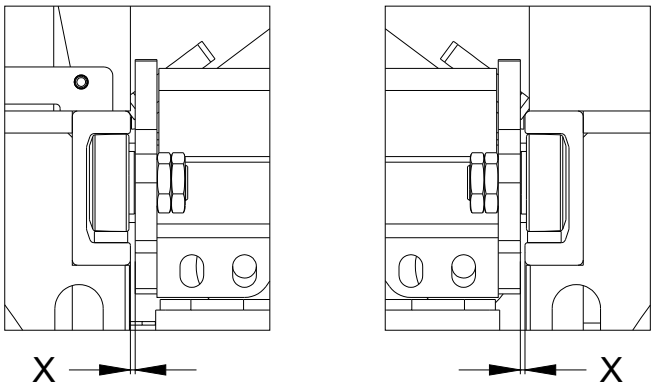

Note

The wear pads must only be in light contact with the channels to allow the carriage to travel freely. Do not over tighten the adjustment bolts as the force between the wear pads and the channel will cause the carriage to stick. Maximum torque of the bolts should not exceed 25Nm (18.5ft.lb).

5. Adjust the wear pads on the rear as described in point 4.

6. Check that the vertical faces of the channels where the wear pads run are clean and adequately lubricated. Operate the reach function to move the mast in and out several times through the full extent of its travel.

7. Check the torque of all the adjustment bolts. The torque must not exceed 25Nm (18.5ft.lb).

8. Tighten all the locking nuts up against the mast carriage side plates to lock the adjustment bolts in place. Use a spanner to prevent the adjustment bolts from turning while the locking nuts are being tightened.

https://truckmanualshub.com/

4.12: Fuel Filtration – Diesel (Service interval = 500 Hours)

On all diesel engine Combilifts, there are two fuel filters located on the rear of the fuel tank as shown in figure 4.8 below. The first filter, the small plastic filter, is to prevent particles entering the electric fuel pump. The second larger filter is to prevent any remaining particles entering the engine. These must be replaced in accordance with the maintenance schedule. The filters are both accessed by extending the mast carriage and entering the frame of the machine.

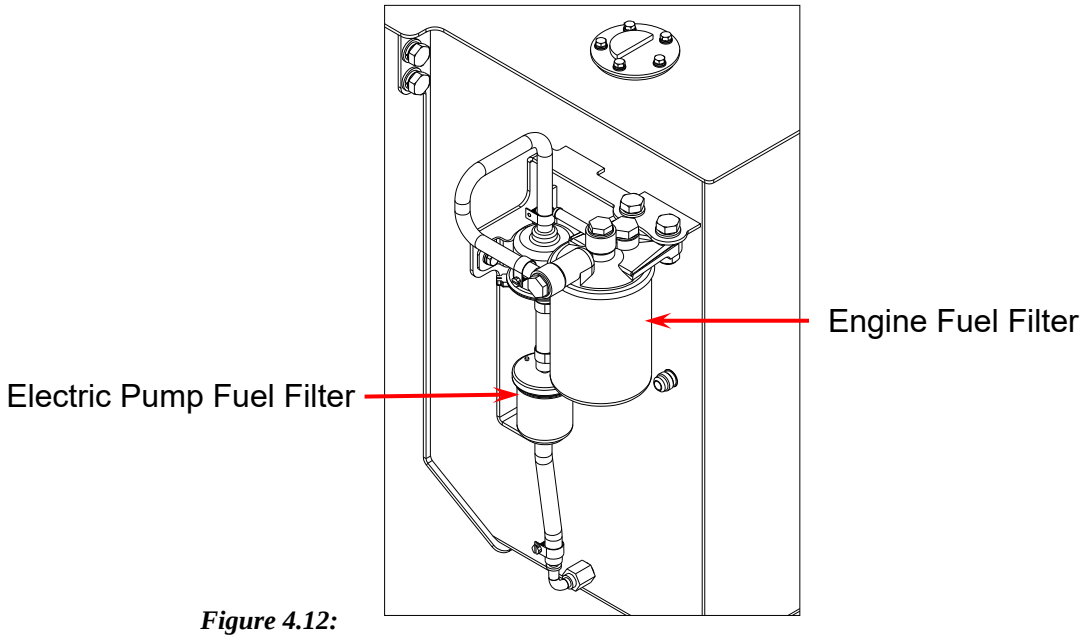

Figure 4.12:

https://truckmanualshub.com/

4.13: Air Filter Element (Clean Every 100hrs, Replace Every 500hrs)

The air filter unit is located under the bonnet on the right hand side of the machine as shown in the diagram below. The air filter cartridge must be cleaned every 100 hours and replaced at intervals of every 500 hours (or 8 months depending on which occurs first). Always ensure that the Dust Valve is pointing down.

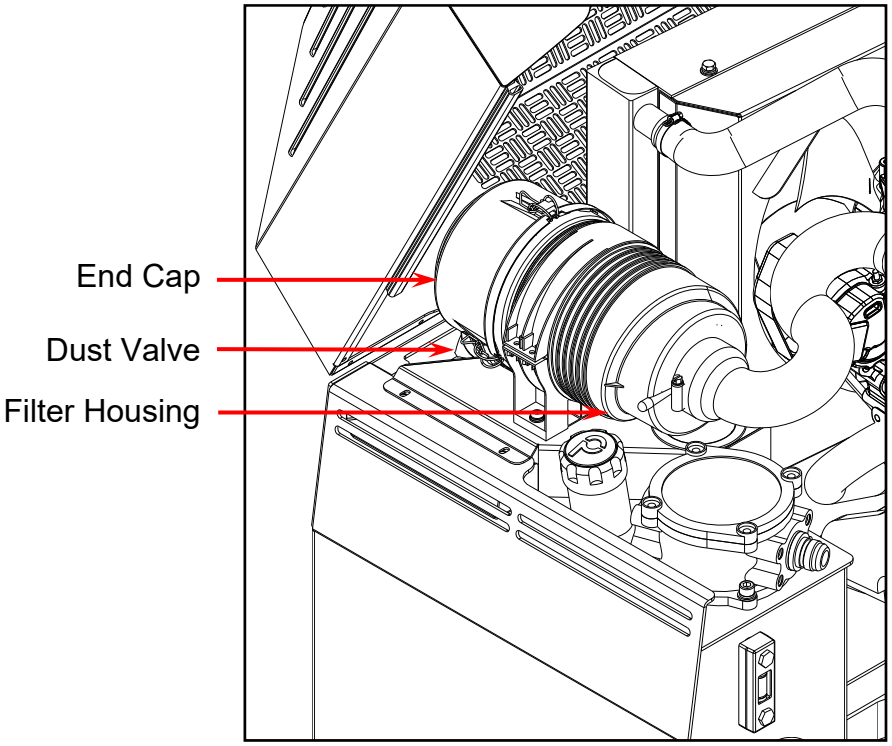

In order to change/clean the air filter cartridge, take the following steps:

1. Raise the bonnet using the bonnet handle at the rear of the truck.
2. Remove the end cap from the filter housing by opening the 3 clips
3. Remove the existing air filter cartridge and **clean it / or replace it** with a new cartridge. Only use a genuine Combilift component.
4. Replace the end cap ensuring that the dust valve is pointing downwards as shown and close the 3 clips.
5. Close the bonnet gently.

https://truckmanualshub.com/

4.14: Grease Point Chart

The diagram below indicates most but not all of the points on the Combilift that must be greased regularly. The bearings on the mast must also be greased regularly. A copy of this diagram is located in the operator compartment in the form of a decal / Information sticker. All Points should be greased weekly with EP2 grease.

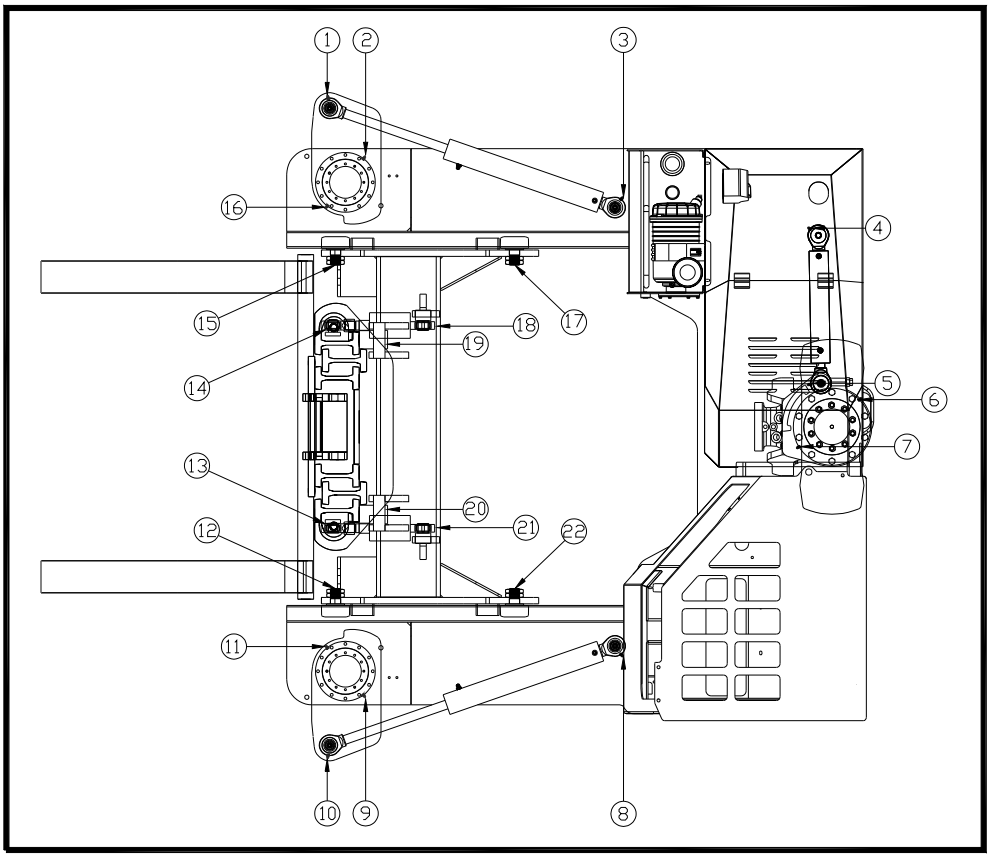

1. Steering Front
2. Swivel Back
3. Steering Back
4. Rear Steering
5. Rear Steering
6. Swivel Front
7. Swivel Back
8. Steering Back
9. Swivel Front
10. Steering Front
11. Swivel Front
12. Carriage Bearing
13. Front Tilt
14. Front Tilt
15. Carriage Bearing
16. Swivel Front
17. Carriage Bearing
18. Rear Tilt
19. Mast bushing
20. Mast Bushing
21. Rear Tilt
22. Carriage Bearing

Note

There may be additional grease points that have not been indicated on the above chart. These may include bearings on the mast, and any additional options or attachments on the machine e.g. fork positioner cylinders, side shift attachments, telescopic attachments etc. Grease points on this additional equipment must be located and greased weekly using EP2 grease

https://truckmanualshub.com/

4.15: Diesel Particulate Filter (DPF)

Refer to the accompanying diesel particulate filter manual (only supplied if a DPF has been fitted) for further details.

Note

Where Diesel Particulate Filters (DPF) are fitted Diesel Fuels with a maximum sulphur content of 15ppm (parts per million) MUST be used.
Diesel Fuels specified to EN 590 or ASTM D975 S15 are strongly Recommended.

Note

If a diesel particulate filter (DPF) is fitted to the truck then API CJ-4 engine oil **MUST** be used.

https://truckmanualshub.com/

Section 5: Technical Information & Circuit Diagrams

5.1: Towing the Combilift

Should the need arise to Tow the Combilift it is necessary to first apply the bypass condition on the hydrostatic pump in order to prevent It from being damaged. It will then be necessary to mechanically release the brakes on the motors.

Hydrostatic transmission / Bypass condition.

In this case the travel drive is switched on to the free wheel position. For this purpose the high-pressure valves of the variable displacement pump have a so-called bypass function. By turning the relevant screw (item 1) the valve is so released that free oil circulation is made possible. In order to bypass the motor, screw in item 1 until it is level with the nut.

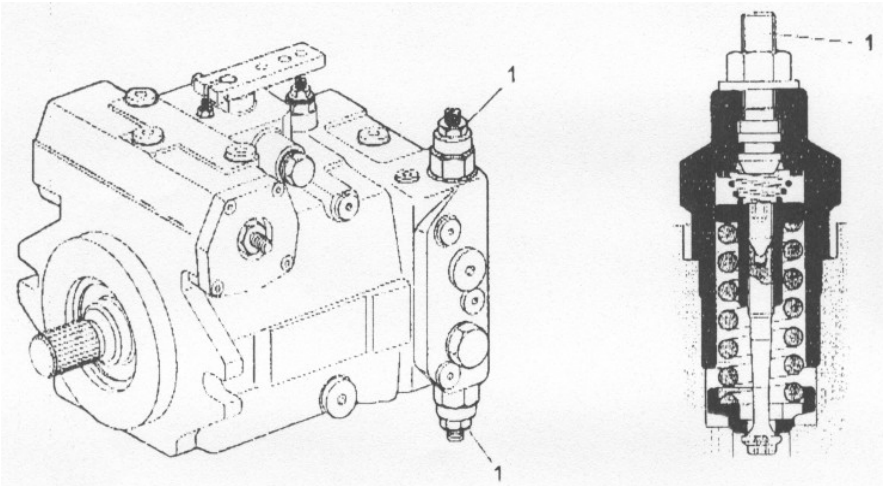

Towing Speed

The maximum permissible towing speed of 2 km/h **should not be exceeded.**

Towing distance

The towing distance should not exceed 1 km. (With no boost available to the hydraulic circuit drains, the heat generation in the hydraulic motor rotary group has to be taken into account.)

Termination of the towing operation

After termination of the towing operation turn back item 1 to its original position. The original set pressure value is thereby available. Screw back item 1 up to stop. Tighten the nut.

https://truckmanualshub.com/

5.2: Mechanical Brake Release

In order to release the brake, follow the steps laid out below.

1. Extract the plug from the rear cover of the motor. (Labelled 142 in the diagram opposite)

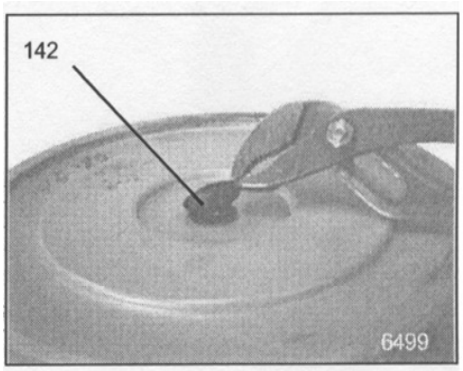

2. Insert a socket head bolt as shown in the diagram with a nut fully inserted onto the bolt.

3. Using a spacer similar to the one shown on the diagram tighten the bolt into the Brake assembly at the rear of the motor

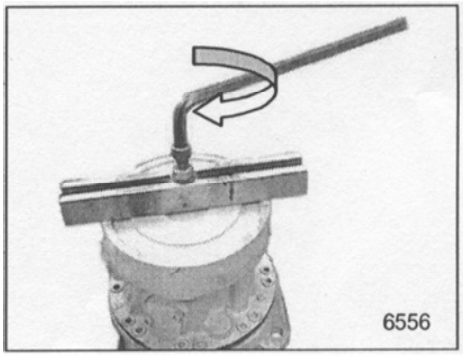

4. When the bolt is in tight, loosen the nut off the bolt by turning it anticlockwise as shown. This action will release the brake and allow the motor to turn freely

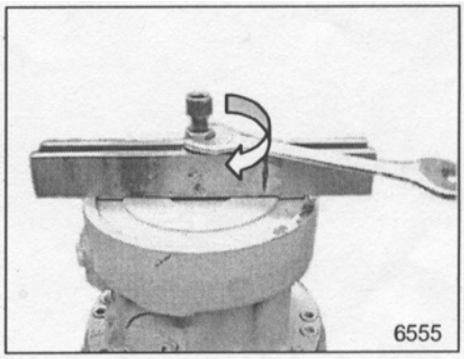

5. To reapply the brake, repeat the steps above in reverse order.

5.3: Checking the Charge Pressure

In order to check the charge pressure, the following steps should be taken:

- Ensure that the engine is switched off.
- Remove the hose connecting the pump to the brake valve at the pump end (port G) and seal with a 9/16“ JIC male bung.
- Attach a pressure gauge to port G on pump (see illustration overleaf).
- Start the engine and read the pressure.

https://truckmanualshub.com/

The charge pressure should measure between 20 - 28 bar (290 – 406 PSI).

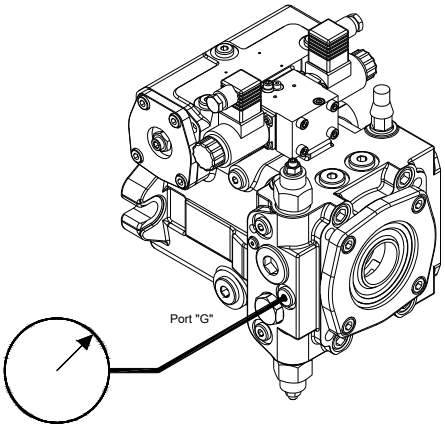

Warning

Ensure that the Machine is switched off until the pressure gauge has been attached and the hose bunged before trying to read the charge pressure.

5.4: Valve Chest Pressure Settings

In order to check the valve chest pressure settings, the following steps should be taken:

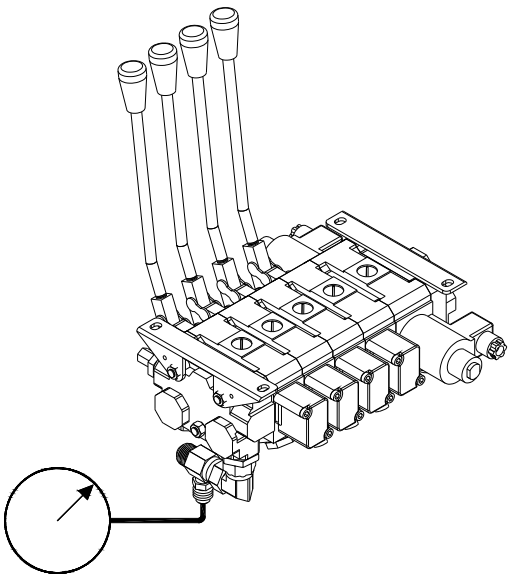

- Attach a pressure gauge to the test point on the valve chest as illustrated opposite.
- Fully extend or retract the cylinder(s) of the function to be tested. For example when checking the tilt-back pressure the mast must be tilted back as far as it will go.
- Fully depress the accelerator pedal and push/pull the lever on the section to be tested (in the example of testing the tilt back pressure the lever will be pulled back).
- The reading on the gauge indicates the pressure setting on one particular port on the valve chest.
- Example: To check the tilt forward pressure tilt the mast forward as far as it will go. Fully depress the accelerator pedal and push the tilt lever forward. The pressure gauge will display the setting on the tilt forward port.

https://truckmanualshub.com/

Metric (SI Units) Settings Table

		MODELS				
		C4000	C4500	C4800	C5000	C5000XL
Main Relief		242 Bar	242 Bar	242 Bar	248 Bar	248 Bar
Lift (Duplex)		220 Bar	228 Bar	235 Bar	234 Bar	234 Bar
Lift (Triplex)		221 Bar	221 Bar	228 Bar	N/A	N/A
Lift (Cascade)		221 Bar	221 Bar	221 Bar	228 Bar	228 Bar
Tilt (Standard)	Forward	111 Bar	111 Bar	111 Bar	179 Bar	179 Bar
	Back	242 Bar	242 Bar	242 Bar	248 Bar	248 Bar
Tilt (Cascade)	Forward	111 Bar	111 Bar	111 Bar	111 Bar	111 Bar
	Back	180 Bar	193 Bar	193 Bar	193 Bar	193 Bar
Reach		180 Bar	180 Bar	180 Bar	180 Bar	180 Bar
Side Shift		180 Bar	180 Bar	180 Bar	180 Bar	180 Bar
Fork Positioner		111 Bar	111 Bar	111 Bar	124 Bar	124 Bar
Side Shift & Fork Posn'r		221 Bar	221 Bar	221 Bar	207 Bar	207 Bar
Reach Forks		180 Bar	180 Bar	180 Bar	179 Bar	179 Bar
Lift/Drop Forks	Up	180 Bar	180 Bar	180 Bar	180 Bar	180 Bar
	Down	111 Bar	111 Bar	111 Bar	111 Bar	111 Bar

Imperial Settings Table

		MODELS			
		C8000	C9000	C10000	C10000XL
Main Relief		3500 PSI	3500 PSI	3600 PSI	3600 PSI
Lift (Duplex)		3200 PSI	3300 PSI	3400 PSI	3400 PSI
Lift (Triplex)		3100 PSI	3200 PSI	N/A	N/A
Lift (Cascade)		3200 PSI	3200 PSI	3300 PSI	3300 PSI
Tilt (Standard)	Forward	1600 PSI	1600 PSI	2600 PSI	2600 PSI
	Back	3500 PSI	3500 PSI	3600 PSI	3600 PSI
Tilt (Cascade)	Forward	1600 PSI	1600 PSI	1600 PSI	N/A
	Back	2600 PSI	2800 PSI	2800 PSI	N/A
Reach		2600 PSI	2600 PSI	2600 PSI	2600 PSI
Side Shift		2600 PSI	2600 PSI	2600 PSI	2600 PSI
Fork Positioner		1600 PSI	1600 PSI	1800 PSI	1800 PSI
Side Shift & Fork Posn'r		3200 PSI	3200 PSI	3000 PSI	3000 PSI
Reach Forks		2600 PSI	2600 PSI	2600 PSI	2600 PSI
Lift/Drop Forks	Up	2600 PSI	2600 PSI	2600 PSI	2600 PSI
	Down	1600 PSI	1600 PSI	1600 PSI	1600 PSI

Note:

The pressure values given in the tables above are to be used as a guideline only. The pressures may be set differently in the factory on occasion to suit different equipment and attachments.

https://truckmanualshub.com/

5.5: Fuse Box

The diagram and table below show the layout of the fuse box, the rating of each fuse and the function related to each fuse. *See the accompanying spare parts manual for part numbers if ordering fuses from Combilift.*

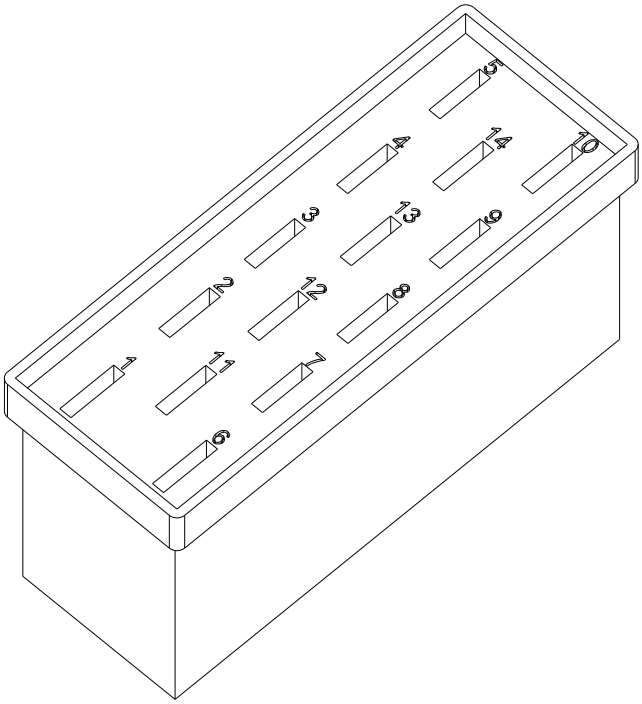

PLC Loom Fuse Table		
Fuse	Amps	Function
1-Diesel	7.5	Mast Height Override, Dash Display Lights, Glow Plug Light, Glow Plug Relay, PLC Supply
1 – LPG	7.5	Mast Height Override, Dash Display Lights, PLC Supply
2	7.5	Joystick Supply, Neutral Relay, Reverse Bleeper
3 – Diesel	7.5	Pull Hold Solenoid, Fuel Pump, High Temperature Engine Cut-out
3 – LPG	7.5	Ignition Coil
4	20	Steering Solenoid Supply, PLC Output Supply
5	7.5	Push Button Brake Switch, Inch Pedal Brake Switch, Brake Light, Brake Solenoid Supply
6	10	Wipers
7	15	Front Work Lights
8	15	Side Work Lights, Cabin Interior Light
9	7.5	Cabin Heater Fan, Cabin Cooling Fan, Optional Radio
10	7.5	Horn
11	7.5	Proximity Switch Supply, Guide Roller Light
12	7.5	Valve Bank Lock Solenoids
13	7.5	Flashing Beacon
14	10	Auxiliary Hydraulic Function

https://truckmanualshub.com/

5.6: Relay Layout

There are a number of relays involved in the electrical control system of the truck. These relays are located inside the dash in the cabin of the Combilift. To access the relays remove the dash top plate by removing the four M6x10 dome head bolts in the corners of the plate as shown in the diagram below.

The relay layout is also shown in the diagram below. The relays have the following functions:

Relay	Function
1	Starter
1a	Neutral Cut-Off
2	Glow Plug Timer Relay (Diesel Only)
9	Steering Solenoid Supply
22	Work Lights (Spot Lights)
32	Auxiliary Hydraulic Function Solenoid
LV	Valve Bank Lock Valve Solenoids
CO	Engine Temperature Cut-out

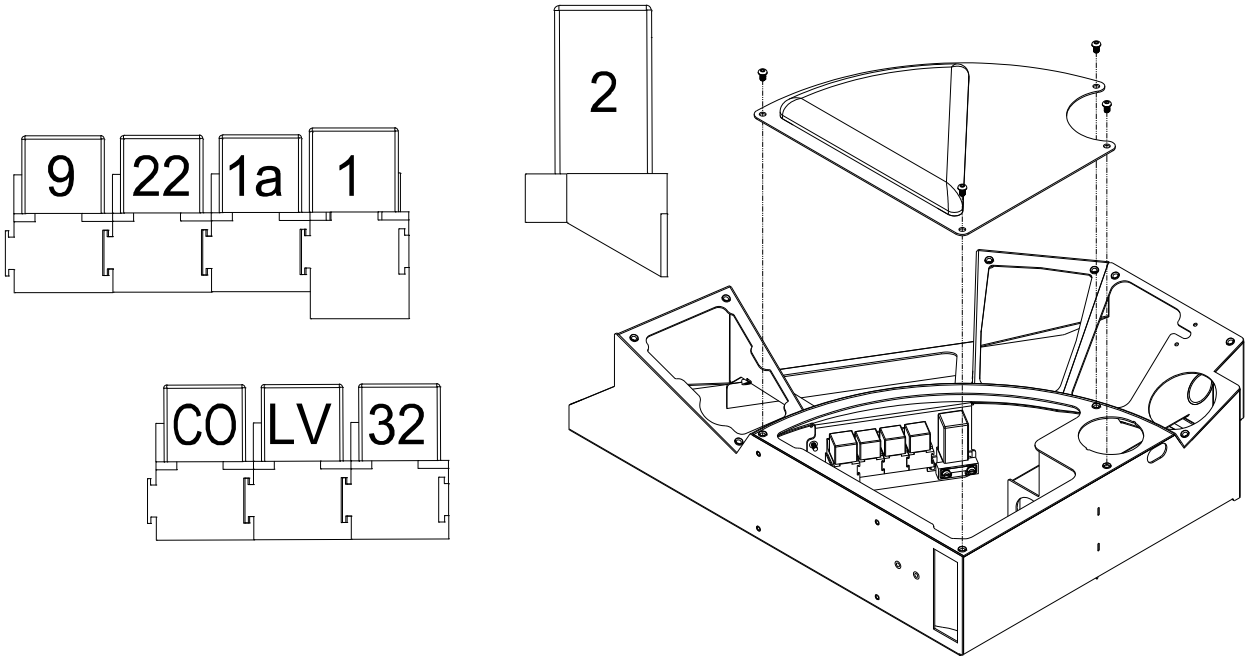

Relays For Optional Extras (Not Shown Above)	Function
23	Indicators - road lights
26	Brake - road lights
27	Guide Roller Light
31	Inch pedal park brake switch
32a	Auxiliary Hydraulic Function Solenoid
33	Extra Spotlights (On Mast)
34	Extra Oil Cooler
45	Air Seat

https://truckmanualshub.com/

5.7: Steering & Hydraulic Functions Circuit

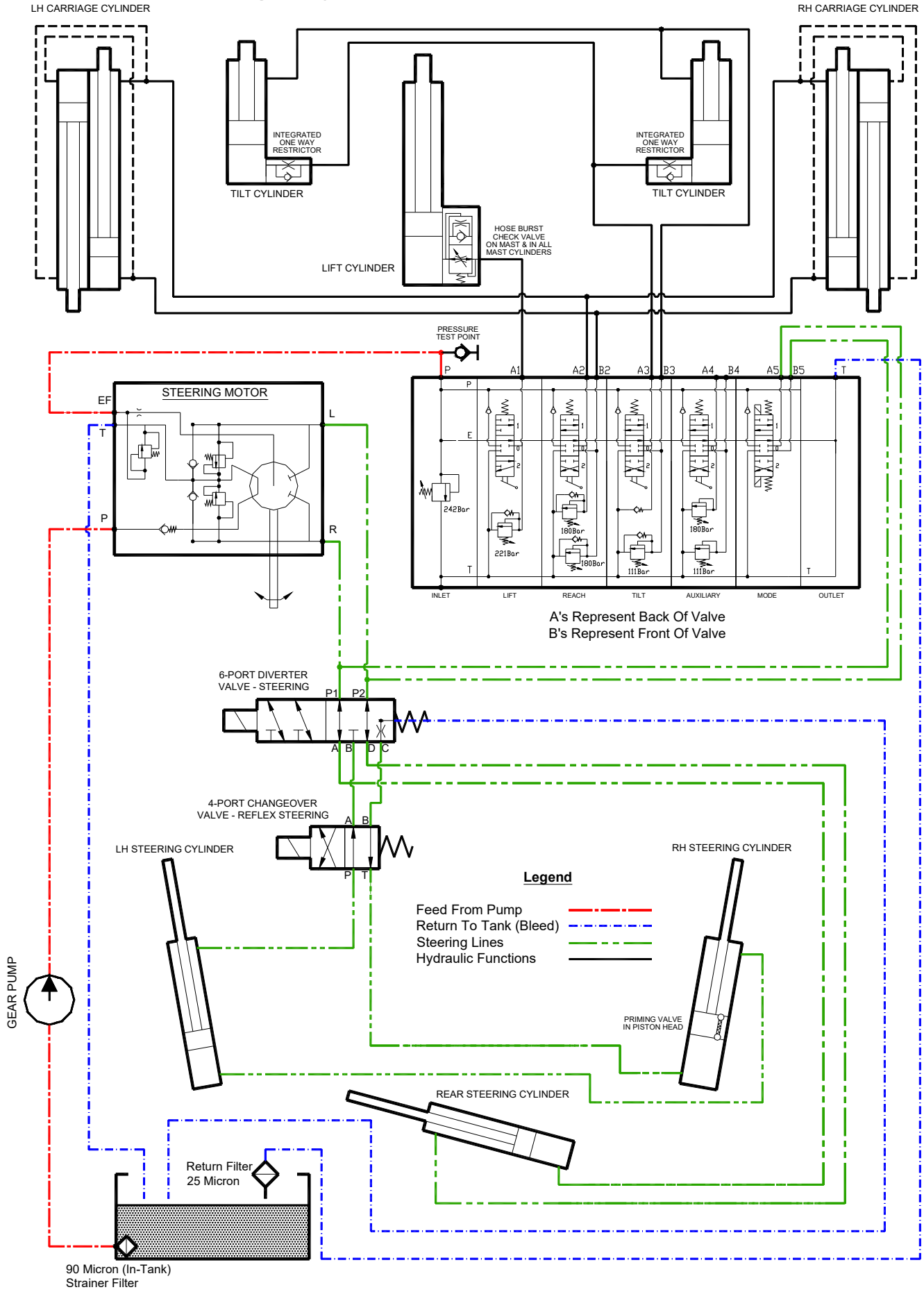

https://truckmanualshub.com/

5.8: Hydraulic Drive Circuit

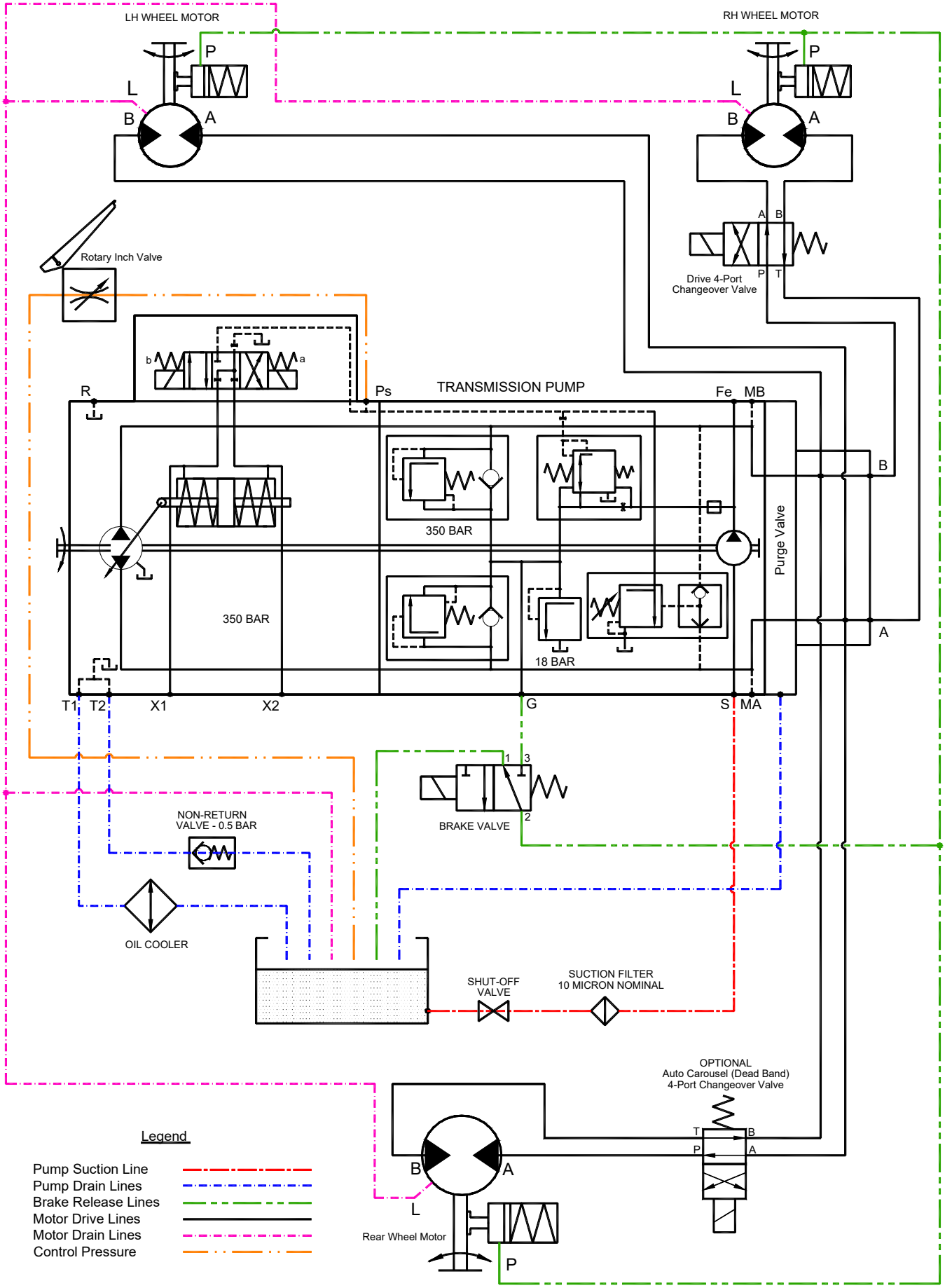

https://truckmanualshub.com/

5.9: Electric Circuit – Kubota Diesel

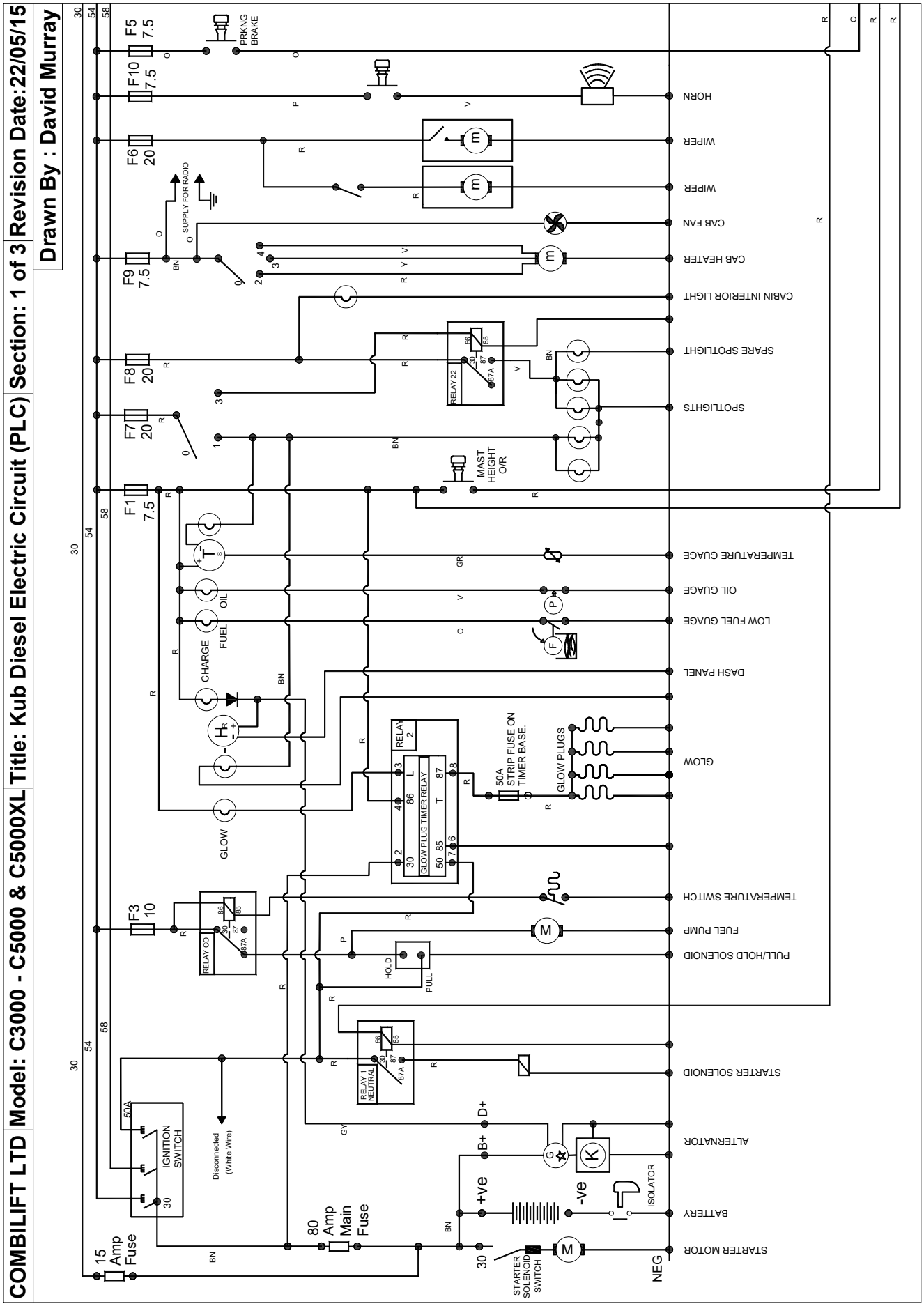

https://truckmanualshub.com/

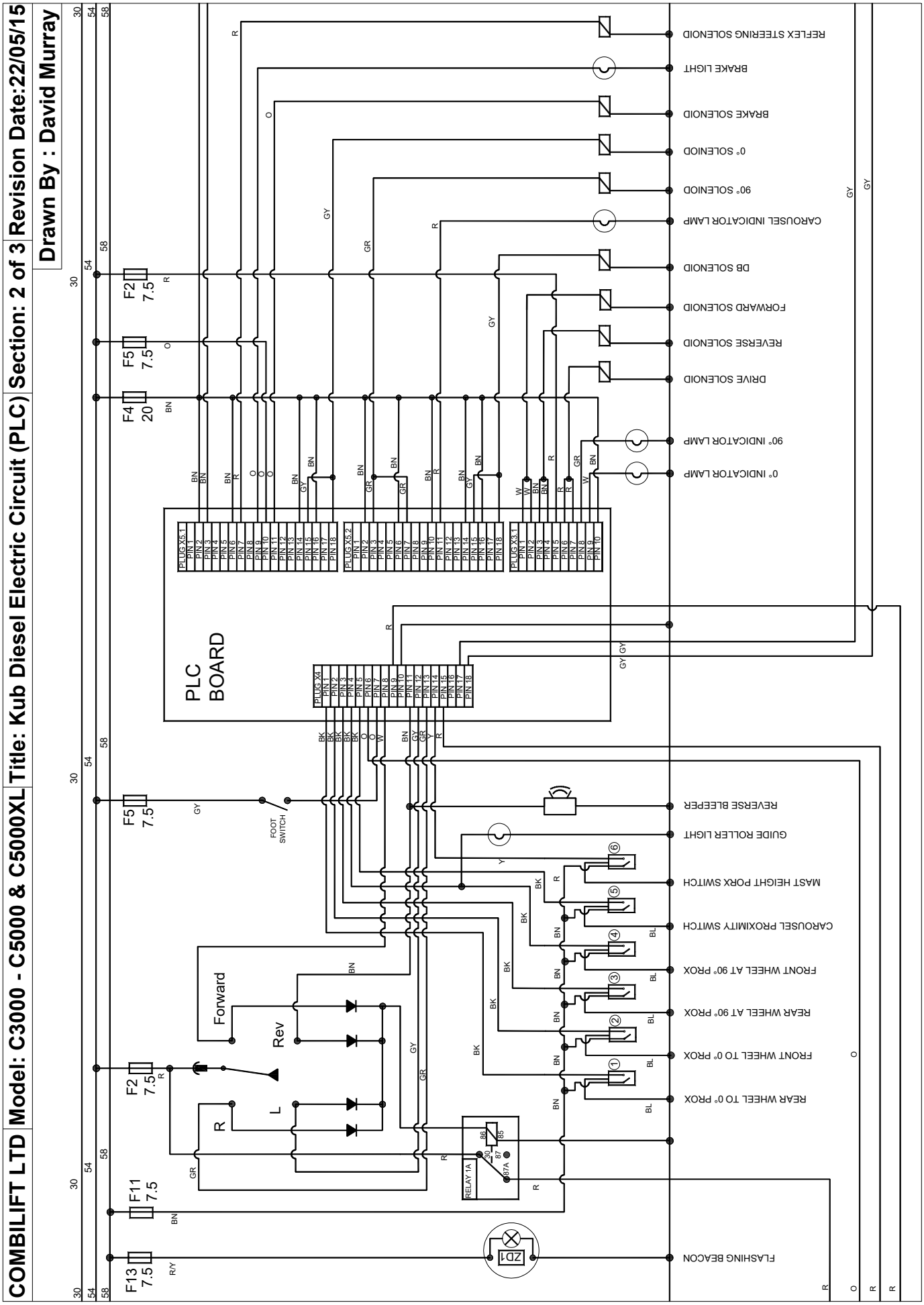

https://truckmanualshub.com/

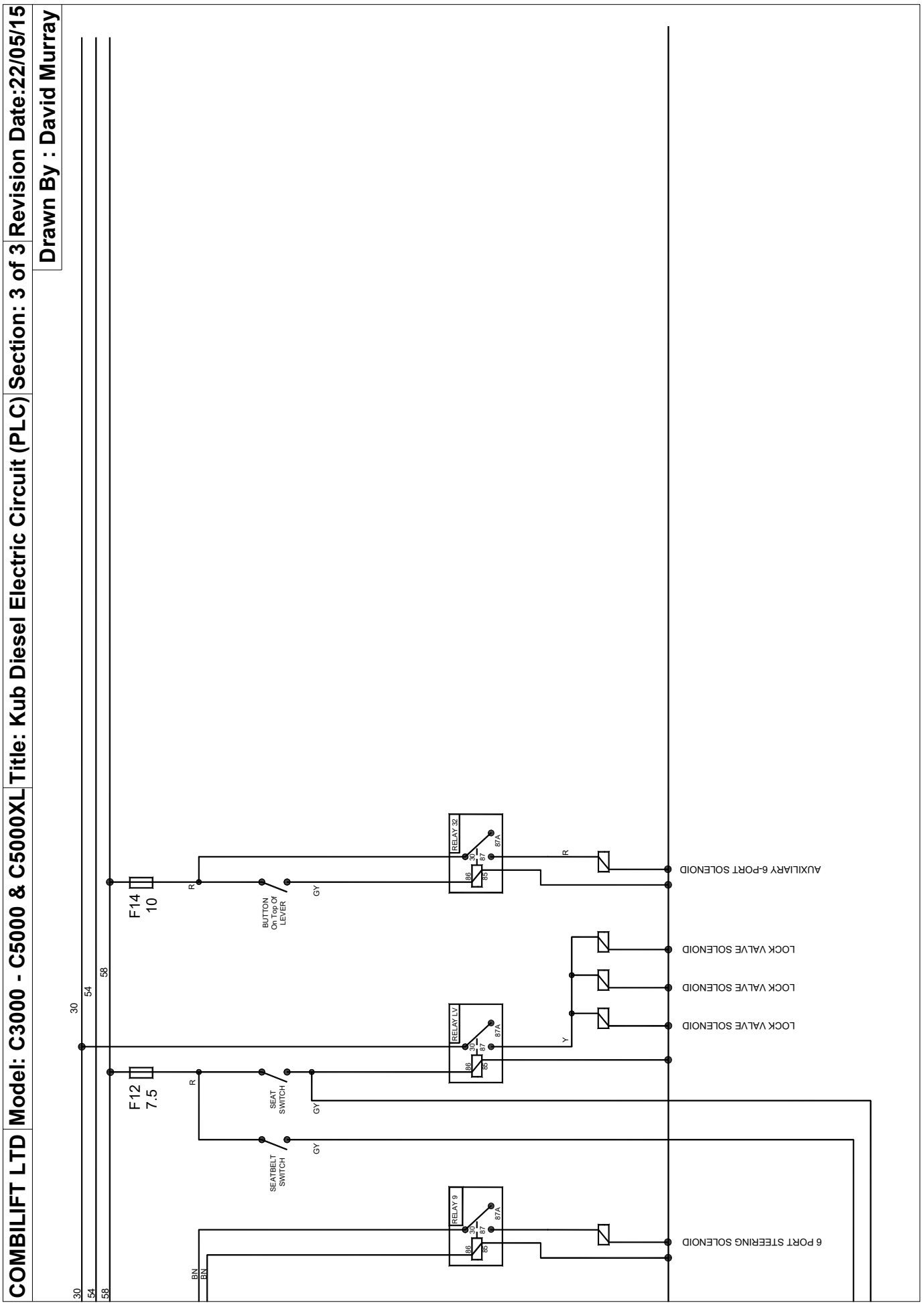

https://truckmanualshub.com/

5.10: Electric Circuit – GM LPG

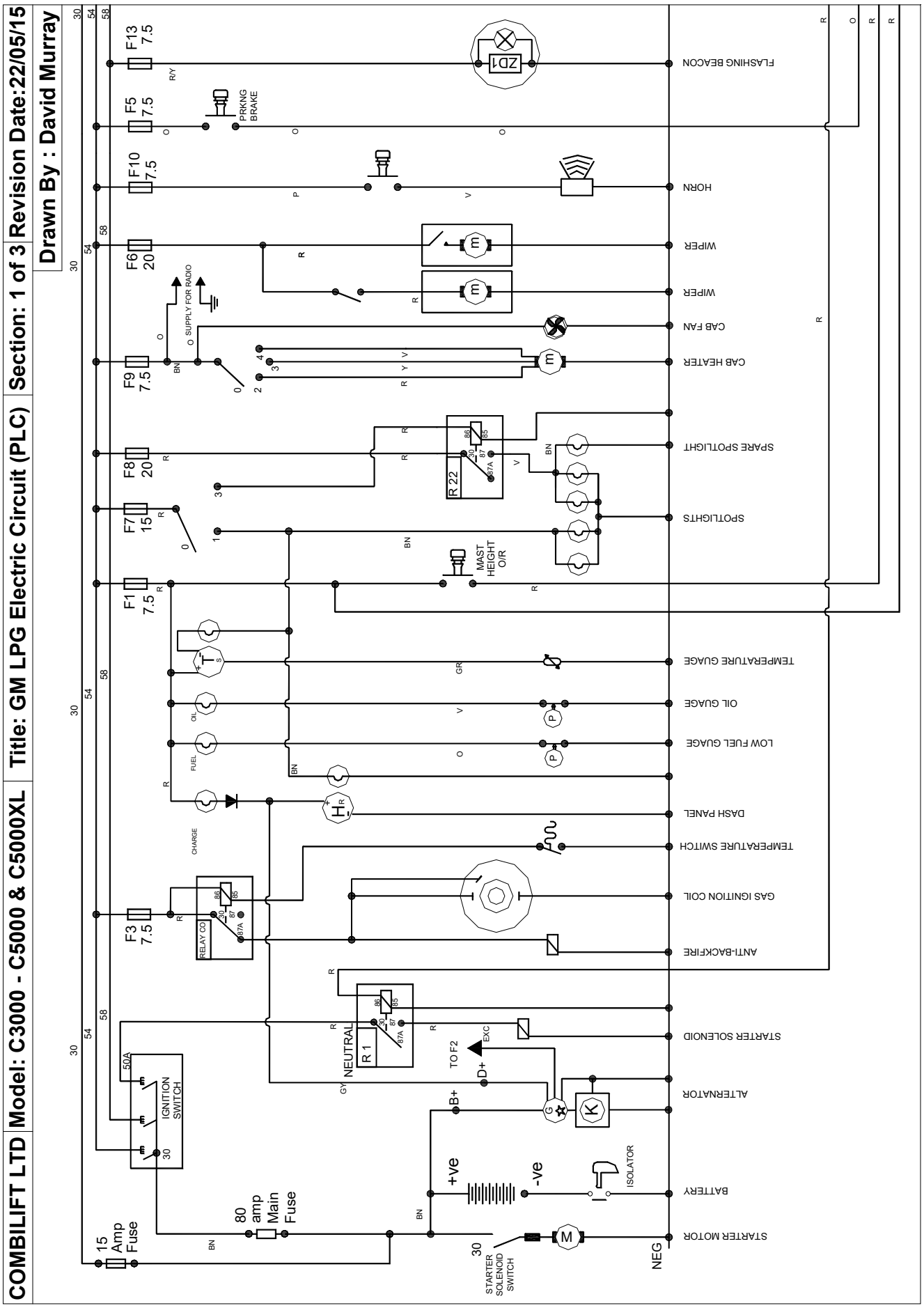

https://truckmanualshub.com/

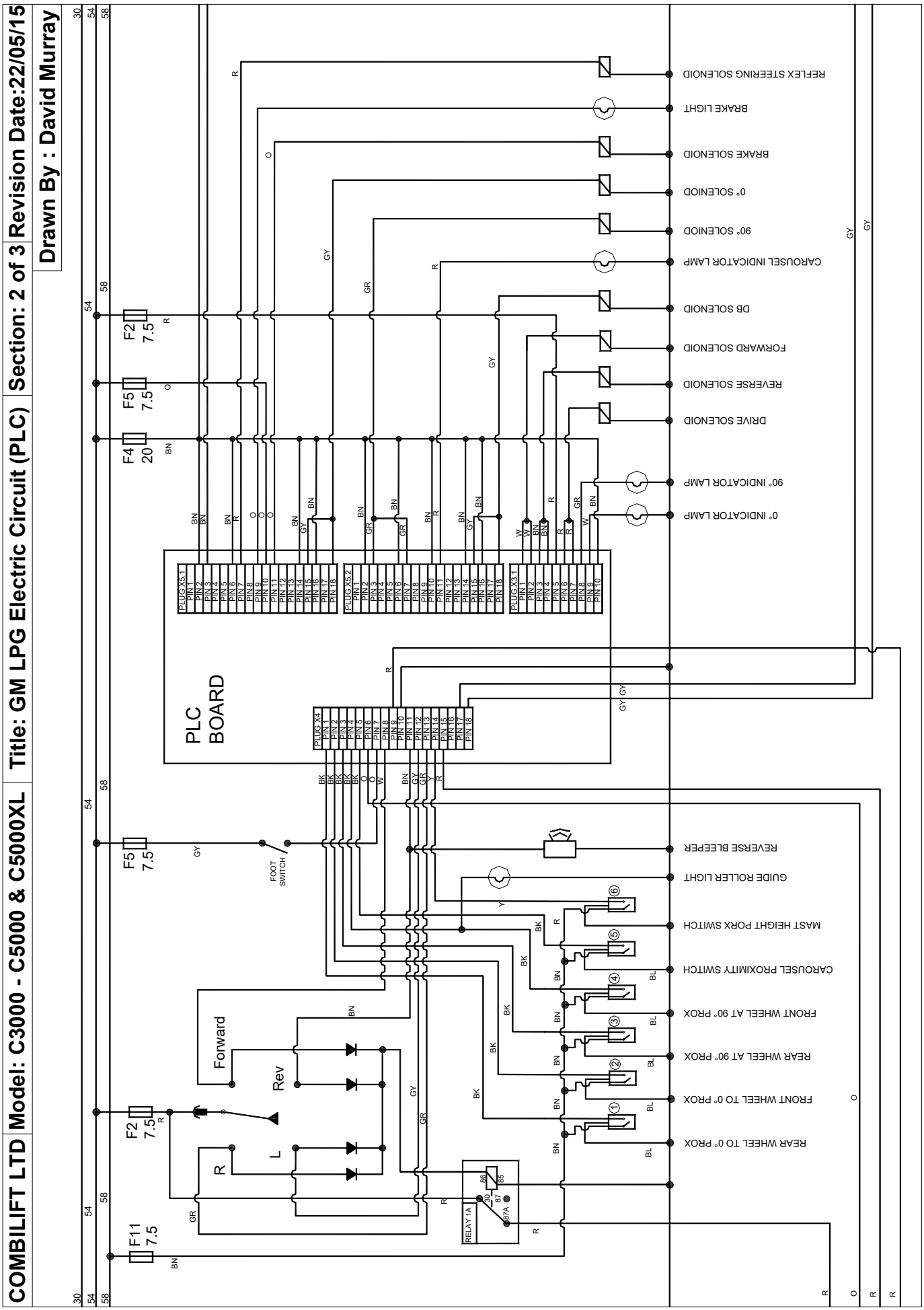

https://truckmanualshub.com/

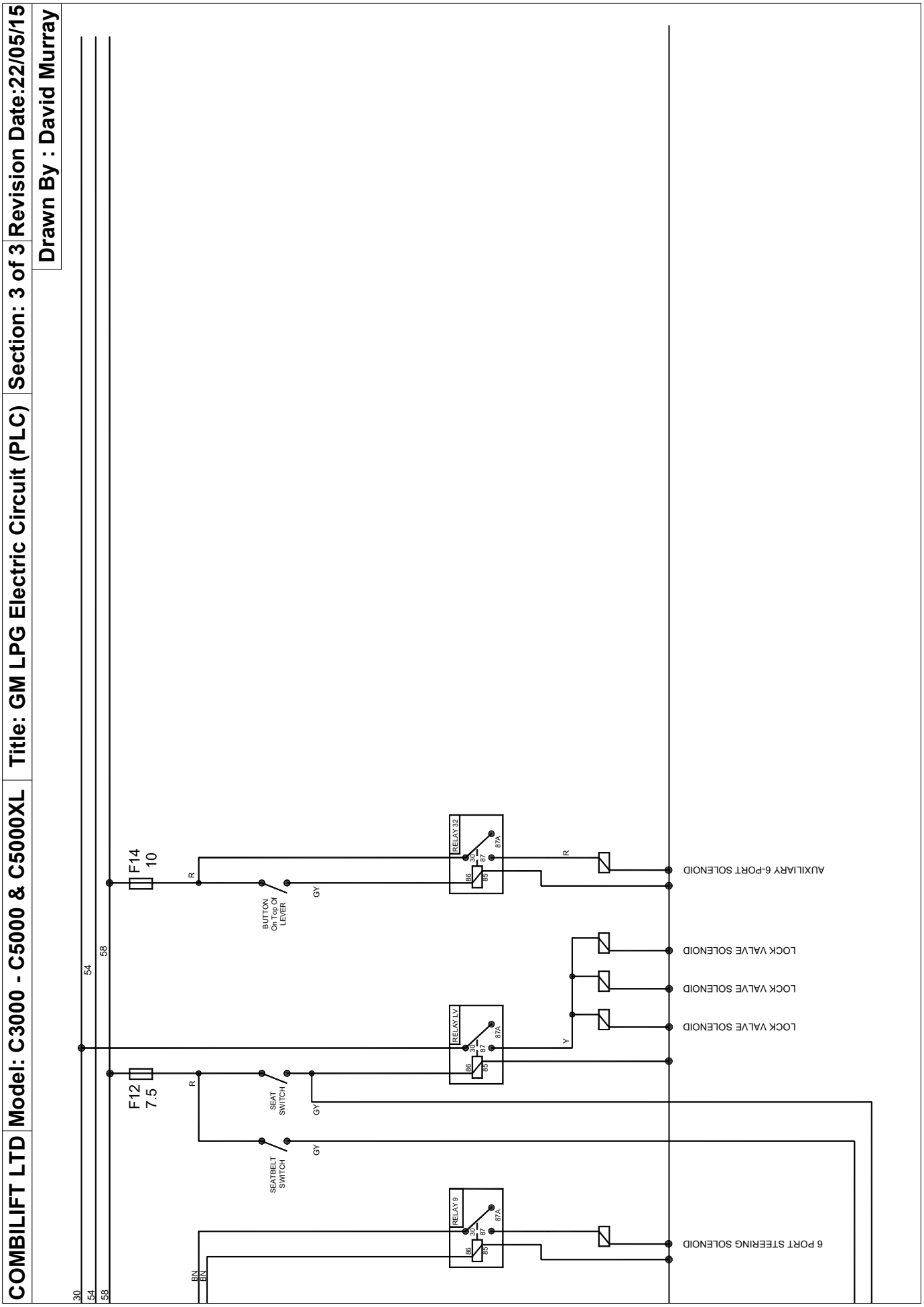

https://truckmanualshub.com/

5.11: Electric Circuit – GM LPG (Tier IV)

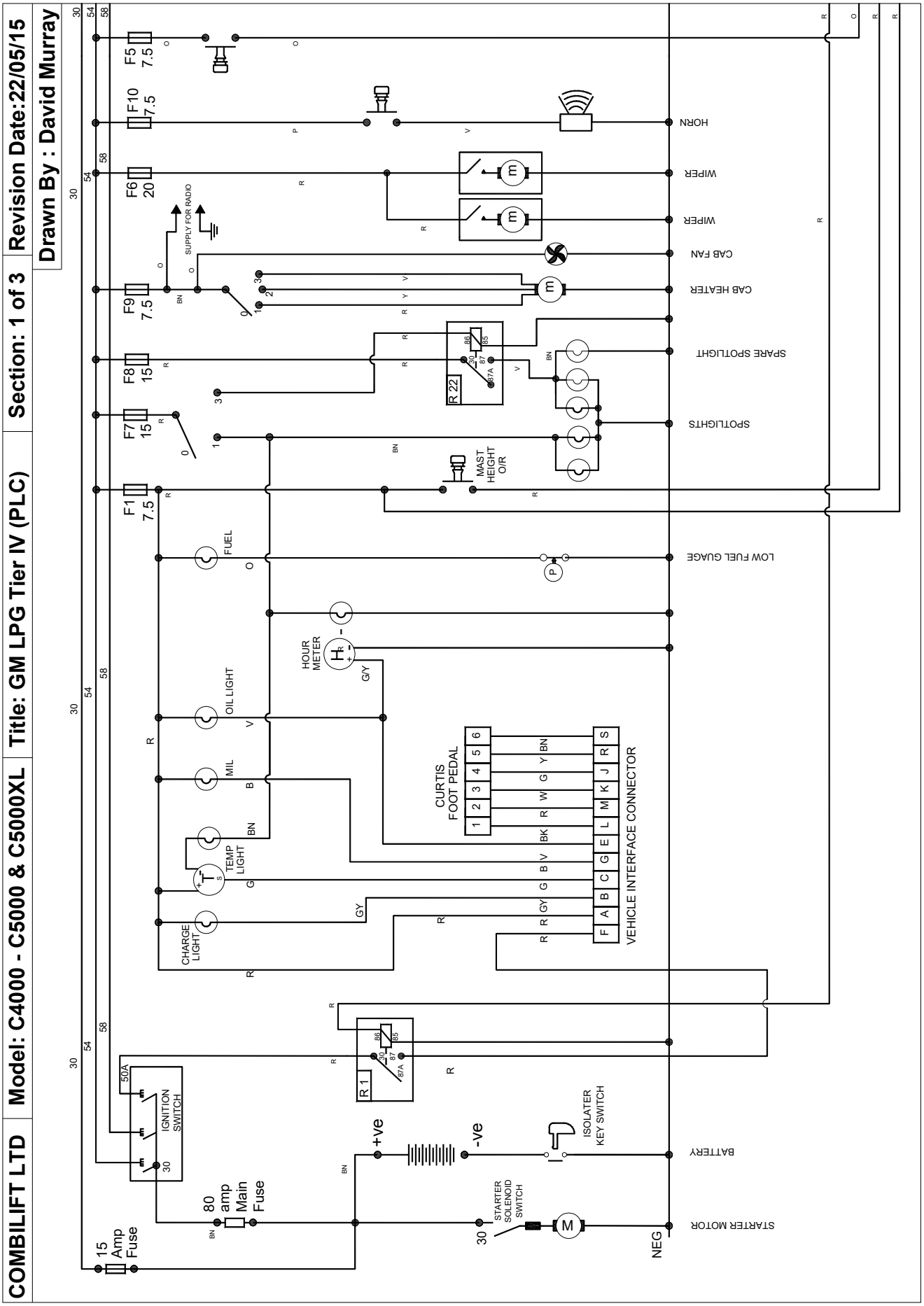

https://truckmanualshub.com/

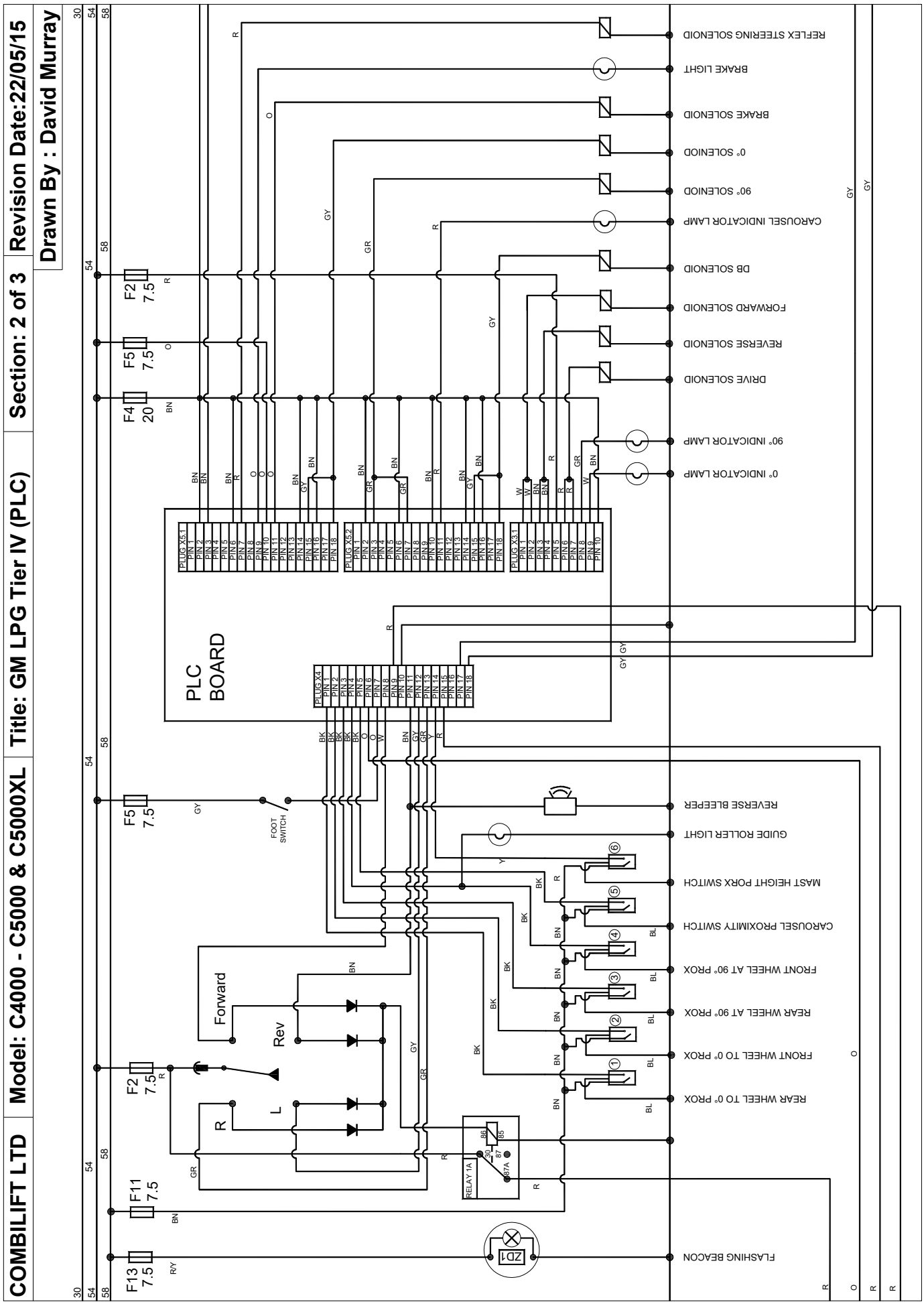

https://truckmanualshub.com/

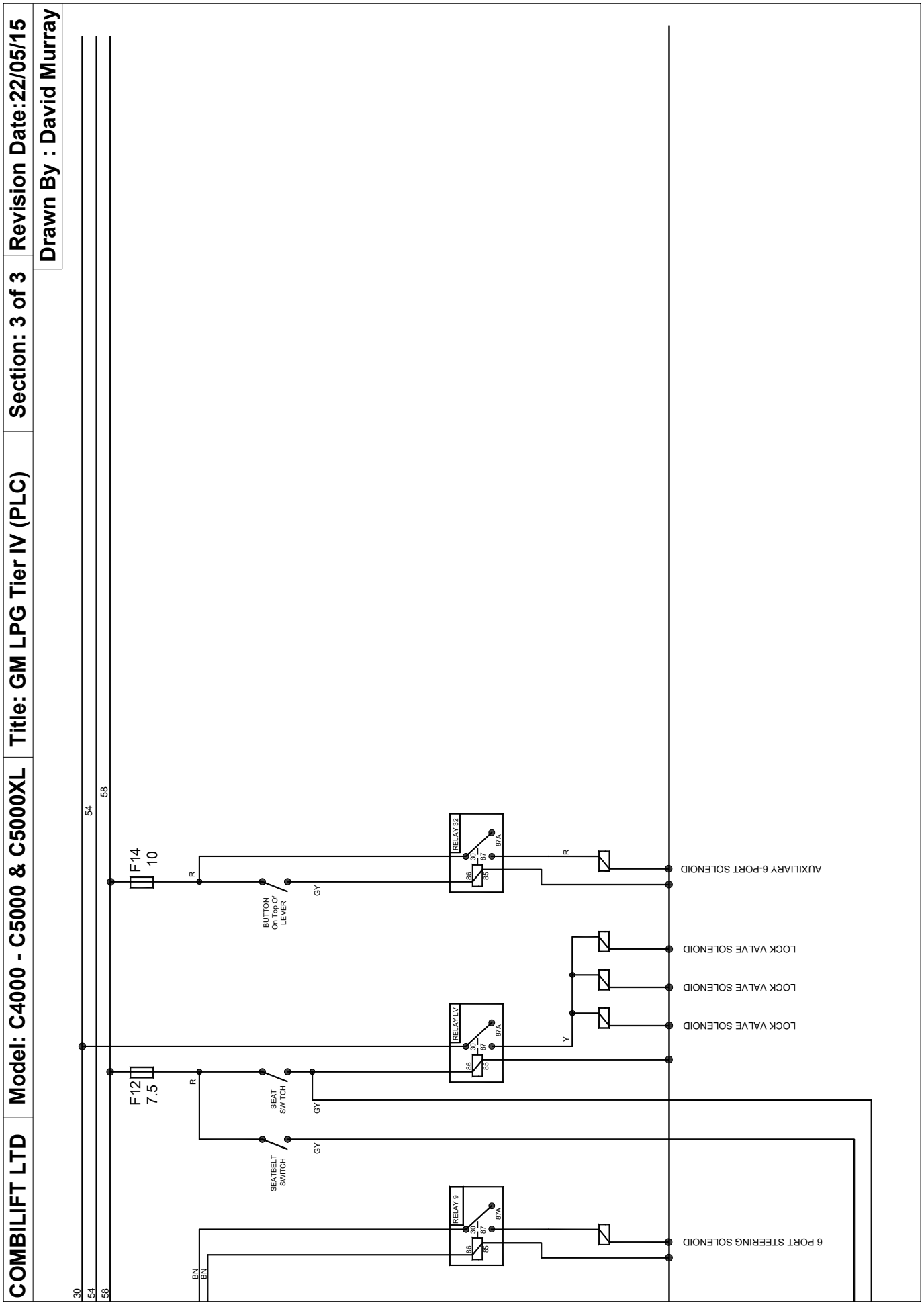

https://truckmanualshub.com/

5.12: Colour Codes for Electric Circuits

CODE - COLOUR

BK - BLACK
BN - BROWN
BL - BLUE
R - RED
O - ORANGE
Y - YELLOW
GR - GREEN
V - VIOLET
P - PINK
GY - GREY
W - WHITE
G/Y - GREEN / YELLOW
R/Y - RED / YELLOW
O/W - ORANGE / WHITE

NEGATIVE WIRES ARE NORMALLY BLUE OR BLACK, DEPENDING ON WHAT UNIT IS BEING INVESTIGATED.
TAKE ALL NEGATIVES TO BE BLACK UNLESS STATED OTHERWISE.

https://truckmanualshub.com/

5.13: PLC Details

The diagram below shows the layout of the major components of the PLC board that need to be known in order to correctly find and repair faults.

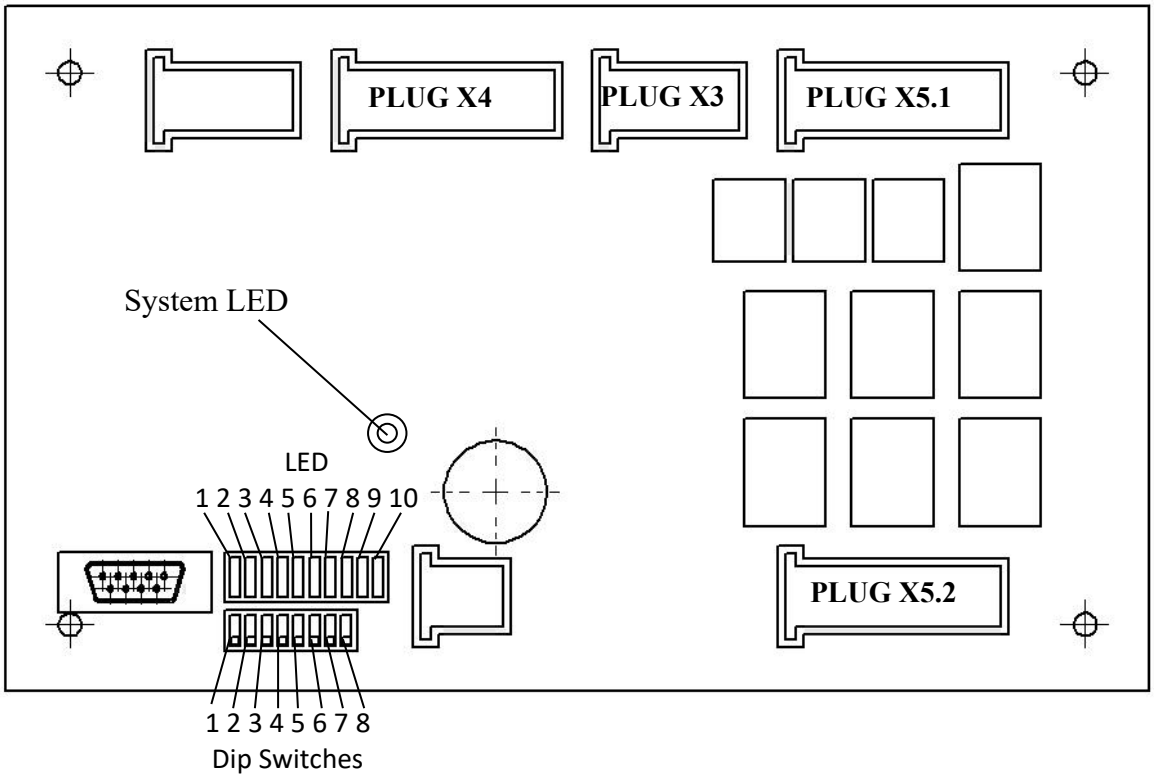

The pins in each of the plugs on the board are laid out as follows.

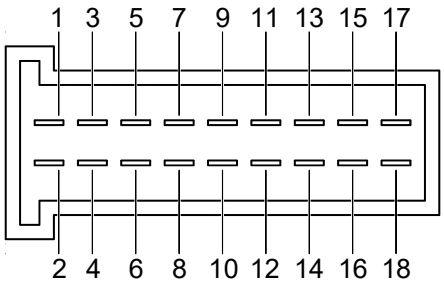

The System LED tells the operator what the PLC is doing. The following table gives an explanation of what the System LED is indicating.

System LED Status	Meaning
No LED	No power Supply to PLC
Flashing Green (Fast)	PLC is not Programmed
Flashing Green (Slow)	PLC is Programmed & Running Normally
Static Green	PLC is Programmed but not Running
Static Red	PLC has Failed (Replace PLC)

Each of the plugs has a specific function as do the pins on each plug. The tables on the following pages give details of the functions on each of the plugs and the pin associated with each function.

https://truckmanualshub.com/

INPUTS

Plug	Pin	Function	Wire Colour
X4	01	Rear Wheel @ Zero Degree Proximity Switch	Black
X4	02	Front Wheel @ Zero Degree Proximity Switch	Black
X4	03	Rear Wheel @ Ninety Degree Proximity Switch	Black
X4	04	Front Wheel @ Ninety Degree Proximity Switch	Black
X4	05	Carousel Steering Proximity Switch (DB Proxy)	Black
X4	06	Park Brake Switch Signal	Orange
X4	07	Inching Pedal Brake Switch Signal (Optional)	Purple
X4	08	Forward Signal Fron Direction Lever	White
X4	09	Power Supply to Board (Supplied From Fuse 1)	Red
X4	10	Negative for Board power Supply	Blue / Black
X4	11	Reverse Signal From Direction Lever	Brown
X4	12	Left Signal From Direction Lever	Green
X4	13	Right Signal From Direction Lever	Grey
X4	14	Mast Height Proximity Switch Signal	Black
X4	15	Mast Height Over Ride Button	Red
X4	16	Optional Extra	??
X4	17	Seatbelt Switch	Grey
X4	18	Seat Switch	Grey

OUTPUTS

Plug	Pin	Function	Wire Colour
X3	01	Forward Solenoid 01	White
X3	02	Forward Solenoid 02	White
X3	03	Reverse Solenoid 01	Brown
X3	04	Reverse Solenoid 02	Brown
X3	05	Common Supply for Pins 01-04 (From Fuse 2)	Red
X3	06	Drive Solenoid 01	Red
X3	07	Drive Solenoid 02	Red
X3	08	Ninety degree Indicator Light	Green
X3	09	Zero Degree Indicator Light	White
X3	10	Common Supply to pins 06-09 (From Fuse 4)	Red

https://truckmanualshub.com/

Outputs (continued)

Plug	Pin	Function	Wire Colour
X5.1	01	*Not Used*	*n/a*
X5.1	02	Common Supply for Output 08 (From fuse 4)	Brown
X5.1	03	Steering Solenoid (Six Port)	Brown
X5.1	04	*Not Used*	*n/a*
X5.1	05	*Not Used*	*n/a*
X5.1	06	Common Supply for Output 09 (From fuse 4)	Brown
X5.1	07	Reflex Solenoid	Red
X5.1	08	*Not Used*	*n/a*
X5.1	09	Brake Light	Orange
X5.1	10	Common Supply for Output 10 (From fuse 5)	Orange
X5.1	11	Brake Solenoid	Orange
X5.1	12	*Not Used*	*n/a*
X5.1	13	*Not Used*	*n/a*
X5.1	14	Common Supply for Output 11 (From fuse 4)	Brown
X5.1	15	Zero Degree Solenoid 01	Grey
X5.1	16	Common Supply for Output 12 (From fuse 4)	Brown
X5.1	17	*Not Used*	*n/a*
X5.1	18	Zero Degree Solenoid 02	Grey

Plug	Pin	Function	Wire Colour
X5.2	01	*Not Used*	*n/a*
X5.2	02	Common Supply for Output 13 (From fuse 4)	Brown
X5.2	03	Ninety Degree Solenoid 01	Green
X5.2	04	*Not Used*	*n/a*
X5.2	05	*Not Used*	*n/a*
X5.2	06	Common Supply for Output 14 (From fuse 4)	Brown
X5.2	07	Ninety Degree Solenoid 02	Green
X5.2	08	*Not Used*	*n/a*
X5.2	09	*Not Used*	*n/a*
X5.2	10	Common Supply for Output 15 (From fuse 4)	Brown
X5.2	11	Carousel Indicator Light	Red
X5.2	12	*Not Used*	*n/a*
X5.2	13	*Not Used*	*n/a*
X5.2	14	Common Supply for Output 16 (From fuse 4)	Brown
X5.2	15	Carousel Steering Solenoid 01	Grey
X5.2	16	Common Supply for Output 17 (From fuse 4)	Red
X5.2	17	*Not Used*	*n/a*
X5.2	18	Carousel Steering Solenoid 02	Grey

5.14: PLC Diagnostics

The diagnostics function can be used to make sure all components are working correctly.

Mode 1 – Joystick Function

Move Switch '1' to the 'ON' position

- **Neutral Position – No LED**
- **Forward Position – LED 1**
- **Reverse Position – LED 2**
- **Left Position – LED 3**
- **Right Position – LED 4**

FORWARD

LEFT

NEUTRAL

RIGHT

REVERSE

- If the joystick is working correctly each LED will only light with the joystick in the corresponding position.
- If the joystick is malfunctioning the LED corresponding to the position will not light up.

Mode 2 – Proximity Sensor Function

Move Switch '2' to the 'ON' Position

Front Wheel 0 Degree Sensor – LED 1

Rear Wheel 0 Degree Sensor – LED 2

Carousel Sensor – LED 3

Front Wheel 90 Degree Sensor – LED 4

Rear Wheel 90 Degree Sensor – LED 5

- Proximity Sensors can be energised by switching from Forward Mode to Sideward mode.
- If a LED does not light it should be energised manually to rule out the failure of the corresponding proximity sensor.
- Once activated the LEDs will remain lit until the switch is reset to the OFF position.

Mode 3 – Switch Mode

Move Switch '3' to the 'ON' Position

Park Brake – **LED 1**

Mast Height Override Switch – **LED 2**

Mast Height Proximity Sensor – **LED 3**

- The Park Brake will only remain lit while the park brake is engaged.
- LED 2 will be ON constantly on all machines that do not have the Mast Height Override Function.
- To energise the mast height proximity sensor lift the forks to the height of the proximity sensor.

Mode 4 – Solenoid Mode

NOTE: This mode must only be used with the key turned on, **NOT** with the engine running.

Forward, Reverse, 0° and 90° Solenoids
Move Switch '4' to the 'ON' Position to test.

Use the directional joystick to energise the solenoids as below

Steering, Reflex, Carousel and Drive Solenoids
Move Switch '5' to the 'ON' Position to test.

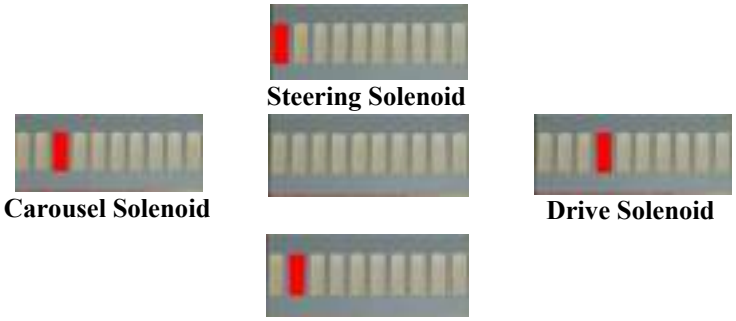

- The LED on each solenoid should be lit along with the LED on the board.
- If the solenoid LED does not light, a wiring problem may be present.
- If the solenoid LED is lit but a problem remains the solenoid and/or the valve should be checked for malfunction.

https://truckmanualshub.com/

Section 6: Appendices

6.1: Appendix A: Certified LPG Engine Emission Control Warranty

CALIFORNIA EMISSION CONTROL WARRANTY STATEMENT YOUR WARRANTY RIGHTS AND OBLIGATIONS

The California Air Resources Board and the Environmental Protection Agency are pleased to explain the emission control system warranty on your Model Year (*2013 - 2014)*[5] off-road Large Spark-Ignition (LSI) engine. New off-road LSI engines must be designed, built and equipped to meet the State's stringent anti-smog standards in all
50 states. *Combilift* must warrant the emission-control system on your engine for the periods of time listed below provided there has been no abuse, neglect or improper maintenance of your engine.

Your emission control system may include parts such as the fuel-injection system, regulator, ignition system, engine computer unit (ECM), catalytic converter and air induction system. Also included may be sensors, hoses, belts, connectors and other emission-related assemblies. Where a warrantable condition exists, *Combilift* will repair your LSI engine at no cost to you including diagnosis, parts and labor.

MANUFACTURER'S WARRANTY COVERAGE: The Model Year *(2013-2014)*[5] off-road LSI engines are warranted for 3 years or 2,500 hours, whichever occurs first, unless indicated otherwise. If any emission- related part on your engine is defective, the part will be repaired or replaced by *Combilift*.

Fuel Metering System	***Catalyst***	***Air Induction System***
Intake Manifold or Air Intake System	***Fuel Injection System***	***Catalytic Converter ****
Air/Fuel Ratio Feedback and Control System	***Exhaust Manifold***	***Air Mass Sensor Assembly***
Positive Crankcase Ventilation System (PCV)	***Ignition Control System***	***Ignition Module(s)***
PCV Valve	***Oil Filler Cap***	***Engine Control Module ****

Miscellaneous Items Used In Above Systems: vacuum, temperature, and time-sensitive valves and switches; sensors used for electronic controls; hoses, belts, connectors, assemblies, clamps, fittings, tubing, wiring, sealing gaskets or devices, and mounting hardware; pulleys, belts and idlers

* Covered for 5 years or 3,500 hours of operation whichever occurs first.

OWNER'S WARRANTY RESPONSIBILITIES:

- As the off-road LSI engine owner, you are responsible for the performance of the required maintenance listed in your owner's manual. *Combilift* recommends that you retain all receipts covering maintenance on your off-road engine, but *Combilift* cannot deny warranty solely for the lack of receipts or for your failure to ensure the performance of all scheduled maintenance.
- As the off-road LSI engine owner, you should however be aware that *Combilift* may deny you warranty coverage if your off-road LSI engine or a part has failed due to abuse, neglect, improper maintenance or unapproved modifications.
- Your engine is designed to operate on propane, gasoline, or compressed natural gas. Use of any other fuel may result in your engine no longer operating in compliance with California's emissions requirements. To confirm the fuel(s) this engine is capable of operating on, see the Emission Control Information label located under hood. LPG engines and fuel systems are designed to operate on HD–5 or HD–10 specification LPG fuel.
- You are responsible for initiating the warranty process. The ARB and EPA suggest that you present your off-road LSI engine to a Combilift dealer as soon as a problem exists. The warranty repairs should be completed by the dealer as expeditiously as possible.

If you have any questions regarding your warranty rights and responsibilities, you should contact *Combilift* at: ***1-877-COMBI56***

https://truckmanualshub.com/

6.2: Appendix B: General Engine Warranty

Combilift warrants to the ultimate purchaser and each subsequent purchaser that this engine is designed, built and equipped so as to conform at the time of sale with the applicable regulations under section 213 of the Clean Air Act, and that this engine is free from defects in materials and workmanship which may cause such engine to fail to conform with the applicable regulations for the first two years from the date of sale to the first ultimate purchaser.

As the engine owner, you are responsible for the proper maintenance of the engine as stated in the maintenance instructions. Proper maintenance generally includes replacement and service, at the owner's expense, of such items as spark plugs, points, condensers, and any other part, item, or device related to emission control.

For engines located within 100 miles** of an authorized service center, warranty repairs must be made only at authorized service centers. For engines located more than 100 miles** from an authorized service center, Combilift will provide for a service technician to come to the owner to make the warranty repair.

** Under either circumstance for information on how to make arrangements for authorized warranty repairs first contact Combilift at:

service.usa@combilift.com or 1-877-COMBI56

6.3: Appendix C: Warranty Registration

The warranty registration form can be filled and submitted online at:

www.combilift.com/warranty

Please complete the warranty registration online within 30 days of receipt of the truck.

Alternatively the warranty registration form on the following page can be used.

https://truckmanualshub.com/

WARRANTY REGISTRATION FORM

COMBiLiFT
LiFTING INNOVATION

Please complete the form below and return this to us within 30 days of delivery to Customer.
Form can be submitted online @ www.combilift.com/warranty

DEALER DETAILS: (Supplier)

Dealer Name:_____ Tel: _____

First Name: _____ Last Name: _____

E-mail: _____ Position/Role: _____

Street: _____ Address Line 2: _____

City: _____ Zip/Postal Code:_____

County/State:_____ Country: _____

MACHINE DETAILS

MODEL: _____ **SERIAL NO.** ☐☐☐☐☐

Delivery / installation date: _ _ / _ _ _ / _ _ _ _

CUSTOMER DETAILS (please state address where truck is located)

Customer Business Name: _____ Tel: _____

First Name: _____ Last Name: _____

E-mail: _____ Position/Role: _____

Street: _____ Address Line 2: _____

City: _____ Zip/Postal Code:_____

County/State:_____ Country: _____

I have received my Aisle-Master/Combilift forklift and read the Operators Manual and am satisfied with both.

*Customer's Signature: _____ Date: _____

WHEN COMPLETED PLEASE RETURN TO:

BY POST TO: Combilift, Annahagh, Monaghan, County Monaghan, Ireland.

BY EMAIL TO: warranty@combilift.com

Failure to complete Warranty Registration Form may impact the Warranty Claim Process.