https://truckmanualshub.com/

WINGET

SERVICE MANUAL

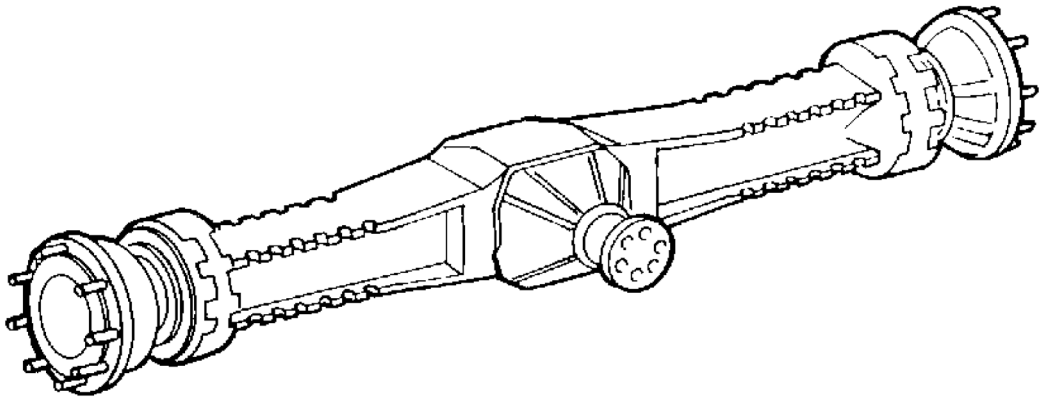

CARRARO

711-19 AXLE

TYPE 125672

WINGET LIMITED
PO BOX 41
EDGEFOLD INDUSTRIAL ESTATE
PLODDER LANE
BOLTON
LANCS
BL4 OLS
Tel: ++44 (0) 1204 854650
Fax:++44 (0) 1204 854663
service@winget.co.uk
parts@winget.co.uk
www.winget.co.uk

https://truckmanualshub.com/

WINGET

SERVICE MANUAL

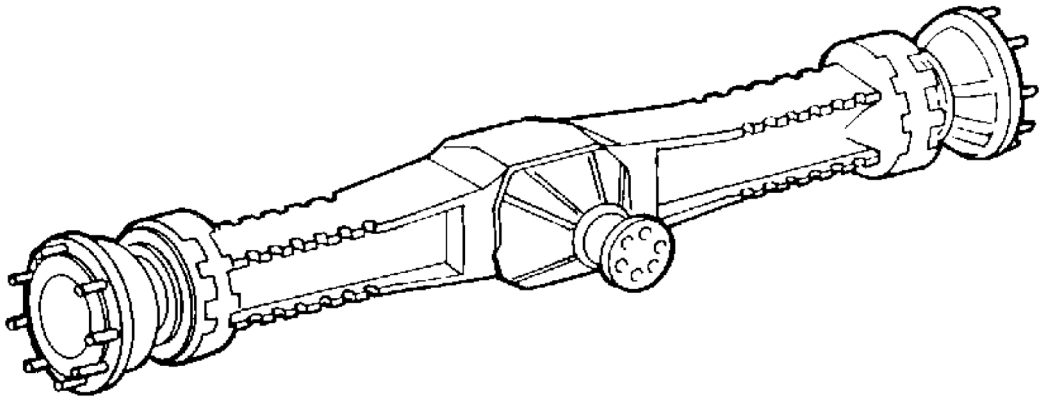

CARRARO

711-19 AXLE

TYPE 125672

WINGET LIMITED
PO BOX 41
EDGEFOLD INDUSTRIAL ESTATE
PLODDER LANE
BOLTON
LANCS
BL4 OLS
Tel: ++44 (0) 1204 854650
Fax:++44 (0) 1204 854663
service@winget.co.uk
parts@winget.co.uk
www.winget.co.uk

https://truckmanualshub.com/

INTRODUCTION

Winget Limited gratefully acknowledge the assistance given by Carraro in the preparation of this manual, however neither Winget Limited nor Carraro can be held responsible for any errors or omissions.

The procedures described within this manual should enable experienced service personnel to strip, repair and re-build Carraro Axles fitted to Winget Site Dumpers in a safe and competent manner. The procedures are not intended to be used by personnel who are unfamiliar with Winget products nor mechanically inexperienced.

It is assumed that personnel are aware of the Health & Safety Regulations, which should be applied, but the following should act as a reminder.

Whenever possible any repairs or service should be carried out in a clean environment. If work must be carried out on site or in the field steps should be taken to ensure that dirt or foreign materials cannot enter the assembly.

Ensure all works tools are in good condition and only use the correct tool for the job in hand.

Always wear safety spectacles when using soft or hard-faced hammers, chisels, drifts or when using air tools. Wear safety spectacles when cleaning components or when grinding.

Do not misuse airlines and be aware of the damage compressed air can cause if misused.

Always make sure lifting equipment is in good condition and the Safe Working Load exceeds the weight of the component to be lifted.

Always use suitable supports i.e. axle stands or baulks of timber in conjunction with hydraulic jacks etc. Never rely on hydraulic jacks alone to support a machine.

Be aware of hot surface temperatures and take care when draining hot oils. Always dispose of waste oils in accordance with local and national regulations.

Whenever possible always disconnect the battery or battery isolator when working on the machine to prevent electrical shorts and unauthorised starting.

Refer to the operator's handbook for a guide to the correct sequence for assembling components and sub-assemblies.

Oils, fuels, silicone sealer etc can cause skin diseases if allowed to contaminate the skin. Always apply barrier creams, wear suitable protective clothing or when contamination is

https://truckmanualshub.com/

unavoidable clean the area with soap and water as soon as possible. Do not use thinners or other solvents to clean skin.

Health & Safety is a matter of common sense. If common sense is applied correctly the risk of accidents can be reduced.

Spares for Carraro Axles fitted to Winget Equipment can only be obtained from Winget Limited or one of our authorised distributors and not from Carraro directly,

Always quote your machine's serial number and model together with the axle serial number and model when ordering spare parts.

Carraro Axles are designed to operate under arduous conditions and providing they are regularly and correctly maintained they will provide long trouble free service.

The contents of this manual although correct at the time of publication, may be subject to alteration by the manufacturers without notice and Winget Limited can accept no responsibility for any errors or omissions contained within the following pages. Nor can we accept any liability whatsoever arising from the use of this manual howsoever caused.

Winget Limited operate a policy of continuous product development. Therefore, some illustrations or text within this publication may differ from your machine.

https://truckmanualshub.com/

REPAIR MANUAL

711-19 AXLE

INDEX OF SECTIONS

SECTION	DESCRIPTION
A	SPECIFICATION & FEATURES
B	SECTION VIEW AND SILHOUETTE
C	TORQUE SETTINGS
D	LUBRICATION
E	SPECIAL TOOLS
F	DISASSEMBLING, REASSEMBLING AND SETTING OPERATIONS

https://truckmanualshub.com/

DESCRIPTION

Rigid Axle - monoblock in spheriodial cast iron - centre differential with self locking device.
Planetary reduction in final drives

SPECIFICATION & FEATURES

BEVEL DRIVE-DIFFERENTIAL

Ratio	T	10 / 32
Backlash	mm	0.18 to 0.24
Shim Thickness for Bevel Pinion position	mm	2.5 to 3.4 (.01 by .01)
Bevel Pinion Bearing Pre-load measured on diameter D 34.87	daN	P=9.2 to 13.7
Crown Wheel Bearing Pre-load measured on diameter D 133	daN	2.4 to 3.6
Bevel Gear Set (total) Bearing Pre-load (measured on the Pinion queue)	daN	T=(P+2.9) to (P+4.3)
Sun Gear-Planet Backlash	mm	0.13 to 0.27
Thickness-Sun Gear Thrust Washers	mm	1.45 to 1.55
Thickness of Self Locking Differential Fixed Plates	mm	1.47 to 1.53
Thickness of Self Locking Differential Rotating Plates	mm	1.57 to 1.3
Thickness of Self Locking Differential Spacer	mm	2.77 to 2.83
Sun Gear Shaft Diameter	mm	21.967 to 21.980
Sun Gear Shaft Bore on Sun Gear	mm	22.065 to 22.098
Assembly Clearance Shaft-Bore	mm	0.085 to 0.131

HALF SHAFT

Short Shaft Outer Diameter	mm	34.904 to 34.92
Short Shaft Bush Diameter-Fitted	mm	35.025 to 35.104
Clearance between Short Shaft and Bush	mm	0.105 to 0.200
Long Shaft Outer Diameter	mm	29.947 to 29.980
Long Shaft Bush Diameter-Fitted	mm	30.050 to 30.115
Clearance between Long Shaft and Bush	mm	0.070 to 0.168
Interference Fit between Bushes and Seat (short shaft side)	mm	0.065 to 0.130

https://truckmanualshub.com/

WHEEL SHAFT AND BRAKES

Brake Piston Outer Diameters:	mm	269.7 to 269.8
	mm	229.7 to 229.8
Wheel Shaft Inner Diameters (Brake Piston Area):	mm	270.000 to 270.081
	mm	230.000 to 230.072
Centering Pin Seat Diameters on Brake Piston	mm	8.150 to 8.186
Centering Pin Diameter	mm	7.978 to 8.000
Brake Disc Thickness	mm	9.90 to 10.10
Maximum Wear of Brake Disc	mm	0.80 to 1.00

FINAL DRIVES

Ratio	T	1 : 6
Thrust Washer Thickness Planetary Gear	mm	1.45 to 1.55
Wheel Bearing Pre-load	--	System Set Right

https://truckmanualshub.com/

SECTION VIEW

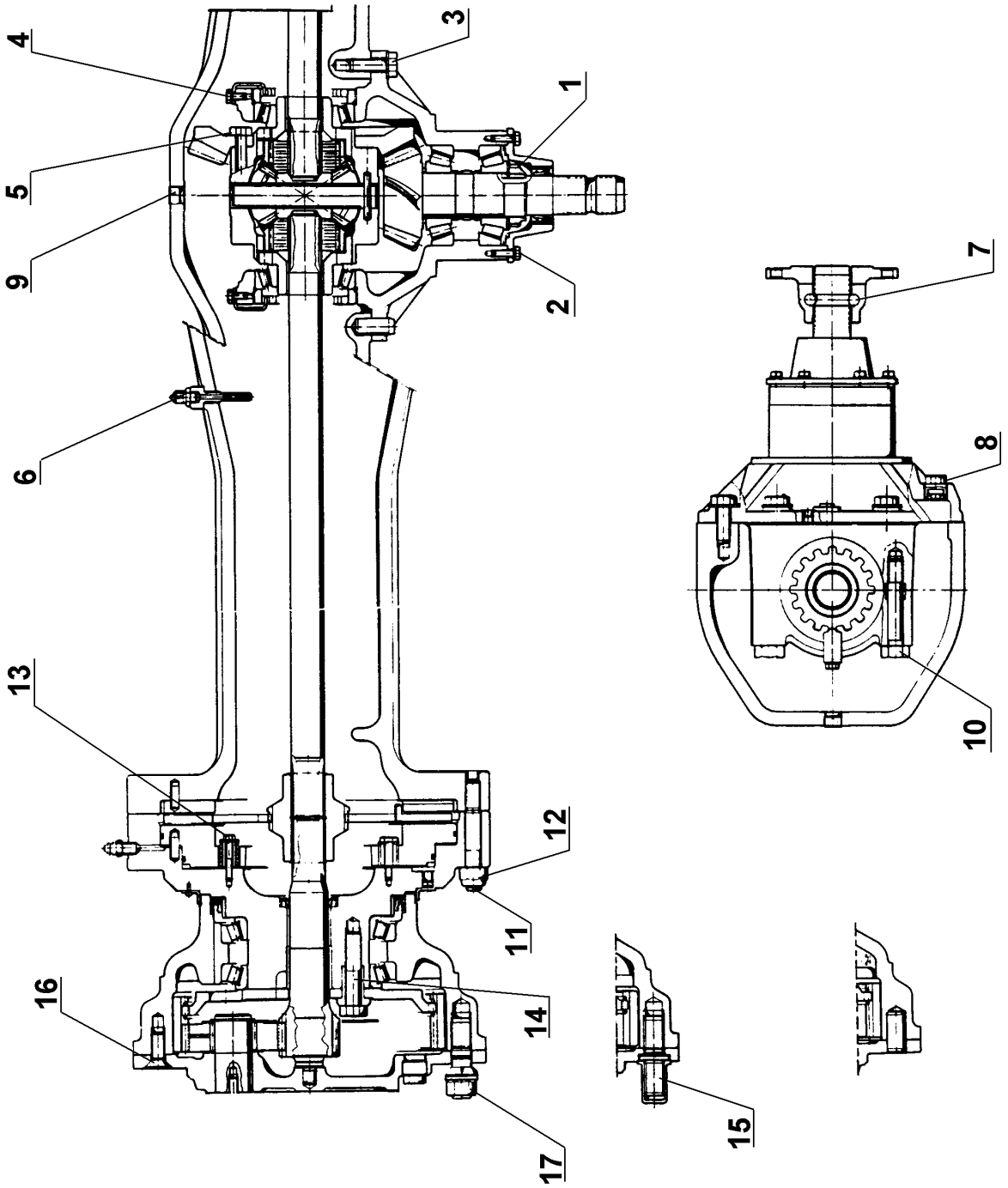

https://truckmanualshub.com/

SILHOUETTE VIEW

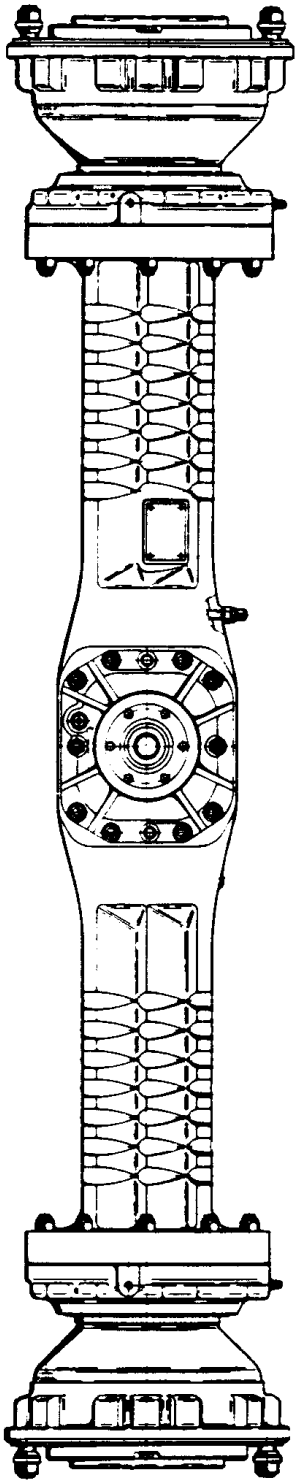

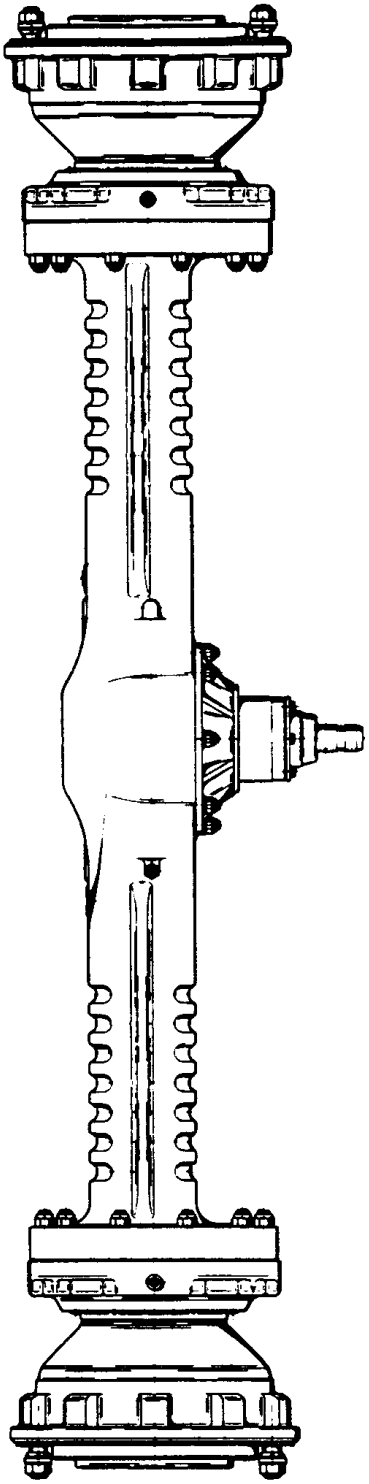

https://truckmanualshub.com/

TIGHTENING TORQUE- (refer to page B1 for identification)

(Note : all mating surfaces are to be sealed with SILASTIC 732 or equivalent)

DESCRIPTION	CODE	THREAD	Nm
BEVEL GEAR – DIFFERENTIAL – AXLE HOUSING			
1 Input Shaft Ring Nut	115054		as per pre-load
2 Bolt-Input Shaft Cover	020749	M6 x 20	10
3 Bolt-Differential Support to Axle Housing	125827	M12 x 33	169
4 Bolt-Crown Wheel Bearing Ring Gear Lock Plate	020744	M6 x 12	10
5 Bolt-Crown Wheel to Differential Carrier (use Loctite 270)	125552	M10 x 75	78
6 Breather Support	121618		20
7 Nuts- Input Shaft Flange	022411	M10 x 1.25	50
8 Oil Drain Plug	092270	M22 x 1.5	40
9 Oil Level Plug	021565	M22 x 1.5	40
10 Bolts-Crown Wheel Bearing Cap to Differential Support	126022	M14 x 2	266
BRAKES AND FINAL DRIVES			
11 Studs-Wheel Shaft to Axle Beam	119354	M14 x 1.5	70
12 Nuts-Wheel Shaft to Axle Beam	022429	M14 x 1.5	156
13 Bolts-Self Adjust Device	020754	M6 x 30	10
14 Bolts-Wheel Carrier to Wheel Shaft	119906	M14 x 65	220 to 250
15 Studs-Planetary Carrier to Wheel Hub	120853	M18 x 1.5	70
16 Screw-Planetary Carrier to Wheel Hub	020510	M12 x 30	80
17 Nuts-Wheel Rim	115812		300

https://truckmanualshub.com/

LUBRICATION

Oil filling-use oil with specification MIL- L- 2105C and API GL5 on Final Reduction Gears

E.g: .with ambient air temperature above 40 C, use:
ESSO GEAR OIL GX85W140

.with ambient air temperature between –10 C and 40 C use:
ESSO GEAR OIL GX80W90

.with ambient air temperature below –10 C use:
ESSO GEAR OIL GX80W

Use oil with specification MF M-1135 and FORD ESEN-M2C.86A and API GL4 on Differential

E.g: ESSO TORQUE FLUID 62

QUANTITY

-Quantity for Differential: 8 litres

-Quantity for Reduction Unit: 1 litres

CHECKING

-Initial Change at 150 hours
(unless advised otherwise in Operators Manual)

-Subsequent Changes every 1000 hours
(unless advised more of frequent changes in
Operators Manual)

-Inspection of Oil Levels every 150 Hours
(unless advised otherwise in Operators Manual)

PRESSURE FITINGS

-with ambient temperature above 0C use a good nr.2 lithium gun grease with molybdenum bisulphide

-with ambient temperature above below 0C use a good nr.1 lithium gun grease with molybdenum bisulphide

-Applications, every 50 hours

https://truckmanualshub.com/

SPECIAL TOOLS

DESCRIPTION	PART No.
-Wrench for Input Shaft Ring Nut, Ref 115054	119044
-Driver for Input Shaft Oil Seal, Ref 116722	119047
-Driver for Drive Shaft Oil Seal, Ref 025351	119047
-Driver for Drive Shaft Bush, Ref 109972	119043
-Wrench for Differential Side Ring Nut, Ref 117400	119030
-Kit for Bevel Distance Measurement, Ref	119049
-Interchangeable Handle	119033
-Driver for Cassette Oil Seal, Ref 047705	119085
-Driver for Cassette Oil Seal, Ref 047705	119086

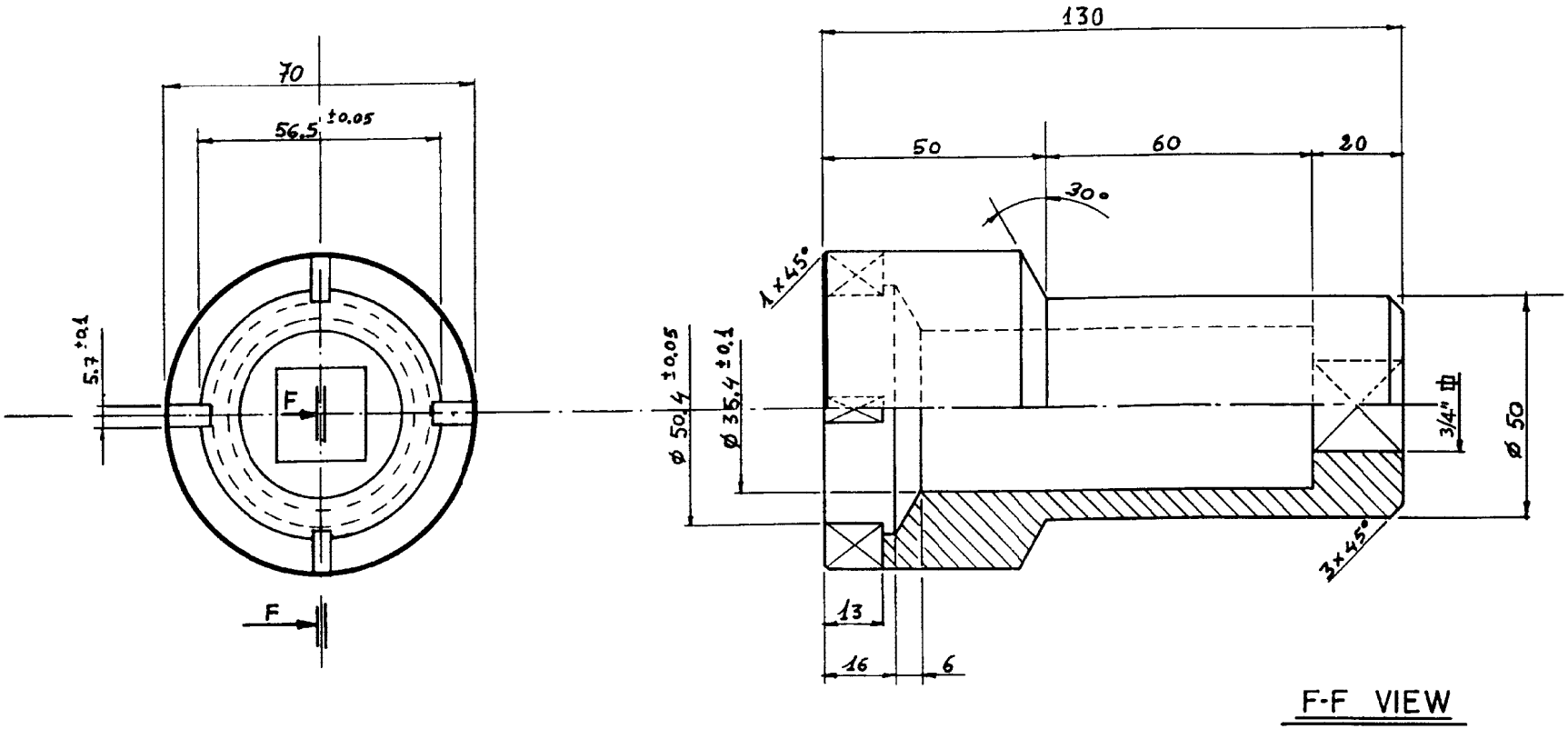

CARRARO OFF. MECC. CARRARO S.p.A. CAMPODARSEGO - (Padova)	Macchina 711		
	Sottogruppo		
	Denominazione WRENCH FOR car115054 RING NUT		
Classifica maler.		Sost. il	Sost. dal
Scala FULL	Mat. SAE 1040 (C40)	Peso grezzo	Posizione Archivio SERVICE DEPT
Data 11-6-86	Tratt. termico	Peso Finito	N. DISEGNO 119044

https://truckmanualshub.com/

https://truckmanualshub.com/

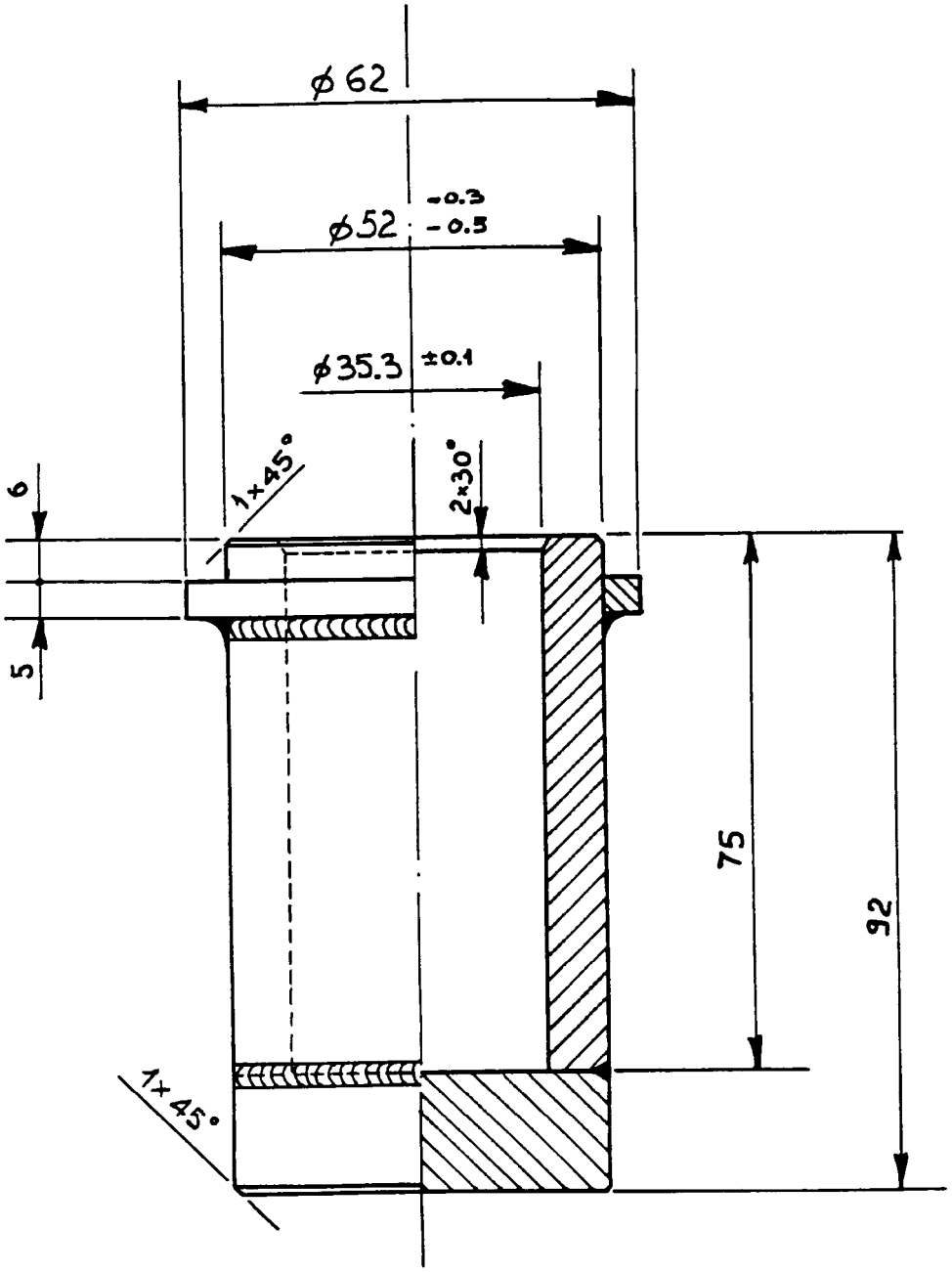

TO BE USED TO FIT THE OIL SEAL
BETWEEN COVER AND PINION SHAFT

CARRARO OFF. MECC. CARRARO S.p.A. CAMPODARSEGO - (Padova)	Macchina 711		
	Sottogruppo		
	Denominazione DRIVER FOR car116722 OIL SEAL		
Classifica mater.		Sost. il	Sost. dal
Scala FULL	Mat. SAE 1040 (C40)	Peso grezzo	Posizione Archivio SERVI DEP
Data 11-11-86	Tratt. termico	Peso Finito	N. DISEGNO 119047
Firma F. Fiorotti	Tratt. superf.	Quantità 1	

https://truckmanualshub.com/

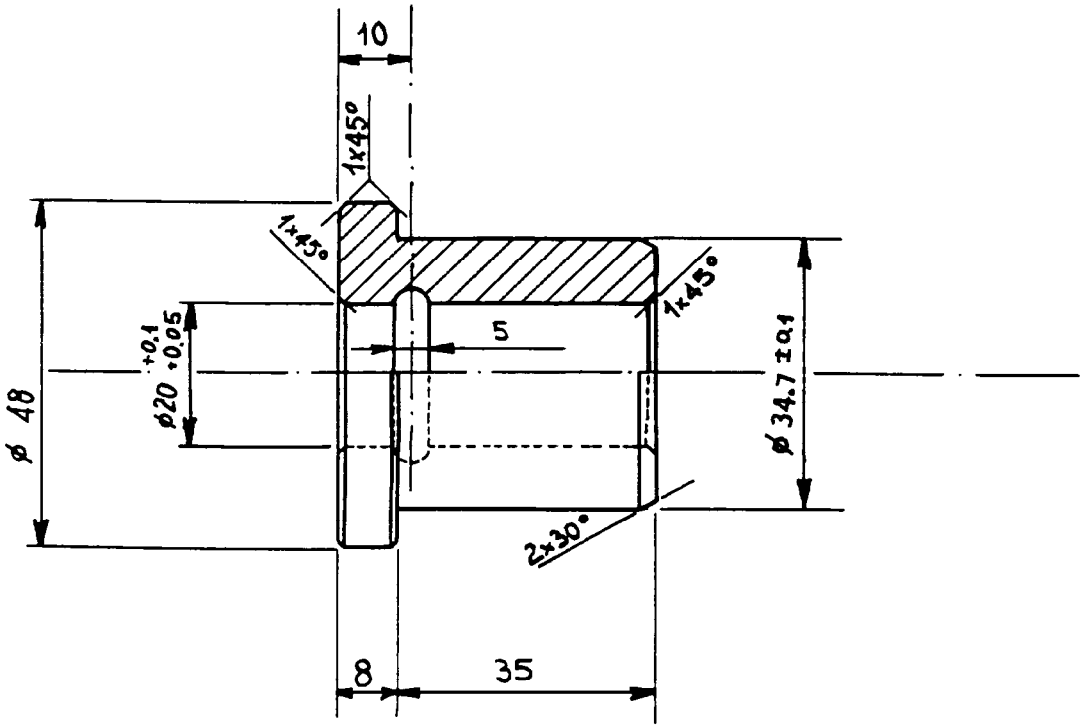

TO BE USED WITH car 119033 INTERCHANGEABLE HANDLE

CARRARO OFF. MECC. CARRARO S.p.A. CAMPODARSEGO - (Padova)	Macchina		
	Sottogruppo		
	Denominazione DRIVER FOR car 109972 BUSH		
Classifica mater.		Sost. il	Sost. dal
Scala FULL	Mat. SAE 1040 (C40)	Peso grezzo	Posizione Archivio SERVIC DEP
Data 11-10-86	Tratt. termico	Peso Finito	N. DISEGNO 119043
Firma	Tratt. superf.	Quantità 1	

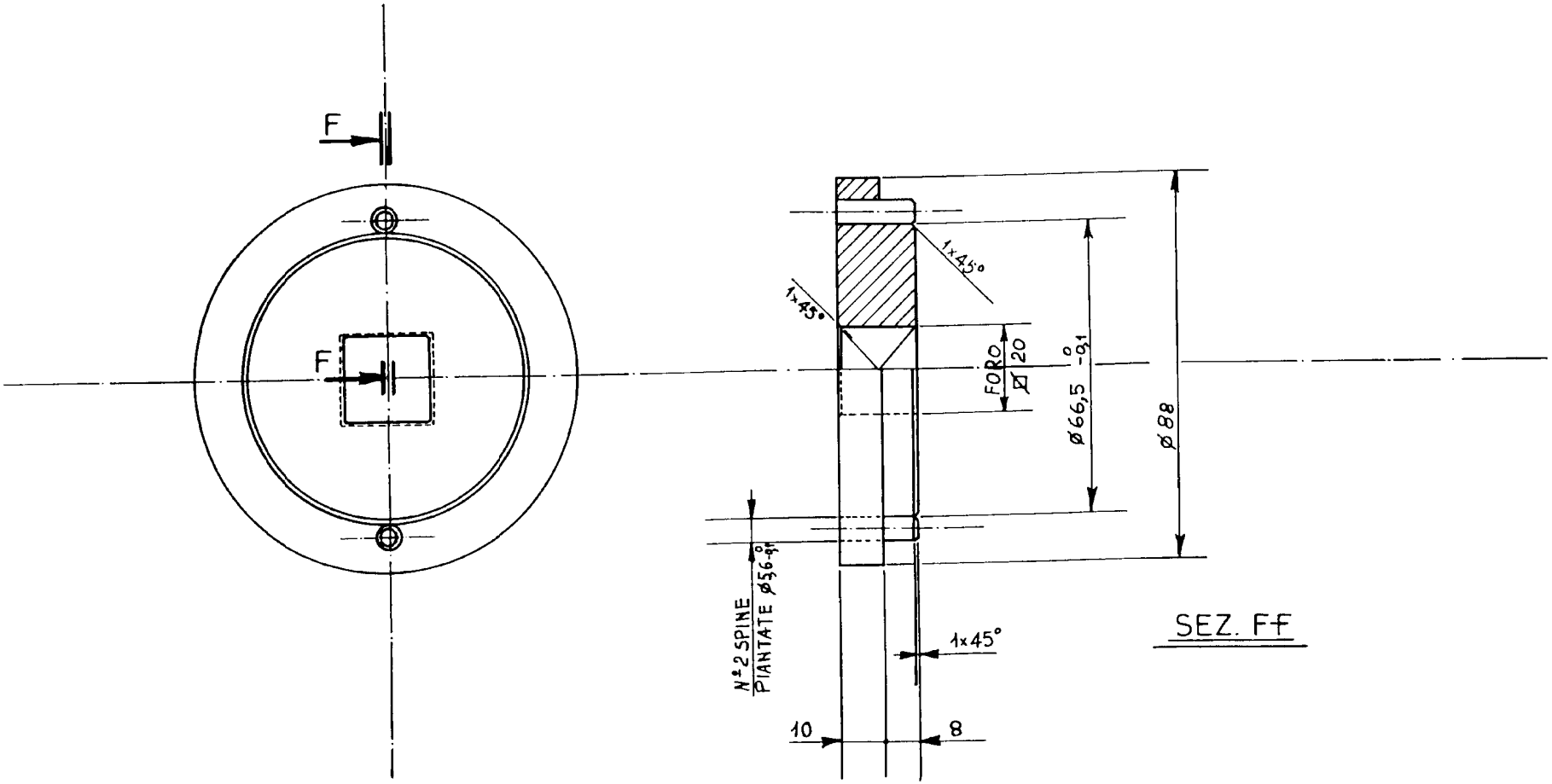

CARRARO CARRARO S.P.A. - VIA OLMO, 29 CAMPODARSEGO (PD) - ITALY	Macchina		
	Sottogruppo		
	Denominazione CHIAVE PER GHIERA 107400		
Classifica mater.		Sost. il	Sost. dal
Scala 1:1	Mat.	Peso grezzo	Posizione Archivio
Data 3-10-86	Tratt. termico	Peso Finito	N. DISEGNO 119030

https://truckmanualshub.com/

https://truckmanualshub.com/

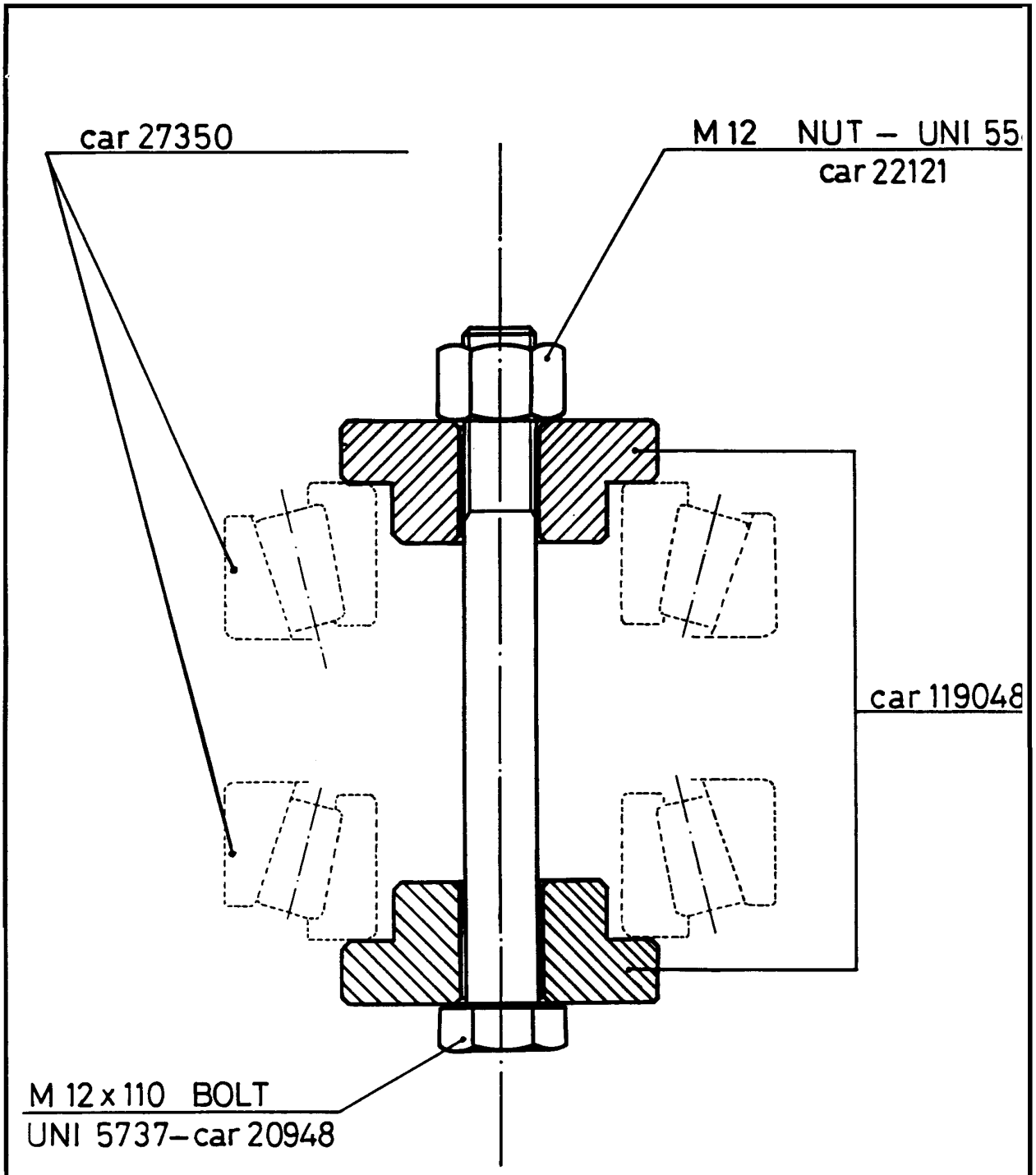

OFF. MECC. CARRARO S.p.A. CAMPODARSEGO - (Padova)	Macchina 711		
	Sottogruppo Bevel gear set		
	Denominazione KIT FOR BEVEL DISTANCE MEA		
Classifica mater.		Sost. il	Sost. dal
Scala FULL	Mat.	Peso grezzo	Posizione Archivio SE D
Data 11-12-86	Tratt. termico	Peso Finito	N. DISEGNO 119049

https://truckmanualshub.com/

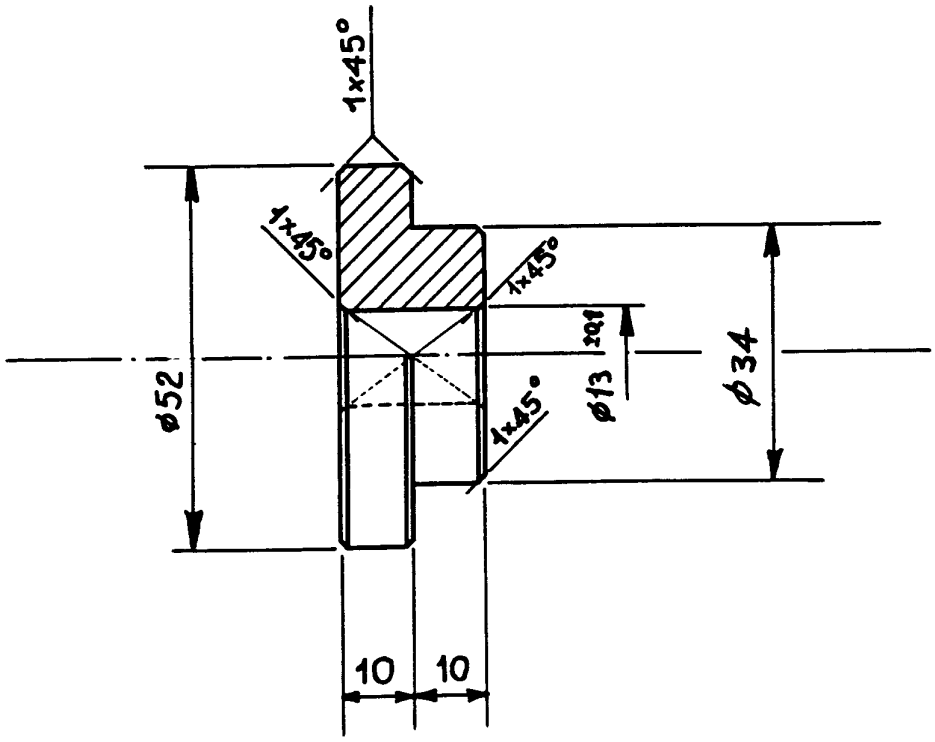

OFF. MECC. CARRARO S.p.A. CAMPODARSEGO - (Padova)	Macchina		
	Sottogruppo Bevel gear set		
	Denominazione DUMMY BEARINGS FOR BEVEL DISTANCE MEASUREMENT		
Classifica mater.		Sost. il	Sost. dal
Scala FULL	Mat. SAE 1040 (C40)	Peso grezzo	Posizione Archivio
Data 11-11-86	Tratt. termico	Peso Finito	N. DISEGNO 119048
		Quantità 2	

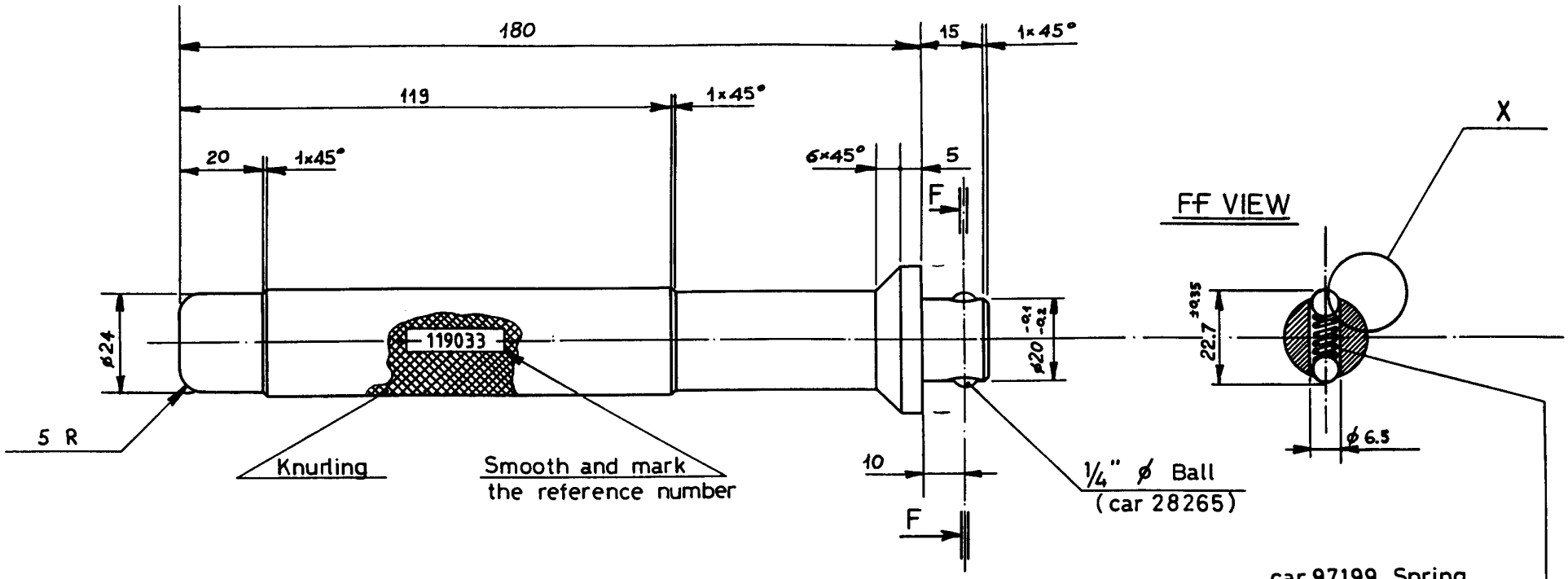

X DETAIL

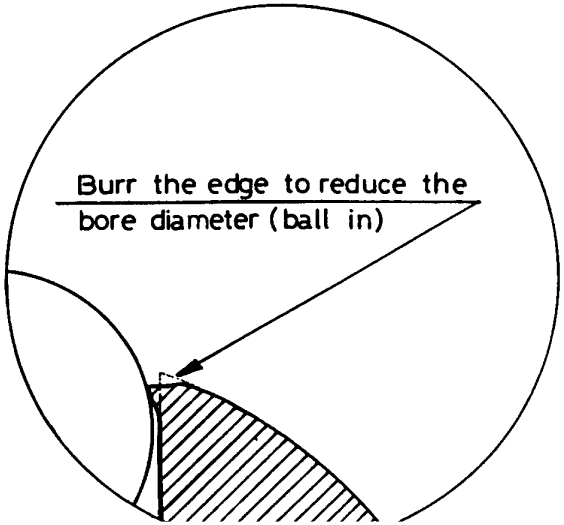

CARRARO CARRARO S.P.A. - VIA OLMO, 29 CAMPODARSEGO (PD) - ITALY	Macchina		
	Sottogruppo		
	Denominazione INTERCHANGEABLE HANDLE		
Classifica mater.		Sost. il	Sost. dal
Scala FULL	Mat. SAE 1040 (C40)	Peso grezzo	Posizione Archivio SERVICE DEPT.
Data 10-6-86	Tratt. termico	Peso Finito	119033

https://truckmanualshub.com/

https://truckmanualshub.com/

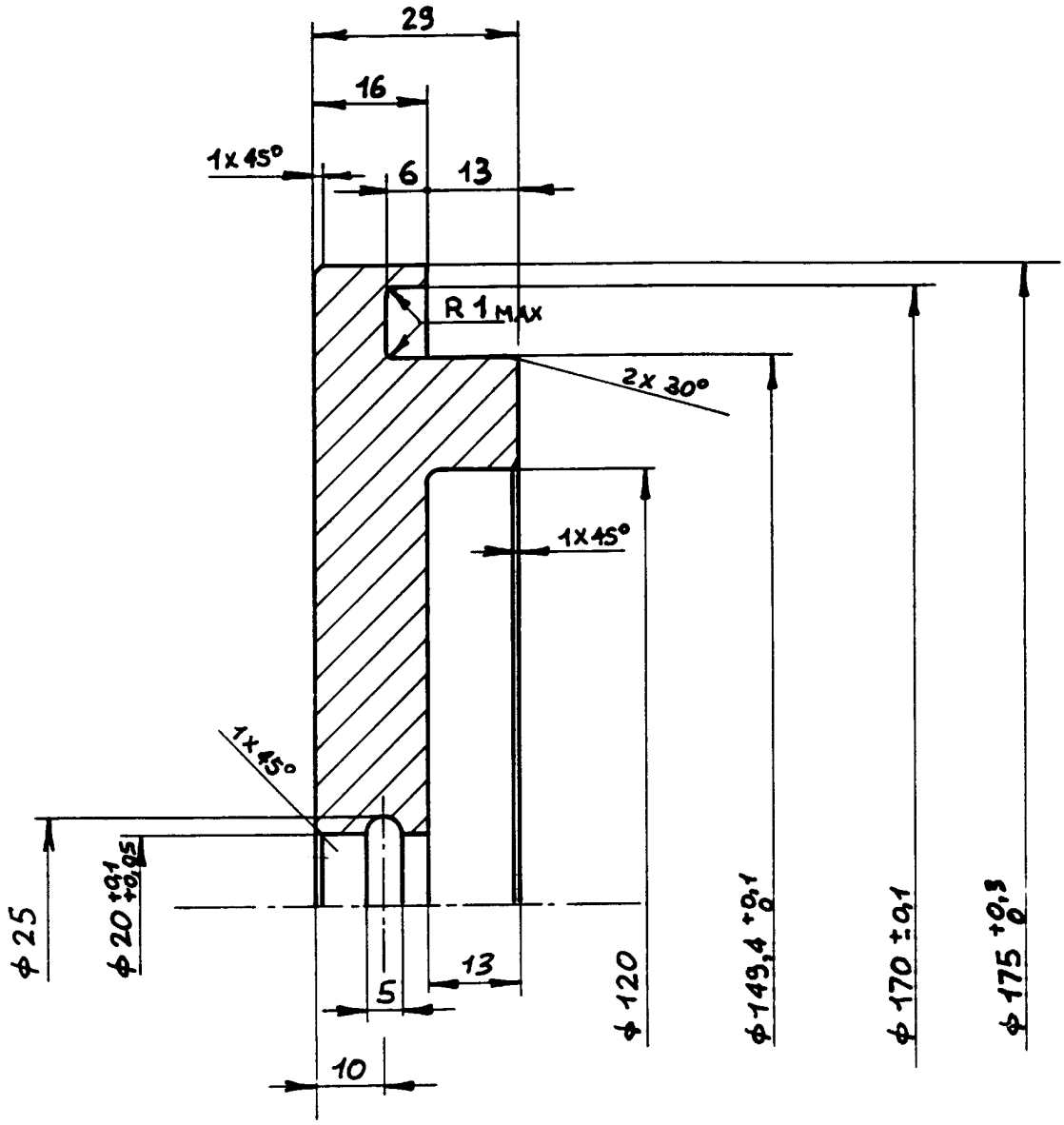

TO BE USED WITH car119033 INTERCHANGEABLE HANDL

CARRARO CARRARO S.P.A. - VIA OLMO, 29 CAMPODARSEGO (PD) - ITALY	Macchina		
	Sottogruppo		
	Denominazione DRIVER FOR car047705&126390 CASSETTE S		
Classifica mater.		Sost. il	Sost. dal
Scala FULL	Mat SAE 1040 (C 40)	Peso grezzo	Posizione Archivio SERV DEPT
Data 02/07/90	Tratt. termico	Peso Finito	119085

https://truckmanualshub.com/

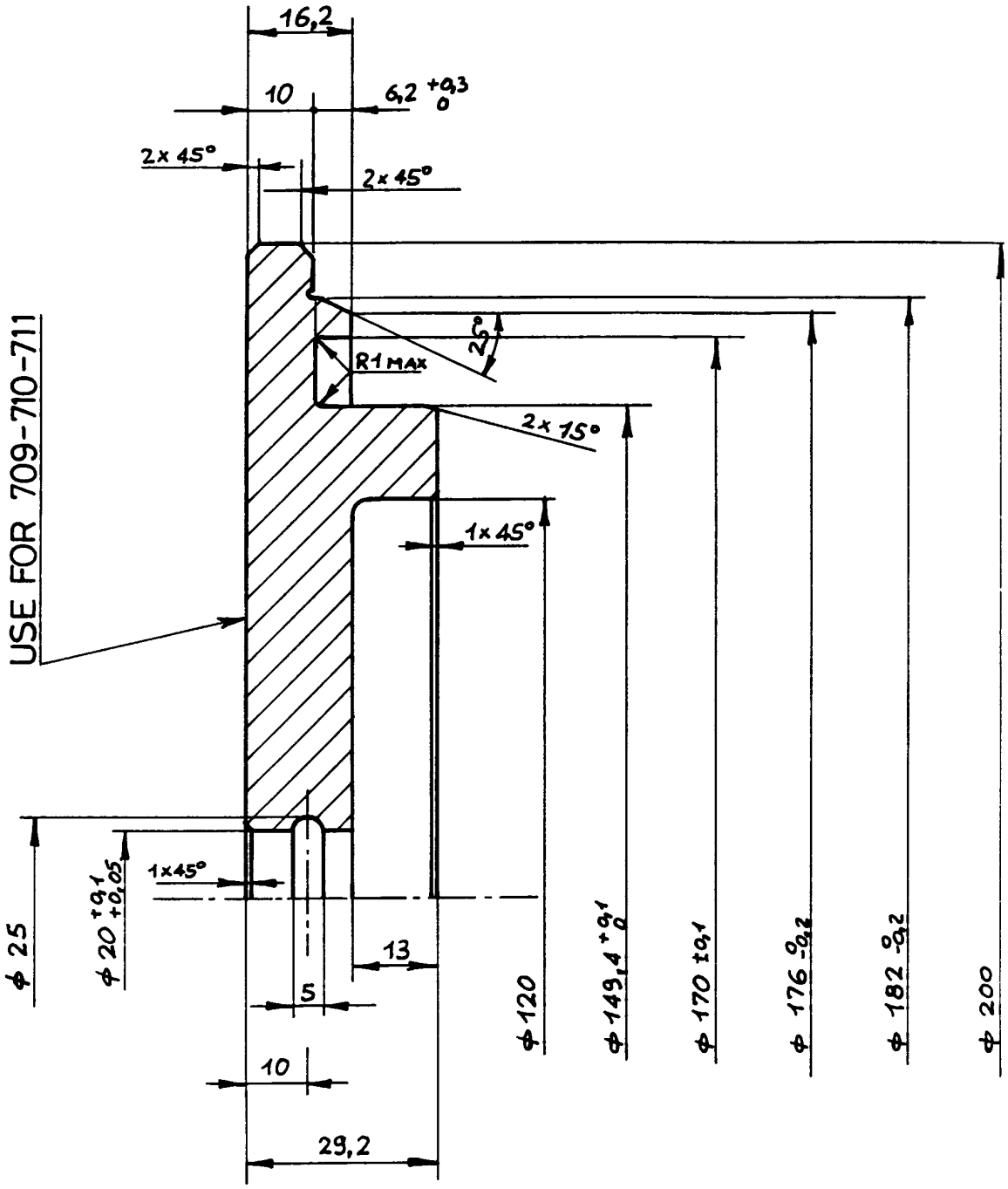

TO BE USED WITH car119033 INTERCHANGEABLE HANDLE

CARRARO CARRARO S.P.A. - VIA OLMO, 29 CAMPODARSEGO (PD) - ITALY	Macchina		
	Sottogruppo		
	Denominazione DRIVER FOR car047705 CASSETTE SEAL		
Classifica mater.		Sost. il	Sost. dal
Scala FULL	Mat. SAE 1040 (C40)	Peso grezzo	Posizione Archivio SERVI DEPT
Data 3/7/90	Tratt. termico	Peso Finito	N. DISEGNO 119086
Firma	Tratt. superf.	Quantità	

https://truckmanualshub.com/

DISASSEMBLING, SETTING AND REASSEMBLING

INDEX OF PAGES Page.

-FOREWORD 1 - 2

-EPICYCLIC REDUCTION 3

-WHEEL HUB 4

-WHEEL SHAFT AND BRAKES 5

-DIFFERENTIAL SUPPORT AND BEVEL GEAR/PINION SET 6

-SETTING THE BEVEL DISTANCE 6.1

-PINION BEARING PRE-LOAD 6.2

-CROWN WHEEL/PINION BACKLASH 6.3

-DIFFERENTIAL BEARING PRE-LOAD 6.4

-DIFFERENTIAL 7

-AXLE HOUSING 8

FOREWORD

DISASSEMBLY-REASSEMBLY

The overhauling of the Final Drives and Wheel Hubs can be completed without removing the axle from the machine.

Should it be necessary to remove the Axle Assembly, adequate supporting of the machine must be ensured to work with safety.

https://truckmanualshub.com/

OIL SEAL FOR ROTATING SHAFT

For an installation of oil seal adhere to the following recommendation:

-Before installation soak the seal for half hour in the same oil that will be used in the housing to be sealed.
-Clean the shaft and ensure the seal area of the same is not damaged, pitted or grooved.
-Place the sealing lips towards the oil side.
-Lubricate the lip seal (oil is better than grease) and fill with grease the space between oil lip and dust lip of dual lip seals.
-Install the oil seal using a suitable seal driver. Avoid hammering directly on the seal'
-To avoid damage to the seal lip caused by the shaft : adequately protect the same during shaft assembly procedure.

'O' RING

Ensure adequate lubrication of the seals before inserting them in their seats to avoid twisting during shaft assembly.

SHIMS

For each adjustment select the correct shim/s by individual measurement.
Do not trust pack measurement or the thickness indicated on the shim.

BEARINGS

For a correct assembly it is suggested:
-Warming from 80° to 90°C before installation in their respective seats.

ROLL PIN

When installing split cut roll pin ensure the cut is oriented towards the direction of the force acting on the roll pin.
Spiral type roll pins do not require any precaution.

SEALING COMPOUND

On area to be sealed use SILASTIC or LOCTITE 510, ensuring both sides to be sealed are clean, dry and totally free from grease and oil.

https://truckmanualshub.com/

EPICYCLIC REDUCTION GEARS

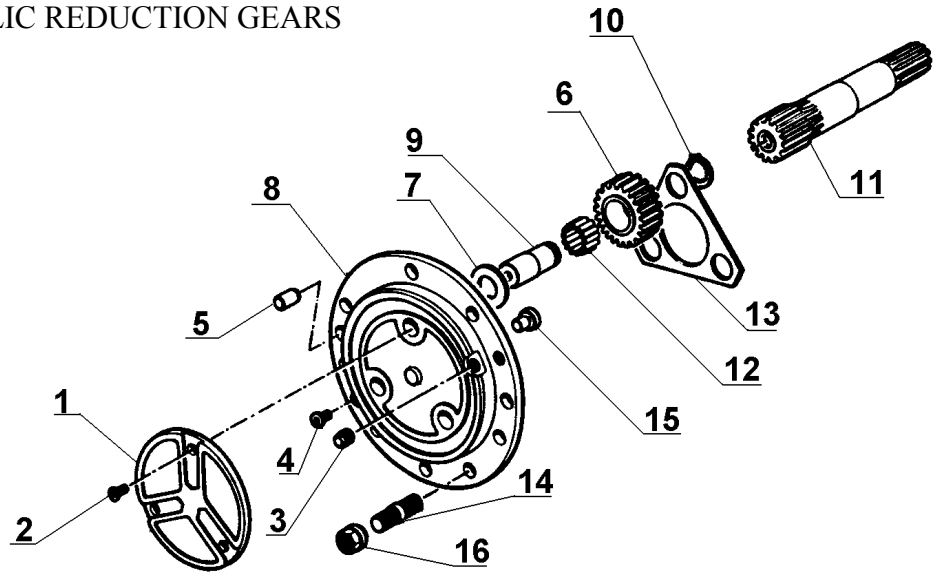

Fig 1

EPICYCLIC REDUCTION GEARS

-Turn the hub so that the filler/drain plug (3) is at the lowest position and drain the hub oil.

-Remove the 2 centering studs (14) and the 2 screws (4) securing the planetary carrier assembly to the hub assembly.

-Inspect the needle bearings (12) and the thrust washer (7) for wear and replace if necessary.

-Inspect the pinion shaft (6) for wear and replace if worn or damaged.

-Reassembling: if necessary hold the needle bearings in place with grease.

-Refill the hub with the correct oil: see specification or refer to relevant operators manual. The filler/drain plug bore position must be at the top.

-Check the level with the plug at the horizontal line.

https://truckmanualshub.com/

WHEEL HUB

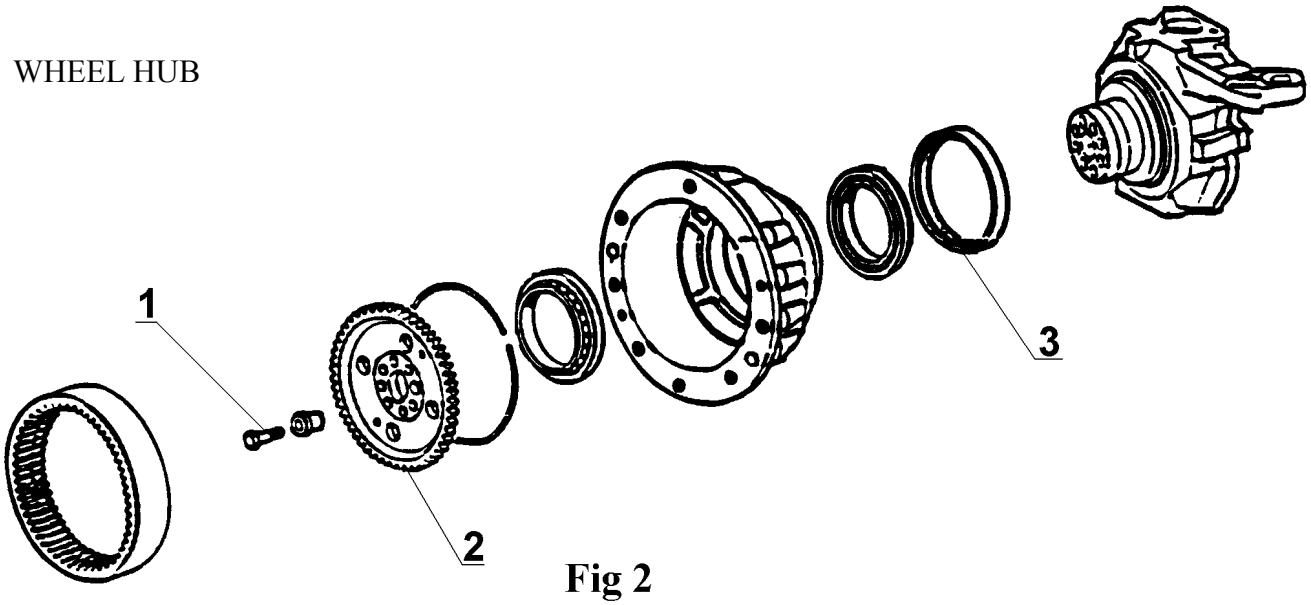

Fig 2

WHEEL HUB

-Unscrew bolts (1) to remove hub from housing.

-To remove the crown gear assembly, use four bolts (1), as puller, on the threaded holes of the wheel carrier (2).

-Inspect the cassette seal (3) on the hub and replace if necessary. Use a suitable driver to ensure the cassette seal is correctly seated to prevent oil leakage.

-The special arrangement 'Set Right' of taper bearings do not require specific setting of pre-load or clearance. In any case before reassembling new spare parts it is better to checking the following dimensions:

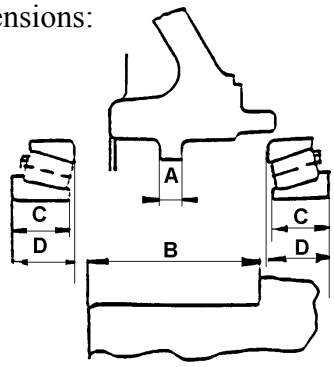

Fig 3

A = 17.95 – 18.00
B = 64.257 – 64.325
C = 21.43
D = 23.070 – 23.172

Replace the incorrect items

SPECIAL TOOLS
Driver for cassette seal (3) : Ref. 119086

https://truckmanualshub.com/

Fig 2

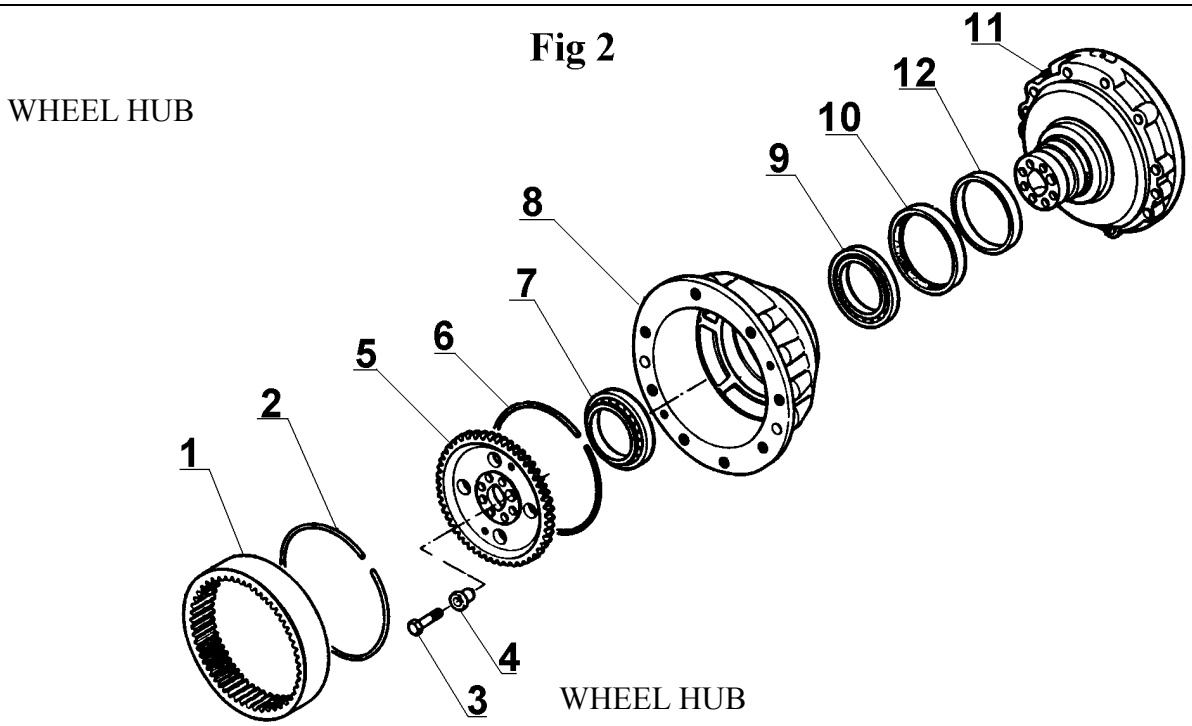

-On the wheel shaft (11) there is a removable oil seal journal (12). Inspect this journal for damage.

-If necessary, carefully cut off the journal, thoroughly clean the wheel hub surface and press o a new part. Ensure that the same is correctly seated to prevent oil leakage.

-The special arrangement 'Set Right' of taper bearings do not require specific setting of pre-load or clearance because the relevant surfaces are machined to fine tolerances. In any case before reassembling new spare parts it is better to check the following dimensions:

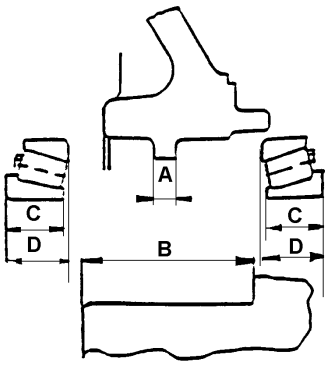

Fig 3

A = 17.95 – 18.00
B = 64.257 – 64.325
C = 21.43
D = 23.070 – 23.172

Replace the incorrect items

https://truckmanualshub.com/

WHEEL SHAFT AND BRAKES **Fig 4**

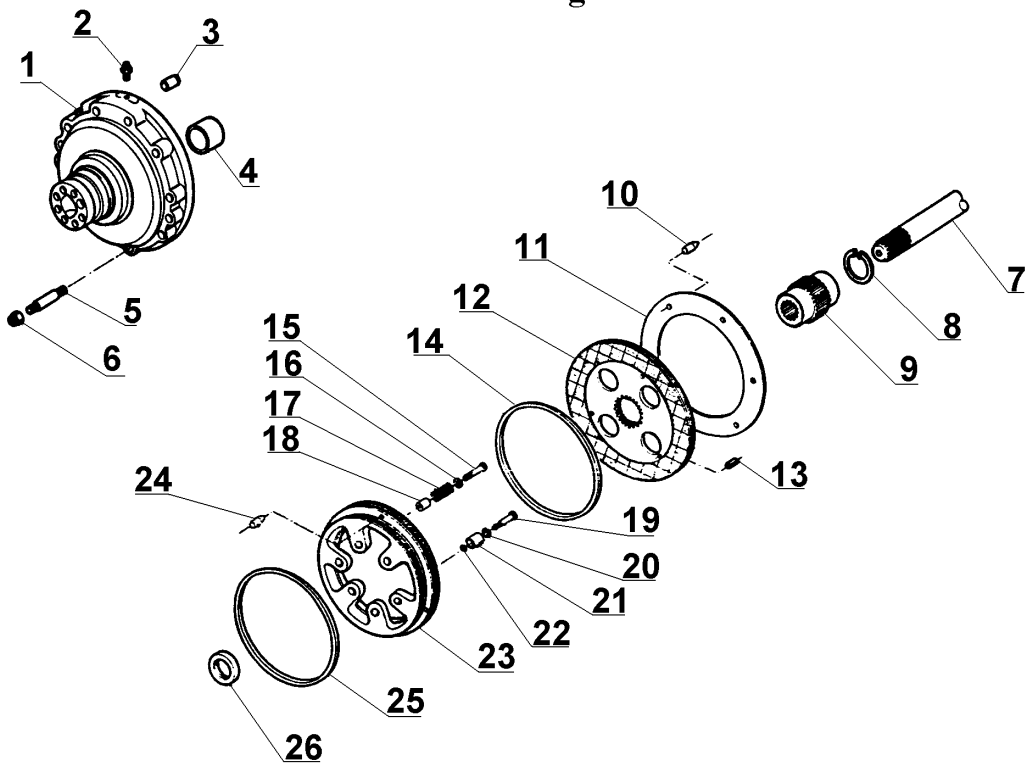

WHEEL SHAFT AND BRAKES

-Inspect the splines on the half shaft (7) for wear and replace if necessary.

-Inspect the brake disc (12) for wear and replace if necessary.

-Inspect the brake piston (23) and reaction plates (11) for wear pitting or grooves and replace if necessary.

-Inspect the quadrings (14) and (25) for damage and replace if necessary.

-Replace the oil seal (26).

https://truckmanualshub.com/

DIFFERENTIAL SUPPORT AND BEVEL GEAR /PINION SET

Fig 8

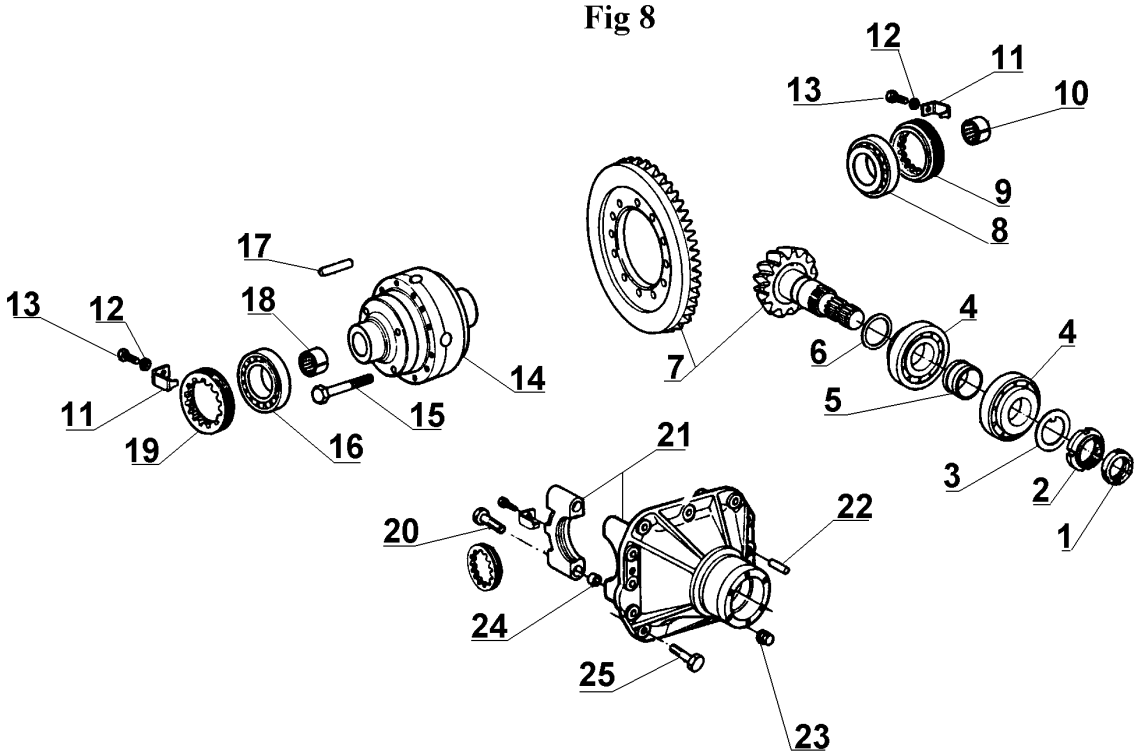

DIFFERENTIAL SUPPORT AND BEVEL GEAR PINION SET

-To remove the differential unscrew the bolts (25) for on bench overhauling.

-Inspect the pinion bearings (4) and the differential side bearings for wear or damage; at the same time inspect the lip seal (1) and preferably replace it.

-Inspect the bevel pinion splines and replace the ring nut (2) and collapsible spacer (5).

The setting operations to complete for this group are as follows:

SETTING THE BEVEL DISTANCE
SETTING THE PRE-LOAD OF THE PINION BEARINGS
SETTING THE PINION/CROWN WHEEL BACKLASH
SETTING THE DIFFERENTIAL BEARING PRE-LOAD

Described on the following pages.

SPECIAL TOOLS:
-Driver for Pinion Seal (1): Ref. 119047
-Wrench for differential ring nut (9) and (16): Ref. 119030

https://truckmanualshub.com/

SETTING THE BEVEL DISTANCE

-Install the pinion bearings in the differential support casing and lightly clamp the bearings using tool (5)

-Tighten the clamp part so that the bearing cones can just be turned by hand. Do not overtighten.

-Install the differential support casing side bearings cap and tighten by the relative retaining nuts.

-Using an internal micrometer, measure the side bearing bore (D).

-Locate the circular bar (6) across the bearing bores in the support casing and using a depth gauge (7), measure the dimension (Y).

-Determine the required thickness of shim using the following calculation:

-B = Y – 25 (shaft diameter) + D/2

-The actual shim thickness will be the difference between calculation B and the dimension etched on the head of the pinion.

-Select the calculated shim thickness from the range available and install on the pinion shaft.

-Press the inner bearing onto the pinion shaft ensuring that it is fully seated.

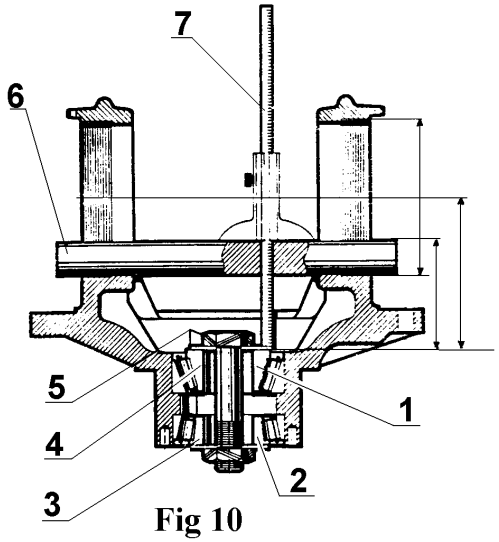

Fig 10

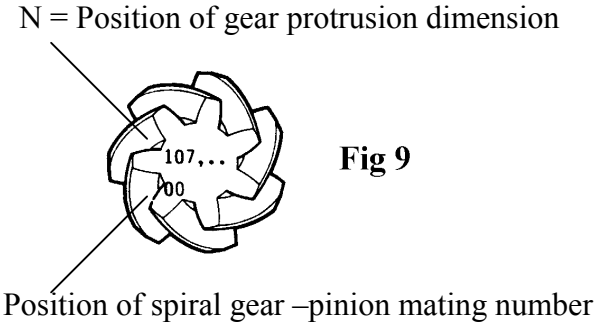

Fig 9

SPECIAL TOOLS

Kit for bevel distance measurement: -Ref. 119049

https://truckmanualshub.com/

PRE-LOAD OF PINION BEARINGS

-Assemble the pinion bearing and spacer assembly into the support casing together with the outer bearing and retaining nut, do not fully tighten the retaining nut but tighten only until it touches the collapsible spacer.

-The pinion bearing requires a pre-load of 9.2 – 13.7 daN measured on the pinion queue without the cover and seal.

-Wrap a length of string or twine evenly and without overwrapping around the exposed input splines and using a pull scale, measure the force required to rotate the pinion shaft in the bearings.

-When the specified pull is achieved by tightening the retaining nut and collapsing the spacer pre-loading the bearings, lock the retaining nut.

-Use silastic 732 or equivalent between the differential end plate and lip seal cover.

NOTE: the approximate torque at the ring nut to begin deformation of the collapsible spacer is 17 – 18 daN

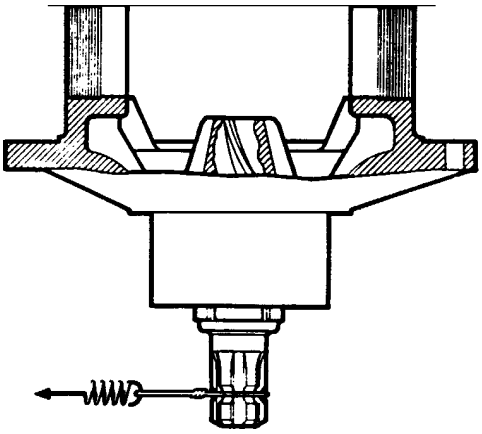

SPECIAL TOOLS

Wrench for pinion ring nut: -Ref. 119044

https://truckmanualshub.com/

SETTING THE BACKLASH

The correct amount of backlash is 0.18 to 0.24mm. The adjustment is made by turning the side ring nuts.
The ring nuts push against the bearings and move the bevel gear toward or away from the bevel pinion. When this adjustment is made the ring nuts can be difficult to move and it may be necessary to release the bearing cap nuts a small amount to relieve the pressure on the ring nuts.
Do not slacken the nuts more than is absolutely necessary.

To set the backlash carry out the following procedure:

-Turn the right nut on the spiral gear side of the differential in a clockwise direction at the same time hit the bearing caps lightly with a soft faced hammer to align the bearings, continue turning until the spiral gear is in contact with the pinion..

-Turn the other ring nut in a clockwise direction at the same time lightly hitting the bearing caps with a soft faced hammer to align the bearings.

-Continue until all the clearance in the bearings has been removed, this will be indicated when the ring nut becomes difficult to move.

-Put the dial gauge in position so that the probe is in contact with and at 90° to a tooth on the spiral gear.

-Check the amount of backlash between the spiral gear and bevel pinion.

-Repeat on two or more teeth at equal distance around the spiral gear.

-Make a note of the clearance, if the amount of clearance is different, put the probe of the dial gauge on the tooth that has the smallest clearance.

-Move the spiral gear toward or away from the pinion by moving each ring nut an equal amount, continue until the dial gauge shows a clearance of 0.18 to 0.24mm.

https://truckmanualshub.com/

SETTING OF THE PRE-LOAD FOR THE DIFFERENTIAL BEARINGS

Adjust the pre-load of the differential side bearings using the following method:

-With the crown wheel in mesh with the pinion and the backlash correctly set, rotate the pinion using a string and pull scale and record the effort required to rotate the pinion and crown wheel /differential unit.

-Tighten each differential side bearing adjuster ring nut by equal to preserve the backlash adjustment.

Install the adjuster ring lock tabs.

-Fully tighten the cap nuts to the specified torque.

-Recheck to make sure that the backlash is correct.

-The total amount of the pre-load to find (differential + pinion bearings) on the diameter 34.87 of the pinion queue must be:

T = (P + 2.9) TO (P + 4.3), where P is the final value found for the pinion.

https://truckmanualshub.com/

4 SUN GEAR DIFFERENTIAL

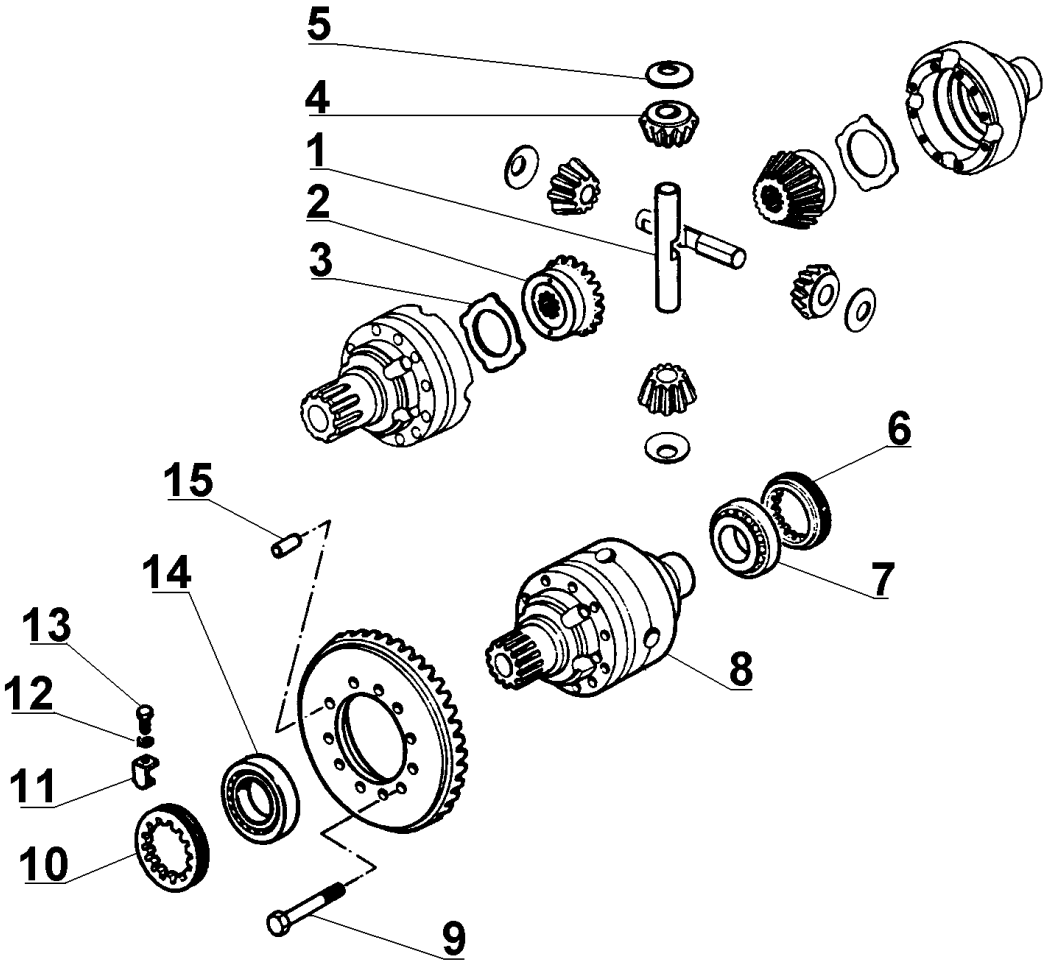

Fig 12

-Inspect the thrust washer (5) and (3) for wear and replace if necessary.

-Inspect the other differential components and the shafts (1) particularly.

-Use LOCTITE 270 to secure the bolts (9) which fasten the crown wheel to the differential housing (8).

https://truckmanualshub.com/

AXLE HOUSING

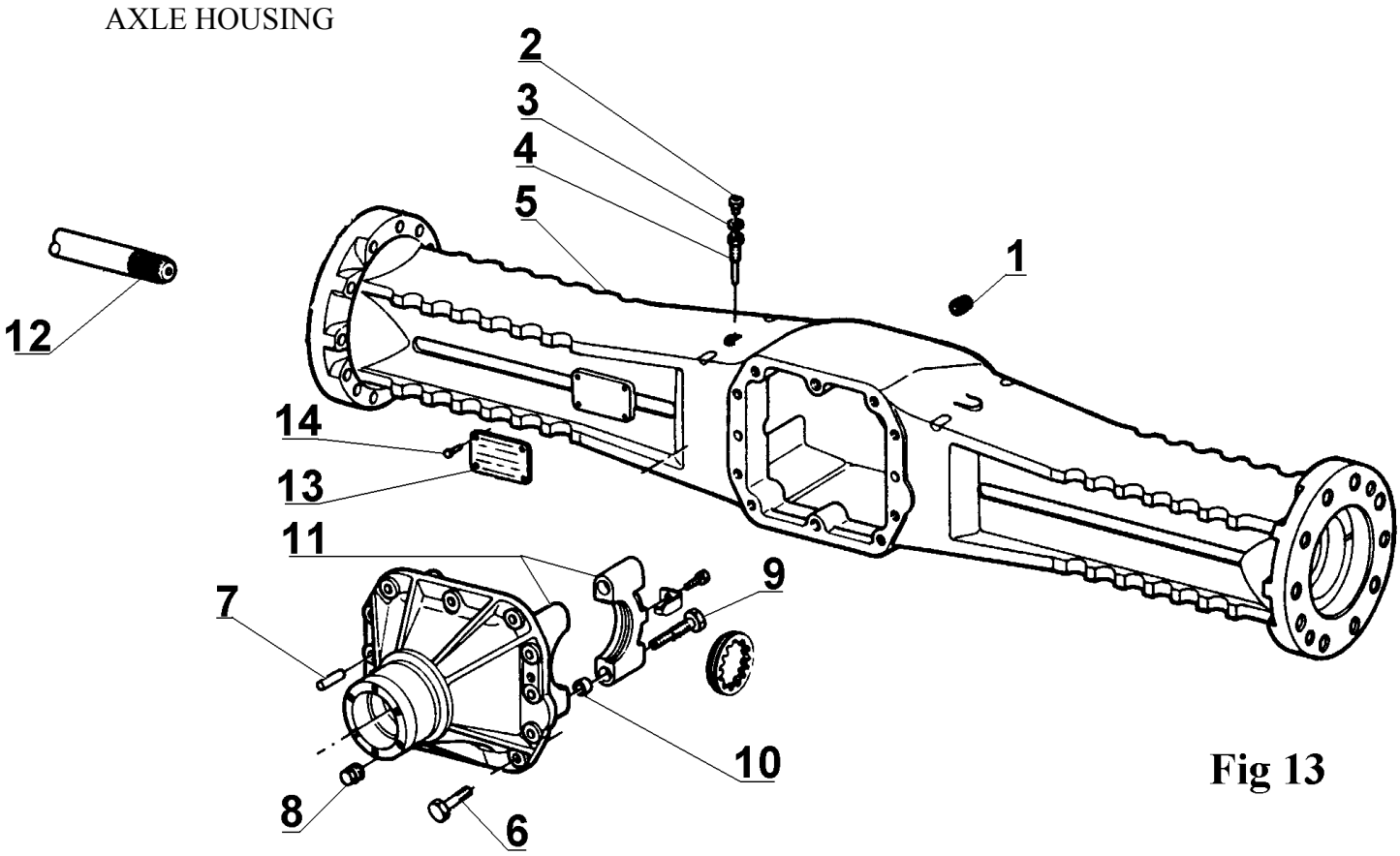

Fig 13

-Inspect the breather pipe (2) to ensure the valve is working correctly and replace if necessary.

-Inspect the splines on the halfshaft (12) and replace if necessary.

-Draining oil: from the plug (8) on the differential end plate.

-Filling with oil and checking the level: use the plug (1) located in the front face of the axle housing.

-Use SILASTIC 732 or equivalent to seal between the differential end plate and axle housing.