https://truckmanualshub.com/

Original instructions

Double pallet stacker

EXD 20

0307 0345

11638011551 EN - 02/2021 - 06

first in intralogistics

https://truckmanualshub.com/

https://truckmanualshub.com/

Address of manufacturer and contact details ▷

STILL GmbH
Berzeliusstraße 10
22113 Hamburg, Germany
Tel. +49 (0) 40 7339-0
Fax: +49 (0) 40 7339-1622
Email: info@still.de
Website: http://www.still.de

https://truckmanualshub.com/

https://truckmanualshub.com/

1 Introduction

Your industrial truck 2
General 2
CE labelling 3
Copyright and property rights 3

EC declaration of conformity 4

Identification label 5

Rules for the operating company of industrial trucks 5

Eco-design requirements for electric motors and variable speed drives 6

Spare parts list 7

Proper usage 8

Description of use and climatic conditions 8

Unauthorised use 9

Explanation of symbols used 9

Disposing of components and batteries 9

2 Safety

Safety regulations 12

Safety regulations for handling consumables 13
Permissible consumables 13
Oils 13
Hydraulic fluid 14
Battery acid 14
Disposal of consumables 15

Emissions 16
Noise emission values 16
Vibration characteristics for vibrations to which the body is exposed 16

Residual dangers, residual risks 17

Stability 17

Definition of responsible persons 18
Operating company 18
Specialist 18
Drivers 18

Safety tests 20
Regular safety inspection of the truck 20

https://truckmanualshub.com/

3 Overviews

Overview 22
General view of the truck 22
General view of the technical compartment 23

Operating and display devices 24
Driver's compartment 24
Display-operating unit 25
Electronic key (option) 26

Markings 28
Labels 28
Serial number 29

4 Use

Technical description 32

List of checks prior to start-up 34

Starting up 35

Checks and actions prior to commissioning 37
Checking the anti-crush safety device 37
Checking the emergency shutdown 38
Checking the brake 38
Checking the horn 39

Truck operating instructions 40

Using the display-operating unit 42
Selection buttons 42
Operation of the display unit 42

Driving safety guidelines 46

Driving 47
Defining directions 47
Driving 47
Steering 48
Braking 49
Horn 50
Drive program 51
Creep Speed function 52
Using the truck on a slope 53

https://truckmanualshub.com/

Operating the FleetManager™ option 55
Description of the FleetManager option. 55
Commissioning a truck equipped with the FleetManager™ option 56
FleetManager™ option: Colour code for the LEDs 57
Disconnecting a truck equipped with the FleetManager™ option 59

Transporting loads 61
Load handling safety rules. 61
Grabbing a loading unit 61
Transporting pallets or other containers 62
Progressive stopping of the carriage in the lower position 63
Reading the capacity plate 64
Lift control elements 66
Handling a single load 68
Handling two stacked pallets 72

Driving assistance system: Dynamic Drive Control 75
Description of the Dynamic Drive Control 75

Cold store usage (optional) 76

Before leaving the truck 78

Handling the battery. 79
Battery type 79
Order picking 79
Opening and closing the battery hood 80
Charging the battery using an external charger 81
On-board charger 83
Using the on-board charger 84
Adjusting the on-board charger 86
Changing the vertical access battery. 86
Changing the side access battery 87

Handling the truck in an emergency 93
Emergency lowering of the mast 93
Truck towing procedure 94

Handling the truck in specific situations 96
Slinging the truck 96
Lifting the truck 97
Transporting the truck 97
Transporting the truck in the lift 98
Driving on loading bridges 98

https://truckmanualshub.com/

5 Maintenance

General maintenance information 100
General 100
Servicing and maintenance personnel training and qualification. 101
Battery maintenance staff 101
Maintenance operations that do not require special training. 101
Ordering spare parts and consumables 101

Safety guidelines for maintenance. 102
Servicing and maintenance measures 102
Working on the electrical equipment 102
Safety devices 102

Technical data for inspection and maintenance 103

Recommended lubricants 104

Accessing the technical compartment 105

1000-hour service plan 106

5000-hour maintenance plan 106

10,000-hour service plan 107

Chassis, bodywork and fittings 108
Cleaning the truck 108
General information on battery maintenance 110
Checking the condition of the forks 111

Steering and wheels 112
Cleaning the pinion gear of the steering geared motor 112
Checking the condition of the wheels 113
Stabiliser maintenance 113

Electrical equipment 114
Cleaning and blowing air through the electrical components 114
Checking the battery acid level and electrolyte density 115
Checking the condition of the cables, terminals and battery connector 116

Hydraulic systems 117
Checking the hydraulic system for leaks 117
Checking the hydraulic oil level 117
Checking the controlled stabiliser hydraulic system for leaks 118
Checking the oil level in the controlled stabiliser circuit. 119

https://truckmanualshub.com/

Lift mast 120
Cleaning and lubricating the chains. 120
Adjusting the length of the mast chains. 120
Checking the protective screen 121

Storage and decommissioning 123
Storage of truck 123
Permanent Putting Out of Commission (Destruction) 124

6 Technical specifications

EXD20 datasheet. 126

EXD20 mast types 130

https://truckmanualshub.com/

https://truckmanualshub.com/

1

Introduction

https://truckmanualshub.com/

Your industrial truck

General

The truck described in these operating instructions corresponds to the applicable standards and safety regulations.

If the truck is to be operated on public roads, it must conform to the existing national regulations for the country in which it is being used. The driving permit must be obtained from the appropriate office.

The truck has been fitted with state-of-the-art technology. Following these operating instructions will allow the truck to be handled safely. By complying with the specifications in these operating instructions, the functionality and the approved features of the truck will be retained.

Get to know the technology, understand it and use it safely - these operating instructions provide the necessary information and help to avoid accidents and to keep the truck ready for operation beyond the warranty period.

Therefore:

– Before commissioning the truck, read the operating instructions and follow the instructions.

– Always follow all of the safety information contained in the operating instructions and on the truck.

https://truckmanualshub.com/

CE labelling

The manufacturer uses CE labelling to indicate that the truck complies with the standards and regulations valid at the time of marketing. The supplied EC declaration of conformity confirms this. The CE labelling is attached to the nameplate.

An independent structural change or an addition to the tow tractor can compromise safety, thereby invalidating the EC declaration of conformity.

The EC declaration of conformity must be carefully stored and made available to the responsible authorities.

▷

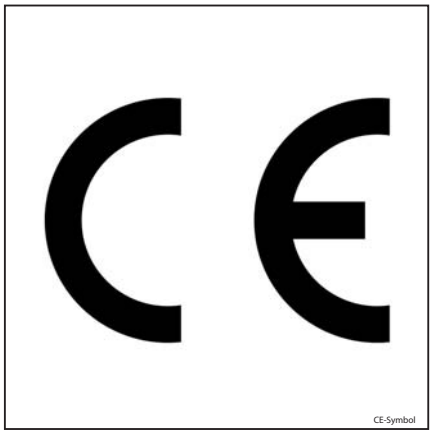

CE-Symbol

Copyright and property rights

This manual - and any excerpts thereof - may not be reproduced, translated or transmitted in any form to third parties without the express written permission of the manufacturer.

https://truckmanualshub.com/

EC declaration of conformity

Declaration

STILL GmbH
Berzeliusstrasse 10
22113 Hamburg

GERMANY

We declare that the machine

Industrial truck	**according to these operating instructions**
Model	**according to these operating instructions**

conforms to the latest version of the Machinery Directive 2006/42/EC.

Person authorised to compile the technical documents:

See EC compliance declaration

STILL S.A.S.

The manufacturer declares that the truck complies with the requirements of the EC directives valid at the time of marketing. This is confirmed by the EC declaration of conformity and by the EC labelling on the nameplate.

An independent structural change or addition to the truck can compromise safety, thus invalidating the EC declaration of conformity.

The EC declaration of conformity must be carefully stored and made available to the relevant authorities.

https://truckmanualshub.com/

Identification label

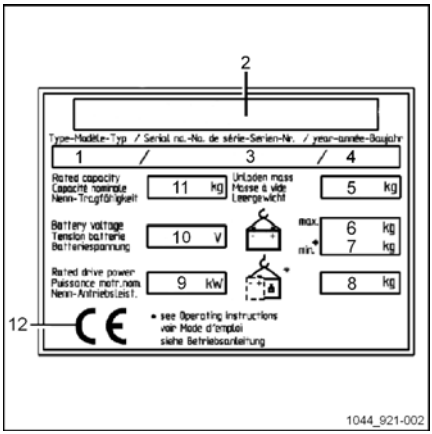

NOTE

Indicate the serial number for all technical enquiries.

1 Model
2 Manufacturer
3 Serial number
4 Year of manufacture
5 Unladen weight (without battery) in kg
6 Maximum battery weight
7 Minimum battery weight (for a lithium-ion battery, the weight of the ballast container is included)
8 Additional weight (ballast weight) in kg
9 Nominal motor power (kW)
10 Battery voltage in V
11 Nominal capacity in kg
12 EC conformity symbol

Rules for the operating company of industrial trucks

In addition to these operating instructions, a code of practice containing additional information for the operating companies of industrial trucks is also available.

This guide provides information for handling industrial trucks:

- Information on how to select suitable industrial trucks for a particular area of application
- Prerequisites for the safe operation of industrial trucks
- Information on the use of industrial trucks
- Information on transport, initial commissioning and storage of industrial trucks

https://truckmanualshub.com/

Internet address and QR code

▷ The information can be accessed at any time by pasting the address **https://m.still.de/vdma** in a web browser or by scanning the QR code.

Eco-design requirements for electric motors and variable speed drives

All motors in this industrial truck are exempt from Regulation (EU) 2019/1781 because these motors do not meet the description given in Article 2 "Scope", Item (1) (a) and because of the provisions in Article 2 (2) (h) "Motors in cordless or battery-operated equipment" and Article 2 (2) (o) "Motors designed specifically for the traction of electric vehicles".

All variable speed drives in this industrial truck are exempt from Regulation (EU) 2019/1781 because these variable speed drives do not meet the description given in Article 2 "Scope", Item (1) (b).

https://truckmanualshub.com/

Spare parts list

The spare parts list can be downloaded by entering the address **https://sparepartlist.still.eu** into a web browser or by scanning the QR code displayed to the side.

When the web page is open, please type in the following password: **Spareparts24!**

On the next screen, please enter your email address and truck serial number to receive the link by email. Then download the spare parts list.

2511

https://truckmanualshub.com/

Proper usage

The truck described in these operating instructions is suitable for lifting, transporting and stacking loads.

The truck should only be used for the purposes for which it was designed, as described in these instructions.

If the truck needs to be used for purposes other than those specified in these instructions, you should first:

- Obtain permission from the manufacturer
- Obtain permission from the competent authorities, if applicable

The purpose of obtaining these permissions in advance is to limit danger as far as possible.

The capacity label specifies the maximum load that can be raised. This limit must not be exceeded.

Description of use and climatic conditions

Normal use

– Indoor and outdoor use.

– Ambient temperature in tropical and Nordic regions ranging from -10°C to 45°C

– Start capability from -10°C to 45°C.

– Maximum start time of 20 seconds

– Use at up to 2000 metres above sea level.

Special use (partly with special measures) for trucks equipped with Gel or Lead batteries

– Use, for example, in the event of abrasive dust (such as AL203), lint, acid, leach, salt and incombustible substances.

– Ambient temperature in tropical regions up to 55 °C.

– Start capability at -25°C.

– Use at up to 3,500 metres above sea level.

https://truckmanualshub.com/

Unauthorised use

Any danger caused as a result of unauthorised use becomes the responsibility of the operator or driver and not that of the manufacturer.

Use for purposes other than those described in these operating instructions is prohibited.

Transporting people is prohibited.

The forklift truck should not be used in areas where there is a risk of fire, explosion or corrosion, or in areas that are particularly dusty.

Stacking or unstacking is not permissible on inclined surfaces or ramps.

Explanation of symbols used

⚠ DANGER

Compulsory procedure that must be followed to avoid life-threatening danger or physical harm.

⚠ WARNING

Compulsory procedure that must followed to avoid injury.

⚠ CAUTION

Compulsory procedure that must be followed to avoid damage to and/or destruction of equipment.

NOTE

For technical requirements that require special attention.

ENVIRONMENT NOTE

To prevent environmental damage.

Disposing of components and batteries

The truck is made up of different materials.

If components or batteries must be replaced and scrapped, they must be:

- disposed of
- treated or
- recycled in accordance with regional and national regulations

NOTE

The documentation provided by the battery manufacturer must be observed when disposing of batteries.

ENVIRONMENT NOTE

We recommend working with a waste management company when disposing of components and batteries.

https://truckmanualshub.com/

https://truckmanualshub.com/

2

Safety

https://truckmanualshub.com/

Safety regulations

These operating instructions, which come with the truck, must be communicated to all those concerned and in particular to personnel responsible for maintenance and driving. The employer must make sure that the forklift operator has properly understood all the safety information.

Please observe the directives and safety regulations attached, in particular:

- Information concerning the use of materials handling trucks
- Regulations concerning traffic lanes and working areas
- Appropriate behaviour, rights and responsibilities of the driver
- Use in particular areas
- Information about the weight and dimensions of pallets or any other container
- Information concerning starting, driving and braking
- Information concerning maintenance and repair
- Regular checks and technical inspections
- Recycling of lubricants, oils and batteries
- Residual risks.

Care is recommended both for the user and the person in charge (employer) with regard to adhering to all safety rules concerning the use of material-handling trucks.

When instructing forklift operators, we recommend the following points are emphasized:

- The features of the truck
- The special accessories
- The specific features of the working environment.

Train the user in how to drive the truck, until it is under proper control.

Then, and only then, proceed to transferring pallets.

Forklift truck stability is guaranteed when the unit is used correctly.

https://truckmanualshub.com/

Safety regulations for handling consumables

Permissible consumables

⚠ WARNING

Consumables can be dangerous.

It is necessary to follow the safety regulations when handling these substances.

Refer to the maintenance data table for the permissible substances necessary for operation.

Oils

⚠ DANGER

Oils are flammable!

- Follow the statutory regulations
- Do not allow oils to come into contact with hot motor parts.
- No smoking, fires or flames!

⚠ DANGER

Oils are toxic!

- Avoid contact and consumption
- In case of inhalation of steam or fumes, breathe fresh air immediately.
- After contact with the eyes, rinse thoroughly with water (for at least 10 minutes) and then consult an eye specialist.
- If swallowed, do not induce vomiting. Seek immediate medical attention.

⚠ WARNING

Prolonged intensive contact with the skin can result in loss of skin oils and cause irritation.

- Avoid contact and consumption.
- Wear protective gloves!
- After any contact, wash the skin with soap and water and then apply a skin care product.
- Immediately change soaked clothing and shoes.

⚠ WARNING

There is a risk of slipping on spilled oil, particularly when combined with water!

- Collect spilled oil immediately using an oil-binding agent and dispose of it in accordance with regulations.

ENVIRONMENT NOTE

Oils are water pollutants!

Always store oil in containers that comply with the applicable regulations.

Avoid spilling oils.

Collect spilt oil immediately using an oil binding agent and dispose of it in accordance with regulations.

Dispose of old oils according to the applicable regulations.

https://truckmanualshub.com/

Hydraulic fluid

⚠ WARNING

During operation of the forklift truck, hydraulic fluids are pressurised and are hazardous to your health.

- Do not spill these fluids!
- Follow the statutory regulations
- Do not allow the fluids to come into contact with hot motor parts.
- Do not allow to come into contact with the skin.
- Avoid inhaling the spray
- Penetration of pressurised fluids into the skin is particularly dangerous if these fluids escape at high pressure due to leaks in the hydraulic system. In case of such injury, seek medical advice immediately.
- To avoid injury, use appropriate personal protective equipment (e.g. protective gloves, industrial goggles, skin protection and skin care products).

ENVIRONMENT NOTE

Hydraulic fluid is a water-polluting substance!

Always store hydraulic fluid in containers complying with the regulations.

Avoid spilling.

Spilt hydraulic fluid should be removed with oil-binding agents at once and disposed of according to the regulations.

Dispose of old hydraulic fluid according to regulations.

Battery acid

⚠ WARNING

Battery acid contains dissolved sulphuric acid. This is toxic.

- Avoid contact and consumption.
- In case of injury, seek medical advice immediately.

⚠ WARNING

Battery acid contains dissolved sulphuric acid. This is corrosive.

- When working with battery acid, always wear protective clothing and eye protection.
- Do not allow any acid to get onto the clothing or skin or into the eyes; if this does happen, rinse immediately with plenty of clean water.
- In case of injury, seek medical advice immediately.
- Immediately rinse away spilt battery acid with plenty of water.
- Follow the statutory regulations

ENVIRONMENT NOTE

- Dispose of used battery acid in line with the applicable regulations.

https://truckmanualshub.com/

Disposal of consumables

ENVIRONMENT NOTE

Materials that have to be disposed of following maintenance, repair and cleaning must be systematically collected and disposed of in accordance with regulations. Observe the national regulations for your country. Work may only be carried out in areas designated for this purpose. Take care to minimise, as far as possible, any impact on the environment.

- Any spillage of fluids such as hydraulic oil, brake fluid or gear lubricant oil must be immediately soaked up with an oil-binding agent.
- The regulations for disposal of used oil are applicable.
- Any spillage of battery acid must be neutralised immediately.

https://truckmanualshub.com/

Emissions

Noise emission values

Calculated during the test cycle performed in accordance with standard EN 12053.

Acoustic pressure level in the driver's compartment			
Truck	L_{PAZ}	=	62 dB (A)
Uncertainty	K_{PA}	±	2.5 dB (A)

NOTE

Lower or higher noise values may occur when using industrial trucks, e.g. due to the mode of operation, environmental factors and other sources of noise.

Vibration characteristics for vibrations to which the body is exposed

The values were determined according to EN 13059 using trucks with standard equipment according to the datasheet (driving over test course with humps).

Specified characteristics for upper limb vibrations	
Vibration characteristics	< 2.5 m/s^2

NOTE

The vibration characteristics for bodily vibrations cannot be used to determine the actual load level of vibrations during operation. This depends on the operating conditions (state of ground, mode of operation etc.) and should therefore be determined on site, where appropriate. It is mandatory to specify the hand-arm vibrations even where the values do not indicate any hazard, as in this case.

https://truckmanualshub.com/

Residual dangers, residual risks

Despite all operational precautions and compliance with standards and rules, the possibility of additional risks when using the truck cannot be entirely excluded.

The truck and all its components comply with the regulations relating to current applicable safety rules.

Persons in the vicinity of the truck must be particularly cautious and react immediately in the event of any malfunction, incident, breakdown etc.

⚠ WARNING

Personnel in contact with the truck must be informed of the risks related to using the truck.

These operating instructions draw your attention to the safety rules.

The risks are:

- Escape of consumables due to leaks, ruptured lines and tanks etc.
- Risk of accident when driving over difficult ground such as slopes, soft or irregular surfaces or in poor visibility etc.
- Falling, tripping etc. when moving on the industrial truck, especially in the wet, with leaking consumables or icy surfaces.
- Loss of stability due to the load being unstable or the load slipping etc.
- Risk of fire and explosion due to batteries and electrical voltages.
- Human error - Disregarding safety regulations.

It is important to adjust the speed of the truck depending on the load and ground conditions.

The stability of the truck has been tested to the latest standards. These standards only take account of the static and dynamic tilting forces that can arise during operation that complies with the specifications and operating rules. Risks caused by misuse or incorrect operation that jeopardise the stability cannot be ruled out in extreme situations.

Stability

Forklift truck stability is guaranteed only if the unit is used according to the indicated recommendations.

It is not guaranteed in the event of:

– cornering at excessive speeds

– moving with the load raised

– moving with a load that is protruding to the side (e.g. sideshift),

– turning and driving diagonally across descents or ascents,

– driving on descents or ascents with the load on the downhill side,

– loads that are too wide or too heavy,

– driving with a swinging load,

– ramp edges or steps.

https://truckmanualshub.com/

Definition of responsible persons

Operating company

The operating company is the natural or legal person or group who operates the truck or on whose authority the truck is used.

The operating company must ensure that the truck is only used for its intended purpose and in compliance with the safety guidelines set out in these operating instructions.

The operating company must ensure that all users read and understand the safety information in these instructions.

The operating company is responsible for the scheduling and correct performance of regular safety checks.

It is recommended that these checks comply with national performance specifications.

Specialist

A specialist is deemed to be:

- A person whose experience and technical training has allowed him to develop relevant knowledge of industrial trucks
- A person who is also familiar with national health and safety regulations and generally recognised technical directives and conventions (standards, VDE regulations, technical regulations of other European Union member states or countries that are signatories to the treaty that established the European Economic Area). This expertise allows him to assess the condition of industrial trucks in terms of health and safety

Drivers

This truck may only be driven by suitable persons who are at least 18 years of age, have been trained in driving, have demonstrated their skills in driving and handling loads, and have been specifically designated to drive the truck. Specific knowledge of the truck is also necessary.

Driver rights,duties and rules of behaviour

The driver must be duly informed of his rights and duties.

The driver must be granted the required rights.

The driver must wear protective equipment (protection suit, safety helmet, industrial goggles and protective gloves) that is appropriate for the conditions, the task and the load to be lifted. The driver must also wear safety footwear to be able to drive and brake in complete safety.

The driver must be familiar with the operating instructions and have access to them at all times.

The driver must:

- Have read and understood the operating instructions
- Have familiarised himself with safe operation of the truck
- Be physically and mentally able to drive the truck safely

⚠ DANGER

The use of drugs, alcohol or medications that affect reactions impair the ability to drive the truck.

Individuals under the influence of the above-mentioned substances are not permitted to perform work of any kind on or with the truck.

https://truckmanualshub.com/

Prohibition of use by unauthorised persons

The driver is responsible for the truck during working hours. He must not allow unauthorised persons to operate the truck.

When leaving the truck, the driver must secure it against unauthorised use.

https://truckmanualshub.com/

Safety tests

Regular safety inspection of the truck

Safety inspection based on time and extraordinary incidents ▷

The operating company (see chapter entitled "Definition of responsible persons") must ensure that the truck is checked by a specialist at least once a year or after noteworthy incidents.

As part of this inspection:

- A full check of the technical condition of the truck in terms of accident safety must be performed
- The truck must be thoroughly checked to detect any damage that may have been caused by improper use
- A test log must be created.

The results of the inspection must be retained until at least a further two inspections have been carried out.

The inspection date is indicated by an adhesive label on the truck.

– Arrange for the service centre to perform periodic safety inspections on the truck.

– Observe the guidelines for tests carried out on the truck in accordance with FEM 4.004.

The operator is responsible for ensuring that any defects are remedied immediately.

– Contact your service centre.

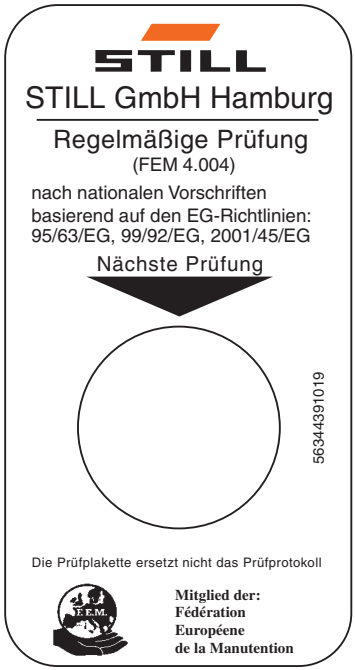

0000_003-001_V3

NOTE

Observe the regulations in force in your country.

https://truckmanualshub.com/

3

Overviews

https://truckmanualshub.com/

Overview

General view of the truck

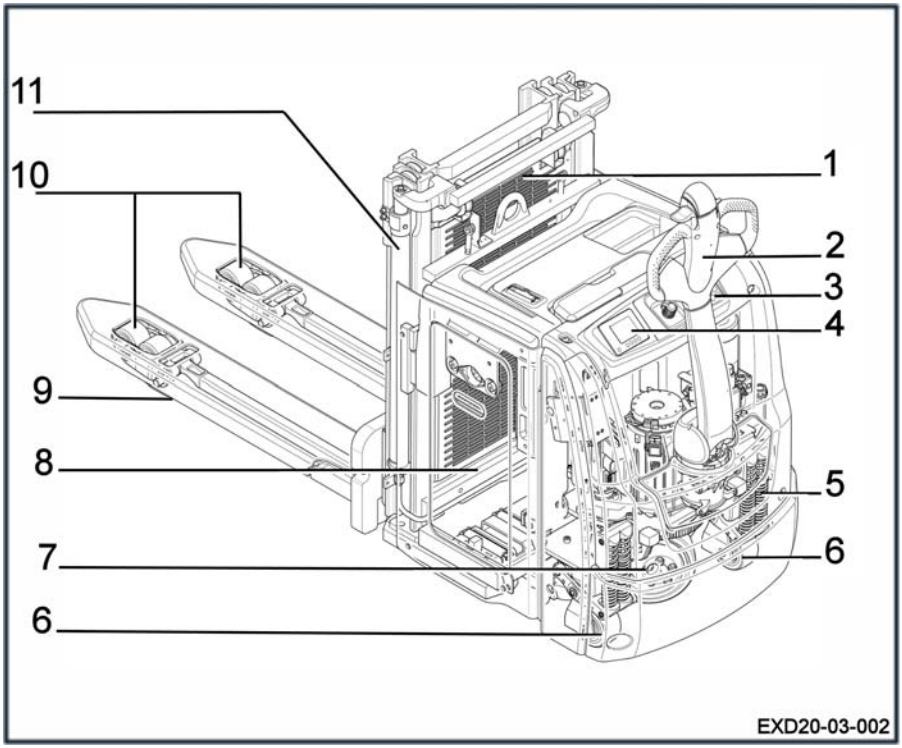

1	Protective screen	7	Drive wheel
2	Tiller	8	Battery compartment
3	Key switch or electronic key	9	Forks
4	Display	10	Load wheels or bogies
5	Stabilisers	11	Mast
6	Stabiliser wheel		

https://truckmanualshub.com/

General view of the technical compartment

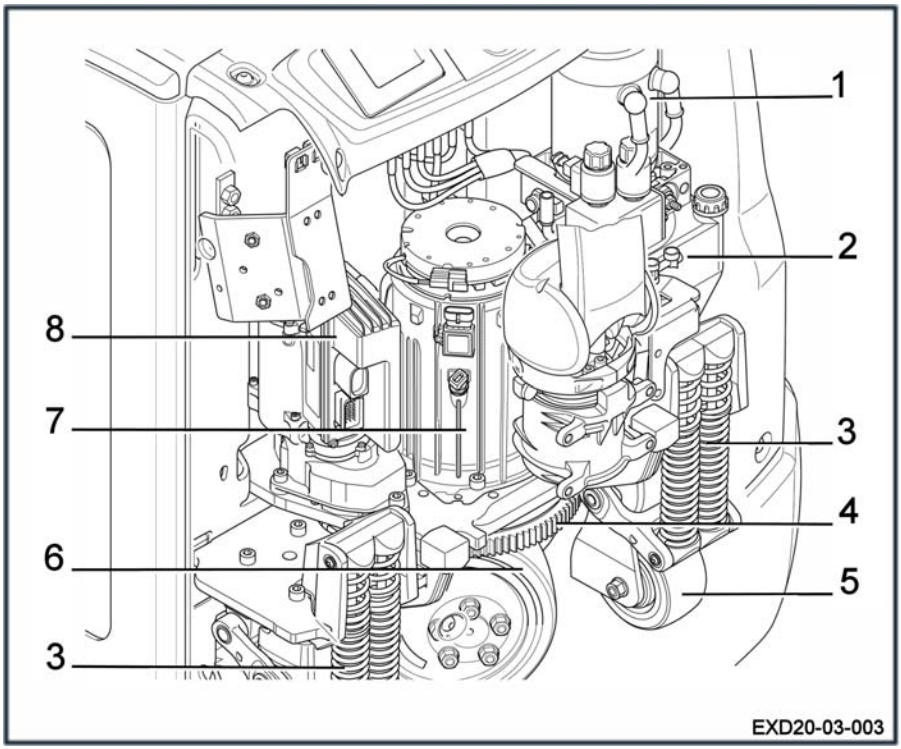

1	Pump-motor unit	5	Stabiliser wheel
2	Tank	6	Drive wheel
3	Stabilisers	7	Traction motor
4	Turntable	8	ES30-24 steering unit

https://truckmanualshub.com/

Operating and display devices

Driver's compartment

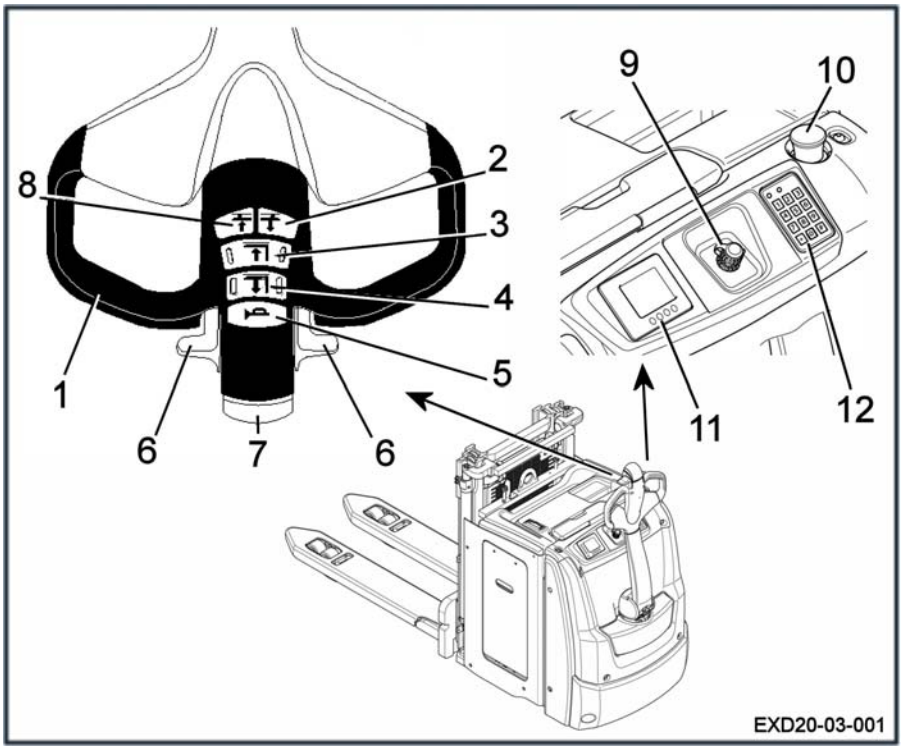

1	Handle	7	Anti-crush safety device
2	Lifting the load arms	8	Lowering the load arms
3	Proportional lowering of forks	9	Diagnostic connector
4	Proportional lifting of forks	10	Emergency stop button
5	Horn	11	Display
6	Drive switch	12	Key switch or electronic key

https://truckmanualshub.com/

Display-operating unit

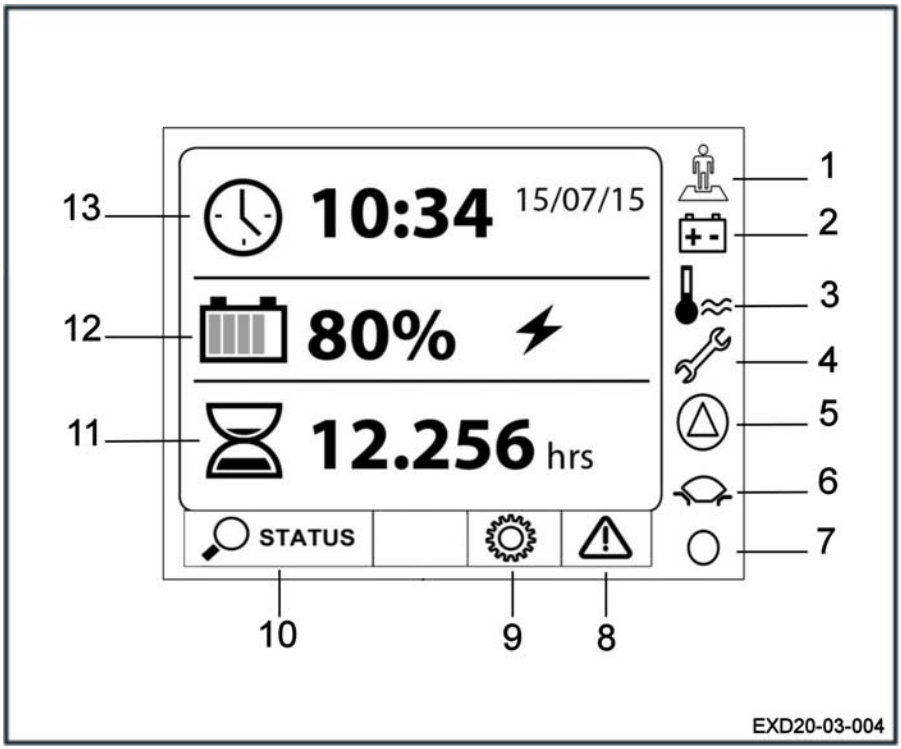

1	Operator present indicator light (depending on the model of the truck)	7	Activity indicator light
2	Battery indicator light	8	Error Code menu
3	Temperature indicator light	9	Settings menu
4	Settings indicator light	10	Truck status menu
5	Warning indicator light	11	Display of the operating time of the truck
6	Drive programme indicator light	12	Display of the battery charge
		13	Display of the date and time

https://truckmanualshub.com/

Electronic key (option)

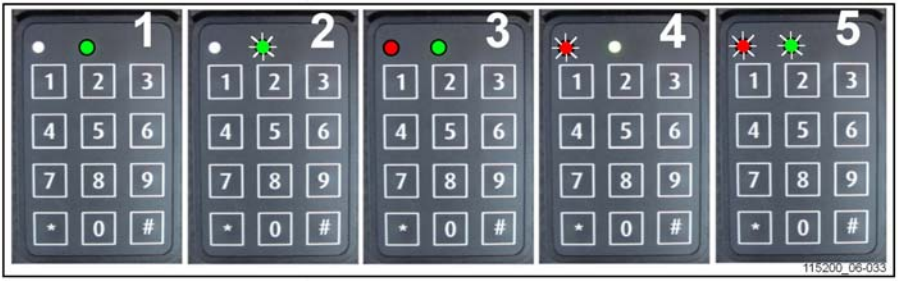

1 Switch ON (operating mode)
2 Switch OFF and awaiting code
3 Programming mode active
4 Key fault or incorrect code
5 Time delay of automatic switch-off

Operation	Enter	Status of LEDs	Comments
USE			
ON	* 1 2 3 4 5 # (by default)	○ red off ● continuous green (1) (correct PIN) ● red flashing ○ green off (4) (incorrect PIN)	1 2 3 4 5 default PIN
OFF	# (3 seconds)	○ red off ● green flashing (2)	Truck power off

PROGRAMMING (truck switch OFF only (2))			
ADMINISTRATOR CODE ESSENTIAL FOR ALL ELECTRONIC KEY SETTINGS	* 0 0 0 0 0 0 0 0 # (by default)	● continuous red ● continuous green (3)	Once the LEDs have gone out, the electronic key automatically reverts to "operating mode".
New operator code	* 0 * 4 5 6 7 8 #	○ red off ● green flashing (2) (code accepted)	Example of new operator code: 45678
Allocating operator codes	* 2 * 5 4 3 2 1 #	○ red off ● green flashing (2) (code accepted)	*2*: operator reference 10 options from 0 to 9
Deleting operator codes	* 2 * #	○ red off ● green flashing (2) (deletion accepted)	*2*: operator reference (between 0 and 9)
Modifying administrator codes	* * 9 * 1 2 3 4 5 6 7 8 #	○ red off ● green flashing (2) (code accepted)	

https://truckmanualshub.com/

PROGRAMMING (truck switch OFF only (2))			
Restoring the initial administrator code			To reactivate the default administrator code (00000000), please contact your agent or nearest dealer.
Activating the automatic switch-off	[*][*][2][*][1][#]	● red flashing ● green flashing (5) (5 seconds before switch-off)	Power switches off automatically after 10 minutes (600 seconds by default) if the truck is not in use.
Setting the time delay of the automatic switch-off	[*][*][3][*][6][0][#]	○ red off ● green flashing (2) (value accepted)	Example: automatically switches off after 1 minute (60 seconds) if not in use. Minimum setting = 10 seconds/maximum = 3000 seconds
Deactivating the automatic switch-off	[*][*][2][*][0][#]	○ red off ● green flashing (2) (command accepted)	

https://truckmanualshub.com/

Markings

Labels

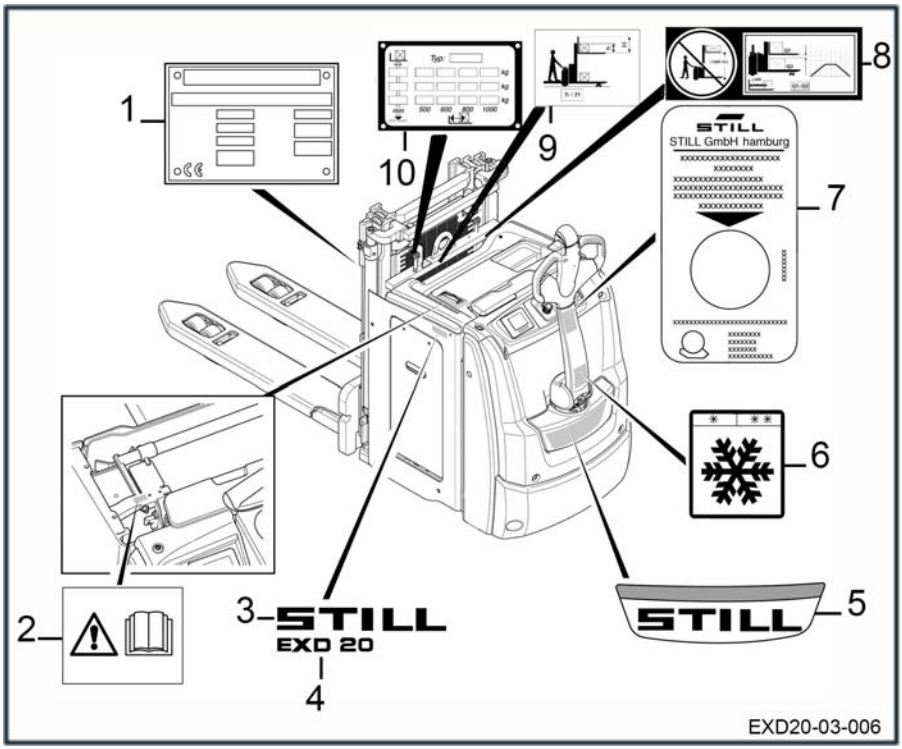

1	Identification label	6	Cold store label
2	Danger instructions label. Consult operating instructions	7	Next inspection label
3	Brand label	8	Double pallet stacker label
4	Model label	9	Double pallet stacker label - loading/unloading
5	Brand label	10	Capacity label

https://truckmanualshub.com/

Serial number

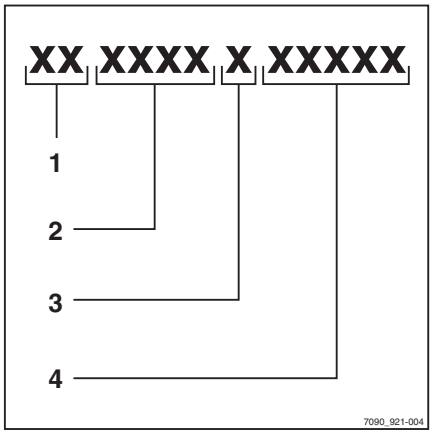

NOTE

Indicate the serial number for all technical enquiries.

The serial number contains the following information:

1 Production location

2 Type

3 Year of production

4 Count number

https://truckmanualshub.com/

https://truckmanualshub.com/

4

Use

https://truckmanualshub.com/

Technical description

EXD20 trucks are intended for stacking and double stacking pallets and/or containers.

Model available:

- EXD20 with proportional lifting and lowering controls with initial lift

Model offered:

The Acc model: Pedestrian mode.

Features

Speed during pedestrian driving:

- **6 km/h** unladen

- **6 km/h** laden

EXD20 capacity:

- In pallet truck mode: 2000 kg
- In pallet stacker mode: 1000 kg
- In double pallet stacker mode: 1000 kg on the forks (main lift) and 1000 kg on the load arms (initial lift)

Refer to the capacity plate.

Drive system

The truck drive system comprises:

- 1.5 kW traction motor
- LAC microprocessor controller to control traction and lift
- ES30–24 steering unit
- 2.2 kW pump unit

Batteries

Power is supplied by:

- A lead battery
- A gel battery
- Or a lithium-ion battery (the truck therefore has specific characteristics)

The types of battery removal that are available are as follows:

- Vertical access
- Side access

These different battery types are not available on all models.

Steering

The ES30–24 electric steering offers driving precision and easier manoeuvring.

The truck is equipped with a 0,185 kW asynchronous steering motor.

The steering is controlled by a tiller.

Masts

The mast is lifted using the proportional tiller control.

These masts are equipped with side lift cylinders.

EXD20 trucks are equipped with:

- S (standard) masts for heights ranging from 1574 to 2424 mm
- D (duplex) masts for heights ranging from 1574 to 2424 mm
- T (triplex) masts for heights of 2136 mm

The cylinders are equipped with end of travel dampers, which enable the carriage to be lowered gradually.

Braking

The truck is equipped with two braking systems:

- An electric counter-current brake:

- Upon releasing the drive switch
- By reversing the drive direction
- Controlled by the rear safety button

- An electromagnetic brake:

- Electromagnetic safety brake, controlled by the emergency off switch
- Electromagnetic safety brake, controlled by the upper or lower position of the tiller
- Electromagnetic parking brake, applied when the power supply is cut

Driver's compartment

The tiller groups together control functions: steering, proportional lift, forward and reverse

https://truckmanualshub.com/

traction, initial lift, horn and double throw safety switch.

The various models are equipped with:

- An emergency off switch
- A display
- A diagnostic connector

Equipment available as standard or as additional options:

That can be added to the truck:

- Load backrest
- Load wheels: single wheels or bogies
- Lithium-ion battery
- Slow speed (Creep Speed)
- Central refilling system
- Cold store (-35°C)

https://truckmanualshub.com/

List of checks prior to start-up

⚠ WARNING

Damage or other defects on the forklift truck or attachments (special equipment) can result in accidents.

If damage or other faults are noticed on the truck or attachments (special equipment) during the following inspections, do not use the truck until it has been properly repaired. Do not remove or disable the safety systems and switches. Do not change the pre-set values.

⚠ WARNING

Risk of falling!

When working on high-level parts of the truck, do not use truck components for access or to stand on.

– Use suitable access equipment.

Before start-up, ensure that the truck operates correctly.

To do this, perform the following checks:

– Fork arms or other load-carrying equipment should not show any signs of noticeable damage (for example: bending, cracks, significant wear).

– Check that there are no signs of leaking consumables under the truck.

– Do not restrict the field of vision. Ensure the visible area specified by the manufacturer is observed.

– Attachment parts (special equipment) must be properly secured and function according to their operating instructions.

– Damaged or missing stickers must be replaced in compliance with the marking position table.

– The guard grille must be intact and securely mounted.

– The roller guide rails must be coated in a visible layer of grease.

– The wheels must show no signs of defects or heavy wear. They must be mounted correctly.

– Check that there are no foreign objects that could hinder the operation of the wheels and rollers.

– The warning devices (horn etc.) must work.

– The battery cover must be closed.

– Check that the covers are correctly positioned.

– The chains must be in perfect condition and must be evenly and correctly tensioned.

– The operator must be qualified to drive the truck. The operator must be able to reach the controls and operate them (especially the anti-crush device). Do not obstruct access to the controls.

Please inform your supervisor if you notice any defects.

https://truckmanualshub.com/

Starting up

NOTE

- *Check that the battery hood is closed*
- *Check that the battery is locked*

– Check that the battery is connected

– Check that the battery compartment hood is closed and locked correctly.

– Release the emergency off switch (1) if it has been pressed. ▷

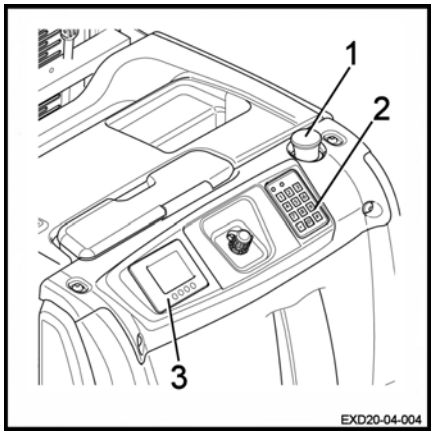

– Turn the key (2). For models equipped with an electronic key or the FleetManager™ option, enter the PIN.

The display (3) switches on. The truck is ready for operation. The brake is automatically disengaged.

– Lower the tiller then reposition in the rest position to unblock truck use.

– Raise the load arms several centimetres.

NOTE

Always adjust your speed to suit the route, any dangers and the load. Use the truck on ground that has the correct surface and hardness.

DANGER

Risk of sparks

Using the truck with the battery hood open is prohibited.

WARNING

Risk of accident or loss of load

Driving on slopes steeper than 10% is prohibited due to braking capacity and stability. The load being transported could tip over.

https://truckmanualshub.com/

– Tilt the tiller in the driving area (3). ▷

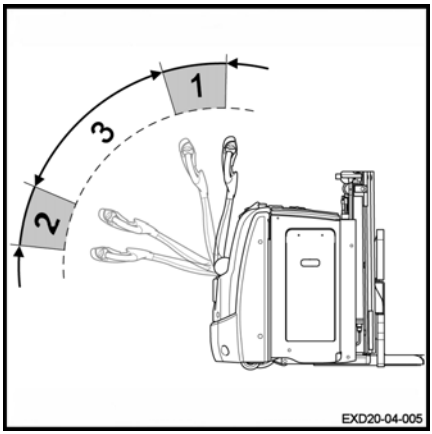

NOTE

In areas (1) and (2), the electromagnetic brake is applied and it is not possible to drive the truck.

https://truckmanualshub.com/

Checks and actions prior to commissioning

Checking the anti-crush safety device

Anti-crush safety function

The machine moves in the opposite direction when the anti-crush button (2) is pressed.

If the truck is being operated in narrow areas (such as in a lift for example), the operator may get stuck against the wall if care is not taken. Without an anti-crush safety device, the tiller could injure the operator.

The truck immediately moves off in the opposite direction when the anti-crush device on the tiller head comes into contact with the driver's body. When the operator moves away from the anti-crush safety device, the machine stops even if a drive direction is selected again.

Normal operation may be resumed after releasing the drive switches.

Checking the anti-crush safety device ▷

⚠ WARNING

Ensure that the test zone is free of people and objects, both in front of and behind the truck.

– Move the drive switch (1) or (3) to move the truck towards you.

– Operate the anti-crush safety device (2).

The truck stops and accelerates in the opposite drive direction.

– Release the anti-crush safety button.

The truck stops.

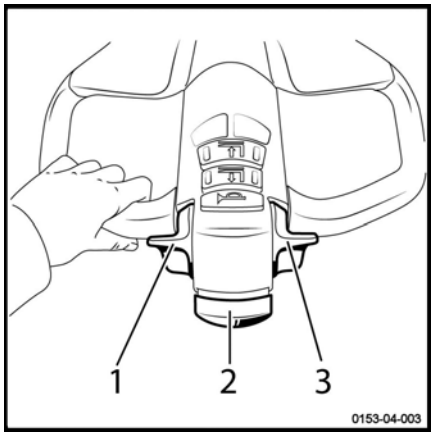

https://truckmanualshub.com/

Checking the emergency shutdown ▷

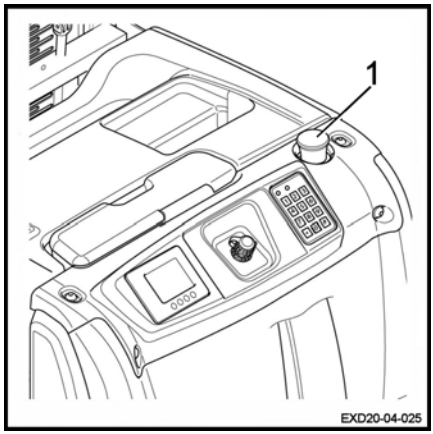

To check the operation of the emergency off switch, proceed as follows:

– Start up the truck.

– Drive the truck.

– Press the emergency off switch (1).

- The truck stops immediately.
- The truck power supply is cut.
- The electrical controls and motors are no longer supplied with power.

– Pull the emergency off switch (1).

The functions are available again.

NOTE

Ensure that the stabiliser wheels operate correctly. This adjustment influences braking effectiveness.

Checking the brake ▷

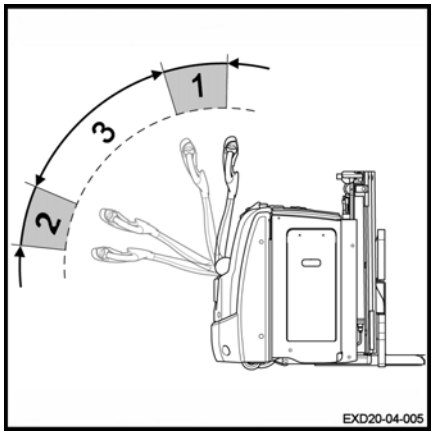

NOTE

Perform this check on a flat surface.

– Drive the machine forward.

– Tilt the tiller in areas (1) and (2).

In these two areas, the machine is braked and the drive unit is no longer powered.

Releasing the tiller in the drive area (3) sends the tiller into area (1) and cuts traction.

https://truckmanualshub.com/

Checking the horn

▷

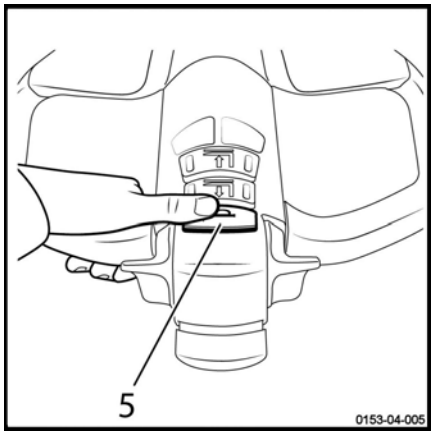

– Press the horn button (5) located on the upper part of the tiller.

– The horn sounds.

https://truckmanualshub.com/

Truck operating instructions

The trucks are designed for indoor and outdoor use in non-hazardous atmospheres. The temperature should be between -10°C and +45°C and the relative humidity of the air less than 95%.

NOTE

A cold store option is available for lower temperatures.

The places where the truck is used must comply with the applicable regulations (condition of the ground, lighting etc.).

The trucks must be used on dry, clean and flat ground.

Before using the truck, it is essential to check the working environment. This check can take the form of visual inspection.

The work area must be clear. The truck's path must be free of obstacles and people.

The operator must be alert to anything that might prevent manoeuvres being carried out safely. The following may create a potential danger:

- A person near the truck
- A person below the forks when they are raised
- The operator must not use an MP3 player or any other electrical equipment that could impair awareness of his/her surroundings
- There must be no signs of oil or grease on the floor

The operator must take care when transporting a load. The load dimensions can interfere with manoeuvres and restrict the field of vision. The speed of the truck must also be reduced as the truck could tip over when breaking or cornering.

The loads must be consistent, with a maximum recommended height of 2 m.

For uses other than those shown above, please consult the After-Sales Service Centre.

It is important to use pallets that are in good condition.

Speed must be reduced when moving over obstacles to prevent the truck from becoming unbalanced and vibrations in the operator's arms.

The trucks can drive across ramps and shallow inclines. With an initial lift, they can cross larger obstacles.

⚠ WARNING

Risk of loss of stability

– Always adapt your driving to the ground conditions (uneven surfaces etc.), particularly hazardous working areas and the load.

NOTE

- *To prevent the bottom of the load lift system from scraping the ground, always move the forks to the raised position before setting off*
- *Always switch off the ignition before leaving the truck*
- *The mast protective screen must always be correctly positioned, properly secured and clean*

⚠ WARNING

Risk of damaging the truck

Ensure that the height of the mast is lower than obstacles (racks, doors etc.).

⚠ WARNING

Risk of injury

Always keep your hands on the controls. Never put your hands near moving parts and assemblies without first lowering the load arms to the ground and disconnecting the battery.

For effective protection, safety shoes must be worn.

Do not climb on the hoods of the truck (battery, chassis etc.).

https://truckmanualshub.com/

⚠ WARNING

Driving safety guidelines:

- The driver must drive slowly around corners and when entering narrow passageways.
- The driver must always maintain a safe braking distance from vehicles or people in front of him.
- The driver must avoid stopping suddenly, making U-turns too quickly and overtaking in dangerous areas with poor visibility.

⚠ CAUTION

Risk of injury

Before using a side access truck, check that the battery is correctly locked.

https://truckmanualshub.com/

Using the display-operating unit

Selection buttons

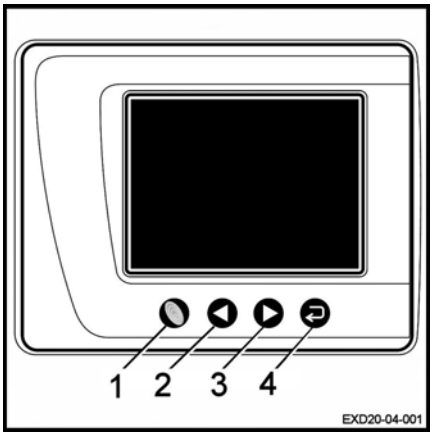

The operator selects the menus using the four selection buttons:

- The **Blue Q** button (1) to select Blue Q mode, hare mode or tortoise mode
- The **left arrow** button (2) to scroll left through the drop-down menu
- The **right arrow** button (3) to scroll right through the drop-down menu
- The **confirm** button (4) to confirm the high-lighted choice on the screen

Operation of the display unit

Managing battery charging

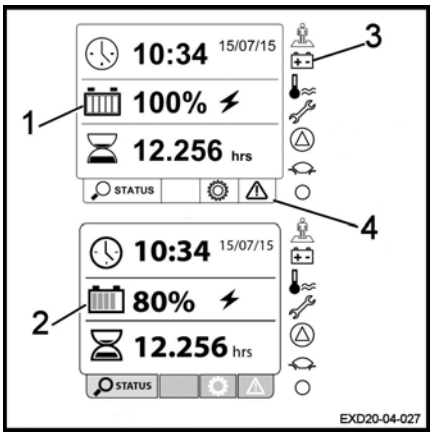

The operating unit shows the battery charge level.

The operator can refer to the battery icon (1) or (2).

The number of bars shown indicates the battery charge level.

- From 0 to 20%: 1 bar.
- From 21 to 40%: 2 bars.
- From 41 to 60%: 3 bars.
- From 61 to 80%: 4 bars.
- From 81 to 100%: 5 bars.

The **Battery** indicator light (3) comes on in the event of a deep discharge of the battery or in the event of a fault.

Two distinct warnings may be displayed if the battery charge is insufficient:

- 1) Less than 25% of charge remaining: The icons (3) and (4) flash and an audible beep sounds. A warning message appears at the icon (4) and remains on until the battery is charged.
- 2) Less than 20% of charge remaining: Three regular beeps sound, lifting is

https://truckmanualshub.com/

restricted, the (3) icon flashes and the (4) icon remains illuminated with a new warning message.

Temperature, settings and warning lights

The **Temperature** light (1) comes on in the event of overheating of the traction motor or the controller.

A warning is shown on the display.

The **Settings** light (2) comes on to indicate the date of the next maintenance.

A warning is shown on the display.

The **Warning** light (3) comes on in the event of a fault in a truck component.

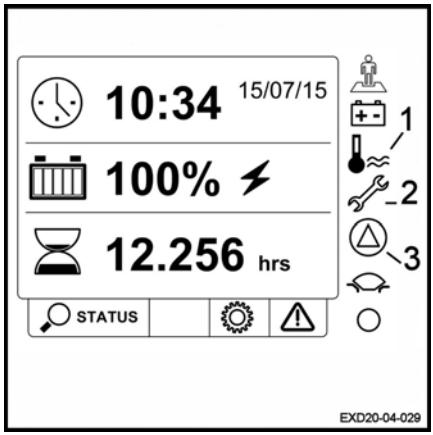

Drive program

The **Drive program** light (1) is permanently illuminated when a travel mode is selected.

There are three different drive modes:

- Tortoise mode (2)
- Hare mode (3)
- Blue Q mode (4)

The icon of the drive mode selected appears on the display.

– Select the desired drive mode using the navigation keys.

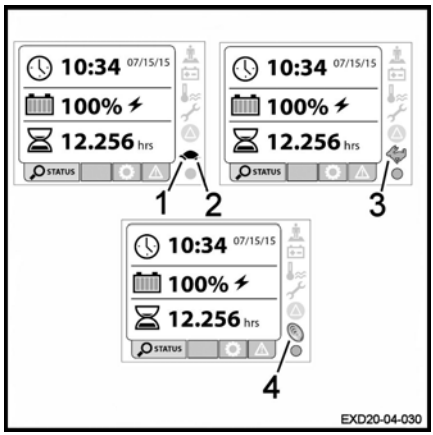

https://truckmanualshub.com/

Activity indicator

The **Activity indicator** light (1) flashes continuously while the truck is in operation.

When the indicator is off, the display unit is locked or frozen. A warning is shown on the display.

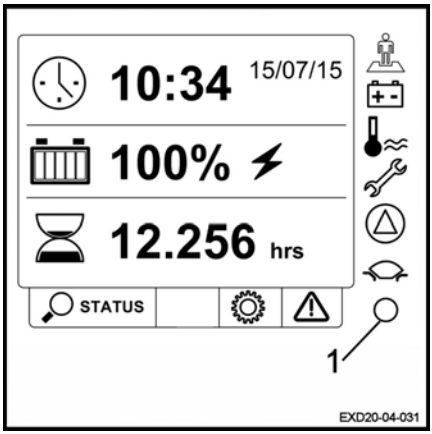

Settings menu

It is possible to access different settings through the Settings menu.

– Select the **Settings** menu (1).

This menu allows access to a drop-down menu (2) consisting of:

- Language
- Unit
- Date format
- Date
- Time
- Adjustment of the Load Management warning sounds
- Adjustment of the contrast
- Adjustment of the brightness

– Select the desired option

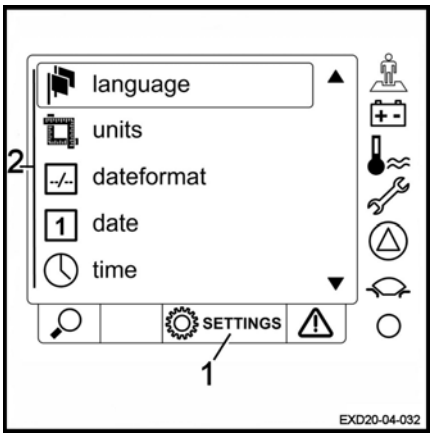

https://truckmanualshub.com/

Error codes menu

It is possible to access error messages that are disrupting the operation of the truck.

– Select the **Error messages** menu (1)

The operator can access the error codes. If several codes are affecting the truck, the operator can scroll through several successive displays.

The number of error messages is indicated at the bottom of the display (2).

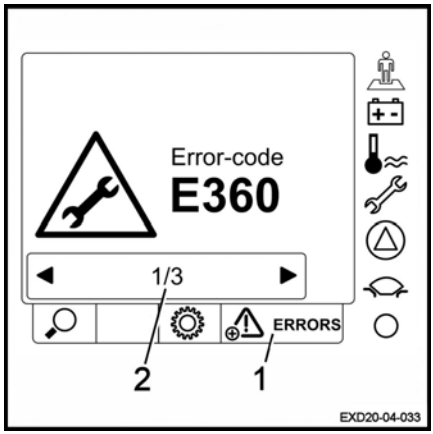

Start-up screen

In addition to the various menus and lights mentioned above, additional data is available:

- The **Truck status** menu (1) displays the truck menu.
- The **Hourglass** icon (2) indicates the operating time of the truck.
- The **Clock** icon (3) indicates the time and date.

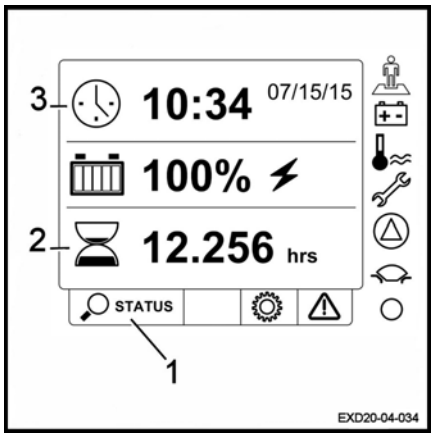

https://truckmanualshub.com/

Driving safety guidelines

Behaviour when driving

Operators must obey the same rules within the plant as on the road. They must drive at speeds appropriate for the driving conditions.

Therefore, they must drive slowly:

- When cornering
- Through narrow passageways
- Through swing doors
- In low-visibility areas
- When the roadway is uneven

Operators must always maintain a safe braking distance from vehicles or people in front of them. They must always maintain control of the truck. They must avoid sudden stops, making fast U-turns, overtaking other vehicles in potentially hazardous or low-visibility areas.

Driving the truck while sitting on the dashboard is prohibited. The operator must be resting against the seat.

These trucks are designed to be used as a pallet stacker, double pallet stacker and pallet truck. Therefore:

- Never sit on the dashboard to drive the truck
- The truck must not be used as a stepladder
- The truck is not designed to transport people
- Operators must always stay within the truck clearance
- Stay in the safety area (working area defined by the manufacturer)
- Ensure the stability of the truck and do not exceed its capacity

Use of a telephone or radio with the truck is permitted.

However, do not use these devices when driving as they may distract you.

Take a test drive on an open surface.

NOTE

Drivers must wear safety shoes that fit properly to be able to drive and brake in complete safety.

https://truckmanualshub.com/

Driving

Defining directions

On a pedestrian-mode double pallet stacker, the conventional directions are:

- Forward travel (1): Tiller direction
- Reverse travel (2): Fork direction

The load is positioned at the rear.

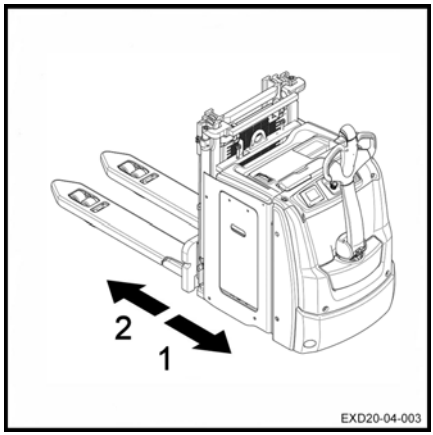

Driving

– Turn the ignition key.

– Lower the tiller in the (3) zone.

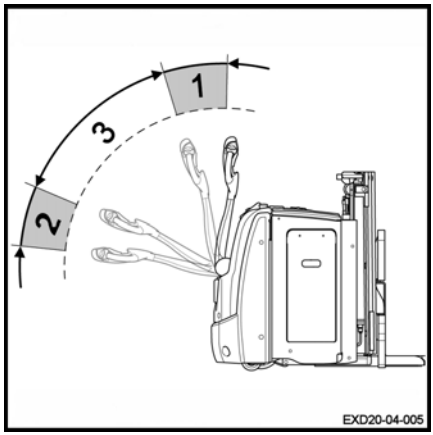

NOTE

The truck is in the drive position in the (3) zone. In the lower zone (2) or the upper zone (1), the brake is applied and the traction motor is switched off.

DANGER

Risk of obstructing the use of the tiller

Do not adjust the A4-sized support to a height that is too low. This could hinder the forklift operator when driving the truck.

Forward travel

https://truckmanualshub.com/

– Press the lower part (1) of the drive switch (3) with your thumb.

– The speed increases with the movement of the drive switch.

– When the drive switch is released, the truck brakes electrically.

Reverse gear

– Press the upper part (2) of the drive switch (3) with your thumb.

– The speed increases with the movement of the drive switch.

– When the drive switch is released, the truck brakes electrically.

▷

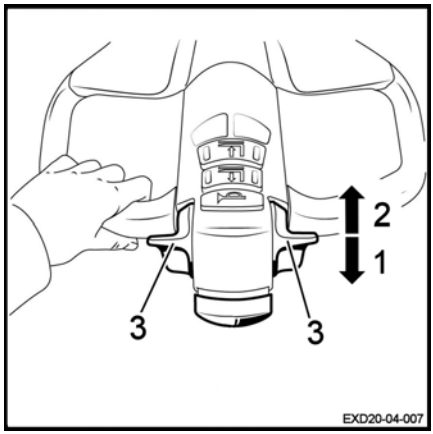

⚠ WARNING

Restricted visibility

During reverse travel, visibility may be restricted. Be very careful. Make sure that the path behind is clear before travelling in reverse.

Reversing the direction of travel

– Push the drive switch in direction (1) or (2).

– Release the drive switch.

– Operate it progressively in the opposite direction until the required speed is reached.

Steering

A long, centred and balanced tiller, fitted with 2 handles, directly controls the drive wheel.

The length of the tiller is designed for ride-on driving.

⚠ WARNING

Risk of serious injury and/or serious damage to equipment

Never use the truck with a defective steering system.

In a straight line, the tiller is centred.

To pivot the truck, proceed as follows:

https://truckmanualshub.com/

– Turn the tiller clockwise: the truck turns to the left in forward travel (1).

– Turn the tiller anti-clockwise: the truck turns to the right in forward travel (2).

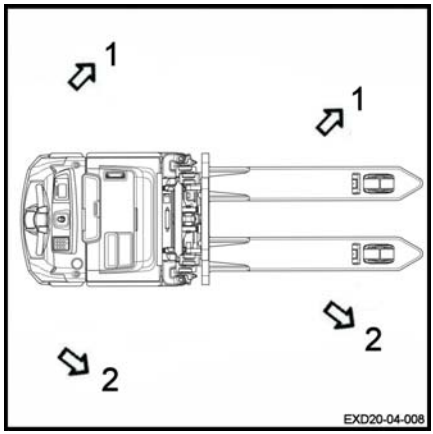

⚠ WARNING

Risk of serious injury and/or serious damage to equipment

Always slow down before negotiating a corner. Approaching a tight corner too fast can cause the truck to overturn.

Braking

⚠ WARNING

The quality of the floor surface affects the braking distance of the truck.

This should be taken into consideration when driving.

Electromagnetic braking

The electromagnetic brake is activated automatically if one of the following conditions is met:

- The tiller is released It is then brought back to the braking position (1) by a gas spring
- The tiller is in the braking position (2) or (1)
- The drive switch is in the neutral position
- The power supply is cut off
- The operator presses the emergency off switch

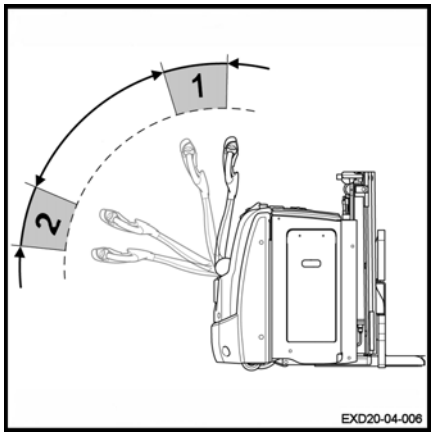

https://truckmanualshub.com/

Braking by reversing the drive direction ▷

Braking can be achieved by reversing the drive direction:

– Move the drive switch (1) or (2) in the opposite direction until the truck stops.

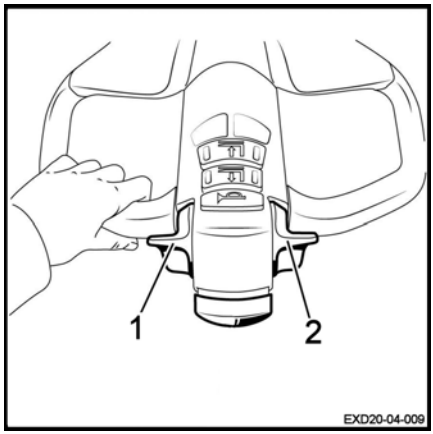

Braking by releasing the drive switch

Braking can be obtained by releasing the drive switch:

– While travelling, completely release the drive switch (1) or (2).

The brake is automatically activated. The truck is immobilised.

Horn ▷

The horn is positioned on the inner side of the tiller.

It is used:

- On routes where there is poor visibility
- At junctions
- In the event of immediate danger

– Press the button (1) .

The horn sounds.

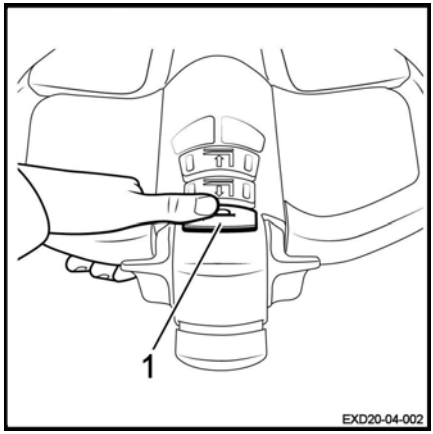

https://truckmanualshub.com/

Drive program

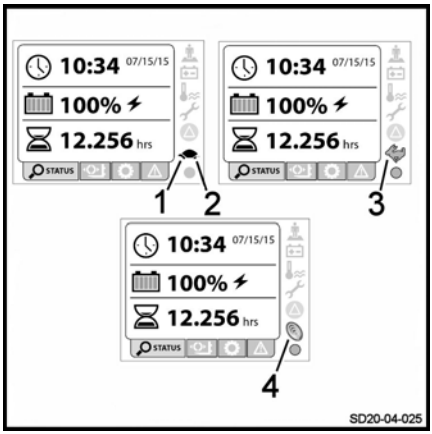

The indicator light (1) is on during operation of the truck. The shape of the indicator light indicates the selected program.

The truck is equipped with three different drive programs:

- Hare mode (3)
- BlueQ mode (4)
- Tortoise mode (2)

NOTE

When the operator restarts the truck, the last mode selected is automatically activated.

NOTE

The drive program is instantly changed. If the operator changes mode while driving the truck, he must remain vigilant.

Hare mode

When Hare mode is selected on the screen, the truck operates at its maximum performance.

Blue Q mode

Selecting Blue Q mode allows you to slightly reduce the performance of the truck:

- The travel speed of the truck is reduced (70% of maximum speed)
- The speed of lifting and lowering the forks is reduced (90% of maximum speed)

This mode allows you to save battery.

Tortoise mode

Selecting Tortoise mode allows you to reduce the performance of the truck:

- The travel speed of the truck is reduced to 6 km/h
- The speed of lifting and lowering the forks is considerably reduced

The different speeds can be adjusted. Contact the After-Sales Service Centre to change these.

https://truckmanualshub.com/

Creep Speed function

This function makes it possible to manoeuvre the truck in confined spaces.

The tiller remains in the vertical position.

– Press the Creep Speed button (1) (tortoise icon) on the tiller. Hold the button down.

– Gently move the drive switch forwards or backwards depending on the manoeuvre to be performed.

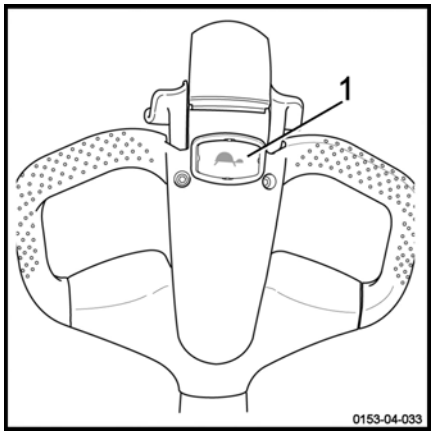

NOTE

The traction speed can be set between 0.5 and 1.5 km/h. Contact the After-Sales Service to change this.

The Creep Speed function cancels automatically when the tiller is in the drive position.

CAUTION

Danger of forklift operator being trapped by the truck.

Gently move the drive switch to adjust the truck speed. This prevents it moving too quickly towards the operator.

NOTE

If the operator releases the Creep Speed button and/or the drive switch, the vertical position of the tiller applies the emergency brake again.

https://truckmanualshub.com/

Using the truck on a slope

NOTE

Incorrect use of the truck on a slope is not recommended. It places particular stress on the traction motor, brakes and battery.

Slopes must be approached with great caution:

- Never attempt a slope whose gradient is greater than that specified in the truck's datasheet.
- Make sure that the ground is clean and has a non-slip surface and that the route is clear.

Travelling up slopes

Always travel up slopes in reverse. The load faces uphill.

Without a load, we recommend that you go up a slope forwards.

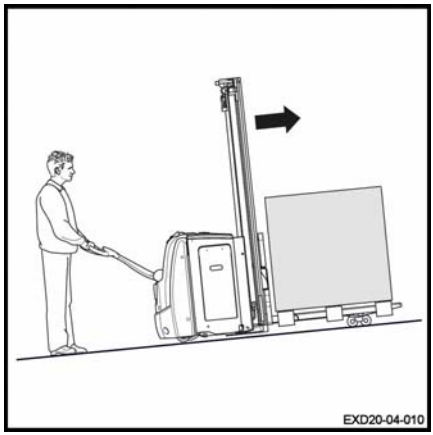

https://truckmanualshub.com/

Travelling down slopes

Always travel down slopes forwards. The load faces uphill.

Without a load, we recommend that you descend a slope forwards.

In all cases, you must travel at a very low speed and brake gradually.

⚠ DANGER

Danger of death and/or risk of serious damage to equipment

Never park the truck on a slope. Never make a U-turn or take shortcuts on a slope.

On a slope, the operator must drive more slowly.

⚠ WARNING

Risk of serious injury and/or serious damage to equipment

Driving on slopes steeper than 10% is prohibited due to braking capacity and stability. The load being transported could tip over.

Starting on a slope

Proceed as follows:

- Move the drive switch in the required direction.
- Release the drive switch to apply the parking brake.

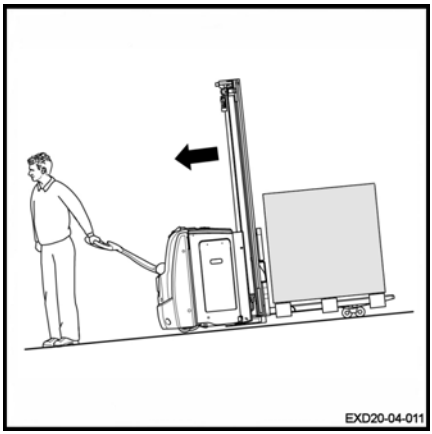

https://truckmanualshub.com/

Operating the FleetManager™ option

Description of the FleetManager option

The FleetManager option allows you to control access to the truck. The option is a fleet management system.

You can access the system:

- Either by using a keypad
- Or by using a reading device for a transponder or an RFID card

The fleet manager sets the access details via the web interface. This affects the transponder cards or PIN codes for the corresponding trucks. It is possible to change the amount of time for which the access authorisation is valid.

Software is also available.

Additional options:

- Shock sensor
- Tools for wireless data management:
  - ▸ GSM(2)GPRS(1) module with antenna

The options available on the truck are:

- Access control
- Access control and shock sensor
- Access control and GPRS module
- Access control, shock sensor and GPRS module

(1) GPRS: General Packet Radio Service

(2) GSM: Global System for Mobile Communication

Shock sensor

This sensor allows you to record the shocks received by the truck.

If the truck receives a shock, it is possible to configure a speed reduction.

The fleet manager is the only person who is able to change certain parameters.

NOTE

Replace the sensor if it is faulty.

GSMGPRS module

The module consists of a GSM modem and an antenna.

The module allows you to:

- Access truck information remotely
- Use geolocation

The data is stored on a server.

Data is transmitted by Bluetooth (default) or by GSM module (optional).

https://truckmanualshub.com/

Commissioning a truck equipped with the FleetManager™ option

Commissioning a truck equipped with a keypad or an electronic key ▷

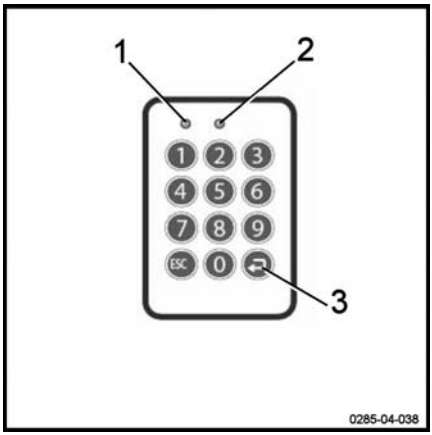

– Turn the switch key to start the truck.

– Enter the PIN code on the keypad. The PIN code consists of five to eight digits.

By default, no PIN code is given as a factory setting.

If the PIN code is correct, the LED (1) is not lit. The LED (2) flashes slowly at two-second intervals (green colour).

No acoustic signal sounds.

– Press the Enter key (3) to confirm.

The truck is now ready for use.

NOTE

In the configuration, the fleet manager can specify that the operator must enter a preliminary code when logging in. The operator can then assess the state of the truck.

Commissioning a truck equipped with an RFID reading device ▷

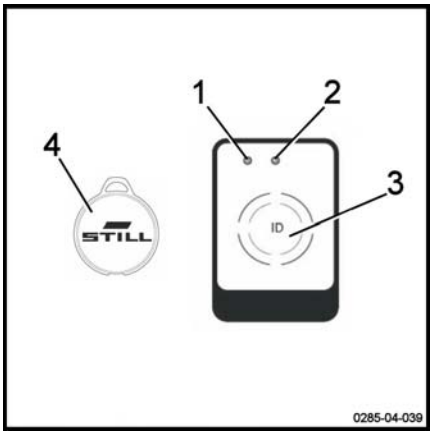

– Turn the switch key to start the truck.

– Place the RFID transponder card or the RFID transponder (4) in front of the reading device (3).

If the card is correct, the LED (1) is not lit. The LED (2) flashes slowly at two-second intervals (green colour).

Two acoustic signals sound.

The truck is now ready for use.

https://truckmanualshub.com/

FleetManager™ option: Colour code for the LEDs

The LEDs can have different statuses and different colours. Below is the list of the most common messages and their meanings.

Malfunction			Cause	Solution
LED status		Signal transmitter		
LED 1	LED 2			
Lit continuously Red colour	Off	A long acoustic signal sounds	**Reading device variant:** no valid access authorisation	Generate a valid access authorisation using the interface
			Keypad variant: no valid access authorisation for the PIN code entered	
			Keypad variant: PIN code entered incorrect or not confirmed using the Enter key	Re-enter the PIN code
Lit continuously Red colour	Flashes once Green colour	A long acoustic signal sounds	The operator has been granted access authorisation. But the period of validity has expired.	Use the interface to enter a new period of validity
			The date of the truck is incorrect	Update the date of the truck
Flashes quickly Yellow colour	Lit continuously Green colour		Memory is 80% full	Clear the memory
Flashes quickly Red colour	Flashes quickly Red colour	A long acoustic signal sounds upon activation	There are several possible causes: - Reading device or keypad not accessible - GPRS module not accessible - Built-in rechargeable battery flat - Memory full	Contact the After-Sales Service Centre

https://truckmanualshub.com/

Malfunction			Cause	Solution
LED status		Signal transmitter		
LED 1	LED 2			
Flashes quickly Red colour	Lit continuously Green colour		A shock has occurred	Reset the shock
Flashes quickly Blue colour	Off		The truck is connected via a Bluetooth link. The operating data is being read. The reading process can take up to five minutes.	The truck is switched on but is not moving. Wait for all of the relevant data to be read. As soon as the LEDs change to a different status, resume work.

https://truckmanualshub.com/

Disconnecting a truck equipped with the FleetManager™ option

NOTE

Operators must not log off intentionally while driving.

WARNING

Access to the truck must be disabled.

Unauthorised users are not allowed to use the truck.

Disconnecting a truck equipped with a keypad or electronic key

▷

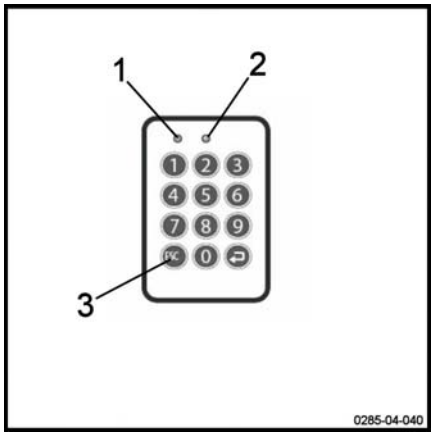

– Park the truck in a safe place.

– Press the button (3) to log off. Keep the button pressed in.

No LEDs light up. A long acoustic signal sounds.

The LED (1) lights up for a second (red colour). The LED (2) is not lit. A long acoustic signal sounds.

The LED (1) is no longer lit. The LED (2) flashes slowly at two-second intervals (green colour). No acoustic signal sounds.

The truck is disabled.

– Turn the switch key to the off position to switch the truck off completely.

https://truckmanualshub.com/

Disconnecting a truck equipped with an RFID reading device ▷

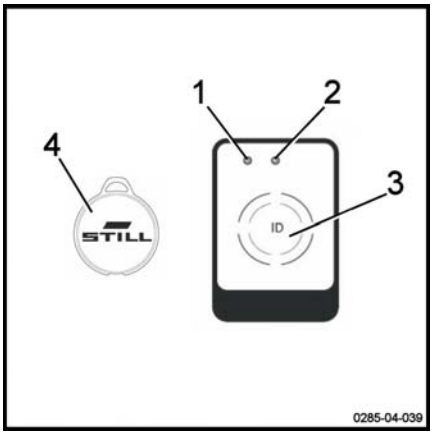

– Park the truck in a safe place.

– Briefly place the RFID card or the RFID transponder (4) in front of the reading device (3).

The LED (1) lights up for a second (red colour). The LED (2) is not lit. A long acoustic signal sounds.

The LED (1) is no longer lit. The LED (2) flashes slowly at two-second intervals (green colour). No acoustic signal sounds.

The truck is disabled.

– Turn the switch key to the off position to switch the truck off completely.

https://truckmanualshub.com/

Transporting loads

Load handling safety rules

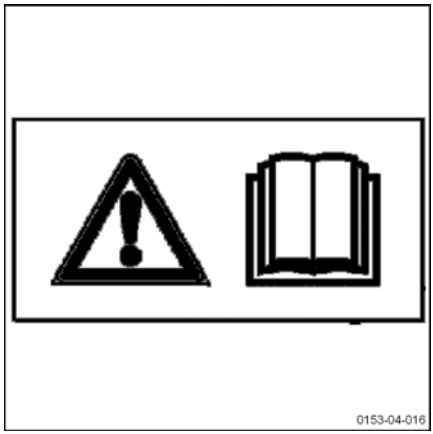

⚠ WARNING

Carefully observe the following instructions before picking up loads. Never touch or stand on moving parts of the truck (e.g. lifting device, pushing devices, work installations or devices for picking up loads).

⚠ WARNING

Take care not to trap hands or feet when operating the truck.

Grabbing a loading unit

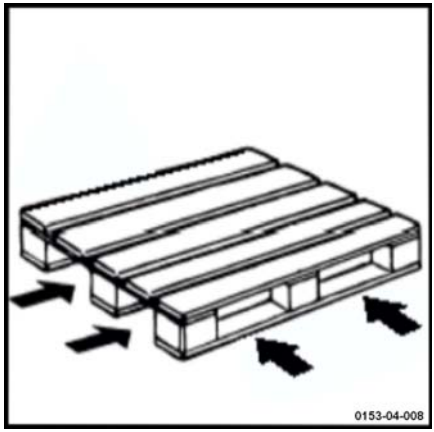

Watch out for the following elements:

- the load must be well-balanced and centred correctly between the fork arms
- the fork arms must be sufficiently slid underneath the load to guarantee stability.

The load must not protrude too far over the fork arms, nor should the fork arms protrude too far out from the load.

https://truckmanualshub.com/

Transporting pallets or other containers ▷

As a general rule, loading units must be transported one by one (e.g. pallets). Transporting several loading units at a time is only authorised:

- when the safety preconditions are fulfilled.
- by order of the monitoring agent.

The forklift operator must ensure that the loading unit is properly packaged. He must only move loading units that have been carefully prepared and that meet the safety requirements.

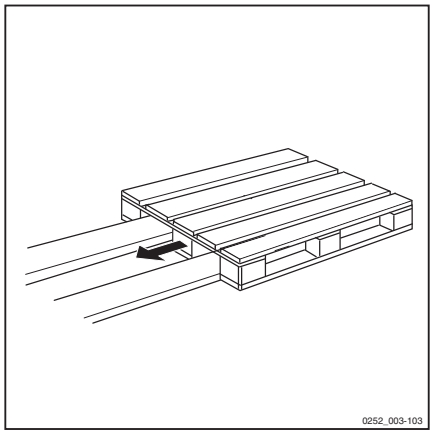

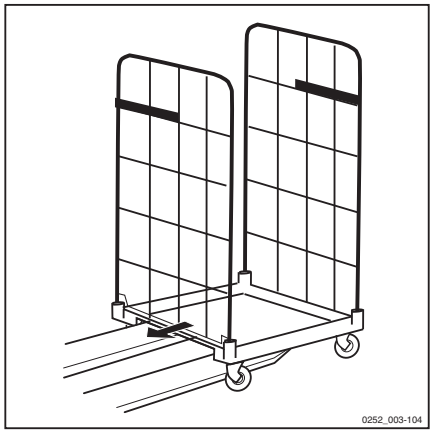

https://truckmanualshub.com/

Progressive stopping of the carriage in the lower position ▷

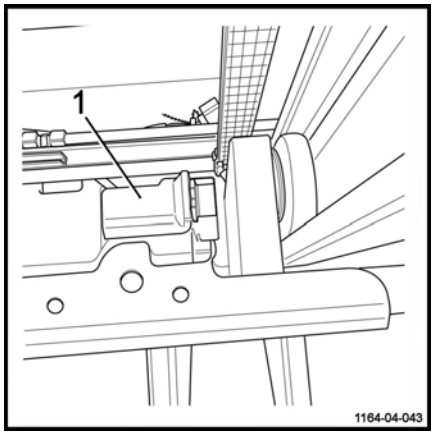

A detector (1) that senses when the position of the forks is 30 cm from the bottom part of the mast triggers an automatic slowing of the lowering action. This detector prevents a violent impact at the end of travel.

– Push the fork lowering control until the carriage is fully lowered.

The progressive shutoff device for the carriage prevents the buffer from being hit at the end of travel.

https://truckmanualshub.com/

Reading the capacity plate

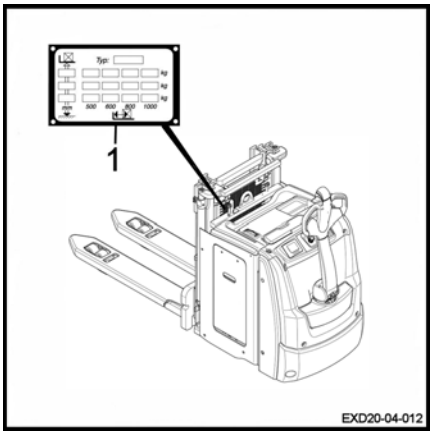

⚠ CAUTION

Risk of loss of control

Before picking up a load, make sure that its weight does not exceed the lifting capacity of the machine.

Refer to the nominal capacity specified on the truck's capacity plate (1).

The values shown correspond to compact, homogeneous loads. They must not be exceeded. If they are exceeded, the stability of the truck and the resistance of the mast and the chassis are no longer guaranteed.

The distance of the load centre of gravity from the back of the fork and the lift height determine the maximum load weight. Check that the pallet is in good condition.

EXD20 capacity

In pallet truck mode: 2000 kg

In pallet stacker mode: 1000 kg

In double pallet stacker mode: 1000 kg on the forks (main lift) and 1000 kg on the load arms (initial lift)

Reading the capacity plate

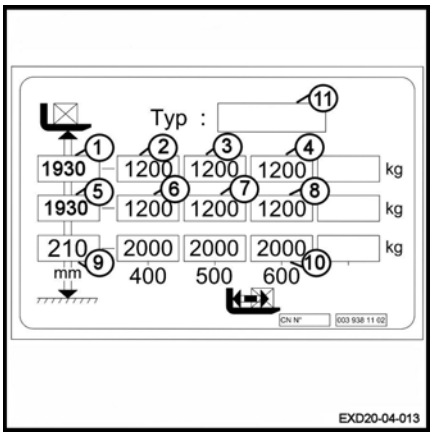

Example with an EXD20 fitted with a duplex mast of 1844 mm:

- 1: Maximum lift height: 1930 mm
- 2: Maximum mast capacity: 1200 kg with a height of 1930 mm (centre of gravity: 400 mm)
- 3: Maximum mast capacity: 1200 kg with a height of 1930 mm (centre of gravity: 500 mm)
- 4: Maximum mast capacity: 1200 kg with a height of 1930 mm (centre of gravity: 600 mm)
- 5: Lift height: 1930 mm
- 6: Mast capacity: 1200 kg with a height of 1930 mm (centre of gravity: 400 mm)
- 7: Mast capacity: 1200 kg with a height of 1930 mm (centre of gravity: 500 mm)
- 8: Mast capacity: 1200 kg with a height of 1930 mm (centre of gravity: 600 mm)
- 9: Maximum lift height: 210 mm with 2000 kg in pallet truck mode

https://truckmanualshub.com/

- 10: Maximum capacity in pallet truck mode:
  2000 kg with a height of 210 mm
- 11: Model

https://truckmanualshub.com/

Lift control elements

⚠ WARNING

Appropriate use of the equipment

Only use the lifting device and the accessories for the work for which they are intended.

The operator must receive instruction on the operation of the load lift system.

⚠ WARNING

Risk of injury

The safety instructions must be strictly adhered to.

Do not touch or stand on moving parts (e.g. lifting device, pushing devices, work installations, load lifting devices).

⚠ WARNING

Risk of injury

Never put your hands near the load lift system.

⚠ DANGER

Risk of accident

The mast protective screen must always be in place, correctly fixed and clean to provide good visibility for the operator.

For safety reasons, the lift and traction functions are inhibited when the tiller is in the rest position.

The truck has two lift systems.

https://truckmanualshub.com/

Raising/lowering the mast

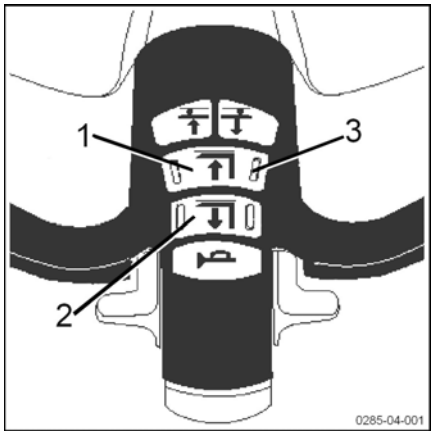

Lifting the mast:

– Press button (2).

The forks are raised.

Lowering the mast:

– Press button (1).

The forks are lowered.

When the lifting control (1) is released, the forks stabilise at the required height.

NOTE

A groove (3) is present on each side of the button. This helps you to feel the button and to identify it even if there is not much light.

Initial Lift

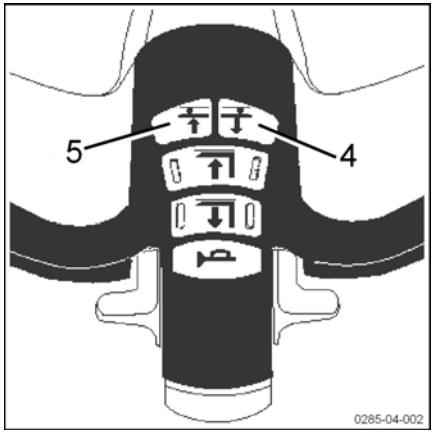

Lifting the load arms:

– Press the button (4).

The load arms are raised.

Lowering the load arms:

– Press the button (5).

The load arms are lowered.

CAUTION

Risk of the load swinging and loss of stability

Do not drive with a load in the raised position without load on the load arms. The high load must be lowered as close as possible to the load in the low position. The operator must lower the forks again before moving the truck.

https://truckmanualshub.com/

Handling a single load

⚠ DANGER

Risk of truck falling

Do not stack the initial lift high.

Before picking up a load

Ensure that the load weight does not exceed the capacity of the truck.

- Refer to the nominal capacity specified on the capacity label of the truck
- Also ensure that the load is stable, well-balanced, attached securely and centred to avoid dropping any part of the load
- Check that the width of the load is compatible with the width of the forks
- Check that the load is not damaged

⚠ CAUTION

Risk of injury

Safety shoes must be worn.

Transporting people is strictly prohibited. Do not use the forks to lift a person.

⚠ DANGER

Risk of tipping

It is essential to slow down when approaching a corner or on wet ground.

⚠ CAUTION

Arrangement of loads

Do not touch nearby loads or loads positioned at the side or in front of the load being handled.

Arrange the loads with a small space between them to prevent them hooking onto one another.

⚠ DANGER

Risk of crushing fingers, hands and arms

Do not put your hands above the mast protection. Do not disassemble the mast protection.

https://truckmanualshub.com/

Picking up a load from the ground

– Use the initial lift to raise a load of up to 2000 kg several centimetres from the ground.

Transporting a load

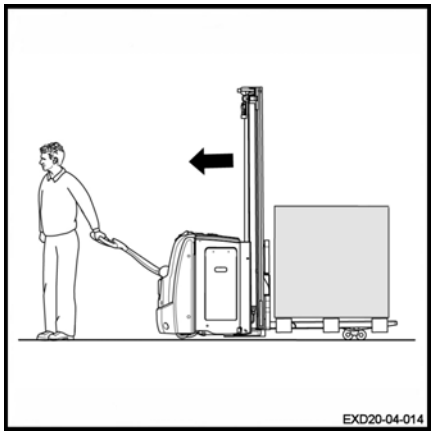

⚠ DANGER

Risk of accident

There must be no one under or near the truck when the load is in the raised position.

⚠ DANGER

Risk of falling

Never transport a load with the forks in the raised position as the truck may become unstable.

Observe the following recommendations:

- Drive forwards for optimum visibility
- Travel up or down slopes with the load uphill. Do not travel across the slope or make a U-turn
- Reverse travel is used for setting down the load. Adjust your speed
- Do not drive with an unstable load
- If visibility is poor, let someone guide you
- Raise the forks slightly in order to pass obstacles
- Be careful of low passageways, low doorways, scaffolding, pipes etc.
- Check that the width of the load is not greater than the width of the aisle

Setting a load down on the ground

Proceed as follows:

– Drive the truck to the required location.

– Carefully move the load into the unloading zone.

– Lower the load until the forks are free.

– Withdraw the truck in a straight line.

– Raise the forks a few centimetres.

https://truckmanualshub.com/

⚠ CAUTION

Risk of falling

Do not touch nearby loads or loads positioned behind the truck.

⚠ CAUTION

Risk of accident

Before you set down the load, ensure that no one is around the truck or the load.

Stacking a load

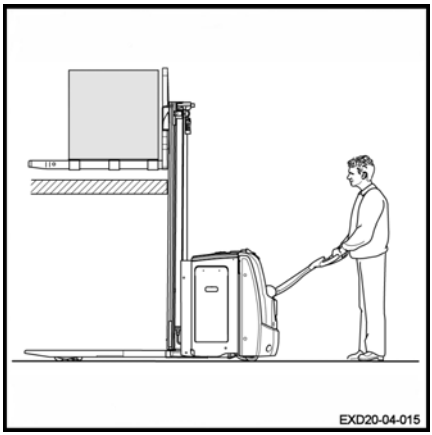

⚠ DANGER

Risk of loss of stability

In order to retain maximum stability and to avoid any risk of overloading the truck, do not use the initial lift control to disengage the load from the storage area.

Proceed as follows:

- Drive the truck to the required location.
- Lower the load arms completely.
- Raise the forks clearly above the level where the load is to be placed.
- Drive the truck forward into the rack.
- Lower the load until the forks are free.
- Withdraw the truck in a straight line.
- Lower the forks again until they are several centimetres from the ground.

⚠ DANGER

Risk of fatal accident

There must be no one under or near the truck when the load is in the raised position.

https://truckmanualshub.com/

Picking up a load at a height

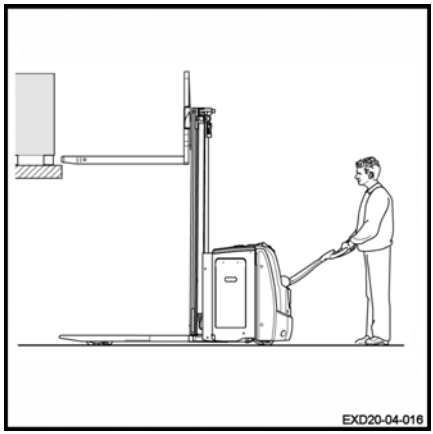

Proceed as follows:

- Drive the truck to the required location.
- Lower the load arms completely.
- Lift the forks to the height of the pallet.
- Carefully move the forks forward under the pallet.
- Lift the forks until the pallet is lifted free of the rack.
- Move slowly to withdraw the forks from the rack.

⚠ DANGER

Risk of hooking the mast on the rack

Do not start lowering the forks until they are completely clear of the rack. The forklift operator must remain vigilant and ensure that there are no obstacles preventing the lowering of the forks.

- With the load on the forks, lower the forks again until they reach the ground.
- Lift the load arms to move the truck.

Before leaving the truck

NOTE

Always stop the truck on level ground away from traffic routes.

Proceed as follows:

- Lower the forks to the lowered position.
- Switch off the ignition (key or electronic key).
- In the event of a prolonged shutdown, press the emergency off switch. Then disconnect the battery.

https://truckmanualshub.com/

Handling two stacked pallets

Double pallet stackers enable two stacked loads to be transported:

- One load on the load arms (initial lift)

- One load on the forks

⚠ DANGER

Risk of loss of stability

The overall weight of the two loads must not exceed the maximum capacity of the machine (refer to the capacity plate).

The heavier load must be placed on the load arms.

Picking up two loads

▷

– Lower the load arms.

– Raise the forks to the correct height to load the upper pallet.

– Carefully move the forks forward into the pallet.

– Raise the forks (1) to lift the first upper load.

– Move slowly in a straight line to withdraw the forks from the rack.

⚠ DANGER

Risk of hooking the mast on the rack

Do not start lowering the forks until they are completely clear of the rack. The operator must remain vigilant and ensure that there are no obstacles preventing the lowering of the forks.

– Lower the forks to move the truck.

– Lift the forks back to a suitable height (to avoid all obstacles).

– Carefully move forward to fetch the second load.

https://truckmanualshub.com/

– Raise the load arms (2) to lift the load from the ground.

– Lower load (Q1) again as close as possible to load (Q2) before driving.

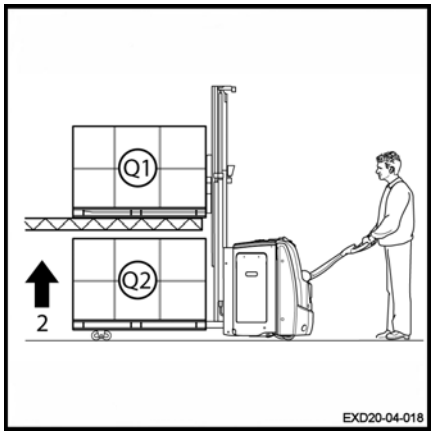

⚠ CAUTION

Risk of crushing goods

Make sure that there is enough space above load (Q2) so as not to crush the top of the pallet.

– Reverse the truck slowly to withdraw the pallets from the racking.

⚠ CAUTION

The total load (Q1) + (Q2) must not exceed 2000 kg. **Q1 must be less than Q2** (for details, read the double pallet stacker label in chapter 4: Capacity).

Transporting two loads

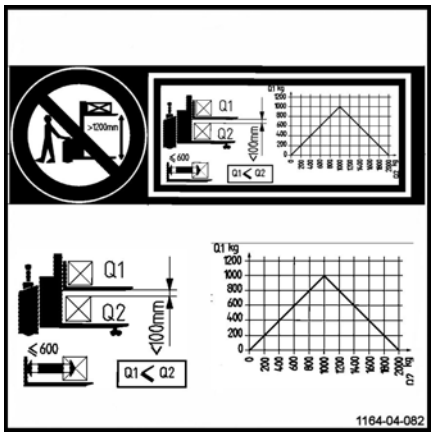

Observe the following recommendations:

- The normal direction of travel is forwards
- Always travel up or down slopes with the load facing uphill
- In the event of poor visibility, move slowly and carefully and ask somebody to guide you
- Do not travel with a load (Q1) on the forks if there is no load (Q2) on the load arms above 300 mm from the ground
- The heavier of the two loads (Q2) must be placed on the bottom on the load arms
- Keep the upper load (Q1) as close as possible to load (Q2) at all times

Setting down two loads

– Carefully move the truck to the required location.

– Raise the forks clearly above the level where the load is to be placed.

– Slowly move the loads towards the racking.

– First of all, place the lower pallet on the ground and then place the upper pallet on the first level.

https://truckmanualshub.com/

– Slowly withdraw the truck in a straight line.
– Lower the forks again.

⚠ WARNING

Lifting and lowering the forks

The initial lift or lowering operation (load arms) is matched by the forks.

Before leaving the machine

⚠ CAUTION

Parking the truck

Always stop the machine on level ground away from traffic routes.

– Lower the forks (unladen) and the load arms to the lowered position.
– Turn off the ignition with the key or the electronic key.
– In the event of a prolonged standstill, press the emergency off switch and disconnect the battery.

https://truckmanualshub.com/

Driving assistance system: Dynamic Drive Control

Description of the Dynamic Drive Control

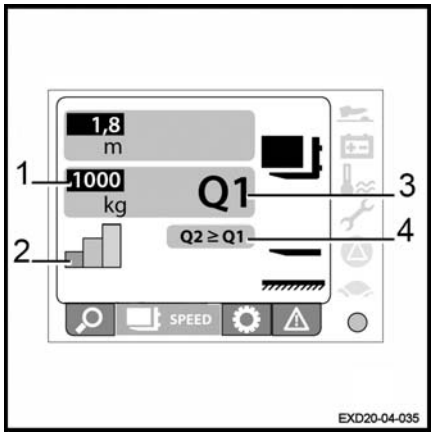

The Dynamic Drive Control option is a system that assists when driving and using the truck.

The forklift operator must remain vigilant under all circumstances and adhere to the truck capacity plate.

⚠ CAUTION

Risk of accident

Despite this option, the forklift operator must remain vigilant. The safety guidelines must be observed.

A specific screen for this option is available on the display. The screen is only displayed when double-stacking is in operation.

No indication of the weight present on the forks is given. Only the maximum weight (1) is communicated when present on the forks.

The load on the load arms, Q2 (4), must be greater than or equal to the load on the forks, Q1 (3).

The maximum speed of the truck depends on the height of the forks.

The vertical bars (2) inform the operator of the speed configuration of the truck. The diagram is displayed only when double-stacking is in operation. It indicates if the speed is high, medium or low.

The speed varies depending on the load on the forks between 0.3 and 1.8 metres. The heavier the load, the lower the speed.

The forklift operator must remain cautious and adjust the speed to suit the environmental conditions.

⚠ CAUTION

Risk of incorrect use of the truck.

The forklift operator must be trained in and familiar with the various features of this option.

https://truckmanualshub.com/

Cold store usage (optional) ▷

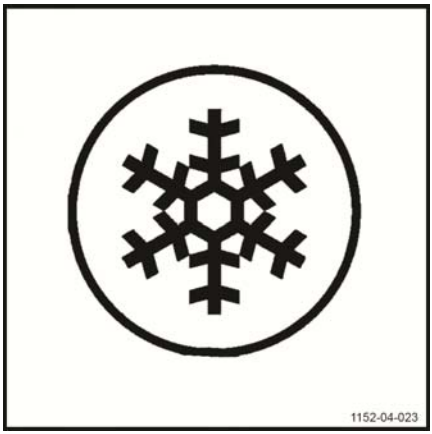

⚠ CAUTION

Standard trucks risk being subject to significant damage if used in extreme conditions.

Only trucks with the Cold Store option may be used inside cold storage. Specific oil designed for cold stores must be used.

These trucks are identified by their Cold Store label.

Area of Use

Trucks with the Cold Store option may be used in two different areas:

- **operating range 1**: the truck can operate at a temperature of -5 °C and, for short periods, at a temperature of -10 °C. It must be parked outside of the cold store.
- **operating range 2 (Entry / Exit applications)**: the truck must be used alternately inside and outside of the cold store. It can withstand temperatures between -30 °C and +45 °C. Specific rules should be followed so as not to damage the truck and to avoid the occurrence of streaming (see the following paragraph). The truck is parked outside of the cold store.

Precautions for Use

The difference in temperature between the cold store and the room temperature zone may result in the formation of condensation water.

This water can freeze when the truck goes back into the cold store and jam the moving parts of the truck.

Streaming occurs if the truck remains outside of the cold store for more than ten minutes. Therefore, it is essential to leave the truck outside of the cold store for 30 minutes so that the condensation disappears.

⚠ DANGER

If the condensation freezes in the cold store, it is prohibited to operate the jammed parts.

This could cause permanent damage to the truck.

https://truckmanualshub.com/

Parking

The truck must be parked outside of the cold store.

Parking inside the cold store could cause serious damage to the electrical and mechanical equipment (seals, hoses, rubber and synthetic parts).

⚠ CAUTION

Do not leave discharged or unused batteries in the cold store.

They could be permanently damaged.

https://truckmanualshub.com/

Before leaving the truck

– Choose a safe and level location.

– Set down the load and lower the forks completely.

The forks must touch the ground.

– Switch off the truck.

The automatic braking is activated.

– Remove the switch key.

⚠ DANGER

Danger of death!

It is prohibited to park the truck with a load in the raised position or the forks in the raised position.

https://truckmanualshub.com/

Handling the battery

Battery type

Trucks can be fitted with different types of battery. Comply with the information indicated on your battery's type plate, as well as with its features.

⚠ WARNING

The weight and size of the battery influence the stability of the truck.

The new battery must weigh the same as the old one. Do not remove extra weight or change its position.

⚠ CAUTION

Be careful not to damage any wiring when replacing the battery.

Order picking

Maintenance personnel

The battery must be replaced by specially trained personnel. Personnel must follow the manufacturer's instructions for the battery, the charger and the truck.

It is also necessary to follow the battery maintenance instructions.

Fire protection measures

⚠ WARNING

Do not smoke or create a flame when handling batteries. There must be no combustible material or tools that produce sparks within a minimum radius of 2 m around the truck and the battery charger.

The work area must be well ventilated. Fire extinguishers must be provided and located near the work area.

https://truckmanualshub.com/

Parking the truck securely

When the battery is being worked on, the truck must be parked safely. The truck can only be restarted when the covers and connectors have been put back in the operating position.

Opening and closing the battery hood

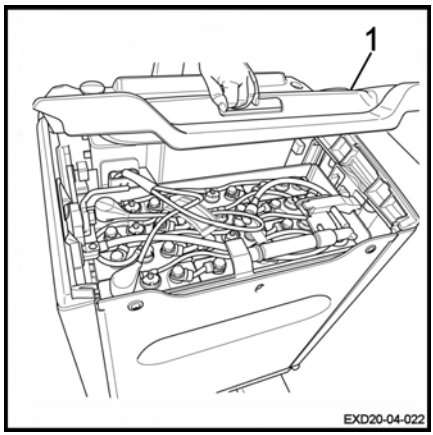

Opening the battery hood

To open the battery hood:

- Immobilise the truck.
- Lower the forks.
- Switch off the ignition (key or electronic key).
- Press the emergency off switch.
- Lift the hood (1) using the handle designed for this purpose.

Closing the battery hood

To close the battery hood:

- Close the hood (1).

⚠ WARNING

Risk of trapping fingers

When closing the battery hood, correctly position your fingers to avoid any risk of them being trapped.

- Ensure that the battery hood is closed securely.

⚠ CAUTION

Risk of sparks

Never drive with the hood open or incorrectly closed.

https://truckmanualshub.com/

Charging the battery using an external charger

⚠ CAUTION

Deep discharging may damage the battery.

– Charge the battery immediately.

The fixed socket on the truck (1) is located above the battery and under the battery hood.

– Park the truck safely.

– Before charging, check the condition of the battery cable and the charger cable. Replace them if necessary.

– Open the hood and leave it open.

– Pull the handle of the battery connector (2) ▷ to disconnect it from the fixed socket on the truck (1).

– Connect the battery connector to the wall-mounted connector.

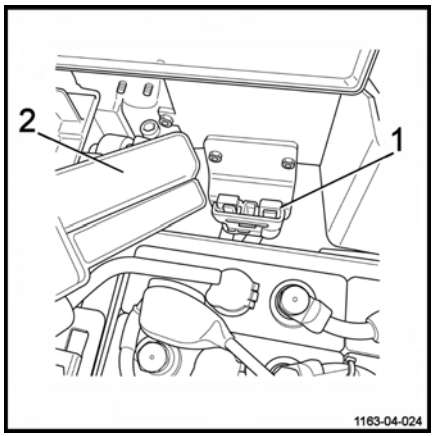

⚠ WARNING

Electrical risk

Only unplug the battery connector from the battery charger when both the battery charger and the truck are switched off.

NOTE

Follow the instructions provided by the manufacturer of the battery and the battery charger (equalising charge).

⚠ WARNING

Risk of damage, short circuit or explosion.

Do not place any metal objects or tools on the battery.

Smoking is prohibited.

⚠ WARNING

The electrolyte (diluted sulphuric acid) is toxic and very caustic.

Follow the safety regulations when handling battery acid.

https://truckmanualshub.com/

⚠ WARNING

Explosive gases are generated during battery charging.

– Make sure that the area is well-ventilated.
– Make sure that the battery hood remains open for the entire time the battery is charging.

https://truckmanualshub.com/

On-board charger

Precautions for installation and use

The on-board charger means you no longer have to use a charging room. This charger can be connected to any 2P+T 230 V 16 A socket. However, before charging this way, the user must ensure that the location selected for charging satisfies all the required safety guarantees:

- The electrical system must comply with standard NF C 15 100.
- The electric wall socket must be a 2 pole + earth 16 A 230 V type that is correctly connected and protected.
- Before charging, check the condition of the connections and cables (retighten, as required).
- Charging must be carried out in an area where there is no condensation or pollution and there must be sufficient ventilation.
- The charger must not be exposed to oil, grease or other similar substances.
- Charging must be carried out with the truck stopped.
- The increase in the temperature of the unit in relation to the ambient temperature is 10°C maximum. The temperature of the expelled air is 25°C maximum. Wait 10 minutes after stopping the charger before touching the unit.
- As the charger is cooled by forced ventilation, do not block the air inlets and outlets. There must be sufficient air circulation to the outside.

The charger is designed:

- To be incorporated inside an industrial truck. The charger must never be used alone (out of the truck).
- To stay permanently connected to the battery.
- To operate in all positions.
- Remain connected to the mains during periods of truck downtime to ensure the availability of the machine.
- To tolerate "opportunity charging".

⚠ CAUTION

Risk of damage to the mains cable resulting in electric shock and/or burns.

Park the truck very close to the wall-mounted mains socket to avoid tensioning the charger's mains cable during charging.

Electrical specifications of the charger

Mains voltage	190 V < U < 260 V
Network frequency	50 / 60 Hz +/-1% (automatic adaptation) No inrush current to the mains connection
Maximum output power	1040 W +/-3%
Maximum output current	35 A +/-2%
Nominal battery voltage	24 V
Tolerance on the voltage of bearing U	1%

Electrical safety

- Protection against reversal of battery polarity: the charger is protected by an output relay. After the battery is reconnected in the right direction, the charger starts charging without requiring human intervention.
- Mains protection: by a 250 V 10 A 5x20 timed fuse. The mains fuse is fitted directly to the electronic card. The user is not authorised to change this fuse. If this fuse is faulty, the charger must be returned to the service centre.

Other charging characteristics

Maintenance charges

If the charger stays connected to the mains, it restarts a charging cycle every 48 hours after the end of the previous charge in order to compensate for self-discharge.

Partial recharging

https://truckmanualshub.com/

The charger adapts automatically to the battery discharge situation and therefore allows any type of partial charging to be carried out ("opportunity charging").

The overcharging calculation takes into account partial recharging. The mixture is always sufficient, without needless water consumption, which prevents premature wear of the batteries (often due to overlong charging periods) and reduces the need for maintenance.

Protection during charging

Mains micro-break protection

If the mains power is cut off, all the existing charging parameters are stored in the memory for 13 minutes. As soon as the mains power returns, charging resumes from the point (I, U) at which it was cut off, with the number of Ah already injected stored in the memory.

If the cut-off period is longer than 13 minutes (the truck could have been used), a complete charging cycle is initialised.

Time protection

If the duration of phases I1 + P + U is more than 16 hours, the charger automatically stops. This can happen when a battery has a short-circuited component. Simply reset the mains to clear the fault.

Temperature safety

As the charger is cooled by ventilation, the air inlets and outlets must never be blocked.

The fan runs when the mains power is connected. It stops when charging is complete or when the mains power is disconnected.

The charger supplies reduced power if the ambient temperature exceeds the usage temperature range in order to protect itself (the charging period will be extended in this case).

The charger stops if the micro-controller detects a temperature measurement fault.

Using the on-board charger ▷

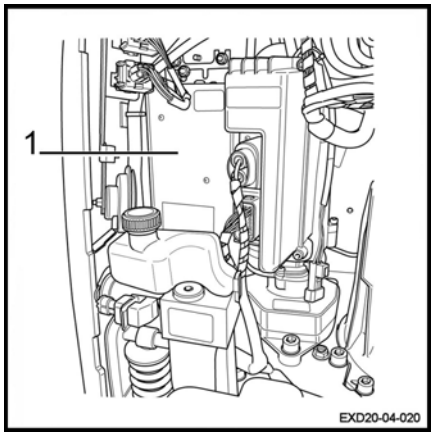

NOTE

The charger is compatible with wet lead and gel batteries with a maximum capacity of 400 Ah.

CAUTION

Electrical danger

Do not disconnect the battery connector during charging (green indicator light flashes).

The truck cannot be operated during charging.

The on-board charger is intended for recharging the battery.

– Switch off the truck

Do not press the emergency off switch. This operation cuts off the circuits and stops the battery from charging.

https://truckmanualshub.com/

– Connect the charger plug (1) to a mains socket.

Phase	Green LED	Red LED
Mains socket disconnected	Off	Off
Charging phases	Flashing	Off
Stopped / Equalisation / Maintenance phase	Continuously lit	Off
Charging process too long	Off	Continuously lit
Charger polarity reversed (+battery and -battery charger cables reversed, with the battery remaining normally connected to the truck assembly)	Continuously lit	Continuously lit
Battery polarity reversed	Off	Off
Selector in neutral position	Flashing	Flashing

⚠ CAUTION

Risk of damaging the equipment

It is strictly prohibited to use an on-board charger other than the one recommended.

⚠ CAUTION

Risk of damage to the mains cable due to frequent handling. Risk of electric shock and/or burns!

The mains cable must be checked regularly as part of periodic statutory checks and maintenance operations.

NOTE

The on-board charger is not compatible with the Cold Store option.

https://truckmanualshub.com/

Adjusting the on-board charger

Charging curve selector

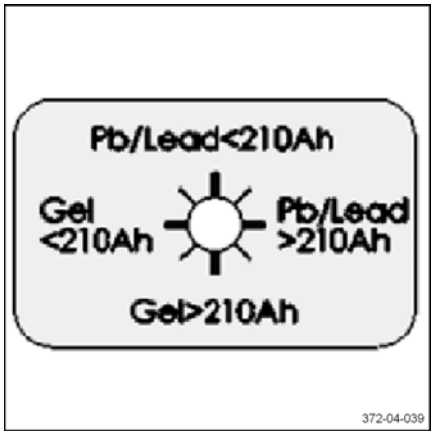

The curve is selected using the selector located on the front face of the charger.

The curve selector is protected by a cap.

The 4 fine lines indicate neutral positions. The charger does not flow and the two LEDs flash simultaneously to indicate that no curve has been selected.

⚠ CAUTION

Risk of premature damage to the battery.

Ensure that the charger setting corresponds to the type of battery.

If the battery is changed, ensure that the setting corresponds to the type of battery.

The four thick lines indicate the four charging curves:

- open lead-acid battery with a capacity less than or equal to 210 Ah
- open lead-acid battery with a capacity equal to or exceeding 210 Ah
- GEL battery with a capacity below 210 Ah
- GEL battery with a capacity greater than 210 Ah

⚠ CAUTION

The charger is supplied in the **neutral** position.

Changing the vertical access battery

To change the battery, proceed as follows:

– Immobilise the truck.

– Lower the forks.

– Switch off the ignition and remove the key.

– Press in the emergency off switch.

– Open the battery hood.

– Disconnect the battery connector.

https://truckmanualshub.com/

– Attach the slinging hooks to the battery compartment.

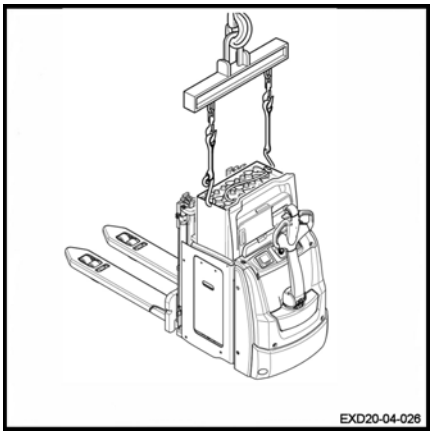

NOTE

Using secured hooks is recommended.

– Lift the battery. Take care not to hook onto the upper bridge piece of the mast.

– Replace the battery.

– Position the new battery in the chassis.

– Remove the slinging hooks.

– Reconnect the battery connector.

– Close the battery hood.

– Return the truck to service.

Changing the side access battery

DANGER

Risk of trapping fingers

It is advisable to wear gloves when changing the battery.

WARNING

Risk of injury

Safety shoes must be worn when changing the battery.

Before handling, ensure that there is nobody around the truck.

To remove the battery, we recommend that you use a fixed roller frame or a truck with extraction rollers (fitted with rollers) for easier handling of the battery.

To change the battery, proceed as follows:

– Immobilise the truck.

– Lower the forks.

– Switch off the ignition and remove the key.

– Press in the emergency off switch.

– Open the battery hood.

– Disconnect the battery connector.

https://truckmanualshub.com/

– Place the connector on the battery cells.

– Unlock the door that is not attached to the side of the battery by lifting the latch (1). Hold the door (2) to prevent it falling.

▷

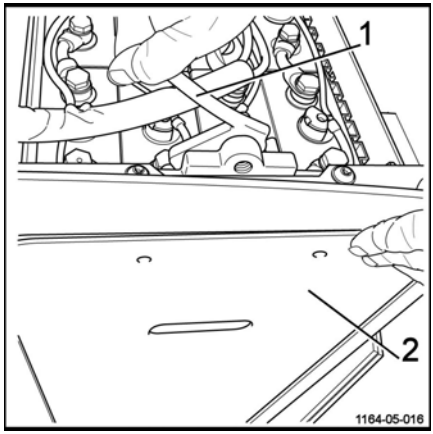

– Remove the door (2) (if this option is selected) and put it to one side.

– Position the truck with extraction rollers or the roller frame in the upright position near the battery compartment on level ground.

▷

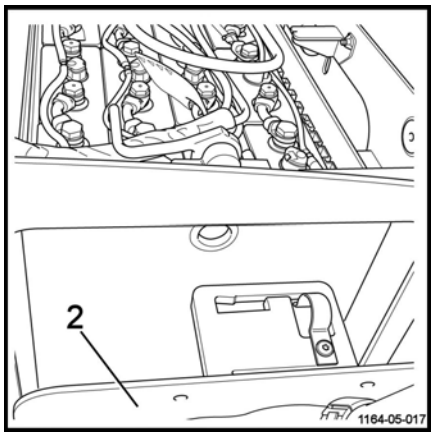

https://truckmanualshub.com/

– Operate and pull the locking handle (2) in the direction indicated by the arrow. ▷

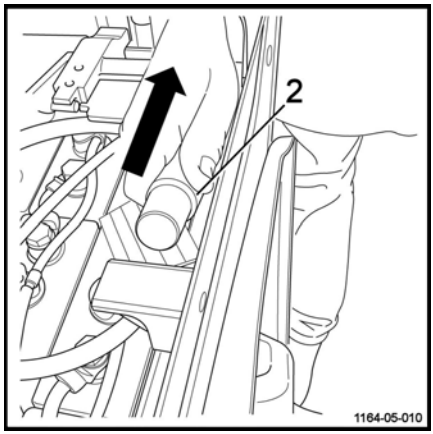

– Lift the locking bar (3) until the battery is freed. ▷

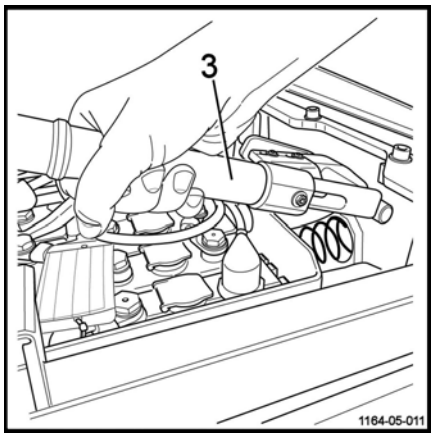

https://truckmanualshub.com/

– Pull the battery onto the truck with extraction rollers or the roller frame
– Replace the battery. Remove the discharged battery and position a charged battery on the roller frame.
– Position the truck with extraction rollers or the roller frame (4) in the upright position next to the battery compartment.

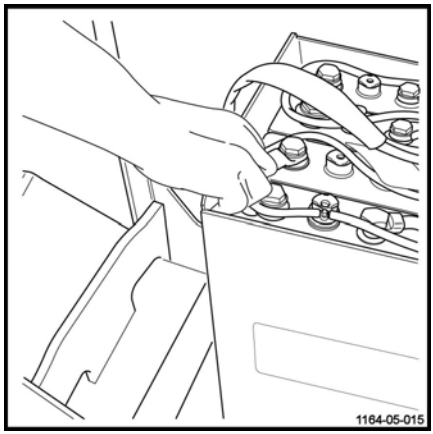

– Push the battery into the compartment.

⚠ DANGER

Risk of trapping fingers

Push the battery from the rear side (A) of the battery. Take care not to trap your fingers by pushing from the top or the side of the battery.

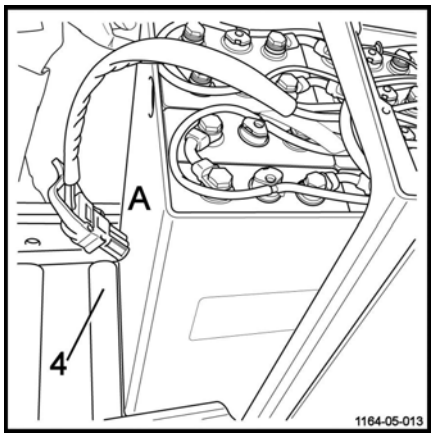

https://truckmanualshub.com/

– Push until a click is heard. The battery is correctly installed. ▷

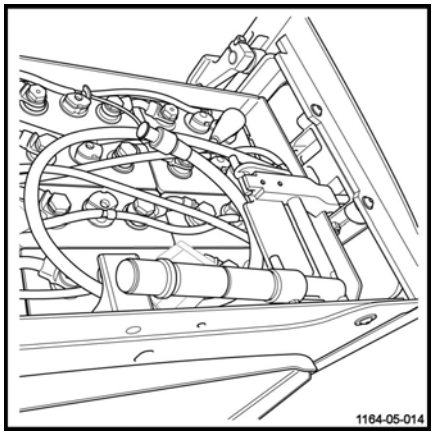

⚠ WARNING

Risk of injury

Ensure that the battery is in the end position and that the hook is correctly holding the battery.

⚠ DANGER

Risk of injury

The battery is correctly positioned but is not yet locked.

– Lower and lock the handle (2) of the locking bar (3) in the direction indicated by the arrow. The locking bar must be horizontal and must be right up against the stop (5). ▷

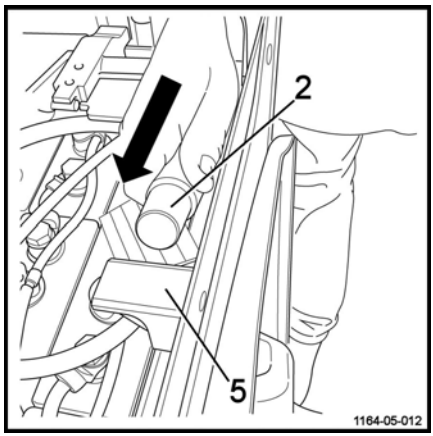

⚠ CAUTION

Risk of locking the battery incorrectly

The locking bar must not in any circumstances be positioned under or on top of the stop. It must be positioned against the stop.

– Reconnect the battery connector.

https://truckmanualshub.com/

– Lower the latch of the battery compartment door (if this option is selected). The door that is not attached to the side of the battery must be correctly locked. ▷

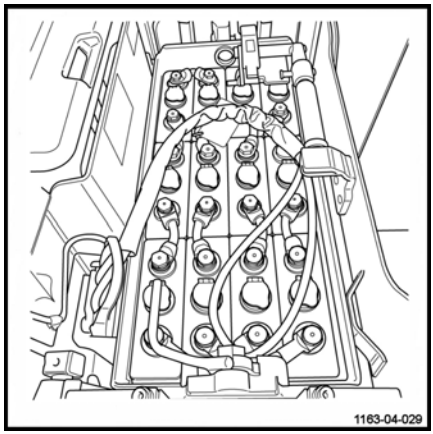

– Refit the battery hood.

– Return the truck to service.

⚠ WARNING

Risk of injury

Before restarting the truck, ensure that the battery is correctly installed. Check that the battery is locked and that the battery hood is closed.

https://truckmanualshub.com/

Handling the truck in an emergency

Emergency lowering of the mast

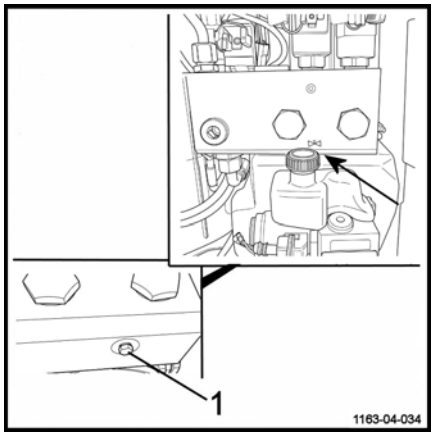

The emergency control (1) allows the mast to be lowered manually in the event of a problem.

This operation is to be performed as follows:

– Remove the front hood of the technical compartment.

– Loosen the screw (1) using an 8 mm open-ended spanner.

⚠ DANGER

Danger of death!

Do not walk underneath raised loads!

Check that no one is in the danger area before manually lowering the mast.

When the forks are fully lowered:

– Tighten the screw (1) using an 8 mm open-ended spanner.

– Refit the front hood of the technical compartment.

https://truckmanualshub.com/

Truck towing procedure

It is not possible to tow the truck with no electrical function. The electromagnetic brake remains in the closed position.

Truck towing is authorised with a rigid connection (tow bar) if the truck to be towed can no longer be braked. Check that the towing vehicle is sufficiently powerful to pull and brake the truck being towed.

Moving with no battery

NOTE

In the event of an electrical fault or no battery, it is possible to unlock the brake manually.

CAUTION

This procedure must be carried out by authorised personnel.

- Unload the fork arms, then disconnect the battery.
- Remove the engine cover.
- Two M5 X 35 screws (1) are required.
- Screw the screws (1) to the brake (2) in the holes (3). The brake is then unlocked.

CAUTION

The truck must only be towed at low speeds.

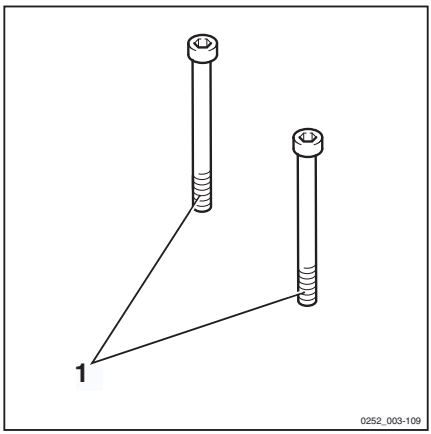

https://truckmanualshub.com/

- After towing, chock the truck to prevent it from moving.
- To re-establish brake operation, unscrew and remove the two screws (1).
- Refit the covers.

⚠ WARNING

It is essential that the covers are correctly refitted before the machine is used.

▷

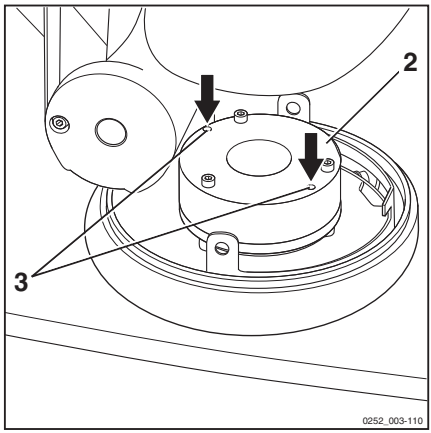

https://truckmanualshub.com/

Handling the truck in specific situations

Slinging the truck

▷

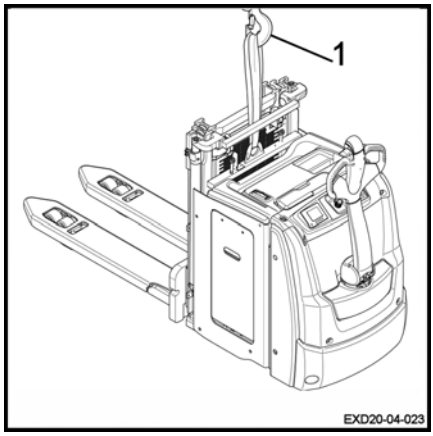

⚠ DANGER

Danger of truck falling.

Only use slings and a hoist of sufficient quality. Check the weight of the machine (including battery) in order to choose a suitable device. Refer to the technical features.

Observe the following instructions:

– Shut off the truck and disconnect the battery connector.

– Remove any items that could fall.

– Protect all parts that come into contact with the lifting device.

– Attach the lifting device to the sling ring (1).

NOTE

Do not sling the truck by the tiller. Do not sling the truck by the accessory support.

– Carefully lift the truck.

⚠ DANGER

Risk of falling.

Make sure no one is under or near the truck when slinging the truck.

https://truckmanualshub.com/

Lifting the truck

▷

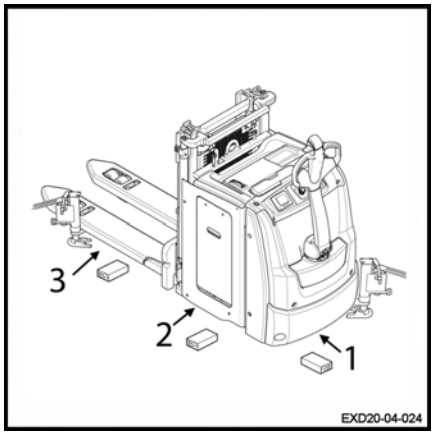

⚠ DANGER

Danger of swinging

You must take care when lifting the truck.

For some work, it is necessary to lift the truck.

– Lift the load arms.
– Switch off the ignition and disconnect the battery connector.
– Use a jack with adequate lifting capacity.

Front section of the truck:

– Place a jack under the chassis (1).

For work on the lifting device:

– Position the jack under the battery frame (2).

Maintenance of the load wheels:

– Place the jack under the forks in the indicated locations (3).

As a safety precaution, always insert a wooden chock.

⚠ WARNING

Risk of truck falling

Immobilise and chock the truck after lifting it.

Transporting the truck

⚠ CAUTION

Always switch off the ignition and disconnect the battery.

Never tie down or sling the truck by the control unit or other points not designed for this.

⚠ CAUTION

Risk of damage to the truck.

Use a hoist and woven **NON METALLIC** slings with an adequate lifting capacity. Refer to the load weight shown on the truck's capacity plate.

The lifting operations must be performed by qualified personnel.

Trucks are generally transported by road or by rail.

https://truckmanualshub.com/

The truck must be suitably protected from the effects of the weather during transport and storage.

To load or unload the truck, use an inclined plane or a mobile ramp.

If the truck is out of service or if the battery has been removed, sling the truck. See **Chapter 4 Slinging the truck**.

⚠ DANGER

Danger of death.

Do not stand within the hoist's operating radius or below the lifted truck.

Transporting the truck in the lift

The truck must only be taken in lifts with an adequate loading capacity that are designed for this purpose, and for which authorisation has been received from the operator. Inside the lift, the truck must be immobilised so that no part is in contact with the wall of the lift cage.

A minimum safety distance of 100 mm from the walls of the lift must always be observed.

Anyone transported with the truck must only enter the lift after the truck has been correctly immobilised and they must exit the lift first.

Driving on loading bridges

Before crossing a loading bridge, the operator must make sure it is properly attached and secured and its load capacity is sufficient. Cross the loading bridge slowly and carefully. The driver must be sure that the vehicle to be entered is secured sufficiently against movement and that it can support the load of the forklift truck.

The lorry driver and lift truck operator must coordinate the departure time of the lorry.

https://truckmanualshub.com/

5

Maintenance

https://truckmanualshub.com/

General maintenance information

General

The following instructions contain all the information required for maintenance of your truck. Carry out the various maintenance work in compliance with the maintenance plan. This will ensure that your truck is reliable and in good working order and that the warranty remains valid.

Maintenance plan

One of the display functions indicates the truck's hours of use. Refer to it and consult the truck's maintenance plan.

The maintenance plan is followed by advice to facilitate work.

Maintenance intervals must be reduced if the truck is used under harsh conditions (extreme heat or cold, large quantities of dust).

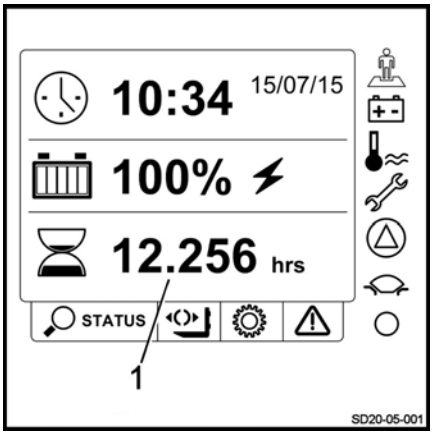

Grade and quantity of lubricants and other consumables

Only lubricants and other consumables specified in these operating instructions are authorised for use in maintenance work.

Lubricants and other consumables required for truck maintenance are listed in the maintenance specifications table.

Never mix different grades of grease or oil. If it is absolutely necessary to change brands, make sure to flush thoroughly beforehand.

Before changing any filters or working on the hydraulic system, thoroughly clean the surface and the areas around the part.

All containers used to pour oil must be clean.

https://truckmanualshub.com/

Servicing and maintenance personnel training and qualification

Truck maintenance must only be carried out by qualified and authorised personnel.

The annual inspection for prevention of accidents at work must be carried out by a person qualified to do so. The person carrying out this inspection must provide their expertise and opinion without being influenced by economic factors or company internal issues. Safety is the only critical deciding factor.

The person responsible for carrying out the inspection must have sufficient knowledge and experience to be able to assess the condition of the truck and the efficiency of the protective installations in accordance with the technical regulations and principles established for checking industrial trucks.

Battery maintenance staff

Batteries must only be recharged, maintained and changed by specially trained personnel. Personnel must follow the manufacturer's instructions of the battery, the battery charger and the truck.

It is essential to follow the battery maintenance instructions and the battery charger operating instructions.

Maintenance operations that do not require special training

Simple maintenance operations such as checking the hydraulic fluid level or checking the battery electrolyte level can be carried out by persons with no special training.

A specific qualification is not necessary.

Refer to the maintenance section of this manual for further information.

Ordering spare parts and consumables

Spare parts are provided by our spare parts service department. You will find the information required to place an order in the spare parts and fitting catalogue.

Only use spare parts recommended by the manufacturer.

Unauthorised spare parts may increase the risk of accidents due to faults relating to quality or incorrect choices. Anyone who uses non-compliant spare parts must assume full responsibility in the event of an accident.

https://truckmanualshub.com/

Safety guidelines for maintenance

Servicing and maintenance measures

To avoid accidents during servicing and maintenance operations, take all necessary safety measures. For example:

– Ensure that there is no risk of the truck moving or starting up unexpectedly. For this reason, remove the battery connector.

Working on the electrical equipment

Operations on the truck's electrical system must only be carried out when there is no voltage supply.

Operating checks, testing and adjustment work on parts supplied with voltage must only be carried out by personnel:

- who have received detailed instructions
- who have been authorised to perform this work
- who have taken the necessary precautionary measures.

Rings, metal bracelets etc., must be removed before carrying out any operations on electric components.

Remove the electric equipment (which comprises electric components such as the traction controller) before carrying out any welding operations. This precaution prevents this electric equipment from being damaged.

Operations on the electric system require the consent of the manufacturer.

Safety devices

After any repair or maintenance work, it is necessary:

- to refit all safety devices
- to check these for correct operation.

https://truckmanualshub.com/

Technical data for inspection and maintenance

Assembly	Consumables/lubricants	Capacities/adjustment values
Hydraulic system	Hydraulic oil	Minimum working capacity: 3.3 l Maximum working capacity: 3.5 l
Transmission gear	Transmission gear oil	1.1 l
Traction motor (1.5 kW)	1F1 fuse	Power: 300 A, quantity: 1
Steering unit ES30–24 (0.185 kW S1)	3F1 fuse	Power: 40 A, quantity: 1
Pump motor (2.2 kW)	1F1 fuse	Power: 300 A, quantity: 1
Control fuse	1F3 fuse	Control: 7.5 A, quantity: 1
Control fuse	1F4 fuse	Control: 5 A, quantity: 1
Battery	Distilled water	As required
Joints	Lithium soap grease	As required

https://truckmanualshub.com/

Recommended lubricants

DANGER

Toxic products.

Oils and other consumables are toxic products. It is advisable to handle and use them with the utmost care.

Hydraulic oil

Recommended oil for standard use:

ISO-L-HM 46 as per ISO 6743-4 or ISO VG46-HLP as per DIN 51524-2

Recommended oil for heavy-duty use:

ISO-L-HM 68 as per ISO 6743-4 or ISO VG68-HLP as per DIN 51524-2

Recommended oil for the cold store version:

ISO-L-HM 32 as per ISO 6743-4 or ISO VG32-HLP as per DIN 51524-2

NOTE

If in doubt, please ask your local dealer for advice. You should also consult your local dealer if a representative of an oil company offers you an oil product that is not specified in these operating instructions. Only the oils listed above are approved by the manufacturer. Using oil mixtures or hydraulic fluids that are not recommended can cause damage that may be expensive to rectify.

Transmission gear oil

Recommended oil:

CLP PG220 DIN 51 517–3

Aerosol can for chains

Standard chain spray A167.

Multi-purpose grease

Lithium soap grease, extreme pressure with anti-wear additive - Standard DIN 51825 - KPF 2K - 30, KPF 2K - 20, KPF 2N - 30.

ENVIRONMENT NOTE

Used oil must be stored safely until it is disposed of in compliance with environmental protection measures. No one should have access to the used oil. Do not dispose of used oil in drains or allow it to penetrate soil.

ENVIRONMENT NOTE

Do not allow the product to disperse into the environment. Packaging that has contained this product is treated as waste. Contaminated packaging must be completely emptied and may then be recovered following a thorough clean.

https://truckmanualshub.com/

Accessing the technical compartment

⚠ WARNING

Risk of injury.

Before removing anything, turn the ignition off and press the emergency stop button.

To access the technical compartment, it is necessary to lift the top hood (1) and remove the front hood (2).

Proceed as follows:

- Remove the four screws (3) from the top hood (1).
- Lift the top cover slightly.
- Remove the two screws (4) from the front hood (2).

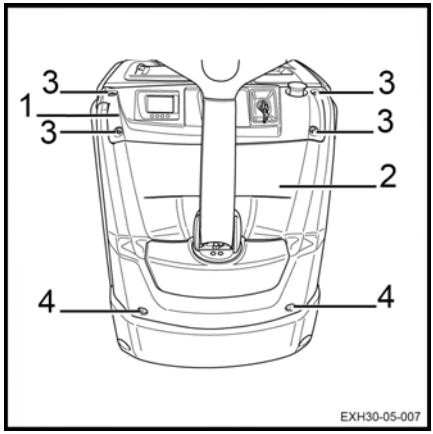

- Remove the front hood.

The technical compartment must be closed once the operation is finished.

- Remove the front hood (2).
- Tighten the two screws (4) of the front hood.
- Reposition the top hood (1).
- Tighten the four screws (3) of the top hood.
- Return the truck to service.

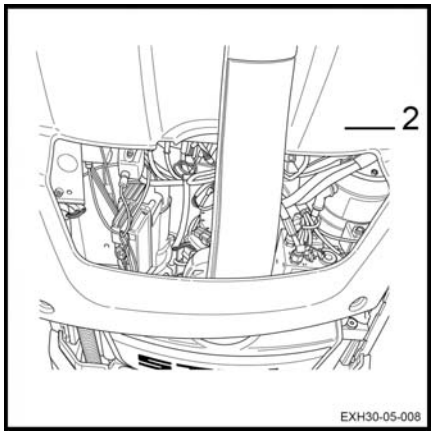

https://truckmanualshub.com/

1000-hour service plan

Depending on the application, environmental conditions and driving style, the following procedures should be carried out every 1000, 2000, 3000, 4000, 6000, 7000, 8000 and 9000 hours
Preparation
Clean the truck
Check the error codes using the diagnostic tool
Chassis and equipment
Check the condition of the forks
Check the electromagnetic brake and ensure that it is working correctly
Check and lubricate the hinges
Check the pump motor brushes for wear
Check the transmission gear for noise and leaks
Lubricate the gears
Wheels
Check the condition and tightness of the wheels
Check the stabilisers
Electrical equipment
Clean the electric steering system and the lifting motors
Check the condition of the cables and the battery sockets and ensure that they are positioned correctly
Check the electrical insulation between the chassis and the electric components
Check the electrical insulation between the chassis and the electronic components
Check the fuses
Check the battery acid level and the electrolyte level
Hydraulics
Check the hydraulic oil level
Check the condition of the pipe lines
Check the oil level of the controlled stabilisers
Load lift system
Check the condition and the length of the mast chain
Lubricate the forks and the mast guide rollers
Check the condition and mounting of the guard grille

5000-hour maintenance plan

Depending on the application, environmental conditions and driving style, the following procedures should be carried out every 5000 and 10,000 hours
Information

https://truckmanualshub.com/

Carry out all 1000-hour maintenance work
Hydraulics
Drain the hydraulic oil

10,000-hour service plan

Depending on the application, environmental conditions and driving style, the following procedures should be carried out every 10,000 hours
Information
Carry out all 1000-hour maintenance work
Carry out all 5000-hour maintenance work
Motor
Drain the transmission gear oil

https://truckmanualshub.com/

Chassis, bodywork and fittings

Cleaning the truck

Cleaning instructions

– Park the truck.

– Press in the emergency off switch.

⚠ CAUTION

Electrical hazards

The battery must always be disconnected during cleaning procedures.

Washing the outside of the truck ▷

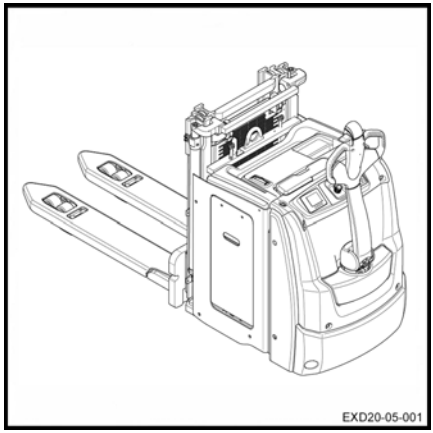

⚠ WARNING

Risk of damage to the truck

– Do not use flammable liquids to clean the truck.

– You must observe the safety rules set out above to prevent spark formation. Sparks could lead to a short circuit.

– All components that are sensitive to moisture (particularly electric components) must be protected when the truck is cleaned.

– Observe the manufacturer's instructions when using the cleaning product.

– Clean the truck with a non-flammable cleaning product mixed with water; a sponge and cloths.

– Specifically clean the oil filling openings and surrounding areas as well as the lubricating nipples (before lubrication).

NOTE

A truck that is cleaned frequently must be lubricated more regularly.

Cleaning the electrical installations

⚠ WARNING

Electrical hazards

Do not expose electrical systems (especially motors) to direct jets.

https://truckmanualshub.com/

NOTE

- *Only use dry cleaning products.*
- *Do not remove the cowlings.*

– Clean the electric installations with a non-metal brush and dry with lightly compressed air.

After washing

– Carefully dry the truck (e.g. with compressed air).

WARNING

Use of compressed air

It is advisable to wear protection goggles and a mask.

– Restart the truck in accordance with the instructions.

NOTE

If, despite taking precautions, traces of moisture remain in the motor, dry it using compressed air. After having eliminated any traces of moisture, the truck may be reactivated. Do not do so before then to prevent any corrosion.

https://truckmanualshub.com/

General information on battery maintenance

DANGER

Risk of injury

Before carrying out any operations on the electric installation, turn the truck power supply off. Disconnect the battery connector.

Precautions to be taken during battery maintenance

The plugs on the battery cells must always be dry and clean.

Neutralise any spilt battery acid immediately.

The battery terminals and lugs must be clean, lightly covered with grease for terminals and securely tightened.

Charging the battery

During the charging process, the surface of the battery cells must be clear to ensure sufficient ventilation.

Do not place metal objects on the battery.

The battery cover must remain open during charging. See the chapter entitled **Battery charging using an external charger.**

Battery type

Lead or gel batteries are used. It is advisable to choose a compatible charger.

Before charging, ensure that the charger is suitable for the type of battery.

CAUTION

Gel batteries are subject to specific charging, maintenance and treatment instructions. A non-compatible charger may result in a battery failure.

Observe the manufacturer's recommendations.

NOTE

- *The discharge indicators used to check the battery must also be suitable for the type of battery*
- *Contact the relevant After-Sales Service Centre*

Charging the battery

– Park the truck in an area without condensation or pollution and with sufficient ventilation.

– Stop the truck.

– Press the emergency off switch.

– Open the battery hood.

– Follow the instructions.

CAUTION

Do not expose the charger to water, rain, oils, grease or any similar substances.

The charger becomes hot during the operation.

CAUTION

Risk of injury

Do not obstruct the ventilation. Allow the charger to cool down for 10 minutes after charging is complete before touching it. Do not use the charger out of the truck.

https://truckmanualshub.com/

Checking the condition of the forks ▷

– Check that the forks (1) show no signs of deformation, splits, heavy wear or cracks.

⚠ CAUTION

Truck damage

If the carriage is damaged, have it changed by the After-Sales Service Centre.

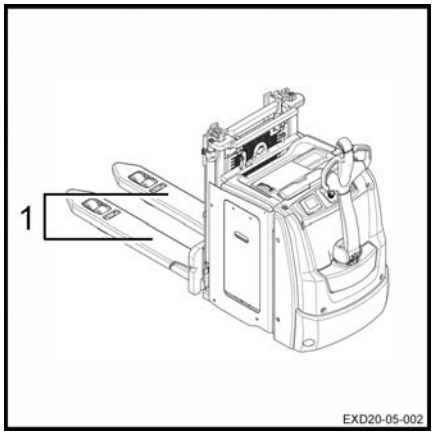

https://truckmanualshub.com/

Steering and wheels

Cleaning the pinion gear of the steering geared motor

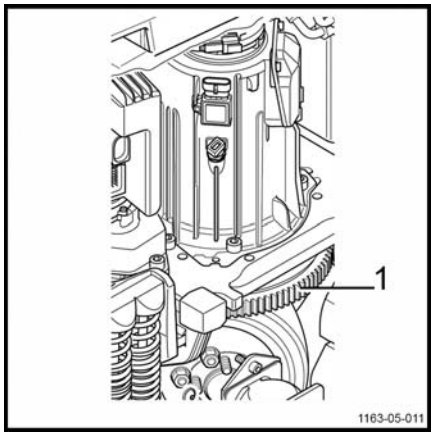

- Immobilise the truck.
- Lower the forks.
- Switch off the ignition and remove the key.
- Press in the emergency off switch.
- Open the battery hood.
- Disconnect the battery connector.
- Remove the hood of the technical compartment.
- Check that the pinion gear and the ring gear (1) are free from dirt.
- Clean with solvent if necessary, then dry with compressed air.

⚠ CAUTION

Use of compressed air

It is advisable to wear protection goggles and a mask.

- Then lubricate the pinion gear and ring gear with silicone aerosol spray.
- Reconnect the battery connector.
- Return the truck to service.

⚠ CAUTION

Risk of dust clogging

There is a risk of dust clogging if non-recommended products are used for greasing.

⚠ CAUTION

Risk of injury

It is advisable to wear gloves when carrying out maintenance on the pinion gear and the turntable.

https://truckmanualshub.com/

Checking the condition of the wheels

▷

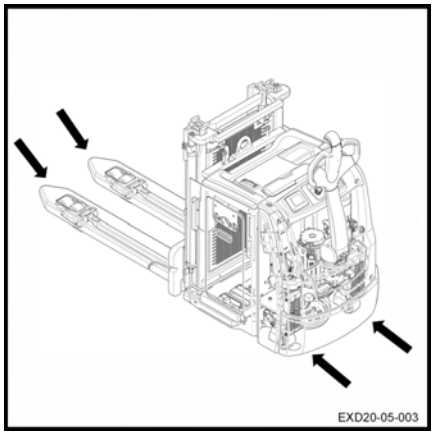

– Raise the truck until the wheels are off the ground.

– Check that the wheels rotate freely and remove any objects that may prevent them from turning or may obstruct them.

⚠ CAUTION

Risk of damaging the wheels

In order to avoid any risk of damaging the bearings and tyres of the wheels, it is essential to remove any wires or plastic strips that may wind around the wheel hubs and mountings.

Stabiliser maintenance

Trucks are equipped with two stabilisers. They ensure the dynamic stability of the truck. Different types of stabilisers are available as options.

Stabilisers do not require any specific maintenance or adjustment work. Wheel wear (drive wheel and stabiliser wheel) is automatically compensated.

However, it is necessary to check the condition of the stabilisers:

- No significant damage to the superstructure.
- The damper cylinder pins must not be twisted.
- No oil leakage must be present on the damper cylinder. This cylinder must be inside the spiral spring.
- No damage to the rollers. The wheels must rotate freely
- No locking at the level of the upper bearing.
- Ensure that the wheel nuts are correctly tightened.
- Ensure that there is no oil leakage under the truck when it is fitted with hydraulic stabilisers.

⚠ WARNING

Risk of loss of dynamic stability

The dynamic behaviour of the device must be monitored, particularly when turning. The behaviour of the truck must be the same when cornering, whether turning to the left or right. If there is a difference in behaviour, please contact the After-Sales Service Centre. Only the technician can replace the two stabilisers if deemed necessary.

NOTE

It is necessary to monitor the wear of the wheels in order to preserve the traction of the truck.

https://truckmanualshub.com/

Electrical equipment

Cleaning and blowing air through the electrical components

▷

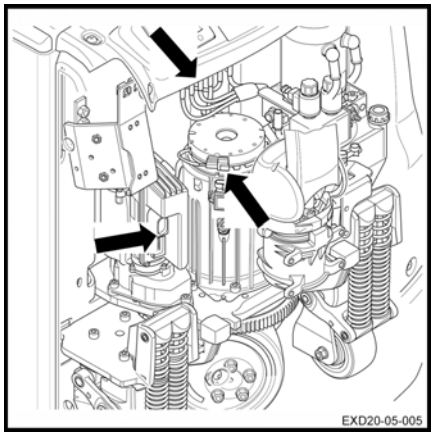

⚠ CAUTION

Electrical hazards

Always disconnect the battery connector before working on an electrical component.

- Press in the emergency off switch.
- Disconnect the battery connector.
- Open the technical compartment.
- Blow the electrical components with compressed air.

⚠ WARNING

Use of compressed air

It is advisable to wear protection goggles and a mask.

- Check the condition of the harness connector pins.

https://truckmanualshub.com/

Checking the battery acid level and electrolyte density ▷

⚠ WARNING

The electrolyte (diluted sulphuric acid) is poisonous and caustic!

- Always wear suitable protective equipment (industrial goggles, safety gloves) when working on a battery.
- Never wear a watch or jewellery when handling battery acid.
- Do not allow any acid to get onto the clothing or skin or into the eyes. If this does happen, rinse immediately with plenty of clean water.
- Immediately rinse away any spilled battery acid with plenty of water.
- In case of injury, seek medical advice immediately.
- Always follow the safety information provided by the battery manufacturer.
- Comply with the regulations in force.

- Check the battery acid level and electrolyte density according to the battery manufacturer's recommendations.
- The cell covers of the battery must be kept dry and clean.
- Any spillage of battery acid must be neutralised immediately.

ENVIRONMENT NOTE

Dispose of any used battery acid in accordance with the regulations.

https://truckmanualshub.com/

Checking the condition of the cables, terminals and battery connector

▷

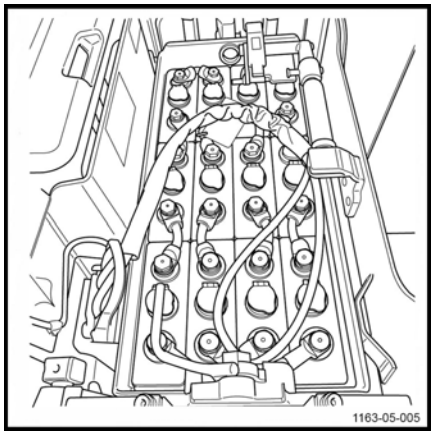

- Check that the cable insulation is undamaged.
- Check that there are no signs of heat build-up in the connections.
- Check that the "+" and "-" output terminals are not sulphated (presence of white salt).
- Check the condition of the battery connector contacts and the presence of the keying pin.

⚠ CAUTION

Risk of damaging the equipment

The points mentioned above can cause serious incidents. In the event of an incident, contact our After-Sales Service Centre as quickly as possible.

https://truckmanualshub.com/

Hydraulic systems

Checking the hydraulic system for leaks

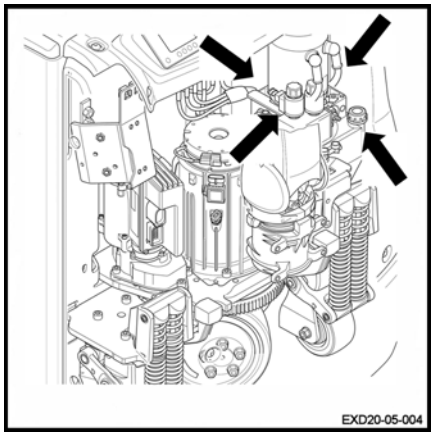

- Switch off the truck and disconnect the battery connector.
- Remove the hood of the technical compartment.
- Inspect the hydraulic system: pipes, hoses and connections between the pump unit and the cylinders.
- Check the cylinders for leaks.
- Check that the hoses are attached correctly and show no signs of friction wear.
- Check the external pipes and hoses on the technical compartment.
- Refit the hood of the technical compartment.
- Return the truck to service.

⚠ CAUTION

Risk of damaging the truck

In the event of leakage, please contact the After-Sales Service Centre.

Checking the hydraulic oil level

To check the hydraulic oil level, proceed as follows:

- Immobilise the truck.
- Lower the forks.
- Switch off the ignition and remove the key.
- Press in the emergency off switch.
- Disconnect the battery connector.

https://truckmanualshub.com/

– Remove the hood of the technical compartment. ▷

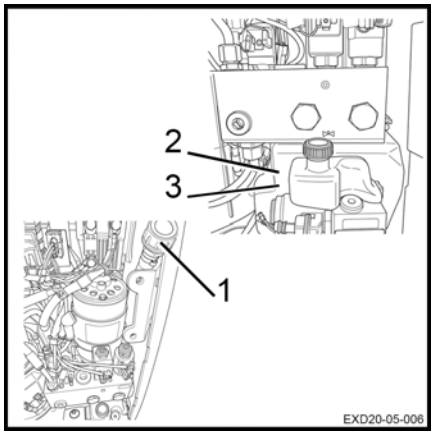

To ensure correct operation of the truck functions, the oil level must be between the minimum mark (3) and maximum mark (2) on the tank.

– Remove the plug (1). If necessary, top up via the opening.

– Refit the plug (1) afterwards.

⚠ CAUTION

Risk of damage to hydraulic components

Only use hydraulic oil that complies with the manufacturer's specifications (see table of recommended lubricants).

– Refit the hood of the technical compartment.

– Reconnect the battery connector.

– Return the truck to service.

Checking the controlled stabiliser hydraulic system for leaks ▷

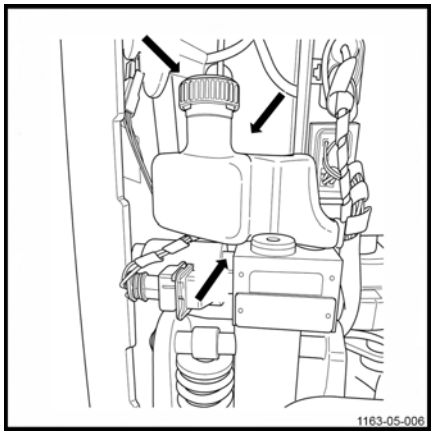

– Switch off the truck and disconnect the battery connector.

– Remove the hood of the technical compartment.

– Inspect the stabiliser hydraulic system:

- Tank
- Rigid pipes
- Connections from the stabiliser directional control valve block to the cylinders

– Check the tank for leaks.

– Tighten the swivel joints on the cylinders if necessary.

– Check the cylinders for leaks.

– Check that the rigid pipes are attached correctly and show no signs of friction wear.

– Refit the hood of the technical compartment.

– Return the truck to service.

https://truckmanualshub.com/

In the event of leakage, please contact the After-Sales Service Centre.

Checking the oil level in the controlled stabiliser circuit ▷

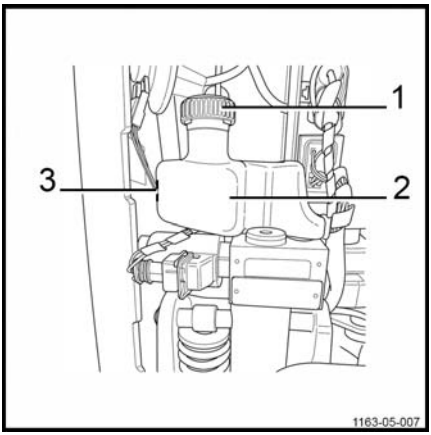

- Switch off the truck and disconnect the battery connector.
- Remove the hood of the technical compartment.

It is essential that the oil level of the stabilisers is on the mark situated between the raised MIN and MAX (3) lettering on the tank (2)

- Top up the level if necessary, after unscrewing the plug (1).
- Screw the plug back in at the end of the operation.

⚠ CAUTION

Risk of damage to the truck

Only use hydraulic oil that complies with the specifications. See table of lubricants.

- Refit the hood of the technical compartment.
- Return the truck to service.

https://truckmanualshub.com/

Lift mast

Cleaning and lubricating the chains

NOTE

If the lifting chain is too dirty, clean it.

- Place a recipient underneath the lifting chain.
- Clean using a paraffin-based product (petroleum, fuel oil etc.). Observe the manufacturer's safety guidelines.
- If using a steam jet, do not use additives.
- Immediately dry the chain and its joints with compressed air. Move the chain frequently during this operation.
- Lubricate the chain immediately using a special aerosol chain lubricant.

CAUTION

Risk of the equipment becoming worn or damaged.

Chains are safety components. Use of cold cleaning agents, chemical products, acid or chlorinated products could destroy the chains.

Adjusting the length of the mast chains

NOTE

Depending on the use of the truck, the chains are liable to stretch and as a result they have to be adjusted regularly.

NOTE

Use of high pressure liquid cleaning devices is not advisable.

DANGER

Danger of death and/or risk of serious damage to equipment

On trucks fitted with macrolon mast protection, clean the translucent screen thoroughly after lubrication operations.

https://truckmanualshub.com/

– Fully lower the mast.
– Undo the locknut (2)
– Place the chains under slight tension by tightening the nut (1).
– Retighten the locknut (2).

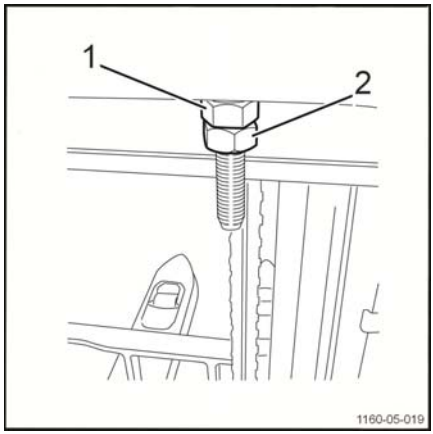

⚠ CAUTION

Risk of the equipment becoming worn or damaged.

After this adjustment, check that the fork carriage does not reach the mastical stop at the top of the mast during the maximum lift. If this is the case, slacken or replace the chains. We recommend that this operation be carried out by our After-Sales Service Centre.

Checking the protective screen

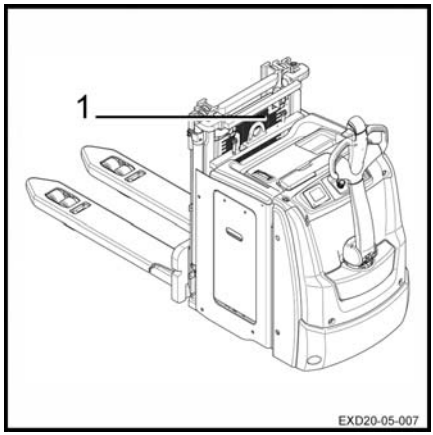

It is important to check the condition of the mast protective screens and to check that the mountings are tightened.

– Check that the protective screen (1) is correctly attached and in good condition (undamaged).
– Replace the protective screen if it is damaged.
– Adhere to the number of mountings as defined by the manufacturer.

⚠ WARNING

Risk of serious injury and/or serious damage to equipment

Never touch moving parts and assemblies without first having lowered the equipment to the ground and disconnected the battery.

https://truckmanualshub.com/

DANGER

Poor visibility

The screen must be installed and correctly attached.

Do not attach anything to the screen that could affect the visibility of the forks.

When cleaning the fork carriage side, only clean the screen when the fork carriage is in the lowered position.

https://truckmanualshub.com/

Storage and decommissioning

Storage of truck

Precautions should be taken if the truck must not be used for a reasonably long period. The operations depend on the length of time it is unused.

Long-term truck storage

The following work must be carried out on the truck to prevent corrosion if it needs to be stored for a long period of time. If the truck is to be stored for more than two months, it must be positioned in a clean and dry area. The area must be well-ventilated with no risk of freezing.

The following operations must be performed:

– Clean the truck thoroughly.

– Check the hydraulic oil level and refill if necessary.

– Lower the forks onto a suitable support (e.g. a pallet) until the chains are slack.

– Coat any unpainted metal parts with a thin layer of oil or grease.

– Grease all hinges and joints.

– Check battery condition and electrolyte density. Maintain the battery in accordance with the manufacturer's requirements. (Follow the instructions).

– Spray contacts with an aerosol product designed for contacts.

– Raise and chock the truck: the wheels must not touch the ground in order to prevent irreversible deformation of the tyres.

– Cover the truck with a cotton cover to protect it from dust.

⚠ CAUTION

We recommend that you do not use a plastic sheet as this encourages condensation to form.

Consult the service department for further measures to take if the truck must be stored for a longer period of time.

Recommissioning after storage

If the truck has been stored for more than six months, it must be checked carefully before being recommissioned. This check is similar to the workplace accident prevention inspection. It is therefore necessary to check all points and systems that are important for truck safety.

Carry out the following operations:

– Clean the truck thoroughly.

– Grease all hinges and joints.

– Check the condition and density of electrolyte, and, if necessary, recharge the battery.

– Check that there are no traces of condensation water in the hydraulic oil. Drain if necessary.

– Carry out the same maintenance work as for the first time it was commissioned.

– Commission the truck.

– In particular, check the following during start-up:

- traction, control and steering.
- brakes (service brake and parking brake).
- lifting device.

https://truckmanualshub.com/

Permanent Putting Out of Commission (Destruction)

When scrapping the truck, it is necessary to:

- Remove the various parts of the truck (covers, battery, chains, motors etc.)
- Sort out the components depending on their type: pipes, rubber components, lubricants, aluminium, iron etc.
- Before scrapping the truck, notify the competent authorities of your country in writing.
- After receiving the authorisation from the competent authorities, remove any components according to national standards.

NOTE

The client is solely responsible for any irregularities he has committed during or after the scrapping of the truck's components and the removal of components.

https://truckmanualshub.com/

6

Technical specifications

https://truckmanualshub.com/

EXD20 datasheet

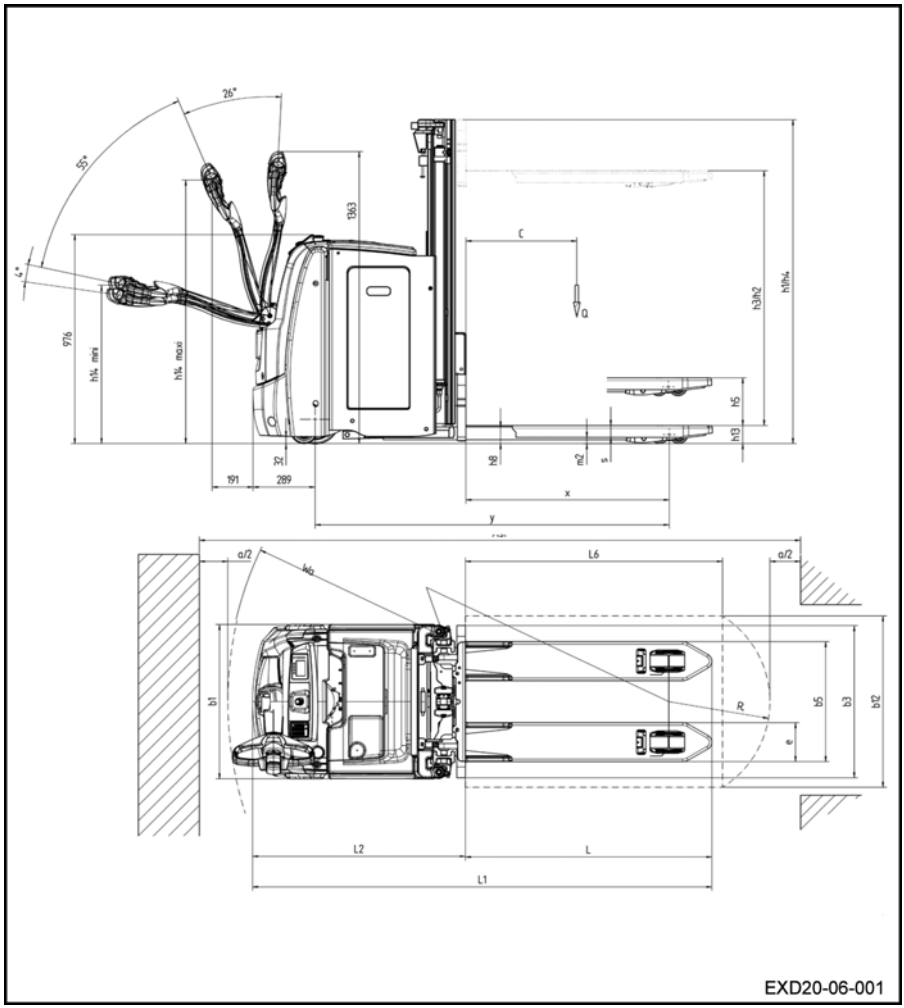

https://truckmanualshub.com/

DESCRIPTION			
1.1	Manufacturer		STILL
1.2	Model type		EXD20
1.3	Method of propulsion: battery, diesel, petrol, LPG, mains power		Battery
1.4	Driving: manual, pedestrian, standing, seated, order picking		Standing
1.5	Nominal capacity: main lift only Main lift/initial lift Initial lift only	Q (kg)	1200; 1000/1000; 2000
1.6	Centre of gravity	C (mm)	600
1.8	Distance from load wheel axle to load support face (±5 mm)	X	949
1.9	Wheelbase (±5 mm)	Y	1653

WEIGHT			EXD20
2.1	Kerb weight (±10%) with battery(2)	kg	1181
2.2	Load per laden axle, drive side/load side (±10%) Load = 2000 kg(1)	kg	1276/1884
2.3	Load per unladen axle, drive side/load side (±10%)(1)	kg	889/292

WHEELS			EXD20
3.1	Tyre: polyurethane, rubber, drive side/load side		R + P/P
3.2	Drive wheel dimensions (width at the ground)	Ø x L (mm)	Ø230 x L90
3.3	Wheel sizes load side	Ø x L (mm)	Ø85 x L85 (bogies: Ø85 x L60)
3.4	Additional wheels (dimensions)	Ø x L (mm)	2 x Ø125 x L60
3.5	Number of wheels drive side/load side (x = drive wheel)		1X + 2/2 (1X + 2/4)
3.6	Track width, drive side (±5 mm)	mm	502
3.7	Track width, load side (±5 mm)	mm	380

DIMENSIONS			EXD20
4.2	Lowered mast height (±5 mm)	h1 (mm)	1465 (2024T)
4.3	Free lift (±5 mm)	h2 (mm)	150 (2024T)
4.4	Lift (±5 mm)	h3 (mm)	125 (2024T)
4.5	Extended mast height (±5 mm) (4)	h4 (mm)	2544 (2024T)
4.6	Initial lift (±5 mm)	h5 (mm)	125

https://truckmanualshub.com/

4.9	Tiller height in driving position min./max. (±5 mm)	h14 (mm)	740/1230
4.10	Load arm/ground height (0/+5 mm)	h8 (mm)	80
4.15	Height at the ends of the fork in the lowered position (0/+5 mm)	h13 (mm)	86
4.19	Total length (+5 mm)	L1 (mm)	2185
4.20	Length to load support (±5 mm)	L2 (mm)	995
4.21	Total width (±5 mm)	b1 (mm)	720
4.22	Fork arm dimensions	s/e/L (mm)	50/180/1190
4.23	Load arm dimensions	s/e/L (mm)	75/150/1115
4.24	Fork carriage width (±5 mm)	b3 (mm)	710
4.25	Fork arm external spread (±5 mm)	b5 (mm)	540/560
4.26	Inside load arm spread (±5 mm)	b4 (mm)	210/230
4.32	Ground clearance at centre of wheelbase (±2 mm)	m2 (mm)	20
4.33	Load dimension b12 x L6	b12 x L6	800 x 1200
4.34	Aisle width with predetermined load	Ast (mm)	2730(3)
4.34.2	Aisle width with a pallet 800 x 1200 crosswise	Ast (mm)	2860(3)
4.35	Turning radius (minimum)	Wa (mm)	2060

PERFORMANCE DATA			EXD20
5.1	Travel speed when laden/unladen (±5%)	km/h	6/6
5.2	Initial lifting speed when laden/unladen (±10%)	m/s	0.050/0.061
	Main lifting speed when laden/unladen (±10%)	m/s	0.14/0.22
5.3	Initial lowering speed when laden/unladen (±10%)	m/s	0.102/0.082
	Main lowering speed when laden/unladen (±10%)	m/s	0.488/0.197
5.8	Maximum gradient (0 kg, 1200 kg, 2000 kg)	%	20/15/12

https://truckmanualshub.com/

5.9	Acceleration time (10 m) when laden/unladen	s	7.6/6.7
5.10	Service brake		electromagnetic

DRIVE SYSTEM				EXD20
6.1	Traction motor, S2: 60 minutes	kW		1.5
6.2	Lift motor, S3: at 10% utilisation	kW		2.2
6.3	Battery type in accordance with DIN 43 535			3 PzS side access
6.4	Battery voltage and capacity (discharge in 5 hours)	V/Ah	Gel/Lead battery	24/375
			3 PzS - side access Li-ion 205 Ah	23/205
			3 PzS - side access Li-ion 410 Ah	23/410
6.5	Battery weight (±10%)	(kg)	Gel/Lead battery	290
	Battery weight with case (±10%)		3 PzS - side access Li-ion 205 Ah	190
	Battery weight with case (±10%)		3 PzS - side access Li-ion 410 Ah	229
6.6	Energy consumption according to standardised VDI cycle	kWh/h		0.483
6.7	Turnover output	T/h		59
6.8	Energy consumption at turnover output	kWh/h		1.5

MISCELLANEOUS			EXD20
8.1	Speed monitor (AC controller)		LAC
10.7	Noise level at forklift operator's ears (±2.5)	dB (A)	62

1) Weight according to line 2.1

2) With battery line 6.5

3) Ast = Wa + R + a (pallet stacker)

Safety distance a = 200 mm

https://truckmanualshub.com/

EXD20 mast types

Mast type	Standard		
	1574T	2024T	2424T
h1	1240	1465	1665
h1'	1315	1540	1740
h2	150	150	150
h3	1574	2024	2424
h4	2094	2544	2944

Mast type	Duplex
	1924 N
h1	1915
h1'	/
h2	1395
h3	2924
h4	3444

https://truckmanualshub.com/

A

Accessing the technical compartment. . . 105
Address of manufacturer. I
Adjusting the length of the mast chains. . 120
Aerosol can for chains. 104
Anti-crush safety device
Checking. 37
Description of the function. 37

B

Batteries. 32
Battery
Type. 79
Battery acid. 14
Before leaving the machine. 74
Before leaving the truck. 71, 78
Before picking up a load. 68
Brake
Checking the brake. 38
Braking. 32, 49
Braking by releasing the drive switch. . . . 50
Braking by reversing the drive direction. . . 50

C

CE labelling. 3
Changing the side access battery. 87
Changing the vertical access battery. 86
Charging the battery. 110
Charging the battery using an external charger. 81
Checking the anti-crush safety device. . . . 37
Checking the battery acid level and electrolyte density. 115
Checking the cables, terminals and battery connector. 116
Checking the condition of the forks. 111
Checking the controlled stabiliser hydraulic system for leaks. 118
Checking the emergency shutdown. 38
Checking the horn. 39
Checking the oil level in the controlled stabiliser circuit. 119
Checking the protective screen. 121
Checks prior to start-up. 34
Cleaning and lubricating the chains. 120
Cleaning the truck. 108
Climatic conditions. 8
Closing the battery hood. 80
cold store. 76
Cold store usage. 76
Consumables. 13
Battery acid safety instructions. 14
Disposal. 15
Oil Safety Information. 13
Safety information for handling hydraulic fluid. 14
Contact details. I
Copyright and property rights. 3

D

Defining directions. 47
Description of the Dynamic Drive Control. 75
Description of use. 8
Destruction. 124
Display-operating unit. 25
Display unit
Activity indicator. 44
Drive program. 43
Error codes menu. 45
Settings. 43
Start-up screen. 45
Temperature. 43
Warnings. 43
Disposing of components and batteries. . . . 9
Drive program
Blue Q mode. 51
Hare mode. 51
Tortoise mode. 51
Driver rights,duties and rules of behaviour. 18
Drivers. 18
Driver's compartment. 24, 32
Drive system. 32
Driving. 47
Driving on loading bridges. 98
Driving safety guidelines. 46

E

EC declaration of conformity. 4
Electrical equipment
Cleaning and blowing air through the components. 114
Electromagnetic braking. 49
Electronic key (option). 26
Emergency lowering. 93

https://truckmanualshub.com/

EXD20 datasheet. 126
EXD20 mast types. 130

F

Features. 32
FleetManager™
Colour code for the LEDs. 57
Commissioning a truck equipped with a keypad or an electronic key. 56
Commissioning a truck equipped with an RFID reading device. 56
Description. 55
Disconnecting a truck equipped with a keypad or electronic key. 59
Disconnecting a truck equipped with an RFID reading device. 60
Disconnecting the truck. 59
Start-up. 56

G

General. 2, 100
General information on battery maintenance. 110
General view of the technical compartment. 23
General view of the truck. 22
Grade and quantity of lubricants and other consumables. 100

H

Handling a single load. 68
Handling two stacked pallets. 72
Horn. 50
Hydraulic fluid. 14
Hydraulic system
Checking the hydraulic oil level. 117
Checking the hydraulic system for leaks. 117

I

Identification label. 5
Initial Lift. 67

L

Labels. 28
Lift control elements. 66
Lifting the truck. 97
Load handling safety rules. 61

M

Maintenance plan. 100
5000 hours. 106
Managing battery charging. 42
Masts. 32
Multi-purpose grease. 104

N

Noise emission values. 16

O

Oils. 13
On-board charger
Adjusting the on-board charger. 86
Charging curve selector. 86
Using the on-board charger. 84
Opening the battery hood. 80
Operating company. 18
Ordering spare parts and consumables. . 101
Order picking. 79

P

Permanent Putting Out of Commission. . 124
Picking up a load at a height. 71
Picking up a load from the ground. 69
Picking up two loads. 72
Precautions to be taken during battery maintenance. 110
Progressive stopping of the carriage in the lower position. 63
Prohibition of use by unauthorised persons. 19
Proper usage. 8

R

Raising/lowering the mast. 67
Reading the capacity plate. 64
Recommended lubricants. 104
Residual dangers, residual risks. 17

S

Safety devices. 102
Safety Inspection. 20
Selection buttons. 42
Serial number. 29
Service plan
1000 hours. 106
10,000 hours. 107

https://truckmanualshub.com/

Servicing and maintenance measures. . . 102
Setting a load down on the ground. 69
Setting down two loads. 73
Settings menu. 44
Slinging the truck. 96
Spare parts list. 7
Specialist. 18
Stabiliser maintenance. 113
Stability. 17
Stacking a load. 70
Starting on a slope. 54
Starting up. 35
Steering. 32, 48
Steering geared motor
Cleaning the pinion gear of the steering geared motor. 112
Symbols used. 9

T

Technical data for inspection and maintenance. 103
Technical description. 32
Transporting a load. 69
Transporting the truck. 97
Transporting the truck in the lift. 98
Transporting two loads. 73
Travelling down slopes. 54
Travelling up slopes. 53
Truck operating instructions. 40

U

Unauthorised use. 9
Using the truck on a slope. 53

V

Vibrations
Vibration characteristics for vibrations to which the body is exposed. 16

W

Wheels
Checking the condition of the wheels. 113
Working on the electrical equipment. . . . 102

https://truckmanualshub.com/

https://truckmanualshub.com/

https://truckmanualshub.com/

STILL GmbH

11638011551 EN - 02/2021 - 06