https://truckmanualshub.com/

GRADALL®

Operator & Safety Manual

Keep this manual with machine at all times.

D152 / D154

S/N D152000001 & After

S/N D154000001 & After

82104002

Revised
February 10th, 2020

This manual, and all manuals for the Gradall Hydraulic Excavator product line, can be viewed or downloaded, free-of-charge, at www.mygradall.com

https://truckmanualshub.com/

IMPORTANT! *- If printed, or downloaded in electronic format, this is an uncontrolled copy of the manual. The current version can be viewed/downloaded at www.mygradall.com*

Gradall is a registered trademark for hydraulic excavators, industrial maintenance machines, attachments and other components manufactured and marketed by Gradall Industries, Inc.

https://truckmanualshub.com/

REVISION LOG

August 31st, 2015 - A - Original Issue of Manual

November 5th, 2015 - B - Added Section 5; Swing Brake Spec to Section 7

March 8th, 2016 - C - Revised torque specs on page 5-5; added torque spec for D154. Revised D152 specs on page 7-2; added specs for D154. Added s/n range for PTO indicator on page 2-13.

October 12th, 2016 - D - Revised control scheme on pages 2-18, 2-19, 2-20 & 3-10. Revised dig brake application parameters on page 3-4. Revised remote driving procedure on pages 3-6 thru 3-8.

February 10th, 2020 - E- Op Manual Revision Log

https://truckmanualshub.com/

This manual is a very important tool! Keep it with the machine at all times.

The purpose of this manual is to provide owners, users, operators, lessors, and lessees with the precautions and operating procedures essential for the safe and proper machine operation for its intended purpose.

Due to continuous product improvements, Gradall Industries, Inc. reserves the right to make specification changes without prior notification. Contact Gradall Industries, Inc. for updated information.

Operator Qualifications

The operator of the machine must not operate or drive the machine until this manual has been read, training is accomplished and operation of the machine has been completed under the supervision of an experienced and qualified instructor.

Operators of this equipment must possess a valid, applicable driver's license, be in good physical and mental condition. Operator must not be using medication which could impair abilities nor be under the influence of alcohol or any other intoxicant during the work shift.

In addition, the operator must read, understand and comply with instructions contained in the following material furnished with the hydraulic excavator:

- This Operator & Safety Manual
- AEM Off-Highway Dump Truck Manual
- EMI Hydraulic Excavator Safety Manual
- All instructional decals and plates
- Any optional equipment instructions furnished
- OEM Chassis Manual

The operator must also read, understand and comply with all applicable Employer, Industry and Governmental rules, standards and regulations.

If any manual is missing or illegible, get a replacement from your employer, distributor, or from Gradall Industries.

Modifications

Any modification to Gradall products must be approved by Gradall.

https://truckmanualshub.com/

This product must comply with all safety related bulletins. Contact Gradall Industries, Inc. or the local authorized Gradall representative for information regarding safety-related bulletins which may have been issued for this product.

Gradall Industries, Inc. sends safety related bulletins to the owner of record of this machine. Contact Gradall Industries, Inc. to ensure that the current owner records are updated and accurate.

Gradall Industries, Inc. must be notified immediately in all instances where Gradall products have been involved in an accident involving bodily injury or death of personnel or when damage has occurred to personal property or the Gradall product.

FOR:

- Accident Reporting and Product Safety Publications
- Current Owner Updates
- Questions Regarding Product Applications and Safety
- Standards and Regulations Compliance Information
- Questions Regarding Product Modifications

CONTACT:

Product Safety and Reliability Department
Gradall Industries, Inc.
406 Mill Avenue
New Philadelphia, OH 44663
Phone: 330-339-2211
Toll-Free: 1-800-445-4752

Other Publications Available

Illustrated Parts Manual.....82104001

Service Supplement 82104003

https://truckmanualshub.com/

NOTES:

https://truckmanualshub.com/

TABLE OF CONTENTS

Revision Log

Read This First

Operator Qualifications ..... b
Modifications ..... b
Other Publications Available c

Table of Contents

Section 1 - General Safety Practices

1.1 Hazard Classification System 1-1
Safety Alert System and Safety Signal Words 1-1
1.2 General Precautions 1-1
1.3 Operation Safety 1-2
Electrical Hazards 1-2
Swing Hazards 1-3
Slip and Fall Hazard 1-5
Crush Hazards 1-6
Travel Hazards - Remote and Driving 1-8
Tip Over Hazard 1-9
Chemical Hazards 1-10
Dust Hazard 1-12
1.4 Personal Protection Equipment 1-13

Section 2 - Pre-Operation and Controls

2.1 Pre-Operation Checks & Inspection 2-1
2.2 Walk-Around Inspection 2-2
2.3 Safety Decals 2-5
Decal Locations 2-5
2.4 Upperstructure Cab Controls & Indicators 2-8
LCD Display 2-8
Auxiliary Hydraulics Control (optional) 2-14
Left Hand Arm Pod 2-16
Right Hand Arm Pod 2-17
Joystick Controls 2-19
Operator Seat Adjustments 2-23
Ignition 2-24
Intermittent Wiper/Washer 2-25
Park Brake Switch 2-26

Section 3 - Operation

3.1 Remote Control Preparation 3-1
Preparing Undercarriage for Remote Control Operation 3-1
Preparing Upperstructure for Remote Control Operation 3-2
3.2 Checks Before Remote Control Operation 3-3

https://truckmanualshub.com/

Normal Engine Operation 3-3
3.3 Remote Mode Brake System 3-4
Remote Control Braking 3-4
Digging Brake 3-4
3.4 Remote Mode Power Train 3-6
Driving Undercarriage from Upperstructure Cab 3-6
Steering the Undercarriage from Upperstructure Cab 3-9
3.5 Typical Dig Cycle 3-10
Standard SAE Boom and Attachment Functions 3-10
3.6 Lifting & Placing a Load 3-16
Precautions 3-16
General 3-17
Positioning Machine For A Lift 3-17
Planning A Lift 3-18
3.7 Lift Capacity 3-19
3.8 Remote Mode Engine Shutdown 3-21
3.9 Return to Travel Mode 3-22
Preparing Upperstructure for Undercarriage Operation 3-22
Boom Stow Procedure 3-23
Securing Unit for Driving 3-23
3.10 Parking the Excavator 3-24
Precaution 3-24
Parking Procedure 3-24
3.11 Preservation & Storage 3-25
Maintenance 3-25

Section 4 - Attachments

4.1 Approved Attachments 4-1
4.2 Unapproved Attachments 4-1
4.3 Attachment Operation 4-1
Excavating Buckets 4-2
Ditching Buckets 4-2

Section 5 - Lubrication & Maintenance

5.1 Introduction 5-1
Clothing and Safety Gear 5-1
5.2 General Maintenance Instructions 5-2
Tire Service 5-2
5.3 Service & Maintenance Schedules 5-3
10 Hour Maintenance Schedule 5-3
50 Hour Maintenance Schedule 5-3
100 Hour Maintenance Schedule 5-4
1st 30 Days (250 hrs Max) & 250 Hour Maintenance Schedule - (Upperstructure) 5-4
750 Hour Maintenance Schedule 5-5

https://truckmanualshub.com/

1500 Hour Maintenance Schedule 5-5
5.4 Upperstructure Lubrication Schedule 5-6
5.5 Undercarriage Lubrication Schedule 5-7

Section 6 - Emergency Procedures

6.1 Loss Of Power 6-1
Stowing the boom without engine power 6-1
To extend the boom without engine power 6-1
To raise the boom without engine power 6-1
Towing 6-2
If You Get Stuck 6-2

Section 7 - Specifications

7.1 Product Specifications 7-1
Lubrication & Fluid Capacities 7-1
Weight 7-2
Dimensions 7-2
7.2 Torque Chart 7-3
7.3 Fuses 7-6
Upperstructure 7-6
Undercarriage 7-6

Index

https://truckmanualshub.com/

https://truckmanualshub.com/

SECTION 1 - GENERAL SAFETY PRACTICES

1.1 HAZARD CLASSIFICATION SYSTEM

Safety Alert System and Safety Signal Words

DANGER

OW0010

DANGER indicates an imminently hazardous situation which, if not avoided, will result in death or serious injury.

WARNING

OW0021

WARNING indicates a potentially hazardous situation which, if not avoided, could result in death or serious injury.

CAUTION

OW0031

CAUTION indicates a potentially hazardous situation which, if not avoided, may result in minor or moderate injury.

1.2 GENERAL PRECAUTIONS

WARNING

OW0021

Before operation, read & understand this manual. Failure to comply with the information in this manual could result in machine damage, property damage, personal injury or death.

https://truckmanualshub.com/

1.3 OPERATION SAFETY

Electrical Hazards

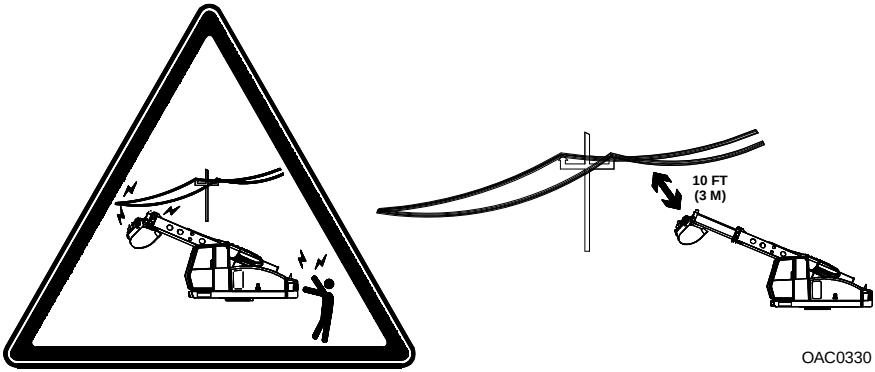

OAC0330

- This machine is not insulated and does not provide protection from contact or being near electrical current.
- **NEVER** operate the excavator in an area where overhead power lines, overhead or underground cables, or other power sources may exist without ensuring the appropriate power or utility company de-energizes the lines.
- Always check for power lines before raising boom.

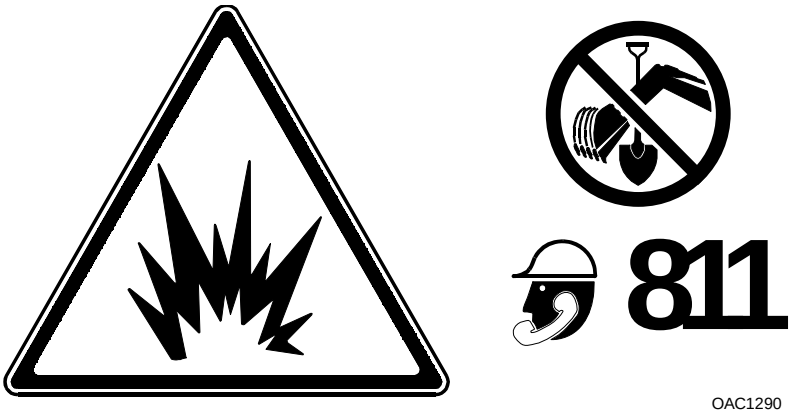

OAC1290

Always **"Call Before You Dig"**. Contact your local One-Call (811 in USA) or the One-Call referral number (888-258-0808 in USA and Canada) to have underground utilities located before digging.

https://truckmanualshub.com/

Swing Hazards

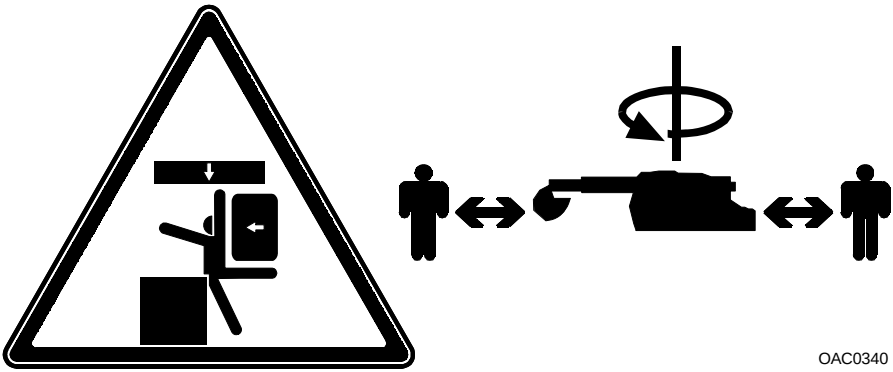

- Keep others away from machine while in operation. Ensure others are clear of the swing radius prior to swinging upperstructure.
- Never carry a water can, equipment, or other worker's tools or personal items on the machine.
- Never permit anyone close enough to machine to become trapped between undercarriage and upperstructure.
- Position machine to prevent possibility of a person being crushed between counterweight and another object.
- Do not allow anyone inside the cab(s) (other than the operator) while in operation.
- Always be careful when using mirrors; distances are distorted and field of view is limited, especially when swinging. Always use a signal person when working in tight quarters.
- Be aware of undercarriage cab, if equipped, and undercarriage components when swinging upperstructure or digging. Position unit so that it won't be necessary to swing boom close to cab or undercarriage components.

https://truckmanualshub.com/

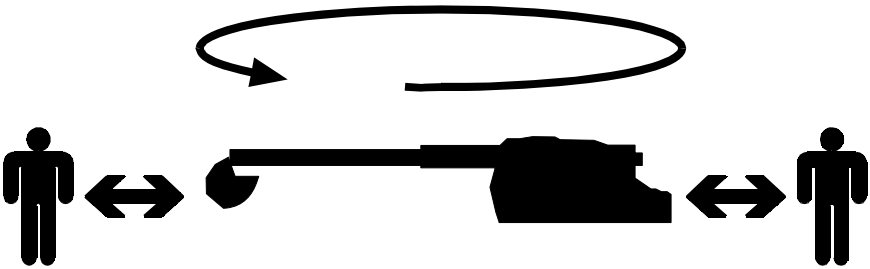

- The circle of safety is a circle around the excavator with the boom at full extension.
- Establish and inform others of the circle of safety. Keep others from entering into the circle of safety.

https://truckmanualshub.com/

Slip and Fall Hazard

OAC0350

- Always maintain 3-point contact using proper hand holds and steps provided when mounting or dismounting. Never grab control levers or steering wheel when mounting or dismounting machine.
- Repair or replace damaged steps and grab handles.
- Keep grab handles, steps, and walkways free of mud, oil, grease and other foreign material. Replace non-skid surface material as required.
- Do not get off machine until shutdown procedure has been performed.
- Align upperstructure with undercarriage before dismounting.

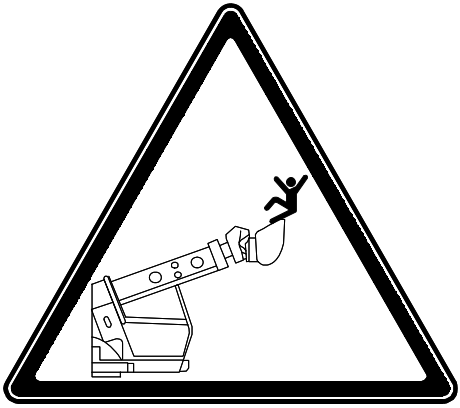

OAC0360

- **Keep others off machine** while in operation.
- **Do not lift personnel with this machine.**

https://truckmanualshub.com/

Crush Hazards

- Do not lean on boom or reach into boom holes, bucket linkage or boom rollers until the attachment or boom is resting on the ground and the engine is stopped.
- Be sure all access covers are in the fully open position before performing any procedures inside compartments.

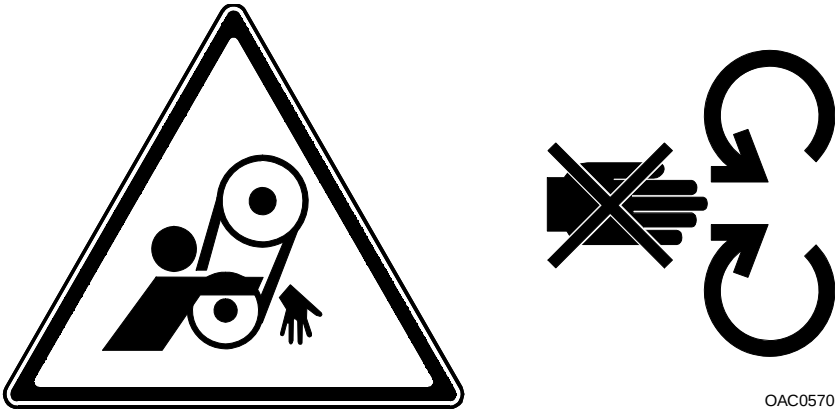

- Stay clear of moving parts while engine is running.
- Rotation of undercarriage cab steering wheel will occur during remote steering operation. Do not occupy undercarriage cab during remote operation.

https://truckmanualshub.com/

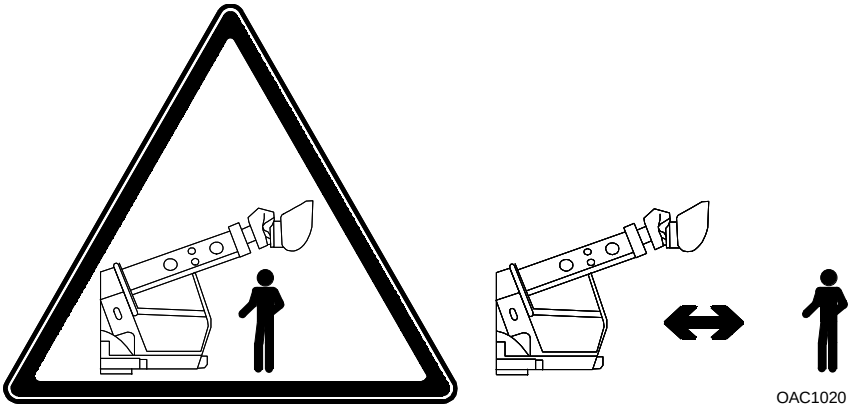

- Never permit anyone under boom, attachment or load. Rest boom or attachment on ground and stop engine before permitting anyone to work beneath boom or behind cradle.

https://truckmanualshub.com/

Travel Hazards - Remote and Driving

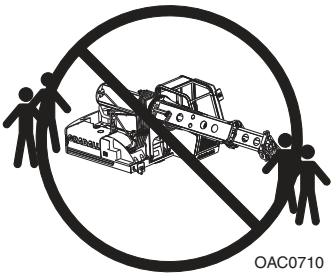

- Look out for and avoid other personnel, machinery and vehicles in the area. Use a spotter if you **do not** have a clear view.
- **Before moving** be sure of a clear path for undercarriage, boom and counterweight and **sound horn.**
- **Always** look in the direction of travel.
- **Before remote travel, check to be sure you are aware of orientation of upperstructure with regard to undercarriage.** Confusion could cause travel in the opposite direction you may expect.

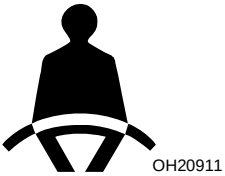

- Always wear seat belt.
- Keep head, arms and other body parts inside cab at all times.
- When machine is operating or driving on public roadways, **comply with all local, state and federal restrictions.**
- **When driving**, ensure boom and attachment are properly secured and positioned for maximum visibility and adequate clearances. Know the overall height of the machine.
- **Always check overhead and side boom clearances** carefully before driving. Position attachment/load to clear obstacles.
- Never drag boom or attachment while moving unit.

https://truckmanualshub.com/

Tip Over Hazard

- Understand how to properly use the capacity chart located in cab. **Do not exceed rated lift capacity**. Plan the lift to be sure it can be performed safely.
- Maintain proper tire pressure at all times.
- Do not depend on machine tipping as a warning of overload. Some load ratings are based on hydraulic lift capacity, not stability.
- Do not increase hydraulic relief settings to lift a load.
- Sudden swing braking can cause unexpected movement of the load and tip the machine.
- Tether suspended loads to restrict movement.

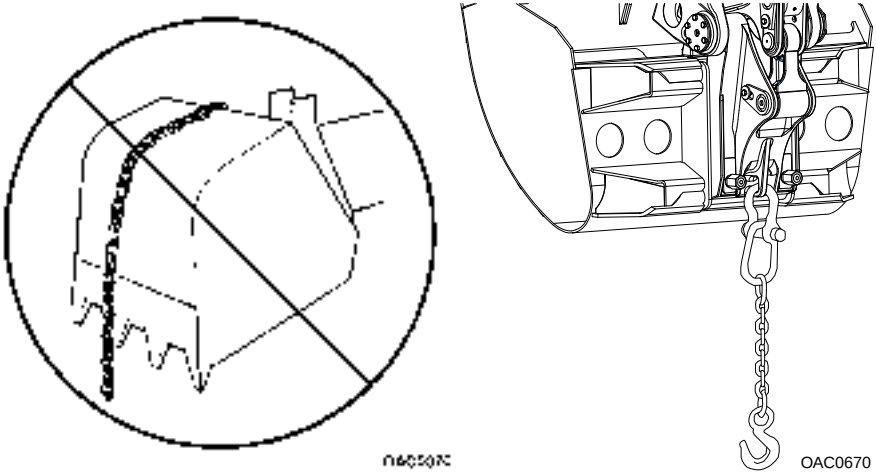

- Never pass load line over open bucket. Relief valves in bucket circuit could cause unexpected, dangerous movement of the load. Bucket linkage could also be damaged.
- Be sure the surface excavator is on is firm enough to support unit and allows for adequate traction.
- Select low travel speed for off-highway grade travel. See *“LCD Display”* on page 2-8.
- Do not travel over excessively steep slopes or excessively rough terrain.
- No load in bucket, attached to boom or any other part of machine during off-highway grade travel.
- Front axle lock cylinders automatically unlock during travel. Do not travel with load over side.
- Shutting off engine will cause front axle lock cylinders to unlock. Place load on ground before shutting off engine.

https://truckmanualshub.com/

Chemical Hazards

Exhaust Fumes

- **DO NOT** operate machine in an enclosed area without proper ventilation.
- **DO NOT** operate the machine in hazardous environments unless approved for that purpose by Gradall and site owner. Sparks from the electrical system and the engine exhaust can cause an explosion.
- If spark arrestors are required, be sure they are in place and in good working order.

Flammable Fuel

OW0300

- **DO NOT** fill the fuel tank or service the fuel system near an open flame, sparks or smoking materials. Engine fuel is flammable and can cause a fire and/or explosion.

WARNING

OW0021

Operating, servicing and maintaining this equipment can expose you to chemicals including gasoline, diesel fuel, lubricants, petroleum products, engine exhaust, carbon monoxide, and phthalates, which are known to the State of California to cause cancer and birth defects or other reproductive harm. To minimize exposure, avoid breathing exhaust, do not idle the engine except as necessary, service your vehicle in a well-ventilated area and wear gloves or wash your hands frequently when servicing your vehicle. Battery posts, terminals and related accessories contain lead and lead compounds, chemicals known to the state of California to cause cancer, birth defects or other reproductive harm. For more information go to www.P65Warnings.ca.gov. This website, operated by California's Office of Environmental Health Hazard Assessment, provides information about these chemicals and how individuals may be exposed to them.

https://truckmanualshub.com/

Hydraulic Fluid

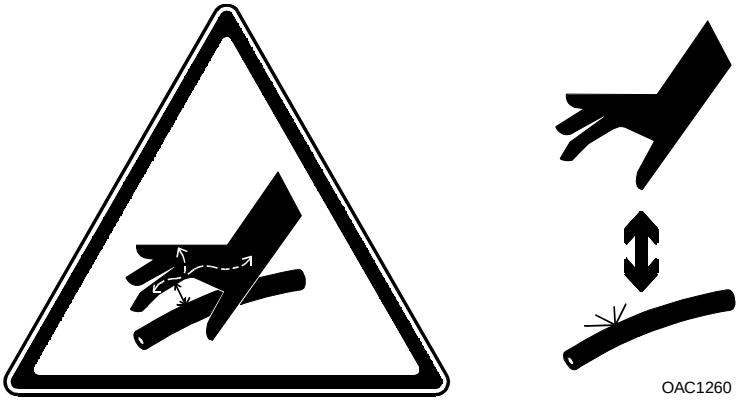

- **DO NOT use your hand to check for leaks**. Use a piece of cardboard or paper to search for leaks. Wear appropriate equipment to protect yourself from spraying fluid. If fluid is injected into the skin seek medical attention immediately.
- Stop engine and relieve trapped pressure before loosening any hydraulic fitting. Hydraulic oil is under enough pressure that it can penetrate the skin.
- **DO NOT** attempt to repair or tighten any hydraulic hoses or fittings while the engine is running or when the hydraulic system is pressurized.

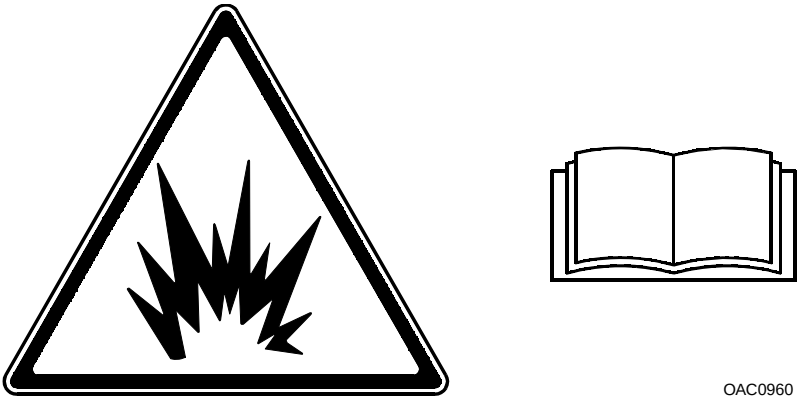

- Relieve pressure from the hydraulic reservoir using the vent valve near the reservoir breather before loosening the filter lid or cover.

https://truckmanualshub.com/

Battery

- Keep sparks, flames and lighted material away from batteries. Explosive gases could cause death or serious injury.

Dust Hazard

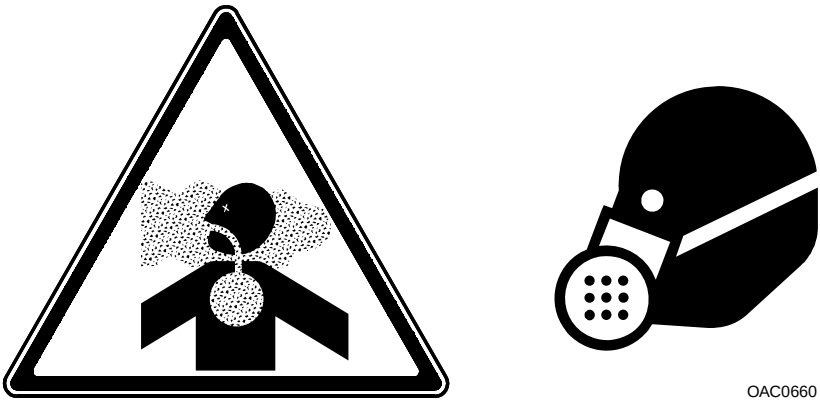

- Repeated or substantial breathing of hazardous dusts, including crystalline silica, could cause fatal or serious respiratory disease including silicosis. Concrete, masonry, many types of rock, and various other materials contain silica sand. California lists respirable crystalline silica as a substance known to cause cancer. Operation of this equipment under certain conditions may generate airborne dust particles that could contain crystalline silica. In those conditions personal protective equipment including an appropriate respirator must be used. If excessive dust is generated, a dust collection or suppression system should also be used during operation.

https://truckmanualshub.com/

1.4 PERSONAL PROTECTION EQUIPMENT

Wear all the protective clothing and personal safety devices issues to you or called for by job conditions. You may need:

- Hard hat
- Safety shoes
- Safety glasses, goggles or face shield
- Heavy gloves
- Hearing protection
- Reflective clothing
- Wet weather gear
- Respirator or filter mask

Wear adequate clothing for the job conditions.

Always know where to get assistance in the case of an emergency. Know where to find and how to use a first aid kit and fire extinguisher/fire suppression system.

https://truckmanualshub.com/

NOTES:

https://truckmanualshub.com/

SECTION 2 - PRE-OPERATION AND CONTROLS

2.1 PRE-OPERATION CHECKS & INSPECTION

Complete all required maintenance before operating unit.

WARNING

OW0021

FALL HAZARD. Use extreme caution when checking items beyond your normal reach. Use an approved ladder. Failure to comply could result in death or serious injury.

Walk around inspection must be performed at beginning of each work shift or at each change of operator. **Contact your local Division of Motor Vehicles for a list of Pre-trip inspections that are recommended in the Commercial Driver's License (CDL) Manual. These inspections should be performed before the inspections on the following pages.**

- Ensure all Safety decals are legible and in place. Clean or replace as required. See page 2-5 for decal information.
- Before removing filler caps or fill plugs, wipe all dirt and grease away from the ports. If dirt enters these ports, it can severely reduce component life.
- Check all fluid levels and refill as needed.

Note: *Consult engine/chassis manufacturer manual(s) for additional engine/chassis inspection information.*

https://truckmanualshub.com/

2.2 WALK-AROUND INSPECTION

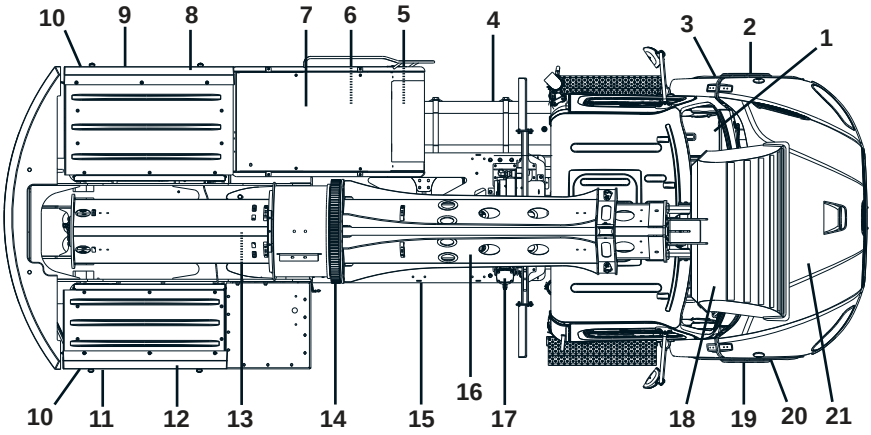

Begin your walk-around inspection at item 1, as noted below. Continue to your right, checking each item in sequence.

INSPECTION NOTE: In addition to any other criteria mentioned, on all components:

- Ensure there are no loose or missing parts and that all parts are securely fastened.
- Check for visible leaks and excessive wear.
- Inspect all structural members including attachment for cracks, excessive corrosion and other damage.

1. Undercarriage Cab -

- General appearance; no visible damage; Chassis manuals in cab.
- Grab handles and steps secure and clean.
- Window glass and mirrors clean and unobstructed. Adjust mirrors for maximum visibility, before and during operation. Be sure windows and doors are securely latched in open or closed position when operating. Replace damaged latches immediately.
- Check seat belts for working condition damage, replace belt if frayed or cut webbing, damaged buckles or loose mounting hardware.

2. Front Axle - Drag link undamaged; steer cylinder and oscillation lock cylinders undamaged, not leaking; hydraulic hoses undamaged, not leaking; brakes undamaged.

3. Wheel/Tire Assembly - No loose or missing lug nuts; No damage to rims or tires; axle bolts torqued.

https://truckmanualshub.com/

4. Fuel Tank - Check fuel level, refill as required; filler cap securely fastened.
5. DEF (Diesel Exhaust Fluid) Tank - Check DEF level, refill as required.
6. Battery Box - Battery cables tight, no visible damage or corrosion. Battery box cover properly latched.
7. Upperstructure Cab -
   - General appearance; no visible damage; Operator & Safety manual located in manual drawer.
   - Grab handles and steps secure and clean.
   - Window glass and mirrors clean and unobstructed. Adjust mirrors for maximum visibility, before and during operation. Be sure windows and doors securely latch in open and closed position. Replace damaged latches immediately.
   - Check seat belt (if equipped) for damage, replace belt if frayed or cut webbing, damaged buckles or loose mounting hardware.
8. AC/Heater Cover - Ensure cover is securely latched. Replace damaged latches immediately.
9. Rear Axle/Fender - Check mud flaps for proper position and condition for highway operation; brakes undamaged.
10. Wheel/Tire Assemblies - No loose or missing lug nuts; proper inflation; No damage to rims or tires; axle bolts torqued.
11. Rear Axle/Fender - Check mud flaps for proper position and condition for highway operation; brakes undamaged.
12. Main Control Valve and Cover - See Inspection Note. Ensure cover is securely latched. Replace damaged latches immediately.
13. Center Pin - See Inspection Note.
14. Tilt Gear - Properly lubricated.
15. Air Tanks - Check for damage/leaks; open petcocks to eliminate condensation.
16. Boom -
    - Rollers properly adjusted; no visible damage to boom hoses/tubes
    - Boom secure if machine is to be driven on highway.
17. Hydraulic Reservoir - Recommended fluid level on sight gauge; filler/breather cap secure and working; oil is clear.
18. Attachment - Properly installed.

https://truckmanualshub.com/

19. Engine Compartment -

- Engine crankcase, check oil level & refill as required. Do not overfill.
- Check engine coolant level at overflow bottle and refill as required.Do not remove the radiator cap. Be sure antifreeze solution is adequate for expected temperatures. Be sure radiator and oil cooler fins are clean.
- Drive belt, check condition & replace as required.
- Power steering fluid at proper level.
- Air Cleaner element condition indicator, check for clogged condition. Replace element as required.
- Engine cover properly latched and secured.

https://truckmanualshub.com/

2.3 SAFETY DECALS

Ensure all **DANGER**, **WARNING**, **CAUTION** and instructional decals and proper capacity charts are legible and in place. Clean and replace as required.

Decal Locations

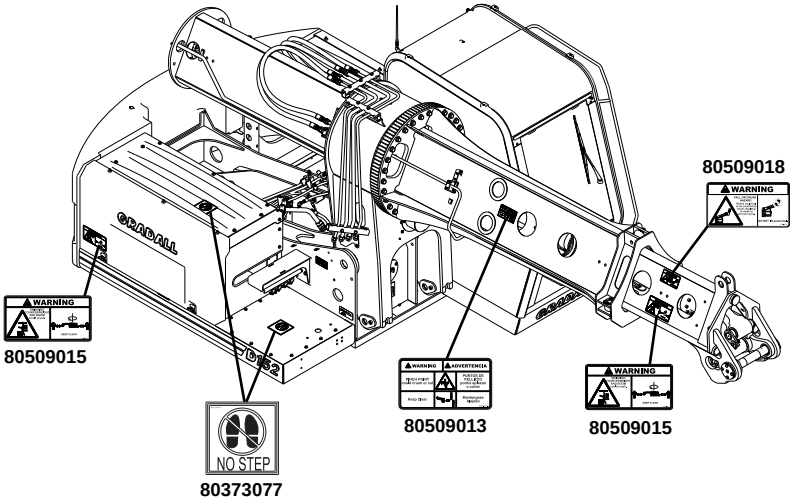

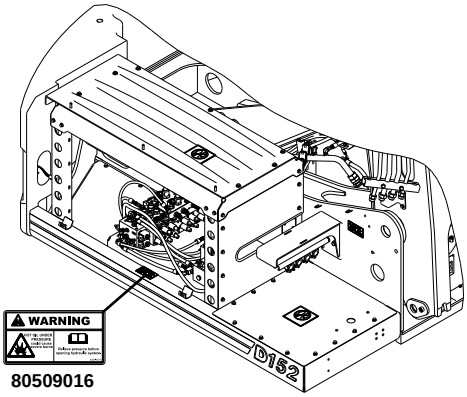

https://truckmanualshub.com/

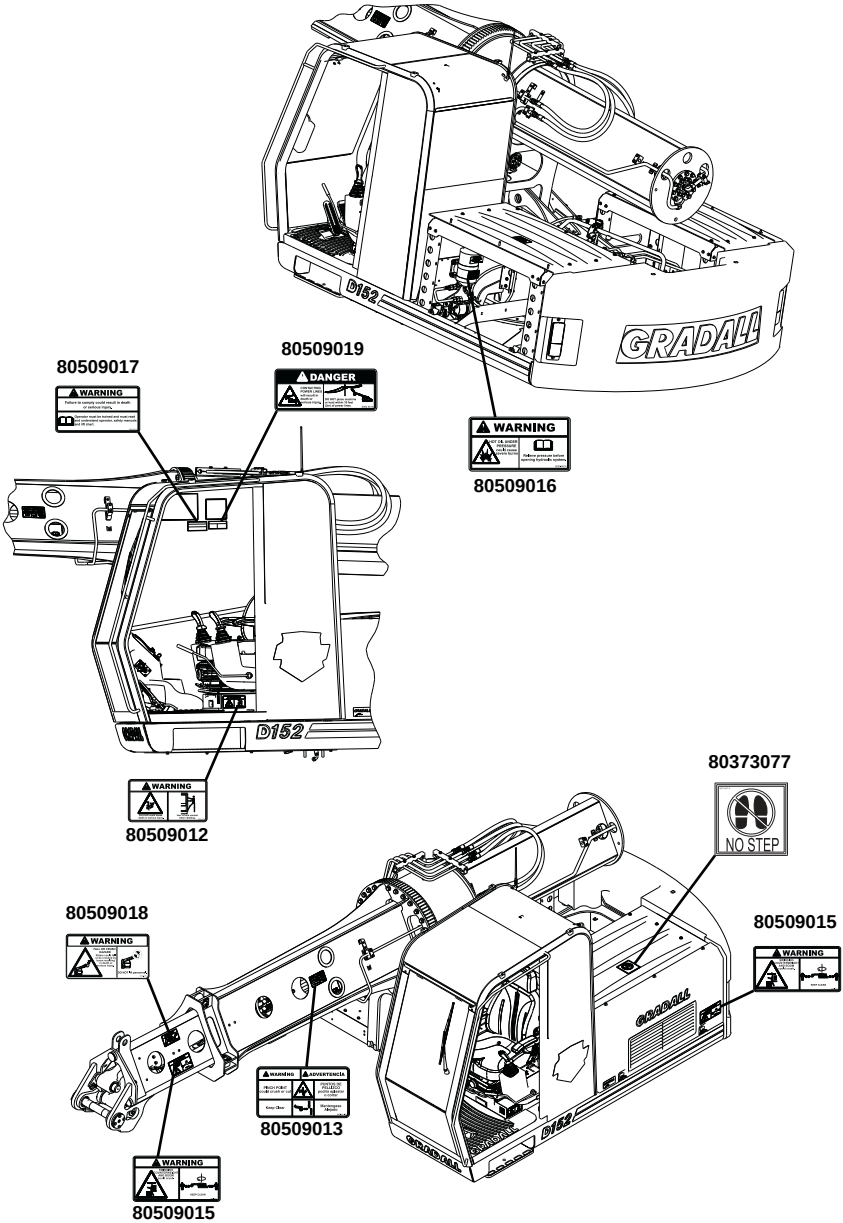

https://truckmanualshub.com/

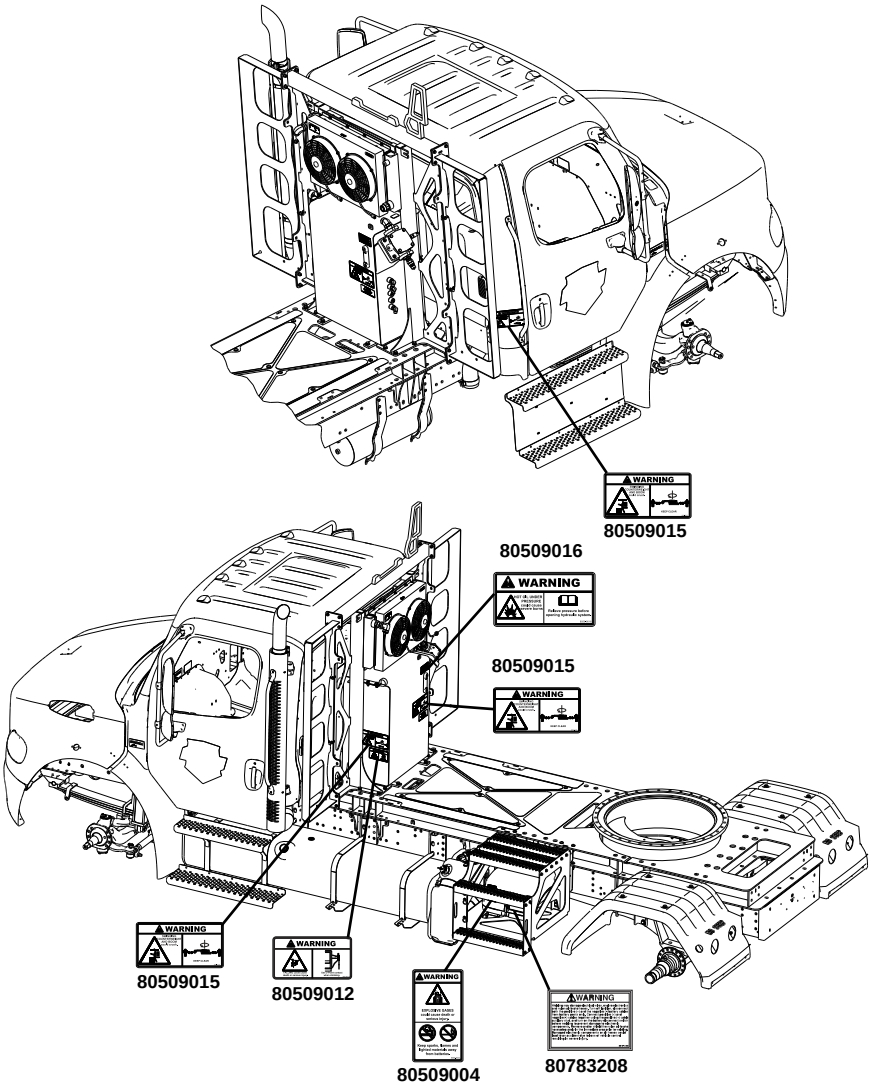

https://truckmanualshub.com/

2.4 UPPERSTRUCTURE CAB CONTROLS & INDICATORS

LCD Display

OAC2111

The LCD display is a collection of controls and indicators. The following pages provide detail of how to understand and function this unit, starting at the top of the display to the bottom.

https://truckmanualshub.com/

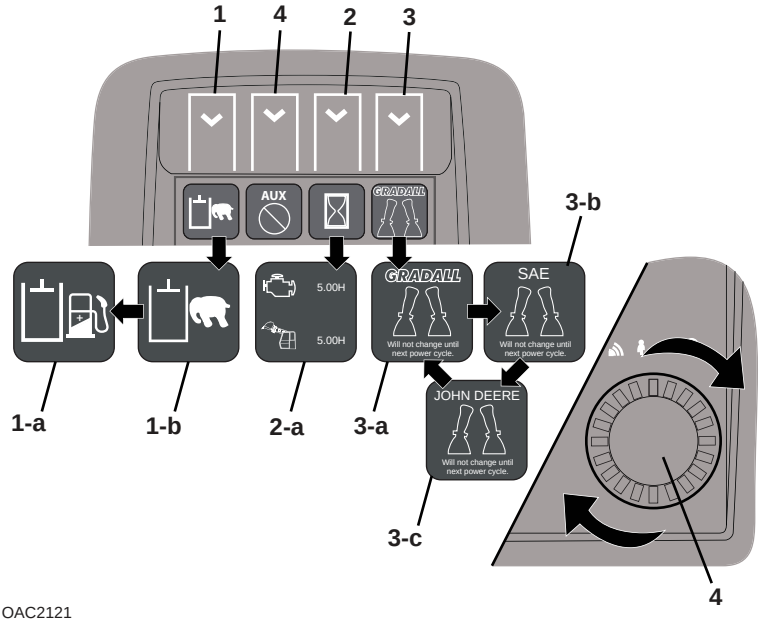

OAC2121

1. Mode Select: Press this button to toggle between fine grade mode **(1-a)** and dig mode **(1-b)**.

2. Hourmeter: Press this button to view the hourmeter information window **(2-a)**. Hourmeter information is separated into chassis engine hours and upperstructure hours. The window will close after a brief period of time, or press the button again **(2)** to close the window manually.

3. Joystick Control Pattern Selection: Press this button to view available control patterns. Scroll the control patterns by rotating the control panel dial **(4)**. When desired control pattern is displayed, press the Joystick Control Pattern Selection button **(3)** to confirm selection. If a new pattern is selected, controls will not change until the next power cycle.

   Available control patterns are Gradall **(3-a)**, SAE **(3-b)** and John Deere **(3-c)**. See *"Joystick Controls"* on page 2-19 for control details.

Note: *When a control pattern is changed, the corresponding control decal must be displayed in the cab.*

4. Auxiliary Hydraulics Control: See page 2-14 for details.

https://truckmanualshub.com/

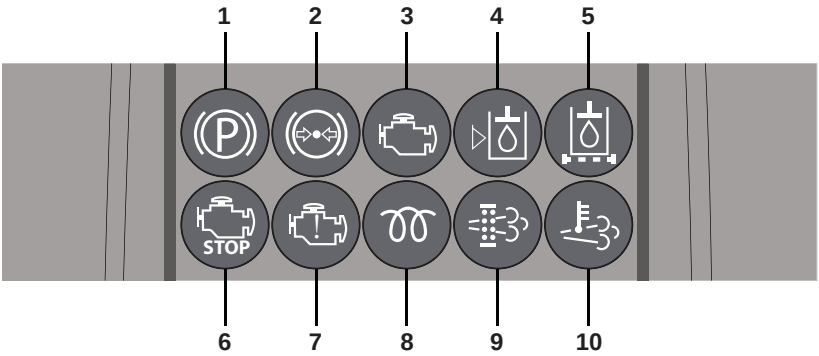

OAC2130

1. Parking Brake Indicator: See *“Park Brake Switch”* on page 2-26.
2. Low Air Indicator: Illuminates red to indicate air system pressure is below minimum operating pressure. An audible alarm is also activated. Upperstructure cab controls will be inoperative if indicator is red.
3. Check Engine Indicator (MIL lamp): Illuminates yellow for any failure that could affect tail pipe emissions.
4. Hydraulic Oil Level Indicator: Illuminates red if oil falls below acceptable operating level.
5. Hydraulic Filter Indicator: Illuminates red to indicate hydraulic reservoir filter needs replaced.
6. Engine Stop Indicator: Illuminates red and pulsing alarm is activated when critical engine fault is detected. Stop engine immediately and repair before continued use.
7. Engine Warning Indicator: Illuminates yellow when non-critical engine fault is detected.
8. Wait-to-Start Indicator: Illuminates yellow until intake manifold warms. Engine can not be started when wait-to-start indicator is illuminated.
9. Diesel Particulate Filter Indicator: Flashes yellow when the need for the particulate filter to regenerate when past engine operation has not provided sufficient conditions for the filter to automatically regenerate.
10. High Exhaust System Temperature Indicator: Illuminates yellow when the exhaust system temperature is or is about to be elevated above normal operating temperatures for the operating mode of the engine.

https://truckmanualshub.com/

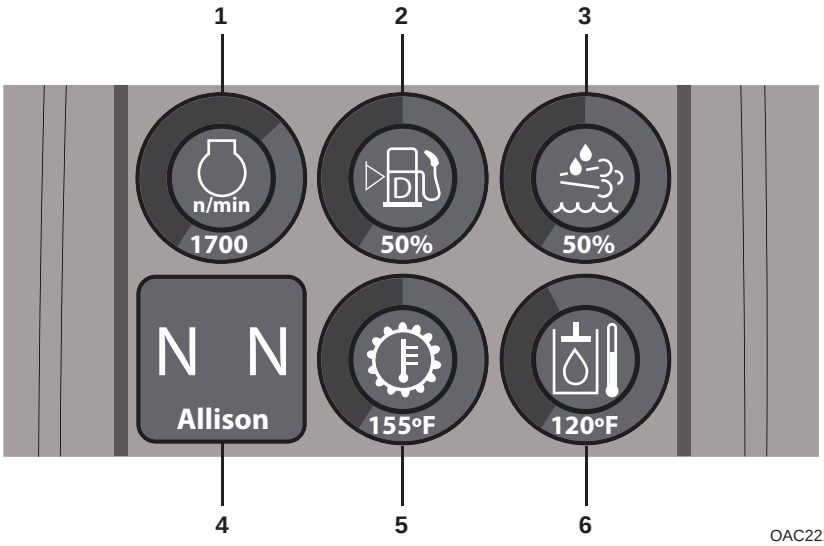

1. Engine Speed (RPM) Indicator
2. Fuel Level Indicator
3. Diesel Exhaust Fluid (DEF) Level Indicator
4. Transmission Gear Indicator: See *"Driving Undercarriage from Upperstructure Cab"* on page 3-6.
5. Transmission Oil Temperature Indicator
6. Hydraulic Oil Temperature Indicator

https://truckmanualshub.com/

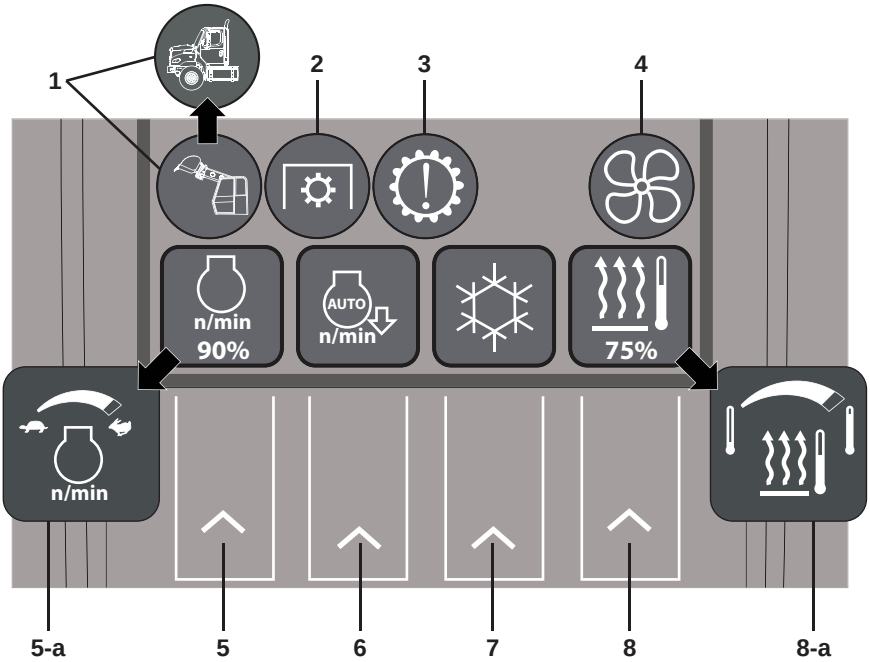

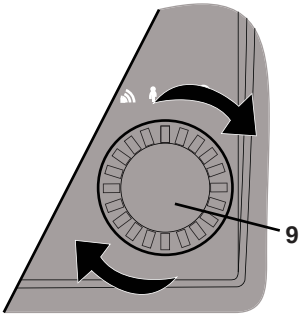

OAC2220

https://truckmanualshub.com/

1. Remote Mode/Travel Mode Indicator: Travel mode indicator (image of chassis cab) will illuminate yellow until air pressure reaches 70psi. Upperstructure cab controls will not be active. Remote Mode Indicator (image of upper cab) will appear and illuminate green once required air pressure is met, and upperstructure cab controls will be active.

2. PTO Indicator: Illuminates green to indicate PTO is engaged.

Note: *The PTO indicator applies to serial numbers D1520000001 thru D152000004 only. Indicator is inactive for all other machines.*

3. Check Transmission Indicator: Illuminates yellow to indicate a problem has been detected in the transmission.

4. Fan On/Off Indicator: No illumination indicates fan is in ‘Off’ position on Right Hand Arm Pod (see page 2-17 for fan control details). With fan in ‘On’ position, the indicator will illuminate as follows:

   - Fan Indicator illuminates red - Fan is ‘On’; A/C is ‘off’
   - Fan Indicator illuminates blue - Fan is ‘On’; A/C is ‘On’

5. Engine Throttle Speed: Press this button to view the engine throttle speed window **(5-a)**. Increase engine speed by rotating the control panel dial **(9)** clockwise. Decrease engine throttle speed by rotating the control panel dial **(9)** counterclockwise. When desired speed is attained, press the Engine Throttle Speed button **(5)**.

6. Auto Idle: Press this button to activate/deactivate auto idle. Indicator will illuminate green when auto idle is active.

   - With auto idle activated, engine speed will return to low idle after 7 seconds of hydraulic control inactivity. Once controls are activated, engine resumes speed set by the operator.
   - With auto idle deactivated, engine speed remains as set by the operator.

7. Air Conditioning On/Off: Press this button to turn air conditioning on/off. Indicator will illuminate blue when air conditioning is on. No illumination indicates air conditioning is off. This button will be inactive when fan switch on Right Hand Arm Pod is in ‘off’ position.

8. Heater Temperature Control: Press this button to view the heater temperature control window **(8-a)**. Increase heater temperature by rotating the control panel dial **(9)** clockwise. Decrease heater temperature by rotating the control panel dial **(9)** counterclockwise. When desired temperature is attained, press Heater Temperature Control button **(8)**.

Note: *Heater Temperature Control button will be inactive if the fan switch on Right Hand Arm Pod is in ‘off’ position, or the Air Conditioning is on.*

https://truckmanualshub.com/

Auxiliary Hydraulics Control (optional)

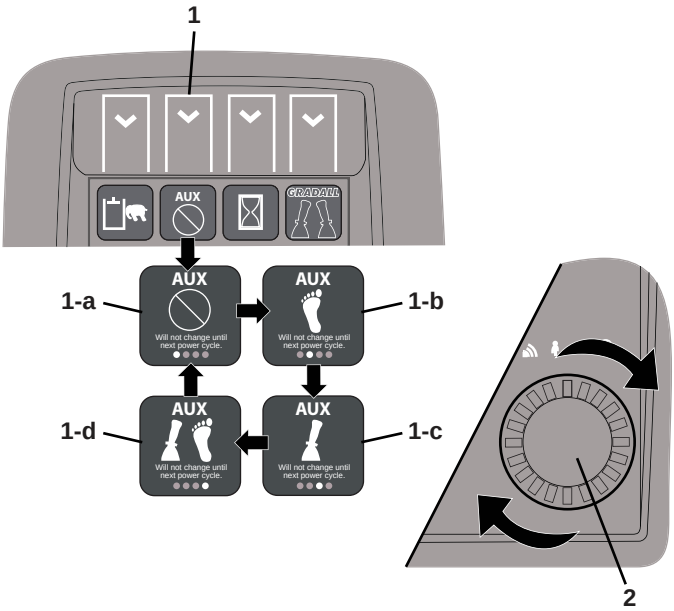

OAC2710

1. Auxiliary Hydraulics Control Selection: Press this button to view available Auxiliary Hydraulic Control options. Scroll the control options by rotating the control panel dial **(2)**. When desired control option is displayed, press the Auxiliary Hydraulics Control button **(1)** to confirm selection. If a new control option is selected, controls will not change until the next power cycle.

   - **1-a** - No Auxiliary Hydraulic Control function is active.
   - **1-b** - Auxiliary Hydraulic Control function is operated by optional foot switch.
   - **1-c** - Auxiliary Hydraulic Control function is operated by the Attachment Shake button on the Left Hand Joystick (see page 2-19 for button location).
   - **1-d** - Auxiliary Hydraulic Control function can be operated by either the Attachment Shake button on the Left Hand Joystick (see page 2-19 for button location), or the optional foot switch.

https://truckmanualshub.com/

This Page Intentionally Left Blank

https://truckmanualshub.com/

Left Hand Arm Pod

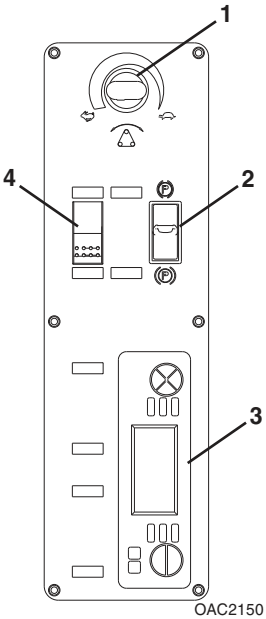

1. Boom Tilt Speed Switch: Rotary switch. Rotate switch clockwise to decrease boom tilt speed; rotate counterclockwise to increase boom tilt speed.
2. Park Brake Switch: See page 2-26 for details.
3. AM/FM Radio
4. Strobe Light Switch (optional): On/Off switch.

https://truckmanualshub.com/

Right Hand Arm Pod

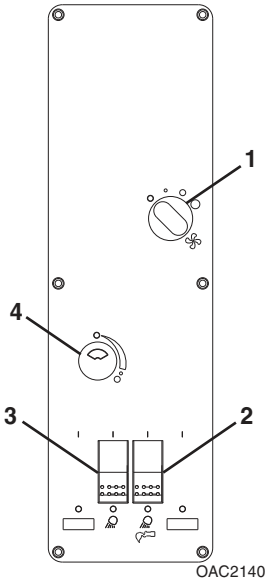

1. Fan Speed: Rotary switch for heater and air conditioner fan.
2. Boom Lights Switch (optional): On/Off switch.
3. Work Lights Switch (optional): On/Off switch.
4. Intermittent Wiper/Washer Switch: See *“Intermittent Wiper/Washer”* on page 2-25.

https://truckmanualshub.com/

NOTES:

https://truckmanualshub.com/

Joystick Controls

Activating the Joysticks

The joysticks will remain locked/inactive until the control cut out lever **(1)** located on the left hand arm pod **(2)** is moved to the unlocked/active position.

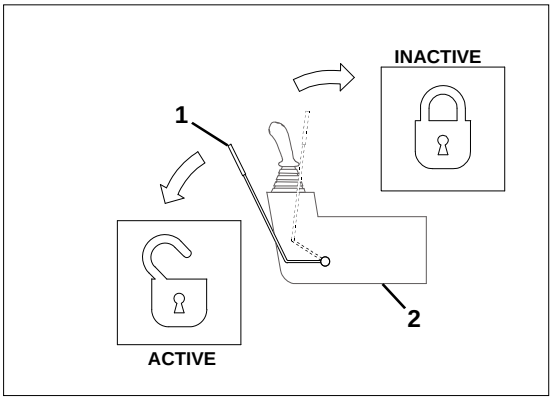

OAC0920

Joystick Control Patterns

Before operating, refer to the selected joystick control pattern located on the LCD display to verify control pattern setting. Ensure the joystick decal matches the machine controls before operating.

https://truckmanualshub.com/

SAE Joystick Controls

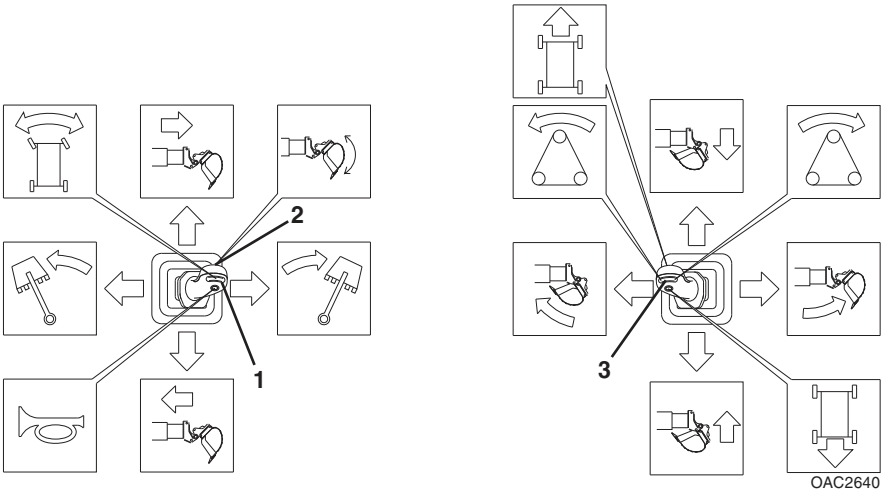

Left Hand Joystick Functions

- Move the joystick back to retract boom; move joystick forward to extend boom. Move joystick right to swing boom right; move joystick left to swing boom left.
- Left-click steer control button **(1)** to turn front wheels left. Right-click steer control button **(1)** to turn front wheels right.
- Attachment shake button **(2)** allows excess dirt or debris to be removed from the boom attachment.
- For two simultaneous boom functions, move the joystick between quadrants. For example, moving the joystick forward and to the left will extend and swing the boom left simultaneously.

Right Hand Joystick Functions

- Move the joystick back to raise boom; move joystick forward to lower boom. Move joystick right to open tool; move joystick left to close tool.
- Left-click boom tilt button **(3)** to tilt boom counterclockwise; right-click boom tilt button **(3)** to tilt boom clockwise.
- For two simultaneous boom functions, move the joystick between quadrants. For example, moving the joystick forward and to the left will lower the boom and close the tool simultaneously.

https://truckmanualshub.com/

GRADALL Joystick Controls

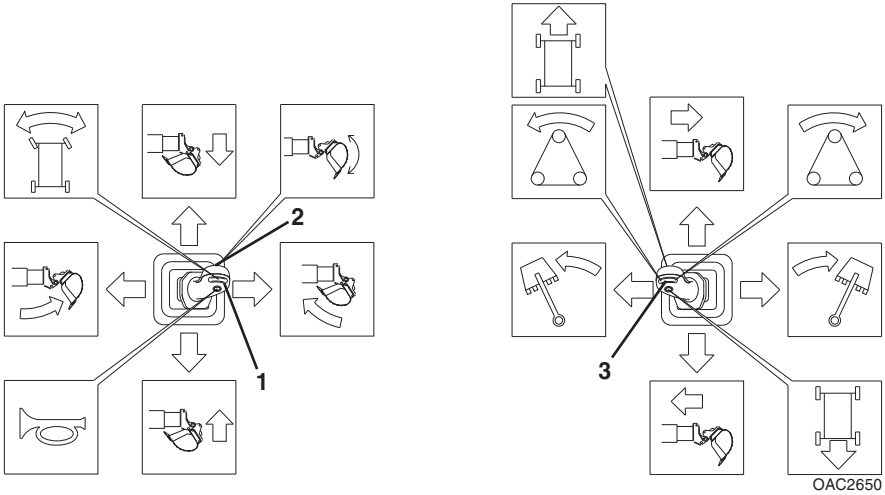

Left Hand Joystick Functions

- Move the joystick back to raise boom; move joystick forward to lower boom. Move joystick right to close tool; move joystick left to open tool.
- Left-click steer control button **(1)** to turn front wheels left. Right-click steer control button **(1)** to turn front wheels right.
- Attachment shake button **(2)** allows excess dirt or debris to be removed from the boom attachment.
- For two simultaneous boom functions, move the joystick between quadrants. For example, moving the joystick forward and to the left will lower boom and open tool simultaneously.

Right Hand Joystick Functions

- Move the joystick back to retract boom; move joystick forward to extend boom. Move joystick right to swing boom right; move joystick left to swing boom left.
- Left-click boom tilt button **(3)** to tilt boom counterclockwise; right-click boom tilt button **(3)** to tilt boom clockwise.
- For two simultaneous boom functions, move the joystick between quadrants. For example, moving the joystick forward and to the left will extend and swing the boom left simultaneously.

https://truckmanualshub.com/

JOHN DEERE Joystick Controls

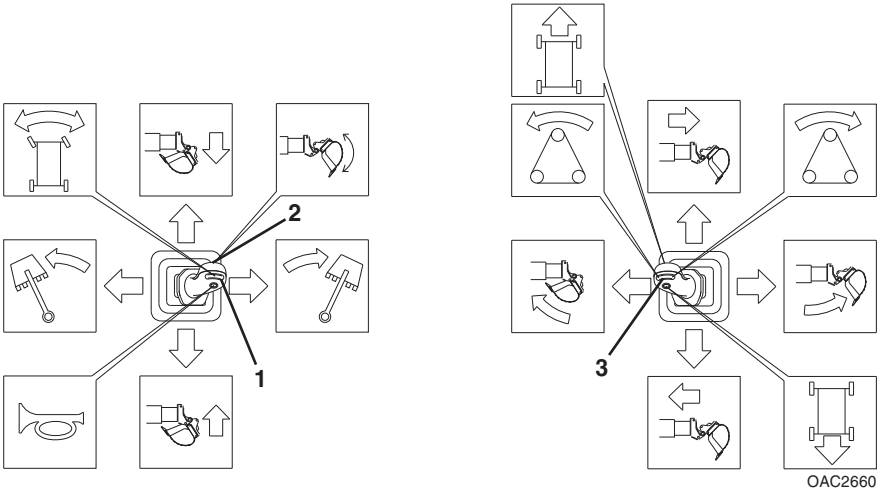

Left Hand Joystick Functions

- Move the joystick back to raise boom; move joystick forward to lower boom. Move joystick right to swing boom right; move joystick left to swing boom left.
- Left-click steer control button **(1)** to turn front wheels left. Right-click steer control button **(1)** to turn front wheels right.
- Attachment shake button **(2)** allows excess dirt or debris to be removed from the boom attachment.
- For two simultaneous boom functions, move the joystick between quadrants. For example, moving the joystick forward and to the left will lower and swing boom left simultaneously.

Right Hand Joystick Functions

- Move the joystick back to retract boom; move joystick forward to extend boom. Move joystick right to open tool; move joystick left to close tool.
- Left-click boom tilt button **(3)** to tilt boom counterclockwise; right-click boom tilt button **(3)** to tilt boom clockwise.
- For two simultaneous boom functions, move the joystick between quadrants. For example, moving the joystick forward and to the left will extend boom and close the tool simultaneously.

https://truckmanualshub.com/

Operator Seat Adjustments

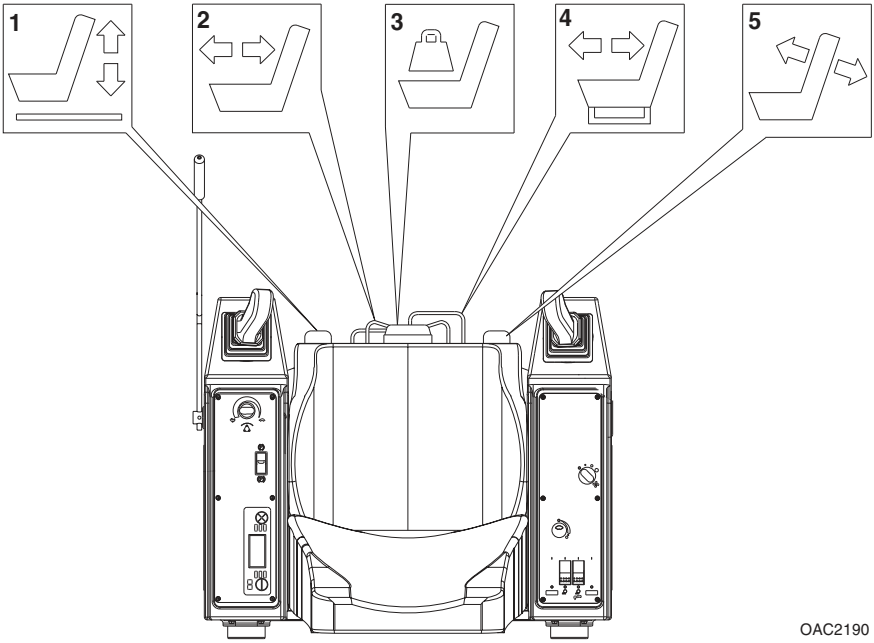

Prior to starting engine adjust seat for position and comfort.

1. Height Adjustment Control
2. Upper Seat Fore and Aft Adjustment Control
3. Weight Control Adjustment
4. Lower Seat Fore and Aft Adjustment Control
5. Seat Back Adjustment

https://truckmanualshub.com/

Ignition

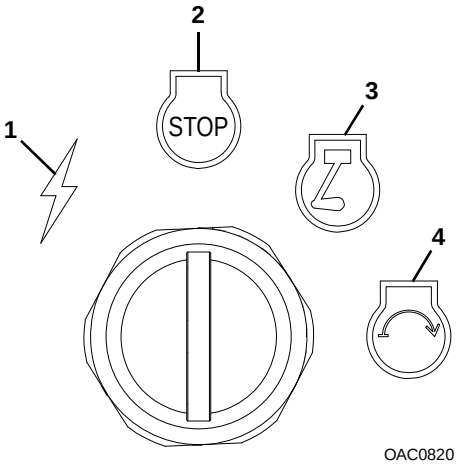

1. ACC: Voltage is available for all electrical functions.
2. OFF: Engine off.
3. RUN: Prohibits rotating key switch to position 4 in the event the engine does not start. Rotate the key to position 2 then back to position 4 to re-engage the starter.
4. START: Engine start.

https://truckmanualshub.com/

Intermittent Wiper/Washer

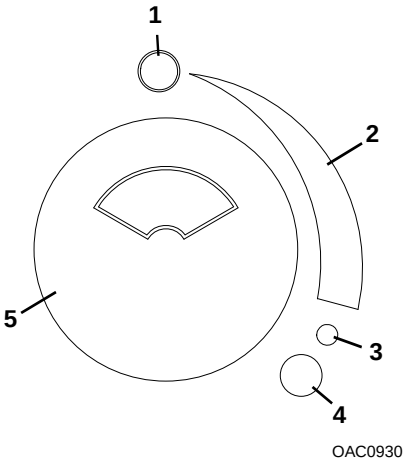

1. OFF
2. DELAY: Rotating knob clockwise decreases delay.
3. LOW: Low wiper speed. No delay.
4. HIGH: High wiper speed. No delay.
5. WASHER: Press and hold switch to activate washer.

https://truckmanualshub.com/

Park Brake Switch

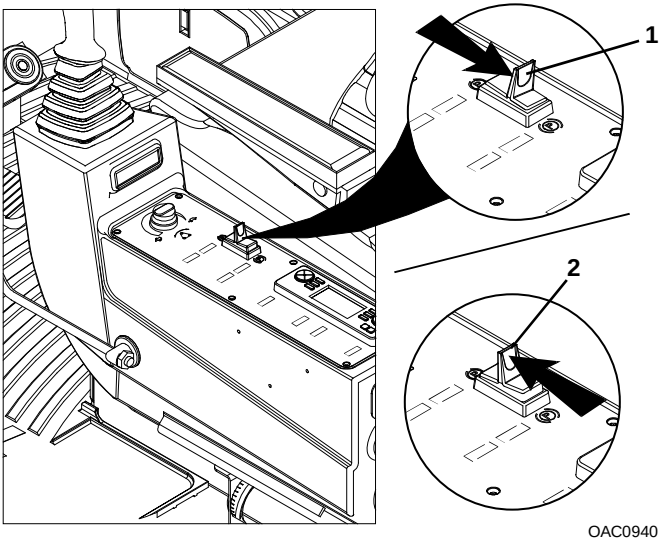

OAC0940

- Park Brake Switch: This switch controls the application and release of the park brake. Indicator light on the LCD display illuminates red to indicate brake is applied.

View of indicator when park brake is on. Will illuminate red.

View of indicator when park brake is off.

OAC2200

- With the engine running and the park brake switch in “OFF” position **(1)**, park brake is disengaged. With switch in “ON” position **(2)**, park brake is engaged and transmission will not engage forward or reverse.

https://truckmanualshub.com/

SECTION 3 - OPERATION

3.1 REMOTE CONTROL PREPARATION

Preparing Undercarriage for Remote Control Operation

Remote travel is to be used for positioning unit at job site, not for over-the-road driving. After reaching job site, perform the following steps to prepare undercarriage for remote control operation:

1. Park the machine in a safe, level area.
2. Turn undercarriage ignition switch to “OFF” position.
3. Set the undercarriage park brake.
4. Set Travel/Remote selector switch, located on undercarriage cab dash, to remote

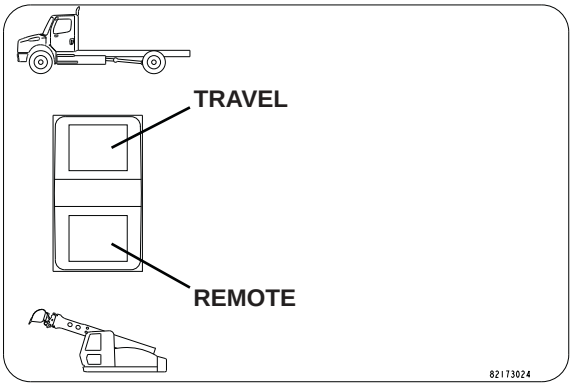

OAC2290

5. Proceed to upperstructure cab.

https://truckmanualshub.com/

Preparing Upperstructure for Remote Control Operation

All instructions on undercarriage cab remote control decal must be followed before starting machine in remote operation.

1. Place control cut out lever in locked/inactive position (refer to page 2-19).
2. Turn ignition switch to “RUN” position.

OAC2260

3. The wait-to-start light will illuminate on LCD Display. When light turns off, move to step 4.

Note: *Engine will not start when light is illuminated.*

4. Turn ignition switch to “START” position to start engine. If engine fails to start, turn ignition switch to “OFF” position and return to step 2.
5. Position control cut out lever in the unlocked/active position to activate and engage joystick controls and pedals in remote operation.

https://truckmanualshub.com/

3.2 CHECKS BEFORE REMOTE CONTROL OPERATION

This section outlines the checks to be performed at the beginning of each work shift or at each change of operator. Repair any deficiencies before driving or operating the equipment. During warm-up period, check the following:

- Make sure the engine does not start with the control cut out lever in the lowered position.
- Check to ensure the engine functions properly and the lights and indicators located in the upperstructure cab are functioning.
- Check to ensure control pattern decal matches joystick control pattern shown on the LCD display.
- Ensure digging brakes and park brake function properly before traveling a significant distance in remote control.
- Be sure travel alarm and horn function properly. Both must be audible from the cab with engine running.
- Make sure all boom and attachment functions operate smoothly and correctly.
- Forward/reverse travel and steering operate correctly.
- Swing the upperstructure left and right and ensure the swing brake functions properly.

Normal Engine Operation

- Observe gauges frequently to be sure all engine systems are functioning properly.
- **Be alert for unusual noises or vibration.** When an unusual condition is noticed, park machine in a safe position and perform shut-down procedure. See *“Remote Mode Engine Shutdown”* on page 3-21. Report condition to your supervisor or maintenance personnel.
- **Avoid prolonged idling.** If the engine is not being used, turn it off.

https://truckmanualshub.com/

3.3 REMOTE MODE BRAKE SYSTEM

Remote Control Braking

WARNING

OW0021

REMOTE CONTROL BRAKING. Allow sufficient time for full brake system pressure to develop before operating unit in remote control. Low air light indicator will turn off when pressure reaches 70 psi.

Always apply upperstructure parking brake before leaving upperstructure cab.

Digging Brake

When traveling in remote mode, the digging brake is automatically applied upon release of the forward/reverse travel joystick button. See page 3-6 for more detail.

- When activated, the digging brake is applied to all wheels to hold the undercarriage stationary while the excavator is digging.

https://truckmanualshub.com/

This Page Intentionally Left Blank

https://truckmanualshub.com/

3.4 REMOTE MODE POWER TRAIN

Driving Undercarriage from Upperstructure Cab

Note: *Never tow a load using remote control drive.*

Operate the engine at full throttle. Undercarriage speed is controlled by the amount of travel pedal actuation.

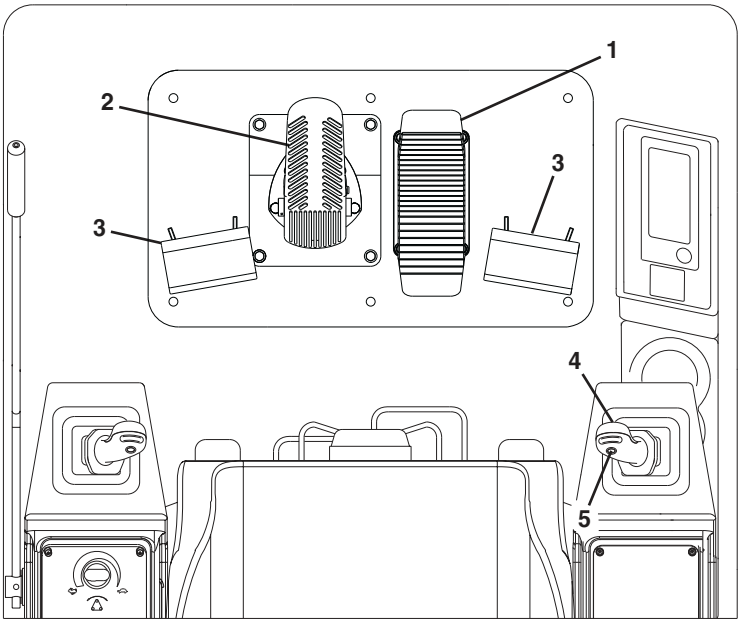

OAC2680

1. Travel Pedal: The travel pedal controls undercarriage travel speed.
2. Brake Pedal:
   - Prior to Travel - Depress fully to engage transmission and allow forward/reverse travel.
   - While Traveling - Depress to slow or stop machine.
3. Foot Rests
4. Joystick Button - Forward Travel
5. Joystick Button - Reverse Travel

https://truckmanualshub.com/

With boom positioned over front of machine:

- **Forward Travel** - Press and hold the forward travel joystick button **(4)**. Fully depress brake pedal **(2)**. Transmission Gear Indicator on LCD display will display a “1” on the left hand side of icon, indicating request for 1st gear engagement has been made:

Transmission Gear Indicator will then display a “1” on the right hand side of icon, indicating transmission is in gear and ready for forward travel:

With forward travel joystick button still depressed, release brake pedal to begin travel. Use the travel pedal **(1)** to increase/decrease travel speed. **Forward travel joystick button must remain depressed for travel. Releasing the button during travel will engage digging brake.**

UNEXPECTED TRAVEL. If on level surface, machine will travel when transmission is engaged and brake pedal released without any actuation of travel pedal.

OW0021

- **Braking** - Allow travel pedal **(1)** to return to neutral position. Fully depress brake pedal **(2)** until machine comes to a stop. Release forward travel joystick button **(4)**. Digging brake will set.

https://truckmanualshub.com/

With boom positioned over front of machine:

- **Reverse Travel** - Press and hold the reverse travel joystick button **(5)**. Fully depress brake pedal **(2)**. Transmission Gear Indicator on LCD display will display an “R” on the left hand side of icon, indicating request for reverse gear engagement has been made:

Transmission Gear Indicator will then display an “R” on the right hand side of icon, indicating transmission is in gear and ready for reverse travel:

With reverse travel joystick button still depressed, release brake pedal to begin travel. Use the travel pedal **(1)** to increase/decrease travel speed. **Reverse travel joystick button must remain depressed for travel. Releasing the button during travel will engage digging brake.**

WARNING

OW0021

UNEXPECTED TRAVEL. If on level surface, machine will travel when transmission is engaged and brake pedal released without any actuation of travel pedal.

- **Braking** - Allow travel pedal **(1)** to return to neutral position. Fully depress brake pedal **(2)** until machine comes to a stop. Release reverse travel joystick button **(4)**. Digging brake will set.

https://truckmanualshub.com/

Steering the Undercarriage from Upperstructure Cab

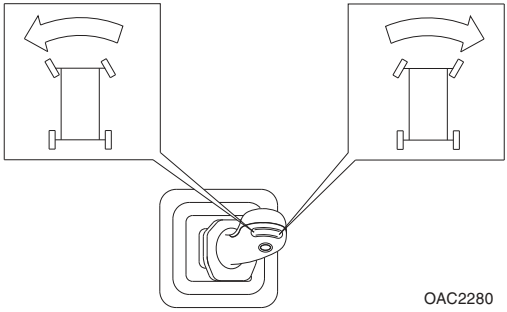

On Left Hand Joystick, left-click steer control button to turn front wheels left. Right-click steer control button to turn front wheels right.

UNEXPECTED DIRECTION OF TRAVEL. Before remote travel, check to be sure you are aware of orientation of upperstructure with regard to undercarriage. Confusion could cause travel in the opposite direction you are expecting.

WARNING
OW0021

https://truckmanualshub.com/

3.5 TYPICAL DIG CYCLE

Standard SAE Boom and Attachment Functions

Prepare for boom and attachment function:

1. Position unit for efficient attachment usage. **Notice!:** While digging, pay close attention to boom position in relation to undercarriage components. In certain instances it is possible for the boom to come into contact with the undercarriage.
2. Stop engine and secure door and windows in desired position for ventilation. Remove boom tie down chain from boom.
3. Perform checks before remote control operation located on page 3-3. Set engine to full throttle position.
4. Be certain control cut out lever is in down position to energize joysticks and foot pedals.

WARNING

OW0021

UNEXPECTED MOVEMENT. Test your controls before operating. If controls have been changed to another pattern, be sure you are familiar with the functions and ensure that the diagram in the cab shows the actual pattern in use. Alternate patterns are located in the operator cab in the manual compartment. If you do not have the proper control decal, do not change the control pattern.

https://truckmanualshub.com/

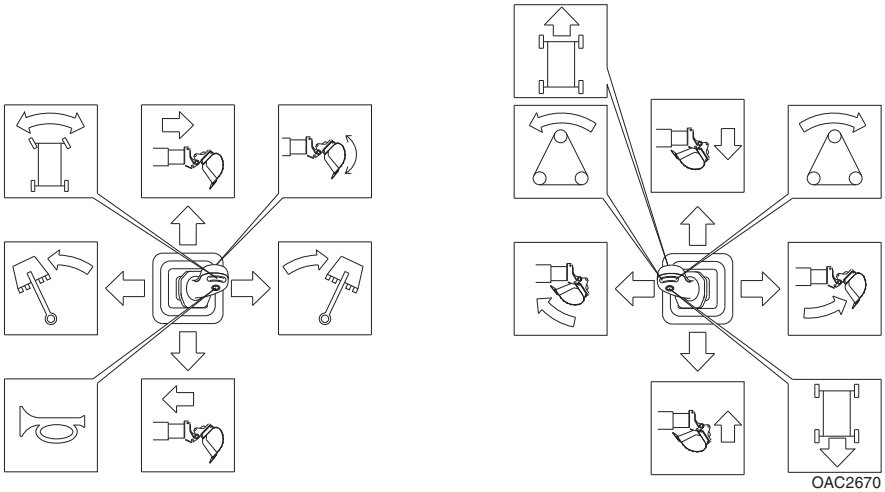

Standard SAE control pattern shown in illustration above.

Note: *Practice with controls in a safe, open area. Joysticks and pedals return to neutral position when released.*

1. Pull back on right joystick **(A)** to raise boom far enough to clear all obstructions.

https://truckmanualshub.com/

2. Move left joystick to left **(G)** to swing left or to right **(H)** to swing right.

3. While pushing left joystick forward **(F)** to extend boom, push right joystick forward **(B)** to lower boom into position for start of cut.

4. Move right joystick to right **(C)** to open bucket or to left **(D)** to close bucket for correct penetration. Teeth should angle downward slightly (about 5 degrees). Angle may be greater for soft digging.

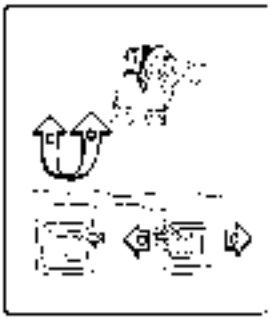

https://truckmanualshub.com/

5. If required, press left side of tilt switch **(I)** to tilt counterclockwise or right side of switch **(J)** to tilt clockwise.

6. While pushing forward on right joystick **(B)** to lower boom and force bucket into ground, pull back on left joystick **(E)** to retract boom and fill bucket.

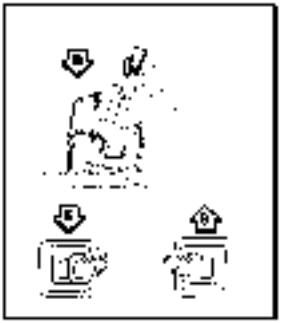

7. As bucket is filling, jog right joystick forward **(B)** to lower boom and maintain depth of cut. At same time jog right joystick to right **(C)** to open bucket and maintain proper bucket angle.

https://truckmanualshub.com/

8. When bucket is full, or when boom is fully retracted, move right joystick to left **(D)** to close bucket. At same time pull right joystick back **(A)** to raise boom far enough to clear obstructions.

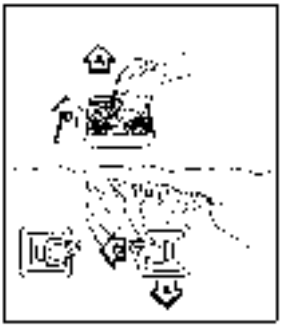

9. Move left joystick to right **(H)** to swing right or to left **(G)** to swing left to dump site. If necessary, extend boom by pushing left joystick forward **(F)**.

10. Move right joystick to right **(C)** to open bucket and dump load.

https://truckmanualshub.com/

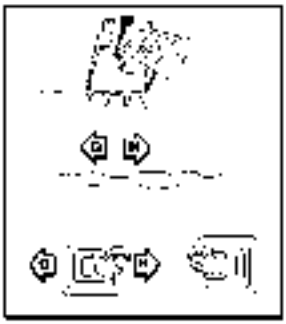

11. Move left joystick to left **(G)** or right **(H)** to align boom for next cut. Repeat steps 3 through 11.

https://truckmanualshub.com/

3.6 LIFTING & PLACING A LOAD

WARNING

OW0021

LIFTING & POSITIONING LOADS. Failure to plan a lift properly could result in death or serious injury.

The automatic boom tilt brake will not prevent boom from tilting in response to an external load. Load must be centered under bucket adapter with boom level from side to side.

Precautions

- Use the lift capacity chart to calculate maximum load. Keep in mind, the attachment weight and rigging must be added to the load, then compared to the value on the lift capacity chart.
- If it becomes necessary to shut the engine off while positioning a load, place load on the ground prior to shutting off engine.
- Be thoroughly familiar with excavator hand signals shown at the end of the manual.
- Operate machine at full throttle and do not shut off engine with suspended load.
- Do not travel with suspended load positioned over the side of the machine.

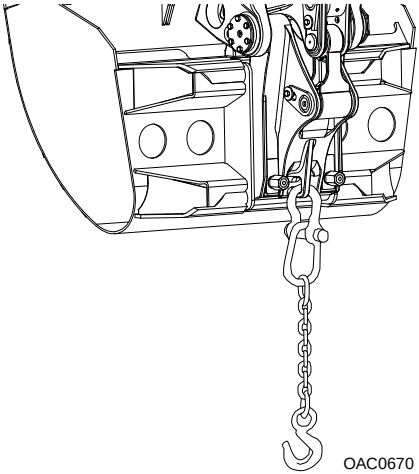

OAC0670

- Suspend loads only as shown above. Passing load line over open bucket can cause uncontrolled movement of load.
- To lift loads, level boom from side to side and close adapter fully against stops. Pass through adapter as shown and be certain chain is locked on itself.

https://truckmanualshub.com/

General

There is a lift capacity difference between the excavator's best and worst lift positions. Just because it can lift a load from one point does not mean it can safely deliver the load to any other point.

Prior to lifting and placing a load, map out the lift, swing, and lower path to ensure that capacity, both hydraulic and stability tipping limits, are not exceeded. The best lifting position is over the rear with the excavator level and the boom fully retracted.

You must plan the lift based on the worst condition of the lift and delivery, not the best. The worst condition can only be determined by performing an UNLOADED TEST AND DELIVERY of the load.

Loads shown on chart in cab are hydraulic lift capacities with those in shaded area indicating tipping limits. Exceeding these capacities can cause a relief valve to open allowing the load to fall or in some cases, the machine to tip over.

Positioning Machine For A Lift

The machine must be on a firm, level surface when making a lift.

The shorter the load radius, the greater the lift capacity. Position the unit to minimize boom extension and swing while keeping adequate distance from obstructions and excavations.

Position machine to gain maximum visibility of load and delivery point. If conditions do not permit a clear view, use a signal person.

https://truckmanualshub.com/

Planning A Lift

Note: *Lift capacities are based on machine being on a firm, level surface and also no load being suspended beneath bucket adapter.*

1. Determine the weight of the load including weight of slings, chains, bucket/attachment (tool), and auxiliary lifting devices. Refer to lift capacity chart for weight adjustment required for bucket.
2. Move the machine to the best position for making the lift.
3. Perform an unloaded trial run of lift to determine maximum boom height/depth and load radius required to complete the lift.
4. Measure boom height/depth from hole in adapter to ground level (same level as bottom of tire). Be sure to allow for length of chain and height of load.

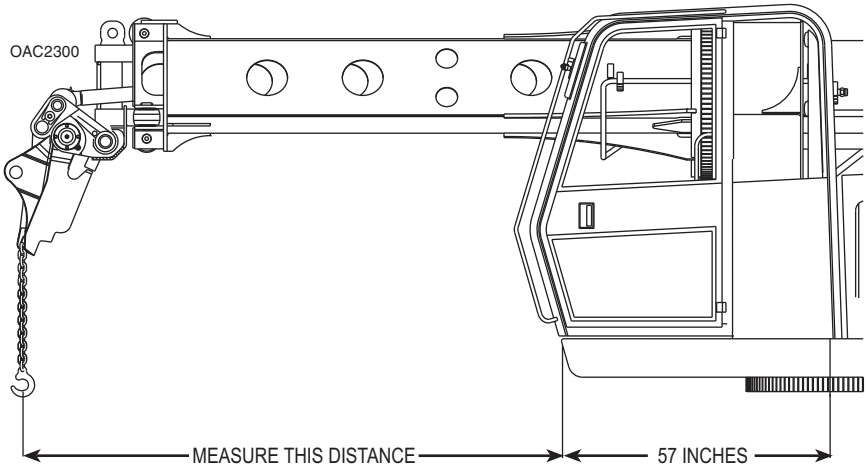

5. Measure load radius from inner corner of frame at front of cab to vertical load line (as shown above) and add distance to center of rotation (57 inches).
6. Refer to lift capacity chart column for required load radius. If required radius is between columns, use column for next larger radius.
7. Check the appropriate capacities for required boom height/depth. The smaller of these capacities is the maximum load permitted for lift conditions.

Note: *To determine working load limits the operator must also consider wind, hazardous conditions, experience of personnel and proper load handling.*

https://truckmanualshub.com/

3.7 LIFT CAPACITY

LOAD POINT HEIGHT		LOAD RADIUS										
		10' (3.0m)		15' (4.6m)		20' (6.1m)		25' (7.6m)		MAXIMUM RADIUS		
		OVER END	OVER SIDE	OVER END	OVER SIDE	OVER END	OVER SIDE	OVER END	OVER SIDE		OVER END	OVER SIDE
ABOVE GROUND LEVEL	20' (6.1m)							5715 (2590)	5715 (2590)	27' 4" (8.3m)	5070 (2300)	5070 (2300)
	15' (4.6m)			12425 (5635)	12425 (5635)	8795 (3990)	8795 (3990)	6515 (2955)	6515 (2955)	29' 5" (9m)	5120 (2320)	5120 (2320)
	10' (3.0m)					9880 (4480)	9880 (4480)	7140 (3240)	7140 (3240)	30' 6" (9.3m)	5230 (2370)	5230 (2370)
	BOOM LEVEL 8' 7" (2.4m)					10080 (4570)	10080 (4570)	7255 (3290)	7255 (3290)	30' 7" (9.3m)	5265 (2390)	5265 (2390)
	5' (1.5m)					10290 (4665)	10030 (4550)	7415 (3365)	7175 (3255)	30' 7" (9.3m)	5375 (2440)	5195 (2355)
AT GROUND LEVEL						9815 (4450)	9800 (4445)	7265 (3295)	7035 (3190)	29' 11" (9.1m)	5550 (2515)	5310 (2410)
BELOW GROUND LEVEL	5' (1.5m)			11090 (5030)	11090 (5030)	8705 (3950)	8705 (3950)	6745 (3060)	6745 (3060)	28' 3" (8.6m)	5740 (2605)	5725 (2595)
	10' (3.0m)	8500 (3855)	8500 (3855)	8630 (3915)	8630 (3915)	7365 (3340)	7365 (3340)	6010 (2725)	6010 (2725)	25' 5" (7.7m)	5910 (2680)	5910 (2680)
	15' (4.6m)	5840 (2650)	5840 (2650)	6640 (3010)	6640 (3010)	6075 (2755)	6075 (2755)			20' 11" (6.4m)	5930 (2690)	5930 (2690)
	20' (6.1m)									12' 10" (3.9m)	4875 (2210)	4875 (2210)

The above loads are in compliance with the SAE standard J1097 DEC2005. They do not exceed 87% of hydraulic lifting capacity or 75% of tipping capacity.

Loads shown in shaded areas indicate the load is limited by tipping rather than hydraulic lift capacity.

The rated lift capacity is based on the machine being equipped with 15,500 lb (7030 kg) counterweight, standard boom, standard tires, no auxiliary hydraulics, and no bucket.

Adjust the listed rated capacities by subtracting the value listed for bucket/attachment used:

8065-6007 60" (1.5 m)	Ditching -	807	lbs.	(366 kg)
8065-6006 66" (1.7 m)	Ditching -	892	lbs.	(405 kg)
8065-6002 72" (1.8 m)	Ditching -	944	lbs.	(428 kg)
8045-6020 24" (610 mm)	Excavating -	603	lbs.	(274 kg)
8045-6021 30" (762 mm)	Excavating -	660	lbs.	(300 kg)
8045-6022 36" (914 mm)	Excavating -	741	lbs.	(336 kg)
8045-6023 42" (1.1 m)	Excavating -	841	lbs.	(382 kg)
8045-6024 48" (1.2 m)	Excavating -	957	lbs.	(434 kg)
8065-6013 72" (1.8 m)	Dredging -	1114	lbs.	(505 kg)
8065-6102 40" (1.0 m)	Pavement -	1262	lbs.	(573 kg)
8065-6024 8' (2.4 m)	Blade -	630	lbs.	(285 kg)
8065-6009 Single Tooth Ripper -		557	lbs.	(253 kg)

The load point is located on the bucket pivot point, including loads listed for maximum radius.

Do not attempt to lift or hold any load greater than these rated values at specified load radii and heights. The weight of slings and any auxiliary devices must be deducted from the rated load to determine the net load that may be lifted.

ATTENTION: All rated loads are based on the machine being stationary and level on a firm supporting surface. The user must make allowance for particular job conditions such as soft or uneven ground, out of level conditions, side loads, hazardous conditions, experience of personnel, etc. The operator and other personnel must read and understand the operator manual before operating this machine. Rules for safe operation of equipment must be adhered to at all times.

- **Note: Bucket adjustment values are 87% of the actual bucket weights.**

OAC0690

Note: *This is a sample capacity chart* ***only! DO NOT*** *use this chart, use the one located in your operator cab.*

https://truckmanualshub.com/

The rated lift capacity is based on the machine being on flat, level ground and equipped with standard boom and no bucket. Adjust the listed rated capacities on capacity chart located in operator cab according to each bucket as shown:

Part Number	Size	Description	Weight Adjustment
82106011	60"	(1.5m) Ditching	-651lbs. (295kg)
82106029	36"	(914mm) Excavating	-698lbs. (317kg)

Note: *Bucket adjustment values are 87% of the actual bucket weights. Any weight adjustment for Gradall buckets not shown can be calculated by multiplying actual bucket weight by .87.*

- The load point is located on the bucket pivot point, including load listed for maximum radius.
- Do not attempt to lift or hold any load greater than the rated values at specified load radii and heights. The weight of slings and any auxiliary devices must be deducted from the rated load to determine the net load that may be lifted.

ATTENTION: All rated loads are based on the machine being stationary and level on a firm supporting surface. The user must make allowance for particular job conditions such as soft or uneven ground, out of level conditions, side loads, hazardous conditions, experience of personnel, etc. The operator and other personnel must be fully trained and understand this Operator Manual and Safety Manuals furnished by the manufacturer before operating this machine. Rules for safe operation of equipment must be adhered to at all times.

https://truckmanualshub.com/

3.8 REMOTE MODE ENGINE SHUTDOWN

To shutdown the excavator, park in a safe location on flat level ground and away from other equipment and/or traffic lanes.

From Upperstructure Cab:

1. Stop machine by releasing travel pedal to neutral position to engage digging brake.
2. Swing the machine to align upperstructure with undercarriage
3. Lower attachment/boom to ground or stow boom in boom rest. See *“Boom Stow Procedure”* on page 3-23.
4. Operate engine at low idle for 3 to 5 minutes. **DO NOT** rev engine.
5. Turn key to “OFF” position and remove key.
6. Exit excavator maintaining 3-point contact.
7. Chock wheels (if necessary).

MACHINE ROLL-AWAY HAZARD. Lower boom to ground or boom rest and stop engine before leaving cab.

OW0021

https://truckmanualshub.com/

3.9 RETURN TO TRAVEL MODE

Preparing Upperstructure for Undercarriage Operation

1. Position unit on level surface and release travel pedal to neutral position to engage digging brake.
2. Position boom in rest, allowing clearance for attachment. See *“Boom Stow Procedure”* on page 3-23.
3. Apply parking brake.
4. Shut down engine from upperstructure cab.
5. Proceed to undercarriage cab.
6. Set parking brake in undercarriage cab.
7. Set Travel/Remote selector switch, located on chassis cab dash, to travel.

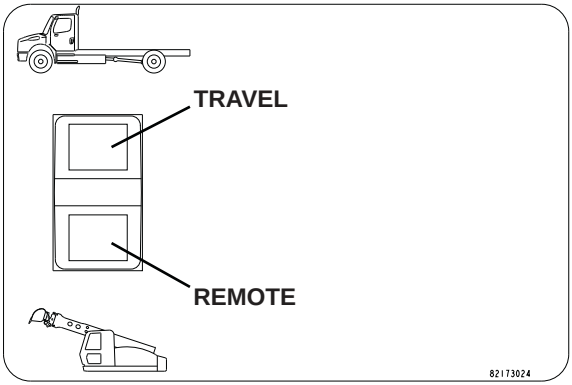

OAC2290

8. Start engine.

https://truckmanualshub.com/

Boom Stow Procedure

1. With teleboom extended, stow boom in boom rest.
2. Retract telescope boom until the boom position decal is visible in the bottom smaller hole in the main boom, as illustrated:

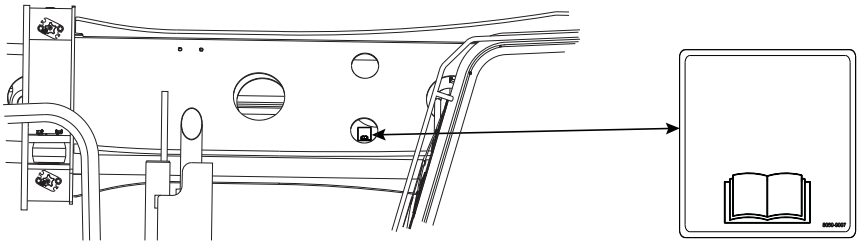

OAC2690

Securing Unit for Driving

Drive to and from job site only under the following conditions:

- Boom is in boom rest.
- Mirrors are clean and properly adjusted for visibility.
- Doors and upperstructure windows secured in closed position.
- No load attached to any part of machine.
- Tires inflated to proper pressure.
- Seat belt buckled across lap.
- Drive in accordance with Federal, State, and Local requirements.
- Plan your route.

https://truckmanualshub.com/

3.10 PARKING THE EXCAVATOR

Precaution

If the machine is in remote and must be shut down for an extended period of time, return the machine to conventional undercarriage operation.

Avoid parking on roads or highways. If it cannot be avoided, or in case of emergency, display warning flags, flares or flashing lights.

Parking Procedure

1. Turn off engine.
2. Fill fuel tank to minimize condensation.
3. Lock all doors and covers and install protective window covers if available.

Note: *If disconnection/removal of battery is desired, consult the chassis manufacturer manual for instructions or precautions prior to doing so.*

https://truckmanualshub.com/

3.11 PRESERVATION & STORAGE

- Park the machine following the procedure on page 3-24.
- Tape a note inside cab window indicating the person to be called in an emergency.
- If machine is on an unpaved surface, be sure tires are resting on sturdy boards to prevent them from being frozen in soft ground.
- Periodically cycle hydraulic functions until normal operating temperature is reached, then apply Boeshield *T9 (part number 1440-4645) to exposed cylinder rods.

Note: *If disconnection/removal of battery is desired, consult the chassis manufacturer manual for instructions or precautions prior to doing so.*

Maintenance

- Take a sample of hydraulic fluid for analysis. ***Note****: Not all analysis methods are compatible with all hydraulic fluids (e.g., laser particle counters do not record accurate cleanliness levels in Mobil 424 due to some of the oil additives being interpreted as contaminants). Consult with your analysis lab as to oil type and test method.*
- Thoroughly clean all mud and debris from the machine to help protect surfaces from corrosion.
- Lubricate all grease fittings until fresh lube is expelled from the lube point.
- If you are close to any lubricant change period, make the change before storage.
- Check level of anti-freeze, drain and refill if necessary to obtain proper protection.

https://truckmanualshub.com/

This Page Intentionally Left Blank

https://truckmanualshub.com/

SECTION 4 - ATTACHMENTS

4.1 APPROVED ATTACHMENTS

To determine if an attachment is approved for use on the hydraulic excavator you are using, perform the following prior to installation.

- Use only Gradall approved attachments.
- Before selecting specific attachments for specific models, consult the load chart on the model literature and consult either an authorized Gradall distributor or Gradall.

If any of the above conditions are not met, do not use the attachment.

4.2 UNAPPROVED ATTACHMENTS

WARNING

OW0021

Use only approved attachments. Attachments which have not been approved for use with your excavator could cause machine damage or an accident resulting in death or serious injury.

Do not use unapproved attachments for the following reasons:

- Gradall cannot establish range and capacity limitations for “will fit,” homemade, altered, or other non-approved attachments.
- An overextended or overloaded excavator can tip over with little or no warning and cause death or serious injury to the operator and/or those working nearby.
- Gradall cannot assure the ability of a non-approved attachment to perform its intended function safely.

4.3 ATTACHMENT OPERATION

- Capacities and range limits for the excavator change depending on the attachment being used.
- Separate attachment instructions (if applicable) must be kept in Manual Holder in cab with this Operator & Safety Manual. An additional copy must be kept with the attachment if it is equipped with a manual holder.
- Window guards must be in place when using powered attachments such as hammers, augers or mowers capable of producing flying debris.

https://truckmanualshub.com/

Excavating Buckets

Size
36" (914mm)

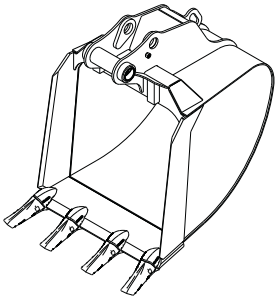

OAC0230

Ditching Buckets

Size
60" (1.52m)

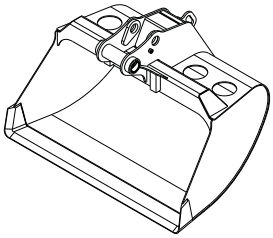

OAC2240

https://truckmanualshub.com/

SECTION 5 - LUBRICATION & MAINTENANCE

5.1 INTRODUCTION

Service the product in accordance with the maintenance schedule on the following pages. Complete all required maintenance before operating unit.

Service intervals are based on machine usage of 1500 hours annually. Use of your product may vary significantly and you must adjust service frequency for your usage to obtain maximum service life.

Always check hourmeter and date at beginning of shift to be certain services are performed at proper intervals. Perform service at whichever interval comes first.

Note: *Failure To Use Gradall Hydraulic Filter Elements Could Void Warranty.*

WARNING
OW0021

FALL HAZARD. Use extreme caution when checking items beyond your normal reach. Use an approved ladder. Failure to comply could result in death or serious injury.

If guards are removed for service, replace them before operating machine.

Do not step or stand on engine cover or upperstructure heater cover when performing checks and services in the area of the main boom and cradle.

Before removing filler caps or fill plugs, wipe all dirt and grease away from the ports. If dirt is allowed to enter ports, it can shorten the life of major hydraulic components along with o-rings, seals, packing and bearings.

CAUTION
OW0031

ELECTRICAL COMPONENT DAMAGE. Do not pressure wash or steam clean under the valve cover on the upperstructure.

When adding fluids, refer to *"Product Specifications"* on page 7-1 to determine proper fluid type.

Clothing and Safety Gear

Wear all the protective clothing and personal safety devices issued to you or called for by job conditions. **DO NOT** wear loose clothing or jewelry that can get caught on controls or moving parts. Refer to page 1-13 for more detail.

https://truckmanualshub.com/

5.2 GENERAL MAINTENANCE INSTRUCTIONS

Prior to performing any service or maintenance on the excavator, follow the shutdown procedure on page 3-21 unless otherwise instructed and place "Do Not Operate" tag on steering wheel in associated cab.

WARNING
OW0021

CUT/CRUSH/BURN HAZARD. Do not perform service or maintenance on the machine with the engine running. Failure to comply could cause death or serious injury.

- Ensure excavator is level for proper fluid readings.
- For boom service, extend boom, close bucket and lower onto flat ground.
- Clean lubrication fittings before lubricating.
- After greasing excavator, cycle all functions several times to distribute lubricants.
- Apply a light coating of engine oil to all linkage pivot points.
- Drain engine and gear cases after operating when oil is hot.
- Check all lubricant and coolant levels when cool.

WARNING
OW0021

MACHINE DAMAGE. Contact Gradall before welding on machine. Welding could damage wires, electronic processors, hoses, and tubes. Prior to welding, turn off ignition, unplug all electronic processors and disconnect positive (+) and
negative (-) battery cables from battery posts only. Do not disconnect cable leads from studs on battery box panel. Connect positive (+) and negative (-) cables together. Remove or adequately shield all components, hoses, tubes, and wires in the area. Component damage could cause an accident resulting in death or serious injury.

Tire Service

Tire service must be performed by a qualified tire service center or an authorized person that is properly trained in procedures and use of safety equipment designed for tire service.

https://truckmanualshub.com/

5.3 SERVICE & MAINTENANCE SCHEDULES

10 Hour Maintenance Schedule

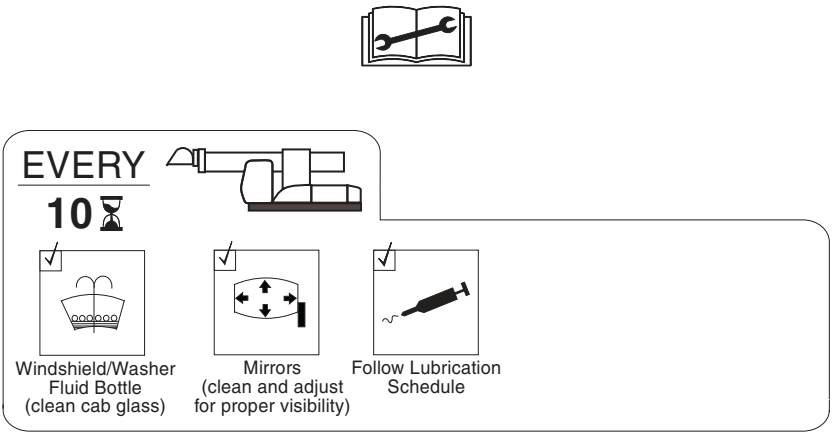

OAC2350

50 Hour Maintenance Schedule

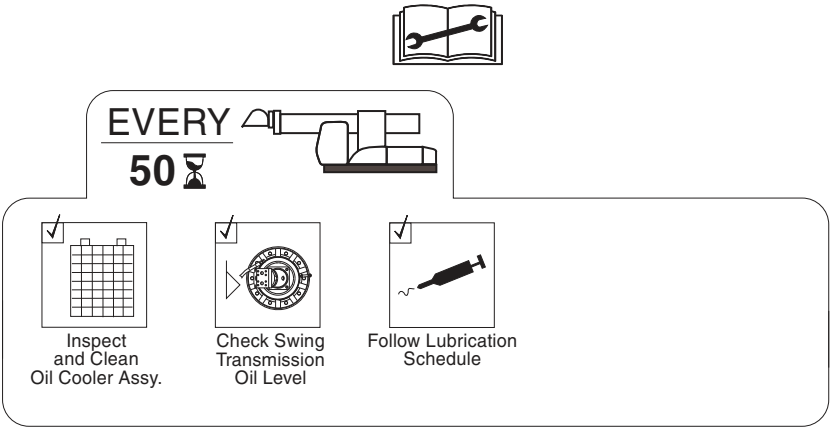

OAC2360

https://truckmanualshub.com/

100 Hour Maintenance Schedule

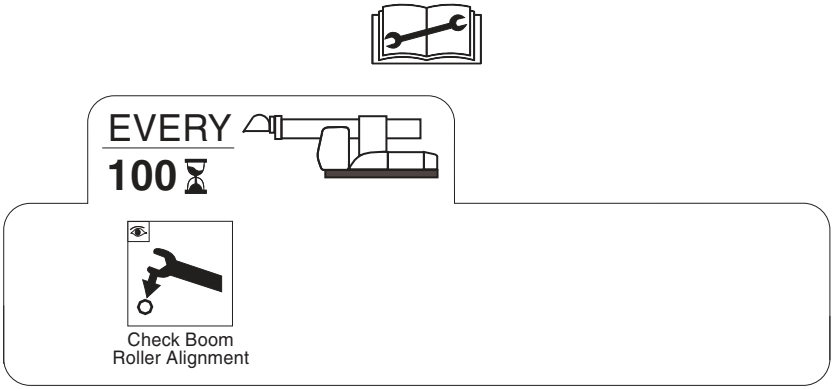

OAC2370

1st 30 Days (250 hrs Max) & 250 Hour Maintenance Schedule - (Upperstructure)

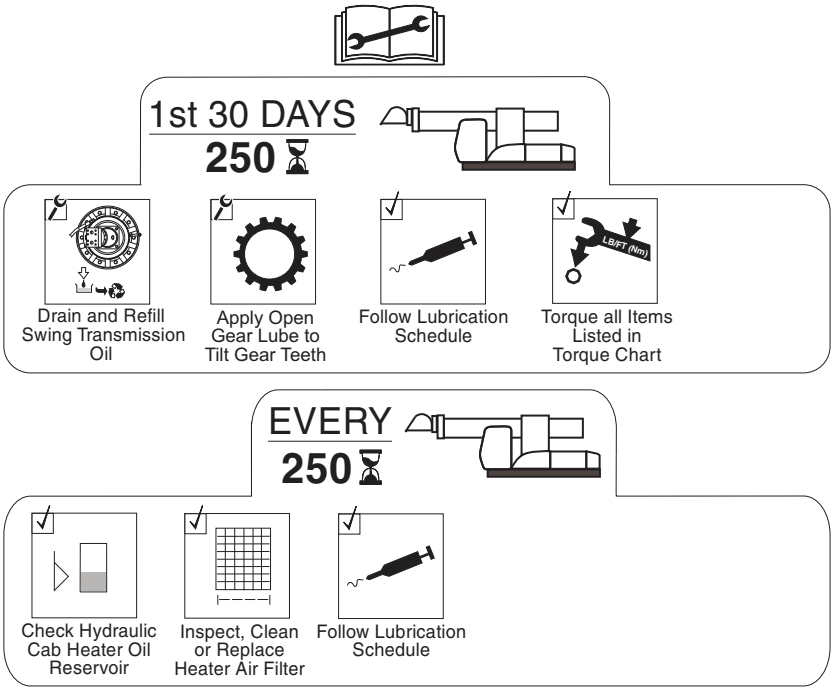

OAC2380

https://truckmanualshub.com/

750 Hour Maintenance Schedule

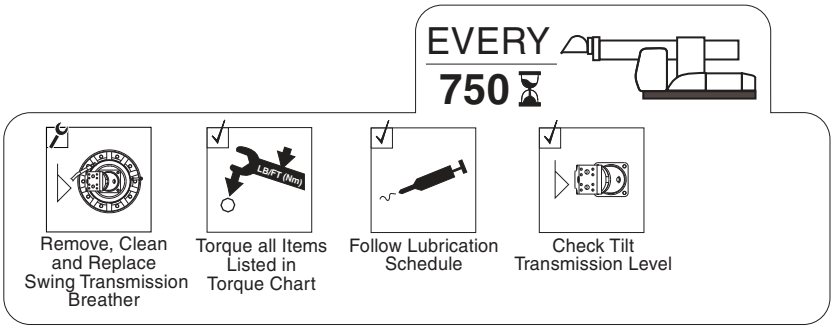

OAC2390

1500 Hour Maintenance Schedule

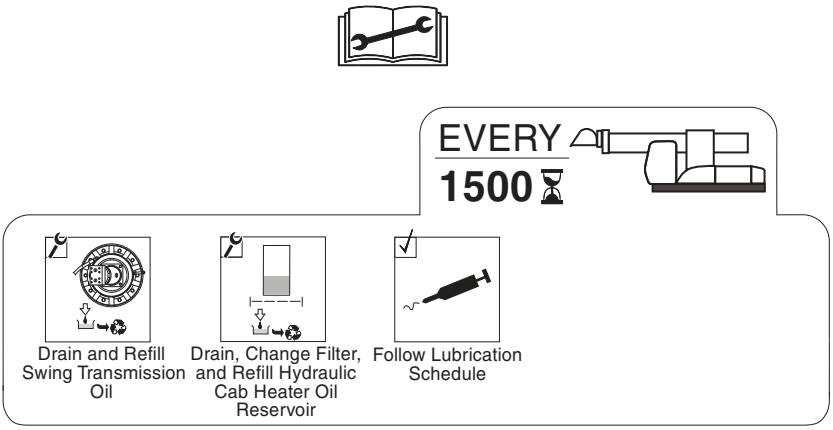

OAC2100

https://truckmanualshub.com/

5.4 UPPERSTRUCTURE LUBRICATION SCHEDULE

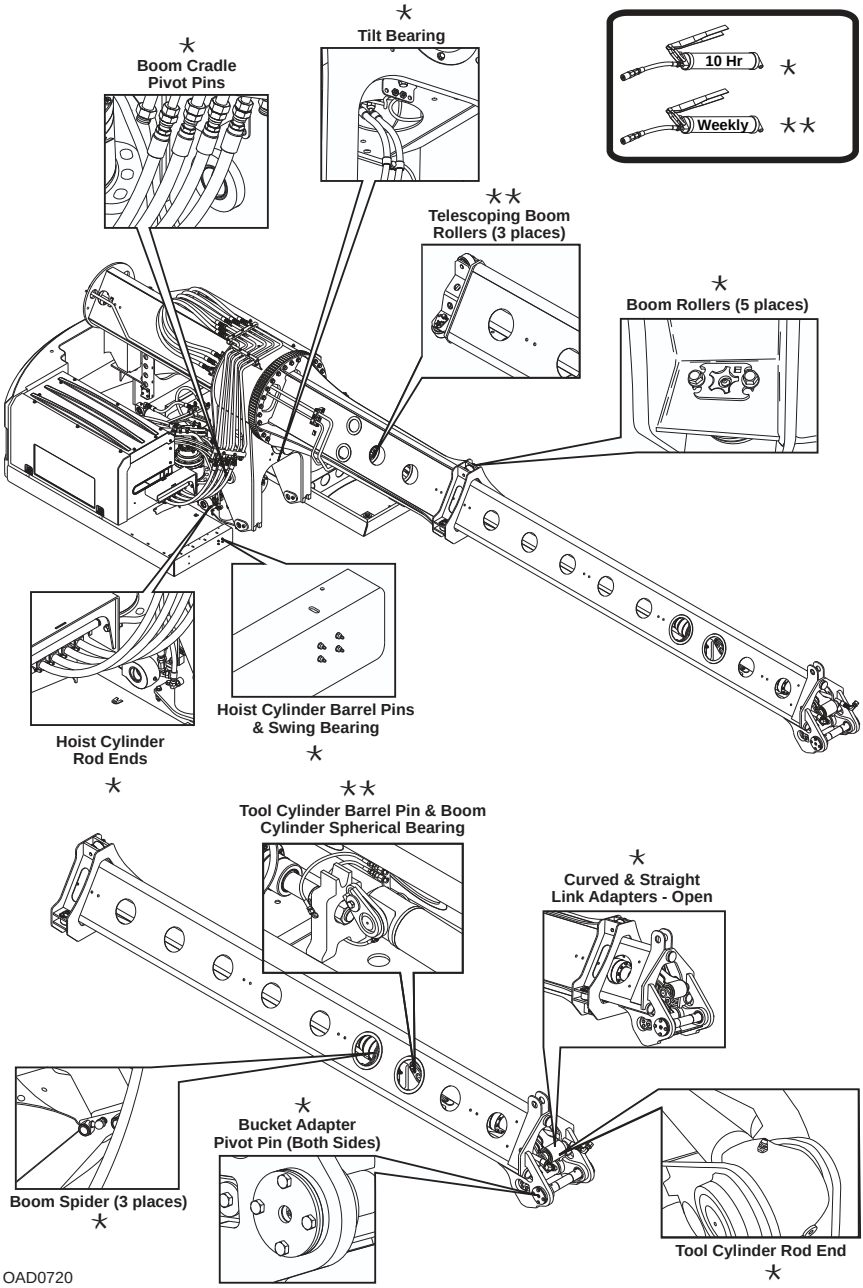

https://truckmanualshub.com/

5.5 UNDERCARRIAGE LUBRICATION SCHEDULE

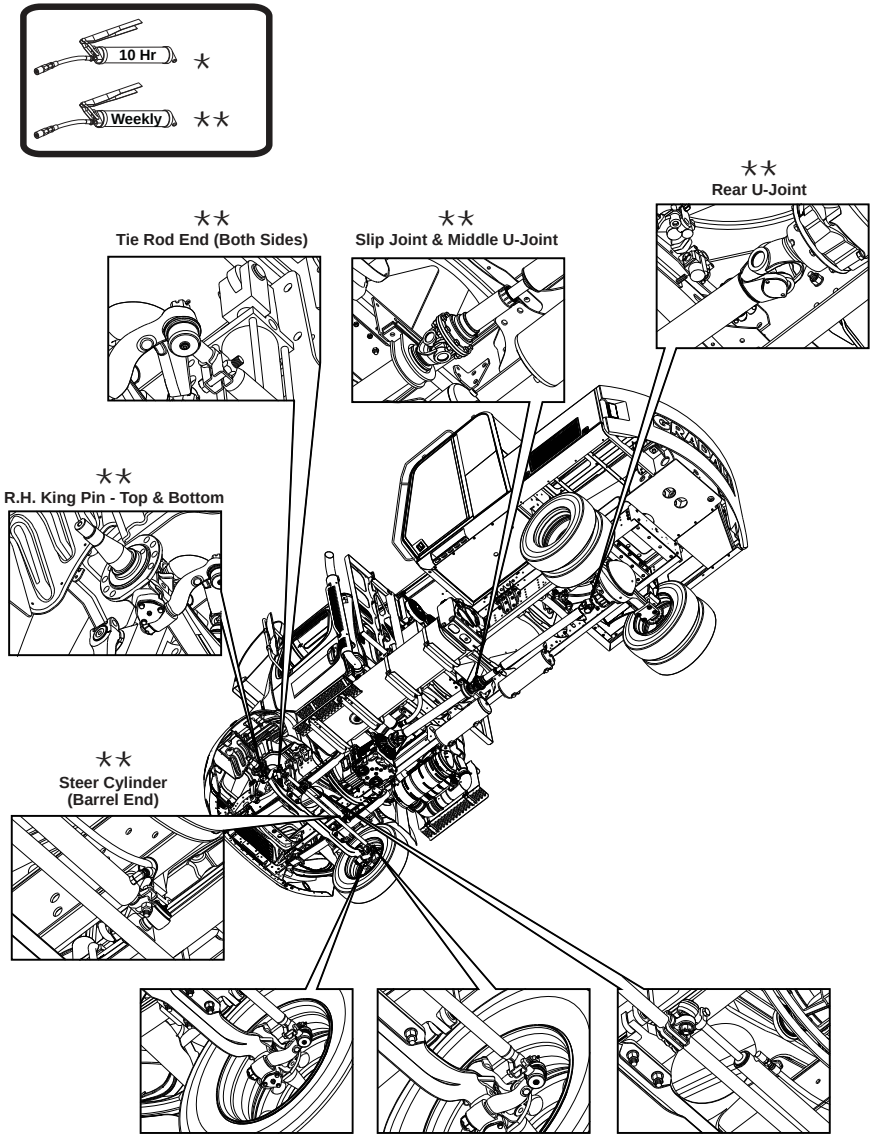

OAD0730

https://truckmanualshub.com/

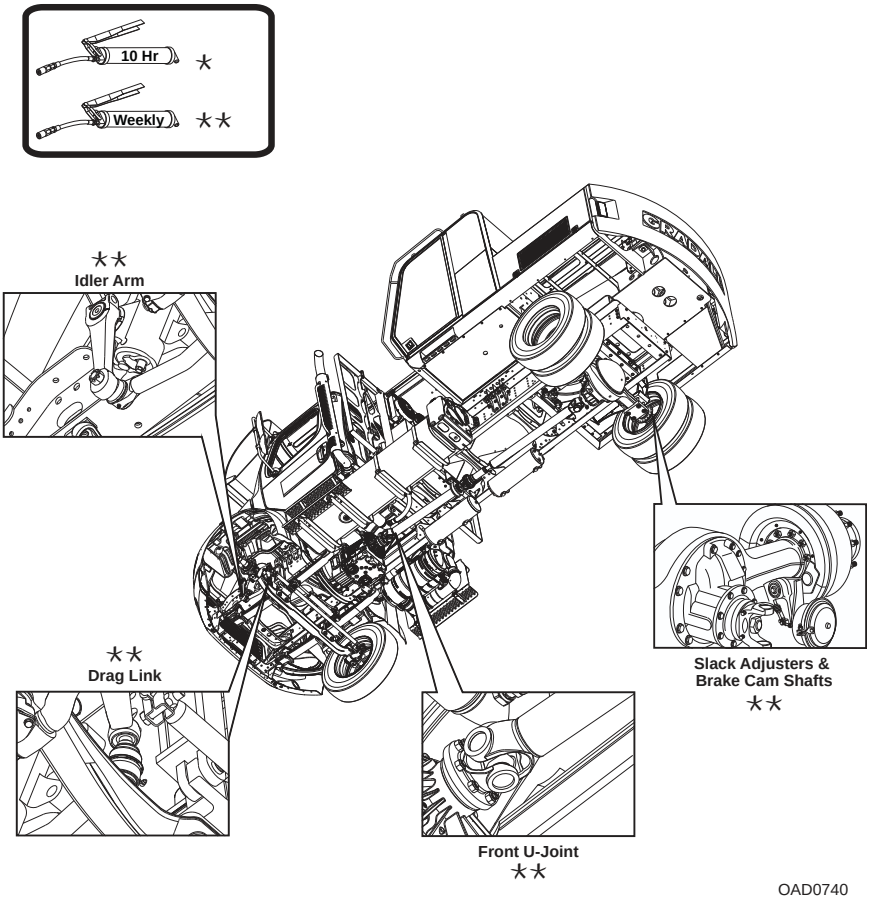

https://truckmanualshub.com/

SECTION 6 - EMERGENCY PROCEDURES

6.1 LOSS OF POWER

The engine will de-rate if a problem develops. If this occurs, place the boom in the boom rest as soon as possible. Make all necessary repairs before continued operation.

If the machine loses power before the boom is place in the boom rest, follow the procedures below:

Stowing the boom without engine power

Be sure there is enough clearance for the attachment when the boom is in the boom rest by measuring the length from the roller bracket on the main boom to the attachment pivot point. If the distance is less than 6 feet, it will be necessary to extend the boom with another machine by performing the following procedure:

To extend the boom without engine power

1. Attach a test hose to the test fitting for the retract side of the boom circuit.
2. Direct the rod side oil into a waste container as the boom is SLOWLY pulled out.
3. Once the boom is at the proper extension, secure the telescoping boom to the main boom using a chain or strap to keep the boom from further movement.

To raise the boom without engine power

1. If the boom needs to be raised to place in the boom rest, it will be necessary to release the swing brake.
2. Secure the end of the boom to keep the upperstructure from swinging once the swing brake has been released.
3. Release the swing brake using a port-a-power to pressurize the swing brake to a maximum of 500 psi.
4. Attach a chain to the end of the telescoping boom to a machine having sufficient lift capacity and lift height to raise the boom.
5. Be certain that the boom will not contact any obstructions while raising it.
6. Attach a test hose on the rod side of the hoist cylinders to bleed oil into a waste container.
7. Lift the boom SLOWLY, directing the hoist cylinder rod side oil into a container.

https://truckmanualshub.com/

8. Once the boom is raised high enough to clear the cab and boom rest, swing into position over the boom rest.
9. While still supporting the boom with another machine, remove the test hose from the hoist up side of the circuit.
10. Attach test hose to the hoist down test fitting, directing oil into a waste container.
11. SLOWLY lower the boom into place squarely on the boom rest.
12. Once the boom is in the rest, use the boom tie-down to secure it.
13. Remove test hoses used for the procedure.
14. Secure the telescope boom to keep it from extending and retracting.
15. Follow the procedure on page 3-22 for shifting the machine into travel mode.

Towing

Towing procedure(s) are located in the Freightliner Chassis Operation Manual.

If You Get Stuck

If unit becomes stuck, you can use the boom to help free it.

- Position undercarriage and upperstructure controls for remote control operation.
- Position boom over rear of undercarriage (centered over rear to prevent tipping) and embed bucket or attachment in ground.

While traveling in appropriate direction, extend or retract boom as required to help push or pull unit to solid ground. Keep wheels in contact with ground.

https://truckmanualshub.com/

SECTION 7 - SPECIFICATIONS

7.1 PRODUCT SPECIFICATIONS

Lubrication & Fluid Capacities

Note: *Lubricants described in this table are used in standard machines when they are shipped from Gradall Industries, Inc.*

Hydraulic System

System Capacity .....62 gallons (235 liters)

Type of Oil ..... Mobilfluid® 424 Tractor Hydraulic Fluid (ISO 46)** (p/n 80533031)

Upperstructure Cab Heater

Capacity .....1.3 gallons (4,9 liters)

Type of Fluid.....Conoco Heat Transfer 32 Hydraulic Fluid (p/n 80533049)

Swing Transmission

Capacity ..... 2.47 quarts (2,3 liters)

Type of Fluid.....Gear Oil 80w90 (p/n 80533027)

Swing Brake

Capacity ..... 4 ounces (0,1 liters)

Type of Fluid..... Mobilfluid® 424 Tractor Hydraulic Fluid (ISO 46)** (p/n 80533031)

Tilt Drive

Capacity ..... 43 ounces (1,2 liters)

Type of Fluid.....Gear Oil 80w90 (p/n 80533027)

Grease Fittings

Capacity ..... as required

Type of Lube..... Extreme Pressure Lube #2

***** Capacities are approximate - Check level to be sure
****** Hydraulic Fluid Specifications; Pour Point -46°F., SSU @ 100° F. 275; Flash Point 442° F. Approved Supplier & Type: Mobil Mobilfluid 424

https://truckmanualshub.com/

Weight

D152

Operating Weight.....32,200 lb (14,605 kg)

Gross Vehicle Axle Rating .....33,000 lb (14,968 kg)

D154

Operating Weight.....34,500 lb (15,689 kg)

Gross Vehicle Axle Rating .....36,200 lb (16,420 kg)

Note: *Refer to detailed specification sheet for additional machine weight information. Specification sheets can be viewed/downloaded at www.gradall.com*

Dimensions

D152 & D154

Wheelbase..... 15.1 ft (4,8 m)

Ground Clearance .....10 in (254 mm)

Transport Length) ..... 22.0 ft (6,7 m)

Transport Height)..... 12.1 ft (3,7 m)

Transport Width) ..... 8.6 ft (2,6 m)

Note: *Refer to detailed specification sheet for additional machine dimension information. Specification sheets can be viewed/downloaded at www.gradall.com*

https://truckmanualshub.com/

7.2 TORQUE CHART

To check **Gradall** torque values, set the torque wrench at 95% of the rated torque values and check fastener. If the torque wrench releases before the fastener moves, assume fastener torque is correct. When setting **Gradall** torque values, use the values given on the following chart. DO NOT EXCEED allowances.

Boom Cylinder Mount Plate

Quantity 19

Thread Size (grade) 5/8-11 (5)

Torque (lubricated) ..... 200-215 lb-ft (272-292 Nm)

Swing Bearing

Quantity 68

Thread Size (grade) 5/8-11 (8)

Torque (lubricated) ..... 200-215 lb-ft (272-292 Nm)

Swing Transmission

Quantity 7

Thread Size (grade) 3/4-16 (8)

Torque (lubricated) ..... 340-365 lb-ft (461-496 Nm)

Tilt Bearing

Quantity 58

Thread Size (grade) 3/4-10 (8)

Torque (lubricated) ..... 340-365 lb-ft (461-496 Nm)

Tilt Drive

Quantity 4

Thread Size (grade) 3/4-16 (5)

Torque (lubricated) ..... 235-250 lb-ft (318-338 Nm)

https://truckmanualshub.com/

Front Axle Torque Check

D152

- Ensure front axle u-bolt nuts are torqued to 370-395 lb-ft (8 nuts)

D154

- Ensure front axle u-bolt nuts are torqued to 560-595 lb-ft (8 nuts)

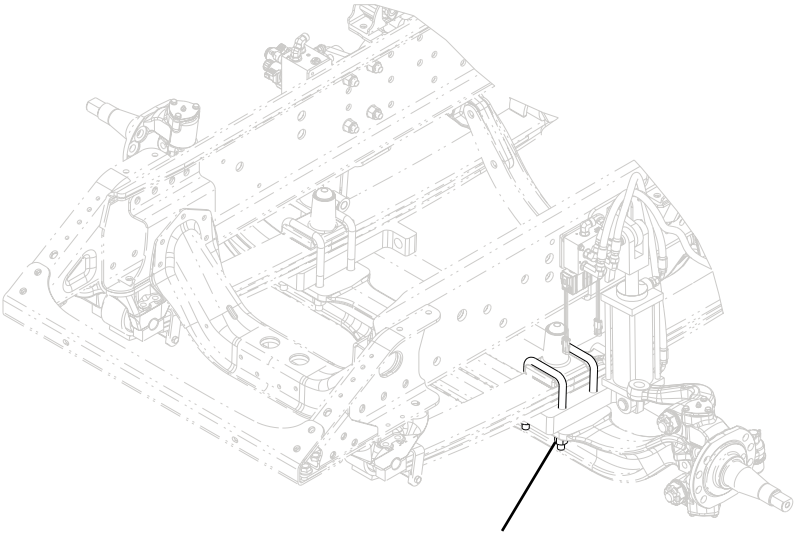

(BOTH SIDES OF FRONT AXLE)

If replacement or torquing of nut(s) is required:

- Remove nut(s), clear threads of existing loctite
- Clear threads of u-bolt(s) of existing loctite.
- Apply loctite (blue 242). (Per loctite manufacturer directions)
- Torque nut(s) to value defined by model designation at top of page.

https://truckmanualshub.com/

Rear Axle Torque Check

- Ensure rear axle cap screws are torqued to 560-595 lb-ft (8 screws)

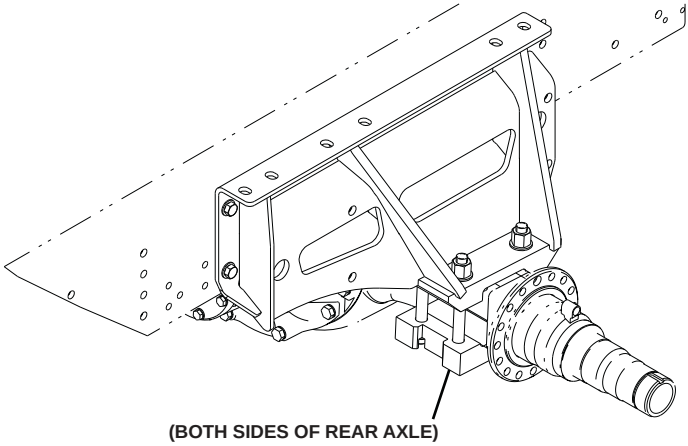

OAC2410

If replacement or torquing of cap screw(s) is required, follow the pattern illustrated:

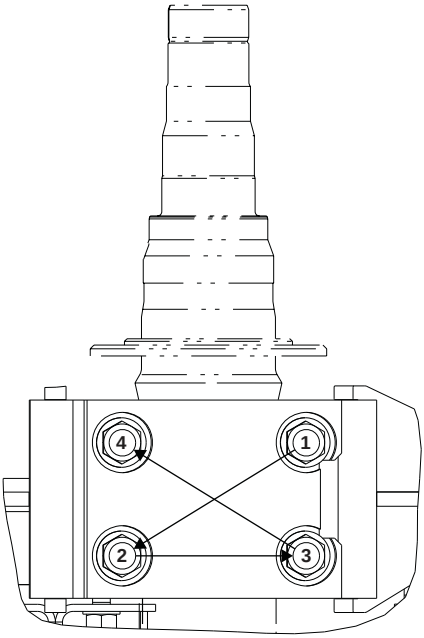

Torque bolts in a 4-stage, criss-cross pattern:
Stage 1 - 150-185 lb-ft
Stage 2 - 280-315 lb-ft
Stage 3 - 470-505 lb-ft
Stage 4 - 560-595 lb-ft

OAC2420

https://truckmanualshub.com/

7.3 FUSES

Fuse location and size designations are identified with the decals shown below.

Upperstructure

UPPER FUSE BOX

300

STD or OPT	WIRE	#	DESCRIPTION	RATING
S	AC FAN-301	F1	R1, AC Fan	25
S	AC PWR-302	F2	R1, AC Clutch	10
O	CAB LT-303	F3	R2, Cab Lights	20
O	WORK LT-304	F4	R2, Work Lights	15
S	WASH-305	F5	Washer Fluid	10
S	IGN-306	F6	Ignition (Display, Joysticks, Pedal, Controller)	10
S	IGN-307	F7	Ignition (Valve PWR)	15
O	-	F8	Empty	-
O	-	F9	Empty	-
S	IGN	F10	Ignition Diode	Diode
S	AC	R1	AC Relay	-
O	WORK LT	R2	Work Lights Relay	-
O	BOOM LT	R3	Boom Lights Relay	-
S	HORN	R4	Horn Relay	-
S	IGN-7	R5	Ignition Relay	-

200

STD or OPT	WIRE	#	DESCRIPTION	RATING
S	BAT-201	F1	BAT, (LCD, Main Controller)	5
O	BAT-202	F2	Spare BAT-202, Radio (not required for current radio)	15
S	BAT-203	F3	Diagnostic PWR	10
O	BAT-204	F4	Spare BAT-204	15
O	BAT-205	F5	R3, Boom Lights	20
O	BAT-206	F6	Spare BAT-206	15
S	BAT-207	F7	R4, Horn	15
S	BAT-208	F8	Controller PWR	15
O	-	F9	Empty	-
S	BAT-210	F10	Controller PWR	15
S	ACC-211	F11	L.H. Switch, Pod Light and Dome Light PWR	15
S	ACC-212	F12	R.H. Switch, Pod Light and Radio PWR	15
O	-	F13	Empty	-
S	ACC-214	F14	Upper Switch PWR	15
O	-	F15	Empty	-
O	ACC-216	F16	Spare ACC-216 and OPT 1 Switch PWR	15
O	ACC-217	F17	Spare ACC-217, OPT 2 Switch and Upper Strobe PWR	15
S	ACC-218	F18	Outlet PWR	10
S	ACC-219	F19	Upper Cab Wiper PWR	20
S	ACC-220	F20	HVAC PWR	25

82173022

OAD0680

Undercarriage

CHASSIS FUSE BOX

100

STD or OPT	WIRE	#	DESCRIPTION	RATING
O	-	F1	Empty	-
O	BAT-102	F2	Spare BAT-102 (Strobe)	15
S	BAT-103	F3	R2, Remote Relay	15
O	BAT-104	F4	Spare BAT-104 (Strobe)	15
O	-	F5	Empty	-
S	BAT-106	F6	Expansion Module PWR	15
S	BAT-107	F7	Upper PWR	20
S	BAT-108	F8	Upper PWR	20
S	BAT-109	F9	Upper PWR	20
S	BAT-110	F10	Upper PWR	20
S	IGN-2	R1	Ignition Relay	-
S	REMOTE	R2	Remote Relay	-
S	PROPEL	R3	Propel Relay (Axle Lock/Dig Brake)	-
S	FAN1	R4	Fan 1 Relay	-
S	FAN2	R5	Fan 2 Relay	-

STD or OPT	WIRE	#	DESCRIPTION	RATING
S	IGN-4	F1	R1, Ignition-4 (Chassis Cab)	15
S	FAN2	F2	R5, Fan 2	30
S	IGN-3	F2	R1, Ignition-3 (Expansion Module, Chassis Switch PWR, Travel Valve PWR)	15
S	FAN1	F4	R4, Fan 1	30

82173021

OAD0690

https://truckmanualshub.com/

A

Approved Attachments 4-1
Attachment Operation 4-1
Attachments 4-1

B

Boom Stow Procedure 3-23
Brake System, Remote Mode 3-4

C

Capacities..... 7-1
Chemical Hazards 1-10
Crush Hazards 1-6

D

Decals 2-6
Dig Cycle 3-10
Ditching Buckets..... 4-2

E

Electrical Hazards 1-2
Emergency Procedures..... 6-1
Engine Shutdown, Remote Mode... 3-21
Excavating Buckets 4-2

F

Front Axle Torque Check 7-4
Fuse Panel 7-6

H

Hydraulic System 7-1

I

Ignition, Upperstructure 2-24
Intermittent Wiper/Washer, Upperstructure 2-25

J

Joystick Controls 2-19

L

LCD Display 2-8, 2-14
Left Hand Arm Pod 2-16
Lift Capacity 3-19
Lifting a Load 3-16
Load Falling Hazard.....1-9
Lubrication & Maintenance 5-1
Lubrication Schedule, Undercarriage5-7
Lubrication Schedule, Upperstructure.... 5-6

O

Operation, Remote Control 3-1
Operator Seat 2-23

P

Park Brake Switch, Upperstructure.2-26
Parking Procedure 3-24
Personal Protection Equipment 1-13
Placing a Load 3-16
Pre-Operation and Controls 2-1
Pre-Operation Checks 2-1

R

Rear Axle Torque Check.....7-5
Right Hand Arm Pod 2-17

S

Safety Practices 1-1
Safety Signal Words 1-1
Service & Maintenance Schedule 5-3
- 10 Hour.....5-3
- 100 Hour.....5-4
- 1500 Hour.....5-5
- 1st 30 Days - Upperstructure.....5-4
- 250 Hour - Upperstructure.....5-4
- 50 Hour.....5-3
- 750 Hour.....5-5

Slip and Fall Hazard.....1-5
Specifications.....7-1
Swing Hazards.....1-3

T

Tip Over Hazard.....1-9

https://truckmanualshub.com/

Travel Hazard 1-8

U

Upperstructure Cab Controls & Indicators 2-8

https://truckmanualshub.com/

Hand Signals

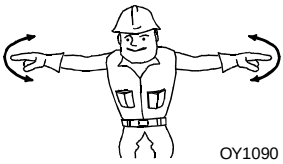 OY1090 EMERGENCY STOP - With both arms extended laterally, hands open downward, move arms back and forth.	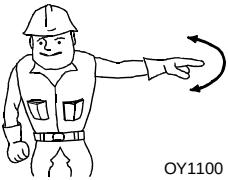 OY1100 STOP - With either arm extended laterally, hand open downward, move arm back and forth.	OY1110 STOP ENGINE - Draw thumb or forefinger across throat.
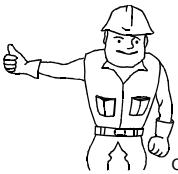 OY1120 RAISE BOOM - With either arm extended horizontally, fingers closed, point thumb upward.	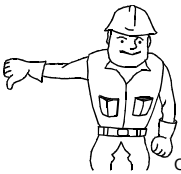 OY1130 LOWER BOOM - With either arm extended horizontally, fingers closed, point thumb downward.	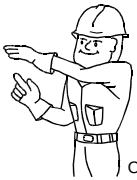 OY1140 MOVE SLOWLY - Place one hand motionless in front of hand giving motion signal. (Raise load slowly shown)
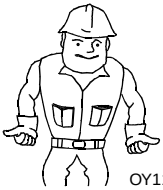 OY1150 EXTEND BOOM - With both hands clenched, point thumbs outward.	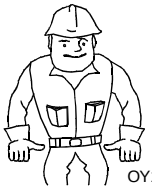 OY1160 RETRACT BOOM - With both hands clenched, point thumbs inward.	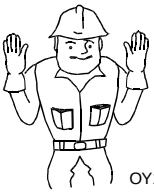 OY1170 THIS FAR TO GO - With hands raised and open inward, move hands laterally, indicating distance to go.
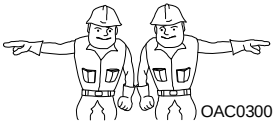 OAC0300 SWING- With either arm extended horizontally, point with forefinger to direction of swing rotation.	OAC0310 OPEN BUCKET- Hold one hand open and stationary. Rotate other hand in small vertical circle with forefinger pointing horizontally at open hand.	OAC0320 CLOSE BUCKET- Hold one hand closed and stationary. Rotate other hand in small vertical circle with forefinger pointing horizontally at closed hand.

Special Signals - When signals for auxiliary equipment functions or conditions not covered are required, they shall be agreed upon in advance by the operator and signalman.

https://truckmanualshub.com/

GRADALL®

Gradall Industries, Inc.
406 Mill Ave SW
New Philadelphia OH. 44663
USA
Phone: (330) 339-2211
Customer Support Toll Free: (800) 445-4752
Fax: (330) 339-3579
www.gradall.com