https://truckmanualshub.com/

JACOBSEN
A Textron Company

Parts manual

Jacobsen AR3

Series:EK
Product codes: AR30001 (D1105-T-E3B) - 68” Width of Cut

Series: FZ
Product codes: AR30002 (D1105-T-E3B) - 72” Width of Cut

Series:GX
Product codes: AR30003 (D1105-T-E3B) - 68” Width of Cut

Series:KG
Product codes: AR30004 (D1105-E4B) - 68” Width of Cut

⚠ WARNING

WARNING: If incorrectly used this machine can cause severe injury. Those who use and maintain this machine must be trained in its proper use, warned of its dangers and must read the entire manual before attempting to set up, operate, adjust or service the machine.

JACOBSEN A Textron Company RANSOMES

RJL 100 September 2017

24727G-GB(rev.9)

https://truckmanualshub.com/

© 2017, Ransomes Jacobsen Limited. All Rights Reserved

https://truckmanualshub.com/

DESCRIPTION	PAGE
CHASSIS	2
OPERATORS PLATFORM (From Serial No EK000604)	6
OPERATORS PLATFORM (To Serial No EK000603)	8
FRONT AXLE & UNIT MOUNTING	10
FRONT AXLE & UNIT MOUNTING	12
PLATFORM SUPPORT	14
FOOTSTEP LH	16
FOOTSTEP RH	18
FOOTGUARD LH	20
FOOTGUARD RH	22
RH FRONT STOP	24
LH FRONT STOP	26
FUEL TANK PART 1	28
FUEL TANK PART 2	30
HYDRAULIC TANK PART 1	32
HYDRAULIC TANK PART 2	34
REAR WHEEL SUPPORT	36
STEERING CYLINDER	38
STEERING TOWER	40
STEERING TOWER FROM SERIAL NUMBER GX100869 & KG000440	42
BATTERY & TRAY	44
FUSE BRACKET	46
ELECTRICAL CIRCUIT INSTRUMENT	48
ELECTRICAL CIRCUIT INSTRUMENT	50
ELECTRICAL CIRCUIT MAIN	52
FRONT WHEEL & MOTOR POCLAIN	54
FRONT WHEEL & MOTOR POCLAIN	56
FRONT WHEEL & MOTOR (SAUER DANFOSS)	58
FRONT WHEEL MOTOR	60
REAR WHEEL & MOTOR	62
MOTOR-WHEEL, Eaton Series 2000 (4184181)	64
MOTOR-WHEEL, DANFOSS OMSW400	66
PUMPS	68
PUMPS	70
PUMP (SAUER-DANFOSS M25)(008005950)	72
PUMP (CASAPPA)	76
LIFT VALVE	78
LIFT VALVE (STERLING)	80
LIFT VALUE (INTEGRATED)	82
LIFT VALVE PROTECTION (AR30001 ONLY)	84
FLUSHING VALVE	86
FLUSHING VALUE (INTERGRATED HYDRAULICS)	88
CUTTER & BRAKE VALVE	90
CUTTER & BRAKE VALVE (STERLING)	92
CUTTER & BRAKE VALVE (INTEGRATED)	94
BRAKE RELEASE VALVE	96
BRAKE RELEASE VALVE FROM SERIAL NUMBER GX100869 & KG000440	98
HYDRAULIC FILTER	100
MANIFOLD & BRACKET	102
ROTARY DECK MOTOR FRONT	104
ROTARY DECK MOTOR CENTRE	106
ROTARY DECK MOTOR BREAKDOWN	108
HYDRAULIC CIRCUIT	110
NADI ENGINE and MOUNTING	112

DESCRIPTION	PAGE
ENGINE & MOUNTING	114
EXHAUST MOUNTING	118
EXHAUST	120
RADIATOR & COWLING	122
AIR CLEANER MOUNTING	124
EXPANSION TANK	126
ENGINE HOOD	128
DECALS	130
SEAT & MOUNTING PLATE	132
SEAT & MOUNTING PLATE FROM SERIAL NUMBER GX100869 & KG000440	134
MICHIGAN V-5300 SERIES SEAT	136
GRAMMER MSG 85 SEAT (4137966) - SUSPENSION	138
GRAMMER MSG 85 SEAT -SEAT TOP	140
TRACTION PEDAL	142
TRACTION PEDAL DAMPER	144
DAMPER CONTROL	146
TRACTION PEDAL NEUTRAL SWITCH	148
INSTRUMENT PANEL	150
INSTRUMENT PANEL FROM SERIAL NUMBER GX100869 & KG000440	152
CONTROL PANEL	154
CONTROL PANEL FROM SERIAL NUMBER GX100869 & KG000440	156
DECK YOKE & MOUNTING	158
DECK HOUSING & CASTER WHEELS (Non Trim TrimTek™)	160
DECK FRAME UPTO S/N GX000579	162
DECK FRAME (TrimTek™) FROM S/N GX000580 / KG000300	164
DECK FRAME TrimTek™ UPTO S/N GX000579	166
DECK FRAME TrimTek™ UPTO S/N GX000579	168
DECK FRAME TrimTek™ FROM S/N GX000580 / KG000300	170
DECK ROLLER	172
OPS FRAME(LMAC164)	174
WORKING LAMP KIT (LMAC163)	176
NARROW WIDTH OF CUT KIT (LMAC199)	178
72" WIDTH OF CUT KIT (AR30002)	180
INCLINOMETER KIT (LMAC 380)	182
TRANSPORT STOPS-AR3 (LMAC 174)	184

https://truckmanualshub.com/

CHASSIS

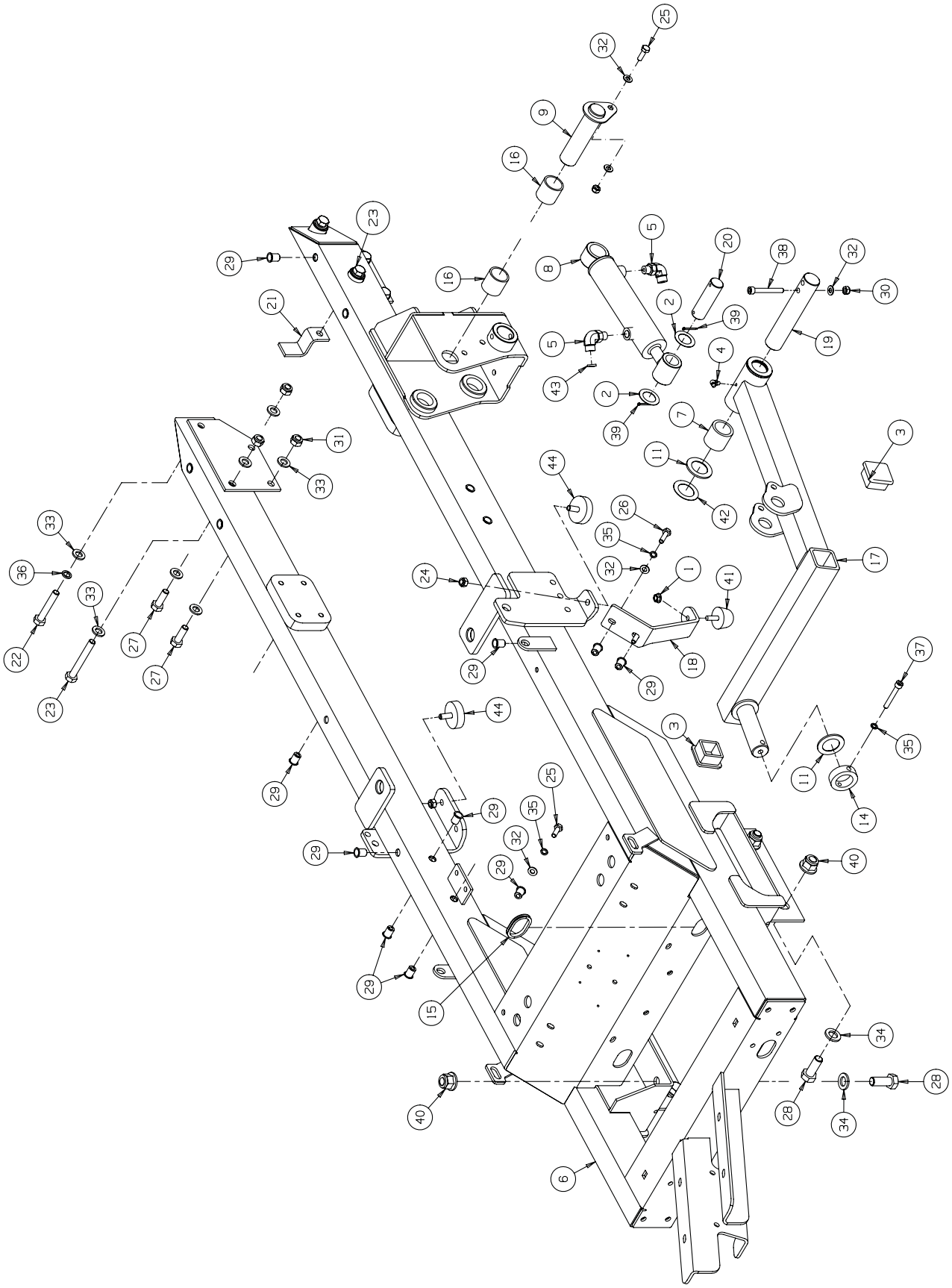

https://truckmanualshub.com/

ITEM	PART NO.	DESCRIPTION	QTY.	REMARKS
1	001393010	Nut-Hex 5/16-18 Whiz	1	
2	001593072	Wshr-Thrust 1 x 1.562 x .030/.032	2	From Serial No. EK000457
3	002952633	End Cap-50 x 50 x 5	2	
4	0029993160	Lubricator-M6 x 90ş	1	
5	158007-01	90-M/M 11/16 ORFS x 9/16 SAE	2	
6	4130029	Wldmt-Chassis	1	
7	4130255	Bush-Devol 1-1/4 x 1-5/8 x 1-1/2	2	
8	4130603	Cylinder-Unit Lift	1	To S/N GX000523
8	4244287	D/A Hyd Cyl, 20 x 127, Lift	1	From S/N GX000524
*	4288991	• Seal Kit for 4244287		
9	4131142	Wldmt-Lift Arm Pin	1	
10	4131462	Wldmt-Yoke, 27" Deck	1	
11	4131628	Whsr-Nylon 32 x 50 x 3	3	
12	4133902	Hyd Hose Assembly	1	Rear Lift Ram to Lift Manifold
13	4133903	Hyd Hose Assembly	1	Rear Lift Ram to Drain Manifold
14	4134461	Coller-Pivot Shaft, 1-1/4"	1	
15	4135333	Grommeting	0.13 m	
16	4136819	Spacer-Lift Cylinder Pin	2	
17	4140815	Wldmt-Lift Arm Ctr	1	From Serial No. EK000445
18	4140881	Bracket-Bumper Stop	1	for NARROW CUT ONLY
19	4141086	Shaft-Pivot, Lift Arm	1	From Serial No. EK000457
20	4146510	Pin-Lift Ram	1	From Serial No.EK000457
21	4179043	Rear Trans Hose Guide	1	
22	450054	Bolt-Hex M12 x 70	2	
23	450058	Bolt-Hex M12 x 90	2	
24	450120398	Nut-Hex 3/8-16 Nyloc Thin	2	
25	450192	Scrw-Hex M8 x 25	3	
26	450193	Scrw-Hex M8 x 30	2	
27	450242	Scrw-Hex M12 x 35	4	
28	450270	Scrw-Hex M16 x 40	8	
29	450369	M8 Nutsert	21	
30	450378	Nut-Hex M8 Nyloc	2	
31	450380	Nut-Hex M12 Nyloc	6	
32	450390	Wshr-M8 x 17 x 1.8	7	
33	450392	Wshr-M12 x 24 x 2.7	4	
34	450393	Wshr-M16 x 30 x 3.3	8	
35	450411	Lockwshr-M8 x 12.75 x 2	5	
36	450413	Lockwshr-M12 x 17.9 x 2.5	2	
37	450730	Capscrw-Sckt M8 x 55	1	
38	450732	Capscrw-Sckt M8 x 65	1	From Serial No. EK000457
39	451241	22 x 3.2 Dia. Split Pin	2	
40	452439	Nut-Hex M16 Flng Nyloc	8	
*	158061-01	• O Ring	1	11/16" ORFS

* Not Illustrated

https://truckmanualshub.com/

CHASSIS

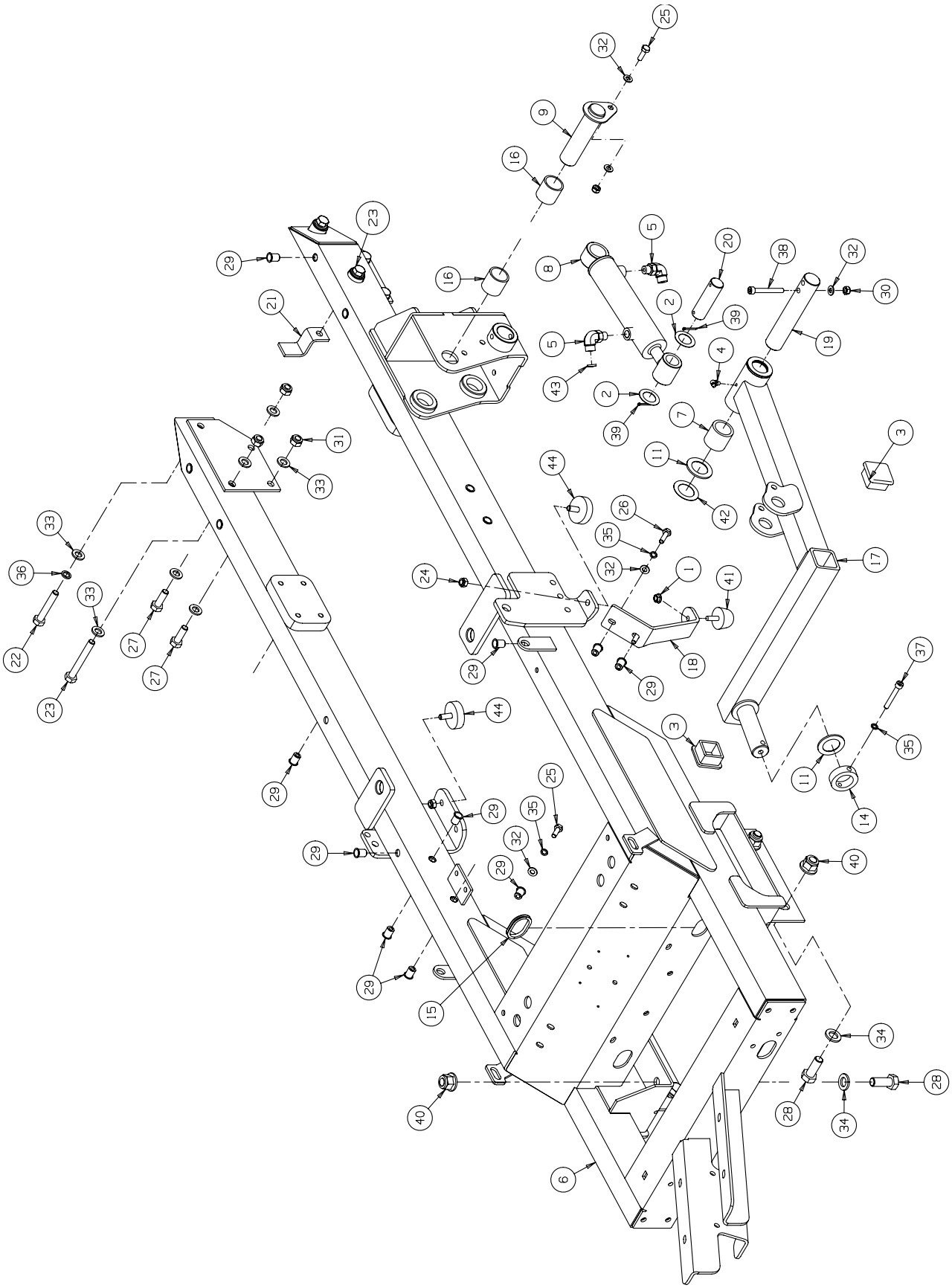

https://truckmanualshub.com/

ITEM	PART NO.	DESCRIPTION	QTY.	REMARKS
*	002218065	• O Ring	1	9/16” SAE
41	523126	Rubber Bumper	1	
42	62464-4A	Wshr-Thrust 1.250 x 1.937 x .030	2	Fit as required
43	69068-03	11/16 ORFS .028" Disc	1	
44	J361723	Bumper Stop	2	

* Not Illustrated

https://truckmanualshub.com/

OPERATORS PLATFORM (From Serial No EK000604)

Illustration Number: 4133601-1 & 4133601-2

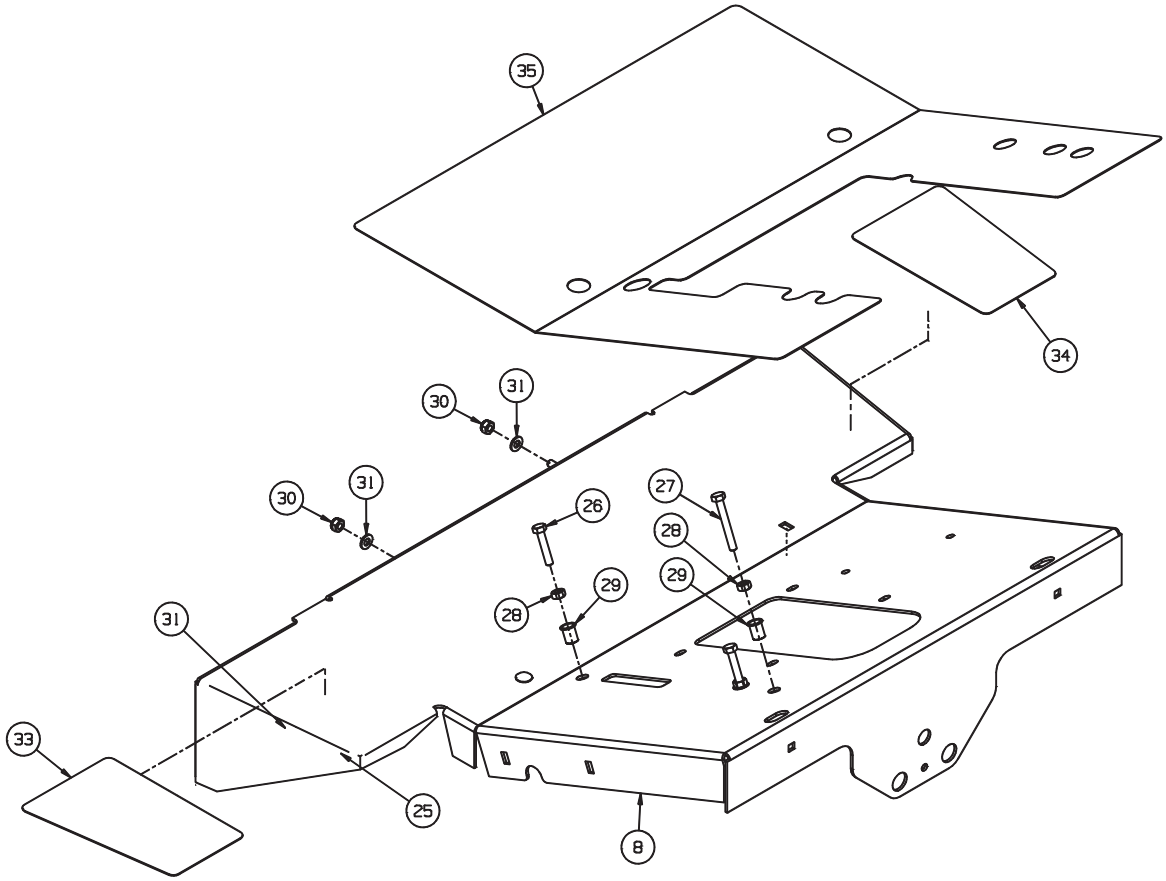

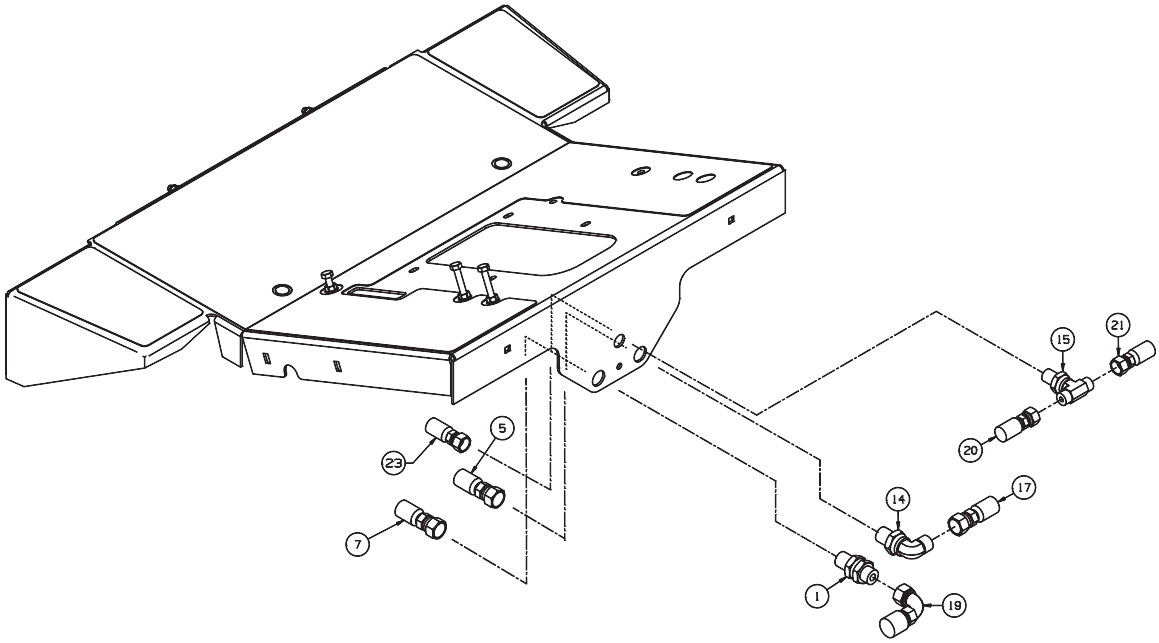

https://truckmanualshub.com/

ITEM	PART NO.	DESCRIPTION	QTY.	REMARKS
5	4133069	Pads Front-LH	1	
8	4165394	Wldmt-Footplate, Ops Platform	1	From Serial no
25	450192	Scrw-Hex M8 x 25	2	
26	450195	Scrw-Hex M8 x 40	1	
27	450199	Scrw-Hex M8 x 60	2	
28	450324	Nut-Hex M8	3	
29	450369	Nutsert-M8 A-L x 17.5	2	
30	450378	Nut-Hex M8 Nyloc	4	
31	450390	Wshr-M8 x 17 x 1.8	6	
32	452564	Bolt-Crg M8 x 25	2	
1	158067-04	Ftg-Blkhd M/M 13/16 ORFS	1	
*	158061-02	• O Ring	1	13/16" ORFS
5	4133910	Hyd Hose Assembly	1	Cutter Valve ’M1’ to LH Blkhd
7	4133912	Hyd Hose Assembly	1	RH Blkhd to Rear Motor ’IN’
14	4136395	90 Blkhd-M/M 13/16 ORFS	1	
*	158061-02	• O Ring	2	13/16" ORFS
15	4136396	Tee-M/M/Blkhd 11/16 ORFS	1	
*	158061-01	• O-Ring	3	11/16" ORFS
17	4136409	Hyd Hose Assembly	1	LH Str Blkhd to LH Motor ‘IN’
19	4136411	Hyd Hose Assembly	1	RH 90 Blkhd to RH Motor ‘OUT’
20	4136412	Hyd Hose Assembly	1	RH Motor Drain to Blkhd ‘T’
21	4136413	Hyd Hose Assembly	1	LH Motor Drain to Blkhd ‘T’
23	4136382	Hyd Hose Assembly	1	Front Blkhd Tee to Manifold (to serial number EK000304)
23	4137213	Hyd Hose Assembly	1	(from serial number EK000304)

* Not Illustrated

https://truckmanualshub.com/

OPERATORS PLATFORM (To Serial No EK000603)

Illustration Number: 4133601-1-early & 4133601-2-early

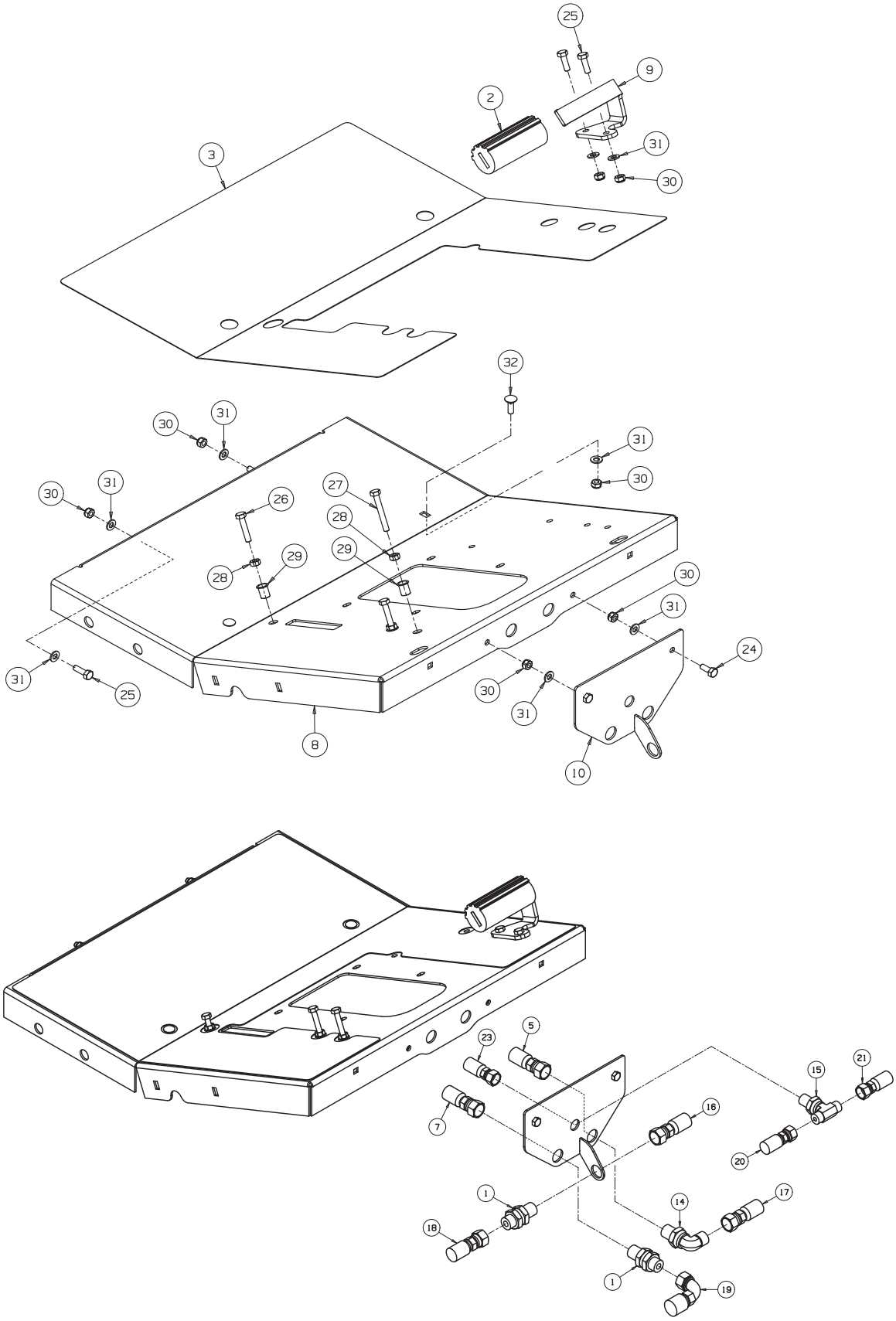

https://truckmanualshub.com/

ITEM	PART NO.	DESCRIPTION	QTY.	REMARKS
2	3003475	Grip-Pedal	1	
3	4133602	Pad-Platform	1	
8	4135108	Wldmt-Footplate, Ops Platform	1	
9	4135601	Foot Support	1	
10	4136185	Wldmt-Bulkhead	1	
24	450191	Scrw-Hex M8 x 20	2	
25	450192	Scrw-Hex M8 x 25	4	
26	450195	Scrw-Hex M8 x 40	1	
27	450199	Scrw-Hex M8 x 60	2	
28	450324	Nut-Hex M8	3	
29	450369	Nutsert-M8 A-L x 17.5	2	
30	450378	Nut-Hex M8 Nyloc	4	
31	450390	Wshr-M8 x 17 x 1.8	6	
32	452564	Bolt-Crg M8 x 25	2	
1	158067-04	Ftg-Blkhd M/M 13/16 ORFS	1	
*	158061-02	• O Ring	1	13/16" ORFS
5	4133910	Hyd Hose Assembly	1	Cutter Valve ’M1’ to LH Blkhd
7	4133912	Hyd Hose Assembly	1	RH Blkhd to Rear Motor ’IN’
14	4136395	90 Blkhd-M/M 13/16 ORFS	1	
*	158061-02	• O Ring	2	13/16" ORFS
15	4136396	Tee-M/M/Blkhd 11/16 ORFS	1	
*	158061-01	• O-Ring	3	11/16" ORFS
16	4136408	Hyd Hose Assembly	1	LH 90 Bulkhd to LH Motor ’OUT’
17	4136409	Hyd Hose Assembly	1	LH Str Blkhd to LH Motor ‘IN’
18	4136410	Hyd Hose Assembly	1	RH Str Bulkhd RH Motor ’IN’
19	4136411	Hyd Hose Assembly	1	RH 90 Blkhd to RH Motor ‘OUT’
20	4136412	Hyd Hose Assembly	1	RH Motor Drain to Blkhd ‘T’
21	4136413	Hyd Hose Assembly	1	LH Motor Drain to Blkhd ‘T’
23	4136382	Hyd Hose Assembly	1	Front Blkhd Tee to Manifold (to serial number EK000304)
23	4137213	Hyd Hose Assembly	1	(from serial number EK000304)

* Not Illustrated

https://truckmanualshub.com/

FRONT AXLE & UNIT MOUNTING

Illustration Number: 4133553-a

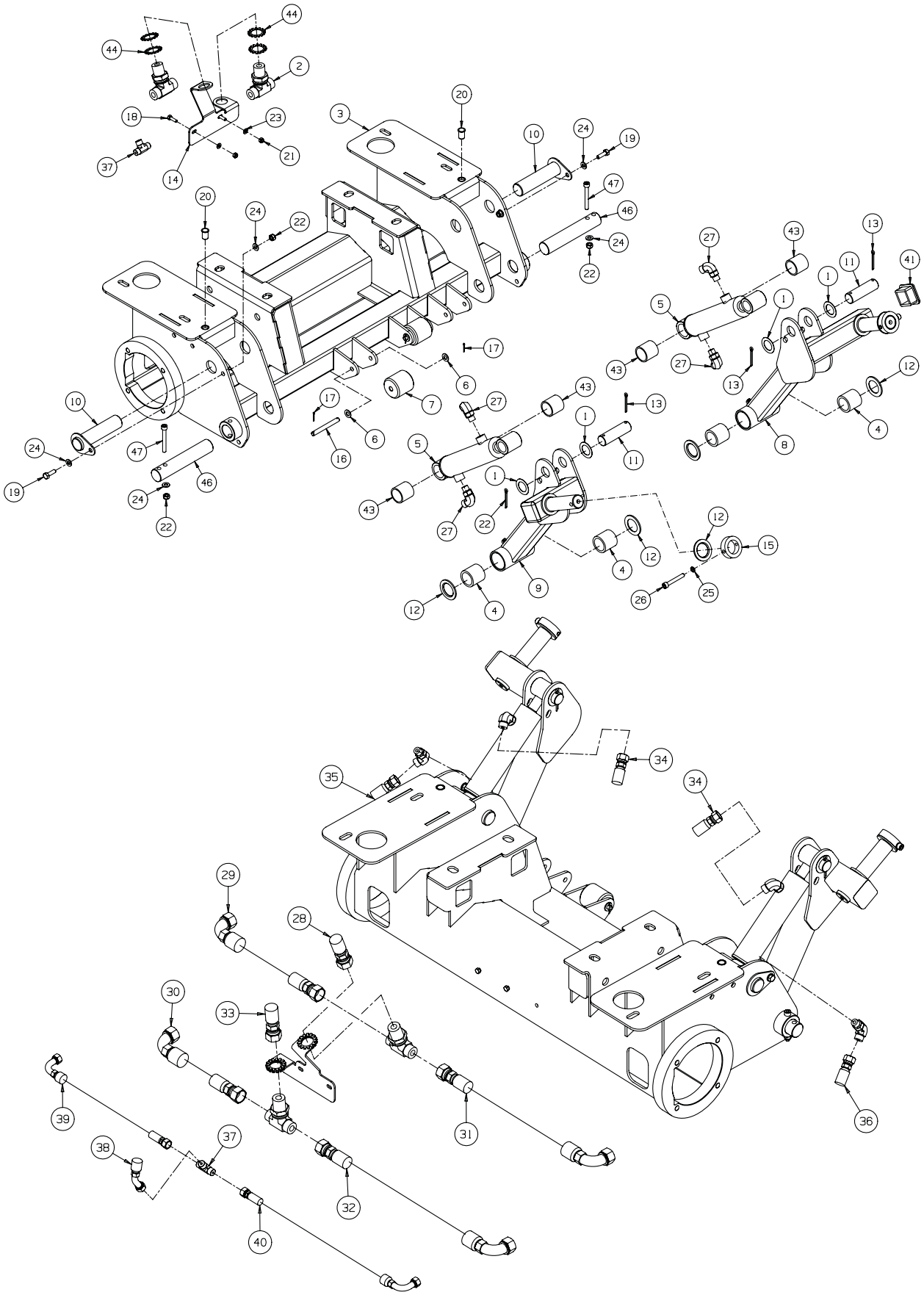

https://truckmanualshub.com/

ITEM	PART NO.	DESCRIPTION	QTY.	REMARKS
1	001593072	Wshr-Thrust 1 x 1.562 x .030/.032	4	From Serial No.GX000524
2	4127319	Tee-M/M/Blkhd 1 ORFS	2	For Sauer Danfoss wheel motors
*	158061-08	• O Ring	3	1" ORFS
3	4130180	Wldmt-Front Axle	1	For Sauer Danfoss wheel motors
4	4130255	Bush-Devol 1-1/4 x 1-5/8 x 1-1/2	4	
5	4130603	Cylinder-Unit Lift	2	To S/N GX000523
5	4244287	D/A Hyd Cyl, 20 x 127, Lift	1	From S/N GX000524
*	4288991	• Seal Kit for 4244287	1	
6 *	4130833	Roller-10 x 50.8 x 35	1	To Serial No. EK000404
6	452000326	Wshr-3/8 x 3/4 x .072	4	From Serial No. EK000405
7	4130834	Roller-10 x 50.8 x 51.8	2	
8	4130836	Wldmt-Lift Arm LH	1	To Serial No. EK000444
8	4308418	Wldmt-Lift Arm LH	1	From Serial No. EK000445
9	4308420	Wldmt-Lift Arm RH	1	
10	4131142	Wldmt-Lift Arm Pin	2	
11	4131144	Wldmt-Ram Pin	2	To Serial No. GX000524
11	4146510	Pin-Lift Ram	2	From Serial No. GX000524
12	4131628	Wshr-Nylon 32 x 50 x 3	6	
13	4131629	Wshr-Nylon 26 x 38 x 5.5	4	To Serial No. EK000438
13	454000572	Split Pin-3/16 x 1-3/4	4	From Serial No. EK000439
14	4133581	Bracket-Bulkhead Ftgs	1	For Sauer Danfoss wheel motors
15	4134461	Collar-Pivot Shaft, 1-1/4”	2	
16 *	450021	Bolt-Hex M8 x 65	1	To Serial No. EK000404
16	4142371	Pivot Pin, Roller	2	From Serial No. EK000445
17	450026	Bolt-Hex M8 x 90	2	To Serial No. EK000444
17	451225	Split Pin-2.5 x 20	2	From Serial No. EK000445
18	450171	Scrw-Hex M6 x 20	2	
19	450192	Scrw-Hex M8 x 25	2	
20	450370	M8 Nutsert	2	
21	450377	Nut-Hex M6 Nyloc	2	
22	450378	Nut-Hex M8 Nyloc	4	
23	450389	Wshr-M6 x 12.5 x 1.8	2	
24	450390	Wshr-M8 x 17 x 1.8	6	
25	450411	Lockwshr-M8 x 12.75 x 2	2	
26	450730	Capscrw-Sckt M8 x 55	2	
27	158007-01	90-M/M 11/16 ORFS x 9/16 SAE	4	
*	158061-01	• O Ring	1	11/16” ORFS
*	002218065	• O Ring	1	9/16” SAE
28	4133856	Hyd Hose Assembly	1	Trans Pump ‘B’ to Front Motor ‘T’ For Sauer Danfoss wheel motors
29	4133857	Hyd Hose Assembly	1	LH Motor - Top Hose For Sauer Danfoss wheel motors

* Not Illustrated

https://truckmanualshub.com/

FRONT AXLE & UNIT MOUNTING

Illustration Number: 4133553-a

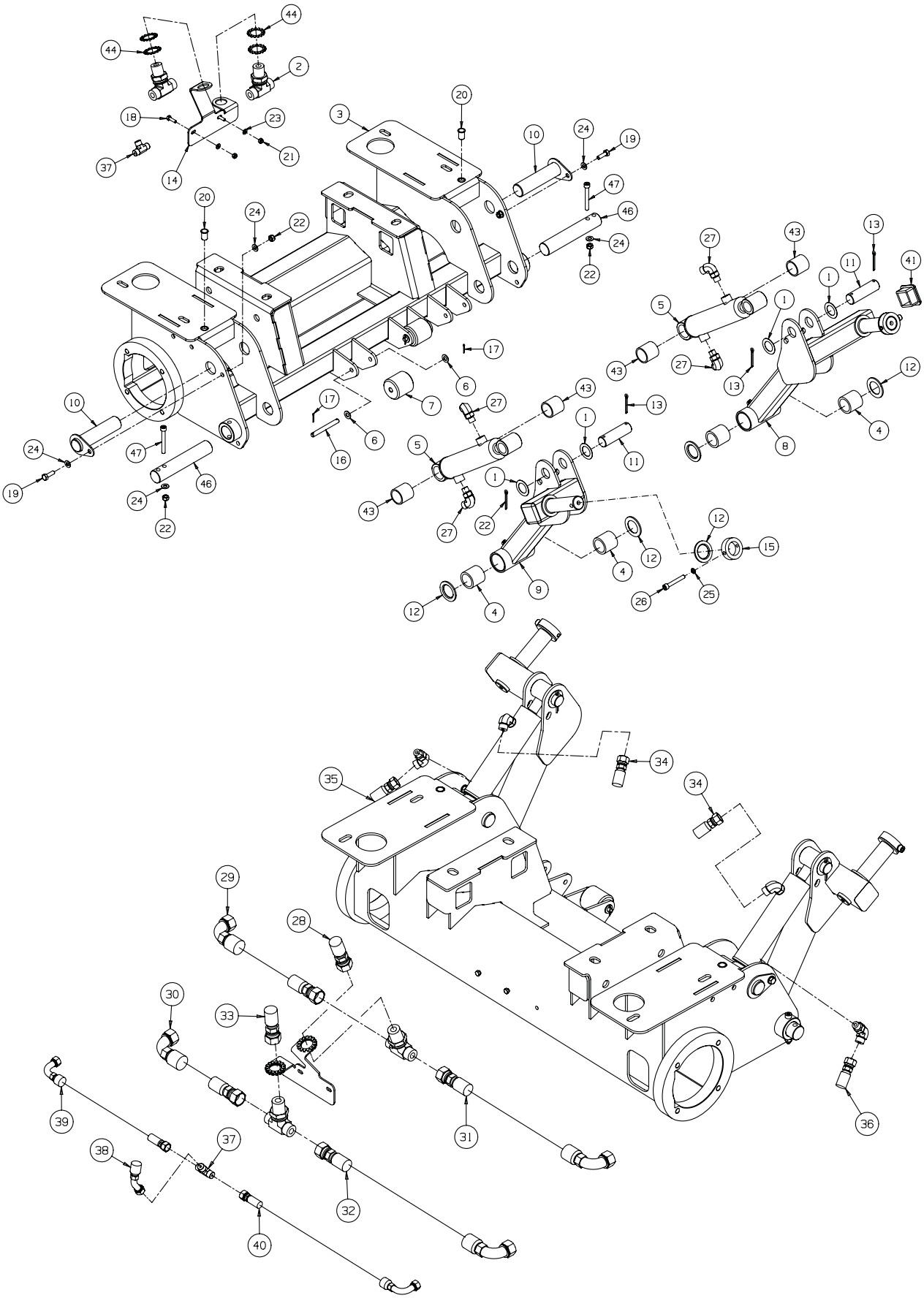

https://truckmanualshub.com/

ITEM	PART NO.	DESCRIPTION	QTY.	REMARKS
30	4133858	Hyd Hose Assembly	1	LH Motor - Bottom Hose For Sauer Danfoss wheel motors
31	4133859	Hyd Hose Assembly	1	RH Motor - Top Hose For Sauer Danfoss wheel motors
32	4133860	Hyd Hose Assembly	1	RH Motor - Bottom Hose For Sauer Danfoss wheel motors
33	4133861	Hyd Hose Assembly	1	Front Motor ‘T’ to Flush Valve (to serial no. EK000304)
33	4137208	Hyd Hose Assembly	1	Front Motor ‘T’ to Flush Valve (from serial no. EK000305) For Sauer Danfoss wheel motors
34	4133901	Hyd Hose Assembly	2	Front Lift Ram to Lift Manifold
35	4133904	Hyd Hose Assembly	1	LH Lift Ram to Drain Manifold
36	4133905	Hyd Hose Assembly	1	RH Lift Ram to Drain Manifold
37	002542050	Tee-M/M/M 9/16 ORFS	1	For Sauer Danfoss wheel motors
*	158061-18	• O Ring	1	9/16" ORFS
38	4133853	Hyd Hose Assembly	1	Rotary Valve ‘A’ to ‘T’ Front Brake Line For Sauer Danfoss wheel motors
39	4133854	Hyd Hose Assembly	1	LH Motor Brake Line to ‘T’ For Sauer Danfoss wheel motors
40	4133855	Hyd Hose Assembly	1	RH Motor Brake Line to ‘T’ For Sauer Danfoss wheel motors
41	002952633	End Cap-50 x 50 x 5	2	
42	002993160	Lubricator-M6 x 90ş	2	
43	4136819	Spacer-Lift Cylinder Pin	4	
44	J447030	Lockwasher-Tooth, Ext 1"	4	For Sauer Danfoss wheel motors
46	4141086	Shaft Pivot Pin	2	
47	450732	M8 x 65 capscrew	2	

* Not Illustrated

https://truckmanualshub.com/

PLATFORM SUPPORT

Illustration Number: 4131602

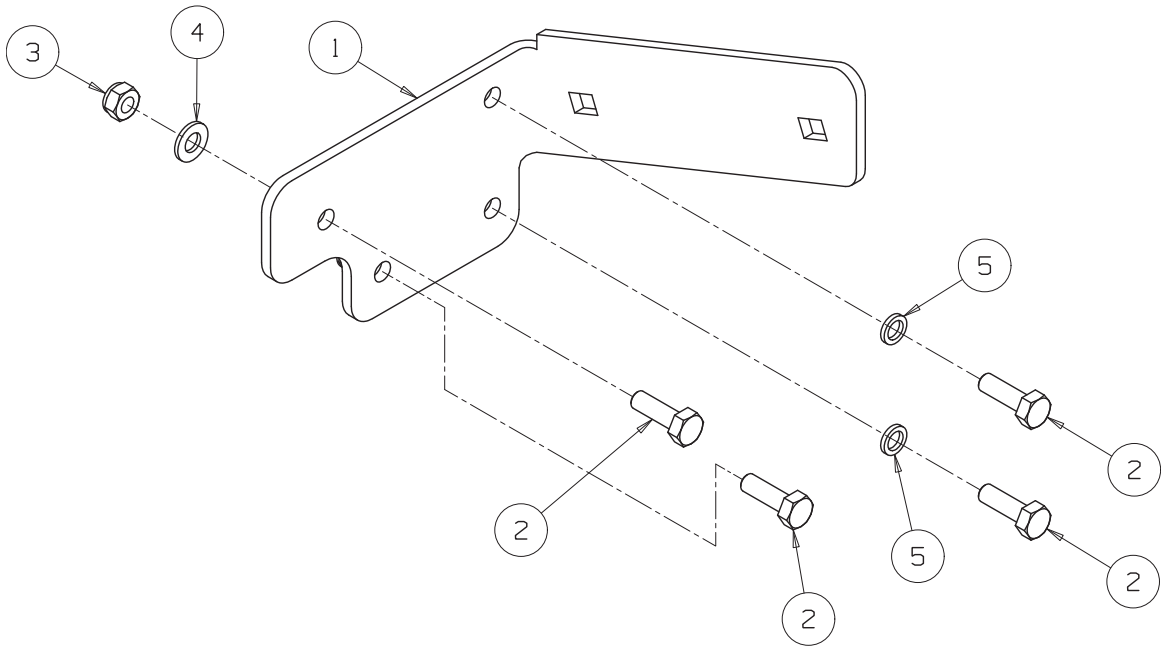

https://truckmanualshub.com/

ITEM	PART NO.	DESCRIPTION	QTY.	REMARKS
1	4134966	Bracket-Platform Support	1	
2	450192	Scrw-Hex M8 x 25	4	
3	450378	Nut-Hex M8 Nyloc	2	
4	450390	Wshr-M8 x 17 x 1.8	2	
5	450411	Lockwshr-M8 x 12.75 x 2	2	

* Not Illustrated

https://truckmanualshub.com/

FOOTSTEP LH

Illustration Number: 4132989

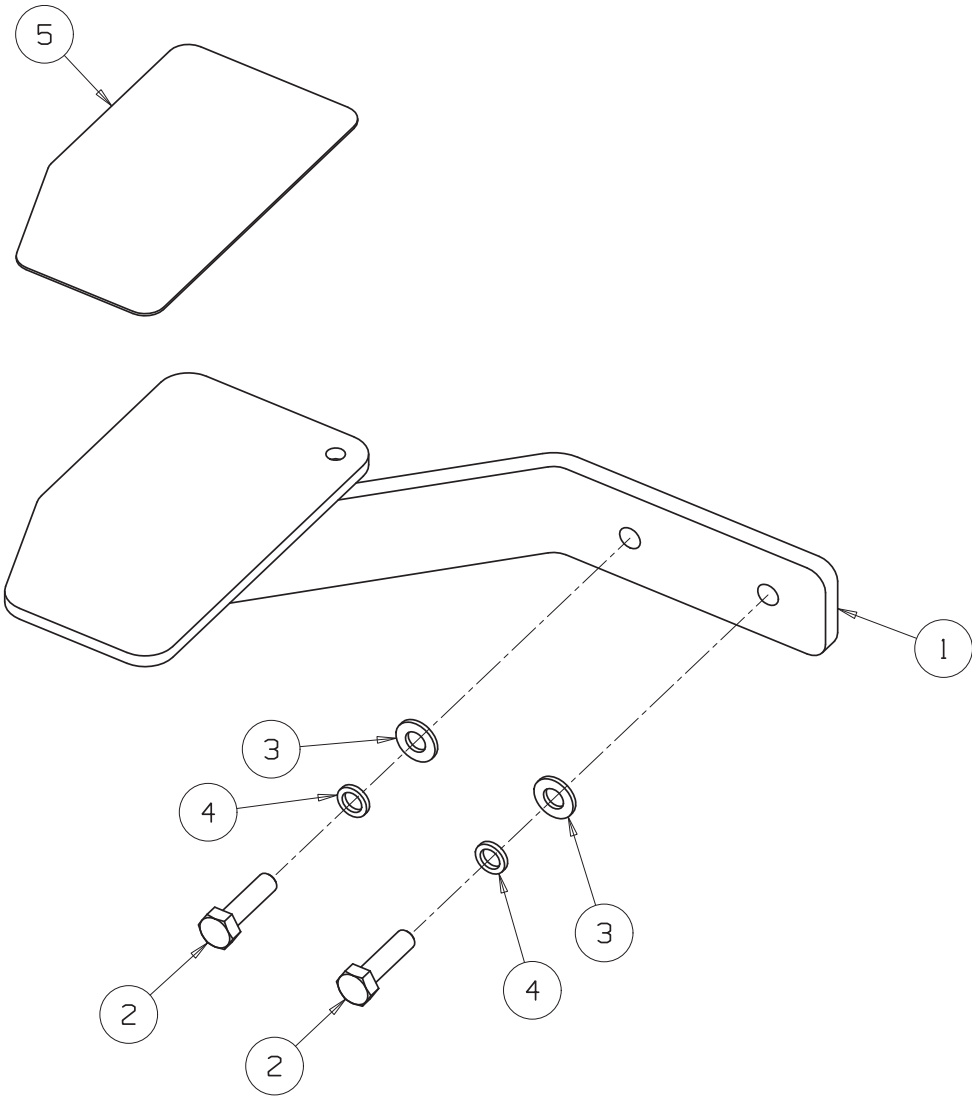

https://truckmanualshub.com/

ITEM	PART NO.	DESCRIPTION	QTY.	REMARKS
1	4132973	WLDMT-FOOTSTEP LH	1	
2	450014	BOLT-HEX M8 x 30	2	
3	450390	WSHR-M8 x 17 x 1.8	2	
4	450411	WSHR-SLW M8	2	
5	MBG4796	PAD-STEP RH	1	

* Not Illustrated

https://truckmanualshub.com/

FOOTSTEP RH

Illustration Number: 4132988

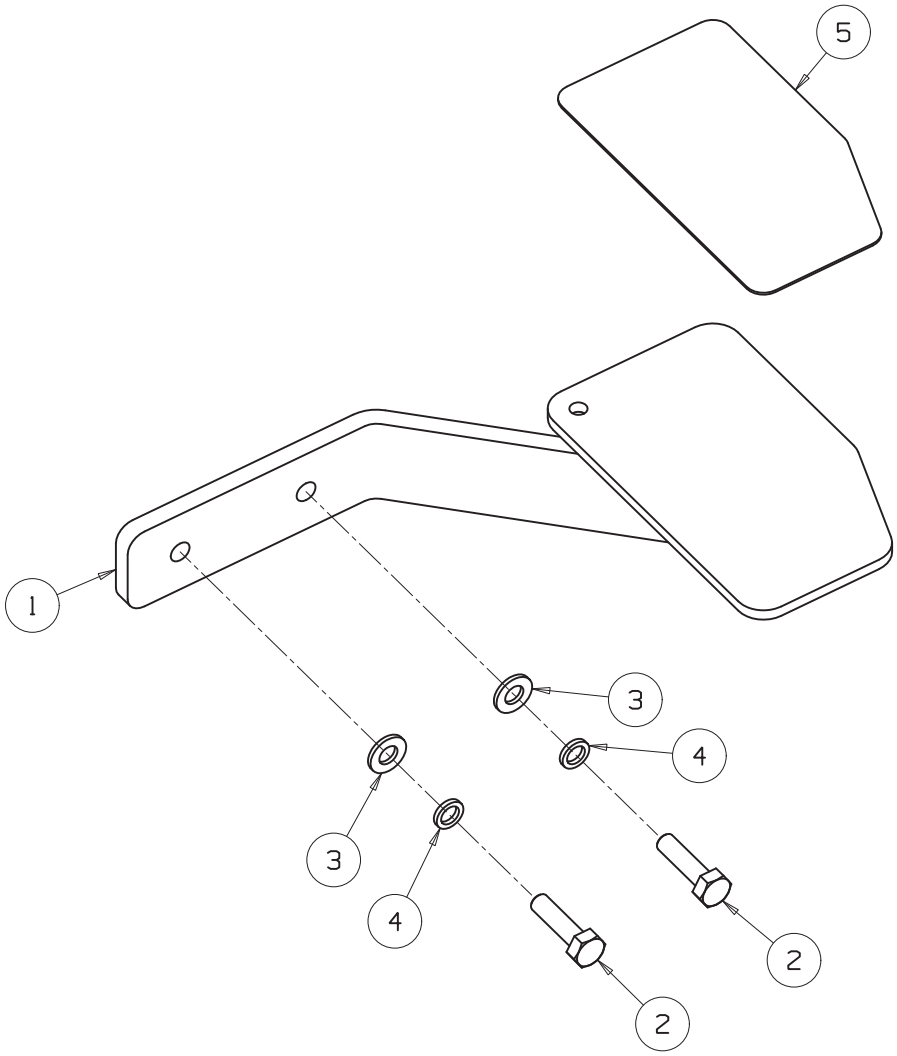

https://truckmanualshub.com/

ITEM	PART NO.	DESCRIPTION	QTY.	REMARKS
1	4132972	WLDMT- FOOTSTEP RH	1	
2	450014	BOLT-HEX M8 x 30	2	
3	450390	WSHR-M8 x 17 x 1.8	2	
4	450411	WSHR-SLW M8	2	
5	MBG4795	PAD-STEP LH	1	

* Not Illustrated

https://truckmanualshub.com/

FOOTGUARD LH

Illustration Number: 4133056

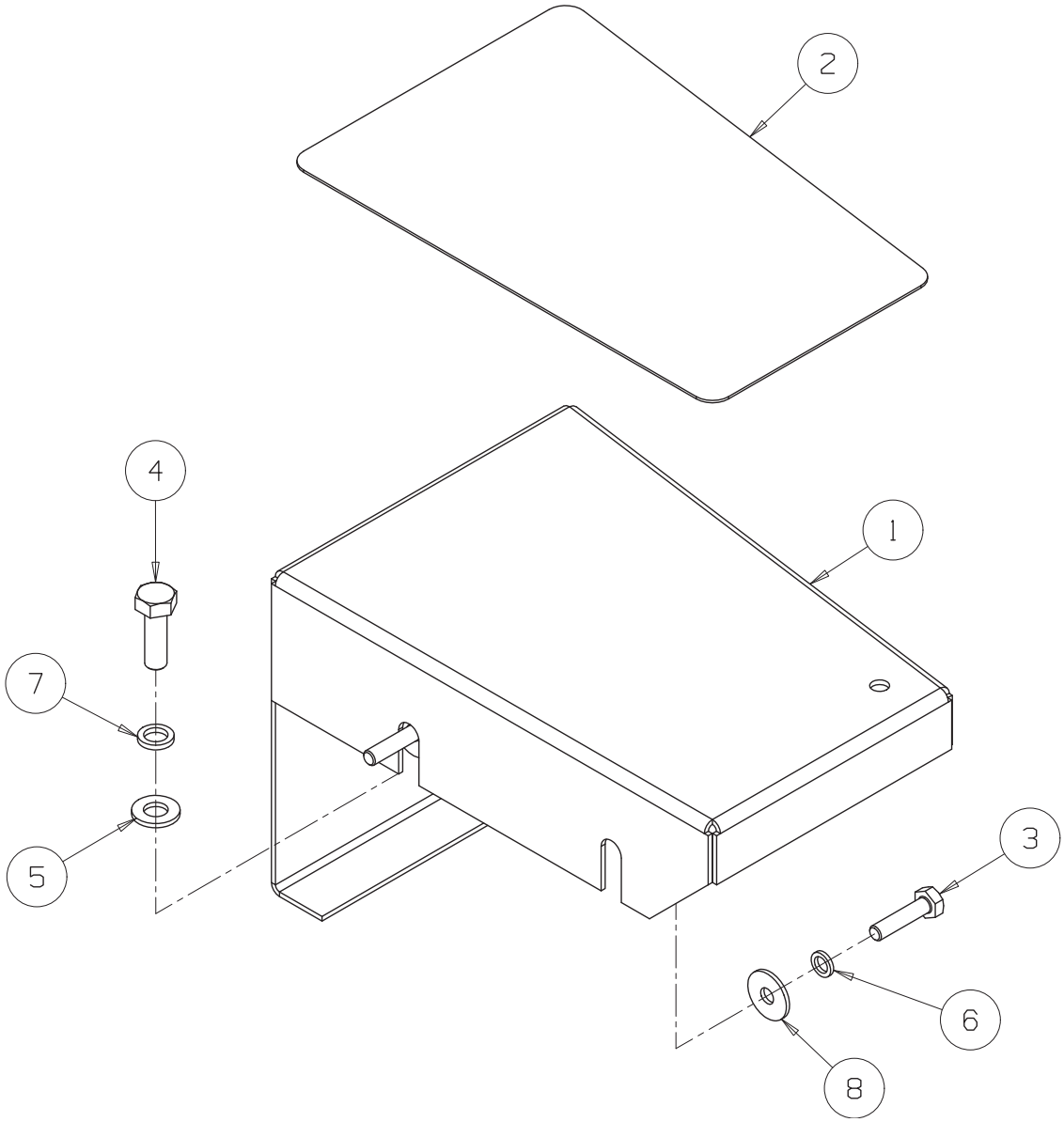

https://truckmanualshub.com/

ITEM	PART NO.	DESCRIPTION	QTY.	REMARKS
1	4133058	Footguard LH	1	
2	4133068	Pad-Footguard LH	1	
3	450172	Scrw-Hex M6 x 25	2	
4	450192	Scrw-Hex M8 x 25	1	
5	450390	Wshr-M8 x 17 x 1.8	1	
6	450410	Lockwshr-M6 x 9.6 x 1.5	2	
7	450411	Lockwshr-M8 x 12.75 x 2	1	
8	452000237	Wshr-1/4 x 3/4 x .064	2	

* Not Illustrated

https://truckmanualshub.com/

FOOTGUARD RH

Illustration Number: 4133057

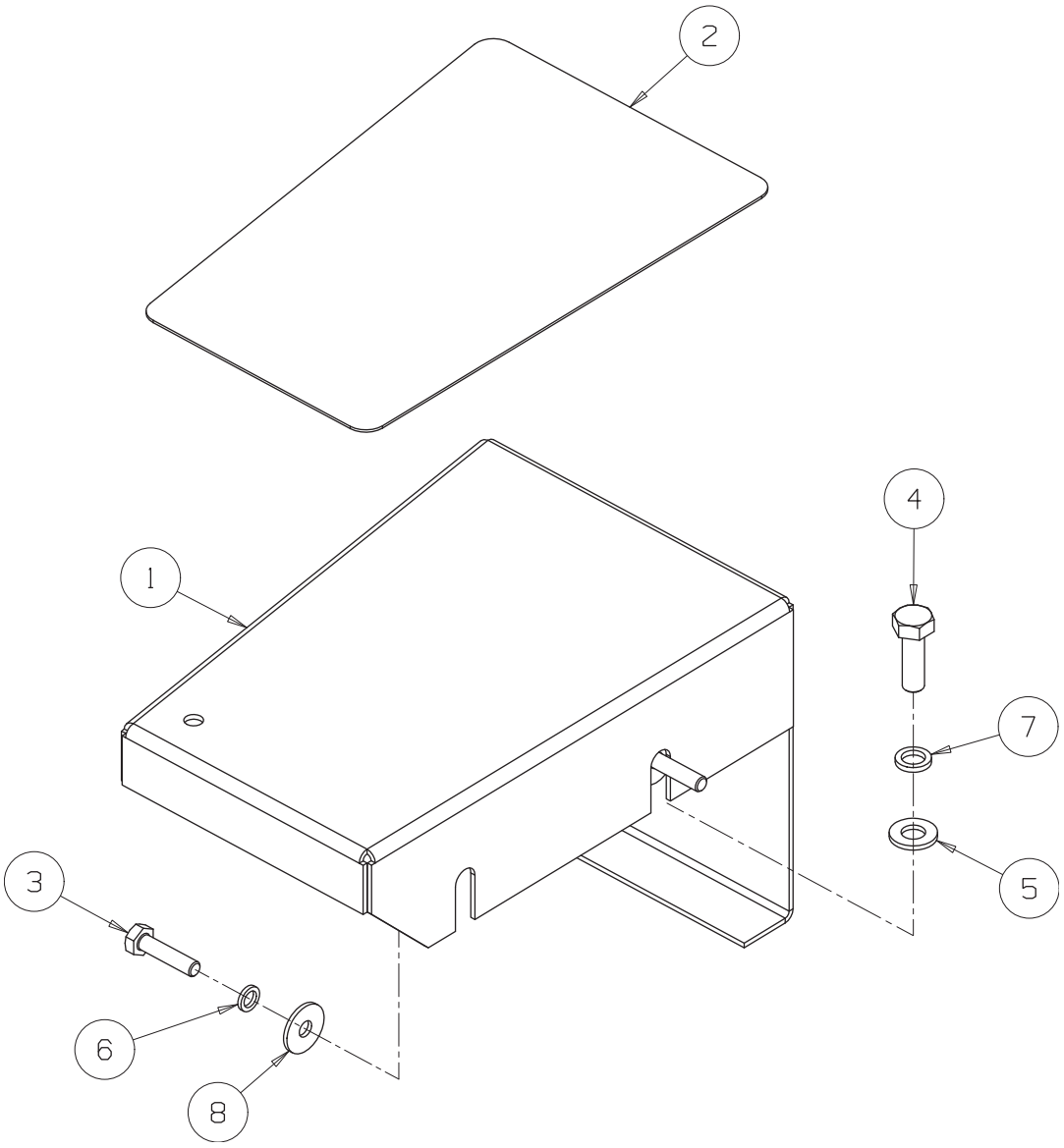

https://truckmanualshub.com/

ITEM	PART NO.	DESCRIPTION	QTY.	REMARKS
1	4133059	Footguard RH	1	
2	4133069	Pad-Footguard RH	1	
3	450172	Scrw-Hex M6 x 25	2	
4	450192	Scrw-Hex M8 x 25	1	
5	450390	Wshr-M8 x 17 x 1.8	1	
6	450410	Lockwshr-M6 x 9.6 x 1.5	2	
7	450411	Lockwshr-M8 x 12.75 x 2	1	
8	452000237	Wshr-1/4 x 3/4 x .064	2	

* Not Illustrated

https://truckmanualshub.com/

RH FRONT STOP

Illustration Number: 4308423_RH_Stop.eps

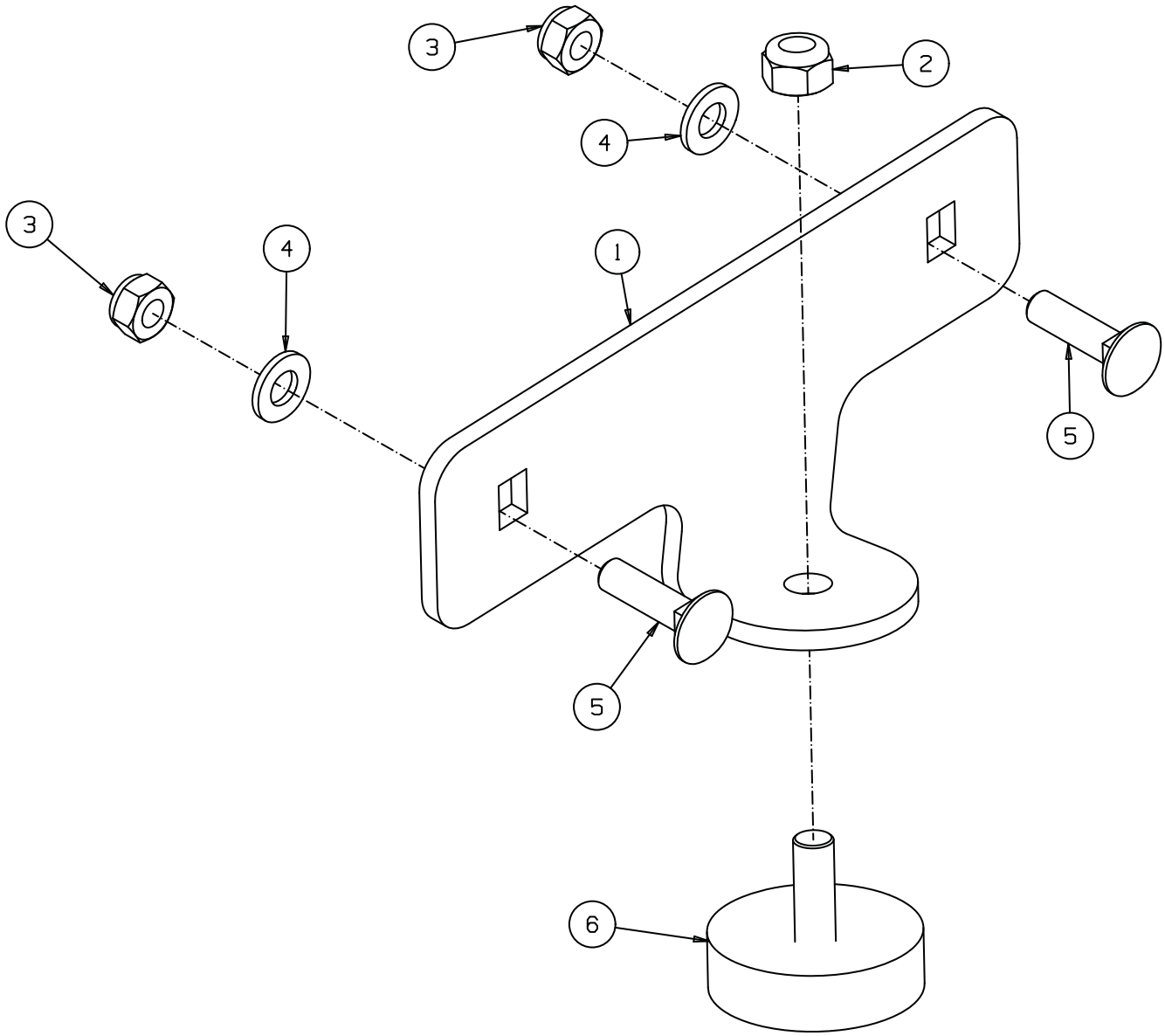

https://truckmanualshub.com/

ITEM	PART NO.	DESCRIPTION	QTY.	REMARKS
1	4322327	Bracket RH Front Stop	1	
2	450120398	Nut Hex 3/8-16, Nyloc Thin	1	
3	450378	Nut Hex M8-1.25, Gr 8, Nyloc	2	
4	450390	Washer M8 X 17 X 1.8	2	
5	452565	Bolt-Crg M8 X 30	2	
6	J361723	Bumper Stop	1	

* Not Illustrated

https://truckmanualshub.com/

LH FRONT STOP

Illustration Number: 4308424_LH_Stop.eps

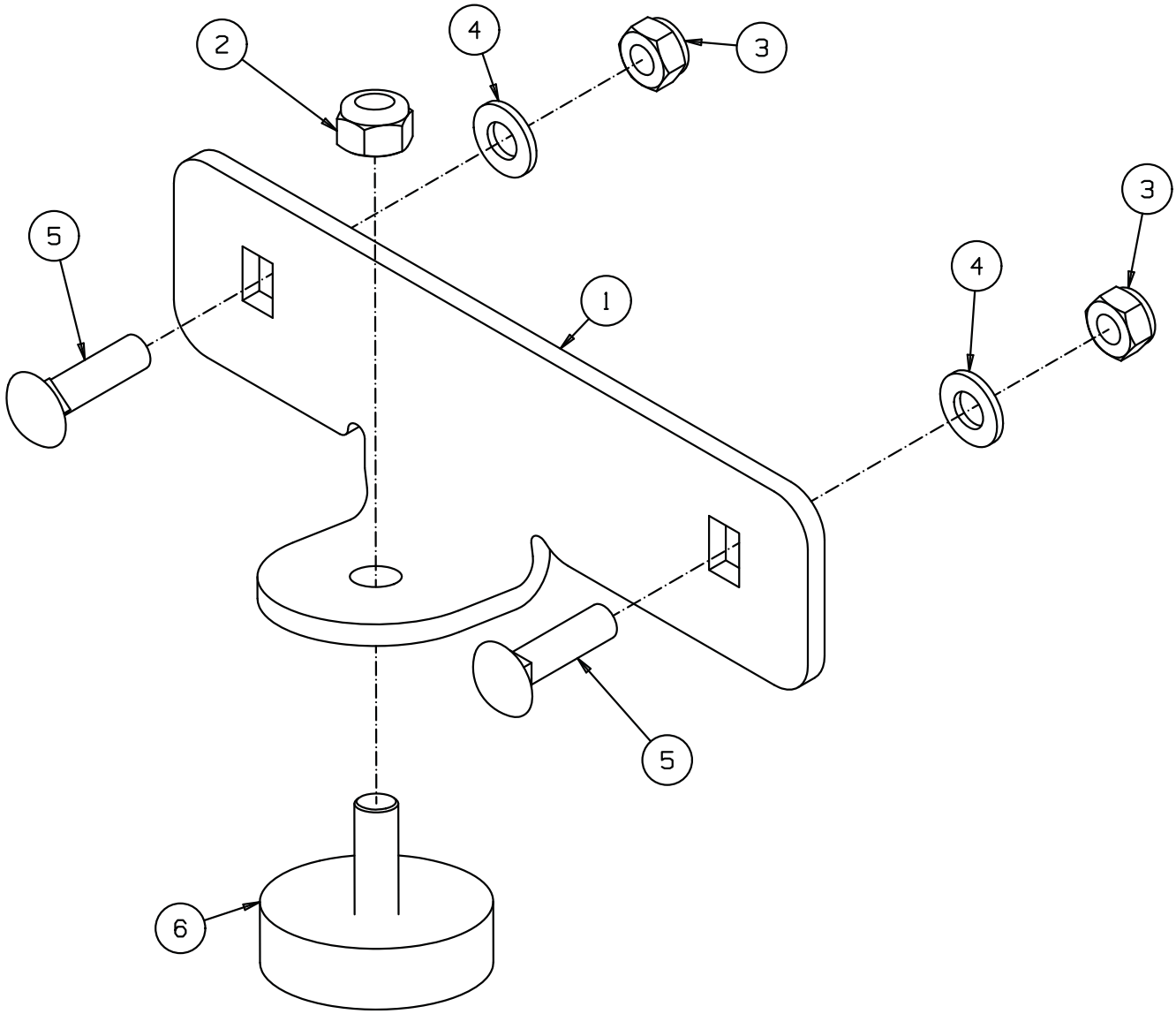

https://truckmanualshub.com/

ITEM	PART NO.	DESCRIPTION	QTY.	REMARKS
1	4322326	Bracket LH Front Stop	1	
2	450120398	Nut Hex 3/8-16, Nyloc Thin	1	
3	450378	Nut Hex M8-1.25, Gr 8, Nyloc	2	
4	450390	Washer M8 X 17 X 1.8	2	
5	452565	Bolt Crg M8 X 30	2	
6	J361723	Bumper Stop	1	

* Not Illustrated

https://truckmanualshub.com/

FUEL TANK PART 1

Illustration Number: 4133675

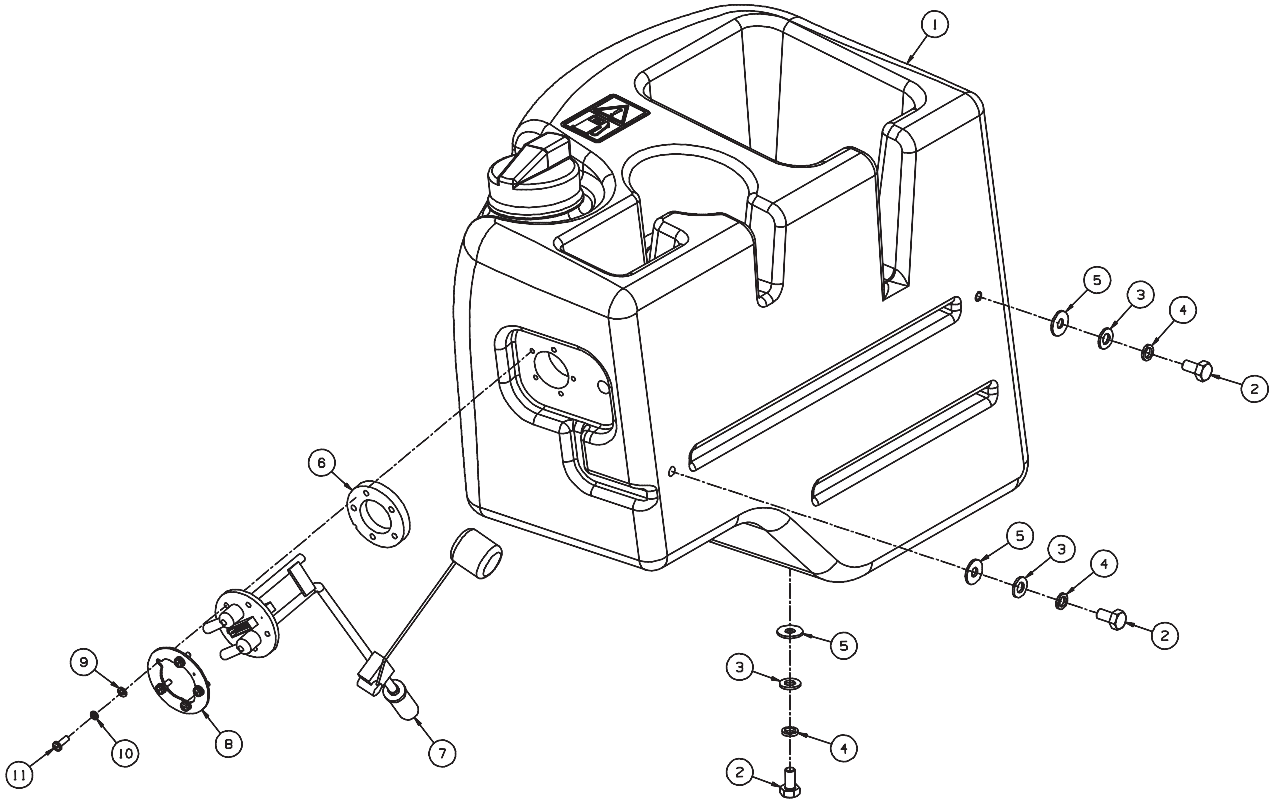

https://truckmanualshub.com/

ITEM	PART NO.	DESCRIPTION	QTY.	REMARKS
1	4133692	Asm-Fuel Tank	1	
2	450213	Scrw-Hex M10 x 20	3	
3	450391	Wshr-M10 x 21 x 2.2	3	
4	450412	Lockwshr-M10 x 15.9 x 2.5	3	
5	452000368	Wshr-3/8" x 1" x .080"	3	
6	4204200	Gasket-Fuel Tank	1	
7	4132363	Fuel Sender	1	
8	4134639	Collar-Fuel Sender	1	
9	450388	Wshr-M5 x 10 x 1.1	5	
10	450409	Lockwshr-M5 x 8.55 x 1.5	5	
11	450528	Scrw-Pan Hd M5 x 16	5	

* Not Illustrated

https://truckmanualshub.com/

FUEL TANK PART 2

Illustration Number: 4133692

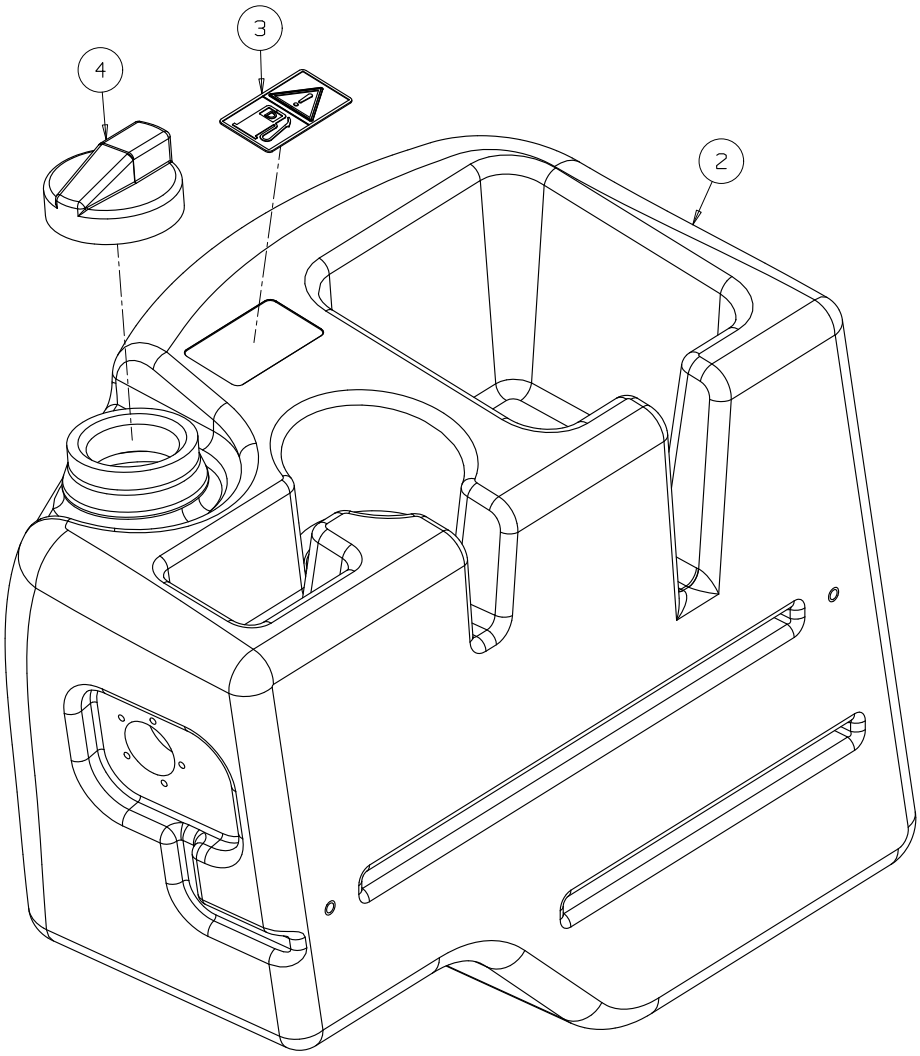

https://truckmanualshub.com/

ITEM	PART NO.	DESCRIPTION	QTY.	REMARKS
2	4131114	Tank-Fuel	1	
3	4133706	Decal-Diesel	1	
4	4133832	Cap-Fuel Tank	1	

* Not Illustrated

https://truckmanualshub.com/

HYDRAULIC TANK PART 1

Illustration Number: 4133676

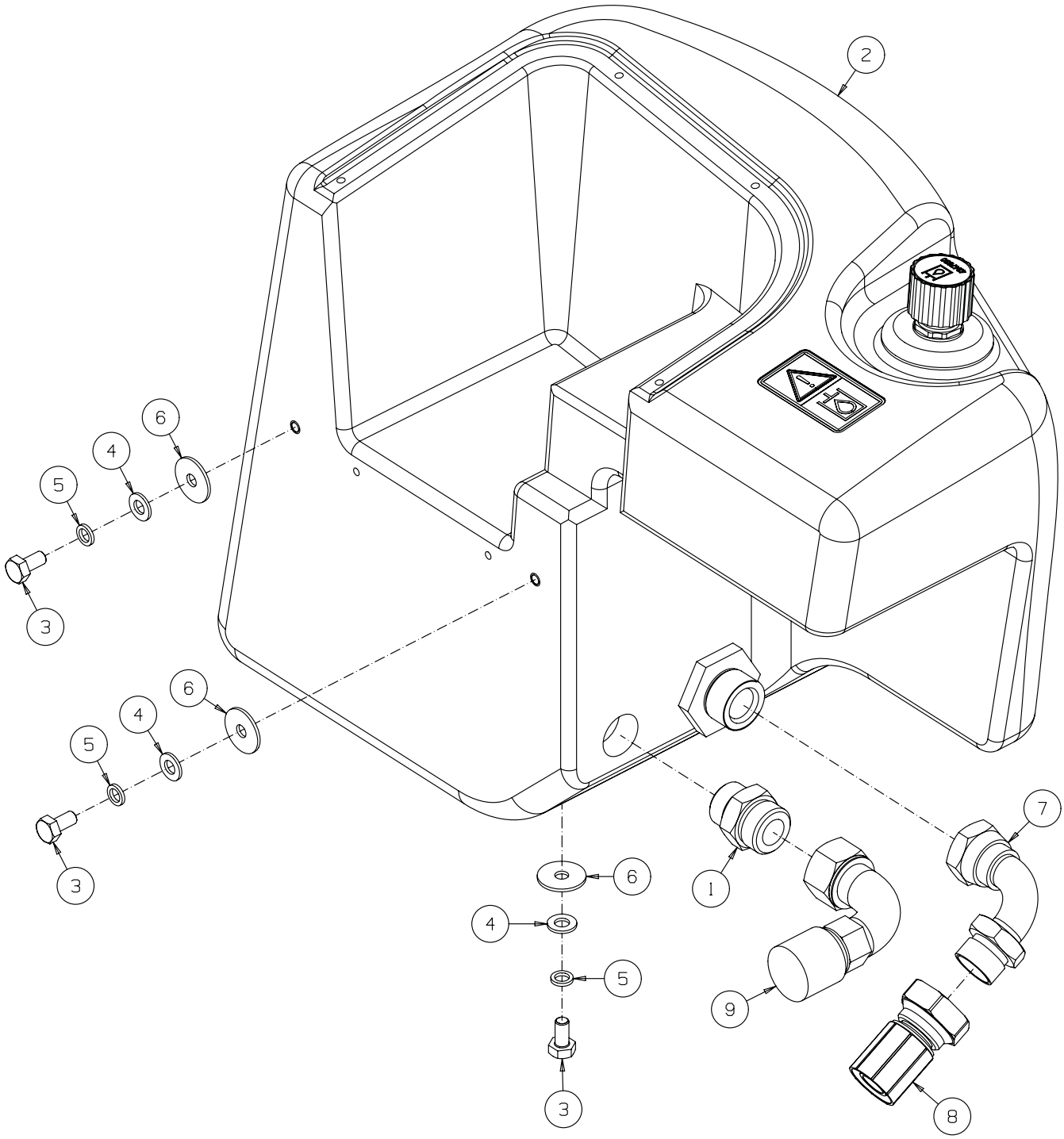

https://truckmanualshub.com/

ITEM	PART NO.	DESCRIPTION	QTY.	REMARKS
1	002515050	Ftg-1-7/16 ORFS x 1-5/16 SAE	2	
*	158061-19	• O Ring	1	1-7/16" ORFS
*	002218140	• O Ring	1	1-5/16" SAE
2	4133693	Asm-Hydraulic Tank	1	
3	450213	Scrw-Hex M10 x 20	3	
4	450391	Wshr-M10 x 21 x 2.2	3	
5	450412	Lockwshr-M10 x 15.9 x 2.5	3	
6	452000368	Wshr-3/8" x 1" x .080"	3	
7*	4135924	Cap-Hydraulic Filler	1	To S/N GX000484
7	4216340	90-M/F 1 BSPP x 1 BSPP Long Drop	1	From S/N
8	4133849	Hose-Tandem Pump Suction to Tank	1	To S/N GX000631 EJ000907 FG000684
8	4283831	Hose-Tandem Pump Suction to Tank	1	From S/N GX000632 EJ000908 FG000685
9	4133914	Hyd Hose Assembly	1	Manifold to Tank

* Not Illustrated

https://truckmanualshub.com/

HYDRAULIC TANK PART 2

Illustration Number: 4133693

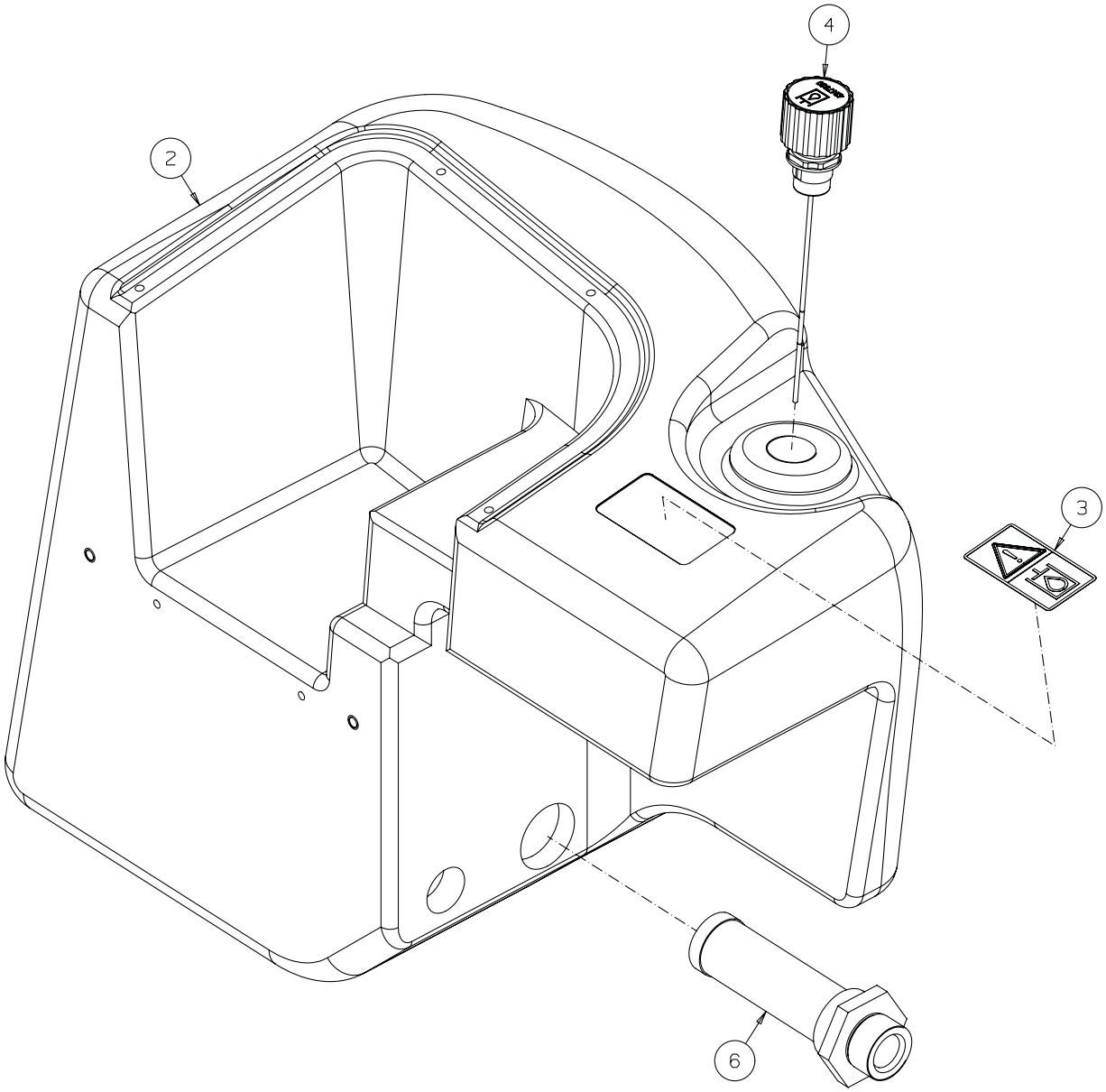

https://truckmanualshub.com/

ITEM	PART NO.	DESCRIPTION	QTY.	REMARKS
2	4131113	Tank-Hydraulic	1	
3	4133705	Decal-Hydraulic Oil	1	Non-Service Part
4	4135924	Cap-Hydraulic Filler	1	To S/N GX000484
4	4247930	Filler / Breather Cap	1	From S/N GX000485
*	4292311	• Filler/Breather Metal seal	1	
*	4292312	• Filler/Breather seal O ring	1	
5	459005226	Magnetic Drain Plug	1	To GX000631
5	4153597	Strainer-Suction, 125 micron	1	From GX000632

* Not Illustrated

https://truckmanualshub.com/

REAR WHEEL SUPPORT

Illustration Number: 4130629

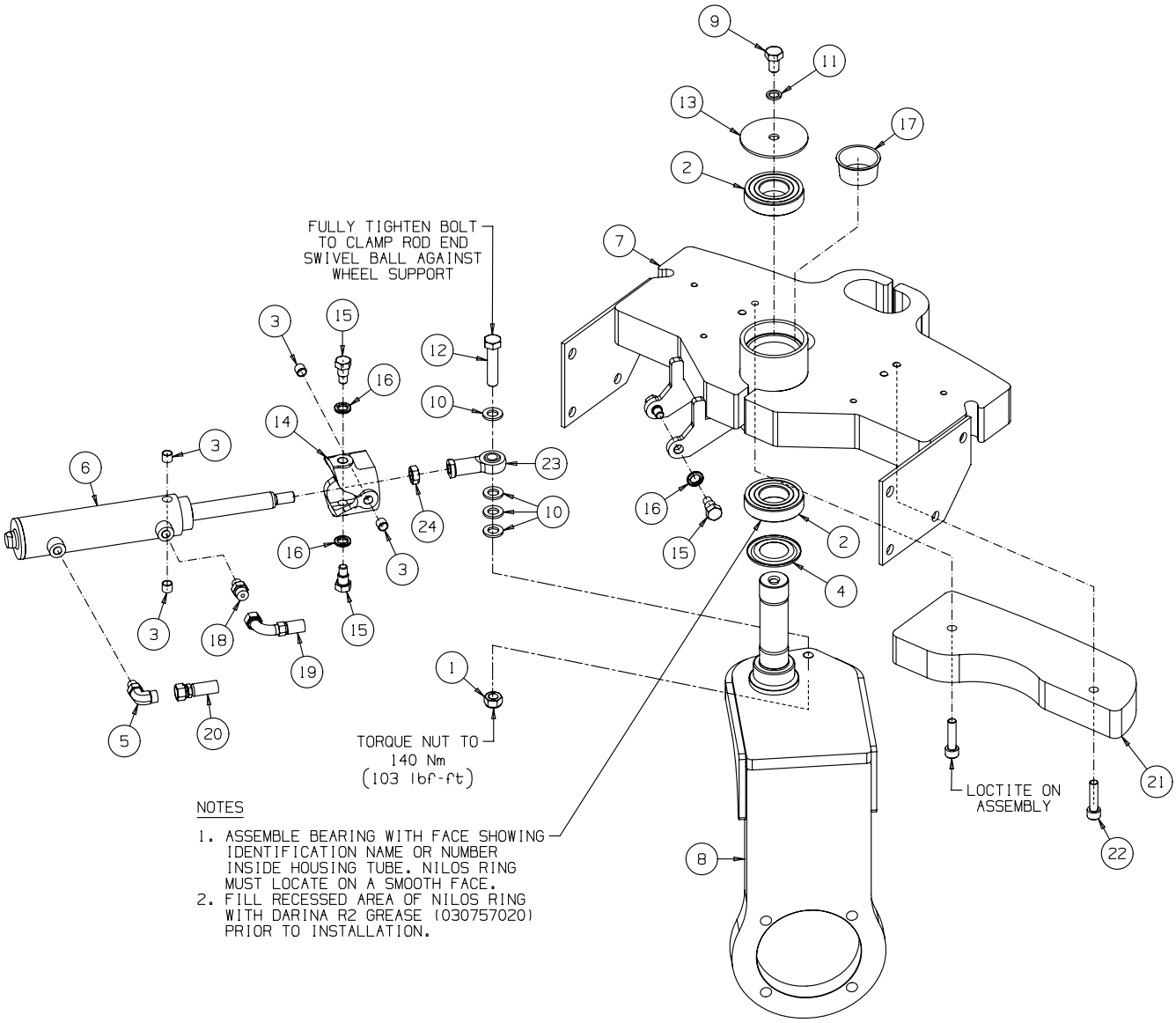

https://truckmanualshub.com/

ITEM	PART NO.	DESCRIPTION	QTY.	REMARKS
1	001399032	Nut-Hex 1/2-20 Nyloc	1	
2	002036070	Brg-Ball 35 x 72 x 17	2	
3	002143004	Bush-DX 10 x 12 x 10	4	
4	002282070	Nilos Ring	1	
5	002525020	90-M/M 9/16 ORFS x 7/16 SAE	1	
*	158061-18	• O Ring	1	9/16" ORFS
*	002218049	• O Ring	1	7/16" SAE
6	4122541	ARRGT - Steering Cylinder	1	Not a Service Part
6	4244289	D/A Hyd Cyl, 20 x 100, Steering	1	From S/N GX000524
*	4291657	Seal Kit for 4244289		
7	4130630	Wldmt-Wheel Pivot	1	Welded assy
8	4130652	Wldmt-Wheel Support	1	Sauer Danfoss Wheel Motor
8	4186621	Wldmt-Wheel Support	1	Eaton Wheel Motor
9	450213	Scrw-Hex M10 x 20	1	To S/N EJ000784 FG000581 GX000437
10	450392	Wshr-M12 x 24 x 2.7	3	
11	450412	Lockwshr-M10 x 15.9 x 2.5	1	To S/N EJ000784 FG000581 GX000437
12	451030625	Bolt-Hex 1/2-20 x 2	1	
13	MBA2397A	Wshr-11 x 82 x 3	1	
14	MBC5942	Journal	1	
15	MBC5959A	Bolt	2	
16	MBC5962	Tab Washer	4	To S/N EJ000902 FG000682 GX000620
16	4273470	AV Wshr-13 x 19.5 x 2.5	4	To S/N EJ000903 FG000683 GX000621
17	4133599	Plug-Tapered, 49 Dia	1	
18	002515000	Ftg-9/16 ORFS x 7/16 SAE	1	
*	158061-18	• O Ring	1	9/16" ORFS
*	002218049	• O Ring	1	7/16" SAE
19	4133894	Hyd Hose Assembly	1	Steer unit ‘L’ to steer ram
20	4133896	Hyd Hose Assembly	1	Steer unit ‘R’ to steer ram frt port
*	450214	M10 x 25 hex hd bolt	2	
21	4153820	Wheel Pivot Weight	1	When 4130630 fitted
22	450741	M10 x 40 bolt	2	
23	008145256	Rod End 1/2-20 UNF	1	
24	450020281	Nut-Hex 1/2-20 Thin	1	
100*	450239	Scrw-Hex M12 x 20	1	From S/N EJ000784 FG000581 GX000437
101*	450413	Lockwshr-M12 x 17.9 x 2.5	1	From S/N EJ000784 FG000581 GX000437

* Not Illustrated

https://truckmanualshub.com/

STEERING CYLINDER

Illustration Number: 4122541

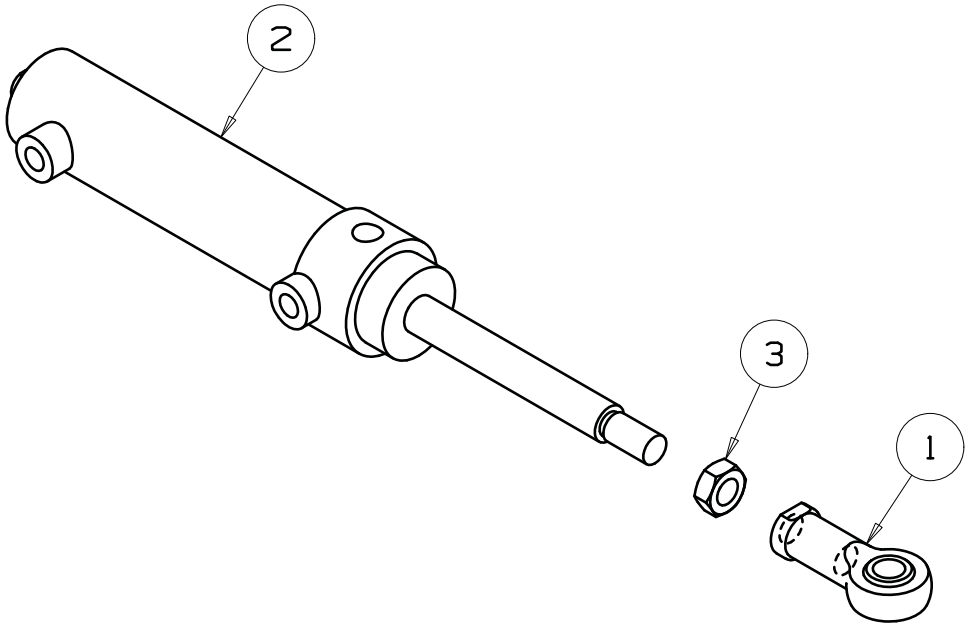

https://truckmanualshub.com/

ITEM	PART NO.	DESCRIPTION	QTY.	REMARKS
1	008145256	Rod End 1/2-20 UNF	1	
2	4139914	Cylinder-Steering	1	To S/N GX000523
*	008015040	• Seal Kit	1	
2	4244289	D/A Hyd Cyl, 20 x 100, Steering	1	From S/N GX000524
*	4291657	Seal Kit for 4244289	A/R	
3	450020281	Nut-Hex 1/2-20 Thin	1	

* Not Illustrated

https://truckmanualshub.com/

STEERING TOWER

Illustration Number: 4130672

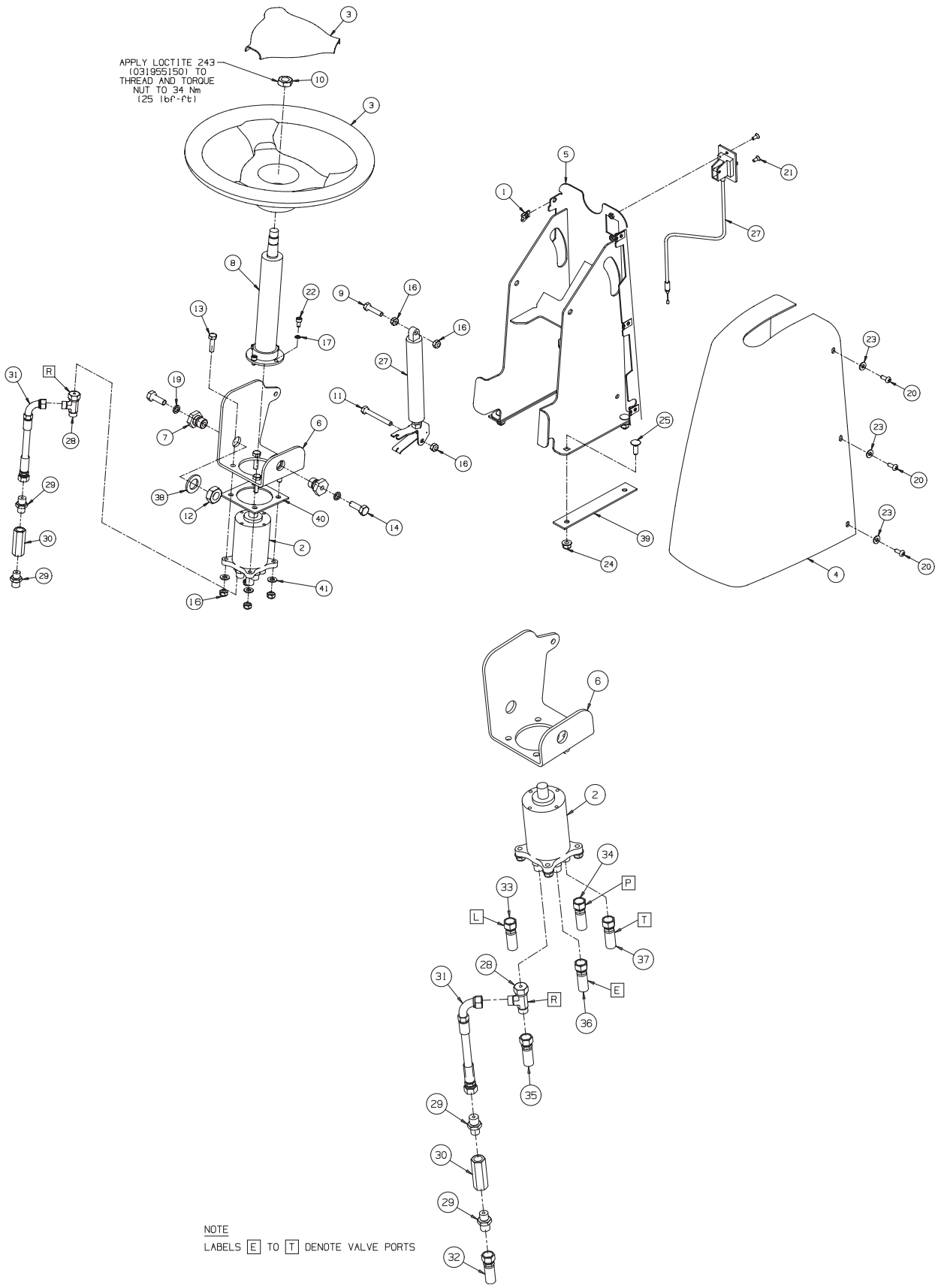

https://truckmanualshub.com/

ITEM	PART NO.	DESCRIPTION	QTY.	REMARKS
1	001394016	Nut-Speed M6	6	
2	008011990	Steering Unit	1	
*	4195580	• Seal Kit	1	
3	2811364	Steering Wheel	1	
*	2811365	• Cap-Steering Wheel	1	
4	3010651	Cover-Steering Tower	1	
5	4130330	Wldmt-Steering Tower	1	
6	4130373	Brkt-Pivot, Steering Unit	1	
7	4130398	Bolt-Pivot, Steering Unit	2	
8	4132076	Steering Column, 220 Lg	1	
9	450015	Bolt-Hex M8 x 35	1	
10	450020338	Nut-Hex 5/8-18 Thin	1	
11	450021	Bolt-Hex M8 x 65	1	
12	450120136	Nut-Hex 3/4-10 Thin	2	
13	450193	Scrw-Hex M8 x 30	4	
14	450215	Scrw-Hex M10 x 30	2	
16	450378	Nut-Hex M8 Nyloc	7	
17	450410	Lockwshr-M6 x 9.6 x 1.5	4	
19	450412	Lockwshr-M10 x 15.9 x 2.5	2	
20	450541	Scrw-Pan Hd M6 x 16	6	
21	450605	Scrw-Csk M5 x 12	2	
22	450710	Capscrw-Sckt M6 x 12	4	
23	452100019	Wshr-1/4 x 5/8 x .064	6	
24	452436	Nut-Hex M8 Flng Nyloc	4	
25	452564	Bolt-Crg M8 x 25	4	
27	1003460	Asm-Actuator, Tilt Spring	1	
*	J5002918	• Gas Spring, Locking	1	
*	J5002919	• Actuator	1	
28	002590480	Tee-M/F/M 9/16 ORFS	1	
*	158061-18	• O Ring	1	9/16" ORFS
29	002590750	Ftg-9/16 ORFS x 1/4 BSPP	2	
*	158061-18	• O Ring	1	9/16" ORFS
30	008011210	Inline Check Valve	1	
31	4133897	Hyd Hose Assembly	1	Check valve to steer valve ‘R’
32	4133893	Hyd Hose Assembly	1	Rotary valve ‘C’ to check valve
33	4133894	Hyd Hose Assembly	1	Steer unit ‘L to steer ram
34	4133895	Hyd Hose Assembly	1	Steer pump to Steer unit ‘P’
35	4133896	Hyd Hose Assembly	1	Steer unit ‘R’ to steer ram frt port
36	4133898	Hyd Hose Assembly	1	Steer unit ‘E’ to lift valve ‘SP’
37	4133899	Hyd Hose Assembly	1	Lift valve ‘T’ to Steer unit ‘T’
38	450394	Wshr-M20 x 37 x 3	2	
39	4139700	Pad-Steering Tower	2	
40	4139701	Pad-Steering Unit	1	
41	450390	Wshr-M8 x 17 x 1.8	4	
*	4142655	Buzzer Assembly	1	

* Not Illustrated

https://truckmanualshub.com/

STEERING TOWER FROM SERIAL NUMBER GX100869 & KG000440

Illustration Number: 4130672-I-Steering Tower.pdf

NOTES:
1. ITEM 10 (NUT-HEX 5/8-18 THIN) IS SUPPLIED WITH STEERING COLUMN (4132076).
2. ITEM 24 (NUT-HEX M8 FLNG NYLOC) AND ITEM 25 (BOLT-CRG M8 x 25) ARE FOR ASSEMBLY OF ITEM 6 (WLDMT STEERING TOWER) TO OPERATORS PLATFORM (413508).

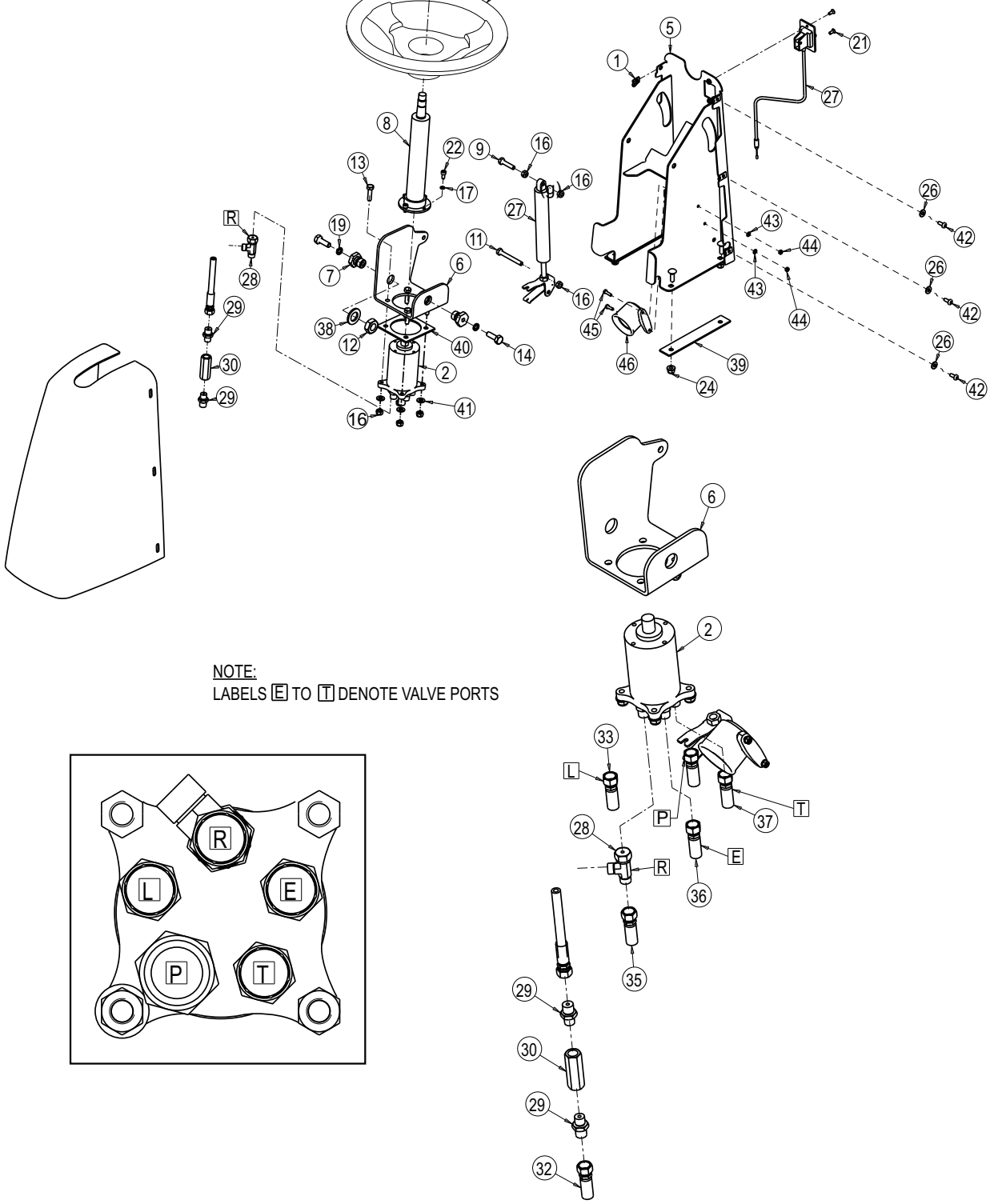

https://truckmanualshub.com/

ITEM	PART NO.	DESCRIPTION	QTY.	REMARKS
1	001394016	M6 Speed Nut	6	
2	008011990	Steering Unit	1	
*	4195580	• Seal Kit	1	
3	2811364	Steering Wheel	1	
5	4130330	Steering Tower Assembly	1	
6	4130373	Steering Unit Pivot Bracket	1	
7	4130398	Steering Unit Pivot Bolt	2	
8	4132076	Steering Column 220 Lg	1	
9	450015	Hexagon Bolt M8-1.25 x 35	1	
10	450020338	Hexagon 5/8-18 Thin Nut	1	
11	450021	Hexagon Bolt M8-1.25 x 65	1	
12	450120136	Hexagon 3/4-10 Thin Nut	2	
13	450193	Hexagon Head Screw M8 1.25 x 30	4	
14	450215	Hexagon Head Screw M10-1.5 x 30	2	
16	450378	Hexagon Nyloc Nut M8-1.25	7	
17	450410	Lock Washer M6 x 9.6 x 1.5	4	
19	450412	Lock Washer M10 x 15.9 x 2.5	2	
21	450605	Countersunk Screw M5-0.8 X 12	2	
22	450710	Capscrew Hexagon Socket M6-1.0 x 12	4	
24	452436	M8 Hexagon Flanged Nyloc Nut	4	
26	452100019	Washer 1/4” x 5/8” x .064"	3	
27	1003460	Actuator Tilt Spring Assembly	2	
*	J5002918	• Gas Spring, Locking	1	
*	J5002919	• Actuator	1	
28	002590480	Tee Fitting M/F/M 9/16 ORS	1	
*	158061-18	• O Ring (9/16” ORFS)	1	
29	002590750	Fitting 9/16 ORFS x 1/4 BSPP	2	
*	158061-18	• O Ring (9/16” ORFS)	1	
30	008011210	Inline Check Valve	1	
31	4133897	Hydraulic Hose Assembly	1	Check Valve to Steer Valve ‘R’
32	4133893	Hydraulic Hose Assembly	1	Rotary Valve ‘C’ to Check Valve
33	4133894	Hydraulic Hose Assembly	1	Steer Unit ‘L to Steer Ram
34	4133895	Hydraulic Hose Assembly	1	Steer Pump to Steer Unit ‘P’
35	4133896	Hydraulic Hose Assembly	1	Steer Unit ‘R’ to Steer Ram Front Port
36	4133898	Hydraulic Hose Assembly	1	Steer Unit ‘E’ to Lift Valve ‘SP’
37	4133899	Hydraulic Hose Assembly	1	Lift valve ‘T’ to Steer unit ‘T’
38	450394	Washer M20 x 37 x 3.3	2	
39	4139700	Steering Tower Pad	2	
40	4139701	Steering Unit Pad	1	
41	450390	Washer M8 x 17 x 1.8	4	
42	450541	Pan Head Screw M6 x 16	3	
43	450388	Washer M5 x 10 x 1.1	2	
44	450322	Hexagon Nut M5-0.8	2	
45	450151	Screw M5-.80 x 16	2	
46	4142655	Horn	1	
47	3010651	Steering Tower Cover	1	

https://truckmanualshub.com/

BATTERY & TRAY

Illustration Number: 4131540

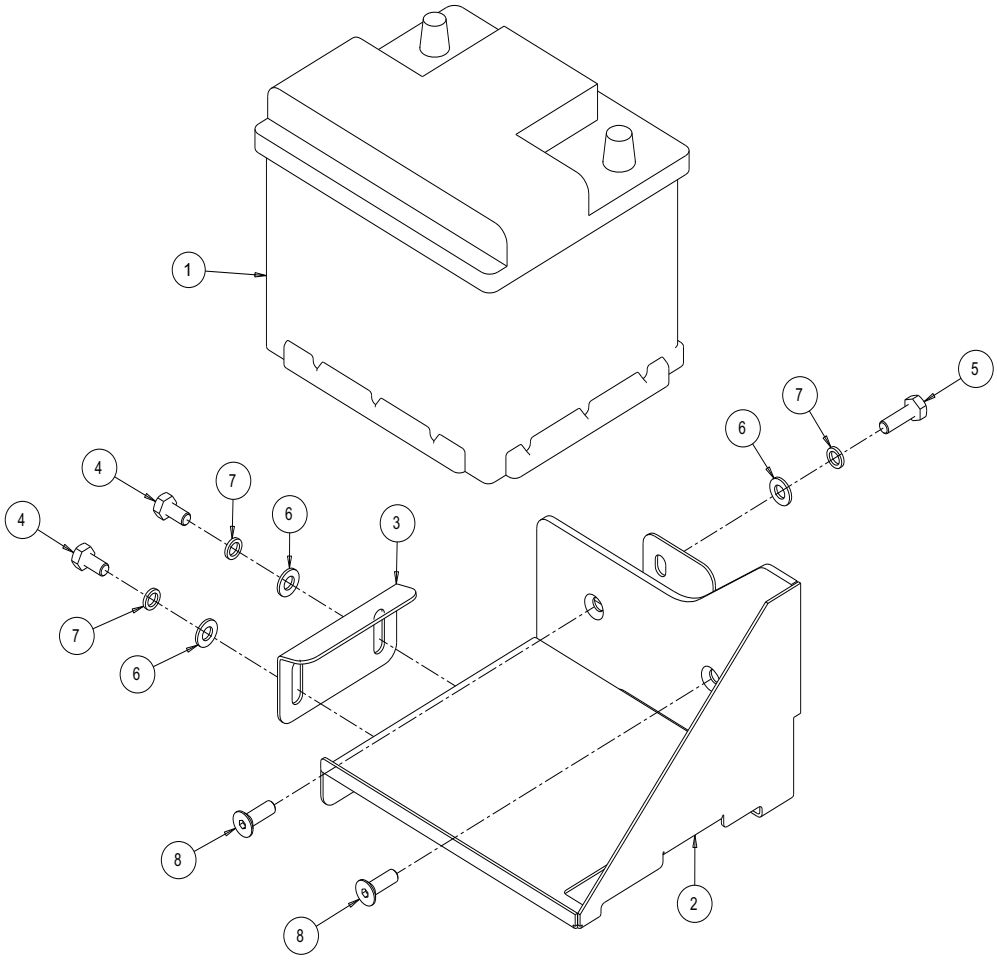

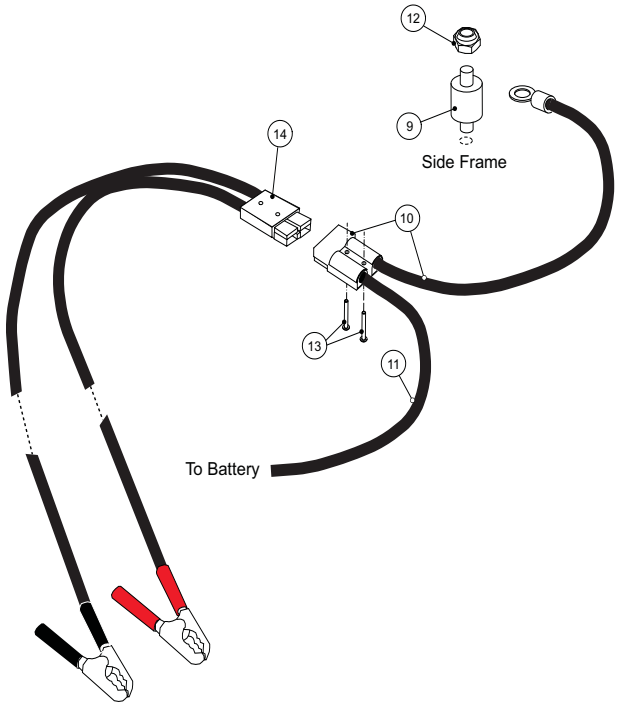

https://truckmanualshub.com/

ITEM	PART NO.	DESCRIPTION	QTY.	REMARKS
1	4322478	Yuasa Battery 12V 45AH 425A	1	
*	4322477	Battery Terminal Adapter - T4-F	1	
2	4131542	Battery Tray	1	
3	4132961	Battery Clamp	1	
4	450190	Hexagon Screw M8-1.25 x 16	2	
5	450192	Hexagon Screw M8-1.25 x 25	1	
6	450390	Washer M8 x 17 x 1.8	3	
7	450411	Lock Washer M8 x 12.75 x 2	3	
8	450866	Countersunk Hexagon Socket Screw M8-1.25 x 25	2	
*	4132354	Negative Battery Cable	1	(Battery Negative - To Engine Ground)
*	4132355	Positive Battery Cable	1	(Battery Positive + to Starter)
*	4139551	Positive Battery Terminal Cover (Red)	1	
	LMAC261	Jump Start Kit		
	EL110	• Electrical Kit	1	
9	4160783	• • Rubber AV Mount	1	
10	4160782	• • Slave Plug Lead	1	
11	4160781	• • Starter Cable (200 mm)	1	
12	450378	• • Nut - Hex M8 Nyloc	1	
*	450369	• Nutsert - M8	1	
13	451129	• Screw - Pan Head No6 x 19	2	
14	4160780	Plug Assembly	1	
*	4139551	Positive Battery Terminal Cover (Red)	1	

https://truckmanualshub.com/

FUSE BRACKET

Illustration Number: 4131909

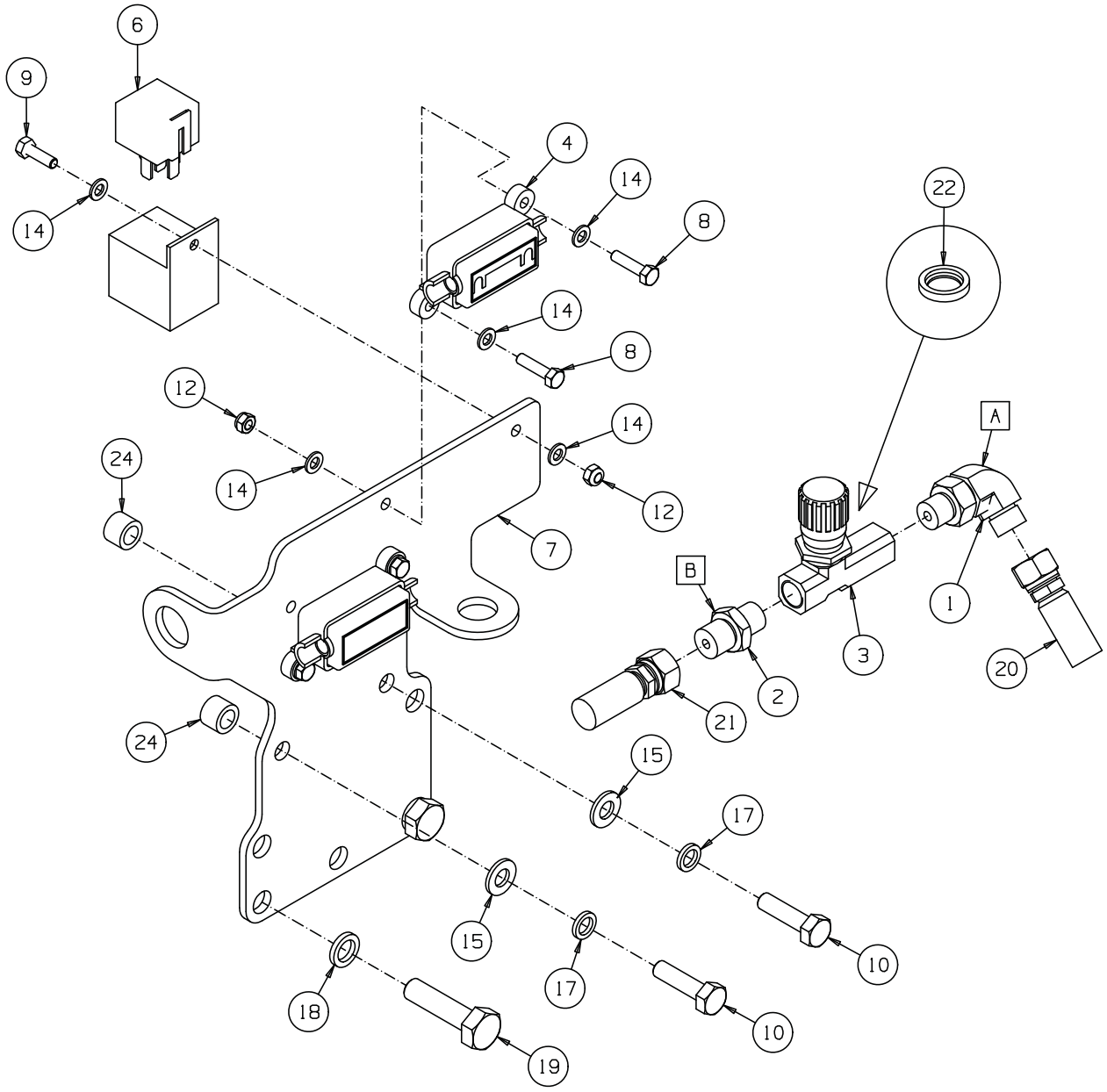

NOTE
LABELS A TO B DENOTE VALVE PORTS

https://truckmanualshub.com/

ITEM	PART NO.	DESCRIPTION	QTY.	REMARKS
1	002590370	90-M/M 9/16 ORFS x 1/4 BSPP	1	
*	158061-18	• O Ring	1	9/16" ORFS
2	002590750	Ftg-9/16 ORFS x 1/4 BSPP	1	
*	158061-18	• O Ring	1	9/16" ORFS
3	008012590	Needle Valve	1	
4	008233350	Strip Fuse Holder	2	
5 *	008233370	40 Amp Strip Fuse	2	
6	008244720	70 Amp Relay	1	
7	4131905	Bracket-Fuse Mounting	1	
8	450152	Scrw-Hex M5 x 20	4	
9	450151	Scrw-Hex M5 x 16	1	
10	450193	Scrw-Hex M8 x 30	2	
11				
12	450376	Nut-Hex M5 Nyloc	5	
13				
14	450388	Wshr-M5 x 10 x 1.1	10	
15	450390	Wshr-M8 x 17 x 1.8	2	
16				
17	450411	Lockwshr-M8 x 12.75 x 2	2	
18	450412	Lockwshr-M10 x 15.9 x 2.5	2	
19	452746	Bolt-Hex M10-1.25 x 40	2	
20	4135211	Hyd Hose Assembly	1	Free Wheel Valve to Trans Pump 'B'
21	4135212	Hyd Hose Assembly	1	Free Wheel Valve to Trans Pump 'A'
22	4139864	Valve Spacer	1	
23				
24	AF09010	Spacer-9 x 13.9 x 10	2	

* Not Illustrated

https://truckmanualshub.com/

ELECTRICAL CIRCUIT INSTRUMENT

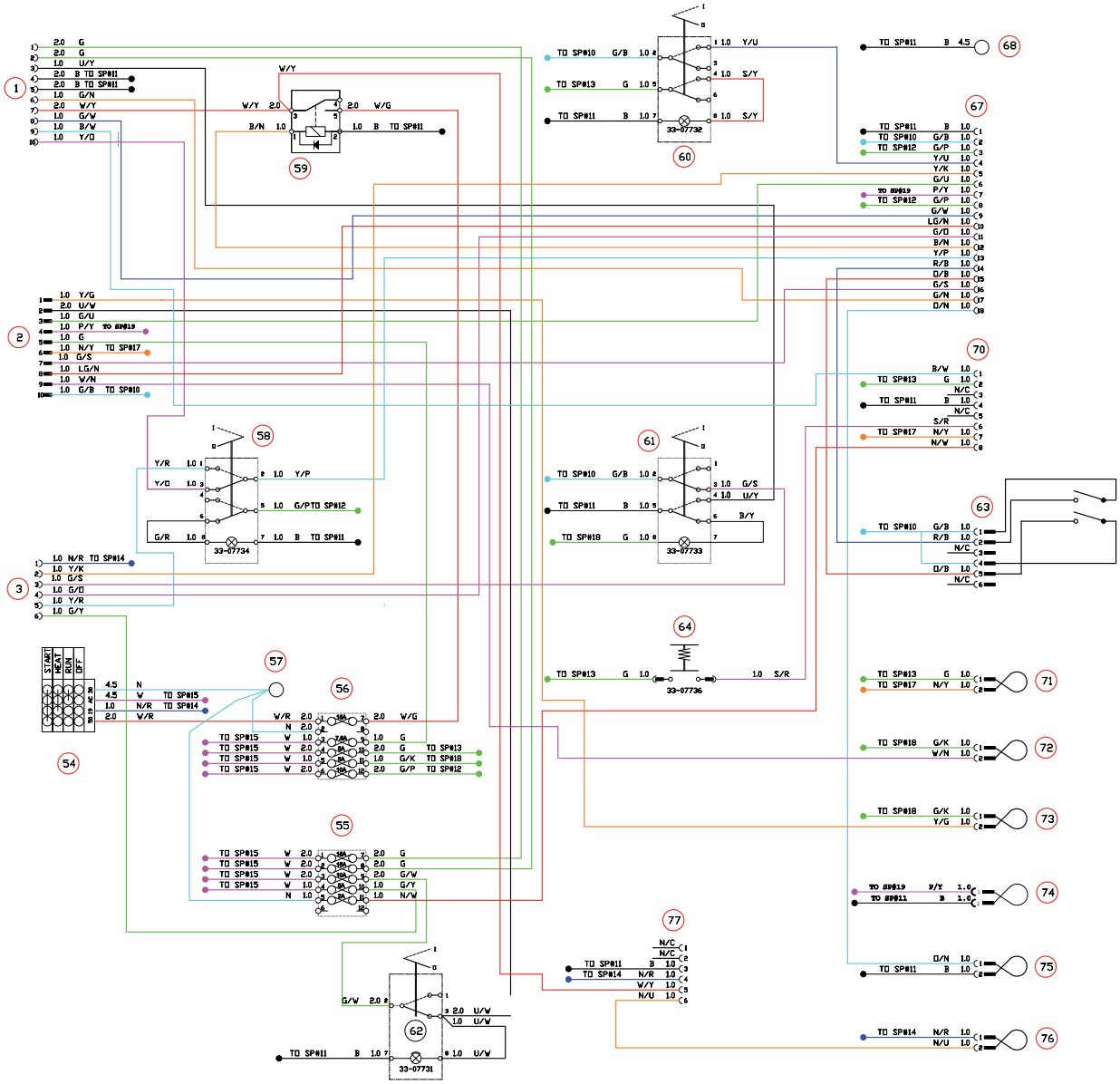

https://truckmanualshub.com/

KEY TO WIRING DIAGRAM

1	Split to Main Harness
2	Split to Main Harness
3	Split to Main Harness
54	Key switch
55	Fuse Box 1
56	Fuse Box 2
57	Battery, Positive
58	Weight Transfer Switch
59	Start Relay
60	Mow Switch
61	Parking Brake Switch
62	Working Lamp Switch
63	Joystick
64	Setup Switch (Multi Function Guage)
67	Module (Control)
68	Battery, Negative
70	Multi Function Guage
71	Alternator Lamp
72	Engine Oil Pressure Lamp
73	Hydraulic Filter Warning Lamp
74	Engine Over Temperature Warning Lamp
75	Module Fault Warning Lamp
76	Glow Plug Timer Lamp
77	Glow Plug Timer

63	Joystick Connections

1	SV Input
2	Raise Switch
5	Lower Switch

CABLE COLOUR CODE

R	Red
G	Green
O	Orange
S	Grey
B	Black
W	White
K	Pink
P	Violet
Y	Yellow
U	Blue
N	Brown
LG	Light Green

E.G. R/W = Red/White

ELECTRICAL CIRCUIT INSTRUMENT

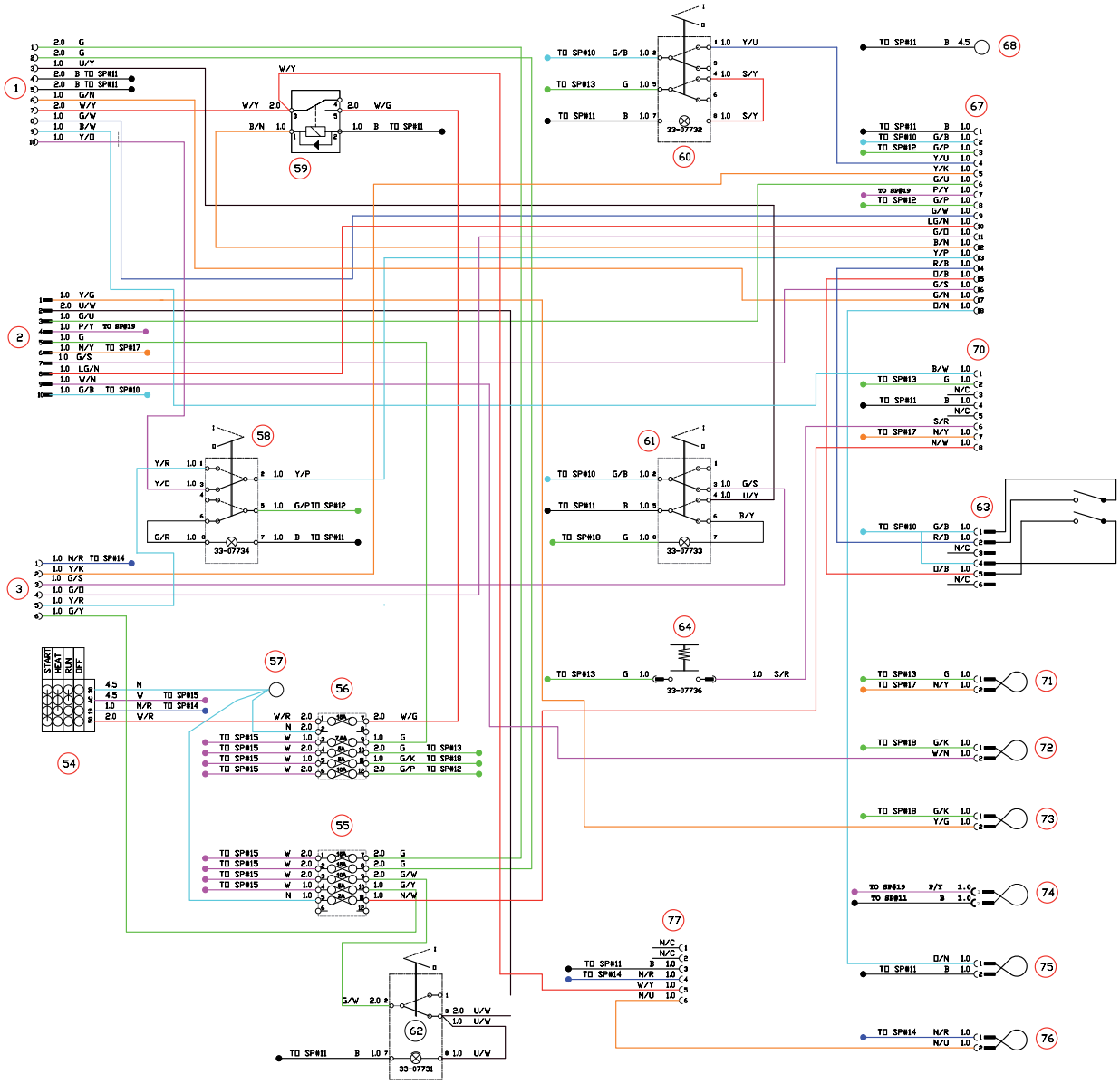

67 Module Connections

1 0V
2 5V O/P
3 +12V IGP Input
4 5V Input from Mow Switch
5 12V Mow Solenoid O/P
6 Temperature Switch
7 12V Over Temperature Switch O/P
8 +12V IGP Input
9 12V Raise Solenoid O/P
10 12V Fuel Solenoid O/P
11 12V Backlap Solenoid O/P
12 12V Start Relay O/P
13 12V Lower Solenoid O/P
14 5V Raise Signal I/P
15 5V Lower Signal I/P
16 5V Park Brake Signal I/P
17 5V Seat Switch Signal I/P
18 12V Warning Lamp O/P

70 Multi Function Guage Connections

1 Fuel Sender
2 IGP
3 Not Used
4 Ground
5 Not Used
6 Set Up Enable
7 Alternator Lamp
8 Battery +ve Fuse

Consol Splices

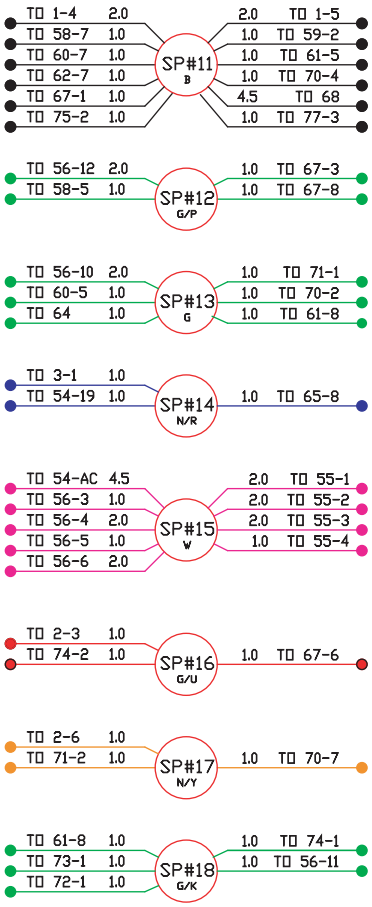

ELECTRICAL CIRCUIT MAIN

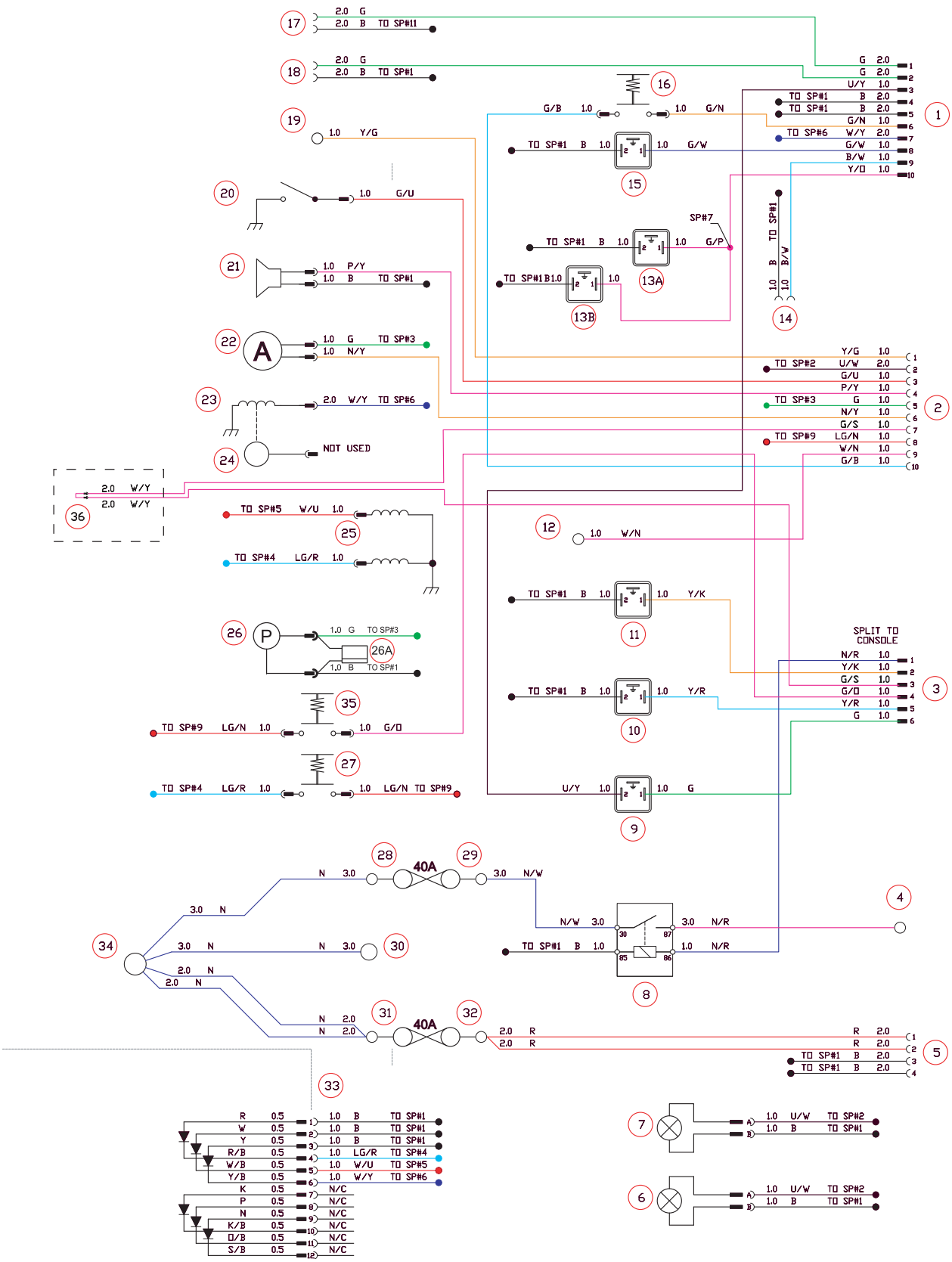

KEY TO WIRING DIAGRAM

1	Split to Console
2	Split to Console
3	Split to Console
4	Glow Plugs
5	Split to Cab
6	Working Lamp
7	Working lamp
8	Glow Plug Relay
9	Brake Solenoid
10	Lower Solenoid
11	Cutter Solenoid
12	Engine Oil Pressure Switch
13a	Weight Transfer Solenoid
13b	Weight Transfer Solenoid
14	Fuel Level Sender
15	Raise Solenoid
16	Seat Switch
17	Accessory Socket 1
18	Accessory Socket 2
19	Hydraulic Oil Filter Switch
20	Engine Temperature Switch
21	Horn
22	Alternator Rotor
23	Starter Solenoid
24	Back Start Connector (not used)
25	Fuel Solenoid
26	Fuel Pump
26	A Suppressor
27	Brake Safety Switch
28	Glow Plug Fuse Connector
29	Glow Plug Fuse Connector
30	Alternator O/P
31	Cab Fuse Connector
32	Cab Fuse Connector
33	Diode Module
34	Starter Main Terminal
35	Backlap Selector Switch
36	Traction Pedal Switch Connection
*	Main Harness - 4132365

CABLE COLOUR CODE

R	Red
G	Green
O	Orange
S	Grey
B	Black
W	White
K	Pink
P	Violet
Y	Yellow
U	Blue
N	Brown
LG	Light Green

E.G. R/W = Red/White

Main Harness Splices

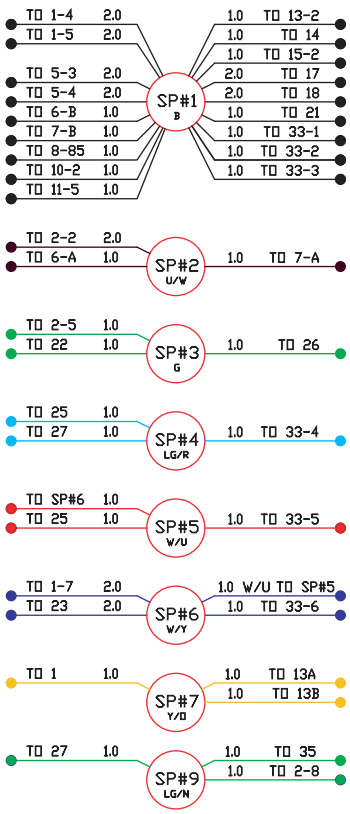

https://truckmanualshub.com/

FRONT WHEEL & MOTOR POCLAIN

Illustration Number: 4277991

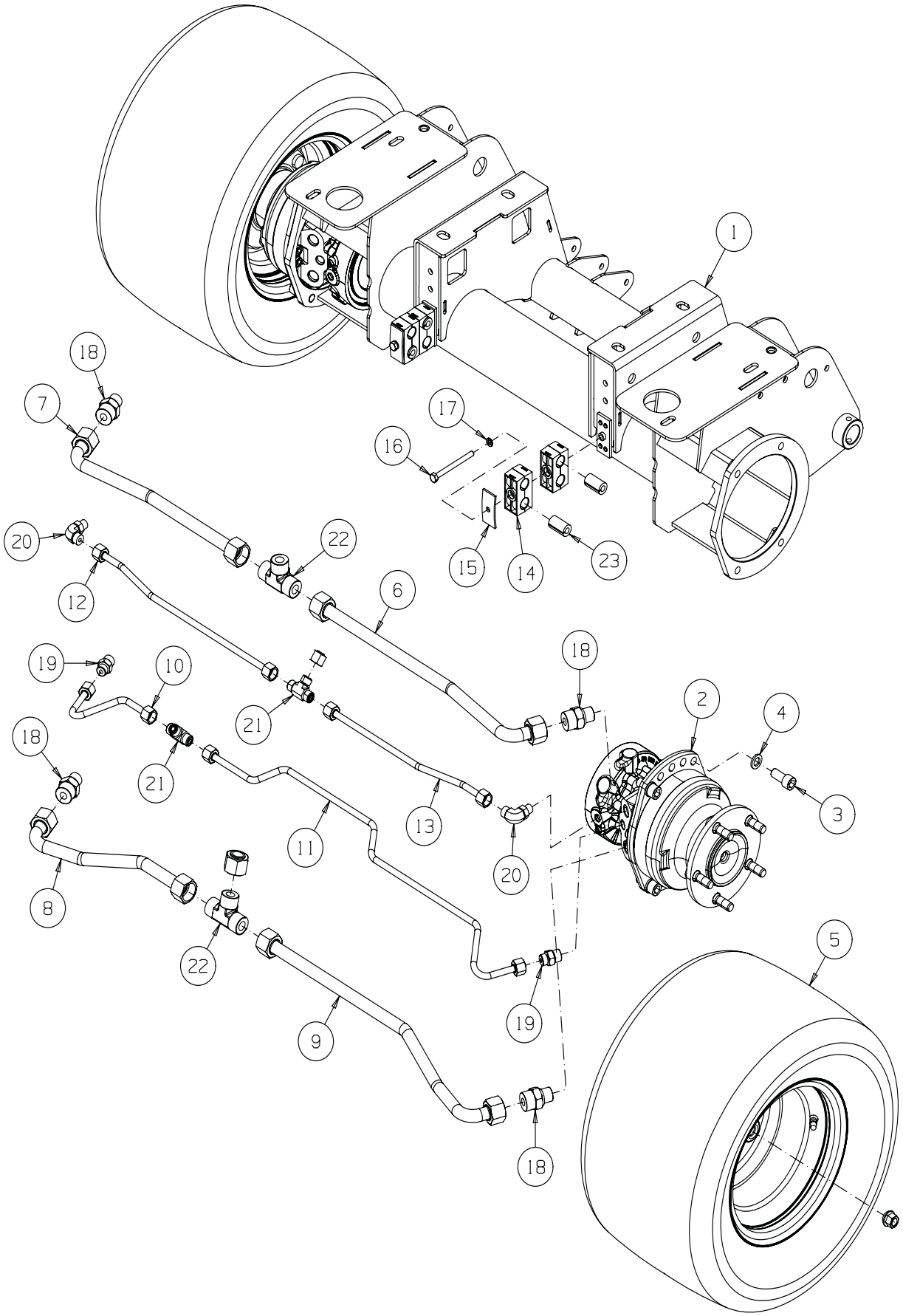

https://truckmanualshub.com/

ITEM	PART NO.	DESCRIPTION	QTY.	REMARKS
		From S/N's GX100638 - EK000305		
1	4238888	Wldmt-Front Axle (Poclain)	1	
2	4252567	213cc Piston Wheel Mtr (SAE Ports)	2	
*	4229520	• Motor Seal Kit	1	
*	4229521	• Multi-Disc Brake Seal Kit	1	
*	008008460	• Wheel Nut, M14 Spherical	5	Torque to 112 ± 10 Nm (83 ± 7 lbf-ft)
3	4228802	Capscrw-Hex Sckt M14-1.5 x 30	8	
4	001594200	Lockwshr-M14 x 24.1 x 3	8	
5	4271150	Wheel & Tyre Asm, 20x12x10	2	
*	4233963	• Tyre	1	
*	4271151	• Rim	1	
*	4220940	• Valve	1	
6	4283257	Hose-RH Mtr (Top Port) to Tee	1	To S/N EK000304, GX100637 From
6	4277993	Steel Tube-RH Mtr (Top Port) to Tee	1	S/N EK000305, GX100638 To S/N
7	4283258	Hose-LH Mtr (Top Port) to Tee	1	EK000304, GX100637 From S/N
7	4277992	Steel Tube-LH Mtr (Top Port) to Tee	1	EK000305, GX100638 From S/N
8	4277994	Steel Tube-LH Mtr (Lwr Port) to Tee	1	EK000305, GX100638 To S/N
8	4283259	Hose LH Mtr (Lwr Port) to Tee	1	EK000304, GX100637 To S/N
9	4283260	Hose-RH Mtr (Lwr Port) to Tee	1	EK000304, GX100637 From S/N
9	4277995	Steel Tube-RH Mtr (Lwr Port) to Tee	1	EK000305, GX100638 To S/N
10	4283261	Hose-LH Mtr (Drain Port) to Tee	1	EK000304, GX100637 From S/N
10	4277996	Steel Tube-LH Mtr (Drain Port) to Tee	1	EK000305, GX100638 To S/N
11	4283262	Hose-RH Mtr (Drain Port) to Tee	1	EK000304, GX100637 From S/N
11	4277997	Steel Tube-RH Mtr (Drain Port) to Tee	1	EK000305, GX100638 To S/N
12	4283263	Hose-LH Mtr (Brake Port) to Tee	1	EK000304, GX100637 From S/N
12	4277998	Steel Tube-LH Mtr (Brake Port) to Tee	1	EK000305, GX100638 To S/N
13	4283264	Hose-RH Mtr (Brake Port) to Tee	1	EK000304, GX100637 From S/N
13	4277999	Steel Tube-RH Mtr (Brake Port) to Tee	1	EK000305, GX100638
14	4251379	Twin Tube Clamp, 3/4" Dia	4	
15	009079310	Top Plate-Tube Clamp	2	
16	450295	Screw-Hex M8-1.25 x 90	2	To S/N EK000304, GX100637 From
16	450205	Scrw-Hex M8-1.25 x 90, Gr 8.8	2	S/N EK000305, GX100638
17	4258312	AV Wshr-8.7 x 13.5 x 2.5	2	
18	002515010	Ftg-M/M 1-3/16 ORFS x 7/8 SAE	4	
*	158061-09	• O-Ring	1	1-3/16" ORFS
*	002218104	• O-Ring	1	7/8" SAE
19	158006-13	Ftg-11/16 ORFS x 3/4 SAE	2	
*	158061-01	• O-Ring	1	11/16" ORFS
*	002218081	• O-Ring	1	3/4" SAE
20	158007-01	90-M/M 11/16 ORFS x 9/16 SAE	2	
*	158061-01	• O-Ring	1	11/16" ORFS
*	002218065	• O-Ring	1	9/16" SAE
21	158011-01	Tee-M/M/M 11/16 ORFS	2	
*	158061-01	• O-Ring	1	11/16" ORFS
22	158011-04	Tee-M/M/M 1.3/16-12 ORFS	2	
*	158061-09	• O-Ring	1	1-3/16" ORFS
23	4278000	Rubber Sleeve 10 x 20 x 35	4	To S/N EK000304, GX100664

* Not Illustrated

https://truckmanualshub.com/

FRONT WHEEL & MOTOR POCLAIN

Illustration Number: 4277991

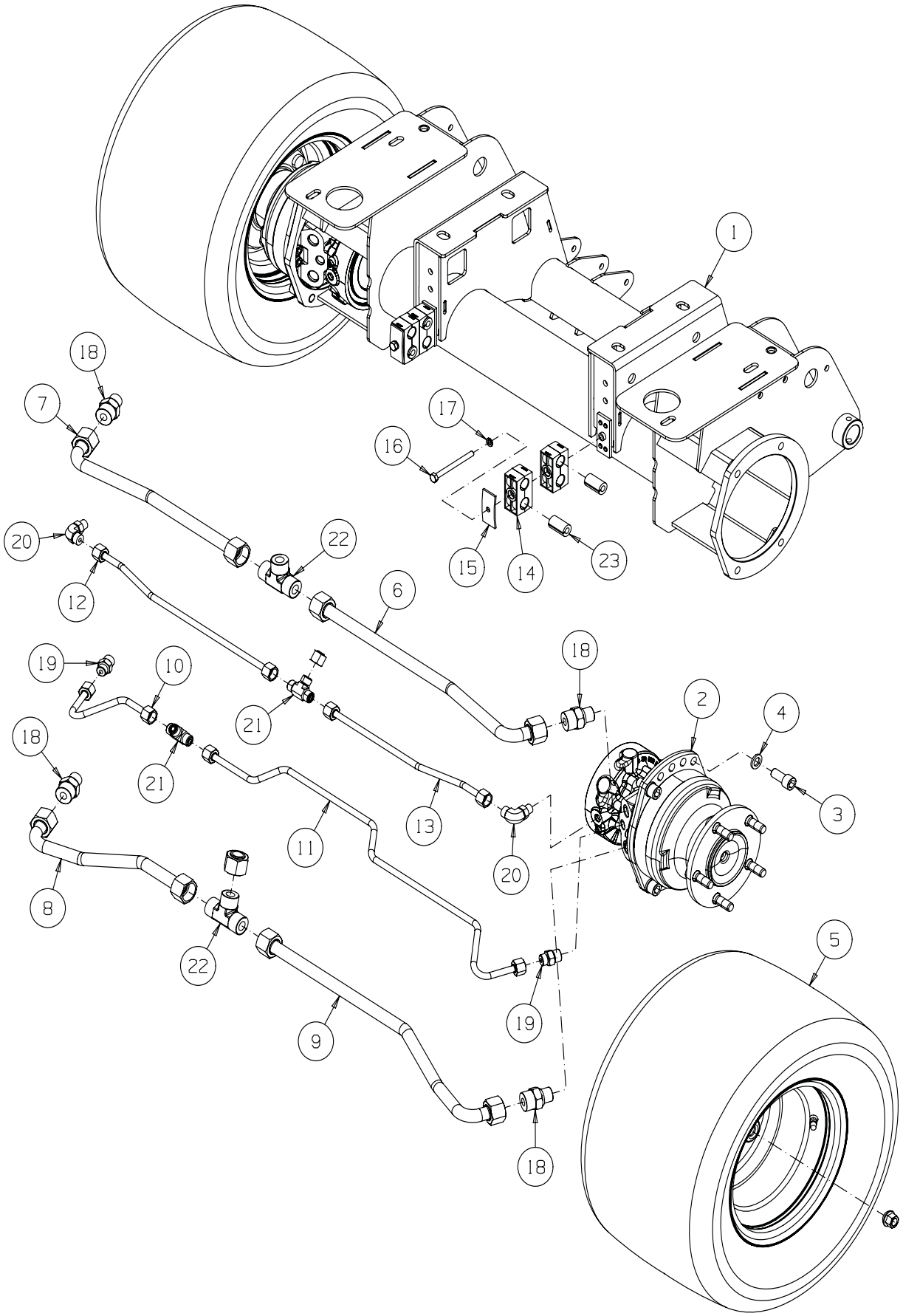

https://truckmanualshub.com/

ITEM	PART NO.	DESCRIPTION	QTY.	REMARKS
24 *	4283265	Hose-Trans Pump ’B’ to Mtr Tee	1	
25 *	4283266	Hose-Mtr Tee to Flush Valve ’RM2’ Tee	1	
26 *	4283268	Hose-Brake Tee to Brake Valve	1	
27 *	4283267	Hose-Drain Tee to Manifold	1	

https://truckmanualshub.com/

FRONT WHEEL & MOTOR (SAUER DANFOSS)

Illustration Number: 4130769

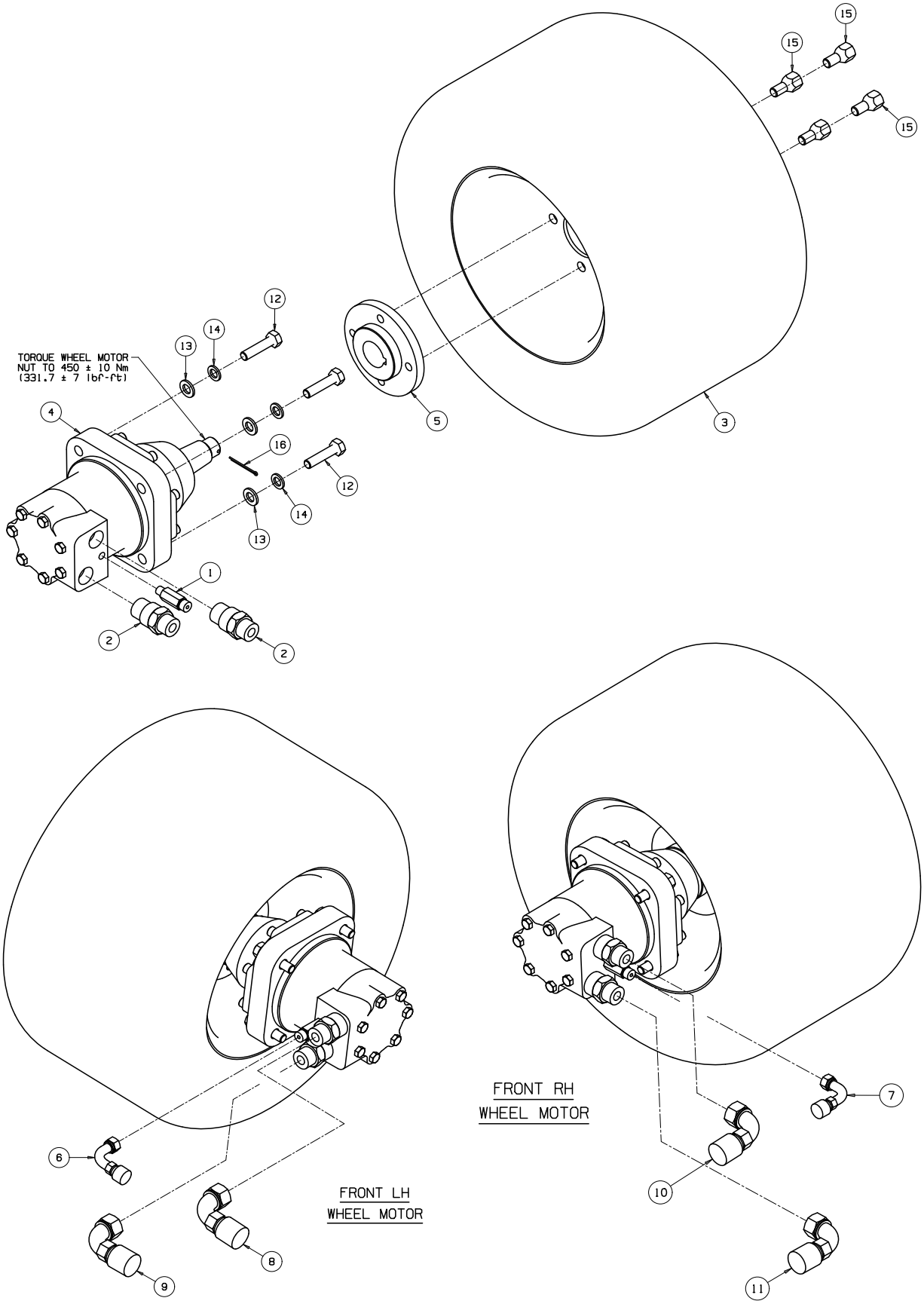

https://truckmanualshub.com/

ITEM	PART NO.	DESCRIPTION	QTY.	REMARKS
1	4127555	Ftg-Lg 9/16 ORFS x 7/16 SAE	1	
*	158061-08	• O Ring	1	9/16" ORFS
*	002218049	• O Ring	1	7/16" SAE
2	4130606	Ftg-Lg 1 ORFS x 1-1/16 SAE	2	
*	158061-08	• O Ring	1	1" ORFS
*	002218120	• O Ring	1	1-1/16" SAE
3	4262990	Asm-Wheel 20x12x10 - 4 Bolt Mount	2	
*	4233963	• Tyre 20x12x10-4 Ply Otr	1	
*	4260270	•Rim 10 x 8.5	1	
*	4220940	• Tyre Valve Assy	1	
4	4130773	Motor-Wheel, Danfoss TMK200FL	1	
5	4130774	Wldmt-Wheel Hub, Front	1	
*	4171164	Casting - Wheel hub, Front	1	From Serial No EK635 FZ473
6	4133854	Hyd Hose Assembly	1	LH Motor Brake Line to ‘T’
7	4133855	Hyd Hose Assembly	1	RH Motor Brake Line to ‘T’
8	4133857	Hyd Hose Assembly	1	LH Motor - Top Hose
9	4133858	Hyd Hose Assembly	1	LH Motor - Bottom Hose
10	4133859	Hyd Hose Assembly	1	RH Motor - Top Hose
11	4133860	Hyd Hose Assembly	1	RH Motor - Bottom Hose
12	450050	Bolt-Hex M12 x 50	4	
13	450392	Wshr-M12 x 24 x 2.7	4	
14	450424	Lockwshr-M12 x 21 x 2.5	4	
15	64220-01	Bolt-Whl 1/2-20 x .88 60 D	4	Torque 74 Nm (54.6 lbf-ft)
16	454000328	Split Pin-1/8 x 1-3/4	1	

* Not Illustrated

https://truckmanualshub.com/

FRONT WHEEL MOTOR

Illustration Number: 4130773

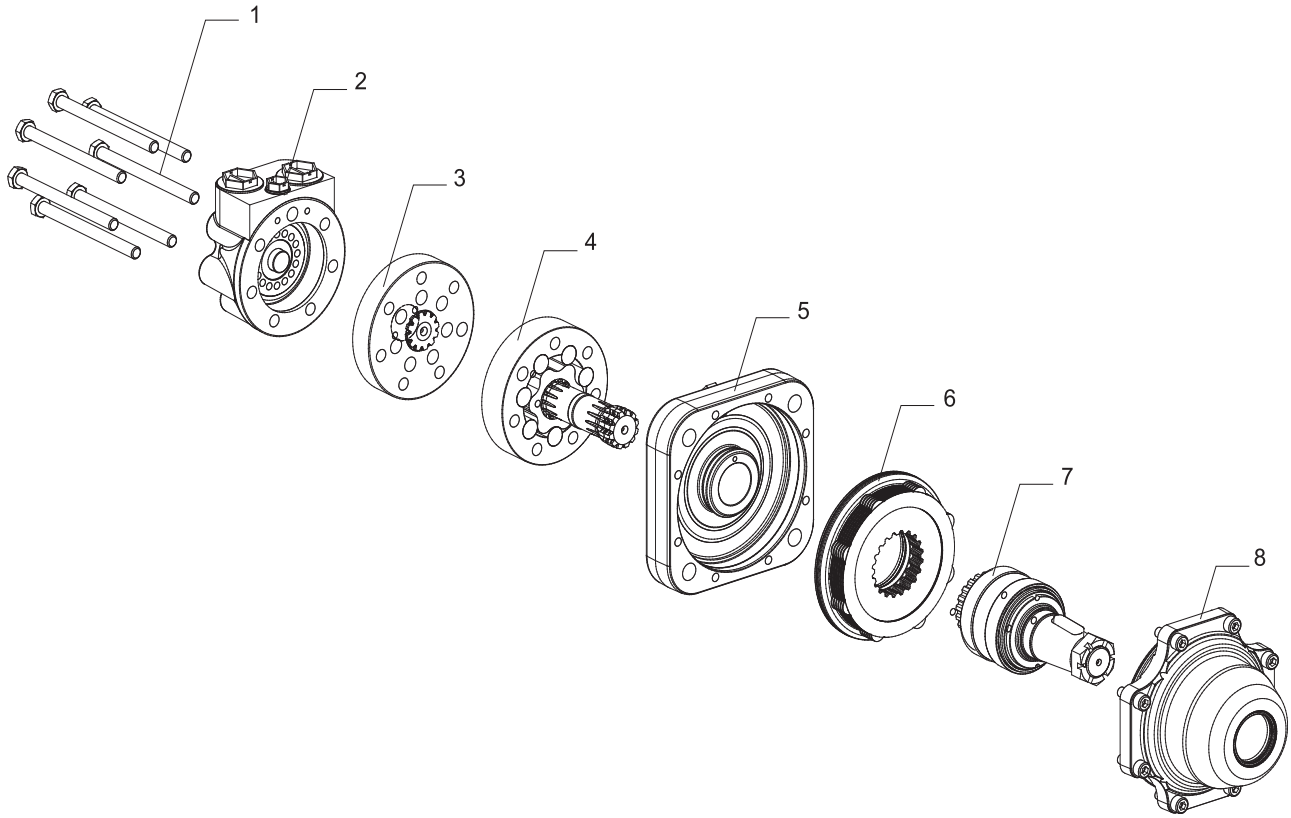

https://truckmanualshub.com/

ITEM	PART NO.	DESCRIPTION	QTY.	REMARKS
1	4134010	• Screw Module	1	
2	4134012	• End Cover	1	
3	4134013	• Valve Module	1	
4	4134014	• Gear Set	1	
5	4134015	• Mounting Flange Module	1	
6	4134016	• Brake Module	1	
7	4134018	• Shaft Module	1	
8	4134019	• Bearing Housing Module	1	
100	4134020	• Seal Kit	1	

* Not Illustrated

https://truckmanualshub.com/

REAR WHEEL & MOTOR

Illustration Number: 4132869

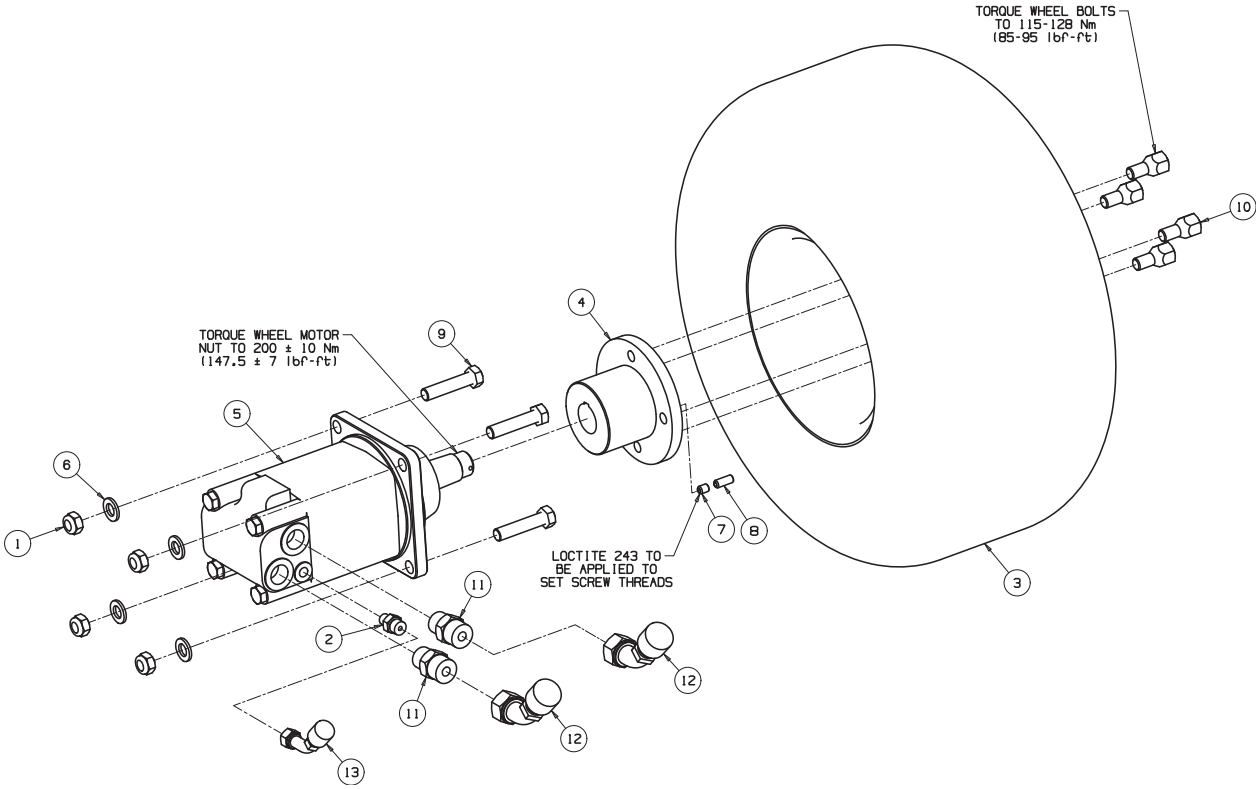

https://truckmanualshub.com/

ITEM	PART NO.	DESCRIPTION	QTY.	REMARKS
1	450380	Nut-Hex M12 Nyloc	4	
2	002515000	Ftg-9/16 ORFS x 7/16 SAE	1	
3	008162460	Asm-Wheel 20x10.00-8	1	From S/N GX100767 KG000302
*	4293444	•i Piece Rim 8 x 7 Contour 4 Bolt	1	
*	008170780	• Tyre-20x10.00-8, 4 ply	1	
3	4302592	Wheel Kit 20x10x8 4 Bolt (1-pce Rim)	1	
*	4233962	Tyre 20x10x8-4 Ply Otr Grassmaster	1	
*	4293444	1 Piece Rolled Rim- 8 X 7	1	
*	4220940	Tubeless Tyre Valve Assy - Tr412	1	
4	4171160	Casting - Wheel Hub, Rear	1	To S/N EK000685, FZ00502 From S/
4	4186860	Casting-Wheel Hub, Rear	1	N EK000686, FZ00503 To S/N
5	4131109	Motor-Wheel, Danfoss OMSW400	1	EK000685, FZ00502
*	4227380	Screw M10 x 180	1	
6	450392	Wshr-M12 x 24 x 2.7	4	
7	450968	Scrw-Set M8 x 10, Cup Pnt	1	Apply Loctite 243 to thread Torque
8	450971	Scrw-Set M8 x 20, Cup Pnt	1	
9	450052	Bolt-Hex M12 x 60	4	
10	64220-01	Bolt-Whl 1/2-20 x .88 60D	4	Torque to 95 - 108Nm (70 - 80 lbs-ft)
11	158006-07	Ftg-M/M 1 ORFS x 7/8 SAE	2	
12	4137209	Hyd Hose Assembly	2	
13	4133889	Hyd Hose Assembly	1	
14	4184181	Motor-Wheel, Eaton	1	From S/N EK000686, FZ00503
15	002525020	Ftg-9/16 ORFS x 7/16 SAE	1	
16	4192180	Hyd Hose Assembly	1	

* Not Illustrated

https://truckmanualshub.com/

MOTOR-WHEEL, Eaton Series 2000 (4184181)

Eaton series 2000 motor

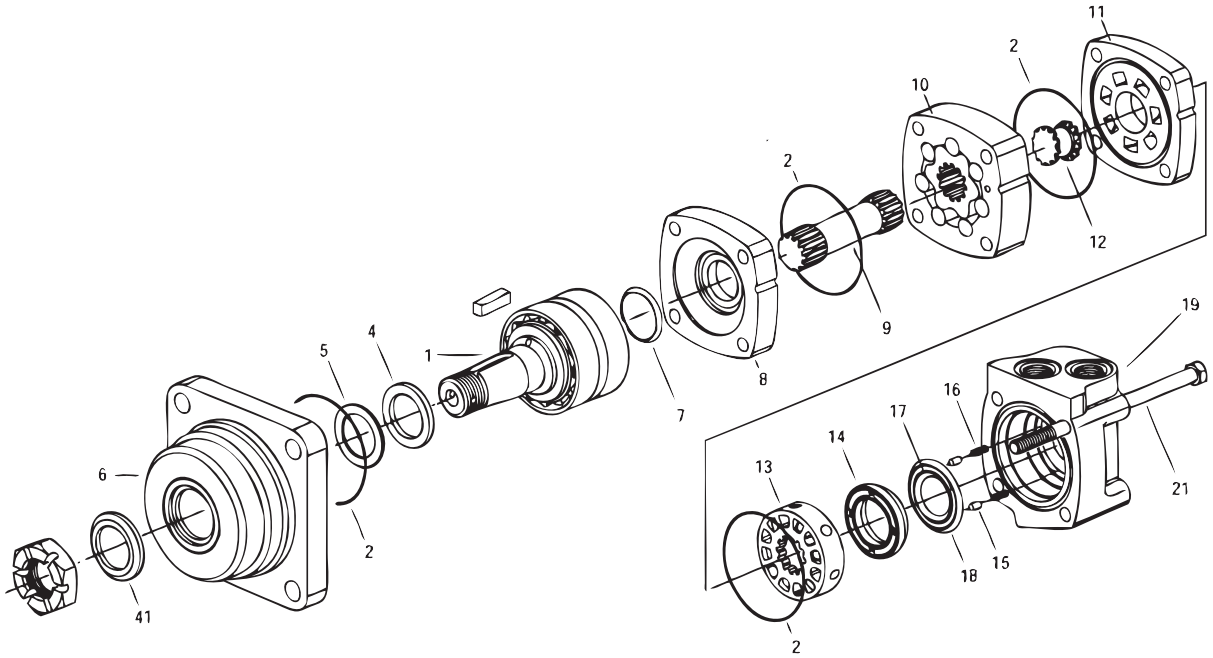

https://truckmanualshub.com/

ITEM	PART NO.	DESCRIPTION	QTY.	REMARKS
	4184181	Wheel Motor	1	
1		• Shaft & Bearing Kit	1	
	554779	• Nut Hex	1	
	554780	• Key	1	
2		• Seal	4	See Seal Kit
3		• Seal Exclusion	1	See Seal Kit
4		• Seal, Shaft	1	See Seal Kit
5		• Ring, Back-up	1	See Seal Kit
6		• Housing, Bearing, Wheel Mount	1	
7		• Seal, Shaft Face	1	See Seal Kit
8		• Plate, Wear	1	
9		• Drive, Main	1	
10		• Geroler	1	
11		• Plate, Wear	1	
12		• Drive Valve	1	
13		• Valve	1	
14		• Balance Ring	1	
15		• Pin, Balance Ring	2	
16		• Spring, Compression	2	
17		• Seal, Face, Inner	1	See Seal Kit
18		• Seal, Face, Outer	1	See Seal Kit
19		• Housing, Valve	1	
21		• Screw, Cap	4	
	4196620	Seal Kit	1	
41	4196621	Guard Seal	1	

https://truckmanualshub.com/

MOTOR-WHEEL, DANFOSS OMSW400

Illustration Number: 4131109

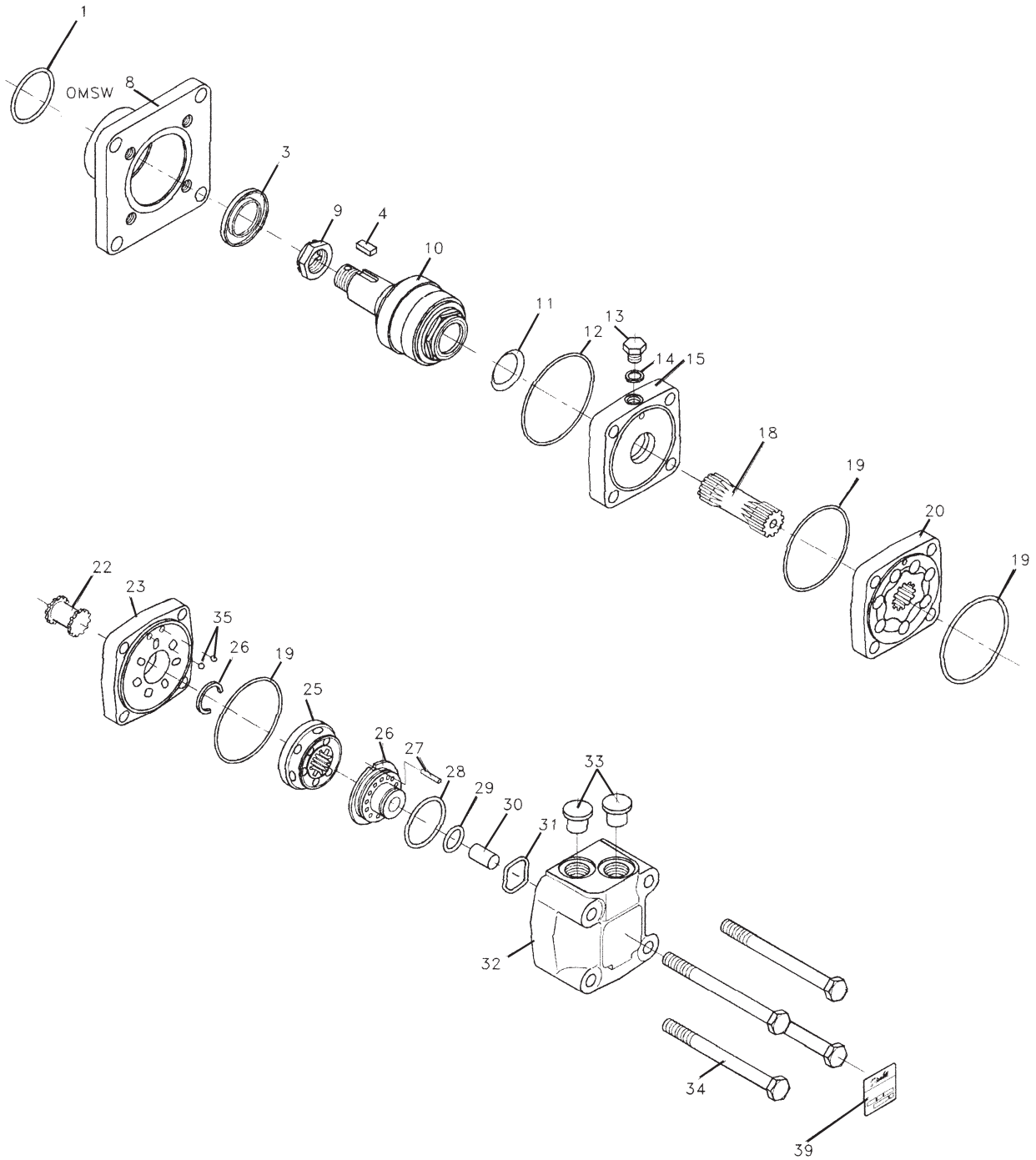

https://truckmanualshub.com/

ITEM	PART NO.	DESCRIPTION	QTY.	REMARKS
	4131109	Motor-Wheel, Danfoss OMSW 400	1	
1	+	• O Ring	1	
3	+	• Shaft Seal	1	
4	008007810	• Parallel Key 5/16 x 5/16 x 1 1/4	1	
8		• Bearing Housing	1	
9	008007820	• Castellated Nut (1-20 UNEF)	1	
10	4257730	• Shaft and Bearing Kit	1	
11	+	• Seal Ring	1	
12	+	• O Ring	1	
13	4118786	• Drain Plug GL' (ISO228/1)	1	
14	4118787	• Washer 13.5 x 17.5 x 1.5 mm	1	
15		• Intermediate Plate	1	
18		• Cardan Shaft	1	
19	+	• O Ring	3	
20		• Gear Wheel Set	1	
22	4118800	• Valve Drive	1	
23		• Channel Plate	1	
25	4118812	• Disc Valve	1	
26	4176300	• Balance Plate	1	
27	4176301	• Guide Pin 4 mm Dia x 20 mm Lg	1	
28	+	• O Ring	1	
29	+	• O Ring	1	
30	4118816	• Spacer	1	
31		• Spring Washer	1	
32	N/A	• Valve Housing	1	
33		• Seal Plug	2	
34		• Bolt	4	
35		• Guide Pin 4 mm Dia x 6 mm Lg	1	
39	N/A	• Name Plate	1	
		Items Marked + Part of		
100	002300620	• Seal Kit	1	Items : 1,3,11,12,19,28 & 29

* Not Illustrated

https://truckmanualshub.com/

PUMPS

Illustration Number: 4130884

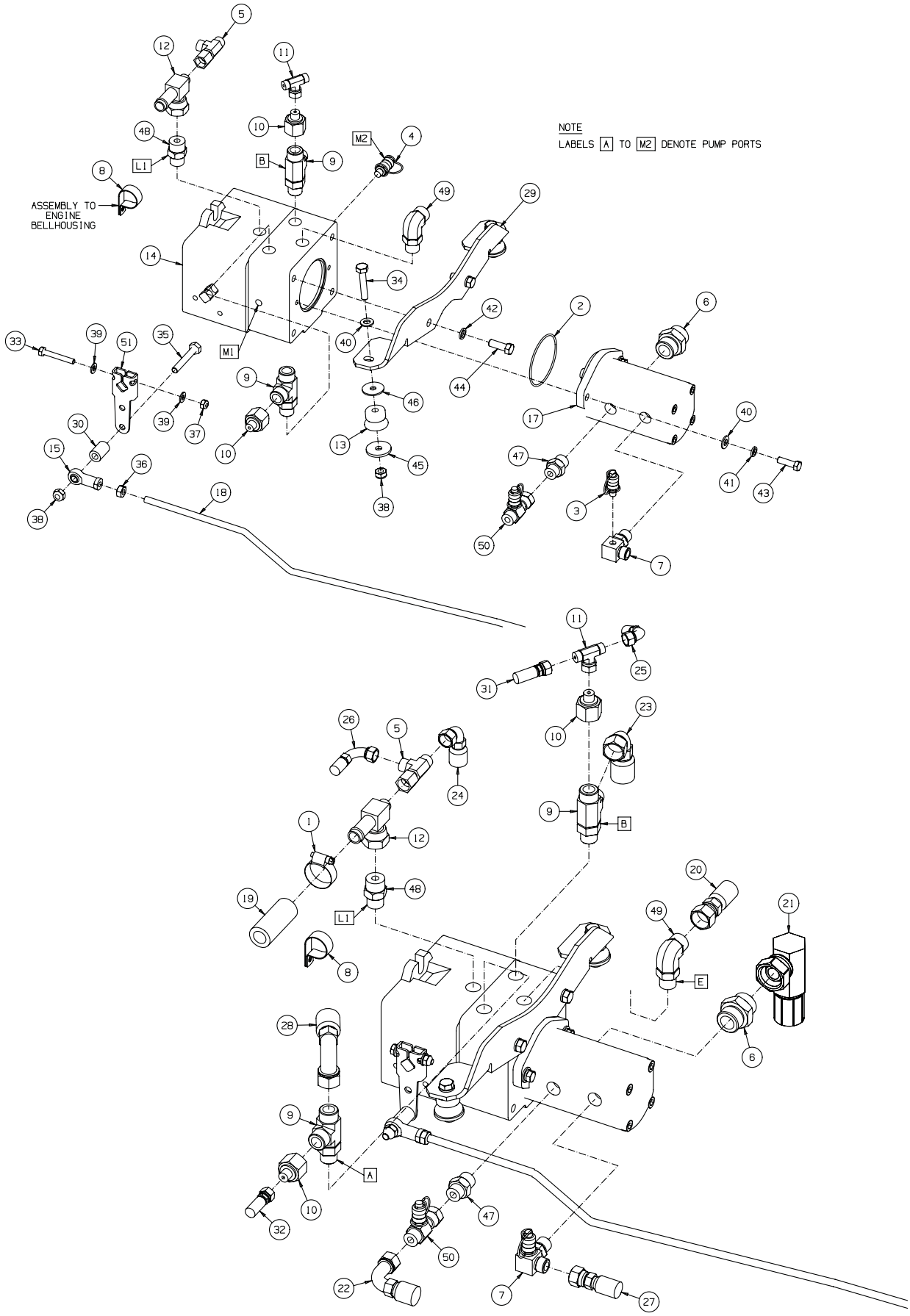

https://truckmanualshub.com/

ITEM	PART NO.	DESCRIPTION	QTY.	REMARKS
1	001925400	Hose Clamp, 19-40	1	
2	002211520	O-Ring 82.22 ID x 2.62 Sect	1	
3	002449048	Test Point-1/8 BSPP x M16	1	
4	002449056	Test Point-7/16 SAE x M16	1	
*	002218040	• O Ring	1	7/16" SAE
5	002498400	Tee-M/F/M 11/16 ORFS	1	
*	158061-01	• O Ring	3	11/16" ORFS
6 *	002515050	Ftg-1-7/16 ORFS x 1-5/16 SAE	1	
*	158061-19	• O Ring	1	1-7/16" ORFS
*	002218140	• O Ring	1	1-5/16" SAE
6	4165262	Ftg-M/M 1 BSPP x 1-5/16 SAE		
*	002218140	• O Ring	1	1-5/16" SAE
7	002590050	90-M/M/F 13/16 ORFS x 7/8 x 1/8 BSP	1	
*	158061-02	• O Ring	1	13/16" ORFS
*	002218104	• O Ring	1	7/8" SAE
8	48228-06	Clamp	1	
9	002590130	Tee-M/M/M 1 ORFS (2) x 7/8 SAE	2	
*	158061-08	• O Ring	2	1" ORFS
*	002218040	• O Ring	1	7/16" SAE
10	002590440	Reducer-F/M 1 ORFS x 9/16 ORFS	2	
*	158061-08	• O Ring	1	1" ORFS
*	58061-18	• O Ring	1	9/16" ORFS
11	002590470	Tee-M/M/F 9/16 ORFS	1	
*	158061-18	• O Ring	2	9/16" ORFS
12	002590520	Tee-M/M/F 11/16 ORFS x 3/4 x 1	1	
*	158061-01	• O Ring	1	11/16" ORFS
*	158061-08	• O Ring	2	1" ORFS
13	002994043	Mount-ISO, Engine	2	
14	008005950	Pump-Transmission, M25-2081	1	
15	008145450	Rod End M10	1	
16	172364A.07	Arm-Control Hd	1	To S/N EK000647 and FZ000490
17	4131108	Pump-Cutter & Steering	1	To S/N EK000647 & FZ000490
17	4177940	Pump-Cutter & Steering	1	From S/N EK000648 & FZ000491
*	4177942	Seal Kit for 4177940		GX000301 & KG000301
18	4132836	Rod-Pump Control	1	
19	4133845	Hyd Hose Assembly	1	Trans Pump ‘L’ to Cooler ‘IN’
20	2692224-05	Hyd Hose Assembly	1	Trans Pump ‘E’ to Filter ‘OUT’
20	4133848	Hyd Hose Assembly	1	Trans Pump ‘E’ to Filter ‘OUT’
21	4133849	Hose-Tandem Pump Suction to Tank	1	To S/N EK000647 and FZ000490
21	4283831	Hose-Tandem Pump Suction to Tank	1	From S/N EK000648 and FZ000491
22	4133850	Hyd Hose Assembly	1	Cutter Pump to Cutter Valve ‘CP’
23	4133856	Hose-Trans Pump ’B’ to Mtr Tee	1	For Sauer-Danfoss wheel motors
23	4283265	Hose-Trans Pump ’B’ to Mtr Tee	1	For Poclain wheel motors

* Not Illustrated

PUMPS

Illustration Number: 4130884

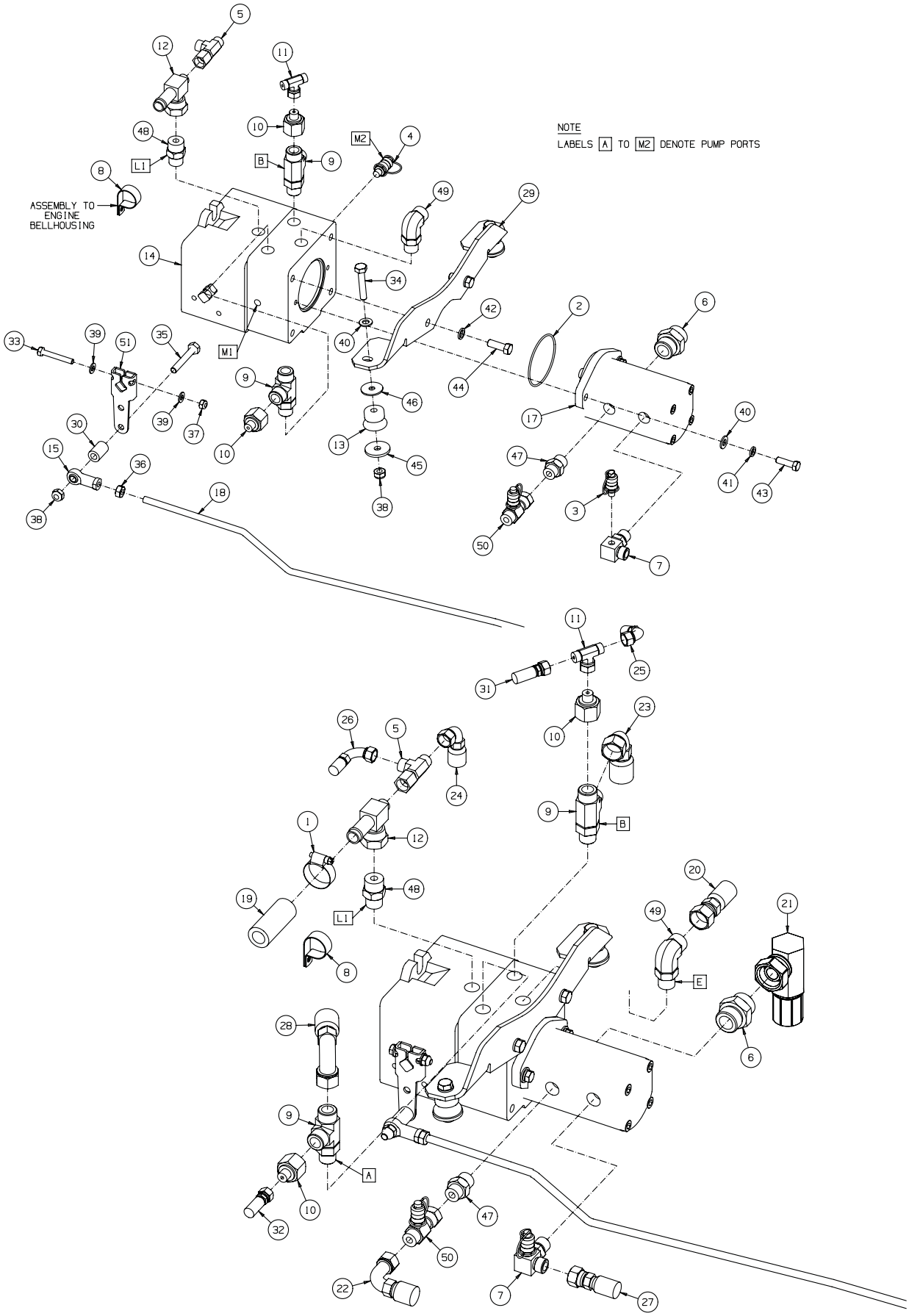

https://truckmanualshub.com/

ITEM	PART NO.	DESCRIPTION	QTY.	REMARKS
24	4133890	Hose-Flush Valve ‘DR’ to Trans Pump ‘L’	1	To S/N EK000304
24	4137210	Hose-Flush Valve ‘DR’ to Trans Pump ‘L’	1	From S/N EK000305
25	4133891	Hose-Flush Valve ‘PP’ to Trans Pump ‘B’	1	To S/N EK000304
25	4137211	Hose-Flush Valve ‘PP’ to Trans Pump ‘B’	1	From S/N EK000305
26	4133892	Hyd Hose Assembly	1	Brake valve ‘DR1’ to Manifold
27	4133895	Hyd Hose Assembly	1	Steer Pump to Steer Unit ‘P’
28	4133918	Hose-Trans Pump ‘A’ to Flush Valve Lower ‘T’	1	To S/N EK000304
28	4137212	Hose-Trans Pump ‘A’ to Flush Valve Lower ‘T’	1	From S/N EK000305
29	4134774	Bracket-Engine, Front	1	
30	4135072	Spacer-11 x 20 x 30	1	
31	4135211	Hose-Free Wheel Valve to Trans Pump ‘B’	1	
32	4135212	Hose-Free Wheel Valve to Trans Pump ‘A’	1	
33	450019	Bolt-Hex M8 x 55	1	
34	450033	Bolt-Hex M10 x 55	2	
35	450035	Bolt-Hex M10 x 65	1	
36	450325	Nut-Hex M10	1	
37	450378	Nut-Hex M8 Nyloc	1	
38	450379	Nut-Hex M10 Nyloc	3	
39	450390	Wshr-M8 x 17 x 1.8	4	
40	450391	Wshr-M10 x 21 x 2.2	2	
41	450412	Lockwshr-M10 x 15.9 x 2.5	2	
42	450413	Lockwshr-M12 x 17.9 x 2.5	2	
43	456110448	Scrw-Hex 3/8-16 x 1-1/4	2	
44	456110757	Scrw-Hex 7/16-14 x 1-1/4	2	
45	MBC0175	Wshr-10.5 x 40 x 4	2	
46	442003927	Wshr-3/8 x 1.375 x .092	2	
47	158006-06	Ftg-M/M 13/16 ORFS x 7/8 SAE	1	
*	158061-02	• O Ring	1	13/16" ORFS
*	002218104	• O Ring	1	7/8" SAE
48	158006-07	Ftg-M/M 1 ORFS x 7/8 SAE	1	
*	158061-08	• O Ring	1	1" ORFS
*	002218104	• O Ring	1	7/8" SAE
49	158007-05	90-M/M 1 ORFS x 7/8 SAE	1	
*	158061-08	• O Ring	1	1" ORFS
*	002218104	• O Ring	1	7/8" SAE
50	4137784	Test Point Tee, 13/16 ORFS	1	
*	158061-02	• O Ring	1	13/16" ORFS
51	4184180	Wldmt-Control Arm	1	

* Not Illustrated

https://truckmanualshub.com/

PUMP (SAUER-DANFOSS M25)(008005950)

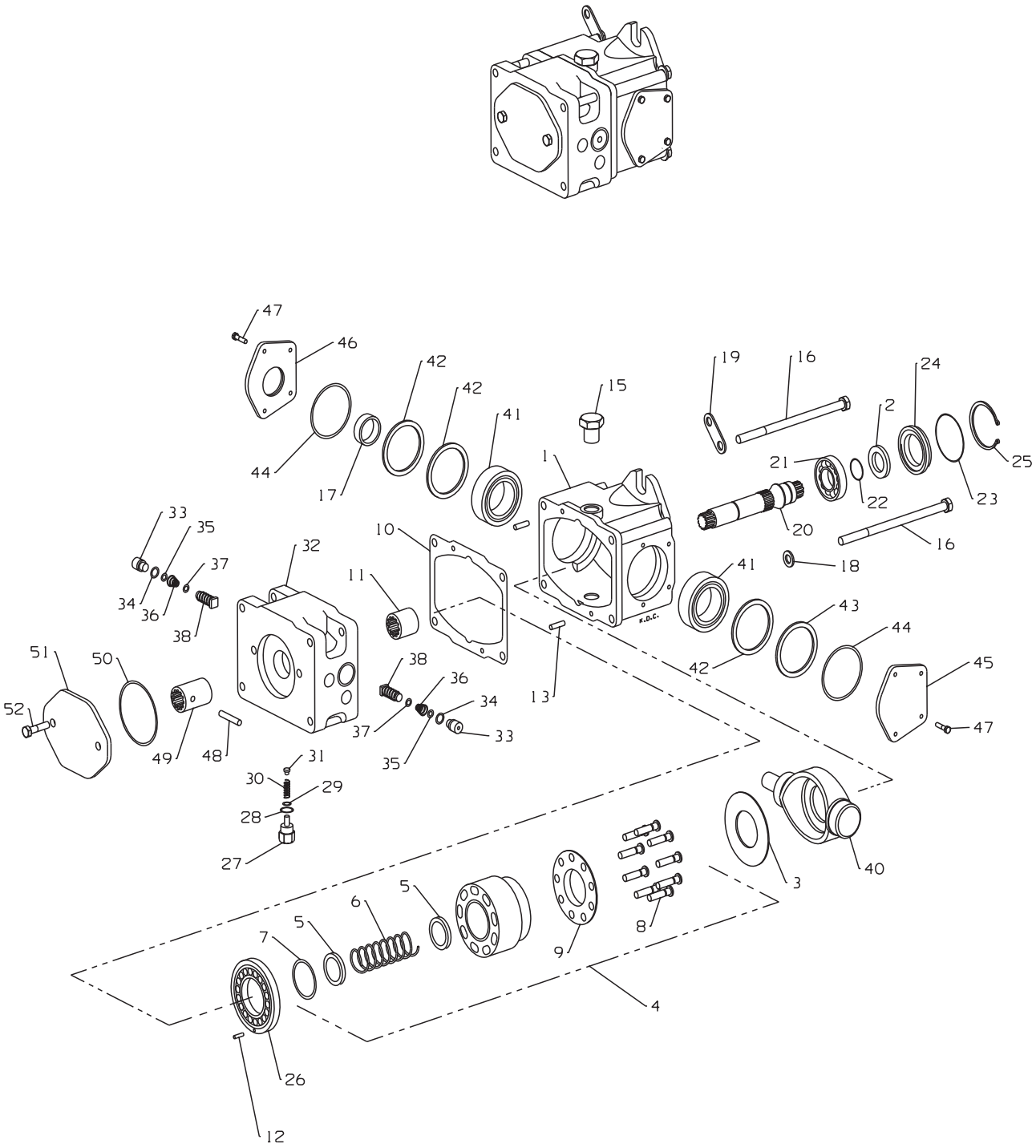

https://truckmanualshub.com/

ITEM	PART NO.	DESCRIPTION	QTY.	REMARKS
	008005950	Transmission Pump	1	
1	N/A	• Pump Housing	1	
2	4134667	• Lip Seal	1	part of kit 008005930
3		• Thrust Plate	1	
4	4272753	• Cylinder Block Kit	1	
5		• Washer	2	
6				
7		• Cylinder Block Spring	1	
8		• Retaining Ring	1	
9		• Piston Assembly	9	
10		• Slipper Retainer	1	
11		• End Cap Gasket	1	part of kit 008005930
12		• Needle Bearing	1	
13		• Pin	1	
14		•O-Ring	3	part of kit 008005930
15	4134668	• Hex Plug	3	
16	008008060	• Screw 875-14	4	
17		• Lip Seal	1	part of kit 008005930
18		• Washer	3	
19		• Lifting Bracket	1	
20		• Shaft	1	
21		• Ball Bearing	1	
22		• Retaining Ring	1	
23	4134670	• O-Ring	1	part of kit 008005930
24	4134671	• Seal Carrier	1	
25	4134672	• Internal Retaining Ring	1	
26		• Valve Plate RH	1	
27	4134673	• Plug Assembly	1	
28		• O-Ring	1	part of kit 008005930
29	4134674	• Shim Kit	1	
30	4134675	• Spring	1	
31	4134676	• Charge Relief Poppet	1	
32		• End Cap	1	
33		• Special Plug	2	
34		• O-Ring	2	part of kit 008005930
35		• O-Ring	2	part of kit 008005930
36	4134669	• Hex Plug	2	
37		• O-ring	2	part of kit 008005930
38	008008410	• Scr Valve /210 Bar	1	
39	008008410	• Scr Valve /210 Bar	1	
40		• Swash Plate	1	

* Not Illustrated

https://truckmanualshub.com/

PUMP (SAUER-DANFOSS M25)(008005950)

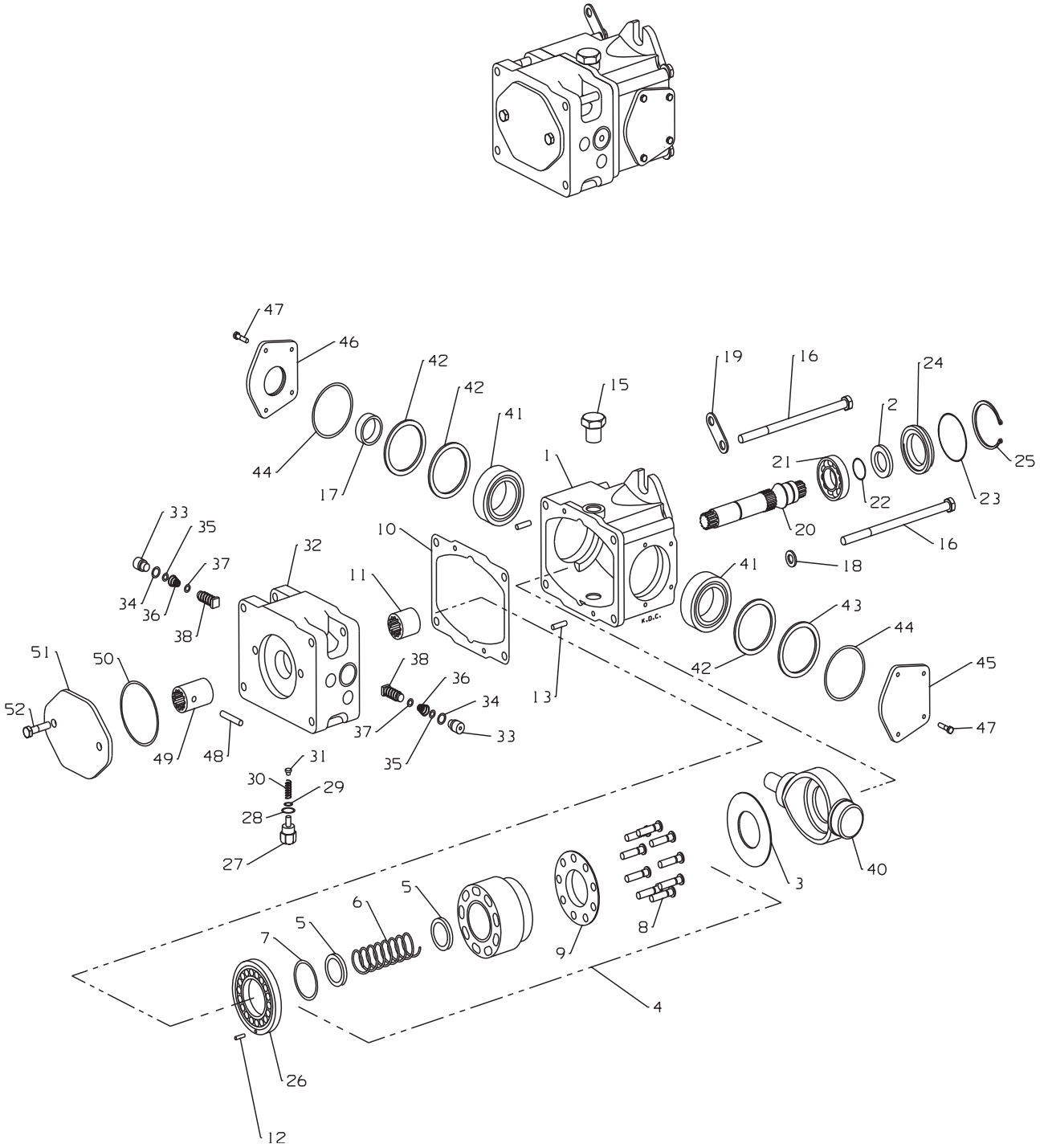

https://truckmanualshub.com/

ITEM	PART NO.	DESCRIPTION	QTY.	REMARKS
41		• Taper Roller Bearing	2	
42				
43				
44	4134677	• O-Ring	2	part of kit 008005930
45	4134678	• Trunnion Cover	1	
46	4134679	• Trunnion Cover Assembly	1	
47	4134680	• Thread Rolling Screw	8	
48		• Spring Pin	1	
49		• Coupling, 9 Tooth	1	
50	4134681	• Pad Seal	1	part of kit 008005930
51	4134682	• Cover Plate	1	
52	4134683	• Hex Screw	2	
	008005930	Overhaul Seal and Gasket Kit		

https://truckmanualshub.com/

PUMP (CASAPPA)

Illustration Number: 4131108

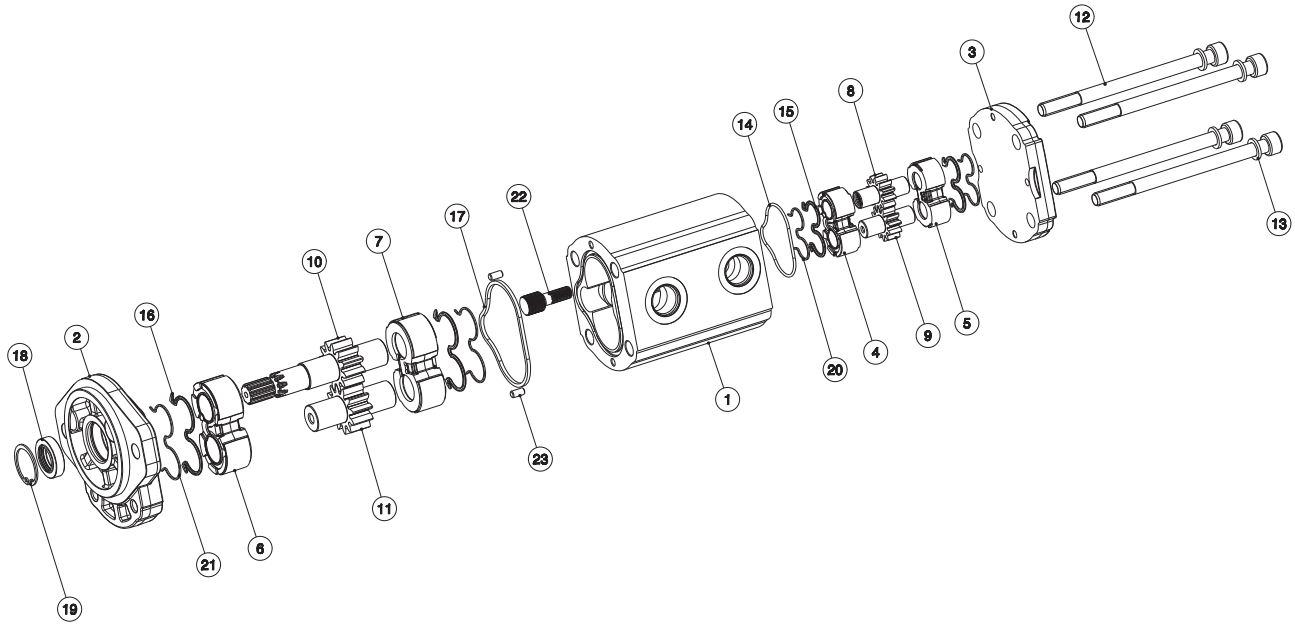

https://truckmanualshub.com/

ITEM	PART NO.	DESCRIPTION	QTY.	REMARKS
*	4131108	Tandem Pump	1	To S/N EK000647 & FZ000490
1	4136965	Body	1	
2	4136966	Front Cover	1	
3	4136967	Twin Rear Cover	1	
4	4136968	Thrust Plate	1	
5	4136969	Thrust Plate	1	
6	4136970	Thrust Plate	1	
7	4136971	Thrust Plate	1	
8	4136972	Drive Gear	1	
9	4136974	Driven Gear	1	
10	4136975	Drive Shaft	1	
11	4136976	Driven Gear	1	
12	4136977	Screw	4	
13	4136978	Washer	4	
14 +		O-Ring	1	
15 +		Seal	2	
16 +		Seal	2	
17 +		Seal	1	
18 +	4136982	Shaft Seal	1	
19	4136979	Ring	1	
20 +		Back-Up Ring	2	
21 +		Back-Up Ring	2	
22	4136980	Hub	1	
23	4136981	Dowel Pin	2	
100	4177942	Seal Kit	1	Contains items marked

* Not Illustrated

https://truckmanualshub.com/

LIFT VALVE

Illustration Number: 4131603

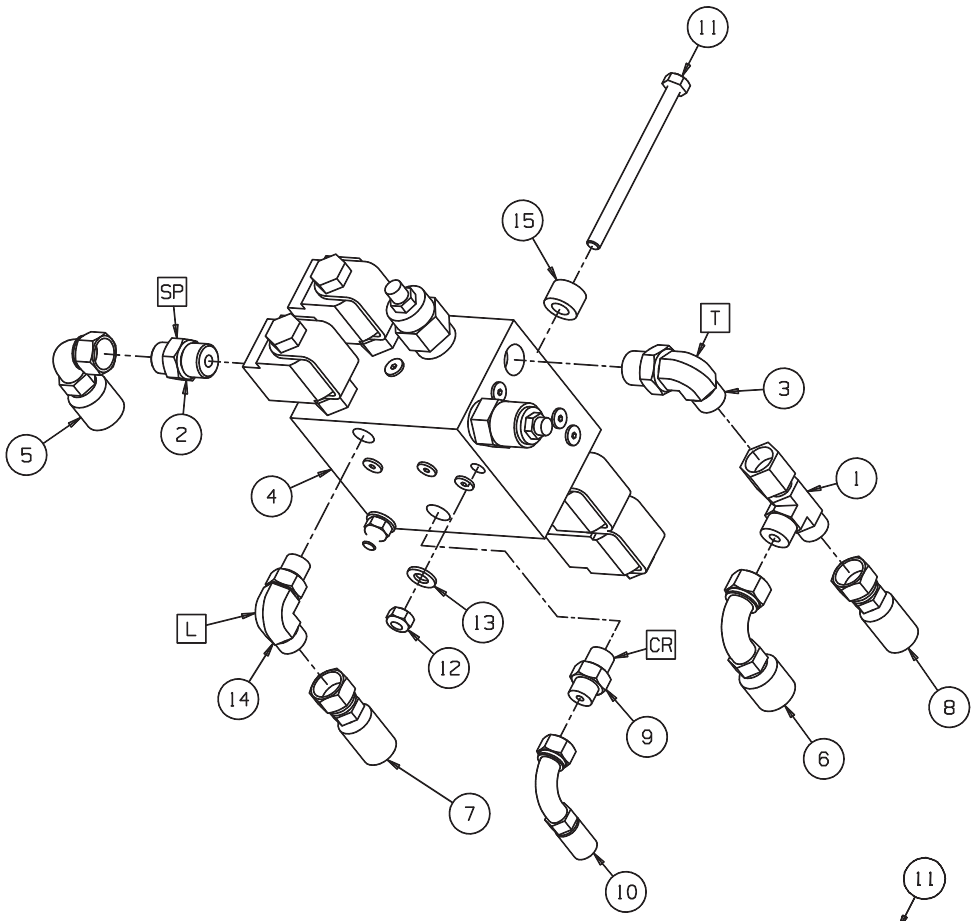

NOTE

LABELS CR TO T DENOTE VALVE PORTS

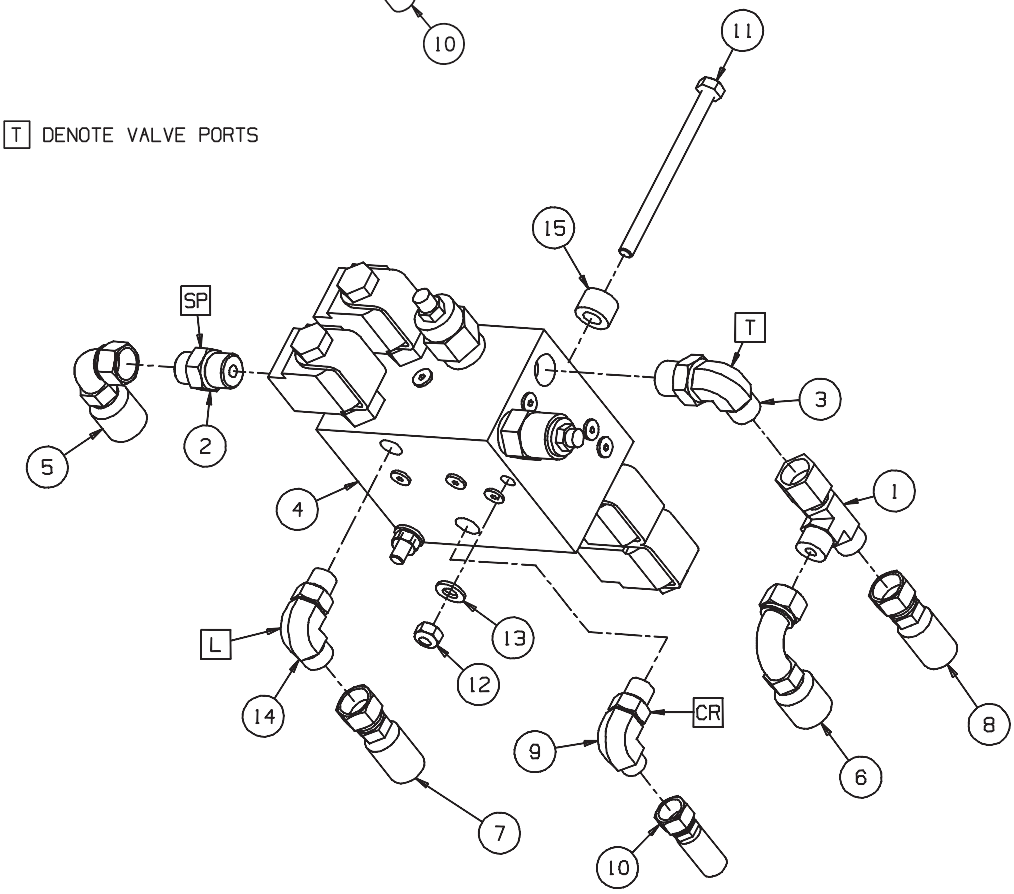

https://truckmanualshub.com/

ITEM	PART NO.	DESCRIPTION	QTY.	REMARKS
1	002498400	Tee-M/F/M 11/16 ORFS	1	
*	158061-01	• O Ring	3	11/16" ORFS
2	158006-13	Ftg-11/16 ORFS x 3/4 SAE	1	
*	158061-01	• O Ring	1	11/16" ORFS
*	002218081	• O Ring	1	3/4" SAE
3	158007-10	90-M/M 11/16 ORFS x 3/4 SAE	1	
*	158061-01	• O Ring	1	11/16" ORFS
*	002218081	• O Ring	1	3/4" SAE
4	4131111	Hydraulic Lift Valve	1	(To S/N EK000315)
	4169021	Hydraulic Lift Valve	1	(From S/N EK000316)
5	4133898	Hyd Hose Assembly	1	Steer Unit ‘E’ to Lift Valve ‘SP’
6	4133899	Hyd Hose Assembly	1	Lift Valve ‘T’ to Steer Unit ‘T’
7	4133900	Hyd Hose Assembly	1	Lift valve ‘L’ to Lift Manifold Front Port
8	4133906	Hyd Hose Assembly	1	Lift Valve ‘T’ to Return ‘T’
9	4136312	Ftg-9/16 ORFS x 5/16 SAE	1	(To S/N EK000315)
*	158061-18	• O Ring	1	9/16" ORFS
*	459290	• O Ring	1	5/16" SAE
9	002515100	Ftg-9/16 ORS x 9/16 SAE	1	(From S/N EK000316 - EK000316)
*	158061-18	• O Ring	1	9/16" ORFS
*	002218065	• O Ring	1	9/16" SAE
9	002525010	90-M/M 9/16 ORS x 9/16 SAE	1	(From S/N EK000316)
*	158061-18	• O Ring	1	9/16" ORFS
*	002218065	• O Ring	1	9/16" SAE
10	4136380	Hyd Hose Assembly	1	Lift Valve ’CR’ to Manifold (To S/N EK000304)
10	4137215	Hyd Hose Assembly	1	(From S/N EK000305 - EK000305)
10	4194980	Hose-Lift Valve ’CR’ to Manifold	1	(From S/N EK000305)
11	450028	Bolt-Hex M8 x 110	2	
12	450378	Nut-Hex M8 Nyloc	2	
13	450390	Wshr-M8 x 17 x 1.8	2	
14	158007-01	90-M/M 11/16 ORFS x 9/16 SAE	1	
*	158061-01	• O Ring	1	11/16" ORFS
*	002218065	• O Ring	1	9/16" SAE
15	MBE3454	Spacer-10.5 x 20 x 13	2	

* Not Illustrated

https://truckmanualshub.com/

LIFT VALVE (STERLING)

Illustration Number: 4131111

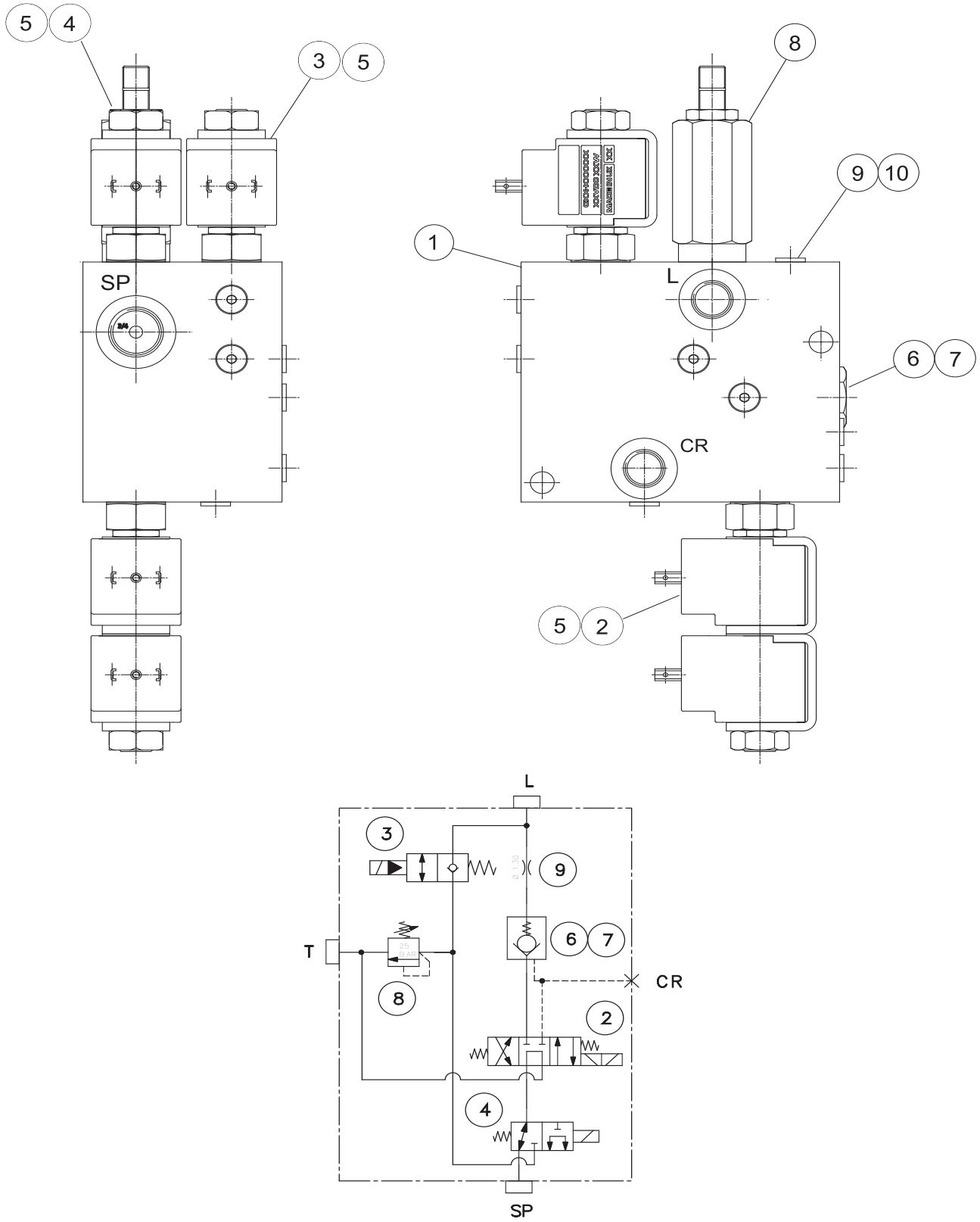

https://truckmanualshub.com/

ITEM	PART NO.	DESCRIPTION	QTY.	REMARKS
	4131111	Hydraulic Lift Value	1	
1		• Block	1	
2	4134873	• Solenoid Valve (c/w Seals)	1	Torque 30 Nm
*	4137264	• • Seal Kit	1	
3	4134876	• Solenoid Valve (c/w Seals)	1	Torque 30 Nm
*	4137265	• • Seal Kit	1	
4	4134877	• Solenoid Valve (c/w Seals)	1	Torque 30 Nm
*	4137266	• • Seal Kit	1	
5	4134878	• Coil	4	Torque 4.1 Nm
6	4134879	• Check Valve	1	Torque 40 Nm
*	4137267	• • Seal Kit	1	
7	4134880	• Pilot Piston	1	
*	4137268	• • Seal Kit	1	
8	4134881	• Relief Valve	1	Torque 50Nm
*	4137269	• • Seal Kit	1	
9	4134882	• Orifice Plug	1	Torque 3 Nm
10		• Hollow Hex Plug	9	Torque 6.5 Nm

* Not Illustrated

https://truckmanualshub.com/

LIFT VALUE (INTEGRATED)

Illustration Number: 4169021

Fitted from S/N
EK000603
EJ000632
FZ000337

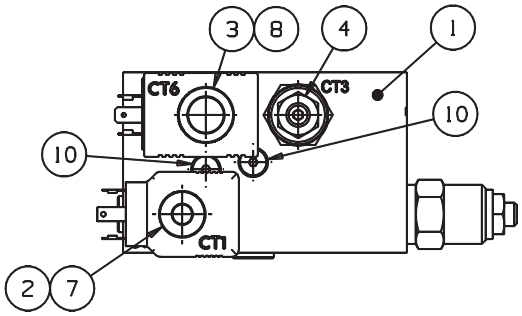

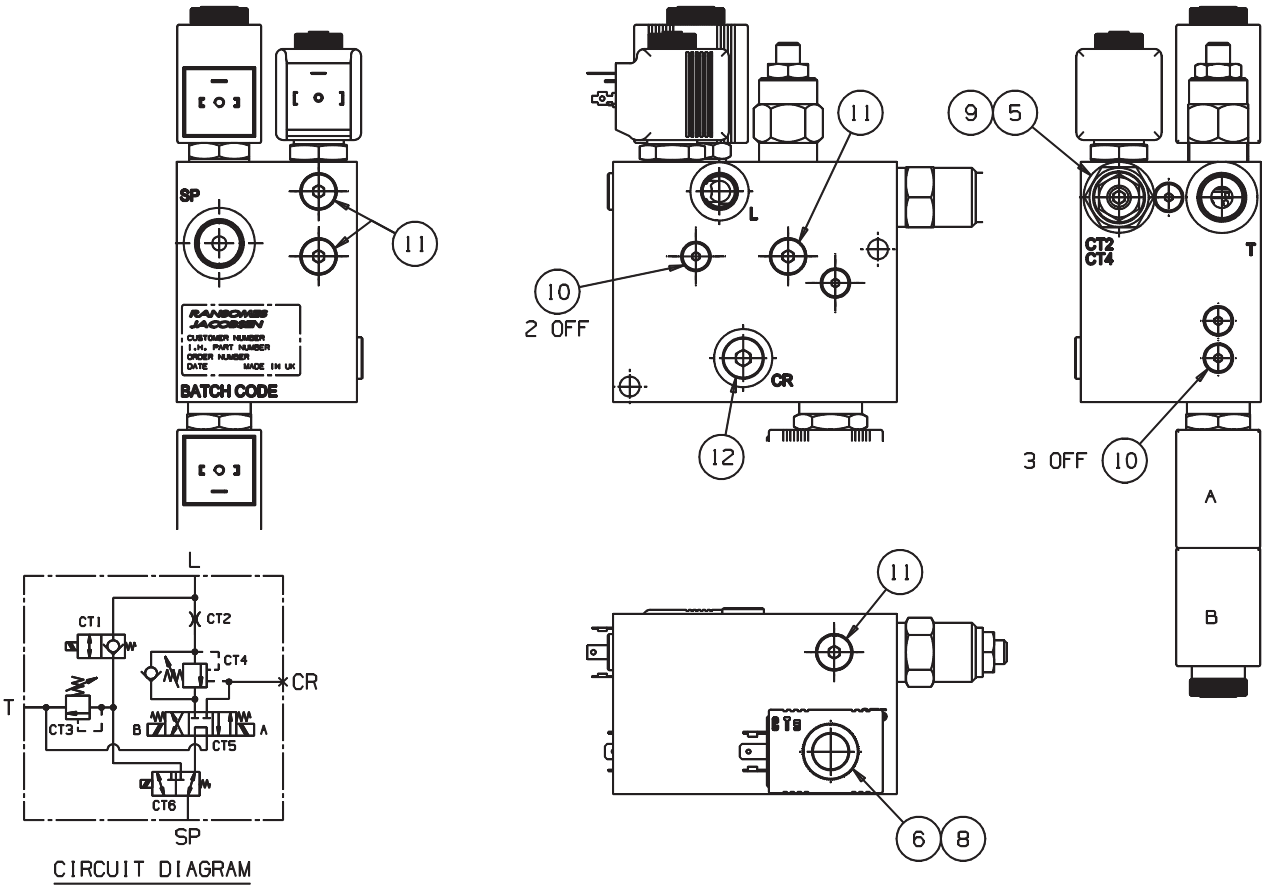

https://truckmanualshub.com/

ITEM	PART NO.	DESCRIPTION	QTY.	REMARKS
	4169021	Hydraulic Lift Valve	1	
1		• Block	1	
2	4171460	• Solenoid Valve (c/w Seals)	1	Torque 20 Nm
*	4171365	• • Seal Kit	1	
3	4171461	• Solenoid Valve (c/w Seals)	1	Torque 30 Nm
*	4171462	• • Seal Kit	1	
4	4171463	• Relief Valve	1	Torque 45 Nm
*	4171464	• • Seal Kit	1	
5	4171465	• Overcentre Valve	1	Torque 45 Nm
*	4171466	• • Seal Kit	1	
6	4171467	• Solenoid Valve (c/w Seals)	1	Torque 30 Nm
*	4171468	• • Seal Kit	1	
7	4171444	• 12VDC Coil	1	
8	4171469	• 12VDC Coil	3	
9	4171470	• M6x0.75 JAT (1.3mm oriface)	1	Torque 2.0-2.5 Nm
10	4171445	• 1/8" SAE Blanking Plug	7	Torque 4.5 Nm + Loctite
11	4171446	• 3/8" SAE Blanking Plug	4	Torque 12.5 Nm + Loctite
12	4171447	• 1/2" SAE Blanking Plug	1	Torque 20 Nm + Loctite

* Not Illustrated

https://truckmanualshub.com/

LIFT VALVE PROTECTION (AR30001 ONLY)

Illustration Number: 4194982

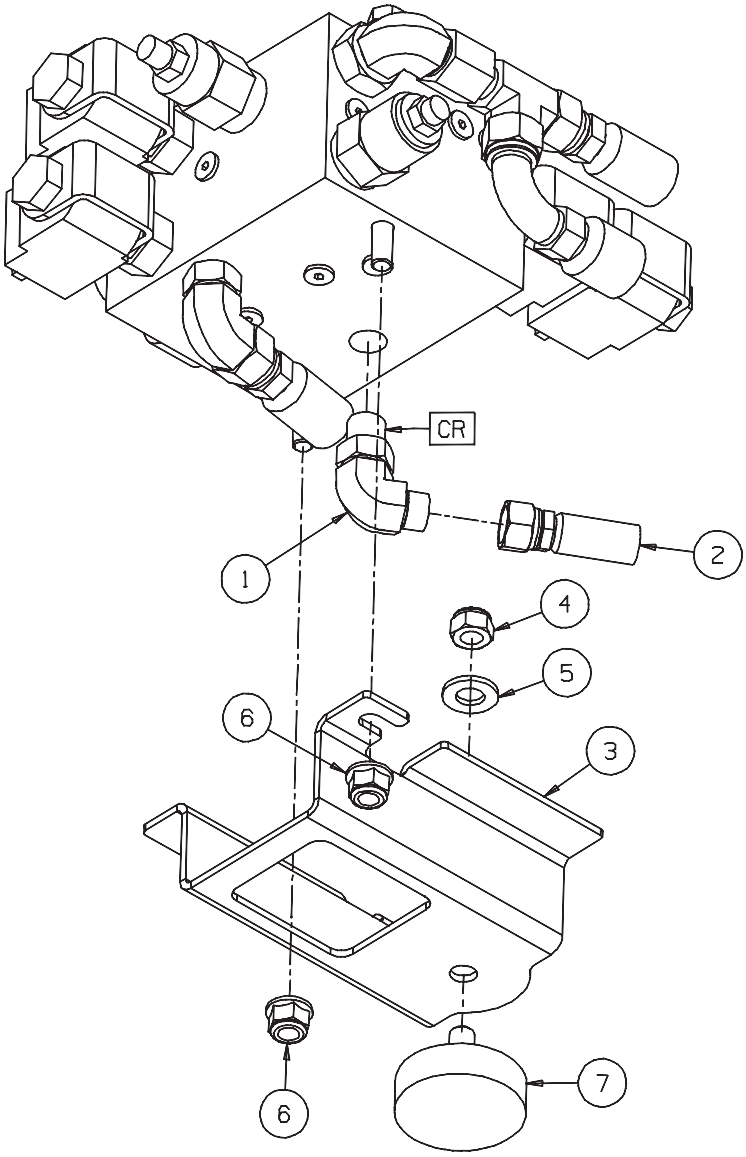

https://truckmanualshub.com/

ITEM	PART NO.	DESCRIPTION	QTY.	REMARKS
	LMAC357	Kit-Lift Valve Protection, AR3	1	
1	002525010	90-M/M 9/16 ORS x 9/16 SAE	1	
*	158061-18	• O Ring	1	9/16" ORFS
*	002218065	• O Ring	1	9/16" SAE
2	4194980	Hose-Lift Valve ’CR’ to manifold	1	
3	4194981	Bracket-Lift Valve	1	
4	450120398	Nut-Hex 3/16-16 Nyloc Thin	1	
5	450391	Washer-M10 x 21 x 2.2	1	
6	452436	Nut-Hex M8 Flange Nyloc	1	
7	J361723	Bumper Stop	1	

https://truckmanualshub.com/

FLUSHING VALVE

Illustration Number: 4131612

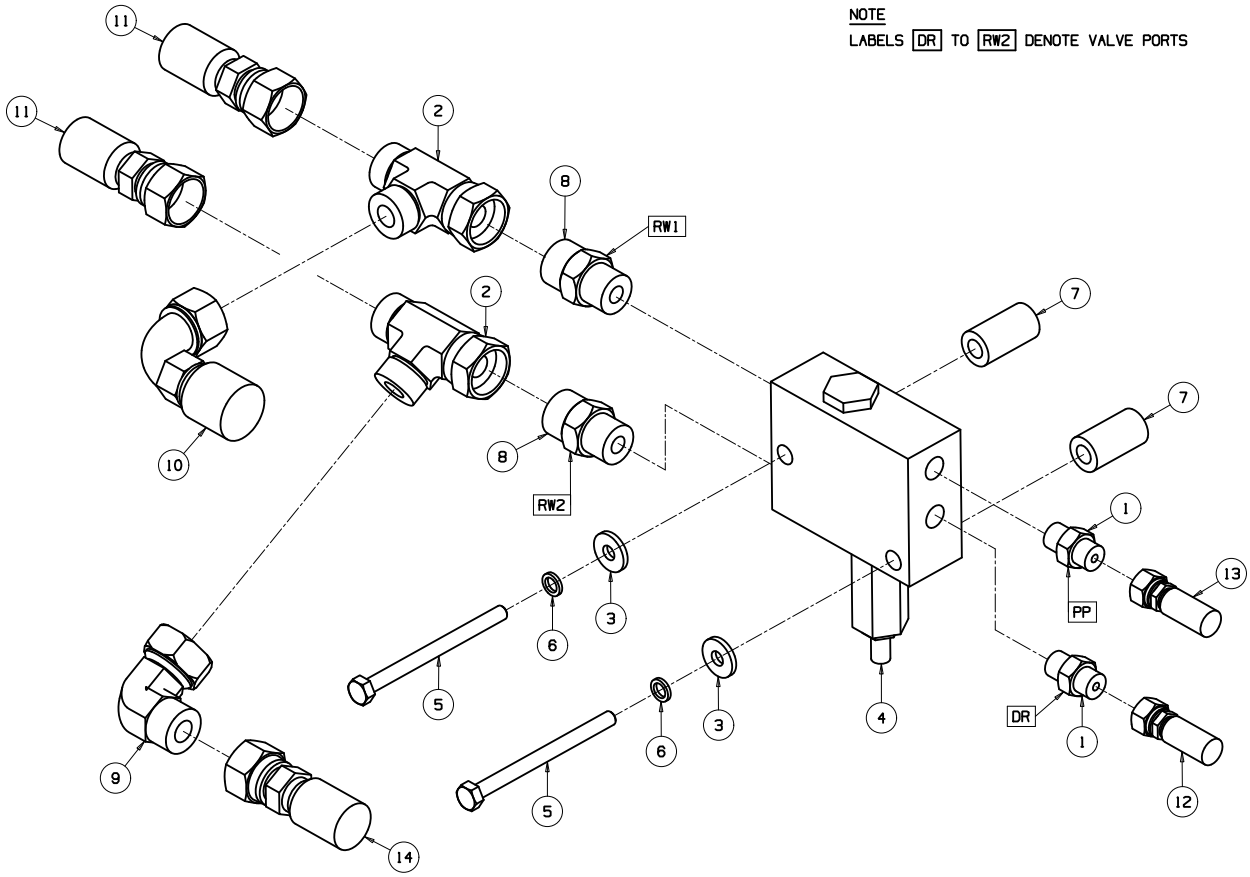

https://truckmanualshub.com/

ITEM	PART NO.	DESCRIPTION	QTY.	REMARKS
1	002515100	Ftg-9/16 ORFS x 9/16 SAE	2	
*	158061-18	• O Ring	1	9/16" ORFS
*	002218065	• O Ring	1	9/16" SAE
2	002590110	Tee-M/F/M 1 ORFS	2	
*	158061-08	• O Ring	3	1" ORFS
3	009072070	Wshr-M8 x 22 x 3	2	
4	4187320	Hydraulic Valve-Flushing	1	
5	450027	Bolt-Hex M8 x 100	2	
6	450411	Lockwshr-M8 x 12.75 x 2	2	
7	MBE3454	Spacer-10.5 x 20 x 20	2	(to serial no. EJ000304)
7	4137200	Spacer-10.5 x 20 x 37	2	(from serial no. EJ000305)
8	158006-07	Ftg-M/M 1 ORFS x 7/8 SAE	2	
*	158061-08	• O Ring	1	1" ORFS
*	002218104	• O Ring	1	7/8" SAE
9	002590080	90-M/F 1 ORFS	1	
*	158061-08	• O Ring	2	1" ORFS
10	4133861	Hyd Hose Assembly	1	Front Motor ‘T’ to Flush Valve (to serial no. EJ000304)
10	4137208	Hyd Hose Assembly	1	Front Motor ‘T’ to Flush Valve (from serial no. EJ000305) For Sauer-Danfoss wheel motors
10	4283266	Hose-Front Mtr Tee to Flush Valve	1	For Poclain wheel motors
11	4133862	Hyd Hose Assembly	2	Rear Motor to Flush Valve (to serial no. EJ000304)
11	4137209	Hyd Hose Assembly	2	Rear Motor to Flush Valve (from serial no. EJ000305)
12	4133890	Hyd Hose Assembly	1	Flush Valve ‘DR’ to Trans Pump ‘L’ (to serial no. EJ000304)
12	4137210	Hyd Hose Assembly	1	Flush Valve ‘DR’ to Trans Pump ‘L’ (from serial no. EJ000305)
13	4133891	Hyd Hose Assembly	1	Flush Valve ‘PP’ to Trans Pump ‘B’ (to serial no. EJ000304)
13	4137211	Hyd Hose Assembly	1	Flush Valve ‘PP’ to Trans Pump ‘B’ (from serial no. EJ000305)
14	4133918	Hyd Hose Assembly	1	Trans Pump ‘A’ to Flush Valve Lower ‘T’ (to serial no. EJ000304)
14	4137212	Hyd Hose Assembly	1	Trans Pump ‘A’ to Flush Valve Lower ‘T’ (from serial no. EJ000305)

* Not Illustrated

https://truckmanualshub.com/

FLUSHING VALUE (INTERGRATED HYDRAULICS)

Illustration Number: 4131110

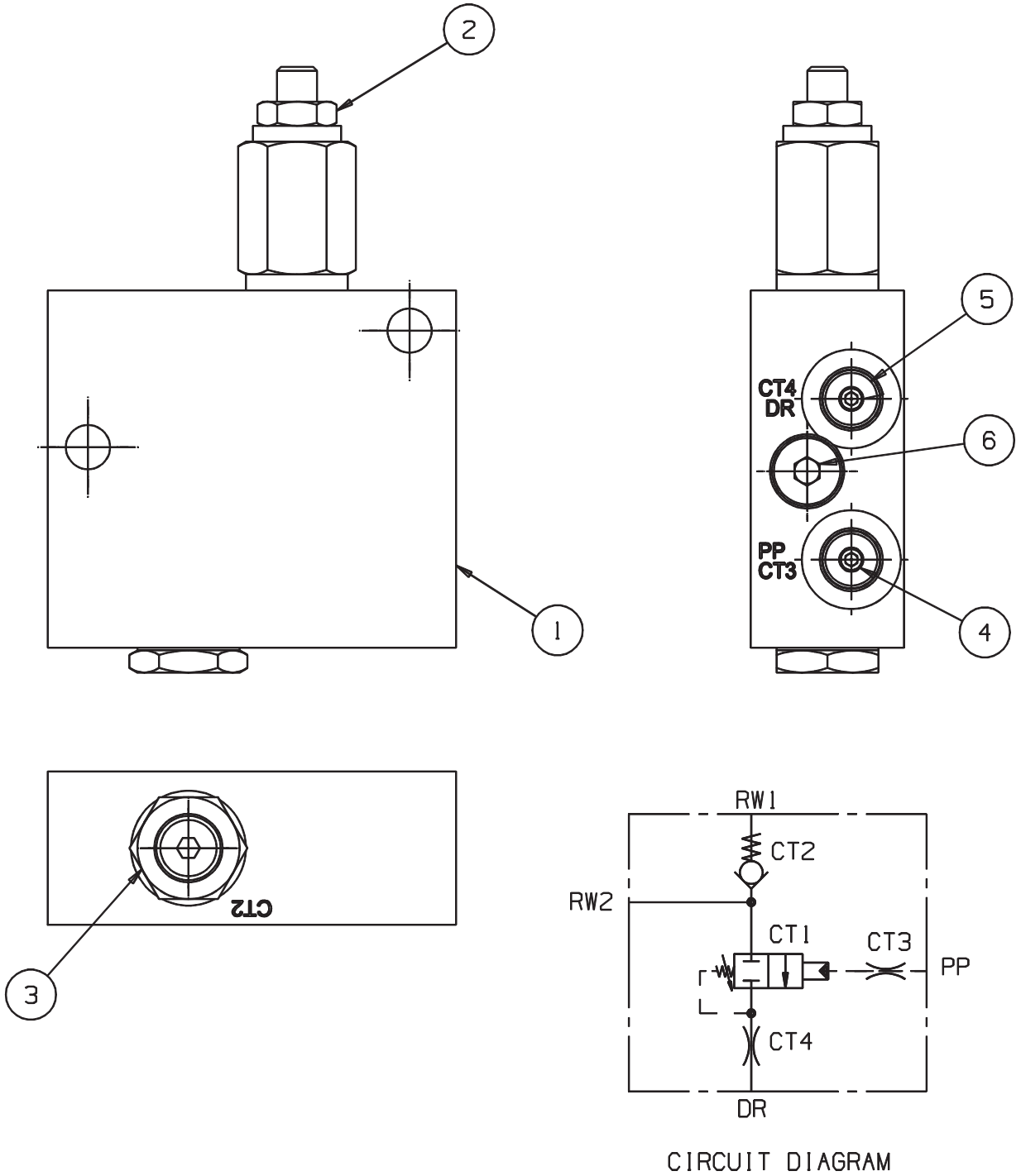

https://truckmanualshub.com/

ITEM	PART NO.	DESCRIPTION	QTY.	REMARKS
	4187320	Flusing Valve		Integrated Hydraulics
1	N/A	• Block	1	
2	4187401	• P.O. Spool Valve	1	Torque 60Nm
*	4187403	Seal Kit for 4187401	1	
3	4187402	• Check Valve	1	Torque 60Nm
*	4187404	Seal Kit for 4187404	1	
4	4187901	• Oriface Plug	1	Torque 2.0 to 2.5 Nm
5	4187900	• Oriface Plug	1	Torque 2.0 to 2.5 Nm
*	4171447	• Blanking Plug 3/8	1	Torque 20Nm

* Not Illustrated

https://truckmanualshub.com/

CUTTER & BRAKE VALVE

Illustration Number: 4131613

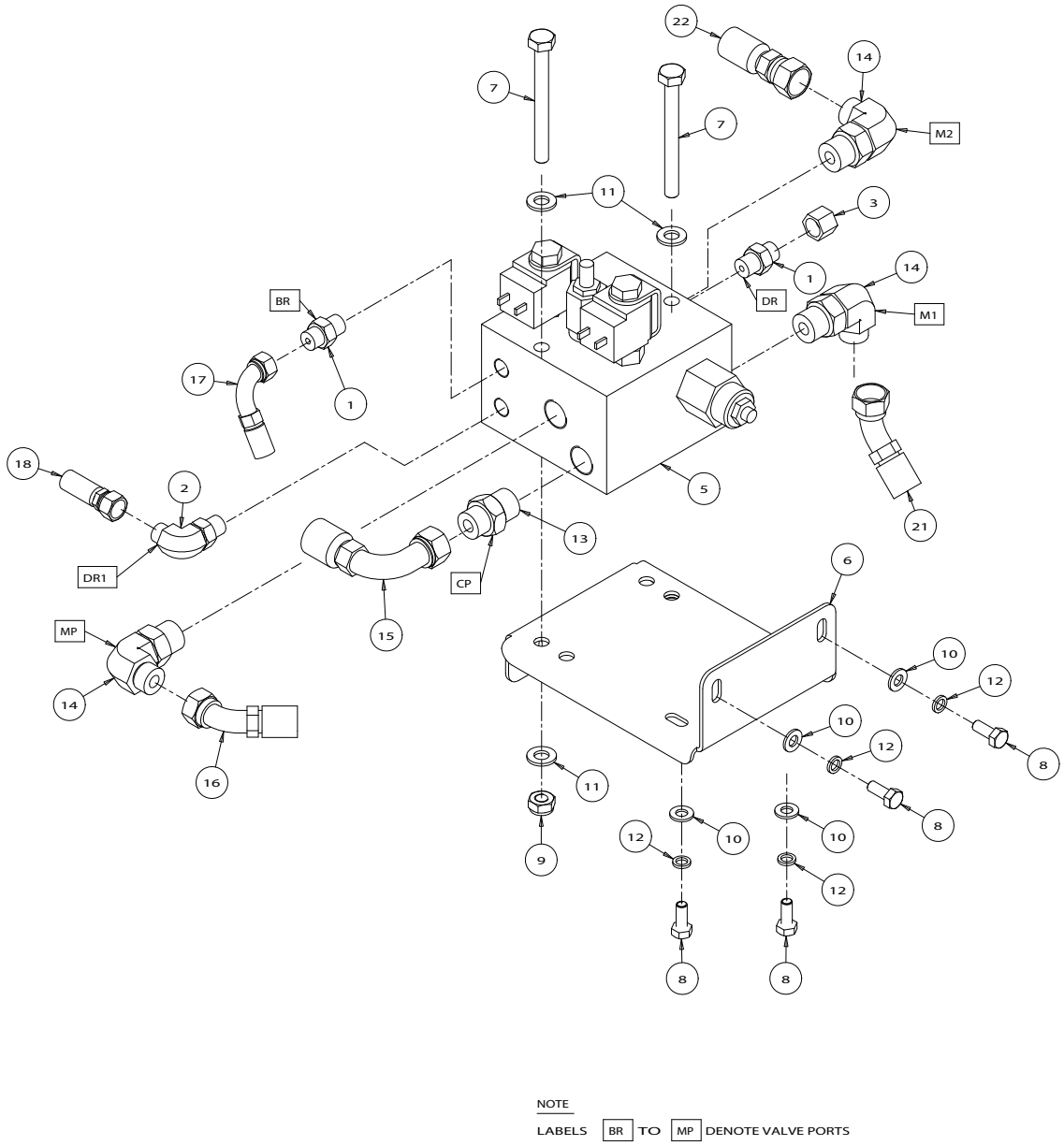

https://truckmanualshub.com/

ITEM	PART NO.	DESCRIPTION	QTY.	REMARKS
1	002515100	Ftg-9/16 ORFS x 9/16 SAE	2	
2	002525010	90-M/M 9/16 ORFS x 9/16 SAE	1	
*	158061-18	• O Ring	1	9/16" ORFS
*	002218065	• O Ring	1	9/16" SAE
3	002560010	Cap-9/16 ORFS	1	
5	4232000	Cutter & Brake Valve	1	Integrated CXP23968-04 From S/N: FR000633, FY000368, GX000348, EJ000750, FG000553.
5	4309700	Cutter and Brake Valve - Relief Type	1	Integrated CXP23968-06 - Replaces 4232000
6	4131615	Brkt-Cutter / Brake Valve Mtg	1	
7	450041	Bolt-Hex M10 x 100	2	
8	450191	Scrw-Hex M8 x 20	4	
9	450379	Nut-Hex M10 Nyloc	2	
10	450390	Wshr-M8 x 17 x 1.8	4	
11	450391	Wshr-M10 x 21 x 2.2	4	
12	450411	Lockwshr-M8 x 12.75 x 2	4	
13	158006-06	Ftg-M/M 13/16 ORFS x 7/8 SAE	1	
*	158061-02	• O Ring	1	13/16" ORFS
*	002218104	• O Ring	1	7/8" SAE
14	158007-03	90-M/M 13/16 ORFS x 7/8 SAE	3	
*	158061-02	• O Ring	1	13/16" ORFS
*	002218104	• O Ring	1	7/8" SAE
15	4133850	Hyd Hose Assembly	1	Cutter Pump to Cutter valve ‘CP’
16	4133851	Hyd Hose Assembly	1	Filter ’IN’ to Cutter valve ‘MP’
17	4133852	Hyd Hose Assembly	1	Rotary Valve ‘B’ to Cutter Valve ‘BR’
18	4133892	Hyd Hose Assembly	1	Brake Valve ‘DR1’ to Manifold Block
21	4133910	Hyd Hose Assembly	1	Cutter Valve ‘M1’ to LH Str Blkhd
22	4133913	Hyd Hose Assembly	1	Rear Cutter ‘OUT’ to Cutter Valve ‘M2’

* Not Illustrated

https://truckmanualshub.com/

CUTTER & BRAKE VALVE (STERLING)

Illustration Number: 4131112

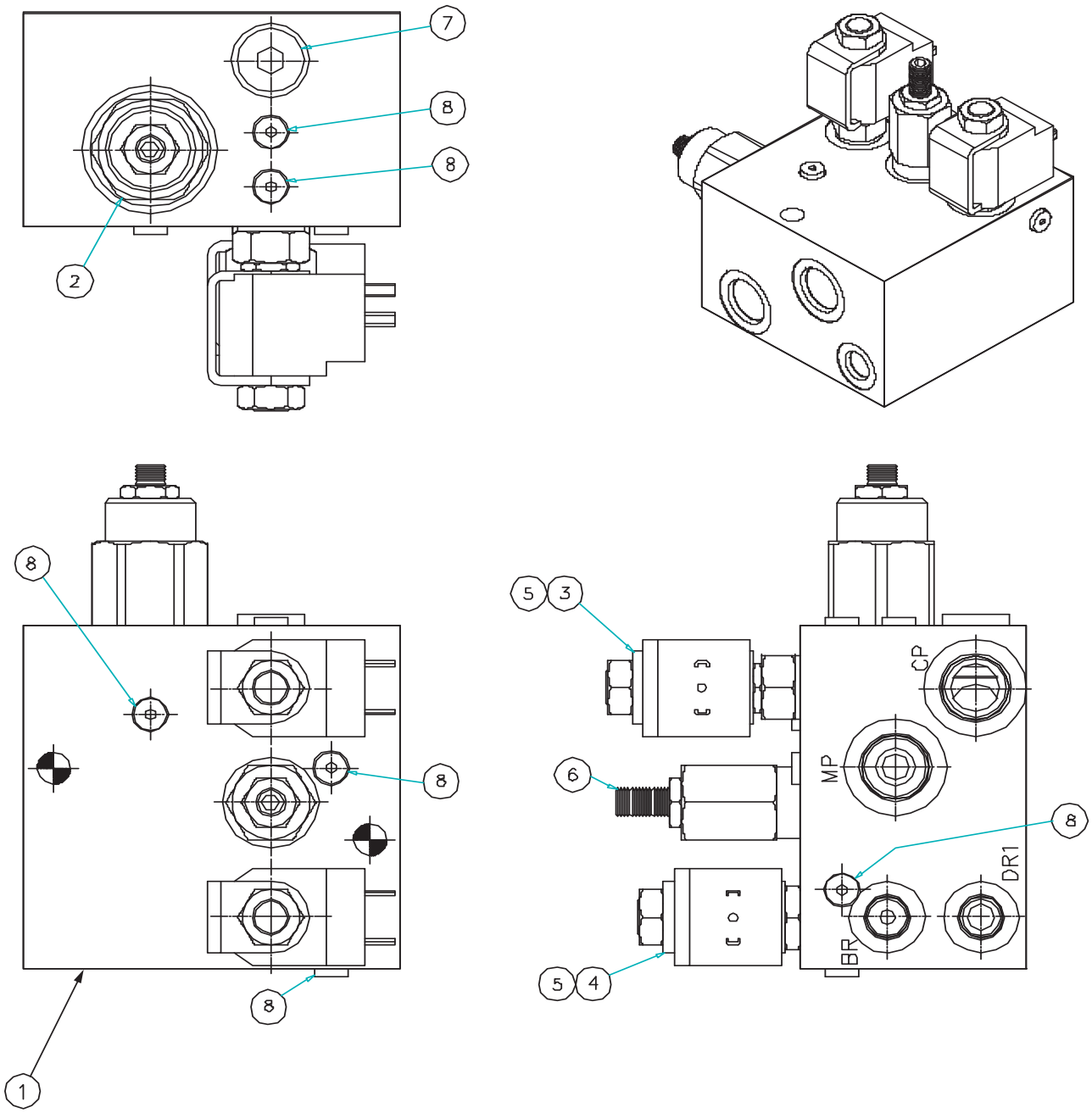

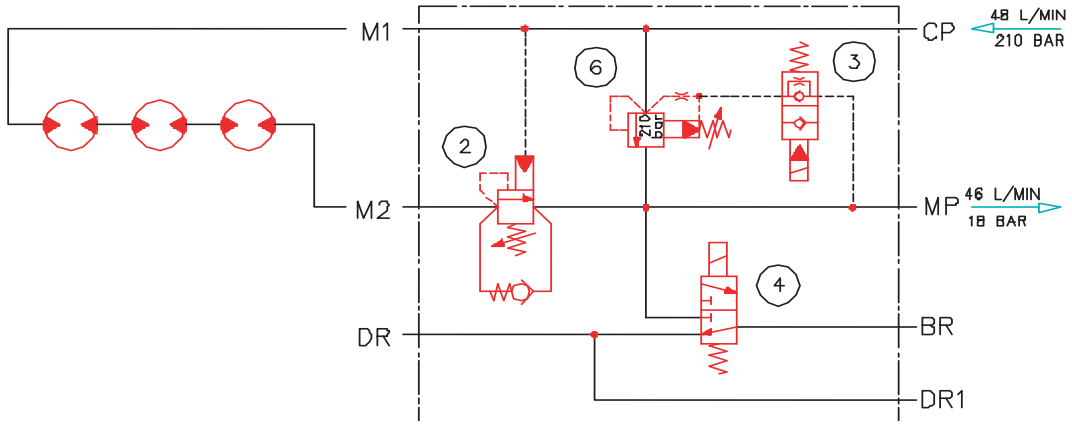

https://truckmanualshub.com/

ITEM	PART NO.	DESCRIPTION	QTY.	REMARKS
1	4131112	Hyd Cutter & Brake Valve Manifold	1	
2	4134891	• Load Control Valve	1	Torque 68 Nm
*	4137270	• • Seal Kit	1	
3	4134892	• Solenoid Valve (c/w Seals)	1	Torque 30 Nm
*	4137265	• • Seal kit	1	
4	4134893	• Solenoid Valve (c/w Seals)	1	Torque 27 Nm
*	4137271	• • Seal Kit	1	
5	4134894	• Coil	2	Torque 4.1 Nm
6	4134895	• Relief Valve	1	Torque 50 Nm
*	4137272	• • Seal Kit	1	
7		• Hollow Hex Plug	1	Torque 50 Nm
8		• Hollow Hex Plug	6	Torque 6.5 Nm

* Not Illustrated

https://truckmanualshub.com/

CUTTER & BRAKE VALVE (INTEGRATED)

Illustration Number: 4169020

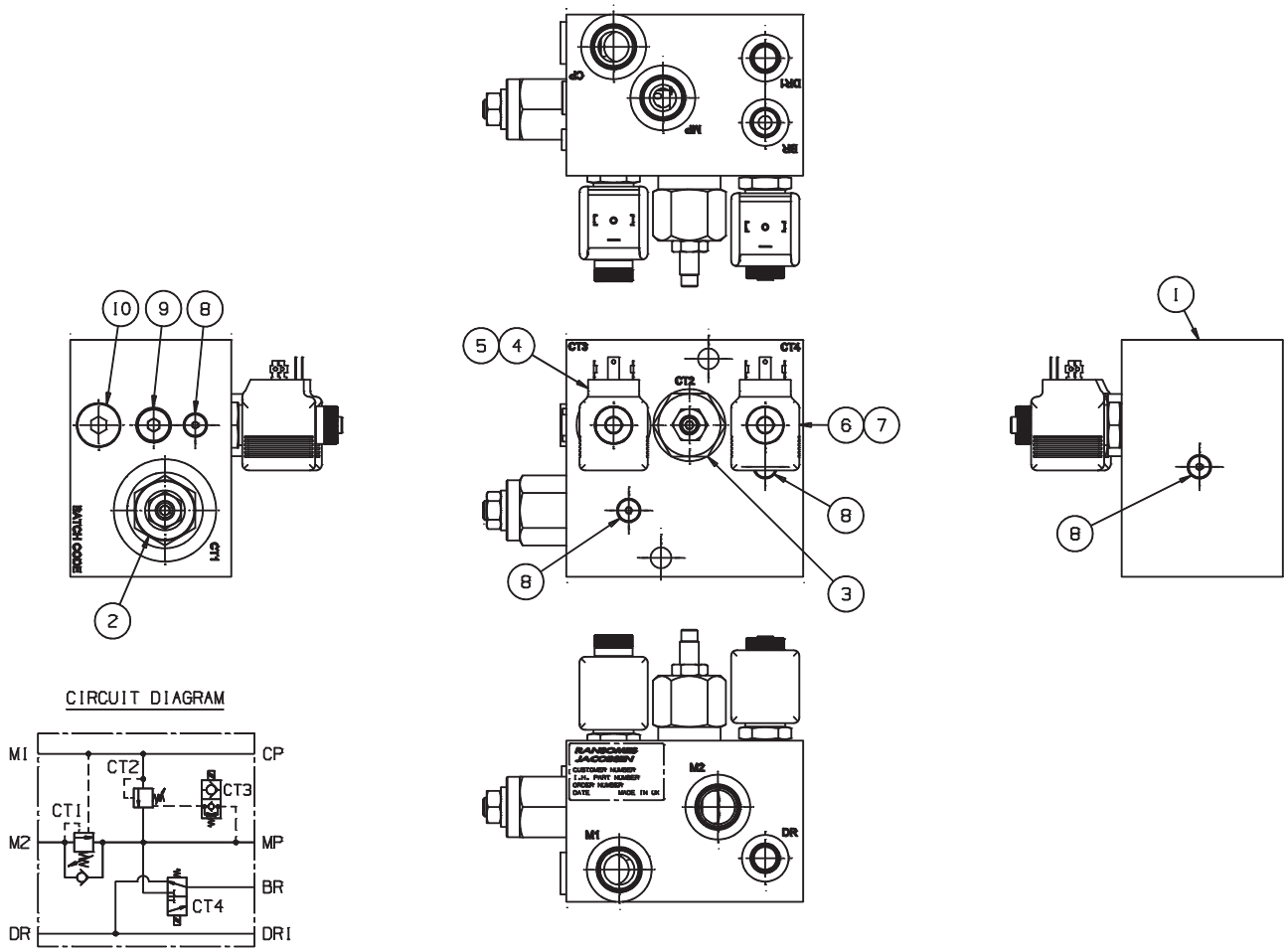

https://truckmanualshub.com/

ITEM	PART NO.	DESCRIPTION	QTY.	REMARKS
	4232000	Cutter & Brake Valve	1	From S/N: FR000633, FY000368, GX000348, EJ000750, FG000553.
1		• Block	1	
2	4171360	• Overcentre Valve	1	Torque 60 Nm
*	4171361	• • Seal Kit	1	
3	4232860	• Relief Valve	1	Torque 75 Nm
*	4232001	• • Seal Kit	1	
4	4171364	• Solenoid Valve (c/w Seals) (c/w seals)	1	Torque 30 Nm
*	4171365	• • Seal Kit	1	
5	4171441	• 12VDC 22 Watt Coil	1	Torque 3.4 Nm
6	4171442	• Solenoid Valve (c/w Seals) (c/w seals)	1	Torque 20 Nm
*	4171443	• • Seal Kit		
7	4171444	• 12VDC 14 Watt Coil	1	Torque 3.4 Nm
8	4171446	• 1/8" SAE Blanking Plug	4	Torque 4.5 Nm + Loctite
*	4171445	• 1/8" SAE Blanking Plug	1	
9	4171447	• 3/8" SAE Blanking Plug	1	Torque 20 Nm + Loctite
10	4171448	• 1/2" SAE Blanking Plug	1	Torque 55 Nm + Loctite

* Not Illustrated

https://truckmanualshub.com/

BRAKE RELEASE VALVE

Illustration Number: 4132185

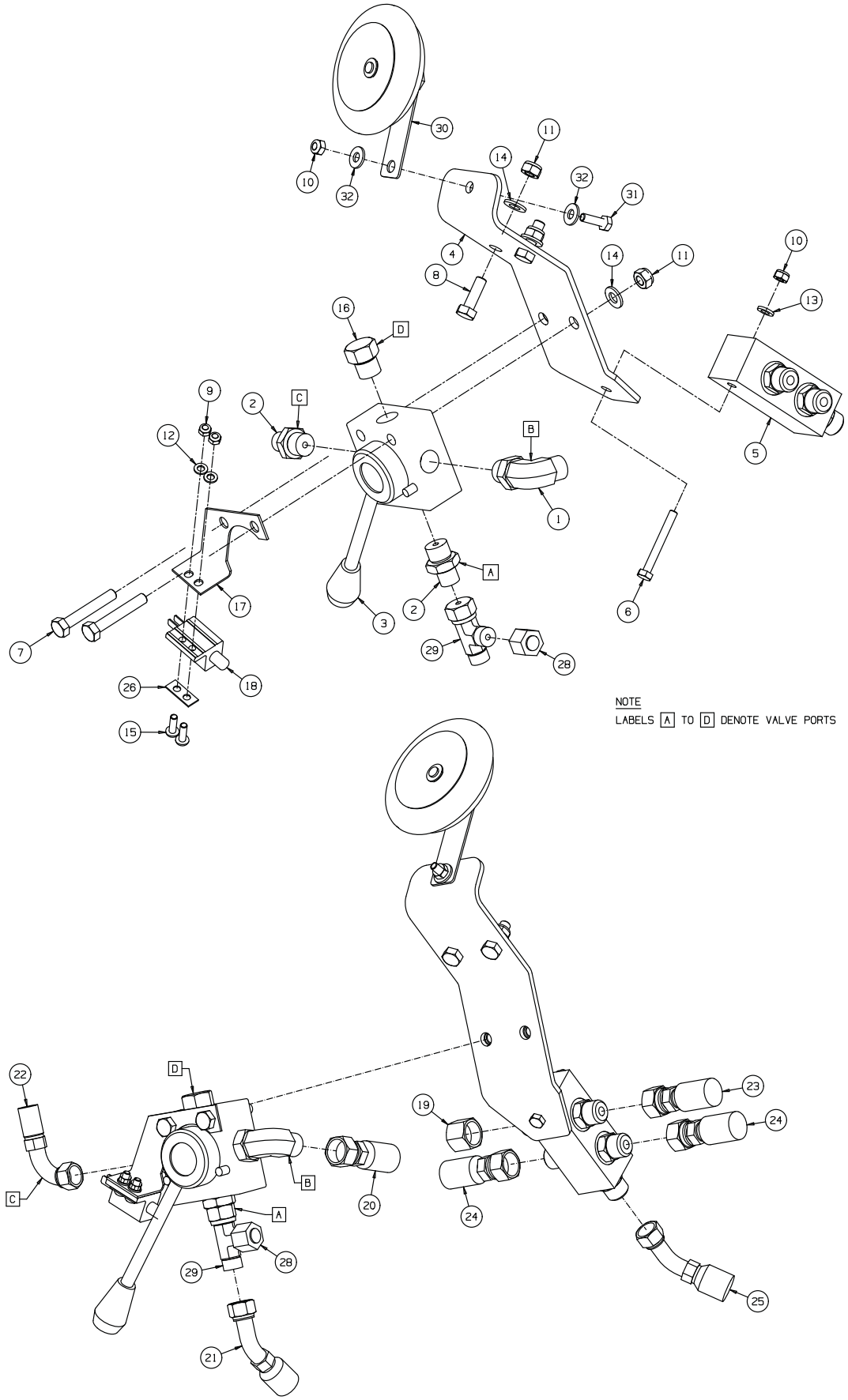

https://truckmanualshub.com/

ITEM	PART NO.	DESCRIPTION	QTY.	REMARKS
1	002590240	90-M/M 11/16 ORFS x 3/8 BSPP	1	
*	158061-01	• O Ring	1	11/16” ORFS
2	002590730	Ftg-9/16 ORFS x 3/8 BSPP	2	
*	158061-18	• O Ring	1	9/16” ORFS
3	008028345	4-Port Rotary Valve	1	
*	001710252	• Ext Circlip, 25 mm	1	
*	640002048	• O-Ring	2	
4	4132248	Bracket-Brake Valve	1	
5	4133237	Manifold-5 Port 11/16 ORFS	1	
*	158061-01	• O Ring	5	11/16” ORFS
6	450005	Bolt-Hex M6 x 50	1	
7	450018	Bolt-Hex M8 x 50	2	
8	450192	Scrw-Hex M8 x 25	2	
9	450376	Nut-Hex M5 Nyloc	2	
10	450377	Nut-Hex M6 Nyloc	4	
11	450378	Nut-Hex M8 Nyloc	4	
12	450388	Wshr-M5 x 10 x 1.1	2	
13	450389	Wshr-M6 x 12.5 x 1.8	1	
14	450390	Wshr-M8 x 17 x 1.8	4	
15	450528	Scrw-Pan Hd M5 x 16	2	
16	459100236	Plug-3/8 BSPP	1	
17	MBG3284A	Brkt-Microswitch	1	
18	W038382	Switch, Normally Open	1	
19	002568020	Cap-11/16 ORFS	1	
20	4133852	Hose-Rotary Valve ‘B’ to Cutter Valve ’BR’	1	
21	4133853	Hose-Rotary Valve ‘A’ to Motor Brake Tee	1	For Sauer-Danfoss wheel motors
21	4283268	Hose-Rotary Valve ‘A’ to Motor Brake Tee	1	For Poclain wheel motors
22	4133893	Hose-Rotary Valve ‘C’ to Check Valve	1	
23	4133900	Hose-Lift Valve ‘L’ to Lift Manifold	1	
24	4133901	Hose-LH & RH Lift Rams to Lift Manifold	2	
25	4133902	Hose-Rear Lift ram to Lift Manifold	1	
26	MBF0918	Clamp Plate	1	
28	002560010	Cap-9/16 ORS	1	From S/N EK000681 & FZ000554
29	002590480	Tee-M/F/M 9/16 ORS	1	From S/N EK000681 & FZ000554
30	008239720	Horn	1	
31	450171	Scrw-Hex M6-1.0 x 20, Gr 8.8	1	
32	452100019	Wshr-1/4 x 5/8 x .064	2	

* Not Illustrated

https://truckmanualshub.com/

BRAKE RELEASE VALVE FROM SERIAL NUMBER GX100869 & KG000440

Illustration Number: 4132185

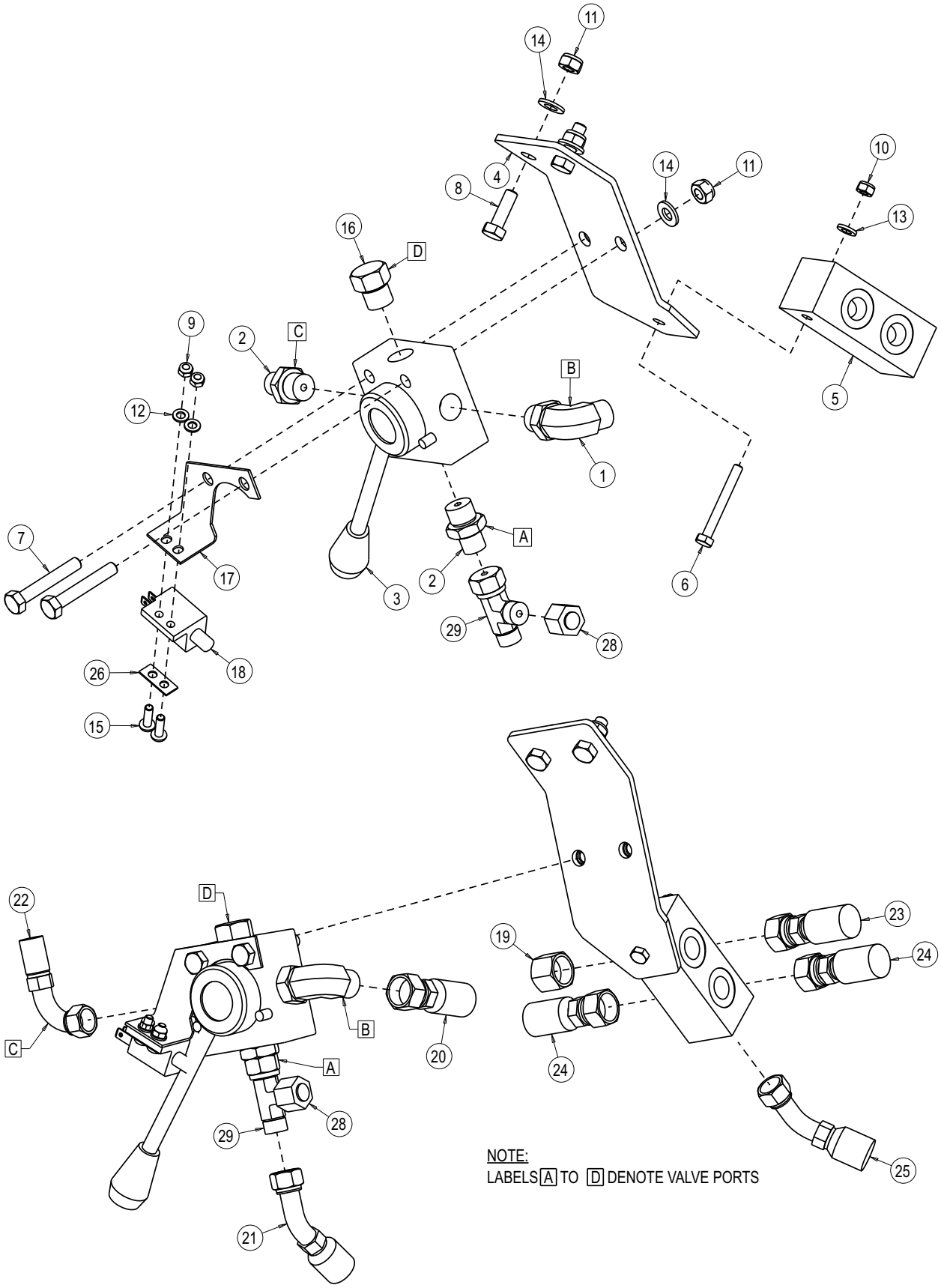

https://truckmanualshub.com/

ITEM	PART NO.	DESCRIPTION	QTY.	REMARKS
1	002590240	Fitting 90-M/M 11/16 ORS x 3/8 BSPP	1	
*	158061-01	• O Ring (11/16” ORFS)	1	
2	002590730	Fitting 9/16 ORFS x 3/8 BSPP	2	
*	158061-18	• O Ring (9/16” ORFS)	1	
3	008028345	4 Port Rotary Valve	1	
*	001710252	• Ext Circlip, 25 mm	1	
*	640002048	• O-Ring	2	
4	4132248	Brake Valve Bracket	1	
5	4133237	5 Port 11/16 ORS Manifold	1	
6	450005	Hexagon Bolt M6-1.0 x 50	1	
7	450018	Hexagon Bolt M8-1.25 x 50	2	
8	450192	Hexagon Head Screw M8-1.25 x 25	2	
9	450376	Hexagon Nyloc Nut M5-0.8	2	
10	450377	Hexagon Nyloc Nut M6-1.0	1	
11	450378	Hexagon Nyloc Nut M8-1.25	4	
12	450388	Washer M5 x 10 x 1.1	2	
13	450389	Washer M6 x 12.5 x 1.8	1	
14	450390	Washer M8 x 17 x 1.8	4	
15	450528	Pan Head Screw M5-0.8 x 16	2	
16	459100236	3/8 BSPP Plug	1	
17	MBG3284A	Microswitch Bracket	1	
18	W38382	Switch normally Open (2way Conn)	1	
19	002568020	11/16 ORS Cap	1	
20	4133852	Hydraulic Hose Assembly	1	
21	4283268	Hose Assembly	1	04RM1-00-04135-0690-485-180
22	4133893	Hydraulic Hose Assembly	1	Rotary Valve ‘C’ to Check Valve
23	4133900	Hydraulic Hose Assembly	1	Lift Valve ‘L’ to Lift Manifold
24	4133901	Hydraulic Hose Assembly	2	L\H & R\H Lift Rams to Lift Manifold
25	4133902	Hydraulic Hose Assembly	1	Rear Lift ram to Lift Manifold
26	MBF0918	Clamp Plate	1	
28	002560010	9/16 ORS CAP	1	
29	002590480	Tee Fitting M/F/M 9/16 ORS	1	

https://truckmanualshub.com/

HYDRAULIC FILTER

Illustration Number: 4127922

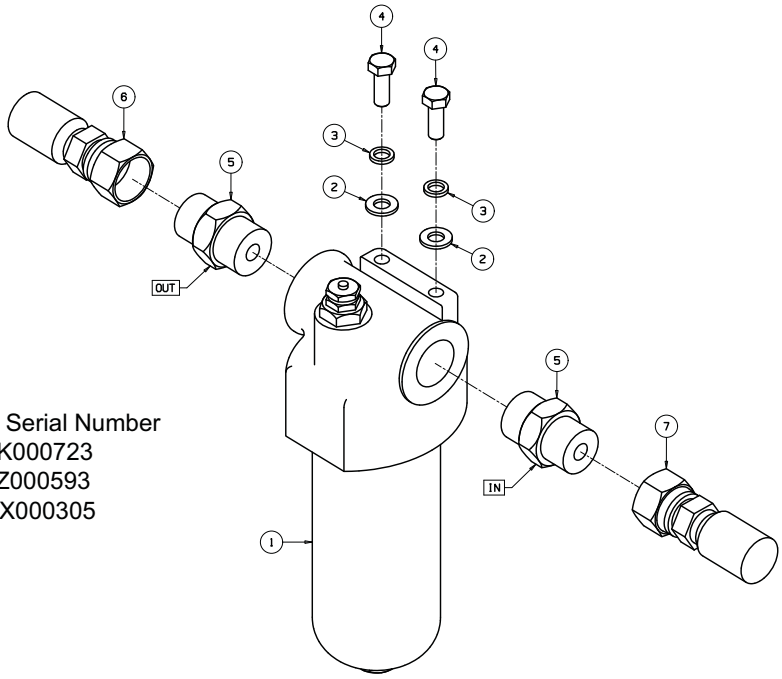

A

To Serial Number
EK000723
FZ000593
GX000305

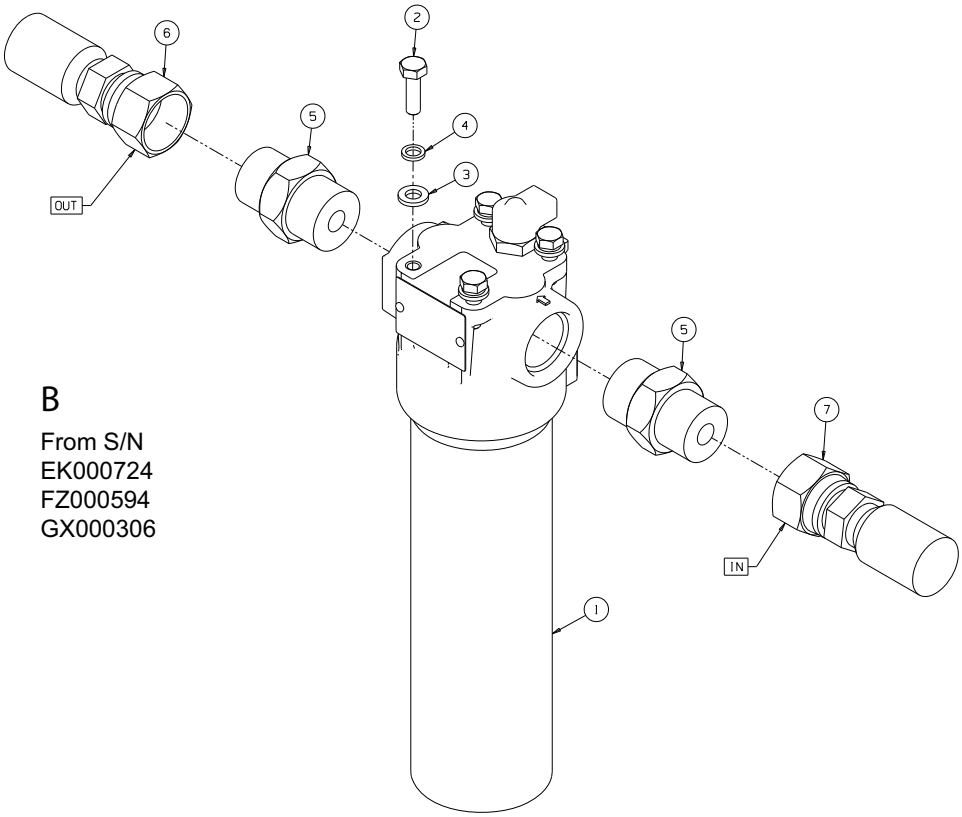

B

From S/N
EK000724
FZ000594
GX000306

https://truckmanualshub.com/

ITEM	PART NO.	DESCRIPTION	QTY.	REMARKS
A		To SERIAL NUMBERS		EK000724 FZ000593 GX000305
1	4151777	Filter-Hyd, 9.6 micron	1	
*	008089620	• Filter Element	1	
*	008089810	• Single Post Electrical Sensor	1	
2	450390	Wshr-M8 x 17 x 1.8	2	
3	450411	Lockwshr-M8 x 12.75 x 2	2	
4	456110341	Scrw-Hex 5/16-18 x 7/8	2	
5	158006-11	Ftg-M/M 1 ORFS x 1-1/16 SAE	2	
*	158061-08	• O Ring	1	1" ORFS
*	002218120	• O Ring	1	1-1/16" SAE
6	4133848	Hyd Hose Assembly	1	Trans Pump ‘E’ to Filter ‘Out’
7	4133851	Hyd Hose Assembly	1	Cutter valve ‘MP’ to Filter ’In’
B		From SERIAL NUMBERS		EK000724 FZ000594 GX000306
1	4252570	Filter-Hyd, 7 Bar, 10 micron ABS	1	
*	4204702	• Filter Bowl D0621	1	
*	4204701	• O-Ring 50 x 21	1	
*	4199061	• Filter Element, 10 Micron Absolute	1	
2	450171	Screw M6 x 20	4	
3	450389	Washer M6	4	
4	450410	S L Washer M6	4	
5	158006-11	Ftg-M/M 1 ORFS x 1-1/16 SAE	2	
*	158061-08	• O Ring	1	1" ORFS
*	002218120	• O Ring	1	1-1/16" SAE
6	4133848	Hyd Hose Assembly	1	Trans Pump ‘E’ to Filter ‘Out’
7	4133851	Hyd Hose Assembly	1	Cutter valve ‘MP’ to Filter ’In’

* Not Illustrated

https://truckmanualshub.com/

MANIFOLD & BRACKET

Illustration Number: 4133037

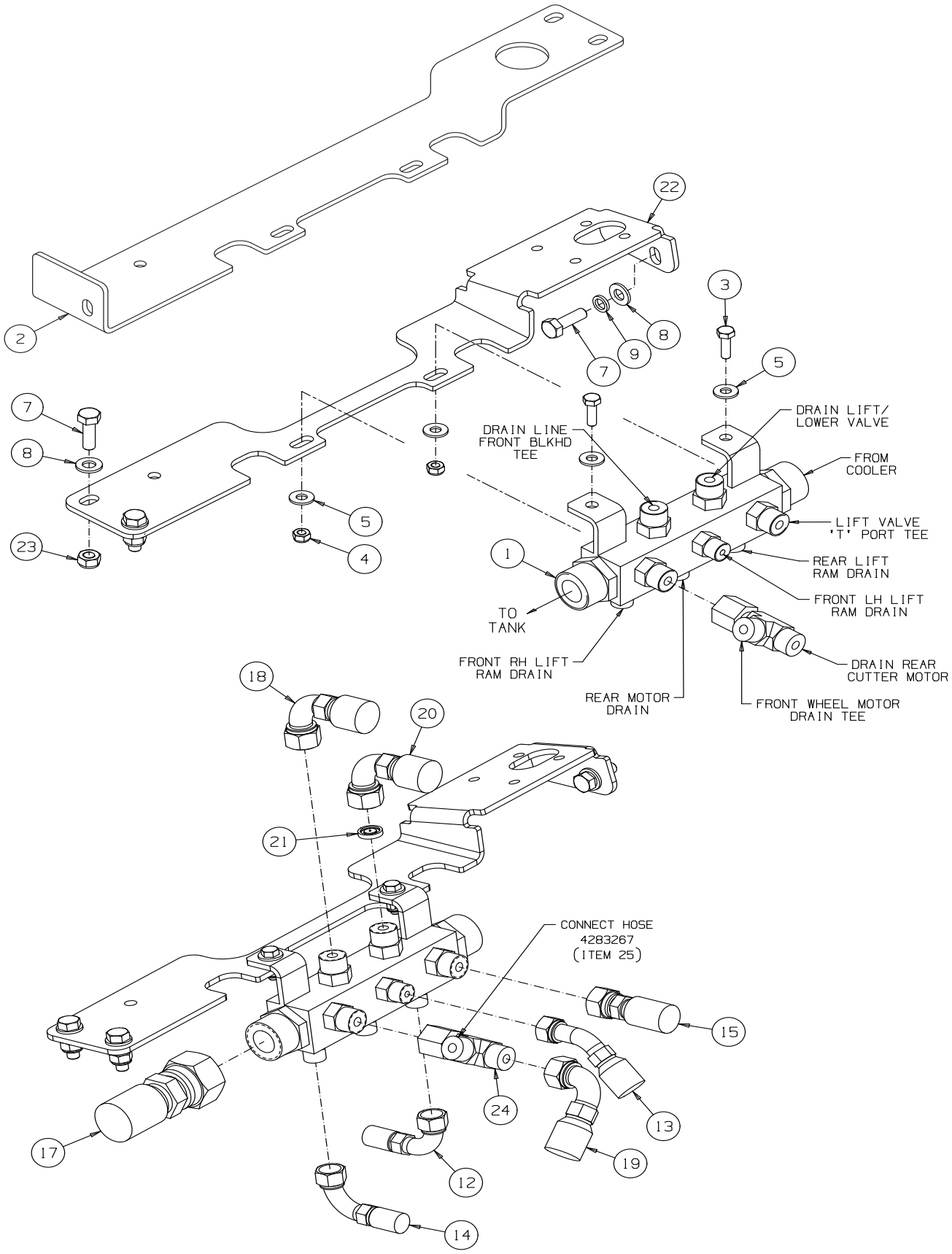

https://truckmanualshub.com/

ITEM	PART NO.	DESCRIPTION	QTY.	REMARKS
1	4133036	Manifold	1	
*	002515100	• Ftg-9/16 ORFS x 9/16 SAE	4	
*	158061-18	• O Ring	4	9/16" ORFS
*	4136856	• Ftg-M/M 1-3/16 ORFS x 3/4 SAE	2	
*	158061-09	• O Ring	1	1-3/16" ORFS
*	4136862	• Ftg-M/M 1 ORFS x 9/16 SAE	1	
*	158061-08	• O Ring	1	1" ORFS
*	158006-01	• Ftg-M/M 11/16 ORFS x 9/16 SAE	1	
*	158061-01	• O Ring	1	11/16" ORFS
2	4133038	Bracket-Manifold Mtg	1	T
3	450171	Scrw-Hex M6 x 20	3	
4	450377	Nut-Hex M6 Nyloc	3	
5	452100019	Wshr-1/4 x 5/8 x .064	6	
6	008239720	Horn	1	
7	450192	Scrw-Hex M8 x 25	1	
8	450390	Wshr-M8 x 17 x 1.8	1	
9	450411	Lockwshr-M8 x 12.75 x 2	1	
10	4133846	Hyd Hose Assembly	1	Cooler ‘OUT’ to Return Manifold
11	4133889	Hyd Hose Assembly	1	Rear Motor Drain to Manifold
12	4133903	Hyd Hose Assembly	1	Rear Lift Ram to Manifold
13	4133904	Hyd Hose Assembly	1	Frt LH Lift Ram to Manifold
14	4133905	Hyd Hose Assembly	1	Frt RH Lift Ram to Manifold
15	4133906	Hyd Hose Assembly	1	Lift valve ‘T’ to Manifold
16	4133909	Hyd Hose Assembly	1	Cutter Drain Manifold
				only fitted to serial no.EJ000304
17	4133914	Hyd Hose Assembly	1	Manifold to Tank
18	4137213	Hyd Hose Assembly	1	Frt Lift Blkhd Tee to Manifold
19	4137214	Hyd Hose Assembly	1	Rear cutter Drain to Manifold
20	4137215	Hyd Hose Assembly	1	Lift/Lower Valve Drain to Manifold
				From S/N EK000680 & FZ000552
20	4194980	Hose-Lift Valve ’CR’ to Manifold	1	From S/N EK000681 & FZ000553
21	69068-05	Orifice Disk 0.089"	1	From S/N EK000681 & FZ000553
22	4190100	RH Manifold Mount	1	
23	4190101	LH Manifold Mount	1	
24	002498400	Tee-M/F/M 11/16 ORFS	1	
*	158061-01	• O Ring	1	11/16" ORFS
25*	4283267	Hose Assy	1	To front motor drain tee

* Not Illustrated

https://truckmanualshub.com/

ROTARY DECK MOTOR FRONT

Illustration Number: 4134872 & 4172880

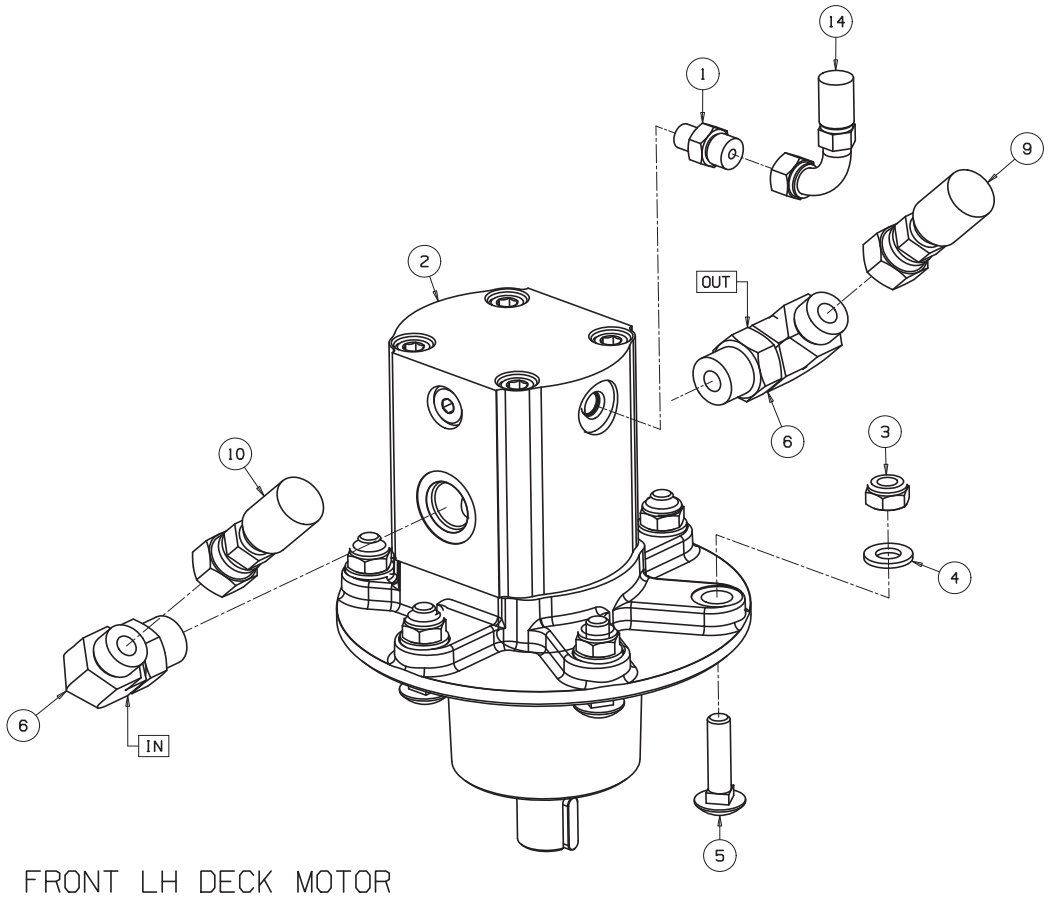

FRONT LH DECK MOTOR

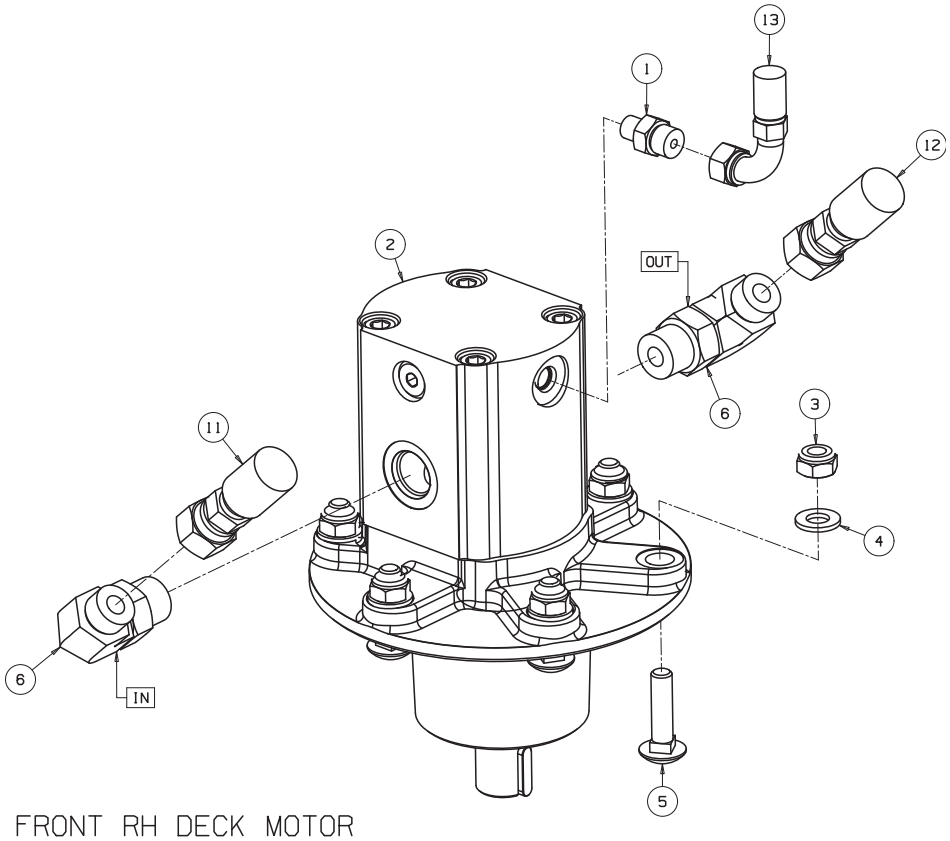

FRONT RH DECK MOTOR

https://truckmanualshub.com/

ITEM	PART NO.	DESCRIPTION	QTY.	REMARKS
		FRONT LH DECK MOTOR		
1	002515000	Ftg-9/16 ORFS x 7/16 SAE	1	
*	158061-18	• O Ring	1	9/16" ORFS
*	002218049	• O Ring	1	7/16" SAE
2	4118247	Motor-Deck CW Rotation	1	
*	4138728	Motor - Deck CCW Rotation	1	Painted Black
3	450379	Nut-Hex M10 Nyloc	6	
4	450391	Wshr-M10 x 21 x 2.2	6	
5	452588	Bolt-Crg M10 x 40	6	
6	158007-03	90-M/M 13/16 ORFS x 7/8 SAE	2	
*	158061-02	• O Ring	1	13/16" ORFS
*	002218104	• O Ring	1	7/8" SAE
9	4136408	Hyd Hose Assembly	1	Blkhd to Frt Mtrs & Rear Mtr to Cutter Valve ’M2’
10	4136409	Hyd Hose Assembly	1	90 Blkhd to LH Motor ’IN’
14	4136413	Hyd Hose Assembly	1	LH Motor Drain to Blkhd ’T’
		Items 9 & 10 reversed when CCW motor is fitted		
		FRONT RH DECK MOTOR		
1	002515000	Ftg-9/16 ORFS x 7/16 SAE	1	
*	158061-18	• O Ring	1	9/16" ORFS
*	002218049	• O Ring	1	7/16" SAE
2	4118247	Motor-Deck CW Rotation	1	
*	4138728	Motor - Deck CCW Rotation	1	Painted Black
3	450379	Nut-Hex M10 Nyloc	6	
4	450391	Wshr-M10 x 21 x 2.2	6	
5	452588	Bolt-Crg M10 x 40	6	
6	158007-03	90-M/M 13/16 ORFS x 7/8 SAE	2	
*	158061-02	• O Ring	1	13/16" ORFS
*	002218104	• O Ring	1	7/8" SAE
11	4136410	Hyd Hose Assembly	1	RH Str Blkhd to RH Motor ’IN’
12	4136411	Hyd Hose Assembly	1	RH 90 Blkhd to RH Motor ’OUT’
13	4136412	Hyd Hose Assembly	1	RH Motor Drain to Blkhd ’T’
		Items 11& 12 reversed when CCW motor is fitted		

* Not Illustrated

https://truckmanualshub.com/

ROTARY DECK MOTOR CENTRE

Illustration Number: 4134872-3 & 4172880-3

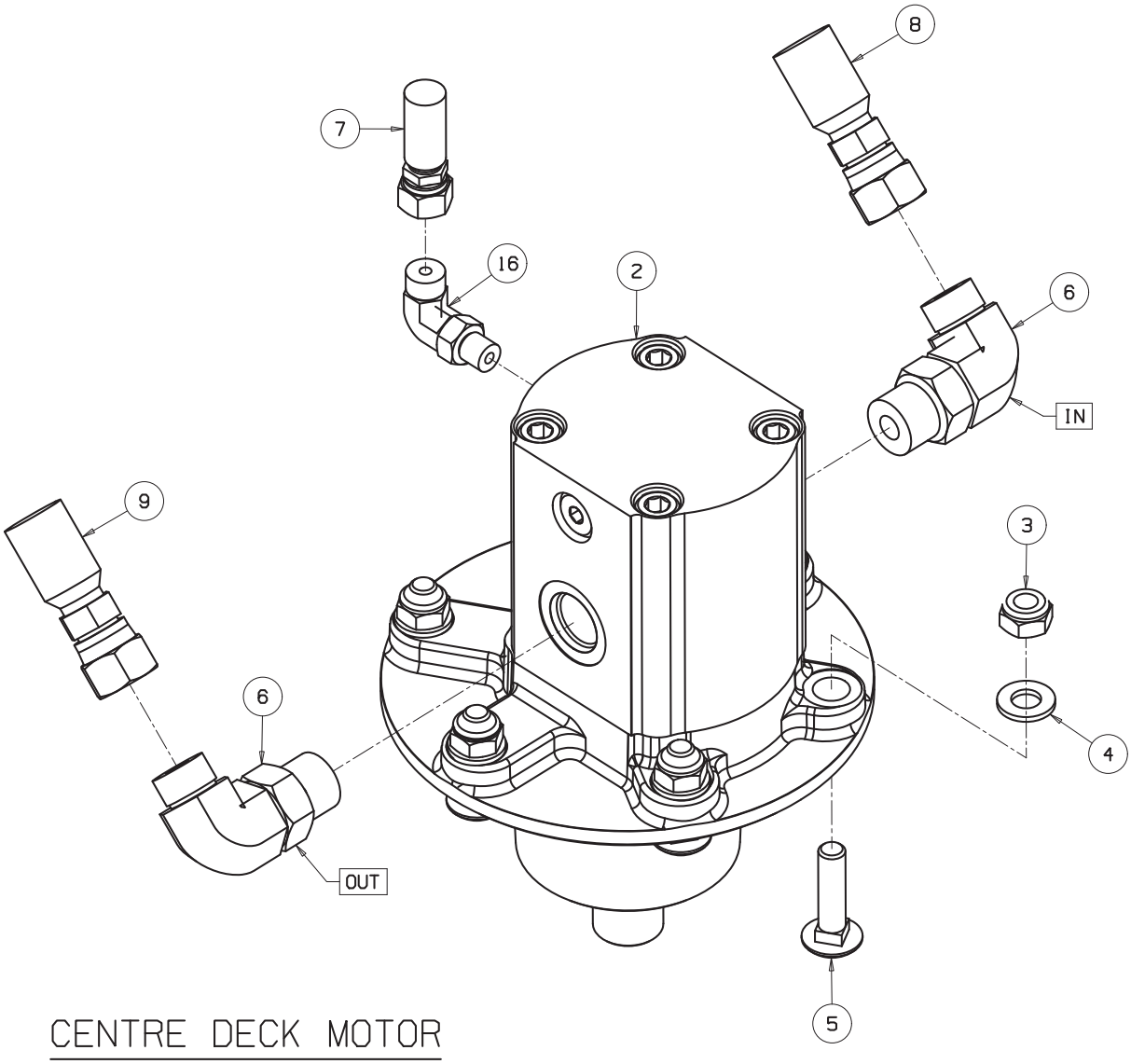

https://truckmanualshub.com/

ITEM	PART NO.	DESCRIPTION	QTY.	REMARKS
		CENTRE DECK MOTOR		
2	4118247	Motor-Deck CW Rotation	1	
*	4138728	Motor - Deck CCW Rotation	1	Painted Black
3	450379	Nut-Hex M10 Nyloc	6	
4	450391	Wshr-M10 x 21 x 2.2	6	
5	452588	Bolt-Crg M10 x 40	6	
6	158007-03	90-M/M 13/16 ORFS x 7/8 SAE	2	
*	158061-02	• O Ring	1	13/16" ORFS
*	002218104	• O Ring	1	7/8" SAE
7	4133907	Hyd Hose Assembly	1	Rear Cutter Drain to Manifold (to serial number EK000304)
7	4137214	Hyd Hose Assembly	1	(from serial number EK000305)
8	4133912	Hyd Hose Assembly	1	Blkhd to Rear Motor ’IN’
9	4136408	Hyd Hose Assembly	1	Blkhd to Frt Mtrs & Rear Mtr to Cutter Valve ’M2’
16	002525020	90-M/M 9/16 ORFS x 7/16 SAE	1	
*	158061-18	• O Ring	1	9/16" ORFS
*	002218049	• O Ring	1	7/16" SAE
		Items 8 & 9 reversed when CCW motor is fitted		

https://truckmanualshub.com/

ROTARY DECK MOTOR BREAKDOWN

Illustration Number: 4118247

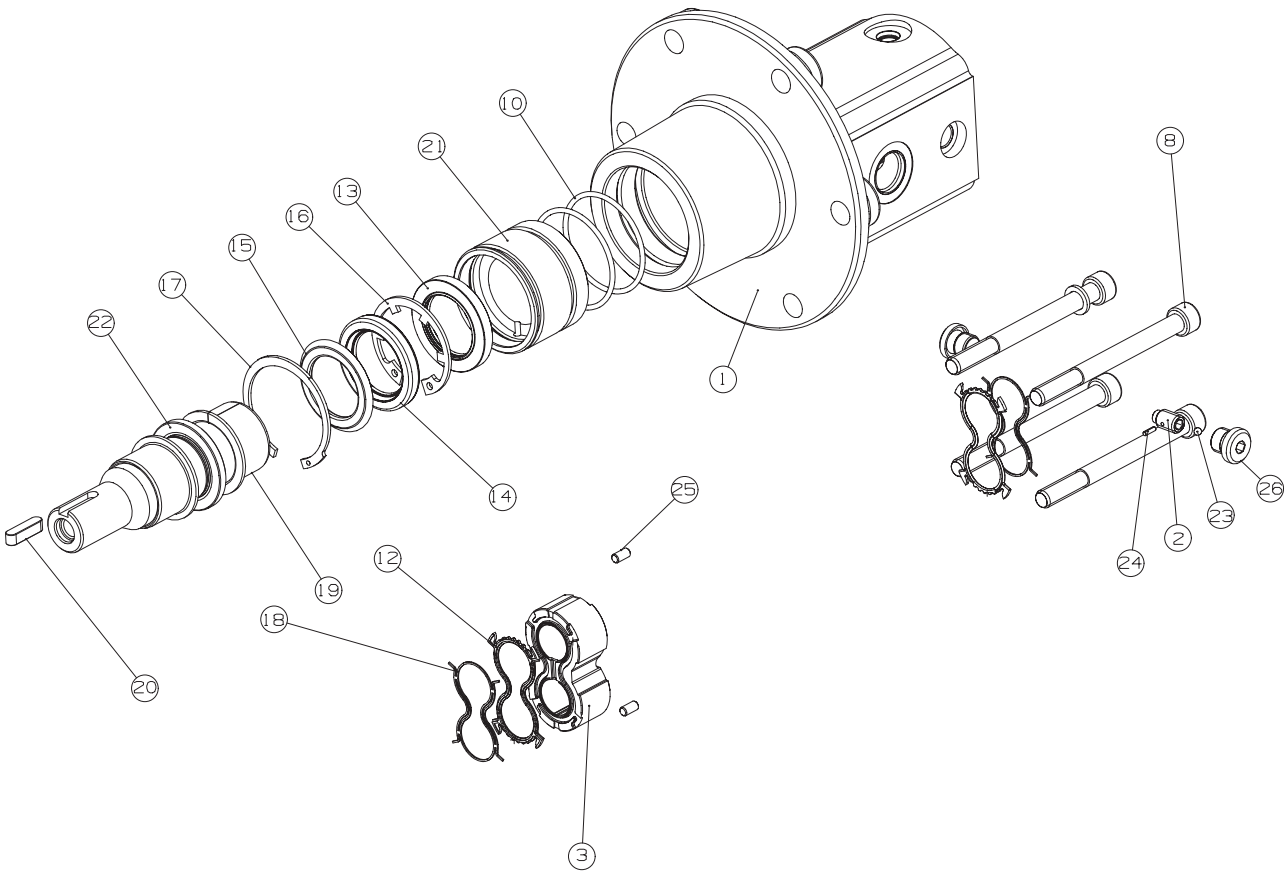

https://truckmanualshub.com/

ITEM	PART NO.	DESCRIPTION	QTY.	REMARKS
	4118247	Hydraulic Motor	1	Casappa
1		• Front Cover	1	
2		• Check Valve Body	1	
3		• Thrust Plate	1	
4		• Thrust Plate	1	
5		• Thrust Plate	1	
6		• Drive shaft	1	
7		• Driven gear	1	
8		• Screw	4	
9		• Washer	4	
10		• Seal	2	
11		• O Ring	1	
12		• Seal	2	
13		• Shaft Seal	1	
14		• Shaft Seal	1	
15		• Shaft Seal	1	
16		• Steel Ring	1	
17		• Steel Ring	1	
18		• Anti Extrusion Ring	2	
19		• Sleeve Bearing	2	
20		• Key	1	
21		• Sleeve Bearing Holder	1	
22		• Support Shaft	1	
23		• Ball	1	
24		• Dowl Pin	1	
25		• Dowl Pin	2	
26		• Steel Plug	2	
27		• Body	1	
	4157422	Seal Kit	1	

https://truckmanualshub.com/

HYDRAULIC CIRCUIT

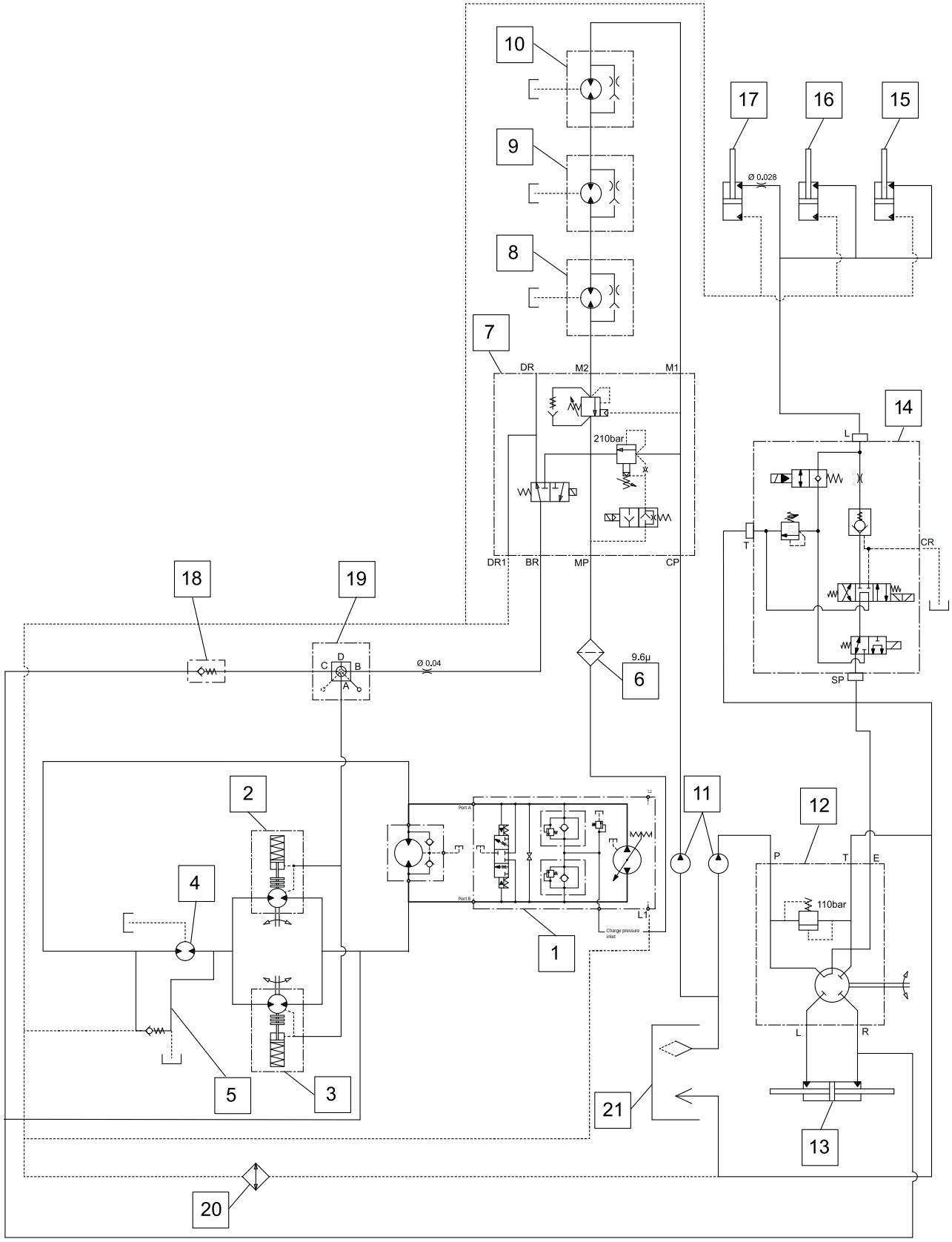

https://truckmanualshub.com/

KEY TO HYDRAULIC DIAGRAM

1	Transmission Pump
2	Hydraulic Wheel Motor Front
3	Hydraulic Wheel Motor Front
4	Hydraulic Wheel Motor Rear
5	Hydraulic Flushing Valve
6	Hydraulic Filter
7	Hydraulic Cutter & Brake Valve
8	Hydraulic Deck Motor
9	Hydraulic Deck Motor
10	Hydraulic Deck Motor
11	Cutter & Steering Pump
12	Hydraulic Steering Unit
13	Hydraulic Steering Cylinder
14	Hydraulic Lift Valve
15	Hydraulic Lift Cylinder
16	Hydraulic Lift Cylinder
17	Hydraulic Lift Cylinder
18	Hydraulic Check Valve
19	Hydraulic Brake Valve
20	Hydraulic Oil Cooler
21	Hydraulic Tank

https://truckmanualshub.com/

NADI ENGINE and MOUNTING

Illustration Number: 4134029_NADI.eps

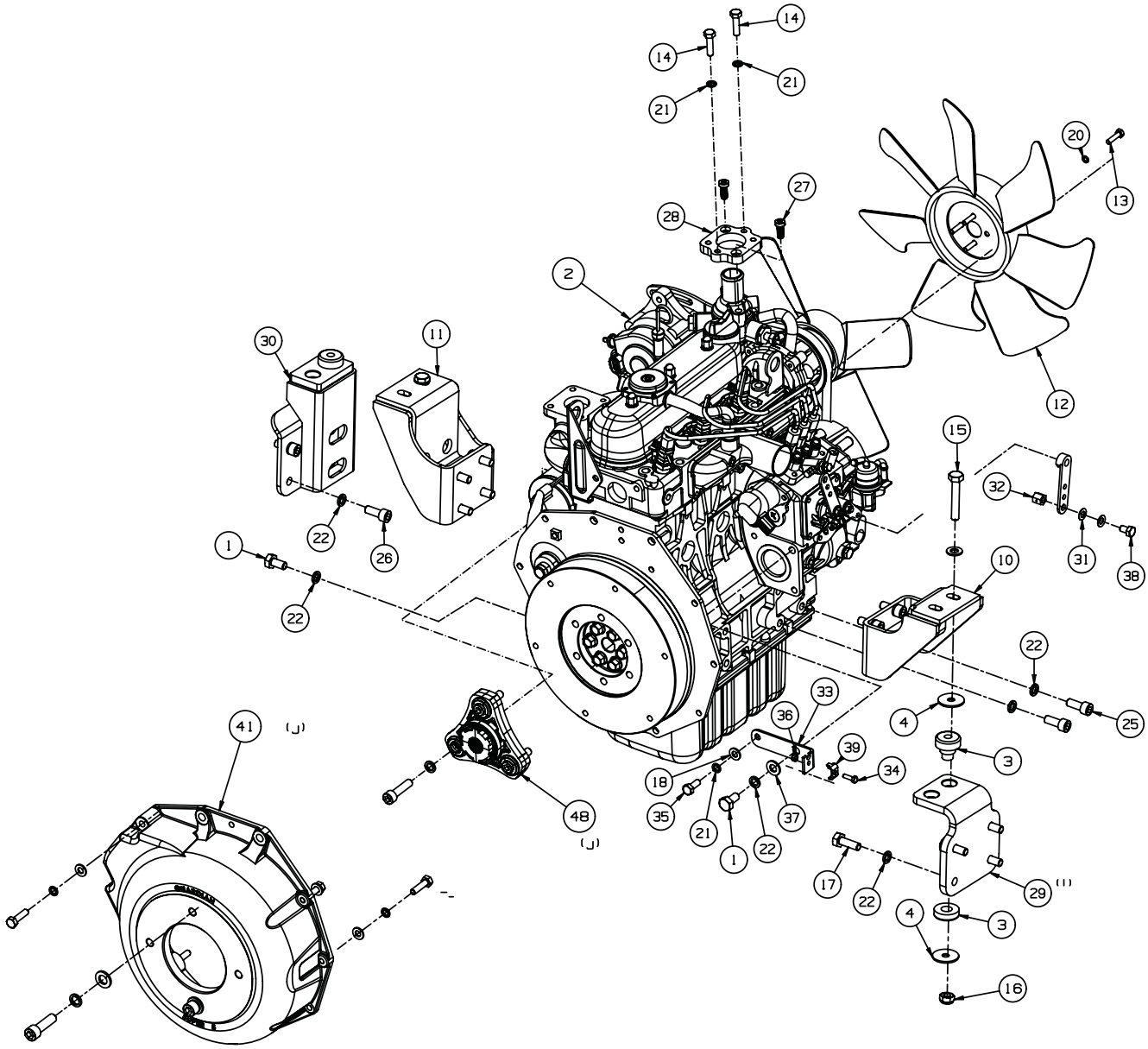

https://truckmanualshub.com/

ITEM	PART NO.	DESCRIPTION	QTY.	REMARKS
1	001190327	Screw Hex M10-1.25 X 20	2	KG Series Tier4 NADI DIESEL
2	4303995	Kubota - D1105 Non-turbo - Tier 4	1	From S/N KG000301
3	4139702	Isolation Mount	2	
4	452101510	Washer-3/8 X 1.375 X.092	4	
6	008902420	Pump Hub	1	
7	2208048-01	Bell Housing	1	
8	2208048-02	Nylon Flange Fle135	1	
10	4137114	Engine Mount LH	1	
11	4137117	Engine Mount RH	1	
12	4130987	Fan-370 Dia, 7-blade	1	
13	450000	Bolt Hex M6-1.0 X 25	4	
14	450014	Bolt Hex M8-1.25 X 30	10	
15	450034	Bolt Hex M10-1.5 X 60	2	
16	450379	Nut Hex M10-1.5 Nyloc	2	
17	450215	Screw Hex M10-1.5 X 30	4	
18	450390	Washer M8 X 17 X 1.8	9	
19	450392	Washer M12 X 24 X 2.7	2	
20	450410	Lock Washer M6 X 9.6 X 1.5	4	
21	450411	Lock Washer M8 X 12.75 X 2	11	
22	450412	Lock Washer M10 X 15.9 X 2.5	18	
23	450413	Lock Washer M12 X 17.9 X 2.5	2	
24	450756	Cap Screw Hex M12-1.75 X 40	2	
25	452740	Cap Screw Hex M10-1.25 X 25	8	
26	450738	Cap Screw Hex M10-1.5 X 25	4	
27	4285631	Cap Screw Hex M8-1.25 X 20	2	
28	MBG4164	Spacer-thermo	1	
29	4179140	Bracket ISO Mount	1	
30	4137121	ISO Mount RH	1	
31	002920501	Spring-disc 8.2 X 16 X 0.9	2	
32	172084	Throttle Clamp	1	
33	MBG2027A	Throttle Bracket	1	
34	450151	Screw Hex M5-0.8 X 16	1	
35	450191	Screw Hex M8-1.25 X 20	1	
36	450376	Nut Hex M5-0.8 Nyloc	1	
37	450391	Washer M10 X 21 X 2.2	3	
38	456010161	Screw Hex 5/16-24 X 1/2	1	
39	W022372	Throttle Clamp	1	
43	001191520	Screw Hex M10 X 35	2	
41	4172800	Bell Housing	1	
40	4172805	Coupling	1	
42	4177860	Cap Screw M10 X 40	3	
46	450014	Bolt M8 X 30	4	
45	450020	Bolt Hex M8 X 60	2	
44	450192	Screw Hex M8 X 25	2	

* Not Illustrated

https://truckmanualshub.com/

ENGINE & MOUNTING

Illustration Number: 4130885

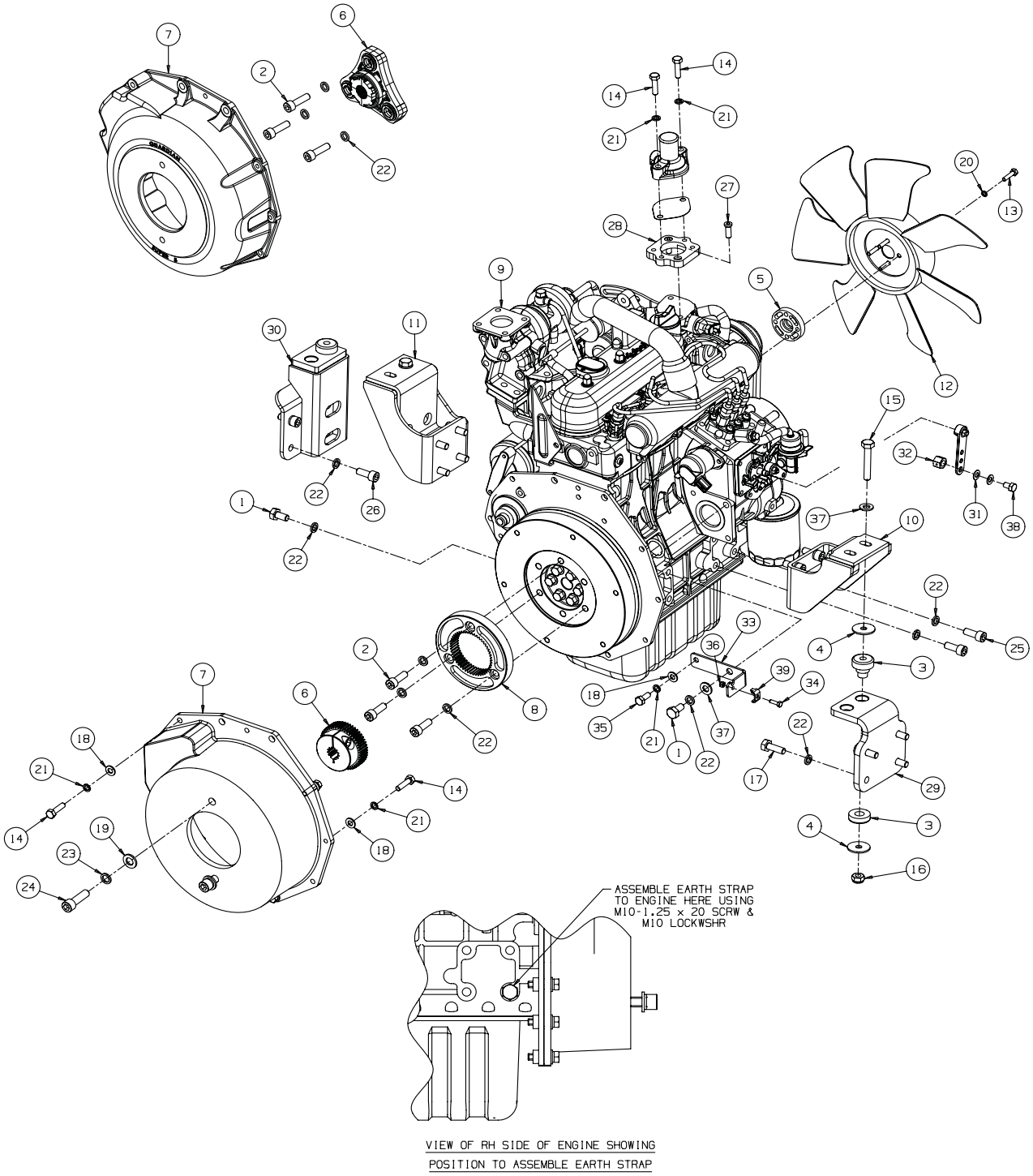

https://truckmanualshub.com/

ITEM	PART NO.	DESCRIPTION	QTY.	REMARKS
1	001190327	Scrw-Hex M10-1.25 x 20	2	
2	001290140	Capscrw-Sckt M10-1.25 x 30	3	
3	4139702	Isolation Mount	2	
4	442003927	Wshr-3/8 x 1.375 x 0.092	4	
5	006822150	Fan Spacer-10 mm	1	
6	008902420	Pump Hub	1	
6	4196203	Coupling-13T, Delta Super 5	1	From S/N GX000489
7	2208048-01	Bell Housing	1	
7	4172800	Bell Housing (Cast Iron)	1	
8	2208048-02	Nylon Flange FLE135	1	
9	4174101	Engine-Kubota D1105T-E3B	1	Tier 3b compliant turbo engine
*	1178025	• Engine Oil Filter	1	
10	4137114	Wldmt-Engine Mount LH	1	
11	4137117	Wldmt-Engine Mount RH	1	
12	4130987	Fan-370 Dia, 7-Blade	1	
13	450000	Bolt-Hex M6 x 25	4	
14	450014	Bolt-Hex M8 x 30	10	
15	450034	Bolt-Hex M10 x 60	2	
16	450379	Nut-Hex M10 Nyloc	2	
17	450215	Scrw-Hex M10 x 30	4	
18	450390	Wshr-M8 x 17 x 1.8	8	
19	450392	Wshr-M12 x 24 x 2.7	2	
20	450410	Lockwshr-M6 x 9.6 x 1.5	4	
21	450411	Lockwshr-M8 x 12.75 x 2	11	
22	450412	Lockwshr-M10 x 15.9 x 2.5	21	
23	450413	Lockwshr-M12 x 17.9 x 2.5	2	
24	450756	Capscrw-Sckt M12 x 40	2	
25	452740	Capscrw-Sckt M10-1.25 x 25	8	
26	450738	Capscrw-Sckt M10 x 25	4	
27	MBG4067	Scrw-Thermo Hsg	2	To S/N GX000638
27	4285631	Capscrw-Hex Sckt M8-1.25 x 20	2	From S/N GX000639
28	LMSE210	Kit-Thermo Hsg Spacer & Screws	1	
29	4179140	Wldmt - Bracket - Iso Mount LH	1	
30	4137121	Wldmt - Iso Mount RH	1	
31	002920501	Sprg-Disc 8.2 x 16 x 0.9	2	
32	172084	Throttle Clamp	1	
33	4137049	Throttle Bracket	1	To S/NGX000638
33	MBG2027A	Throttle Bracket	1	From S/N GX000639
34	450151	Scrw-Hex M5x 16	1	
35	450191	Scrw-Hex M8 x 20	1	
36	450376	Nut-Hex M5 Nyloc	1	
37	450391	Wshr-M10 x 21 x 2.2	3	
38	456010161	Scrw-Hex 5/16-24 x 1/2	1	

* Not Illustrated

https://truckmanualshub.com/

ENGINE & MOUNTING

Illustration Number: 4130885

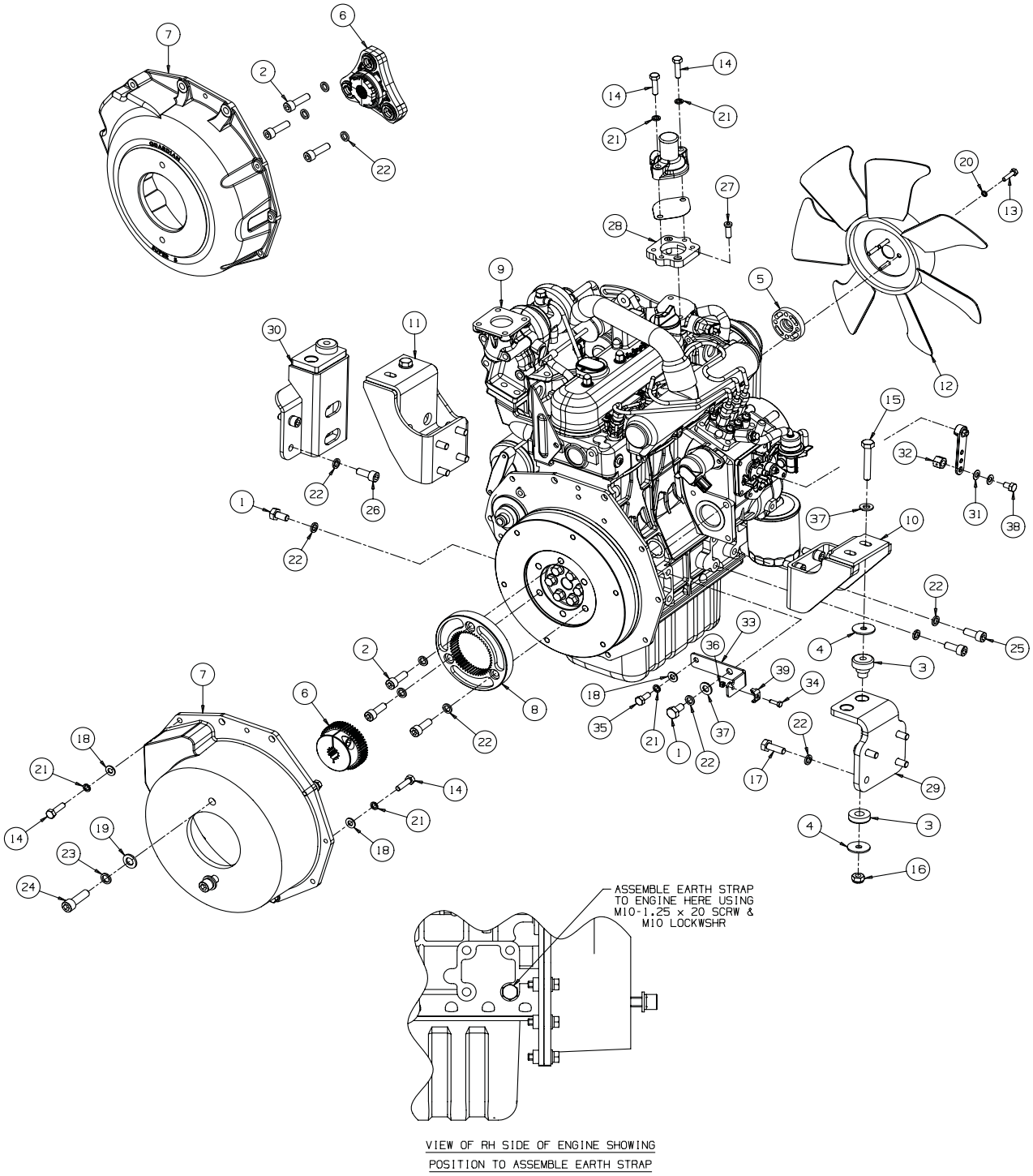

https://truckmanualshub.com/

ITEM	PART NO.	DESCRIPTION	QTY.	REMARKS
39	W022372	Throttle Clamp	1	
*	LMAC311	Coupling Kit	1	
*	LMAC312	Bell Housing Kit	1	
*	LMAC313	Bell Housing & Coupling Kit	1	
*	4176380	Kit-Bell Housing & Coupling	1	To S/N GX000488

* Not Illustrated

https://truckmanualshub.com/

EXHAUST MOUNTING

Illustration Number: 4135867

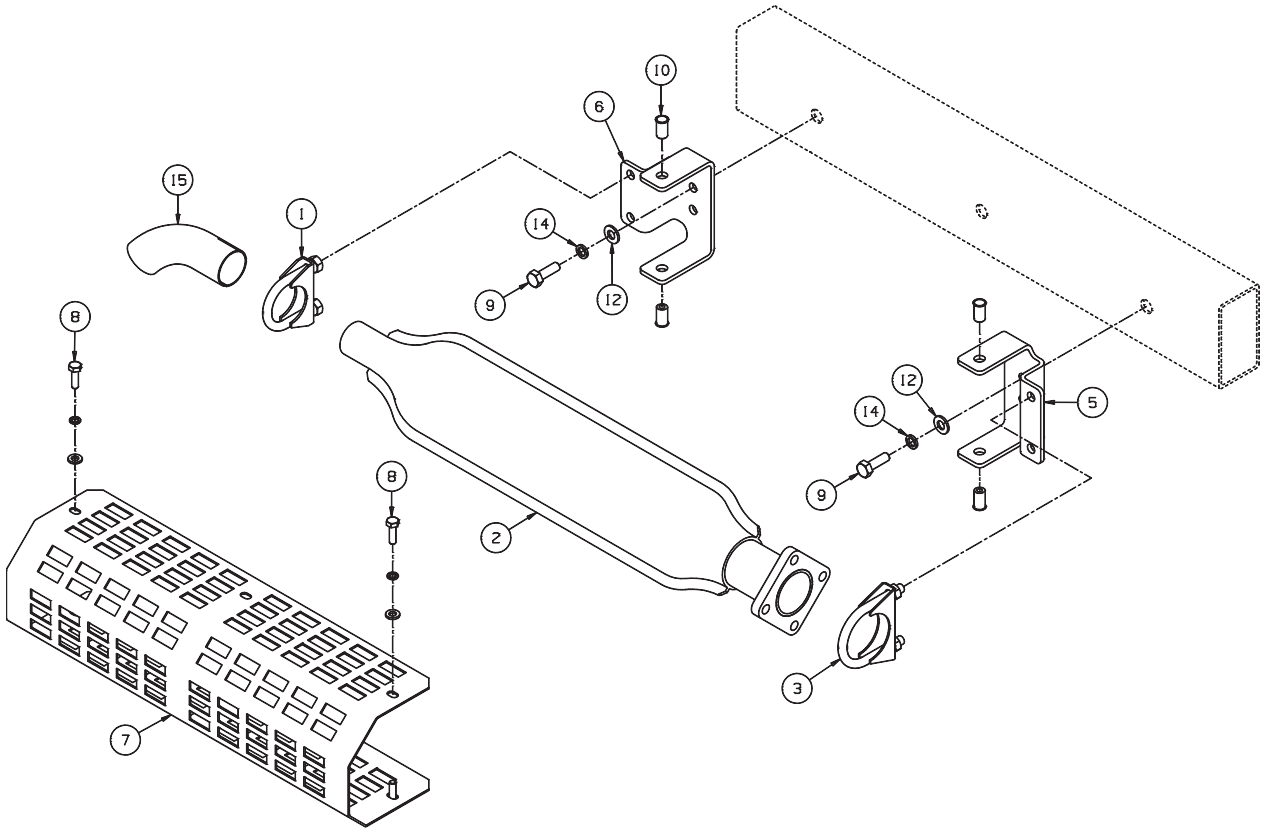

https://truckmanualshub.com/

ITEM	PART NO.	DESCRIPTION	QTY.	REMARKS
1	001990399	U-clamp, 1-3/8"	1	
2	4174421	Muffler	1	
3	4116132	U-clamp, 48 mm	1	
5	4135830	Bracket-Exhaust Mtg, Front	1	
6	4135831	Bracket-Exhaust Mtg, Rear	1	
7	4135847	Cover-Exhaust	1	
8	450171	Scrw-Hex M6 x 20	4	
9	450192	Scrw-Hex M8 x 25	2	
10	450358	Nutsert-M6 A-K x 17.3	4	
11	450389	Wshr-M6 x 12.5 x 1.8	4	
12	450390	Wshr-M8 x 17 x 1.8	2	
13	450410	Lockwshr-M6 x 9.6 x 1.5	4	
14	450411	Lockwshr-M8 x 12.75 x 2	2	
15	MBC1264	Tailpipe	1	

* Not Illustrated

https://truckmanualshub.com/

EXHAUST

Illustration Number: AR3_Exhausts.eps

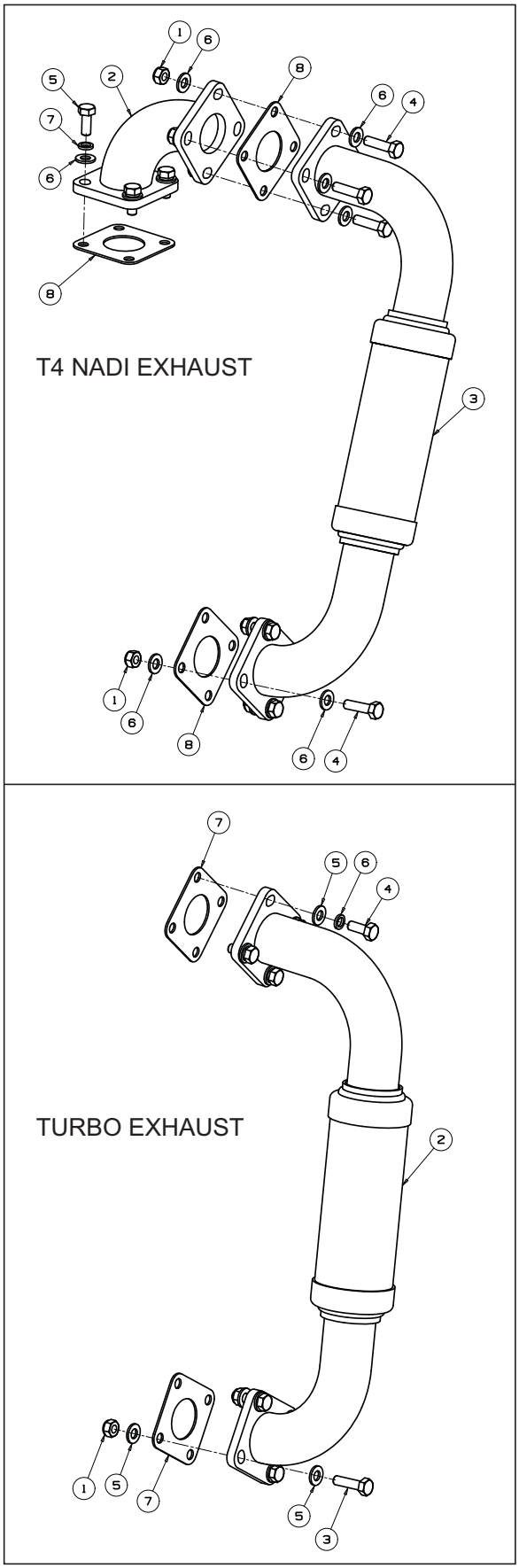

https://truckmanualshub.com/

ITEM	PART NO.	DESCRIPTION	QTY.	REMARKS
		TURBO EXHAUST		
1	001339050	Nut Hex M8 Staytite	4	
2	4136098	Exhaust Assembly	1	
3	450014	Bolt Hex M8 x 30	4	
4	450191	Screw Hex M8 x 20	4	
5	450390	Washer-M8 x 17 x 1.8	12	
6	450411	Washer - SLW M8	4	
7	553020	Gasket, Muffler	2	
		NADI EXHAUST T4		KG Series
1	001339050	Nut Hex M8 Staytite	4	From S/N KG000301
2	4136075	Wldmt-Exhaust Pipe	1	
3	4136098	Exhaust Assembly	1	
4	450014	Bolt Hex M8 x 30	8	
5	450191	Screw Hex M8 x 20	4	
6	450390	Washer-M8 x 17 x 1.8	20	
7	450411	Washer - SLW M8	4	
8	553020	Gasket, Muffler	3	

https://truckmanualshub.com/

RADIATOR & COWLING

Illustration Number: 4130886

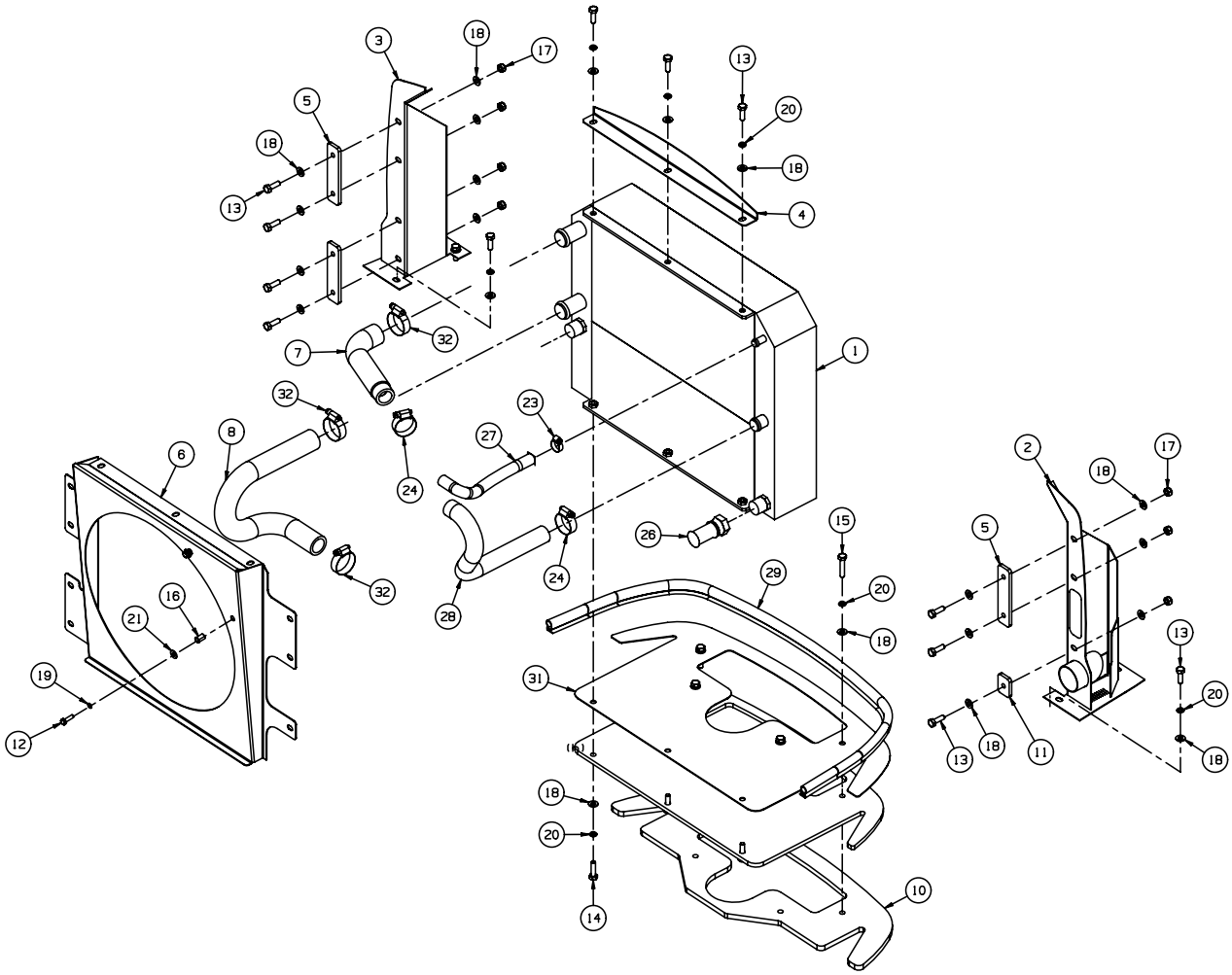

https://truckmanualshub.com/

ITEM	PART NO.	DESCRIPTION	QTY.	REMARKS
1	4130963	Asm-Radiator / Cooler	1	
2	4131095	Wldmt-Radiator Support LH	1	
3	4131096	Wldmt-Radiator Support RH	1	
4	4131123	Flange-Top, Radiator	1	
5	4131130	Spacer-Cowling	3	
6	4131165	Cowling-Radiator	1	
7	4132109	Hose-Upper Radiator	1	
8	4132119	Hose-Lower Radiator	1	
9	4133116	Plate-Radiator Mtg	1	
10	4133117	Plate-Radiator Mtg	1	
11	4133225	Spacer-Cowling	1	
12	450171	Scrw-Hex M6 x 20	2	
13	450192	Scrw-Hex M8 x 25	14	
14	450193	Scrw-Hex M8 x 30	3	
15	450195	Scrw-Hex M8 x 40	4	
16	450357	M6 Nutsert	2	
17	450378	Nut-Hex M8 Nyloc	7	
18	450390	Wshr-M8 x 17 x 1.8	28	
19	450410	Lockwshr-M6 x 9.6 x 1.5	2	
20	450411	Lockwshr-M8 x 12.75 x 2	14	
21	452100019	Wshr-1/4 x 5/8 x .064	2	
22 *	4238802	Bulk-Channel, Flx Trim	1.3	Quantity = metres
23	001925220	Hose Clamp, 8-22	1	
24	001925400	Hose Clamp, 19-40	2	
25	4133845	Hyd Hose Assembly	1	Trans Pump ‘L’ to Cooler ‘IN’
26	4133846	Hyd Hose Assembly	1	Cooler ‘OUT’ to Return Manifold Side
27	4259813	Hose-Exp Tank to Radiator	1	
28	4133916	Hose-Exp Tank to Radiator	1	
29	002989360	Seal-Engine Hood	1.1	Quantity = metres
31	4136834	Plate-Hood Seal	1	
32	108094-01	Hose Clamp, 19-44	3	

* Not Illustrated

https://truckmanualshub.com/

AIR CLEANER MOUNTING

Illustration Number: 4131759

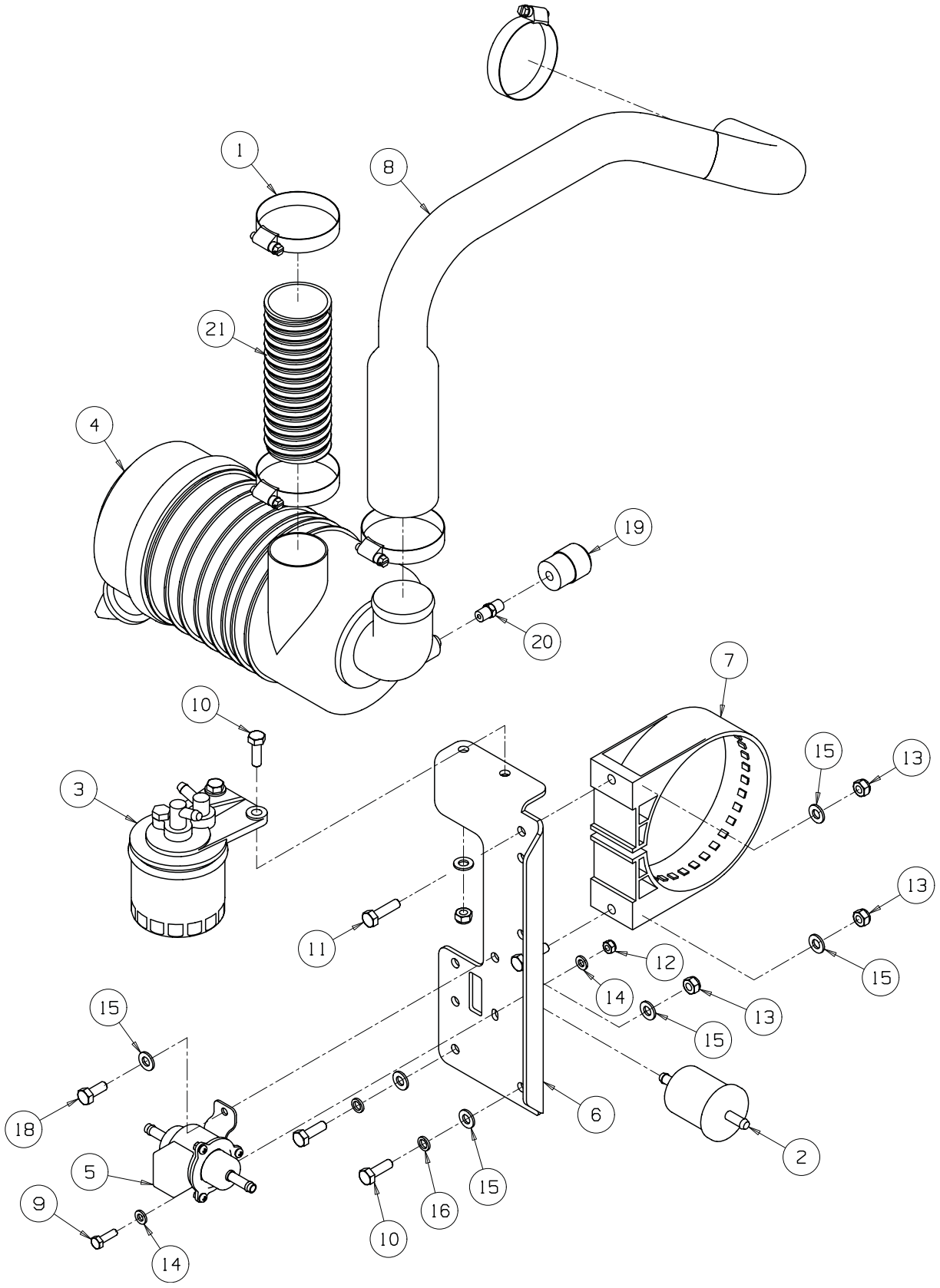

https://truckmanualshub.com/

ITEM	PART NO.	DESCRIPTION	QTY.	REMARKS
1	001925700	Hose Clamp 23-70	4	
2	006890160	In-Line Fuel Filter	1	
3	4136011	Fuel Filter	1	
	4136009	• Filter Canister	1	
4	2198147	Air Cleaner	1	
*	2198147-01	• Element	1	
*	2198147-02	• Valve-Dust Unloader	1	
*	2198147-03	• Cover	1	
*	2198147-04	• S-Cover Clip	1	
5	4126806	Electric Fuel Pump	1	
6	4243082	Bracket-Air Cleaner Mtg	1	
7	4133245	Mounting Band-5" Plastic	1	
8	4135927	Air Cleaner Hose	1	
9	450619	Scrw-Hex M6 x 20	1	
10	450192	Scrw-Hex M8 x 25	4	
11	450193	Scrw-Hex M8 x 30	2	
12	450377	Nut-Hex M6 Nyloc	1	
13	450378	Nut-Hex M8 Nyloc	5	
14	450389	Wshr-M6 x 12.5 x 1.8	2	
15	450390	Wshr-M8 x 17 x 1.8	8	
16	450411	Lockwshr-M8 x 12.75 x 2	2	
17*	680001941	Cable Tie-300 x 4.8	1	
18	450633	Scrw-Hex M8 x 20	1	
19	008109680	Restriction Indicator	1	
20	840346	Adaptor-Gauge	1	
21	4137196	Hose-Air Cleaner Intake	1	

* Not Illustrated

https://truckmanualshub.com/

EXPANSION TANK

Illustration Number: 4133518

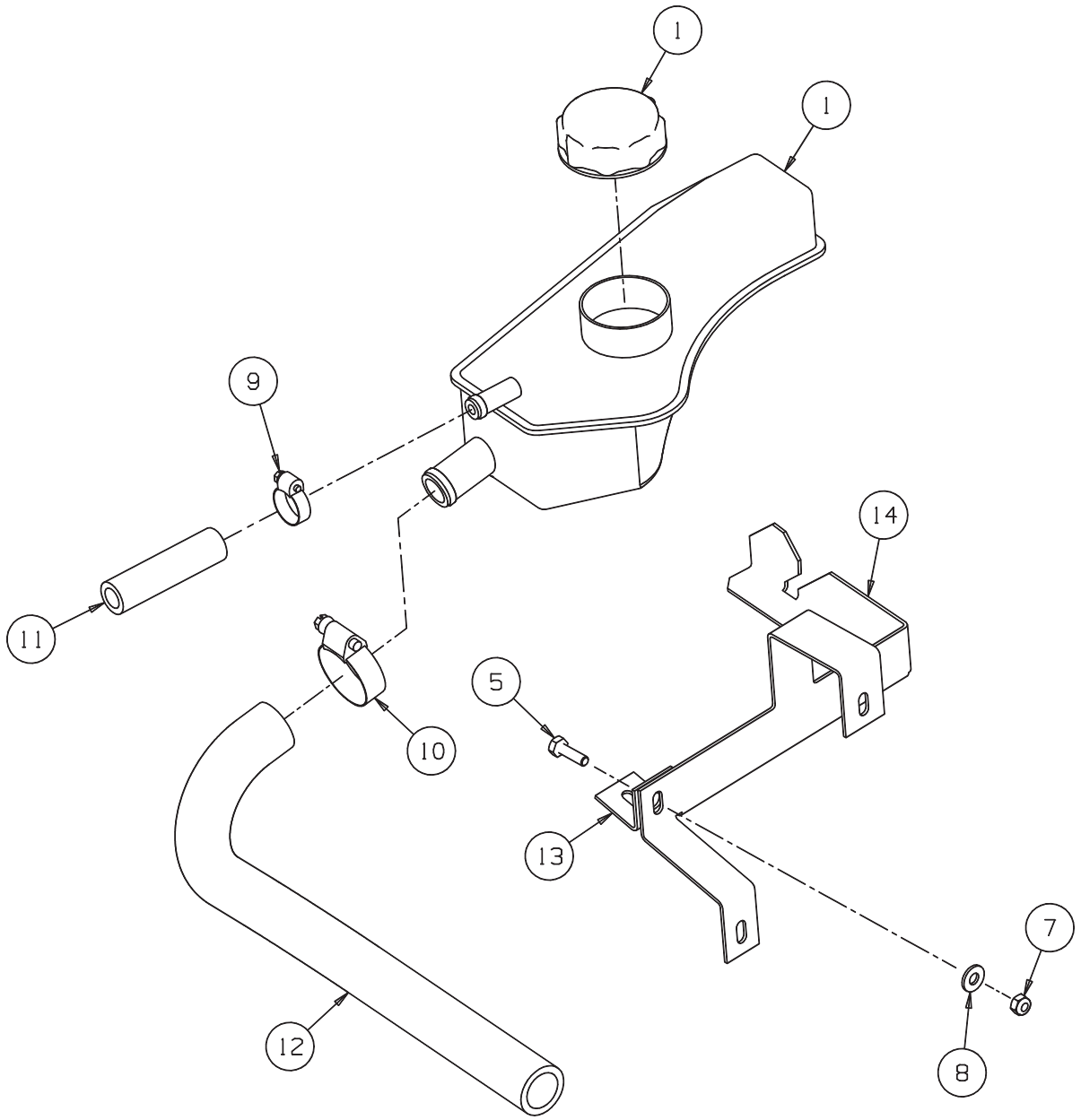

https://truckmanualshub.com/

ITEM	PART NO.	DESCRIPTION	QTY.	REMARKS
1	4123826	Expansion Tank & Cap	1	
*	4123828	• Pressure Cap-13 PSI	1	
5	450171	Scrw-Hex M6 x 20	1	
7	450377	Nut-Hex M6 Nyloc	1	
8	452100019	Wshr-1/4 x 5/8 x .064	2	
9	001925220	Hose Clamp, 8-22	1	
10	001925400	Hose Clamp, 19-40	1	
11	4133915	Hose-Exp Tank to Radiator	1	
12	4133916	Hose-Exp Tank to Radiator	1	
13	4165391	Bracket-Expansion Tank	1	
14	4165392	Bracket-Expansion Tank	1	

* Not Illustrated

https://truckmanualshub.com/

ENGINE HOOD

Illustration Number: 4131967

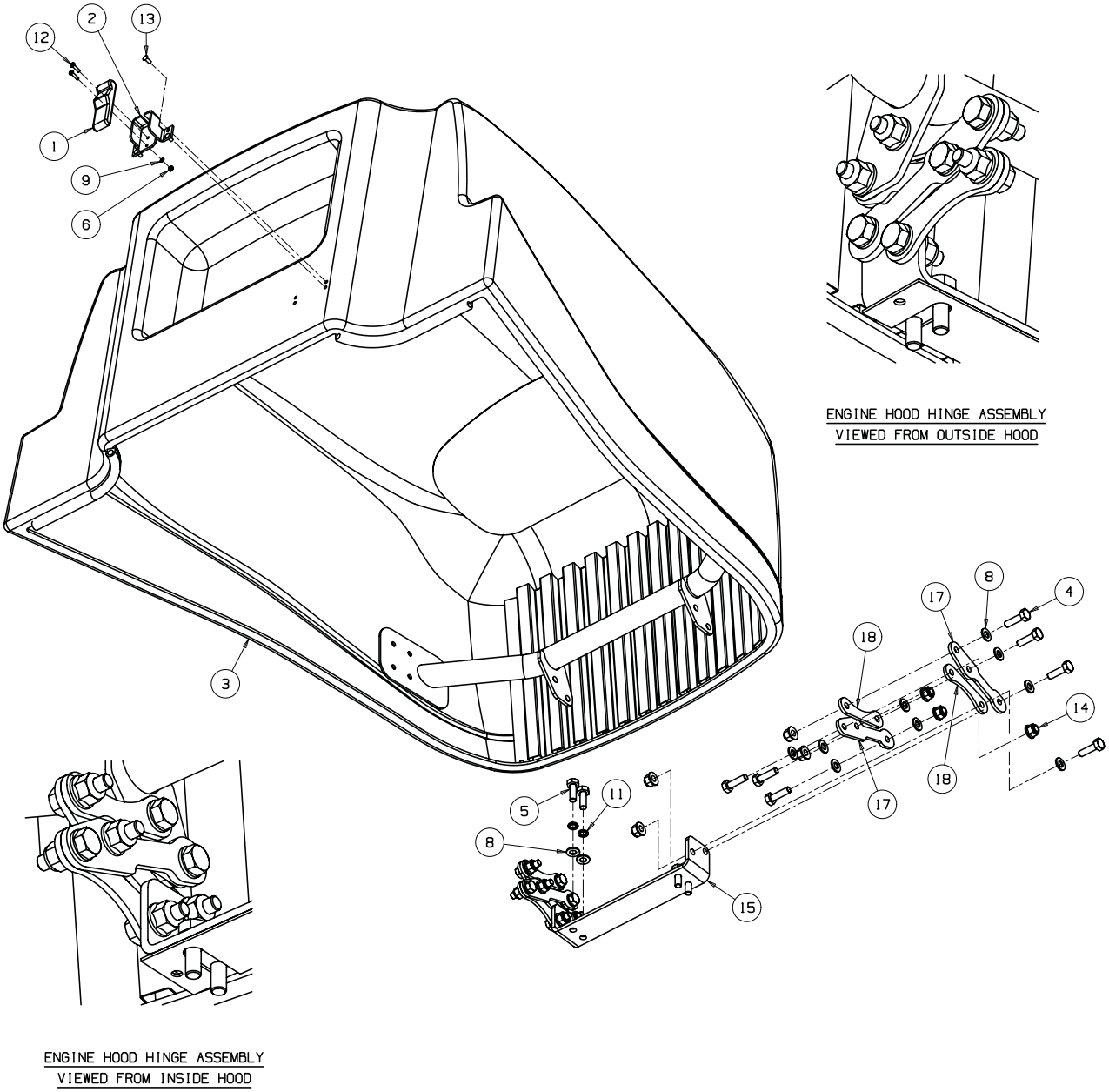

https://truckmanualshub.com/

ITEM	PART NO.	DESCRIPTION	QTY.	REMARKS
1	2198112	Latch	1	Complete Draw Latch Assembly
2	4131199	Brkt-Latch, Hood	1	
3	4171040	Asm-Engine Hood	1	
*	4137560	• Seal-Side Tube	2	
4	450029	Bolt-Hex M10 x 35	14	
5	450215	Scrw-Hex M10 x 30	4	
6	450321	Nut-Hex M4	2	
8	450391	Wshr-M10 x 21 x 2.2	22	
9	450408	Lockwshr-M4 x 6.95 x 1.2	2	
11	450412	Lockwshr-M10 x 15.9 x 2.5	4	
12	450519	Scrw-Pan Hd M4 x 16	2	
13	001496044	Rivet-Pop 4.8 x 12	4	
14	452437	Nut-Hex M10 Flange Nyloc	14	
15	MBG6824	Bonnet Bracket	1	
17	4137174	Hinge Bracket-Long	4	
18	MBG7112	Hinge Bracket-Short	4	
*	4207360	Cargo Net	1	

* Not Illustrated

https://truckmanualshub.com/

DECALS

Illustration Number: 4133967

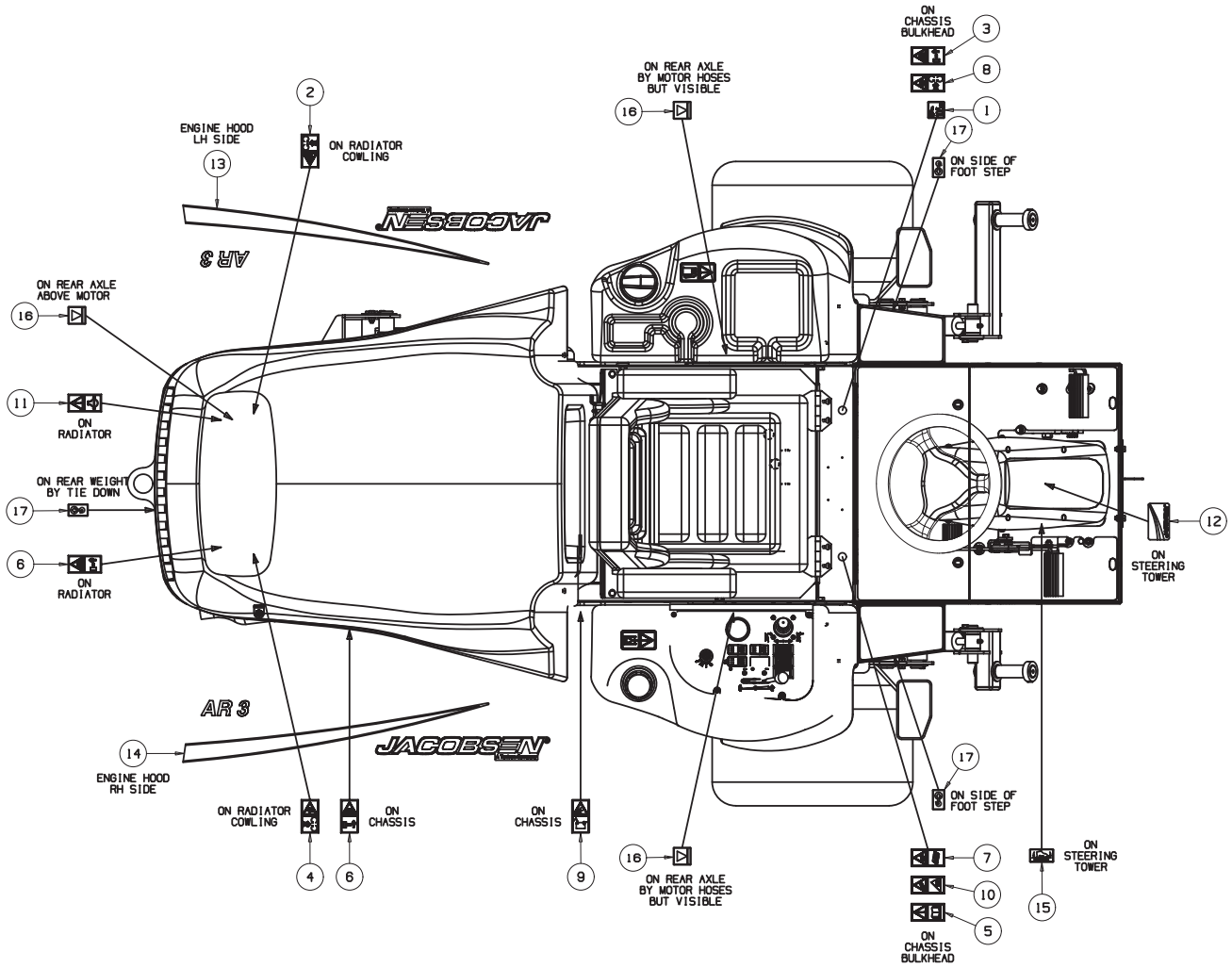

https://truckmanualshub.com/

ITEM	PART NO.	DESCRIPTION	QTY.	REMARKS
	IDL146	Kit-Decal, AR3		
1 +	009034770	• Decal-Noise 105dB	1	
2	009034880	• Decal-Fan	1	
3	009034890	• Decal-Bystander Warning	1	
4	009034900	• Decal-Belt	1	
5	009034910	• Decal-Instruction	1	
6	009034920	• Decal-Hot	2	
7	009034930	• Decal-Hyd Pressure Leak	1	
8	009034960	• Decal-Rotating Blades	1	
9	009114100	• Decal-Battery	1	
10	4333660	• Decal-Slope 17 Deg	1	
11	4118415	• Decal-Coolant Hazard	1	
12	4124182	• Emblem-Jacobsen	1	
13	4133929	• Decal-Hood LH, AR3	1	
14	4133931	• Decal-Hood RH, AR3	1	
15 +		• • Decal-Fwd/Rev	1	
16 +		• • Decal-Jacking	3	
17 +		• • Decal-Hooking	3	
18*	4146857	• Decal-Seat Belt ROPS	1	
19*	4153197	• Decal-Pressure Wash	1	
+		Included in Decal Set 4134053		

* Not Illustrated

https://truckmanualshub.com/

SEAT & MOUNTING PLATE

Illustration Number: 4137386

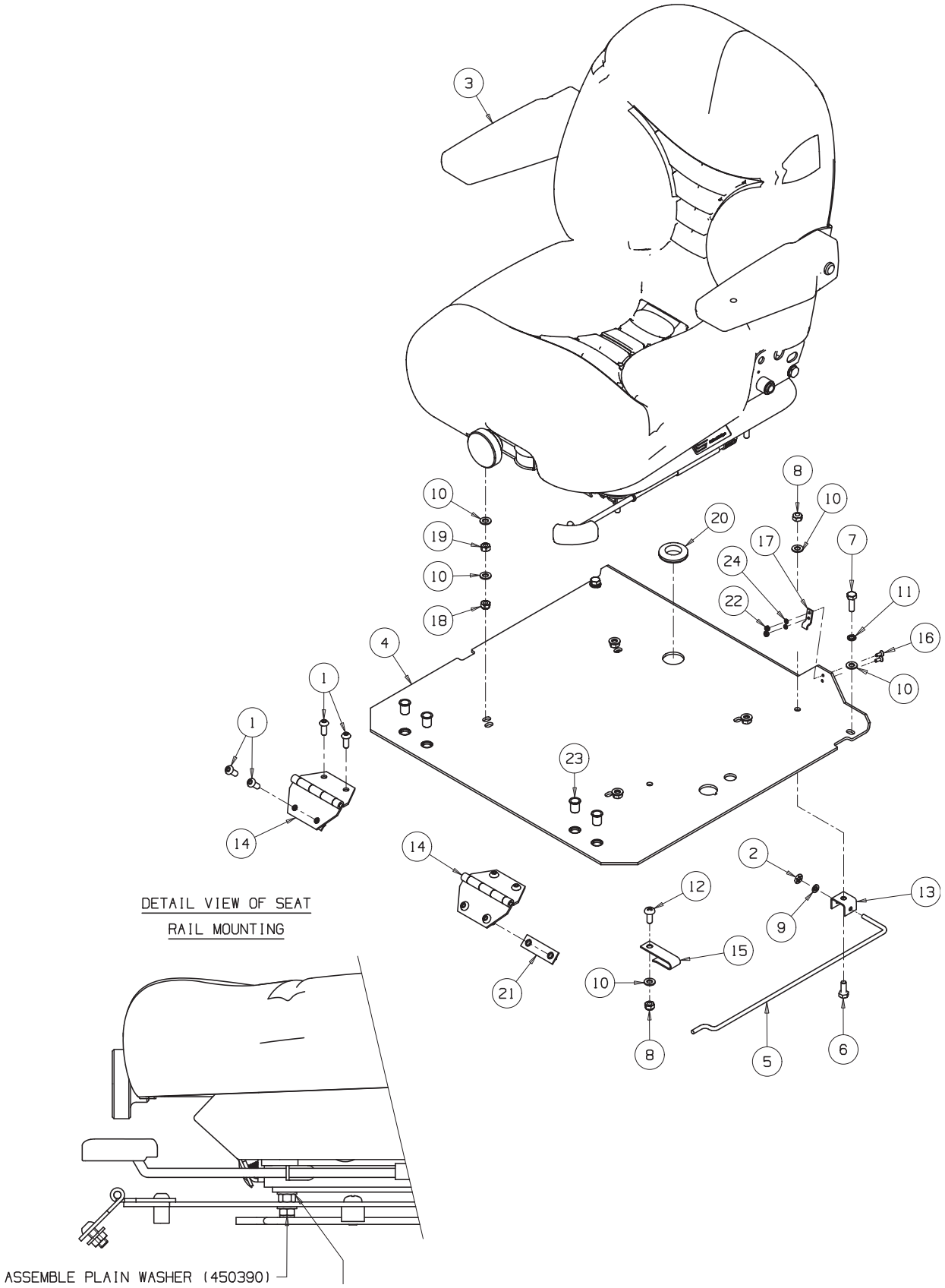

https://truckmanualshub.com/

ITEM	PART NO.	DESCRIPTION	QTY.	REMARKS
1	4142288	Scrw-Pan Hd M8 x 20 Torx	8	
2	001399139	Star Ring 6 mm	1	
3	4136247	Seat-Michigan V-5300 series	1	
3	4137966	Seat-Grammer MSG85	1	
4	4131166	Plate-Seat Mtg	1	
5	4132991	Seat Stay	1	
6	450191	Scrw-Hex M8 x 20	1	
7	450192	Scrw-Hex M8 x 25	2	
8	450378	Nut-Hex M8 Nyloc	2	
9	450389	Wshr-M6 x 12.5 x 1.8	1	
10	450390	Wshr-M8 x 17 x 1.8	12	
11	450411	Lockwshr-M8 x 12.75 x 2	2	
12	450552	Scrw-Pan Hd M8 x 20	1	
13	MBG0993.07	Bracket-Stay	1	
14	MBG2013.07	Hinge-Seat Stay	2	
15	MBG3241	Clip	1	
16	450594	Scrw-Csk M4 x 12	2	
17	2198112	Latch	1	Complete Draw Latch Assembly
18	001393222	Nut-Hex 5/16-18 Nyloc	4	
19	450120021	Nut-Hex 5/16-18	4	
20	002953420	Grommet-25.4 x 44.5 x 9.9	1	
21	4118558	Wldmt-Keep Plate	2	
22	450321	Nut-Hex M4	2	
23	450369	Nutsert-M8 A-L x 17.5	4	
24	450408	Lockwshr-M4 x 6.95 x 1.2	2	
25*	002989470	Foam	1.5m	

* Not Illustrated

https://truckmanualshub.com/

SEAT & MOUNTING PLATE FROM SERIAL NUMBER GX100869 & KG000440

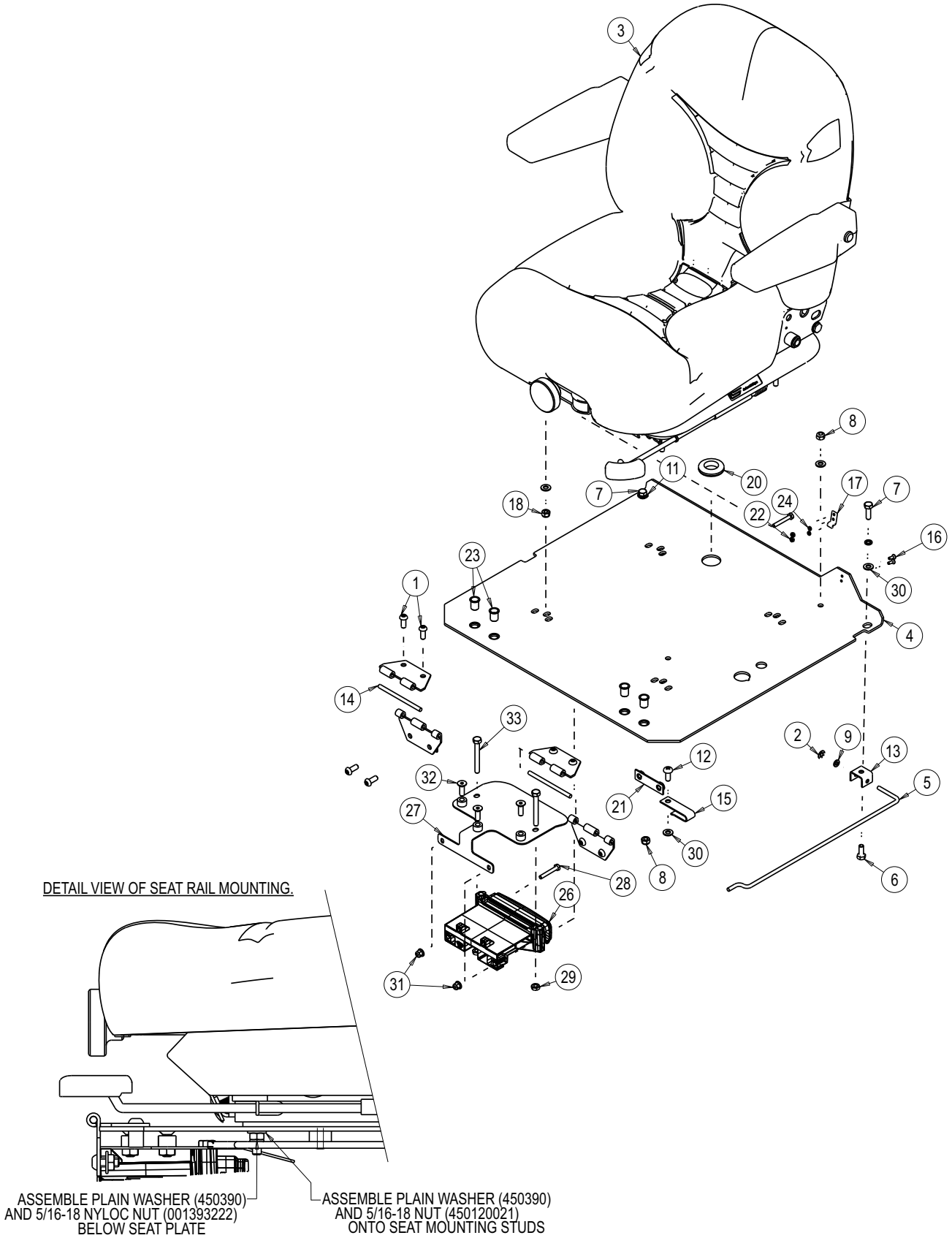

https://truckmanualshub.com/

ITEM	PART NO.	DESCRIPTION	QTY.	REMARKS
1	4142288	Torx Pan Head Screw M8 x 20	8	
2	001399139	6mm Star Ring	1	
3	4136247	Michigan V-5300 Seat	1	
4	4131166	Seat Mounting Plate	1	
5	4132991	Seat Stay	1	
6	450191	Hexagon Head Screw M8-1.25 x 20	1	
7	450192	Hexagon Head Screw M8-1.25 x 25	2	
8	450378	Hexagon Nyloc Nut M8-1.25	2	
9	450389	Washer M6 x 12.5 x 1.8	1	
11	450411	Lock Washer M8 x 12.75 x 2	2	
12	450552	Pan Head Screw M8-1.25 x 20	1	
13	MBG0993.07	Stay Bracket	1	
14	MBG2013.07	Seat Plate Hinge	2	
15	MBG3241	Clip	1	
16	450594	Countersunk Screw M4-0.7 x 12	2	
17	2198112	Draw Latch	1	Complete Draw Latch Assembly
18	001393222	Hexagon Nyloc Nut 5/16-18	4	
20	002953420	Grommet 25.4 x 44.5 x 9.9	1	
21	4118558	Keep Plate	2	
22	450321	Hexagon Nut M4-0.7	2	
23	450369	Nutsert M8-1.25 (a-l) (0.7-3.8 G/l)	4	
24	450408	Lock Washer M4 x 6.95 x 1.2	2	
25	002989470	Foam Strip	2	
26	4375328	Plus+1™ Programmed Controller	1	MC024 120
27	4375426	Controller Bracket	1	
28	450003	Hexagon Bolt M6-1.0 x 40	2	
29	450331	Hexagon Thin Nut M8-1.25	2	
30	450390	Washer M8 x 17 x 1.8	8	
31	452435	M8 Hexagon Flanged Nyloc Nut	2	
32	450866	Countersunk Hexagon Socket Screw M8-1.25 x 25	3	
33	450021	Hexagon Bolt M8-1.25 x 65	2	

https://truckmanualshub.com/

MICHIGAN V-5300 SERIES SEAT

Illustration Number: 4136247-3

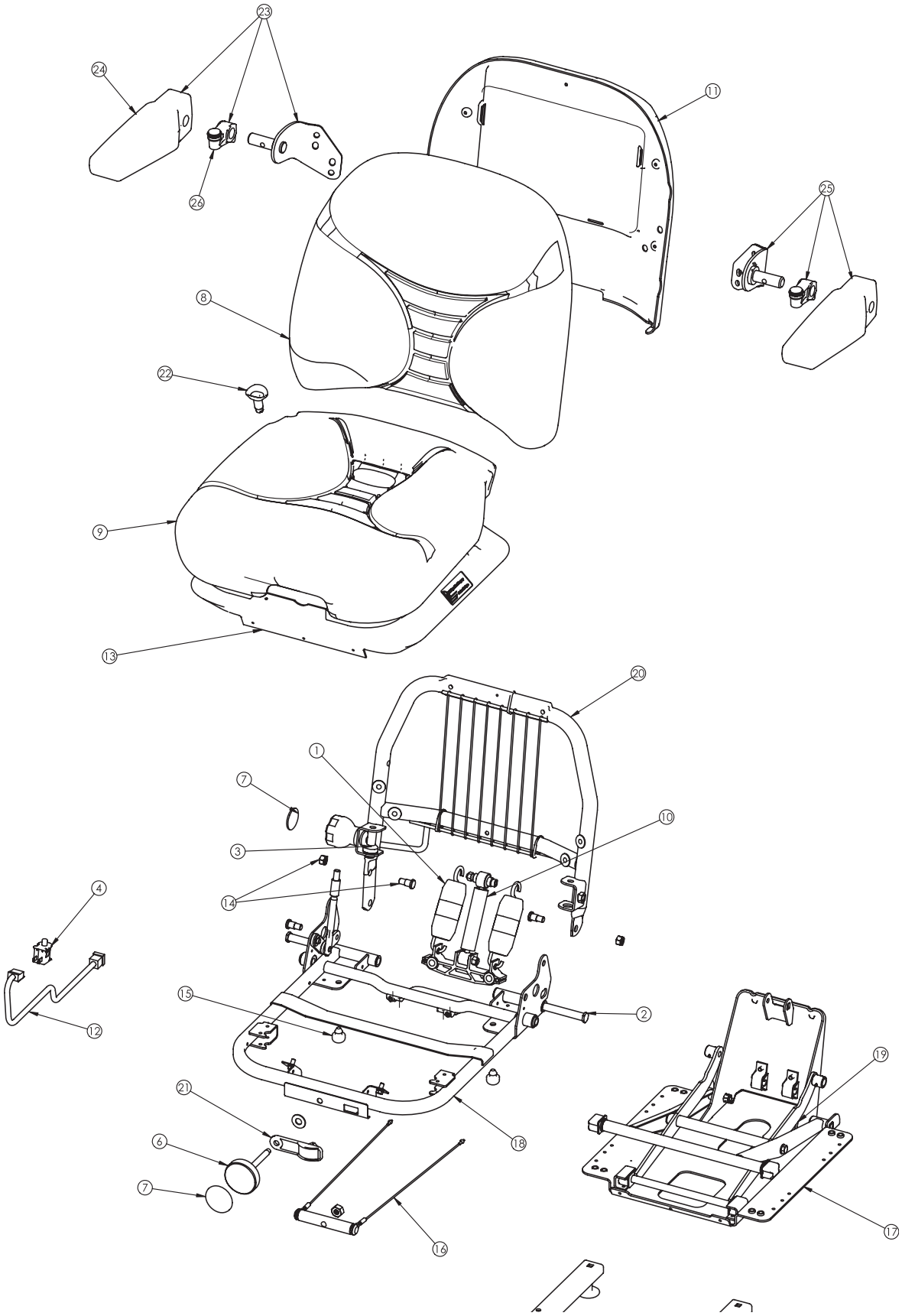

https://truckmanualshub.com/

ITEM	PART NO.	DESCRIPTION	QTY.	REMARKS
1	4136899	Spring & Saddle Kit	1	
2	4136900	Shaft / Bearing Kit	1	
3	4136901	Gear Kit	1	
4	4136902	Switch - Snap Mount Kit	1	
5	4136903	Slide Kit	1	
6	4136904	Knob Kit	1	
7	4136905	Label Kit	1	
8	4136906	Back Cushion Kit	1	
9	4136907	Seat Cushion Kit	1	
10	4136908	Shock Absorber Kit	1	
11	4136909	Back Panel Kit	1	
12	4136910	Wire Harness Kit	1	
13	4136911	Boot Kit	1	
14	4136912	Pivot Bolt Kit	1	
15	4136913	Bumper Kit	1	
16	4136914	Weight Adjust Kit	1	
17	4136915	Susp. Base Weldment Kit	1	
18	4136916	Seat Frame Weldment Kit	1	
19	4136917	Linkage Assy Kit	1	
20	4136918	Back Frame Weldment Kit	1	
21	4136919	Weight Ind Assy Kit	1	
22	4136920	Water Drain Kit	1	
23	4136921	Armrest Assy RH Kit	1	
24	4136922	Armrest, Moulded Kit	1	
25	4136923	Armrest Assy LH Kit	1	
26	4136924	Armrest Stop Assy	1	

* Not Illustrated

GRAMMER MSG 85 SEAT (4137966) - SUSPENSION

Illustration Number: 4137966-3

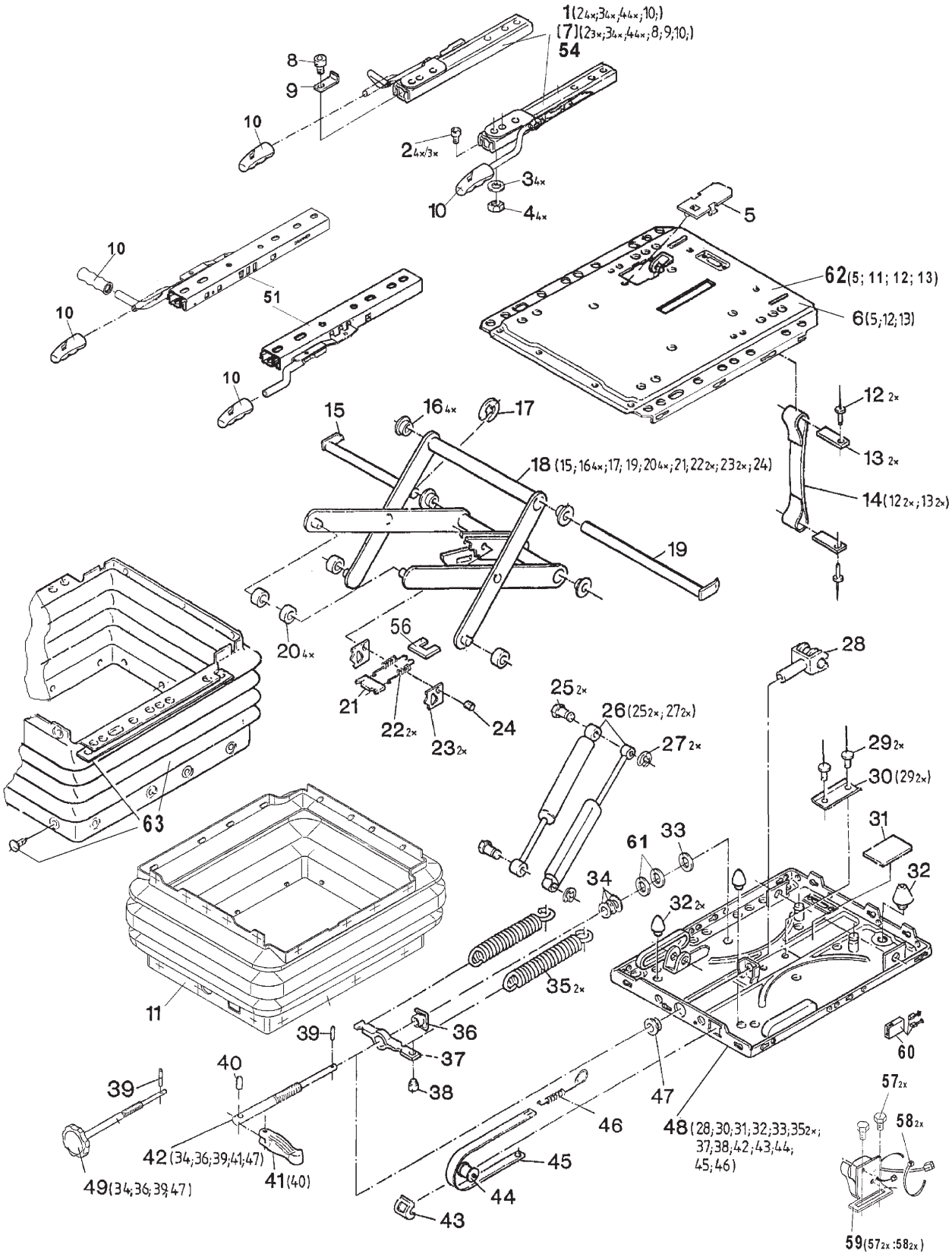

https://truckmanualshub.com/

ITEM	PART NO.	DESCRIPTION	QTY.	REMARKS
5	008173680	Cover	1	
6		Kit, Suspension Upper	1	
11		Kit, Bellow	1	
15	008173790	Bolt	1	
16	008173800	Bushing	4	
18	008199900	Swing Arm Kit	1	
19		Bolt	1	
20	008173780	Roller	4	
21	008173820	Plate	1	
22		Tension Spring	2	
23	008173830	Release Plate	2	
24	008173840	Bolt	1	
25	008173710	Bolt, M8 x 22, Yellow	2	
26	008199680	Kit, Shock Absorber, S	1	
27	008173720	Washer, Retaining, 5 mm	2	
28	4197067	Fork	1	
29	008173740	Rivet, 4.0 x 10.0	2	
30		Bracket, U-Shaped Pro	1	
31	008173760	Rubber Plate	1	
32	008173730	Bumper Set	1	
33	008173870	Thrust Washer Kit	1	
35	008144410	Spring, Tension	2	
36	008173880	Nut, M12, Flange	1	
37	008173910	Spring Bracket	1	
38	008173930	Plug, Retainer	1	
39		Pin, 3.0 x 16	1	
40		Pin, 4 x 28	1	
41		Handle (Toggle)	1	
42		Adjustment Spindle	1	
43	008173950	Guide	1	
44	008193960	Roller	1	
45	008193920	Band, Weight, 130 kg	1	
46	008173940	Tension Spring	1	
47		Bushing	1	
52		Suspension Lower Par	1	
53		Fixing Parts	1	
55		Suspension MSG85	1	
57		Screw, M6 x 12	2	
58		Ties, Cable, 2.5 x 102	2	
59	4160220	Switch	1	
60	008174000	Connector, Electrical	1	

* Not Illustrated

GRAMMER MSG 85 SEAT -SEAT TOP

Illustration Number: 4137966-5

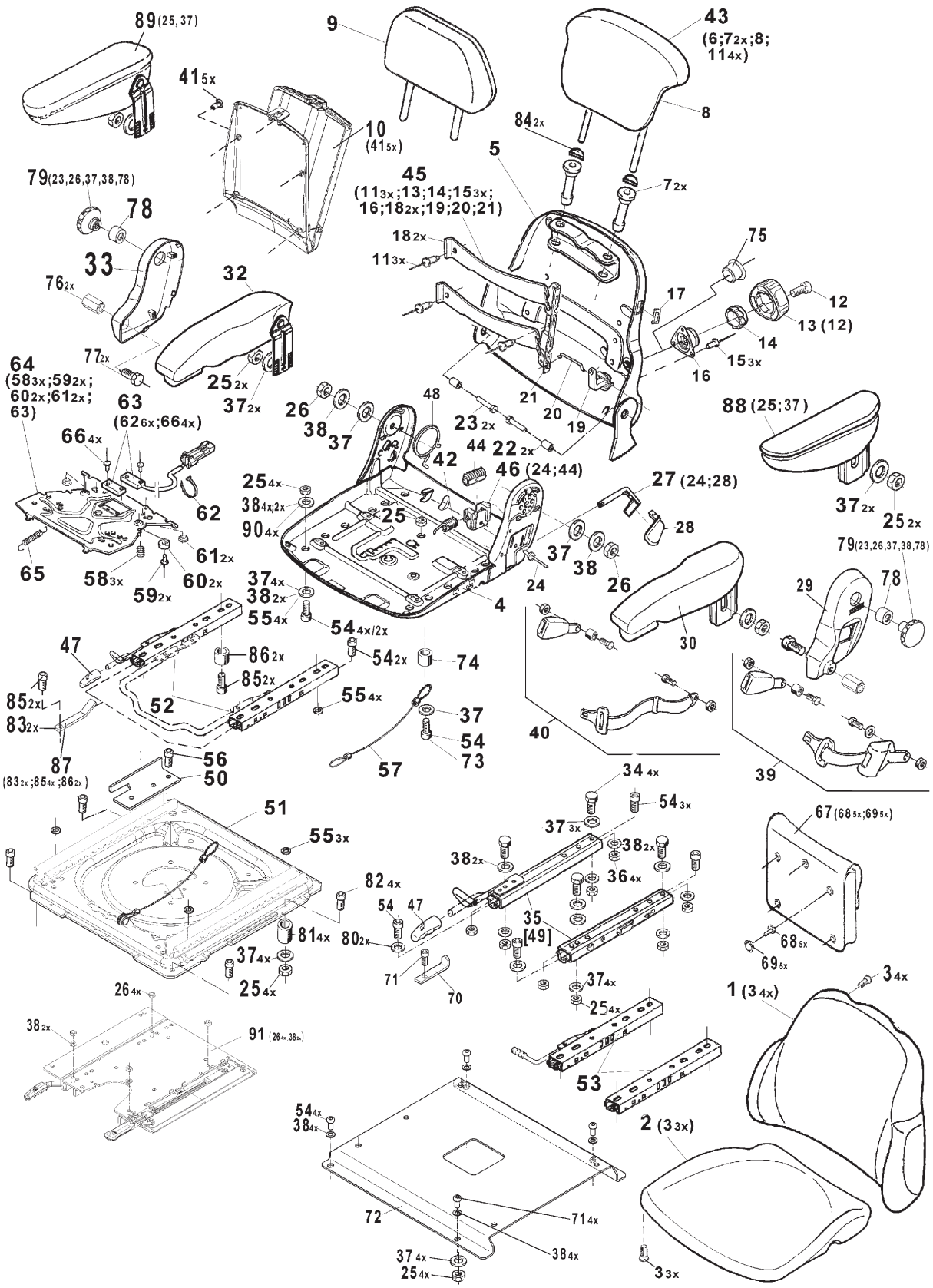

https://truckmanualshub.com/

ITEM	PART NO.	DESCRIPTION	QTY.	REMARKS
1	4185280	Assy, Cushion, Backrest	1	142219
2	4178162	Assy, Cushion, Seat	1	142220
3		Screw, M5 x 25, Pan Hd	7	1054392
4		Seat Pan	1	1075488
5		Backrest Pan Kit	1	140682
7		Tube	2	138686
8		Backrest Extension	1	1105077
22		Tube	2	138686
23		Screw, M8-1.25 x 40	2	118558
24		Rivet, 6 x 12	1	1103259
25		Nut, Hex, M8-1.25	6	110291
26	113048	Nut, Hex, M8-1.25	2	113048
27		Lever	1	140675
28		Handle, Grey	1	139454
29		Cover, LH, Blk	1	1078696
33		Cover, RH, Blk	1	1078701
34		Screw M8 x 16	4	111030
35		Set of Adjustment Rails	1	135236
36		Nut, Hex M8-1.25	4	139843
37		Washer, Flat, M8	11	113290
38		Washer 8.4-Hv140	6	110489
39		Kit, Seatbelt, 2 Retractable	1	902133
40		Seatbelt, 2 Non-retractable	1	902125
42		Spring, Spiral	1	1046892
44		Stop	1	142257
46		Bearing Kit	1	139255
48		Spring, Leg, Backrest	1	142152
49		Set of Adjustment Rails	1	136243
54		Screw, M8 x 16, Hex Socket	4	122949
67		Literature Box	1	One supplied
*		Literature Holder (net)	1	
68		Blind Rivet 3.2 x 11.2	5	135786
69		Ball	5	106408
88	4188242	Armrest	1	141172
89	4188244	Armrest	1	141173

https://truckmanualshub.com/

TRACTION PEDAL

Illustration Number: 4130703

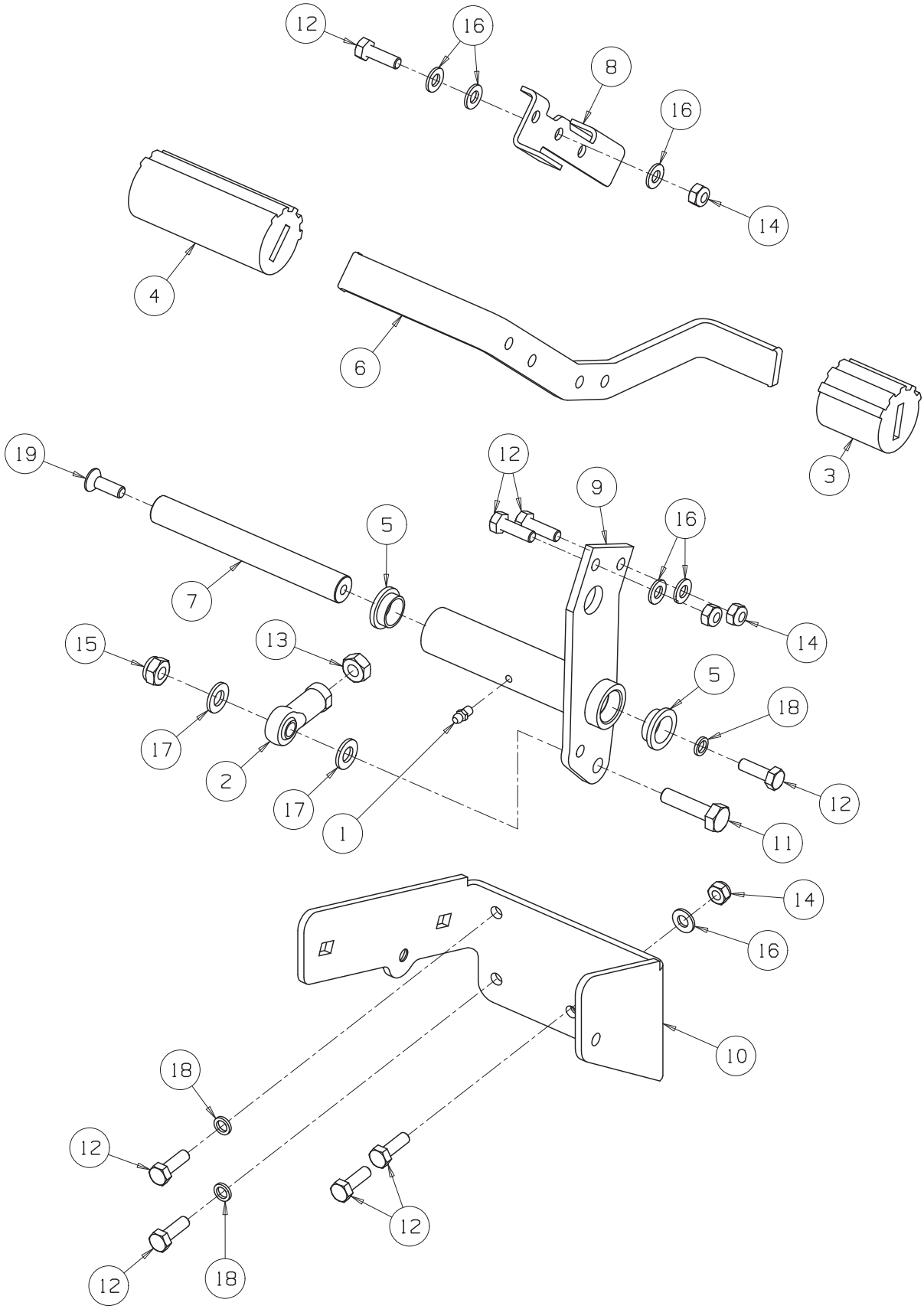

https://truckmanualshub.com/

ITEM	PART NO.	DESCRIPTION	QTY.	REMARKS
1	002993013	Lubricator-M6 Straight	1	
2	008145450	Rod End M10	1	
3	3003474	Grip-Pedal	1	
4	3003475	Grip-Pedal	1	
5	4130415	Bush-Flng 3/4 x 7/8 x 3/8	2	
6	4130704	Pedal-Traction	1	
7	4130705	Shaft-Pivot, Pedal	1	
8	4130706	Stop-Mow Speed	1	
9	4130707	Wldmt-Lever, Pedal	1	
10	4134965	Bracket-Pedal Mounting	1	
11	450030	Bolt-Hex M10 x 40	1	
12	450192	Scrw-Hex M8 x 25	8	
13	450325	Nut-Hex M10	1	
14	450378	Nut-Hex M8 Nyloc	5	
15	450379	Nut-Hex M10 Nyloc	1	
16	450390	Wshr-M8 x 17 x 1.8	7	
17	450391	Wshr-M10 x 21 x 2.2	2	
18	450411	Lockwshr-M8 x 12.75 x 2	3	
19	450866	Scrw-Sckt Csk M8 x 25	1	

* Not Illustrated

https://truckmanualshub.com/

TRACTION PEDAL DAMPER

Illustration Number: 4135110

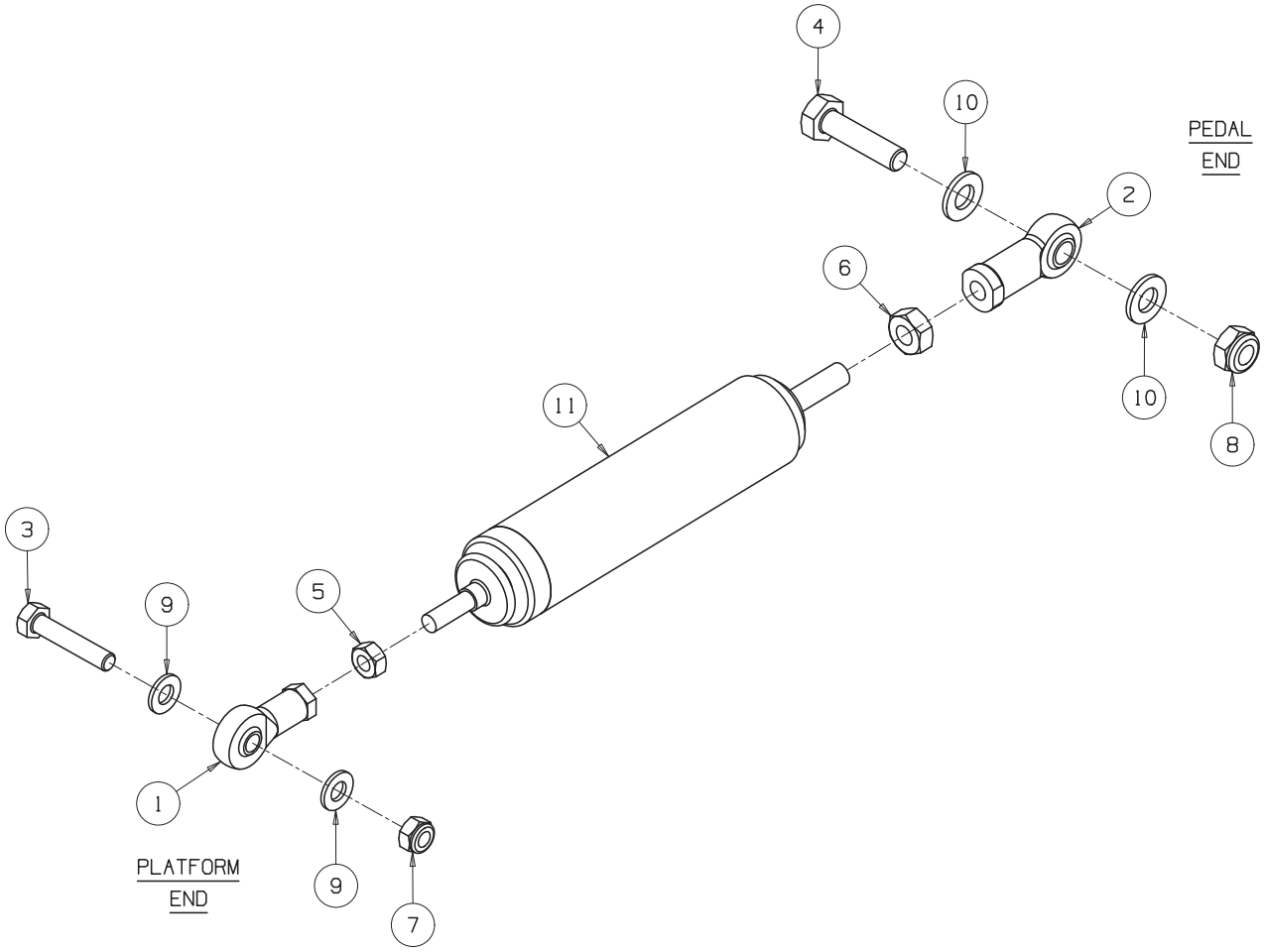

https://truckmanualshub.com/

ITEM	PART NO.	DESCRIPTION	QTY.	REMARKS
1	008145117	Rod End-M8 RH	1	
2	008145450	Rod End M10	1	
3	450016	Bolt-Hex M8 x 40	1	
4	450030	Bolt-Hex M10 x 40	1	
5	450324	Nut-Hex M8	1	
6	450325	Nut-Hex M10	1	
7	450378	Nut-Hex M8 Nyloc	1	
8	450379	Nut-Hex M10 Nyloc	1	
9	450390	Wshr-M8 x 17 x 1.8	2	
10	450391	Wshr-M10 x 21 x 2.2	2	
11	4135777	Asm-Damper Control	1	

* Not Illustrated

https://truckmanualshub.com/

DAMPER CONTROL

Illustration Number: 4135777

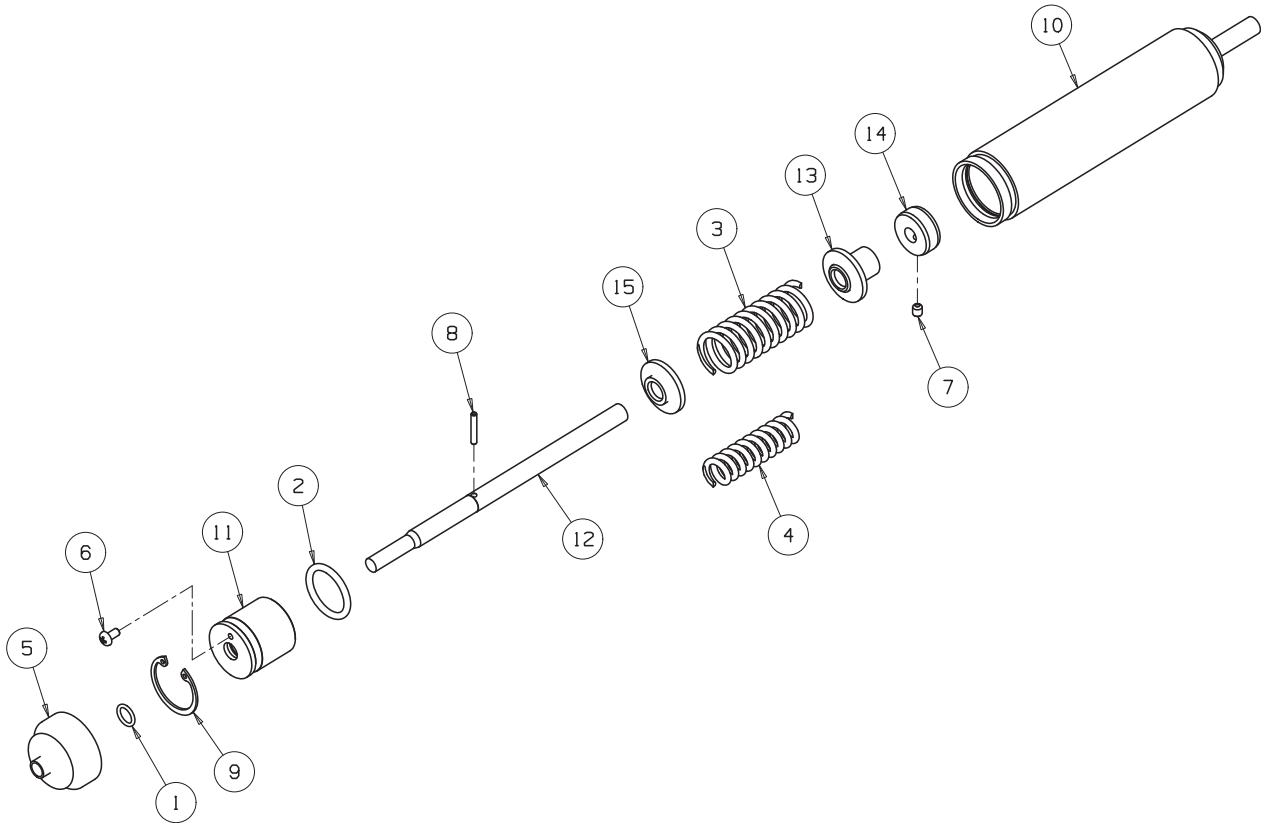

https://truckmanualshub.com/

ITEM	PART NO.	DESCRIPTION	QTY.	REMARKS
1	002210122	O-Ring 9.25 ID x 1.78 Sect	1	
2	002212140	O-Ring 25 ID x 3.53 Sect	1	
3	002911170	Sprg-Comp 25.4 x 3.25 x 76.2	1	
4	002911220	Sprg-Comp 15.88 x 2.34 x 76.2	1	
5	009134850	Gaiter	1	
6	450515	Scrw-Pan Hd M4 x 8	1	
7	450950	Scrw-Set M5 x 6, Cup Pnt	1	
8	451581	Pin-Tension 3 x 20	1	
9	451962	Circlip-Int 32 x 1.2 T	1	
10	MBE2480B.7	Wldmt-Cylinder (Black)	1	
11	MBE2483B	End Cap	1	
12	MBE2484C	Piston Rod	1	
13	MBE2485A	Reaction Sleeve	1	
14	MBE2486A	Piston	1	
15	MBE2495A	Reaction Sleeve	1	

* Not Illustrated

https://truckmanualshub.com/

TRACTION PEDAL NEUTRAL SWITCH

Illustration Number: 4139745

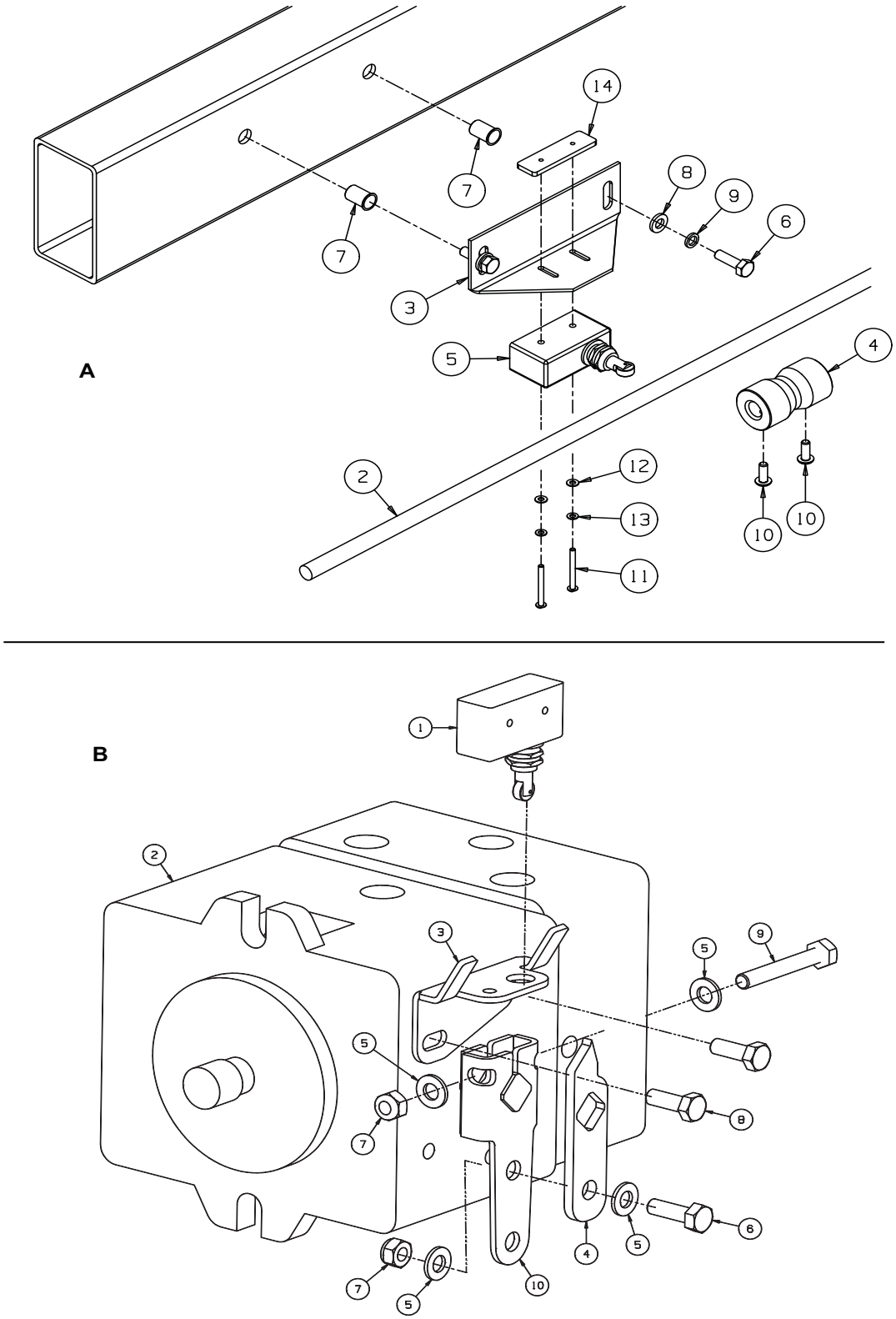

https://truckmanualshub.com/

ITEM	PART NO.	DESCRIPTION	QTY.	REMARKS
A				
2	4132836	Rod-Pump Control	1	
3	4139707	Bracket-Neutral Switch	1	before s/n EK000435
3	4141587	Bracket-Neutral Switch	1	from s/n EK000436
4	4139708	Actuator-Neutral Switch	1	
5	4139733	Microswitch	1	
6	450171	Scrw-Hex M6 x 20	2	
7	450357	Nutsert-M6 A-K x 14.7	2	
8	450389	Washer-M6 x 12.5 x 1.8	2	
9	450410	Lockwasher-M6 x 9.6 x 1.5	2	
10	451144	Scrw-Pan Hd No.10 x 13	2	
11	001814310	Scrw-Pan Hd M3 x 30	2	from s/n EK000436
12	001830030	Wshr-M3 x 7 x 0.6, Brass	2	from s/n EK000436
13	001863037	Wshr-M3 x 6.4 x 0.61, Crinkle	2	from s/n EK000436
14	4141588	Plate-Switch Mounting	1	from s/n EK000436
B				
1	4199940	Microswitch	1	from s/n EK000724 and FZ000594
1 *	4139733	Microswitch	1	before s/n EK000723 and FZ000593
2	008005950	Pump-Transmission, M25-2081	1	
3	4199960	Bracket-Neutral Switch	1	from s/n EK000724 and FZ000594
3 *	4184220	Bracket-Neutral Switch	1	before s/n EK000723 and FZ000593
4	4166940	Arm-Control Hd	1	from s/n EK000603 and FZ000342
4 *	172364A.07	Arm-Control Hd	1	before s/n EK000602 and FZ000341
5	450390	Washer-M8 x 17 x 1.8	2	
6	450192	Screw-Hex M8 x 25	1	
7	450378	Nut-Hex M8 Nyloc	1	
8	456110341	Scrw-Hex 5/16-18 x 7/8	2	
*	4162020	Neutral Switch Ext Lead	1	
9	450019	Bolt-Hex M8 x 55	1	
10	4184180	Wldmt-Control Arm	1	from s/n EK000603 and FZ000342

* Not Illustrated

https://truckmanualshub.com/

INSTRUMENT PANEL

Illustration Number: 4132733

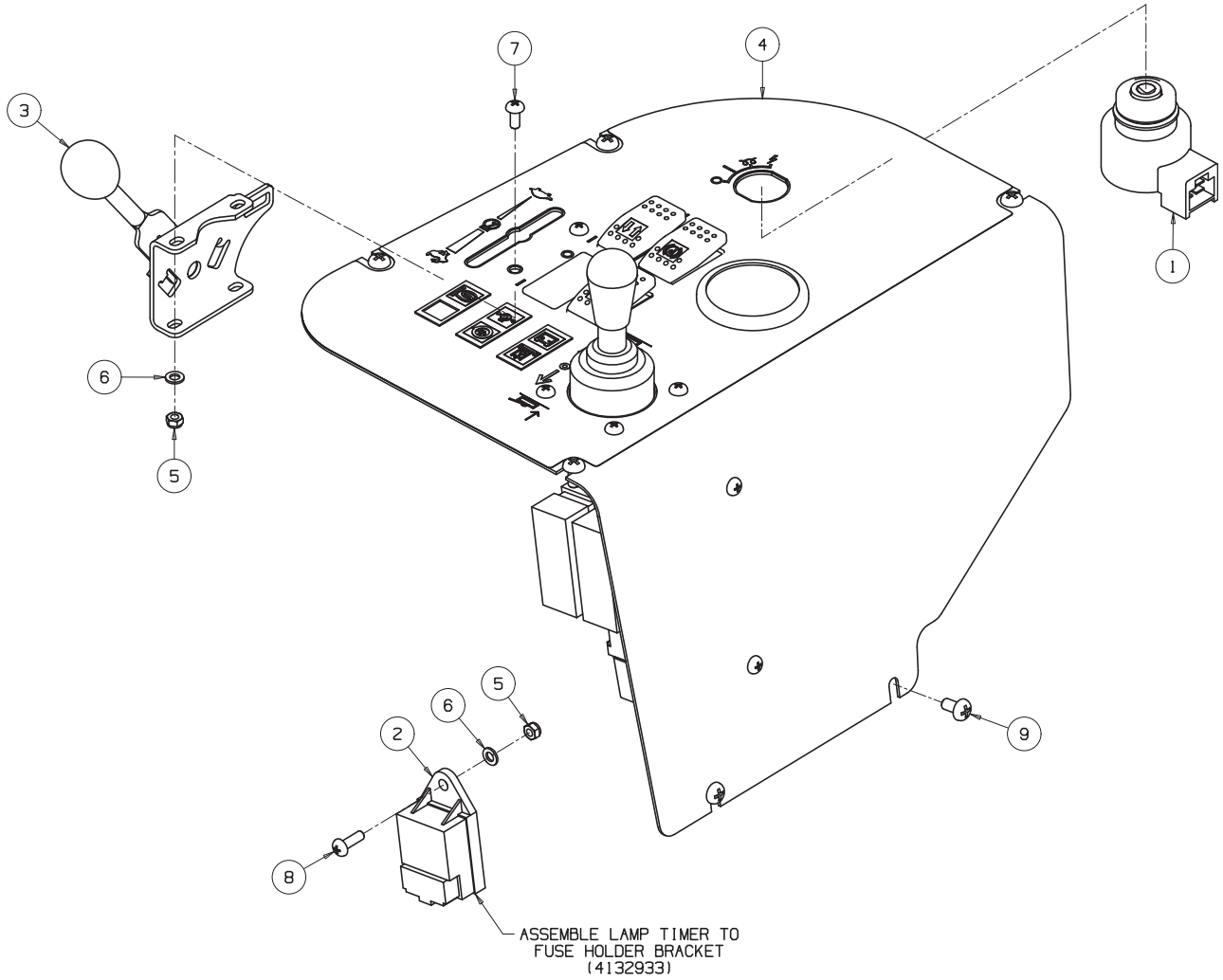

https://truckmanualshub.com/

ITEM	PART NO.	DESCRIPTION	QTY.	REMARKS
1	2810269	Starter Switch	1	Kubota
2	15694-65992	Lamp Timer	1	Kubota
3	4132751	Throttle Control	1	
*	4134746	• Knob-Throttle Control	1	
*	4134751	• Cable - Throttle Control	1	
4	4135383	Panel Assembly - Complete	1	
5	450376	Nut-Hex M5 Nyloc	3	
6	450388	Wshr-M5 x 10 x 1.1	3	
7	450526	Scrw-Pan Hd M5 x 12	2	
8	450528	Scrw-Pan Hd M5 x 16	1	
9	450539	Scrw-Pan Hd M6 x 12	6	

* Not Illustrated

https://truckmanualshub.com/

INSTRUMENT PANEL FROM SERIAL NUMBER GX100869 & KG000440

Illustration Number: 4132733I- Instrument Panel.pdf

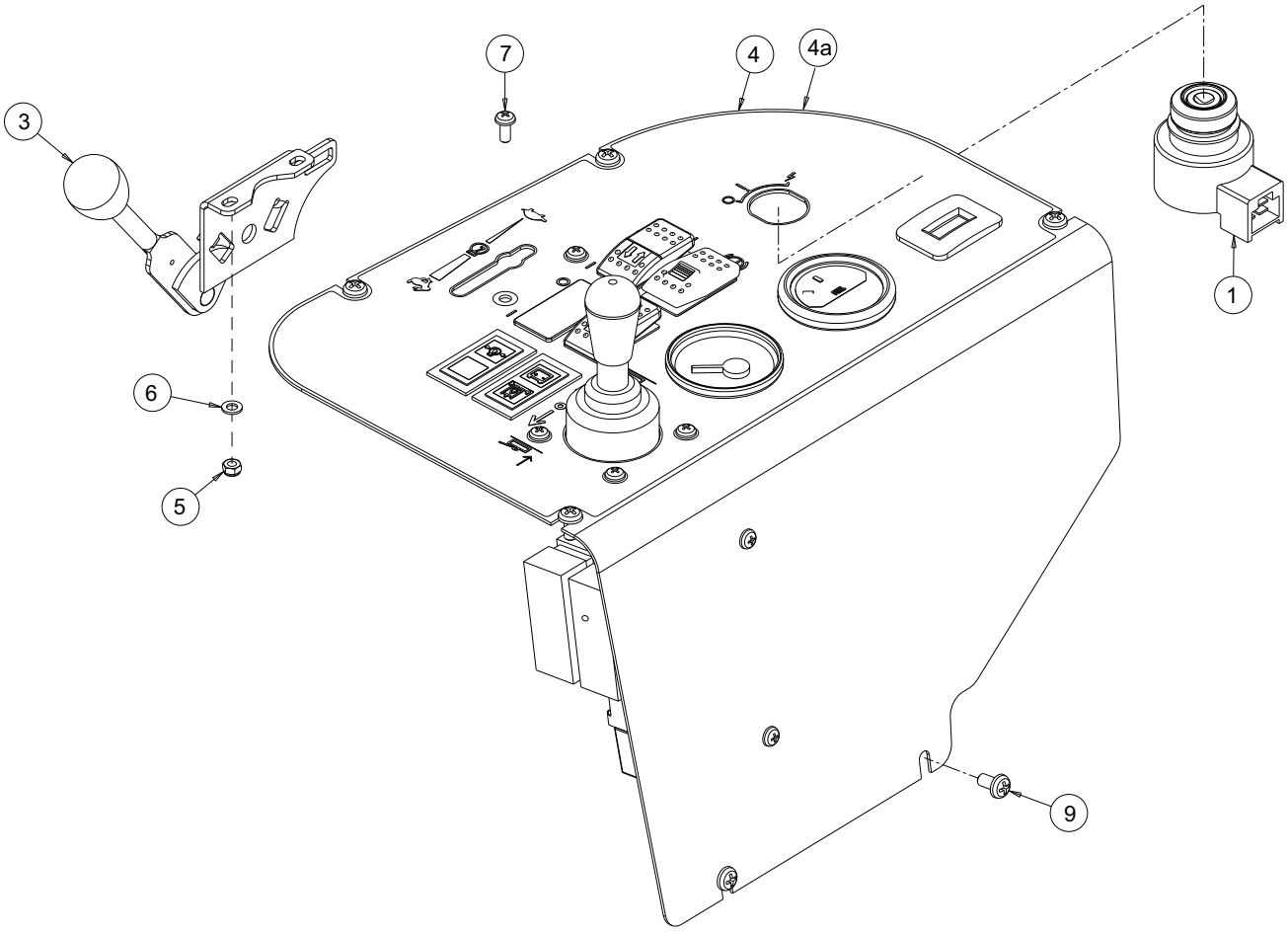

https://truckmanualshub.com/

ITEM	PART NO.	DESCRIPTION	QTY.	REMARKS
1	4152421	Keyswitch	1	
3	4132751	Throttle Control	1	
4	4376247	Instrument Panel Complete	1	Includes All Switches and Gauges
4a	4331970	Instrument Panel	1	
5	450376	Hexagon Nyloc Nut M5-0.8	2	
6	450388	Washer M5 x 10 x 1.1	2	
7	450526	Pan Head Screw M5-0.8 x 12	2	
9	450539	Pan Head Screw M6-1.0 x 12	6	

https://truckmanualshub.com/

CONTROL PANEL

Illustration Number: 4135383

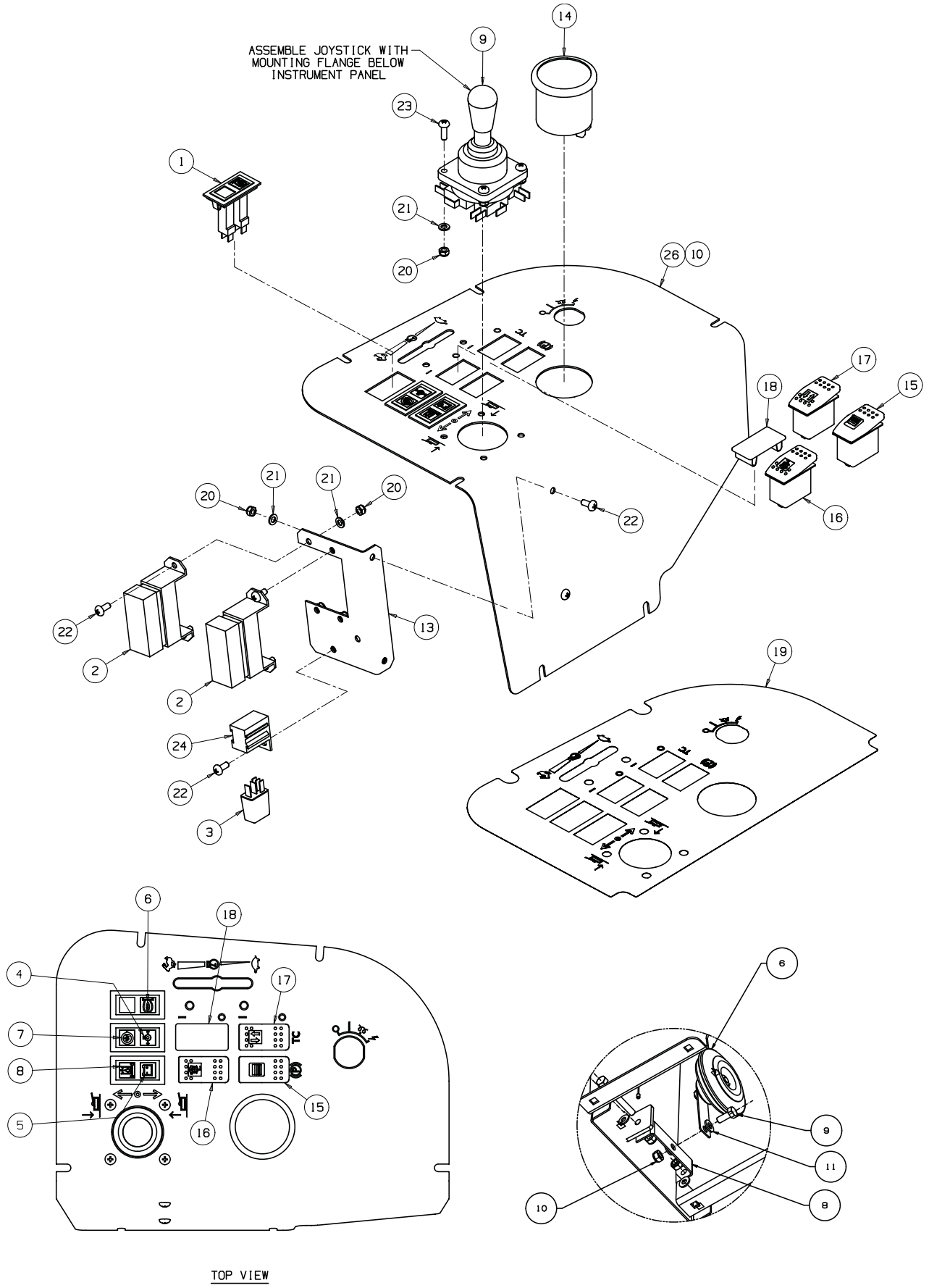

https://truckmanualshub.com/

ITEM	PART NO.	DESCRIPTION	QTY.	REMARKS
1	8231870	Twin Pilot Lamp	3	
2	8238350	Fuse Holder	2	
3	8244700	Relay Micro 12V	1	
4	8295630	Lens-Engine Oil Pressure (Red)	1	
5	8295640	Lens-Battery Charge (Red)	1	
6	8295650	Lens-Engine Pre-Heater (Green)	1	
7	8295710	Lens-Engine Overheat	1	
8	8295980	Lens-Filter Blocked	1	
9	1004290	Joystick c/w Harness	1	
11	4139765	Logic Controller	1	
12*	4132367	Harness-Console Loom	1	to s/n GX000395
12*	4139780	Harness-Console Loom	1	from s/n GX000396
	4139570	Kit- Control Module Update	1	Prior to s/n GX000396
		• Short Wire	1	230mm (Engine Overheat Warning Lamp to Module Malfunction Warning Lamp
		• Long Wire	1	1550mm (Engine Over Heat Lamp to Horn) Warning
		• Cable Tie	6	
13	4132933	Bracket-Fuse Holder	1	
14	4237722	EnGage II without Buttons	1	From s/n: GX000396
14*	4133446	EnGage II with Buttons	1	use 4237722
15	4135850	Rocker Switch - Park Brake	1	to s/n GX000395
15	4139764	Rocker Switch - Park Brake (Lock)	1	from s/n GX000396
16	4135851	Rocker Switch - Mow	1	
17	4135852	Rocker Switch - WT/Transfer	1	
18	4135853	VHP Mounting Panel Plug	1	
20	450376	Nut-Hex M5 Nyloc	11	
21	450388	Wshr-M5 x 10 x 1.1	11	
22	450526	Scrw-Pan Hd M5 x 12	7	
23	450529	Scrw-Pan Hd M5 x 20	4	
24	8244710	Relay Base	1	Part of Harness-Console Loom
26	4284331	Instrument Panel (Screen Printed)		Superceedes Items 10 and 19
		Engine Overheat Horn		LMAC508 - From GX1000655 EJ1000919 FG100690
6	008239720	Horn	1	
8	4288832	Horn Bracket	1	
9	450191	Screw Hex M8 1.25 x 20	2	
10	450378	Nut hex M8 1.25 Nyloc	2	
11	450390	Washer M8 17 x 1.8	8	
*	4287151	Lmac508 loom	1	for new horn location

* Not Illustrated

https://truckmanualshub.com/

CONTROL PANEL FROM SERIAL NUMBER GX100869 & KG000440

Illustration Number: 4376247A-Instrument Panel Complete.pdf

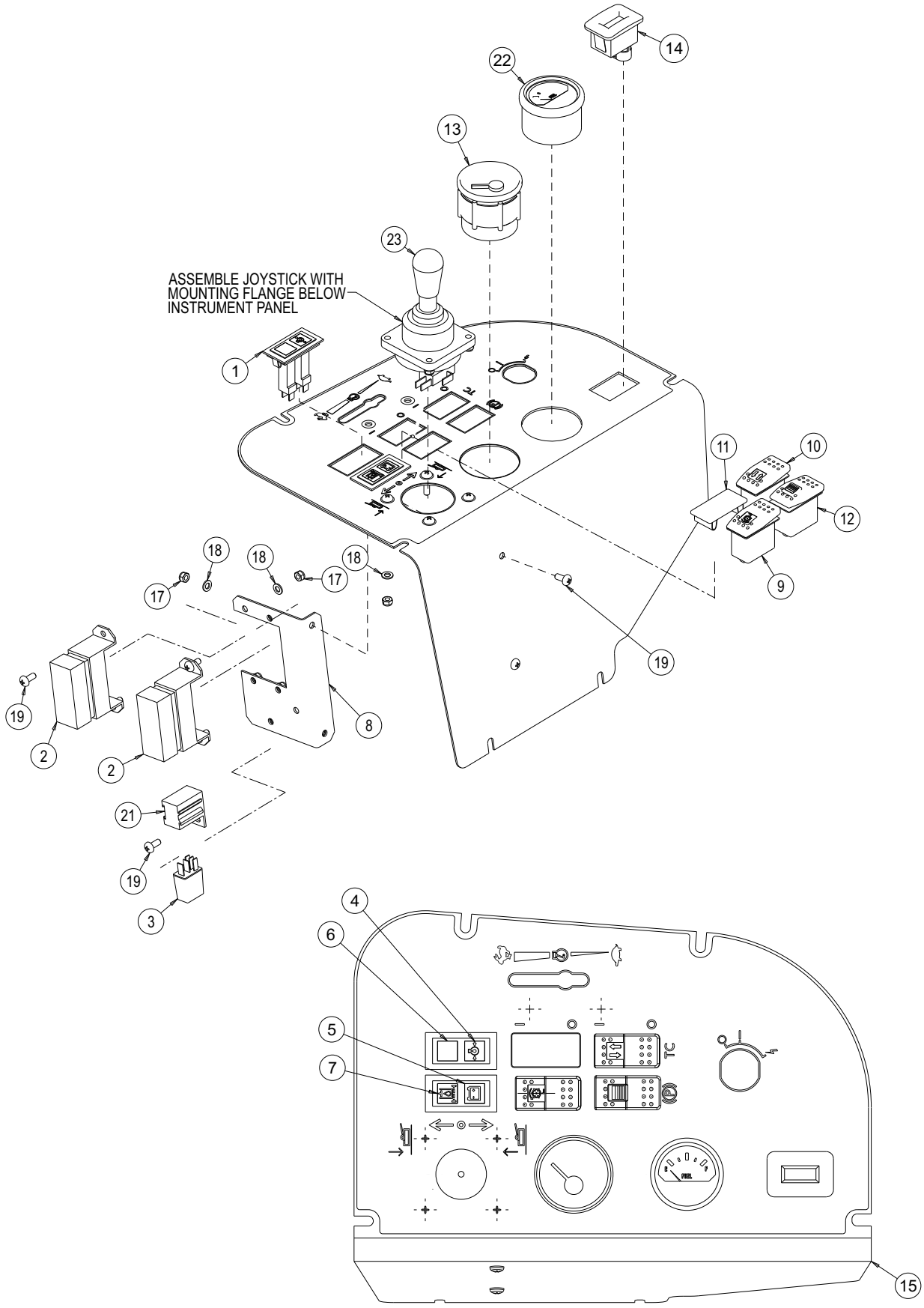

https://truckmanualshub.com/

ITEM	PART NO.	DESCRIPTION	QTY.	REMARKS
1	008231870	Twin Pilot Lamp	2	
2	008238350	Fuse Holder	2	
*	008233172	15 Amp Fuse	AR	
*	008233164	10 Amp Fuse	AR	
*	4139775	2 Amp Fuse	AR	
*	008233340	7.5 Amp Fuse	AR	
*	008233156	5 Amp Fuse	AR	
3	008244700	Micro Relay 12 Volt	1	
4	008295630	Oil Pressure Lens (Red)	1	
5	008295640	Battery Charge Lens (Red)	1	
6	008295660	Lens (Red)	1	
7	008295980	Filter Blocked Lens (Red)	1	
8	4132933	Fuse Holder Bracket	1	
9	4135851	Rocker Switch (Mow)	1	
10	4135852	Rocker Switch (Weight Transfer)	1	
11	4135853	Blanking Plug	1	
12	4139764	Lockable Parking Brake Switch	1	
13	4152717	Temperature Gauge	1	
14	4274659	Hour Meter	1	
15	4373826	Instrument Panel	1	
16	4374626	AR3 Panel Harness	1	
17	450376	Hexagon Nyloc Nut M5-0.8	11	
18	450388	Washer M5 x 10 x 1.1	11	
19	450526	Pan Head Screw M5-0.8 x 12	7	
20	450529	Pan Head Screw M5-0.8 x 20	4	
21	008244710	Relay Base	1	
22	W178092-04	Fuel Gauge	1	
23	1004290	Joystick 1 Axis	1	
*	2812344	Switches Complete With Screws	AR	
*	4129722	Deutsch Connector (DT04-6P)	AR	
24	4120507	Cylinder Engage Switch	1	

https://truckmanualshub.com/

DECK YOKE & MOUNTING

Illustration Number: 4137586 & 4137587

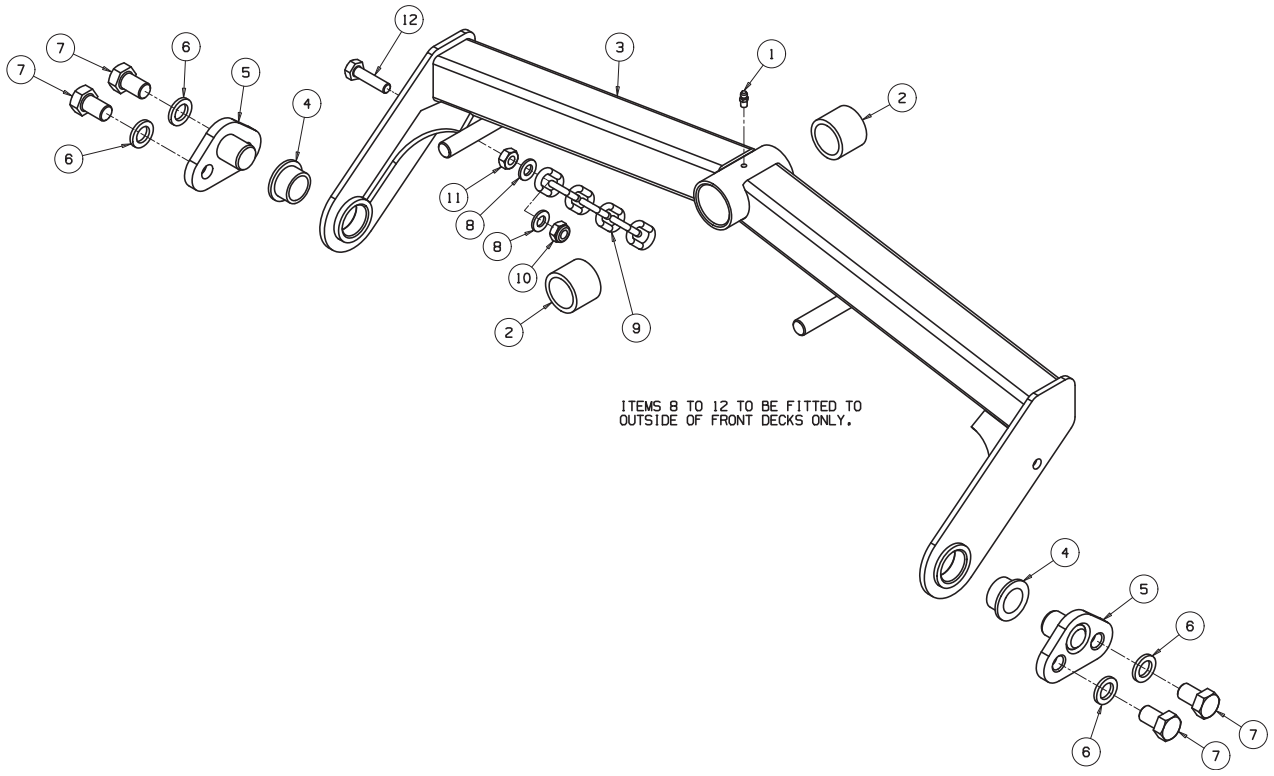

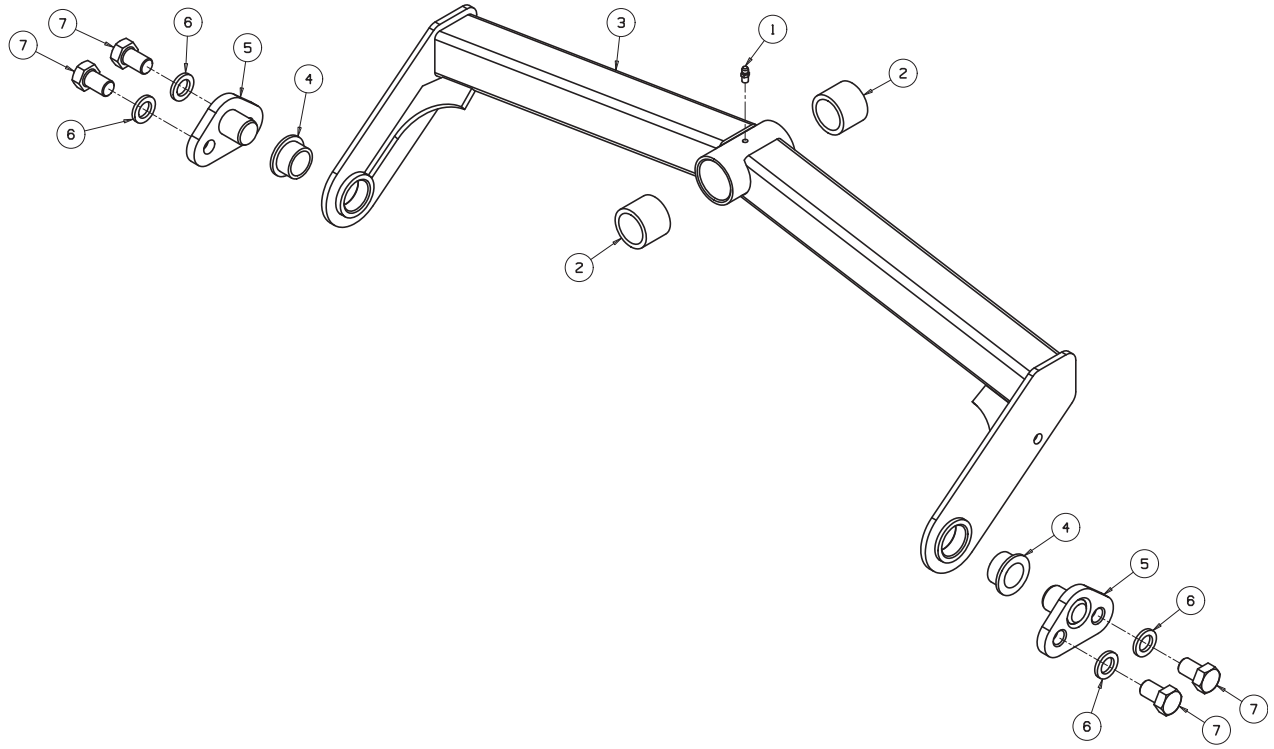

https://truckmanualshub.com/

ITEM	PART NO.	DESCRIPTION	QTY.	REMARKS
1	002993013	Lubricator-M6 Str	1	
2	4130256	Bush-Devol 1-1/4 x 1-5/8 x 1-1/4	2	
3	4131462	Wldmt-Yoke Rear, 27" Deck	1	Rear Yoke
3	4137533	Wldmt-Yoke Front, 27" Deck	1	Front Yoke
4	4131889	Bush-Flng 1 x 1-1/4 x 3/4	2	
5	4135710	Wldmt-Deck Pivot, AR3	2	
6	450425	Lockwshr-M16 x 27.3 x 3.5	4	
7	456011248	Scrw-Hex 5/8-18 x 1	4	
8	450391	Wshr-M10 x 21 x2.2	2	Outside Front Deck Only
9	W158001	Chain (7 Links)	1	Outside Front Deck Only
10	450379	Nut-Hex Nyloc M10	1	Outside Front Deck Only
11	450325	Nut-Hex M10	1	Outside Front Deck Only
12	450217	Scrw-Hex M10 x 40	1	Outside Front Deck Only

* Not Illustrated

https://truckmanualshub.com/

DECK HOUSING & CASTER WHEELS (Non Trim TrimTek™)

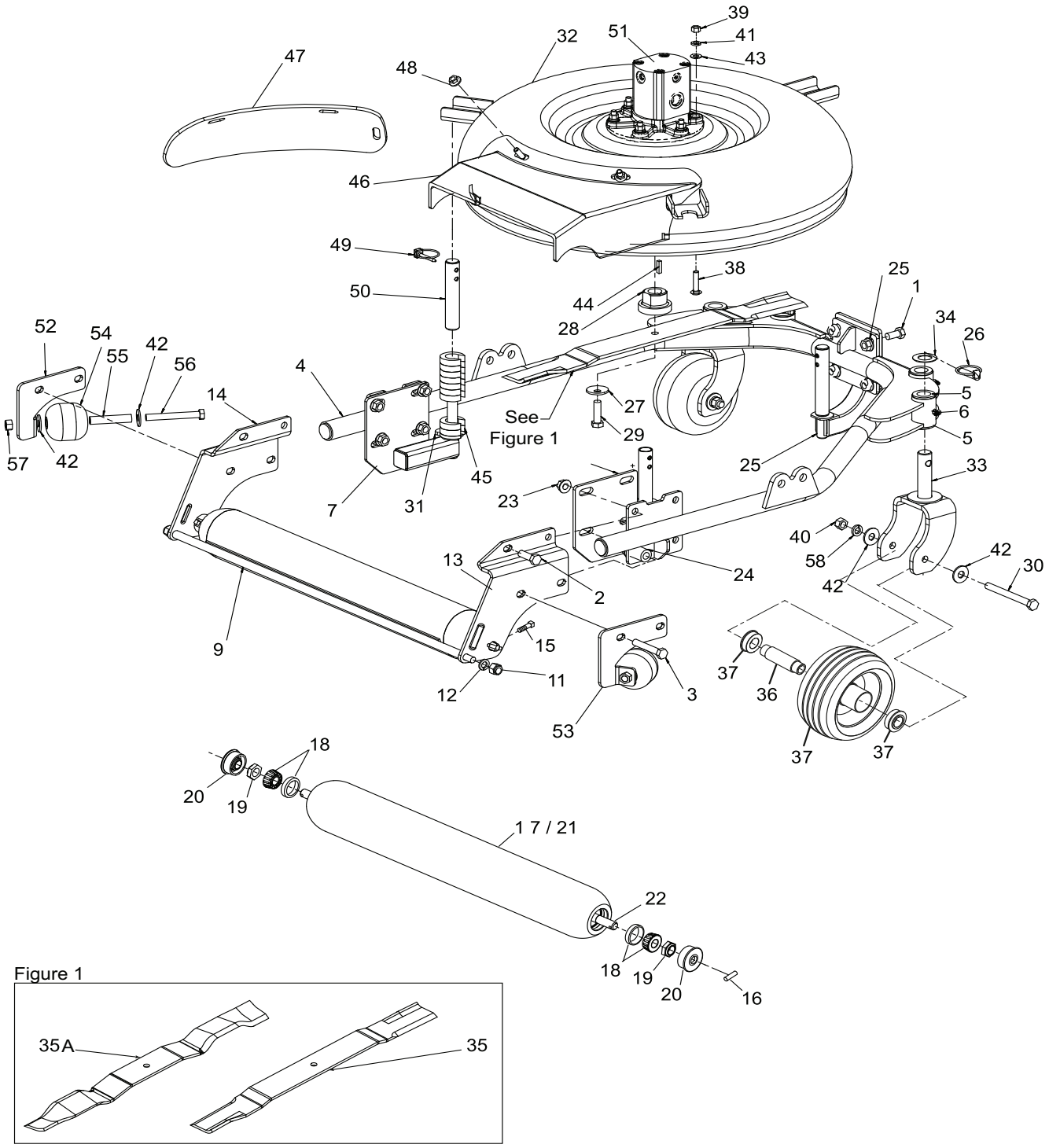

https://truckmanualshub.com/

ITEM	PART NO.	DESCRIPTION	QTY.	REMARKS
16	316938	Pin, Spirol	2	
17	4153038	Roller	1	Greasable
18	365208	• Bearing Cup	2	
18	365209	• Bearing Cone	2	
19	367029	• Locknut, 3/4-16 Hex Jam	1	
20	3010210	• Seal	2	
21	4153037	• Tube, Roller	1	
22	4129609	• Shaft, Roller	1	
*	471214	• Lubricator	2	
23	445789	Nut, 1/2-13 Spiralock Flange	2	
24	4124129	Spacer	2	
25	4135429	Front Cutting Height Bracket	1	
26	3004894	Pin, 7/16 x 1-3/4" Snap Ring	2	
27	3007764	Washer, Blade	1	
28	3008388	Adapter, Blade	1	
29	400410	Screw, 1/2-13 x 1-3/4" Hex Head	1	
30	400426	Screw, 1/2-13 x 5" Hex Head	2	
31	4117807	Spacer	3	
32	4129605	Deck Housing	1	
33	4124066	Caster Wheel Yoke	2	
34	4124076	Flat Washer, 1"	7	
35	4129639	Blade 27"	1	
35A	4163101	Mulching Blade CCW	1	
36	4174960	Spacer, Wheel	1	
37	4173922	Caster Wheel, 6-1/4 x 3	2	
*	4173923	• Ball Bearing, Flange	2	
38	440124	Carriage Bolt, 3/8-16 x 1-3/4"	6	
39	443110	Nut, 3/8-16 Hex	6	
40	443118	Nut, 1/2-13 Hex	2	
41	446142	Lockwasher, 3/8 Heavy	6	
42	452012	Flat Washer, 1/2	8	
43	453011	Flat Washer, 3/8	6	
44	557523	Key, 1/4 Square x 1"	1	
45	PJH1054	Spacer, Cutting Height	27	
46	4132519	Chute, Rear Discharge	1	
47	4132520	Cover, Mulching	1	
48	445783	Nut, 3/8-16 Whizlock Flange	3	
49	365948	Pin, 1/4 x1-3/4" Snap Ring	3	
50	4133007	Sleeve, Cutting Height	3	
51	4118247	Motor, Deck	1	
52	4137521	Bracket, Skid LH	1	
53	4137520	Bracket, Skid RH	1	
54	2198153	Roller 3"	2	
55	4137534	Sleeve, Roller	2	
56	400422	Screw 1/2" - 13 UNC x 4 Hex ~Hd	2	
57	444758	Nut, Hex Lock 1/2" - 13 UNC	2	
58	446154	Lockwasher, 1/2 Heavy	2	

* Not Illustrated

https://truckmanualshub.com/

DECK FRAME UPTO S/N GX000579

Deck Frame.eps

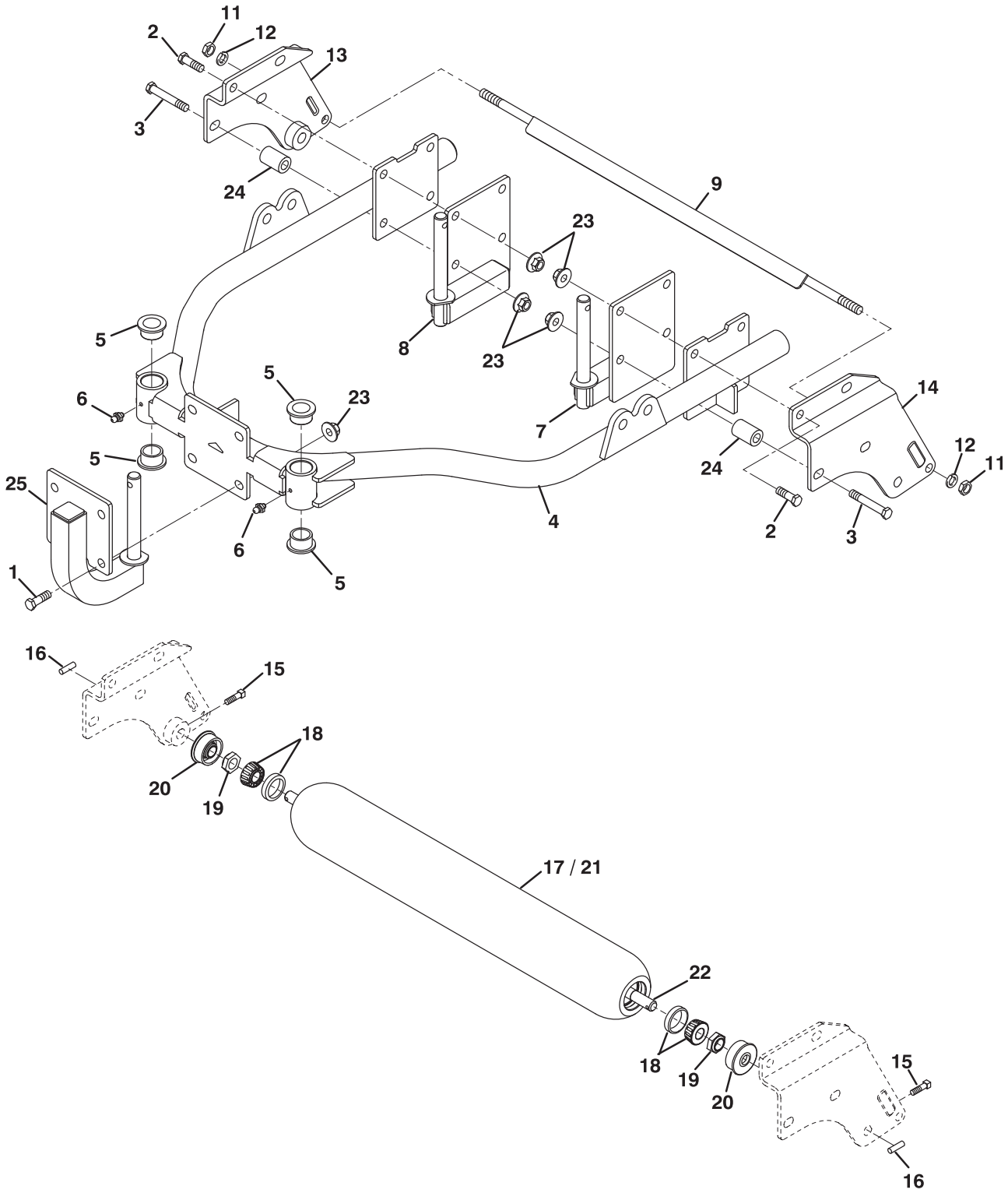

https://truckmanualshub.com/

ITEM	PART NO.	DESCRIPTION	QTY.	REMARKS
1	400404	Screw, 1/2-13 x 1" Hex Head	4	
2	400408	Screw, 1/2-13 x 1-1/2" Hex Head	4	
3	400418	Screw, 1/2-13 x 3" Hex Head	4	
4	4129638	Deck Frame	1	
5	4127478	• Flanged Bushing	4	
6	471214	• Straight Grease Fitting	2	
7	4129636	LH Rear Cutting Height Bracket	1	
8	4129637	RH Rear Cutting Height Bracket	1	
9	4130527	Scraper, Roller	1	
10	445771	Nut, 1/2-13 Hex Nylon Insert	2	
11	446152	Lockwasher, 1/2	2	
12	3007764	Washer	2	
13	4129614	RH Roller Bracket	1	
14	4129615	LH Roller Bracket	1	
15	412017	Screw, 5/16-18 x 3/4" Square Head	2	
16	316938	Pin, Spirol	2	
17	4129612	Roller	1	Non Greasable
18	503378	• Bearing Cup and Cone	2	
19	367029	• Locknut, 3/4-16 Hex Jam	1	
20	3010210	• Seal	2	
21	4129607	• Tube, Roller	1	
22	4129609	• Shaft, Roller	1	
23	445789	Nut, 1/2-13 Spiralock Flange	2	
24	4124129	Spacer	2	
25	4135429	Front Cutting Height Bracket	1	
1				

https://truckmanualshub.com/

DECK FRAME (TrimTek™) FROM S/N GX000580 / KG000300

4197840_B_1_aug_2015.eps

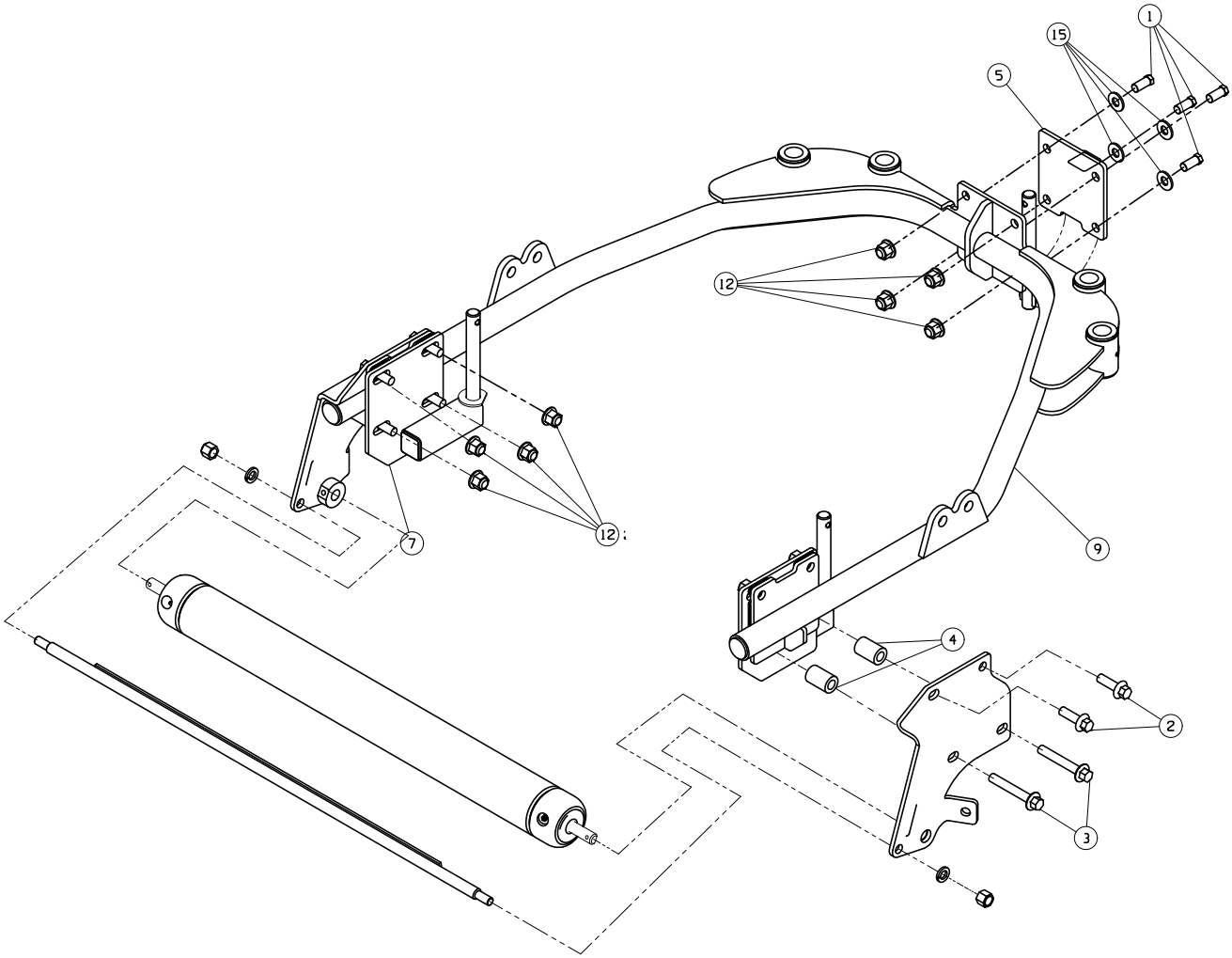

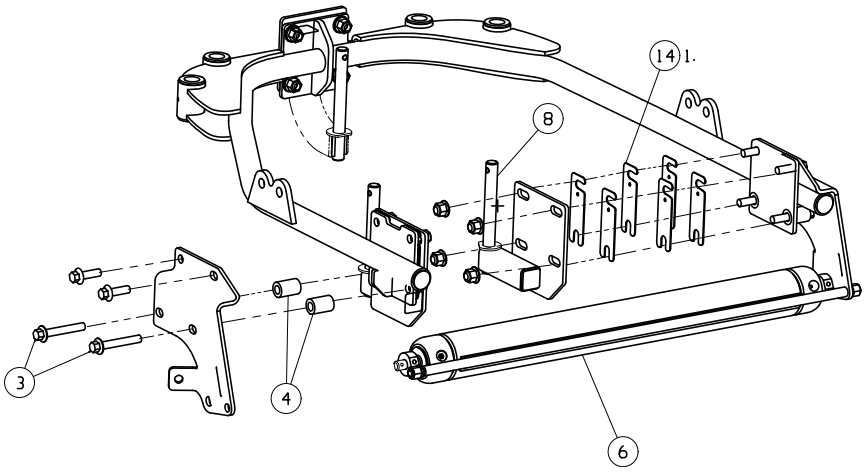

https://truckmanualshub.com/

ITEM	PART NO.	DESCRIPTION	QTY.	REMARKS
1	365979	M12-1.75 X 25 Hex Head	4	
2	452411	M12-1.75 X 40 Hex Flange	4	
3	452415	M12-1.75 X 80 Hex Flange	4	
4	4124129	Spacer	4	
5	4135429	HOC Assembly, Front	1	
6	4163181	Assembly, Roller	1	
7	4129636	27 In Deck HOC LH	1	
8	4129637	27 In Deck HOC RH	1	
9	4138528	Deck Frame	1	
12	452438	Nut, M12 1.75	12	
14	4161960	Spacer, Deck Hoc Bracket	12	
15	450402	Washer Flat M-12	4	

* Not Illustrated

https://truckmanualshub.com/

DECK FRAME TrimTek™ UPTO S/N GX000579

Deck June 07 4163180

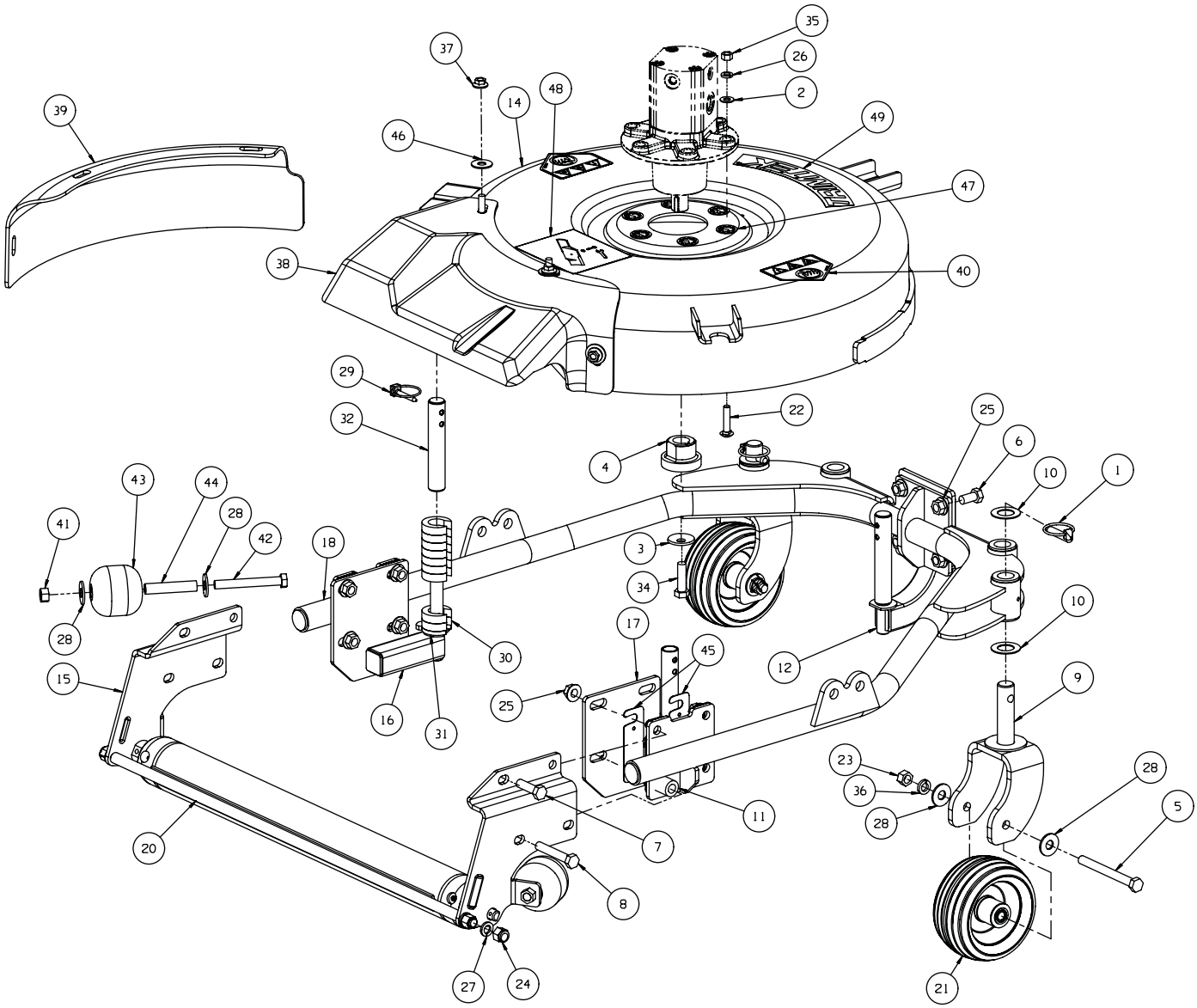

https://truckmanualshub.com/

ITEM	PART NO.	DESCRIPTION	QTY.	REMARKS
	4163180	Deck Assembly	3	Per Machine
1	3004894	Pin - Klik Type	2	
2	453011	Flat Washer, 3/8	6	
3	3007764	Washer, Blade	1	
4	3008388	Adapter - Blade	1	
*	4163101	Blade (Counter Clockwise)	1	3 per Machine
5	400426	Screw, 1/2-13 X 5.00" Hex Hd	2	
6	400404	Screw, 1/2-13 X 1" Hex Hd	4	
7	400410	Screw, 1/2-13 X 1-3/4" Hex Hd	4	
8	400418	Screw, 1/2-13 UNC X 3.00 Hex Hd	4	
9	4124066	Caster Yoke	2	
10	4124076	Washer, 1.00 Id X 1.75 OD	4	
11	4124129	Spacer	4	
12	4135429	Hoc Assy, Front	1	
14	4163080	Deck	1	
15	4163181	Assembly, Roller	1	
16	4129636	27 In Deck Hoc LH	1	
17	4129637	27 In Deck Hoc RH	1	
18	4138528	Deck Frame	1	
20	4130527	27" Scraper	1	
21	4173922	Wheel, Caster, Ar-5	2	
22	440124	Bolt Carriage 3/8-16 X 1.75 Sn	6	
23	443118	Nut, 1/2-13 Hex	2	
24	445771	Nut, 1/2-13 Hex Jam Nylon	2	
25	800379	Nut, 1/2-13	12	
26	446142	Lockwasher, 3/8	6	
27	446152	Washer, Lock 1/2 Reg.	2	
28	452012	Flat Washer, 1/2	8	
29	365948	Pin, Snap Ring	3	
30	PJH1054	Spacer	27	
31	4117807	Spacer	3	
32	4133007	Hoc Sleeve	3	
34	401237	Screw, 1/2-13 X 1-3/4 Hex Hd LH	1	
35	443110	Nut, 3/8-16 Hex	6	
36	446154	Lockwasher, 1/2	2	
37	445783	Nut 3/8-16 Whizlock Large Flange	3	
38	4163103	Deflector Ar3	1	
39	4163104	Cover Mulch	1	
40	4164381	Decal, Keep Hands And Feet Away	2	
41	444758	Nut, Hex Lock 1/2-13 UNC	2	
42	400422	Screw 1/2-13 UNC X 4.00 Hex Hd	2	
43	2198153	Roller 3 Inch	2	
44	4137534	Sleeve, Roller	2	

* Not Illustrated

https://truckmanualshub.com/

DECK FRAME TrimTek™ UPTO S/N GX000579

Deck June 07 4163180

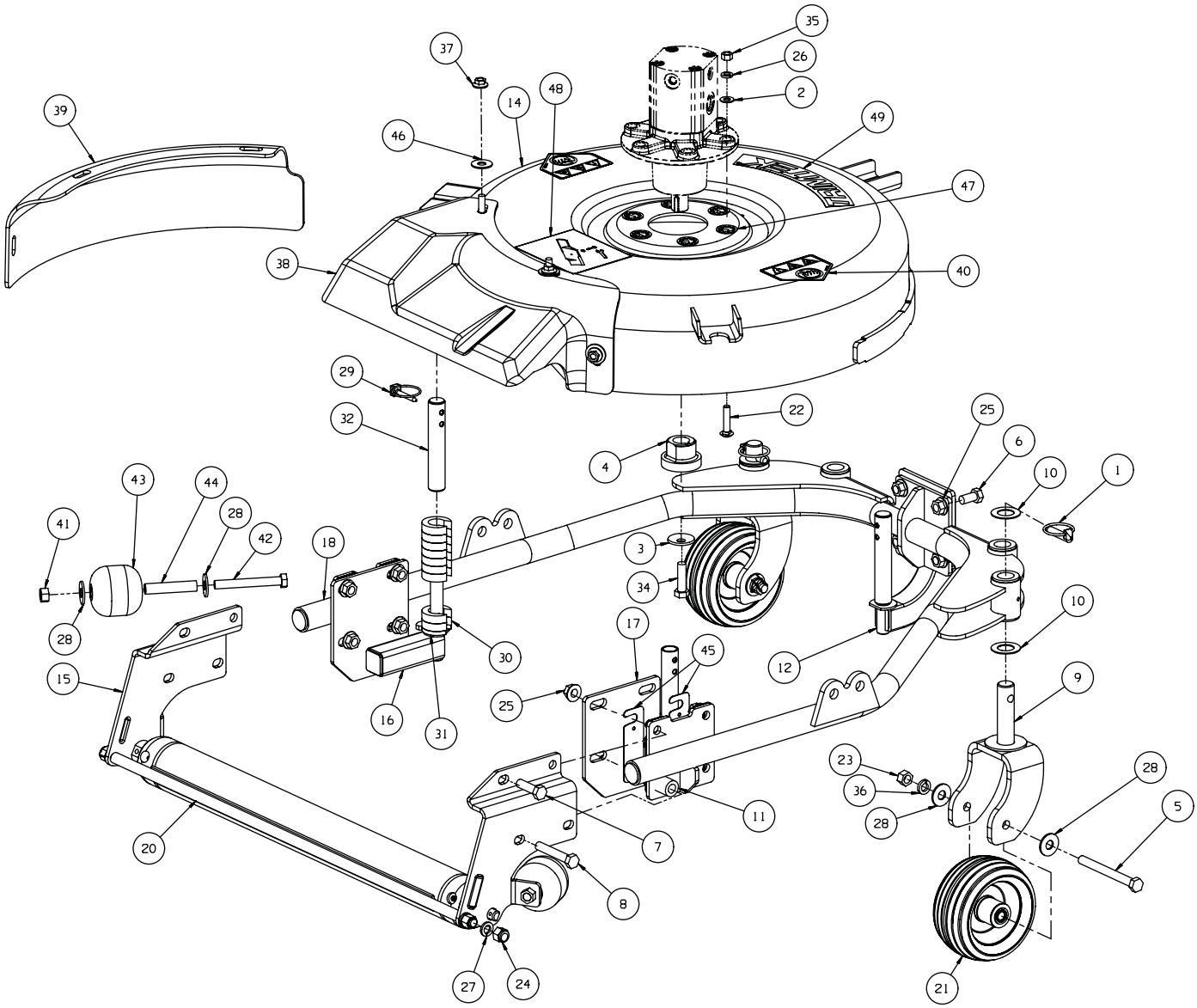

https://truckmanualshub.com/

ITEM	PART NO.	DESCRIPTION	QTY.	REMARKS
45	4161960	Spacer, Deck Hoc Bracket	12	
46	452010	Washer, Flat 7/16 Wide	3	
47	4139787	Washer, 3/8 Retaining	6	
48	4176547	Blade Bolt, Decal	1	
49	4179022	Decal, Trimtek	1	

https://truckmanualshub.com/

DECK FRAME TrimTek™ FROM S/N GX000580 / KG000300

4204922-J_1_aug_2015.eps

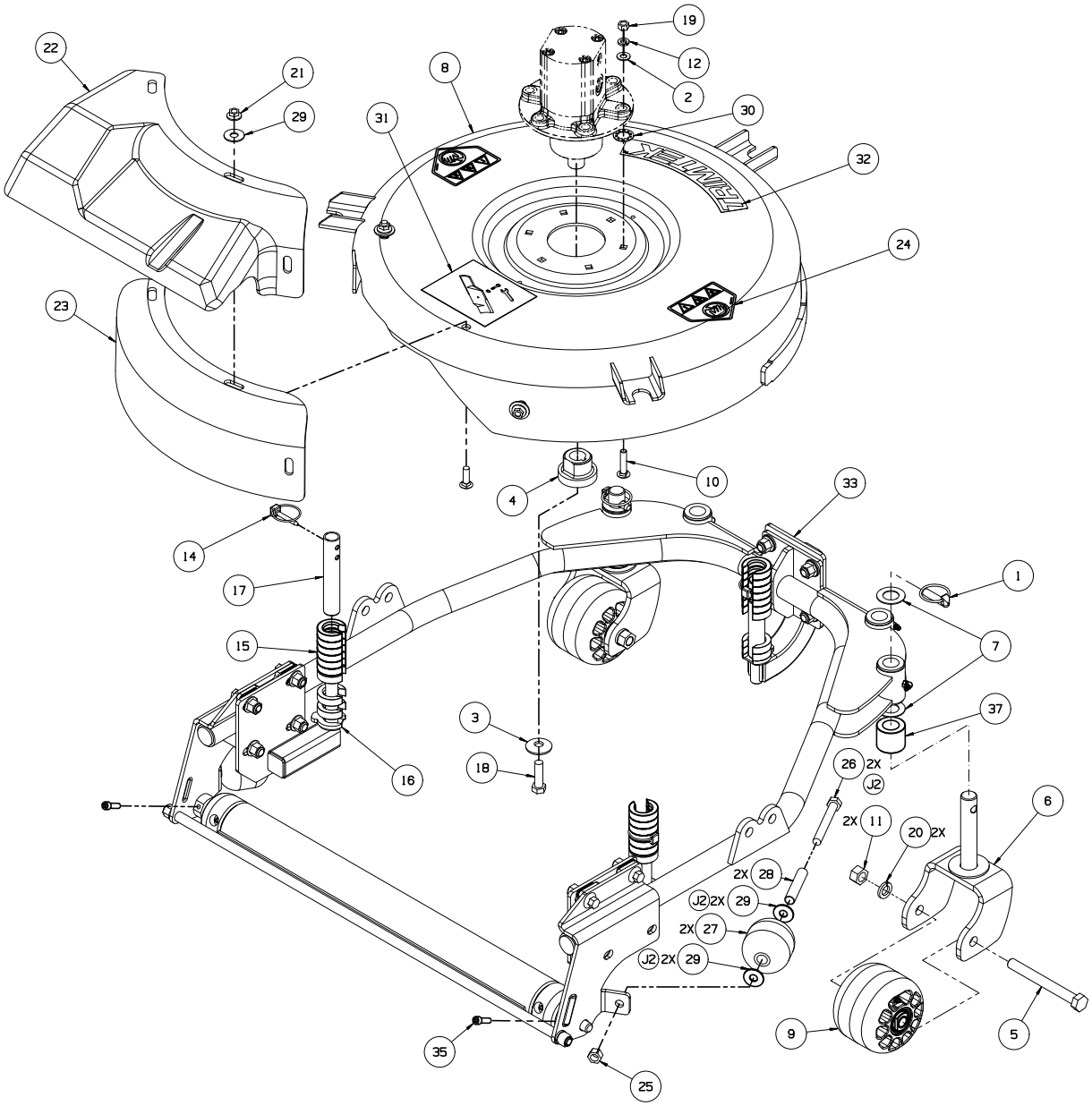

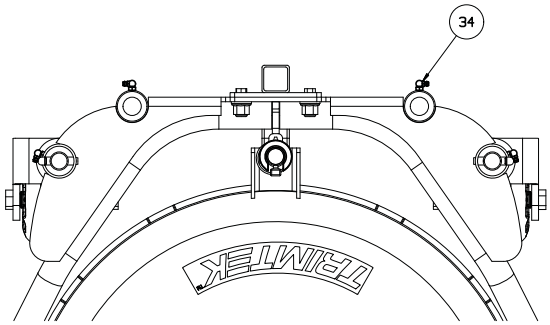

https://truckmanualshub.com/

ITEM	PART NO.	DESCRIPTION	QTY.	REMARKS
1	3004894	Pin - Klik Type	2	
2	453011	Flat Washer, 3/8	6	
3	3007764	Washer, Blade	1	
4	3008388	Adapter - Blade	1	
5	64123-118	Bolt, 5/8-11 X 6 Hex	2	
6	4251174	Caster Yoke	2	
7	4124076	Washer, 1.00 IDX 1.75 OD	4	
8	4218385	Deck	1	
9	4251124	Wheel Assembly	2	
10	440124	Bolt Carriage 3/8-16 X 1.75	6	
11	443126	Nut, 5/8-11 Hex	2	
12	446142	Lockwasher, 3/8	6	
14	365948	Pin, Snap Ring	3	
15	PJH1054	Spacer, Caster	27	
16	4117807	Spacer	3	
17	4133007	HOC Sleeve	-	
18	401237	Screw, 1/2-13 X 1-3/4 Hex Head LH	1	
19	443110	Nut, 3/8-16 Hex	6	
20	446164	Washer, Lock 5/8	2	
21	445783	Nut 3/8-16 Whizlock Large Flange	3	
22	4163103	Deflector Ar3	1	
23	4163104	Cover Mulch	1	
24	4164381	Decal, Keep Hands And Feet Away	2	
25	444758	Locknut, 1/2-13 Center	2	
26	400422	Screw, 1/2-13 X 4" Hex Head	2	
27	2198153	Roller 3 Inch	2	
28	4137534	Sleeve, Roller	2	
29	452010	Washer, Flat 7/16 Wide	7	
30	4139787	Washer, 3/8 Retaining	6	
31	4176547	Blade Bolt, Decal	1	
32	4179022	Decal, Trimtek	1	
33	4197842	Deck Frame Rear	1	
34	471221	Fitting, Grease 1/4-28 90 Deg	4	
35	434004	Screw, 5/16-18 X 1" Soc Head	2	
37	4251191	Spacer, Caster Yoke	2	

https://truckmanualshub.com/

DECK ROLLER

4285651-Deck Roller.pdf

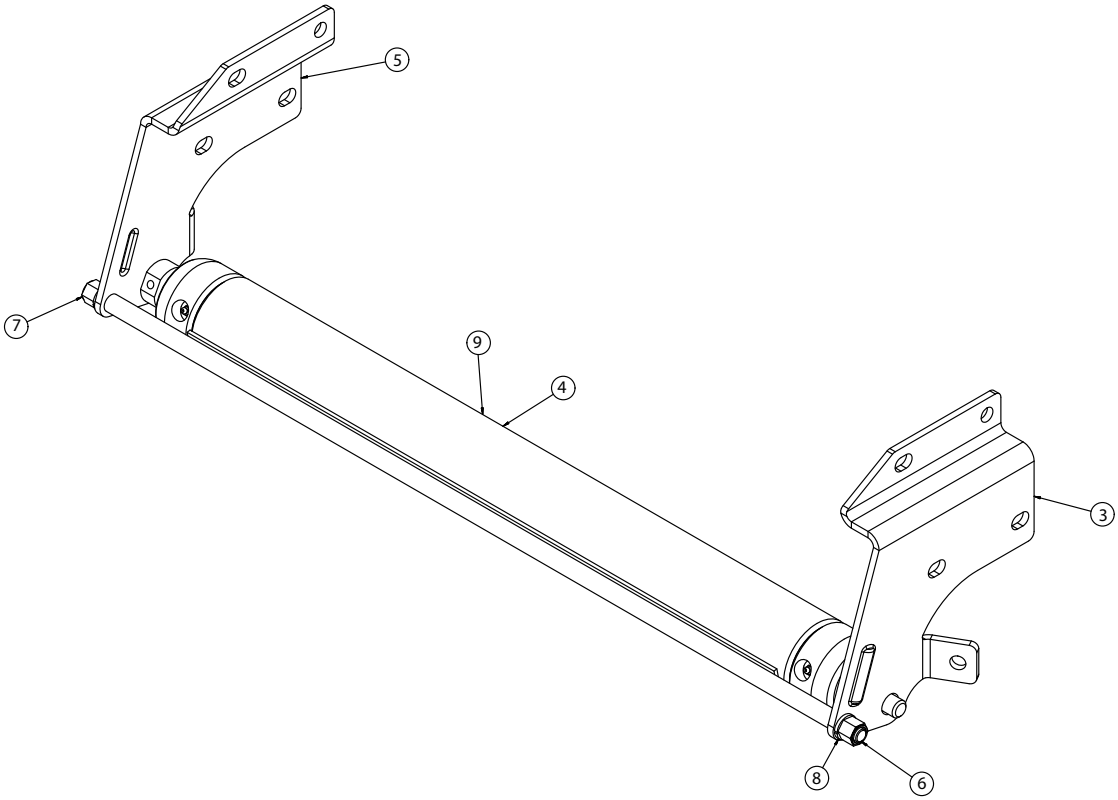

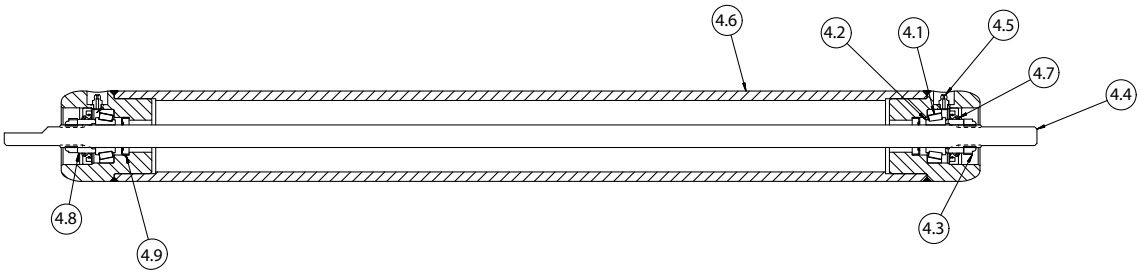

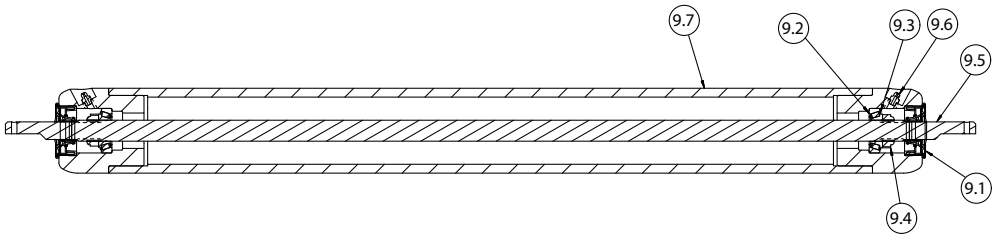

https://truckmanualshub.com/

ITEM	PART NO.	DESCRIPTION	QTY.	REMARKS
3	4163089	Weldment, Roller Bracket RH	1	
4	4285651	Assembly, Roller 3 inch diameter	1	Shaft has a flat on one end
4.1	4135151	• Bearing Cup Roller	2	
4.2	4135152	• Bearing Cone, Roller	2	
4.3	367029	• Nut 3/4 - 16 UNF Lock Jam	2	
4.4	4285652	• Shaft, roller	1	
4.5	471214	• Fitting, Grease 1/4-28	2	
4.6	4285653	• Weldment, Roller	1	
4.7	3004882	• Seal - Excluder	2	
4.8	3005156	• Sleeve, Wear	2	
4.9	338647	• Oil Seal	2	
5	4163087	Weldment, Roller Bracket LH	1	
6	4200721	Weldment, Scraper	1	
7	64237-06	Locknut, Nylon Insert	2	
8	446152	Washer, Lock 1/2in	2	
9	4163083	Assembly Roller	1	Shaft has a flat on both ends
9.1	3010210	• Seal	2	
9.2	365208	• Cup, Bearing	2	
9.3	365209	• Cone, Bearing	2	
9.4	367029	• Nut 3/4-16 UNF Lock Jam	2	
9.5	4129609	• Shaft	1	
9.6	471214	• Lubricator	2	
9.7	4163084	• Roller	1	

* Not Illustrated

https://truckmanualshub.com/

OPS FRAME(LMAC164)

Illustration Number: 4137350 & 4137585

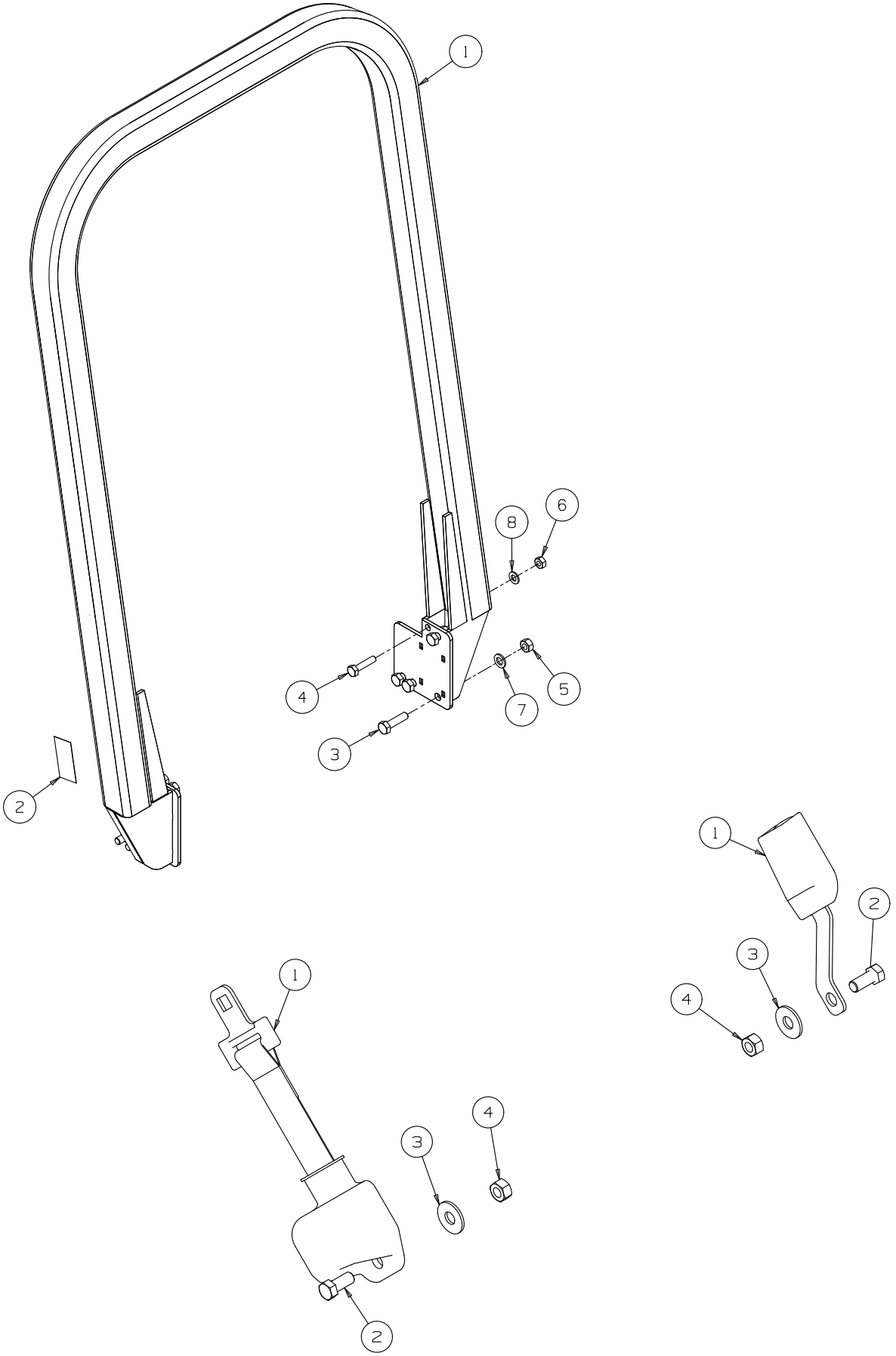

https://truckmanualshub.com/

ITEM	PART NO.	DESCRIPTION	QTY.	REMARKS
	4137350	OPS Kit (ABT)	1	
1	AR3-01	Roll Bar	1	
2		Label	1	
	4270936	Bolt Kit for OPS Frame	1	Comprising Items 3 - 8
3		• Hex Bolt - M12 x 45 Gd 10.9	8	
4		• Hex Bolt - M10 x 45 Gd 10.9	2	
5		• Hex Nut (Stover M12)	8	
6		• Hex Nut (Stover M10)	2	
7		• Plain Washer M12	8	
8		• Plain Washer M10	2	
	4137585	Seat Belt Kit	1	
9	4133937	• Seat Belt Assembly	1	
	4135347	Seat Belt - Hardware Kit	1	Comprising Items 2 - 4
10		• Scrw-Hex 7/16" x 20 x 1	2	
12		• Nut-Hex Lock 7/16" x 20	2	
11		• Wshr - 1/2" x 1 1/4" x 0.104	2	

https://truckmanualshub.com/

WORKING LAMP KIT (LMAC163)

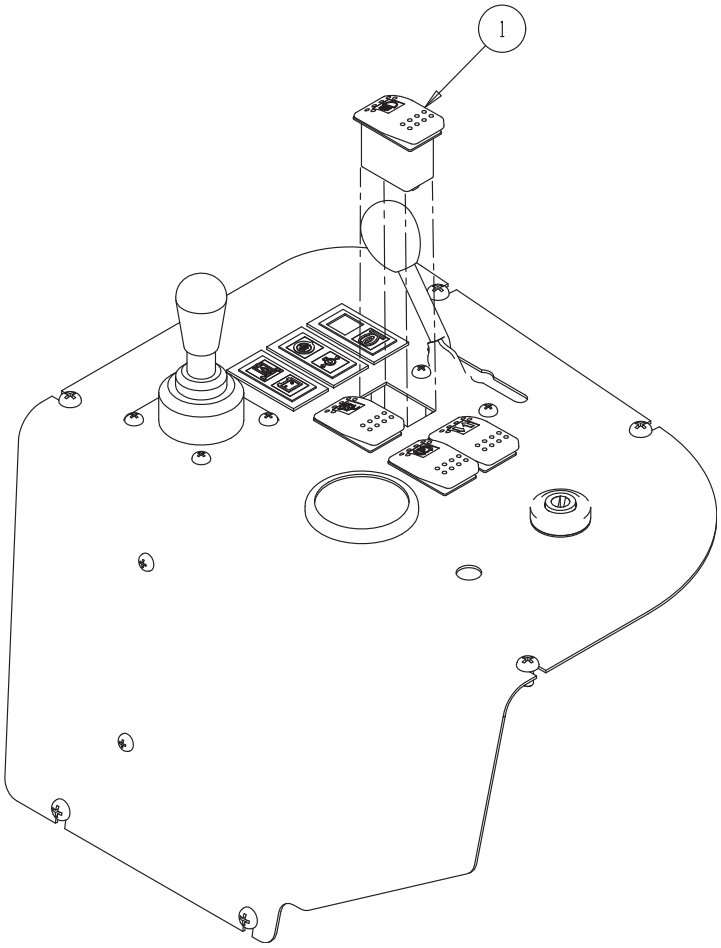

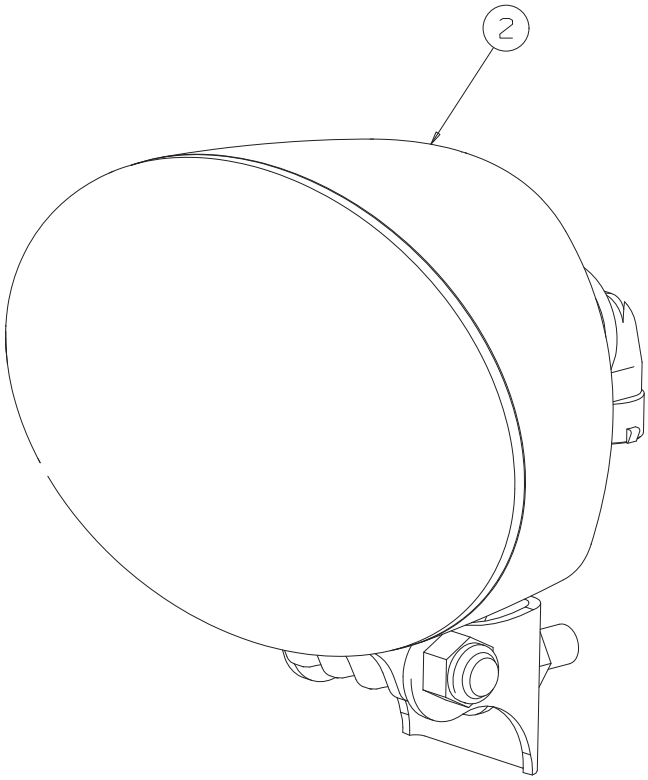

https://truckmanualshub.com/

ITEM	PART NO.	DESCRIPTION	QTY.	REMARKS
1	4135848	Work lamp Switch	1	
2	4122840	Worklamp	2	
*	4123183	Bulb, 886, 12.8v	A/R	

* Not Illustrated

https://truckmanualshub.com/

NARROW WIDTH OF CUT KIT (LMAC199)

Illustration Number: Right_Left_Lift.eps

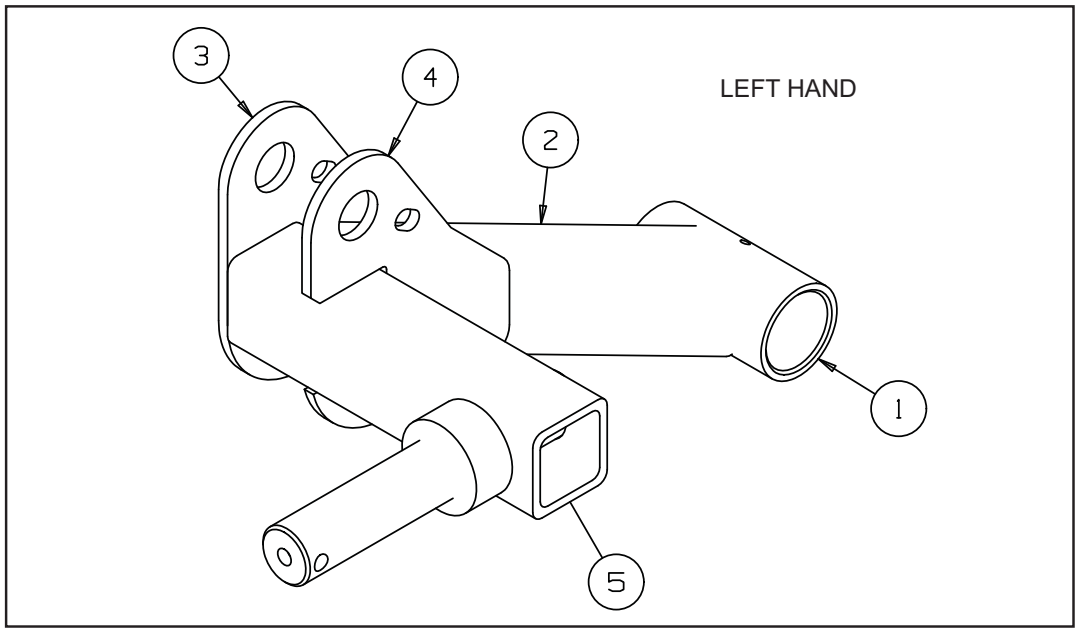

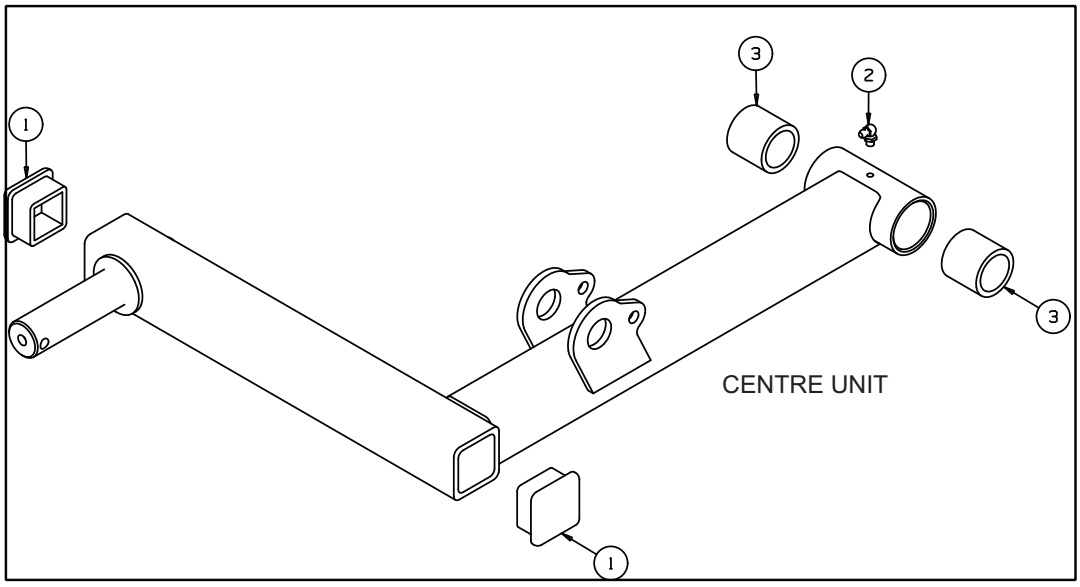

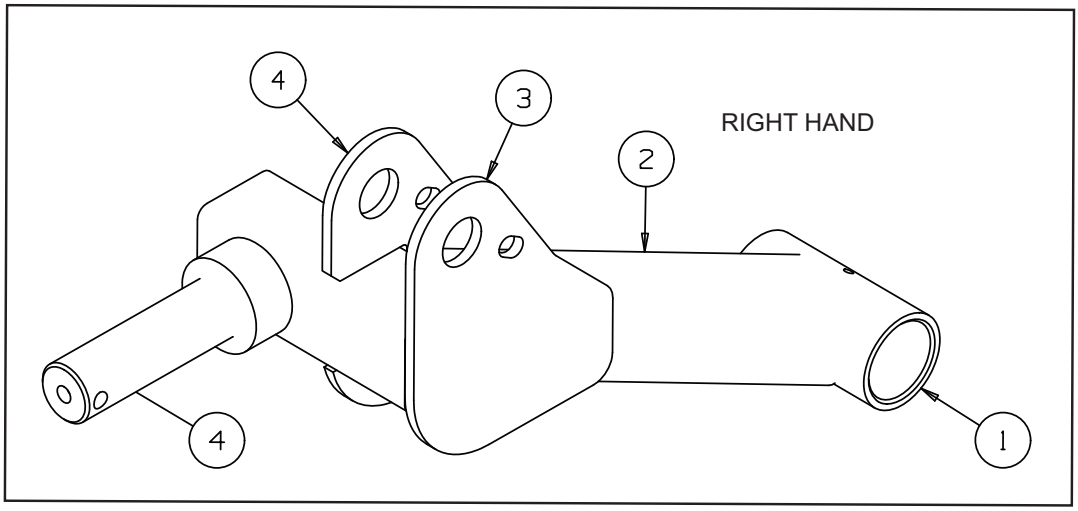

https://truckmanualshub.com/

ITEM	PART NO.	DESCRIPTION	QTY.	REMARKS
	4308418	Lift Arm-Front LH	1	
1	4130843	Tube-lift Arm	1	
2	4130857	Tube-lift Arm	1	
3	4130865	Plate-lift Arm	1	
4	4130874	Plate-lift Arm	1	
5	4308421	Pivot Pin, Front LH Lift Arm	1	
	4308420	Lift Arm-Front RH		
1	4130843	Tube-lift Arm	1	
2	4130857	Tube-lift Arm	1	
3	4130865	Plate-lift Arm	1	
4	4130874	Plate-lift Arm	1	
5	4308422	Pivot Pin	1	
	LMSE195	Lift Arm-Centre	1	
1	002952633	• End Cap-RHS 50x50x5	2	
2	002993160	• Lubricator-M6 x 90 Deg	1	
3	4130255	• Bush-Devol 1-1/4 x 1-5/8 x 1-1/2	2	
4	4140815	• Wldmt-Lift Arm Ctr	1	
5	4140881	Bracket-Bumper Stop	1	

* Not Illustrated

https://truckmanualshub.com/

72" WIDTH OF CUT KIT (AR30002)

Illustration Number: 4130836 & 4130838

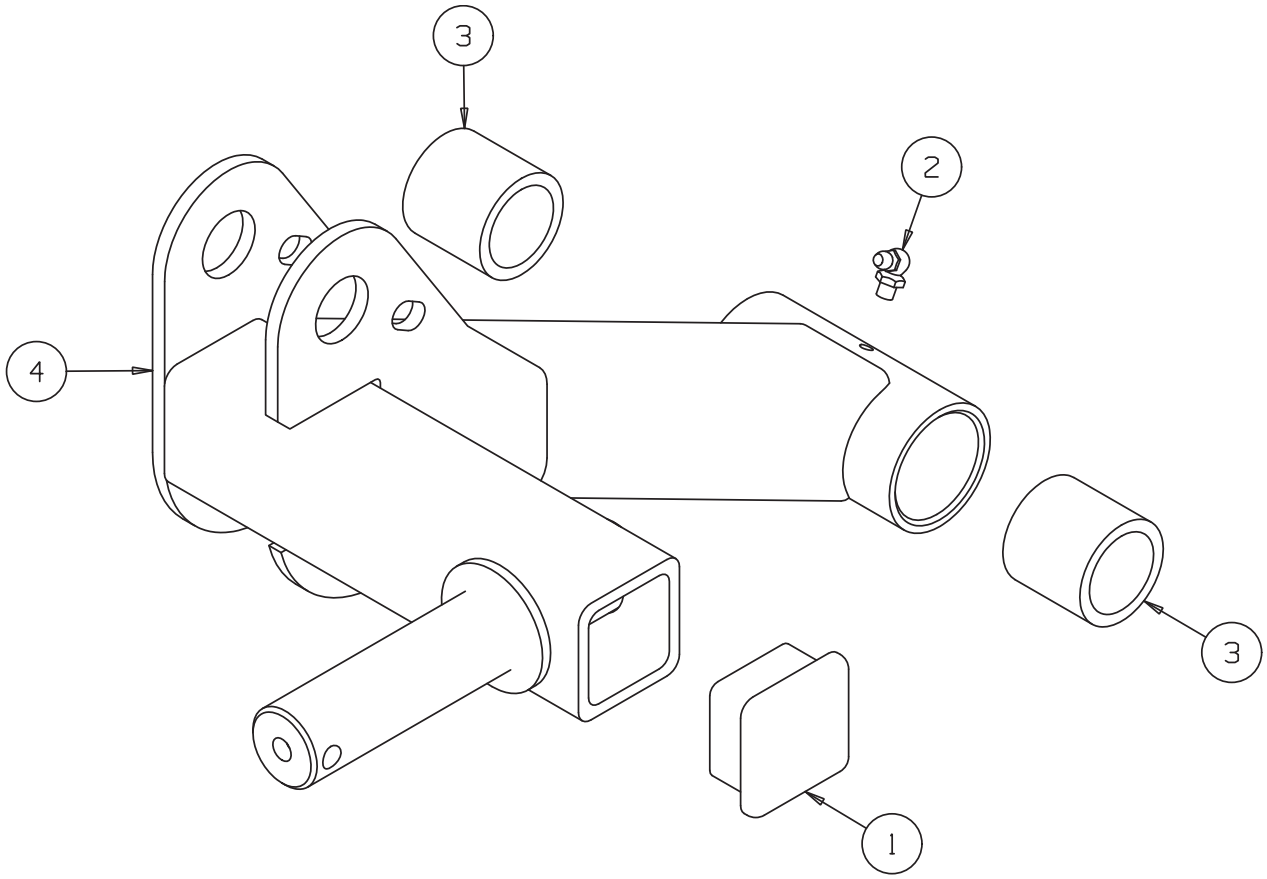

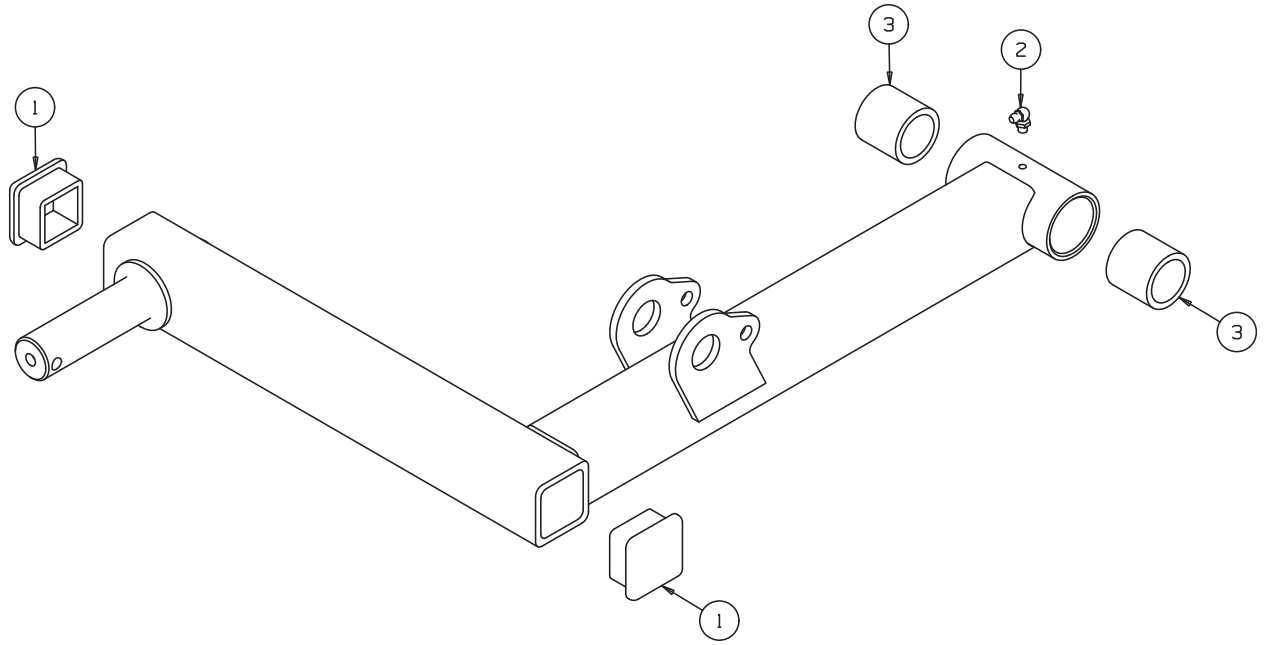

https://truckmanualshub.com/

ITEM	PART NO.	DESCRIPTION	QTY.	REMARKS
		Lift Arm-Front LH	1	
1	002952633	• End Cap-RHS 50x50x5	1	
2	002993160	• Lubricator-M6 x 90 Deg	1	
3	4130255	• Bush-Devol 1-1/4 x 1-5/8 x 1-1/2	2	
4	4130836	• Wldmt-Lift Arm LH	1	
		Lift Arm-Centre	1	
1	002952633	• End Cap-RHS 50x50x5	2	
2	002993160	• Lubricator-M6 x 90 Deg	1	
3	4130255	• Bush-Devol 1-1/4 x 1-5/8 x 1-1/2	2	
4	4130838	• Wldmt-Lift Arm Ctr	1	
5	4131709	Bracket-Bumper Stop	1	

* Not Illustrated

https://truckmanualshub.com/

INCLINOMETER KIT (LMAC 380)

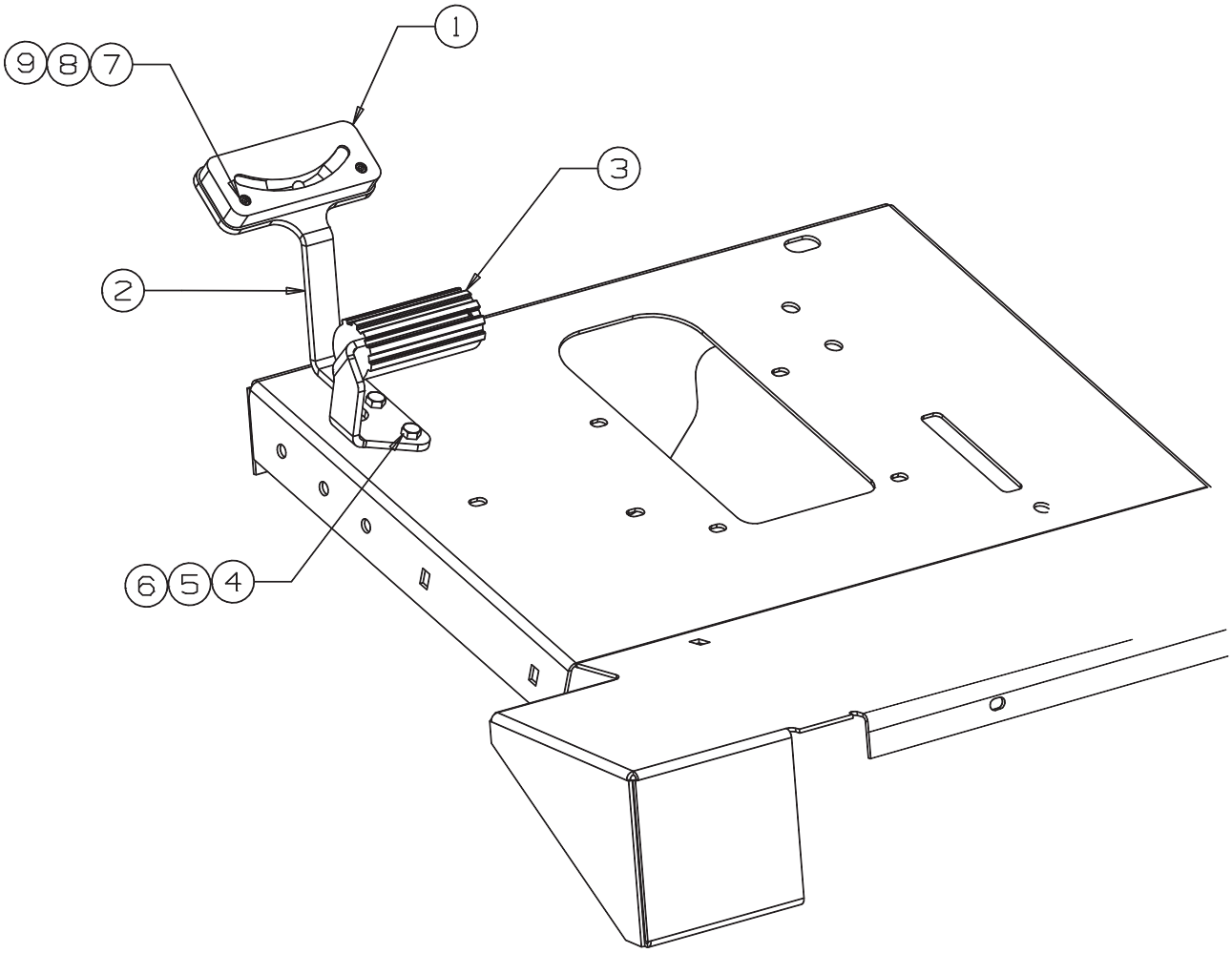

https://truckmanualshub.com/

ITEM	PART NO.	DESCRIPTION	QTY.	REMARKS
1	4212921	• Ball Inclinometer	1	
2	4206788	• Footrest and Inclinometer Braclet	1	
3	3003475	• Grip-Pedal	1	
4	450192	• Screw M8 x 25	2	
5	450390	• Washer 8mm	2	
6	450378	• Nyloc Nut M8	2	
7	450699	• Hex Hd Screw M5	2	
8	450388	• Washer 5mm	2	
9	450376	• Nyloc Nut M5	2	

https://truckmanualshub.com/

TRANSPORT STOPS-AR3 (LMAC 174)

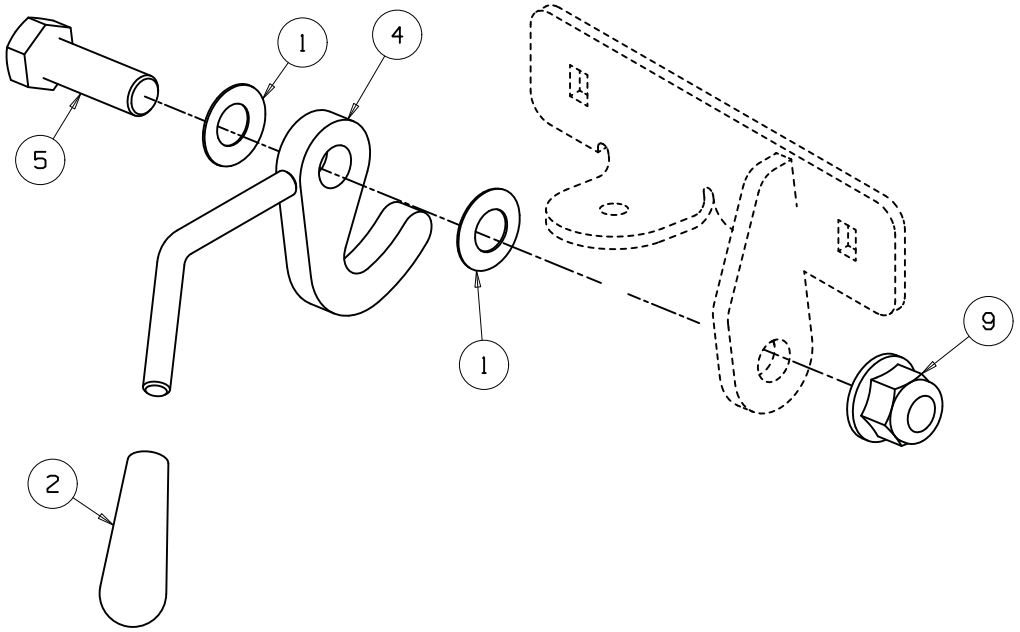

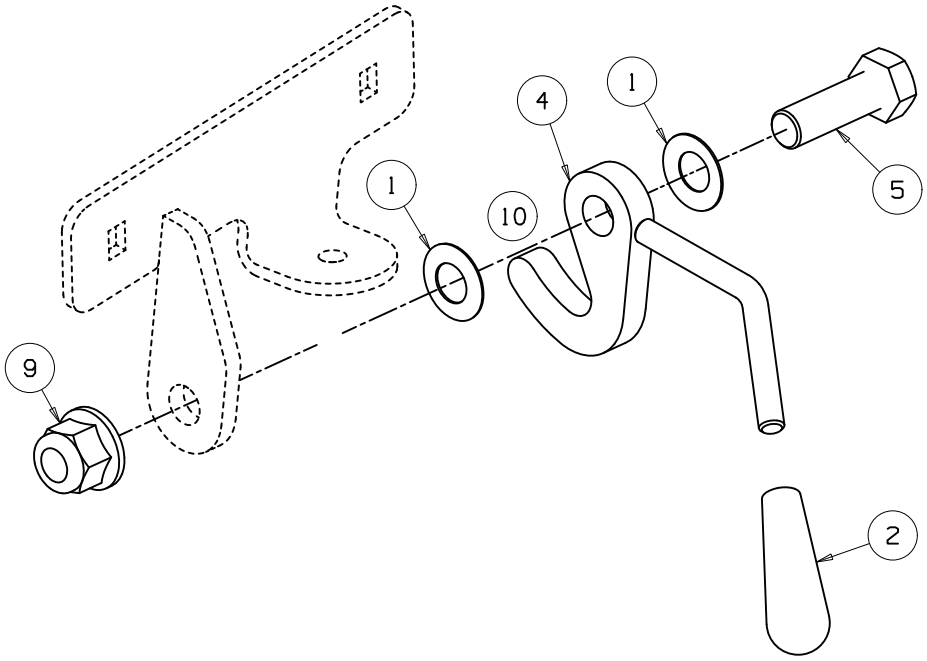

https://truckmanualshub.com/

ITEM	PART NO.	DESCRIPTION	QTY.	REMARKS
1	002921109	Sprg-Disc 16.3 x 31.5 x 0.8	4	up to sn EK000354
2	002990227	Knob	2	up to sn EK000354
4	4137435	Transport Hook W/A	2	up to sn EK000354
5	450069	Bolt-Hex M16 x 50	2	up to sn EK000354
9	452439	Nut-Hex M16 Flng Nyloc	2	up to sn EK000354

https://truckmanualshub.com/

https://truckmanualshub.com/

https://truckmanualshub.com/

JACOBSEN
A Textron Company

bsi. ISO 9001 Quality Management

bsi. ISO 14001 Environmental Management

bsi. OHSAS 18001 Occupational Health and Safety Management

Europe & Rest of The World Except North & South America

Ransomes Jacobsen Limited
West Road, Ransomes Europark, Ipswich, IP3 9TT
English Company Registration No. 1070731
www.ransomesjacobsen.com

North & South America

Jacobsen, A Textron Company
11108 Quality Drive, Charlotte,
NC 28273, USA
www.Jacobsen.com

JACOBSEN A Textron Company RANSOMES