https://www.pdfmanual4trucks.com/

Bobcat®

COMPACT EXCAVATORS

E17 E19 E20

One Tough Animal™

https://www.pdfmanual4trucks.com/

A NEW GENERATION...

... of Bobcat 1-2 ton conventional swing models (E17-E19) - together with the brand-new unique 2 ton Zero House Swing model (E20) - provide superior performance, operator comfort, safety and functional features.

E20 - Zero House Swing (ZHS)

For operators looking for compactness without sacrificing operator comfort and performance.

- 2019 kg operating weight with cab
- Digging depth: 2385 / 2565 mm
- Overall width: 1360 mm, with possibility to retract to 980 mm
- Heavy counterweight for unbeatable stability
- Cab and canopy selection
- Comfort package (optional)
  - Joystick-controlled boom swing and auxiliary for greater comfort and accuracy with selectable auxiliary modes
  - Autoshift travel motors to guarantee better traction and manoeuvrability
  - Higher-class seat
- 2nd auxiliary line circuit (optional)
- Hydraulic clamp (optional)

E20 - EXPECT THE UNEXPECTED

- ✔ Zero House Swing functionality (even with cab)
- ✔ Stability of best-in-class conventional machine
- ✔ Roomy and comfortable operator environment
- ✔ Easy access for daily maintenance and service

https://www.pdfmanual4trucks.com/

Key features:

- Robust and reliable excavator
- Excellent performance - both speed and force
- Smooth operation for precise job
- Unparalleled working range
- Best-in-class stability and visibility
- Unrivalled operator comfort and access to cab
- Advanced electronic control functions with new control panel
- Integrated upper-structure tie-down points

Excavators can be upgraded to any customer requirement with the following options:

- Long dipperstick for superior digging depth and reach
- Long blade for extra stability and easy dustpanability
- Keyless ignition
- Motion alarm
- Seat options, all with retractable seat belt
- Cab lights and MP3 radio
- Object handling certified
- Auxiliary line circuit extension on dipperstick
- Klac and Lehnhoff couplers

E19 - Conventional Tail Swing

For experienced operators focusing on performance and durability.

- 1885 kg operating weight with cab
- Digging depth: 2385 / 2565 mm
- Overall width: 1360 mm, with possibility to retract to 980 mm
- Cab and canopy selection
- Additional counterweight for excellent stability (optional)
- Comfort package (optional)
  - Joystick-controlled boom swing and auxiliary for greater comfort and accuracy with selectable auxiliary modes
  - Autoshift travel motors to guarantee better traction and manoeuvrability
  - Higher-class seat
- 2nd auxiliary line (optional)
- Hydraulic clamp (optional)

E17 - Conventional Tail Swing

This entry level "1.5 ton" excavator - designed for easy transportability - includes many of the E19's features.

- 1711 kg operating weight with canopy
- Digging depth: 2249 mm
- Overall width: 1360 mm, with possibility to retract to 980 mm
- Cab and canopy selection
- 2nd speed (optional)

https://www.pdfmanual4trucks.com/

COMFORT, VISIBILITY AND SAFETY

The E17/E19 and E20 cabs offer an uncompromised operator environment - which, together with excellent visibility, provides the best possible operator comfort and safety.

Premium features for first-class comfort on any job:

- Unique-in-class joystick control of boom swing and auxiliary hydraulics with 3 selectable auxiliary modes to match any attachments
- Fully adjustable cab heater unit
- Seat options for optimal operator preference
- All parameters checked in one view with new control panel (auto engine shutdown, auto cab lights switch-off, audible alarm in case of malfunction)
- Easy-to-operate gas spring-assisted light and rigid front window
- Keyless ignition for optimal safety
- Battery kill switch for storage and to prevent theft
- Automatic slew brake for safe parking and transportation

Display:

1. Engine hours, job hours, service codes, voltage, maintenance clock, countdown for glow plugs, RPM
2. General warning
3. Engine coolant temp
4. Two speeds
5. Engine warning
6. Lights
7. Fuel gauge and alarm
8. Seat belt
9. Hydraulic warning
10. Info button - Display menu
11. Aux hydraulics button - Thumb aux control (optional)

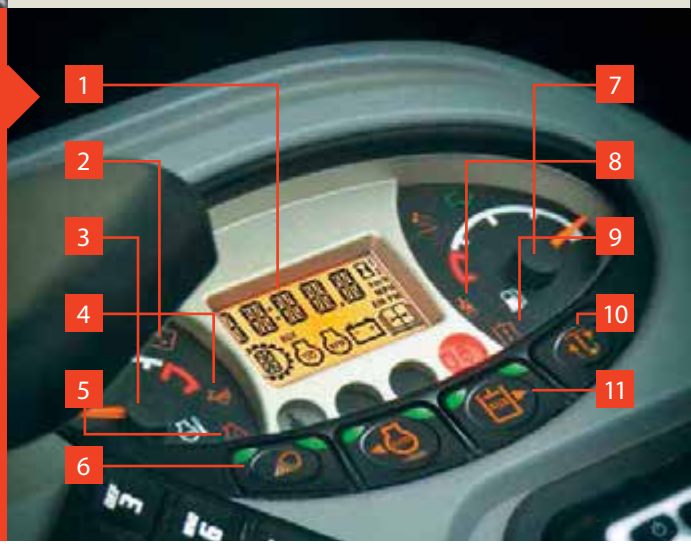

https://www.pdfmanual4trucks.com/

These machines are built around the operator - providing optimal ergonomics for operators of all sizes. The new cab design features large windows and narrow pillars to maximise all-around visibility.

Superior comfort for hours on end

- Large and spacious cab
- Convenient space for the feet with flat floor for easy cleaning
- Easy cab access
- Ergonomic pedals and easy access to all controls
- Floor panels are easy to remove
- Storage box
- Cup holders

https://www.pdfmanual4trucks.com/

SMOOTH PERFORMANCE AND COMPACTNESS

Bobcat's unique E17, E19 and E20 hydraulic systems make the best possible use of the engine power. Fast cycle times, combined with smooth control of class-leading breakout forces, provide maximum productivity. Boom and dipperstick cylinder cushioning - unique in their class - enhance overall smoothness.

The Zero House Swing (ZHS) concept enhances Zero Tail Swing (ZTS) functionality by further protecting the front upper structure corners turning within the swing circle. ZHS functionality provides 320° of free rotation while working close to any object.

The retractable undercarriage (standard equipment for all 3 models) enables you to enter buildings through the doors. Side-shifted work group provides excellent working visibility. New easy-to-operate durable blade extensions. Left-hand side-mounted offset cylinder to minimise chance of damaging surrounding objects.

https://www.pdfmanual4trucks.com/

Lift more, lift higher

The superior dumping height makes loading trucks easy, while the reach at ground level means you don't need to reposition as often when digging.

With enhanced stability and lifting capacity, combined with best-in-class proportional auxiliary flow, the E17, E19 and E20 offer you the highest versatility in operating a wide range of attachments.

Transportability

All 3 models fit easily on a conventional trailer. Easier transportability with new integrated upper structure tie-down points.

Two dozer blade options:
1/ Standard length for customers that prefer compactness for working in reduced spaces, 2/ Extended length for customers that prefer dustpanability and increased front stability. All blades provide excellent departure angles and higher profile for better dozing performance.

https://www.pdfmanual4trucks.com/

QUALITY – RELIABILITY – DURABILITY

Tough materials, tested design

Using highly durable materials makes the Bobcat E17, E19 and E20 models hard-wearing and robust. The design features are tested under extreme conditions - and the heavy steel gauge tailgate ensures extra durability and peace of mind while working.

Reliability added in every feature:

- Rear tailgates protected by casted counterweights
- Metal covers can be opened or bolted on
- 2-piece blade cylinder hoses
- Wrenchless hydraulic hose technology helps prevent leakage
- Proven boom and dipperstick design
- Top-mounted boom cylinder
- Oversized cylinders for long life
- New paint and surface treatment process
- Reinforced expandable undercarriage to raise rigidity

https://www.pdfmanual4trucks.com/

MAINTENANCE AND SERVICE

Daily maintenance and service points are conveniently located for easy and immediate access.

Side-by-side coolers for easy cleaning. Diagnostics are easy thanks to display error codes on control panel and service tool connection. The E20 tailgate provides great access to all daily maintenance components and service points.

E17 E19 — SPECIFICATIONS

https://www.pdfmanual4trucks.com/

	E17	E19
WEIGHTS		
Operating weight with canopy	1711 kg	1781 kg
Operating weight with cab	1807 kg	1885 kg
Additional weight for internal counterweight	-	50 kg
Ground pressure	29.4 kPa	32.4 kPa
ENGINE		
Make / model	Kubota / D722-E2B-BCZ-7	Kubota / D722-E2B-BCZ-7
Fuel/Cooling	Diesel/Liquid	Diesel/Liquid
Number of cylinders	3	3
Displacement	0.7 L	0.7 L
Maximum NET power (ISO 9249)	9.9 kW	9.9 kW
Maximum NET torque (ISO 9249)	42.3 Nm	42.3 Nm
PERFORMANCE		
Digging force, standard dipperstick (ISO 6015)	9108 N	10371 N
Digging force, long dipperstick (ISO 6015)	-	9279 N
Digging force, bucket (ISO 6015)	16177 N	20835 N
Drawbar pull	14334 N	19380 N
Travel speed, low range	2.0 km/h	2.5 km/h
Travel speed, high range	3.2 km/h	4.0 km/h
HYDRAULIC SYSTEM		
Pump type	Triple gear pump	Dual piston pump with gear pump
Pump capacity	32.5 L/min	41.3 L/min
Pump 1 capacity at 2500 RPM	10.0 L/min	11.3 L/min
Pump 2 and 3 capacity at 2500 RPM	11.3 L/min	15 L/min
Auxiliary flow	32.5 L/min	30 L/min
Auxiliary relief	227.0 bar	180.0 bar
SLEW SYSTEM		
Boom swing, left	80 °	80 °
Boom swing, right	60 °	60 °
Slew rate	8.7 RPM	8.4 RPM
FLUID CAPACITIES		
Cooling system	3.3 L	3.3 L
Engine lubrication plus oil filter	3.3 L	3.3 L
Fuel reservoir	19.0 L	19.0 L
Hydraulic system	17.0 L	19.0 L
ENVIRONMENTAL		
Noise level LpA (EU Directive 2006/42/EC)	79 dB(A)	79 dB(A)
Noise level LWA (EU Directive 2000/14/EC)	93 dB(A)	93 dB(A)
Whole body vibration (ISO 2631–1)	0.74 ms^{-2}	0.74 ms^{-2}
Hand-arm vibration (ISO 5349–1)	1.42 ms^{-2}	1.42 ms^{-2}
Hand-arm vibration (ISO 5349–1) Uncertainty	0.37 ms^{-2}	0.37 ms^{-2}

STANDARD FEATURES

TOPS/ROPS/FOPS* canopy
Hydraulically retractable undercarriage from 1360 to 980 mm
Exposed counterweight with 4 mm steel tailgate
980 mm dozer blade with two 190 mm blade extensions
230 mm rubber track
Double acting auxiliary hydraulics
Auxiliary quick couplers (E19)
Control console locks
Horn
Hydraulic joystick controls
Foldable & ergonomic pedals
Hydraulic and Travel Control Lockouts
Retractable seat belt
Two-speed travel (E19)
Upperstructure four point tie down
Engine with auto shutdown
Full fuel warning alarm
Work light
Battery kill switch
Storage compartment
Cupholders
Warranty: 12 months or 2000 hours

* (1) Tip Over Protective Structure (TOPS) – Meets requirements of ISO 12117. (2) Roll Over Protective Structure (ROPS) – Meets requirements of ISO 3471. (3) Falling Object Protective Structure (FOPS) – Meets requirements of ISO 3449.

OPTIONS

TOPS/ROPS cab with heater
AM/FM MP3 stereo radio
Cab/canopy light kit
Clamp ready long dipperstick (E19)
Long dozer blade
Additional internal counterweight (E19)
Comfort package (E19)
- Fingertip auxiliary and offset hydraulic control with selectable auxiliary hydraulic flow
- Auto Shift Drive Motors
- Superior seat with high back (Canopy)
- Deluxe textile suspension seat (Cab)

Keyless start
Travel motion alarm
Two-speed travel (E17)
Deluxe textile suspension seat (Cab) (E17)
2nd Auxiliary hydraulics (E19)
Auxiliary hydraulic line on dipperstick
Auxiliary quick couplers (E17)
Hydraulic clamp (E19)
Klac and Lehnhoff couplers
Boom Load Holding Valve
Object handling certified

WORKING RANGE

std./long dipperstick* – std./long dozer blade**

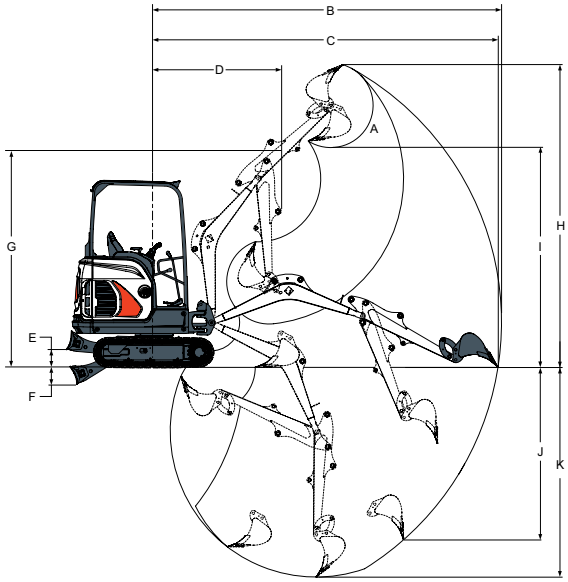

	E17	E19
A	196 °	196 °
B	3919 mm	4084 mm
B*	-	4257 mm
C	3871 mm	4039 mm
C*	-	4214 mm
D	1526 mm	1542 mm
D*	-	1561 mm
E	220 mm	220 mm
E**	300 mm	300 mm
F	204 mm	204 mm

	E17	E19
F**	254 mm	254 mm
G	2405 mm	2564 mm
H	3371 mm	3573 mm
H*	-	3701 mm
I	2370 mm	2566 mm
I*	-	2693 mm
J	1810 mm	1948 mm
J*	-	2115 mm
K	2249 mm	2385 mm
K*	-	2565 mm

DIMENSIONS

std./long dipperstick* – std./long dozer blade**

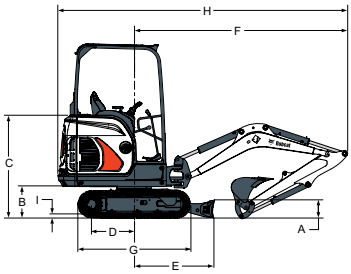

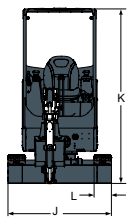

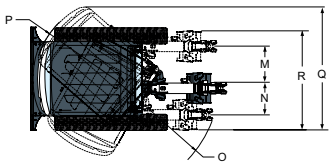

	E17	E19
A	235 mm	235 mm
B	419 mm	419 mm
C	1340 mm	1340 mm
D	1114 mm	1114 mm
E	1045 mm	1045 mm
E**	1252 mm	1252 mm
F	2666 mm	2832 mm
F*	-	2812 mm
G	1476 mm	1476 mm
H	3665 mm	3831 mm
H*	-	3812 mm

	E17	E19
I	25 mm	25 mm
J	1360 mm > 980 mm	
K	2299 mm	2299 mm
L	230 mm	230 mm
M	433 mm	433 mm
N	589 mm	589 mm
O	1128 mm	1154 mm
P	1009 mm	1009 mm
Q	1801 mm	1801 mm
R	1645 mm	1645 mm

E20 — SPECIFICATIONS

https://www.pdfmanual4trucks.com/

	E20
WEIGHTS	
Operating weight with canopy	1930 kg
Operating weight with cab	2019 kg
Ground pressure	31.1 kPa
ENGINE	
Make / model	Kubota / D722-E2B-BCZ-7
Fuel/Cooling	Diesel/Liquid
Number of cylinders	3
Displacement	0.7 L
Maximum NET power (ISO 9249)	9.9 kW
Maximum NET torque (ISO 9249)	42.3 Nm
PERFORMANCE	
Digging force, standard dipperstick (ISO 6015)	10371 N
Digging force, long dipperstick (ISO 6015)	9279 N
Digging force, bucket (ISO 6015)	20835 N
Drawbar pull	19302 N
Travel speed, low range	2.5 km/h
Travel speed, high range	4.0 km/h
HYDRAULIC SYSTEM	
Pump type	Dual piston pump with gear pump
Pump capacity	41.3 L/min
Pump 1 capacity at 2500 RPM	11.3 L/min
Pump 2 and 3 capacity at 2500 RPM	15 L/min
Auxiliary flow	30 L/min
Auxiliary relief	180.0 bar
SLEW SYSTEM	
Boom swing, left	80 °
Boom swing, right	60 °
Slew rate	8.4 RPM
FLUID CAPACITIES	
Cooling system	3.3 L
Engine lubrication plus oil filter	3.3 L
Fuel reservoir	19.0 L
Hydraulic system	19.0 L
ENVIRONMENTAL	
Noise level LpA (EU Directive 2006/42/EC)	82 dB(A)
Noise level LWA (EU Directive 2000/14/EC)	93 dB(A)
Whole body vibration (ISO 2631–1)	0.73 ms^{-2}
Hand-arm vibration (ISO 5349–1)	1.57 ms^{-2}
Hand-arm vibration (ISO 5349–1) Uncertainty	0.37 ms^{-2}

STANDARD FEATURES

TOPS/ROPS/FOPS* canopy
Hydraulically retractable undercarriage from 1360 to 980 mm
Heavy Counterweight
980 mm dozer blade with two 190 mm blade extensions
230 mm rubber track
Double acting auxiliary hydraulics with quick couplers
Control console locks
Horn
Hydraulic joystick controls
Hydraulic and Travel Control Lockouts
Foldable and ergonomic pedals
Retractable seat belt
Two-speed travel
Upperstructure four point tie down
Engine with auto shutdown
Full fuel warning alarm
Work light
Battery kill switch
Cupholders
Warranty: 12 months or 2000 hours

* (1) Tip Over Protective Structure (TOPS) – Meets requirements of ISO 12117. (2) Roll Over Protective Structure (ROPS) – Meets requirements of ISO 3471. (3) Falling Object Protective Structure (FOPS) – Meets requirements of ISO 3449.

OPTIONS

TOPS/ROPS cab with heater
AM/FM MP3 stereo radio
Cab/canopy light kit
Clamp ready long dipperstick
Long dozer blade
Comfort package
- Fingertip auxiliary and offset hydraulic control with selectable auxiliary hydraulic flow
- Auto Shift Drive Motors
- Superior seat with high back (Canopy)
- Deluxe textile suspension seat (Cab)

Keyless start
Travel motion alarm
2nd Auxiliary hydraulics
Auxiliary hydraulic line on dipperstick
Hydraulic clamp
Klac and Lehnhoff couplers
Boom Load Holding Valve
Object handling certified

WORKING RANGE

std./long dipperstick* – std./long dozer blade**

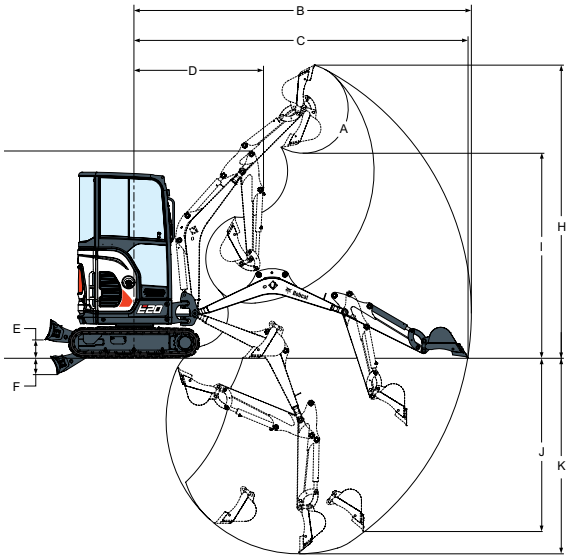

	E20
A	196 °
B	4134 mm
B*	4307 mm
C	4089 mm
C*	4264 mm
D	1592 mm
D*	1611 mm
E	220 mm
E**	300 mm
F	204 mm

	E20
F**	254 mm
G	2564 mm
H	3573 mm
H*	3701 mm
I	2566 mm
I*	2693 mm
J	1948 mm
J*	2115 mm
K	2385 mm
K*	2565 mm

DIMENSIONS

std./long dipperstick* – std./long dozer blade**

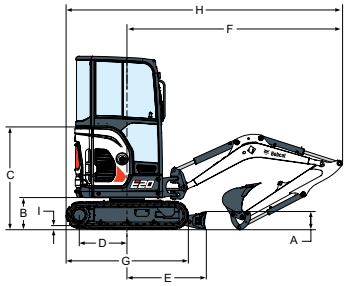

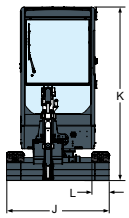

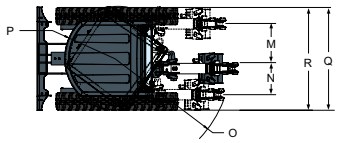

	E20
A	235 mm
B	419 mm
C	1138 mm
D	1258 mm
E	1045 mm
E**	1252 mm
F	2882 mm
F*	2862 mm
G	1620 mm
H	3688 mm
H*	3669 mm

	E20
I	25 mm
J	1360 mm > 980 mm
K	2299 mm
L	230 mm
M	433 mm
N	589 mm
O	1154 mm
P	1009 mm
Q	1801 mm
R	1645 mm

E17 E19 E20 — LIFT CAPACITIES

https://www.pdfmanual4trucks.com/

Picking up and placing heavy items is easy with all 3 models.
E20 stability is comparable to that of best-in-class conventional machines on the market. E19 stability can be boosted to class-leading stability by adding internal counterweights. In addition, these machines now come with an optional certified 'object handling device', which consists of: boom load holding valve, dipperstick load holding valve, hooking device and overload warning device.

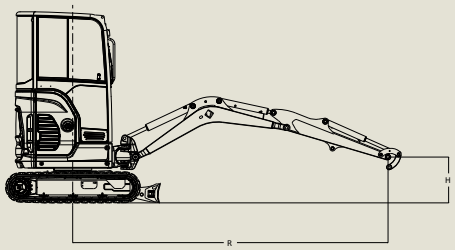

E17 - RATED LIFT CAPACITY (Canopy, Long blade)

LIFT POINT HEIGHT [H]	RATED LIFT CAPACITY - OVER BLADE BLADE DOWN			RATED LIFT CAPACITY - OVER BLADE BLADE UP			RATED LIFT CAPACITY - OVER SIDE BLADE UP			RATED LIFT CAPACITY - OVER SIDE BLADE UP - RETRACTED		
	LIFT RADIUS [R]		LIFT @ max radius [R]	LIFT RADIUS [R]		LIFT @ max radius [R]	LIFT RADIUS [R]		LIFT @ max radius [R]	LIFT RADIUS [R]		LIFT @ max radius [R]
	2000 mm	3000 mm		2000 mm	3000 mm		2000 mm	3000 mm		2000 mm	3000 mm	
2000 mm			*336 kg @ 2960 mm			258 kg @ 2960 mm			305 kg @ 2960 mm			180 kg @ 2960 mm
1000 mm	*448 kg	*352 kg	*331 kg @ 3338 mm	*448 kg	246 kg	210 kg @ 3338 mm	*448 kg	289 kg	246 kg @ 3338 mm	313 kg	170 kg	143 kg @ 3338 mm
Ground	*693 kg	*373 kg	*305 kg @ 3310 mm	409 kg	236 kg	206 kg @ 3310 mm	485 kg	276 kg	241 kg @ 3310 mm	276 kg	161 kg	136 kg @ 3310 mm
-1000 mm	*566 kg		*309 kg @ 2875 mm	416 kg		247 kg @ 2875 mm	485 kg		287 kg @ 2875 mm	270 kg		168 kg @ 2875 mm

E19 - RATED LIFT CAPACITY (Canopy, Standard dipperstick, Long blade)

LIFT POINT HEIGHT [H]	LIFT RADIUS [R]		LIFT @ max radius [R]	LIFT RADIUS [R]		LIFT @ max radius [R]	LIFT RADIUS [R]		LIFT @ max radius [R]	LIFT RADIUS [R]		LIFT @ max radius [R]
	2000 mm	3000 mm		2000 mm	3000 mm		2000 mm	3000 mm		2000 mm	3000 mm	
2000 mm		*394 kg	*422 kg @ 3175 mm		277 kg	244 kg @ 3175 mm		309 kg	293 kg @ 3175 mm		191 kg	183 kg @ 3175 mm
1000 mm	*660 kg	*459 kg	*402 kg @ 3533 mm	487 kg	261 kg	198 kg @ 3533 mm	543 kg	312 kg	237 kg @ 3533 mm	325 kg	193 kg	142 kg @ 3533 mm
Ground	*896 kg	*497 kg	*380 kg @ 3515 mm	439 kg	244 kg	193 kg @ 3515 mm	504 kg	294 kg	232 kg @ 3515 mm	290 kg	177 kg	137 kg @ 3515 mm
-1000 mm	*739 kg	*409 kg	*368 kg @ 3112 mm	401 kg	235 kg	222 kg @ 3112 mm	478 kg	272 kg	270 kg @ 3112 mm	266 kg	156 kg	159 kg @ 3112 mm

E19 - RATED LIFT CAPACITY (Cab, Long dipperstick, Long blade, Add. counterweight)

LIFT POINT HEIGHT [H]	LIFT RADIUS [R]		LIFT @ max radius [R]	LIFT RADIUS [R]		LIFT @ max radius [R]	LIFT RADIUS [R]		LIFT @ max radius [R]	LIFT RADIUS [R]		LIFT @ max radius [R]
	2000 mm	3000 mm		2000 mm	3000 mm		2000 mm	3000 mm		2000 mm	3000 mm	
2000 mm		*340 kg	*380 kg @ 3372 mm		*340 kg	260 kg @ 3372 mm		*340 kg	306 kg @ 3372 mm		228 kg	188 kg @ 3372 mm
1000 mm	*496 kg	*412 kg	*372 kg @ 3708 mm	*496kg	294 kg	217 kg @ 3708 mm	*496 kg	346 kg	254 kg @ 3708 mm	390 kg	219 kg	156 kg @ 3708 mm
Ground	*854 kg	*465 kg	*364 kg @ 3691 mm	495 kg	279 kg	212 kg @ 3691 mm	560 kg	329 kg	248 kg @ 3691 mm	341 kg	204 kg	154 kg @ 3691 mm
-1000 mm	*735 kg	*405 kg	*351 kg @ 3315 mm	464 kg	273 kg	240 kg @ 3315 mm	541 kg	310 kg	285 kg @ 3315 mm	342 kg	196 kg	176 kg @ 3315 mm

E20 - RATED LIFT CAPACITY (Canopy, Standard dipperstick, Long blade)

LIFT POINT HEIGHT [H]	LIFT RADIUS [R]		LIFT @ max radius [R]	LIFT RADIUS [R]		LIFT @ max radius [R]	LIFT RADIUS [R]		LIFT @ max radius [R]	LIFT RADIUS [R]		LIFT @ max radius [R]
	2000 mm	3000 mm		2000 mm	3000 mm		2000 mm	3000 mm		2000 mm	3000 mm	
2000 mm		*403 kg	*422 kg @ 3225 mm		311 kg	227 kg @ 3225 mm		305 kg	270 kg @ 3225 mm		192 kg	158 kg @ 3225 mm
1000 mm	*646 kg	*469 kg	*402 kg @ 3583 mm	*646 kg	306 kg	227 kg @ 3583 mm	*646 kg	301 kg	223 kg @ 3583 mm	331 kg	175 kg	126 kg @ 3583 mm
Ground	*932 kg	*508 kg	*380 kg @ 3565 mm	526 kg	297 kg	224 kg @ 3565 mm	509 kg	289 kg	222 kg @ 3565 mm	281 kg	164 kg	124 kg @ 3565 mm
-1000 mm	*769 kg	*418 kg	*368 kg @ 3162 mm	546 kg	297 kg	261 kg @ 3162 mm	516 kg	294 kg	260 kg @ 3162 mm	286 kg	168 kg	145 kg @ 3162 mm

E20 - RATED LIFT CAPACITY (Cab, Long dipperstick, Long blade)

LIFT POINT HEIGHT [H]	LIFT RADIUS [R]		LIFT @ max radius [R]	LIFT RADIUS [R]		LIFT @ max radius [R]	LIFT RADIUS [R]		LIFT @ max radius [R]	LIFT RADIUS [R]		LIFT @ max radius [R]
	2000 mm	3000 mm		2000 mm	3000 mm		2000 mm	3000 mm		2000 mm	3000 mm	
2000 mm		*341 kg	*380 kg @ 3422 mm		*341 kg	274 kg @ 3422 mm		*341 kg	272 kg @ 3422 mm		205 kg	165 kg @ 3422 mm
1000 mm	*532 kg	*423 kg	*372 kg @ 3758 mm	*532 kg	321 kg	233 kg @ 3758 mm	*532 kg	316 kg	229 kg @ 3758 mm	348 kg	189 kg	135 kg @ 3758 mm
Ground	*952 kg	*498 kg	*364 kg @ 3741 mm	552 kg	315 kg	230 kg @ 3741 mm	535 kg	306 kg	227 kg @ 3741 mm	304 kg	180 kg	133 kg @ 3741 mm
-1000 mm	*835 kg	*453 kg	*351 kg @ 3365 mm	577 kg	316 kg	263 kg @ 3365 mm	545 kg	313 kg	262 kg @ 3365 mm	313 kg	186 kg	154 kg @ 3365 mm

* Rated hydraulic lift capacity
The lifting capacities are based on ISO 10567 and do not exceed 75 % of the static tilt load of the machine or 87 % of the hydraulic lifting capacity of the machine. The lifting capacities exclude a standard bucket

Specifications and design are subject to change without notice. Pictures of Bobcat products may show other than standard equipment.

Bobcat®

www.bobcat.eu

©2014 BOBCAT B4475000-EN (08-14)

DI CE - Drève Richelle 167 - B-1410 Waterloo, Belgium