https://truckmanualshub.com/

RT80Q

Operator’s Manual

CE

CMW®

Issue 1.0

053-2528

https://truckmanualshub.com/

Overview

Chapter Contents

Serial Number Location 2

Intended Use 3

Equipment Modification 3

Unit Components 4

Operator Orientation. 5

About This Manual 5

- Bulleted Lists. 5
- Numbered Lists. 5

https://truckmanualshub.com/

Serial Number Location

Record serial numbers and date of purchase in spaces provided. RT80Q (1) and engine serial numbers (2) are located as shown.

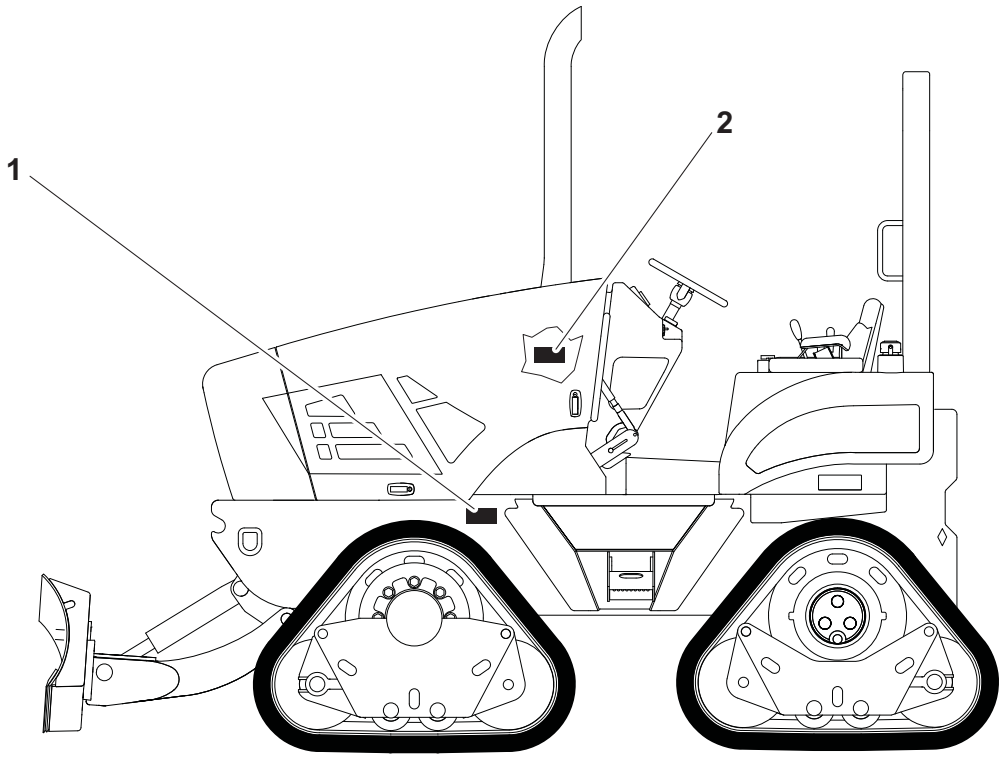

t33om083w.eps

Date of manufacture	
Date of purchase	
RT80Q serial number	
Front attachment serial number	
Rear attachment serial number	
Trailer serial number	
Engine serial number	

https://truckmanualshub.com/

Intended Use

The RT80Q is a riding trencher designed to install buried service lines of various sizes using a variety of Ditch Witch attachments.

Attachment	Max. width/diameter	Max. depth
H810 trencher	24" (610 mm)	93" (2.4 m)
H813 trencher	12" (305 mm)	58.4" (1.5 m)
H832 plow	n/a	36" (915 mm)
RC80 reel carrier	84" (2.1 m) reel diameter	n/a
H853 combo	12" (305 mm)	69" (1.8 m)
A820 backhoe	18" (460 mm) bucket	89" (2.2 m)
HD630 saw	See manufacturer's specifications	

This unit is designed for operation in temperatures typically experienced in earth moving and construction work environments. Provisions may be required to operate in extreme temperatures. Contact your Ditch Witch dealer. Use in any other way is considered contrary to the intended use.

The RT80Q should be used with genuine Ditch Witch chain, teeth, and sprockets. It should be operated, serviced, and repaired only by persons familiar with their particular characteristics and acquainted with the relevant safety procedures.

Equipment Modification

This equipment was designed and built in accordance with applicable standards and regulations. Modification of equipment could mean that it will no longer meet regulations and may not function properly or in accordance with the operating instructions. Modification of equipment should only be made by competent personnel possessing knowledge of applicable standards, regulations, equipment design functionality/requirements and any required specialized testing.

The protection offered by the Rollover Protective System (ROPS) will be imparied if it has been subjected to any modification, structural damage, or has been involved in an overturn accident. The ROPS must be replaced after a roll-over.

https://truckmanualshub.com/

Unit Components

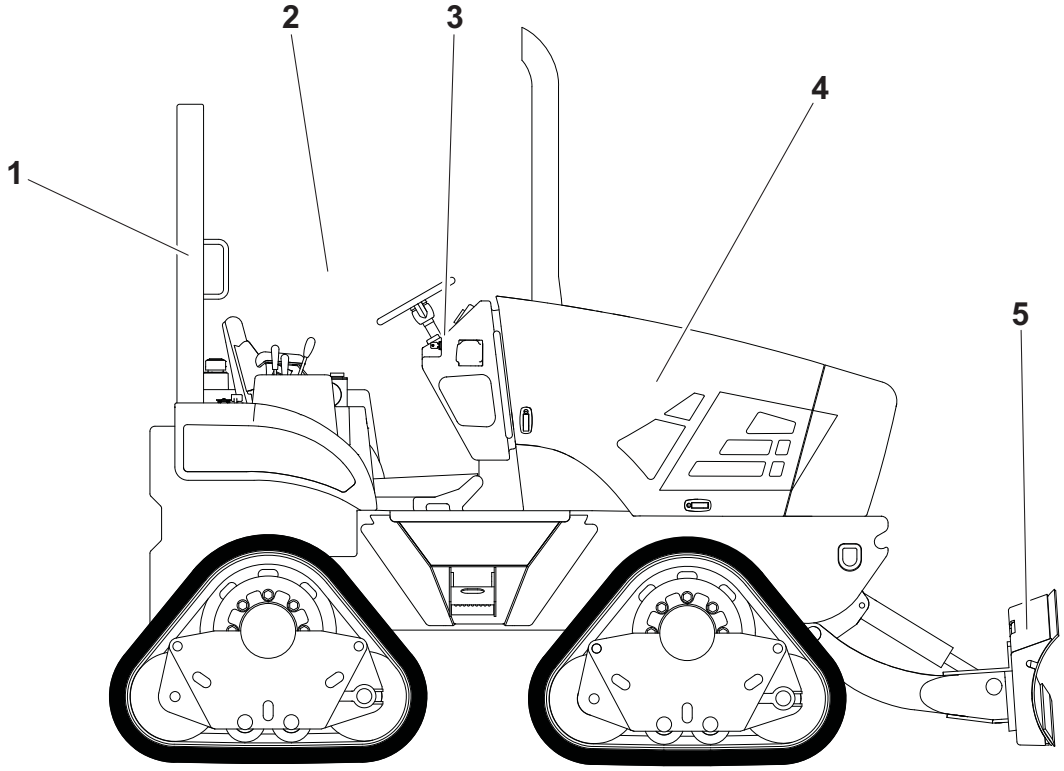

t33om026w.eps

1. Rollover Protective Structure (ROPS)
2. Operator station
3. Control console
4. Engine compartment
5. Backfill blade (optional)

NOTICE: The protection offered by the Rollover Protective System (ROPS) will be imparied if it has been subjected to any modification, structural damage, or has been involved in an overturn accident. The ROPS must be replaced after a roll-over.

https://truckmanualshub.com/

Operator Orientation

1. Front of unit
2. Right of unit
3. Rear of unit
4. Left of unit

Right and left sides of machine are determined by facing front of unit while seated at the controls.

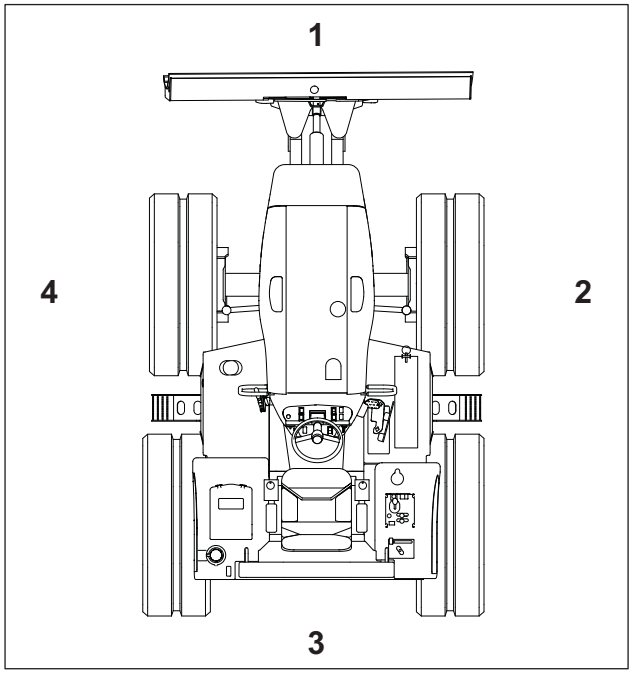

t26om005h.eps

About This Manual

This manual contains information for the proper use of this machine. See **Operation Overview** for basic operating procedures. Cross references such as "See page 50" will direct you to detailed procedures.

Bulleted Lists

Bulleted lists provide helpful or important information or contain procedures that do not have to be performed in a specific order.

Numbered Lists

Numbered lists contain illustration callouts or list steps that must be performed in order.

https://truckmanualshub.com/

https://truckmanualshub.com/

Foreword

This manual is an important part of your equipment. It provides safety information and operation instructions to help you use and maintain your Ditch Witch equipment.

Read this manual before using your equipment. Keep it with the equipment at all times for future reference. If you sell your equipment, be sure to give this manual to the new owner.

If you need a replacement copy, contact your Ditch Witch dealer. If you need assistance in locating a dealer, visit our website at **www.ditchwitch.com** or write to the following address:

The Charles Machine Works, Inc.
Attn: Marketing Department
PO Box 66
Perry, OK 73077-0066
USA

The descriptions and specifications in this manual are subject to change without notice. The Charles Machine Works, Inc. reserves the right to improve equipment. Some product improvements may have taken place after this manual was published. For the latest information on Ditch Witch equipment, see your Ditch Witch dealer.

Thank you for buying and using Ditch Witch equipment.

https://truckmanualshub.com/

RT80 Quad-Track
Operator's Manual

Issue number 1.0/OM-06/12
Part number 053-2528

Copyright 2012
by The Charles Machine Works, Inc.

Ditch Witch®, Ditch Witch, CMW, Roto Witch, and The Underground Authority, are registered trademarks of The Charles Machine Works, Inc.

This product is covered by one or more of the following patents: U.S. D640290, D640291, and D640292 with other U.S. and foreign patents pending.

https://truckmanualshub.com/

Contents

Overview 1
machine serial number, information about the type of work this machine is designed to perform, basic machine components, and how to use this manual

Foreword 7
part number, revision level, and publication date of this manual, and factory contact information

Safety 11
machine safety alerts and emergency procedures

Controls 21
machine controls, gauges, and indicators and how to use them

Operation Overview 67
an overview for completing a job with this machine: planning, setting up, installing product, and restoring the jobsite; with cross references to detailed procedures

Prepare 71
procedures for inspecting and classifying the jobsite, planning the installation path, and preparing the jobsite for work

Drive 77
procedures for startup, cold start, driving, and shutdown

Transport 83
procedures for lifting, hauling, and towing

Trench 95
procedures for trenching

Plow 101
procedures for plowing

Reel Carrier 109
procedures for using reel carrier/winder

Saw 113
procedures for sawing

https://truckmanualshub.com/

Backhoe 117
procedures for digging with backhoe

Drill 123
procedures for drilling

Systems and Equipment 131
chain, teeth, sprockets, and optional equipment

Complete the Job 139
procedures for backfilling and restoring the jobsite and rinsing and storing equipment

Service 141
service intervals and instructions for this machine including lubrication, replacement of wear items, and basic maintenance

Specifications 187
machine specifications including weights, measurements, power ratings, and fluid capacities

Support 203
the warranty policy for this machine, and procedures for obtaining warranty consideration and training

Service Record 209
a record of major service performed on the machine

https://truckmanualshub.com/

Safety

Chapter Contents

Guidelines 12

Safety Alert Classifications 13

Safety Alerts 14

Emergency Procedures 17

- Electric Strike Description 17
- If an Electric Line is Damaged 18
- If a Gas Line is Damaged 19
- If a Fiber Optic Cable is Damaged 20
- If Machine Catches on Fire 20

https://truckmanualshub.com/

Guidelines

Follow these guidelines before operating any jobsite equipment:

- Complete proper training and read operator's manual before using equipment.
- Contact your local One-Call (811 in USA) or the One-Call referral number (888-258-0808 in USA and Canada) to have underground utilities located before digging. Also contact any utilities that do not participate in the One-Call service.
- Classify jobsite based on its hazards and use correct tools and machinery, safety equipment, and work methods for jobsite.
- Mark jobsite clearly and keep spectators away.
- Wear personal protective equipment.
- Review jobsite hazards, safety and emergency procedures, and individual responsibilities with all personnel before work begins. Safety videos are available from your Ditch Witch dealer.
- Replace missing or damaged safety shields and safety signs.
- Use equipment carefully. Stop operation and investigate anything that does not look or feel right.
- Do not operate unit where flammable gas may be present.
- Contact your Ditch Witch dealer if you have any question about operation, maintenance, or equipment use.

https://truckmanualshub.com/

Safety Alert Classifications

These classifications and the icons defined on the following pages work together to alert you to situations which could be harmful to you, jobsite bystanders or your equipment. When you see these words and icons in the book or on the machine, carefully read and follow all instructions. YOUR SAFETY IS AT STAKE.

Watch for the three safety alert levels: **DANGER**, **WARNING** and **CAUTION**. Learn what each level means.

DANGER indicates a hazardous situation that, if not avoided, will result in death or serious injury. This signal word is to be limited to the most extreme situations.

WARNING indicates a hazardous situation that, if not avoided, could result in death or serious injury.

CAUTION indicates a hazardous situation that, if not avoided, could result in minor or moderate injury.

Watch for two other words: ***NOTICE*** and **IMPORTANT**.

NOTICE indicates information considered important, but not hazard-related (e.g., messages relating to property damage).

IMPORTANT can help you do a better job or make your job easier in some way.

https://truckmanualshub.com/

Safety Alerts

DANGER Moving digging teeth will kill you or cut off arm or leg. Stay away.

DANGER Turning shaft will kill you or crush arm or leg. Stay away.

DANGER Electric shock. Contacting electric lines will cause death or serious injury. Know location of lines and stay away.

WARNING Jobsite hazards could cause death or serious injury. Use correct equipment and work methods. Use and maintain proper safety equipment.

WARNING Crushing weight could cause death or serious injury. Use proper procedures and equipment or stay away.

WARNING Moving parts could cut off hand or foot. Stay away.

WARNING Explosion possible. Serious injury or equipment damage could occur. Follow directions carefully.

WARNING Incorrect procedures could result in death, injury, or property damage. Learn to use equipment correctly.

https://truckmanualshub.com/

WARNING Fall possible. Riders can fall from machine and be injured or killed. Only operator is allowed on machine.

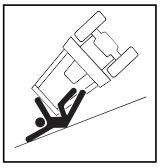

WARNING Rollover possible. If machine rolls over, you could be thrown from seat and killed or crushed. Wear seat belt.

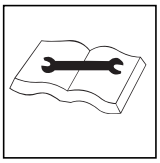

WARNING Improper control function could cause death or serious injury. If control does not work as described in instructions, stop machine and have it serviced.

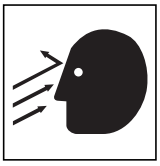

WARNING Looking into fiber optic cable could result in permanent vision damage. Do not look into ends of fiber optic or unidentified cable.

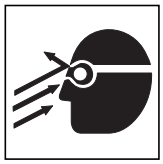

WARNING Pressurized fluid or air could pierce skin and cause injury or death. Stay away.

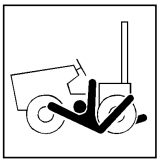

WARNING Runaway possible. Machine could run over you or others. Learn how to use all controls. Start and operate only from operator's position.

WARNING Fire or explosion possible. Fumes could ignite and cause burns. No smoking, no flame, no spark.

https://truckmanualshub.com/

WARNING Moving traffic - hazardous situation. Death or serious injury could result. Avoid moving vehicles, wear high visibility clothing, post appropriate warning signs.

WARNING Hot pressurized cooling system fluid could cause serious burns. Allow to cool before servicing.

CAUTION Flying objects may cause injury. Wear hard hat and safety glasses.

CAUTION Hot parts may cause burns. Do not touch until cool.

CAUTION Exposure to high noise levels may cause hearing loss. Wear hearing protection.

CAUTION Fall possible. Slips or trips may result in injury. Keep area clean.

CAUTION Battery acid may cause burns. Avoid contact.

CAUTION Improper handling or use of chemicals may result in illness, injury, or equipment damage. Follow instructions on labels and in material safety data sheets (MSDS).

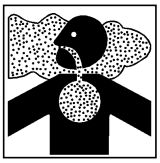

CAUTION Breathing crystalline silica dust may cause lung disease. Cutting, drilling, or working materials such as concrete, sand, or rock containing quartz may result in exposure to silica dust. Use dust control methods or appropriate breathing protection when exposed to silica dust.

https://truckmanualshub.com/

Emergency Procedures

WARNING Jobsite hazards could cause death or serious injury. Use correct equipment and work methods. Use and maintain proper safety equipment.

Before operating any equipment, review emergency procedures and check that all safety precautions have been taken.

EMERGENCY SHUTDOWN - Turn ignition switch to stop position or push remote engine stop button (if equipped).

Electric Strike Description

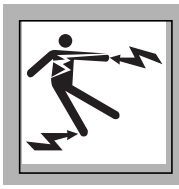

DANGER Electric shock. Contacting electric lines will cause death or serious injury. Know location of lines and stay away.

When working near electric cables, remember the following:

- Electricity follows all paths to ground, not just path of least resistance.
- Pipes, hoses, and cables will conduct electricity back to all equipment.
- Low voltage current can injure or kill. Many work-related electrocutions result from contact with less than 440 volts.

Most electric strikes are not noticeable, but indications of a strike include:

- power outage
- smoke
- explosion
- popping noises
- arcing electricity

If any of these occur, assume an electric strike has occurred.

https://truckmanualshub.com/

If an Electric Line is Damaged

If you suspect an electric line has been damaged and you are **on tractor**, DO NOT MOVE. Remain on tractor and take the following actions. The order and degree of action will depend upon the situation.

- Warn people nearby that an electric strike has occurred. Instruct them to leave the area and contact utility.
- Raise attachments and drive from immediate area.
- Contact utility company to shut off power.
- Do not return to jobsite or allow anyone into area until given permission by utility company.

If you suspect an electric line has been damaged and you are **off tractor**, DO NOT TOUCH TRACTOR. Take the following actions. The order and degree of action will depend upon the situation.

- LEAVE AREA. The ground surface may be electrified, so take small steps with feet close together to reduce the hazard of being shocked from one foot to the other. For more information, contact your Ditch Witch dealer.
- Contact utility company to shut off power.
- Do not return to jobsite or allow anyone into area until given permission by utility company.

https://truckmanualshub.com/

If a Gas Line is Damaged

WARNING Fire or explosion possible. Fumes could ignite and cause burns. No smoking, no flame, no spark.

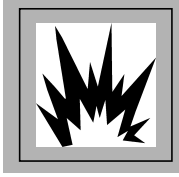

WARNING Explosion possible. Serious injury or equipment damage could occur. Follow directions carefully.

If you suspect a gas line has been damaged, take the following actions. The order and degree of action will depend on the situation.

- Immediately shut off engine(s), if this can be done safely and quickly.
- Remove any ignition source(s), if this can be done safely and quickly.
- Warn others that a gas line has been cut and that they should leave the area.
- Leave jobsite as quickly as possible.
- Immediately call your local emergency phone number and utility company.
- If jobsite is along street, stop traffic from driving near jobsite.
- Do not return to jobsite until given permission by emergency personnel and utility company.

https://truckmanualshub.com/

If a Fiber Optic Cable is Damaged

Do not look into cut ends of fiber optic or unidentified cable. Vision damage can occur.

If Machine Catches on Fire

Perform emergency shutdown procedure and then take the following actions. The order and degree of action will depend on the situation.

- Immediately move battery disconnect switch (if equipped and accessible) to disconnect position.
- If fire is small and fire extinguisher is available, attempt to extinguish fire.
- If fire cannot be extinguished, leave area as quickly as possible and contact emergency personnel.

https://truckmanualshub.com/

Controls

Chapter Contents

Center Console 22

Graphic Display. 26

- Interlock screen. 29
- Menu screen 31
- Gauge screens 40

Right Console 44

Seat Console 47

Seat Deck. 49

Trencher Controls. 51

Plow Controls 53

Combo Controls 55

Saw Controls. 58

Backhoe Console 60

Drill Controls 64

Battery Disconnect 65

https://truckmanualshub.com/

Center Console

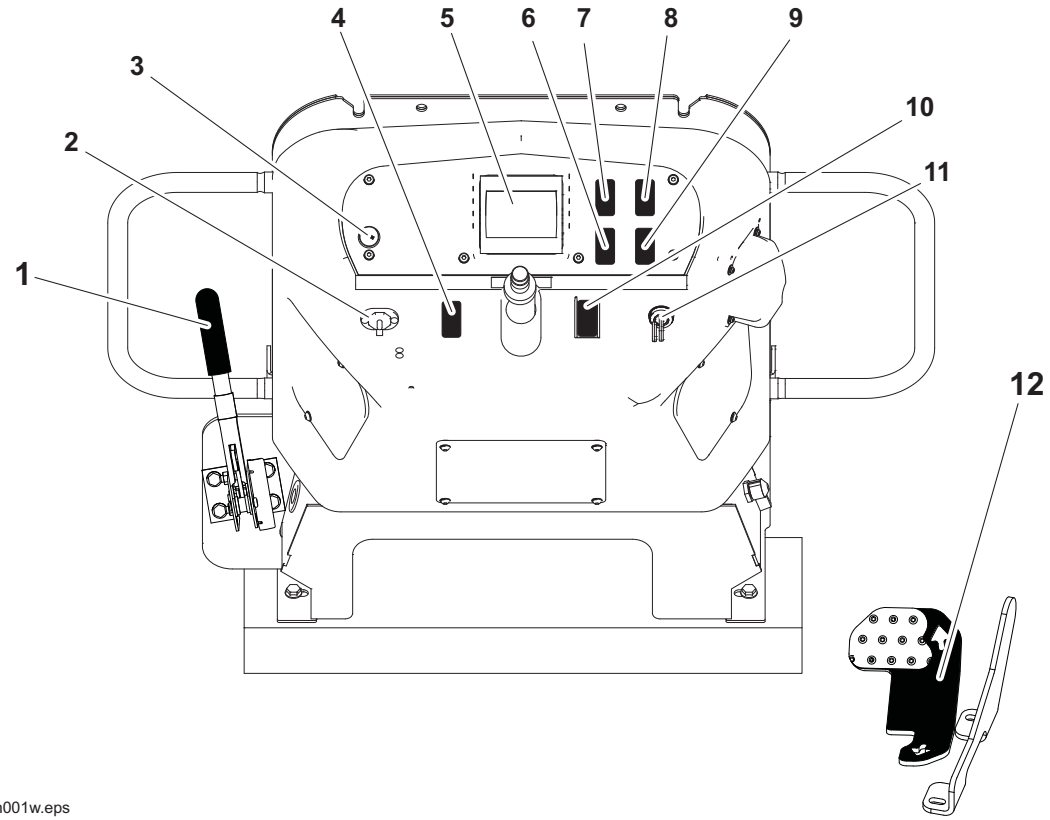

1. Parking brake control
2. Auxiliary power outlet
3. Horn switch
4. Axle lock switch
5. Graphic display
6. Work light switch*
7. Reel carrier switch*
8. Reel winder mode selector switch*
9. Flasher switch*
10. Ground drive speed switch
11. Ignition key switch
12. Ground drive foot control

* option

Item	Description	Notes
1. Parking brake control	To set brake, push handle down. To release brake, pull handle up.	Engaged parking brake disables ground drive.

https://truckmanualshub.com/

Item	Description	Notes
2. Auxiliary outlet 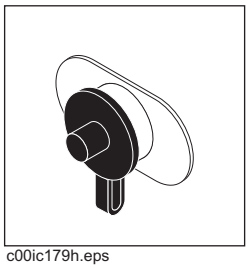 c00ic179h.eps	Provides power for other equipment.	Power output is 12V, 10A.
3. Horn 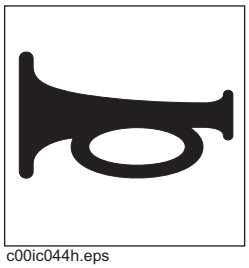 c00ic044h.eps	To sound horn, press.	
4. Axle lock switch 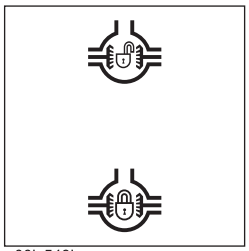 c00ic549h.eps	To lock rear axle, press top. To unlock rear axle, press bottom.	***NOTICE:*** To prevent mechanical damage, stop tractor before operating axle lock switch. **IMPORTANT:** After pressing switch to unlock axle, it may be necessary to move tractor 6' (2 m) in reverse to fully unlock.
5. Graphic display 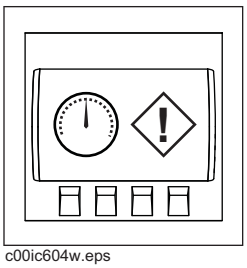 c00ic604w.eps	Graphic symbols are displayed for indicators and conditions previously shown with gauges.	See more information in "Graphic Display" on page 26.

https://truckmanualshub.com/

Item	Description	Notes
6. Work light switch 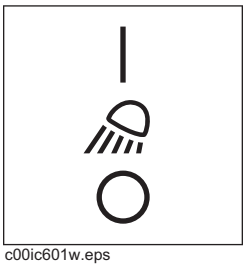 c00ic601w.eps	To activate lights, press top. To deactivate, press bottom.	Optional.
7. Reel carrier switch 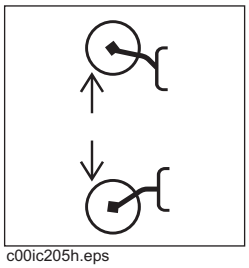 c00ic205h.eps	To raise, press top. To lower, press bottom.	Optional.
8. Reel winder selector switch c00ic642w.eps	To change backfill blade joystick to reel winder control mode, press top. To return to backfill blade mode, press bottom.	Optional.
9. Flasher switch 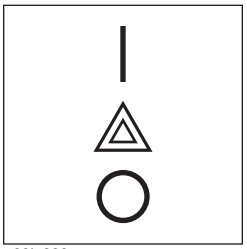 c00ic600w.eps	To activate flashers, press top. To deactivate, press bottom.	Optional.

https://truckmanualshub.com/

Item	Description	Notes
10. Ground drive speed switch 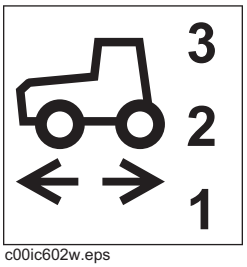 c00ic602w.eps	To select High (3), Medium (2) or Low (1), press appropriate switch position.	Screen icon displays High, Medium or Low selection.
11. Ignition switch 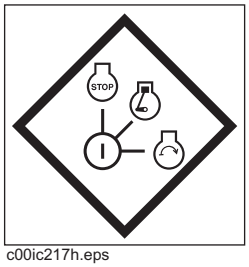 c00ic217h.eps	To start engine, insert key and turn clockwise. To stop engine, turn counterclockwise.	**IMPORTANT:** If engine does not start on first attempt, check that all interlock requirements have been met, return switch to STOP, and try again.
12. Ground drive foot control 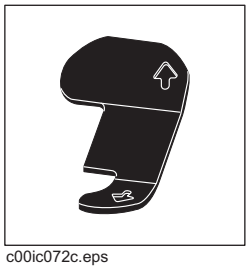 c00ic072c.eps	To move tractor forward, push top of pedal. To move tractor backward, push bottom of pedal. To increase speed in either direction, push pedal farther from center. To reduce speed in either direction, release pedal.	Pedal should automatically return to neutral when released.

https://truckmanualshub.com/

Graphic Display

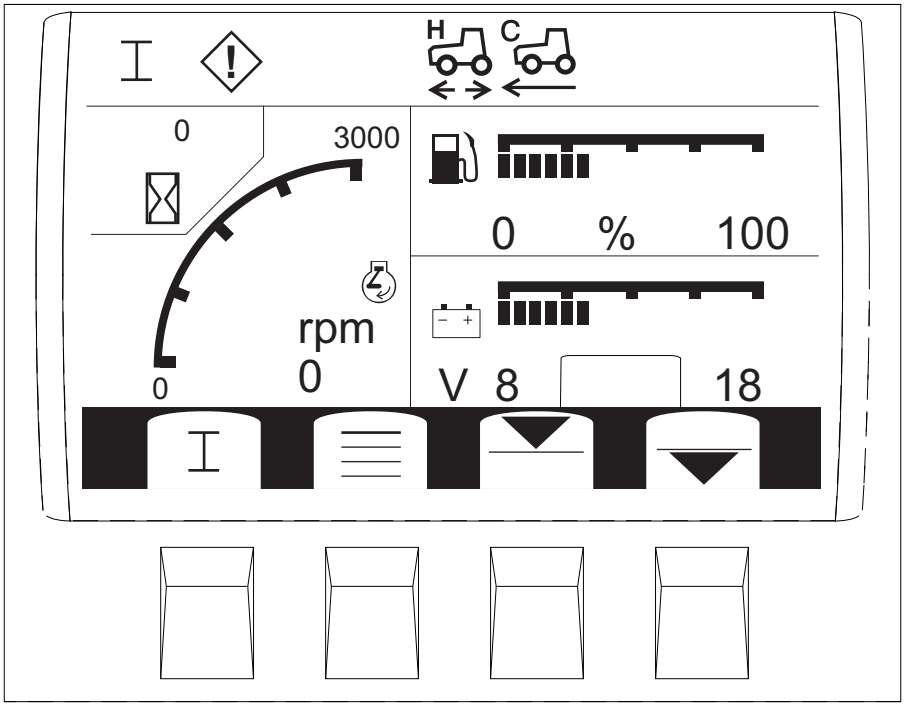

t33om062w.eps

The graphic display module allows the operator to use keys to toggle between various screens and functions. The operator can toggle between gauge functions, faults and alerts, setup, and hourmeter functions.

Item	Description	Notes
Interlock screen icon 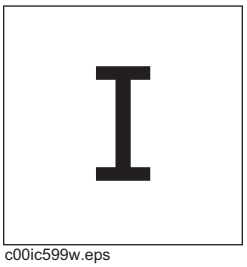 c00ic599w.eps	Screen icon is displayed if interlock conditions are met.	
Operator alert screen icon c00ic605w.eps	Screen icon is displayed when non-critical engine faults are detected.	

https://truckmanualshub.com/

Item	Description	Notes
Ground drive speed screen icon 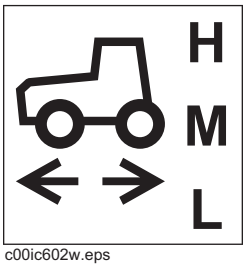 c00ic602w.eps	Screen icon displays High, Medium or Low selection.	Control decal shows 1, 2, or 3.
Cruise control screen icon 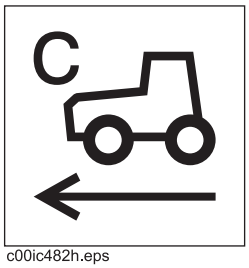 c00ic482h.eps	Screen icon displays when cruise control is in operation.	
Trip/Hourmeter screen icon 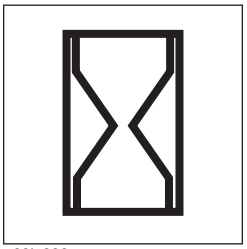 c00ic606w.eps	Engine operating time and job time displayed above screen icon.	
Engine RPM screen icon 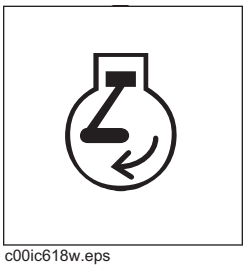 c00ic618w.eps	Engine RPM displayed below screen icon.	

https://truckmanualshub.com/

Item	Description	Notes
Interlock key function 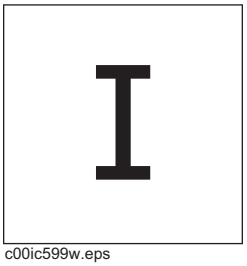 c00ic599w.eps	Press to display interlock screen.	
Menu key function 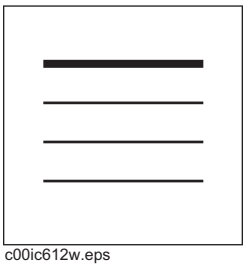 c00ic612w.eps	Press to display menu screen.	
Gauge key function 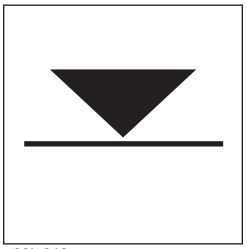 c00ic613w.eps	Press to display upper right screen gauge functions.	
Gauge key function 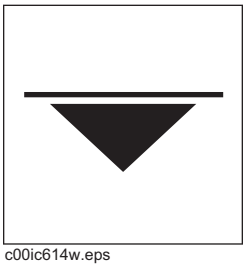 c00ic614w.eps	Press to display lower right screen gauge functions.	

https://truckmanualshub.com/

Interlock Screen

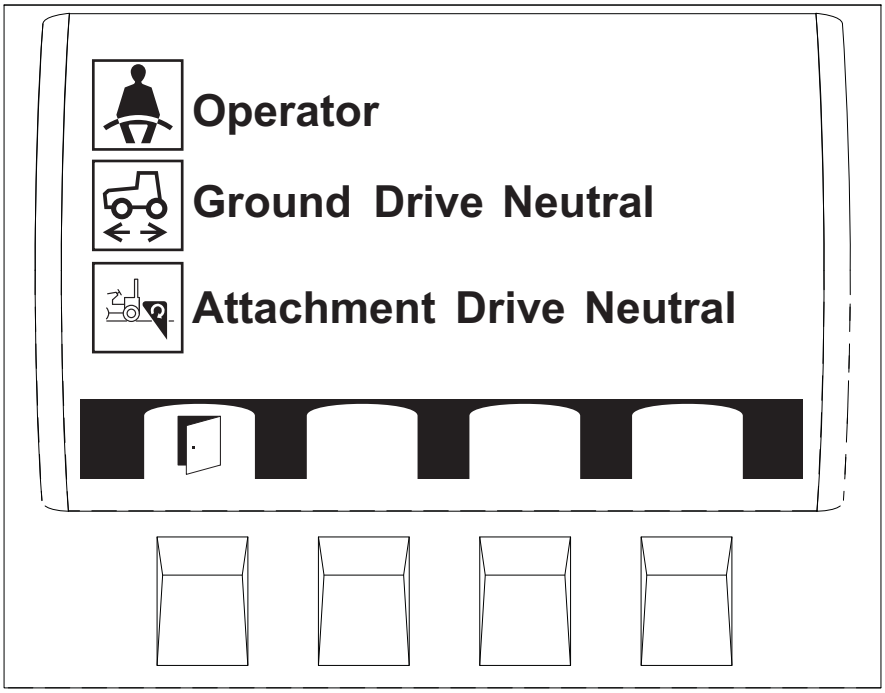

t33om070w.eps

Item	Description	Notes
Operator presence screen icon c00ic100a.eps	Icon flashes when operator is not in seat.	**IMPORTANT:** This function is part of the start interlock system. All three start interlock icons must be on steady (not flashing) to start engine.
Ground drive neutral screen icon 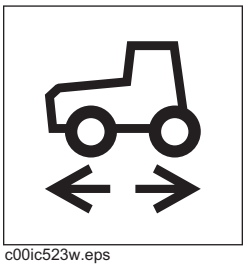 c00ic523w.eps	Icon flashes when ground drive hand or foot control is not in neutral.	**IMPORTANT:** This function is part of the start interlock system. All three start interlock icons must be on steady (not flashing) to start engine.

https://truckmanualshub.com/

Item	Description	Notes
Attachment neutral screen icon c00ic524w.eps	Icon flashes when attachment speed/direction control is not in neutral.	**IMPORTANT:** This function is part of the start interlock system. All three start interlock icons must be on steady (not flashing) to start engine.
Exit screen key function 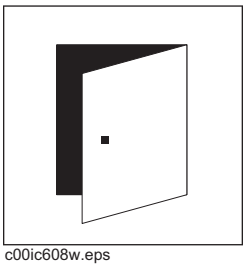 c00ic608w.eps	To exit selected screen, press.	

https://truckmanualshub.com/

Menu Screen

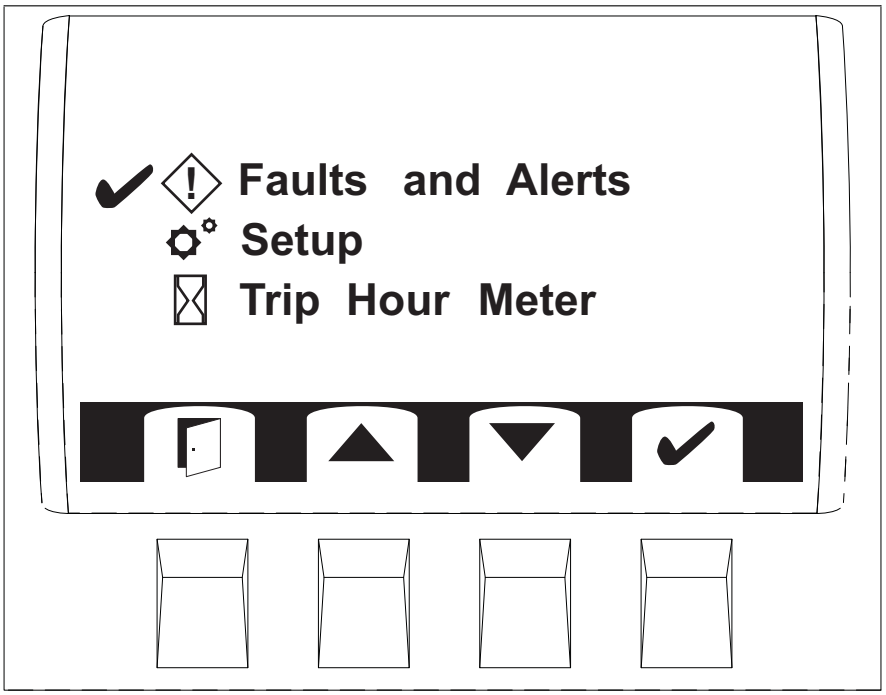

t33om066w.eps

Item	Description	Notes
Selection screen icon 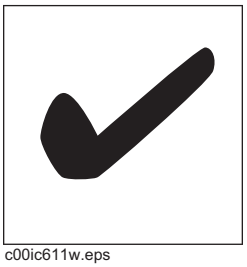 c00ic611w.eps	Indicates menu choice.	Use up and down keys to toggle between menu items.
Up key function 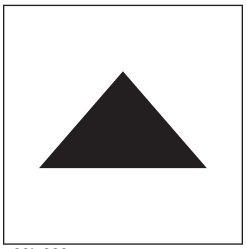 c00ic609w.eps	To move up the menu, press.	

https://truckmanualshub.com/

Item	Description	Notes
Down key function 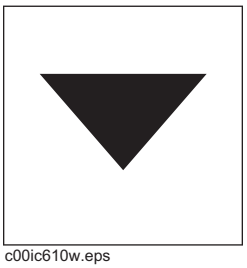 c00ic610w.eps	To move down the menu, press.	
Check key function 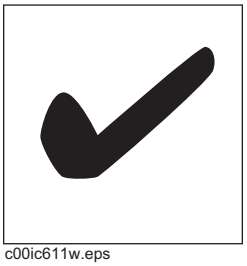 c00ic611w.eps	To select a menu item, press.	

https://truckmanualshub.com/

Faults and Alerts

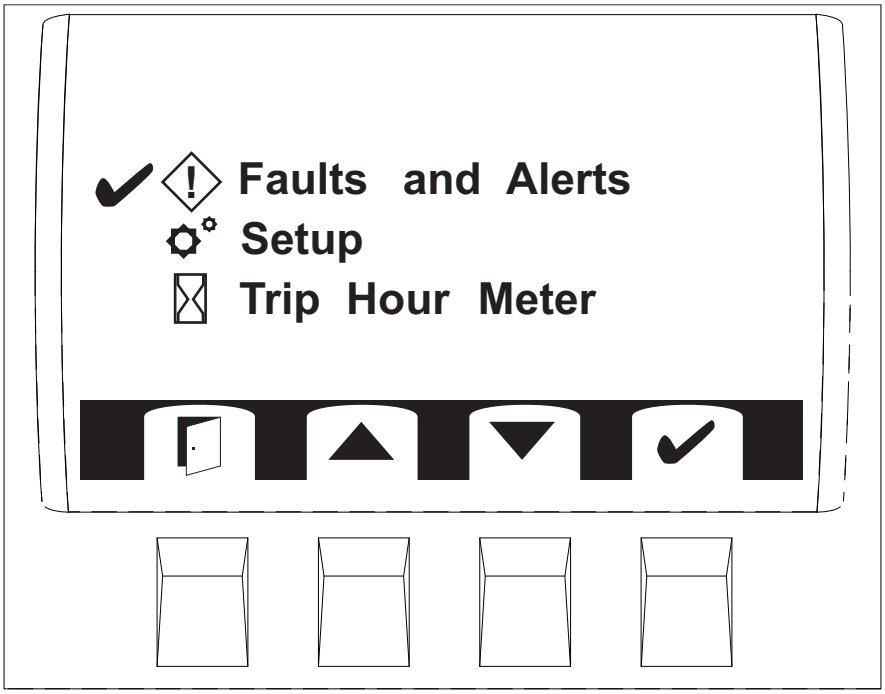

t33om066w.eps

Alerts Menu

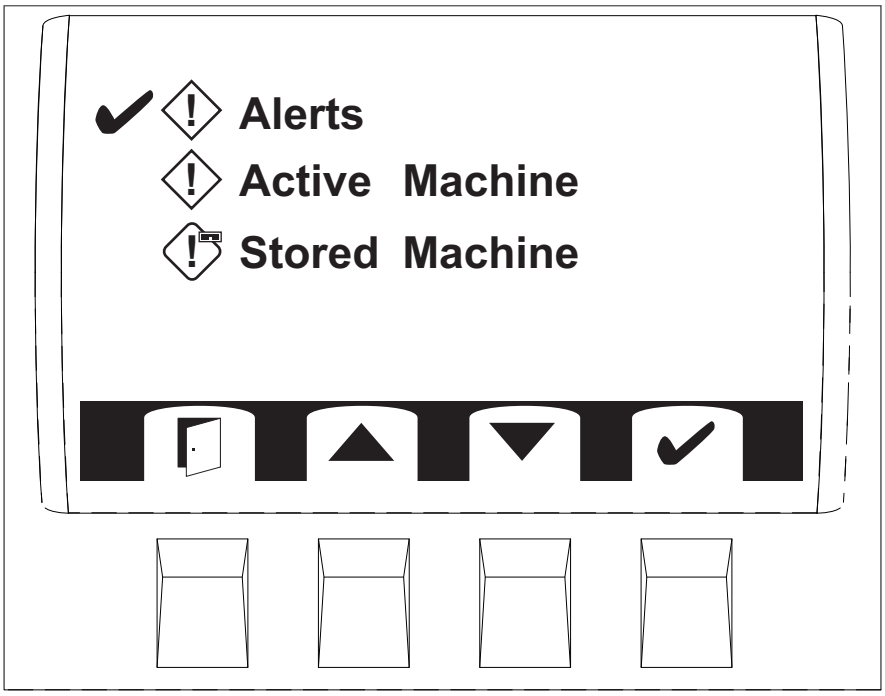

t33om067w.eps

https://truckmanualshub.com/

Active Machine Alerts

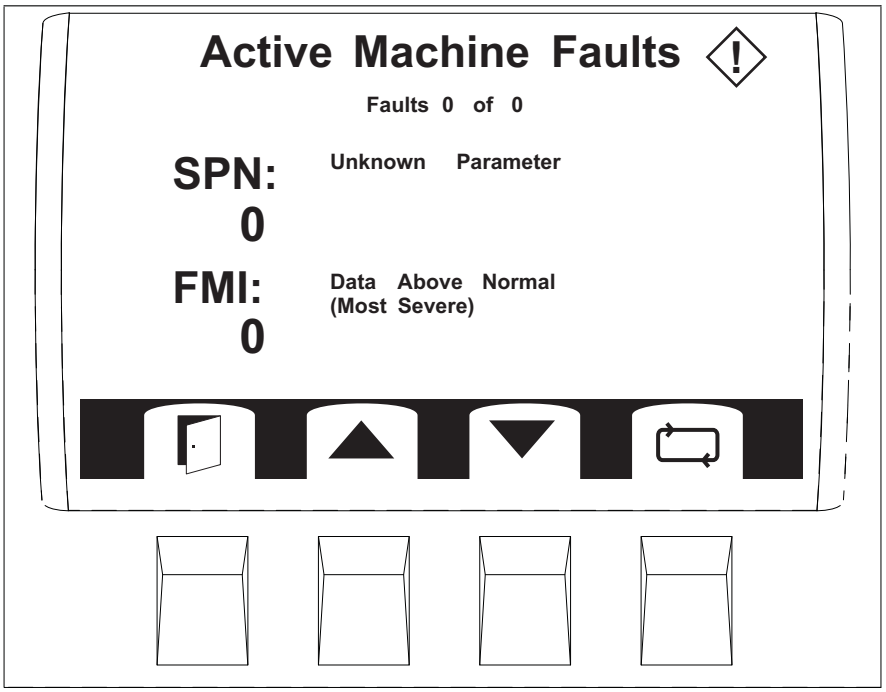

t33om068w.eps

Item	Description	Notes
Clear display key function 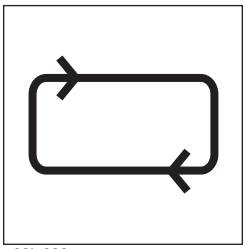 c00ic633w.eps	To clear the display (but not the codes), press.	For a list of diagnostic trouble codes, see "Diagnostic Trouble Codes" on page 136.

https://truckmanualshub.com/

Stored Machine Alerts

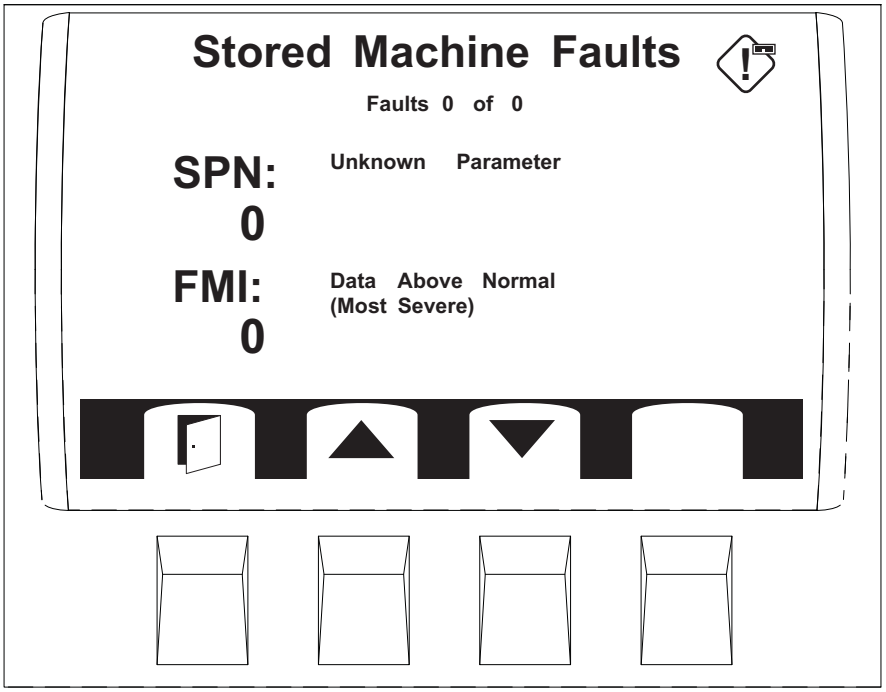

t33om069w.eps

Item	Description	Notes
Clear display key function 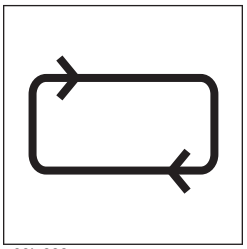 c00ic633w.eps	To clear the display (but not the codes), press.	For a list of diagnostic trouble codes, see "Diagnostic Trouble Codes" on page 136.

https://truckmanualshub.com/

Setup Menu

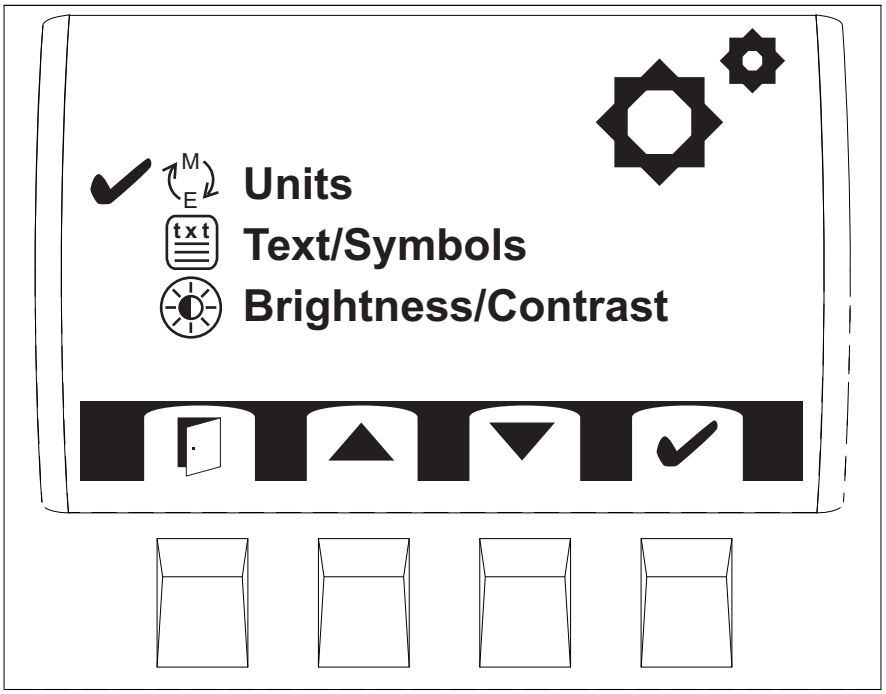

t33om071w.eps

Units

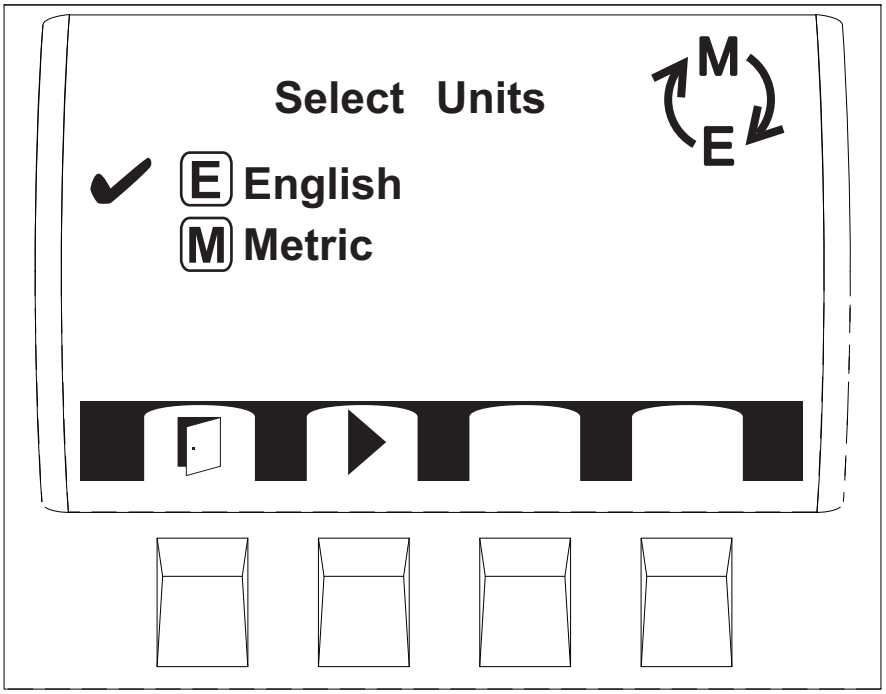

t33om072w.eps

https://truckmanualshub.com/

Text/Symbols

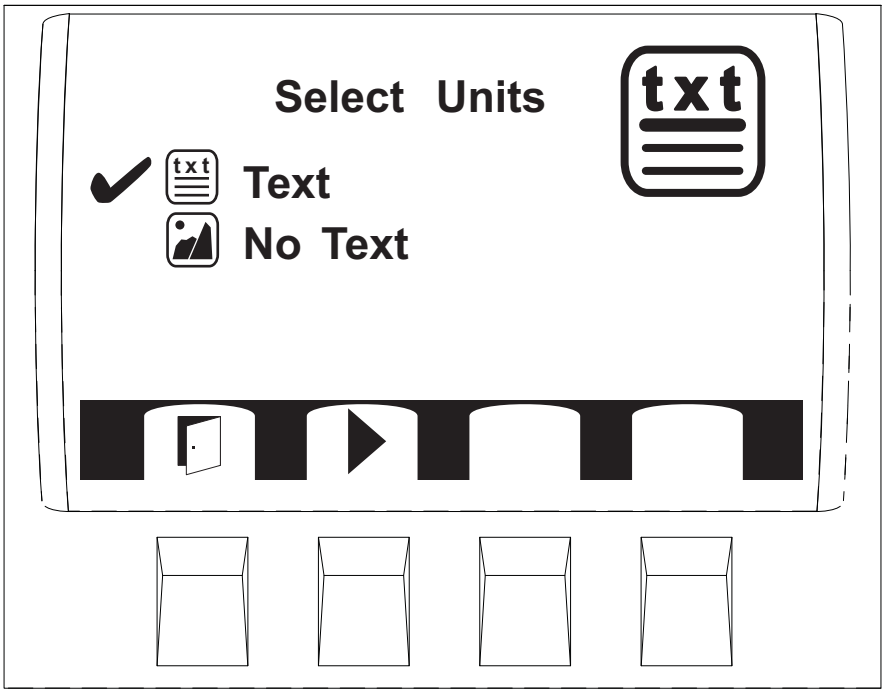

t33om073w.eps

https://truckmanualshub.com/

Brightness/Contrast

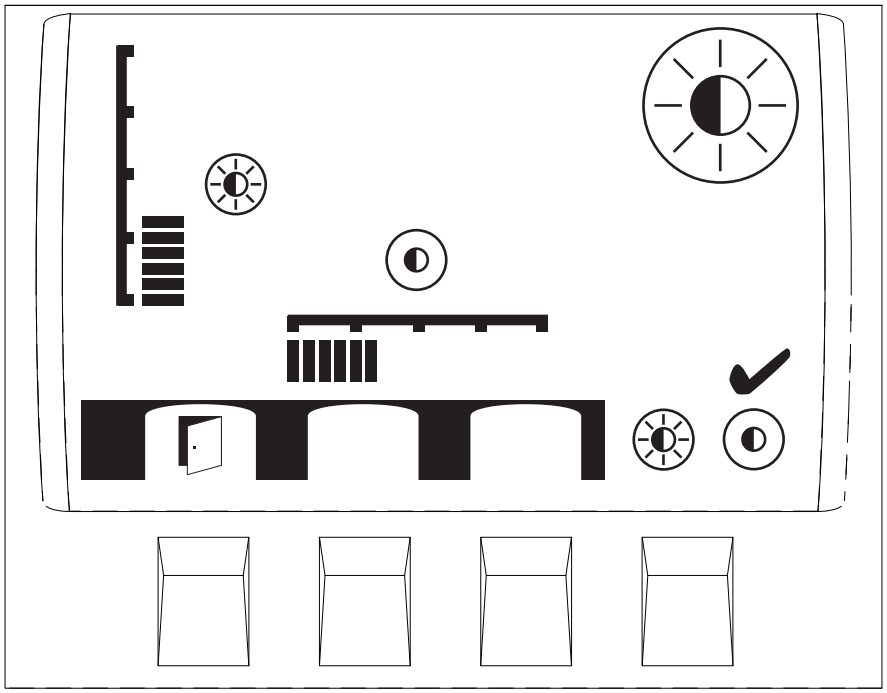

t33om075w.eps

Item	Description	Notes
Brightness screen icon 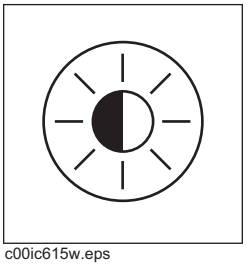 c00ic615w.eps	Keys used to adjust brightness when check is above brightness icon.	Bar graph displays screen brightness level.
Contrast screen icon 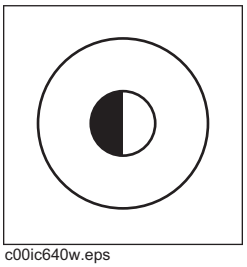 c00ic640w.eps	Keys used to adjust contrast when check is above contrast icon.	Bar graph displays screen contrast level.

https://truckmanualshub.com/

Trip/Hour Menu

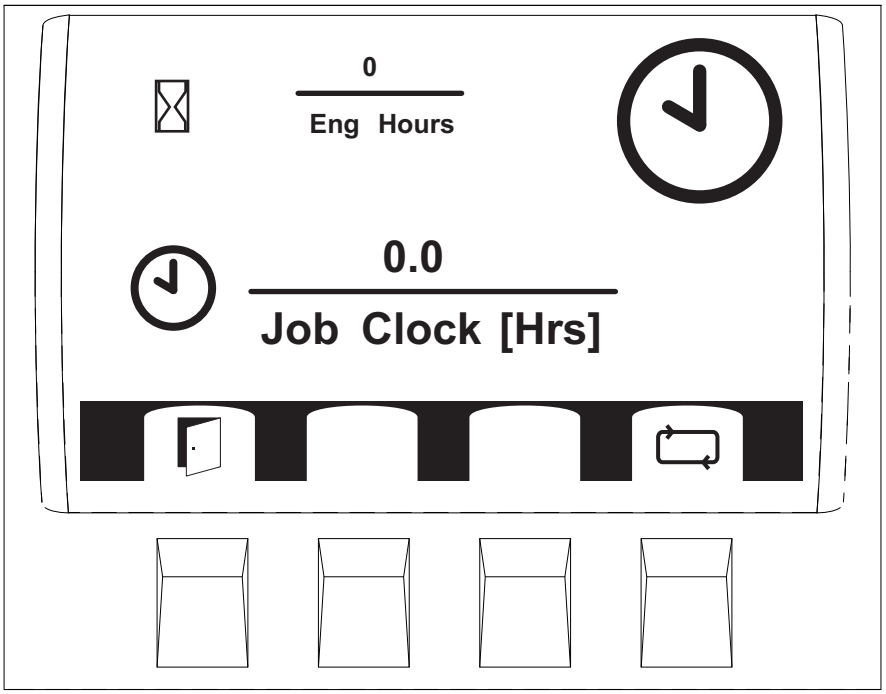

t33om074w.eps

Item	Description	Notes
Hours/Job Clock screen icon 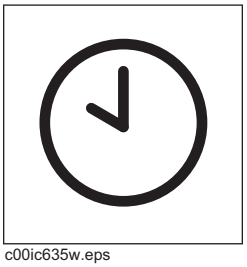 c00ic635w.eps	Records engine operating time and job time.	Use engine operating times to schedule service. Job time can be reset.

https://truckmanualshub.com/

Gauge Screens

Upper Pane

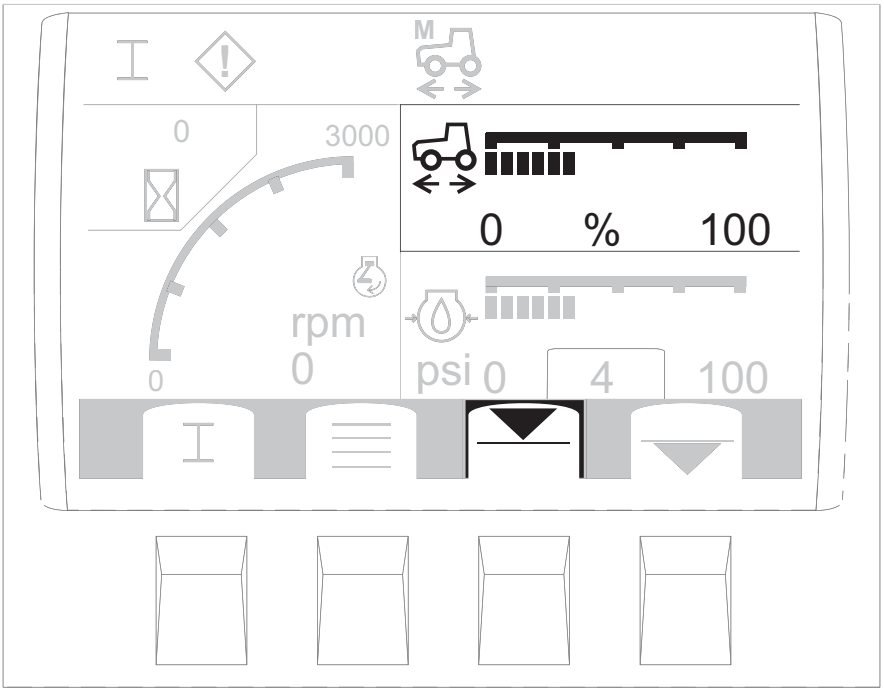

t33om085w.eps

Use arrow keys to toggle gauge functions and upper or lower pane.

Item	Description	Notes
Fuel level screen icon c00ic622w.eps	Bar graph displays fuel level as percent full.	RT80Q fuel tank holds 30 gal (114 L).
Ground drive speed screen icon 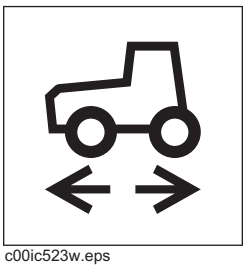 c00ic523w.eps	Bar graph displays ground drive as percent of full speed.	

https://truckmanualshub.com/

Item	Description	Notes
Attachment speed screen icon c00ic524w.eps	Bar graph displays attachment speed as percent of full speed.	

https://truckmanualshub.com/

Lower Pane

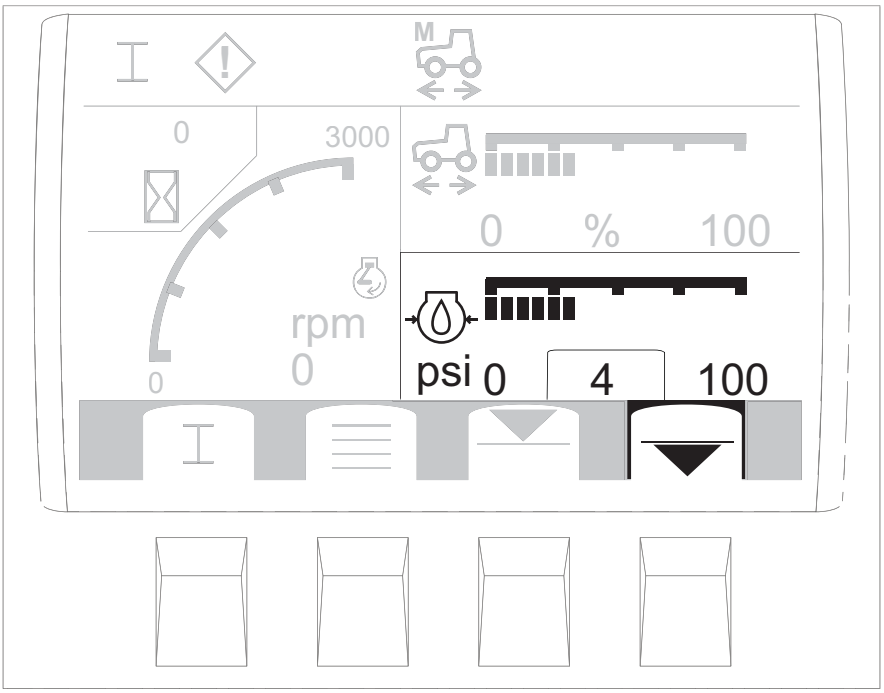

t33om086w.eps

Use arrow keys to toggle gauge functions and upper or lower pane.

Item	Description	Notes
Volts screen icon 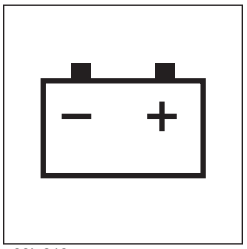 c00ic619w.eps	Bar graph displays system voltage.	Should show 12-14V with engine running.
Engine oil pressure screen icon 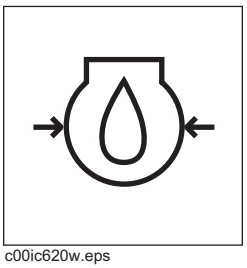 c00ic620w.eps	Bar graph displays engine oil pressure. Indicator will light if pressure is too low.	Normal operating pressure is 15-80 psi (1.03 - 5.5 bar). If pressure is low: • Check oil level. • If pressure is still low, consult engine manual.

https://truckmanualshub.com/

Item	Description	Notes
Engine coolant temperature screen icon 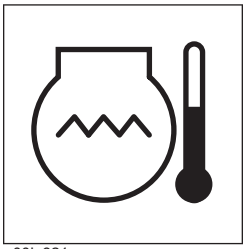 c00ic621w.eps	Bar graph displays engine coolant temperature. Engine temperature indicator will light if temperature is too high.	Normal temperature is 180°-220° F (82°-104° C). If temperature is high: • Turn off engine and let it cool. • Check cooling system for low fluid level, seal damage, or leaks.

https://truckmanualshub.com/

Right Console

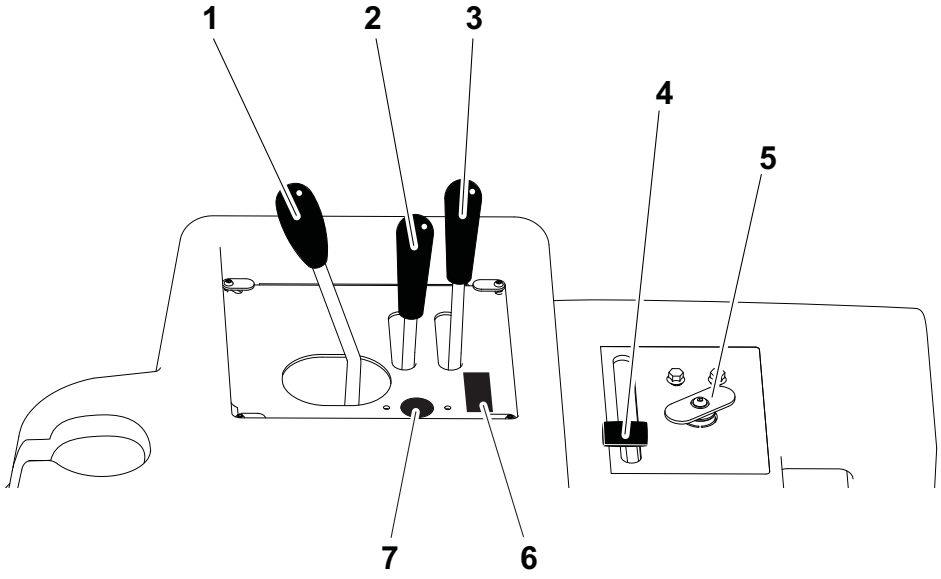

t33om004w.eps

1. Backfill blade lift/tilt or reel winder control
2. Backfill blade angle control
3. Rear steer control
4. Throttle
5. Rear steer indicator
6. Cruise control switch
7. Cruise control rpm dial control

https://truckmanualshub.com/

Item	Description	Notes
1. Backfill blade lift/tilt function control 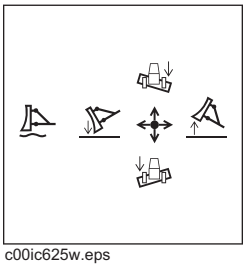 c00ic625w.eps	**Backfill blade mode:** • To lower, move forward. • To float, move forward to end. • To raise, move backward. • To tilt right side down, move right. • To tilt left side down, move left.	Reel winder mode selector switch on center console changes function to control reel winder arm lift and winder direction.
Reel winder function control 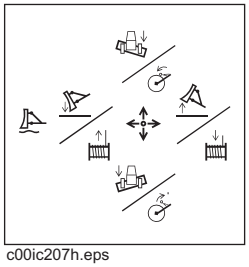 c00ic207h.eps	Reel winder mode: • To unwind, move forward. • To wind, move backward. • To lower reel winder arm, move right. • To raise reel winder arm, move left.	
2. Backfill blade angle control 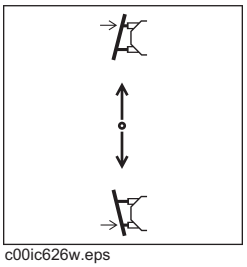 c00ic626w.eps	**Backfill blade:** • To angle right, move right. • To angle left, move left.	
3. Rear steer control 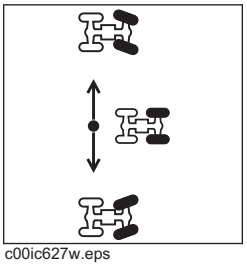 c00ic627w.eps	To move rear tracks left, move right. To center tracks, move to center position. To move rear tracks right, move left.	***NOTICE:*** • Tracks move when you move control. To stop movement, release control. • Visually verify track position

https://truckmanualshub.com/

Item	Description	Notes
4. Throttle 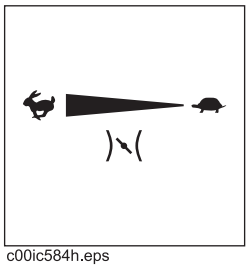 c00ic584h.eps	To increase speed, move left. To decrease speed, move right.	
5. Rear steer indicator 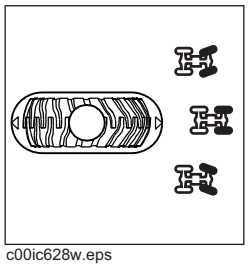 c00ic628w.eps	Displays position of rear wheels.	
6. Cruise control selector 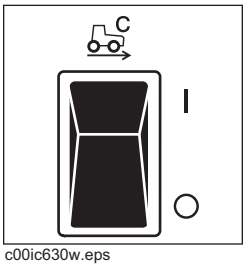 c00ic630w.eps	To turn on, press top. Switch indicator and display should indicate that cruise mode is activated. To turn off, press top again. Switch indicator and display should indicate that cruise mode is deactivated.	Turn on cruise control only when: • ground drive motor control is in low (1) • ground drive is in neutral Hand and foot controls must be in neutral or cruise control switch input will be ignored.
7. Cruise control rpm dial control 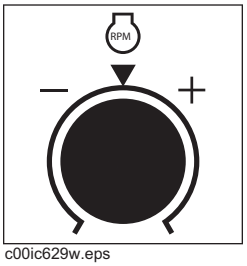 c00ic629w.eps	To decrease engine load while using cruise control, turn clockwise. To increase engine load while using cruise control, turn counterclockwise.	This typically decreases engine load temporarily. This typically increases engine load temporarily.

https://truckmanualshub.com/

Seat Console

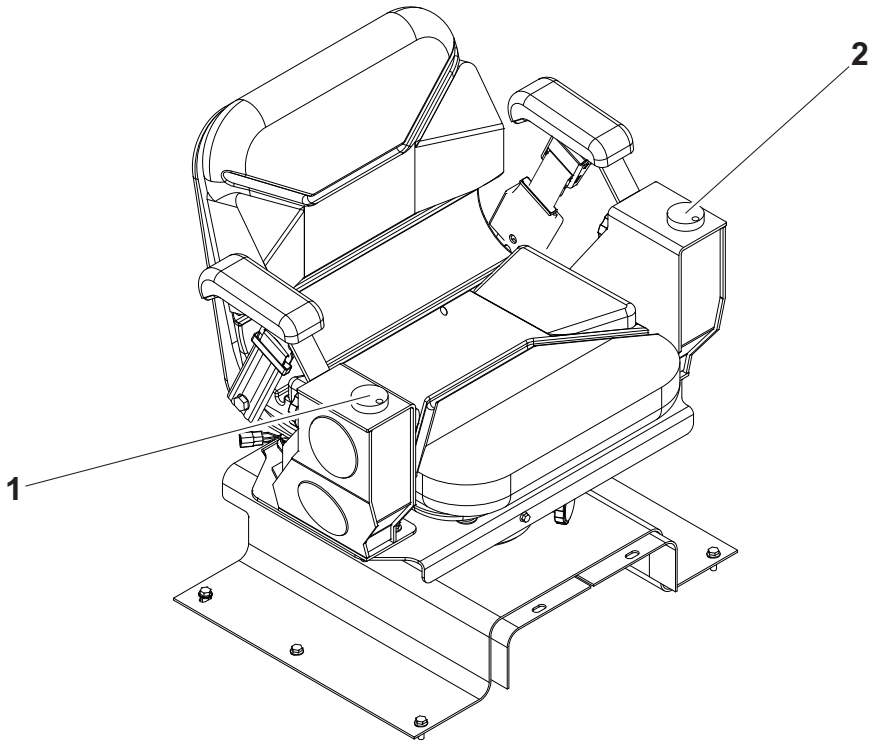

t33om002w.eps

1. Ground drive speed control
2. Attachment speed/direction control

Item	Description	Notes
1. Ground drive speed control 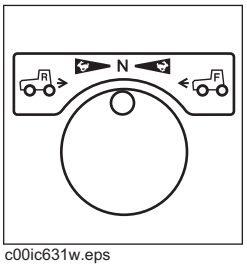 c00ic631w.eps	To go faster in either direction, move farther from neutral. To stop, return to center.	***NOTICE:*** Control does not automatically return to neutral. **IMPORTANT:** This control is disabled in high gear.

https://truckmanualshub.com/

Item	Description	Notes
2. Attachment speed/ direction control 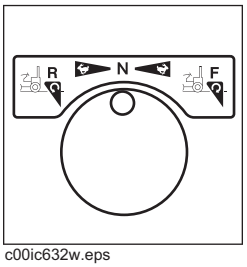 c00ic632w.eps	To go faster in either direction, move farther from neutral. To stop, return to center.	***NOTICE:*** Control does not automatically return to neutral.

https://truckmanualshub.com/

Seat Deck

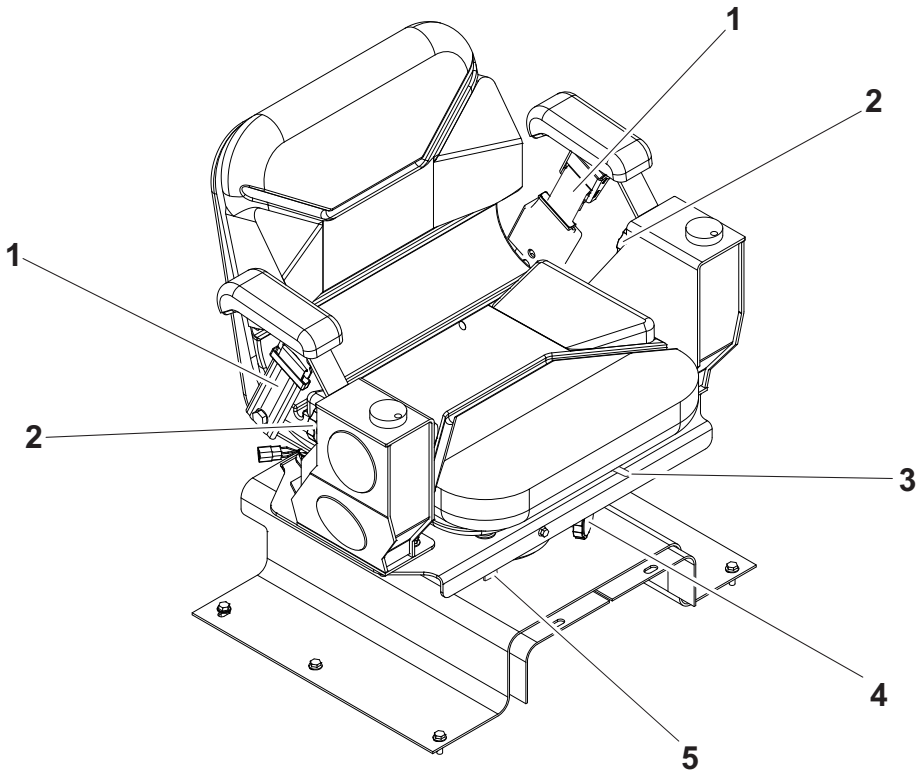

t33om003w.eps

1. Seat belt
2. Armrest adjustment control
3. Seat slide control
4. Seat height adjustment lock
5. Seat pivot control

Item	Description	Notes
1. Seat belt	To fasten, insert latch into buckle. Adjust until seat belt is low and tight. To release, lift top of buckle.	
2. Armrest adjustment control	To raise or lower armrests: • Remove knob. • Adjust armrest to desired position. • Replace knob.	

https://truckmanualshub.com/

Item	Description	Notes
3. Seat slide control	To slide seat forward or backward, pull, then adjust seat. To lock seat in place, release.	
4. Seat height adjustment lock	To lock seat height, turn clockwise. To unlock seat height, turn counterclockwise.	
5. Seat pivot control	To pivot seat to the right, pull. To lock seat in position, release. To return seat to front-facing position, swing seat left.	Seat pivots only to the right and can be locked in any position from 0-90°. **IMPORTANT:** Drive tractor with operator's seat facing front. If desired, operate rear attachments with seat pivoted.

https://truckmanualshub.com/

Trencher Controls

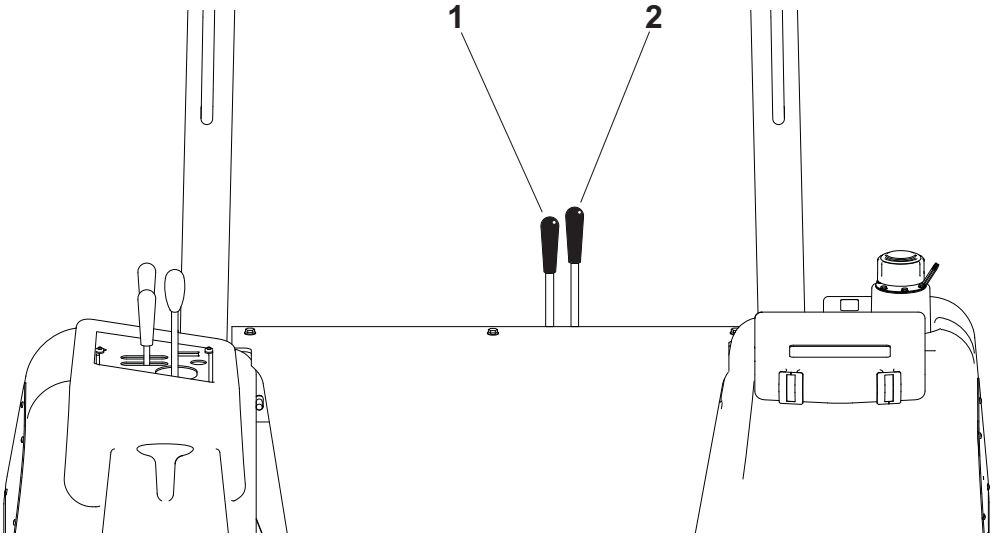

t33om008w.eps

1. Trencher slide control*
2. Boom lift control

*optional

Item	Description	Notes
1. Trencher slide control (H813 only) 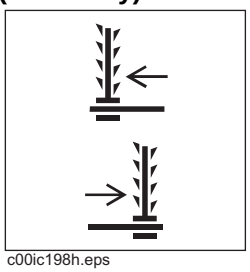 c00ic198h.eps	To slide trencher right, push. To slide trencher left, pull.	**IMPORTANT:** If slide sticks: • Lower trencher to ground. • Operate trencher slide until trencher moves slightly. • Raise trencher and slide it into position.

https://truckmanualshub.com/

Item	Description	Notes
2. Boom lift control 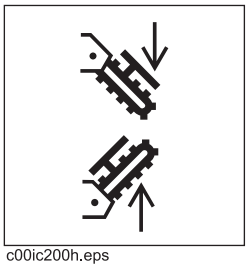 c00ic200h.eps	To lower, push. To raise, pull.	

https://truckmanualshub.com/

Plow Controls

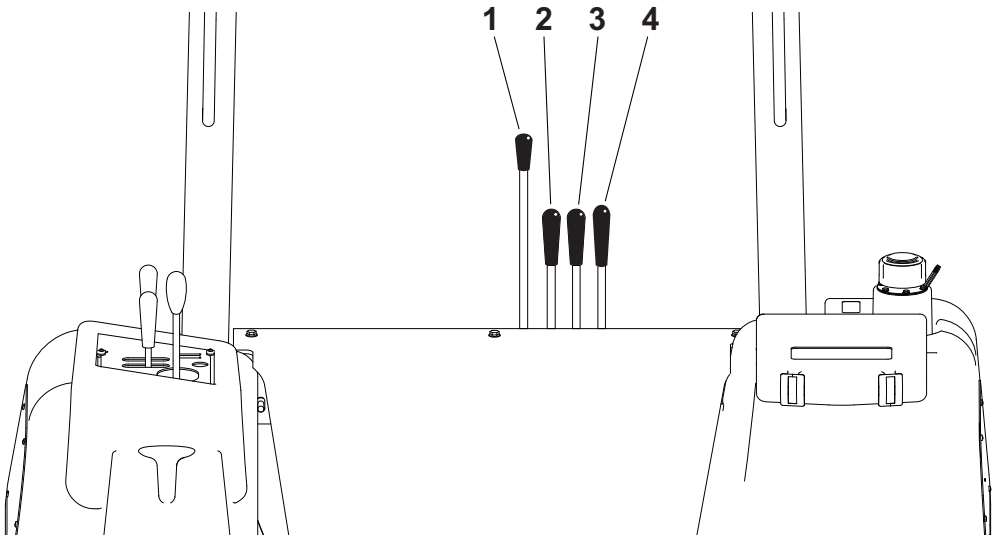

t33om009w.eps

1. Plow stow lock control
2. Plow swing control
3. Blade steer control
4. Plow lift control

https://truckmanualshub.com/

Item	Description	Notes
1. Stow lock control 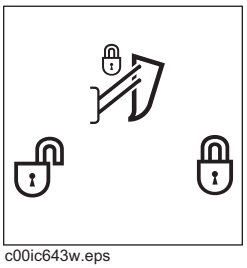 c00ic643w.eps	**To lock:** • Raise plow fully. • Pull stow lock handle. • Lower plow slightly to engage lock. **To unlock:** • Raise plow slightly. • Push stow lock handle to release lock.	Use this control to lock plow in the up position.
2. Plow swing control 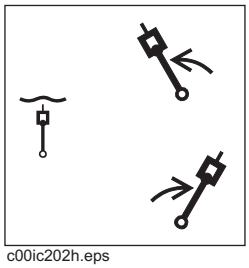 c00ic202h.eps	To swing left, pull. To swing right, push. To float, push to end.	***NOTICE:*** • If soil conditions allow, operate in float position. • Lower plow into ground before moving control to float position. • Do not raise plow with control in float position.
3. Blade steer control 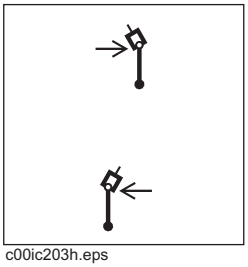 c00ic203h.eps	To steer right, push. To steer left, pull.	
4. Plow lift control 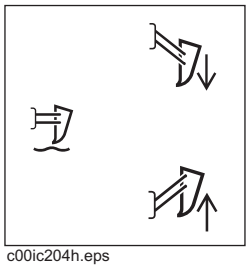 c00ic204h.eps	To raise, pull. To lower, push. To float, push to end.	***NOTICE:*** • If soil conditions allow, operate in float position. • Lower plow into ground before moving control to float position.

https://truckmanualshub.com/

Combo Controls

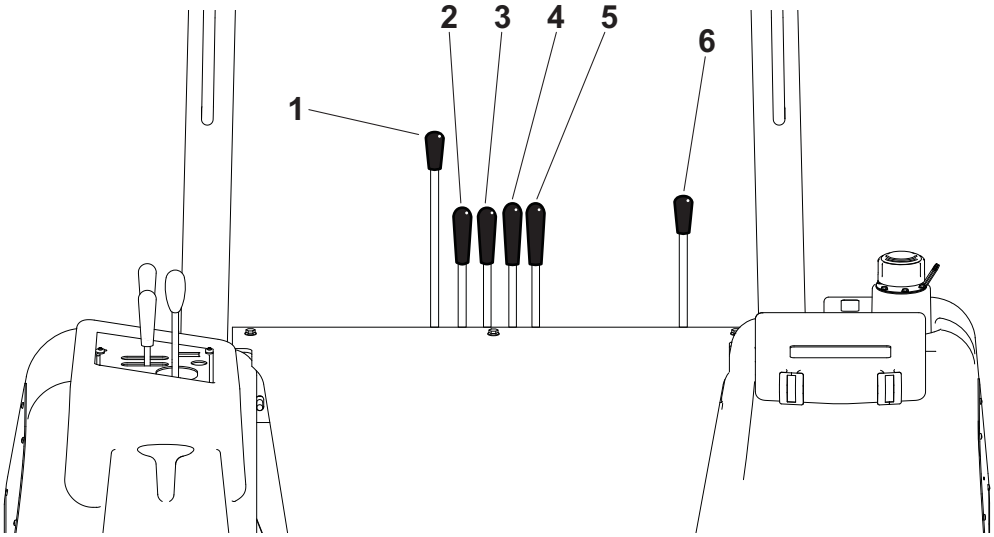

t33om010w.eps

1. Plow stow lock control
2. Plow swing control
3. Blade steer control
4. Plow lift control
5. Boom lift control
6. Trench/Plow selector control

https://truckmanualshub.com/

Item	Description	Notes
1. Stow lock control 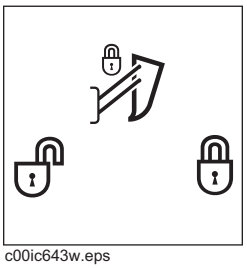 c00ic643w.eps	**To lock:** • Raise plow fully. • Pull stow lock handle. • Lower plow slightly to engage lock. **To unlock:** • Raise plow slightly. • Push stow lock handle to release lock.	Use this control to lock plow in the up position.
2. Plow swing control 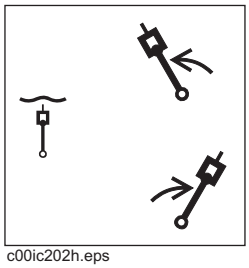 c00ic202h.eps	To swing left, pull. To swing right, push. To float, push to end.	***NOTICE:*** • If soil conditions allow, operate in float position. • Lower plow into ground before moving control to float position. • Do not raise plow with control in float position.
3. Blade steer control 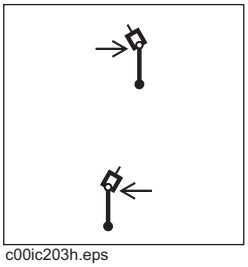 c00ic203h.eps	To steer right, push. To steer left, pull.	
4. Plow lift control 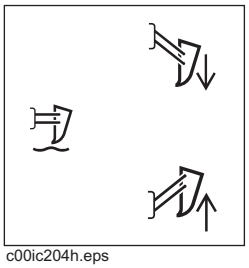 c00ic204h.eps	To raise, pull. To lower, push. To float, push to end.	***NOTICE:*** • If soil conditions allow, operate in float position. • Lower plow into ground before moving control to float position.

https://truckmanualshub.com/

Item	Description	Notes
5. Boom lift control 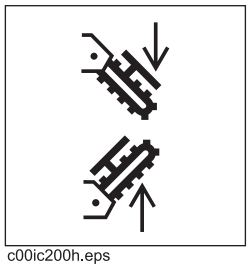 c00ic200h.eps	To lower, push. To raise, pull.	
6. Trench/Plow selector control 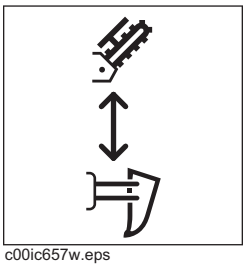 c00ic657w.eps	To trench, move forward. To plow, move backward.	

https://truckmanualshub.com/

Saw Controls

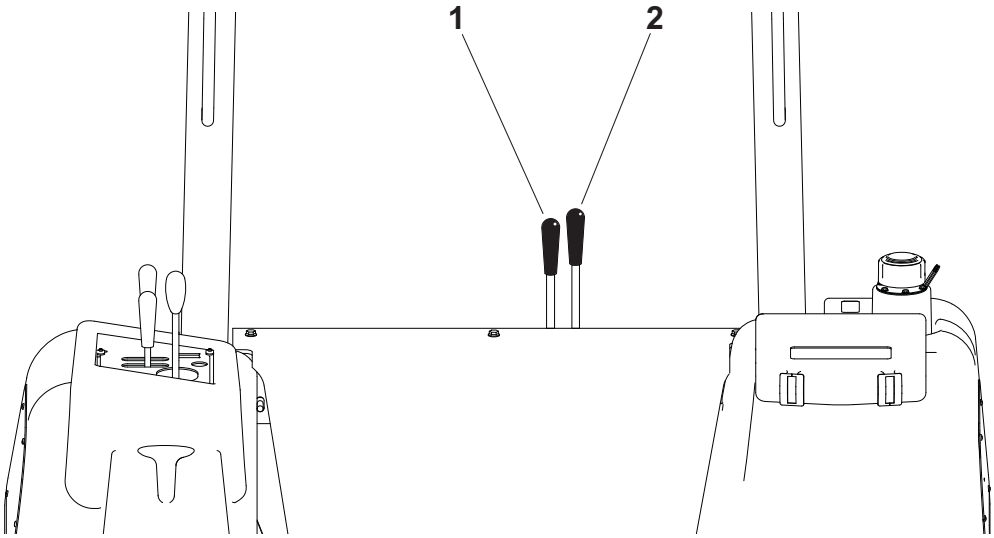

t33om008w.eps

1. Saw slide control
2. Saw lift control

Item	Description	Notes
1. Saw slide control 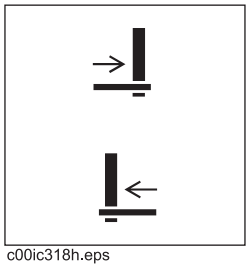 c00ic318h.eps	To slide saw right, push. To slide saw to center, pull. **EMERGENCY SHUTDOWN:** Release all controls and turn ignition switch to STOP.	

https://truckmanualshub.com/

Item	Description	Notes
2. Saw lift control 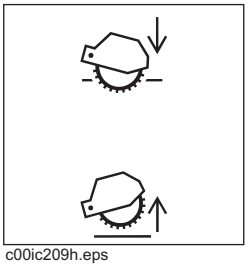 c00ic209h.eps	To lower, push. To raise, pull. **EMERGENCY SHUTDOWN:** Release all controls and turn ignition switch to STOP.	

https://truckmanualshub.com/

Backhoe Console

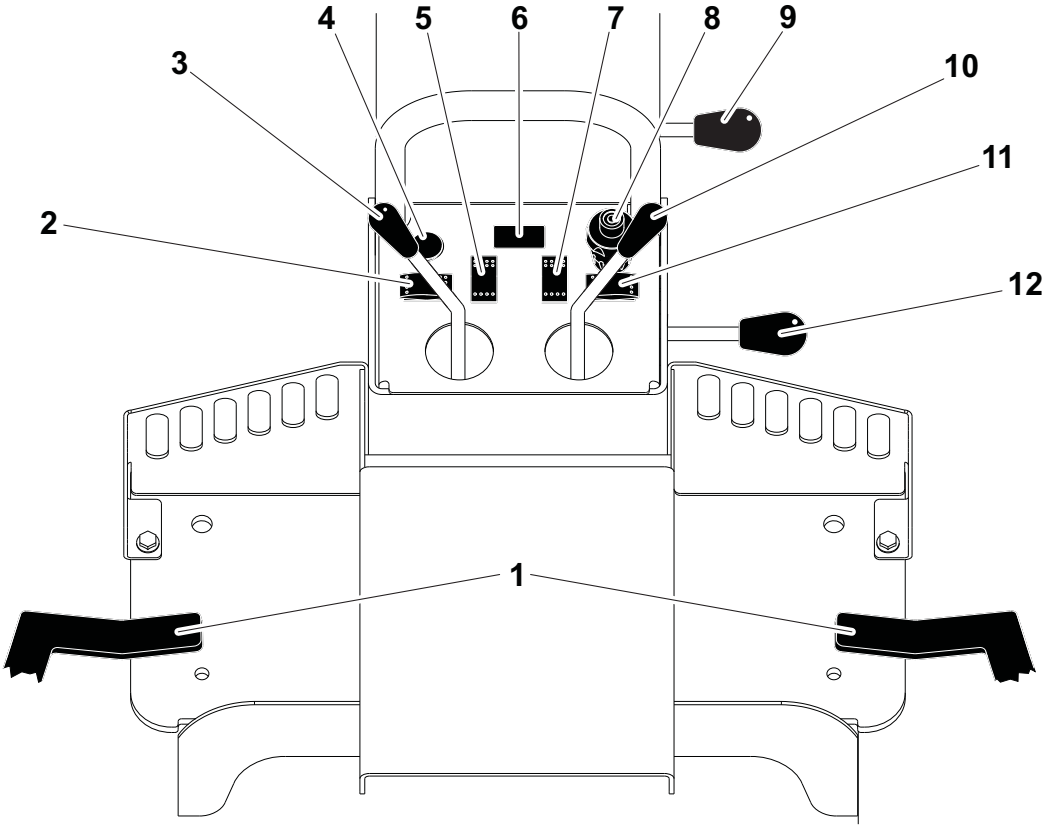

a44in001w.eps

1. Stabilizer lock release pedals
2. Left stabilizer control
3. Boom/Swing control
4. Remote engine stop switch
5. Remote backfill blade switch
6. Work light switch*
7. Ground drive switch
8. Remote throttle
9. Boom stow lock
10. Bucket/dipper control
11. Right stabilizer control
12. Swing stow lock

*optional

https://truckmanualshub.com/

Item	Description	Notes
1. Stabilizer lock 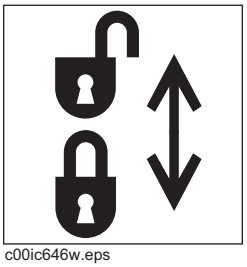 c00ic646w.eps	Step on pedal to release. Locks automatically as stabilizer is fully raised.	
2. Left stabilizer control switch 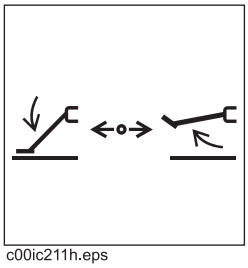 c00ic211h.eps	To lower, press left. To raise, press right.	
3. Boom/Swing control 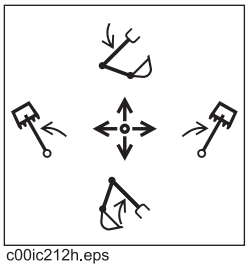 c00ic212h.eps	To swing boom left, move left. To swing boom right, move right. To raise boom, pull. To lower boom, push.	Control can perform more than one action at a time. By "feathering" the control, operator can combine backhoe operations. ***NOTICE:*** Do not operate with backhoe in the stowed (upright) position.
4. Remote engine stop switch c00ic085c.eps	To stop engine immediately, press	**IMPORTANT:** For normal engine shutdown, use ignition switch.

https://truckmanualshub.com/

Item	Description	Notes
5. Remote backfill blade control switch 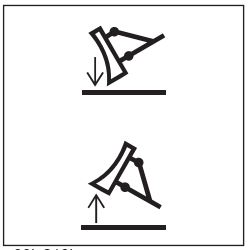 c00ic210h.eps	To lower, press top. To raise, press bottom.	
6. Work light switch 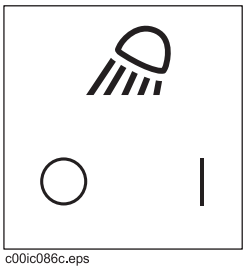 c00ic086c.eps	To turn on, press right. To turn off, press left.	Optional
7. Remote ground drive control 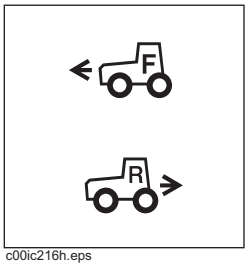 c00ic216h.eps	To move tractor forward, push. To move tractor backward, pull.	***NOTICE:*** • This control is disabled if tractor seat is occupied. • Ground drive must be in low (1) position. • Ensure that backfill blade, if equipped, and stabilizers are raised before operating this control. • Do not move more than 30' (10 m) at a time.
8. Remote throttle 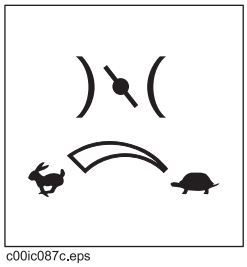 c00ic087c.eps	To increase engine speed, turn counterclockwise. To decrease engine speed, turn clockwise. To lock, push button, pull up, then release button. To unlock, push button, then push down.	

https://truckmanualshub.com/

Item	Description	Notes
9. Boom stow lock 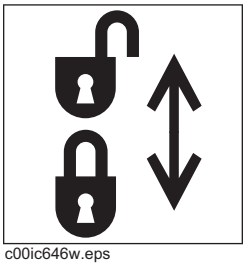 c00ic646w.eps	**To lock:** • Raise boom fully. • Pull stow lock handle. • Lower boom slightly to engage lock. **To unlock:** • Raise boom slightly. • Push stow lock handle to release lock.	Use this control to lock boom in the up position. ***NOTICE:*** Always lock boom during transport.
10. Bucket/dipper control 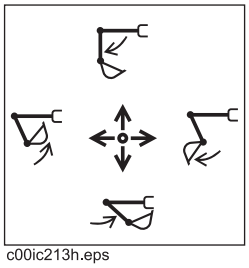 c00ic213h.eps	To open bucket, move right. To close bucket, move left. To move dipper in, pull. To move dipper out, push.	Control can perform more than one action at a time. By "feathering" the control, operator can combine backhoe operations.
11. Right stabilizer control switch 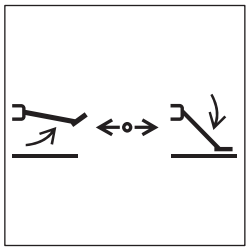 c00ic088c.eps	To lower, press right. To raise, press left.	
12. Boom swing lock 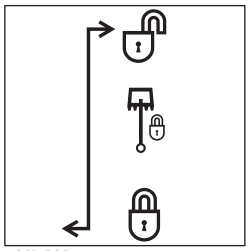 c00ic089c.eps	To lock, push down and into hook. To unlock, pull up and into hook.	Backhoe can be locked in several swing positions. If lock will not engage, swing backhoe slightly left or right until lock engages. ***NOTICE:*** Always lock boom during transport.

https://truckmanualshub.com/

Drill Controls

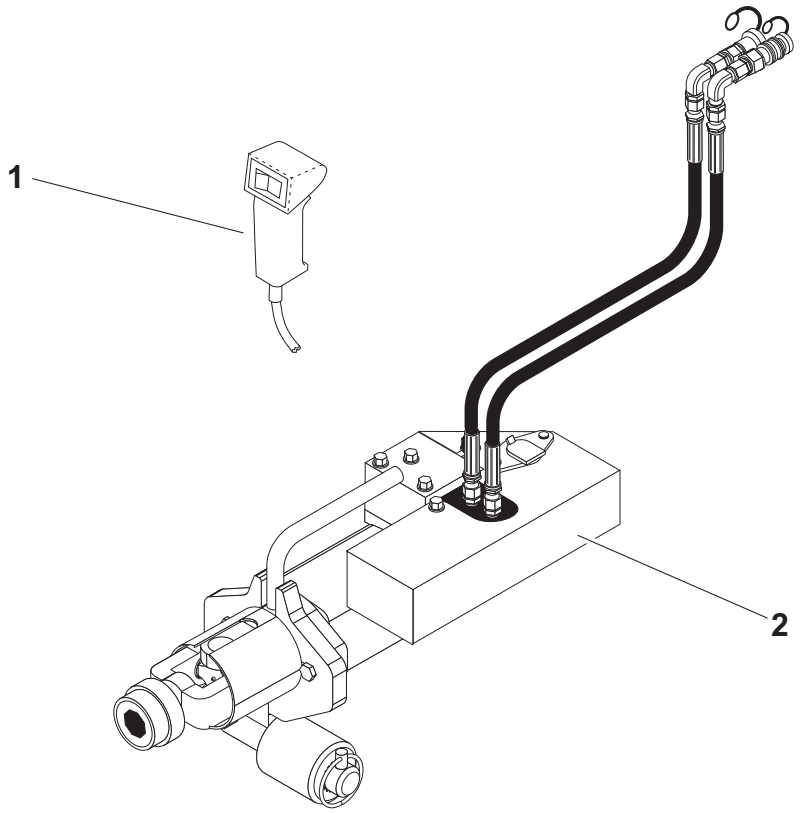

t33om063w.eps

1. Drilling attachment control
2. Drilling attachment

Item	Description	Notes
1. Drilling attachment control 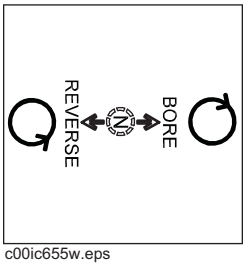 c00ic655w.eps	To rotate clockwise, press bore. To rotate counterclockwise, press reverse. **EMERGENCY SHUTDOWN:** Release all controls and turn ignition switch to STOP.	**IMPORTANT:** Always rotate clockwise during drilling and backreaming. Rotate counterclockwise only to dislodge a dry bore bit or reamer that has seized in the bore hole. Switch should return to neutral position when released.

https://truckmanualshub.com/

Battery Disconnect

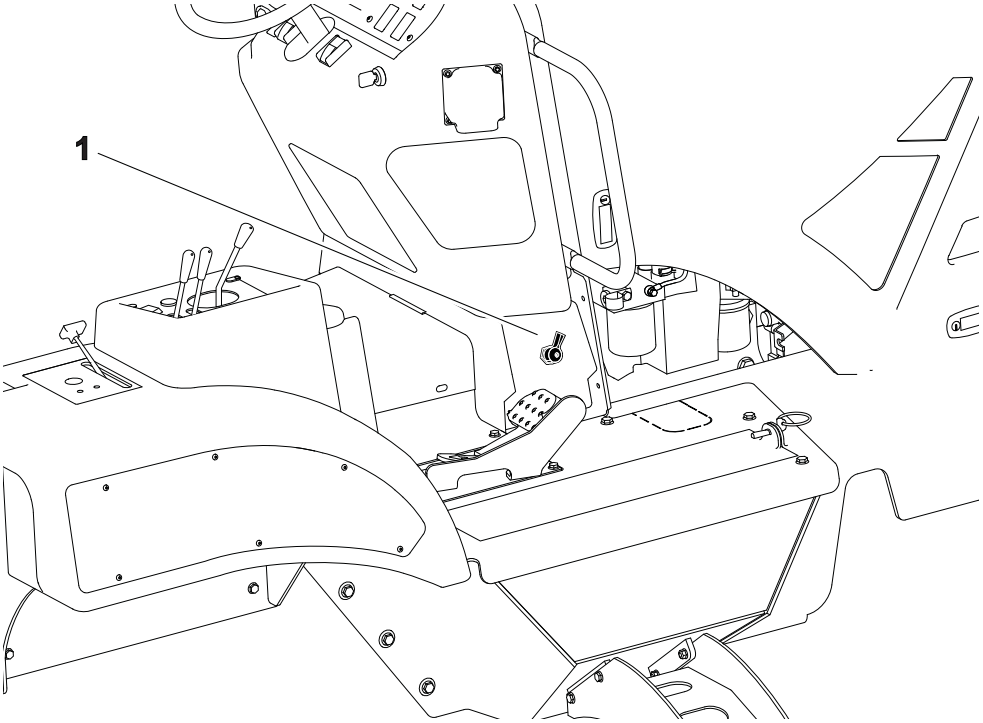

t33om012w.eps

1. Battery disconnect switch

Item	Description	Notes
1. Battery disconnect switch 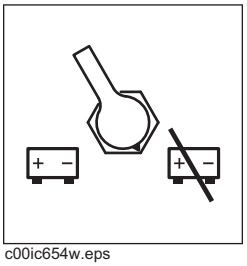 c00ic654w.eps	To connect, move left. To disconnect, move right.	***NOTICE:*** Do not operate battery switch with engine operating.

https://truckmanualshub.com/

https://truckmanualshub.com/

Operation Overview

Chapter Contents

Planning 68

Trenching 68

Plowing 68

Sawing 69

Digging with Backhoe 69

Drilling 69

Leaving Jobsite 69

https://truckmanualshub.com/

Planning

1. Gather information about jobsite. See 72.
2. Inspect jobsite. See page 73.
3. Classify jobsite. See page 74.
4. Select chain and teeth to match your soil type, if necessary. See page 135.
5. Check supplies and prepare equipment. See page 76.
6. Haul equipment to jobsite. See page 83.

Trenching

1. Start unit. See 78.
2. Position tractor and controls. See page 96.
3. Begin trenching. See page 96 .
4. Engage cruise control if desired. See page 132.
5. Engage optional Trench Depth Meter, if equipped.
6. Complete the installation. See page 139.
7. Shut down tractor. See page 81.

Plowing

1. Start unit. See page 78.
2. Position tractor and controls. See page 103.
   - offset plowing - page 107
   - coordinated plowing - page 107
   - crabbing - page 107
3. Attach product. See page 103.
4. Begin plowing. See page 106.
5. Engage cruise control if desired. See page 132.
6. Complete the installation. See page 139.
7. Shut down tractor. See page 81.

https://truckmanualshub.com/

Sawing

1. Start unit. See page 78.
2. Position tractor and controls. See page 114.
3. Begin sawing. See page 114.
4. Complete the installation. See page 139.
5. Backfill the trench. See page 140.
6. Shut down tractor. See page 81.

Digging with Backhoe

1. Start unit. See page 78.
2. Set stabilizers and unstow backhoe. See page 118.
3. Excavate. See page 119.
4. Stow backhoe properly. See page 120.
5. Shut down tractor. See page 81.

Drilling

1. Start unit. See page 78.
2. Dig approach trench and target trench. See page 125.
3. Assemble drill string and position tractor. See page 126.
4. Begin drilling. See page 127.
5. Use drill string guide as needed. See page 127.
6. Add rod. See page 128.
7. Backream. See page 128.
8. Shut down tractor. See page 81.
9. Disassemble joints. See page 129.

Leaving Jobsite

1. Backfill if necessary. See page 140.
2. Rinse equipment. See page 140.
3. Stow tools. See page 140.
4. Haul equipment from jobsite. See page 90.

https://truckmanualshub.com/

https://truckmanualshub.com/

Prepare

Chapter Contents

Gather Information 72

- Review Job Plan 72
- Notify One-Call Services 72
- Arrange for Traffic Control. 72
- Plan for Emergency Services 72

Inspect Site 73

- Identify Hazards 73

Classify Jobsite. 74

- Inspect Jobsite 74
- Select a Classification 74
- Apply Precautions 75

Check Supplies and Prepare Equipment 76

- Supplies 76
- Fluid Levels 76
- Condition and Function 76
- Accessories. 76

https://truckmanualshub.com/

Gather Information

A successful job begins before you dig. The first step in planning is reviewing information already available about the job and jobsite.

Review Job Plan

Review blueprints or other plans. Check for information about existing or planned structures, elevations, or proposed work that may be taking place at the same time.

Notify One-Call Services

Contact your local One-Call (811 in USA) or the One-Call referral number (888-258-0808 in USA and Canada) to have underground utilities located before digging. Also contact any utilities that do not participate in the One-Call service.

Arrange for Traffic Control

If working near a road or other traffic area, contact local authorities about safety procedures and regulations.

Plan for Emergency Services

Have the telephone numbers for local emergency and medical facilities on hand. Check that you will have access to a telephone.

https://truckmanualshub.com/

Inspect Site

Inspect jobsite before transporting equipment. Check for the following:

- changes in elevation such as hills or other open trenches
- obstacles such as buildings, railroad crossings, or streams
- signs of utilities ("Inspect Jobsite" on page 74)
- traffic
- access
- soil type and condition

Identify Hazards

Identify safety hazards and classify jobsite. See "Classify Jobsite" on page 74.

WARNING Jobsite hazards could cause death or serious injury. Use correct equipment and work methods. Use and maintain proper safety equipment.

To help avoid injury:

- Wear personal protective equipment including hard hat, safety eye wear, and hearing protection.
- Do not wear jewelry or loose clothing.
- Notify One-Call and companies which do not subscribe to One-Call.
- Comply with all utility notification regulations before digging or drilling.
- Verify location of previously marked underground hazards.
- Mark jobsite clearly and keep spectators away.

Remember, jobsite is classified by hazards in place -- not by line being installed.

https://truckmanualshub.com/

Classify Jobsite

Inspect Jobsite

- Follow U.S. Department of Labor regulations on excavating and trenching (Part 1926, Subpart P) and other similar regulations.
- Contact your local One-Call (811 in USA) or the One-Call referral number (888-258-0808 in USA and Canada) to have underground utilities located before digging. Also contact any utilities that do not participate in the One-Call service.
- Inspect jobsite and perimeter for evidence of underground hazards, such as:
  - "buried utility" notices
  - utility facilities without overhead lines
  - gas or water meters
  - junction boxes
  - drop boxes
  - light poles
  - manhole covers
  - sunken ground
- Have an experienced locating equipment operator sweep area within 20' (6 m) to each side of trench path. Verify previously marked line and cable locations.
- Mark location of all buried utilities and obstructions.
- Classify jobsite.

Select a Classification

Jobsites are classified according to underground hazards present.

If working . . .	then classify jobsite as . . .
within 10' (3 m) of a buried electric line	electric
within 10' (3 m) of a natural gas line	natural gas
in sand, granite, or concrete which is capable of producing crystalline silica (quartz) dust	crystalline silica (quartz) dust
within 10' (3 m) of any other hazard	other

NOTICE: If you have any doubt about jobsite classification, or if jobsite might contain unmarked hazards, take steps outlined previously to identify hazards and classify jobsite before working.

https://truckmanualshub.com/

Apply Precautions

Once classified, precautions appropriate for jobsite must be taken.

Electric Jobsite Precautions

Use one or both of these methods.

- Expose line by careful hand digging or soft excavation.
- Have service shut down while work is in progress. Have electric company test lines before returning them to service.

Natural Gas Jobsite Precautions

In addition to positioning equipment upwind from gas lines, use one or both of these methods.

- Expose lines by careful hand digging or soft excavation.
- Have gas shut off while work is in progress. Have gas company test lines before returning them to service.

Crystalline Silica (Quartz) Dust Precautions

Crystalline silica dust is a naturally occuring substance found in soil, sand, concrete, granite, and quartz. Breathing silica dust particles while cutting, drilling, or working materials may cause lung disease or cancer. To reduce exposure:

- Use water spray or other means to control dust.
- Refer to U.S. Department of Labor Occupational Safety and Health Administration guidelines to learn more about appropriate breathing protection and permissible exposure limits.

Other Jobsite Precautions

You may need to use different methods to safely avoid other underground hazards. Talk with those knowledgeable about hazards present at each site to determine which precautions should be taken or if job should be attempted.

https://truckmanualshub.com/

Check Supplies and Prepare Equipment

Supplies

- fuel
- keys
- personal protective equipment, such as hard hat and safety glasses

Fluid Levels

- fuel
- hydraulic fluid
- battery charge
- engine oil

Condition and Function

- digging chain and teeth
- brake pads and disc
- fan belts
- light bulbs
- filters (air, oil, hydraulic)
- tracks
- pumps and motors
- hoses and valves
- signs, guards, and shields

Accessories

Fire Extinguisher

If required, mount a fire extinguisher near the power unit but away from possible points of ignition. The fire extinguisher should always be classified for both oil and electric fires. It should meet legal and regulatory requirements.

https://truckmanualshub.com/

Drive

Chapter Contents

Start Unit 78

Drive 80

Safe Slope Operation 81

Shut Down 82

https://truckmanualshub.com/

Start Unit

Before operating tractor, read engine manufacturer's starting and operating instructions. Follow instructions for new engine break-in.

WARNING Incorrect procedures could result in death, injury, or property damage. Learn to use equipment correctly.

To help avoid injury:

- Read operator's manual before operating equipment. Follow instructions carefully. Contact Ditch Witch dealership for operation information or demonstration.
- Wear hard hat, safety glasses, and other protective equipment required by job. Do not wear jewelry or loose clothing that can catch on controls.

WARNING Runaway possible. Machine could run over you or others. Learn how to use all controls. Start and operate only from operator's position.

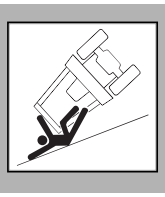

WARNING Rollover possible. If machine rolls over, you could be thrown from seat and killed or crushed. Wear seat belt.

https://truckmanualshub.com/

1. Fasten and adjust seat belt.
2. Check that ground drive control and attachment speed/direction control are in neutral.
3. Move throttle to idle.
4. Verify that parking brake is engaged.
5. Turn ignition switch to the run position (key on, engine off). Cold start wait indicator will light (if equipped).

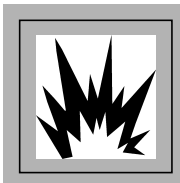

WARNING Explosion possible. Serious injury or equipment damage could occur. Follow directions carefully.

To help avoid injury: Do not use ether or any other type of aerosol starting fluid when unit is equipped with cold start option.

6. When cold start wait indicator goes off, turn ignition switch all the way clockwise to start tractor. Warning alarm will sound. Indicators will light.
   - If engine does not crank, check start interlock display. See page 26 for start interlock information.
   - If engine turns but does not start within 10 seconds, allow starter to cool before trying to start again.

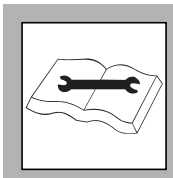

WARNING Improper control function could cause death or serious injury.

To help avoid injury: Stop machine and have it serviced if control does not work as described in instructions.

IMPORTANT: Machine will not start if start interlock requirements are not met. See page 26 for start interlock information.

7. Run engine at half-throttle or less for five minutes before operating tractor. During warmup, check that all controls work properly.

https://truckmanualshub.com/

Drive

WARNING Moving traffic – hazardous situation. Death or serious injury could result. Avoid moving vehicles, wear high visibility clothing, post appropriate warning signs.

To help avoid injury:

- Survey your field of vision when operating the machine.
- Drive carefully in congested areas. Know machine's clearance and turning radius.
- Keep attachments low when operating on slope. Drive slowly and cautiously.

EMERGENCY SHUTDOWN: Turn ignition switch to STOP.

1. Turn on lights as needed.
2. Raise backfill blade and all attachments.
3. Release parking brake.
4. Adjust throttle.
5. When operating in low or medium:
   - if using the hand control, the foot control will only increase speed.
   - any opposing signal from controls causes ground drive to stop.
6. When operating in high, ground drive stops if hand control is moved out of neutral position.

https://truckmanualshub.com/

Safe Slope Operation

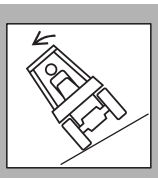
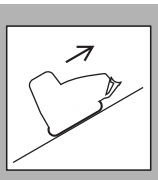

WARNING Tipover possible. Machine can tip over and crush you.

To help avoid injury:

- Always operate with heavy end uphill.
- Drive cautiously at all times.
- Never jerk control levers. Use a steady even motion.
- Do not park unit on slope without lowering digging attachment to the ground, returning all controls to neutral position, shutting down unit, and applying parking brake.

Operating safely on a slope depends upon many factors including:

- Distribution of machine weight, including front loading and absence of load
- Height of load
- Even or rough ground conditions
- Potential for ground giving way causing unplanned tilt forward, reverse or sideways
- Nearness of ditches, ruts, stumps or other obstructions and sudden changes in slope
- Speed
- Turning
- Braking performance
- Operator skill

These varying factors make it impractical to specify a maximum safe operating angle in this manual. It is therefore important for the operator to be aware of these conditions and adjust operation accordingly. Maximum engine angle and braking performance are two absolute limits which must never be exceeded. These maximums are stated below since they are design limits. These design limits usually exceed the operating limits and must never be used alone to establish safe operating angle for variable conditions.

Maximum engine lubrication angle – 30°

Maximum service brake retarding force – equal to traction of both tracks.

Maximum secondary brake retarding force – equal to traction of one track.

Maximum park brake holding force – equal to traction of both tracks.

https://truckmanualshub.com/

Shut Down

1. When job is complete, move ground drive control to neutral.
2. Set parking brake.
3. Lower all attachments to ground.
4. Move throttle to idle for 3 minutes to cool engine.
5. Turn ignition switch to STOP. If leaving machine unattended, remove key.
6. For maintenance or long-term storage, turn battery disconnect switch, if equipped, to the disconnect position.

https://truckmanualshub.com/

Transport

Chapter Contents

Lift 84

Tie Down 87

Haul 90

Tow 93

https://truckmanualshub.com/

Lift

WARNING Crushing weight. If load falls or moves it could kill or crush you. Use proper procedures and equipment or stay away.

WARNING Incorrect procedures could result in death, injury, or property damage. Learn to use equipment correctly.

Tractor

This machine is not configured for lifting. If the machine must be lifted, load machine into a container or onto a platform appropriate for lifting. See "Specifications" for weight of machine.

Centerline Trencher

Lift points shown with arrows. Use crane capable of supporting the equipment's size and weight. See "Specifications" or measure and weigh equipment before lifting.

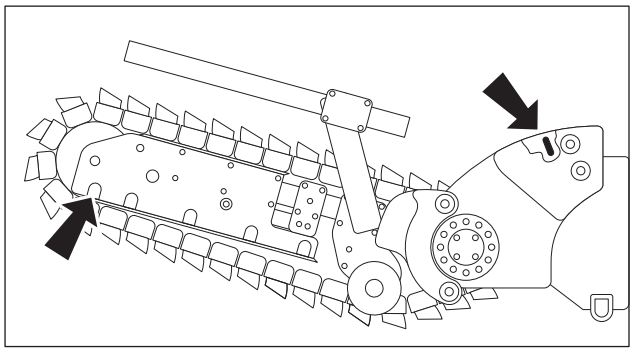

t30om012h.eps

https://truckmanualshub.com/

Traversing Trencher

Lift points shown with arrows. Use crane capable of supporting the equipment's size and weight. See "Specifications" or measure and weigh equipment before lifting.

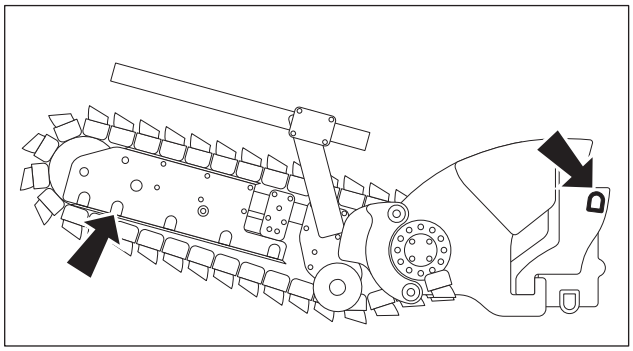

t30om013h.eps

Combo

Lift points shown with arrows. Use crane capable of supporting the equipment's size and weight. See "Specifications" or measure and weigh equipment before lifting.

Plow linkage has some movement and may require better support in some situations.

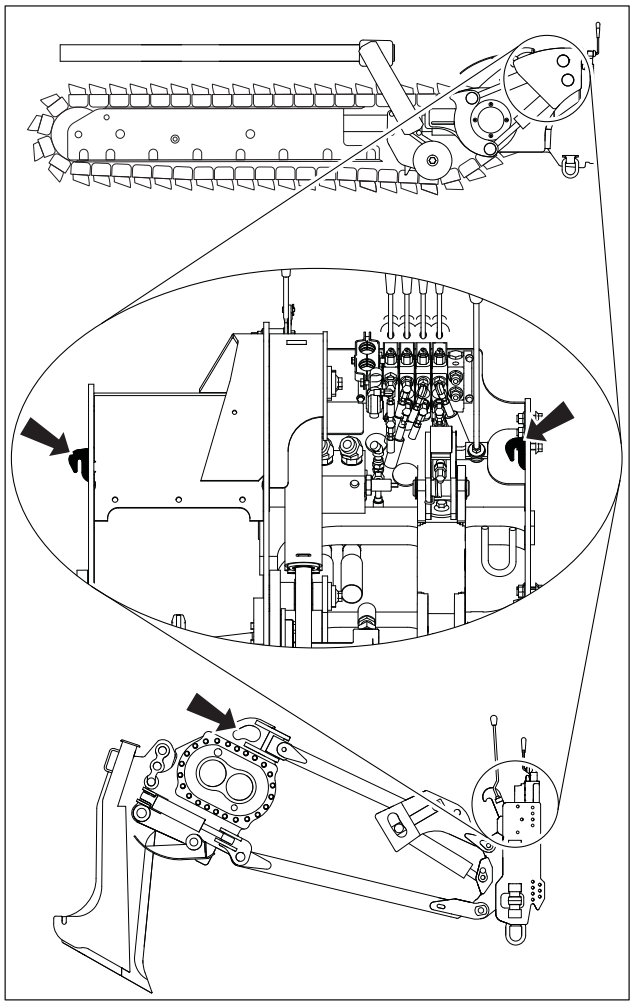

t33om022w.eps

https://truckmanualshub.com/

Plow

Lift points shown with arrows. Use crane capable of supporting the equipment's size and weight. See "Specifications" or measure and weigh equipment before lifting.

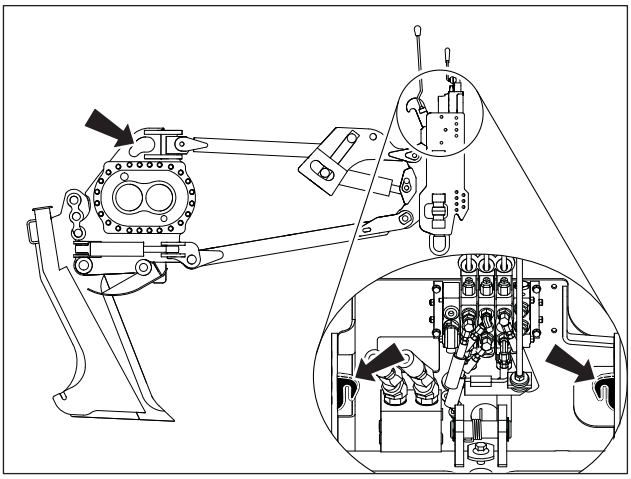

t33om018w.eps

Reel Carrier

Lift points shown with arrows. Use crane capable of supporting the equipment's size and weight. See "Specifications" or measure and weigh equipment before lifting.

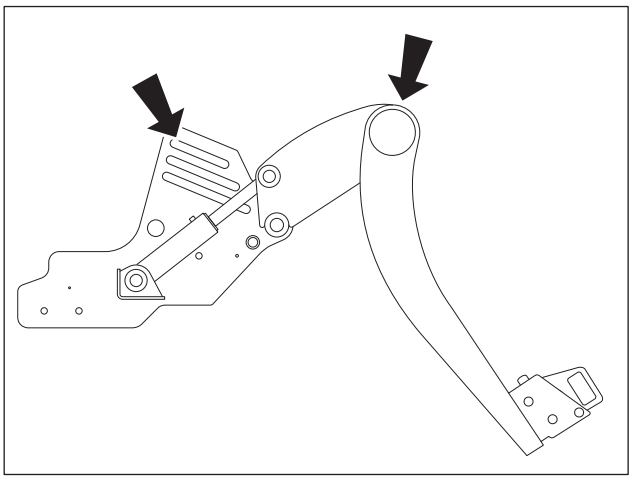

t30om021h.eps

https://truckmanualshub.com/

Tie Down

WARNING Incorrect procedures could result in death, injury, or property damage. Learn to use equipment correctly.

Points

Tiedown points are identified by tiedown decals. Securing to trailer at other points is unsafe and can damage machinery.

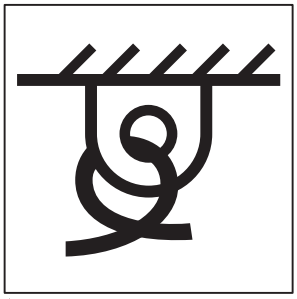

ic1320a.eps

Tractor

Attach chains at front and rear tiedown points. Make sure chains are tight before transporting unit.

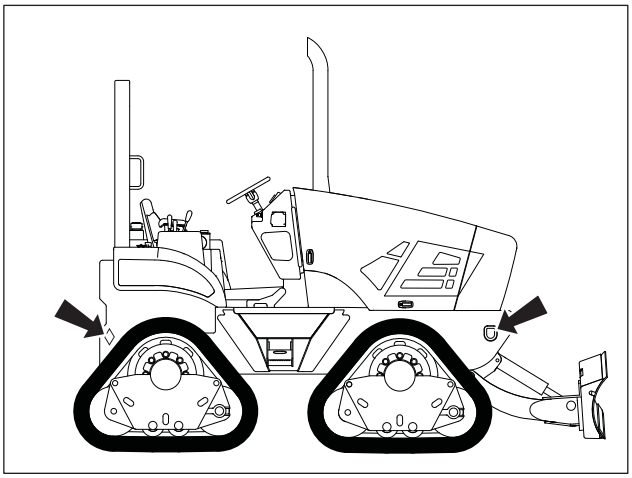

t33om014w.eps

Centerline Trencher

Lower trencher to trailer deck and chain at attachment frame and through boom. Make sure chains are tight before transporting.

IMPORTANT: If trencher is equipped with a trench cleaner, ensure that trench cleaner shoe is fully up and extra bolt (found in operator's manual compartment) is installed in center hole for additional support.

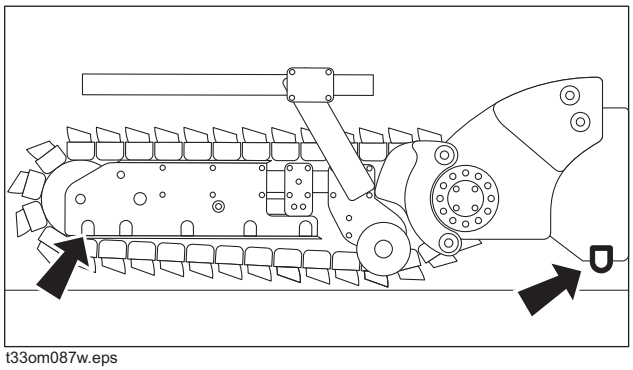

t33om087w.eps

https://truckmanualshub.com/

Traversing Trencher

Lower trencher to trailer deck and chain at attachment frame and through boom. Make sure chains are tight before transporting.

IMPORTANT: If trencher is equipped with a trench cleaner, ensure that trench cleaner shoe is fully up and extra bolt (found in operator's manual compartment) is installed in center hole for additional support.

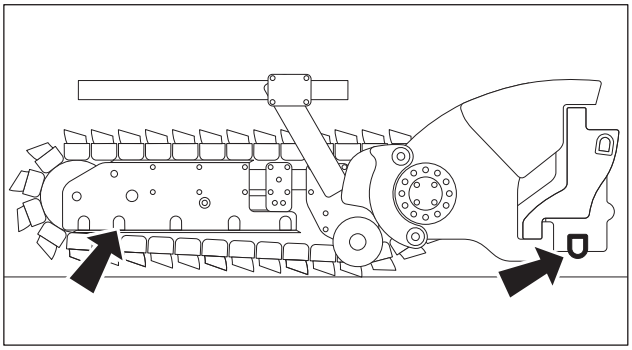

t33om088w.eps

Combo

Lower attachment to trailer deck and chain at attachment frame and vibrator box. Make sure chains are tight before transporting.

NOTICE:

- Engage attachment stow lock and swing lock devices in addition to securing at tiedowns.
- Unsecured plow can swing outside the trailer and become a traffic hazzard. Lower plow and chain to trailer deck before hauling.
- If trencher is equipped with a trench cleaner, ensure that trench cleaner shoe is fully up and extra bolt (found in operator's manual compartment) is installed in center hole for additional support.

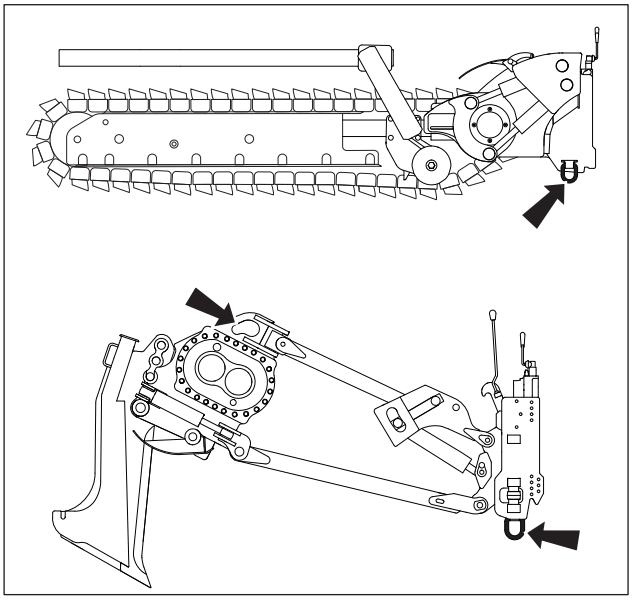

t33om027w.eps

https://truckmanualshub.com/

Plow

Lower plow to trailer deck and chain at attachment frame and vibrator box. Make sure chains are tight before transporting.

NOTICE:

- Engage attachment stow lock and swing lock devices in addition to securing at tiedowns.
- Unsecured plow can swing outside the trailer and become a traffic hazard. Lower plow and chain to trailer deck before hauling.

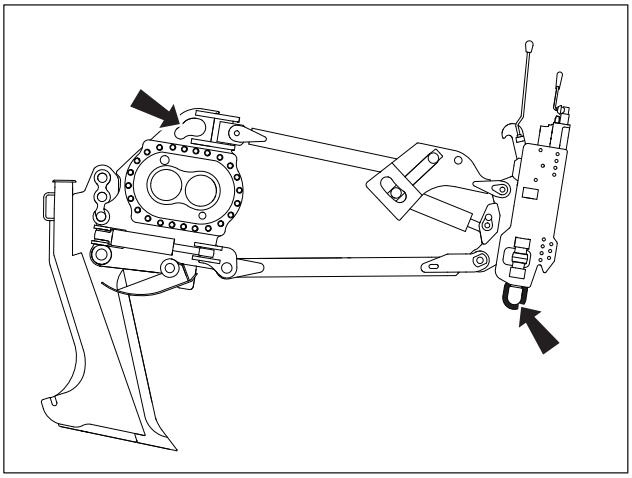

t33om019w.eps

Reel Carrier

Lower reel carrier to lowest position and tie down at attachment arms. Make sure chains are tight before transporting.

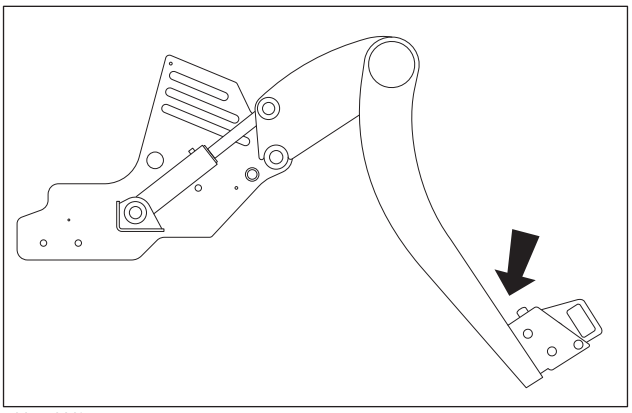

t30om020h.eps

https://truckmanualshub.com/

Haul

WARNING Incorrect procedures could result in death, injury, or property damage. Learn to use equipment correctly.

To help avoid injury:

- Read trailer operator's manual before loading or transporting your machine. Incorrectly loaded machine can slip or cause trailer sway.
- Ensure that tow vehicle has proper tow capacity rating.
- Attach trailer to tow vehicle before loading or unloading.
- Park, load, and unload trailer on level ground.
- Check that unit and trailer do not exceed size or weight regulations.
- Load trailer correctly to avoid trailer swaying. Ten to fifteen percent of total vehicle weight (equipment plus trailer) must be on tongue to help prevent trailer sway.
- Connect safety chains to tow vehicle. Attach left chain to right side of tow vehicle and vice versa to cradle hitch. Do not connect to pintle hook or hitch ball.
- Connect breakaway switch cable to tow vehicle. Do not connect to pintle hook or hitch ball.

Procedure

Inspect Trailer

1. Check hitch for wear and cracks. Lubricate if needed.
2. Check battery for 12V charge.
3. Inspect lights for cleanliness and correct operation. Inspect reflectors and replace if needed.
4. Check trailer tire pressure. Check lug nut torque with a torque wrench. Adjust if needed.
5. Ensure trailer brakes are adjusted to come on with tow vehicle brakes.
6. Check ramps and trailer bed for cracks.

https://truckmanualshub.com/

Load

WARNING Crushing weight. If load falls or moves it could kill or crush you. Use proper procedures and equipment or stay away.

To help avoid injury:

- Attach trailer to tow vehicle before loading or unloading.
- Load and unload trailer on level ground.
- Block trailer wheels.

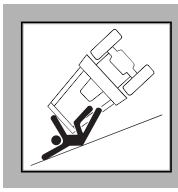

WARNING Rollover possible. If machine rolls over, you could be thrown from seat and killed or crushed. Wear seat belt.

1. Fasten and adjust seat belt.
2. Start tractor. See page 78 for proper start-up procedures.
3. Raise attachments, but keep them low and centered. Check that they are not in float.
4. Release parking brake and verify that parking brake indicator is off.
5. Move ground drive switch to low.
6. Slow engine to low throttle and slowly drive tractor onto trailer.
7. Position tractor on trailer deck for proper weight distribution.
8. Engage parking brake and verify that parking brake indicator is on.
9. Lower attachments to trailer bed and turn tractor off. See page 81 for proper shutdown procedures.
10. Attach chains to tractor and attachments where tiedown decals are located. See page 87.

https://truckmanualshub.com/

Unload

WARNING Crushing weight. If load falls or moves it could kill or crush you. Use proper procedures and equipment or stay away.

To help avoid injury:

- Attach trailer to tow vehicle before loading or unloading.
- Load and unload trailer on level ground.
- Block trailer wheels.

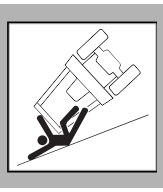

WARNING Rollover possible. If machine rolls over, you could be thrown from seat and killed or crushed. Wear seat belt.

1. Lower trailer or ramps.
2. Check that parking brake is engaged and verify that parking brake indicator is on.
3. Check that ground drive controls are in neutral.
4. Remove chains from tiedowns.
5. Fasten and adjust seat belt.
6. Start tractor. See page 78 for proper start-up procedures.
7. Raise attachments, but keep them low and centered. Check that they are not in float.
8. Release parking brake and verify that parking brake indicator is off.
9. Slow engine to low throttle and slowly back unit down trailer or ramps.

https://truckmanualshub.com/

Tow

WARNING Incorrect procedures could result in death, injury, or property damage. Learn to use equipment correctly.

Under normal conditions, tractor should not be towed. If tractor becomes disabled and towing is necessary:

- Do not tow for more than 200 yd (180 m).
- Tow at less than 1 mph (1.6 km/h).
- Steering will be very difficult.

Procedure

1. Engage parking brake.
2. Block front and rear tracks to prevent unit from rolling.
3. Attach tow line to all available tie-down points facing towing vehicle.
4. Activate the tow valve (shown).
   - Under tractor, locate two screws on bottom of pump housing.
   - Use flat blade screwdriver to turn each screw 90° counterclockwise until they contact relief check valves.
5. Remove blocks.
6. Fasten seatbelt and adjust seatbelt.
7. Disengage parking brake.
8. After towing, turn tow screws clockwise 90°.

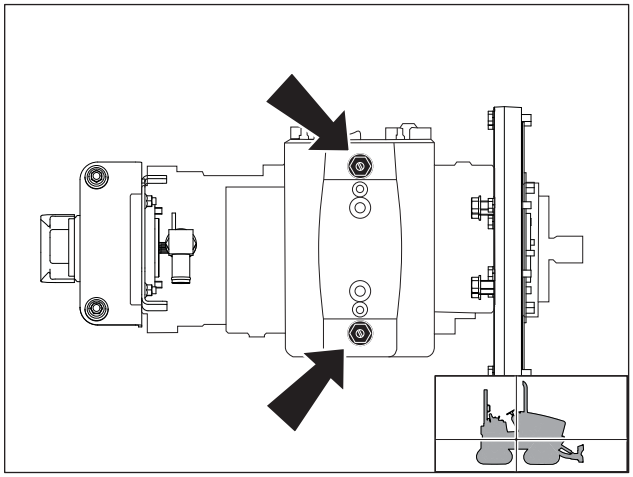

t33om076w.eps

https://truckmanualshub.com/

https://truckmanualshub.com/

Trench

Chapter Contents

Setup 96

Operation 97

https://truckmanualshub.com/

Setup

EMERGENCY SHUTDOWN - Turn ignition switch to STOP.

WARNING Crushing weight could cause death or serious injury. Use proper procedures and equipment or stay away.

To help avoid injury: Use attachments or counterweights to make front and rear loads balance when all attachments are raised. Contact your Ditch Witch dealer about counterweighting for your equipment.

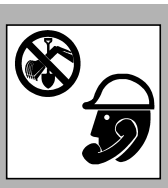

WARNING Jobsite hazards could cause death or serious injury. Use correct equipment and work methods. Use and maintain proper safety equipment.

To help avoid injury: Comply with all utility notification regulations before digging or drilling.

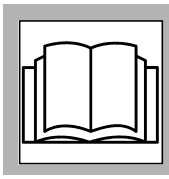

WARNING Incorrect procedures can result in death, injury, or property damage. Learn to use equipment correctly.

Before Using Trencher

NOTICE: If trencher is equipped with trench cleaner, check to ensure that shipping bolt has been removed, as shown.

1. Fasten and adjust seat belt.
2. Start tractor. See page 78 for start-up procedures.
3. Drive to starting point. Move in line with planned trench.

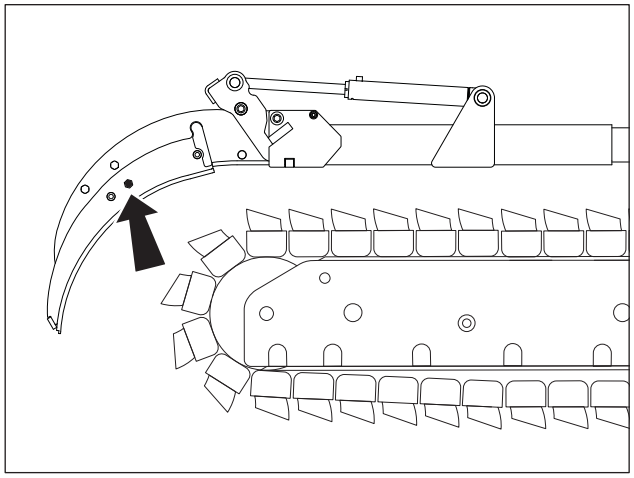

t33om080w.eps

https://truckmanualshub.com/

IMPORTANT:

- When cutting asphalt, start trench in soil at edge of road and use shortest possible boom at full depth.
- Sight along center of hood to a stake driven beyond end of trench line for straight trench.
- For optimal spoils delivery, adjust the auger positions forward or backward to accommodate terrain and digging depth.

4. Lower backfill blade.
5. Engage parking brake.
6. Lower boom to just above ground.
7. Check that attachment speed/direction control and ground drive controls are in neutral.
8. If equipped with combo, select trenching control position.

Operation

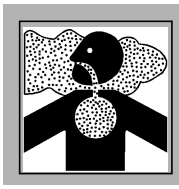

CAUTION Breathing crystalline silica dust may cause lung disease. Cutting, drilling, or working materials such as concrete, sand, or rock containing quartz may result in exposure to silica dust. Use dust control methods or appropriate breathing protection when exposed to silica dust.

DANGER Electrical shock. Contacting electrical lines will cause death or serious injury. Know location of lines and stay away.

To help avoid injury: Expose lines by hand before digging. Cutting high voltage cable can cause electrocution.

WARNING Incorrect procedures could result in death, injury, or property damage. Learn to use equipment correctly.

To help avoid injury:

- Comply with all utility notification regulations before digging or drilling.
- Notify companies that do not subscribe to One-Call.

https://truckmanualshub.com/

CAUTION Flying objects thrown by machine may strike people. Wear hard hat and safety glasses.

DANGER Moving digging teeth will cause death or serious injury. Stay away.

To help avoid injury:

- Ensure parking brake is engaged.
- Allow 3' (1 m) between digging teeth and obstacle. Machine might jerk when digging starts.
- Keep everyone at least 6' (2 m) from machine, attachments, and their range of movement.

1. Lower backfill blade to reduce shock when trenching begins.
2. If necessary, adjust throttle to low idle.
3. Move attachment speed/direction control to desired speed. DIGGING CHAIN WILL MOVE.

NOTICE: Always start trenching with attachment speed set at low. If soil conditions permit optimum digging at higher speeds, select high.

4. Increase engine speed to full throttle.
5. Slowly lower digging boom to depth.
6. Raise backfill blade and release parking brake.
7. Move ground drive control to desired speed.
8. If using optional mechanical trench cleaner:
   - Stop tractor and turn ignition switch to STOP.
   - Lower trench cleaner, if equipped.
   - Restart tractor, fasten seat belt, and continue trenching.

NOTICE:

- Make sure that shipping bolt is removed before attempting to use trench cleaner.
- Do not have trench cleaner in working position when starting a trench.
- Do not back up with trench cleaner in working position.
- Do not use trench cleaner in conditions where large rocks can get between chain and cleaner.

https://truckmanualshub.com/

9. If using optional hydraulic trench cleaner:
   - Trench forward a short distance.
   - Move hydraulic control lever to lower trench cleaner, and continue trenching.
10. Push ground drive control forward to trenching speed.

> ***NOTICE:***
>
> - Do not make sharp turns. Lower boom to full depth when turning.
> - If an object becomes lodged in chain, move attachment speed/direction control to neutral and raise boom slightly. Reverse chain direction. If object must be removed manually, turn engine off and engage parking brake.

11. When trench is complete, move ground drive control to neutral.
12. Adjust throttle to low idle.
13. Raise boom.
14. As boom clears top of trench, move attachment speed/direction control to neutral.
15. Drive a short distance away from work site.
16. Shut down tractor. See page 81 for proper shutdown procedures.
17. Return optional trench cleaner to the stowed position.

https://truckmanualshub.com/

https://truckmanualshub.com/

Plow

Chapter Contents

Setup 102

Operation 105

https://truckmanualshub.com/

Setup

EMERGENCY SHUTDOWN - Turn ignition switch to STOP.

WARNING Crushing weight could cause death or serious injury. Use proper procedures and equipment or stay away.

To help avoid injury: Keep everyone at least 6' (2 m) from machine, attachments, and their range of movement.

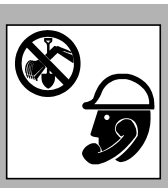

WARNING Jobsite hazards could cause death or serious injury. Use correct equipment and work methods. Use and maintain proper safety equipment.

To help avoid injury: Comply with all utility notification regulations before digging or drilling.

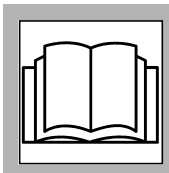

WARNING Incorrect procedures can result in death, injury, or property damage. Learn to use equipment correctly.

To help avoid injury: Use attachments or counterweights to make front and rear loads balance when all attachments are raised. Contact your Ditch Witch dealer about counterweighting for your equipment.

NOTICE: Do not operate vibrator unless plow is in the ground.

https://truckmanualshub.com/

Position Tractor

IMPORTANT: If material must be at a constant depth, dig starting and target trenches.

1. Fasten and adjust seat belt.
2. Start tractor. See page 78 for start-up procedures.
3. Drive to starting point. Move in line with planned trench.
4. Engage parking brake and verify parking brake indicator is on.
5. Lower backfill blade, if equipped.
6. If equipped with combo, select the plow control position.
7. Lower plow to starting point of trench.
8. Turn ignition switch to STOP.

Attach Product

To Pull Product

1. Insert material into pulling grip.
2. Tape grip with duct tape.

NOTICE: Keep everyone away from material being installed.

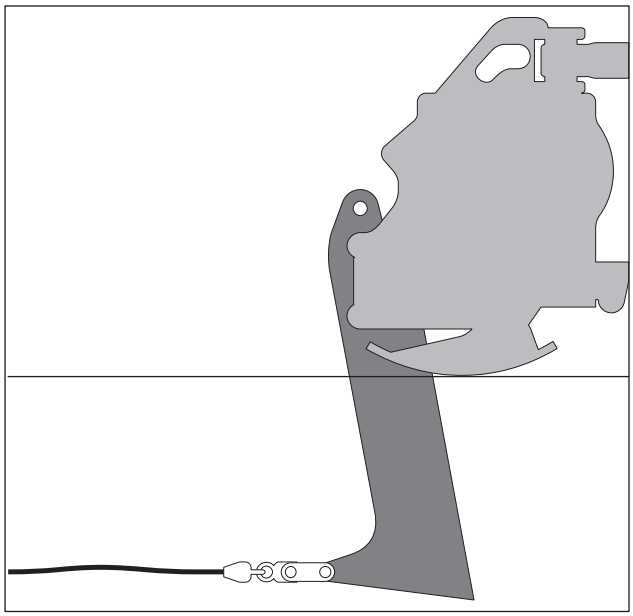

Plow_Pull.eps

https://truckmanualshub.com/

To Feed Product

1. Remove cable guide.
2. Feed cable/marking tape through tube from top to bottom.
3. Replace cable guide and tighten fasteners.
4. Secure cable.

NOTICE: Keep everyone away from material being installed.

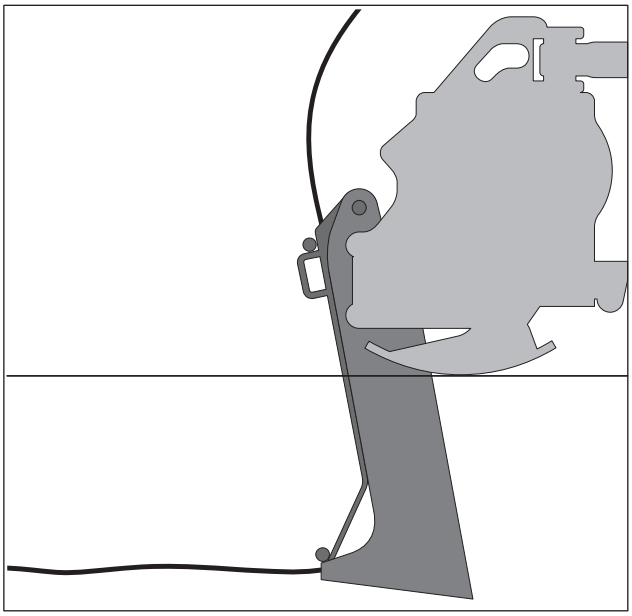

Plow_Feed.eps

https://truckmanualshub.com/

Operation

WARNING Crushing weight could cause death or serious injury. Use proper procedures and equipment or stay away.

DANGER Electrical shock. Contacting electrical lines will cause death or serious injury. Know location of lines and stay away.

To help avoid injury: Expose lines by hand before digging. Cutting high voltage cable can cause electrocution

WARNING Incorrect procedures could result in death, injury, or property damage. Learn to use equipment correctly.

NOTICE: Do not drive backward with plow in the ground.

https://truckmanualshub.com/

Start Plowing

1. Fasten and adjust seat belt.
2. Start tractor. See page 78 for start-up procedures.
3. Adjust throttle to low idle.
4. Check that ground drive control is in neutral.
5. Lower reel carrier to lowest position possible, if equipped.

> ***NOTICE:*** Use extreme caution when operating reel carrier on sloped surfaces.

6. If equipped with backfill blade tilt/attachment swing valve and control, move selector to swing position.
7. If equipped with reel winder, select reel winder on function switch. Lower reel winder arm to disengage reel winder from product spool.
8. Raise backfill blade.
9. Move ground drive control to forward at plowing speed and lower plow blade into ground.

> ***NOTICE:*** Do NOT move ground drive to reverse with plow blade in the ground.

10. Increase engine speed to full throttle.
11. Rotate attachment speed/direction control to attachment speed that allows the least tractor vibration at the highest ground drive possible without track slippage. PLOW WILL VIBRATE.
12. Check cable for damage during plowing. Run continuity checks on electric cable and check pipe pressure. Damage can result from improper operation, incorrect blade choice, striking underground obstructions, or other conditions.

Finish Plowing

1. When installation is complete, move ground drive control to neutral.
2. With vibrator running, lower throttle speed and raise plow to ground level.

> ***NOTICE:*** Do not operate vibrator when plow is out of the ground. This will cause excessive vibration resulting in rapid wear, and possible damage to the unit and product being installed.

3. Move attachment speed/direction control to neutral.
4. Engage parking brake.
5. Lower backfill blade.
6. Turn ignition switch to STOP and remove product from plow.
7. Start tractor, raise backfill blade and drive a short distance away from work site.
8. Shut down tractor. See page 81 for proper shutdown procedures.

https://truckmanualshub.com/

Special Plowing

Your Ditch Witch equipment allows you to plow four ways: normal plowing, offset plowing (1), coordinated plowing (2), and crabbing (3).

NOTICE: Oversteering blade may damage blade or cable.

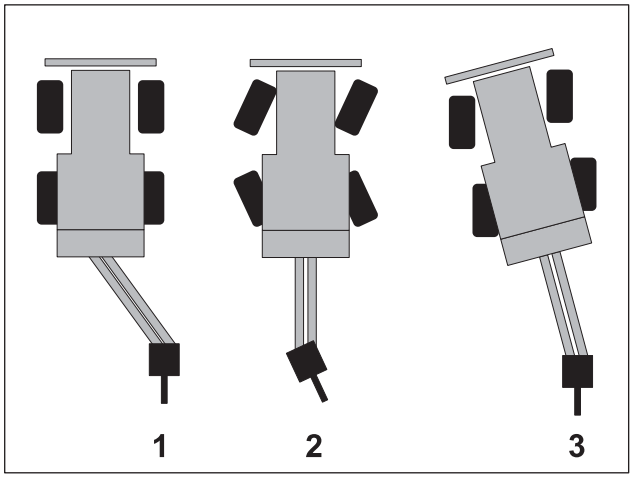

Plowing.eps

Offset Plow

Offset plowing can be used to plow next to a road while keeping tracks on a more stable surface or in similar conditions.

1. Use plow swing to move plow to planned trench line.
2. Use blade steer to position blade parallel to direction of tractor frame.

Coordinated Plow

Coordinated plowing can be used to turn a tight circle around a jobsite obstacle or in similar conditions.

1. Move rear steer/center switch to the rear steer position.
2. Use the rear steer switch to position the tracks as shown above (2).
3. Slowly move tractor forward.
4. Plow as normal.

IMPORTANT: When coordinated plowing, keep plow blade straight or in the same angle position as rear tracks.

Crab Plow

Crab can be used to plow along edge of jobsite or in similar conditions.

1. Move rear steer/center switch to the rear steer position.
2. Use the rear steer switch to position the tracks as shown above (3).
3. Slowly move tractor forward.
4. Plow as normal.

https://truckmanualshub.com/

https://truckmanualshub.com/

Reel Carrier

Chapter Contents

Setup 110

Operation 111

https://truckmanualshub.com/

Setup

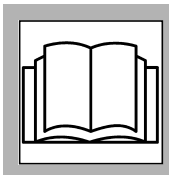

WARNING Incorrect procedures can result in death, injury, or property damage. Learn to use equipment correctly.

Adjust Reel Winder

1. Lower reel carrier.
2. Turn ignition switch to STOP.
3. Remove reel.

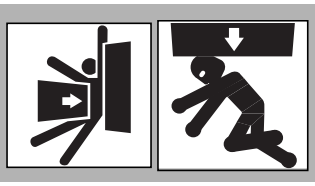

WARNING Crushing weight could cause death or serious injury. Use proper procedures and equipment or stay away.

4. While supporting lever arm (3), remove bolt (1) that attaches hydraulic lift cylinder to lever arm.
5. Attach cylinder rod to the correct mounting hole for your diameter reel:
   - For 2-5' (61-152 cm) diameter reels, attach to bottom mounting hole (1).
   - For 5-7' (152-213 cm) diameter reels, attach to top mounting hole (2).

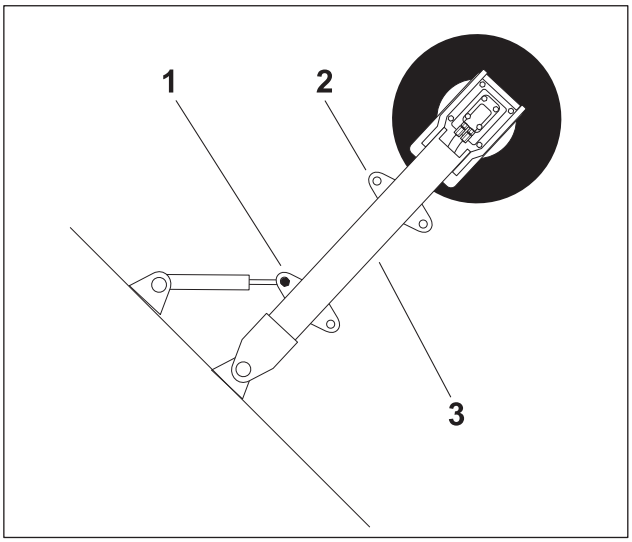

ReelWinder.eps

https://truckmanualshub.com/

Operation

1. Fasten and adjust seat belt.
1. Drive to beginning of planned plow path.
2. Engage parking brake.
3. Lower backfill blade, if equipped.
4. Lower plow attachment.
5. Adjust throttle.
6. Attach service line to reel.

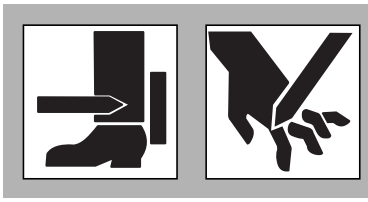

WARNING Moving parts could cut off hand or foot. Stay away.

7. Move reel winder selector switch to activate reel winder control functions.
8. Lower reel winder arm until track meets reel flange.
9. Wind service line.
10. When finished winding, raise reel winder arm.
11. Adjust throttle.
12. Move reel winder selector switch to activate backfill blade controls.
13. Raise backfill blade, if equipped.
14. Release parking brake.
15. Follow directions in "Setup" on page 102 to begin plowing.

https://truckmanualshub.com/

https://truckmanualshub.com/

Saw

Chapter Contents

Setup 114

- Before First Use 114

Operation 116

- Normal Use 115

https://truckmanualshub.com/

Setup

EMERGENCY SHUTDOWN - Turn ignition switch to STOP.

WARNING Crushing weight could cause death or serious injury. Use proper procedures and equipment or stay away.

To help avoid injury: Use attachments or counterweights to make front and rear loads balance when all attachments are raised. Contact your Ditch Witch dealer about counterweighting for your equipment.

WARNING Jobsite hazards could cause death or serious injury. Use correct equipment and work methods. Use and maintain proper safety equipment.

To help avoid injury: Comply with all utility notification regulations before digging or drilling.

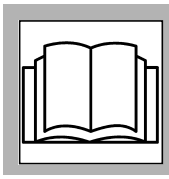

WARNING Incorrect procedures can result in death, injury, or property damage. Learn to use equipment correctly.

Before First Use

NOTICE: Before first use read saw manufacturer's instructions carefully and be sure you understand the operation of both the tractor and the saw attachment before operating.

WARNING Incorrect procedures could result in death, injury, or property damage. Learn to use equipment correctly.

To help avoid injury: Unless otherwise instructed, all service should be performed with tractor off.

https://truckmanualshub.com/

Operation

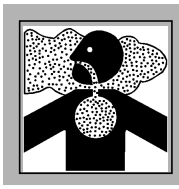

CAUTION Breathing crystalline silica dust may cause lung disease. Cutting, drilling, or working materials such as concrete, sand, or rock containing quartz may result in exposure to silica dust. Use dust control methods or appropriate breathing protection when exposed to silica dust.

DANGER Electrical shock. Contacting electrical lines will cause death or serious injury. Know location of lines and stay away.

To help avoid injury: Expose lines by hand before digging. Cutting high voltage cable can cause electrocution.

WARNING Incorrect procedures could result in death, injury, or property damage. Learn to use equipment correctly.

CAUTION Flying objects thrown by machine may strike people. Wear hard hat and safety glasses.

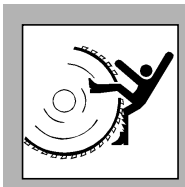

DANGER Moving digging teeth will kill you or cut off arm or leg. Stay away.

To help avoid injury:

- Allow 3' (1 m) between digging teeth and obstacle. Machine might jerk when digging starts.
- Keep everyone at least 6' (2 m) from machine, attachments, and their range of movement.

Normal Use

1. Fasten and adjust seat belt.
2. Start tractor. See "Start Unit" on page 78 for start-up procedures.
3. Drive to starting point. Move in line with planned trench.
4. See manufacturer's instructions for saw operating procedures.

https://truckmanualshub.com/

5. Engage parking brake.
6. Move gearbox control to 1 (low).
7. Swivel seat to the desired position.
8. Engage axle lock.
9. Lower saw to just above ground.
10. Check that saw is in line with planned trench.
11. Release parking brake.
12. Work slowly and carefully.
13. When trench is complete, move ground drive control to neutral and adjust throttle to low idle.

https://truckmanualshub.com/

Backhoe

Chapter Contents

Setup 118

Operation 119

Stow 120

https://truckmanualshub.com/

Setup

1. Move attachment speed/direction control to neutral position.
2. Move ground drive control to neutral position.
3. Engage parking brake if not on level ground.
4. Lower rear attachment to 6" (150 mm) above ground.
5. Check that backfill blade is straight and lower it to ground.
6. Ensure ground drive is in low speed.
7. Decrease engine speed to low throttle.
8. Move to backhoe operator's station.
9. Release seat lock (shown) and move seat into operating position.
10. Release and lower stabilizers enough to lift front tires or tracks.
11. Disengage boom and swing stow locks.
12. Adjust engine speed to 1/2 to 3/4 throttle for digging.

IMPORTANT: Engine speed affects speed of backhoe operation.

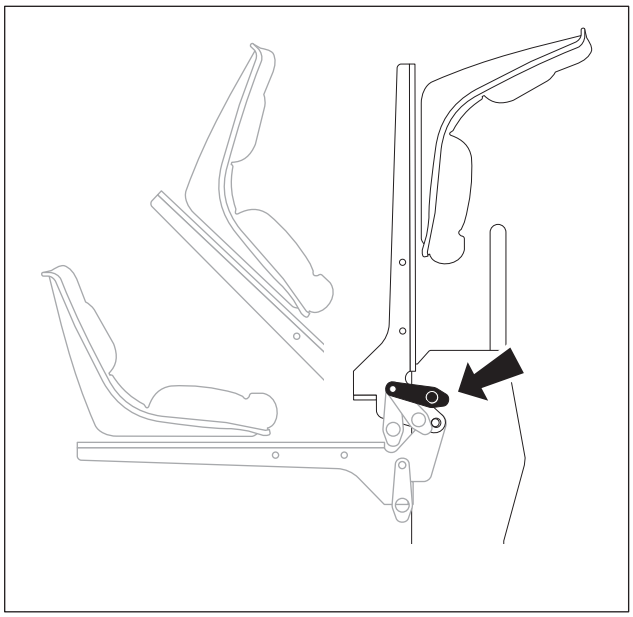

Backhoe_Seat.eps

https://truckmanualshub.com/

Operation

Dig

Use boom/swing control and bucket/dipper control to dig hole or trench.

IMPORTANT: For more information about backhoe controls, see "Backhoe Console" on page 60.

- Keep dipper and boom at right angles as much as possible for maximum power.
- Keep bucket in line with dipper as much as possible.
- Position bucket so teeth cut soil. As soil is cut, curl bucket under dipper.
- Move dipper and bucket together. Increasing engine speed will not increase backhoe force.

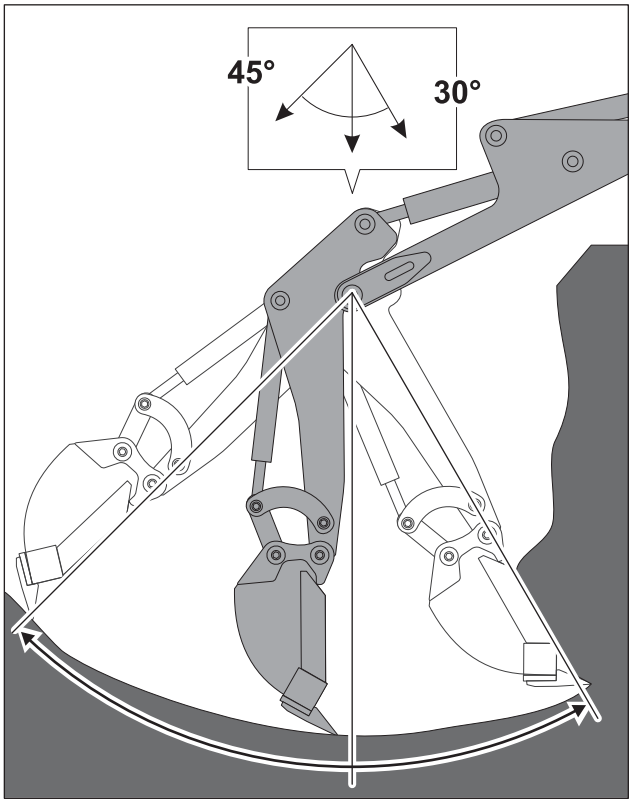

Backhoe_Dig.eps

Move Unit

To move unit from the backhoe operator's station using the remote ground drive function:

NOTICE:

- Remote ground drive is disabled if an operator is sitting in main operator seat.
- Remote ground drive is disabled if ground drive controls are not in neutral.
- Only use this method to move unit less than 30' (10 m) at one time.

1. Raise stabilizers.
2. Use remote ground drive switch to move unit.
3. Lower stabilizers.

https://truckmanualshub.com/

Stow

IMPORTANT: Before returning to tractor operator station, raise stabilizers, return remote throttle to low idle, and stow and lock boom.

1. When hole or trench is complete, lift boom while keeping dipper pointed at ground.

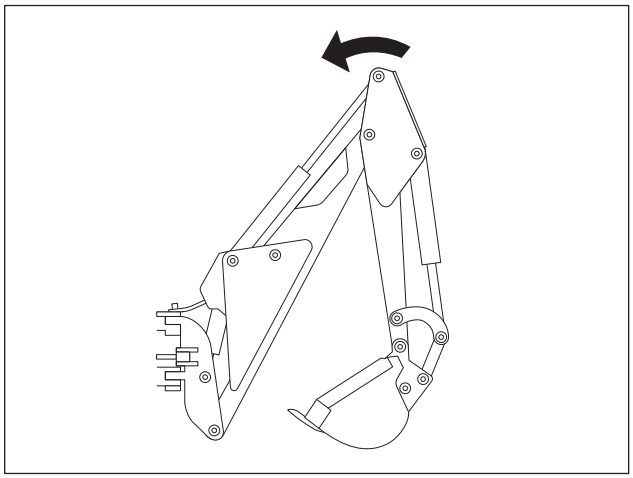

Backhoe_Stow_Boom.eps

2. Curl bucket closed and move dipper fully toward boom.
3. Lift boom to highest position and engage stow lock.

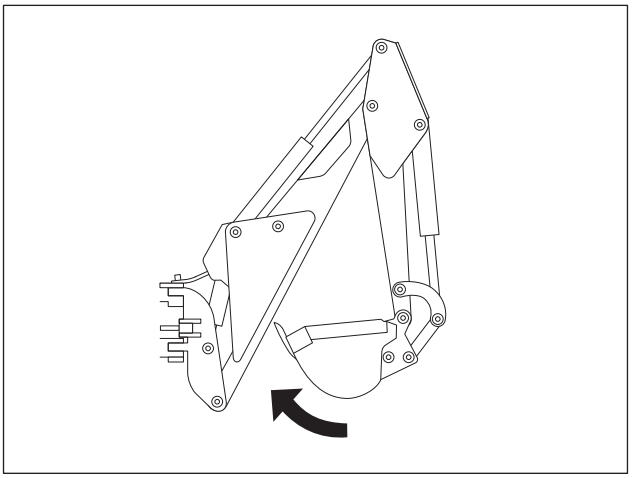

Backhoe_Stow_Bucket.eps

https://truckmanualshub.com/

4. Raise stabilizers into locked position.
5. Return remote throttle to low idle.

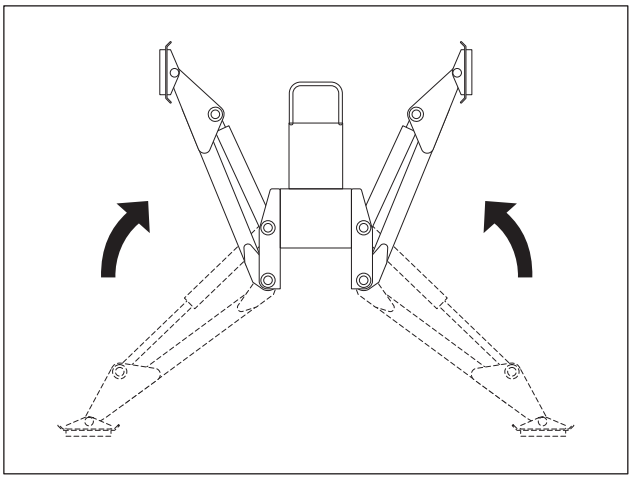

Backhoe_Stow_Stabilizers.eps

6. Rotate seat into stowed position and engage seat lock (shown).

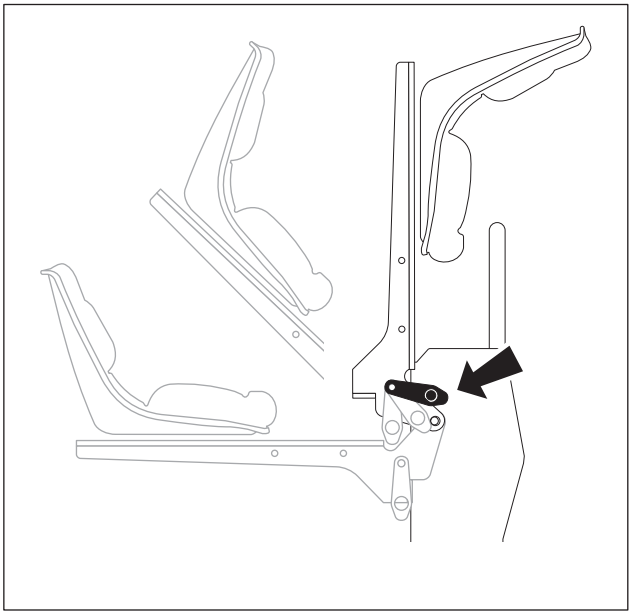

Backhoe_Seat.eps

https://truckmanualshub.com/

https://truckmanualshub.com/

Drill

Chapter Contents

Prepare Jobsite and Equipment 125

- Approach Trench (1) 125
- Target Trench (2) 125
- Drill Pipe and Equipment. 126

Drill 127

- Using Drill String Guide. 127

Add Rod 128

Backream. 128

Disassemble Joints 129

https://truckmanualshub.com/

Drilling Attachment

DANGER Turning shaft will kill you or crush arm or leg. Stay away.

To help avoid injury:

- Do not straddle trench or drill pipe while drilling. Keep everybody at least 10' (3 m) away from drill pipe during operation.
- Keep all persons away from material being installed. If swivel malfunctions, material being installed can rotate.
- Use a guide to align drill rod when starting a bore. Guides are available from your Ditch Witch dealership.

WARNING Jobsite hazards could cause death or serious injury. Use correct equipment and work methods. Use and maintain proper safety equipment.

To help avoid injury: Set up warning barriers and keep people away from equipment and jobsite while drilling.

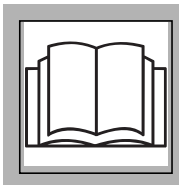

WARNING Incorrect procedures could result in death, injury, or property damage. Learn to use equipment correctly.

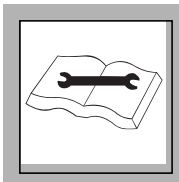

WARNING Improper control function could cause death or serious injury. If control does not work as described in instructions, stop machine and have it serviced.

To help avoid injury:

- Do not alter controls. Improper control function can cause serious injury.
- Do not tape or tie down switch or lever.
- Stop drilling and turn off power supply if releasing control does not stop turning shaft. Have unit repaired.

https://truckmanualshub.com/

Prepare Jobsite and Equipment

Approach Trench (1)

1. Mark path where you intend to drill.
2. Dig an approach trench (1) along the intended bore path.

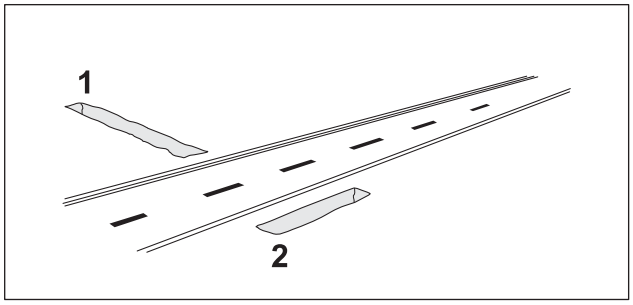

Drill_Attchmnt_Prep_Job.eps

IMPORTANT: The approach trench should be at least:

- deep enough for pipe to lay flat and enter soil at correct angle
- 20' (6 m) long
- 4" (100 mm) wide

Target Trench (2)

1. Select a completion point for the drilling project.
2. Dig a target trench (2) **across** the anticipated completion point.

IMPORTANT: The actual length of the target trench depends on soil conditions and length of pipe sections. Make it deep enough for drill bit to enter slightly above the trench floor.

https://truckmanualshub.com/

Drill Pipe and Equipment

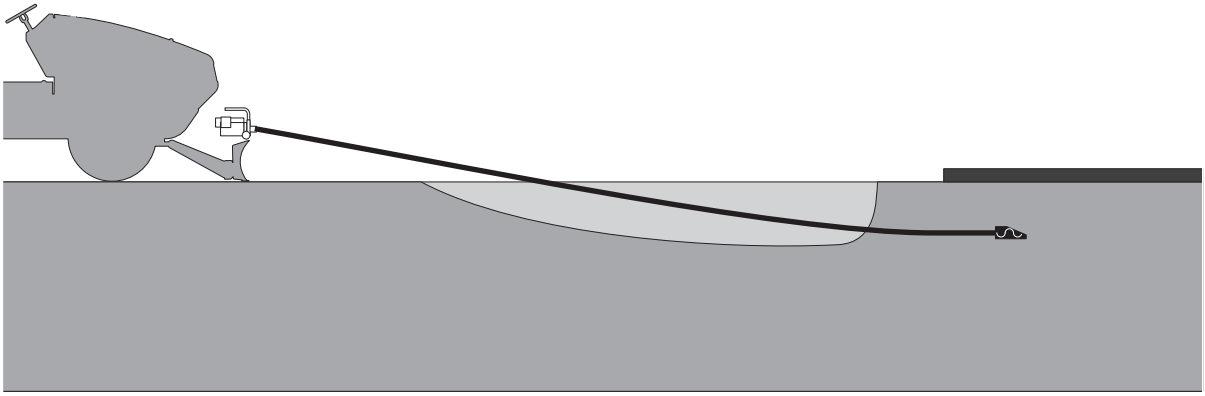

DrillRod_Trencher

1. Assemble at least 20' (6 m), but not more than 30' (9 m), of drill rod.

> ***NOTICE:*** More than 10-15' (3-4.5 m) of drill rod out of the trench increases the tendency of drill rod to bend.

2. Install drill bit to the cutting end of the drill string.
3. Put drill string in approach trench.
4. Move tractor to the approach trench and align the drilling attachment with the intended bore path.
5. Turn off engine.
6. Attach drill string to drilling attachment.

https://truckmanualshub.com/

Drill

IMPORTANT: For location and description of drilling controls see "Drill Controls" on page 64.

EMERGENCY SHUTDOWN: Release drilling control and turn ignition switch to STOP.

1. Start tractor's engine and begin clockwise (forward) rotation.
2. Slowly advance tractor while maintaining clockwise rotation.

NOTICE:

- Drilling too quickly causes bit to drift off course and may bend drill rod. After bore path is established, speed may be slightly increased.
- If drill rod starts to bend, stop forward movement of unit and back the unit slightly until rod straightens. Do not drill with bent rod.
- If drill rod hits an obstruction, rotate drill string counterclockwise to back up slightly.

Using Drill String Guide

DANGER Turning shaft will kill you or crush arm or leg. Stay away.

To help avoid injury: Keep everybody at least 10' (3 m) away from drill rod during operation. Do not straddle trench or drill rod while drilling.

Use drill string guide to align drill string as it enters the soil. When using drill string guide, follow these guidelines:

- Use only approved Ditch Witch drill string guide (p/n 179-737).
- Stand only on the **left** side of the approach trench.
- Keep drill string guide at least 3' (1 m) behind bit.
- Use drill string guide to control only the first 5' (1.5 m) of the bore path.
- After drilling 5' (1.5 m), stop unit and remove drill string guide.
- **Do not** use drill string guide during backreaming or any time the drill string is being pulled back.

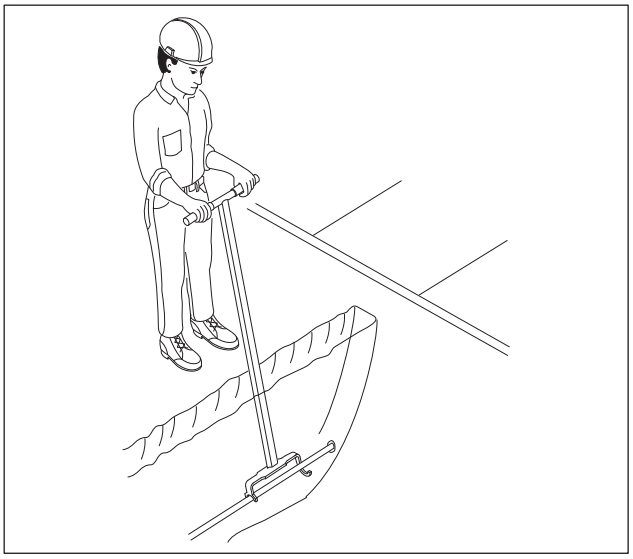

DrillStringGuide.eps

https://truckmanualshub.com/

Add Rod

1. Stop drilling attachment.
2. Back up tractor 6" (150 mm) to loosen drill rod in ground.
3. Disconnect drill rod from drilling attachment.
4. Move tractor away from bore.
5. Add one drill rod to continue bore.

Backream

After drill bit enters target trench, the bore hole may be enlarged by changing the drill bit to a backreamer and drawing it back through the initial bore.

1. Turn tractor ignition switch to STOP.
2. Replace drill bit with backreamer.
3. Start tractor engine and begin clockwise rotation.

IMPORTANT: Always rotate clockwise during backreaming. Rotate counterclockwise only to dislodge a dry bore bit or reamer that has siezed in the bore hole.

4. Slowly back up tractor while maintaining rotation.
5. When backreamer exits the bore hole, stop rotation immediately.

IMPORTANT:

- Do not try to increase hole size too much in one pass. Several passes using successively larger reamers will save wear on machine.
- During backreaming, keep drill string straight. Sharp bends in the drill rod at the motor coupling can cause rod failure.

https://truckmanualshub.com/

Disassemble Joints

1. Press tab through hole in female side of joint using special tool or screwdriver.
2. Pull rods apart.

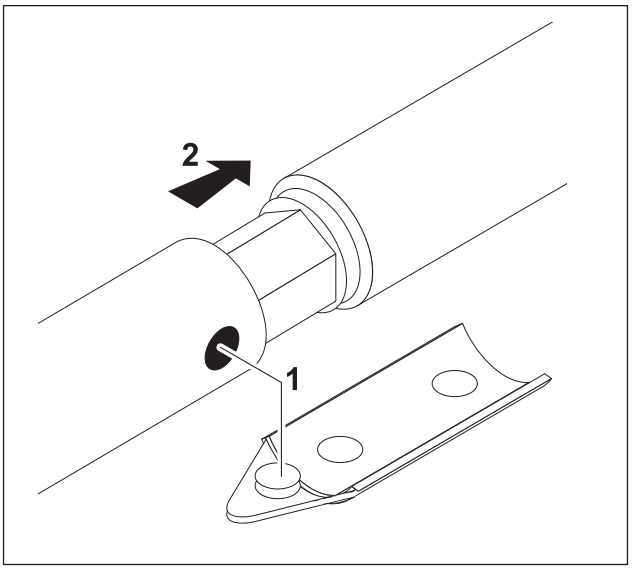

Drill_Attchmnt_RodJoints.eps

https://truckmanualshub.com/

https://truckmanualshub.com/

Systems and Equipment

Chapter Contents

Cruise Control 132

- Operate Cruise Control 132

Chain, Teeth, and Sprockets 134

- Chain and Tooth Maintenance 134
- Chain Types 134
- Chain Selection 135

Diagnostic Trouble Codes . . . . . .

Optional Equipment 136

- RT80Q Tractor 137
- H810/H813 Trencher 137
- H832 Plow 137
- H853 Combo 138
- RC80 Reel Carrier 138
- HD630 Saw 138
- Counterweighting 138

https://truckmanualshub.com/

Cruise Control

Cruise control is a standard feature that allows the unit to automatically adjust ground drive speed according to digging conditions. In easier soil conditions, the ground drive speed will increase. When the unit encounters difficult soil conditions, the ground drive speed will decrease. The unit does this by adjusting ground drive pump output to maintain a preset engine speed.

Operate Cruise Control

EMERGENCY SHUTDOWN - Turn ignition switch to STOP.

Plowing

1. First set the following controls:
   - ground drive controls to neutral
   - ground drive switch to low
   - ensure cruise control is off
   - lower plow to desired depth
   - adjust engine to maximum throttle
   - all other controls set as desired
2. Press cruise control switch once and ensure that cruise control switch indicator lights. Icon will also be shown on graphic display.
3. Set ground drive hand control to maximum speed suitable for digging conditions.
4. Use RPM dial control to select optimum engine speed for digging conditions.
5. When finished plowing, move ground drive control to neutral and press cruise control switch again to turn off cruise control.

https://truckmanualshub.com/

Trenching

1. First set the following controls:
   - ground drive controls to neutral
   - ground drive switch to low
   - ensure cruise control is off
   - all other controls set as desired
2. Move cruise control RPM control to arrow at center.
3. Press cruise control switch once and ensure that cruise control switch indicator lights. Icon will also be shown on graphic display.
4. Following procedures on "Setup" on page 96, begin trenching to desired depth.
5. When desired depth is reached, ensure throttle is fully open.
6. Slowly move ground drive control forward.
7. Slowly adjust cruise control RPM control to match digging conditions.

IMPORTANT:

- In harder digging conditions, higher cruise control rpm setting may improve digging performance.
- In easier digging conditions, lower cruise control rpm setting may increase ground drive speed.

8. When finished trenching, move ground drive control to neutral and press cruise control switch again to turn off cruise control.
9. Allow chain to dig itself free before stopping attachment.

https://truckmanualshub.com/

Chain, Teeth, and Sprockets

Chain and Tooth Maintenance

- Always replace sprockets at the same time you replace the digging chain. Sprockets and chain are designed to work together. Replacing one without the other will cause premature wear of the new part.
- Keep digging teeth sharp. Using dull, worn teeth will decrease production and increase shock load to other trencher components. It can also cause chain stretch, which leads to premature chain wear and failure.
- Maintain the proper amount of tension on the digging chain. Overtightening will cause chain stretch and loss of machine performance. For correct tightening procedure, see "Check Digging Chain Tension" on page 155.
- Use the tooth pattern most appropriate for your digging conditions. If you move to a different soil type, contact your Ditch Witch dealer for information about the most effective chain type and tooth pattern.

Chain Types

Chain type	Features
4-pitch	standard chain
2-pitch	more teeth for smoother cutting
alternating side bar	prevents spoil compaction on chain
bolt-on adapters	allow easy configuration changes
Shark Chain II	versatile, virtually maintenance-free
combination	provides pick and shovel effect

https://truckmanualshub.com/

Chain Selection

These charts are meant as a guideline only. No one chain type works well in all conditions. See your Ditch Witch dealer for soil conditions and chain recommendations for your area. Ask for the latest Chain, Teeth, and Sprockets Parts Catalog.

- 1 = best
- 2 = better
- 3 = good
- 4 = not recommended

Chain	Sandy Soil	Soft Soil	Medium Soil	Hard Soil	Rocky Soil	Sticky Soil
4-pitch cup tooth	3	1	2	3	4	1
2-pitch cup tooth	2	3	1	1	3	4
bolt-on adaptor, 2-pitch	4	4	3	2	1	4
bolt-on adaptor/cup tooth combo	4	3	2	1	2	4
Shark Chain II	4	3	2	1	1	4
alternating side bar	4	4	4	4	4	1

Soil	Description
sandy soil	sugar sand, blow sand, or other soils where sand is the predominant component
soft soil	sandy loam
medium soil	loams, loamy clays
hard soil	packed clays, gumbo, all compacted soils
rocky soil	chunk rock, glacial till, cobble, rip rap, gravel
sticky soil	gumbo, sticky clays

https://truckmanualshub.com/

Diagnostic Trouble Codes

Diagnostic code	Definition
SPN 521999, FMI 31	invalid parameters error
SPN 521998, FMI 31	invalid option parameter settings
SPN 521997, FMI 31	controller internal system error
SPN 521996, FMI 31	internal hardware error
SPN 521995, FMI 31	hardware protection
SPN 521240, FMI 3, 4	6.3 volt power supply
SPN 521239, FMI 3, 4	external 5 volt power supply
SPN 521241, FMI 0,1, 2 ,3, 4	controller internal temperature
SPN 521234, FMI 3, 4	ground drive hand control
SPN 521235, FMI 3, 4	ground drive foot control
	ground drive swash plate angle
SPN 521236, FMI 3, 4	sensor
	attachment swash plate angle
SPN 521237, FMI 3, 4	sensor
SPN 521231, FMI 3, 4	attachment hand control
SPN 521233, FMI 3, 4	rpm pot
SPN 521248, FMI 5, 6	differential lock solenoid
SPN 521249, FMI 5, 6	ground drive motor (gear) solenoid
SPN 521369, FMI 11	start relay circuit
SPN 521361, FMI 11	backup alarm circuit
SPN 521371, FMI 5, 6	ground drive forward solenoid
SPN 521372, FMI 5, 6	ground drive reverse solenoid
SPN 521373, FMI 5, 6	attachment forward solenoid
SPN 521374, FMI 5, 6	attachment reverse solenoid
SPN 521366, FMI 11	seat indicator circuit
	ground drive neutral indicator
SPN 521364, FMI 11	circuit
SPN 521367, FMI 11	cruise indicator circuit
SPN 521368, FMI 11	attachment neutral indicator circuit

https://truckmanualshub.com/

Optional Equipment

See your Ditch Witch dealer for more information about the following optional equipment.

RT80Q Tractor

Equipment	Description
4 post ROPS	replaces standard 2 post ROPS
GPS	allows tracking of position
backup alarm	safety warning feature
flasher light kit	mounts to ROPS
work light kit	mounts to ROPS

H810/H813 Trencher

Equipment	Description
booms	several boom length options are available
hydraulic trench cleaner	removes spoils from the trench floor
mechanical trench cleaner	
long auger extensions	for conditions that require spoils to be moved farther from the trench

H832 Plow

Equipment	Description
blades	several blade options are available
tape dispenser	for marking tapes
reel carrier	designed to fit your Ditch Witch equipment and speed cable installation
reel winder	rotates reel carrier spool
cable guides	designed to fit your Ditch Witch equipment and speed cable installation

https://truckmanualshub.com/

H853 Combo

Equipment	Description
blades	several blade options are available
reel carrier	designed to fit your Ditch Witch equipment and speed cable installation
tape dispenser	for marking tapes
mechanical trench cleaner	removes spoils from the trench floor

RC80 Reel Carrier

Equipment	Description
reel winder	rotates reel carrier spool

HD630 Saw

Equipment	Description
See manufacturer's information.	

Counterweighting

Attachment	Counterweight required
H853 combo	front weights x 15 required or A820 backhoe attachment
H832 plow	front weights x 15 required or A820 backhoe attachment with optional rear weights x 12
RC80 reel carrier	not approved for use with H810 or HD630 optional rear weights x 12 with H832
H810/H813 trencher	front weights x 15 optional or A820 backhoe attachment
HD630 saw	front weights x 15 required

Counterweights are 110 lb (5.0 kg) each.

https://truckmanualshub.com/

Complete the Job

Chapter Contents

Restore Jobsite 140

- Backfilling 140

Rinse Equipment 140

Stow Tools 140

https://truckmanualshub.com/

Restore Jobsite

After product is installed, return spoils to the trench with optional backfill blade.

Backfilling

1. Position unit at end of trench, several feet from spoils. Aim tractor at outer edge of spoils.
2. Adjust backfill blade to fit land contour.
3. Move outer edge of spoils toward trench. Take two or more passes at spoils rather than moving all spoils at once.
4. Repeat on other side of trench, if necessary.
5. Engage float and make final pass over trench.

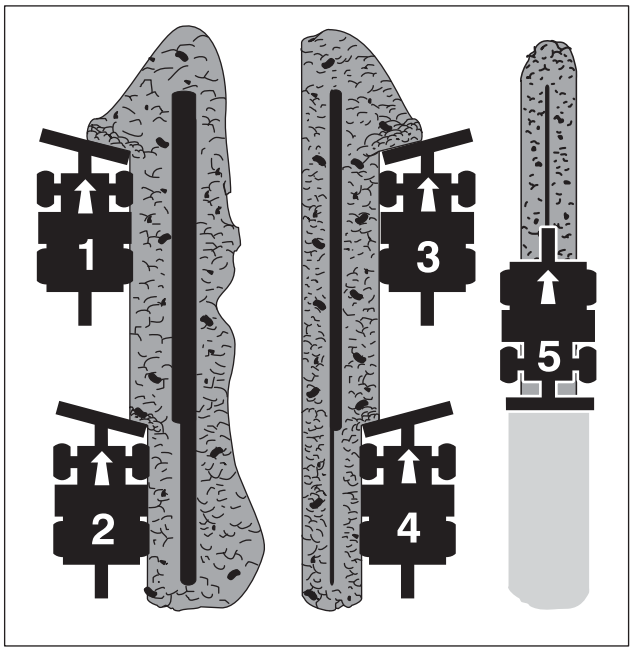

Backfilling.eps

Rinse Equipment

Spray water onto equipment to remove dirt and mud.

NOTICE: Do not spray water onto operator's console. Electrical components could be damaged. Wipe down instead.

Stow Tools

Make sure all tools and accessories are loaded and properly secured on trailer.

https://truckmanualshub.com/

Service

Chapter Contents

Service Precautions 142

Lubrication Overview 143

Recommended Lubricants/Service Key 143

- Approved Fuel. 145
- Approved Coolant 145
- Engine Oil Temperature Chart 146

10 Hour 147

50 Hour 160

100 Hour. 162

250 Hour 166

500 Hour 168

1000 Hour 173

2000 Hour. 175

5000 Hour. 176

As Needed 177

https://truckmanualshub.com/

Service Precautions

WARNING Incorrect procedures could result in death, injury, or property damage. Learn to use equipment correctly.

To help avoid injury:

- Perform all service with engine off unless otherwise instructed.
- Refer to engine manufacturer's manual for engine maintenance instructions.
- Lower unstowed attachments to ground before servicing equipment.

Welding

NOTICE: Welding can damage electronics.

- Disconnect battery at battery disconnect switch, if equipped, or disconnect battery cables before welding to prevent damage to battery. Do not turn off battery disconnect switch with engine running or alternator and other electronic devices may be damaged.
- Connect welder ground clamp close to welding point and make sure no electronic components are in the ground path.
- Always disconnect the harness connections to the controllers and other electronic components prior to welding on machine or attachments.

Cleaning

NOTICE: When cleaning equipment, do not spray electrical components with water.

Changing Attachments

The RT80Q is programmed to operate with the original attachment configuration. If you change attachments, contact your Ditch Witch dealer to make sure the electronic programming is updated. If you change attachments without updating the electronic programming, your attachment may not function correctly.

https://truckmanualshub.com/

Lubrication Overview

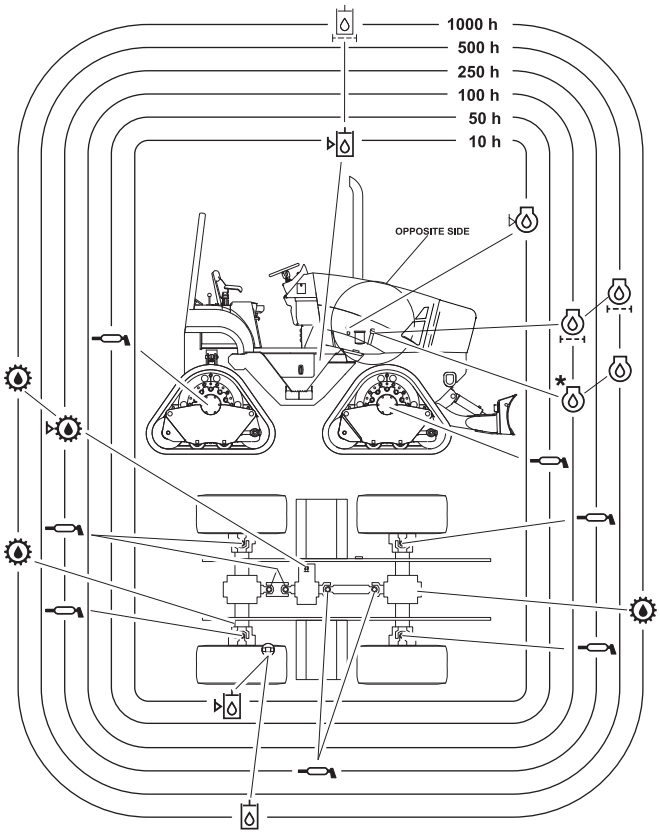

t33om053w.eps

https://truckmanualshub.com/

Recommended Lubricants/Service Key

Item	Description
DEO	John Deere Plus-50® or eqivalent multi-viscosity diesel engine oils meeting ACEA specification E4/E5. Other multi-viscosity diesel engine oils meeting API classifications CI++0, CH-4, or ACEA E3 may be used, **but only with 250 hour change intervals**.
MPG	Multipurpose grease meeting ASTM D217 and NLGI 5
EPG	Extreme pressure grease meeting ASTM D217 and NLGI 5
MPL	Multipurpose gear oil meeting API service classification GL-5 (SAE 80W90)
THF	Tractor hydraulic fluid, similar to Phillips 66 HG, Mobilfluid 423, Chevron Tractor Hydraulic Fluid, Texaco TDH Oil, or equivalent
DEAC	Diesel engine Antifreeze/Coolant meeting ASTM D4985 with SCAs meeting John Deere JDM H24A2
	Check level of fluid or lubricant
	Check condition
	Filter
	Change, replace.
	Adjust, service, or test

Proper lubrication and maintenance protects Ditch Witch equipment from damage and failure. Service intervals listed are for minimum requirements. In extreme conditions, service machine more frequently. Use only recommended lubricants. Fill to capacities listed in "Fluid Capacities" under "RT80Q Tractor" on page 187.

For more information on engine lubrication and maintenance, see your John Deere® engine manual.

NOTICE:

- Use only genuine Ditch Witch parts, filters, approved lubricants, TJC, and approved coolants to maintain warranty.
- Use the "Service Record" on page 209 to record all required service to your machine.

https://truckmanualshub.com/

Approved Fuel

The engine is this unit is designed to run on diesel fuel. Use only high-quality fuel meeting ASTM D975 No. 2D, EN590, or equivalent. At temperatures below 32°F (0°C), winter fuel blends are acceptable. See engine operation manual for more information.

IMPORTANT: Fuel sulfur content should be less than 5000 ppm (0.5%). Worldwide, fuel sulfur regulations vary widely. Fuel used should always comply with local regulations. If using fuel with sulfur content above 5000 ppm (0.05%, low sulfur diesel in the U.S.), reduce oil change interval by half.

Biodiesel blends up to 5% (B5) are approved for use in this unit. The fuel used must meet the specifications for diesel fuel shown above. Extra attention is needed when using biodiesel, especially when operating in cold weather or storing fuel. Contact your Ditch Witch dealer or the engine manufacturer for more information.

Approved Coolant

This unit was filled with John Deere Cool-Gard coolant before shipment from factory. Add only John Deere Cool-Gard (p/n 255-006) or any fully-formulated, ethylene glycol based, low-silicate, heavy-duty diesel engine coolant meeting ASTM specification D5345 (prediluted) or D4985 (concentrate) and containing supplemental coolant additives (SCAs) meeting John Deere specification JDM H24A2.

NOTICE: Do not use water or high-silicate automotive-type coolant. This will lead to engine damage or premature engine failure.

NOTICE: Do not mix heavy-duty diesel engine coolant and automotive-type coolant. This will lead coolant breakdown and engine damage.

https://truckmanualshub.com/

Engine Oil Temperature Chart

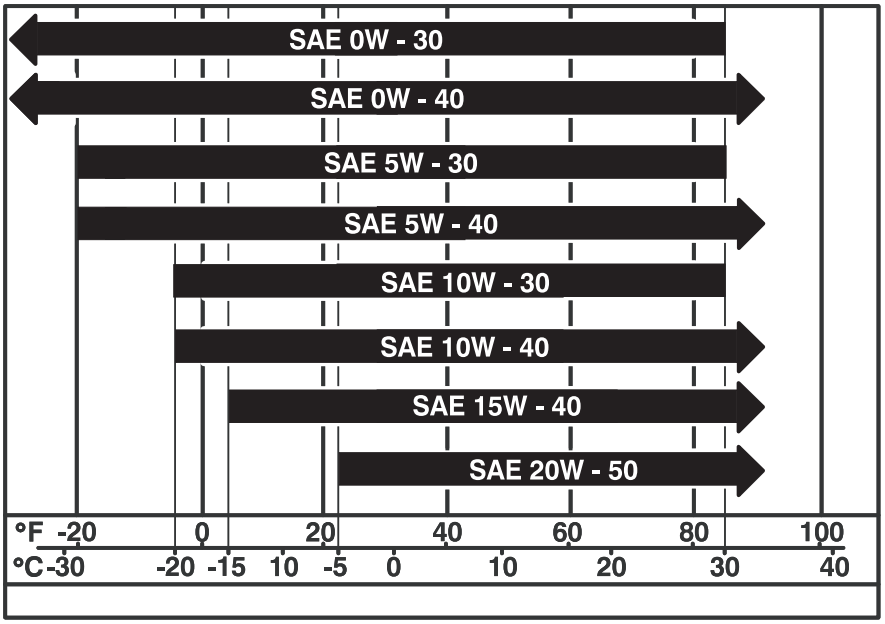

t11om076c.eps

Temperature range anticipated before next oil change

https://truckmanualshub.com/

10 Hour

Location	Task	Notes
TRACTOR	Check engine oil level	DEO
	Check air filter	
	Check coolant level	DEAC
	Check water separator and fuel filter	
	Check hydraulic fluid	THF
	Check hydraulic hoses	
	Check radiator/oil cooler	
TRENCHER	Lube trencher tail roller	EPG
	Lube trencher pivot and headshaft	EPG
	Lube trencher auger bearings	EPG
	Lube trencher auger shaft	EPG
	Check trencher auger bolts	
	Check digging chain teeth and bits	
	Check digging chain tension	
	Check boom mounting bolts	250 ft•lb (339 N•m)
	Check attachment mounting bolts	200 ft•lb (271 N•m)
	Check restraint bar position	400 ft•lb (542 N•m)
	Check trench cleaner position	option. 350 ft•lb (475 N•m)
PLOW	Lube plow pivots	EPG
	Check plow vibrator oil	MPL
	Check plow arm pins and bushings	
	Check plow connector pivots	
	Check attachment mounting bolts	200 ft•lb (271 N•m)

https://truckmanualshub.com/

Tractor

Check Engine Oil Level

Check engine oil at dipstick (1) before operation and every 10 hours thereafter. Add DEO at fill (2) as necessary to keep oil level at highest line on dipstick.

IMPORTANT: If adding oil before the initial oil change at 250 hours, add only SAE 10W30. After 250 hours, see page 144 for DEO specifications.

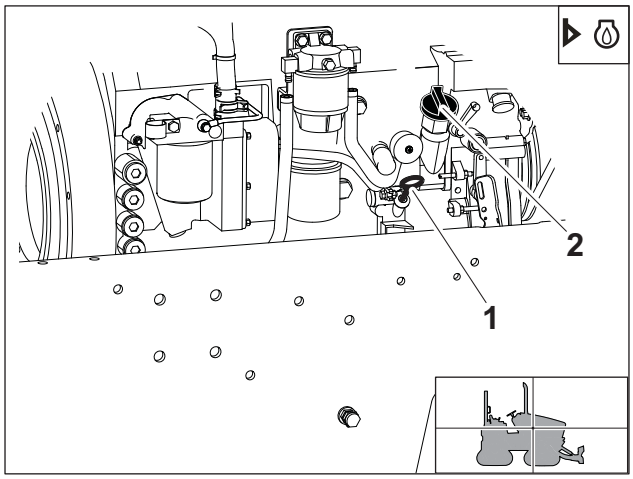

t33om029w.eps

Check Hydraulic Fluid

With tractor level, check fluid at sight glass (1) every 10 hours. Add THF at fill (2) as necessary. Fluid level should be halfway up sightglass.

IMPORTANT:

- Tank may be under pressure. Fill cap includes a 3 psi check valve. Open cap slowly.
- Do not open unless adding hydraulic fluid.

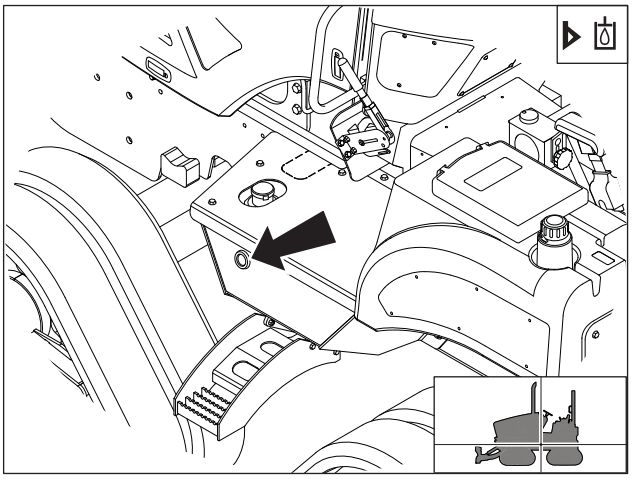

t33om023w.eps

https://truckmanualshub.com/

Check Air Filter

Check air filter restriction indicator (arrow) and clean dust trap every 10 hours. Change filters when restriction indicator reaches red zone. Do not attempt to clean filters.

NOTICE: Only open the air filter canister when air restriction is indicated.

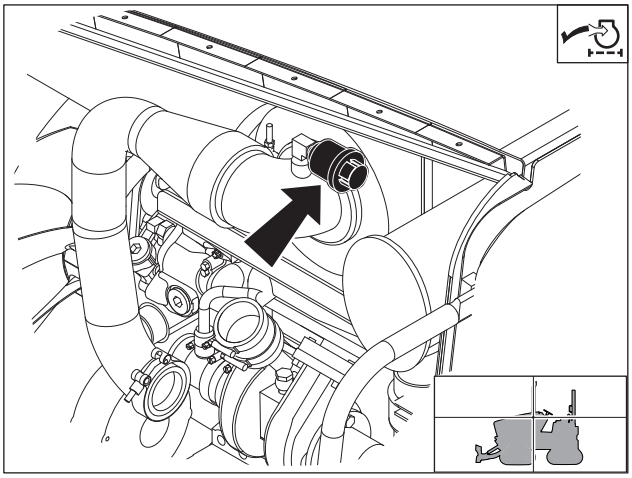

t33om030w.eps

To change:

1. Remove filter cover and remove primary (1) and secondary (2) elements.
2. Wipe inside of housing and wash cover.
3. Install new elements.
4. Replace cover.
5. Reset restriction indicator.

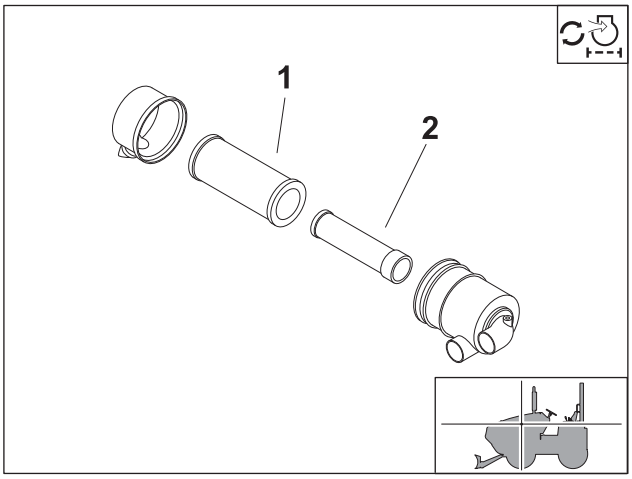

t26om019h.eps

Check Coolant Level

With engine cool, check coolant level in auxiliary tank sight glass every 10 hours. Maintain level so that coolant is visible in sight glass (arrow) and no higher than bottom of fill neck. If low, add approved coolant. Do not overfill.

IMPORTANT: See page 145 for information on approved coolants.

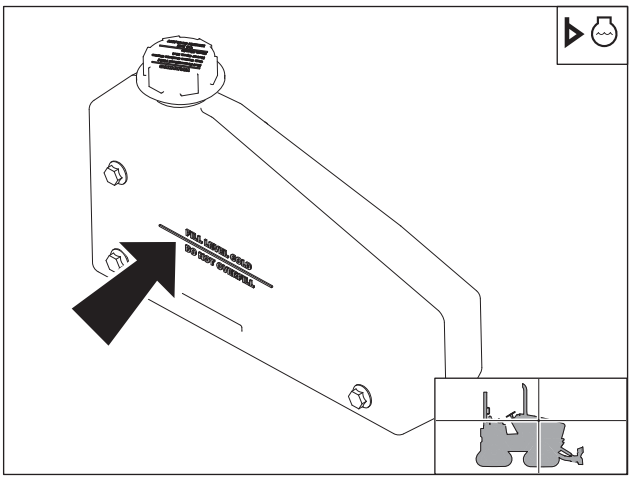

t33om032w.eps

https://truckmanualshub.com/

Check Fuel Filter Water Separator

Check water separator every 10 hours. Drain at plug (arrow) as needed until water is removed and fuel runs from drain.

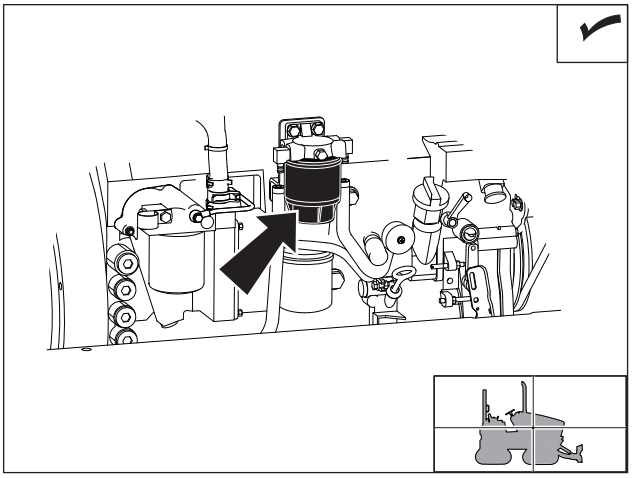

t33om031w.eps

https://truckmanualshub.com/

Check Hydraulic Hoses

WARNING Fluid or air pressure could pierce skin and cause injury or death. Stay away.

To help avoid injury:

- Before disconnecting a hydraulic line, turn engine off and operate all controls to relieve pressure. Lower, block, or support any raised component with a hoist. Cover connection with heavy cloth and loosen connector nut slightly to relieve residual pressure. Catch all fluid in a container.
- Before using system, check that all connections are tight and all lines are undamaged.
- Use a piece of cardboard or wood, rather than hands, to search for leaks.
- Wear protective clothing, including gloves and eye protection.

If you are injured, seek immediate medical attention from a doctor familiar with this type of injury.

Check all hydraulic hoses every 10 hours.

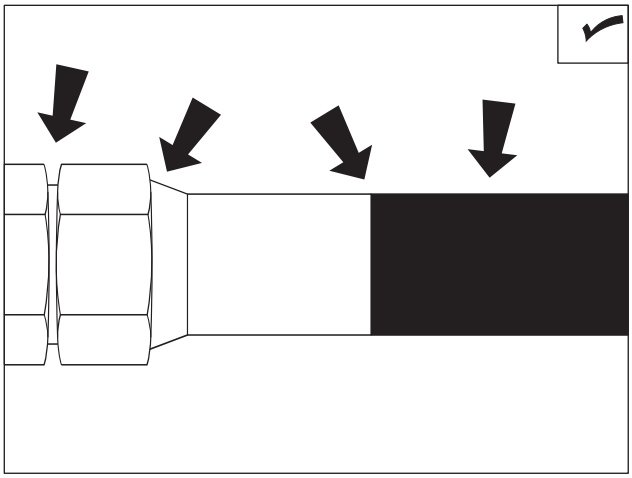

CheckHoses.eps

https://truckmanualshub.com/

Check Radiator/Oil Cooler

Check radiator/oil cooler for dirt, grass, and other debris every 10 hours. Clean with compressed air or spray wash as needed. Be careful not to damage fins with high pressure air or water. Check more often if operating in dusty or grassy conditions.

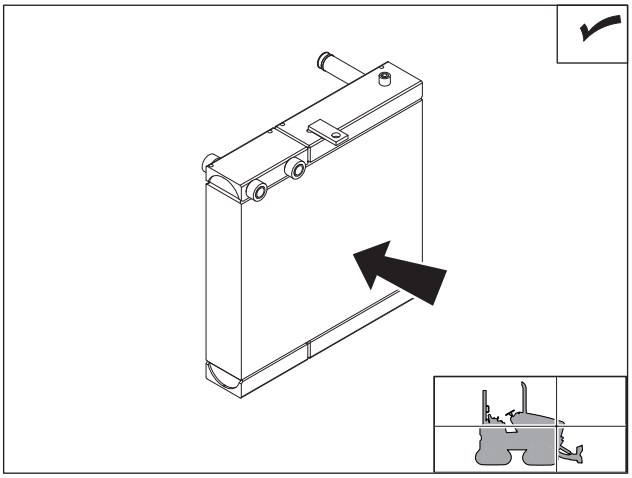

t33om033w.eps

https://truckmanualshub.com/

Trencher

Lube Trencher Tail Roller

Wipe zerks clean and lube every 10 hours with EPG. Lube roller zerks on both sides of boom.

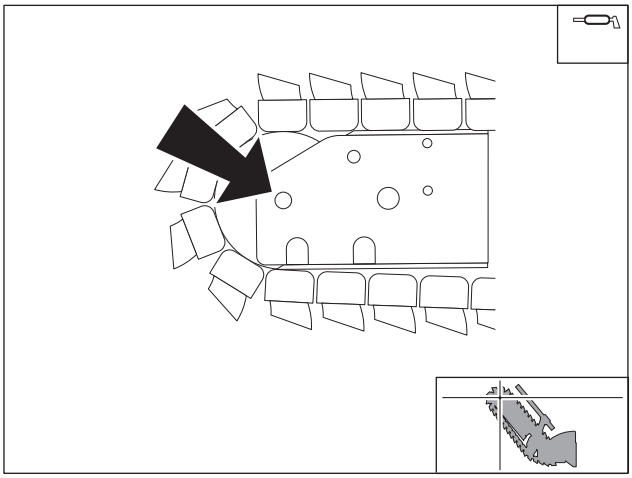

t30om049h.eps

Lube Trencher Pivot

Wipe five zerks located on right of trencher pivot clean and lube every 10 hours with EPG.

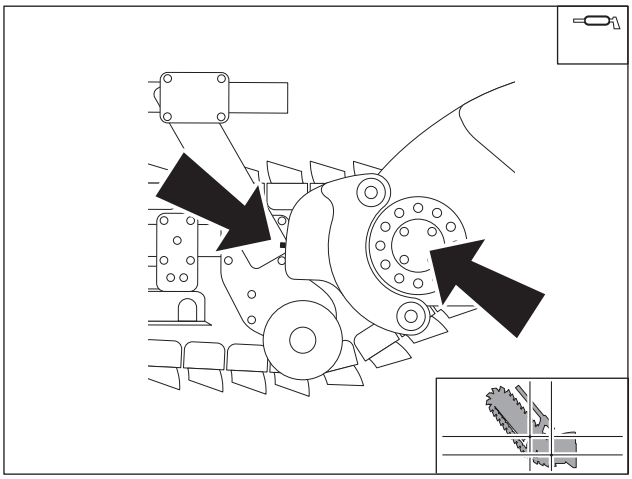

t30om050h.eps

Wipe four zerks located on left of trencher pivot clean and lube every 10 hours with EPG.

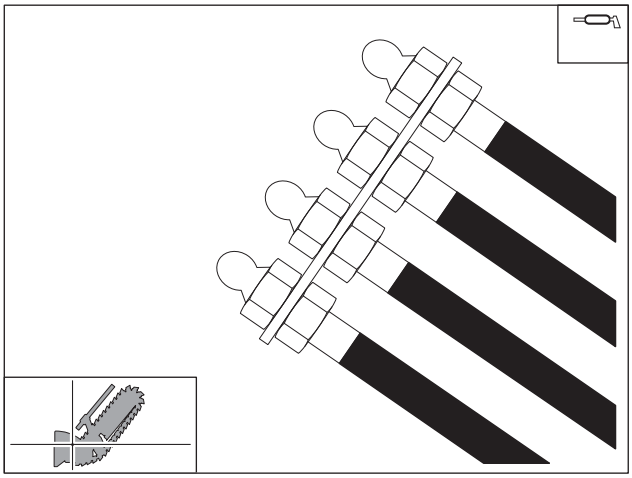

t30om051h.eps

https://truckmanualshub.com/

Lube Trencher Auger Bearings

Lube two auger bearing zerks (one on each side) every 10 hours with EPG.

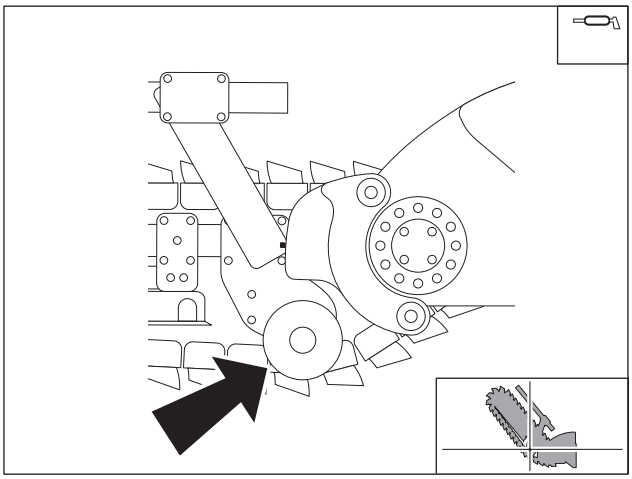

t30om052h.eps

Lube Trencher Auger Shaft

Lube four auger shaft zerks (two on each side) every 10 hours with EPG.

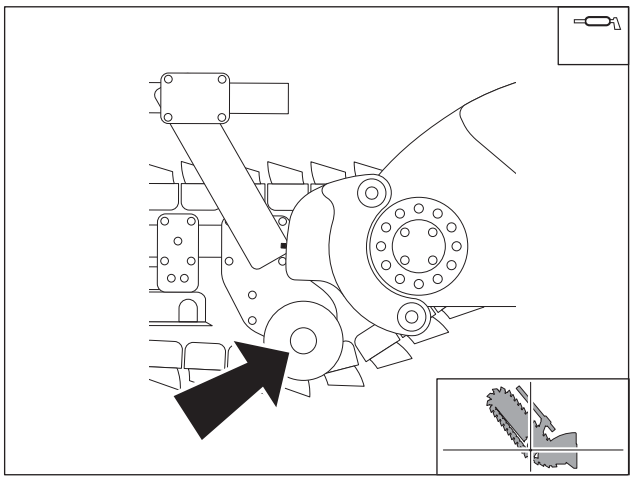

t30om053h.eps

Check Trencher Auger Bolts

Check trencher auger bolts every 10 hours. For optimal spoils delivery, adjust augers to match terrain and digging depth.

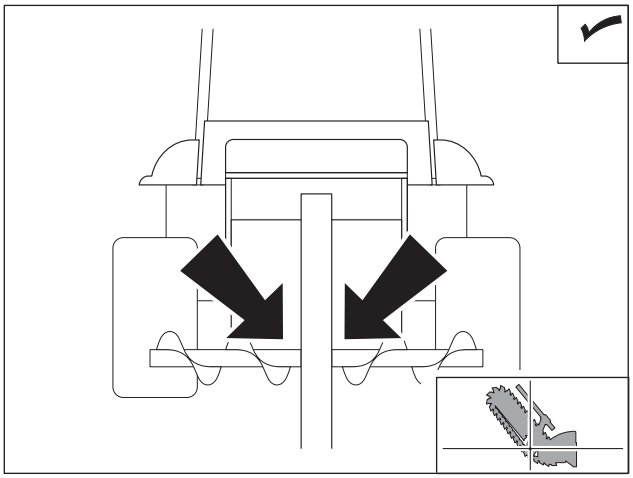

t30om054h.eps

https://truckmanualshub.com/

Check Digging Chain Teeth and Bits

Check teeth (1) for wear every 10 hours. Replace worn teeth, using Ditch Witch replacement parts and maintaining original tooth pattern.

For more efficient digging, contact your Ditch Witch dealer for information about the tooth pattern best suited to your jobsite.

If using rock chain bits, check that bits rotate freely. Clean chain and check bits after each use. Replace bit when carbide cap or insert is worn or adapter can be damaged.

Check chain every 10 hours. Replace worn or broken chains. If sidebars (2) are bent or loose on chain pins (3), chain spacers should be used to join sidebars.

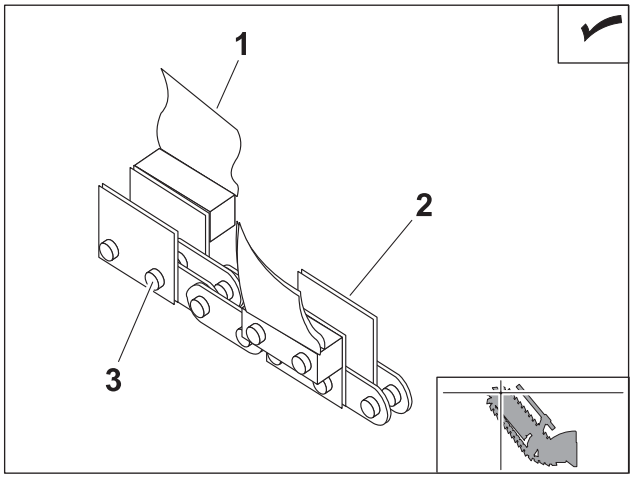

t30om055h.eps

Check Digging Chain Tension

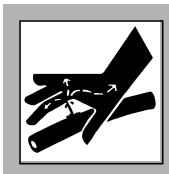

WARNING Fluid pressure could pierce skin and cause injury or death. Stay away.

To help avoid injury:

- Service digging boom grease cylinder only while standing on opposite side of boom.
- Wear gloves and safety glasses, and cover fitting with cloth when relieving pressure in cylinder.

Check digging chain tension every 10 hours. With boom horizontal, measure distance from bottom of boom to chain. When properly adjusted, distance should be 4.5 - 5.5" (114 - 140 mm).

To tighten chain, loosen six bolts on trencher boom and pump EPG into cylinder. To relieve chain tension, loosen plug on grease cylinder.

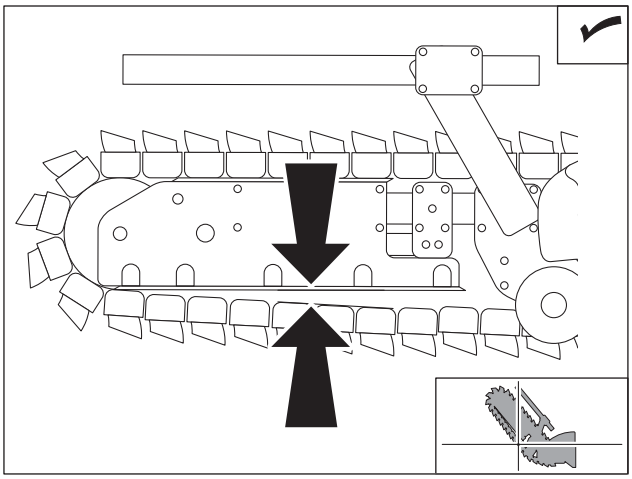
t30om059h.eps

https://truckmanualshub.com/

Check Boom Mounting Bolts

Check 14 bolts (7 on each side) every 10 hours and ightened as necessary to keep bolts and other fasteners tight. Check for looseness or wear. Check that bolts are tightened to 250 ft•lb (28 N•m).

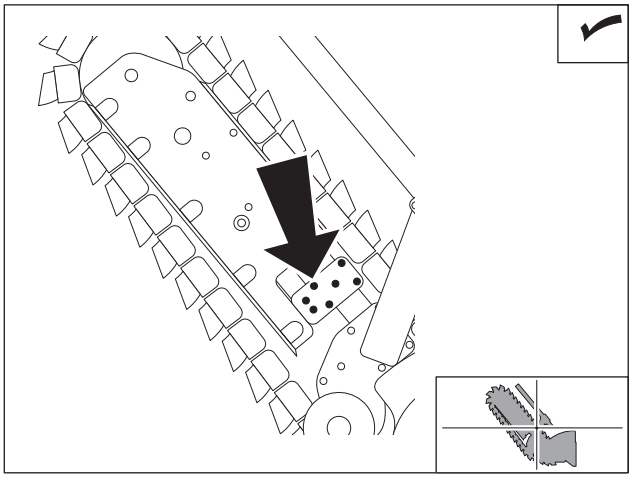

t30om056h.eps

Check Attachment Mounting Bolts

Check bolts every 10 hours and torque as necessary to keep bolts and other fasteners tight. Check for looseness or wear. Apply Loctite 271® adhesive. Check that bolts are tightened to 200 ft•lb (271 N•m).

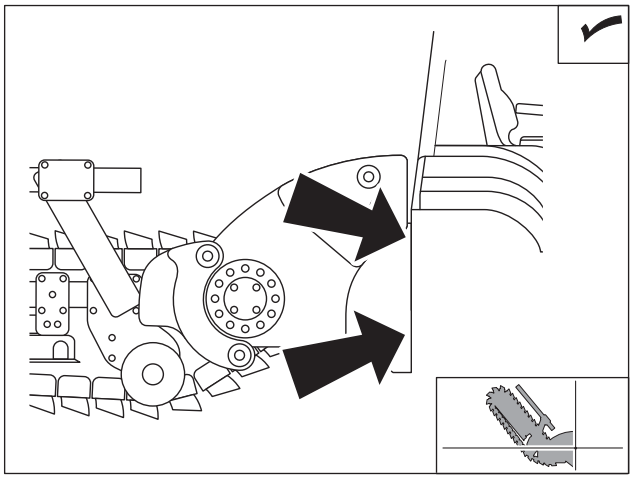

t30om057h.eps

Check Restraint Bar Position

Check restraint bar position every 10 hours, or anytime the digging chain is adjusted or replaced. The restraint bar is properly positioned when the end of bar extends between the center of the tail roller/sprocket and the end of the digging chain. Check for looseness or wear.

Tighten bolts as necessary to keep them tight. Bolts mounting arm to boom should be tightened to 400 ft•lb (542 N•m). Apply Loctite 271® adhesive.

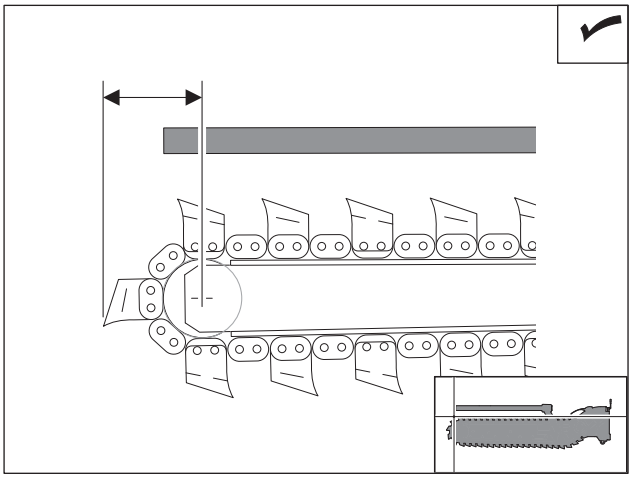

t33om89w.eps

https://truckmanualshub.com/

Check Trench Cleaner Position

Check trench cleaner position (if equipped) every 10 hours, or anytime the digging chain is adjusted or replaced. The trench cleaner is properly positioned when there is 3-4 in (76-102 mm) between the digging teeth and the inside of the trench cleaner shoe (A).

Check that bolts holding personnel restraint bar/ trench cleaner to arm are tightened to 350 ft•lb (475 N•m). Apply Loctite 271® adhesive.

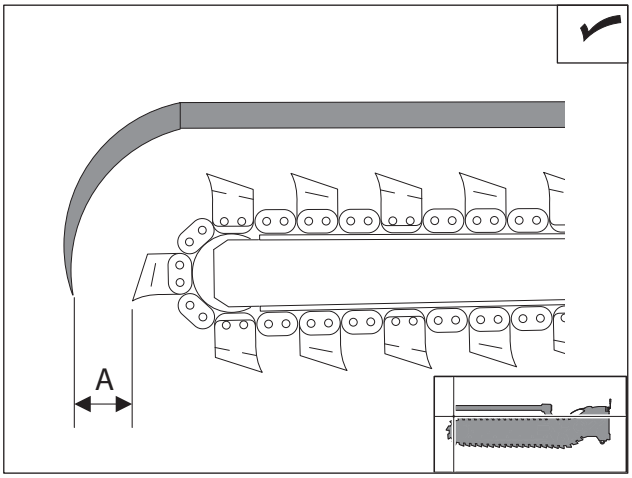

t33om90w.eps

https://truckmanualshub.com/

Plow

Lube Plow Pivots

Lube pivots every 10 hours with EPG.

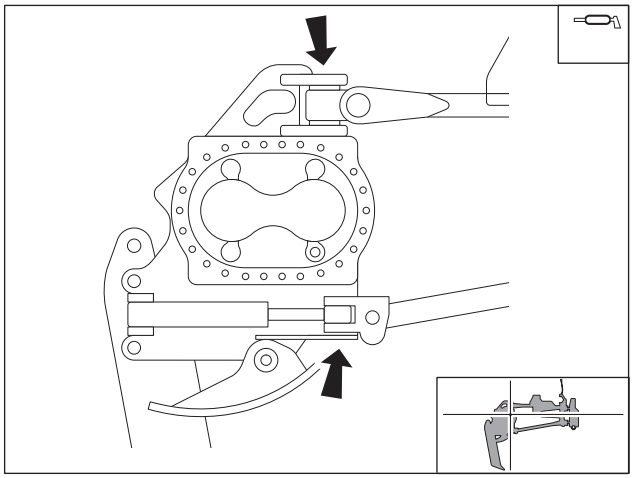

t30om064h.eps

Check Plow Vibrator Oil

Check plow vibrator oil on each side of vibrator every 10 hours. With vibrator horizontal, oil should be halfway up sight glass (2). Add MPL as needed at fill (1).

IMPORTANT: Do not add oil to plow vibrator when hot. Let plow vibrator cool before removing fill plug.

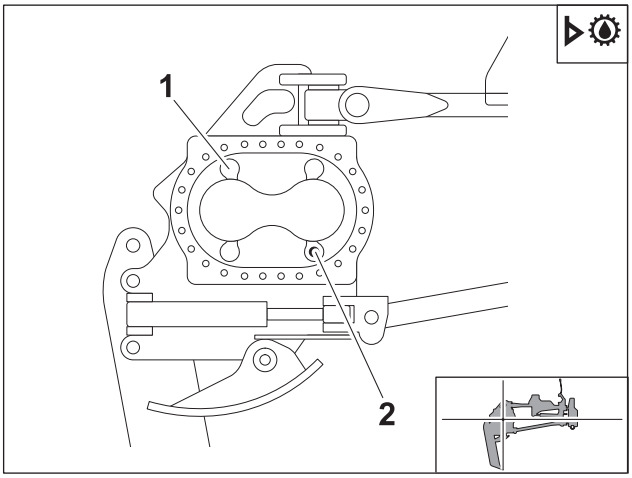

t30om065h.eps

https://truckmanualshub.com/

Check Plow Arm Pins and Bushings

Check plow arm pins and bushings every 10 hours. Tighten as needed.

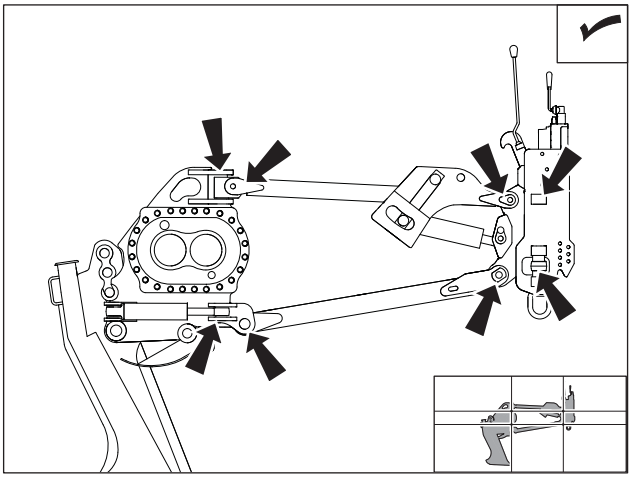

t33om024w.eps

Check Plow Connector Pivots

Visually check pivots every 10 hours for wear or damage.

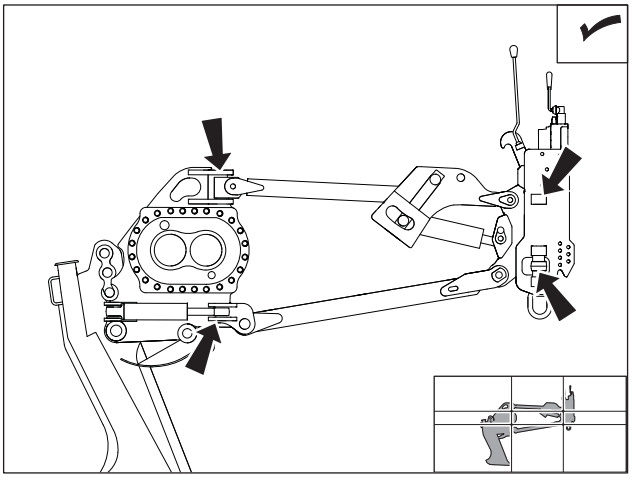

t33om025w.eps

Check Attachment Mounting Bolts

Check mounting bolts every 10 hours and tighten as necessary to keep bolts and other fasteners tight. Check for looseness or wear. Apply Loctite 271® adhesive. Check that bolts are tightened to 200 ft•lb (271 N•m).

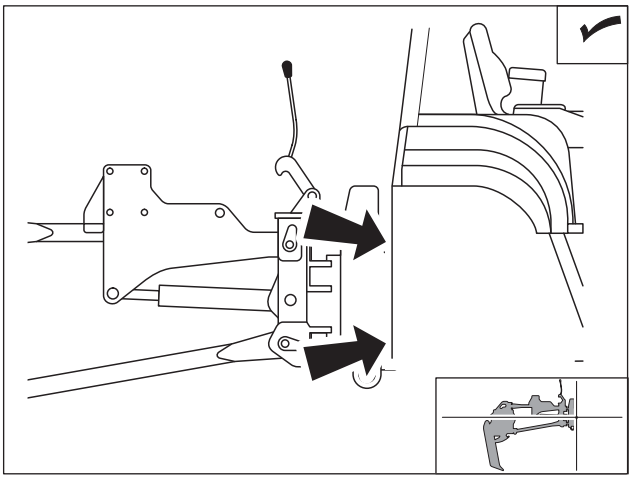

t30om069h.eps

https://truckmanualshub.com/

50 Hour

Location	Task	Notes
TRACTOR	Check drive belts	
	Lube track pivot bearings	MPG
TRENCHER	Check trencher gearbox oil	MPL
PLOW	Change plow vibrator oil (initial)	MPL
	Check plow lift cylinder pins and bumpers	

Tractor

Check Drive Belts

Check belts every 50 hours for damage or wear. Replace worn belt. Adjust tension as needed. See engine manual for procedure and tension measurement.

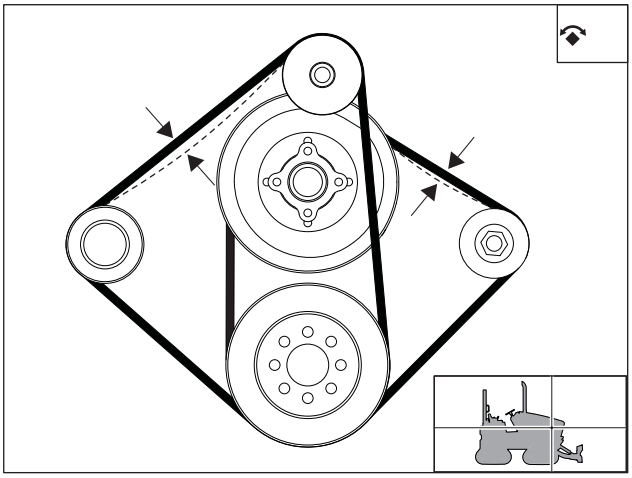

t33om017w.eps

Lube Track Pivot Bearings

Lube track pivot bearings at zerk (shown) every 50 hours. Use MPG.

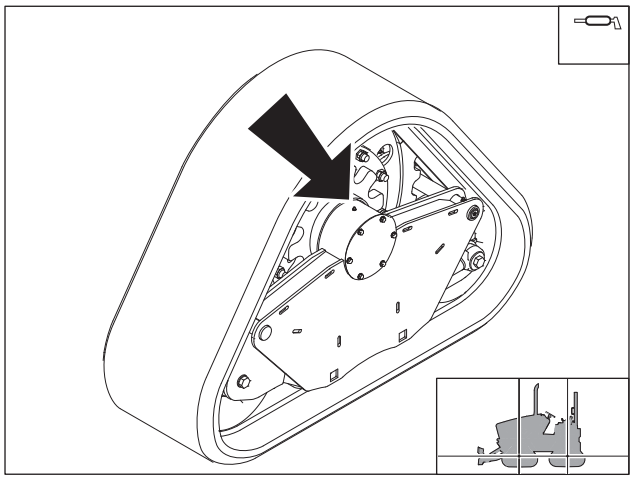

t33om034w.eps

https://truckmanualshub.com/

Trencher

Check Trencher Gearbox Oil

Check oil at sight tube every 50 hours. Keep oil level at horizontal line (shown) on housing. If necessary, add MPL at fill plug.

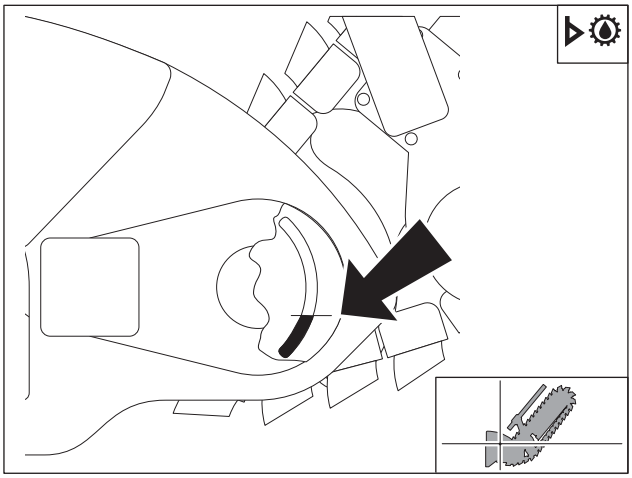

t30om060h.eps

Plow

Change Plow Vibrator Oil

Change plow vibrator oil after first 50 hours of operation. Drain oil at drain plug (2). Replace plug and move plow vibrator to horizontal position. Add MPL at fill (1) until oil is halfway up sight glass (2). Refill capacity is 4 qt (3.8 L).

IMPORTANT: Do not drain oil from plow vibrator when hot. Let plow vibrator cool before removing drain plug.

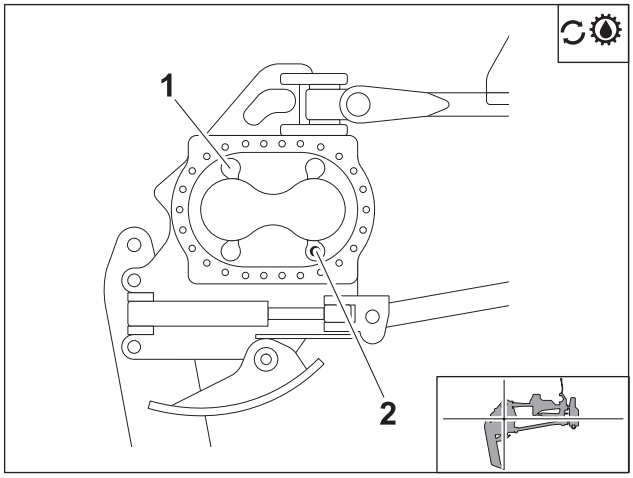

t30om066h.eps

Check Plow Lift Cylinder Pins and Bumpers

Check plow lift cylinder pins and bumpers every 50 hours.

Replace as needed.

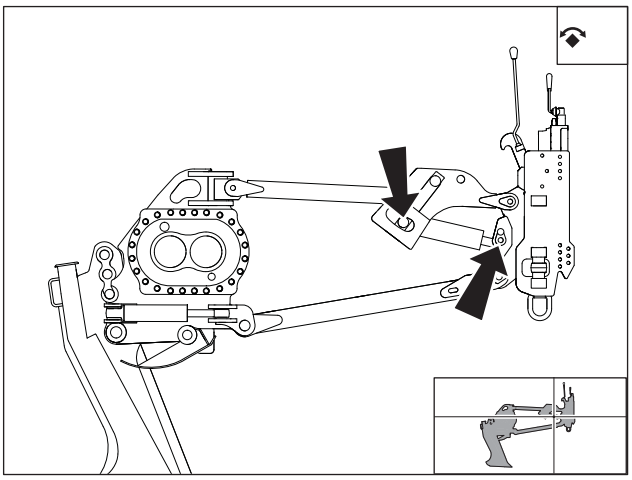

t33om079w.eps

https://truckmanualshub.com/

100 HOUR

Location	Task	Notes
TRACTOR	Change engine oil and filter	DEO, initial
	Check track tension	
	Check track hub bolts	295 ft•lb (400 N•m).
	Inspect track rollers and sprocket	
PLOW	Check plow shear mounts	
	Test plow connector pivots	

Tractor

Change Engine Oil and Filter (Initial)

Change engine oil and filter after first 100 hours of operation. Oil capacity is 8 qts (7.6 L).

To change:

1. While oil is warm, remove drain plug (1). Drain oil and replace plug.
2. Remove filter (2) and replace with new filter each time oil is changed. Add DEO at fill (3).

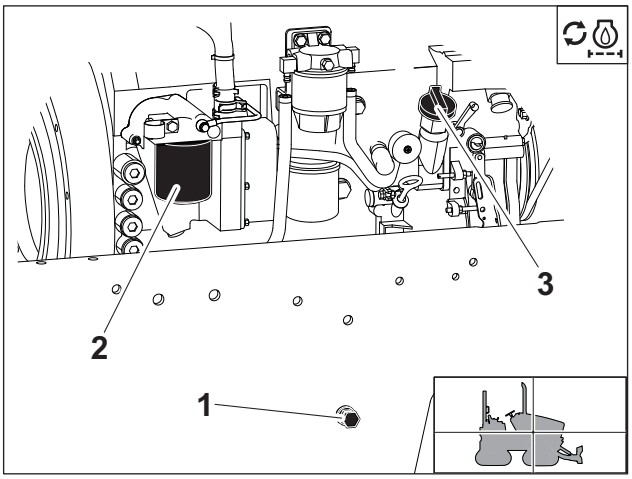

t33om048w.eps

NOTICE:

- Regular oil change interval is 500 hours only if using John Deere Plus-50® or ACEA E4/E5.
- Oil change interval is 250 hours when using alternative oils meeting API service classifications CI-4, CH-4, or ACEA E3.
- See "Recommended Lubricants" for more information about DEO specifications.

https://truckmanualshub.com/

Check Track Tension

Check track tension every 100 hours.

To check:

1. Elevate unit on jackstands or lifting devices capable of holding the weight of the tractor.
2. Measure tension using one of the methods below. Track is tensioned correctly when:
   - there is a 1/4" gap between the tracks and the middle rollers,
   - or when grease pressure is 1400-1600 psi.

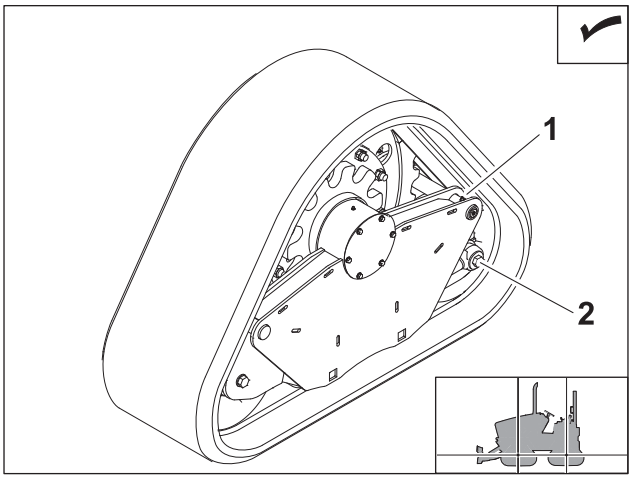

t33om035w.eps

To adjust:

1. Loosen bolts on each cylinder end (2).
2. Pump MPG into zerk (1) until track is correctly tensioned.
3. Tighten bolts on cylinder end (2).

Check Track Hub Bolts

Check track hub bolts. Tighten to 295 ft•lb (400 N•m).

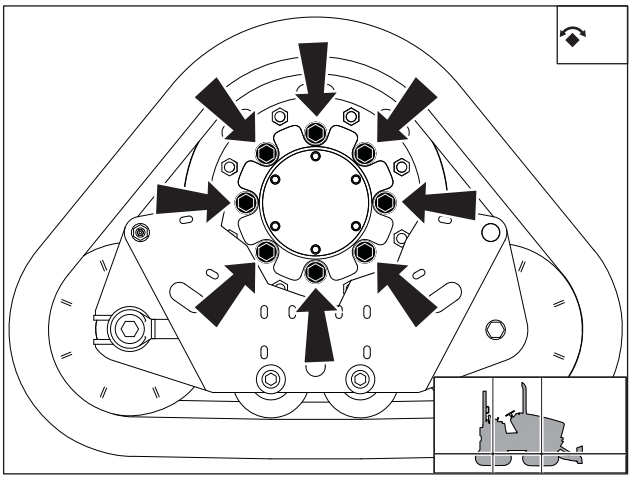
t33om082w.eps

https://truckmanualshub.com/

Inspect Track Rollers and Sprocket

Inspect track rollers and sprocket for wear every 100 hours. Replace as needed.

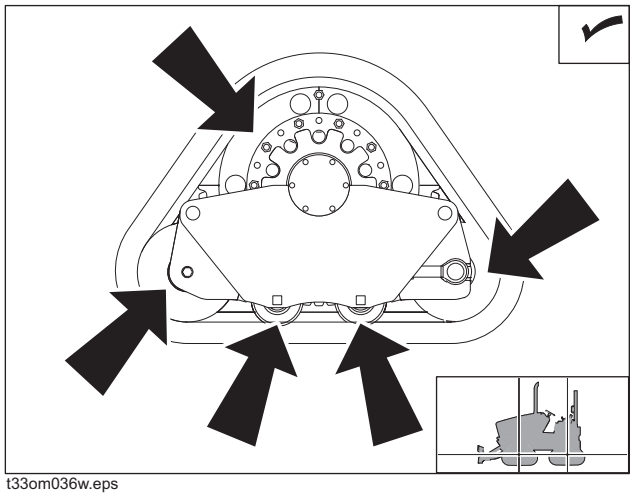

t33om036w.eps

Plow

Check Shear Mounts

Check shear mounts for wear every 100 hours. Replace as needed.

IMPORTANT: When replacing shear mounts, it is important to compress the shear mounts with the washers to prevent the shear mount from tearing.

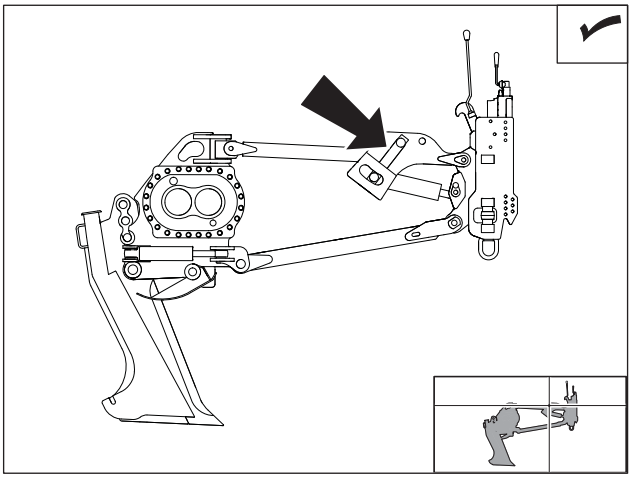

t33om054w.eps

https://truckmanualshub.com/

Test Plow Connector Pivots

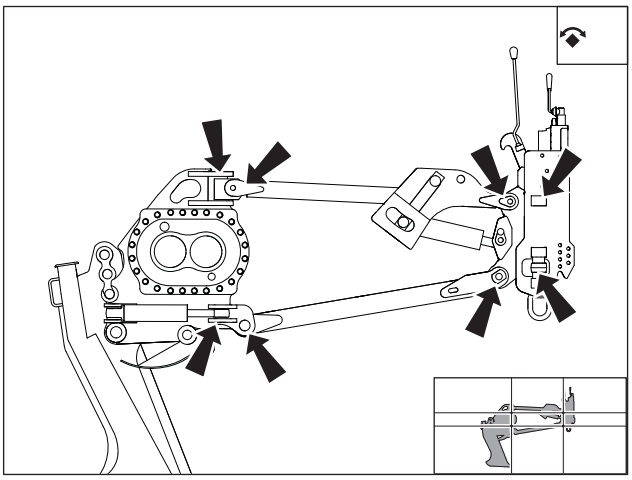
t33om028w.eps

Test upper and lower connector pivots every 100 hours.

To test upper pivot:

1. Lower plow to ground.
2. Use plow lift control to put hydraulic load on pivot joints. Do not raise plow.
3. As hydraulic load is applied and released, visually check joints for motion. If motion is observed, contact your Ditch Witch dealer.

To test lower pivot:

1. Lower plow to ground.
2. Use hydraulic jack to place load on lower arm.
3. As hydraulic load is applied and released, visually check joints for motion. If motion is observed, contact your Ditch Witch dealer.

IMPORTANT: Lower plow blade to ground and visually inspect bushings and joints. Replace bushings if there is excessive motion.

https://truckmanualshub.com/

250 Hour

Location	Task	Notes
TRACTOR	Lube driveshaft U-joints	EPG
	Lube axle spindle pins	EPG
	Check ground drive gearbox oil	MPL
	Check differential oil	MPL
	Lube planetary wheel ends	MPL

Tractor

Lube Driveshaft U-joints

Lube driveshaft U-joints every 250 hours with 3-4 shots of EPG.

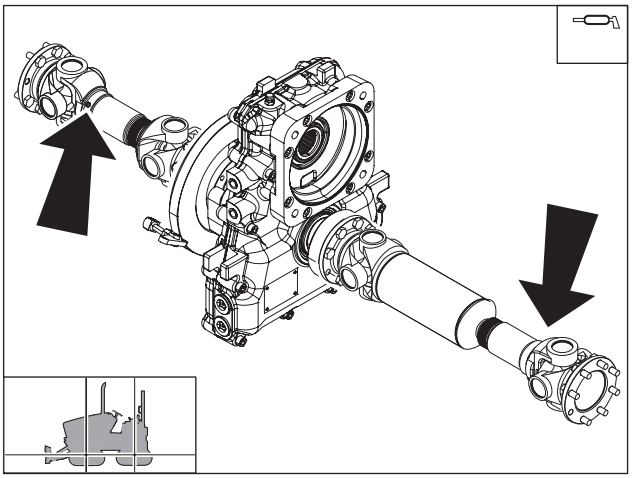

t33om037w.eps

Lube Axle Spindle Pins

Lube axle spindle pins every 250 hours with 3-4 shots of EPG.

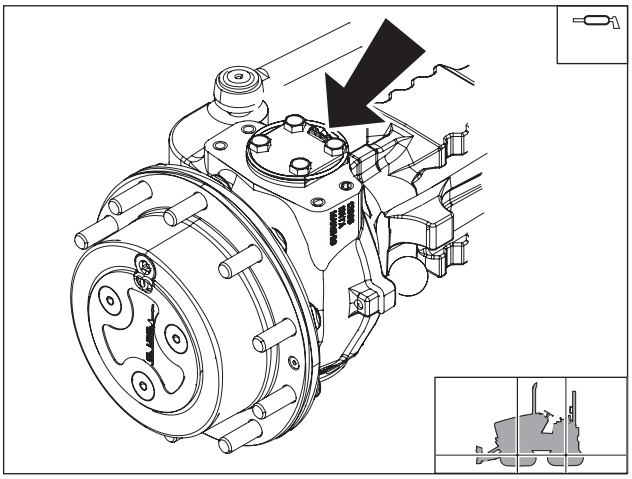

t33om038w.eps

https://truckmanualshub.com/

Check Ground Drive Gearbox Oil

Check oil level at fill (shown) every 250 hours. Keep level at raised horizontal line on gearbox. Add MPL as needed.

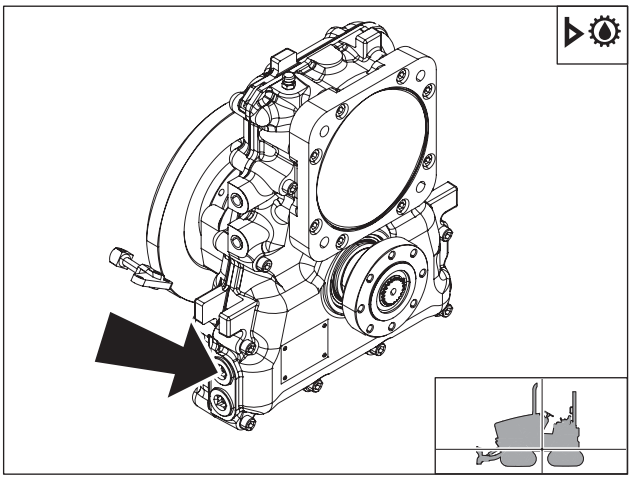

t33om039w.eps

Check Differential Oil

Check oil level at fill (shown) every 250 hours. Add MPL as needed.

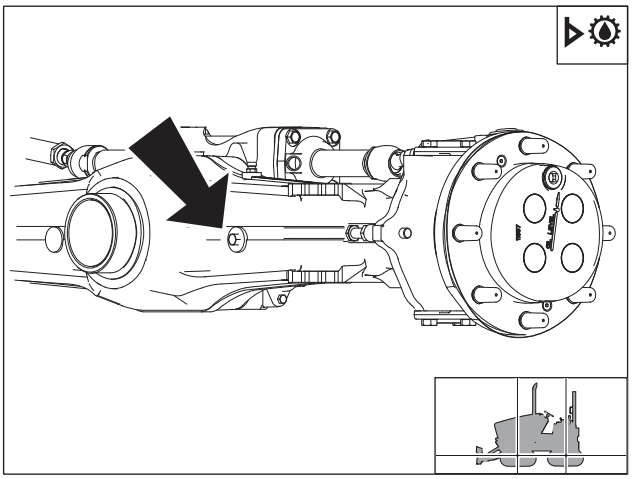

t33om040w.eps

Lube Planetary Wheel Ends

Remove track to check oil level in planetary wheel ends every 250 hours. Add MPL as needed.

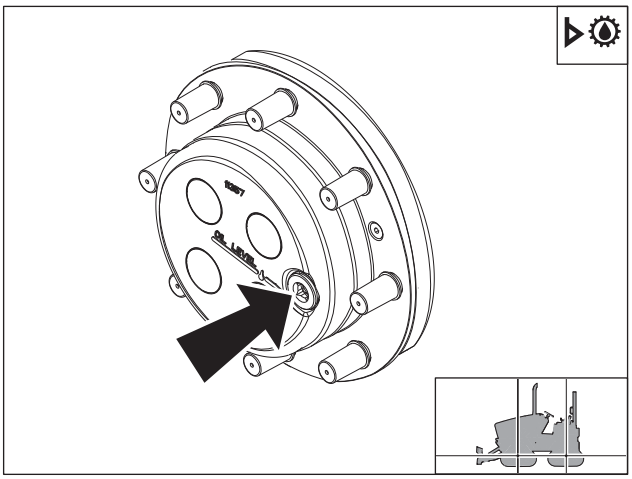

t33om041w.eps

https://truckmanualshub.com/

500 Hour

Location	Task	Notes
TRACTOR	Change fuel filters	
	Change engine oil and filter	DEO
	Change hydraulic fluid and filter	THF
	Check radiator SCA level	
PLOW	Change plow vibrator oil	MPL
TRENCHER	Adjust headshaft bearings	

Tractor

Change Fuel Filters

Change fuel filters (1, 2) every 500 hours.

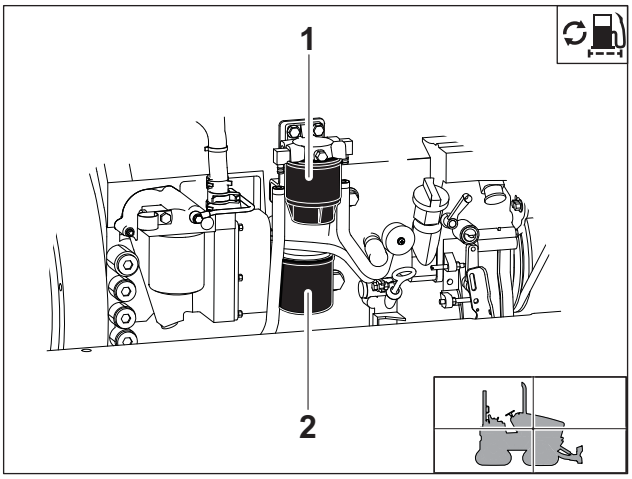

t33om049w.eps

https://truckmanualshub.com/

Change Engine Oil and Filter

Regular engine oil and filter change interval is 500 hours only if using John Deere Plus-50® or ACEA E4/E5. Oil capacity is 8 qts (7.6 L).

To change:

1. While oil is warm, remove drain plug (1). Drain oil and replace plug.
2. Remove filter (2) and replace with new filter each time oil is changed. Add DEO at fill (3).

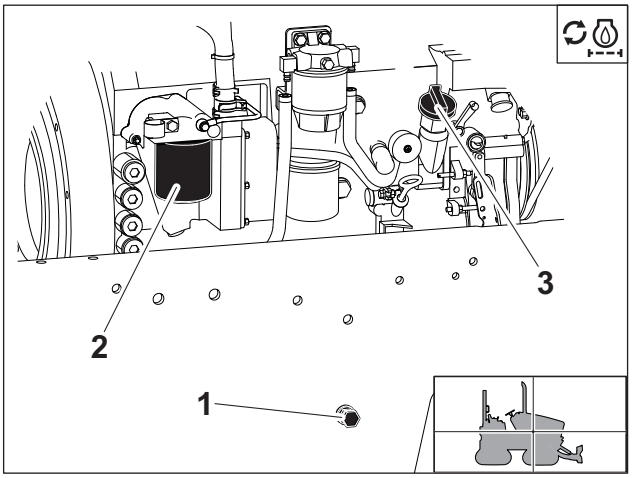

t33om048w.eps

NOTICE:

- Regular oil change interval is 500 hours only if using John Deere Plus-50® or ACEA E4/E5.
- Oil change interval is 250 hours when using alternative oils meeting API service classifications CI-4, CH-4, or ACEA E3.
- See "Recommended Lubricants" for more information about DEO specifications.

https://truckmanualshub.com/

Change Hydraulic Fluid and Filter

Change hydraulic fluid and filter every 500 hours.

Change hydraulic fluid and filter every 250 hours if jobsite temperature exceeds 100°F (38°C) more than 50% of the time.

To change:

1. Remove drain plug (1).
2. Drain fluid and replace plug.
3. Change filter (2).
4. Refill with THF at fill (3).

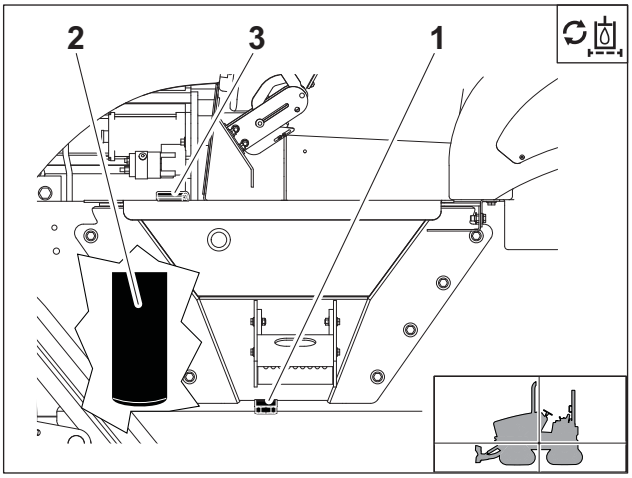

t33om055w.eps

Test Radiator SCA Level

IMPORTANT:

- Always check expiration date on 3-Way Heavy Duty Coolant Test Kit. An expired kit will not give accurate readings.
- See page 145 for more information on approved coolants.

Test SCA level every 500 hours using 3-Way Heavy Duty Coolant Test Kit (p/n 256-032). If SCA levels do not fall within appropriate range, replenish with a heavy-duty coolant conditioner such as John Deere coolant conditioner (p/n 256-033).

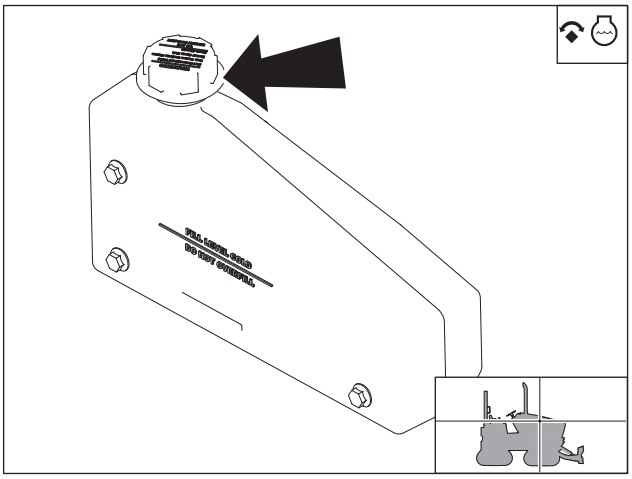
t33om042w.eps

https://truckmanualshub.com/

Plow

Change Plow Vibrator Oil

Change plow vibrator oil every 500 hours. If normal operating temperature exceeds 100° F (38° C), change plow vibrator oil every 250 hours.

Drain oil at drain plug (2). Replace plug and move plow vibrator to horizontal position. Add MPL at fill (1).

IMPORTANT: Do not drain oil from plow vibrator when hot. Let plow vibrator cool before removing drain plug.

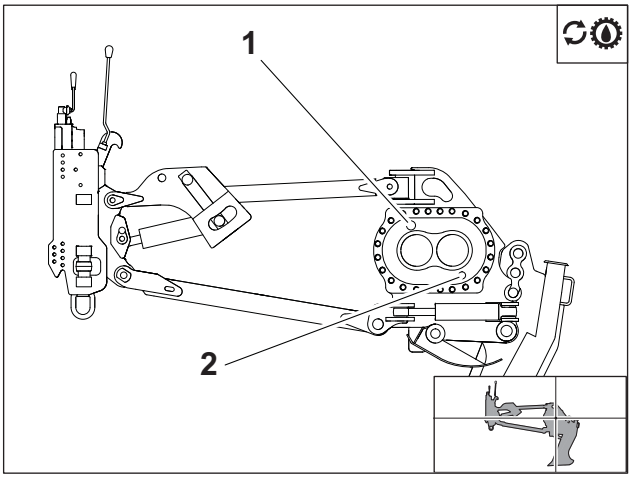

t33om078w.eps

Add MPL at fill until oil is halfway up sight glass (1). Refill capacity is 4 qts (3.8 L).

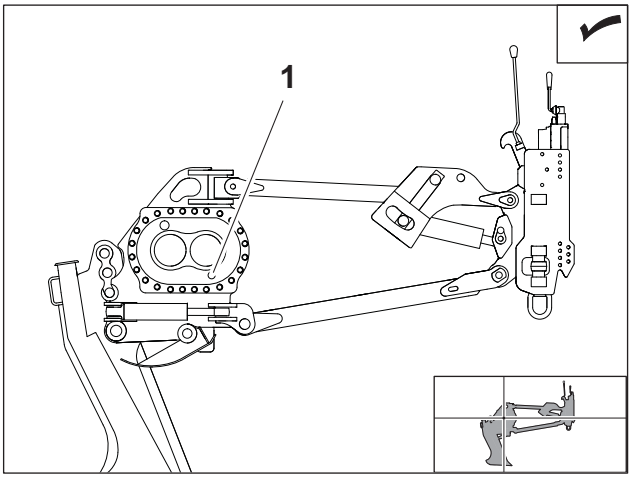

t33om077w.eps

https://truckmanualshub.com/

Trencher

Adjust Headshaft Bearing

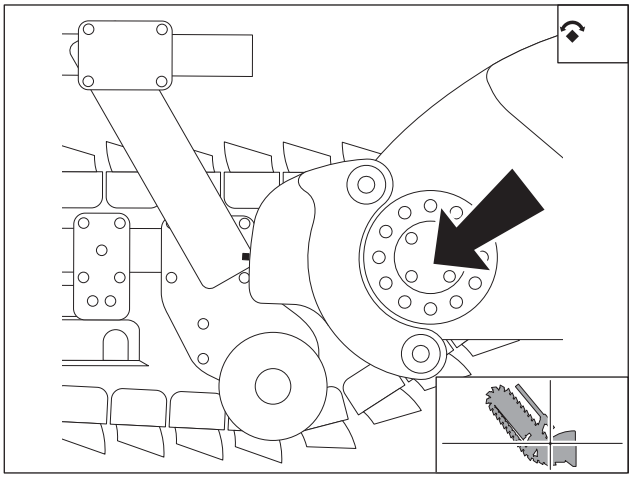
t30om062h.eps

Adjust headshaft bearing every 500 hours.

To adjust:

1. Remove cover. Remove bolts attaching trenching attachment motor to gearbox.
2. Remove bolt and washers in left end of headshaft.
3. Support gearbox with hoist and slide it off headshaft.
4. Install spacer (p/n 184-044) in place of gearbox while checking bearings.
5. Replace bolt on end of headshaft.
6. Remove chain from headshaft sprocket.
7. Turn chain sprocket until headshaft sprocket turns. When properly adjusted, it will take two hands and some effort. If it turns easily, remove a shim.

https://truckmanualshub.com/

1000 Hour

Location	Task	Notes
TRACTOR	Change differential oil	MPL
	Change ground drive gearbox oil	MPL
	Change planetary wheel end oil	MPL
TRENCHER	Change trencher gearbox oil	MPL

Tractor

Change Differential Oil

Change differential oil every 1000 hours.

To change:

1. Remove drain plug (2).
2. Drain fluid and replace plug.
3. Add MPL at fill (1).

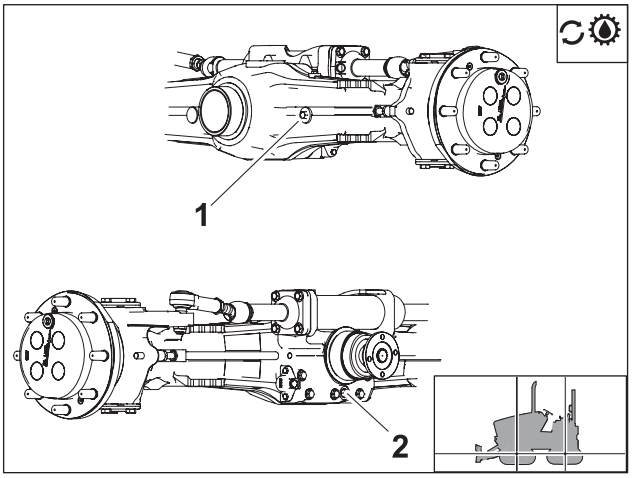

t33om043w.eps

Change Ground Drive Gearbox Oil

Change ground drive gearbox oil every 1000 hours.

To change:

1. Remove drain plug (2).
2. Drain oil and replace plug.
3. Add MPL at fill (1).

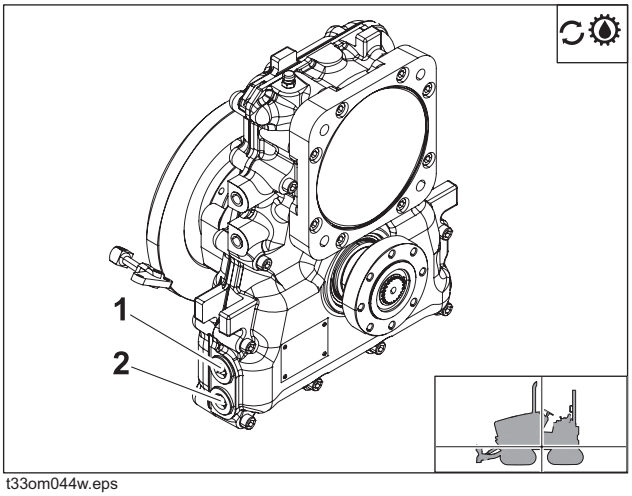

t33om044w.eps

https://truckmanualshub.com/

Change Planetary Wheel End Oil

Change wheel end oil every 1000 hours.

To change:

1. Position wheel with plug at bottom.
2. Remove plug.
3. Drain oil.
4. Reposition wheel with plug at midway position.
5. Add MPL until level is at plug opening.
6. Replace plug.

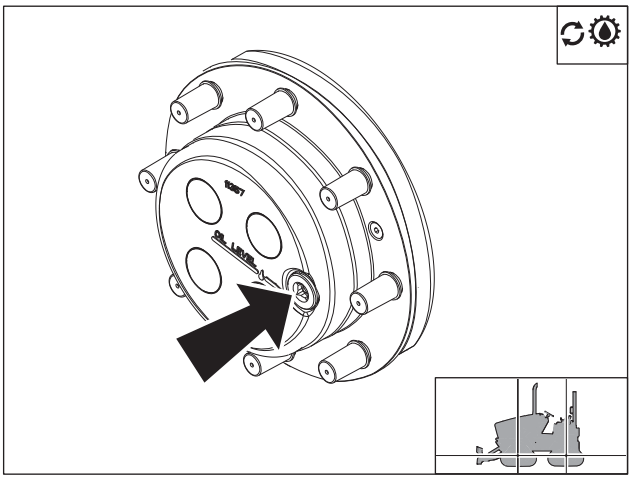

t33om050w.eps

Trencher

Change Trencher Gearbox Oil

Change trencher gearbox oil every 1000 hours. Drain at plug. Replace drain plug and fill with MPL to lowest line on sight tube (shown).

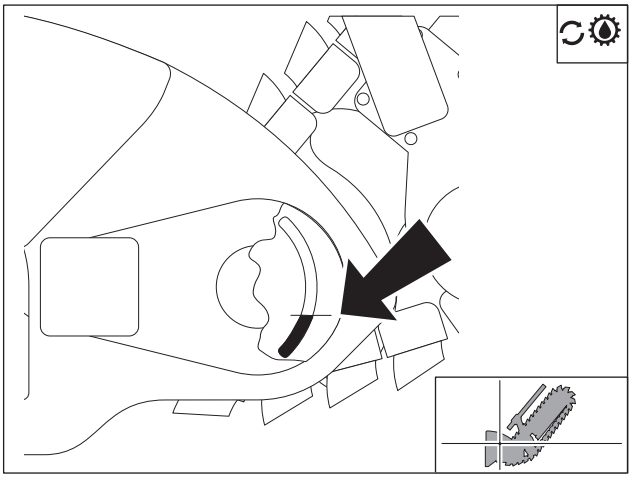

t30om061h.eps

https://truckmanualshub.com/

2000 Hour

Location	Task	Notes
TRACTOR	Change engine coolant	if proper SCA levels are not maintained when using Cool-Gard or if using approved coolant other than Cool-Gard; see "5000 Hour" on page 176 if proper SCA levels are maintained when using Cool-Gard

Tractor

Change Engine Coolant

NOTICE:

- Coolant change interval depends on coolant used and whether SCA levels are properly maintained. Read notes carefully above to ensure coolant is changed at the correct interval.
- The use of non-approved coolant may lead to engine damage or premature engine failure and will void engine warranty.
- See page 145 for list of approved coolants.

If proper SCA levels are not maintained when using Cool-Gard or if using approved coolant other than Cool-Gard, drain cooling system at drain (2) every two years or 2000 hours. Refill at fill (1) with approved coolant. Cooling system capacity is 14 qt (13.3 L).

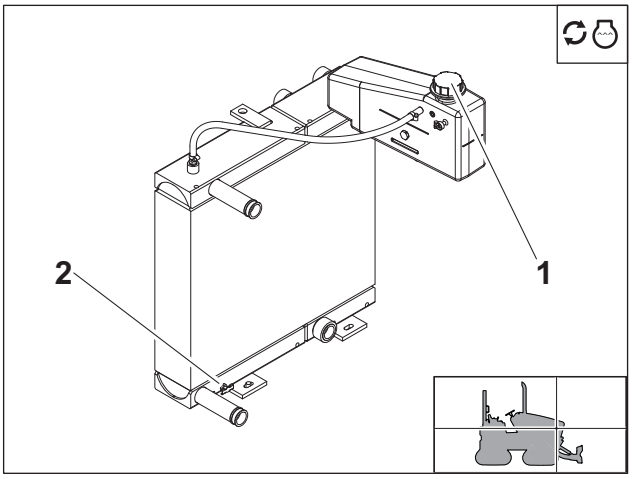

t33om051w.eps

https://truckmanualshub.com/

5000 Hour

Location	Task	Notes
TRACTOR	Change engine coolant	if proper SCA levels are maintained when using Cool-Gard; see "2000 Hour" on page 175 if proper SCA levels are not maintained when using Cool-Gard or if using approved coolant other than Cool-Gard

Tractor

Change Engine Coolant

NOTICE:

- Coolant change interval depends on coolant used and whether SCA levels are properly maintained. Read notes carefully above to ensure coolant is changed at the correct interval.
- The use of non-approved coolant may lead to engine damage or premature engine failure and will void engine warranty.
- See page 145 for list of approved coolants.

If proper SCA levels are not maintained when using Cool-Gard or if using approved coolant other than Cool-Gard, drain cooling system at drain (2) every two years or 2000 hours. Refill at fill (1) with approved coolant. Cooling system capacity is 14 qt (13.3 L).

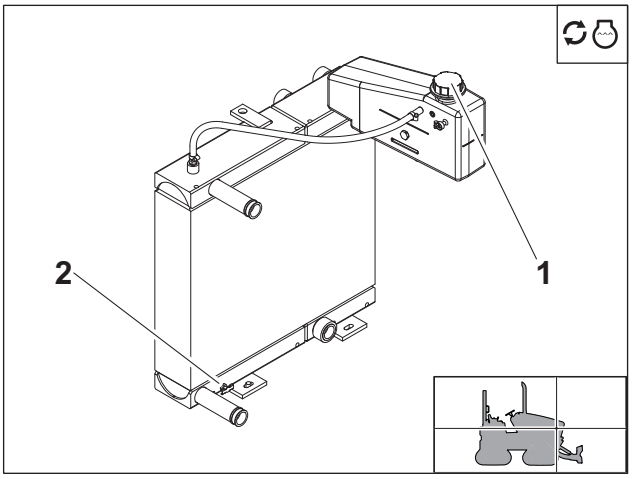

t33om051w.eps

https://truckmanualshub.com/

As Needed

Location	Task	Notes
TRACTOR	Adjust parking brake	
	Clean radiator fins	
	Check seatbelt and seatbelt mounting hardware	
TRENCHER	Replace digging chain	
	Check restraint bar position	400 ft•lb (542 N•m)
	Check trench cleaner position	option. 350 ft•lb (475 N•m)
PLOW	Clean feed tube	
	Replace sod cutter and blade	
	Check plow blade bolts	210 ft•lb (285 N•m)
BACKHOE	Replace pins and bushings	

https://truckmanualshub.com/

Tractor

Adjust Parking Brake

Adjust parking brake as needed.

To adjust:

1. Release parking brake.
2. Remove orange sleeve.
3. Twist lever clockwise to tighten.
4. Engage parking brake to test tension. If tension is too tight, the brake lever will not engage fully. Repeat steps 1-3 as necessary.
5. Replace orange sleeve.

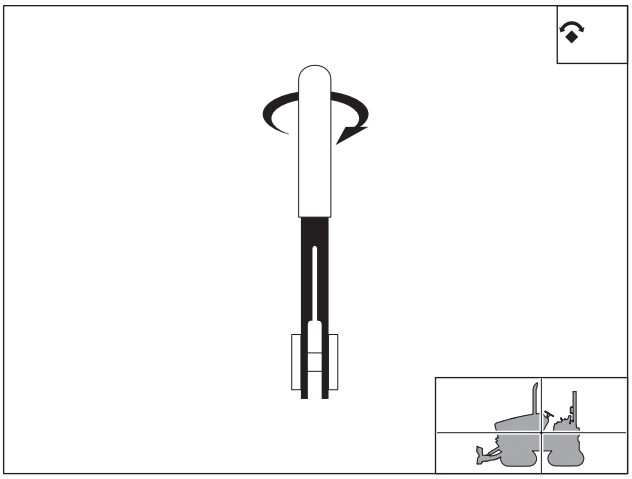

t33om046w.eps

Check Radiator/Oil Cooler

Check radiator/oil cooler for dirt, grass, and other debris as needed. Clean with compressed air or spray wash as needed. Be careful not to damage fins with high pressure air or water. Check more often if operating in dusty or grassy conditions.

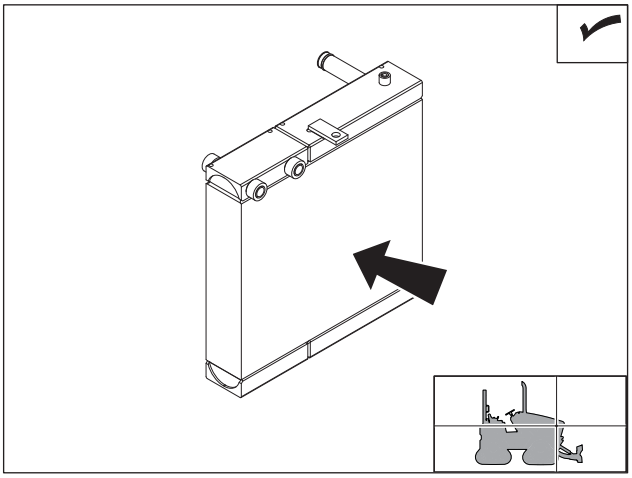

t33om033w.eps

https://truckmanualshub.com/

Inspect Seat Belt

Check seat belt and mounting hardware as needed. Inspect the webbing, buckle and latch, retractor, and mounting hardware.

Buckle and Latch

Check that the buckle and latch (1) are not broken or corroded. When inserting the latch into the buckle, the latch should insert smoothly until an audible click is heard. Latch should not release when the seat belt is tugged.

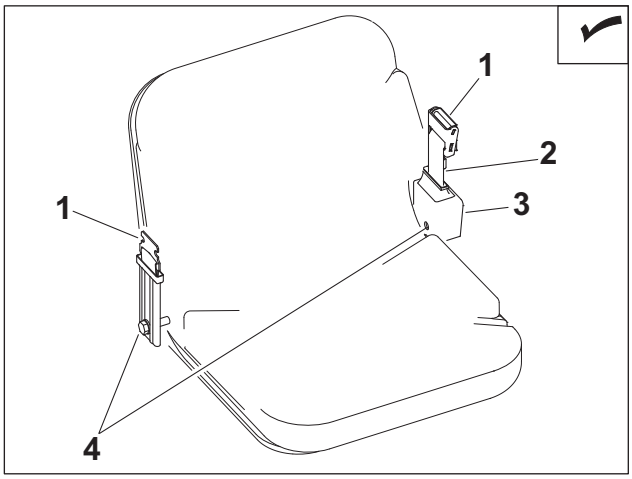

SeatBelt.eps

Webbing

Inspect seat belt webbing (2) to ensure that it is not cut, frayed or showing signs of extreme or unusual wear. Check the area near the buckle and latch and anywhere the seat belt has contact with equipment or seat.

Retractor

Check that the retractor (3) operates smoothly when the belt is pulled and released. Retractor should spool belt without locking.

Mounting Hardware

Inspect the seat belt mounting bolts (4) on both sides of the seat to ensure they are tight. Replace missing, damaged, or corroded bolts.

https://truckmanualshub.com/

Trencher

Replace Digging Chain

Visually check digging chains for wear on teeth (1), rollers, and sidebars (2). Check pins (3) and bushing wear by measuring distance between chain pins and comparing it with a new chain.

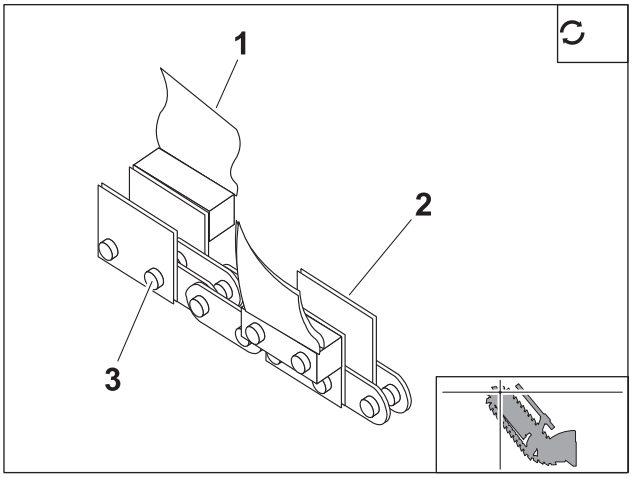

t30om063h.eps

IMPORTANT: Replace sprockets when a new chain is installed.

To remove chain:

1. Fasten and adjust seat belt.
2. Start tractor. See page 78 for proper start-up procedures.
3. Move attachment direction/speed control until digging chain connector pin is on top of boom.
4. Lower boom to ground.
5. Engage parking brake and verify parking brake indicator is on.
6. Turn ignition switch to STOP.
7. Secure chain by clamping links on either side of connector pin with chain jaws. Squeeze jaws to reduce pressure on connector pin.

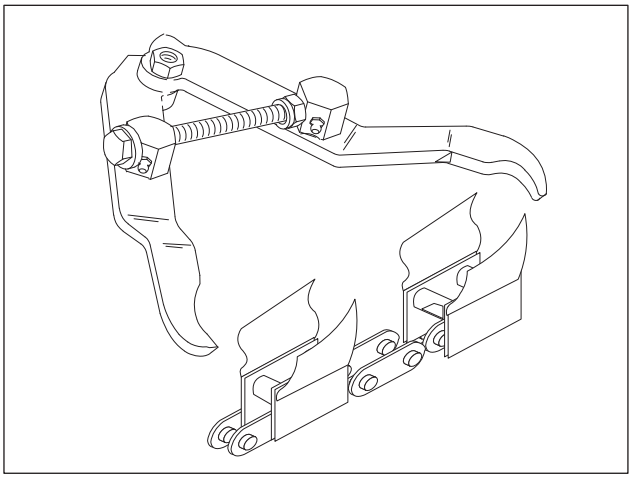
Digging_Chain_Remove_01.eps

https://truckmanualshub.com/

8. Loop cable through links nearest connector pin.

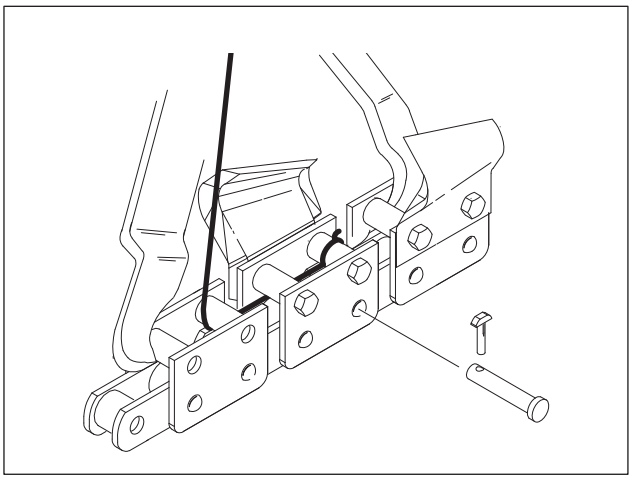

Digging_Chain_Remove_02.eps

WARNING Fluid pressure could pierce skin and cause injury or death. Stay away.

To help avoid injury:

- Service digging boom grease cylinder only while standing on opposite side of boom.
- Wear gloves and safety glasses, and cover fitting with cloth when relieving pressure in cylinder.

9. Loosen plug on grease cylinder to relieve chain tension.
10. Stand clear of chain and remove lock key from connector pin. Drive connector pin out of link.

WARNING Crushing weight could cause death or serious injury. Use proper procedures and equipment or stay away.

11. Unclamp links. Slowly release cable and lower chain to ground.
12. Lay chain on ground with teeth down.

https://truckmanualshub.com/

To install chain:

1. Lay chain on ground with teeth down and pointed toward unit.
2. Fasten and adjust seatbelt.
3. Start tractor. See page 78 for start-up procedures.
4. Disengage parking brake and verify parking brake indicator is off.
5. Move ground drive control to reverse.
6. Back unit up until chain extends past head shaft about 1' (305 mm).
7. Move ground drive control to neutral.
8. Lower backfill blade, if equipped, to ground.
9. Lower boom to horizontal position.
10. Engage parking brake and verify parking brake indicator is on.
11. Turn ignition switch to STOP.
12. Pull rear end of chain over and about 10" (260 mm) past tail roller.
13. Use hoist to pull front end of chain over head shaft sprocket.
14. Move chain down boom until chain connector pin and lock key can be installed. Install connector pin and lock key.
15. Tighten chain by pumping EPG into grease cylinder.

Check Restraint Bar Position

Check restraint bar position anytime the digging chain is adjusted or replaced. The restraint bar is properly positioned when the end of bar extends between the center of the tail roller/sprocket and the end of the digging chain. Check for looseness or wear.

Tighten bolts as necessary to keep them tight. Bolts mounting arm to boom should be tightened to 400 ft•lb (542 N•m). Apply Loctite 271® adhesive.

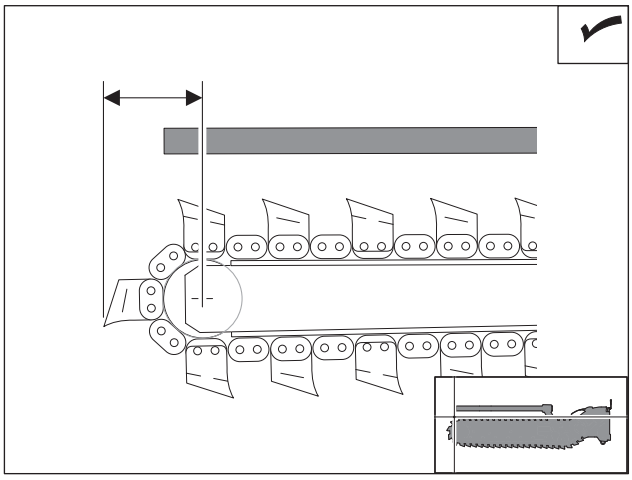

t33om89w.eps

https://truckmanualshub.com/

Check Trench Cleaner Position

Check trench cleaner position (if equipped) anytime the digging chain is adjusted or replaced. The trench cleaner is properly positioned when there is 3-4 in (76-102 mm) between the digging teeth and the inside of the trench cleaner shoe (A).

Check that bolts holding personnel restraint bar/ trench cleaner to arm are tightened to 350 ft•lb (475 N•m). Apply Loctite 271® adhesive.

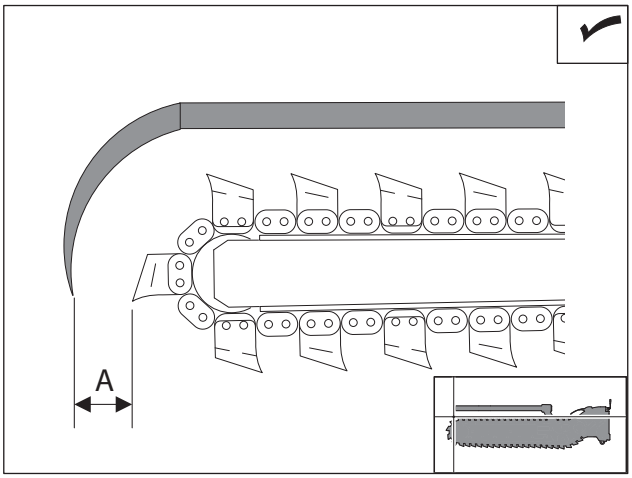

t33om90w.eps

Time Augers

Ensure that augers are balanced, as shown. If auger timing is off, unit will bounce from side to side even in normal digging conditions.

To adjust timing:

1. Remove bolts holding augers to auger shaft and rotate either auger as needed until augers are balanced.
2. Reinstall bolts and tighten securely.

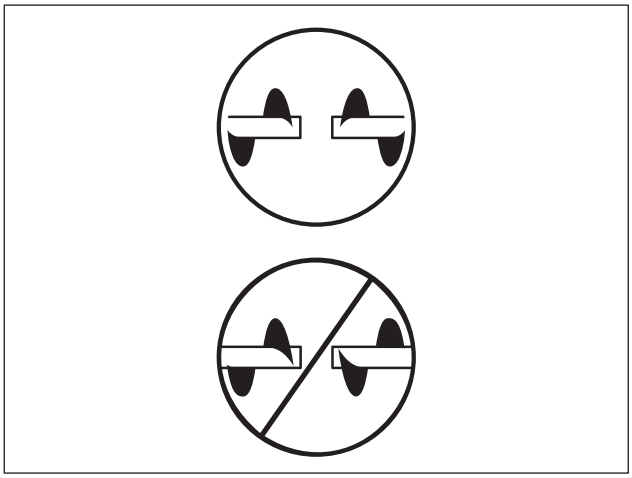

Augers_Adjust.eps

https://truckmanualshub.com/

Plow

Clean Feed Tube

Clean feed tube as needed.

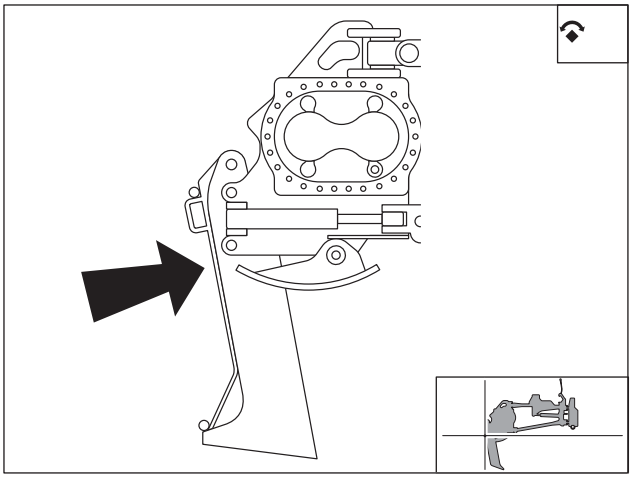

t30om072h.eps

Replace Sod Cutter and Blade

Replace worn sod cutter and plow blade as needed.

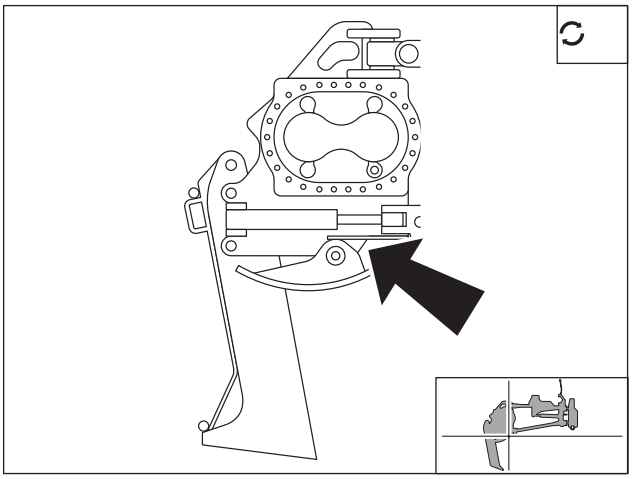

t30om073h.eps

https://truckmanualshub.com/

Check Plow Blade Bolts

Check plow blade bolts as needed. If loose, use Loctite® 242 (blue) and tighten bolts to 210 ft•lb (285 N•m).

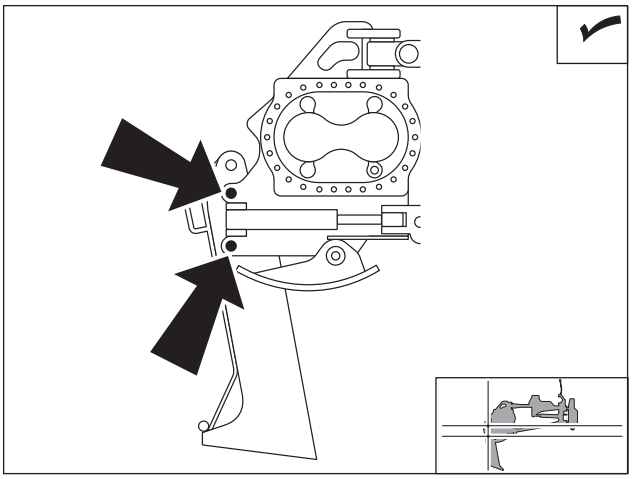

t30om074h.eps

Backhoe

Replace Pins and Bushings

Replace pins (1) and bushings (2) when worn or damaged.

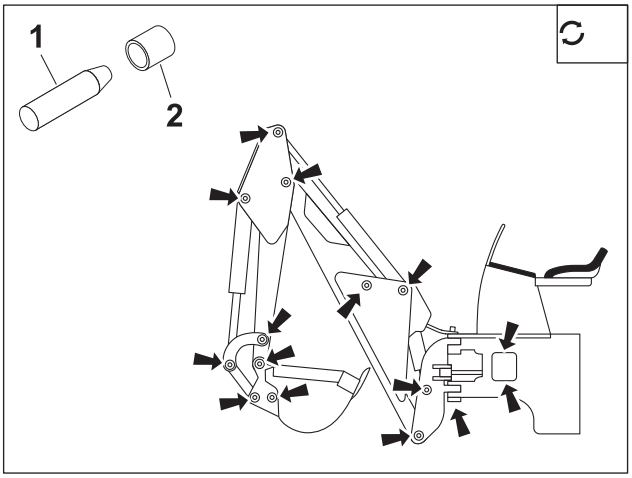

t26om020h.eps

https://truckmanualshub.com/

https://truckmanualshub.com/

Specifications

RT80Q Tractor

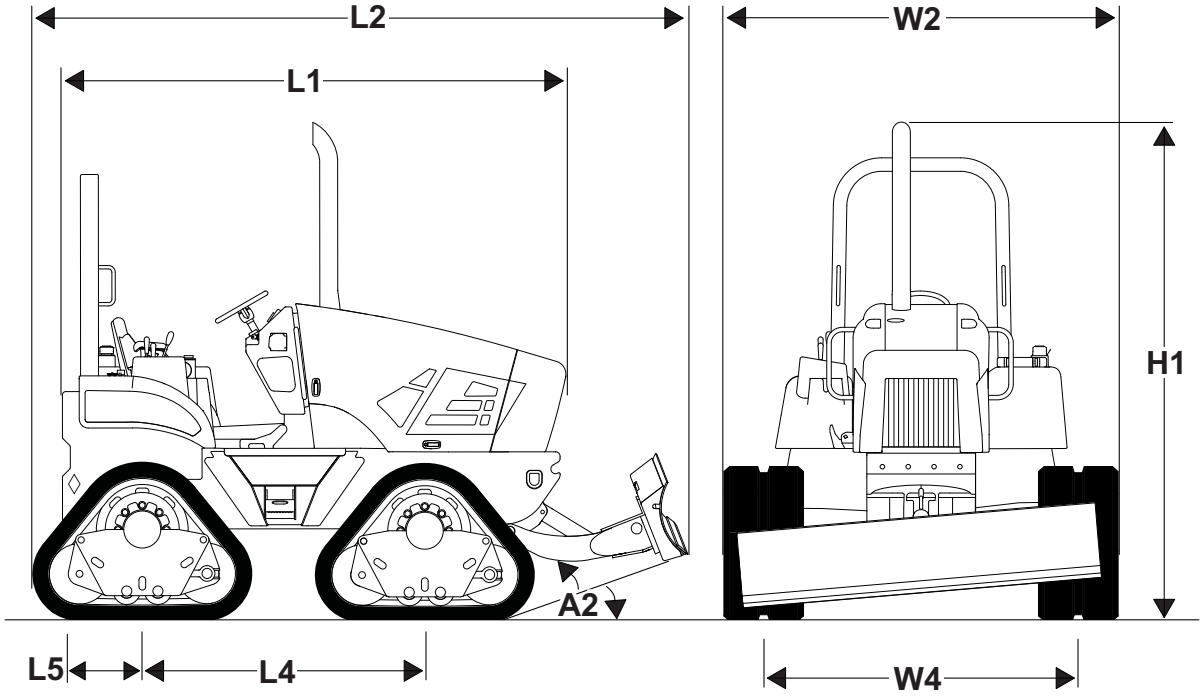

t33om015w.eps

Dimensions		U.S.	Metric
A2	Angle of approach	31°	31°
H1	Height	103 in	2.6 m
L1	Nose to rear mount length	112.3 in	2.9 m
L2	Length - transport	141.7 in	3.6 m
L4	Wheelbase	63 in	1.6 m
W2	Width	87.3 in	2.2 m
W4	Tread	70 in	1.8 m
L5	Rear axle to attachment mount holes	16.8	427 mm

https://truckmanualshub.com/

General
Ditch Witch model RT80Q tractor, 4-wheel drive, rigid frame, hydrostatic ground drive through rubber tracks, 4-wheel steering, hydrostatic attachment drive, riding unit.

Operation		U.S.	Metric
Forward speeds			
	Low	1.5 mph	2.4 km/h
	Medium	3.3 mph	5.2 km/h
	High	4.6 mph	7.4 km/h
Reverse speeds			
	Low	1.3 mph	2.1 km/h
	Medium	3.0 mph	4.8 km/h
	High	2.2 mph	3.5 km/h
Vehicle clearance circle (SAE) wall to wall with optional backfill blade			
	Front steer only	33.5 ft	10.2 m
	Coordinated steer	21.5 ft	6.5 m
Ground clearance		15.25 in	387 mm
Basic unit weight		11,580 lb	5253 kg
Maximum allowable tractor weight		19,100 lb	8864 kg
Front counterweight		1650 lb	748 kg

Backfill Blade (optional)	U.S.	Metric
Blade width	80 in	2.03 m
Blade height	14 in	355 mm
Lift height above ground	25.2 in	640 mm
Blade drop below ground	10.9 in	277 mm
Maximum swing angle (left/right)	30°	30°
Tilt angle (up/down)	16°	16°

https://truckmanualshub.com/

Power Plant	U.S.	Metric
Engine: Deutz TD2011L04W, diesel, water cooled, direct injection, 4 cyl. turbocharged. EPA Tier 3; EU Stage IIIA		
Displacement	221 in^3	3.62 L
Bore	3.78 in	96 mm
Stroke	4.92 in	125 mm
Engine manufacturer's gross power rating per SAE J1349	83 hp	62 kW
Estimated net power per SAE J1349	78 hp	58 kW
Rated speed	2600 rpm	2600 rpm
Emmissions Compliance	EPA Tier 3, EU Stage IIIA	

Power Train
Ground drive transmission: hydrostatic
Differentials: planetary front and rear with standard rear steering
Parking brake: manual lever disc brake
Tracks: 450x86x36 rubber track, chevron pattern
Attachment drive transmission: hydrostatic, electric rotary knob, speed infinitely variable from zero to maximum

Hydraulic System	U.S.	Metric
Ground drive pump capacity at 2600 rpm	32 gpm	121 L/min
Ground drive pump relief pressure at 2600 rpm	6000 psi	414 bar
Attachment pump capacity at 2600 rpm	32 gpm	121 L/min
Attachment pump forward relief pressure at 2600 rpm	6000 psi	414 bar
Attachment pump reverse relief pressure at 2600 rpm	6000 psi	414 bar
Auxiliary pump capacity at 2600 rpm, front	7.4 gpm	28 L/min
Auxiliary pump capacity at 2600 rpm, rear	6.5 gpm	25 L/min
Auxiliary pump relief pressure at 2600 rpm	3000 psi	207 bar

https://truckmanualshub.com/

Fluid Capacities	U.S.	Metric
Fuel tank	30 gal	114 L
Engine oil	8 qt	7.6 L
Hydraulic reservoir	14 gal	53 L
Hydraulic system	20 gal	76 L
Cooling system	14 qt	13.3 L

Battery (2 used)
Group 78U, SAE res. cap 110 min., SAE cold crank @ 0° F (-18° C), 800 amp
Auxiliary power outlet - 12 volt, 10 amp

Vibration Level
Average vibration transmitted to the operator's hand and whole body while plowing is 5.15 m/s^2 and 0.58 m/s^2 respectively.
Operator seat complies with ISO 7096.

Noise Levels
Operator ear sound pressure level is 96 dBa per ISO 6394.
Exterior sound power level is 110 dBa per ISO 6393.

Unless otherwise specified, all figures are for standard equipment only. Specifications are called out according to SAE recommended procedures. Due to selected options, delivered equipment may not necessarily match that described. Specifications are general and subject to change without notice. If exact measurements are required, equipment should be weighed and measured.

https://truckmanualshub.com/

H810 Trencher

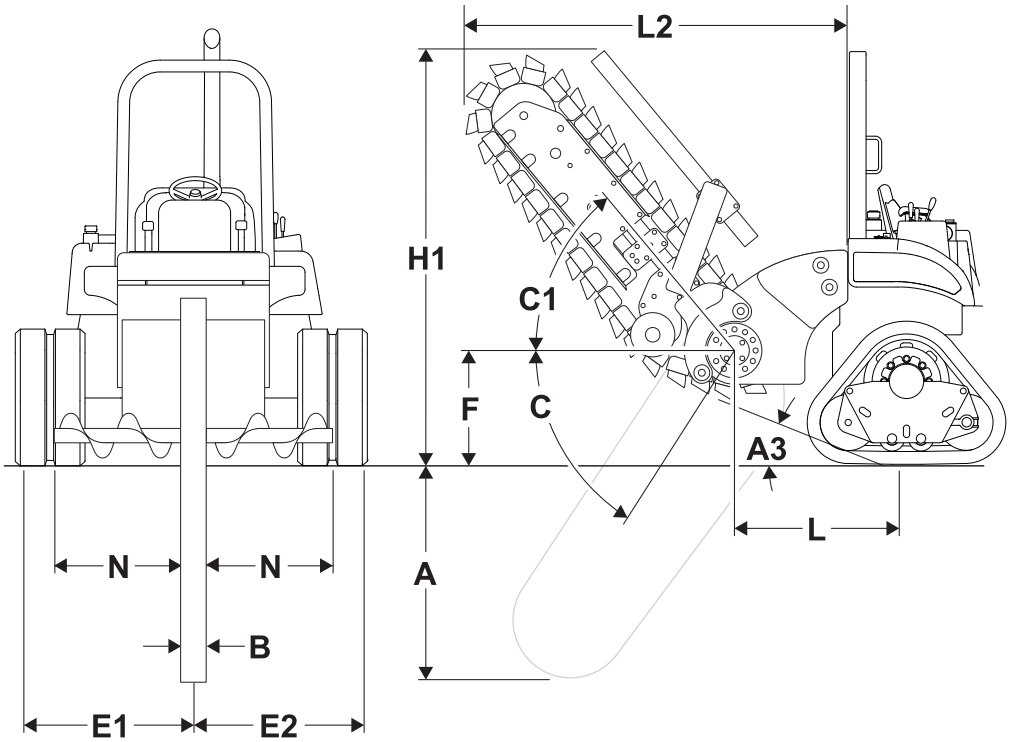

t33om056w.eps

Dimensions		U.S.	Metric
A^3	Angle of departure	30°	30°
A	Trench depth, maximum	93 in	2.36 m
B	Trench width, maximum	24 in	610 mm
C	Boom travel down	65°	65°
C^1	Boom travel up	50°	50°
E^1	Centerline of trench to outside edge, left	48.1 in	1.2 m
E^2	Centerline of trench to outside edge, right	39.1 in	994 mm
F	Headshaft height, digging chain	36 in	914 mm
H^1	Transport height	128 in	3.25 m
L^2	Transport length	120 in	3.05 m
L	Headshaft overhang	46 in	1.2 m
N	Soil discharge reach	33 in	843 mm
	Attachment weight	1750 lb	794 kg

https://truckmanualshub.com/

Operation		U.S.	Metric
Headshaft speeds at 2600 engine rpm			
	Ratio low	170 rpm	170 rpm
	Ratio standard	208 rpm	208 rpm
	Ratio high (not recommended)	280 rpm	280 rpm
Digging chain speeds at 2600 engine rpm			
	Ratio low	485 ft/min	148 m/min
	Ratio standard	592 ft/min	180 m/min
	Ratio high (not recommended)	798 ft/min	243 m/min

https://truckmanualshub.com/

H813 Trencher

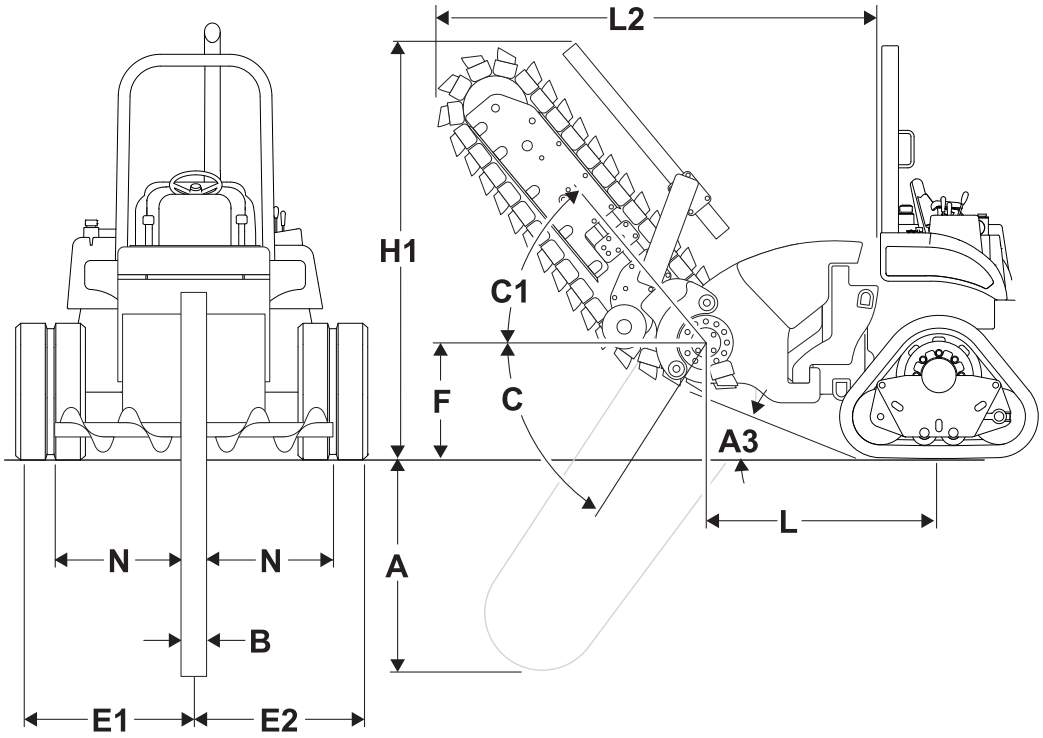

t33om057w.eps

Dimensions		U.S.	Metric
A3	Angle of departure	26.6°	26.6°
A	Trench depth, maximum	58.4 in	1.5 m
B	Trench width, maximum	12 in	305 mm
C	Boom travel down	55°	55°
C1	Boom travel up	51°	51°
E1	Centerline of trench to outside edge, left	29.1-72.6 in	739-1844 mm
E2	Centerline of trench to outside edge, right	14.6-58.1 in	371-1476 mm
F	Headshaft height, digging chain	32.6 in	828 mm
H1	Transport height	125.6 in	3.2 m
L2	Transport length, fully raised	93.5 in	2.4 m
L	Headshaft overhang	48 in	1.2 m
N	Soil discharge reach, short auger	17 in	430 mm
	Soil discharge reach, long auger	30 in	760 mm

https://truckmanualshub.com/

	Attachment weight*	2422 lb	1099 kg

Operation		U.S.	Metric
Headshaft speeds @ 2600 engine rpm			
	low speed motor	174 rpm	174 rpm
	standard speed motor	219 rpm	219 rpm
	high speed motor	275 rpm	275 rpm
Digging chain speed with 10-tooth, 3.067" (78 mm) pitch headshaft sprocket			
	low speed motor	452 ft/min	168 m/min
	standard speed motor	569 ft/min	174 m/min
	high speed motor	715 ft/min	218 m/min
Digging chain speed with 12-tooth, 2.0" (50 mm) pitch headshaft sprocket			
	low speed motor	352 ft/min	107 m/min
	standard speed motor	443 ft/min	135 m/min
	high speed motor	557 ft/min	170 m/min
Digging chain speed with 14-tooth, 2.0" (50 mm) pitch headshaft sprocket			
	low speed motor	410 ft/min	125 m/min
	standard speed motor	515 ft/min	157 m/min
	high speed motor	647 ft/min	197 m/min

Vibration Level
Average vibration transmitted to the operator's hand and whole body while trenching in rock is 5.8 m/s^2 and 0.81 m/s^2 respectively.

*with 4' (1.2 m) roller boom and 70K chain

https://truckmanualshub.com/

H832 Plow

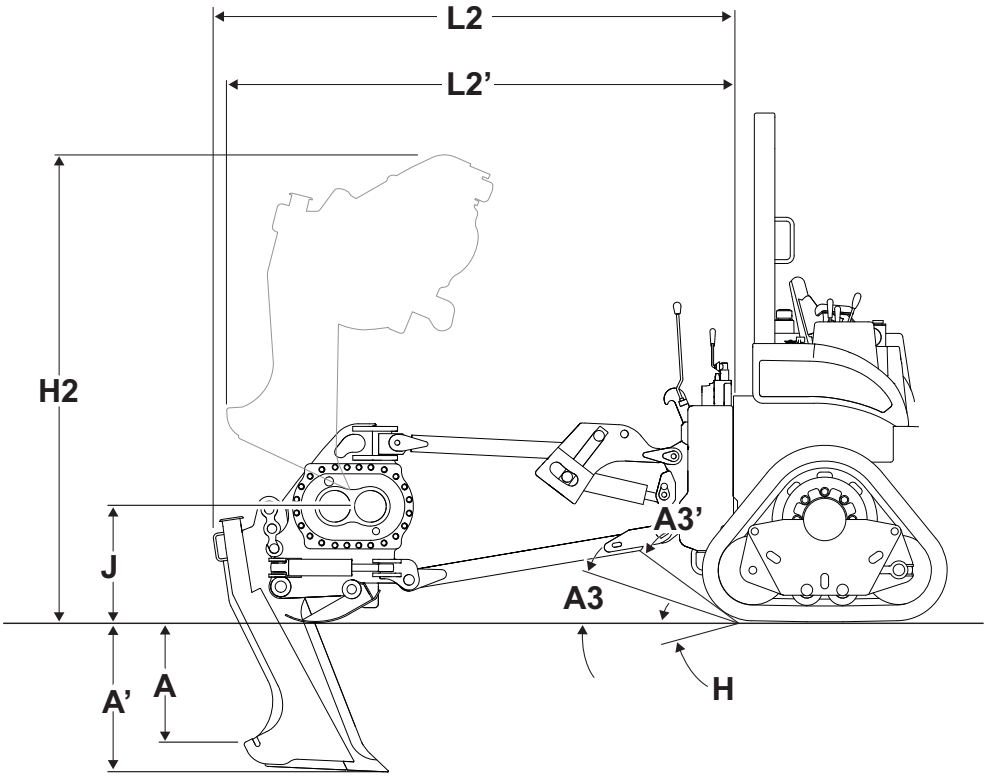

t33om058w.eps

Dimensions		U.S.	Metric
A	Cover depth*	36 in	915 mm
A'	Penetration*	40 in	1.02 m
A3'	Angle of departure, transport, no blade	46.7°	46.7°
A3	Angle of departure, transport, 24" (610 mm) blade	25.3°	25.3°
	Angle of departure, transport, 30" (760 mm) blade	29.8°	29.8°
H	Angle of depression, plow max.	7°	7°
H2	Height transport	97 in	2.46 m
J	Blade ground clearance, 30" (760 mm) blade	33.1 in	840 mm
L2	Attachment length, fully lowered, no blade	96.7 in	2.46 m
L2'	Attachment length, fully raised, no blade	70 in	1.78 m
	Plow swing angle	85°	85°
	Inclusive blade steer angle	89°	89°

https://truckmanualshub.com/

	Center of plow to outside edge of machine, left	43.7 in	1.11 m
	Center of plow to outside edge of machine, right	43.7 in	1.11 m

*Suggested maximum. Plow blade used will be determined by job requirements and soil conditions

Operation		U.S.	Metric
Plow vibrator force @ 1800 rpm		35,215 lb	157 kN
Maximum material diameter			
	Pulled	3 in	80 mm
	Fed	2 in	50 mm

General	U.S.	Metric
Attachment weight, without plow blade	2230 lb	1012 kg
Counterweight required. Contact your local Ditch Witch dealer for counterweight requirements.		

https://truckmanualshub.com/

H853 Combo

Trencher

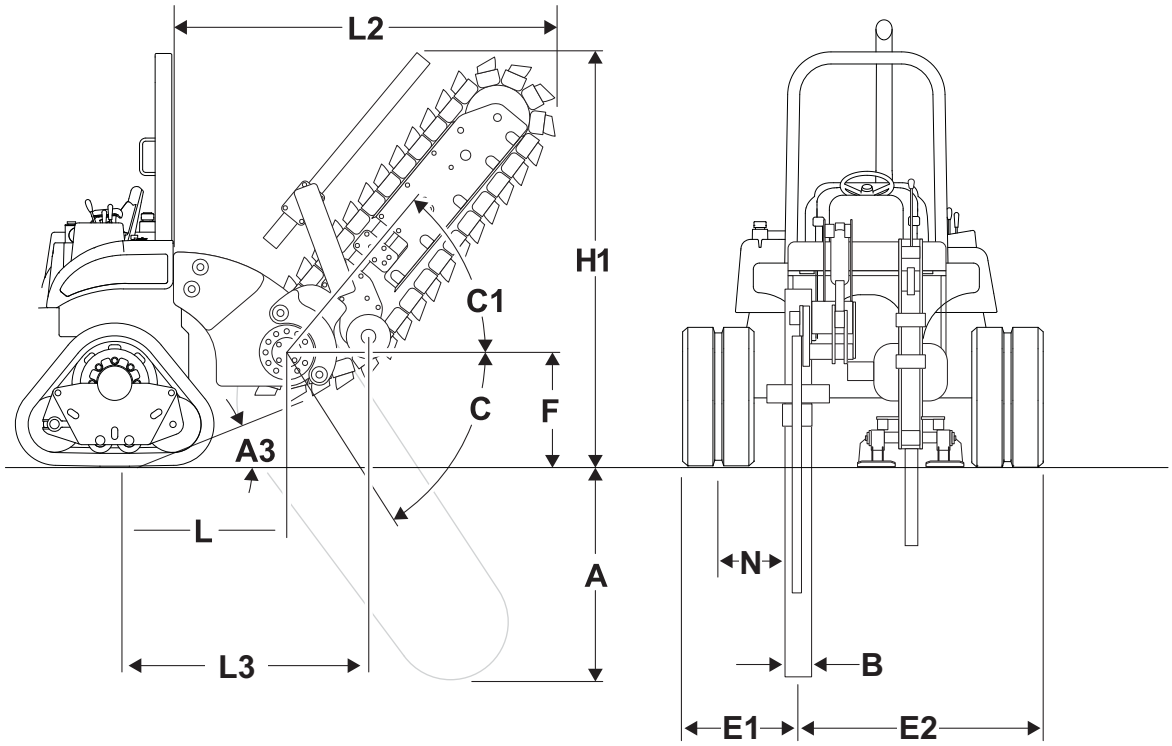

t33om059w.eps

Dimensions		U.S.	Metric
A	Trench depth, maximum	69 in	1.76 m
A3	Angle of departure	29°	29°
B	Trench width	6-12 in	150-300 mm
C1	Boom travel up	49°	49°
C	Boom travel down	56°	56°
F	Headshaft height, digging chain	32.7 in	831 mm
L 2	Transport length (48" boom)	92.5 in	2.4 m
H1	Transport height (48" boom)	106 in	2.7 m
E1	Center of trench to outside edge, left*	13 in	330 mm
E2	Center of trench to outside edge, right	76 in	1.93 m
N	Spoil discharge reach, minimum	19 in	480 mm

https://truckmanualshub.com/

L	Headshaft overhang	42.7 in	1.1 m

*Left edge of machine is defined as outside of digging chain guard

Operation		U.S.	Metric
Headshaft speeds @ 2600 engine rpm			
	low speed motor	174 rpm	174 rpm
	standard speed motor	219 rpm	219 rpm
	high speed motor	275 rpm	275 rpm
Digging chain speed with 10-tooth, 3.067" (78 mm) pitch headshaft sprocket			
	low speed motor	452 ft/min	168 m/min
	standard speed motor	569 ft/min	174 m/min
	high speed motor	715 ft/min	218 m/min
Digging chain speed with 12-tooth, 2.0" (50 mm) pitch headshaft sprocket			
	low speed motor	352 ft/min	107 m/min
	standard speed motor	443 ft/min	135 m/min
	high speed motor	557 ft/min	170 m/min
Digging chain speed with 14-tooth, 2.0" (50 mm) pitch headshaft sprocket			
	low speed motor	410 ft/min	125 m/min
	standard speed motor	515 ft/min	157 m/min
	high speed motor	647 ft/min	197 m/min

https://truckmanualshub.com/

Plow

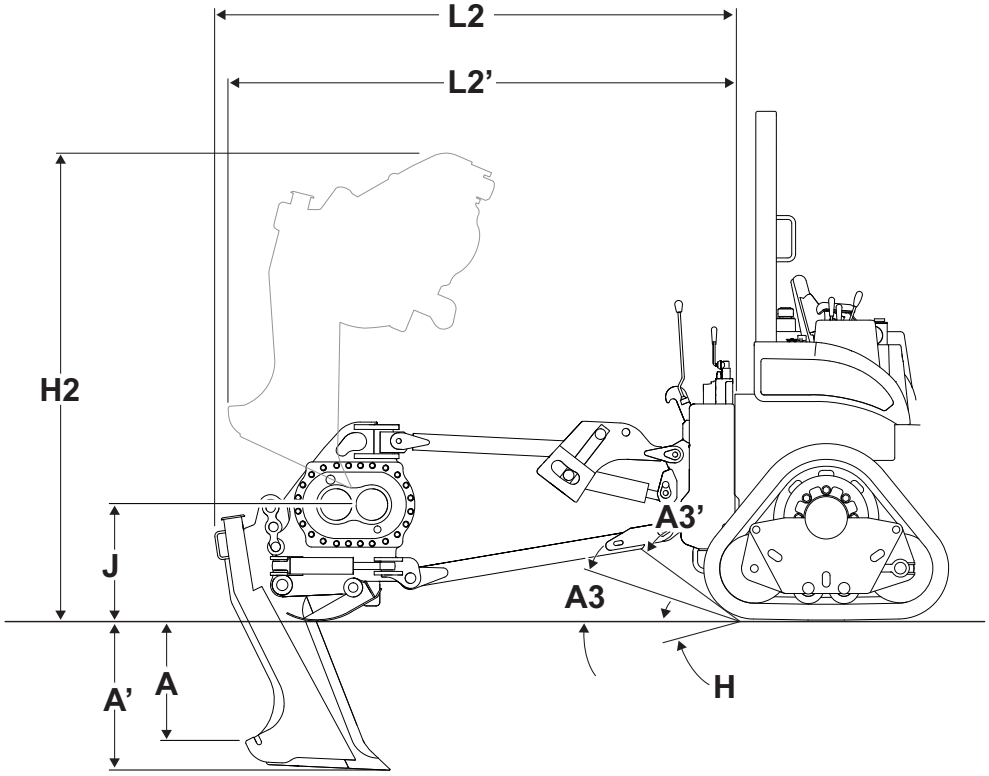

Dimensions		U.S.	Metric
A	Cover depth*	36 in	915 mm
A'	Penetration*	40 in	1.02 m
A3	Angle of departure, transport, 24" (610-mm) blade	25.3°	25.3°
	Angle of departure, transport, 30" (760-mm) blade	29.8°	29.8°
A3'	Angle of departure, transport, no blade	46.7°	46.7°
H	Angle of depression, plow max.	7°	7°
H2	Height, transport	97 in	2.6 m
J	Blade ground clearance, 30" (760-mm) blade	33.1 in	841 mm
L2	Attachment length, fully lowered, no blade	96.7 in	2.5 m
L2'	Attachment length, fully raised, no blade	70 in	1.8 m
	Plow swing angle, left	0°	0°
	Plow swing angle, right	44°	44°
	Inclusive blade steer angle	89°	89°

https://truckmanualshub.com/

	Center of plow to outside edge of machine, left	48.3 in	1.2 m
	Center of plow to outside edge of machine, right	39 in	993 mm

* Suggested maximum. Plow blade used will be determined by job requirements and soil conditions.

Operational		**U.S.**	**Metric**
Plow vibrator force @ 1800 rpm		35,215 lb	157 kN
Maximum material diameter			
	Pulled	3 in	76 mm
	Fed	2 in	51 mm

General	**U.S.**	**Metric**
Attachment weight without boom, chain, or plow blade	3455 lb	1567 kg
Counterweight required. Contact your local Ditch Witch dealer for counterweight requirements.		

https://truckmanualshub.com/

A820 Backhoe

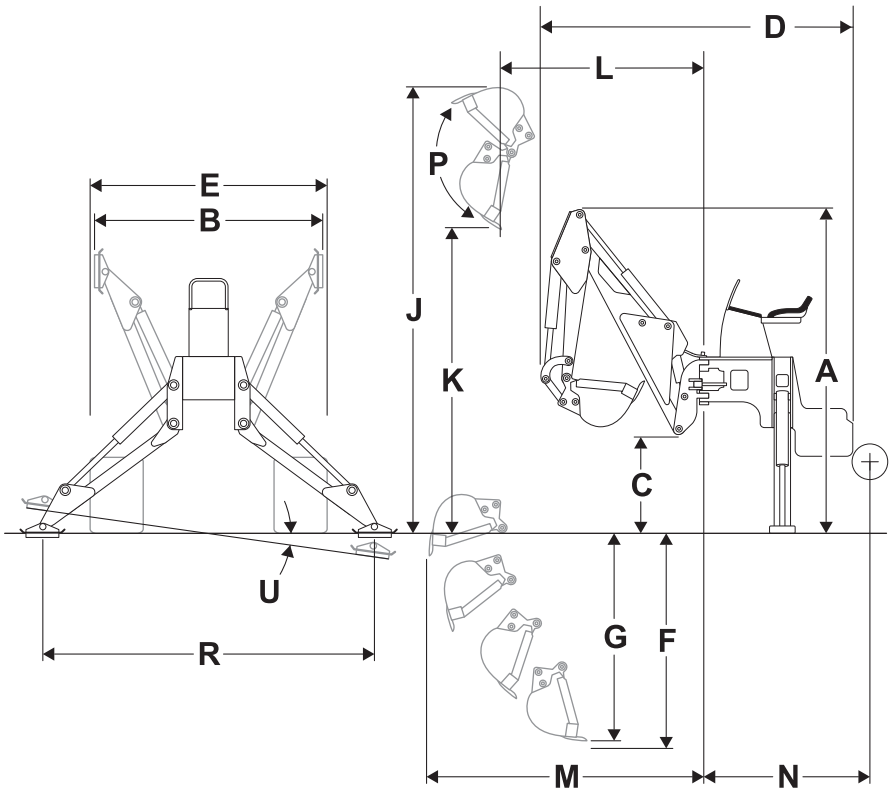

Dimensions		U.S.	Metric
A	Transport height	113.5 in	2.9 m
C	Ground clearance	36.6 in	929 mm
D	Backhoe length, stowed	57.2 in	1.5 m
F	Digging depth, max.	89 in	2.2 m
G	Digging depth, 2" (0.6 m) flat bottom	88.2 in	2.2 m
J	Operating height, fully raised	152.2 in	3.9 m
K	Loading height	94.2 in	2.4 m
L	Loading reach	56.1 in	1.4 m
M	Reach from swing pivot	142.2 in	3.6 m
N	Swing pivot to centerline axle	40.1 in	1.0 m
P	Bucket rotation	150°	150°
B	Stabilizer spread, transport	67.6 in	1.7 m

https://truckmanualshub.com/

E	Backhoe or basic unit width	120 in	3.1 m
R	Stabilizer spread, operating	91.8 in	2.3 m
U	Leveling angle	6°	6°

General		U.S.	Metric
Bucket			
	Width	12-18 in	305-460 mm
	Capacity	1.7-2.6 ft^3	0.05-.07 m^3
Backhoe weight with 12" (305 mm) bucket		2150 lb	975 kg
Lift capacity, boom over end and swing arc, SAE*			
	@ 48" (1.2 m)	1140 lb	517 kg
	@ ground level	1080 lb	490 kg
	@ 72" (1.8 m)	1090 lb	494 kg
Lift capacity, dipperstick over end and swing arc, SAE*			
	@ 53" (1.4 m)	1749 lb	793 kg
	@ 72" (1.8 m)	2020 lb	916 kg
Swing arc		170°	170°
Digging force			
	Using bucket cylinder	6500 lb	29 kN
	Using dipperstick cylinder	3600 lb	16 kN

*Lift capacities are for a stationary machine supported by stabilizers.

https://truckmanualshub.com/

RC80 Reel Carrier

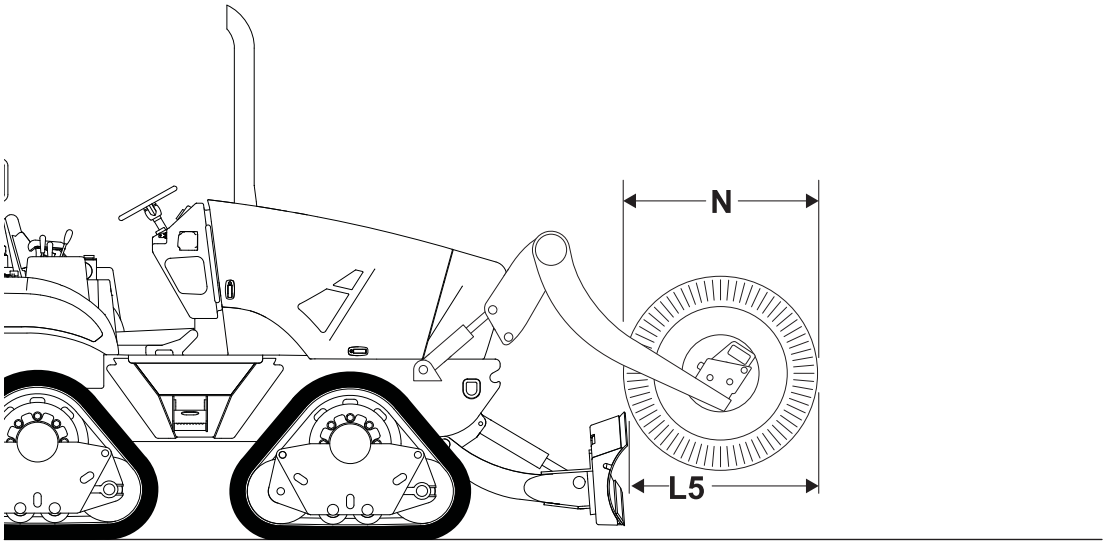

t33om061w.eps

Dimensions		U.S.	Metric
L5	Distance from backfill blade to outside edge of reel carrier with maximum diameter reel	73.5 in	1.9 m
N	Maximum reel diameter	84 in	2.1 m
	Internal width	54 in	1.2 m
	Capacity	2000 lb	907 kg
	Attachment weight	1040 lb	472 kg

https://truckmanualshub.com/

https://truckmanualshub.com/

Support

Procedure

Notify your dealer immediately of any malfunction or failure of Ditch Witch equipment.

Always give model, serial number, and approximate date of your equipment purchase. This information should be recorded and placed on file by the owner at the time of purchase.

Return damaged parts to dealer for inspection and warranty consideration if in warranty time frame.

Order genuine Ditch Witch replacement or repair parts from your authorized Ditch Witch dealer. Use of another manufacturer's parts may void warranty consideration.

Resources

Publications

Contact your Ditch Witch dealer for publications and videos covering safety, operation, service, and repair of your equipment.

Ditch Witch Training

For information about on-site, individualized training, contact your Ditch Witch dealer.

https://truckmanualshub.com/

Warranty

Ditch Witch Equipment and Replacement Parts Limited Warranty Policy

Subject to the limitation and exclusions herein, free replacement parts will be provided at any authorized Ditch Witch dealership for any Ditch Witch equipment or parts manufactured by The Charles Machine Works, Inc. (CMW) that fail due to a defect in material or workmanship within one (1) year of first commercial use (Exception: 2 years for all SK5 attachments). Free labor will be provided at any authorized Ditch Witch dealership for installation of parts under this warranty during the first year following "initial commercial" use of the serial-numbered Ditch Witch equipment on which it is installed. The customer is responsible for transporting their equipment to an authorized Ditch Witch dealership for all warranty work.

Exclusions from Product Warranty

- All incidental or consequential damages.
- All defects, damages, or injuries caused by misuse, abuse, improper installation, alteration, neglect, or uses other than those for which products were intended.
- All defects, damages, or injuries caused by improper training, operation, or servicing of products in a manner inconsistent with manufacturer's recommendations.
- All engines and engine accessories (these are covered by original manufacturer's warranty).
- Tires, belts, and other parts which may be subject to another manufacturer's warranty (such warranty will be available to purchaser).
- ALL IMPLIED WARRANTIES NOT EXPRESSLY STATED HEREIN, INCLUDING ANY WARRANTY OF FITNESS FOR A PARTICULAR PURPOSE AND MERCHANTABILITY.

IF THE PRODUCTS ARE PURCHASED FOR COMMERCIAL PURPOSES, AS DEFINED BY THE UNIFORM COMMERCIAL CODE, THEN THERE ARE NO WARRANTIES WHICH EXTEND BEYOND THE FACE HEREOF AND THERE ARE NO IMPLIED WARRANTIES OF ANY KIND WHICH EXTEND TO A COMMERCIAL BUYER. ALL OTHER PROVISIONS OF THIS LIMITED WARRANTY APPLY INCLUDING THE DUTIES IMPOSED.

Ditch Witch products have been tested to deliver acceptable performance in most conditions. This does not imply they will deliver acceptable performance in all conditions. Therefore, to assure suitability, products should be operated under anticipated working conditions prior to purchase.

Defects will be determined by an inspection within thirty (30) days of the date of failure of the product or part by CMW or its authorized dealer. CMW will provide the location of its inspection facilities or its nearest authorized dealer upon inquiry. CMW reserves the right to supply remanufactured replacements parts under this warranty as it deems appropriate.

Extended warranties are available upon request from your local Ditch Witch dealer or CMW.

Some states do not allow exclusion or limitation of incidental or consequential damages, so above limitation of exclusion may not apply. Further, some states do not allow exclusion of or limitation of how long an implied warranty lasts, so the above limitation may not apply. This limited warranty gives product owner specific legal rights and the product owner may also have other rights which vary from state to state.

For information regarding this limited warranty, contact CMW's Product Support department, P.O. Box 66, Perry, OK 73077-0066, or contact your local Ditch Witch dealer.

First version: 1/91; Latest version: 7/05

A Note To Ditch Witch Equipment Owners:

If your equipment was purchased through a Ditch Witch dealer, there is no need to read further.

However, if you purchased from any other source, please fill out the form on the reverse side and return it to us.

This will enable you to receive updates on this equipment as well as information on new products of interest.

Thanks for using Ditch Witch equipment.

(Please Fold Along This Line And Seal At Bottom With Tape)

NO POSTAGE NECESSARY IF MAILED IN THE UNITED STATES

BUSINESS REPLY MAIL

FIRST CLASS PERMIT NO 23 PERRY OKLAHOMA

POSTAGE WILL BE PAID BY

The Charles Machine Works, Inc.
P.O. Box 66
Perry, Oklahoma 73077-9989

A Note To Ditch Witch Equipment Owners:

If your equipment was purchased through a Ditch Witch dealer, there is no need to read further.

However, if you purchased from any other source, please fill out the form on the reverse side and return it to us.

This will enable you to receive updates on this equipment as well as information on new products of interest.

Thanks for using Ditch Witch equipment.

(Please Fold Along This Line And Seal At Bottom With Tape)

NO POSTAGE NECESSARY IF MAILED IN THE UNITED STATES

BUSINESS REPLY MAIL

FIRST CLASS PERMIT NO 23 PERRY OKLAHOMA

POSTAGE WILL BE PAID BY

The Charles Machine Works, Inc.
P.O. Box 66
Perry, Oklahoma 73077-9989

https://truckmanualshub.com/

Ditch Witch® Registration Card

Please Type or Print All Information

Purchaser's Company Name

Attention

Street Address or P.O. Box

City County

State Zip Nation

( )

Phone Number With Area Code

Model Serial Number

Attachments/Accessories Serial Numbers

Attachments/Accessories Serial Numbers

Attachments/Accessories Serial Numbers

Name of Ditch Witch Dealership

Your Signature

Ditch Witch® Registration Card

Please Type or Print All Information

Purchaser's Company Name

Attention

Street Address or P.O. Box

City County

State Zip Nation

( )

Phone Number With Area Code

Model Serial Number

Attachments/Accessories Serial Numbers

Attachments/Accessories Serial Numbers

Attachments/Accessories Serial Numbers

Name of Ditch Witch Dealership

Your Signature

https://truckmanualshub.com/

https://truckmanualshub.com/

Service Record

Service Performed	Date	Hours

https://truckmanualshub.com/

Service Performed	Date	Hours