https://truckmanualshub.com/

Model 387
Instrument System
Service Manual

Document Number 072-40245

Rev. D

AMETEK®
DIXSON

https://truckmanualshub.com/

Every effort has been made to keep the information in this document current and accurate as of the date of publication or revision. However, no guarantee is given or implied that the document is error-free or that it is accurate with regard to any specification. AMETEK Dixson reserves the right to modify product designs and specifications without notice.

Revision Table

Revision	Date	Description
	01/27/99	Initial release.
A	05/14/99	Changed all occurrences of “2100” to “387”, and of “self test” to “initialization”; Fig. 5-22, corrected pin designations on J3 illustration.
B	09/28/99	Added Chapter 6, “Using the Handheld Diagnostic Tool"; removed all references to PTM/VTM replacement and to the ABS system; improved Pyrometer troubleshooting instructions; updated Warning Messages tables to reflect current configuration; various other updates and changes resulting from Engineering Dept. review.
C	03/01/04	Updated and renamed Figure 5-16.
D	01/01/07	Removed contact information.

https://truckmanualshub.com/

Table of Contents

1 Introduction 1-1

1.1 Purpose and Scope . . . 1-1
1.2 How To Use This Manual . . . 1-1
1.3 System Components . . . 1-2
1.4 What Makes the Model 387 Instrument System Different . . . 1-2

2 Operation 2-1

2.1 Activating the Instrumentation . . . 2-1
2.2 Select/Reset Switch . . . 2-1
2.3 Speedometer with Integral Message Center . . . 2-1
2.4 Using the Speedometer Message Center . . . 2-2
2.4.1 Clock Operation . . . 2-2
2.4.2 Trip Odometer Operation . . . 2-3
2.4.3 Clock Alarm Operations . . . 2-3
2.5 Warning Alarms . . . 2-3
2.5.1 Red Warning LEDs . . . 2-3
2.5.2 Vehicle Safety Warning Messages . . . 2-4
2.5.3 System Fault Messages . . . 2-4

3 Functional Description 3-1

3.1 The Interface Module . . . 3-2
3.1.1 Pressure and Vacuum Inputs . . . 3-2
3.1.2 Transducer Modules . . . 3-3
3.1.2.1 Pressure Transducer Module . . . 3-3
3.1.2.2 Vacuum Transducer Module (VTM) . . . 3-4
3.1.3 Vacuum/Pressure and Pressure/Vacuum Transducer Modules . . . 3-4
3.2 J1708 Data Bus . . . 3-4
3.3 Electronic Control Units . . . 3-5
3.4 Speedometer with Integrated Message Center . . . 3-5
3.4.1 Select and Reset Switches . . . 3-6
3.4.2 Power Take-Off (PTO) Input . . . 3-6
3.4.3 Two-Speed Axle Input . . . 3-6
3.5 Diagnostic Capabilities. . . . 3-6
3.5.1 Power-On Initialization . . . 3-6
3.5.2 Diagnostic Connector . . . 3-7
3.6 Private Data Bus . . . 3-7
3.6.1 Five-Wire Cable Assemblies . . . 3-7
3.6.2 Two-Inch Gauges . . . 3-7
3.6.3 J1708 Data Bus and Private-Bus-Driven Gauges . . . 3-8

https://truckmanualshub.com/

3.6.4 Tachometer 3-8
3.6.4.1 Ammeter 3-9
3.6.4.2 Voltmeter 3-10
3.6.4.3 Pyrometer 3-11
3.6.4.4 Transmission and Axle Temperature Gauges 3-12
3.6.4.5 Fuel Level 3-13
3.7 Backlighting 3-13

4 Service Procedures 4-1

4.1 Some Important Dos and Don'ts 4-1
4.2 Replacing the Speedometer and Tachometer 4-1
4.3 Servicing the Two-Inch Gauges 4-2
4.3.1 Removal and Reinstallation 4-2
4.3.2 Disassembling a Two-Inch Gauge 4-3
4.3.3 Reassembling a Two-Inch Gauge 4-4
4.4 Reprogramming a Two-Inch Gauge 4-6
4.5 Servicing the Interface Module 4-6
4.5.1 Removing the Interface Module 4-6
4.5.2 Reinstalling the Interface Module 4-6
4.5.3 Reprogramming the Interface Module 4-6
4.6 Spare Parts Listing 4-7

5 Troubleshooting Procedures 5-1

5.1 Required Test Equipment 5-1
5.2 Troubleshooting Procedure Start Point 5-2
5.2.1 The Initialization 5-3
5.3 Troubleshooting Procedures for Two-Inch Gauges 5-4
5.3.1 Two-Inch Gauge Fails Initialization, No Pointer Movement, LED Never Lights 5-5
5.3.2 Two-Inch Gauge Passes Initialization but LED Flashes 5-6
5.3.2.1 Air and Fuel Pressure Gauges 5-7
5.3.2.2 Temperature Gauges 5-9
5.3.2.3 J1708 Data Bus Gauges 5-11
5.3.2.4 Vacuum Gauges 5-11
5.3.2.5 Voltmeter Gauge 5-13
5.3.2.6 Ammeter Gauge 5-14
5.3.2.7 Fuel Level Gauge 5-16
5.3.2.8 Pyrometer 5-17
5.4 Troubleshooting Procedures for the SMC 5-19
5.4.1 SMC Pointer Never Moves 5-20
5.4.2 Speedometer and Odometers Inaccurate 5-21
5.4.3 Speedometer Accurate, Odometer Inaccurate 5-21
5.4.4 Odometer Advances When PTO Engaged 5-22
5.4.5 Speedometer Does Not Change Speed When Two-Speed Axle Engaged 5-23
5.4.6 Engine Hours Do Not Advance 5-24

https://truckmanualshub.com/

5.5 One or More Gauge Pointers Sweep 5-25
5.5.1 A J1708 Data Bus Gauge Pointer Sweeps 5-26
5.5.2 A Non-J1708 Data Bus Gauge Pointer Sweeps 5-26
5.5.3 Several (But Not All) Gauge Pointers Sweep 5-27
5.5.4 SMC Pointer and All J1708 Data Bus Gauge Pointers Sweep 5-27
5.5.5 All J1708 Data Bus Gauge Pointers (Except the SMC Pointer) Sweep 5-29
5.5.6 All Gauge Pointers Except the SMC Pointer Sweep 5-30
5.5.7 Only the SMC Pointer Sweeps, and No Messages Appear 5-32
5.5.8 SMC Pointer Sweeps, and a NO DATA Message Appears. 5-32
5.6 Warning Messages 5-33
5.7 Backlighting Problems 5-34
5.7.1 Two-Inch Gauges 5-34
5.7.1.1 One Gauge Has No Backlighting 5-34
5.7.1.2 More Than One Gauge Has No Backlighting 5-34
5.7.1.3 All Gauges Plus Tachometer Have No Backlighting.....5-35
5.7.2 SMC Has No Backlighting 5-36
5.8 Select/Reset Switches not Working 5-36
5.9 Wiring Diagrams 5-38

6 Using the Handheld Diagnostic Tool 6-1
6.1 Care and Cleaning 6-1
6.2 Description 6-2
6.3 Reading Engine ECU Gauge Data 6-3
6.3.1 Procedure. 6-3
6.4 Reading Private Bus Gauge Data. 6-6
6.4.1 Procedure. 6-6
6.5 Viewing Configuration Data 6-8
6.5.1 Procedure. 6-8
6.6 Programming and Verifying Ports 5A and 5B 6-10
6.6.1 Procedure 6-10
6.7 Programming the Main Transmission Temperature Warning LED 6-13
6.7.1 Procedure 6-13
6.8 HDT Spare Parts 6-16

https://truckmanualshub.com/

AMETEK®
DIXSON

List of Illustrations

Figure 1-1 Panel and Interface Module 1-2
Figure 2-1 System Initialization 2-1
Figure 2-2 Speedometer Message Center Displays 2-2
Figure 3-1 Instrumentation Block Diagram 3-1
Figure 3-2 387 System Interface Module 3-2
Figure 3-3 Pressure Circuit 3-3
Figure 3-4 Pressure, Vacuum, and Pressure/Vacuum Transducer Modules 3-4
Figure 3-5 387 Speedometer with Message Center 3-5
Figure 3-6 System Initialization 3-6
Figure 3-7 J1708 Data Bus Gauges 3-8
Figure 3-8 Ammeter Circuit 3-9
Figure 3-9 Voltmeter Circuit 3-10
Figure 3-10 Pyrometer Circuit 3-11
Figure 3-11 Axle and Transmission Temperature Circuits 3-12
Figure 3-12 Fuel Level Circuit 3-13
Figure 4-1 Two-Inch Gauge Removal and Reinstallation 4-3
Figure 4-2 Scaleplate Alignment 4-5
Figure 4-3 Two-Inch Gauge Disassembly 4-5
Figure 4-4 Removing the Interface Module 4-6
Figure 5-1 Gauge Initialization 5-3
Figure 5-2 Checking 2-inch Gauge Power 5-5
Figure 5-3 Checking Pressure Gauges with Standard Test Gauge 5-7
Figure 5-4 Checking Temperature Sensor Wiring 5-10
Figure 5-5 Testing the Air and Fuel Restriction Gauges 5-12
Figure 5-6 Testing the Voltmeter Gauge 5-13
Figure 5-7 Testing the Ammeter Gauge 5-15
Figure 5-8 Testing the Fuel Level Gauges 5-16
Figure 5-9 Testing the Pyrometer 5-17
Figure 5-10 Testing the Pyrometer (continued) 5-18
Figure 5-11 Troubleshooting SMC Power and Ground 5-20
Figure 5-12 Troubleshooting the PTO (Power Take-Off) Input 5-22
Figure 5-13 Troubleshooting the Two-Speed Axle Input 5-23
Figure 5-14 SMC Pointer and All J1708 Data Bus Gauge Pointers Sweep 5-28
Figure 5-15 All J1708 Data Bus Gauge Pointers (except SMC) Sweep 5-29
Figure 5-16 Checking Power to the Interface Module 5-31
Figure 5-17 Checking Private Bus Wire Continuity 5-31
Figure 5-18 Gauge Backlighting Problem (except SMC) 5-35
Figure 5-19 SMC Backlighting Problem 5-36
Figure 5-20 Troubleshooting the Select and Reset Switches 5-37
Figure 5-21 Instrumentation Harness Layout 5-38
Figure 5-22 Gauge Connector Wiring 5-39

https://truckmanualshub.com/

Figure 5-23 Instrumentation Connector Pinout Diagram 5-40
Figure 6-1 Hand-Held Diagnostic Tool. 6-2
Figure 6-2 Connecting the HDT to the Diagnostic Connector. 6-3
Figure 6-3 Connecting the HDT to the Private Bus 6-6

List of Tables

Table 2-1 Red Warning LEDs 2-5
Table 2-2 Vehicle Safety Warning Messages 2-6
Table 4-1 387 System Spare Parts 4-7
Table 5-1 Troubleshooting Starting Point 5-2
Table 5-2 Two-Inch Gauge Problems. 5-4
Table 5-3 Problems Indicated by Flashing Gauge LEDs 5-6
Table 5-4 SMC Problems 5-19
Table 5-5 Problems Indicated by Sweeping Pointer(s) 5-25
Table 5-6 Warning Messages 5-33
Table 5-7 System Fault Messages 5-33
Table 6-1 HDT Spare Parts 6-16

https://truckmanualshub.com/

Notes:

https://truckmanualshub.com/

1 Introduction

1.1 Purpose and Scope

The purpose of this manual is to provide Peterbilt with the knowledge required to produce their own repair procedures. This manual contains the technical repair information necessary to diagnose and repair the Model 387 Instrument System (also referred to as simply the "instrumentation"). The information in this manual is not proprietary and can be used as Peterbilt sees fit.

The manual describes how to operate, service, and troubleshoot the instrumentation installed in vehicles that broadcast engine- and speed-related information over a public data bus (the SAE J1708 data bus). For information about the vehicle's Electronic Control Unit(s), wiring diagrams, the SAE J1708 data bus, external sensors and other components that are not part of the instrumentation, please refer to the appropriate vehicle service documentation.

1.2 How To Use This Manual

The manual is divided into six chapters:

- **Introduction** - Contains a brief introduction to the product and to the manual itself.
- **Operation** - A complete operator's manual. Written for the vehicle operator, this chapter describes how to use the instrumentation and how to interpret the information it presents. If you are going to operate the vehicle, you should read and understand the information in this chapter.
- **Functional Description** - Describes the components that make up the instrumentation and how they communicate with other systems in the vehicle. An understanding of the information in this chapter will help you diagnose and find problems in the instrumentation. If you are going to service the instrumentation, you should read and understand the information in this chapter.
- **Service** - Describes how to remove, disassemble, and reinstall the components of the instrumentation. It contains a spare parts list, and other important information. Do not service the instrumentation until you have read and understand the information in this chapter.
- **Troubleshooting** - Provides detailed troubleshooting information that will help you identify faulty components within the instrumentation.
- **Using the Handheld Diagnostic Tool (HDT)** - Describes the operation of the handheld diagnostic tool used to help diagnose problems with the instrumentation.

https://truckmanualshub.com/

1.3 System Components

The instrumentation consists of a 3⅜-inch speedometer with an integrated message center, a 3⅜-inch tachometer, several 2-inch gauges, a Select/Reset switch, and a remotely mounted Interface Module. Figure 1-1 shows how a typical system with four 2-inch gauges might look, along with an Interface Module.

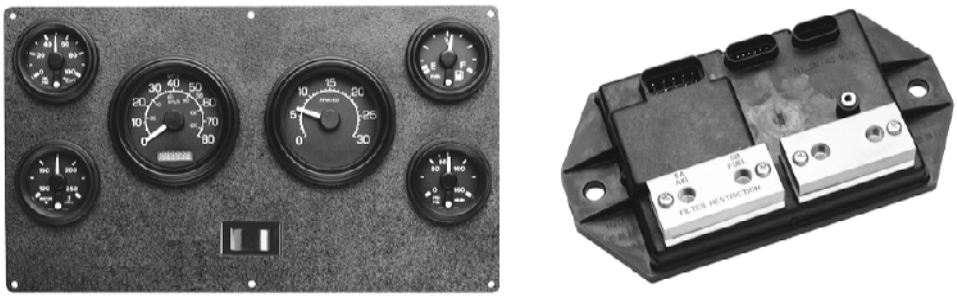

Figure 1-1 *Panel and Interface Module*

1.4 What Makes the Model 387 Instrument System Different

In conventional instrumentation, each electrical gauge is connected to a sensor by a signal wire and a return wire. Additional wires for illumination, power, ground and warning lights could total as many as six wires per gauge. Thus, a panel with 10 gauges plus a speedometer and a tachometer could require up to 60 separate wires. By comparison, the Model 387 Instrument System uses a single 5-wire cable to connect all the gauges. This significantly reduces the number of wires behind the instrument panel and makes the system much easier to troubleshoot and service.

The instrumentation is easy to repair. The 2-inch gauges can be disconnected, removed from the panel, disassembled, reassembled, and reinstalled without tools, and they are maintenance-free.

With the exception of the scaleplate, all 2-inch gauges are identical. Each scaleplate is coded and when installed in the gauge, configures the gauge to the function shown on the scaleplate. This reduces the spare parts inventory by requiring only a few blank gauges and a supply of inexpensive scaleplates rather than a complete spare gauge of each type.

The instrumentation can also display warning messages and audible alarms, and has built-in diagnostic capabilities to help diagnose problems.

https://truckmanualshub.com/

2 Operation

2.1 Activating the Instrumentation

Turning on the ignition activates the instrumentation and starts the initialization described in Figure 2-1.

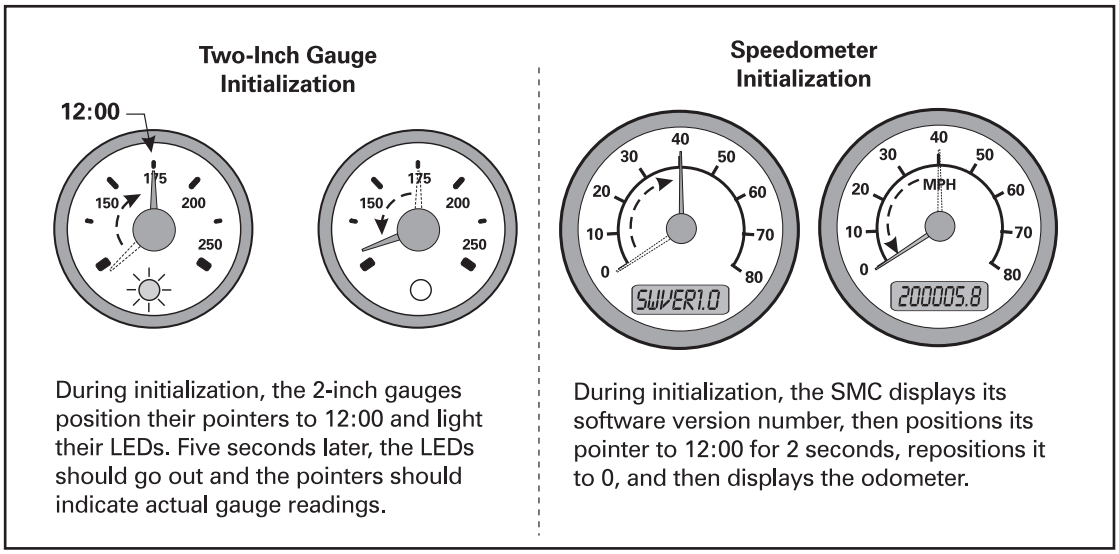

Figure 2-1 *System Initialization*

Service the vehicle if any of the following conditions occur after the initialization:

- The speedometer or tachometer pointer sweeps back and forth in a windshield wiper motion.
- A 2-inch gauge pointer sweeps back and forth in a windshield wiper motion and stops at a 10:00 position with its red LED on.
- A 2-inch gauge pointer stays at a 7:00 position and its red LED flashes.
- A 2-inch gauge pointer goes to and remains at a 12:00 position with its red LED on.

2.2 Select/Reset Switch

A Select/Reset switch on the dash allows you to select, set, and reset message center displays. It also allows you to scroll through active system warning messages.

2.3 Speedometer with Integral Message Center

The speedometer and its message center together are called the SMC. The SMC normally displays road speed and the odometer reading. The SMC can also display other functions as shown in Figure 2-2.

https://truckmanualshub.com/

To view a different function, press and release the Select switch until the desired function appears.

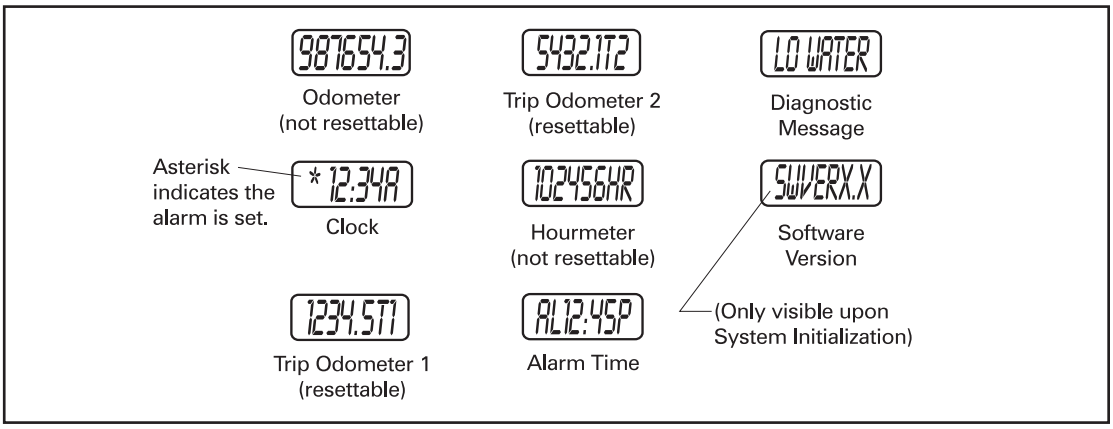

Figure 2-2 *Speedometer Message Center Displays*

The message center goes into a “sleep” mode (i.e. goes blank) when the ignition is turned off. Each time you press the Select switch, the message center is “awakened” for 10 seconds. This allows you to scroll through the different functions.

If a warning alarm is triggered, a warning message will override all other displays until the condition that caused the warning alarm is corrected. Some warning alarms include an audible warning. Warning alarms are described in detail in Section 2.5.

2.4 Using the Speedometer Message Center

2.4.1 Clock Operation

To display the clock time, press and release the Select switch until the clock is displayed.

To change the clock time -

1. Press and release the Reset switch. The Hours display will flash, indicating the value can be changed.
2. Press the Select switch to change the Hours value, or press the Reset switch to accept the displayed value and enable the Minutes value to be changed. To change from AM to PM, scroll through 12 hours.
3. When the Minutes value is flashing, press the Select switch to change the value, or press the Reset switch to accept the displayed value and exit the Change Time function. Scrolling the Minutes value past 59 will not change the Hours value.

https://truckmanualshub.com/

2.4.2 Trip Odometer Operation

To display the Trip 1 or 2 Odometer, press and release the Select switch until **XXXXT1** or **XXXXT2** is displayed (XXXX = the actual mileage reading).

To reset a trip odometer to zero -

1. Display the odometer to be reset (Trip 1 or Trip 2)
2. Press and hold the Reset switch for 3 seconds.

2.4.3 Clock Alarm Operations

To display the alarm time, press and release the Select switch until an **AL** appears along with a time value.

To change the alarm time -

1. Press and release the Reset switch. The Hours digits will begin to flash, indicating the values can be changed.
2. Press the Select switch to change the Hours value, or press the Reset switch to accept the displayed value and enable the Minutes value to be changed. To change from AM to PM, scroll through 12 hours.
3. When the Minutes value is flashing, press the Select switch to change the value. Scrolling the Minutes value past 59 will not change the Hours value.
4. Press the Reset switch to accept the displayed value and exit the Change Alarm Time function. This also activates the alarm and an asterisk (*) will appear in the first digit of the Clock display to indicate the alarm is on.

To activate or deactivate the alarm tone, from any display, press and hold the Select switch longer than three seconds.

To silence the alarm tone while it is sounding, press and release the Select switch while the alarm is sounding.

2.5 Warning Alarms

A warning alarm indicates that some condition in the vehicle requires attention. A warning alarm can be indicated in the following ways:

- Red warning LEDs in the 2-inch gauges
- Vehicle safety warning messages in the SMC
- System fault warning messages in the SMC

A warning alarm will continue until the condition that caused it is corrected. At that time, the SMC will display a Reset message for 10 seconds, and the warning indications will cease. Pressing the Reset switch clears the Reset message sooner.

2.5.1 Red Warning LEDs

Table 2-1 on page 2-5 lists the conditions which light the red warning LEDs. Some of the LEDs light when the Interface Module receives the appropriate message

https://truckmanualshub.com/

over the J1708 data bus. Other LEDs light as determined by Interface Module programming, and some warning LEDs are not used. Column 3 lists the condition that causes the warning LED to light.

You cannot dismiss or override red warning LED indications. A red warning LED will remain on until the condition causing it is corrected.

Note - *Not all gauges listed are currently available.*

2.5.2 Vehicle Safety Warning Messages

Messages advising of unsafe operating conditions can appear in the SMC. Examples are a major engine or transmission problem (low oil pressure, high temperature, low coolant level) and a problem with the brake safety (low air pressure). An audible alarm will accompany these warning messages.

Vehicle safety warning messages are listed in Table 2-2 on page 2-6. Column 1 shows the warning message as it appears in the SMC, and column 2 identifies its meaning. Column 3 identifies the gauge whose red warning LED lights. Column 4 shows the associated Reset message.

You can *temporarily* override vehicle safety warning messages two ways:

1. Press the Reset switch for 3 seconds. This will dismiss the message and silence the buzzer. If an active alarm still exists, the message and buzzer will return.
2. Press the Reset switch for 1 second, then press the Select switch to display any other function. The warning message will disappear for 60 seconds. It will then reappear and remain until the condition causing it is corrected. The audible alarm will continue to sound.

2.5.3 System Fault Messages

A system fault message indicates a problem exists with the Model 387 Instrument System that does not directly affect vehicle safety. These occur when the ignition is first switched on. The messages are:

IM CAL, IM CFG, IM DIAG, IM LIN, IM SLFT, ODO ERR, NO DATA, SMC MEM.

System fault messages are detected by the Interface Module or the SMC. No gauge LED is associated with them, no audible warning will sound, and no Reset message will appear.

The NO DATA message can occur any time, not just during System Initialization.

https://truckmanualshub.com/

Gauge	Indication When Led Is On	Activating Condition
Air Cleaner Restriction	Clogged	More than 25" of water (H2O)
Air Tank 1	Too low	Less than 66 psi
Air Tank 2	Too low	Less than 66 psi
Air Starter Air Pressure	No indication	Not activated
Ammeter	Incorrect discharge rate	>25 amps when RPM <1200, or >2 amps when RPM >1200
Auxiliary Transmission Oil Temp	Too high	Higher than 230° F
Brake Saver Application Air Pressure	No indication	Not activated
Brake Saver Oil Temp	Too high	Higher than 230° F
Center Drive Axle Oil Temp	Too high	Higher than 230° F
Engine Load	No indication	Not activated
Engine Oil Pressure	Too low	Engine ECU
Engine Oil Temperature	Too high	Engine ECU
Front Drive Axle Oil Temp	Too high	Higher than 230° F
Fuel Filter Restriction	Clogged	More than 7" of mercury
Fuel Level (left, right, or main tank)	Low fuel	⅛ tank or less
Fuel Pressure	No indication	Not activated
Load Gauge Air Pressure	No indication	Not activated
Main Transmission Oil Temp	Too high	Programmable
Manifold Boost	No indication	Not activated
Pusher Suspension Air Pressure	No indication	Not activated
Pyrometer	Too high	Higher than 1200° F
Tractor Brake Applic. Air Pressure	No indication	Not activated
Rear Drive Axle Oil Temp	Too high	Higher than 230° F
Tag Suspension Air Pressure	No indication	Not activated
Trailer Brake Applic. Air Pressure	No indication	Not activated
Voltmeter	Too low or too high	>15 volts or <10 volts
Engine Coolant Temp	Too high	Engine ECU
6X6 Front Drive Axle Oil Temp	Too high	Higher than 230° F
Air Deflector Position	No indication	Not activated
Transfer Case Oil Temp	Too high	Higher than 230° F

Table 2-1 *Red Warning LEDs*

https://truckmanualshub.com/

Warning Message	Condition	Associated Gauge LED	Reset Message
H2O TMP	Coolant temperature high	Water Temperature	H2OT OK
LOW AIR1	Air tank #1 pressure low	Primary Air Pressure	AIR1 OK
LOW AIR2	Air tank #2 pressure low	Secondary Air Pressure	AIR2 OK
OILPRES	Engine oil pressure low	Engine Oil Pressure	OIL OK
OIL TEMP	Engine oil temperature high	Engine Oil Temperature	OILT OK
TRANTMP	Main transmission oil temperature high	Main Transmission Oil Temperature	TRAN OK
CAUTION! *If a message that is not listed in this table appears, do not ignore it. The vehicle should be serviced regardless of the message that appears.*			

Table 2-2 *Vehicle Safety Warning Messages*

https://truckmanualshub.com/

3 Functional Description

This section describes the instrumentation on a functional level. It is not necessary to read this section to troubleshoot and service the system. It is intended to provide a more detailed understanding of how the system works. Figure 3-1 illustrates the major components and signal flow.

Note - *Throughout this manual, the terms "public data bus" or "public bus" refer specifically to the J1708 data bus.*

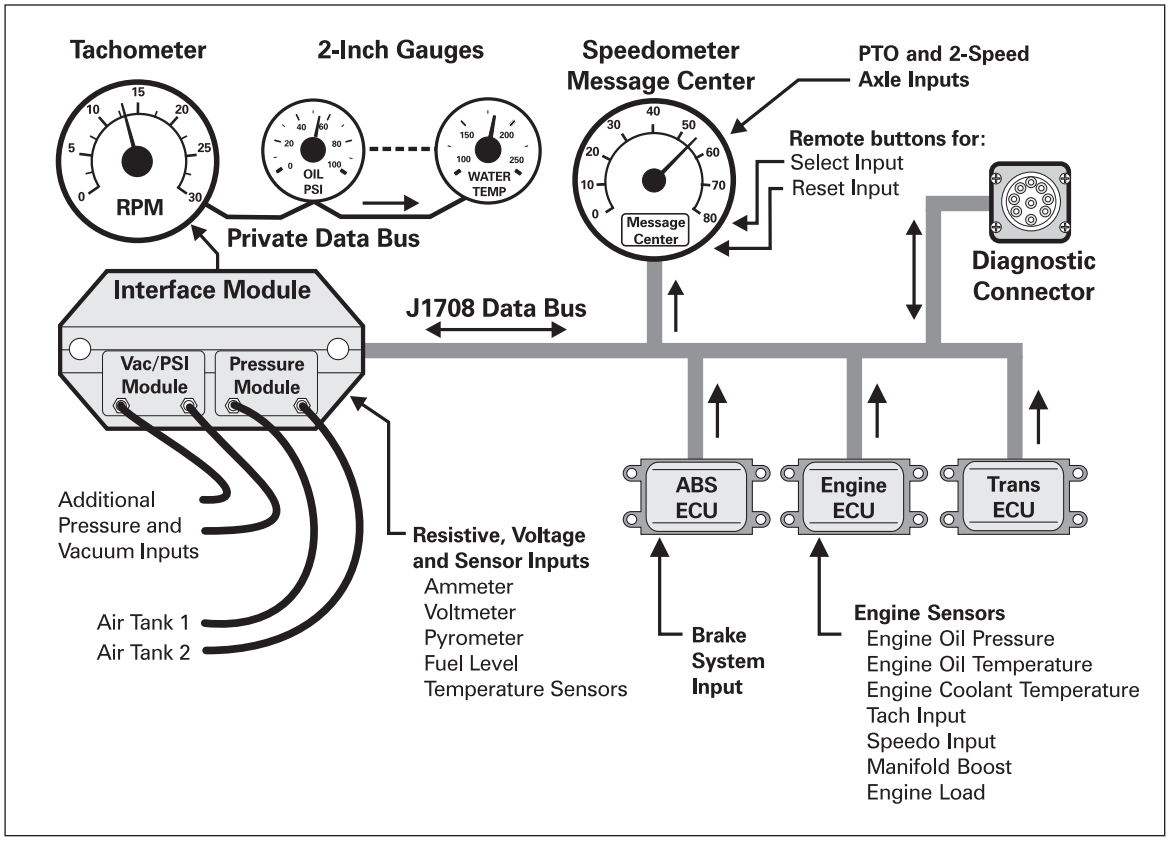

Figure 3-1 *Instrumentation Block Diagram*

Caution! Never store gauges face down. The gauge meter movements use an oil damping suspension. If a gauge is left face-down longer than 15 minutes, the oil may begin to run out. This causes inaccurate gauge readings, premature gauge failure, and voids the warranty.

https://truckmanualshub.com/

3.1 The Interface Module

The Interface Module controls the instrumentation by collecting information from various sources and converting that information into gauge pointer information which it then sends to the gauges. It is an environmentally sealed unit and it is usually mounted beneath the cab and against the frame rail. It is connected to the J1708 data bus, and to switches, sensors and pressure/vacuum hoses throughout the vehicle.

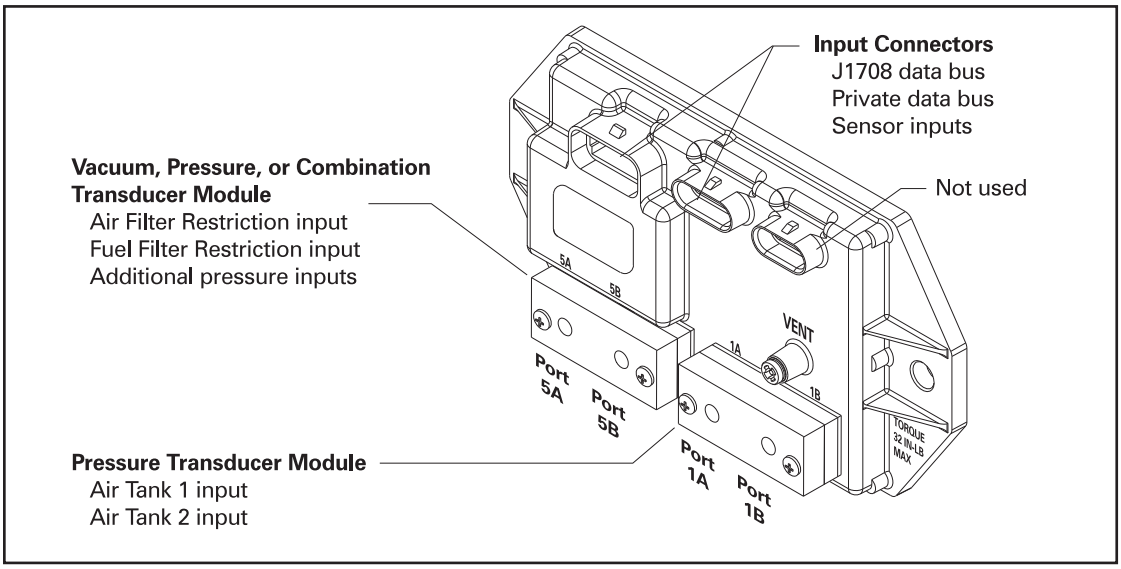

Figure 3-2 *387 System Interface Module*

All gauge and display information is gathered by the Interface Module except:

- **Road Speed and Engine Hours** - Road Speed and Engine Hours messages are sent directly to the SMC over the J1708 data bus. The SMC also uses road speed messages to compute mileage and display it on the odometers.
- **Select and Reset Input** - These switched inputs are applied directly to the SMC.
- **Clocks** - Clock and Alarm Clock information is generated within the SMC.
- **Gauge Backlighting** - Power for the gauge backlighting comes from an external dimming control and completely bypasses the Interface Module.

3.1.1 Pressure and Vacuum Inputs

Hose connections to the transducer modules provide pressure or vacuum to the Interface Module. The Interface Module converts the pressure and vacuum signals to data and places that data on the private data bus to drive the pressure gauges. Connections are shown in Figure 3-3.

https://truckmanualshub.com/

If an Air Filter Restriction gauge is present, its input must be connected to port 5A. If a Fuel Filter Restriction gauge is present, its input must be connected to port 5B. Other pressure inputs are connected to port 5A or 5B, whichever is available depending upon whether an Air Filter or a Fuel Filter Restriction gauge is present.

Whenever the Interface Module is replaced, you must reprogram it recognize the pressure gauges. You do not need to reprogram it when replacing defective gauges.

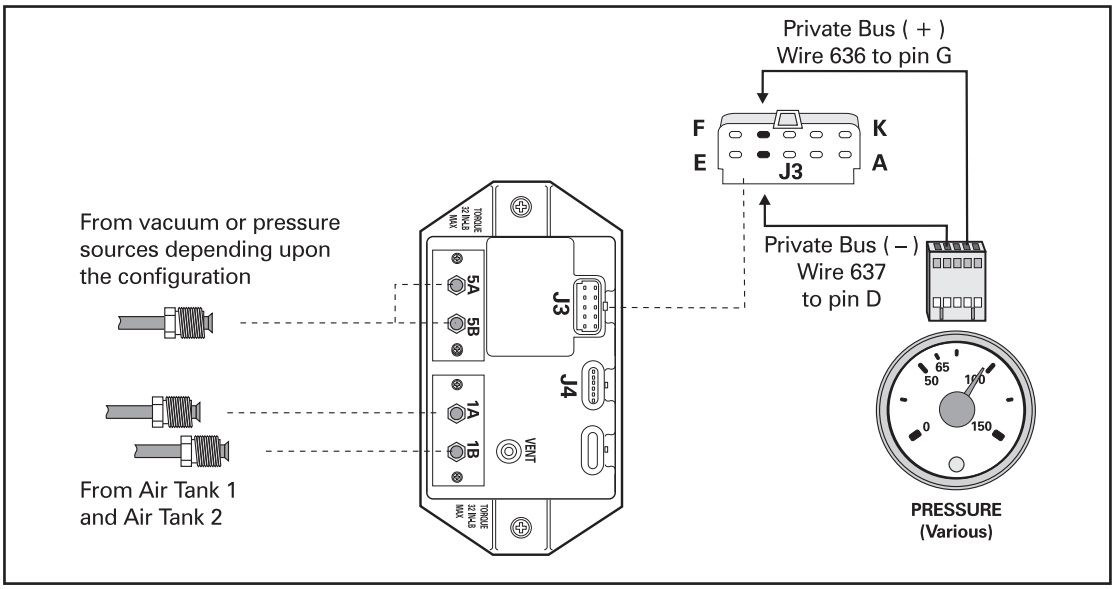

Figure 3-3 *Pressure Circuit*

3.1.2 Transducer Modules

Four different transducer modules are available. All modules consist of pressure or vacuum transducers (or both) mounted in a common thermoplastic base inside a metal housing. Each transducer converts pressure (or vacuum) into a DC voltage that can be used by the Interface Module.

Transducer modules cannot be replaced in the field.

3.1.2.1 Pressure Transducer Module

A pressure transducer module (PTM) contains two identical pressure transducers, each capable of handling up to 150 psi. It can be connected to air, fuel, or oil pressure inputs. It is mounted at port 1A/1B and connected to Air Tank 1 and Air Tank 2 air pressure. A second PTM may also be mounted at port 5A/5B and connect to additional pressure sources. See Figure 3-4 on page 3-4.

https://truckmanualshub.com/

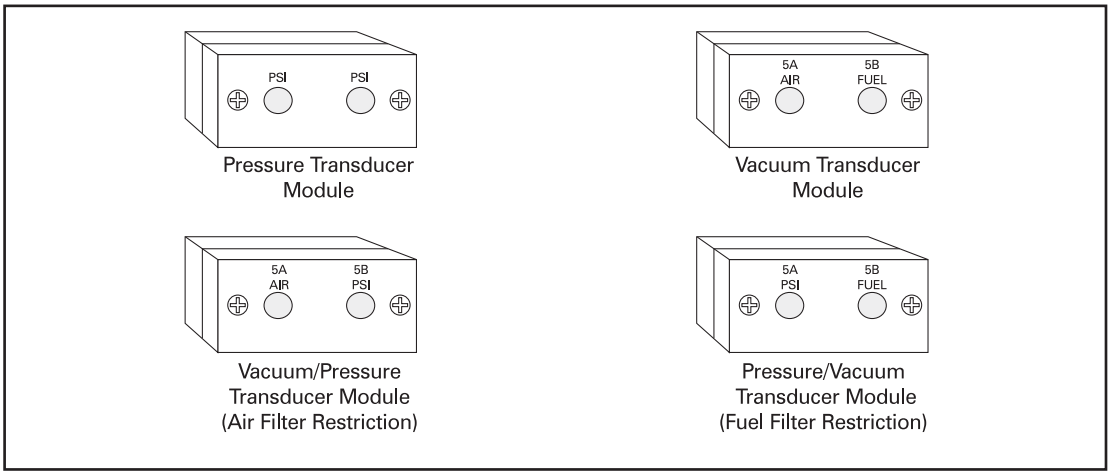

Figure 3-4 *Pressure, Vacuum, and Pressure/Vacuum Transducer Modules*

3.1.2.2 Vacuum Transducer Module (VTM)

A vacuum transducer module (VTM) contains two vacuum transducers. The VTM is used for the Air Filter Restriction and Fuel Filter Restriction gauges. The VTM must be mounted at port 5A/5B only.

The vacuum transducers are *not* identical. The Air Filter Restriction end must go to port 5A, and the Fuel Filter Restriction end must go to port 5B as shown in Figure 3-4.

3.1.3 Vacuum/Pressure and Pressure/Vacuum Transducer Modules

Two types of combination modules are available. One type contains a pressure transducer and an Air Restriction transducer; the other type contains a pressure transducer and a Fuel Filter Restriction transducer. Combination modules are *not* interchangeable and are mounted at port 5A/5B. If used, the Air Filter Restriction end *must* go to port 5A, and the Fuel Filter Restriction end *must* go to port 5B as shown in Figure 3-4.

CAUTION - The sudden application of pressure to transducer modules can destroy them and void their warranties. Always apply pressure gradually and at a rate that does not exceed 150 PSI per second.

3.2 J1708 Data Bus

The J1708 data bus is a *public* data bus consisting of a pair of twisted-wires. It allows electronic devices and other equipment in the vehicle to send and receive data. The two wires making up the J1708 data bus are part of the vehicle's wiring harness. Because it connects to many different components in widely separated locations, a problem with the data bus or with one of the component's connected to it can sometimes be hard to isolate. For a complete description of the J1708 data bus and data format, refer to SAE J1708 document *Standard For Data Communications Interface* and to SAE J1587 document, *Standard For Data Interchange*.

https://truckmanualshub.com/

3.3 Electronic Control Units

Electronic Control Units (sometimes called *ECUs*) are computerized units that control a particular vehicle subsystem. For example, an Engine ECU helps maximize engine efficiency, a Transmission ECU helps control transmission operation, and an ABS (Anti-lock Brake System) ECU maximizes braking performance. An ECU designed for one system cannot be interchanged with an ECU designed for another.

ECUs are connected to the J1708 data bus. They send and receive data to each other and to other devices on the bus. Each ECU is programmed to respond to and to generate specific data.

3.4 Speedometer with Integrated Message Center

The SMC is connected to the J1708 data bus and responds to data from the Engine ECU. It uses road speed data from the Engine ECU to calculate its own pointer information. It also responds to other data on the J1708 data bus and can display it on the Message Center. Examples are engine hours and diagnostic messages. The SMC has no calibration switches and requires no programming. See Figure 3-5.

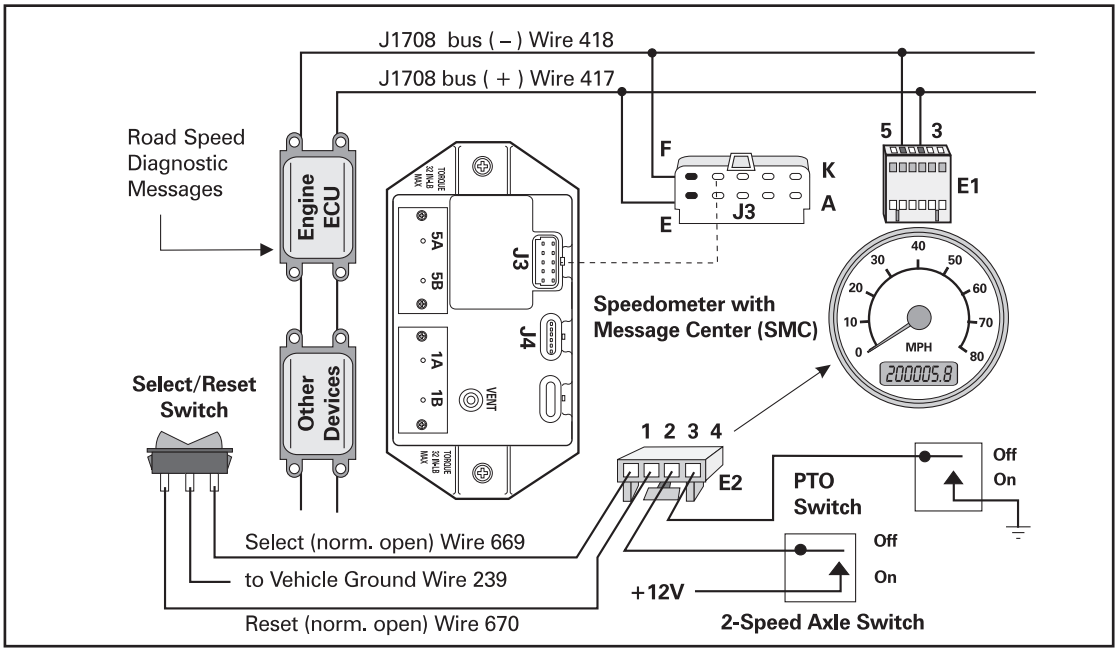

Figure 3-5 *387 Speedometer with Message Center*

The SMC calculates and stores its own odometer, trip odometer, clock and alarm clock information independent of the Interface Module, and has a built-in audible alarm. The SMC automatically displays warning messages when an alarm condition is detected.

https://truckmanualshub.com/

3.4.1 Select and Reset Switches

The Select and Reset switches select, set, and reset the clock, the alarm clock, and the trip odometers. Their inputs are connected to the SMC by a 4-pin connector on the rear of the speedometer housing.

If these inputs are not connected, the SMC will display odometer information and warning messages only.

3.4.2 Power Take-Off (PTO) Input

This input provides a ground from a switch in the PTO system to the SMC. It prevents the SMC from accumulating miles when the PTO system is in use and the vehicle is not moving.

3.4.3 Two-Speed Axle Input

This input to the back of the SMC is a positive voltage that comes from the 2-speed axle actuator on the gearshift lever. When the 2-speed axle is engaged, this input causes the SMC to reduce the road speed indication by a factor of 0.73 to 1.

3.5 Diagnostic Capabilities

The instrumentation has a built-in initialization routine and several diagnostic capabilities that can indicate if the system is functioning properly or if a problem exists with it or with the system inputs.

3.5.1 Power-On Initialization

When the ignition is first turned on the instrumentation performs an initialization to verify correct operation. The initialization is described in Figure 3-6.

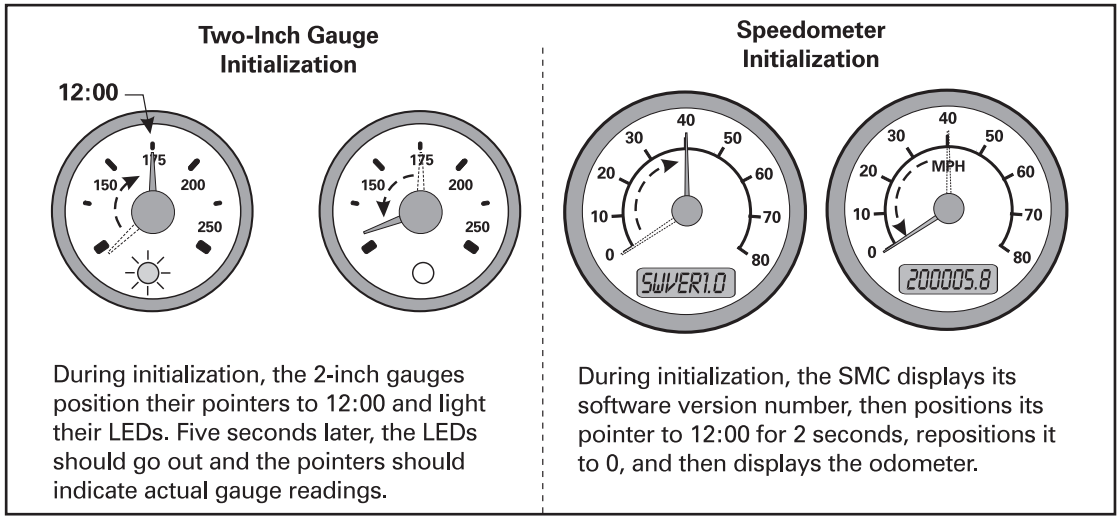

Figure 3-6 *System Initialization*

https://truckmanualshub.com/

3.5.2 Diagnostic Connector

The diagnostic connector allows test equipment such as the Handheld Diagnostic Tool described in Chapter 6 to be connected to the J1708 data bus. The diagnostic connector is usually located underneath the driver's side of the dashboard.

Note - *The diagnostic connector is not part of the instrumentation and is mentioned for reference only.*

3.6 Private Data Bus

The private data bus connects the Interface Module to the tachometer and the 2-inch gauges. It carries data from the Interface Module to the tachometer and 2-inch gauges. The private data bus consists of a pair of wires in the 5-wire cable assemblies. It is not connected to the J1708 data bus.

3.6.1 Five-Wire Cable Assemblies

Identically wired 5-wire cable assemblies make up the private data bus that connects the tachometer and 2-inch gauges. These cable assemblies carry power, ground, backlight power and private data bus signals from one gauge to the next. Their 5-pin plugs are polarized and cannot be plugged in backwards. Identical pinouts allow either end to be plugged into either of two identical sockets on the back of the gauges. The plugs are held in place by a locking tab. Depressing the locking tab lets you remove the connector from the gauge.

3.6.2 Two-Inch Gauges

Each 2-inch gauge consists of a printed circuit board and meter assembly, and a scaleplate with programming tab. These parts are mounted together with a glass faceplate and a sealing ring in a plastic, twist-apart housing. Figure 4-3 on page 4-5 shows how these parts are assembled.

The printed circuit board has a red warning LED, two LEDs for backlighting, a microprocessor that converts messages from the private data bus into LED and pointer information, a pair of private data bus connectors, and small 5-pin contact assembly that accepts the programming tab on the scaleplate.

The scaleplate's programming tab automatically configures a gauge to the function shown on the scaleplate. Holes in the tab perform the actual programming by allowing certain contact pins to make contact with the circuit board. A microprocessor on each gauge circuit board converts the private data bus messages into meter drive signals. Figure 4-2 on page 4-5 shows the contact assembly and the placement of the tab.

https://truckmanualshub.com/

3.6.3 J1708 Data Bus and Private-Bus-Driven Gauges

The sensors for the Tachometer, Engine Oil Pressure, Engine Coolant, Engine Oil Temperature, Engine Load %, and Manifold Boost gauges are connected to the Engine ECU. The Engine ECU converts these sensor inputs into data which it sends to the Interface Module over the J1708 data bus. For that reason, these gauges are called *J1708 data bus* gauges. J1708 data bus gauges and connections are shown in Figure 3-7.

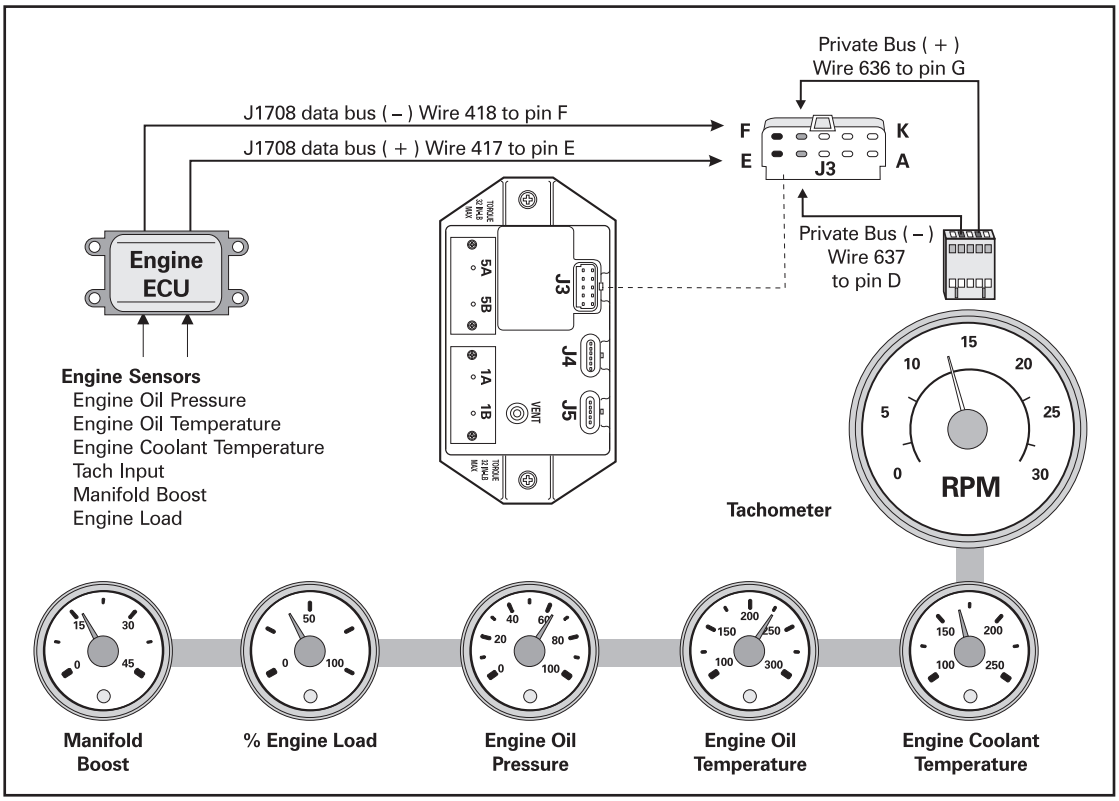

Figure 3-7 *J1708 Data Bus Gauges*

The axle and transmission temperature sensors, the ammeter, fuel level and pyrometer sensors, and pressure/vacuum inputs are connected directly to the Interface Module and are referred to as private-bus-driven gauges.

3.6.4 Tachometer

The tachometer is similar in construction to the 2-inch gauges except that it is larger and is not programmable.

Engine speed data originates at a sensor mounted on the engine. The Engine ECU receives the data, converts it into rpm data and sends it over the J1708 data bus. The Interface Module reads the rpm data on the J1708 data bus and converts it into tachometer data which it places on the private data bus. The tachometer receives the data and converts it into pointer drive signals. Connections are shown in Figure 3-7.

https://truckmanualshub.com/

3.6.4.1 Ammeter

The signal for the ammeter begins at a sense wire coiled up in the battery box (between the battery's positive terminal and the megafuse leading to the alternator). As current from the vehicle's charging system flows through the sense wire, a voltage of a few millivolts is generated. This voltage is applied to the Interface Module which converts it into ammeter messages on the private data bus.

If the system is charging, the positive voltage at the sense wire causes the ammeter to read in the positive (+) area. If the system is discharging, the sense wire voltage goes negative and causes the ammeter to read in the negative (–) area. See Figure 3-8 for the actual wire connections.

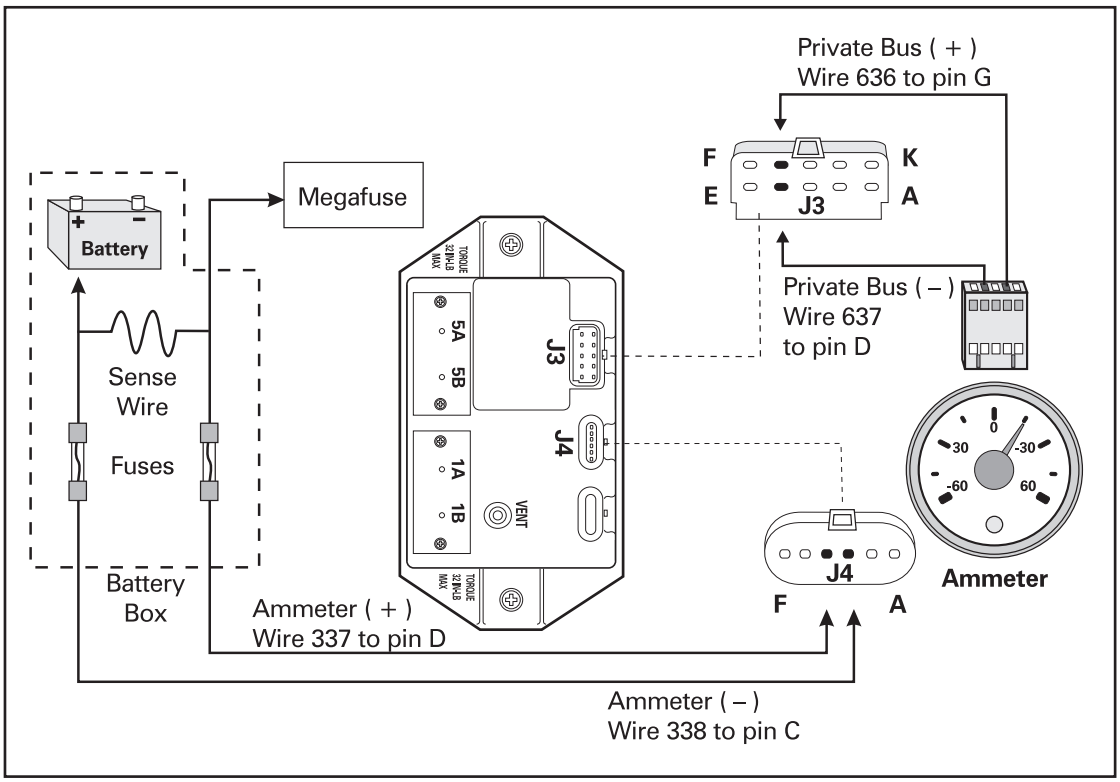

Figure 3-8 *Ammeter Circuit*

https://truckmanualshub.com/

3.6.4.2 Voltmeter

Battery voltage is fed to the Interface Module through the ignition switch. The Interface Module converts the voltage into data that it places on the private data bus. See Figure 3-9 for the actual wire connections.

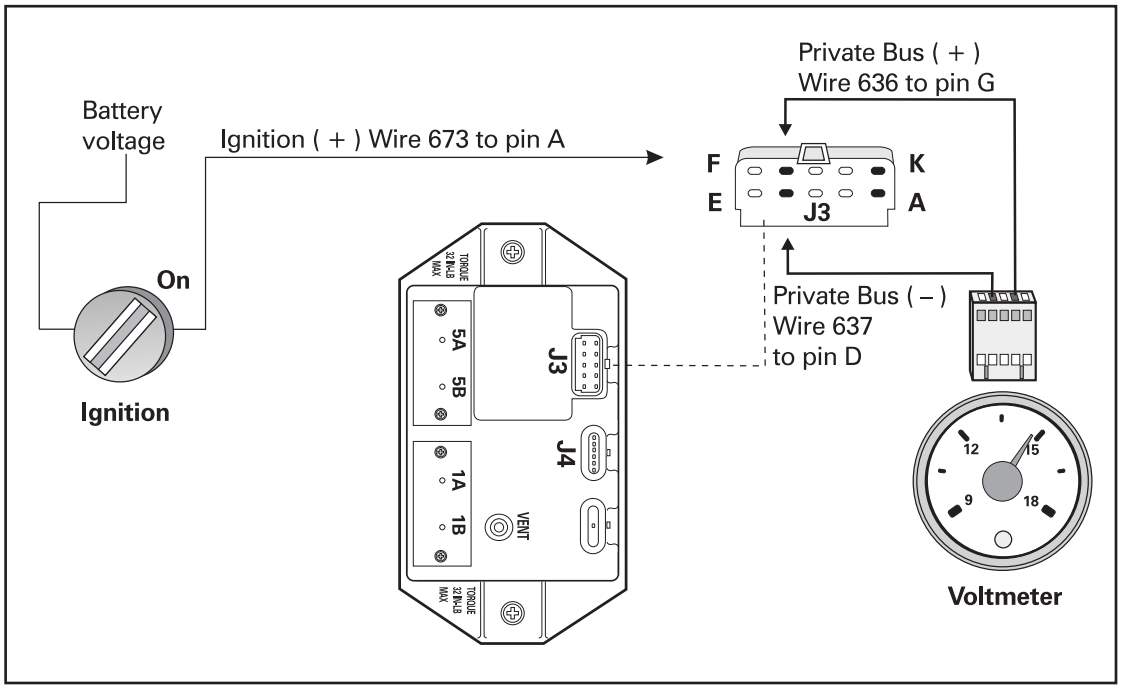

Figure 3-9 *Voltmeter Circuit*

https://truckmanualshub.com/

3.6.4.3 Pyrometer

The signal for the pyrometer begins at a Type K thermocouple that is mounted in the exhaust stream and connected to the Interface Module. A thermocouple creates a small voltage (less than 33 millivolts) that changes depending upon its temperature. As the exhaust temperature rises, the thermocouple output voltage increases. The Interface Module converts the voltage into data that it places on the private data bus. Connections are shown in Figure 3-10.

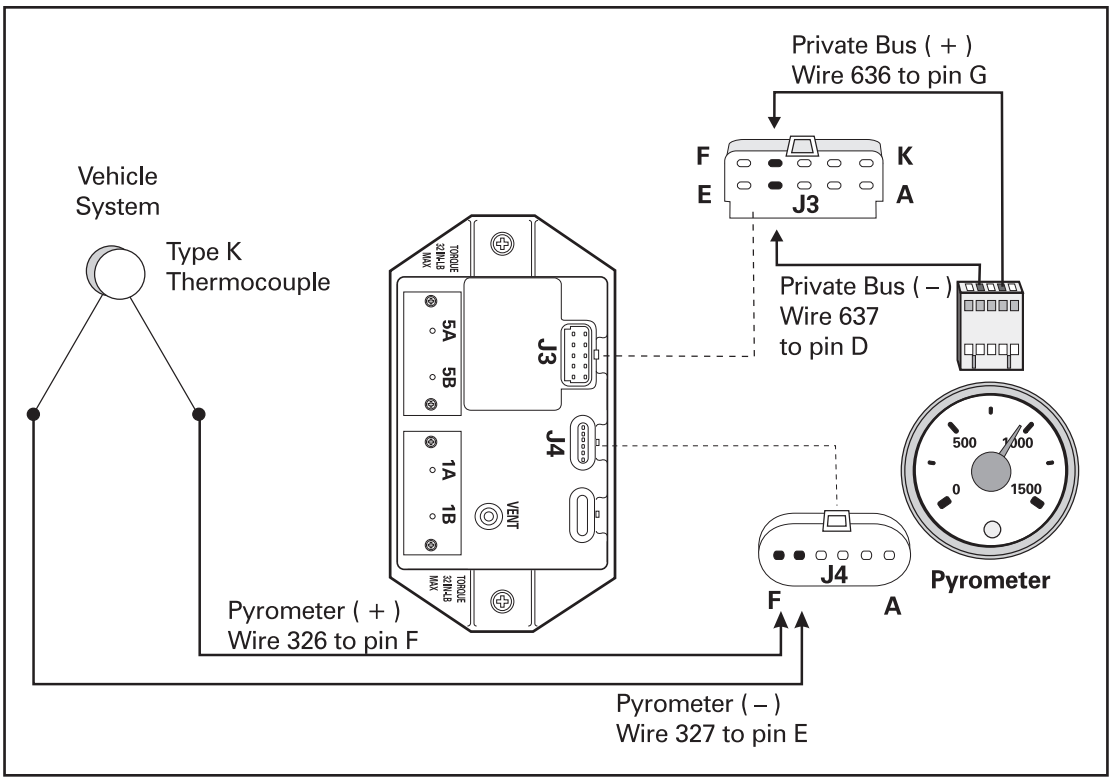

Figure 3-10 *Pyrometer Circuit*

https://truckmanualshub.com/

3.6.4.4 Transmission and Axle Temperature Gauges

Temperature senders installed in the appropriate axle or transmission housing and connected to the Interface Module sense the temperature of the gear oil. Each sender contains a thermistor whose value decreases as the temperature increases. The Interface Module converts the thermistor resistance and into data that it places on the private data bus. Connections are shown in Figure 3-11.

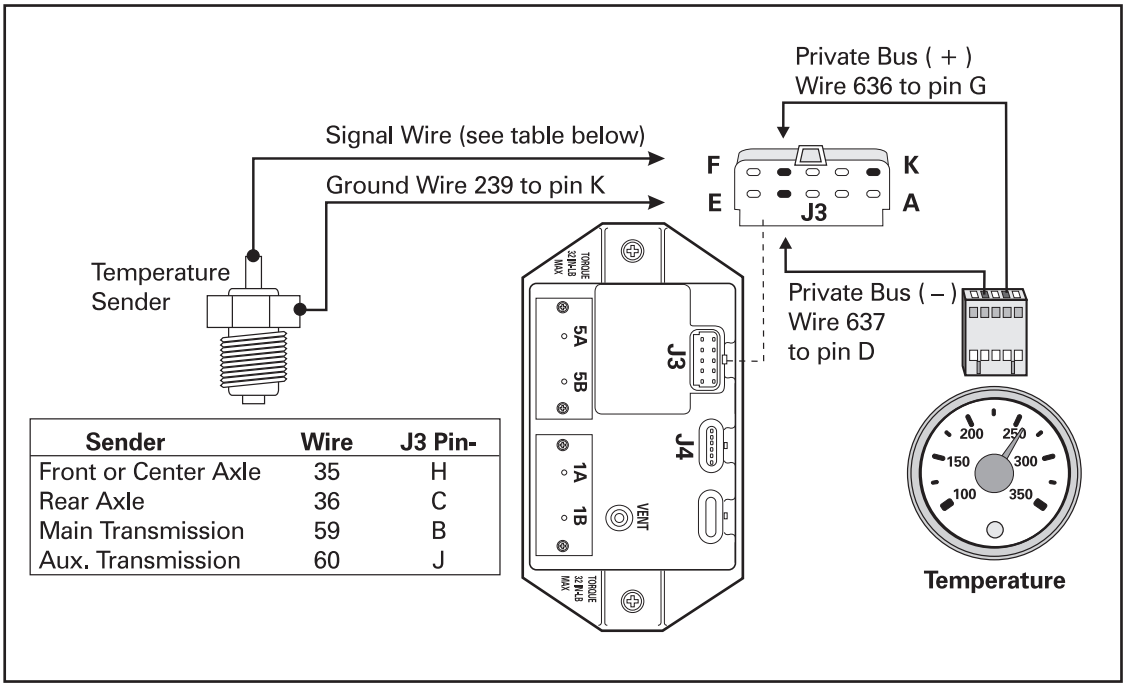

Sender	Wire	J3 Pin-
Front or Center Axle	35	H
Rear Axle	36	C
Main Transmission	59	B
Aux. Transmission	60	J

Figure 3-11 *Axle and Transmission Temperature Circuits*

https://truckmanualshub.com/

3.6.4.5 Fuel Level

The signal for the fuel level comes from a sender unit that is mounted inside the fuel tank and connected to the Interface Module. The sender unit contains a float device attached to a variable resistor. As the fuel level drops, the float drops and the resistance of the variable resistor increases. The Interface Module converts the resistance into data that it places on the private data bus. Connections are shown in Figure 3-12.

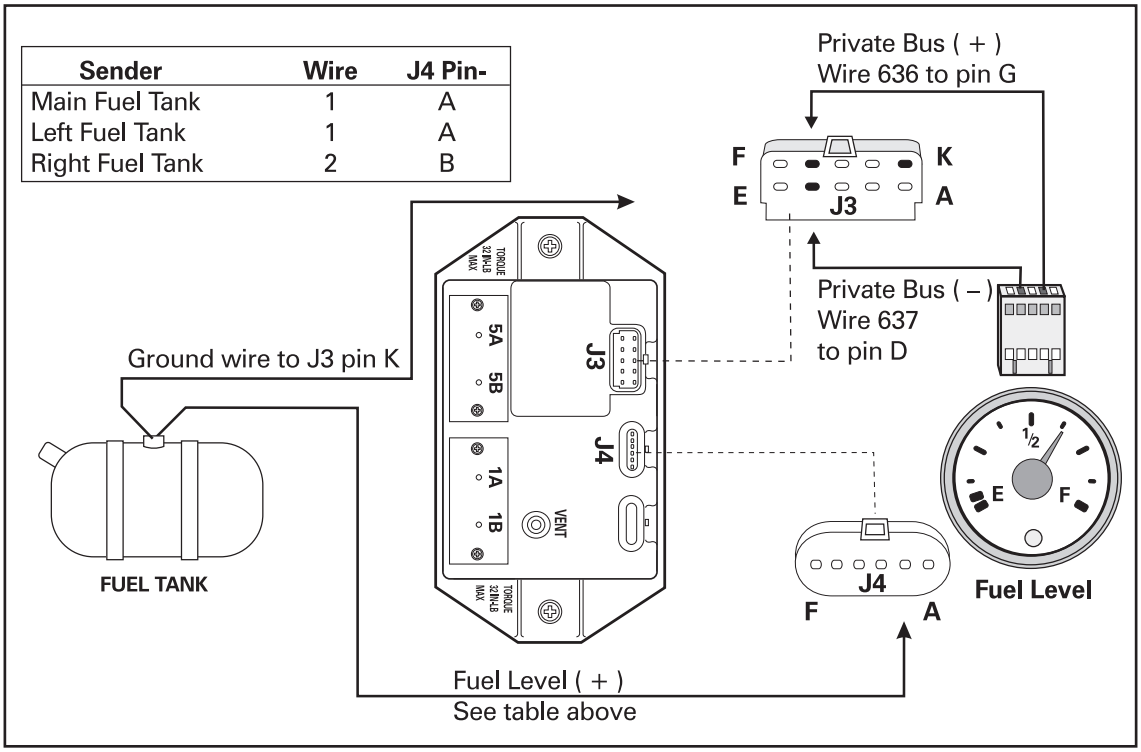

Sender	Wire	J4 Pin-
Main Fuel Tank	1	A
Left Fuel Tank	1	A
Right Fuel Tank	2	B

Figure 3-12 *Fuel Level Circuit*

3.7 Backlighting

Light-emitting diodes (LEDs) permanently mounted inside the gauge provide backlighting. The LEDs are not replaceable. Theyreceive power from a dimming control located on the vehicle dash, and that power is passed from one gauge to the next through the 5-wire cable assemblies. If a gauge's backlighting fails, the gauge must be replaced. More information is available in Chapter 5.

Backlight power for the SMC comes from the same source used for the gauge backlighting.

https://truckmanualshub.com/

Notes:

https://truckmanualshub.com/

4 Service Procedures

All components of the instrumentation are easily replaceable in the field. This chapter describes the correct method of removing and replacing the system's components. For troubleshooting information, see Chapter 5. For a functional description of the instrument system, see Chapter 3.

Note - *None of the instrumentation's components can be repaired in the field. Replace them if defective. Opening any of the components voids the warranty. The 2-inch gauges may be opened to replace scaleplates without affecting the warranty.*

4.1 Some Important Dos and Don'ts

Do—	Don't—
Always unplug all connectors from the Interface Module before performing any welding on the vehicle. Extensive and expensive electronic damage may result if the wiring is left connected.	Do not splice into the data bus at any time. Incorrect data and false readings can result.
The warning lights and the backlighting in the gauges are LEDs. If a gauge LED is defective, replace the entire gauge.	Do not open or attempt to service the speedometer, tachometer, or Interface Module or the warranty will be voided.
Store or hold gauges in their normal operating position or face up to prevent the gauge dampening fluid from leaking out.	Do not store or otherwise leave any gauge face down longer than 15 minutes.
Apply pressure or vacuum slowly to transducer modules.	Do not apply pressure to transducer modules at a rate that exceeds 150 PSI per second.

4.2 Replacing the Speedometer and Tachometer

Note - *The SMC calculates and stores odometer and trip odometer data. If the SMC is replaced with one from another vehicle, the odometer will reflect the other vehicle's accumulated mileage. If a factory-new speedometer is installed, the odometer will read zero.*

https://truckmanualshub.com/

The SMC and tachometer are mounted using standard U-brackets. To replace the SMC or tachometer:

1. Unplug the connectors from the rear of the gauge by depressing their tabs while pulling the connector straight out.
2. Remove the two nuts and lock washers holding the U-bracket and remove the U-bracket.
3. Remove the instrument from the front of the panel.
4. To reinstall, place the instrument through the front of the panel and line up the alignment tab at the bottom with the cutout notch in the mounting hole.
5. Attach the U-bracket to the instrument and secure with the nuts and lock washers.
6. Reattach the connectors.

4.3 Servicing the Two-Inch Gauges

4.3.1 Removal and Reinstallation

Follow the instructions in Figure 4-1 to remove and reinstall the 2-inch gauges.

https://truckmanualshub.com/

Removing a Two-Inch Gauge:

A. Unplug the 5-wire connectors from the rear of the gauge by depressing their tabs while pulling the connector straight out.

B. Twist the clamp ring in the direction shown about 1/8 turn.

C. Pull the clamp ring straight off the rear of the gauge housing.

D. Remove the gauge from the front of the panel.

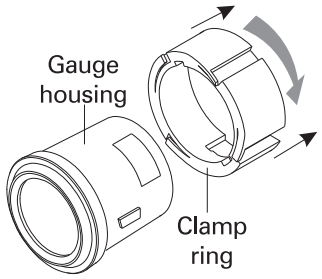

Installing a Two-Inch Gauge:

A. Insert the rear of the assembled gauge into the panel from the front.

B. Slide the clamp ring onto the rear of the gauge and twist the ring until the two notches in the ring align with the two tabs on the outside of the gauge housing.

C. Once the notches are aligned with the tabs, continue to slide the clamp ring up against the rear of the panel.

D. Twist the clamp ring 1/8 turn in the direction shown until it "clicks" into its locked position.

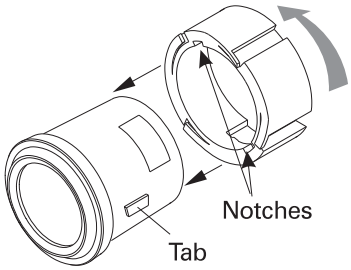

Note: *The clamp ring has two built-in stop points to ensure a tight fit without damage. These stops are indicated by a "click" when twisting the ring. Twist the clamp ring to the second click only if the first click does not secure the gauge.*

Figure 4-1 *Two-Inch Gauge Removal and Reinstallation*

Note - *If installing an additional pressure gauge, ensure that the correct Vacuum or Pressure Transducer Modules are installed on the Interface Module, and that the Interface Module has been programmed to recognize the new gauge.*

4.3.2 Disassembling a Two-Inch Gauge

1. With your hand, turn the bezel counter-clockwise about ⅛ turn and remove the bezel, glass, gasket, and mask ring. This requires a fair amount of initial force.
2. Gently slide the gauge out of its housing.
3. Gently pull the scaleplate programming tab out from under the connector on the printed circuit board.
4. Remove the scaleplate by allowing the gauge pointer to pass through the cut on the scaleplate.

https://truckmanualshub.com/

4.3.3 Reassembling a Two-Inch Gauge

1. Attach the scaleplate to the gauge as shown in Figure 4-2.
2. Referring to Figure 4-3, insert the gauge body into the housing. Ensure the connector extends through the rear of the housing. The three round notches around the edge of the printed circuit board fit over the round guides on the inside of the housing. The gauge is correctly inserted when the two round notches in the front of the gauge fit over the two round guides on the inside of the housing and the connector extends slightly out the rear of the housing.
3. Hold the gauge and housing face up. Line up the hole in the finger of the mask ring over the warning LED in the gauge body and place the mask ring down over the scaleplate. When the mask ring is correctly installed, the two round notches on the outside will mate with the two guides on the inside of the housing.
4. Center the gasket over the mask ring.
5. Center the glass faceplate over the gasket.
6. Line up the tab on the back of the bezel with the cut-out in the housing, then twist the bezel ⅛ turn clockwise until it clicks into place.

https://truckmanualshub.com/

A. Gently slide the scaleplate on the gauge by spreading the cut in the scale to allow the scaleplate to slide under the pointer.

B. Align the warning LED with the hole in the scaleplate.

C. Make sure the scaleplate programming tab is clean, then insert it between the five metal contact fingers and the printed circuit board as shown. Do not bend the tab. *Make sure that the holes in the programming tab seat fully under the metal fingers in the contact assembly. This automatically configures the gauge to the function shown on the scaleplate.*

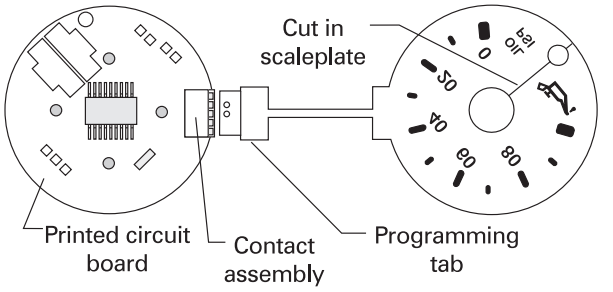

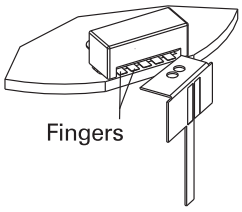

Insert one corner first, then the other. Tab goes between metal fingers and circuit board.

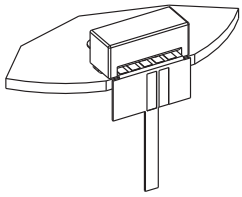

Tab correctly inserted with the metal fingers on top of the tab.

Figure 4-2 *Scaleplate Alignment*

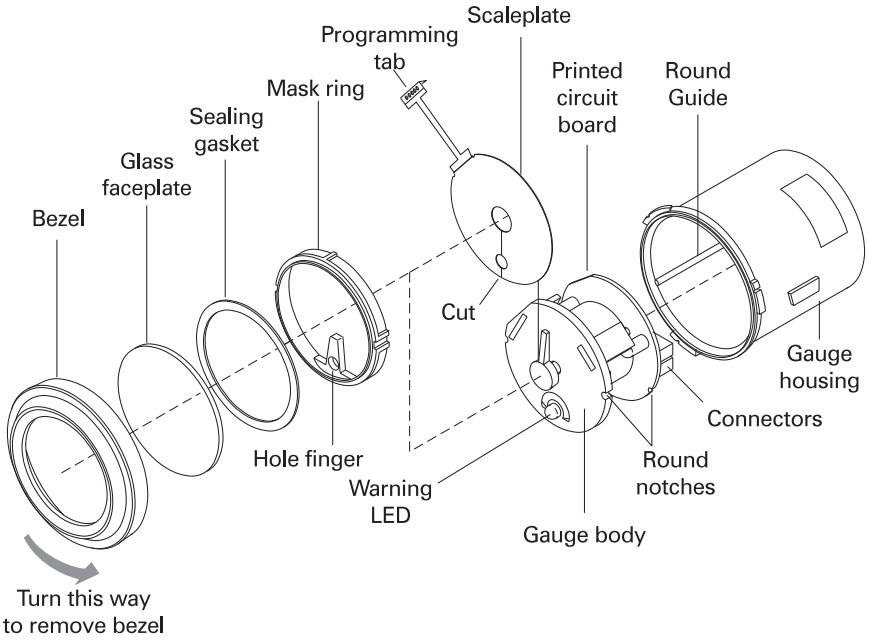

Figure 4-3 *Two-Inch Gauge Disassembly*

https://truckmanualshub.com/

4.4 Reprogramming a Two-Inch Gauge

Two-inch gauges are identical in design and hardware with the exception of their scaleplates. This allows any 2-inch gauge to serve a variety of functions simply by changing its scaleplate. To reprogram a 2-inch gauge to a different function, simply attach the appropriate scaleplate as shown in Figure 4-2.

4.5 Servicing the Interface Module

4.5.1 Removing the Interface Module

To remove the Interface Module, follow the instructions in Figure 4-4.

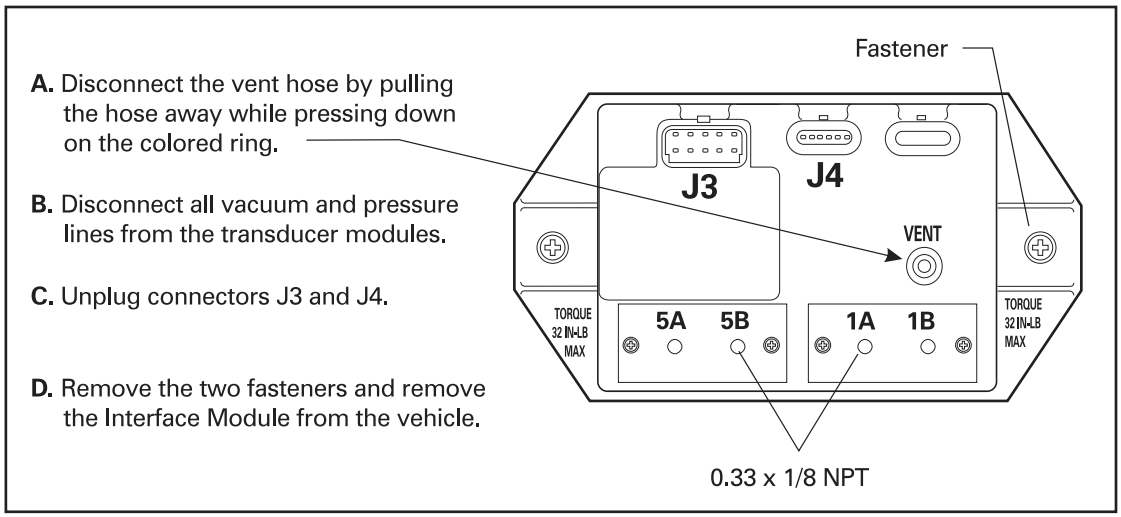

Figure 4-4 *Removing the Interface Module*

4.5.2 Reinstalling the Interface Module

1. Position the Interface Module in its mounting location and secure it using the two fasteners. Do not tighten the mounting fasteners more than 32 inch-pounds.
2. Reconnect J3 and J4.
3. Reconnect the air vent hose and the vacuum/pressure hoses to the Interface Module as specified by the vehicle manufacturer.

4.5.3 Reprogramming the Interface Module

The Interface Module must be told which pressure gauges are present at ports 5A and 5B, and what kind of transmission is installed in the vehicle. This is done using the HDT as described in Chapter 6. In addition, the Interface Module must be reprogrammed whenever it is replaced.

https://truckmanualshub.com/

4.6 Spare Parts Listing

Part Number	Description
17-05068-001	Interface Module (PPPP) with modules
17-05068-002	Interface Module (PPVV) with modules
17-05068-003	Interface Module (PPVP) with modules
17-05068-004	Interface Module (PPPV) with modules
17-05068-005	Interface Module (PPCC) with one pressure module
17-05066-001	SMC, MPH/kph, black bezel
17-05066-002	SMC, MPH/kph, satin bezel
17-05066-003	SMC, KPH/mph, black bezel
17-05066-004	SMC, KPH/mph, satin bezel
17-05067-007	Tachometer, black bezel
17-05067-002	Tachometer, satin bezel
00049861	2-inch general gauge, black bezel
00049862	2-inch general gauge, satin bezel
Call factory for part number	2-inch gauge scaleplates
Note - *PP = Pressure/Pressure; PV = Pressure/Fuel Restriction; VP = Air Restriction/Pressure; VV = Air Restriction/Fuel Restriction; CC = Cover Plate*	

Table 4-1 *387 System Spare Parts*

https://truckmanualshub.com/

Notes:

https://truckmanualshub.com/

https://truckmanualshub.com/

https://truckmanualshub.com/

https://truckmanualshub.com/

https://truckmanualshub.com/

https://truckmanualshub.com/

https://truckmanualshub.com/

https://truckmanualshub.com/

https://truckmanualshub.com/

https://truckmanualshub.com/

https://truckmanualshub.com/

https://truckmanualshub.com/

https://truckmanualshub.com/

https://truckmanualshub.com/

https://truckmanualshub.com/

https://truckmanualshub.com/

https://truckmanualshub.com/

https://truckmanualshub.com/

https://truckmanualshub.com/

https://truckmanualshub.com/

https://truckmanualshub.com/

https://truckmanualshub.com/

https://truckmanualshub.com/

https://truckmanualshub.com/

https://truckmanualshub.com/

https://truckmanualshub.com/

5.5 One or More Gauge Pointers Sweep

Run the initialization again and observe all gauge pointers. Then find the symptom in Table 5-5 that best describes what you see and follow the instructions.

Symptom	Probable Cause	Action
A J1708 data bus gauge* pointer sweeps.	No data from Engine ECU.	Go to Section 5.5.1 on page 5-27.
A non-J1708 data bus gauge pointer sweeps.	Interface Module incorrectly programmed.	Go to Section 5.5.2 on page 5-27.
Several (but not all) gauge pointers sweep.	Private data bus wires open between the gauges.	Go to Section 5.5.3 on page 5-28.
The SMC and all J1708 data bus gauge* pointers sweep, SMC displays **NO DATA** (may take a couple of minutes to appear).	Defective part on J1708 data bus.	Go to Section 5.5.4 on page 5-28.
All J1708 data bus gauge pointers* except the SMC pointer sweep.	J1708 data bus open between Engine ECU and Interface Module.	Go to Section 5.5.5 on page 5-30.
All gauge pointers *except* the SMC pointer sweep.	Private data bus open; defective component on private data bus.	Go to Section 5.5.6 on page 5-31.
Only the SMC pointer sweeps, and no messages appear.	No speed data from Engine ECU.	Go to Section 5.5.7 on page 5-33.
SMC pointer sweeps, SMC displays **NO DATA** (may take a couple of minutes to appear).	J1708 data bus open between Engine ECU and SMC.	Go to Section 5.5.8.

** **Notes:** J1708 data bus gauges are gauges whose data is sent from the Engine ECU to the Interface Module over the J1708 data bus. The SMC, Tachometer, Engine Oil Temperature, Engine Oil Pressure, Engine Coolant Temperature, Manifold Boost, and Engine Load % gauges are all J1708 data bus gauges*

Data for the remaining gauges is sent directly to the Interface Module through connectors J3 and J4 (various temperature inputs, fuel level, etc.) or through direct connections to the pressure and vacuum transducer modules.

Table 5-5 *Problems Indicated by Sweeping Pointer(s)*

https://truckmanualshub.com/

5.5.1 A J1708 Data Bus Gauge Pointer Sweeps

Probable Cause - No data from Engine ECU.

Procedure:

1. Start the vehicle's engine and use the Select button to scroll through the SMC messages. If **DIAG** appears, the Interface Module is defective and must be replaced. If not, go to the next step.
2. Connect the HDT to the rear of any 2-inch gauge. Usually the last gauge in the series has an unused connector.
3. Use the HDT to verify data for the suspect gauge is present on the private data bus.
   a. If data for that gauge is present on the private data bus, remove the gauge and verify that the gauge scaleplate is correctly installed; if the scaleplate is correctly installed, replace the defective gauge.
   b. If data for that gauge is *not* present on the private data bus, disconnect the HDT from the 2-inch gauge and connect it to the diagnostic connector to see if the Engine ECU is placing data for the gauge on the J1708 data bus.
   c. If data for that gauge is present on the J1708 data bus, replace the Interface Module.
   d. If data for that gauge is *not* present on the J1708 data bus, check the Engine ECU according to the manufacturer's diagnostic procedures.

5.5.2 A Non-J1708 Data Bus Gauge Pointer Sweeps

Probable Cause - Interface Module incorrectly programmed.

Procedure:

1. Start the vehicle's engine and use the Select button to scroll through the SMC messages. If **DIAG** appears, the Interface Module is defective and must be replaced. If not, go to the next step.
2. Connect the HDT to the rear of any 2-inch gauge. Usually the last gauge in the series has an unused connector.
3. Use the HDT to verify data for the suspect gauge is present on the private data bus.
   a. If data for that gauge is present on the private data bus, remove the gauge and verify that the gauge scaleplate is correctly installed; if the scaleplate is correctly installed, replace the defective gauge.
   b. If the gauge is not a pressure gauge and no data for it is present on the private data bus, replace the Interface Module.
   c. If the gauge is a pressure gauge and data for that gauge is not present on the private data bus, connect the HDT to the diagnostic connector

https://truckmanualshub.com/

and verify the Interface Module is correctly configured for that gauge. If not, reconfigure as appropriate.

d. If the Interface Module is correctly programmed for that pressure gauge and data is still not present on the private data bus, replace the Interface Module.

5.5.3 Several (But Not All) Gauge Pointers Sweep

Probable Cause - The private data bus + or – wires are open between the gauges.

Procedure:

1. Locate the first gauge in the daisy chain that is not working and verify its connectors are fully engaged.
2. Unplug both connectors and inspect their pins and the gauge receptacle for bent or missing pins. Replace the gauge or the 5-wire cable assembly if damaged.
3. If no damage is evident, replace the 5-wire cable assembly that connects the first defective gauge to the last gauge on the daisy chain that works.
4. If the problem still is not corrected, then the last working gauge on the daisy chain could have an internally damaged connector. Replace that gauge.

5.5.4 SMC Pointer and All J1708 Data Bus Gauge Pointers Sweep

Symptoms - The SMC pointer and the pointers of all public bus gauges sweep; the SMC displays **NO DATA**.

Note: *It can take as long as 2 ½ minutes to display* ***NO DATA****.*

Probable Cause - The J1708 data bus from the Engine ECU to the Interface Module and the SMC is open (broken wire or connector pin); defective Interface Module; defective SMC; defective Engine ECU or other device connected to the J1708 data bus.

Procedure: (see Figure 5-14 on page 5-29.)

1. Perform the checks in Figure 5-14 on page 5-29. If the reading is less than about 10 ohms, another device using the J1708 data bus (SMC, Interface Module, ABS, Transmission or HVAC ECU, satellite communications devices, etc.) could be defective and interfering with bus communications. Continue with the next step.
2. To find which device may be interfering with data bus communications, switch the ignition off and disconnect the devices from the J1708 data bus as follows:

   a. Locate the splice block behind the glove box and unplug all devices at the splice block *except* the Engine ECU.

   b. Disconnect the Interface Module by unplugging 10-pin connector J3 at the module.

https://truckmanualshub.com/

c. Disconnect the SMC by unplugging the six-pin connector from the rear of the SMC.

3. After disconnecting all devices *except* the Engine ECU, use the engine manufacturer's diagnostic procedures to verify the Engine ECU is working properly.
4. If the Engine ECU is good, reconnect each device *one at a time*, verifying the Engine ECU is still working after each device is connected.
5. If the Engine ECU quits working after a particular device is connected, replace that device.

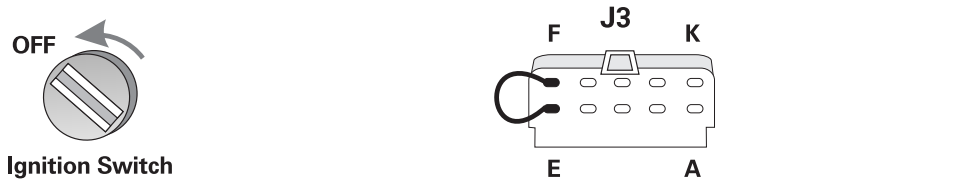

A. Turn the ignition off.

B. Unplug 10-pin connector J3 from the Interface Module and place a jumper between harness connector J3 pins E and F (Public Bus + and –).

C. Unplug the Engine ECU and measure the resistance between circuits 417 and 418 (J1708 data bus wires).

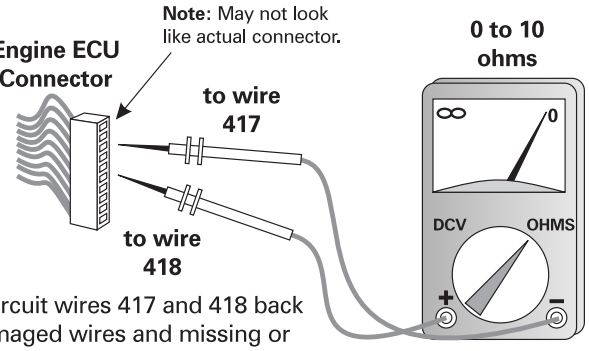

More than 10 ohms measured: Trace circuit wires 417 and 418 back to harness connector J3 looking for damaged wires and missing or broken connector pins.

Less than 10 ohms measured: Another device using the J1708 data bus (SMC, Interface Module, ABS, Transmission or HVAC ECU, satellite communications devices, etc.) could be defective and interfering with bus communications.

Figure 5-14 *SMC Pointer and All J1708 Data Bus Gauge Pointers Sweep*

https://truckmanualshub.com/

5.5.5 All J1708 Data Bus Gauge Pointers (Except the SMC Pointer) Sweep

Probable Cause - J1708 data bus is open between the Engine ECU and the Interface Module.

Procedure: Follow the steps in Figure 5-15.

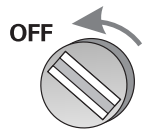

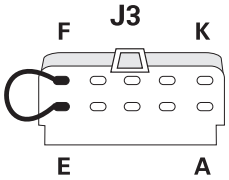

A. Turn the ignition off.

B. Unplug 10-pin connector J3 from the Interface Module. Place a jumper between harness connector J3 pins E and F (Public Bus + and –).

C. Unplug the Engine ECU and measure the resistance between circuits 417 and 418 (J1708 data bus wires).

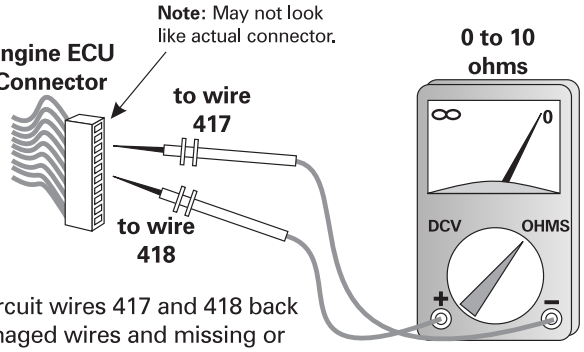

More than 10 ohms measured: Trace circuit wires 417 and 418 back to harness connector J3 looking for damaged wires and missing or broken connector pins.

Less than 10 ohms measured: Reconnect the Engine ECU and Interface Module connectors.

D. Connect the HDT to the diagnostic connector and verify that the Engine ECU is sending data for the gauges on the J1708 data bus.

Data is being sent: Replace the Interface Module.
Data not being sent: Troubleshoot the Engine ECU using the engine manufacturer's procedures.

Figure 5-15 *All J1708 Data Bus Gauge Pointers (except SMC) Sweep*

https://truckmanualshub.com/

5.5.6 All Gauge Pointers Except the SMC Pointer Sweep

Possible Causes - Private bus is open between the Interface Module and the gauges; Interface Module defective or not receiving power; defective gauge.

Procedure:

1. Connect the HDT to the diagnostic connector.
2. Switch the ignition on and verify that the HDT establishes a communications link with the Interface Module.
   a. If communications are not established, follow the procedures in Figure 5-16 on page 5-31 to determine the cause.
   b. If communications *are* established, follow the procedures in Figure 5-17 on page 5-32.
3. If you have followed the procedures in Figure 5-17 and have not found the problem, one of the 2-inch gauges could be at fault. To find out which one:
   a. Disconnect the last gauge in the 5-wire cable daisy chain (it will have an unused connector).
   b. Switch the ignition on and see if the gauges still continue to sweep after the initialization.
   c. If not, the disconnected gauge is defective. Replace it.
   d. If the gauges continue to sweep, switch the ignition off, disconnect the next to the last gauge in the daisy chain, switch the ignition back on and observe the pointers.
   e. Repeat this process until all gauges except the SMC have been unplugged. If the problem goes away after unplugging a particular gauge, then that gauge is defective and must be replaced.
   f. If the problem persists after unplugging all the gauges, replace the Interface Module.

https://truckmanualshub.com/

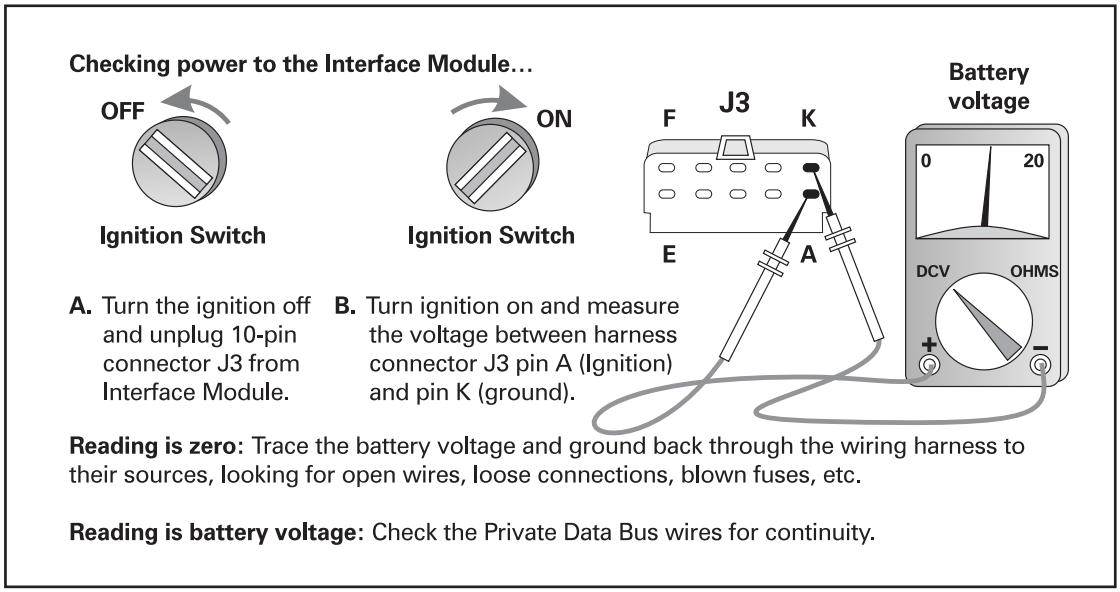

Figure 5-16 *Checking Power to the Interface Module*

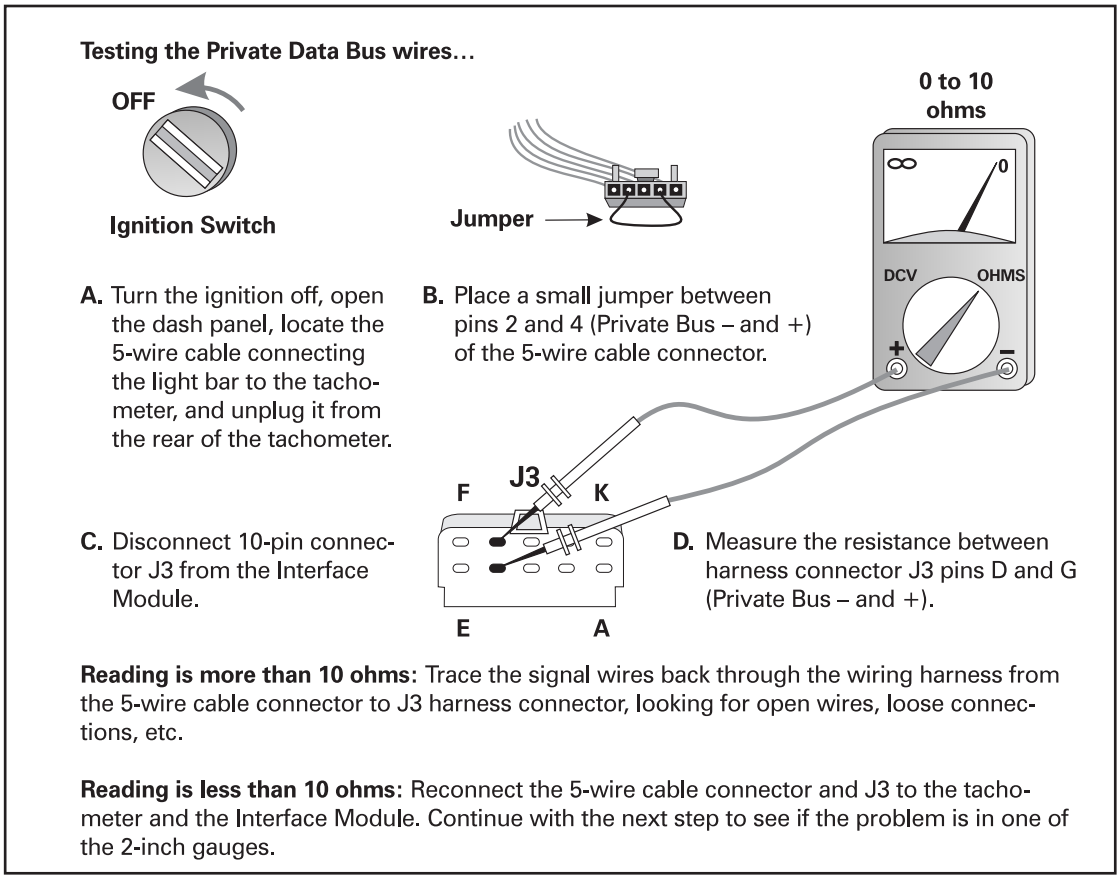

Figure 5-17 *Checking Private Bus Wire Continuity*

https://truckmanualshub.com/

https://truckmanualshub.com/

https://truckmanualshub.com/

https://truckmanualshub.com/

https://truckmanualshub.com/

https://truckmanualshub.com/

https://truckmanualshub.com/

https://truckmanualshub.com/

https://truckmanualshub.com/

6 Using the Handheld Diagnostic Tool

The Handheld Diagnostic Tool (HDT) is designed to be used with the procedures in Chapter 5 of this manual. This chapter describes the HDT and how to use it. Instrument System troubleshooting information is found in Chapter 5.

The following subjects are covered:

Care and Cleaning	Section 6.1 on page 6-1.
Description	Section 6.2 on page 6-2.
Reading Engine ECU Gauge Data	Section 6.3 on page 6-3.
Reading Private Bus Gauge Data	Section 6.4 on page 6-6.
Viewing the Configuration Data	Section 6.5 on page 6-8.
Programming and Verifying Ports 5A and 5B	Section 6.6 on page 6-10.
Programming the Alarm Point for the Main Transmission Temperature Gauge Warning LED	Section 6.7 on page 6-15.
HDT Spare Parts	Section 6.8 on page 6-19.

6.1 Care and Cleaning

The HDT is a precision instrument and is designed for years of trouble-free operation in a normal vehicle repair environment. It will operate between –10 and +50 degrees Centigrade and is spill-resistant. Always return the tool to its carrying case when not in use.

To clean the HDT, us only a soft cloth and a mild, non-abrasive soap. Do not use gasoline, alcohol, or solvents because they will damage the instrument and void its warranty.

https://truckmanualshub.com/

6.2 Description

The HDT is designed to help troubleshoot the 387 Instrument System by letting you see the data on the J1708 and private data buses. You will need this tool when installing a new Interface Module.

Connecting the HDT to the diagnostic connector (6- or 9-pin) on the vehicle allows Engine ECU data on the J1708 data bus to be read and allows the Interface Module to be programmed. Connecting it to the rear of a 2-inch gauge with the special adapter allows data on the private data bus to be read. The HDT requires no batteries and is powered by the vehicle through the connector.

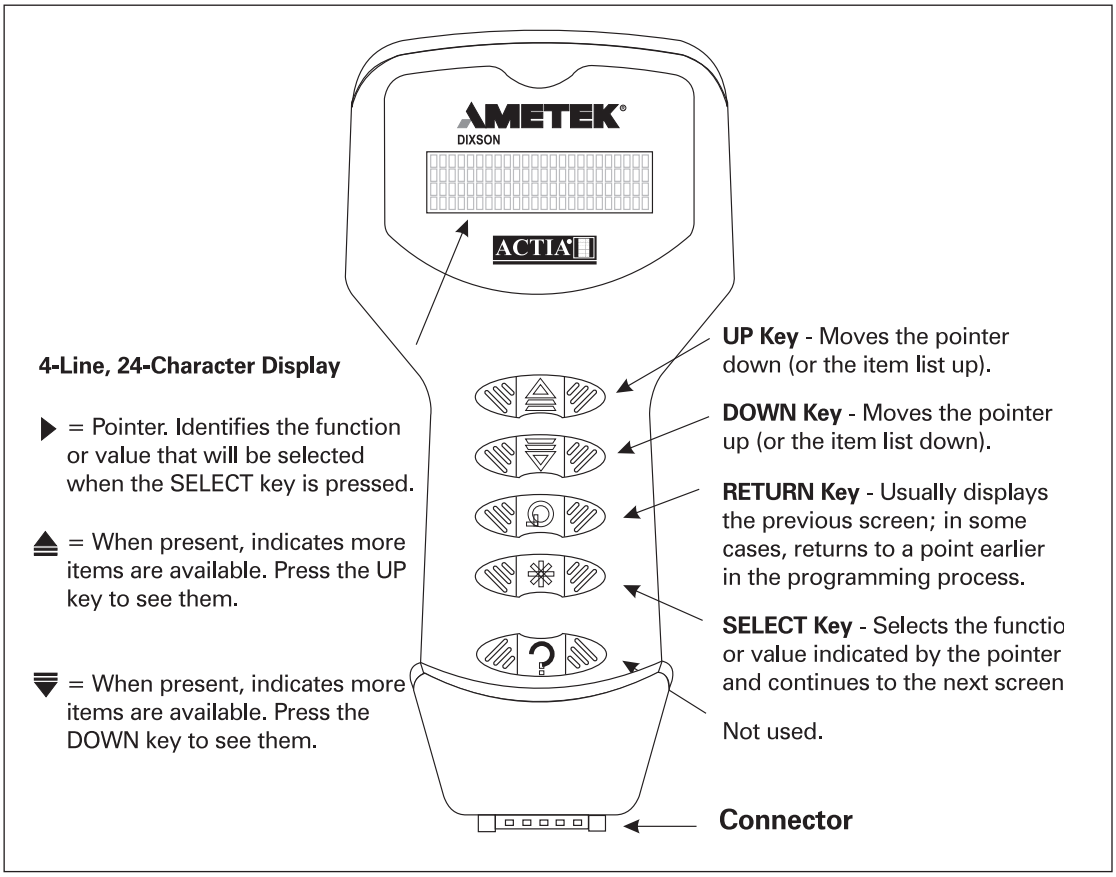

Figure 6-1 *Hand-Held Diagnostic Tool*

https://truckmanualshub.com/

6.3 Reading Engine ECU Gauge Data

This section describes how to use the HDT to see gauge data from the Engine ECU on the J1708 data bus. This is useful while troubleshooting to help determine if the Engine ECU is broadcasting gauge data to the Interface Module and SMC. If no gauge data is being broadcast, the Engine ECU, the J1708 data bus wiring, or another device connected to the J1708 data bus could be defective. The HDT can also be used to compare gauge data from the Engine ECU to individual gauge readings in the instrument system to help determine if the gauge or the Interface Module is defective.

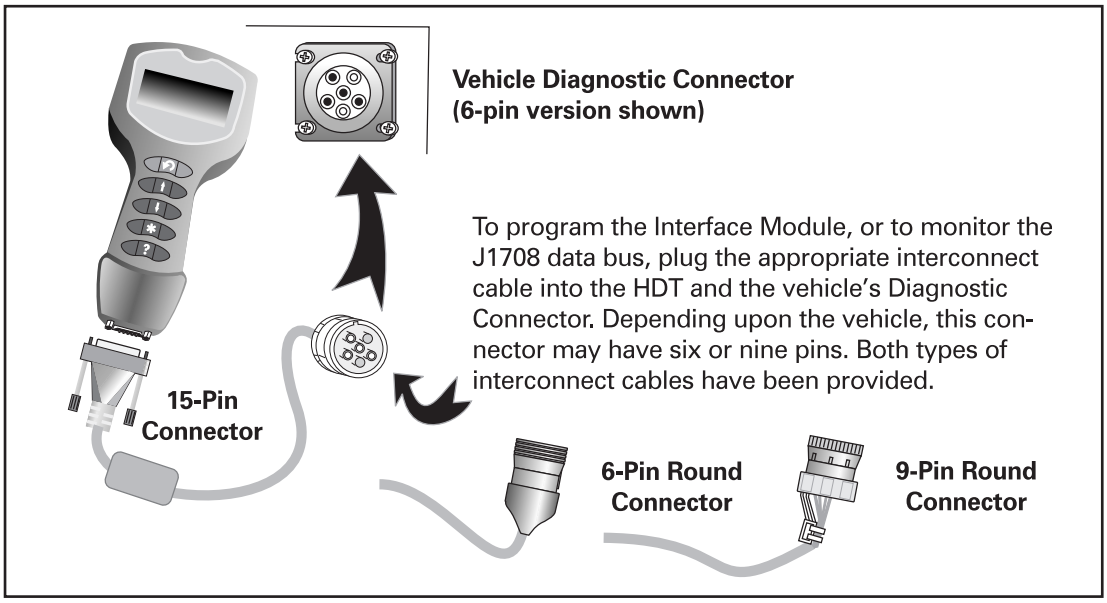

Figure 6-2 *Connecting the HDT to the Diagnostic Connector*

6.3.1 Procedure

1. With the ignition off, connect the HDT to the diagnostic connector on the vehicle using the appropriate adapter. See Figure 6-2. The diagnostic connector is usually located under the dash on the driver's side.
2. Turn the ignition on. The HDT will look for the Interface Module and try to establish communications with it while displaying:

ESTABLISHING DATA LINK	Displayed while the HDT establishes communications with the vehicle system.

Typically, this takes less than 30 seconds but can take up to 2 minutes.

https://truckmanualshub.com/

a. If communications are established, the HDT will display:

```
INTERLINK MODULE
    DETECTED
SOFTWARE VERSION:
     V 1.0
```

Indicates the software version of the Interface Module. Your version number may be different.

b. If communications are not established after 2 minutes, and repeat this procedure starting at Step 1 with the ignition off. If the HDT fails to establish communications after three attempts, there may be a problem with the J1708 data bus. In this case, pick the symptom from Chapter 5 that best describes the original failure in the instrument system and follow the troubleshooting procedures.

3. After communications are established, continue this procedure by pressing the Select key. While the HDT reads the configuration data, it will display:

```
READING THE
CONFIGURATION
BLOCK xxx/yyy
```

Displayed while the HDT gathers data from the vehicle's system. *xxx* and *yyy* = block numbers.

a. If the HDT reads the configuration data successfully, it will display:

```
      ACCESS LEVEL
▶NORMAL
 FACTORY
```

"Normal" is the tool's normal operating mode."Factory" is for factory use only and requires a password.

b. If the HDT cannot read the configuration data, it will display COULD NOT READ THE CONFIGURATION. In this case, first repeat this procedure from Step 1 with the ignition off. If still unsuccessful, one-at-a-time disconnect other devices that use the J1708 data bus and repeat this procedure each time to isolate the faulty component.

4. Use the Up and Down keys to move the pointer to NORMAL, then press the Select key. The HDT will display:

```
 INTERLINK/MINILINK
▶READ PUBLIC BUS
 CONFIGURE
```

https://truckmanualshub.com/

5. With the pointer at READ PUBLIC BUS, press the Select key. The HDT will display the following:

```
     READ PUBLIC BUS

▶TACHOMETER
▼ENGINE LOAD
```

▼ = More items available.
Press the Down key to see.

6. To see the names of the J1708 data bus gauges the for which the Interface Module has been programmed, use the Up and Down keys to scroll through the list. The J1708 data bus gauge names are: TACHOMETER, ENGINE LOAD, ENGINE OIL PSI, BOOST PRESSURE, ENG/BRAKESAV OIL TP, COOLANT TEMPERATURE, and SPEEDOMETER. Other gauge names that appear are private data bus gauges.
7. To see the data the Engine ECU is sending to a particular gauge, move the pointer to that gauge's name and then press the Select key. After a few seconds the HDT will display the name of the gauge and the value being sent to it:

```
          TACHOMETER
VALUE: xxxx
```

xxxx is the value sent to the tachometer.

   a. If the Engine ECU is broadcasting data for the selected gauge, that data should appear after VALUE within 15 seconds. This data can be compared to the corresponding gauge indication.
   b. If data does not appear after 15 seconds, the Engine ECU is not broadcasting data for the selected gauge. Follow the troubleshooting procedures.
8. To select another gauge, press the Return key to exit this display and return to the gauge list. You can also press the Return key again to go back to previous menus to access other functions.
9. When finished, disconnect the HDT.

https://truckmanualshub.com/

6.4 Reading Private Bus Gauge Data

This section describes how to use the HDT to see gauge data on the private bus. This is useful while troubleshooting by determining if the Interface Module is broadcasting data for a particular gauge. If no gauge data is being broadcast for a particular gauge, the Interface Module may be defective or incorrectly programmed. The HDT can also be used to compare data from the Interface Module to individual gauge readings in the instrument system to help determine if the gauge or the Interface Module is defective.

6.4.1 Procedure

1. With the ignition off, connect the HDT to the rear of any 2-inch gauge using the adapter cable as shown in Figure 6-3. Usually the last gauge in the daisy chain has an unused connector.

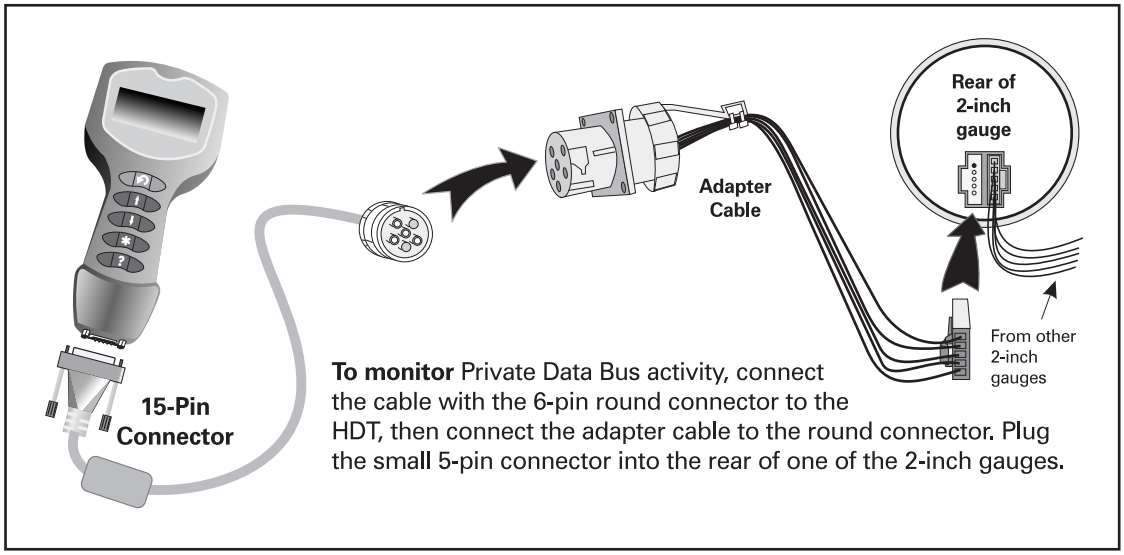

Figure 6-3 *Connecting the HDT to the Private Bus*

2. Turn the ignition on. The HDT will look for the Interface Module and try to establish communications with it while displaying:

`ESTABLISHING DATA LINK`	Displayed while the HDT establishes communications with the vehicle system.

Typically, this process takes less than 30 seconds.

https://truckmanualshub.com/

a. If communications are established, the HDT will display:

```
        PRIVATE BUS
SELECT GAUGE BY
▶ NUMBER
  NAME
```

b. If communications are not established after 15 seconds, repeat this step. If still unsuccessful there may be a problem with the private data bus. Choose the symptom from Chapter 5 that best describes the original instrument system failure and follow the troubleshooting procedures.

3. Move the pointer to NAME and press the Select key. The HDT will display:

```
       GAUGE BY NAME

▶<gauge name>
▼<gauge name>
```

▼ = More items available.
Press the Down key to see.

4. To see the names of the private data bus gauges the for which the Interface Module has been programmed, use the Up and Down keys to scroll through the list.

5. To see the data the Interface Module is sending to a particular gauge, move the pointer to that gauge's name and then press the Select key. After a few seconds the HDT will display the name of the gauge and the value being sent to it:

```
        PRIVATE BUS
    <gauge name>
VALUE    : xxx
LED DATA: yyy
```

xxx = data value
yyy = ON means gauge LED should be on, OFF means LED should be off.

VALUE and LED data should appear within 15 seconds. If not, the Interface Module is not broadcasting data for the selected gauge. If this is the case, follow the troubleshooting procedures in Chapter 5.

6. To select another gauge, press the Return key to exit this display and return to the gauge list, then repeat this procedure from Step 5.

7. When finished, disconnect the HDT.

https://truckmanualshub.com/

6.5 Viewing Configuration Data

The HDT can be used to see what conditions turn on the warning lights in non-J1708 gauges. (The information in this section is presented as additional information not necessary to the operation of the HDT or to the servicing of the vehicle).

6.5.1 Procedure

1. With the ignition off, connect the HDT to the vehicle's diagnostic connector using the appropriate adapter as shown in Figure 6-2. The diagnostic connector is usually located under the dash on the driver's side.

2. Turn the ignition on. The HDT will look for the Interface Module and try to establish communications with it while displaying:

ESTABLISHING DATA LINK	Displayed while the HDT establishes communications with the vehicle system.

Typically, this takes less than 30 seconds but can take up to 2 minutes.

a. If communications are established, the HDT will display:

INTERLINK MODULE DETECTED SOFTWARE VERSION: V *1.0*	Indicates the software version of the Interface Module. Your version number may be different.

b. If communications are not established after 2 minutes, repeat this procedure starting at Step 1 with the ignition off. If the HDT fails to establish communications after three attempts, there may be a problem with the J1708 data bus. In this case, choose the symptom from Chapter 5 that best describes the original instrument system failure and follow the troubleshooting procedures.

3. After communications are established, read the configuration data by pressing the Select key. The HDT will display:

READING THE CONFIGURATION BLOCK *xxx/yyy*	Displayed while the HDT gathers data from the vehicle's system. *xxx* and *yyy* = block numbers.

a. If the HDT reads the configuration data successfully, it will display:

https://truckmanualshub.com/


```
        ACCESS LEVEL
▶NORMAL
 FACTORY
```

"Normal" is the tool's normal operating mode."Factory" is for factory use only and requires a password.

b. If the HDT cannot read the configuration data, it will tell you so. First repeat this procedure from Step 1 with the ignition off. If still unsuccessful, one-at-a-time disconnect other devices that use the J1708 data bus and repeat this procedure each time to isolate the faulty component.

4. Press the Select key when the pointer is at NORMAL. The HDT will display:

```
  INTERLINK/MINILINK
▶READ PUBLIC BUS
 CONFIGURE
```

5. Move the pointer to CONFIGURE and press the Select key. The HDT will display:

```
           MAIN MENU
▶VIEW CONFIG
 MODIFY CONFIG
 WRITE CONFIG
```

Used to see Main Transmission Temperature programming.

Used to change the configuration.

Used to accept the changes and send them to the Interface Module.

6. To view the configuration data in the Interface Module, move the pointer to VIEW CONFIG and press the Select key. The HDT will display:

```
         VIEW CONFIG

▶TACHOMETER
▼ENGINE LOAD
```

First gauge names in list are J1708 data bus gauges. Remaining gauges are private bus gauges.

The HDT will a list of J1708 data bus gauge names followed by a list of non-J1708 data bus gauge names. Non-J1708 data bus gauge names will be followed by a high warning value and a low warning value. The gauge names in the list may vary with different configurations, and may not reflect the gauge configuration in the vehicle.

7. To see how a gauge's warning LED is configured, move the pointer to the desired private data bus gauge name and press the Select key. (If a J1708 data bus gauge name is selected, pressing Select does nothing.)

https://truckmanualshub.com/

6.6 Programming and Verifying Ports 5A and 5B

This section describes how to use the HDT to program and/or verify the programming of Ports 5A and 5B, but only if they are being used as pressure ports. Ports 5A and 5B only need to be programmed when the Interface Module has been replaced or if it was found during troubleshooting that the port is incorrectly programmed.

Pressure ports 1A and 1B are always programmed for Air Tank 1 and Air Tank 2 and cannot be changed with the HDT.

Note: *If the port is already being used as an Air Restriction or Fuel Restriction port, it cannot be reprogrammed to a pressure port.*

6.6.1 Procedure

1. With the ignition off, connect the HDT to the vehicle's diagnostic connector using the appropriate adapter as shown in Figure 6-2. The diagnostic connector is usually located under the dash on the driver's side.
2. Turn the ignition on. The HDT will look for the Interface Module and try to establish communications with it while displaying:

ESTABLISHING DATA LINK	Displayed while the HDT establishes communications with the vehicle system.

Typically, this takes less than 30 seconds but can take up to 2 minutes.

a. If communications are established, the HDT will display:

INTERLINK MODULE DETECTED SOFTWARE VERSION: V *1.0*	Indicates the software version of the Interface Module. Your version number may be different.

b. If communications are not established after 2 minutes, repeat this procedure starting at Step 1 with the ignition off. If the HDT fails to establish communications after three attempts, a problem may exist with the J1708 data bus. In this case, choose the symptom from Chapter 5 that best describes the original instrument system failure and follow the troubleshooting procedures.

3. After communications are established, read the configuration data by pressing the Select key. The HDT will display:

https://truckmanualshub.com/

READING THE CONFIGURATION BLOCK *xxx/yyy*	Displayed while the HDT gathers data from the vehicle's system. *xxx* and *yyy* = block numbers.

https://truckmanualshub.com/

a. If the HDT reads the configuration data successfully, it will display:

```
        ACCESS LEVEL
▶NORMAL
 FACTORY
```

"Normal" is the tool's normal operating mode."Factory" is for factory use only and requires a password.

b. If the HDT cannot read the configuration data, it will tell you so. First, repeat this procedure from Step 1with the ignition off. If still unsuccessful, one-at-a-time disconnect other devices that use the J1708 data bus and repeat this procedure each time to isolate the faulty component.

4. Press the Select key when the pointer is at NORMAL. The HDT will display:

```
 INTERLINK/MINILINK
▶READ PUBLIC BUS
 CONFIGURE
```

5. Move the pointer to CONFIGURE and press the Select key. The HDT will display:

```
           MAIN MENU
▶VIEW CONFIG
 MODIFY CONFIG
 WRITE CONFIG
```

Used to see Main Transmission Temperature programming.

Used to change the configuration.

Used to accept the changes and send them to the Interface Module.

6. To change the configuration data in the Interface Module, move the pointer to MODIFY CONFIG and press the Select key. The display will vary depending upon how the Interface Module is configured. Two examples follow.

https://truckmanualshub.com/

Example 1

```
      MODIFY CONFIG
▶DISABLED        P5A
 TRAC BRAK APPLD PSI
 MAIN TRANS TEMP:XXX
```

Port 5A and 5B assignments (if they are pressure ports). If a port is disabled, its number will be displayed.

Always last item in list.
XXX = temperature value.

Notes: *Vacuum ports are not displayed.*
Ports 1A and 1B cannot be changed and are not displayed.

Example 2

```
      MODIFY CONFIG
▶TRAC BRAK APPLD PSI
 MAIN TRANS TEMP:XXX
```

Port 5A or 5B has been assigned to a pressure gauge. The remaining port is not displayed because it is a vacuum port.

https://truckmanualshub.com/

7. To reprogram a port or to see to which port a gauge is programmed:
   a. Use the Up or Down keys to move the pointer alongside its name.
   b. Press the Select key. The HDT will display:

```
                    P5A
 <gauge name>
▶<gauge name>
 <gauge name>
```

Port number to which indicated gauge will be assigned.

   c. Press the Up or Down key to scroll through the list of gauge names.
   d. When the pointer is next to the name of the gauge you want to assign to the displayed port, press the Select key. (If you want to leave the port assignment as it was when you started, press the Return key to return to the previous menu, or simply unplug the HDT.)
   e. After pressing the Select key, the HDT will display the MODIFY CONFIG menu and the pointer will point to the name of the gauge you chose:

```
      MODIFY CONFIG
▶TRAC BRAK APPLD PSI
 MAIN TRANS TEMP:XXX
```

Varies depending upon the gauge name you select.

XXX = temperature value in °F.

8. To keep the changes you have made and store the new configuration data:
   a. Press the Return key to return to the MAIN MENU. The HDT will display:

```
          MAIN MENU
▶VIEW CONFIG
 MODIFY CONFIG
 WRITE CONFIG
```

Used to see Main Transmission Temperature programming.

Used to change the configuration.

Used to accept the changes and send them to the Interface Module.

   b. Move the pointer to WRITE CONFIG and press the Select key. The HDT will display:

```
 SENDING THE
CONFIGURATION
BLOCK xxx/yyy
```

Displayed while the HDT sends the updated data to the Interface Module.

https://truckmanualshub.com/

The HDT will display the MAIN MENU if the programming was successful. You can then program another gauge or use the Return key to go back to previous menus. When finished, unplug the tool.

If the HDT displays SYSTEM ERROR, turn the ignition off and back on, then repeat this procedure from the beginning.

6.7 Programming the Main Transmission Temperature Warning LED

This section describes how to program the correct turn-on temperature of the Main Transmission Temperature gauge warning LED.This procedure is only required when the Interface Module has been replaced or a different type of transmission has been installed in the vehicle.

The temperature at which the warning LED lights depends upon the type of transmission that is installed in the vehicle.

Installed Transmission	Temperature
Allison without retarder	285° F
Allison with retarder	300° F
ZF transmission	285° F
Manual transmission	275° F

6.7.1 Procedure

1. With the ignition off, connect the HDT to the diagnostic connector (6- or 9-pin) on the vehicle using the appropriate adapter. See Figure 6-2. The diagnostic connector is usually located under the dash on the driver's side.
2. Turn the ignition on. The HDT will look for the Interface Module and try to establish communications with it while displaying:

```
ESTABLISHING
 DATA LINK
```

Displayed while the HDT establishes communications with the vehicle system.

3. Typically, this takes less than 30 seconds but can take up to 2 minutes.
   a. If communications are established, the HDT will display:

```
INTERLINK MODULE
    DETECTED
SOFTWARE VERSION:
     V 1.0
```

Indicates the software version of the Interface Module. Your version number may be different.

https://truckmanualshub.com/

b. If communications are not established after 2 minutes, repeat this procedure starting at Step 1 with the ignition off. If the HDT fails to establish communications after three attempts, a problem may exist with the J1708 data bus. Pick a symptom from Chapter 5 that best describes the original failure in the instrument system and follow the troubleshooting procedures.

4. After communications are established, press the Select key. The HDT will read the configuration data and display:

```
READING THE
CONFIGURATION
BLOCK xxx/yyy
```

Displayed while the HDT gathers data from the vehicle's system. *xxx* and *yyy* = block numbers.

a. If the HDT reads the configuration data successfully, it will display:

```
        ACCESS LEVEL
▶NORMAL
 FACTORY
```

"Normal" is the tool's normal operating mode."Factory" is for factory use only and requires a password.

b. If the HDT cannot read the configuration data, it will tell you so. First, repeat this procedure from Step 1 with the ignition off. If still unsuccessful, one-at-a-time disconnect other devices that use the J1708 data bus, repeating this procedure each time to isolate the faulty component.

5. With the pointer at NORMAL, press the Select key. The HDT will display:

```
 INTERLINK/MINILINK
▶READ PUBLIC BUS
 CONFIGURE
```

6. Move the pointer to CONFIGURE and press the Select key. The HDT will display:

```
           MAIN MENU
▶VIEW CONFIG
 MODIFY CONFIG
 WRITE CONFIG
```

Used to see Main Transmission Temperature programming.

Used to change the configuration.

Used to accept the changes and send them to the Interface Module.

https://truckmanualshub.com/

7. To change the configuration data in the Interface Module, move the pointer to MODIFY CONFIG and press the Select key. The HDT will display:

```
      MODIFY CONFIG
▶TRAC BRAK APPLD PSI
 MAIN TRANS TEMP:XXX
```

Varies depending upon the gauge name you select.

XXX = temperature value in °F.

8. Move the pointer to MAIN TRANS TEMP:XXX and press the Select key. The HDT will display a list of transmissions that may be installed in the vehicle:

```
      MODIFY CONFIG
▼ALLISON W/O RETARDR
▶ALLISON W/ RETARDER
▲MANUAL TRANSMISSION
```

This screen is used to select which type of transmission is installed in the vehicle, and subsequently, the temperature at which the warning LED will light.

9. Move the pointer next to the name of the transmission type that is installed in the vehicle, then press the Select key. The HDT will display:

```
      MODIFY CONFIG
 TRAC BRAK APPLD PSI
▶MAIN TRANS TEMP:XXX
```

XXX = temperature value in °F.

10. Return to the MAIN MENU by pressing the Return key once.
11. Store the Main Transmission Type value in the Interface Module by moving the pointer to WRITE CONFIG and then pressing the Select key. The HDT will display:

```
 SENDING THE
CONFIGURATION
BLOCK xxx/yyy
```

Displayed while the HDT sends the updated data to the Interface Module.

   a. If the value was successfully stored, the HDT will display the MAIN MENU. At that point you can use the Return key to go back to previous menus. When finished, unplug the tool.
   b. If instead the HDT displays SYSTEM ERROR, turn the ignition off and back on, then repeat this procedure from the beginning.
12. When finished, disconnect the HDT from the vehicle.
13. To verify you set the correct value, go to Section 6.5 on page 8.

https://truckmanualshub.com/

https://truckmanualshub.com/

6.8 HDT Spare Parts

Part Name	Part Number
Hand-held Diagnostic Tool, complete kit	000-49856
Handheld Diagnostic Tool	220-12237
Carrying Case	240-12309
Diagnostic Cable with 6-Pin Connector	220-12234
Diagnostic Cable with 9-Pin Connector	220-12233
Private Bus Adapter	240-11204
Reprogramming Cable Adapter	220-12235

Table 6-1 *HDT Spare Parts*

END OF DOCUMENT