https://truckmanualshub.com/

Original instructions

# OPERATION & SERVICE MANUAL

## 8-10T Internal Combustion Counterbalanced Forklift Truck

CPCD 80
CPCD 100

KION Baoli (Jiangsu) Forklift Co., Ltd.

Downloaded from www.Manualslib.com manuals search engine

https://truckmanualshub.com/

# OPERATION & SERVICE MANUAL

## 8-10t Internal Combustion Counterbalanced Forklift Truck

KION Baoli (Jiangsu) Forklift Co., Ltd.

Downloaded from www.Manualslib.com manuals search engine

# PREFACE

Thank you for selecting BAOLI forklift truck! Your trust is a great honor to us!

8-10 ton internal combustion counterbalanced forklift trucks adopt hydraulic transmission with advanced TCM continuous speed control and integral drive axle with wheel reducer, so they have a lot of advantages such as good traction and travel performance, easy operation, reliable brake, wide visibility and safe performance. These trucks are all suit for handling and stacking packed goods in stations, ports, goods yards and warehouses and used widely in food processing, light and textile, mining industries and other factories, with some of attachments fitted, the trucks can be applied more and more.

This manual states the trucks' specifications, operation, maintenance, service, main assemblies' constructions and working principles so as to be completely familiar with the truck to get the most of it, and to help the operators to use the trucks correctly and attain the highest functions. It is necessary to read over the manual before they operate the trucks or service personnel serve these trucks.

Besides this Operation and Service Manual, there is Operator's Manual, which includes important information of safety driving and periodic maintenance. And, the manual of some important parts is provided.

We suggest you to give the manual a proper storage. If there is something in the manual you do not understand, ask the distributor to explain it to you. Suggestion and criticisms are welcome.

This manual content might not correspond with the actual condition because of the improving of our products. Our products are subject to improvements and changes without notice.

We heartily wish you keep everything running smoothly during operation of BAOLI forklift truck!

Downloaded from www.Manualslib.com manuals search engine

https://truckmanualshub.com/

# CONTENTS

**Ⅰ. About the forklift truck**.....1

1. External view and specification.....1

2. Characteristic of forklift truck.....3

**Ⅱ. Safety instruction and operation of forklift truck**.....5

1. Handling a new forklift truck.....5

2. Inspection before operation.....5

3. Start and stop of the engine.....6

4. Shipping, loading and unloading, slinging and towing of forklift truck.....7

5. Parking and storing.... . .....8

6. Information of safety operation.... ..... .....10

7. Operation device and meter.....16

8. Caution plate.....18

**Ⅲ. Periodic inspection and servicing**.....23

1. General rules on inspection and maintenance.....23

2. Essentials of servicing.....24

3. Recommended oil.....25

4. Lubrication system.....25

5. Routine check before daily operation.....27

6. Precautions of cooling system.....27

7. Notes during brake-in.....27

**Ⅳ. Construction, principle, adjustment and maintenance of forklift truck**…28

**1. Power system**.....28

1.1 General description.....28

1.2 Engine disposition.....29

1.3 Inspection and adjustment of engine.....31

1.4 Fuel system.....31

1.5 Coolant system.....33

1.6 Check and adjustment.....33

1.7 Precautions of cooling system.....38

**2. Drive unit**.....39

2.1 General description.....39

Downloaded from www.Manualslib.com manuals search engine

2.2 Torque converter……41
2.3 Charging pump……42
2.4 Hydraulic clutch……..43
2.5 Control valve and inching valve……43
2.6 Hydraulic circulation system……45
2.7 Principle……46
2.8 Caution when the trouble occurs……46
2.9 Trouble shooting……47
**3. Front axle**……50
3.1 General description……50
3.2 Main reduction gear & differential……50
3.3 Final reduction gear……50
3.4 Troubleshooting……53
3.5 Service data……53
**4. Brake system**……..54
4.1 General description……54
4.2 Power brake……..54
4.3 Parking brake……58
4.4 Wheel brake……..58
4.5 Troubleshooting……60
**5. Steering system**……61
5.1 General description……61
5.2 Hand wheel……60
5.3 Cycloid gear type powered steering unit……..62
5.4 Steering system troubleshooting……...70
5.5 Rear axle……..71
**6. Hydraulic system**……..73
6.1 General description……73
6.2 Main pump……73
6.3 Control valve……73
6.4 Control valve operation……74

Downloaded from www.Manualslib.com manuals search engine

https://truckmanualshub.com/

6.5 Main safety valve operation……..76
6.6 Tilt lock valve operation……77
6.7 Hydraulic circulation system (Main circuit)……..78
6.8 Troubleshooting……79
6.9 Maintenance……...80
**7. Lift Cylinder & tilt Cylinder**……81
7.1 Lift cylinder……81
7.2 Flow regulator……83
7.3 Tilt cylinder……84
**8. Lifting system**……85
8.1 General description……85
8.2 Inner & outer mast……..85
8.3 Lift bracket……..85
8.4 Roller position……..86
8.5 Adjustment of lifting system……...88
8.6 Maintenance and adjustment……...88
**9. Electric system**……91
9.1 General description…… 91
9.2 Brief explanation for operation……..95
9.3 Precautions when using the battery……97
9.4 Harness……...97
**Product improve suggestion sheet**……102
**NOTE**……103
**EC DECLARATION OF CONFORMITY**……104

Downloaded from www.Manualslib.com manuals search engine

# Ⅰ. About the forklift truck

## 1. External view and specification

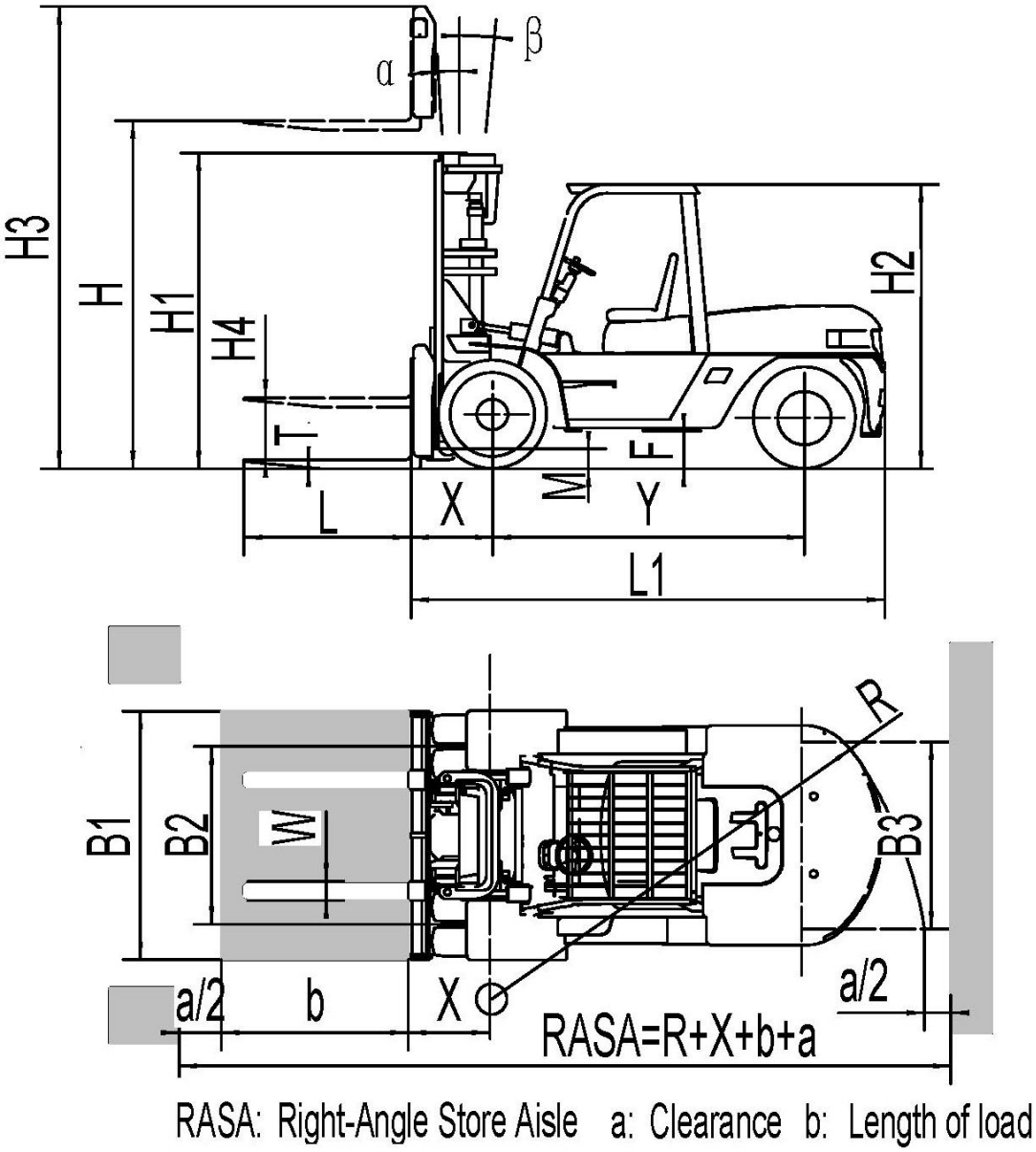


External view of internal forklift truck



Downloaded from www.Manualslib.com manuals search engine

## Main specification

| | | | | | | | | | |
|---|---|---|---|---|---|---|---|---|---|
| General | Model | | | | | CPCD80-C | CPCD80-W | CPCD100-C | CPCD100-W |
| | | | | | | | CPCD80-CU1 | | CPCD100-CU1 |
| | Power type | | | | | Diesel | | | |
| | Operating way | | | | | Sitting | | | |
| | Rated capacity | | | | kg | 8000 | | 10000 | |
| | Load center | | | | mm | 600 | | | |
| Dimensions | Lift height | | | H | mm | 3000 | | | |
| | Free lift height | | | H4 | mm | 205 | | 210 | |
| | Fork size | | | L×W×T | mm | 1500×160×75 | | 1500×160×80 | |
| | Fork outside spread (Min./Max.) | | | | mm | 320/2015 | | 420/2144 | |
| | Mast tilt angle | | | α/β | deg | 6/12 | | 6/12 | |
| | Front overhang | | | X | mm | 700 | | 733 | |
| | Overall dimensions | Length to fork face | | L1 | mm | 3940 | | 4258 | |
| | | Overall width | | B1 | mm | 2245 | | | |
| | | Mast lowered height | | H1 | mm | 2695 | | 2845 | |
| | | Mast extended height | | H3 | mm | 4445 | | 4307 | |
| | | Overhead guard height | | H2 | mm | 2565 | | | |
| | Turning radius | | | R | mm | 3700 | | 3900 | |
| Performance | No load/full load | Travel speed | | | km/h | 28 / 24 | | 28 / 22 | |
| | | Lift speed | | | mm/sec | 480/350 | 410/350 | 390/280 | 390/300 |
| | Max. gradeability | | | | % | 20 | | | |
| | Self weight | | | | kg | 11080 | | 12860 | |
| Chassis | Tyre | Front | | | | 9.00-20-14PR | | | |
| | | Rear | | | | 9.00-20-14PR | | | |
| | Tread | Front | | B2 | mm | 1600 | | | |
| | | Rear | | B3 | mm | 1700 | | | |
| | Wheelbase | | | Y | mm | 2500 | | 2800 | |
| | Min. mast ground clearance (no load/full load) | | Mast | M | mm | 245/205 | | | |
| | | | Frame | F | | 343/323 | | | |
| Drive units & control | Battery | | | | V/AH | 2×12/100 | | | |



Downloaded from www.Manualslib.com manuals search engine

## 2. Characteristic of forklift truck

The forklift truck has advantages as follows:

1. The hydraulic steering device makes steering flexible and the double ladder like steering bridge makes the turning radius minor.

2. The braking system employs oil brake, makes it possible to manipulate conveniently and brake reliably.

3. Employed wide-vision extension type mast, the truck is high intensity.

4. Hydraulic transmission type forklift trucks are provided with a drive unit including a torque converter and a hydraulic transmission. They feature the following:

a. Hydraulic torque converter can change the speed automatically with no limitation and output torque makes the forklift truck have good performance of drawing.

b. The slight travel device makes it easy for the drivers to aim the truck to the position of cargo.

c. At work, for the forklift truck that need starting and shifting frequently, achievement of smooth gear shifting control can raise working efficiency, simplify operation, reduce the driver's labor intensity and reduce requirement of the driver's operation skill.

5. The trucks' braking system employs oil brake, make it possible to manipulate conveniently and brake reliably.

6. Employed wide-vision type mast, and it's frame is two stage CJ extension type mast. The truck is high intensity and has wide vision. The mast adopts series design, having different lifting height according to the needs of the client.

7. Specific outline adopts streamline design, it has advantages such as low noise, small libration, comfortable operation, safety and reliability.



Downloaded from www.Manualslib.com manuals search engine

**Main parts of forklift truck:**

| No. | Name | Contents |
|---|---|---|
| 1 | Power system | engine mounting, system of fuel, exhaust and coolant etc. |
| 2 | Transmission | torque converter, transmission, transmission shaft, etc. |
| 3 | Drive axle | housing, half shaft, differential, wheel reducer, brake, front wheel etc. |
| 4 | Brake system | wheel brake and parking brake |
| 5 | Steering system | steering wheel, steering shaft, cycloid gear type powered steering unit and steering axle assy etc. |
| 6 | Hydraulic system | pump, valve, HP oil pipe, LP oil pipe, connectors etc. |
| 7 | Electric system | lamps and lanterns, battery, meter, harness etc. |
| 8 | Load system | mast, fork, carriage, load backrest, tilt cylinder, lift cylinder, lift chain, mast roller etc. |

**Weight of the main parts that can be disassembled**

| Model / Specification | | 8T | 10T |
|---|---|---|---|
| Balance weight | Slinging capacity (kg) | >4500 | >5000 |
| Overhead guard | Slinging capacity (kg) | >150 | |
| Mast | Slinging capacity (kg) | >2000 | >2100 |
| Carriage | Slinging capacity (kg) | >1000 | >1200 |
| Fork | Slinging capacity (kg) | >220 | >250 |



Downloaded from www.Manualslib.com manuals search engine

# Ⅱ. Safety instruction and operation of forklift truck

It is important for drivers and managers to remember the principle of “first safety” and ensure the safety operation as the description of Operation & Service Manual. Please read this manual thoroughly. This will give you a complete understanding of Baoli forklift truck and you will operate them correctly and safely.

## 1. Handling a new forklift truck

The performance and service life of the forklift truck depends heavily upon the way you handle it during the break-in period. Drive with special caution while becoming familiar with a new forklift truck.

(1) Always warm up your vehicle before putting it to work irrespective of season. Don’t run engine at high rpm without load needlessly. Operate the vehicle under the light load, avoid sudden speeding and braking.

(2) Replace gear oil in the differential and reducer after the new forklift truck working for 100 hours.

(3) Renew the oil in engine oil pan, transmission, driving axle and hydraulic oil tank; check and readjust the clearance of the driving and driven gear in the reducer after the new forklift truck working for 200 hours.

## 2. Inspection before operation

Please pay attention to the following items in order to make the vehicle working with high efficiency and lengthen its service life.

(1) The forklift truck adopts the home or imported engine, please read the manual accompanied with the engine carefully when using and maintenance.

(2) Check the tyre inflation pressure, if doesn’t enough, charge air in time. Check the bolts of all wheels for tightness.

(3) Check the amount of oil in the working oil tank for sufficiency, the position of lubrication should be lubricated. The oil level should be at the middle position between the upper and lower scale marks of oil level meter. The contamination level of the hydraulic oil should be lower than Grade 12.

(4) Check the radiator, and add antifreeze if necessary.

(5) Check hydraulic oil and brake fluid for leakage. Check if any leak or damage found on the oil pipes, water hoses, vent-pipes and the piping joints, pumps and valves



Downloaded from www.Manualslib.com manuals search engine

etc.

(6) Check for all the terminals and plugs in normal state. Check the meters, lamps, switches and electric circuit if they are running properly.

(7) Check every pedal for free stroke and the levers for looseness and smooth operation. Check lifting system, actuate the lifting and tilting levers to be certain that the lift bracket moves up and down properly and the mast can be tilted smoothly. Check brake system and steering system for flexibility and reliability.

(8) Check the wheel brake: the free stroke of brake pedal is 4-8 mm, when achieving effective brake, the clearance between the front floor and the pedal should be more than 20mm.

(9) Check the parking brake: the unload forklift truck can park on 20% slope, when the parking brake is locked.

(10) Check all connectors and fasteners for looseness.

## 3. Start and stop of the engine

### (1) Start of the engine

(a) First set the shift lever at the neutral position and the parking brake at the braking position.

(b) When starting, put the key into the start switch, turn it in the counter clockwise, preheat 15-20 seconds, and then turn it in the clockwise to “START” so the starting motor works. When your hand is away from the key, it automatically returns to “ON” by spring force. Every starting time shouldn’t morn than 15 seconds. Restarting should be after 30 seconds. As the engine doesn’t work after some times starting, should check and remove the trouble, do not keep the starting motor engaged for a long time**.**

(c) Following the start of the engine, it’s necessary to set the engine on idle running for five minutes. Full load operation can’t be started until water temperature of the engine rises above 60℃.

When the engine is on idle running, you must check water thermometer, oil manometer, ammeter, fuel measurer, and so on for the data, whether to meet the specification, and check each pedal for free stoke, braking performance for its reliability, steering operation for its flexibility, tyre pressure for its conformance to the standard. If there is no trouble, operation may be allowed.



Downloaded from www.Manualslib.com manuals search engine

**(2) Stop the engine**

First set the engine on idle running for five minutes, so as to cool the engine gradually, and then turn off the ignition switch, so the engine is stopped to work.

**Notice：**

. While the engine running, does not turn the start switch to “START” position, or it will damage the starting motor.

. Do not keep the start switch at the “ON” position while the engine is shut down. This will result in battery discharge.

## 4. Shipping, loading and unloading, slinging and towing of forklift truck

**(1) Ship the forklift truck**

(a) Apply the parking brake when shipping the forklift trucks by container or freight car.

(b) Fix the mast and the balance weight with steel wire and use jacks to prevent the forklift trucks from moving in the cabin.

(c) Pay attention to the overall length, width, height when loading, unloading and shipping and conforming the regulations is necessary.

(d) Single transporting if necessary after disassembling the mast and balance weight.

<table>
<tr><td rowspan="2">Model</td><td colspan="3">Mast</td><td colspan="2">Balance weight</td></tr>
<tr><td colspan="2">Dimension(mm)</td><td>Weight(kg)</td><td>Dimension(mm)</td><td>Weight(kg)</td></tr>
<tr><td>8T</td><td colspan="2">2450×2175×850</td><td>2423</td><td>1980×1166×1325</td><td>4193</td></tr>
<tr><td rowspan="2">10T</td><td>Mast</td><td>2600×1201×695</td><td>1864</td><td rowspan="2">1980×1610×1169</td><td rowspan="2">4826</td></tr>
<tr><td>Carriage</td><td>2238×1330×435</td><td>1330</td></tr>
</table>

**Notice:**

**Dismantling and slinging the component shall not be performed without the approval of our company. Under special circumstances, the appointed sling position should be used. The balance weight, fork and mast of the forklift truck all have their appointed sling position. The above-mentioned data is only for a reference, which may be adjusted because of configuration or technology optimization.**



Downloaded from www.Manualslib.com manuals search engine

**(2) Load and unload the forklift truck**

(a) Use the plate with enough length, width and strength.

(b) Pull the parking brake and use jacks to stop the wheel.

(c) Fasten the plate on the center of the cabin, there must be no grease on the plate.

(d) The left and right height of the plate must be equal to make the loading and unloading smooth.

(e) Don't change the direction on the plate to prevent the danger.

(f) Reverse the forklift truck slowly when loading it on the freight car.

**(3) Sling the forklift truck**

(a) Only the specially trained personnel can sling the truck.

(b) Sling points should be always at the positions specified in sling nameplate.

(c) The slinging cable must be enough to hang the forklift truck.

(d) Disassembled parts of forklift truck must be slung in the appointed position.

**(4) Towing of forklift truck**

(a) The towing pin is installed below the counter weight. When towing the forklift truck, first extract the pin and fasten a steel wire, then install the pin back.

(b) When towing the forklift truck, release the hand brake lever.

(c) The towing pin only used for following situation, while the forklift truck can't move or while transporting the forklift truck.

(d) Fasten the towing steel wire at the appointed position.

(e) Don't apply capacity abruptly when towing the forklift truck.

**(5) Repair the broken-down forklift truck**

If the forklift truck broken-down suddenly during using, drag it away and repair in time to avoid hindering other vehicles or workers.

## 5. Parking and storing

**(1) Safe parking**

(a) Park your forklift truck on a level ground preferably in a wide area. If parking on a slope is unavoidable, pull the parking brake device and block the wheels to prevent



Downloaded from www.Manualslib.com manuals search engine

accidental roll. The forklift truck is forbidden parking on a steep slope.

(b) Park your forklift truck in the area where designated or traffic conditions permit. If necessary, put a signpost or signal lights around the truck.

(c) Park your forklift truck on the solid ground. Avoid soft ground, deep mud or slippery surfaces.

(d) If you can not lower the forks on the ground due to break-down of the lifting system, put a warning flag to the fork end and park in the traffic conditions permitting.

**(2) Storing**

·**Before storing**

Before storing your forklift truck, clean it thoroughly and perform inspection using the following procedures.

(a) Wipe away grease, oil, etc. adhering to the body of the truck with waste cloth and water, if needed.

(b) While washing the body of the truck, check general condition of the truck. Especially check the truck's body for recess or damage and tyres for wear and nails or stones in the tread.

(c) Fill the oil tank up with the appointed fuel.

(d) Check for leakage of hydraulic oil, engine oil, fuel or coolant.

(e) Apply grease where needed.

(f) Check for looseness of hub nuts and cylinder piston rod joints. Check the surface of piston rod for damage.

(g) Check mast rollers to see that they rotate smoothly.

(h) Full oil into the lift cylinders by lifting the lift cylinders at the full stroke.

(i) In cold weather, don't draw off long antifreeze, if there is cooling water, run it away.

·**Daily storage**

(a) Park the forklift truck at a specified place and block the wheels.

(b) Place the shift lever in the neutral position and pull the parking brake lever.

(c) Put the key switch in "OFF" position and turn off the engine, operate the lever of the control valve several times and release the residual pressure of the cylinder or pipes.

(d) Remove the key and keep it in a secure place.

·**Long time storage**



Downloaded from www.Manualslib.com manuals search engine

Perform the following service and checks in addition to the “Daily storage” service:

(a) Taking the rainy season into consideration, park the truck at a higher and hard ground.

(b) Apply antirust oil to the exposed parts such as piston rods and shafts which tends to rust.

(c) Cover components which may be caught with humidity.

(d) The truck should be operated at least once a week. Fill the cooling system, if cooling water is discharged. Remove grease from the piston rods and shafts. Start the engine and warm up thoroughly. Move the truck slowly forwards and backwards. Operate the hydraulic controls several times.

(e) Avoid parking on soft grounds such as asphalted road in summer.

·**Operate the forklift truck after long time storage**

(a) Remove antirust oil from the exposed parts.

(b) Discharge the engine oil in crankshaft case of the engine, discharge the gear oil or hydraulic transmission oil in differential and gear box, after cleaning up then renew oil.

(c) Discharge foreign matter and water from the hydraulic reservoir and fuel tank.

(d) Remove the cylinder cap, the valves and the rocker shafts, check for the clearance in normal data.

(e) Add cooling fluid to specified level.

(f) Perform pre-operation checks carefully.

(g) Warm up the engine before operation.

**Warning:**

If at any time your forklift truck is found to be in need of repair, defective, or in any way unsafe, the condition should be reported to the supervisor, and the truck should be taken out of service until it has been restored to safe operating condition.

## 6. Information of safety operation

(1) The forklift truck belongs to special equipment. Only trained and authorized operator shall be permitted to operate and service the truck.

(2) Wear the safety guards, such as clothing, shoes, helmet and gloves while operating the truck.



Downloaded from www.Manualslib.com manuals search engine

(3) When operating the truck, observe and follow all nameplates stuck on the truck. The nameplates must be replaced if lost or damaged.

(4) Daily maintenance should be done before or after using the truck. Anytime you find that the truck is not functioning normally, operation of the truck should be halted and check or repair at once.

(5) When the distance between the gravity center of loads and the fork arms is 600mm, the max. capacity is the rated capacity. When the distance exceeds 600mm, the capacity shall be reduced according to the load chart. Overloading is strictly prohibited.

(6) Operate your forklift truck on a hard ground. Operate on other ground, the lift capacity and travel speed must be decreased. Wipe off the oil and grease from the floor.

(7) If the forklift truck is equipped with attachment, its usage sphere will be wider, but its allowable load and stability is reduced. The attachment and special device is not to be diverted to any other purpose. It's very dangerous to rebuild the attachment. Please read the additional instruction we supplied and operate the truck following it strictly.

(8) Users select "Lengthening fork" in order to carry widening loads. Pay much attention not to overload and observe the allowable load and the capacity chart stuck on the truck. Careful driving should be taken when traveling and turning.

(9) The unloaded forklift truck with attachment should be operated as a loaded truck.

(10) Connect the power and turn on the key switch, select the position of direction switch, check the truck for normal operation by turning steering wheel, depress the speed-adjusting pedal softly to keep proper acceleration.

(11) During operation, pay attention to the performance and condition of the system of machinery, hydraulic, electric and speed-adjuster etc.

(12) When operate one lever, pay attention not to shift another lever. Don't operate the lever at any position out of the driver's seat.

(13) The shift distance of control valve lever can control the speed of the lifting or descending of the goods. When the goods are lifted or descended, the initial speed shouldn't be too fast in either case.

(14) When tilting the mast forward or backward to the limit or lifting the fork to the maximum height, return the directional lever to neutral.



Downloaded from www.Manualslib.com manuals search engine

(15) The starting, turning, driving, braking and stopping of the truck should be done smoothly. When turning on the humid or slippery road, the truck should be decelerated.

(16) Because the forklift truck turns by the rear wheels, the end counterweight may swing widely when turning. Use care in narrow aisles and other workplaces.

(17) Operate the forklift truck smoothly, don't jerk the steering wheel. Avoid sudden stop, acceleration, stop or turn. In the case of improper operation, the truck will turn over. In case of this, the driver must keep calm, don't jump off the truck. The driver must hold tightly the control wheel with two hands; meanwhile, his body must incline in opposite direction of truck's turning over.

(18) Turning, lateral or deflective traveling shall not be taken on a slope. It could cause overturning of the truck, it is very dangerous. On a slope, drive the truck with load forward to ascend and backward to descend. When the truck goes down on a slope, drive slowly with the brakes on. Make sure that the engine should not be shut down when traveling on a slope.

(19) The stability of the truck is influenced by the wind-force during outside operation, you must notice specially.

(20) Be careful and slow driving over a dock or temporary paving slab.

(21) Insert forks deeply under goods. Adjust fork's distance according to the dimension of goods. Make the loads distribute on the forks evenly to avoid tilt and slide of goods.

(22) Don't pick the loads with single fork. Fork can not be used to pull out any embedded goods, if necessary, the pulling force should be estimated.

(23) Don't handle unfixed or loose goods. Be careful to handle bulky goods. To prevent the collapse of stacked goods, tighten them. Forbid loading loose or little volume goods without pallet.

(24) When loading the goods, lower the forks to the floor. After the fork inserting stacked goods, the fork arms should be in contact with the goods. Drive the truck with mast tilting back for stabilizing the load. Before traveling, raise the forks for 200mm-300mm from the floor.

(25) When handling bulky loads which block your view, operate the forklift truck in reverse or have a guide.

(26) While mast's lifting and lowering, anyone is absolutely prohibited from standing under the lift bracket or being lifted with forks. Never permit anyone to stand or walk



Downloaded from www.Manualslib.com manuals search engine

under upraised forks.

(27) When lifting the load, according to the weight of the load, accelerate properly and then pull the lifting lever.

(28) The load descends for the gravity, at this time, the engine must be in idle position, and the lever must be pulled slowly to prevent the load from sudden falling.

(29) When loading and unloading goods, keep the mast vertical and the truck is in braking state.

(30) Load should cling to the load backrest. Do not handle the load which exceeds height of the backrest, or else there is a danger of load's falling against operator.

(31) When travel with load, don't tilt mast forward, don't do handling. Don't brake abruptly to prevent goods from slipping off the forks.

(32) It is necessary to brake before tilting the mast forward or backward. It's also necessary to decelerate and tilt forward slowly so as to prevent the goods from slipping off the forks.

(33) Don't make a sudden braking when the truck traveling with loads.

(34) Drive the forklift truck to the stacked goods at a low speed, at the same time, pay much attention to sharp and hard objects near the goods, otherwise, the tyres will be pricked.

(35) Pay attention to pedestrian, obstacle and bumpy road when driving. Pay attention to the clearance over the forklift truck.

(36) Keep your head, hands, arms, feet and legs within the confines of the cab. Never allow other persons on the forklift truck.

(37) Tilt the mast of the high lift forklift truck as backward as possible when operating the truck. Use minimum forward and backward tilt when loading and unloading. It is dangerous to travel or turn when lifting the goods at high levels.

(38) It is noted that the goods will fall down when the forks of the truck with lifting height more than 3m lift, take the protection measures if necessary.

(39) Before the truck decelerating and stopping, don't change gear to reverse shift, so as to ensure the safe loading.

(40) When the truck stops and the engine is on idle position, the mast must be tilted backward. You shouldn't leave the truck with idling engine or hanged goods unattended.

(41) When adding fuel, make the driver leave the truck and the engine flameout. Don't ignite when checking the level of fuel tank.



Downloaded from www.Manualslib.com manuals search engine

(42) Don't open the radiator cap when the engine is very hot.

(43) After one day's working, the fuel tank should be added oil to prevent the humidity in the fuel tank from becoming the blob and then interfusing the fluid.

(44) When leaving, engage the hand brake, lower the forks on the ground and let the shift lever to neutral, make the engine flameout or cut down the electric supply. If parking on a slope with smaller gradient, apply the parking brake and block the wheels. The truck is forbidden parking on a slope with bigger gradient.

(45) Don't adjust the control valve and relief valve at will to prevent the damage of hydraulic system and its components because of excessive pressure passing them.

(46) Tyres should be inflated according to the pressure value specified in the nameplate of "Tyre Pressure".

(47) Check the chains periodically to make sure that good lubrication condition exists between the chain elements, the degree of tightness between left and right chain is identical. If the variation value of the chain pitch exceeds 2% standard value, it indicates that the chains have been worn excessively, replace it immediately.

(48) The overhead guard is main part which is strong enough to meet safety standard, and protect the operator from falling materials. It's very dangerous to dismantle or rebuild the overhead guard, because these conditions could lead to an accident.

(49) A load backrest shall be used as protection against back falling objects on the fork. It's very dangerous to dismantle or rebuild the load backrest, because these conditions could lead to an accident.

(50) You can't change or add other working equipments on the truck without our company's permission, or the rated capacity and safety operation will be affected.

(51) Keep safety when serving on high position.

(52) The forklift truck must be operated under the following environment: below an elevation of 1000 meters and temperature between -20℃and 40℃, relative humidity is 95%. Careful operation must observe under other adverse circumstances.

(53) Because of the danger for the people, the forklift is forbidden operating in airtight space, or you may be choked by the tail gas. The tail gas's exhausting standard shouldn't be lower than the no-load mechanical vehicle exhaust standard ruled by the nation that users are in. If in Europe nation, the adopted tail gas's exhausting index should be applied Europe StageⅢA standard.



Downloaded from www.Manualslib.com manuals search engine

(54) According to the Directive 2000/14/EC and based on EN12053 standard，the noise pressure level at the operator's position and the measured sound power level and the guaranteed sound power level is referred to the following table. But the noise of the forklift truck may fluctuate due to different operation and the influence of the external environment.

(55) The driver feels the vibration of the forklift truck when operating and traveling the forklift truck.. According to ISO3691 and based on EN13059 standard. The vibration of the forklift truck fluctuates according to environment condition. In normal working condition, the vertical direction acceleration mean value from the seat to the operator by testing is in the following table. But the vibration frequency felt by the driver depends on the working condition (etc. road, operation method), so the actual vibration frequency must be determined according to environment condition when necessary.

| Model | The noise pressure level at the operator's position | The measured sound power level | The guaranteed sound power level | The vertical direction acceleration mean value from the seat to the operator |
|---|---|---|---|---|
| | EN12053 | EN12053 | 2000/14/EC | |
| CPCD80 | 87 dB(A) | 110 dB(A) | 111 dB(A) | 0.92 ($m/s^2$) |
| CPCD100 | 86 dB(A) | 109 dB(A) | 111 dB(A) | 1.06 ($m/s^2$) |

(56) To prevent the fire, accident or other unpredictable event, prepare the fire extinguishers in advance and operate them according to the instructions.

(57) Preventive maintenance services should be done before or after using the truck. Anytime you find that the truck is not functioning properly, operation of the truck should be halted and check or repair the trouble.

(58) When operating the machine, observe and follow all markings on the machine. If the marking is lost, please stick it in time.



Downloaded from www.Manualslib.com manuals search engine

## 7. Operation device and meter

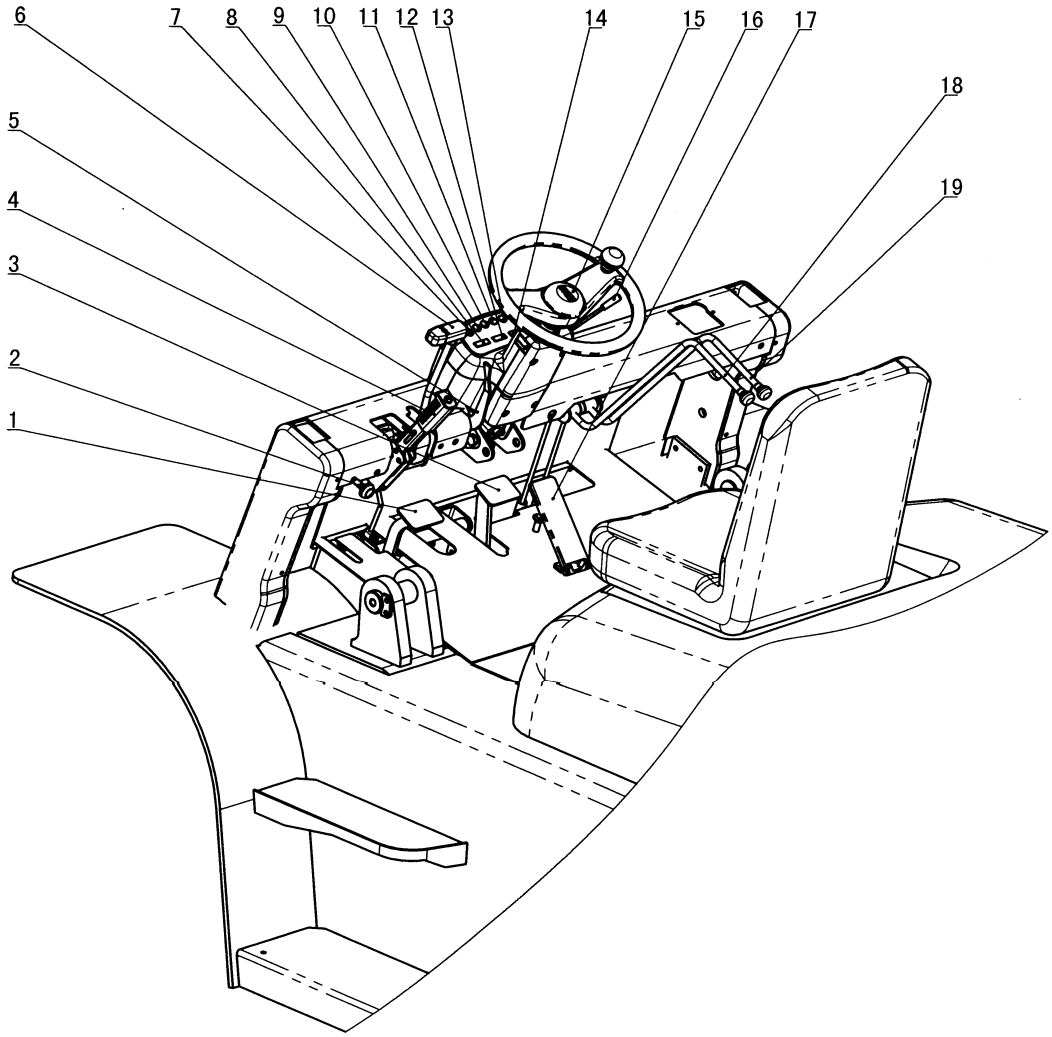


1. Inching pedal
2. Button for stopping engine
3. Brake pedal
4. Parking brake lever
5. Hand wheel adjusting lever
6. Shift lever
7. Oil pressure indicator
8. Fuel gauge
9. Charge signal
10. Neutral signal
11. Air filter indicator (option)
12. Water temp. gauge
13. Sedimentor indicator (option)
14. Hour meter
15. Horn button
16. Turn signal lever
17. Accelerator pedal
18. Lift lever
19. Tilt lever



Downloaded from www.Manualslib.com manuals search engine

The function and use method of operation device and meter is listed as follows:

| No. | Name | Function | Use method |
|---|---|---|---|
| 1 | Inching pedal | Couple or uncouple the transmission. | When the pedal is pressed, the transmission is uncoupled. |
| 2 | Button for stopping engine | Stop the engine. | Pull the button to stop the engine. |
| 3 | Brake pedal | Brake the truck. | Depress the pedal to brake the truck. |
| 4 | Parking brake lever | Park the truck. | Pull the lever backward fully. |
| 5 | Hand wheel adjusting lever | Adjust the angle of steering wheel. | |
| 6 | Shift lever | Change the travel direction. | Pull the lever forward, the truck travels forward. |
| 7 | Oil pressure indicator | Indicate the pressure of engine oil. | Pressure is insufficient, it lights up. |
| 8 | Fuel gauge | Indicate the fuel capacity. | Ignition switch is set at on. |
| 9 | Charge signal | Indicate the battery condition of charge. | Lamp comes on when the ignition switch is set at on. |
| 10 | Neutral signal | Indicate the neutral position. | Shift lever is in neutral position, it lights up. |
| 11 | Air filter indicator (option) | It will warn when the air filter is blocked. | Exceed standard resistance, it flashes. |
| 12 | Water temp. gauge | Indicate the temperature of engine coolant. | Ignition switch is set at on. |
| 13 | Sedimentor indicator (option) | Indicate water amount in sedimentor. | Water reaches to a certain level, it lights up |
| 14 | Hour meter | Shift lever is in neutral position. | Ignition switch is set at on. |
| 15 | Horn button | Control the horn. | Press it to sound horn. |
| 16 | Turn signal lever | Indicate the turning direction. | Pull the lever, the turn signal light blinks. |
| 17 | Accelerator pedal | Increase the engine speed | Depress the pedal to increase the speed. |
| 18 | Lift lever | Control lift cylinder. | Pull backward to lift, pull forward to decline. |
| 19 | Tilt lever | Control tilt cylinder. | Pull the lever backward to tilt the mast backward. |



Downloaded from www.Manualslib.com manuals search engine

## 8. Caution plate

The caution plates attached on the vehicle indicates the operating method and instructions. Before driving it, please be sure to read them thoroughly. If the caution plate drops, stick it again. When maintaining, check if the caution plate is complete and the writing is legible, if necessary, please replace them.

**(1) Safety mark** (People are forbidden to stand on or down the fork.)

**(2) General information when operating**

**(3) Nameplate of forklift truck**

Downloaded from www.Manualslib.com manuals search engine

## (4) Lubrication system

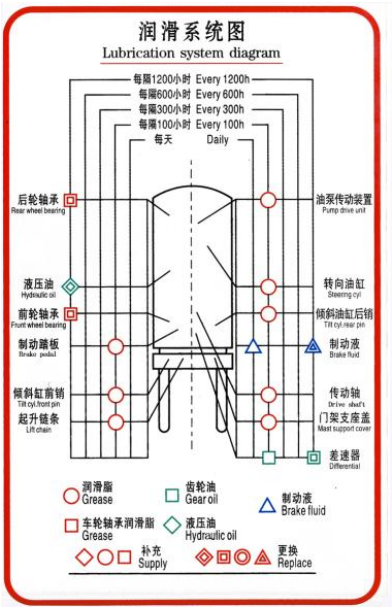


## (5) Capacity chart

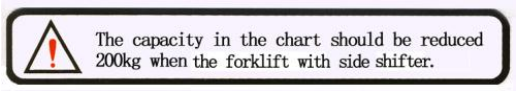
The capacity in the chart should be reduced 200kg when the forklift with side shifter.

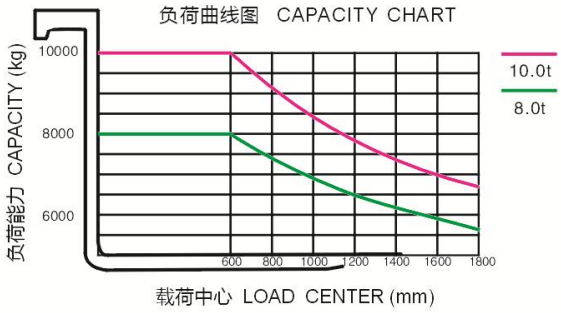


## (6) Inspections before starting

Inspections before starting

Do inspections before starting the truck:

1. Hydraulic oil level: The liquid level should be in the middle position of up and down marks of oil level indicator;
2. Check the pipes, joints and pump valves for leakage and damage;
3. Check the driving brake:
(1) The virtual travel of brake pedal should be between 20-30mm;
(2) The clearance between front backing plate and pedal should be larger than 20mm;
4. Check the parking brake frequently and make sure that the truck with full load can stop on the ramp with 15% slope when pulling the lever to the bottom;
5. Check if meters, lamps, switches and electronic wirings are working normally.



Downloaded from www.Manualslib.com manuals search engine

**(7) Adjust parking brake**

**(8) Add hydraulic oil**

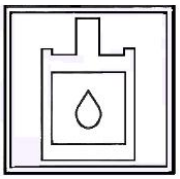

**(9) Add fuel**

**(10) Add antifreeze**

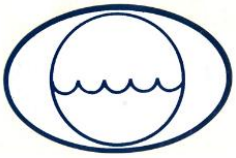

**(11) Tyre safety decal (charging tyre)**

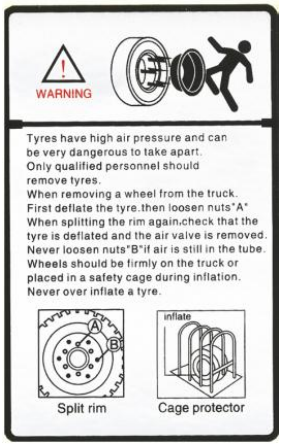


**(12) Tyre pressure decal (charging tyre)**

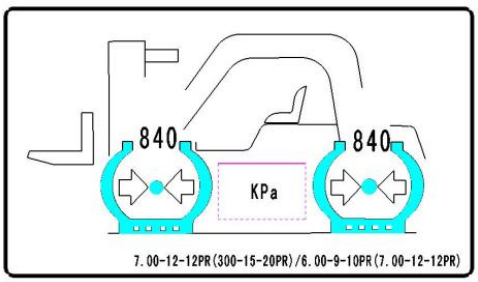




Downloaded from www.Manualslib.com manuals search engine

**(13) Cautions for high voltage**

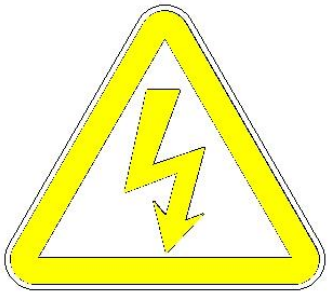

**(14) Sling point indication**

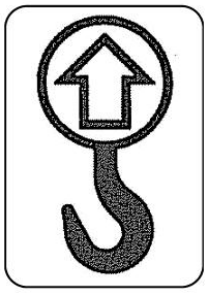

**(15) Sling decal**

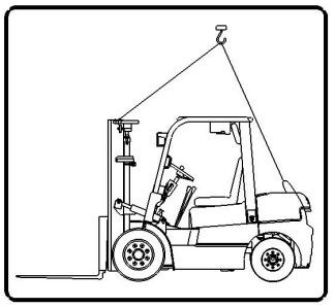

**(16) Forbid entering into the space behind the mast**

**(17) Forbid conveying person**

Downloaded from www.Manualslib.com manuals search engine

**(18) Hand caution decal**

**(19) Fan hurting hands**

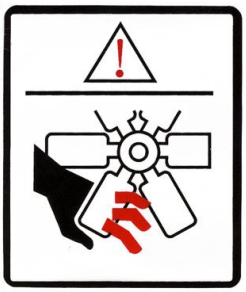

**(20) Hood crushing hands**

**Energy accumulator decal**

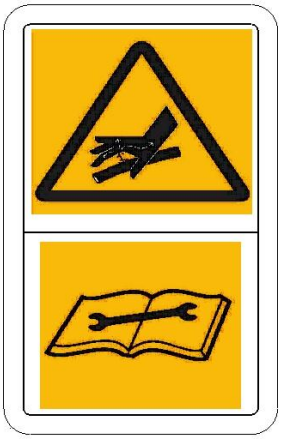

**Belt pulley thumb hand decal**

Downloaded from www.Manualslib.com manuals search engine

# Ⅲ. Periodic inspection and servicing

During operating the forklift truck, it is necessary to operate carefully, service and maintain periodically to make the forklift truck keep in good condition.

## 1. General rules on inspection and maintenance

(1) Only use genuine parts provided by our company.

(2) Only use genuine or recommended oil when replacing or adding.

(3) Clean oil fillers and grease fittings with a brush or waste cloth before adding oil or grease.

(4) Checking oil level and adding oil should be made with the truck parked on a level ground.

(5) Preventive maintenance should be done in an orderly manner and due care taken not to injure yourself.

(6) If any damage or fault is found, stop the truck and report the condition to the manager. Do not operate the truck until it has been repaired completely.

**. Regular inspection**

(1) Check the seal and the reliability of the hydraulic system.

(2) Check the reliability of the steering and braking system.

(3) Check the reliability of mast, driving axle and steering axle connecting with the frame.

(4) Check all wheels for tightness.

**. Irregular inspection**

(1) Check the reliability of each welding joints of the mast, frame and so on.

(2) Check the reliability of connecting joints of steering cylinder, joint plate and gimbals etc.

(3) Check all pipes and hoses for any leakage and breakage.

(4) Check the performance of the traveling brake and the parking brake.

**Caution:**

**. Only trained and authorized serviceman shall be permitted to service and repair the truck.**

**. When checking and maintaining the forklift truck, do not use the mast or the load backrest instead of a ladder, these actions will lead to a dangerous condition unexpectedly.**



Downloaded from www.Manualslib.com manuals search engine

## 2. Essentials of servicing

(1) Some critical components must be replaced according to demands periodically. Use genuine parts only.

(2) Use the same model oil only when replacing or adding.

(3) If any damage or fault is found, stop the truck and report the condition to the manager. Do not operate the truck until it has been repaired completely.

Periodic service and maintenance must be done according to the following list after using the forklift truck.

| No. | Item | Contents | Period (hrs.) | Remark |
|---|---|---|---|---|
| 1 | Bearing, steering wheel | Replace grease | 1000 | |
| 2 | Bearing, drive wheel | Replace grease | 1000 | |
| 3 | Steering link lever | Replace grease | 1000 | |
| 4 | Parking brake lever | Add grease | 200 | |
| 5 | Pin, foot brake | Add grease | 200 | |
| 6 | Drive axle body | Replace gear oil | 2400 | |
| 7 | Braking oil | Add | Whenever necessary | |
| 8 | Pin, tilting cylinder | Add lubricating grease | 400 | |
| 9 | King pin, knuckle | Replace grease | 1000 | |
| 10 | Hydraulic tank and filter | Clean | 1000 | |
| 11 | Hydraulic oil | Replace | 1000 | |
| 12 | Lift chain | Replace | 3000 | If damaged, replace it. |
| 13 | H. P. hose | Replace | 3000 | |
| 14 | Switch, hydraulic motor | Clean photoelectric coupler | 200 | |
| 15 | Brush, traction motor | Check | 1000 | |
| 16 | Brush, hydraulic motor | Check | 1000 | |
| 17 | Brush, steering motor | Check | 1000 | |

**Notice:**

**When serving and checking the truck, do not use the mast or the load backrest instead of a ladder, these actions will lead to a dangerous condition unexpectedly.**

## 9. Periodic servicing



Downloaded from www.Manualslib.com manuals search engine

## 3. Recommended oil

| Name | Brand or code | | Quantity |
|---|---|---|---|
| | Domestic | Overseas | |
| Diesel | Refer to diesel engine manual or select GB252-81 light diesel: Winter—10～—35# Summer0# | JISK2204/2# (general region) JISK2204/3# (cold region) | 140L |
| Lubricant oil | Select refer to engine manual or working condition diesel:GB5323-85 | SAE10W (Winter) SAE30 (Summer) | |
| Hydraulic oil | N32# or N46# | ISOVG30 | 90L |
| Torque converter oil | 6# Torque converter oil | SAE10W | 20L |
| Gear oil | 85W/90 | SAE85W/90 | 18L |
| Brake fluid | DOT3 Compound brake fluid | | 1.5L |
| Lubricant grease | 3# Lithium base grease (drop point 170) | JISK~~2220/2#~~ | |
| ~~Coolant~~ | ~~Water or 35℃Long Life Coolant (FD~~-2) | | Filled |

Adding oil, grease and coolant should follow relevant automobile standard. The waster of the forklift truck must be reclaimed obeying the relevant laws and regulations. Incorrect treatment will pollute water, soil and atmosphere etc.

Wear a helmet, safety shoes and working clothes to avoid contacting with body when adding oil, grease and coolant.

## 4. Lubrication system

| NO. | Position | Grease point | Type | Time(hours) | | | |
|---|---|---|---|---|---|---|---|
| | | | | 50 | 100 | 500 | 1000 |
| 1 | Support of steering | 2 | Lime grease | | + | | |
| 2 | The two end joints of steering cylinder | 2 | Lime grease | + | | | |
| 3 | Bearing of knuckle | 4 | Lime grease | | + | | |
| 4 | Bracket of foot control | 1 | Lime grease | | + | | |
| 5 | Pin of tilt cylinder | 2 | Lime grease | + | | | |
| 6 | Lever head of tilt cylinder | 2 | Lime grease | + | | | |
| 7 | Support bushing of mast | 2 | Lime grease | | + | | |
| 8 | Lift roller of fork bracket | 8 | Lime grease | | + | | |

**Note: About lubrication of the engine, refer to the ENGINE OPERATION MANUAL.**



Downloaded from www.Manualslib.com manuals search engine

## Lubrication diagram

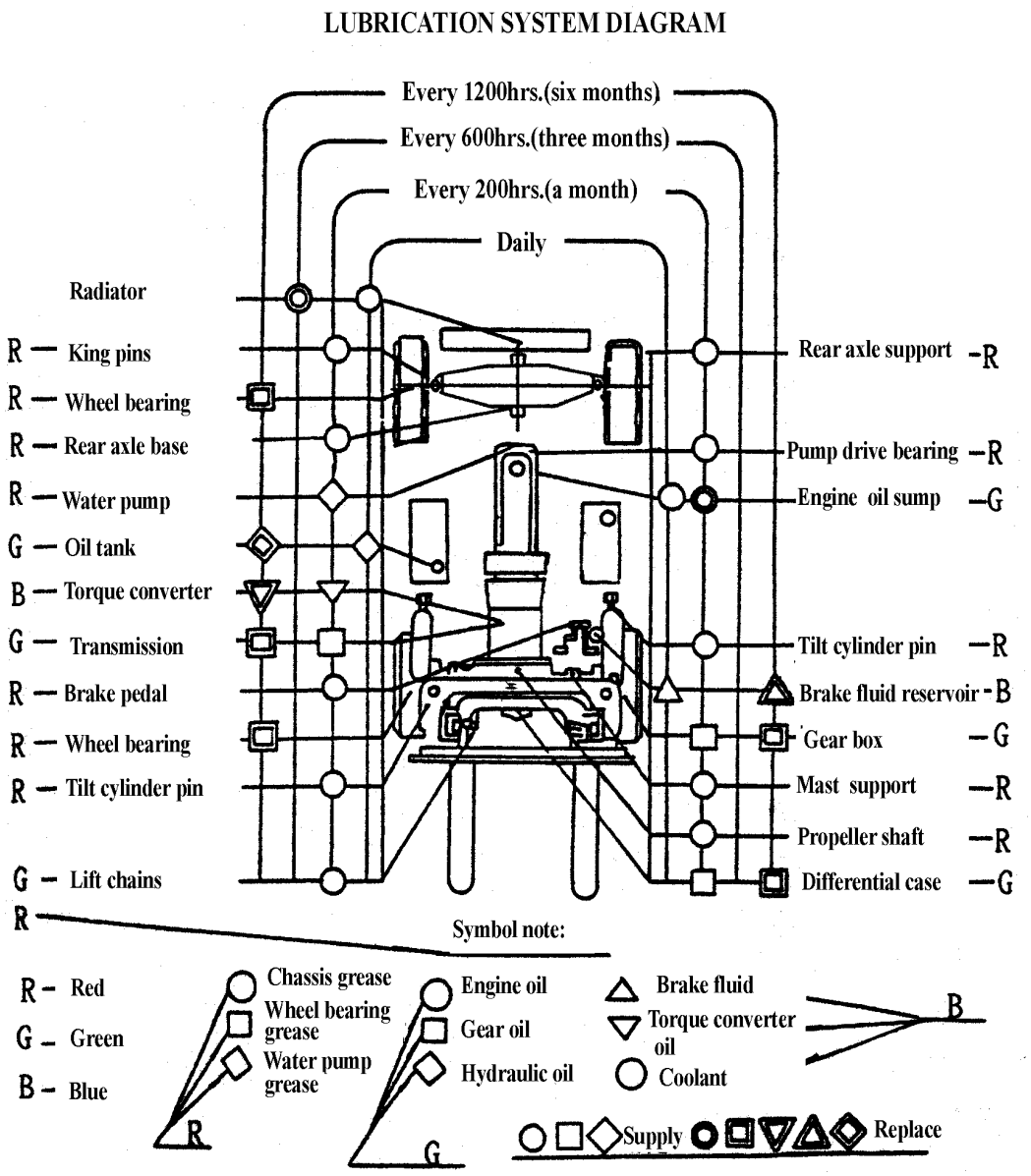




Downloaded from www.Manualslib.com manuals search engine

## 5. Routine check before daily operation

(1) Check the storage of fuel.

(2) Check if any leak or damage found on the oil pipe, water hose, vent-pipe and hydraulic parts.

(3) Check whether the hydraulic hose storage attain to the regular capacity, the oil level should be at the middle position between the upper and lower scale marks of oil level meter.

(4) Check if fix or loose found on the wheel bolt and transmission bolt.

(5) Check tires air pressure.

(6) Check steering and transmission for flexibility and reliability.

(7) Check the traveling brakes: The free travel of brake pedal is 40mm, the clearance between the front floor and the pedal should be bigger than 20mm.

(8) Check the parking brake: The unload truck can park on the 20% grade ramp, when the parking level is pulled to the bottom.

(9) Check the electric system to see whether connect, the connector whether loose, the lights, meter whether work normally.

## 6. Precautions of cooling system

(1) Use extreme care when removing the radiator pressure cap. In pressure system, the sudden release of pressure can cause a steam flash which would cause a serious personal injury. Loosen cap slowly to allow steam to escape. After that, tighten cap securely.

(2) Check the radiator coolant reservoir fluid level. It should between FULL and LOW mark. Add the same type coolant to specified level if necessary. The coolant can be used all the year round.

(3) Put the coolant on a safe place and mark “Dangerous Matter” for its poisonous. If swallowed by accident, take the emergency first aid and consult a physician immediately.

(4) According to variety working condition, periodic wiping away the dirt adhering to the surface of the radiator is necessary.

## 7. Notes during brake-in

Operating the machine under the light load, low speed condition for the first stage of operation of 100 hours. Avoid suddenly speeding and brake. Renew the oil in engine oil pan, transmission, driving axle and hydraulic oil tank after 200 operation hours.



Downloaded from www.Manualslib.com manuals search engine

# Ⅳ. Construction, principle, adjustment and maintenance of forklift truck

In order to keep good condition of your truck, you must have an intimate understanding of the construction, principle, adjustment and maintenance of the forklift truck. When find damage or a fault at the truck, stop operating the truck and inform a professional serviceman. Use genuine parts of our company for replacement.

## 1. Power system

### 1.1 General description

Power system consists of the engine, fuel system, cooling system and exhaust system. The engine is connected with the frame by rubber cushion to avoid vibration (Fig.1.1).

For the construction and adjustment of engine, please refer to the operation and maintenance manual of engine.

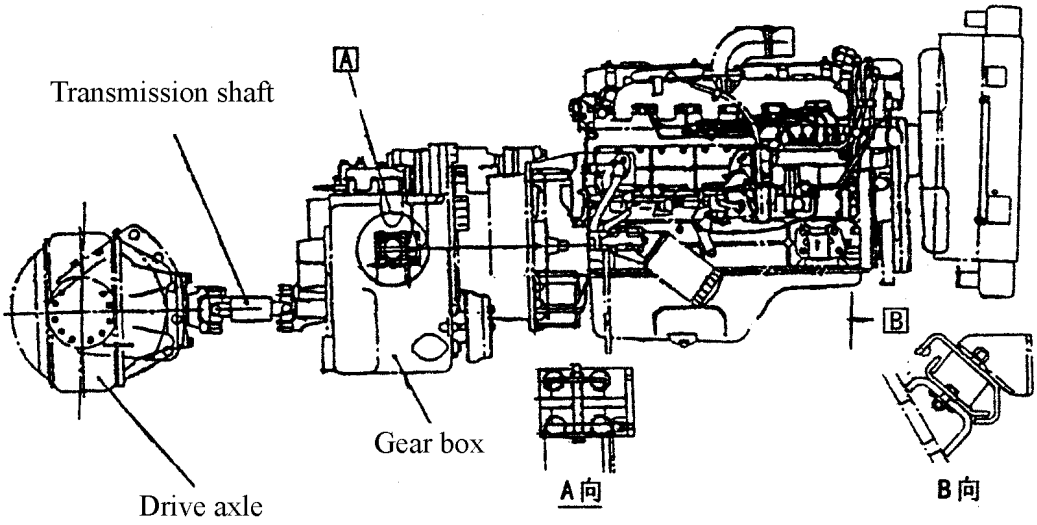


Fig. 1.1 Installation of engine



Downloaded from www.Manualslib.com manuals search engine

## 1.2 Engine disposition

The engine used for 8-10t forklift truck includes the import engine 6BG1 (ISUZU), the home engine 6102BG6 (Zhaoyang).

| Engine model | 6102BG6A | A-6BG1QC | QSB4.5 |
|---|---|---|---|
| Place of production | Zhaocai | Japan(ISUZU) | Cummins,Inc. |
| Rated output / Speed kw/rpm | 80.9/2500 | 82.3/2000 | 82/2200 |
| Rated torque / Speed N.m/rpm | 353/1600 | 416/1400-1600 | 488/1500 |
| Cylinder number | 6 | 6 | 4 |
| Bore×Stroke mm | 102×118 | 105×125 | 102×137 |
| Total displacement L | 5.785 | 6.494 | 4.5 |
| Appropriate truck model | CPCD80-CY<br>CPCD100-CY | CPCD80<br>CPCD100 | CPCD80-CU1<br>CPCD100-CU1 |

**Parallel table for engine and forklift model which is coincidence and stuck with CE label:**

| Engine model | | | The guaranteed sound power level LwA(dB) 2000/14/EC | Exhausting 2004/26/EC | CE CONFORMITY 2006/42/EC | Truck model |
|---|---|---|---|---|---|---|
| Diesel engine | Cummins,Inc. | QSB4.5 | 111 | StageⅢA | yes | CPCD80-CU1<br>CPCD100-CU1 |

**Note:** The sound power level $L_{WA}$ according to 2000/14/EC standard, the exhausting according to 2004/26/EC standard.

Here we give a brief description of the construction, parameter and disposition about model 6BG1 imported engine. For the construction and specifications of other engines, see their respective operation instruction. Refer to Fig 1.2 and attached list about the construction and specifications of 6BG1.



Downloaded from www.Manualslib.com manuals search engine

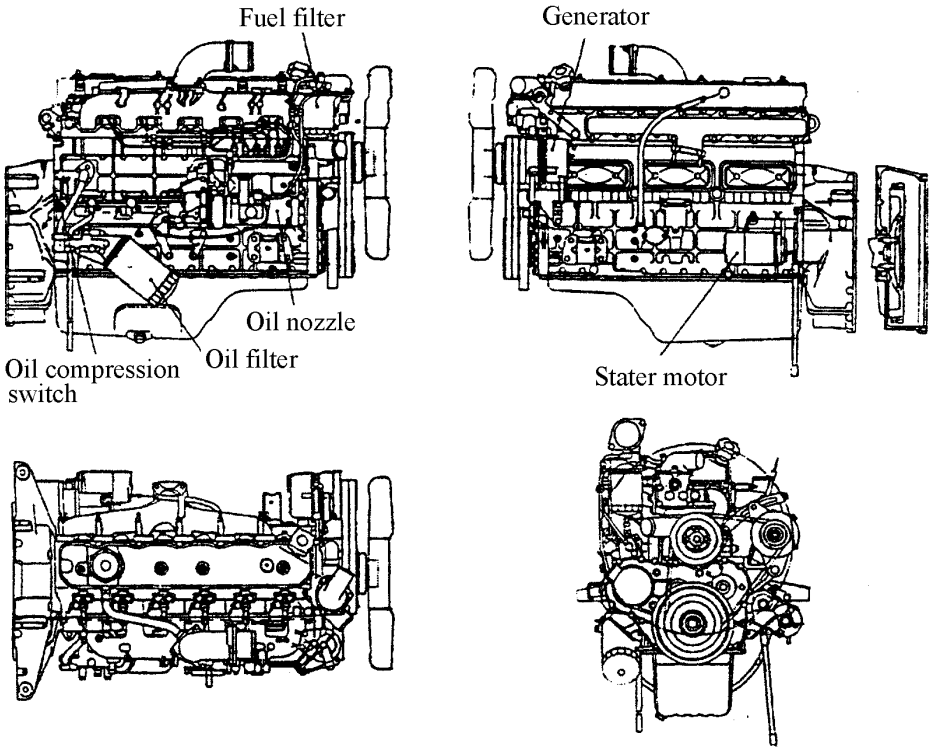


Fig.1.2 A-6BG1QC diesel engine

**Main performance and disposition of A-6BG1QC**

| | | | |
|---|---|---|---|
| Model | | | A-6BG1QC |
| Type | | | 4-cycle,water-cooled,overhead valve |
| No. of cylinder—bore×stroke | | | 6-105mm×125mm |
| Total displacement (L) | | | 6.494 |
| Compression ratio | | | 17 |
| Performance | Rated speed | rpm | 2000 |
| | Rated output | kw | 82.3 |
| | Max. torque (N.m/rpm) | | 416/1400-1600 |
| | Full-load fuel consumption | g/kwh | 233 |
| | No-load Min. speed | rpm | 700 |
| | Weight | kg | 450 |
| | Dimension | mm | 1129.5×672.0×860.0 |
| Injection start pressure | | $kg/cm^2$ | $kg/cm^2$ |
| Compress pressure | | $kg/cm^2$ | $kg/cm^2$ |



Downloaded from www.Manualslib.com manuals search engine

## 1.3 Inspection and adjustment of engine

In order to keep good condition of your truck, you must carry out periodic inspection and adjustment of power system.

(1) Regularly clear the dust of air cleaner.

(2) Regularly replace oil filter and fuel filter.

(3) Check and apply the coolant periodically.

(4) Periodic inspection of throttle valve and injection pump.

(5) Check fan belt for tension and all fasteners.

**Note:**

Always check the exhaust gas of the engine during using the forklift truck. Especially after maintaining the engine, it's necessary to verify the discharge indicator ensure that discharge value is fit for the national standard, so as to minimum damage to the person and environment.

## 1.4 Fuel system

The fuel system composed with the fuel tank, filter, fuel sensor.

### 1.4.1 Fuel tank

The fuel tank is a welded construction integrated with the truck frame. It is located on the left side of the truck frame. The tank cover with a fuel sensor is located on the top surface of the tank. Once every 600 hours operation, it is required to clean the fuel tank.

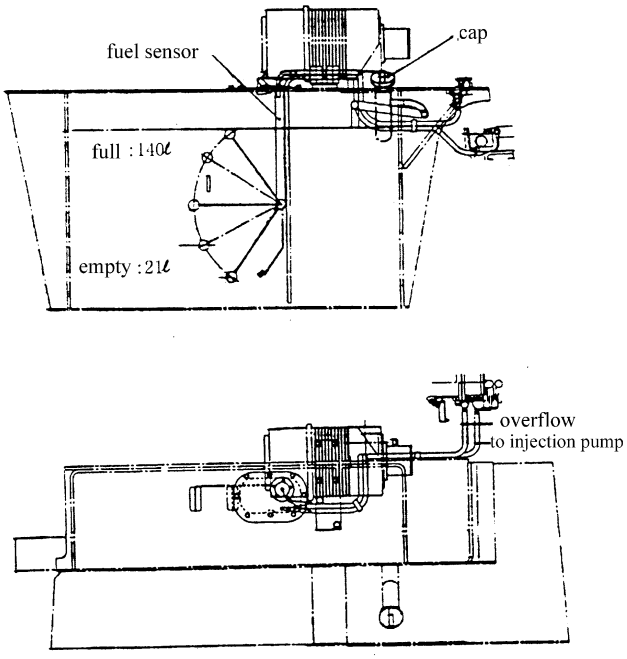


Fig.1.3 Fuel tank



Downloaded from www.Manualslib.com manuals search engine

### 1.4.2 Fuel sensor

The function of the fuel sensor is to change the oil in the oil tank to the electric through the bobber up and down sport, in the end transfer to the fuel chart in the dashboard, let others to know the oil quantity directly. See Fig.1.4.

(a) Once every 600 hours operation, it is required to replace the filter assembly.

(b) Apply several drops of fuel to the around of the new filter's seal before installation, it should be screwed 2/3 circles again when the filter's seal touches the body of engine.

(c) When the warning lamp is on, drain all the water by loosing the draining switch.

**Note: Turn off the draining switch after draining water.**

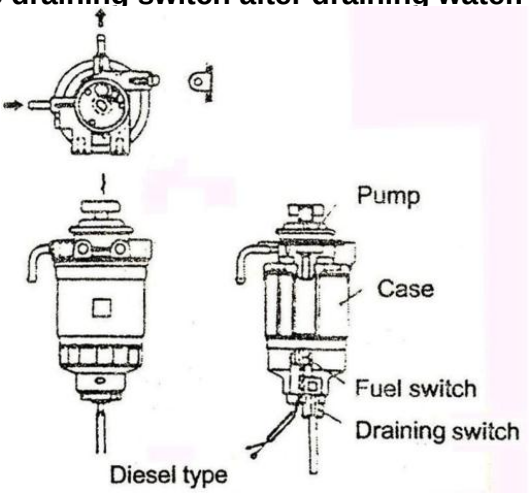


Fig.1.4 Fuel filter

### 1.4.3 Fuel filter

The fuel filter was installed in the engine enters hose, used to filtrate the fuel supply to the engine. There also have other through valve inside of the filter, when the filter jammed, it also can supply the oil to the engine. See Fig.1.5.

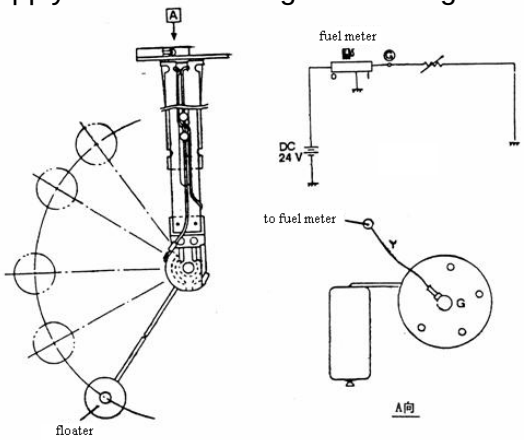


Fig.1.5 Fuel sensor



Downloaded from www.Manualslib.com manuals search engine

## 1.5 Coolant system

The coolant system composed with water pump, fan, radiator and the ancillary radiator, the water pump installed in the engine, the crank through the V-series tape to drive the water pump work.

## 1.6 Check and adjustment

To have a good work state, it needs to check and research on the engine termly. The main point is as following:

### 1.6.1 Cleaning of the air condition (Fig.1.6)

(1) Take out the filter.

(2) Check the dust and the damage of the filter, fist puff away from inside to outside to clean with low pressure air, if it's jammed and can't clean or has been damage, change a new one.

(3) Clean the dust in the cover.

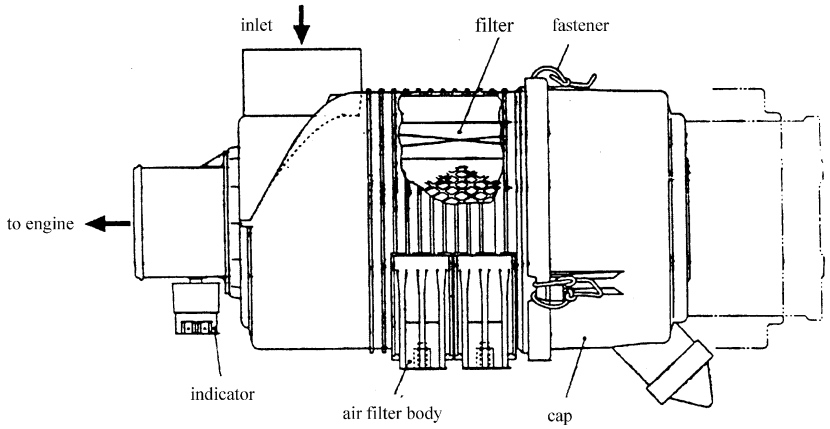


Fig.1.6 Air condition

### 1.6.2 Replacement of fuel filter (Fig.1.7)

(1) Use the filter specially spanner disassemble, if damage or block, need to change.

(2) Along with the around of the new filter seal O-ring, add little lube then install, when it contact the filter, screw 2/3 circle.

Fig.1.7



Downloaded from www.Manualslib.com manuals search engine

### 1.6.3 Replacement of oil filter (Fig.1.8)

(1) Use the filter specially spanner disassemble and change.

(2) Along with the around of the new oil filter seal o-ring, add little lube then install, when it contact the filter, screw 2/3 circle.

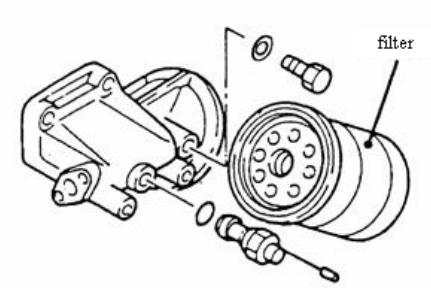


Fig.1.8

### 1.6.4 Vice radiator (Fig.1.9)

(1) Check the coolant in the vice radiator

The ancillary radiator as Fig.1.8, when the antifreeze under the “LOW” scale, it means need to add coolant, add to the 2/3 scale of the up and down scale.

(2) Change the coolant

a. Stop working more than half an hour, wait it cooling, then open the radiator cover, and loose the water outlet valve under the radiator.

b. Loose the engine water outlet valve, release all the coolant.

c. After releasing, screw down those two valve which mentioned in the above.

d. Add the regular coolant, after idle work few time, check the ancillary radiator, it should be in the 2/3 scale.

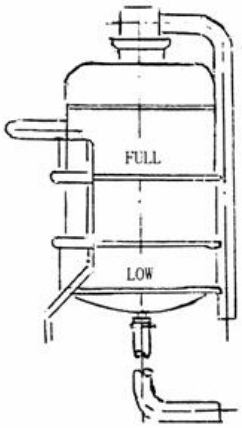


Fig.1.9

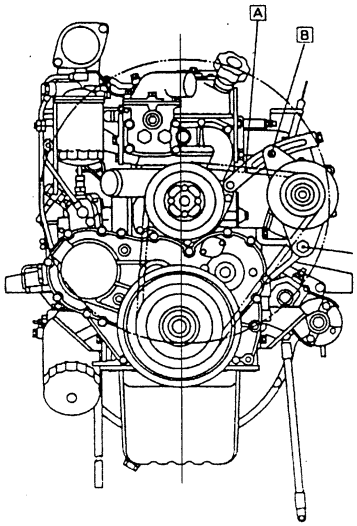


Fig.1.10



Downloaded from www.Manualslib.com manuals search engine

### 1.6.5 Adjust the fan belt

If the fan belt is loose, tighten it. See Fig.1.10.

Step: loosen the fixed bolt B and C of generator, move the generator out. Press the A section of belt with the force of 10kg strength, the flexible degree is about 10mm, then tighten the bolt B,C orderly.

### 1.6.6 Tighten the bolt of the engine cylinder end

(1) Tighten the bolt with 68Nm twisting moment by the order of Fig 1.11.

(2) Tighten the twisting moment to 93Nm, then tighten the bolt orderly.

(3) Turn the bolt 90 degree and tighten them.

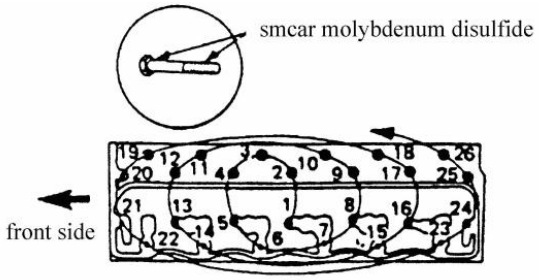


Fig.1.11

### 1.6.7 Valve clearance adjustment

(1) Turn the crank shaft clockwise, make the "TC" mark on shock absorber of belt coincide with the pointer.

(2) Inspect the hole cover, affirm the position of soleplate mark and pointer.

If the soleplate mark coincide with hand position, show the 1st cylinder. TDC, adjust the valve clearance with "△" mark. And adjust the valve clearance with "※"mark.

Valve clearance value: 0.4mm. (the same to absorb and exhaust, cooling state)

Refer to Fig1.12, 1.13, 1.14.

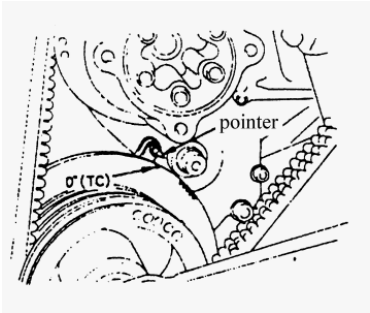


Fig.1.12



Downloaded from www.Manualslib.com manuals search engine

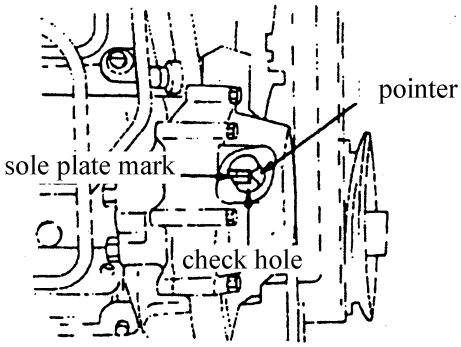


Fig.1.13

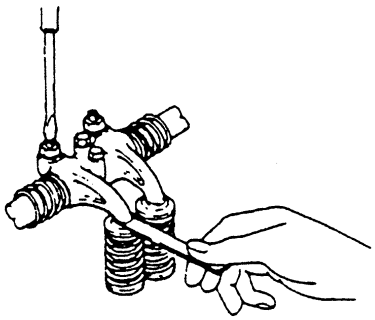

Fig.1.14

The material adjustment see Table 3.2.

| Cylinder NO. | 1 | | 2 | | 3 | | 4 | | 5 | | 6 | |
|---|---|---|---|---|---|---|---|---|---|---|---|---|
| I:inspiration valve<br>E: exhaust valve | I | E | I | E | I | E | I | E | I | E | I | E |
| 1st cyl. in TDC | △ | △ | △ | | | △ | △ | | | △ | | |
| 6th cyl. in TDC | | | | ※ | ※ | | | ※ | ※ | | ※ | ※ |

**1.6.8 Fuel injection ignition time affirmation**

(1) Affirm if the "assemble countermark" is in conformity with the place of injection pump flange. See Fig1.15.

(2) Put the 1st cylinder to the TDC position, turn the crank shaft about 30° counterclockwise, See Fig1.16.

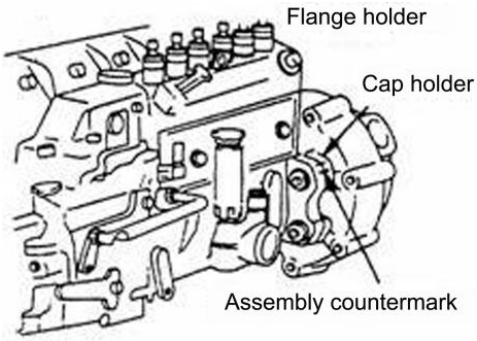


Fig.1.15

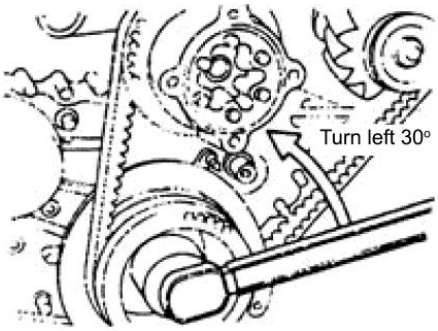


Fig.1.16



Downloaded from www.Manualslib.com manuals search engine

(3) Loosen the 1st cylinder injection pipe, dismantle the spring on drain valve bracket and drain valve, then install the drain valve bracket on injection pump. See Fig1.17.

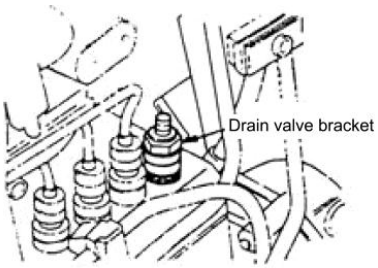


Fig.1.17

4) While charging pump transmit fuel, it turn the crank shaft clockwise , when the fuel lever of drain valve bracket up to the stop position, stop turning the crank shaft. Affirm the hand sign. See Fig 1.18.

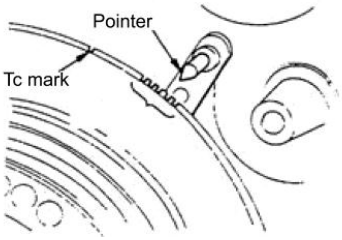


Fig.1.18

**1.6.9 Fuel injection ignition time adjustment**

(1) Dismantle pipe installed on injection pump.

(2) Loosen installed bolt of injection pump.

(3) While affirm the ignition time according 1.5.7 gist, turn it over engine under advance condition , turn it to engine under "delay" condition.

(4) After adjustment, tighten all the bolt of injection pump, affirm the ignition time again.

(5) Assemble the drain valve used in the 1st cylinder, and install each bolt on each position.

**1.6.10 Measurement of compression pressure (Fig 1.19)**

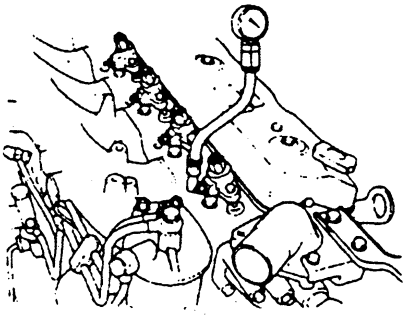

Fig.1.19

(1) Dismantle heat spark plug and fuel injection pipe.

(2) Install manometer on the heat spark plug of 1st cylinder, the demarcate value of



Downloaded from www.Manualslib.com manuals search engine

the manometer is 500N/ $cm^2$.

(3) Running the starting device by plenty battery, meter the pressure at this time.

(4) Measure the other 5 cylinder by the same way, and measure 2 times, then figure out each average value; compression pressure: 304N/$cm^2$ (limit value 255N/$cm^2$)

### 1.6.11 Exhaust of injection pump ( Fig 1.20)

(1) Loosen core vent of injection pump.

(2) Operate hand pump slowly till the core vent doesn't bubbling.

(3) Tighten the core vent.

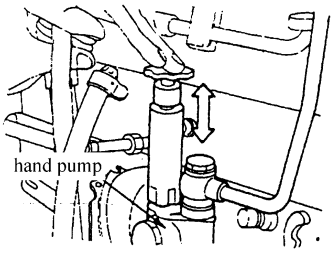


Fig.1.20

## 1.7 Precautions of cooling system

(1) During using the forklift truck, if the temperature of the radiator or coolant is too high, don’t open the cap of the radiator immediately. To find the reason for boiling, use extreme care when removing the cap, the sudden release of pressure can cause a steam flash which would cause a serious personal injury. Lower the running speed of the engine to moderate speed, after the cooling system cooled then turn to idle speed, loosen cap slowly to allow steam to escape, the cap can be removed. After that, make sure the cap is tightened securely.

(2) Check the radiator coolant reservoir fluid level. It should between FULL and LOW mark. Add the same type coolant to specified level if necessary. The coolant can be used all the year round.

(3) Put the coolant on a safe place and mark “Dangerous Matter” for its toxicity. If swallowed by accident, take the emergency first aid and consult a physician immediately.

(4) According to variety working condition, periodic wiping away the dirt adhering to the surface of the radiator with detergent, compressed air or high pressure water (pressure less than 4kg/$cm^2$) is necessary.



Downloaded from www.Manualslib.com manuals search engine

## 2. Drive unit

Drive unit consists of torque converter and a hydraulic transmission. The structure of the hydraulic transmission refers to Fig.2-1, the structure of the torque converter refers to Fig.2-2.

**Main technical parameter**

| Item | | | Parameter |
|---|---|---|---|
| Torque converter | Type | | 3-element,1-stage,2-phase type |
| | Torque converter ratio | | 12.5″(Φ315) ratio 3.1 |
| | Pressure setting Mpa | | 0.5~0.7 |
| Charging pump | Type | | Inner-mesh gear type |
| | Flow rate (l/min) | | 40 (2000rpm, 2Mpa) |
| Transmission | Type | | Power-shift constant mesh |
| | Shift NO. | | Apiece 2 Fwd/Bwd |
| | Gear ration | | Ⅰ:1.621 / Ⅱ:0.526 |
| | Clutch | Friction piece mm | O.D.Φ134 / I.D.Φ90 / T.2.8 |
| | | Surface area $cm^2$ | 77.4 |
| | | Pressure Mpa | 1.2~1.5 |
| Weight (kg) | | | 295 |
| Oil amount (l) | | | 20 |
| Oil type | | | NO.6 torque converter oil/ SAE10W |

### 2.1 General description

The power-shift transmission mounted on the forklift truck has excellent features as follows:

(1) An inching valve provides the machine with improved inching performance. Due to this valve, the lift truck is allowed to perform inching operation regardless of whether the engine is at low RPM or at high RPM, and when the truck is started up.

(2) As clutch plates, seven steel plates and the same number of composite plates subjected to special treatment are provided so that improved durability can be ensured.

(3) Both one-way overrun clutches in the torque converter are used to increase the efficiency for power transmission.

(4) High quality of oil filters is helpful to increasing the life of the torque converter.



Downloaded from www.Manualslib.com manuals search engine

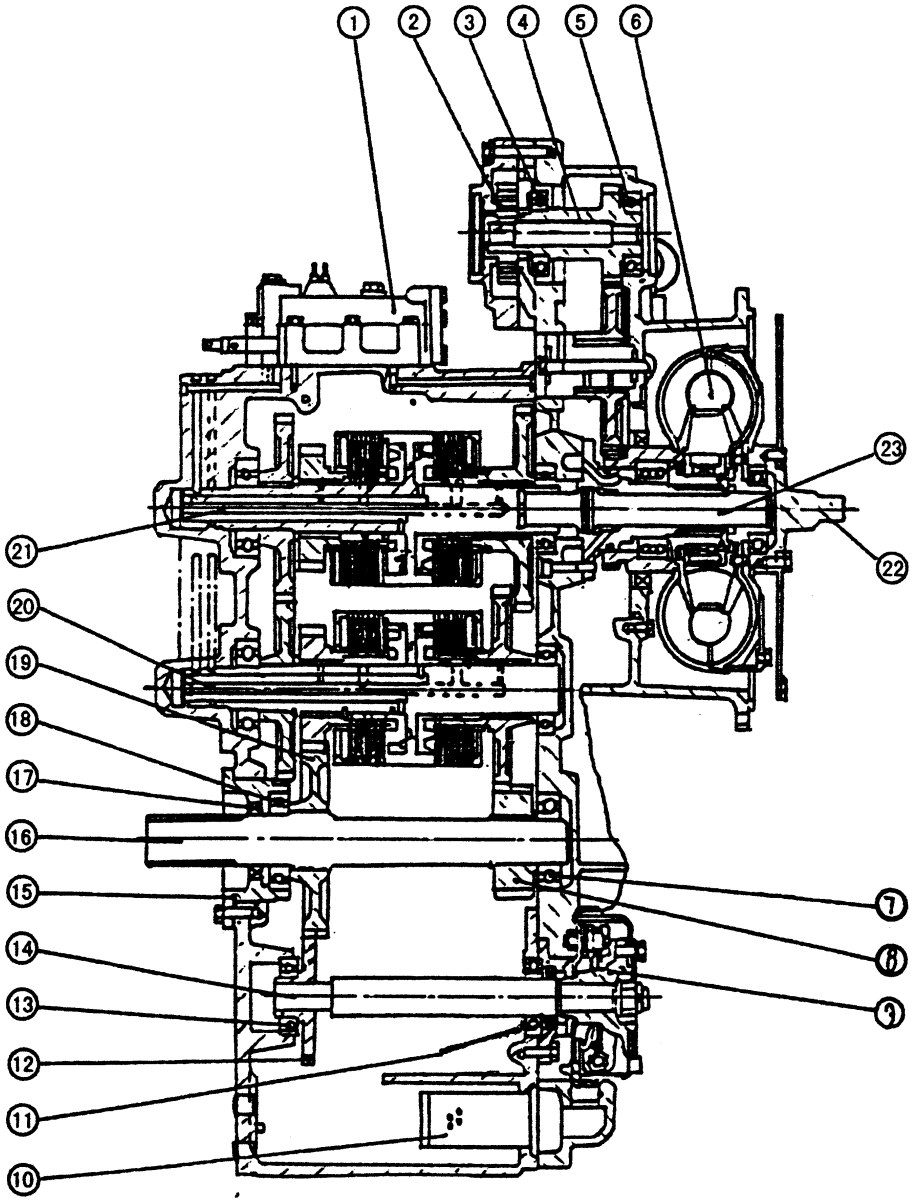


Fig.2.1 Torque converter transmission

| | | | | | |
|---|---|---|---|---|---|
| 1. | Control valve | 9. | Parking brake | 17. | Oil seal |
| 2. | Charging pump | 10. | Strainer | 18. | Ball bearing |
| 3. | Ball bearing | 11. | Oil seal | 19. | Gear |
| 4. | Drive shaft | 12. | Gear | 20. | Reverse clutch pack |
| 5. | Ball bearing | 13. | Ball bearing | 21. | Forward clutch pack |
| 6. | Torque converter | 14. | Shaft | 22. | Input plate |
| 7. | Ball bearing | 15. | Bearing cover | 23. | Transmission output shaft |
| 8. | Gear | 16. | Output shaft | | |



Downloaded from www.Manualslib.com manuals search engine

## 2.2 Torque converter

The torque converter consists of pump wheel installed on input shaft, a turbine wheel installed on output shaft and stator wheel fixed on torque converter body.

Pump rotor is driven by elastic plate, the elastic plate is connected with flywheel, the pump rotor start turning while the engine is running. The liquid in pump rotor eject along blade lattice. The mechanical energy changes to kinetic energy.

So the liquid feed into vane of turbo, and transfer the moment to output shaft, the direction that the liquid leave turbo change under the action of idler pulley, and the liquid flow into pump rotor with the best angle, it produce counterforce moment to push the idler pulley and the output shaft add a moment which is equal to the counterforce moment

When the turbo rotate speed increase and near to input rotate speed, the change of liquid angle reduce, the moment of output reduce to it, finally, the liquid flow into idler pulley in the reverse direction, and then the above counterforce moment act backward. Under the circumstance, the torque from output shaft is less than the input shaft's. To prevent the phenomenal, there is a unilateralism clutch installed in idler pulley, when the counterforce moment act backward, the idler pulley running freely, under the circumstance, the input torque is equal to output torque, and ensure work efficiently.

The torque converter changes the transfer of moment by mechanic method, and has coupling mechanism and torque converter function, so it' is two phase, operate swiftly and raise efficiency.

There are unilateralism clutch, turbo, pump rotor and idler pulley installed in torque converter. The torque converter is full of oil.

On pump wheel end, there is a gear engaged with the drive gear of charging pump to drive changing pump.

The turbine wheel is connected with input shaft by spine, transfer power to hydraulic clutch.

The structure of the torque converter refers to Fig.2-2.



Downloaded from www.Manualslib.com manuals search engine

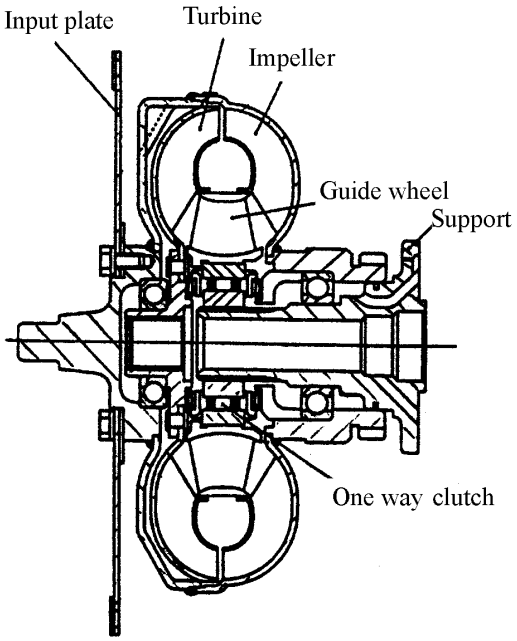


Fig 2.2 Torque converter

**2.3 Charging pump**

Fig 2.3 shows the structure of charging pump.

The charging pump consists of drive gear, driven gear, case and cover. They are fixed on the head of torque converter housing. The drive gear is driven by pump wheel, driven gear and drive gear, the charging pump feeds oil in the under part of transmission to each part of it.

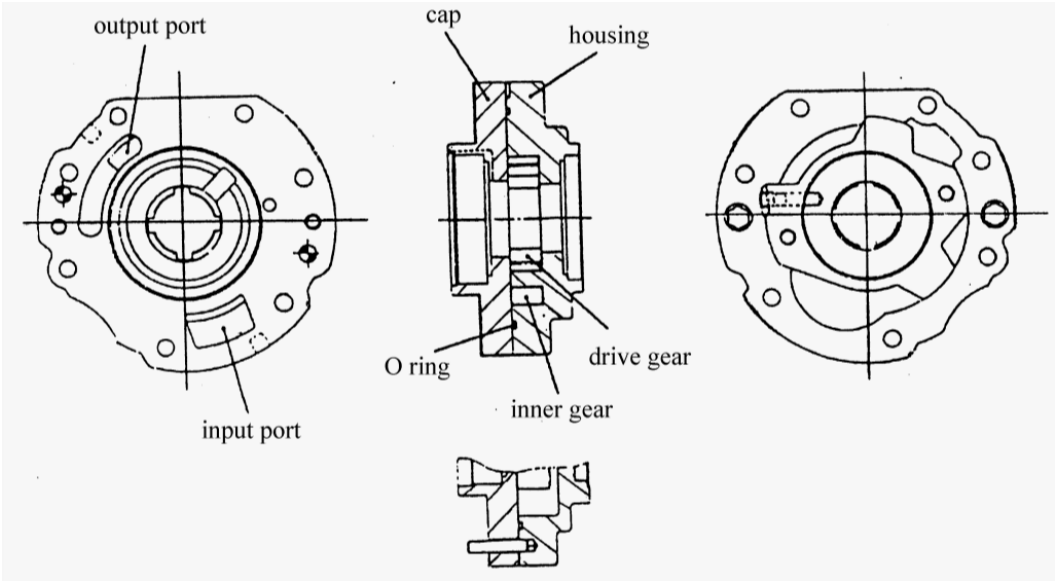


Fig.2.3 Charging pump



Downloaded from www.Manualslib.com manuals search engine

## 2.4 Hydraulic clutch

Fwd clutch see Fig 2.4, reverse clutch see Fig.2.5.

There is a hydraulic clutch fixed on transmission, the drive gear on the side of clutch is engaged with the corresponding driven gear, the drive gear on the side of reverse clutch is engaged with the opposite gear.

The clutch is consists of 6 clutch disks and 7 steel plates. They are installed alternately and assembled with piston.

The piston is provided with sliding type oil seal on its inner and outer circumferences to insure oil sealing during operation. When out the action, the dish-shaped return spring comes away the hydraulic clutch, the surface of clutch is lubricated by the oil from oil condenser, to prevent conglutination and abrasion on clutch surface.

When pressure oil acts to piston, the clutch and steel plate which fitted together are pressed, so the clutch transfer the power to drive gear from torque converter.

The transfer flow of power from torque to transmission is as follows:

Turbine wheel-input shaft-clutch drum-steel plate-clutch disk-forward or reverse gear-output shaft.

## 2.5 Control valve and inching valve

The control valve see Fig.2.6.

The control valve is installed on the top of transmission housing, reverse valve and inching valve are installed in it.

Hydraulic clutch relief valve adjusts the oil pressure of clutch in transmission, the torque converter relief valve adjusts the pressure of oil feed into torque converter.

The inching valve pole is connected with inching pedal, when press inching pedal, the inching pedal press in , the oil pressure of clutch depress for a while, the clutch loosen.



Downloaded from www.Manualslib.com manuals search engine

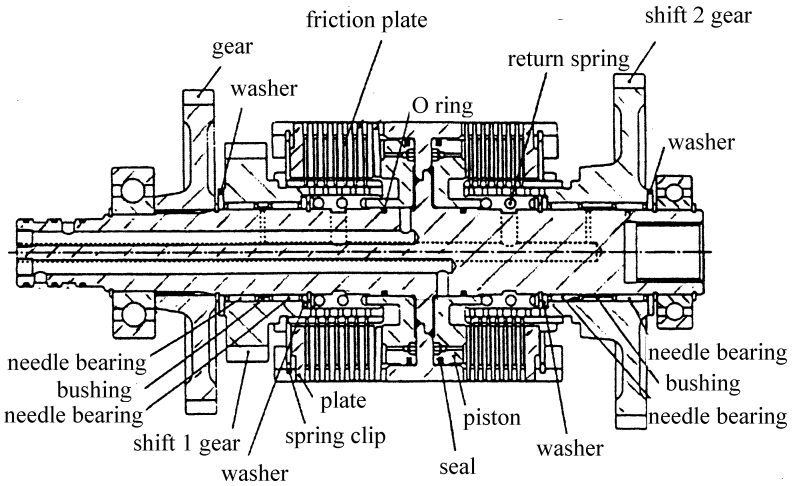


Fig.2.4 Forward shift clutch

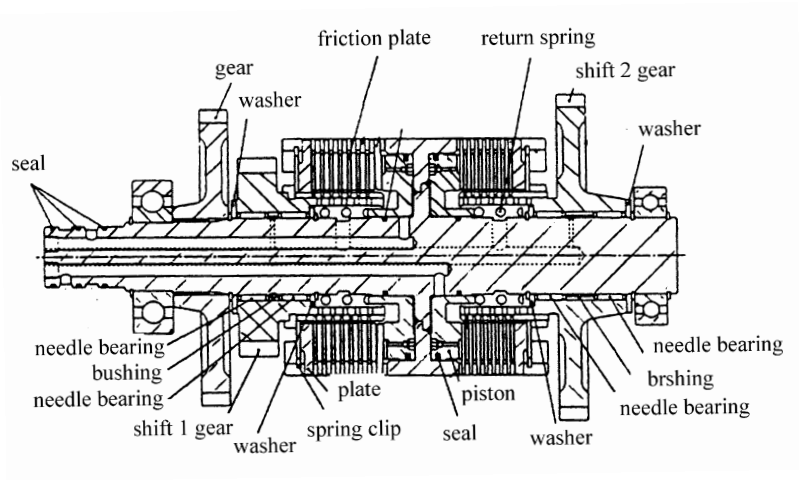


Fig.2.5 Reverse shift clutch

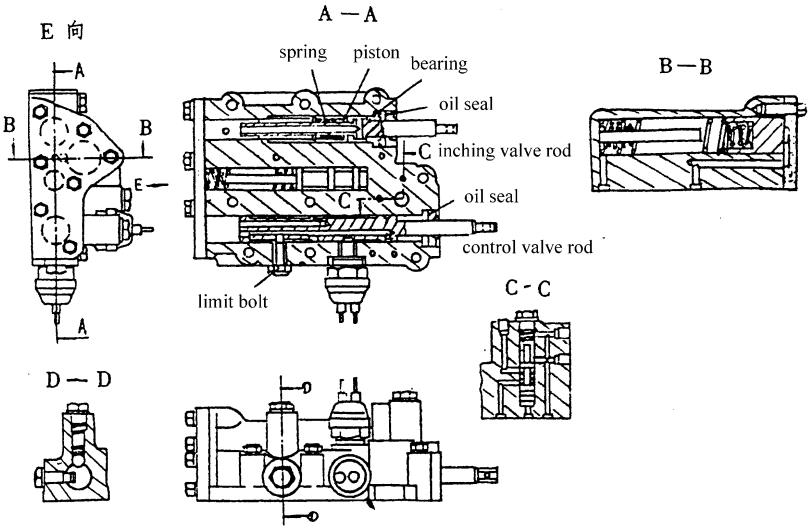


Fig.2.6 Control valve



Downloaded from www.Manualslib.com manuals search engine

## 2.6 Hydraulic circulation system (see Fig. 2.7)

When the engine is started and the charging pump is put into operation, the torque converter fluid in the oil tank (transmission case) is forcibly sent to the control valve from the pump through the strainer.

The fluid sent from the charging pump is divided to two directions in the torque converter case, one for torque converter and the other for transmission.

Pressure of the fluid for clutch is adjusted to 1.2 to 1.5 MPa with the relief valve. And then it is supplied to the control valve. Pressure of the fluid divided for the converter is adjusted to 0.5 to 0.7 MPa with the converter relief valve. After that this fluid reaches the wheel of torque converter. After it is cooled by the oil cooler, it lubricates the clutch group and then returns to the oil tank through the filter.

When the selector valve is in neutral position, the circuit from the selector valve to the clutch is closed. Therefore the fluid is joined with the torque converter filling fluid.

When the selector spool is set to the forward or reverse position, fluid flows into the accumulator due to action of modulate valve, so that pressure rises gradually. During this time the clutch starts to engage.

When the accumulator is filled with fluid, hydraulic pressure rises intensively so that the hydraulic clutch is completely engage. While the forward or reverse clutch is operating, another clutch is rotating between the sintered plates and the steel plates. Therefore this part is lubricated with oil sent from the oil cooler to prevent seizure of plates.

When the brake pedal is depressed and the inching valve is actuated, most of hydraulic oil supplied to the clutch is drained from the inching valve and returns to the transmission case. The fluid for the torque converter circulates in the same manner as in neutral state.



Downloaded from www.Manualslib.com manuals search engine

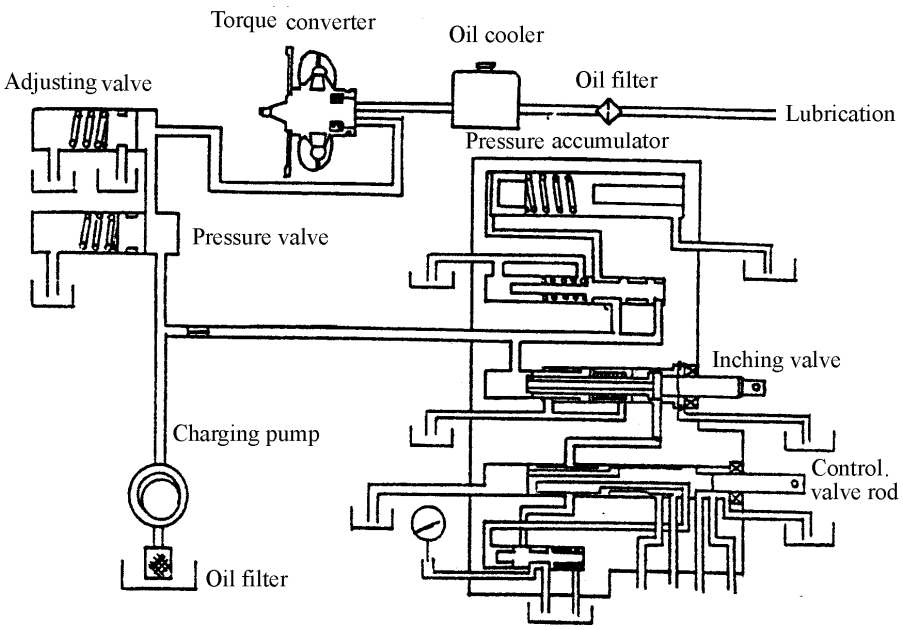


Fig. 2.7 Hydraulic circulation system

## 2.7 Principle

The torque converter consists primarily of a pump wheel connected to the input shaft, a turbine wheel connected to the output shaft, and a stator wheel fixed to the housing.

The transmission consists of charging pump, hydraulic clutch, the forward gear and reverse gear.

Power transmission route from the torque converter to the transmission is as follows: Turbine wheel — main shaft — clutch drum — steel plate — clutch plate—forward or reverse gear—output shaft.

## 2.8 Caution when the trouble occurs

When the truck cannot run by itself due to trouble and it must be dragged with another machine, be sure to observe the following requirements.

(1) Remove the propeller shaft between the transmission and the differential.

(2) Set the shift lever in neutral position.

When the charging pump does not operate, normal lubrication is not performed. Therefore, if rotation is transmitted from the front wheel to the transmission gear and clutch disk, seizure may occur.



Downloaded from www.Manualslib.com manuals search engine

## 2.9 Trouble shooting

### (1) Insufficient power

| Parts | Problem | Possible cause and remedy |
|---|---|---|
| Torque converter | A. Too low oil pressure | |
| | 1. Lower oil level | Check oil level and add oil. |
| | 2. Air entering in resulting from loose connectors. | Check connectors or oil pipes. Retighten each connectors or replace seals. |
| | 3. Blocked oil filter | Check, clean or replace |
| | 4. Oil can not be pumped out. | Check and replace. |
| | 5. Deformed spring of relief valve. | Check tension of spring |
| | 6. Seal ring or O-ring seal damaged | Check and replace. |
| | B. Fly wheel damaged | Check oil, if have dirt, replace it. |
| Gear box | A .Unsuitable oil or air bubble | Check oil |
| | 1. Air entering in resulting from loose connections. | Check connectors or oil pipes. Retighten each connector or replace seals. |
| | 2. Too lower oil pressure or air bubble in oil | Measure and adjust pressure. |
| | B. Slipped clutch | |
| | 1. Oil pressure lower | Measure and adjust pressure. |
| | 2. Seal ring damaged | Check and replace |
| | 3. Piston ring of the clutch damaged | Check and replace |
| | 4. Worn friction piece or deformed steel piece | Replace |
| | C. Incorrect position between inching rod and shift rod. | Check and adjust. |
| Engine | Insufficient engine power | Adjust or repair engine |



Downloaded from www.Manualslib.com manuals search engine

**(2) Too higher oil temperature**

| Parts | Problem | Possible cause and remedy |
|---|---|---|
| Torque converter | 1. Lower oil level | Check oil level and add oil. |
| | 2. Blocked oil filter | Check, clean or replace. |
| | 3. Fly wheel bump against other parts. | Check oil, if have dirt, replace it. |
| | 4. Air entering in resulting from loose connectors. | Check connectors or oil pipes. Retighten each connector or replace seals. |
| | 5. Water mixed into oil | Check and replace oil. |
| | 6. Low oil flow | Check pipes and replace. |
| | 7. Worn bearing | Check and replace. |
| Gear box | 1. Slipped clutch | Replace friction piece of clutch. |
| | 2. Worn bearing | Check and replace. |

**(3) Noisy gear box**

| Parts | Problem | Possible cause and remedy |
|---|---|---|
| Torque converter | 1. Elasticity plate is broken. | Check noise and replace elasticity plate. |
| | 2. Damaged or worn bearing. | Check or replace |
| | 3. Gear is broken. | Check or replace |
| | 4. Spline is worn | Check or replace |
| | 5. Noisy main pump | Check or replace |
| | 6. Loosen bolt | Check, tighten or replace |
| Gear box | 1. Bearing is worn | Check or replace |
| | 2. Gear is broken | Check or replace |
| | 3. Spline is worn | Check or replace |
| | 4. Loosen bolt | Check, tighten or replace |



Downloaded from www.Manualslib.com manuals search engine

**(4) Too lower transmission efficiency**

| Parts | Problem | Possible cause and remedy |
|---|---|---|
| Torque converter | 1. Elasticity plate is broken. | Check turn noise and replace. |
| | 2. Lower oil amount. | Check oil level and add oil. |
| | 3. Driving system of oil pump is ineffective. | Check and replace. |
| | 4. Shaft is broken. | Check and replace. |
| | 5. Too lower oil pressure. | Check oil pump for suction pipe. |
| Gear box | 1. Lower oil amount. | Check oil level and add oil. |
| | 2. Seal ring is worn. | Check and replace. |
| | 3. Slipped clutch. | Check oil pressure of the clutch. |
| | 4. Shaft is broken. | Check and replace. |
| | 5. Clutch cap is broken. | Check and replace. |
| | 6. Retainer ring of clutch cap is broken. | Check and replace. |
| | 7. Foreign matters mixed in oil tank of clutch. | Check, clean or replace. |
| | 8. Spline of shaft is worn. | Check and replace. |

**(5) Oil leakage**

| Parts | Problem | Possible cause and remedy |
|---|---|---|
| Torque Converter or Gear Box | 1. Worn seal ring | Check and replace seal ring. |
| | 2. Incorrect connection of case. | Check, tighten or replace. |
| | 3. Loose connector and oil pipe. | Check, tighten or replace. |
| | 4. Loose drain plug. | Check, tighten or replace. |
| | 5. Oil spray from air hole. | Check connectors, air holes or replace pipes. |
| | 6. Much oil. | Check oil level and drain surplus oil. |



Downloaded from www.Manualslib.com manuals search engine

## 3. Front axle

The main specifications of the front axle:

| | | |
|---|---|---|
| Type | | Full-floating type, integral shaped |
| Main reduction gear | Type | Spiral bevel pinion type |
| | Reduction ratio | 6.33 |
| Final reduction gear | Type | Planetary gear type |
| | Reduction ratio | 3.58 |
| Total reduction ratio | | 22.66 |
| Amount of oil | Main reduction gear | 10 L |
| | Final reduction gear | 8 L (left and right) |
| Driving wheel | Tire | 9.00-20-14PR |
| | Rim | 7.00-20 |
| | Air pressure | 760 |

### 3.1 General description

The front axle consists of the main reduction gear, the differential, the final reduction gear and brakes. (see Fig. 3.1) The front axle is bolted to the front side of the frame. The mast is installed on the axle housing.

### 3.2 Main reduction gear & differential

The main reduction gear & differential consists primarily of a cross case, ring gear (spiral bevel pinion) and drive pinions, which are all assembled on the main reduction gear carrier as shown in Fig. 3.2, and is fitted to the axle housing through packing.

### 3.3 Final reduction gear

The final reduction gear is of the planet gear type consisting of a sun gear, planetary gears and an internal gear. Two final reduction gears are installed on each end of the axle housing. The sun gear is splined to the axle shaft and locked with snap ring. The planetary gears are installed onto the shafts in the planet carrier which is fixed to the wheel hub. The internal gear is splined to the axle spindle through hub.

The principle of power transmission is as follows (see Fig. 3.3).

When the sun gear turns, the rotation is transmitted to the pinion gears and ring gear. However, since the ring gear is fixed to the spindle, the pinion gears revolve around the sun gear while spinning themselves. The pinion gears are installed to the carrier which is fixed to the wheel hub, therefore, power of the drive shaft causes the wheel to turn.



Downloaded from www.Manualslib.com manuals search engine

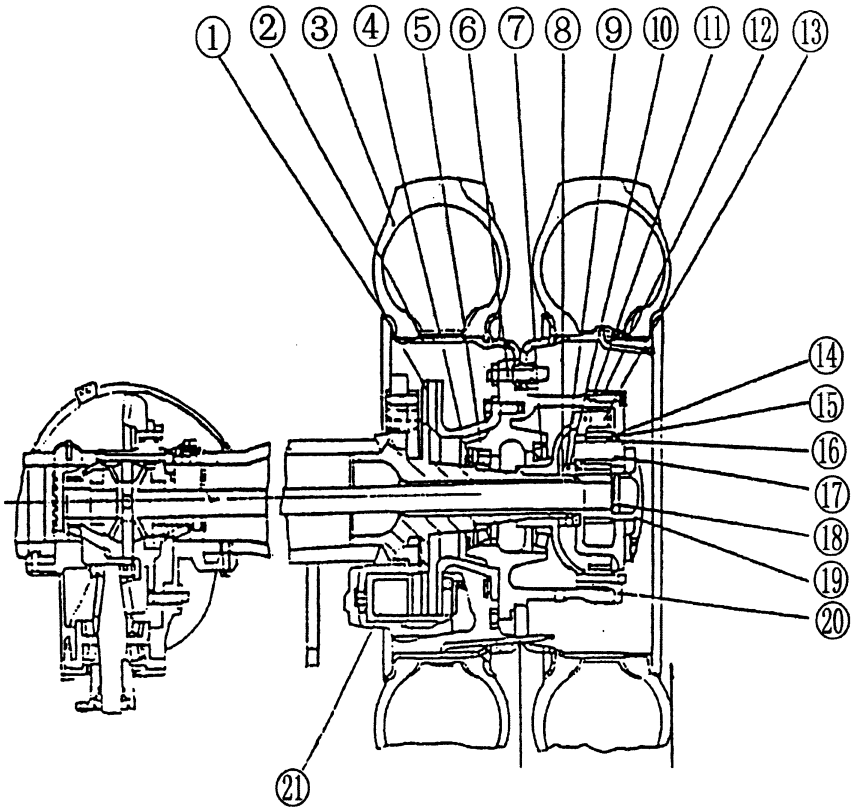


Fig.3.1 Front axle

| | | | | | |
|---|---|---|---|---|---|
| 1. | Breaking dial | 8. | Lock nut(in) | 15. | Roller bearing |
| 2. | Wheel assembly | 9. | Prevent-loosen gasket | 16. | Steel ball |
| 3. | Tyre | 10. | Lock nut(out) | 17. | Pinion gear shaft |
| 4. | Oil seal | 11. | Inner-gear seat | 18. | Thrust washer |
| 5. | Taper roller bearing | 12. | Braking plate and shell assembly | 19. | Half-bearing cover |
| 6. | Wheel assembly | 13. | Inner gear ring | 20. | Pinion gear bracket |
| 7. | Taper roller bearing | 14. | Pinion gear | 21. | Clamp brake |



Downloaded from www.Manualslib.com manuals search engine

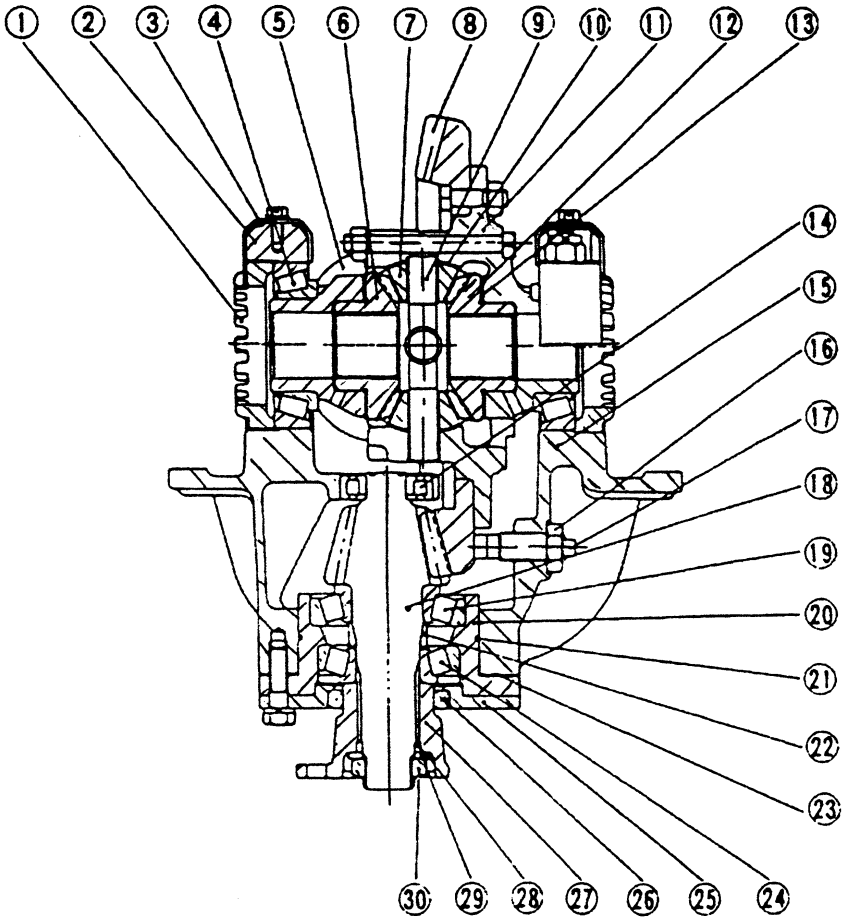


Fig. 3.2 Reducer & differential

| | | | | | |
|---|---|---|---|---|---|
| 1. | Adjust nut | 11. | Flange half | 21. | O-ring |
| 2. | Cap | 12. | Side gear | 22. | Spacer |
| 3. | Lock plate | 13. | Thrust washer | 23. | Shim |
| 4. | Taper roller bearing | 14. | Roller bearing | 24. | Taper roller bearing |
| 5. | Plain half | 15. | Carrier | 25. | Seal retainer |
| 6. | Side gear | 16. | Lock nut | 26. | Oil seal |
| 7. | Pinion gear | 17. | Adjust bolt | 27. | Flange |
| 8. | Spiral bevel pinion | 18. | Drive pinion | 28. | O-ring |
| 9. | Spider | 19. | Taper roller bearing | 29. | Washer |
| 10. | Thrust washer | 20. | Bearing cage | 30. | Lock nut |



Downloaded from www.Manualslib.com manuals search engine

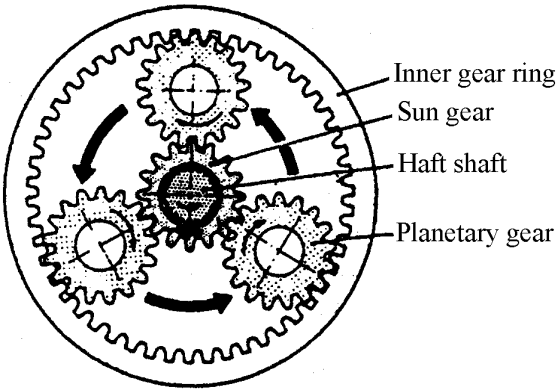


Fig. 3.3 Final reduction gear

### 3.4 Troubleshooting

| Trouble | Cause | Correction |
|---|---|---|
| Oil leaks from differential carrier. | Loose bolt or broken gasket of differential carrier. | Retighten or replace. |
| | Breather is clogged. | Clean or replace. |
| | Oil seal is worn or damaged. | Replace. |
| Noisy differential | Gear is worn, damaged or broken. | Replace. |
| | Bearing is worn, damaged or broken. | Replace. |
| | Improper backlash. | Adjust |
| | Loose spline fitness of side gear to propeller shaft. | Replace parts. |
| | Insufficient gear oil. | Add as necessary. |

### 3.5 Service data

| Parts | Item | Standard value (mm) |
|---|---|---|
| Differential | Tightening torque of ring gear set bolt | 140-160(N.m) |
| | Tightening torque of cross case set bolt | 140-160(N.m) |
| | Thickness of pinion washers | 1.562-1.613 |
| Axle housing | Tightening torque of the set bolt for axle housing and differential carrier. | 150-175(N.m) |
| | Tightening torque set bolt securing axle housing to frame. | 630-946(N.m) |
| | Tightening torque set bolt brake board to axle housing. | 280-330(N.m) |
| Hub | I.D. of hub oil seal fitting part | 164.6-165 |
| | Tightening torque of set bolt securing brake drum to hub. | 280-330(N.m) |
| | Tightening torque of set bolt securing planet carrier to hub. | 98-113(N.m) |
| | Tightening torque of hub nut. | 480-560(N.m) |



Downloaded from www.Manualslib.com manuals search engine

# 4. Brake system

## 4.1 General description

The brake system consists of two wheel brakes installed on the front axle and parking brake on the propeller shaft.

## 4.2 Power brake (see Fig.4.1)

The wheel brake system consists of brake pedal, brake valve, power accumulator and brake.

The power brake works by making use of pressure oil provided by gear pump of hydraulic system, the pressure oil is divided to two directions, one for the brake valve, and the other for the energy reservoir. They are controlled by the stroke of the brake pedal.

### 4.2.1 Position of brake pedal (Fig. 4.2)

The brake pedal and the inching pedal are mounted on the left side of the frame by a bracket. The piston of the brake valve is actuated through the push rod by the operation of the brake pedal. The inching pedal also can control the brake valve by linkage with the brake pedal, in the meantime, can control the inching valve in the transmission.

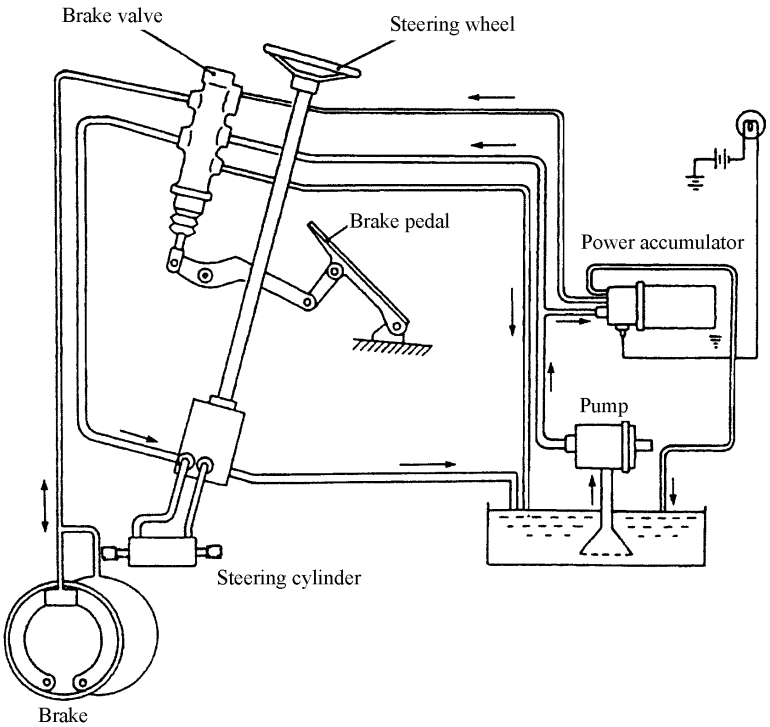


Fig. 4.1 Brake system



Downloaded from www.Manualslib.com manuals search engine

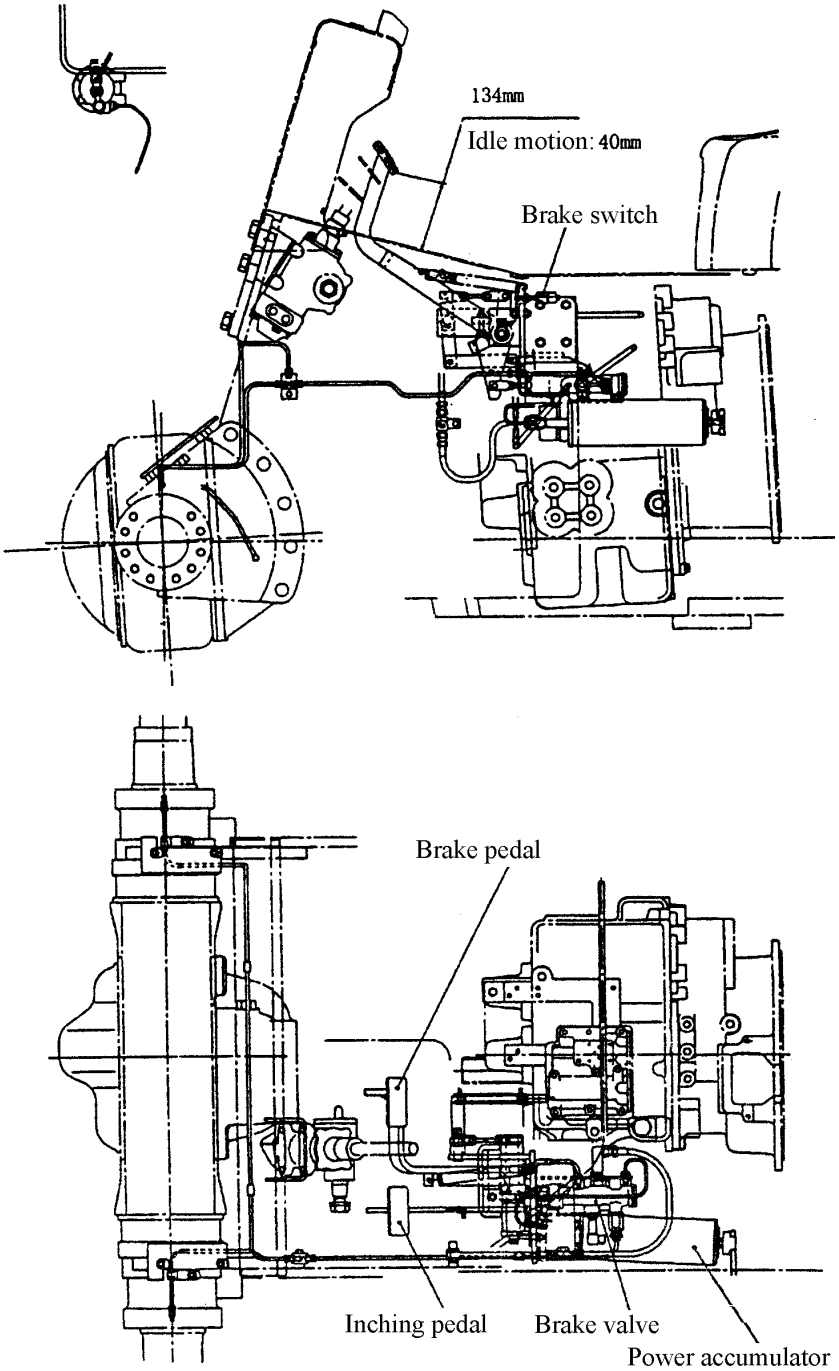


Fig. 4.2 Position of brake pedal



Downloaded from www.Manualslib.com manuals search engine

### 4.2.2 Brake valve (Fig. 4.3)

(1) Non-brake state

Since the brake valve A port is open, the nozzle of the pump and powered steering is interlinked, the operation of steering is normal in the state of non-brake. When the brake pedal isn't been pressed, the oil pressure in the chamber D won't go up in that the port B is close.

(2) Brake state

A. When pressing the brake pedal, the piston 10 shifts to the left, valve sleeve 7 and recoil piston 5 are pressed to the left by the spring group 8, in the meantime, the return spring 6 is compressed to the left.

B. A port is closed owing to the shift of the part 7, and chamber D disconnects with the port of the return oil tank, and the chamber D connects with the port of pump in that the port B is closed.

C. Now the valve sleeve 7 shifts to the left, the oil pressure of the pump port and the chamber D rises in that the C is compressed, in the meantime, the recoil piston 5 is pushed by higher oil pressure in the chamber D .

D. When the max. pedal force acts on the right end of the piston, the bolt and the pedal bracket can limit the position in order to make the oil pressure in the chamber D lower the max. adjusting oil pressure.

E. When your foot releases the pedal, the valve sleeve 7 returning to the original position relies on the opposite force, the process of the brake ends.

(3) Reservoir working performance

When the oil pump stops working (engine flameout) or damage, the reservoir is on working performance.

A. Press the brake pedal, valve sleeve 7, backswing piston 5, check valve pin 3 will be shifted left, the pin tips the ball over, at the same time, chamber D is connected with reservoir connector, acts on the brake cylinder with reservoir pressure.

B. Leaves the pedal, valve sleeve, backswing piston and pin moves left, the ball of check valve is connected with valve seat (check valve closed) acting by spring force, the pin stops in the corresponding position.

C. Backswing moves right, chamber C opens, the oil of brake cylinder goes back to the oil tank through chamber D.

### 4.2.3 Energy reservoir (Fig.4.4)

The energy reservoir can supply energy when the engine stops working or the oil pump is in trouble. The type of the energy storage is spring type.

The buzzer of the warning switch sounds continuously when the reservoir doesn't storage energy.

When pressing the brake pedal, the oil pressure exceeds 3.9MPa, the check valve



Downloaded from www.Manualslib.com manuals search engine

opens and oil flows to the energy reservoir. Now the piston shifts to the left, the warning switch doesn't ring.

The reservoir storages the maximum energy along with the oil pressure rises constantly, the oil pressure is 13 MPa, this value is controlled by the safety valve.

The energy reservoir storages the pressure energy, there are safety valve and pressure alarm switch inside it. Preventive maintenance should be done by authorized serviceman. Failure to use will cause crack. Depressurization treatment should be done when the truck parking or preventive maintenance.

The method to decrease the pressure: After the engine is flameout, press the brake pedal for 5 to 8 times, then the pressure of reservoir in brake system can be decreased.

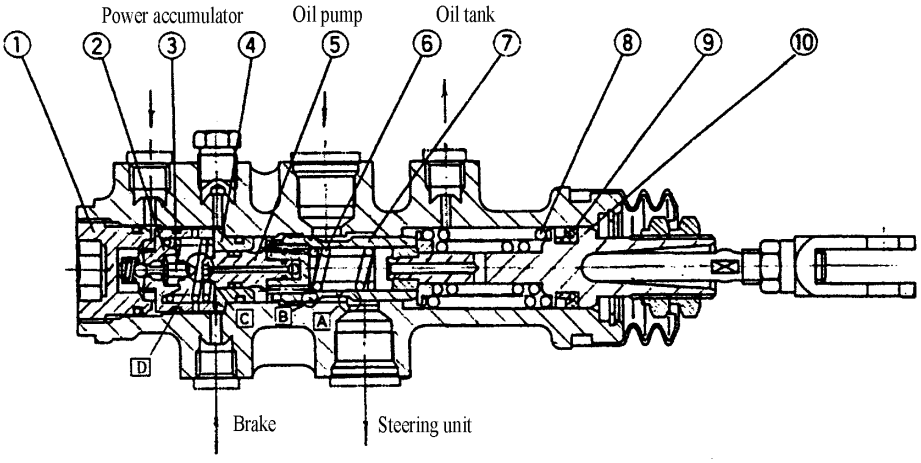


Fig. 4.3 Brake valve

| | | | | | |
|---|---|---|---|---|---|
| 1 | Plug | 5 | Recoil piston | 9 | Oil seal |
| 2 | One-way valve base | 6 | Return spring | 10 | Piston assy |
| 3 | One-way valve pin | 7 | Valve sleeve | | |
| 4 | Piston guide base | 8 | Spring group | | |

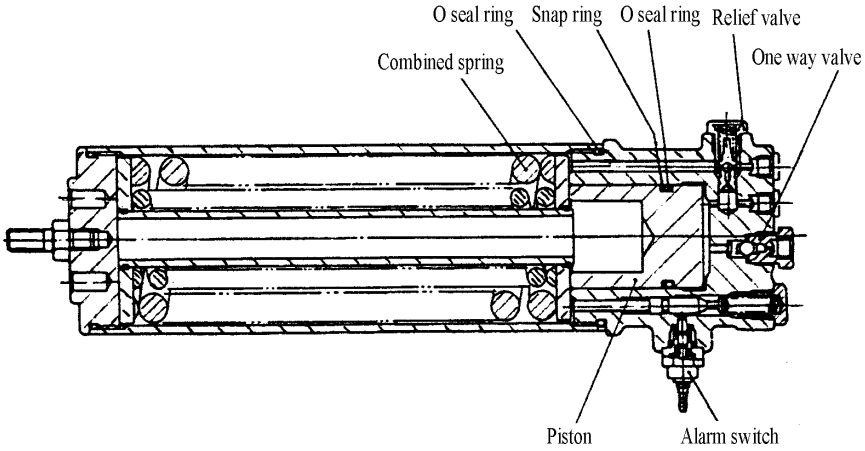


Fig. 4.4 Energy reservoir



Downloaded from www.Manualslib.com manuals search engine

### 4.3 Parking brake

The parking brake is of internal expansion and lining type, and built in the output shaft of the torque converter transmission.

The operation of the parking brake is shown in Fig.4.5.

When the forklift truck parks on a slope with standard capacity, the hand operation force should below 300N. Adjust the pull force by diagrammatic direction.

### 4.4 Wheel brake (Fig. 4.6)

Wheel brake is clamp brake, installing symmetry around. Clamp brake consists of clamp body, operating cylinder (four by one couple), rub pieces (two by one couple), brake plate. The structure is seen in the picture. The wheel brake is consisting of a pair of brake shoes, operating cylinder, a adjuster, 3-4 return springs and backing plates. Two wheel brakes are provided on each end of the front axle. The adjuster adjusts the clearance between the brake shoes and the inner surface of brake drum.

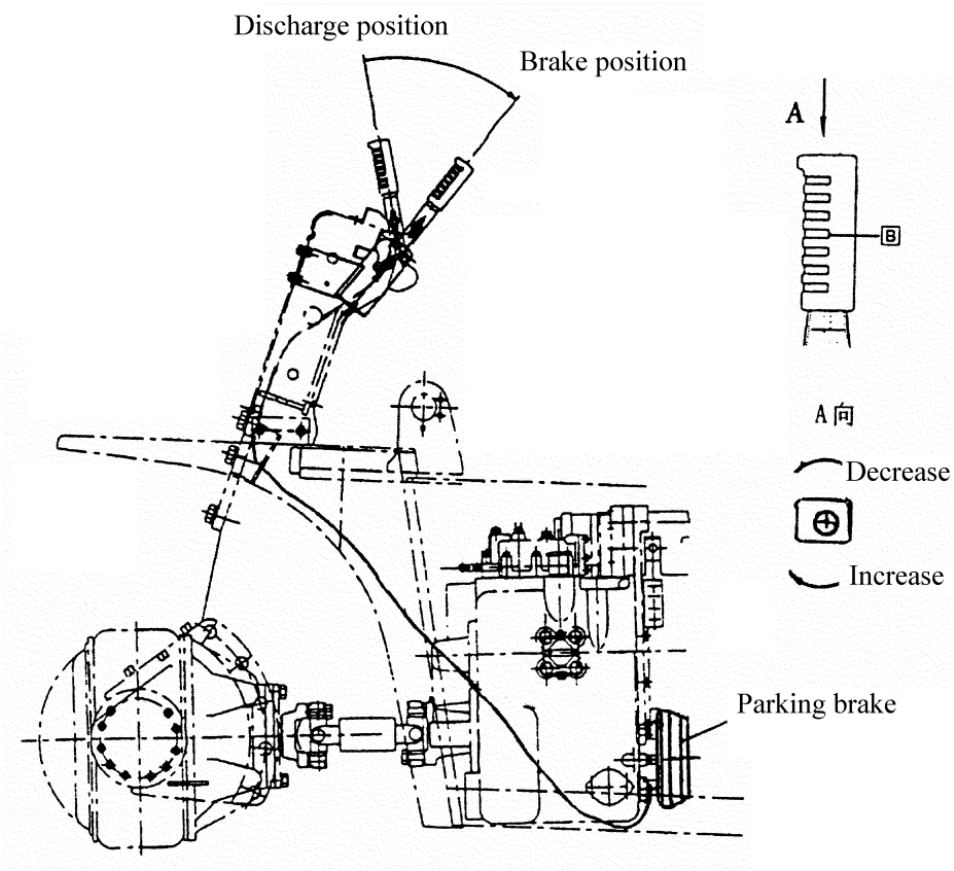


Fig. 4.5 Parking brake device



Downloaded from www.Manualslib.com manuals search engine

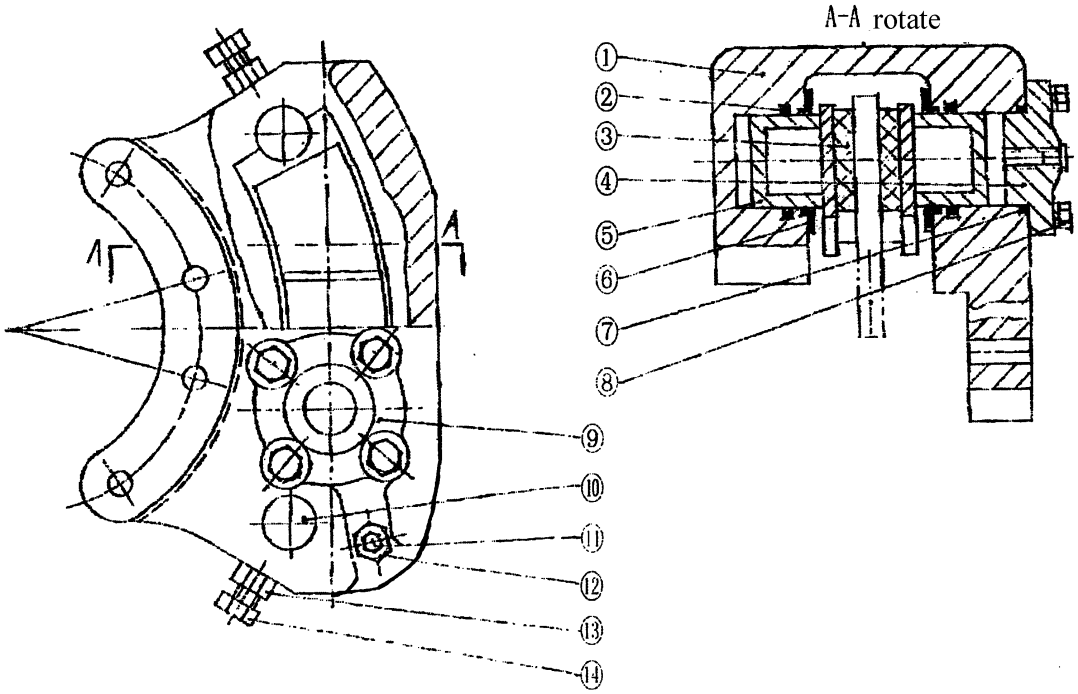


Fig.4.6 clamp brake

| | | | | | |
|---|---|---|---|---|---|
| 1 | clamp body | 6 | dustproof cover | 11 | deflate spile |
| 2 | rectangle ring seal | 7 | O-ring seal | 12 | deflate seat |
| 3 | rub piece assy | 8 | bolt | 13 | nut |
| 4 | below crock cover | 9 | above crock cover | 14 | bolt |
| 5 | pump plunger | 10 | pin shaft | | |



Downloaded from www.Manualslib.com manuals search engine

## 4.5 Troubleshooting

| Problem | Possible cause | Remedy |
|---|---|---|
| Poor braking force | Fluid leakage from brake system | Repair |
| | Maladjustment of brake shoe clearance | Adjust |
| | Brake overheating | Check for dragging |
| | Poor contact between brake drum and friction piece | Adjust |
| | Foreign matter adhered on friction piece | Repair or replace |
| | Foreign matter mixed in brake fluid | Replace |
| | Maladjustment of brake pedal | Adjust |
| Noisy brake | Hardened friction piece surface or foreign matter adhered thereto | Repair or replace |
| | Deformed backing plate or loose bolts | Repair or replace |
| | Deformed shoe or incorrect installation | Repair or replace |
| | Worn friction piece | Replace |
| | Loose wheel bearing | Replace |
| Uneven braking | Oil-contaminated friction piece | Repair or replace |
| | Malfunction operating cylinder | Repair or replace |
| | Eccentric brake drum | Repair or replace |
| | Maladjustment clearance of friction piece | Adjust |
| | Improper tire pressure | Adjust |
| Soft or spongy brake | Brake fluid leaks from system | Repair |
| | Maladjustment clearance of friction piece | Adjust and repair |
| | Air mixed in brake system | Exhaust air |
| | Maladjustment of brake pedal | Readjust |



Downloaded from www.Manualslib.com manuals search engine

# 5. Steering system

## 5.1 General description

Steering system contains mainly a steering hand wheel, a steering column, a cardan joint, a powered steering unit, a steering axle and a steering cylinder.

The steering shaft is connected with the steering unit and steering hand wheel by the joint. The steering column may be tilted properly forward or backward. Turn the hand wheel clockwise, the forklift truck will turn to the right, on the contrary, the truck will turn to the left.

Main parameter and structure of the steering system sees below:

| Item | | | Parameter & structure |
|---|---|---|---|
| Type | | | Rear wheel steering powered |
| Diameter of steering hand wheel | | mm | 360 |
| Steering unit | Type | | BZZ powered steering unit |
| | Displacement | min | 280 |
| | Rated pressure | MPa | 16 |
| Steering cylinder | Type | | Double-action type |
| | Cylinder dia. / Rod dia. | mm | Φ115/Φ85 |
| | Stroke | mm | 2×216 |
| Divider | Setting pressure | MPa | 12.5 |
| | Rated displacement | | 27 |
| Steering axle | Type | | Transverse cylinder type |
| | Steering angle(outside/inside) | | 76°/54° |
| | Rear tread | mm | 1700 |
| | Interval of knuckle spindle | mm | 1500 |
| Diameter of cardan joint | | mm | Φ42 |
| Wheel | Tire | | 9.00-20-14PR |
| | Rim | | 7.00-20 |
| | Pressure | KPa | 760 |

## 5.2 Hand wheel

Hand wheel is operated in normal way, that is to say, when turning the hand wheel right, the truck will turn right. When turning the hand wheel left, the truck will turn left. The rear wheels of the forklift truck are steering wheels, which make the tail section of the truck swing out when turning. The turning method can be mastered easily through practice.

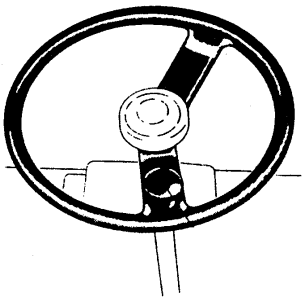



Downloaded from www.Manualslib.com manuals search engine

### 5.3 Cycloid gear type powered steering unit

The steering unit can transmit the pressure oil from the flow divider by pipes to the steering cylinder in terms of the rotating angle of the hand wheel. When the engine stop running, the charging pump will not work, in this case a man-powered steering should be adopted. The sketch map of powered steering system is shown as Fig.5.1. The structure of the steering unit is shown as Fig.5.2.

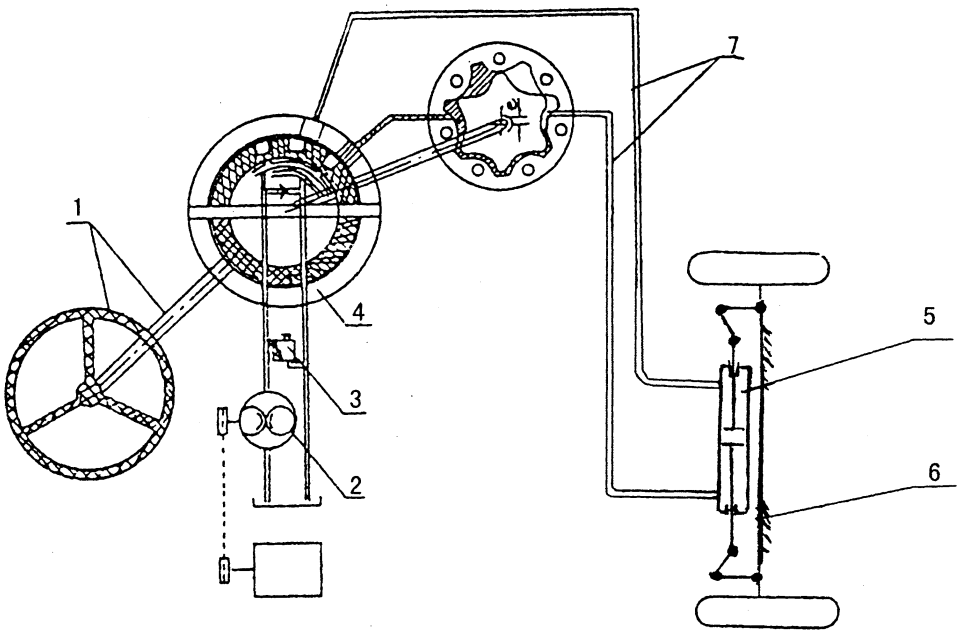


Fig. 5.1 Hydraulic steering system

1. Hand wheel and steer shaft
2. Oil pump
3. Flow control valve
4. Hydraulic steering unit
5. Steering cylinder
6. Steering axle
7. Hose



Downloaded from www.Manualslib.com manuals search engine

### 5.3.1 Steering unit assy

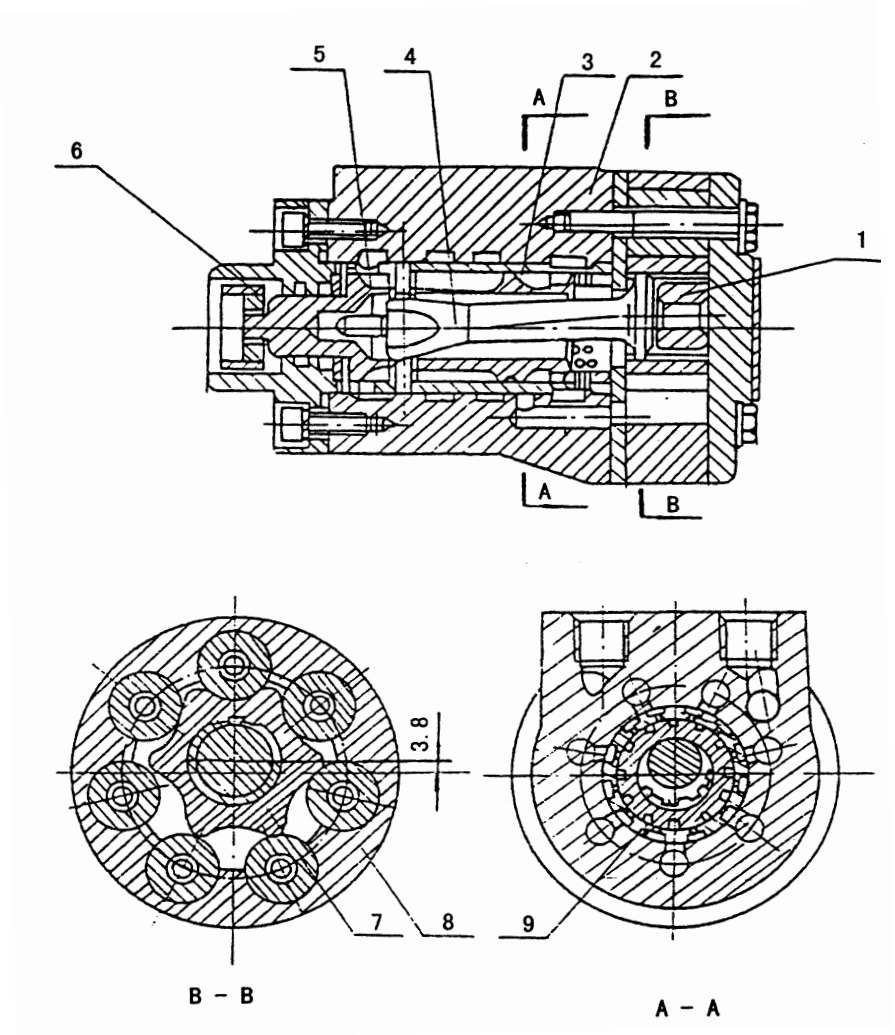


Fig.5.2 Cycloid gear type powered steering unit

1. Spacing sleeve
2. Valve body
3. Valve core
4. Interlock shaft
5. Spring piece
6. Joint sleeve
7. Rotor
8. Stator
9. Valve sleeve



Downloaded from www.Manualslib.com manuals search engine

### 5.3.2 Work principle

Valve bore, valve sleeve, valve body in the redirector makes up of along valve, having an effect of controlling the direction of the oil flow. Rotor and stator makes up of cycloid mesh, having an effect of measure element when turning, to make sure that the oil quantity in oil crock and corner of steering wheel makes direct ratio; having an effect of hand moving oil pump when turning by manpower; and linkage shaft having an effect of transferring wrest rules.

Middle position (steering wheel isn't running), in the opening ring system, the oil from oil pump passes through the lumen of valve bore to oil box.(Fig.5.2 a)

When turning by power, oil from oil pump pass through the along valve to cycloid pin wheel mesh, force rotor running following steering wheel, and press the ration oil to the left or the right of crock, force turning wheel to turn by power, and oil in the other cylinder flows back to oil box.(Fig.5.2 b, c)

When engine comes out flameout, the steering wheel will be operated by manpower, with valve bore, melt, interlock shaft, driving rotor to press oil in one cylinder to the other one, then force turning wheel, to carry out turning by manpower (Fig.5.2 d). Filling oil by oil box when passing through filling unilateralism valve.

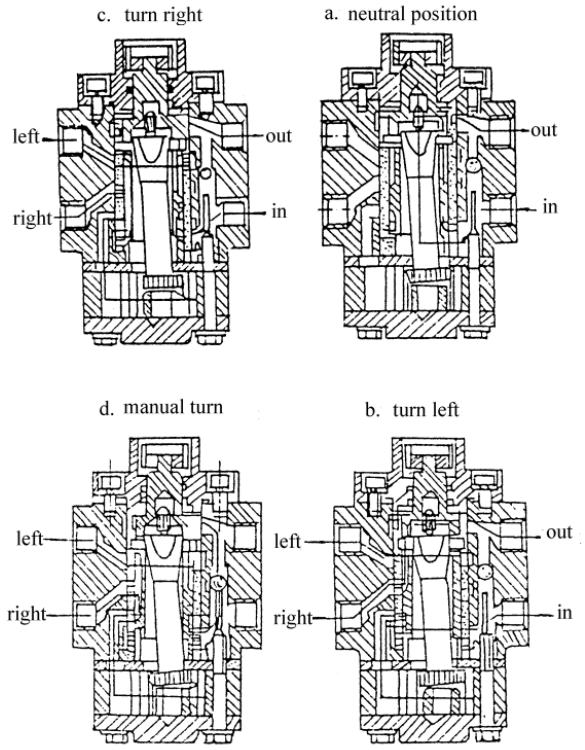


Fig5.3 Oil circuit of steering unit



Downloaded from www.Manualslib.com manuals search engine

### 5.3.3 Usage of the steering unit

(1) Install the steering unit

When installing the steering unit, it must ensure concentric with the connecting shaft, axial clearance can avoid propping by valve core, checking the hand wheel if it can return to the neutral position flexibly after installing.

The allowable flow rate of the inlet oil pipe is 1-1.5m/s, the allowable flow rate of the outlet oil pipe is 4-5m/s. The experimental pressure of the high pressure tube must high than 1.5 times as much as the maximum working pressure.

For the safety and convenient repair, it is suggested that a connector should be installed at the inlet port of the steering unit for a pressure gauge.

(2) Oil temperature range:-20℃~+80℃

Normal oil temperature:+30℃~+60℃

(3) Choose oil: N46 or N32 hydraulic oil

(4) Filter oil: The accuracy of oil inputted into the steering unit is 30 micron. 0.2-0.3MPa Back pressure of outlet oil of the steering unit can prevent the oil from flowing into the oil for the manpower turning.

(5) Cleaning pipes of the system and closed oil tank can reduce the oil pollution.

(6) Trial run: Clean the oil tank and add oil to the top level before trial run. Loose the bolt connector of the steering cylinder and bleed air at the low speed of the oil pump.

Disassemble the piston rod and steering wheel, turn the hand wheel, make the piston at the limit left or right position, then add oil into the oil tank to the top level.

Tighten all bolt connectors and connect the piston rod, check the steering system for the good condition. If the hand wheel can’t be operated flexibly, it’s necessary to find possible cause and remedy it.

Check the system pressure when the piston of the steering cylinder reaches the limit position.

(7) Maintenance: Check the condition of the leakage, oil level of the oil tank everyday. Regularly replace the oil filter and oil. During operation abnormal condition is found, it’s necessary to find possible cause and remedy it. Don’t turn the hand wheel by two men at the same time.



Downloaded from www.Manualslib.com manuals search engine

### 5.3.4 Check and maintenance of the steering unit

In order to keep the steering system in good working condition and avoid accidents, it is necessary to check the steering system regularly. The structure of steering unit is referred to Fig5.4.

(1) Regularly check water, foreign matter and acid number of the working oil, if necessary, replace it with new oil.

(2) When checking the steering system, don't disassembly the steering unit readily, if the steering unit is in trouble, please ask professional service men to repair it.

(3) Dismounting tool used and repair site must be clean. It would be the best adopting indoor operations.

(4) Notes of assembling

a. Wash all parties clearly with gasoline or kerosene before assembling, for there is paint on the connection surface, it must be washed with acetone. You can't wash the parties with cotton yarn or cloth, but with brush, even clear away with compress air if possible. Shouldn't immerse the rubber in the gasoline for a long time. After assembling the steering, join 50-100ml pressure oil in the orifice, turn the valve bore to right and left, then install and practice the truck if they are not abnormal.

b. Valve body, block plate, stator, rotor and the connection surface of the back cover must be kept clean, and they can't be hurt.

c. Notice that the whorl cover most be lower than the surface of the valve body.

d. Block ring and slip ring have an inverse surface, the surface of block ring should face the front cover, while the slip ring faces the valve bore.

e. There is mark on the surface of the rotor and interlock shaft, the mark must be face to face when assembling.

f. The gasket of the bolt (with pin) must be cuprum or aluminum.

g. The method of riveting the seven bolt in the back cover: screw one by two in order, not in turn but gradually, with the power of 30-40N.m.

h. When assembling the oil pipe, notice the mark "in", "back", "left", "right" on the valve body, they must be connected with the right oil pipe.

(5) Disassembly and assembly

a. Order of disassembly: front cover-block ring-slip ring-valve sleeve- (shim- shift arm-valve core-spring piece)-back cover-spacing sleeve- stator-rotor- interlock shaft-block plate-pin cover-steel ball-valve body.



Downloaded from www.Manualslib.com manuals search engine

b. Order of assembly

valve core-spring piece-valve sleeve-shift arm-shim-valve body-slip ring-block ring-front cover-steel ball-screw cover-block plate-interlock shaft -rotor-stator -spacing sleeve-back cover.

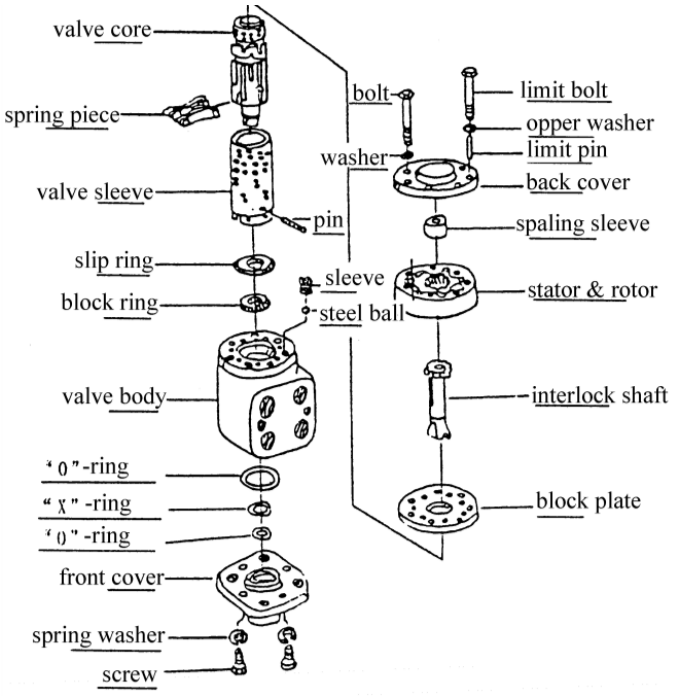


Fig5.4 Structure of steering unit

### 5.3.5 Inspection on reassembly of steering system

(1) Check the arrangement of the hydraulic pipeline and the turning direction for correctness.

(2) Check the force necessary to turn the steering handwheel to right and left until it can't be turned any more to see if they are identical each other and check the operation if the steering handwheel for smoothness during above operation.

(3) After assembling a steering system, put up the turning wheel, make the engine to run at a slack speed, then turn the steering wheel slowly, and do it times and times, to exhaust the air in the hydraulic pipeline and cylinder. Check whether voice for it to turns is normal or not. If abnormal voice can't be heard, it says that the air has been exhausted absolutely. Then make the engine run at a slack speed, to go up the oil temperature.

(4) Measure the operation of steering

Place the truck on the dry and flat road. Attach the spring equilibrator to the verge



Downloaded from www.Manualslib.com manuals search engine

of the steering wheel with the parking detent, to measure the operation of steering, which must be under 150N.

(5) Measure the pressure with pressure meter (15-20MPa), cutoff valve and soft tube in Fig. 5.4.

Remove the split-flow valve to the line of the turning implement, engage a line with pressure meter on the side of diffluent valve, engage a line with breaking valve on the side of turning implement, then make the engine run at a slack speed.

When the steering wheel is at a free state, the oil pressure is about 0.5-2MPa. If the pressure is higher than it, check whether the diffluent valve and line is stopped or not. If there is no abnormal thing, speed up the engine to about 1500r/min. Then close the parking valve slowly and notice that the temperature of pressure is improved.

Move the highest pressure of the diffluent valve to 12MPa, so, when the parking valve is closed, the pressure meter will show its pressure.

If the pressure is over 12MPa, it shows that the diffluent valve has malfunction. But if the pressure is too low, it shows that the oil pump has malfunction or the spring of the diffluent valve has rupture. In this circumstance, the time of the closed of the parking valve can't be over 15 seconds.

Notice: The oil pump provides pressure oil to make the cylinder run, so its task must be thought in two ways, demarcate pressure and rating flux.

The pressure is to force the cylinder while the flux is relation to the speed of the cylinder. It says that, even though the pressure is normal, to 12MPa, if the flux is lack, the cylinder can't run normally, resulting in that the steering is too heavy to operate. So when the diffluent valve needs to be disassembled and be assembled again, adjust the flux valve and safety valve properly according to the capacity and the operation of the cylinder, then mark in the proper position to assemble again or measure the distance of the bolt.

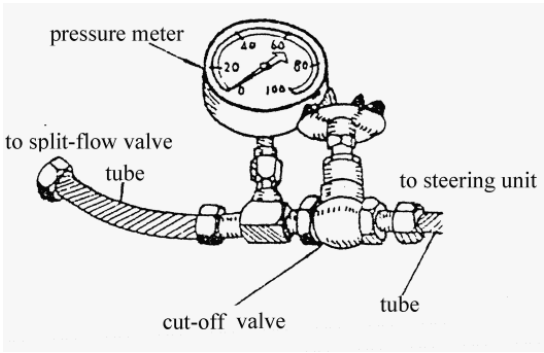


Fig5.5 Measure the pressure



Downloaded from www.Manualslib.com manuals search engine

### 5.3.6 Steering unit troubleshooting

| Problem | Possible cause | Remedy |
|---|---|---|
| Oil leakage | Oil leaks from the connection surface of valve body, stator and rear cap due to the dirty. | Clean. |
| | The rubber ring is worn. | Replace rubber ring. |
| | The washer of limit bolt is uneven. | Grind or replace washer. |
| Hard steering operation | Oil pump can't supply insufficient fuel. | Select appropriate oil pump or check the divider. |
| | Air mixed in steering system. | Vent air and check oil pipes. |
| | Oil tank isn't full. | Add oil to specified level. |
| | Oil is too sticky. | Use recommended viscosity oil. |
| | The ball check valve inside the valve body malfunctioning. | If the ball is lost, fit a Φ8 ball. If the ball is blocked by the dirty, clean it. |
| | Oil pressure of the divider is lower than the working pressure or the divider is blocked by the dirty. | Adjust the pressure of the divider or clean it. |
| Steering malfunction | Spring piece is broken off. The hand wheel can't return to neutral position automatically. | Replace the spring piece. |
| | Shift arm is broken off or deformed. | Replace the shift arm. |
| | Drive shaft is broken off or deformed | Replace the drive shaft. |
| | Mutual position between the rotor and the drive shaft is disorder. | Reassemble the rotor and the drive shaft. |
| | Bilateral overload valve is out of order. (the steel ball is seized up by the dirty ) | Clean the valve. |
| Handwheel can't return to neutral position. | 1. Valve core and the column is decentraction.<br>2. Valve core is propped by the column.<br>3. Hard to steer the column.<br>4. Broken spring piece | Readjust or replace. |
| No hand steering device | Radial and axial clearance between the rotor and stator is improper. | Replace rotor and stator. |



Downloaded from www.Manualslib.com manuals search engine

## 5.4 Steering system troubleshooting

### 5.4.1 Inspection after reassembling the steering system

(1) Check the force when turning the steering handwheel to right and left until it can't be turned any more to see if they are identical each other and check the operation if the steering handwheel for smoothness during above operation.

(2) Check the arrangement of the hydraulic pipeline and the turning direction for correctness.

(3) Lift up the rear wheels and slowly turn the handwheel over several times to exhaust the air in the hydraulic pipelines and the cylinder.

### 5.4.2 The troubleshooting of the steering system for the distributor valve is the following table:

| Problem | Possible cause | Remedy |
|---|---|---|
| Steering wheel is caught when rapidly turned. | Flow control valve spool blocked | Disassemble, repair or replace |
| | Flow control valve spool worn | Replace as assembly |
| Oil pressure does not rise. | Relief valve stuck open | Replace as assembly |
| Oil pressure higher than relief set pressure. | Relief valve stuck closed | Replace as assembly |
| Noisy relief valve | Relief valve vibrating. | Replace as assembly |
| Too high oil temperature. | Relief valve stuck closed | Replace as assembly |
| Hard steering operation while idling. | Relief valve stuck open | Replace as assembly |
| | Flow control valve spool blocked | Disassemble, repair or replace |
| | Flow control valve spool worn | Replace as assembly |
| Varying steering force. | Relief valve vibrating. | Replace as assembly |
| | Flow control valve spool blocked | Disassemble, repair or replace |
| | Flow control valve spool worn | Replace as assembly |
| Hard steering operation. | Relief valve stuck open | Replace as assembly |
| | Flow control valve spool blocked | Disassemble, repair or replace |
| | Flow control valve spool worn | Replace as assembly |



Downloaded from www.Manualslib.com manuals search engine

## 5.5 Rear axle

The rear axle is primarily composed of an axle body, right and left knuckles, tie rods, wheels, hubs and steering cylinder. The steering axle is of cranks and slider mechanism. The cylinder piston rod pushes the knuckle steering through tie rod, causing wheel's deflection and truck's steering. The steering axle is bolted to the rear frame by the buffer.

**(1) Rear axle body**

The rear axle body is of the steel plate weld construction type and has boss holes for knuckles at both ends.

**(2) Right and left knuckles**

On the knuckle, a hub for installing a wheel thereon is installed by two bearings. The hub is provided with an oil seal for grease. The knuckle is installed between two bosses with bearings through which a king pin is inserted. Lubricate all bearings by a nozzle installed on the top cover, users must add lubricant in time.

**(3) Steering cylinder**

The steering cylinder is of double-action piston type. The seal unit consists of the supporting ring and O-ring seal. The construction of the steering cylinder is shown as Fig. 5.6.

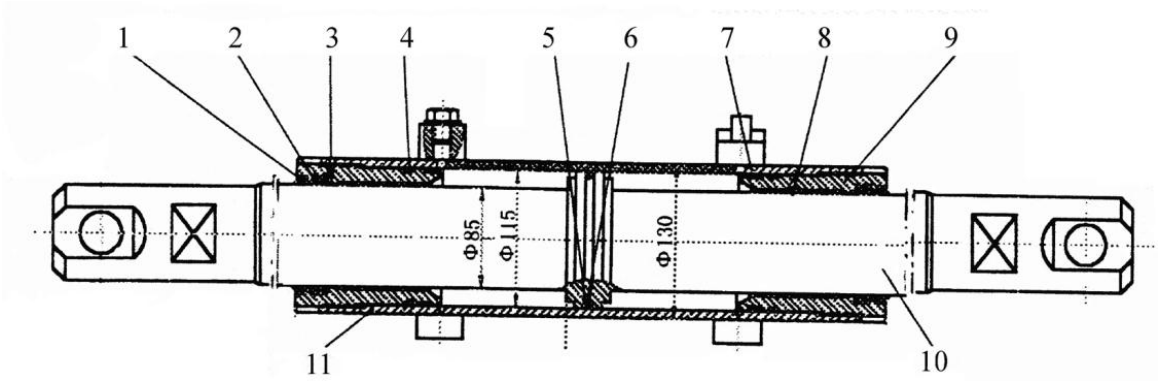


Fig. 5.6 Steering cylinder

| | | | | | |
|---|---|---|---|---|---|
| 1. | Dust ring | 5. | Back-up ring | 9. | Bushing |
| 2. | Seal ring | 6. | O-ring | 10. | Piston rod |
| 3. | Snap ring | 7. | Back-up ring | 11. | Cylinder body |
| 4. | O-ring | 8. | Bearing | | |



Downloaded from www.Manualslib.com manuals search engine

**(4) Rear wheel bearing pre-load adjustment**

a. As shown in Fig5.7, fill up the chamber formed by wheel hubs, wheel hub bearing and wheel hub covers with lubricating grease. Coat the lips of the oil seals with lubricating grease.

b. Press the hub bearing into the hub and fit the hub on the knuckle shaft.

c. Fit a flat washer and tighten a castle nut with torque of 206～235N.m and loosen it and then tighten it again with torque of 9.8N.m.

d. To ensure firm installation of the hub, slightly knock at it with a wooden hammer and in the meantime, rotate the hub for 3～4 turns.

e. Tighten the castle nut and align one of its notches with a hole drilled in the steering knuckle.

f. Again slightly knock at the hub with a wooden hammer and in this time, rotate manually the hub for 3～4 turns to ensure its smooth rotation with a specified torque of 2.94～7.8N.m.

g. If the torque value necessary to rotate the hub is more than the specified one above-mentioned, screw out the castle nut for 1/6 turn and measure the torque value then.

h. When the torque value measured is up to the specified one, lock the castle nut with a cotter pin.

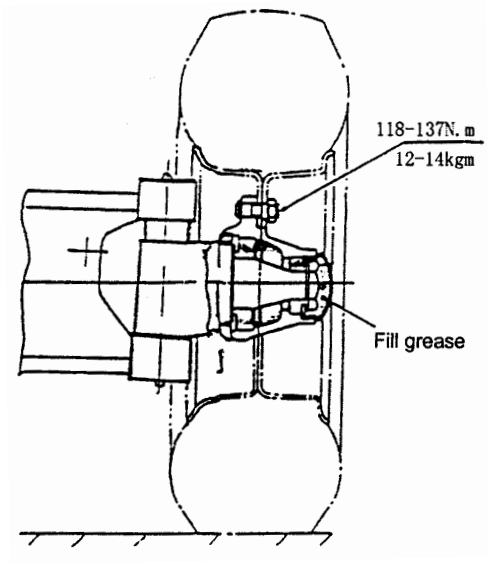


Fig5.7 Pre-load adjustment



Downloaded from www.Manualslib.com manuals search engine

# 6. Hydraulic system

| | | |
|---|---|---|
| Hydraulic oil pump | Type | Gear pump |
| | Displacement | 32 ml/r 36 ml/r |
| Control valve | Type | Two-pool type with relief valve, flow divider and tilt self-locking valve |
| | Setting pressure | 19 MPa |
| | Dividing pressure | 12 MPa |
| | Flow rate | 25 L/min |

## 6.1 General description

The hydraulic system mainly consists of main pump, control valve, high & low pressure oil pipes and joints. The main pump is a gear type and installed on the side of the transmission. As the engine runs, the main pump is driven to draw up oil from the tank and send it to the control valve. The control valve, provided with a relief valve to keep the circuit pressure within the specified one, controls the cylinders by changing over the oil passages inside the valve body with the spools.

## 6.2 Main pump

The main pump consists primarily of a drive gear, driven gear and pump body which contain the two gears and other components. The drive gear is in mesh with the driven gear.

## 6.3 Control valve (See Fig.6.1)

The control valve is a sectional type consisting of the inlet section, plunger section and outlet section which are assembled with three bolts.

At the inlet section there is a cartridge type relief valve to set the oil pressure in the circuit. The steering relief valve is used for adjusting the oil pressure in the steering oil circuit. Twist them clockwise, raise the oil pressure, on the contrary, reduce the oil pressure. The plunger section controls the hydraulic cylinders by changing over the flow of oil from the relief valve with plungers. The tilt cylinder plunger section is equipped with a tilt lock valve. Oil returned from the cylinders is returned to the tank through the



Downloaded from www.Manualslib.com manuals search engine

outlet section. Each section is sealed with O-ring, and the oil passage at the high pressure side is given a check valve.

**Caution:** Don't adjust the pressure of the main relief valve at will. If the pressure is too high, the hydraulic system and hydraulic component may be damaged. When maintaining or using, if oil pressure isn't the same as the standard value, on the basis of JB/TT3300 test way, the professional serviceman should adjust the pressure according to the following procedures:

(a) Screw the plug screw off the inlet port of the control valve, install a 25MPa oil pressure gauge.

(b) Operate the tilt lever, measure the pressure when the oil pressure stroke to the end.

(c) When the oil pressure isn't the same as the standard value, twist the adjusting nut, twist it clockwise, raise oil pressure, on the contrary, reduce oil pressure.

(d) After adjusting, tighten the nut.

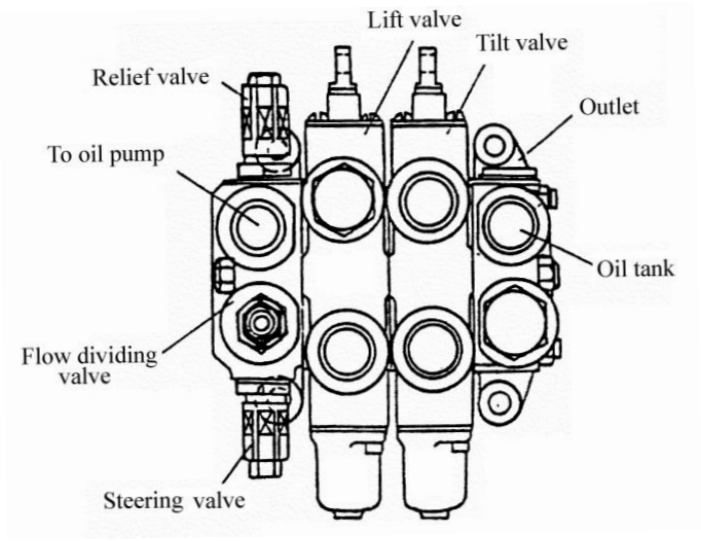


Fig.6.1 Control valve

## 6.4 Control valve operation

(1) Middle position (See Fig.6.2)

The oil that is expelled from the main pump will pass the middle passage and be back to fuel tank. This moment, the cylinder port A & B must be off.



Downloaded from www.Manualslib.com manuals search engine

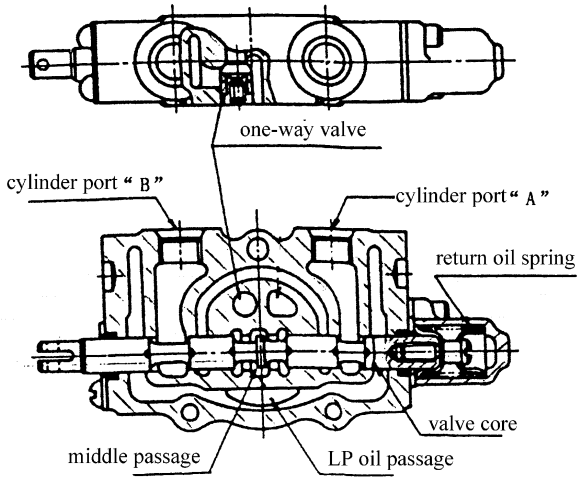


Fig.6.2 Middle position

(2) Push slide valve (See Fig.6.3)

At that time, the middle passage is off. The oil that is come from the oil enter will push out the one-way valve, and inflood cylinder port B. The oil that is expelled from the cylinder port A will pass the low-pressure passage and be back to fuel tank. The slide valve will replace to the middle position recur to the replacement spring.

(3) Pull slide valve (See Fig.6.4)

This moment, the middle position passage is off. The oil that is come from the oil enter port will push out the one-way valve, and inflood cylinder port A, the oil that is expelled from the cylinder port B will pass the low-pressure passage and be back to fuel tank. The slide valve will replace to the middle position recur to the replacement spring.

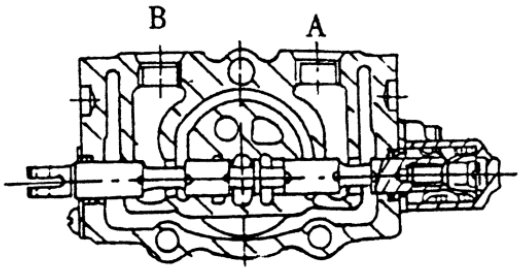


Fig.6.3 push slide valve

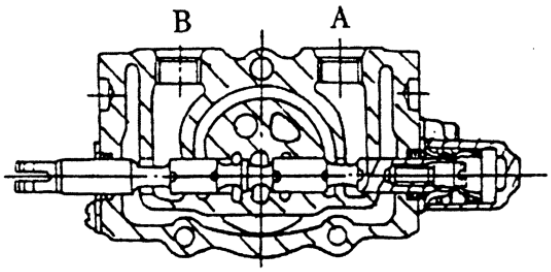


Fig.6.4 pull slide valve



Downloaded from www.Manualslib.com manuals search engine

### 6.5 Main safety valve operation

(1)The main safety valve must be installed between the cylinder HP port and LP passage. The oil that pass through the valve core will be acting on the different diameter surface A & B, so the core K of the one-way valve and the core D of the main safety valve will be firmly fall into the valve base. (See Fig.6.5)

(2)When the oil pressure of the cylinder HP port is overrun the spring limit pressure, the precursor valve core E will be open, and the oil will inflood the hole via the valve core circumference, then reach the LP passage. (See Fig.6.6)

(3)Once the precursor valve core E is open, the back pressure of the core C will be reduced, so the core C will be shift to the right direction, then be on the core E. As a result, the back oil route of the core D will be cut off, the inside pressure will be also reduced. (See Fig.6.7)

(4)Compared with the cylinder port HP, the inside pressure is imbalance, then the safety valve core will be open, so the oil of the HP side will reach LP passage directly. (See Fig.6.8)

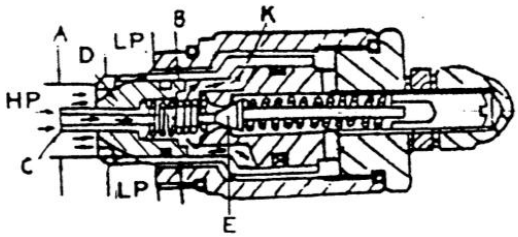


Fig.6.5

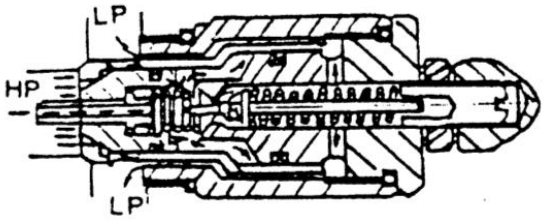


Fig.6.6

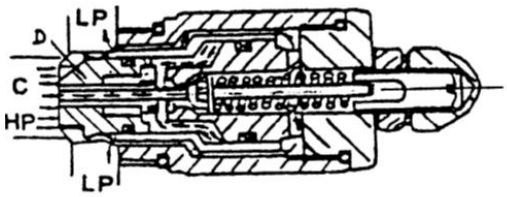


Fig.6.7

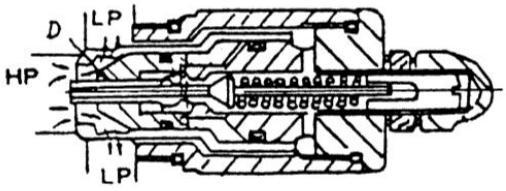


Fig.6.8



Downloaded from www.Manualslib.com manuals search engine

## 6.6 Tilt lock valve operation

Tilt lock valve is used for preventing the shaking of the mast (because the tilt cylinder maybe cause the inside negative pressure), at the same time, it can avoid the danger that the mast will be tilted due to the wrong operation (hit the tilt operation staff) when the engine is off. In traditional structure, even if the engine is off, the mast will be pitch if someone hit the tilt operation staff. But using this new-style tilt lock valve, in spite of the strength that push the tilt operation staff, this complexion will be not occurred. Tilt lock valve structure, see Fig.6.9. In the picture, the port A is connect with the front of the tilt cylinder and the port B is with the behind. When pull the tilt operation staff ( pull slide valve), the oil that is come from the oil pump will be inpour A, and the oil that is come from B port will be back to Oil tank. As a result, the mast will be retroverted. On the other hand, push the tilt operation staff (push slide valve), the oil that is come from oil pump will be inpour B, recur to the HP oil, the lock valve begin to work, then Port A can connect with LP, the mast will be pitch. But when the engine is off, that is, have no HP oil make the lock valve work, so Port A cannot connect with LP, and the mast will not be pitch, at the last, the tilt cylinder will not be cause the negative pressure.

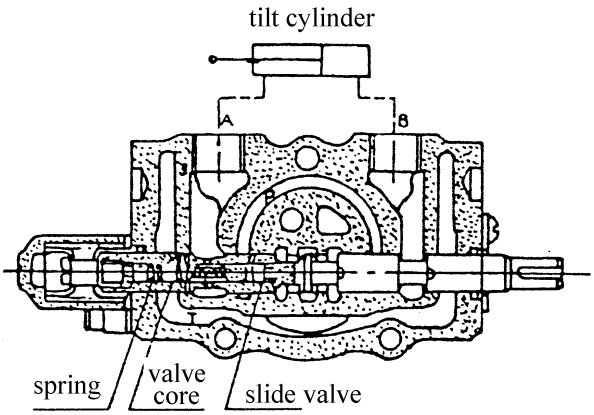


Fig. 6.9 Tilt lock valve

T: to oil tank P: to oil pump A,B: to tilt cylinder



Downloaded from www.Manualslib.com manuals search engine

## 6.7 Hydraulic circulation system (Main circuit)

The hydraulic system sketch sees Fig. 6.10.

The hydraulic circulation system of the main circuit is complicated with the hydraulic for power steering. The hydraulic piping is of O-ring fitting type with excellent sealing performance, providing secure oil tightness.

The hydraulic oil sent from the rear main pump flows directly to the control valve, while the hydraulic oil sent from the front main pump is divided by the flow divider valve in two portions for steering and load handling operation.

The hydraulic oil for load handling flows into the control valve and mingles with the hydraulic oil from the rear main pump. With the control valve in neutral position, the oil returns to the oil tank, passing through the valve.

When the lift lever is pulled, the hydraulic oil from the control valve flows through the flow regulator valve and reaches the lower part of the lift cylinder piston to push up the piston rod. When the lift lever is pushed, the circuit between the lower part of the lift cylinder piston and the oil tank is opened, and the piston begins to descend due to the weight of the piston rod, lift bracket, forks, etc. In this case, the oil returning to the control valve is regulated by the flow regulator.

When the tilt lever is operated, the hydraulic oil from the main pump reaches one side of the piston to push it. The oil pushed by the piston returns to the oil tank through the control valve.

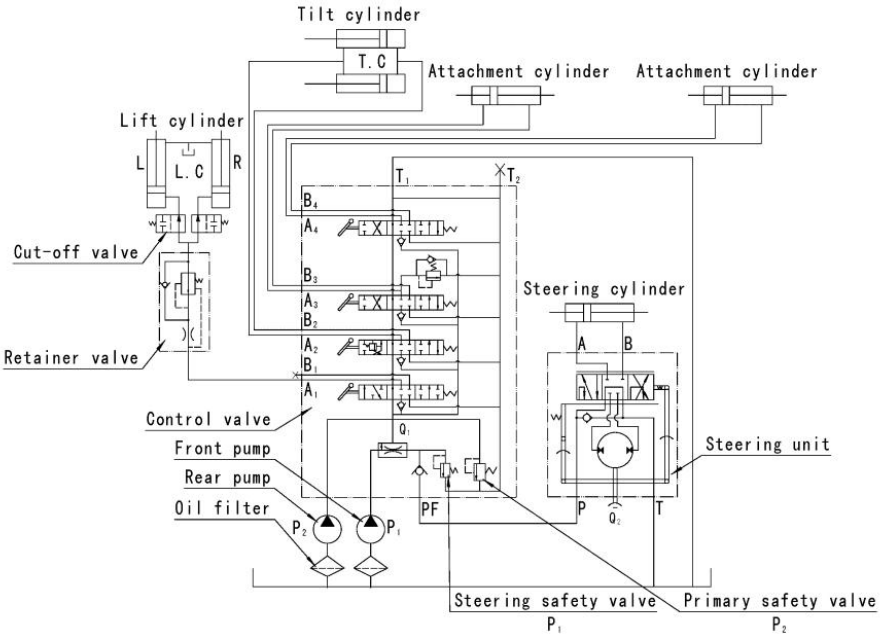


Fig.6.10 Hydraulic system

| Ton | t | 8 | 10 |
|---|---|---|---|
| Flow of control valve $Q_1$ | L/min | 160 | 160 |
| Flow of steering unit $Q_2$ | L/min | 25 | 25 |
| Pressure of primary safety valve $P_1$ | MPa | 20 | 20 |
| Pressure of steering safety valve $P_2$ | MPa | 12.3 | 12.3 |



Downloaded from www.Manualslib.com manuals search engine

### 6.8 Troubleshooting

| Problem | Possible cause | Remedies |
|---|---|---|
| Gear pump can not be pressurized. | Parts worn. | Disassembly, repair or replace parts. |
| | Blocked oil pipe. | Make the oil pipe through. |
| | Blocked oil tank or filter. | Clean dirty or replace oil. |
| | Too high oil stickiness or oil temperature. | Use recommended oil. |
| Noisy or undulate pressure. | Blocked oil filter. | Clean dirty. |
| | Lower oil level. | Add oil up to specified oil level. |
| | Air entering in resulting from loose suction connections. | Retighten each connection. |
| | Gear precision is reduced. | Replace gear or shave. |
| Control valve leaks. | O-ring seal (ends of valve body) broken down. | Replace O- ring seal. |
| | O-ring seal (connections of valve body) broken down. | Replace O- ring seal. |
| Spool can not be reset. | Return spring become deformed. | Replace return spring. |
| | There is dirty between valve body and spool valve. | Clean. |
| | Valve body deformed with the too tight coupling bolt. | Retighten coupling bolt. |
| The pressure of the relief valve is not right. | Pressure regulating spring deformed. | Replace pressure regulating spring. |
| | Cone valve is worn. | Replace cone valve. |
| | Lock nut is loosen. | Tighten and lock. |
| | Outlet port is block up. | Clean. |
| The lower slippage of the mast is too large. | The clearance between valve body and spool becomes large. | Repair or renew spool. |
| | The spool isn’t in neutral position. | Make the spool in neutral position. |
| | Cone valve is worn or seized by dirt. | Replace cone valve or clean dirty. |



Downloaded from www.Manualslib.com manuals search engine

## 6.9 Maintenance

### 6.9.1 Detaching of multi-way valve

Detach the valve from forklift and clean it.

(1) Loose bolts and separate each part ,please note that 1-way valve or spring on contact surface shall be kept well.

(2) Loose the bolts at a side of slide valve end as well as at cover side, and then detach them together with valve leather, o-ring and sealing washer.

(3) Place slide valve onto table vice, loose bolts and dismantle spring and its base, spring and valve rod shall be taken out in the case of tilt slide valve with self-locking tilt valve.

### 6.9.2 Reassembly of multi-way valve

Clean all parts with mineral oil and check if there is any burrs or scars, replace it if necessary. valve body ,slide valve and valve rod shall be in good order, replace complete part if necessary.

(1) Clamp the slice valve with table vice, and then assemble valve rod and spring in right direction.

(2) Put O-ring, valve leather, sealing washer, spring and its base in good order into end of slide valve, and then cover it and tighten the bolts at 25～32N.m.

(3) Insert slide valve (1 piece)assembly into valve body and cover it, tighten the bolts with hex at hexagon slot (torque9~11N.m).

(4) Fix O-ring and valve leather onto the head of slide valve and screw the bolts with 4.6～5.8N.m.

(5) After the above assembly, 1-way valve ,spring and o-ring shall be inserted into every slide valve, tighten it with 3 bolts (torque 103N.m for large bolts, 66N.m for small ones).



Downloaded from www.Manualslib.com manuals search engine

## 7. Lift cylinder & tilt cylinder

| | | |
|---|---|---|
| Lift cylinder | Type | Single-action piston type, with cut-off valve |
| | Bore diameter | Φ100 |
| | Stroke | 1495mm (Only for 3m lift height) |
| Tilt cylinder | Type | Double-action piston type |
| | Bore diameter | Φ115 |
| | Stroke | 242mm |

### 7.1 Lift cylinder

The two lift cylinders of single acting type are used and located behind each outer mast frame. The bottoms of the cylinders are sustained by the mast support of the outer mast while the tops of cylinders, or the piston rod tops are inserted into the upper beam of the inner mast.

The lift cylinder assembly consists primarily of a cylinder body, piston, piston rod and cylinder cap. At the lower part of the cylinder body is arranged an inlet for high-pressure oil, and at the upper part there is an outlet for low-pressure oil above the piston packing, to which a return pipe is connected.

The piston is fastened to the piston rod with a steel clamp. A wear ring, packing and back-up ring are attached to the outside periphery of the piston which is moved along the inner surface of the cylinder by high-pressure oil. An oil seal and bushing are installed on the cylinder cap which is screwed into the cylinder body. The bushing supports the piston rod, and the oil seal prevents dust from entering the cylinder. The upper end of the piston rod and inner mast upper beam is locked with bolts.

When the lift lever is tilted backward, high oil pressure is sent into the lift cylinders through their inlets to push up the piston rods and the piston head, causing the forks to rise through chains. The height from the ground to the fork upper position when the inner mast channel beam upper ends exceed the outer mast upper ends is called “Free lift” . Within this range, the mast height does not vary.

With the lift lever tilted forward, the piston rods of the lift cylinders descend by the weights of the piston rods, inner mast, lift bracket, finger bar and forks, causing oil under the piston to flow out of the cylinders. The oil discharged from the cylinders is regulated by the flow regulator and returns through the control valve to the oil tank.

The structure of the lift cylinder is shown in Fig. 7.1.

**Note:** Please pay more regard to safety when adjusting the lift cylinder.



Downloaded from www.Manualslib.com manuals search engine

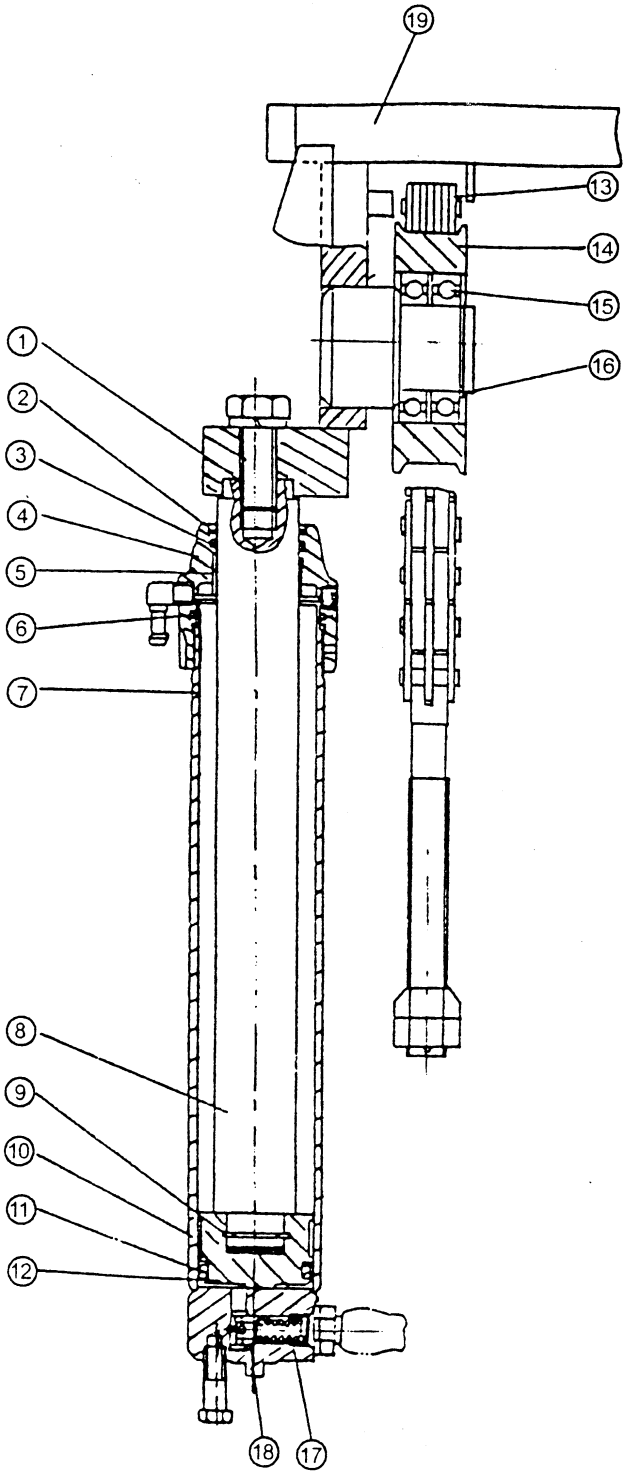


1. Adjusting pacer
2. Dust ring
3. Yx ring
4. Cylinder cap
5. Bushing
6. O-seal ring
7. Cylinder body
8. Piston rod
9. Snap ring, steel
10. Wear ring
11. Yx ring
12. Piston
13. Lift chain
14. Chain wheel
15. Ball bearing
16. Snap ring
17. Spring
18. Cut-off valve
19. Upper beam

Fig.7.1 Lift cylinder



Downloaded from www.Manualslib.com manuals search engine

## 7.2 Flow regulator

The flow regulator is located between the control valve and the high pressure ports of the two lift cylinders, near the left lift cylinder. The structure of the flow regulator valve is shown in Fig7.2.

When the lift spool valve is placed in the “lift” position, the oil from the control valve flows through the oil chambers A and B, C, oil holes H, G, D, E, and the chamber I to the lift cylinder without any regulation. When the control valve is placed in the “down” position, the oil flows through chamber I, oil holes E, D, G, H, and chambers C, B, A to the valve. Then there is pressure difference between chamber A and C. Turn on the ball valve (4), a pressure difference overcomes the force of the spring (9) and moves the valve core (5) right, thus the oil flow being decreased by narrowing of the hole G and H, and reduces the oil flow passing through the throttle plate.

The flow regulator valve serving both as a flow regulating valve while forks are being lowering and a safety device if rubber hoses between the control valve and lift cylinders are damaged due to any reason.

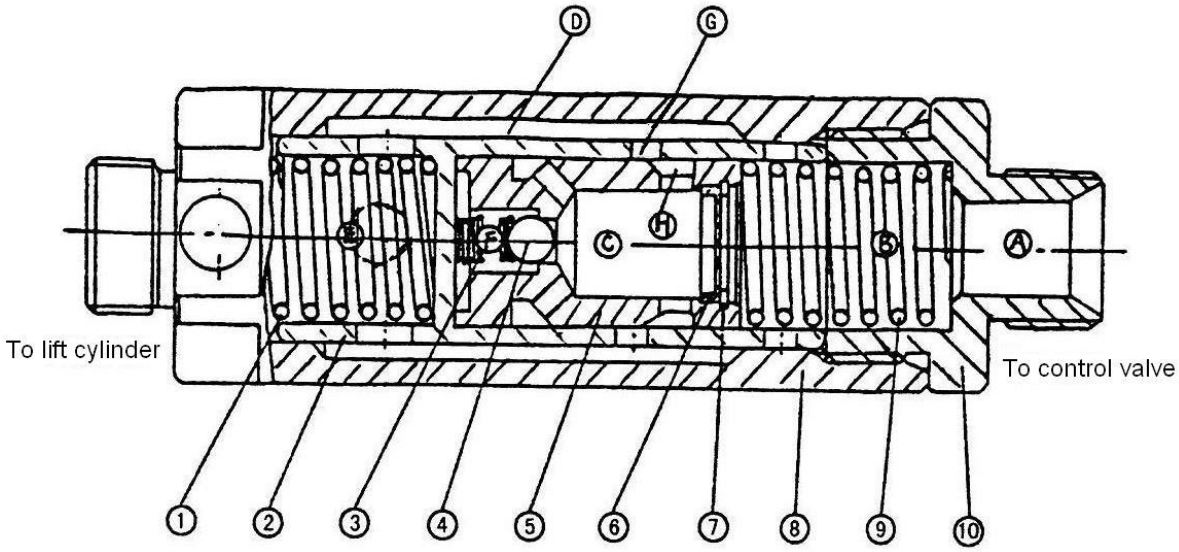


Fig.7.2 Flow regulator

| | | | |
|---|---|---|---|
| 1. Spring | 4. Nylon ball | 7. Snap ring | 10. Joint |
| 2. Valve sleeve | 5. Valve core | 8. Valve body | |
| 3. Spring | 6. Throttle plate | 9. Spring | |



Downloaded from www.Manualslib.com manuals search engine

### 7.3 Tilt cylinder

Two tilt cylinders of double acting type are provided at each side of the frame. The front end of the piston rod is installed on the mast and the cylinder tail is on the frame with pins. The tilt cylinder assembly consists primarily of a cylinder body, cylinder cap, piston and piston rod. The structure of the tilt cylinder is shown as Fig7.3.

When the tilt lever in the driver's room is tilted forward, high pressure oil enters from the cylinder tail to shift the piston forward, tilting the mast forward 6° . With the tilt lever tilted, high pressure oil enters from the cylinder cap side. This shifts the piston to the rear, causing the mast to tilt backward 12° .

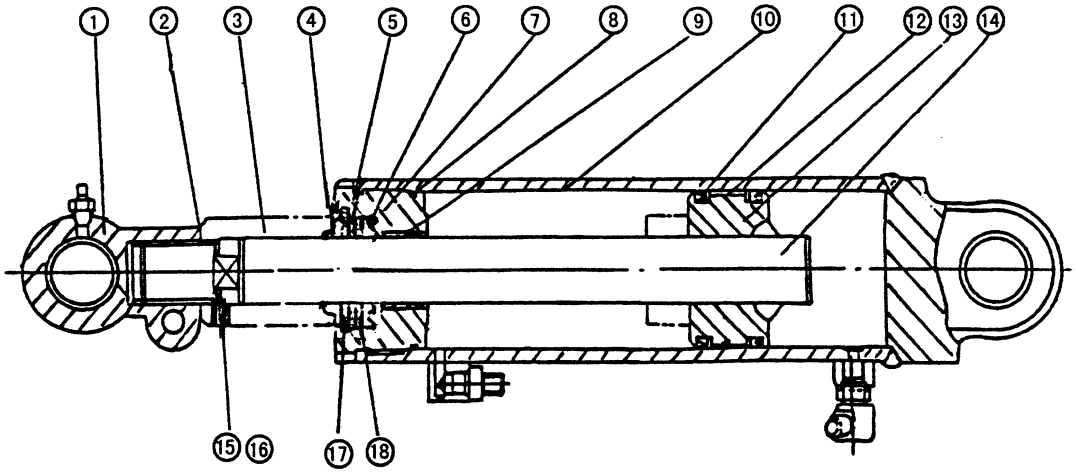


Fig7.3 Tilt cylinder

| | | |
|---|---|---|
| 1. Ear ring | 7. Guide sleeve | 13. Piston |
| 2. Dust ring | 8. O-ring | 14. Piston rod |
| 3. Adjusting sleeve | 9. Bearing | 15. Plug |
| 4. Dust ring | 10. Cylinder body | 16. Screw |
| 5. Snap ring | 11. Yx-ring | 17. Snap ring |
| 6. Yx-ring | 12. Retainer ring | 18. Snap ring |



Downloaded from www.Manualslib.com manuals search engine

# 8. Lifting system

## 8.1 General description

The lifting system is of two-stage, rolling telescopic mast type. The inner mast frames have J-shaped section. The outer mast frames have C-shaped section. The masts of forklift trucks all contain a free lift range. The structure of the mast sees Fig. 8.1 and Fig8.2.

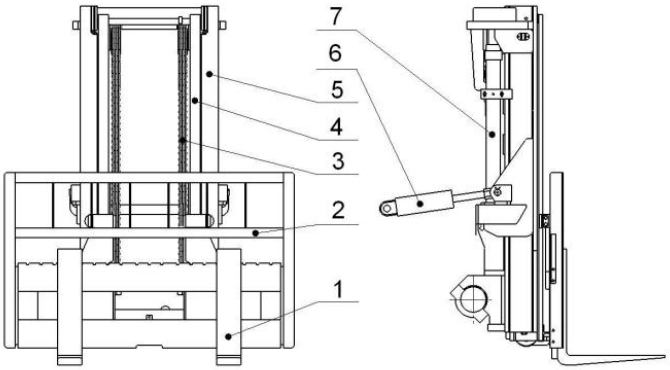


Fig8.1 Mast (8t)

1. Fork 2. Lift bracket 3. Lift chain 4. Inner mast
5. Outer mast 6. Tilt cylinder 7. Lift cylinder

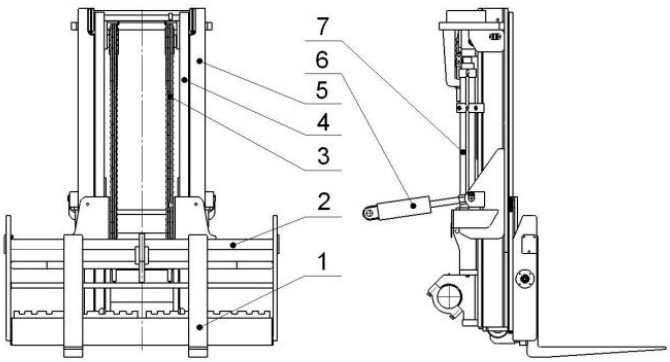


Fig8.2 Mast (10t)

1. Fork 2. Lift bracket 3. Lift chain 4. Inner mast
5. Outer mast 6. Tilt cylinder 7. Lift cylinder



Downloaded from www.Manualslib.com manuals search engine

### 8.2 Inner & outer mast

The mast assembly is of the free lift range-contained two stage telescopic type consisting of the inner and outer mast, and is sustained by mast supports. The mast supports are welded to the bottom of the outer mast, being extended from the axle housing. The outer masts are provided with brackets for lock pins of tilt cylinder connecting hardware. The mast is tilted by operation of the tilt cylinders.

The inner mast is composed of right and left mast frames which are connected with each other by upper and lower connecting members. At the upper inside of each outer mast frame an end roller is installed on the end roller shaft welded to the frame, with a snap ring. In addition, the outer mast frames are fitted with side rollers to sustain the inner mast frames. At the lower outside of each inner mast frame an end roller is installed on the end roller shaft with snap ring, which is welded to the inner mast. Under the end rollers other side rollers are located to sustain transverse load. With the aid of these rollers, the inner mast can smoothly operate.

**Notice:** Please pay more regard to safety when maintaining the main rollers and side rollers on the upper of outer mast.

### 8.3 Lift bracket

At the lift brackets, end rollers that roll along the inside of the inner mast frames are installed on the end roller shafts with snap rings. The end roller shafts are welded to the lift brackets. The side rollers that roll along on the inside of the inner mast frames are bolt fitted, being shim adjusted. To prevent the rolling of the finger bar, two retaining rollers are used, which roll along on the outside of inner mast frames. The longitudinal load is sustained by the end rollers of which the upper ones emerge from the top mast when the forks reach the maximum lift height.

The transverse load is sustained by upper retaining rollers and lower side rollers. As we mentioned above, the mast assembly and lift brackets are designed with rigidity, stability and smooth operation in mind.

Furthermore, the finger bar and lift brackets are made into one body construction using high tension steel to improve the durability. This meets the ISO Standards.

The two forks installed on the finger bar are made of special alloy steel which has been subjected to heat treatment.

The fork pin fastens the fork on the definite position. When adjusting the clearance



Downloaded from www.Manualslib.com manuals search engine

of the fork, pull the fork pin turn 1/4 circle, the fork clearance must be adjusted according to the loaded goods.

### 8.4 Roller position

There are three kinds of rollers, main roller, side roller group and side roller. They are separately mounted on the inner mast, outer mast and lift bracket. The main rollers sustain the main loads from front, which can't be adjusted, and rear direction and the side rollers sustain the side loads with the left and right side clearance adjusted by the gasket group, this will make the inner mast and lift bracket move freely. See Fig8.3, Fig8.4.

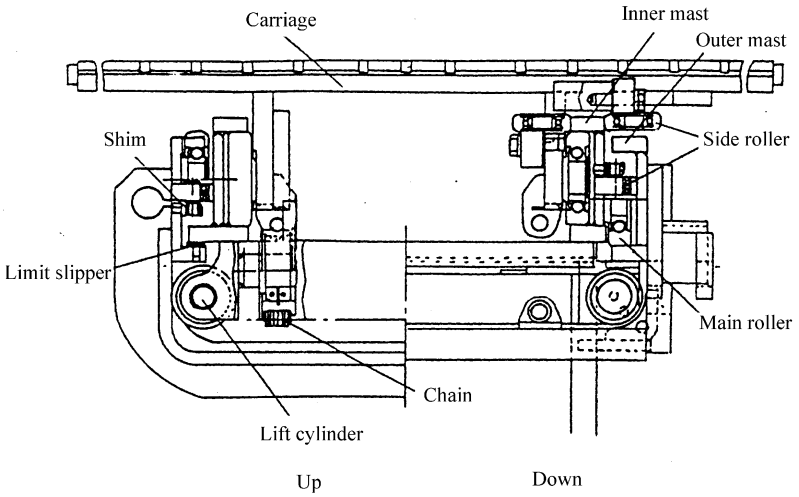


Fig8.3 Roller mounting (8t forklift)

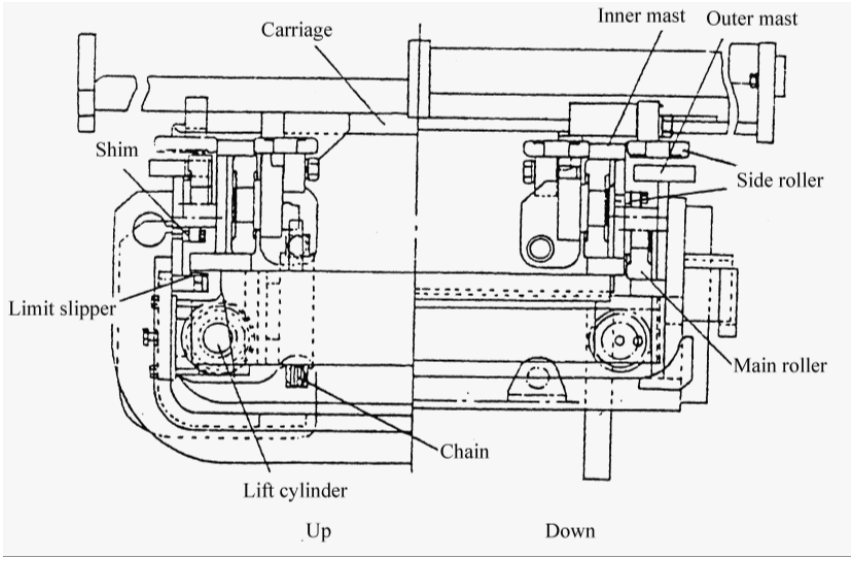


Fig8.4 Roller mounting (10t forklift)



Downloaded from www.Manualslib.com manuals search engine

## 8.5 Adjustment of lifting system

a. The clearance between the inner mast and the guide plate of the outer mast is 0.5-1.0mm, which is adjusted by the spacer of the guide plate. The clearance between the side roller and the channel beam is 0.3-0.8mm, which is adjusted by the axial bolt inner the roller.

b. Make the forks descend to the ground, adjust the lifting chain to assure the distance between the center of lift bracket lower rollers and the bottom of inner mast is smaller than 25mm.

c. Make the mast assembly tilts backward, adjust the pulling force of lift chains and let the tightness of lift chains be equal.

d. Make use of the spacer of the lift cylinder to adjust the error occurred between the right and left cylinders in height.

## 8.6 Maintenance and adjustment

### 8.6.1 Adjustment of lift cylinder (Fig8.5)

When replace the lift cylinder, inner mast or outer mast, we shall readjust the stroke of the lift cylinder as following:

(1) Install the piston rod in the upper beam of the inner mast without shims.

(2) Lift the mast slowly to the max. stroke of the cylinder and check the two cylinders synchronize or not.

(3) Install shims between the top of the piston rod of the cylinder which stop first and the upper beam of the inner mast. The thickness of the shim is 0.2mm or 0.5mm.

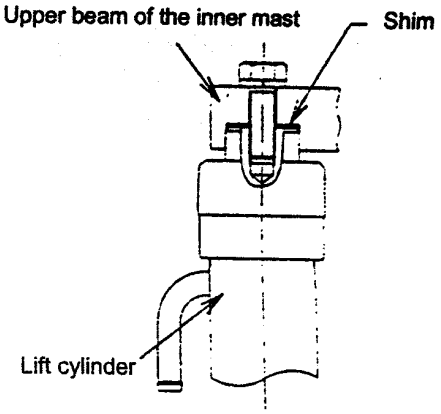


Fig8.5

(4) Adjust the tightness of lift chains.

**Notice: Please pay more regard to safety when adjusting the lift cylinder at an elevated height.**



Downloaded from www.Manualslib.com manuals search engine

### 8.6.2 Carriage adjustment

(1) Park forklift on horizontal place and let mast vertical.

(2) Put the bottom of fork onto ground, screw the adjustable nut at the end of joint and let main idler wheel come out l/4-l/3 of its radius. See Fig8.6.

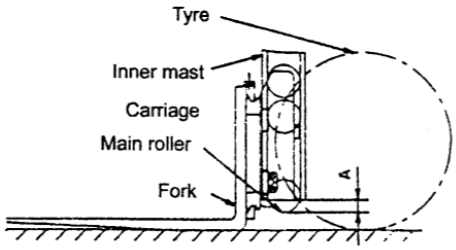


Fig.8.6

(3) Lift fork to Max. height, and ensure gap B between limit blocks of fork and of inner mast shall be 5-10mm. See Fig8.7.

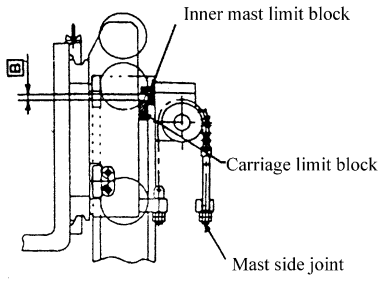


Fig.8.7

(4) Put down the fork and tilt to specified position, adjust the nut at chain upside and tensility of two chains should be same. See Fug8.8.

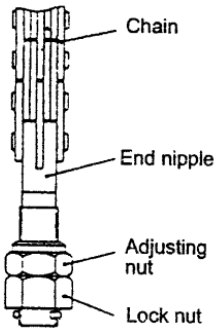


Fig.8.8

### 8.6.3 Replace rollers of the lift bracket

(1) Place a pallet on the forks and let the truck parking on the horizontal ground.

(2) Make the forks and the pallet down to the ground.

(3) Disassemble the end nipple of the upper chain and take the chain down from the sheave.

(4) Lift the inner mast (See Fig8.9 ①).

(5) Make the truck back-up if the lift bracket is fully separated from the outer mast. (See Fig8.9 ②)



Downloaded from www.Manualslib.com manuals search engine

(6) Replace the main rollers.

·Disassemble all the snap rings and take out the main rollers with a drawing tool except the adjusting shims.

·Ensure the new rollers have the same types as the replaced rollers. Install the new rollers inside the lift bracket and fasten them with snap rings.

**8.6.4 Replace rollers (Fig8.10)**

(1) Use the same way as 8.5 to disassemble the lift bracket from the inner mast.

(2) Let the truck parking on the horizontal ground and wedge up the front wheels for 250mm to 300mm.

(3) Apply the parking brake and wedge up the rear wheels.

(4) Disassemble the bolts which fasten the lift cylinder and the inner mast. Hang up the inner mast not to loose the shims of the piston rod heads.

(5) Disassemble the connecting bolts for the lift cylinder and the bottom of the outer mast. Disassemble the lift cylinders and the oil pipes between the two cylinders without loosen the oil pipe joints.

(6) Main rollers on the upper outer mast will be showed on the top of the inner mast as soon as main rollers were taken apart from bottom of the inner mast after laying down the inner mast.

(7) Replace the main rollers.

·Disassemble the upper main rollers with a drawing tool, don't loose the adjust shims.

·Install the new rollers and the shims disassembled before.

(8) Hang up the inner mast to let all the rollers in the mast.

(9) Reassemble the lift cylinder and the lift bracket.

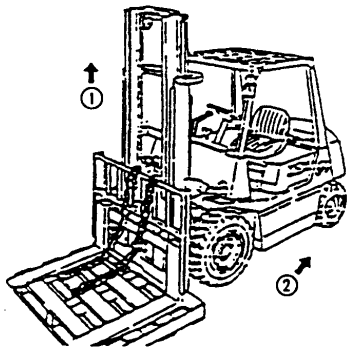


Fig8.9

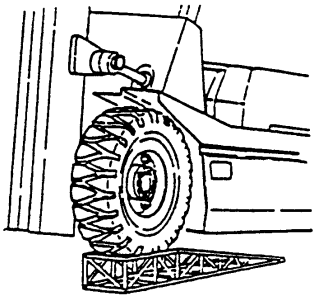

Fig8.10



Downloaded from www.Manualslib.com manuals search engine

# 9. Electric system

## 9.1 General description

The electric system for this forklift truck is of the single-pole type. It mainly consists of the following systems (See the principle diagram in Fig9.1, Fig9.2):

(1) Charge system

This system contains generator, battery, charging indictor, etc. It supplies current for all the electric appliances.

Voltage: DC24V

Dealing with the waste and worn batteries according to relevant laws and regulations.

(2) Starting system

This system mainly consists of mid-relay, starting relay (only ISUZU diesel engine), key switch, starting protection circuit, starting motor, etc. This system is used for starting the engine.

(3) Parking control system (ISUZU diesel engine)

This system consists of the key switch, relay for stopping engine and automatic device for stopping engine.

For the truck equipped with a homemade engine, this system is controlled by a cable for stopping engine.

(4) Instruments

It mainly consists of hour meter, fuel meter, water temperature meter, charge signal, oil pressure indicator, neutral signal, air filter indicator and sedimentor indicator. They are all performance checking instruments for the forklift truck.

The instrument panel adopts Curtis internal-combustion engine meter core. The fuel meter and water temperature meter are ten solid state bars of multicolor LED display. The hour meter in the BAOLI instrument panel is solid state digital display with back lamp.

**Notice for operation of instrument:**

a. Working circumstance: Elevation is lower than 1200 meters, working temperature -25℃～+40℃, relative humidity is not larger than 95%.



Downloaded from www.Manualslib.com manuals search engine

b. Forbid wetting the meter. When washing the truck, don’t let water into the meter, if it happens, clean it with dry cloth.

c. Don’t pull the plug of the meter and harness for the connection.

d. Forbid impacting or scratching the meter strongly.

e. When the meter works abnormally, contact with our company for maintenance.

(5) Lighting and signal device

They include all kinds of illuminating lamps, signal lamps, horn and buzzer, etc.

Headlight:55W

Front combination lamp (turning/front):21W/5W

Rear combination lamp (turning/rear/brake/backing) (up):

21W(yellow)/5W(red)/21W(red)/10W(white)

Rear combination lamp (down): 55W (yellow)

Warning lamp (optional):21W

Rear lamp (optional): 70W

Decal lamp (optional): 10W



Downloaded from www.Manualslib.com manuals search engine

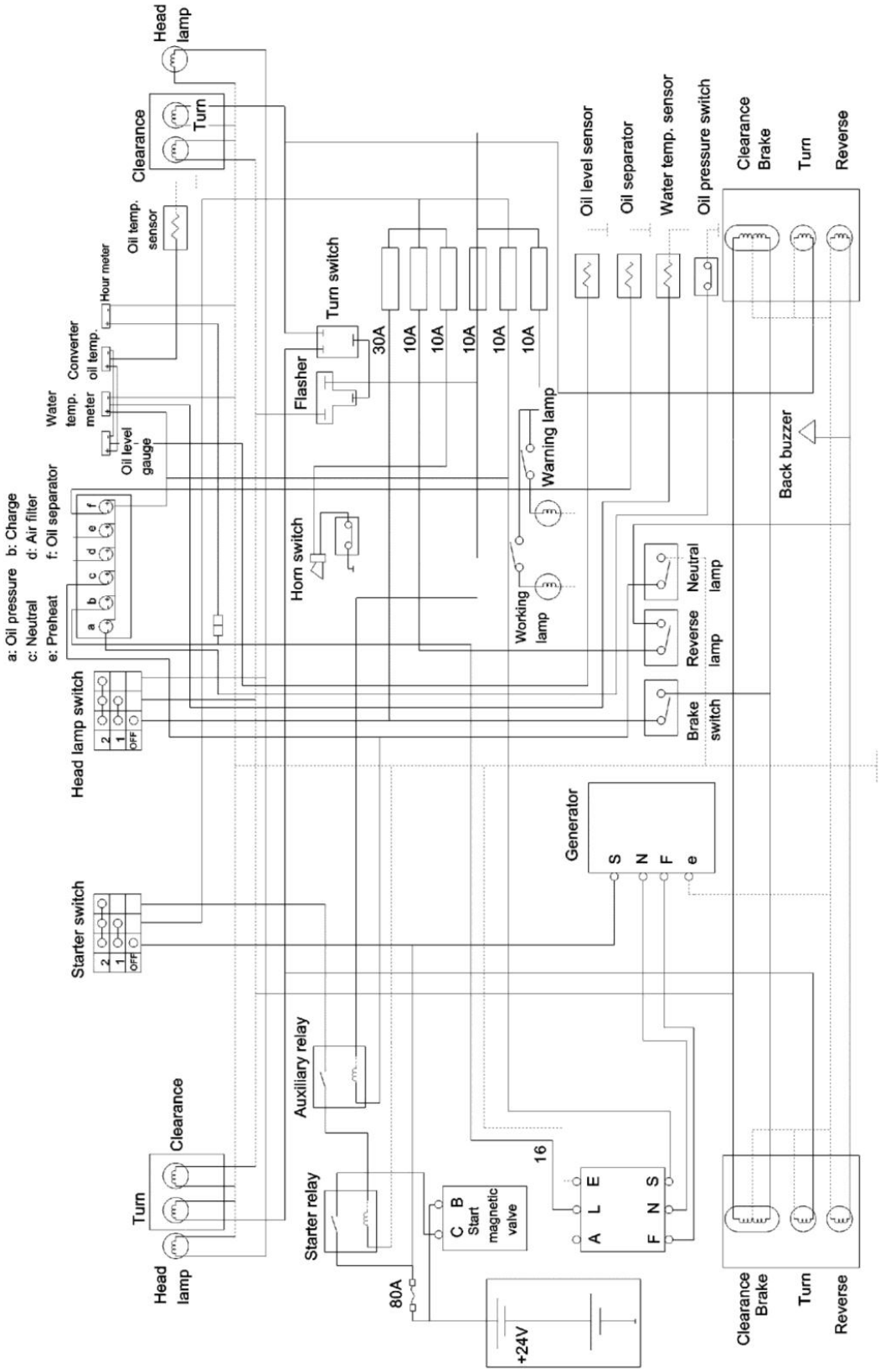


Fig.9.1 Principle diagram of electric system (domestic) CPCD80-100CY



Downloaded from www.Manualslib.com manuals search engine

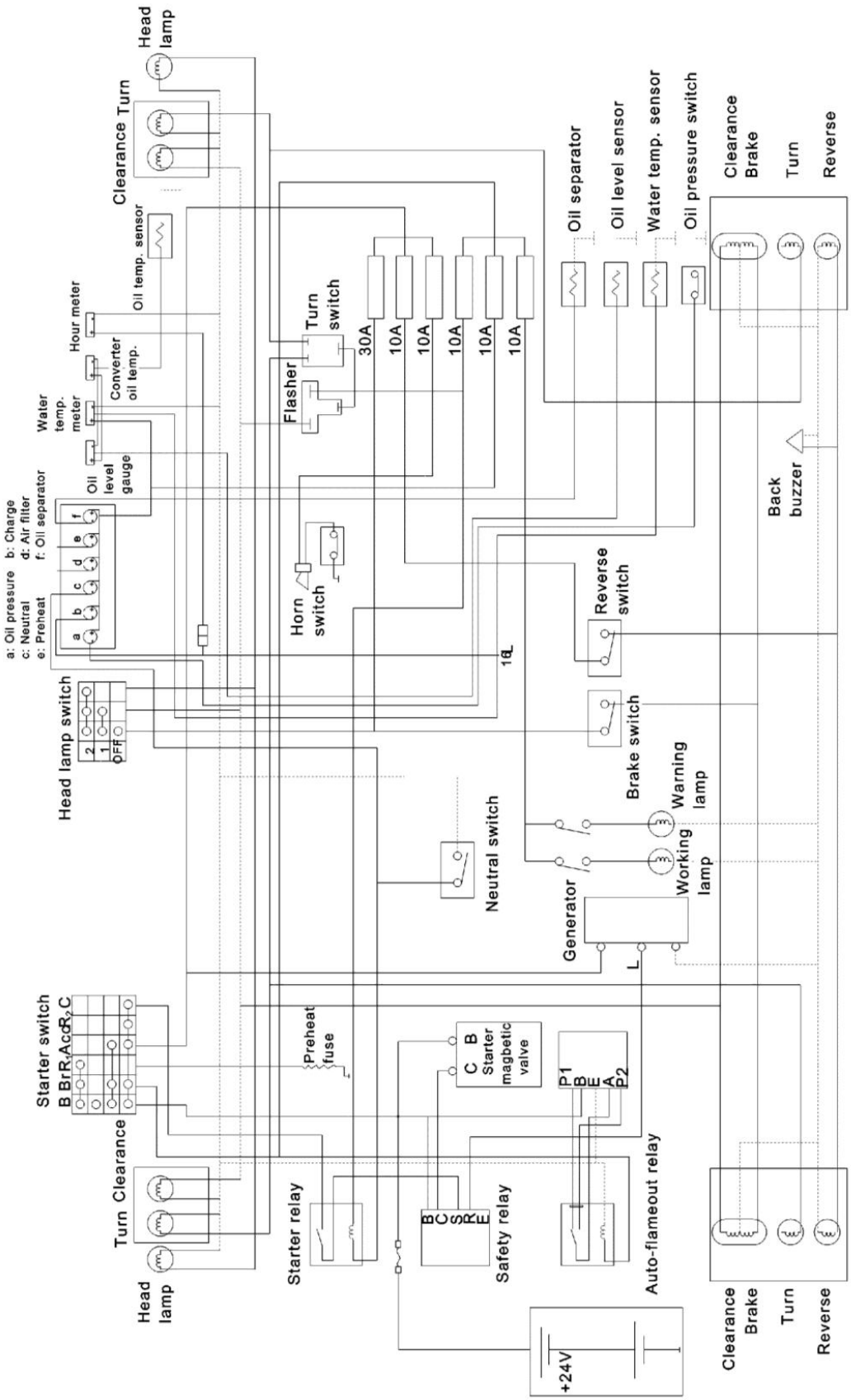


Fig.9.2 Principle diagram of electric system (imported) CPCD80-100W



Downloaded from www.Manualslib.com manuals search engine

## 9.2 Brief explanation for operation

(1) Starting

There is a starting protection circuit in the control box for the forklift truck. You have to shift the direction switch in neutral before you start the engine. Otherwise, you can not start the engine.

Turn the key switch clockwise to the first “on” position, the instrument circuit and the firing circuit is ready for work. See Fig9.3.

Turn the imported 6BG1 engine in reverse direction without loosening it, at the same time, preheat it until the turning stops.

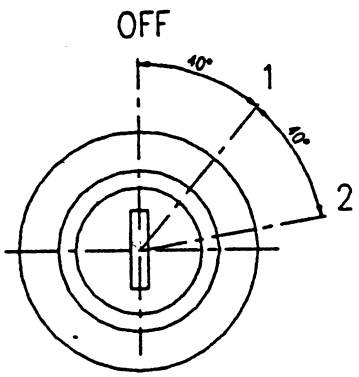


Fig9.3 Key switch

Turn the key switch clockwise to the second “on” position (starting position), then start the engine.

After engine starting, push the direction switch forward (that is forward gearshift), then pedal accelerator, the forklift truck runs faster and you can begin to work. When pull the direction switch backward (that is in reverse gearshift), the backing lamp is on and the buzzer sounds.

(2) Lamp switch

Pull the lamp switch to the first “on” position, the front lamps and rear lamps are on. Pull the lamp switch to the second “on” position, the headlights are on while the front lamps and rear lamps keep on.

(3) Turning signal

Pull the turning switch backward, the left turning lamps flash. Push the turning switch forward, the right turning lamps flash.

(4) Brake signal

When you pedal brake, the brake lamps (red) in the rear combination lamps are on.

(5) Backing signal



Downloaded from www.Manualslib.com manuals search engine

When you need to reverse the forklift truck, pull the direction switch backward and the transmission is in reverse gear. Then the backing lamps (white) in the rear combination lamps are on and the buzzer sounds.

(6) Charging signal

Before you start the engine, put the key switch to the first “on” position and the charging lamp is on. After engine starting, the charging lamp is automatically off. If the charging lamp becomes on while the engine is working, it means something is wrong with the charging circuit and you must stop working and check the charging circuit as soon as possible.

(7) Oil pressure signal

Before you start the engine, put the key switch to the first “on” position and the oil pressure alarm lamp is on. After engine starting, the oil pressure alarm lamp is automatically off. If this lamp becomes on while the engine is working, it indicates low lubricating oil pressure and you must stop working and check the lubricating system as soon as possible.

(8) Water separator signal

Before you start the engine, put the key switch to the first “on” position and the water separator alarm lamp is on. After engine starting, the water separator alarm lamp is automatically off. If this lamp becomes on while the engine is working, it means too much water has been accumulated in the water separator. You should push the handle in the water separator to get rid of the water. After eliminating the water, this lamp becomes off.

(9) Fuel meter

It indicates how much fuel is left in the fuel tank. If it displays fewer than two bars, it means little fuel is left in the fuel tank and the buzzer sounds. You should replenish the fuel tank as soon as possible.

(10) Water temperature meter

It indicates the temperature of the coolant for the engine.

(11) Hour meter

It indicates the working hour of the engine.

The core of LED combined instrument is solid ten-section color LED.(Fig9.4)



Downloaded from www.Manualslib.com manuals search engine

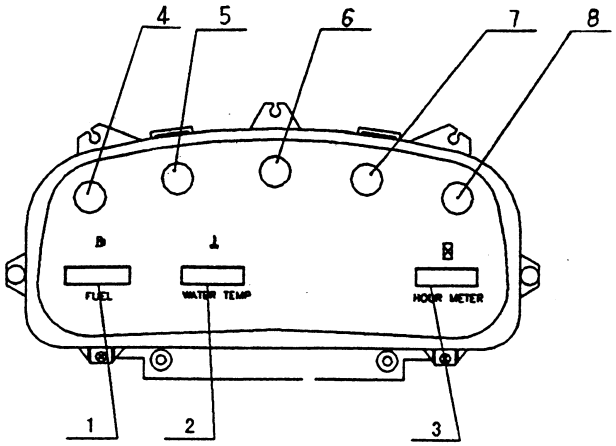


Fig9.4 LED Combined instrument

1. Fuel meter
2. Water temperature meter
3. Hour meter
4. Oil pressure indicator
5. Charge indicator
6. Neutral indicator
7. Filter indicator
8. Water separator signal

### 9.3 Precautions when using the battery

(1) Gases produced by the battery can be explosive. Do not smoke, use an open flame, and create an arc or sparks in the vicinity of the battery.

(2) The electrolyte of battery is made of the dilute sulphuric acid. Handling should be taken care. When the electrolyte adheres to eye, skin and clothes, it causes to lose eyesight and burns. When an accident is occurred, take the emergency first aid and consult a physician immediately.

(3) Dealing with the waste and worn batteries according to relevant laws and regulations.

### 9.4 Harness

Allowable current-carrying of standard section for low voltage wire:

| Section ($mm^2$) | 0.5 | 0.75 | 1.0 | 1.5 | 2.5 | 3.0 | 4.0 | 5.0 | 6.0 |
|---|---|---|---|---|---|---|---|---|---|
| Current-carrying (A) | | | 11 | 14 | 20 | 22 | 25 | 25 | 35 |

The harness diagram is as shown in Fig9.5.1, Fig9.5.2, Fig9.5.3, Fig9.5.4.



Downloaded from www.Manualslib.com manuals search engine

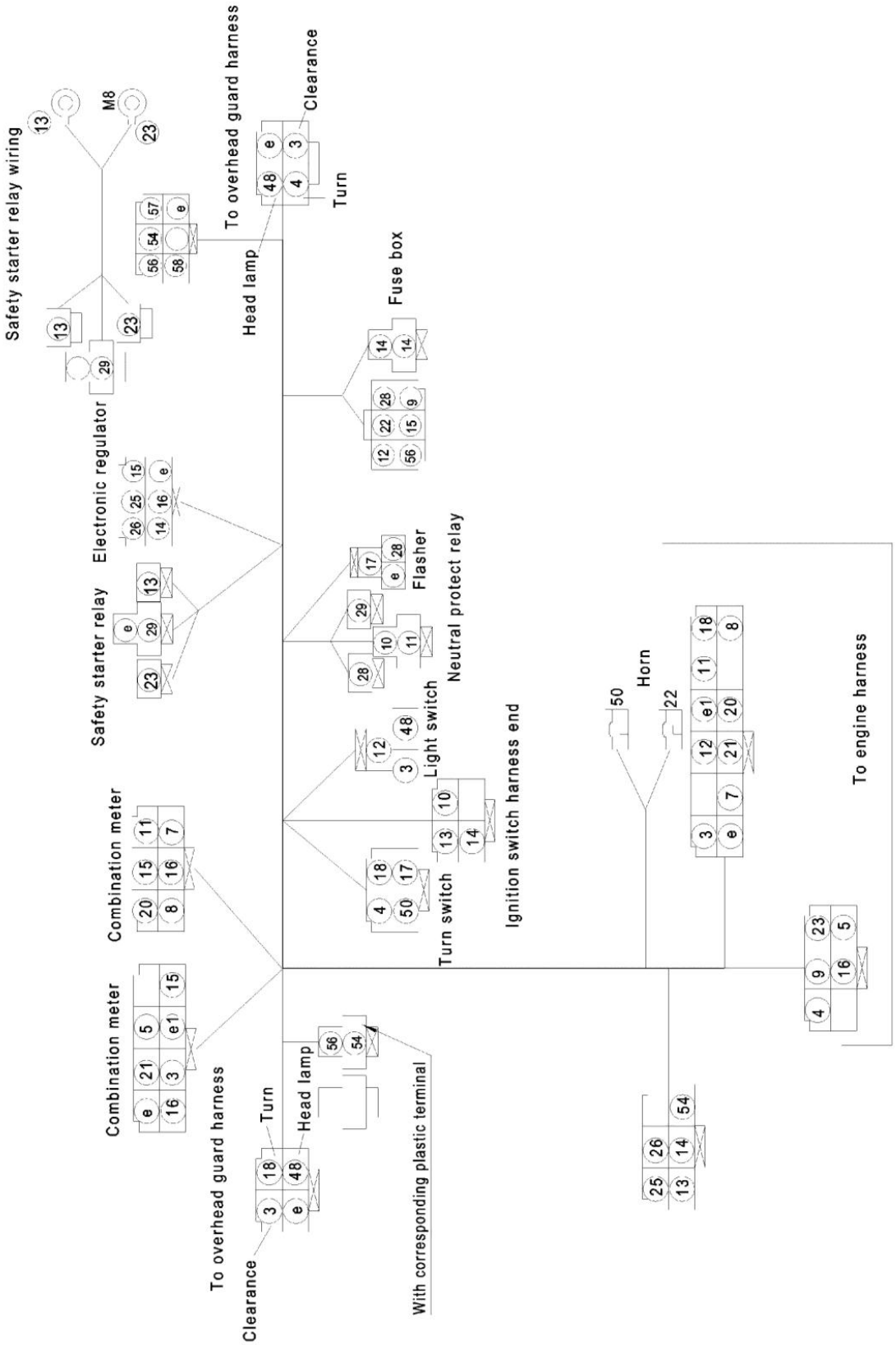


Fig9.5.1 Diagram of meter harness (domestic) CPCD80-100CY



Downloaded from www.Manualslib.com manuals search engine

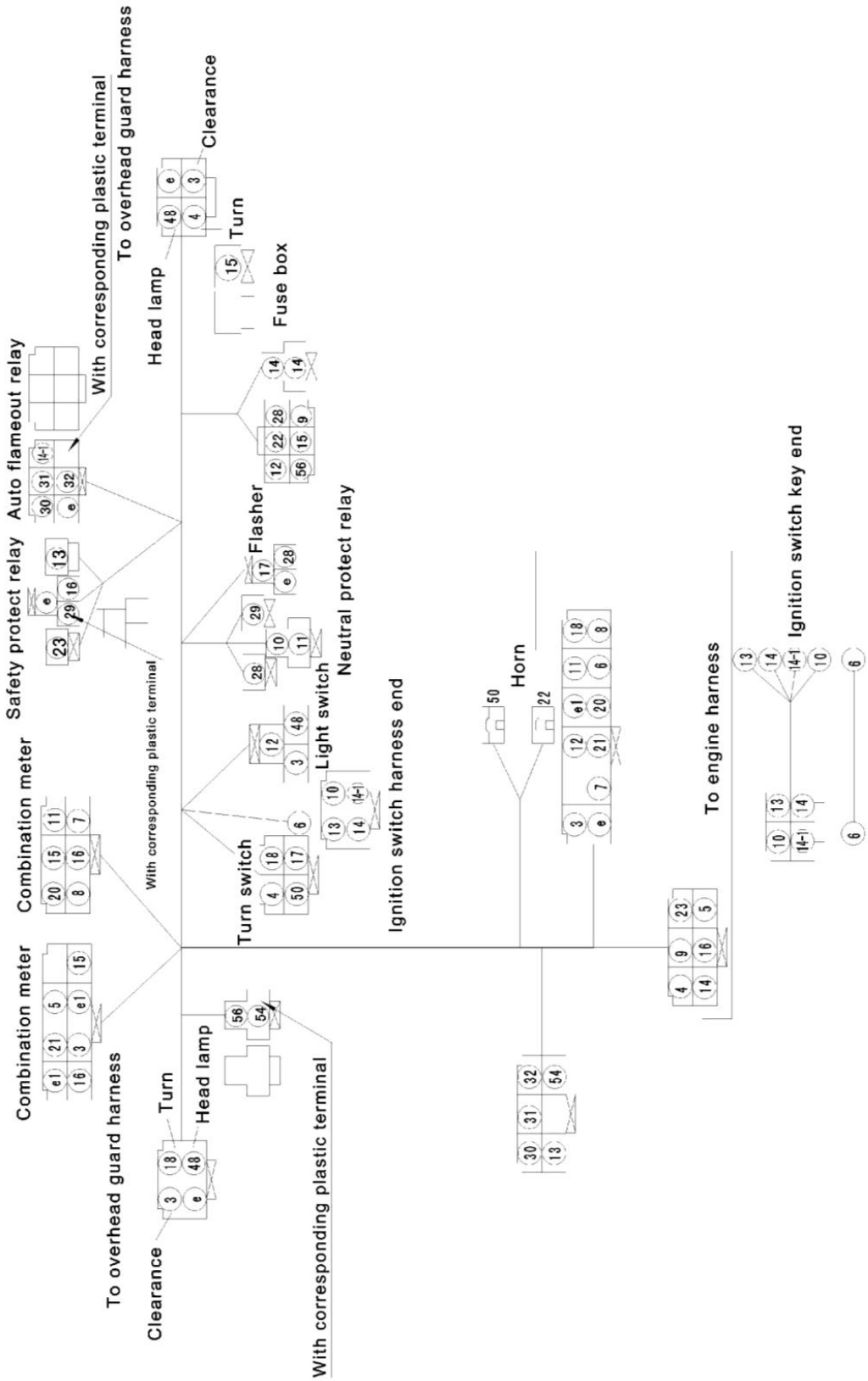


Fig9.5.2 Diagram of meter harness (imported) CPCD80-100W



Downloaded from www.Manualslib.com manuals search engine

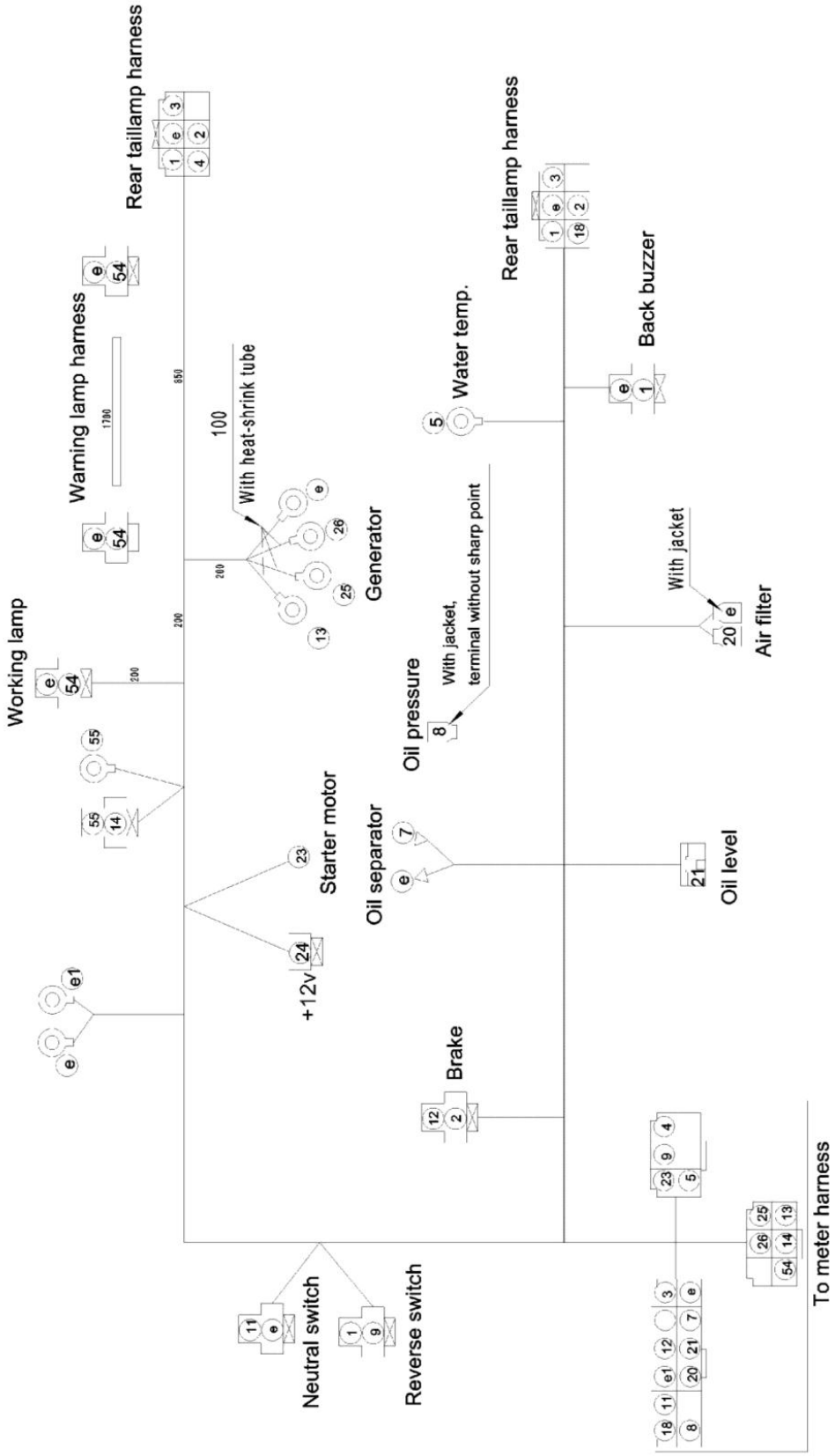


Fig9.5.3 Diagram of main harness (domestic) CPCD80-100CY



Downloaded from www.Manualslib.com manuals search engine

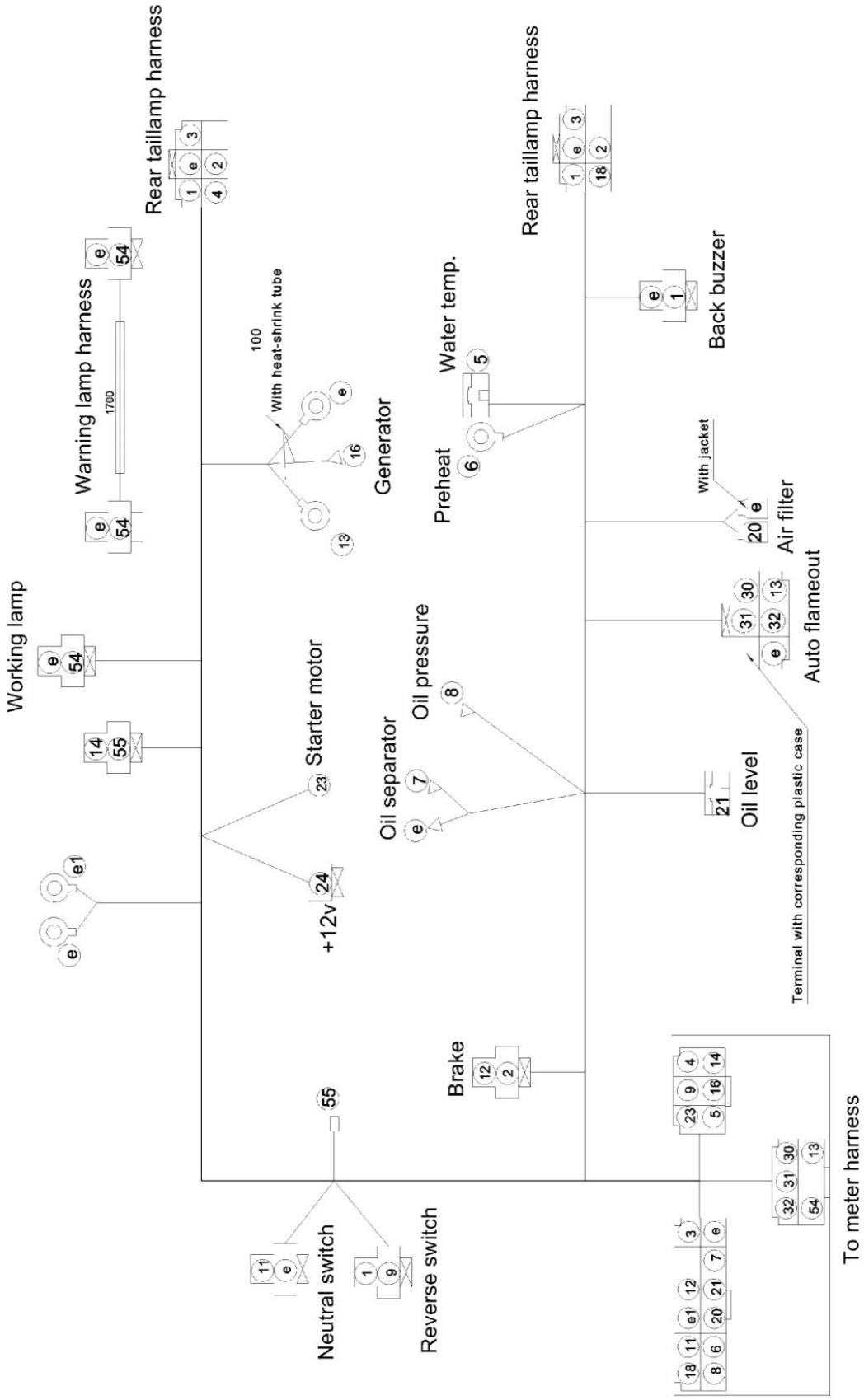


Fig9.5.4 Diagram of main harness (imported) CPCD80-100W



Downloaded from www.Manualslib.com manuals search engine

## Production improve suggestion sheet (feedback)

| | | | |
|---|---|---|---|
| Production name | | | |
| Factory number | | Produce lot number | |
| Leave factory date | | Start use date | |
| Use company | | | |

Suggestion content:

To improve our forklift trucks, absord your valuable suggestion, please send to us suggestion content.

We also ask your understanding for the fact that, due to on-going improvement of parts and equipment the numerical values given in the manual are subject to change without notice.

Downloaded from www.Manualslib.com manuals search engine

# NOTE



Downloaded from www.Manualslib.com manuals search engine

https://truckmanualshub.com/

# EC DECLARATION OF CONFORMITY

**MANUFACTURE**

Name: KION Baoli(Jiangsu) Forklift CO., LTD.
Address: No.8 Xinzhou Road, Economic Development Zone, Jingjiang ,Jiangsu, China
Post: 214500 ,Jiangsu, China

**THE TECHNICAL DOCUMENTATION WAS COMPILED BY:**

Name: Wu,Yun-Cheng
Address: Hoppengarten 19,Germany
Post: 40489 Duesseldorf,Germany

**HEREBY DECLARES THAT THE PRODUCT DESCRIBED BELOW:**

Description: Industrial truck – Counterbalanced Lift truck
Model:
Serial number: Net engine power: kW
Manufacturing year:

**COMPLIES WITH THE PROVISIONS OF THE FOLLOWING EUROPEAN DIRECTIVES:**

2006/42/EC Machinery Directive
2004/108/EC EMC Directive
97/68/EC Engine pollutant emission Directive

**2000/14/EC & 2005/88/EC Noise Directive**

Equipment according to the definition given by Annex I, item 36 of Noise Directive.
Conformity assessment procedure followed: Annex V of Noise Directive 2000/14/EC
Holder of the technical documentation
Name: KION Baoli(Jiangsu) Forklift CO., LTD.
Measured sound power level: dB Guaranteed sound power level: dB

**COMPLIES WITH THE PROVISIONS OF THE FOLLOWING HARMONIZED STANDARDS:**

| | |
|---|---|
| EN 1726-1：1998 +A1：2003 | Safety of industrial trucks — Self-propelled trucks up to andincluding 10 000 kg capacity and industrialtractors with a drawbarpull up to and including20 000 N |
| Annex I of Machinery Directive 2006/42/EC | Essential health and safety requirements relating to the design andconstruction of machinery |

Done at: Jingjiang ,Jiangsu, China
On : _____

Name of the signatory: 陈斌/ChenBin
Title: Director of Quality Assurance
Signature: _____



Downloaded from www.Manualslib.com manuals search engine

https://truckmanualshub.com/

KION Baoli (Jiangsu) Forklift Co., Ltd.

**Service Hotline**: 400-828-2789

Tel: +86 523 8461 6148

Fax: +86 523 8461 6126

P.C.: 214500

Add: No. 8 Xinzhou Road·Economic Development Zone·Jingjiang·Jiangsu·China

**www.baoli-mh.com**

* We reserves the right to make any changes or modifications of pictures and specifications in this manual without giving previous notice and without

Edition: ME05-02:2010

Downloaded from www.Manualslib.com manuals search engine

https://truckmanualshub.com/

**KION Baoli (Jiangsu) Forklift Co., Ltd.**

**Tel:** +86 523 8461 6148

**Fax:** +86 523 8461 6126

**P.C.:** 214500

**Add:** No.8 Xinzhou Road • Economic Development Zone
Jingjiang • Jiangsu • China

**www.baoli-mh.com**

• We reserve the right to make any changes or modifications in this manual without giving previous notice and without incurring any obligation.

**Edition:** ME05-02 : 2009

Downloaded from www.Manualslib.com manuals search engine