https://truckmanualshub.com/

TDA1200・TDA1600 Owner's Operating Manual

Tractor Mounted Aerator

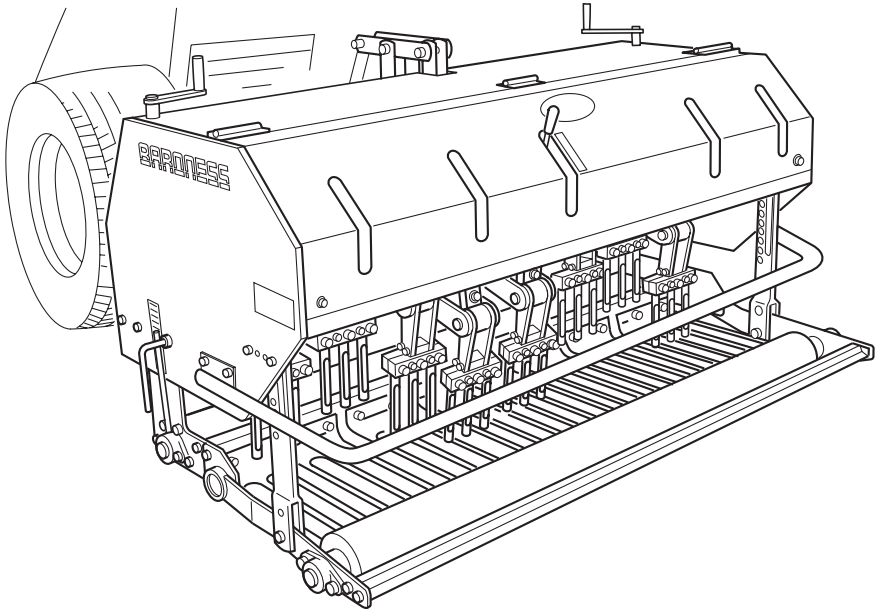

"Required reading" Read this manual and the owner's manual for the engine before using the machine.

BARONESS®
Quality on Demand

Serial No. TDA1200：21038-・TDA1600：21026-

Original Instructions Ver. 2.1

https://truckmanualshub.com/

Contents

Greeting 3
Introduction 3
Warning Symbols 3
Precautionary Statement 4
Purpose 4
Safety 4
Safe Operating Practices 5
Training 5
Preparation 5
Operation 5
Maintenance and Storage 6
Towing 6
Disposal 6
Recycle and Waste Disposal 6
About Recycle 6
About The Waste Disposal 6
Product Overview 7
1. Specifications 7
1-1. Specifications 7
TDA1200 7
TDA1600 7
1-2. Types of Tines 8
1-3. Relationship between Operation Speed and Pitch 9
TDA1200 9
TDA1600 9
2. Names of Each Section 10
3. Regulation Decals 11
3-1. Positions of Regulation Decals 11
3-2. Description of Regulation Decals 11
Serial Number Plate 11
Specification Decal 11
UKCA Mark 12
Year of Manufacture Decal 12
4. Safety Signs and Instruction Signs 13
4-1. About Safety Signs and Instruction Signs 13
4-2. Positions and Description of Safety Decals and Instruction Decals 13
Handling Instructions 14
5. Tractor 14
5-1. Tractor Standards 14
5-2. Preparation on The Tractor 14
6. Adjustment before Attachment 14
6-1. Precautions about Attachment 14
6-2. Method of Attaching The Machine 14
6-3. Method of Attaching Universal Joint 15
6-4. Method of Cutting Universal Joint 17
7. Inspections 18
7-1. Precautions before Inspection 18
7-2. Inspection of Covers 18
7-3. Inspection of Rollers 18
7-4. Inspection of Tines 18
7-5. Inspection of Lawn Pressing Plate 18
7-6. Inspection of Gear Oil 19
7-7. Supply of Gear Oil 19
7-8. Inspection of Universal Joint 19
7-9. Inspection of Oil Leakage 19
8. Tightening Torques 20
8-1. Standard Tightening Torques 20
8-2. Tightening Torque by Model 21
TDA1200 21
TDA1600 22
9. Adjustment before Operation 23
9-1. Precautions about Adjustment 23
9-2. Adjustment of Tine Depth 23
10. Operation Method 24
10-1. Positions and Description of Operation Decals 24
10-2. Change Lever 25

https://truckmanualshub.com/

10-3. Up-Down Handle 25
10-4. Rear Roller 26
11. Traveling 26
11-1. Precautions before Traveling 26
11-2. Traveling Operation 26
12. Operations 27
12-1. Precautions before Operation 27
12-2. Aeration Procedure 28
13. Transporting 28
14. Long-Term Storage 28
Maintenance 29
15. Maintenance Precautions 29
16. Maintenance Schedule 29
17. Greasing 30
17-1. About Greasing 30
17-2. Greasing Points 30
18. Maintenance Work 30
18-1. Cleaning of Aeration Section 30
18-2. Change of Tines 30
18-3. Change of Gear Oil 31
18-4. Disassembly of Crank 31
Timing Chart 32
TDA1200 32
TDA1600 33

https://truckmanualshub.com/

Greeting

Thank you for purchasing the Baroness product.

This manual describes the proper handling, adjustment, and inspection of your product.

We hope you will use the product safely, and take advantage of its best performance.

Introduction

Read this manual carefully to ensure that you thoroughly understand how to properly operate and maintain the product, and to avoid causing injury to yourself or others.

The operator is responsible for operating the product properly and safely.

Maintenance should only be performed by a certified specialist.

If you have any questions concerning maintenance or genuine parts, please contact your local Baroness dealer or Kyoeisha.

When making inquiries about the product, please specify the product's model designation and serial number.

When loaning or transferring the product, please also provide this manual together with the product.

Kyoeisha Co., Ltd.

Warning Symbols

This manual uses the following warning symbols for handling precautions that are important for your safety.

⚠	Warning symbol

This symbol indicates the articles regarding “Danger,” “Warning,” or “Caution.”

Those articles describe important safety precautions and so read them carefully to understand completely before operating the machine.

Failure to adequately follow these safety precautions may cause an accident.

⚠Danger

This symbol indicates that serious injury or death will occur if the warning is ignored.

⚠Warning

This symbol indicates that serious injury or death may occur if the warning is ignored.

⚠Caution

This symbol indicates that injury or damage to property may occur if the warning is ignored.

Important

This symbol indicates precautions on the mechanism of the machine.

https://truckmanualshub.com/

Precautionary Statement

⚠Caution

The information described in this manual is subject to change for improvement without prior notice.

When replacing parts, be sure to use genuine Baroness parts or parts designated by Kyoeisha.

Note that the Baroness product warranty may not apply to defects caused by the use of parts from other companies.

Prior to use, carefully read the following manuals to thoroughly understand the contents for safe and correct operation.

- Baroness Owner's Operating Manual
- The Tractor’s Owner’s Manual
- Service Instructions for PTO Drive Shafts

Purpose

This product is intended for aerating golf courses.

Do not use this product in any way other than its intended purpose, and do not modify this product.

Operating this product for other purposes and modifying it may be very dangerous and may cause damage to the product.

Safety

Failure to adequately follow these safety precautions may cause an accident resulting in injury or death.

⚠Danger

This product is designed to ensure safe operation and has been tested and inspected thoroughly before shipment from the factory.

The product is equipped with safety devices to prevent accidents.

However, whether the product demonstrates its original performance level depends on the manner in which it is operated and handled, as well as the manner in which it is managed on a daily basis.

Inappropriate use or management of the product may result in injury or death.

Observe the following safety instructions to ensure safe operation.

Safe Operating Practices

Training

1.Read this manual and other training material carefully.Be familiar with the controls, safety signs, and the proper use of the equipment.
2.If the operator or mechanic can not read English it is the owner's responsibility to explain this material to them.
3.All operators and mechanics should seek and obtain professional and practical instruction. The owner is responsible for training the users.
4.Never allow children or people unfamiliar with these instructions to use or service the machine.
5.The owner/user can prevent and is responsible for accidents or injuries occurring to themselves ,other people, or property.
6.Keep in mind that the owner, operator, and mechanic are responsible for accidents or hazards occurring to other people or their property.
7.You can find additional safety information where needed throughout this manual.

Preparation

1.Evaluate the terrain to determine what accessories and attachments are needed to properly and safely perform the job. Only use accessories and attachments approved by the manufacturer.
2.Inspect the area where the equipment is to be used and remove all objects such as rocks, toys and wire which can be thrown by the machine.
3.Keep children out of the operating area and under the watchful care of a responsible adult other than the operator.
4.Check that shields are attached properly.
5.Before using, always visually inspect to see that the tines and tine mounts are not worn or damaged.
When some tines are worn, replace all the installed tines at the same time to prevent abnormal vibration.
6.Pay attention to all the tine mount holders, which operate simultaneously.

Operation

1.Only operate in good light, keeping away from holes and hidden hazards.
2.Never operate the machine with damaged guards, shields, or without safety protective devices in place.
3.Stop the engine in the following conditions.
[1]Before making depth adjustment.
[2]Before clearing blockages.
[3]Before checking, cleaning or working on the machine.
[4]After striking a foreign object or if an abnormal vibration occurs.
Inspect the machine for damage and make repairs before restarting and operating the equipment.
4.Keep hands and feet away from the rotating parts.
5.Never operate while people, especially children, or pets are nearby.
6.Stop the tines rotating before crossing surfaces other than grass.
7.Disengage drive to attachments when transporting or not in use.
8.Take care when loading or unloading the machine into a trailer or a truck. Load or unload the machine in a flat and safe place. Before loading or unloading, set the parking brake on the truck or trailer, stop the engine, and chock the wheels.
Fasten the machine to the truck with a rope or other suitable restraining device that has sufficient strength.

https://truckmanualshub.com/

Maintenance and Storage

1.Disengage drives on level ground, stop drive to the tine section, set parking brake, stop engine. Wait for all movement to stop before adjusting, cleaning or repairing.
2.Never allow untrained personnel to service machine.
3.Appropriately manage and correctly use the tools necessary for servicing or adjusting the machine.
4.Carefully release pressure from components with stored energy.
5.Use care when checking the tines.
[1]Wrap the tines or wear gloves, and use caution when servicing them.
[2]Only replace tines.
6.On multi-bladed machines, take care as rotating one blade can cause other blades to rotate.
7.Keep hands and feet away from moving parts. If possible, do not make adjustments with the engine running.
8.Keep all parts in good working condition and all hardware tightened. Replace all worn or damaged decals.
9.Keep all nuts, bolts and screws tight to be sure the equipment is in safe working condition.

Towing

1.Follow the manufacturer’s recommendation for weight limits for towed equipment and towing on slopes.

Disposal

Recycle and Waste Disposal

About Recycle

Recycling battery etc. is recommended for environmental conservation and economical use of resources.
It may be required by local laws.

About The Waste Disposal

Make sure that waste generated when servicing or repairing the machine is disposed of in accordance with local regulations.
(e.g. waste oil, antifreeze, rubber products, and wires etc.)

Product Overview

1. Specifications

1-1. Specifications

TDA1200

Model		TDA1200	
Dimensions	Total length	38.19 in	97 cm
	Total width	55.91 in	142 cm
	Total height	33.46 in	85 cm
Weight		1157.41 lb	525 kg
Gear oil capacity		1.0 U.S.gals	3.8 dm^3（3.8 L）
Number of crank		6	
Tine		φ17 ・ 8.46 in	φ17・215 mm
Number of tines		18 pcs (Various options available)	
Aerating width		46.06 in	117 cm
Pitch (Traveling direction)		Depending on the condition	
Interval		2.56/3.94 in	6.5・10 cm
Working depth		Max. 9.84 in (Depending on the condition)	Max. 25 cm (Depending on the condition)
Drive	Aerating	PTO driving	
Speed of PTO rotation		Max. 400 rpm	
Working speed		-	
Applicable tractor	Horsepower	13.2 kW (18.0 PS) or more	
	Max lifting capacity	1,432.98 lbf or more	650 kgf or more
Universal joint	Clutch setting torque	Allowed max 4,602.52 lb-in	Allowed max 520 N-m (5,302.44 kgf-cm)
		Regular use 2478.28 lb-in	Regular use 280 N-m (2,855.16 kgf-cm)
Connection		Tractor ; 3-point link lifting type	
Efficiency		0.46 acres/hour (0.99 mph x Operating width)	1,872 m^2/h (1.6 km/h x Operating width)

TDA1600

Model		TDA1600	
Dimensions	Total length	38.19 in	97 cm
	Total width	70.47 in	179 cm
	Total height	33.46 in	85 cm
Weight		1278.66 lb	580 kg
Gear oil capacity		1.0 U.S.gals	3.8 dm^3（3.8 L）
Number of crank		8	
Tine		φ17 ・ 8.46 in	φ17・215 mm
Number of tines		24 pcs (Various options available)	
Aerating width		61.42 in	156 cm
Pitch (Traveling direction)		Depending on the condition	
Interval		2.56 / 3.94 in	6.5・10 cm
Working depth		Max. 7.09 in (Depending on the condition)	Max. 18 cm (Depending on the condition)
Drive	Aerating	PTO driving	
Speed of PTO rotation		Max. 1,000 rpm	
Working speed		-	
Applicable tractor	Horsepower	17.6 kW (24.0 PS) or more	
	Max lifting capacity	1,432.98 lbf or more	700 kgf or more
Universal joint	Clutch setting torque	Allowed max 4,602.52 lb-in	Allowed max 520 N-m (5,302.44 kgf-cm)
		Regular use 2478.28 lb-in	Regular use 280 N-m (2,855.16 kgf-cm)
Connection		Tractor ; 3-point link lifting type	
Efficiency		0.77 acres/hour (1.24 mph x Operating width)	3,120 m^2/h (2.0 km/h x Operating width)

https://truckmanualshub.com/

1-2. Types of Tines

There are two main types of tines: "pipe type" (which pulls out the lawn) and "spike type" (which drills holes).

	Pipe type	Spike type
Aeration effect	Large effect	Good
Permeability effect	Large effect	Good
Underground gas diffusion effect	Large effect	Good
Damage to turf surface	Large	Less than with pipe type
Damage to lawn	Large	Less than with pipe type
Lawn recovery	Takes time	Quick
Aeration period	When lawn cultivation is thriving	Whenever needed
Core disposal	Necessary	Unnecessary (Cores not discharged)
Mowing after aeration	Better to mow	Better to mow
Effect on play after aeration	Not immediately possible	Instantly possible (However, mowing after tamping is required.)
Degradation of thatch by mixing with soil	Promoted	Limited

1.Pipe-type tines

	Tip dimensions		Outer diameter of mount	Total length	Quantity used	Tine mount	Lawn pressing plate
	Inner diameter	Outer diameter					
φ10V tine 100	6 mm (0.24 in)		9.5 mm (0.37 in)	100 mm (3.94 in)	72 96	Specialized	Specialized
φ12V tine 120	8.2mm (0.323 in)		9.5 mm (0.37 in)	120 mm (4.72 in)	72 96	Specialized	Specialized
φ13V tine 225	7 mm (0.43 in)		12 mm (0.47 in)	225 mm (8.46 in)	18 24	-	-
φ16V tine 125	11 mm (0.43 in)		16 mm (0.63 in)	125 mm (4.92 in)	36 48	Specialized	-
φ17V tine 215	10 mm (0.39 in)		12 mm (0.47 in)	215 mm (8.46 in)	18 24	-	-
φ17V tine 265	10 mm (0.39 in)		12 mm (0.47 in)	265 mm (10.43 in)	18 24	-	-

* In the column “Quantity used”, the upper figure indicates the quantity for TDA1200 and the lower for TDA1600.

2.Spike-type tines

	Tip dimensions		Outer diameter of mount	Total length	Quantity used	Tine mount	Lawn pressing plate
	Inner diameter	Outer diameter					
φ8 spike tine		8 mm (0.31 in)	16 mm (0.63 in)	120 mm (4.72 in)	36 48	Specialized	-
φ10 solid tine		10 mm (0.39 in)	9.5 mm (0.37 in)	100 mm (3.94 in)	72 96	Specialized	Specialized
φ12.5 spike tine		12.5 mm (0.49 in)	16 mm (0.63 in)	120 mm (4.72 in)	36 48	Specialized	-

* In the column “Quantity used”, the upper figure indicates the quantity for TDA1200 and the lower for TDA1600.

1-3. Relationship between Operation Speed and Pitch

TDA1200

Important

The engine rotation speed during tractor operation should be 1,600 - 2,000 rpm.
Max PTO rotation speed should be 400 rpm.
If the PTO rotation speed exceeds 400 rpm, the machine will be damaged.

Use the following table as reference.
Tractor's speed and the pitch vary depending on the tractor's specifications.

Tractor				TDA1200	
Auxiliary speed change	Main speed change	Speed	PTO rotation	Crank rotation	Pitch
1	1	0.52 km/h	1st speed	Slow speed	53 mm
				High speed	42 mm
1	2	0.75 km/h	1st speed	Slow speed	75 mm
				High speed	60 mm
1	3	1.06 km/h	1st speed	Slow speed	108 mm
				High speed	86 mm
1	4	1.60 km/h	1st speed	Slow speed	163 mm
				High speed	130 mm

* The above table shows the figures during the maximum engine rotation speed 1,800 rpm.

TDA1600

Important

The engine rotation speed during tractor operation should be 1,800 -2,300 rpm.
Max PTO rotation speed should be 1,000 rpm.
If the PTO rotation speed exceeds 1,000 rpm, the machine will be damaged.

Use the following table as reference.
Tractor's speed and the pitch vary depending on the tractor's specifications.

Tractor				TDA1600	
Auxiliary speed change	Main speed change	Speed	PTO rotation	Crank rotation	Pitch
1	1	0.58 km/h	1st speed	Slow speed	53 mm
				High speed	42 mm
			2nd speed	Slow speed	37 mm
				High speed	30 mm
1	2	0.83 km/h	1st speed	Slow speed	75 mm
				High speed	60 mm
			2nd speed	Slow speed	53 mm
				High speed	42 mm
1	3	1.18 km/h	1st speed	Slow speed	108 mm
				High speed	86 mm
			2nd speed	Slow speed	75 mm
				High speed	60 mm
			3rd speed	Slow speed	50 mm
				High speed	40 mm
1	4	1.78 km/h	1st speed	Slow speed	163 mm
				High speed	130 mm
			2nd speed	Slow speed	114 mm
				High speed	91 mm
			3rd speed	Slow speed	75 mm
				High speed	60 mm

*The above table shows the figures during the maximum engine rotation speed 2,000 rpm.

https://truckmanualshub.com/

2. Names of Each Section

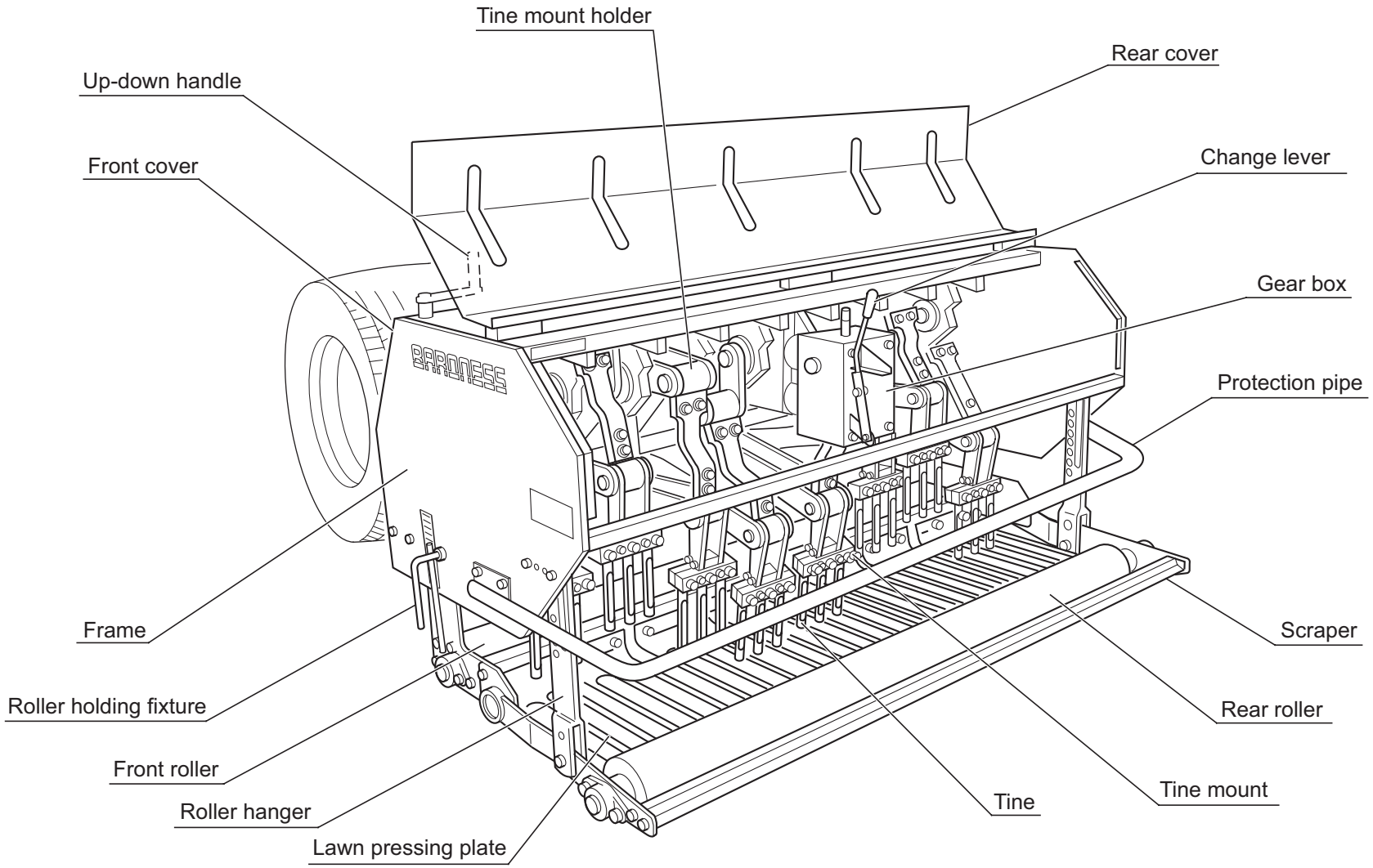

https://truckmanualshub.com/

3. Regulation Decals

3-1. Positions of Regulation Decals

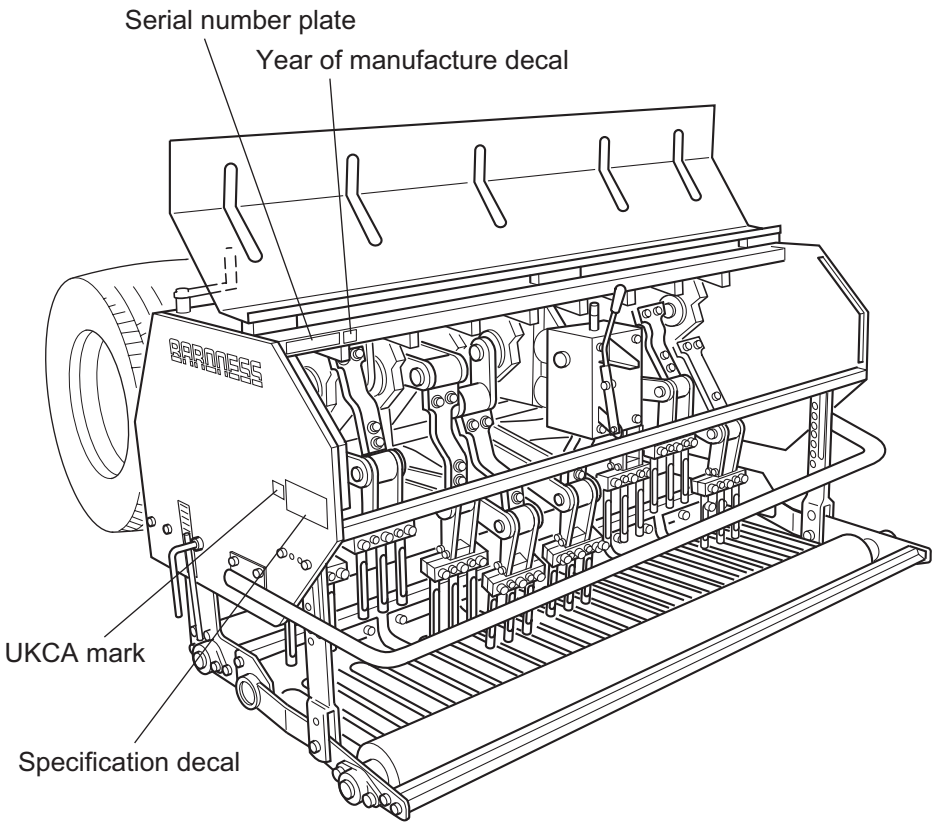

3-2. Description of Regulation Decals

Serial Number Plate

The serial number plate indicates the model and serial number of the machine.

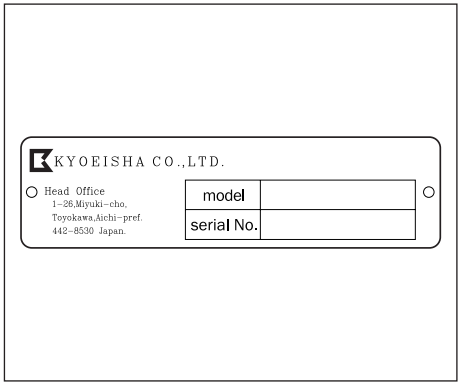

Specification Decal

(For Europe)

CE mark indicates that the machine sold in the EU nations complies with the EU requirements.

The Specification decal indicates the CE marking, model , and weight, etc.

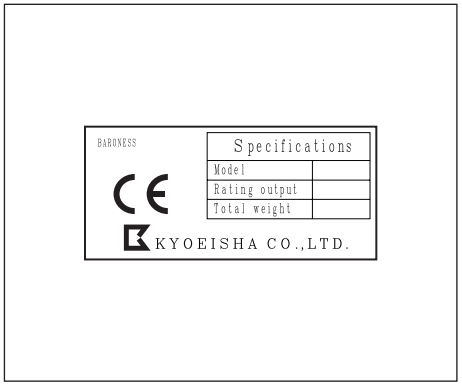

https://truckmanualshub.com/

UKCA Mark

(For UK)

UKCA mark indicates that the machine sold in the UK complies with the UK requirements.

Year of Manufacture Decal

(For Europe)

The year of manufacture decal indicates the year when this machine was manufactured.

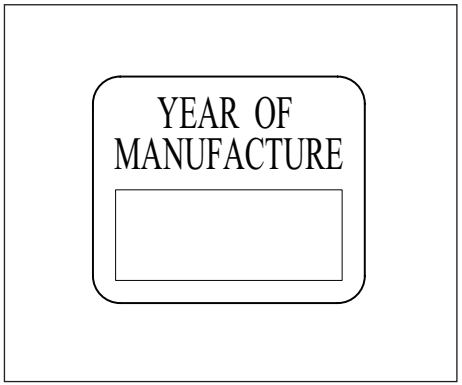

https://truckmanualshub.com/

4. Safety Signs and Instruction Signs

4-1. About Safety Signs and Instruction Signs

Important Safety decals and instruction decals are attached to this product. Make sure that they are preserved in their entirety. If they are damaged, become dirty, or peel off, replace them with new ones.

Part numbers for decals that need to be replaced are listed in the parts catalog. Order them from a Baroness dealer or Kyoeisha.

4-2. Positions and Description of Safety Decals and Instruction Decals

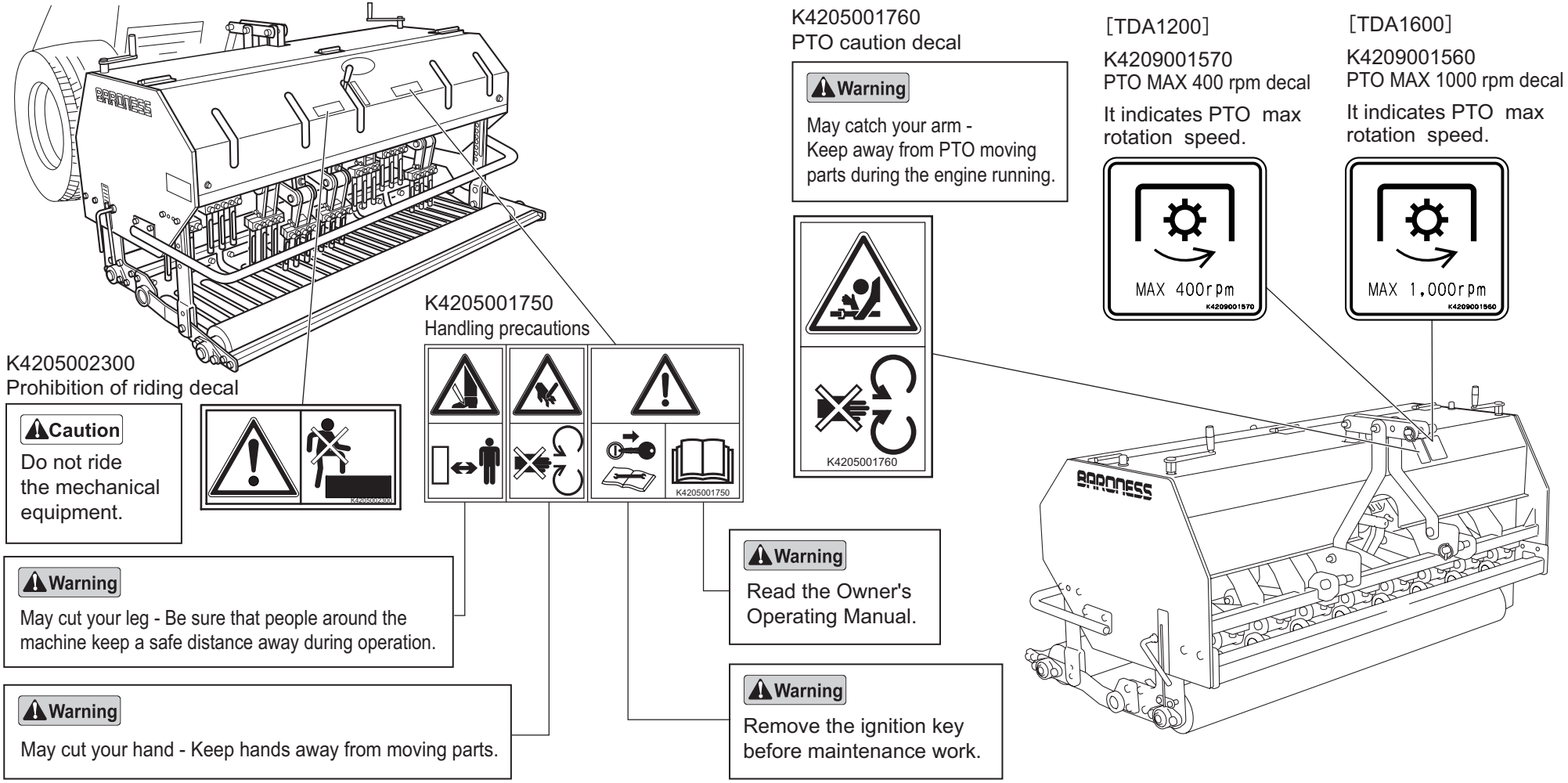

https://truckmanualshub.com/

Handling Instructions

5. Tractor

5-1. Tractor Standards

This machine employs “standard three-point link” mounting system. In the “standard three-point link”, attach the top and lower links of the tractor and the universal joint of this machine by hand.

5-2. Preparation on The Tractor

⚠Caution
Read the “three-point link standards” in the tractor’s owner’s manual carefully.

Important
Only the tractors equipped with standard three-point link parts can be connected to this machine.

1.If the tractor is equipped with specific three-point link, remove the top link bracket for specific three-point link and replace it with standard three-point link parts.
Use the length-adjustable top link, the both ends of which have a screw.
Attach the lift rod to the front hole of the lower link.

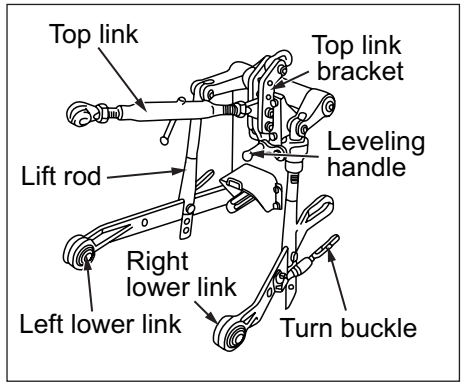

2.If the moving distance when raising and lowering the attached machine is insufficient, adjust it by changing the mounting holes on the lift rod
- Use the upper hole to increase the moving distance when raising.
- Use the lower hole to increase the moving distance when lowering.

6. Adjustment before Attachment

6-1. Precautions about Attachment

⚠Warning
Make sure there is no one around the tractor and between this machine and the tractor.

⚠Warning
Do not get under the machine. Do not put your foot under the machine.

⚠Warning
Before attaching the machine, apply the parking brake of the tractor, set the PTO speed change lever to the “Neutral” position and stop the engine.

⚠Warning
When attaching the machine, install the tractor’s genuine balance weights to adjust balance. Otherwise, the machine may lose balance and overturn.

⚠Caution
Attach and detach the machine on a flat, stable place.

⚠Caution
Two or more workers should attach and detach this machine since it is very heavy.

6-2. Method of Attaching The Machine

1.Place the machine on a flat, stable location.
2.Move the tractor backward to the machine and align the center position of the machine’s linkage section.
3.Raise and lower the lower links with the tractor’s lift lever to align them with the link pin position.
4.Apply the tractor’s parking brake and stop the engine.
5.Chock the tractor.
6.Attach the left lower link and lock the link pin.
7.Raise and lower the lower link with the leveling handle on the right lift link to align it with the pin position.

https://truckmanualshub.com/

8.Attach the right lower link and lock the link pin.

9.Align the implement mounting hole in the top link (upper link) with the mounting holes of the machine.

If the top link (upper link) is not aligned with the mounting pin hole, loosen the lock nuts on the top link and adjust its length.

10.Attach the top link (upper link) , lock the link pin and tighten the lock nuts.

11.Start the tractor's engine and raise the machine slightly with the lift lever.

Important

When vibration is generated in the machine, the vibration will cause damages to the lawn, tractor and the machine.

12.Adjust the top link (upper link) so that the machine can level off.

* Adjust it so that the machine vibrates only 10 - 20 mm on the right and left sides evenly. Check the vibration on the right and left sides of the machine. If the vibration is large, adjust so that the play is reduced.

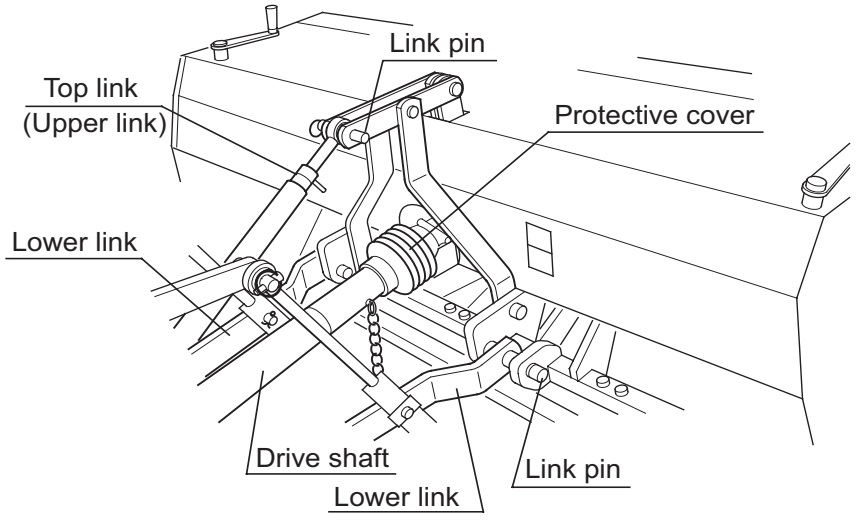

Note :

For removing the machine, reverse the installation procedure.

6-3. Method of Attaching Universal Joint

⚠Caution

Before attaching the universal joint, disengage the PTO clutch and stop the tractor's engine.

Important

Do not mount the universal joint that is too long or too short.

A long universal joint prongs the tractor's PTO shaft or the attached machine's input shaft.

A short universal joint is in poor meshing engagement and will cause breakage.

Important

The universal joint length depends on the type of tractor to be linked.

Important

Do not raise the machine with only one side of tractor's lower links attached.

Important

Do not continue rotating the universal joint with the machine raised.

The universal joint or the machine may break.

1.Set the tractor PTO speed change lever to the "Neutral" position.

2.Raise or lower the machine slowly to adjust its height so that the height of tractor's PTO shaft and that of machine's input shaft are on the same level.

3.Close the hydraulic stop valve completely.

Note:

For the location of the hydraulic stop valve, refer to the tractor operator's manual.

4.Apply the tractor parking brake and stop the engine.

5.Hang the chain of universal joint on the top link (lift link).

https://truckmanualshub.com/

Important

Be sure to attach the universal joint clutch part to the implement side.

6.Pull the set cover and simultaneously push the universal joint onto PTO shaft until the locking device engages.

*Make sure that the knock pin and set cover have returned to their original positions.

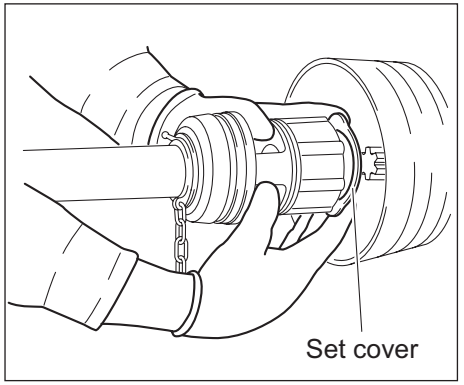

7.Press the knock pin and simultaneously push the universal joint onto PTO shaft until the pin engages.

*Attach it with the tractor's PTO speed change lever in neutral.

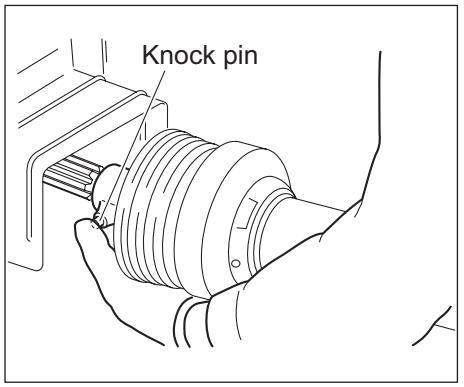

8.Attach the universal joint to the machine and then attach it to the tractor.

Insert it until the knock pin locks.

*Make sure that the knock pin and set cover have returned to their original positions.

Important

Do not forcibly insert the universal joint with a hammer etc.

It may cause the joint breakage.

9.Shorten the joint to the highest possible extent and attach it if the clearance between the joint tip and the tractor's PTO shaft is approximately 10 mm.

*Make sure that the lock pin head projects more than 10 mm.

*Make sure that the lock pin is precisely in meshing engagement with the shaft groove.

If there is not that clearance, cut off the excessive portion of universal joint.

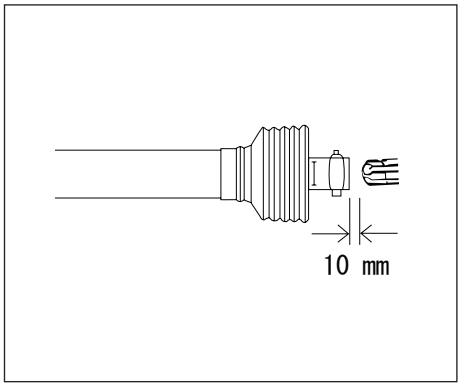

10.Attach the chain for stopping protective cover rotation on the lower link hook.

11.Make sure that the machine is not equipped with tines.

12.Start the engine of the tractor.

13.Make sure that there is no abnormal noise in the universal joint and the machine when rotating PTO shaft with the machine lowered (or with the front roller in contact with the ground).

https://truckmanualshub.com/

6-4. Method of Cutting Universal Joint

Caution Work with great caution when using a high speed cutter.

Important The universal joint length depends on the type of tractor to be linked.

1. Hold the half shafts of universal joint next to each other in the shortest working position between the tractor and machine, and mark them.
2. Cut the inner and outer guard tubes at the marked positions.

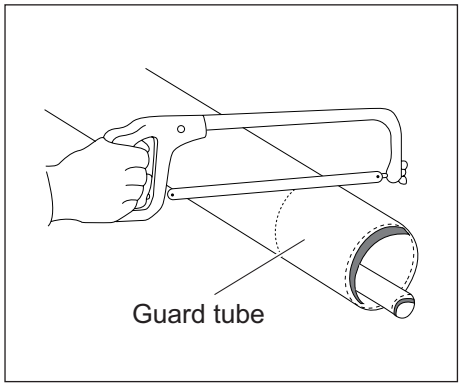

3. Mark the shaft at the same length from its tip as the removed guard tube.

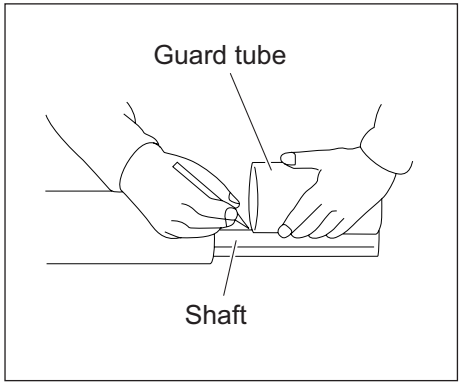

4. Cut the inner and outer shafts at the marked position.

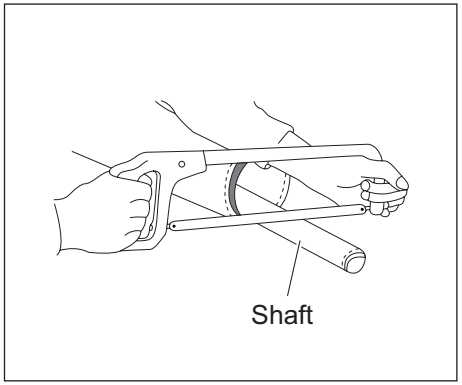

5. Round off all sharp edges, remove burrs and clean the shafts.

https://truckmanualshub.com/

7. Inspections

7-1. Precautions before Inspection

⚠Caution
Read “Inspection before work” on the tractor’s owner’s operating manual carefully.

⚠Caution
Be sure to stop the engine before inspection, service and adjustment with the tractor linked.

7-2. Inspection of Covers

⚠Caution
If you have removed a protective cover during inspection, be sure to securely install it in its original position.
If a protective cover remains removed, foreign objects may fly off, possibly resulting in injuries.

- Make sure that there is no wear or deterioration of protective covers.
- Make sure that there is no damage to protective covers.
- Make sure that there is no interference with moving parts due to deformation of protective covers.
- Make sure that protective covers are installed in their appropriate positions.

7-3. Inspection of Rollers

Bearing wear due to frequent use or bearing damage caused by water infiltration may prevent the roller from rotating smoothly.
Inspect the roller and, if necessary, replace parts such as oil seals and bearings.

1. Make sure that there is no abrasion nor adhesion of the roller.
2. Make sure that there is no wear of the roller shaft.
3. Make sure that there is no wear nor damage of the oil seal.
4. Make sure that there is no wear nor rust of the bearing.
5. Make sure that there is no play in the roller shaft.

7-4. Inspection of Tines

⚠Caution Wear gloves when touching tines to avoid cutting your hands.

Vibration from imbalance, dullness or poor discharge of cores may occur due to frequent use or damage during transportation.
Inspect and, if necessary, replace.

1. Make sure that the tines are not bent.
2. Make sure that the tines are not chipped.
3. Check how much the tines are worn.
   The operating depth cannot be maintained if tine wear is 10 mm (0.39 in) or more.
4. Make sure that the edges of tines are not too blunt, making cutting difficult.
5. Make sure that the mounting bolts for the tines are not loose.
6. Check how much the sliding plate of the tine mount section is worn.

7-5. Inspection of Lawn Pressing Plate

Damage may occur due to frequent use or during transportation.
Inspect and, if necessary, replace.

1. Make sure that there is no deformation of the lawn pressing plate.
2. Make sure that there are no cracks or damage to the lawn pressing plate.
3. Make sure that the mounting bolts for the lawn pressing plate are not loose.

https://truckmanualshub.com/

7-6. Inspection of Gear Oil

The oil gauge is located on the side of the gear box.

1. On a level surface, check that the oil level reaches the middle of the oil gauge.
2. Check underneath the machine for oil leakage.

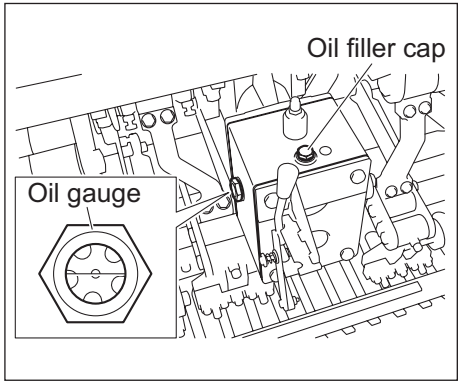

7-7. Supply of Gear Oil

Important Do not mix different types of oil.

Important Use BONNOC TS680 (or equivalent) as oil.

1. If the oil level is low, follow the steps below to supply oil.
   [1] Open the oil filler cap, and then supply oil through the oil filling port until the oil level reaches the middle of the oil gauge.
   [2] Tighten the oil filler cap securely.
2. On a level surface, check if the oil level is at the middle of the oil gauge. If necessary, supply oil.
3. Check underneath the machine for oil leakage.

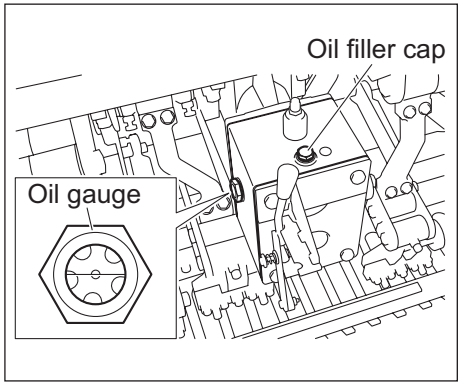

7-8. Inspection of Universal Joint

1. Inspect the chain for damage, abnormal wear and so on.
2. Inspect the cover for cracks, damage, abnormal wear and so on.

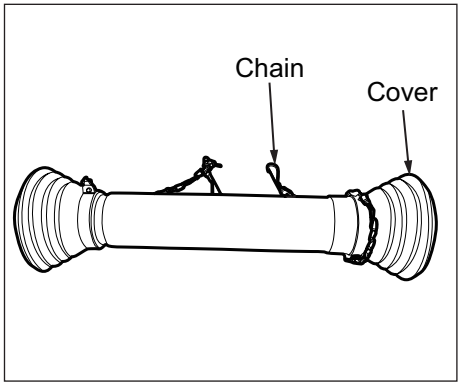

7-9. Inspection of Oil Leakage

After approximately 50 hours of operation, some joints may be loosened and oil and grease may leak.

Be sure to retighten the parts.

Check the bottom of the machine for oil and grease leakage.

https://truckmanualshub.com/

8. Tightening Torques

Important Refer to the Tightening Torque table.
Note that the Baroness product warranty may not apply to defects caused by incorrect or overtorque tightening, etc.

Important A number of bolts are used in each part of this machine. Be sure to re-tighten the bolts and nuts, because they may be loosened at the earlier stage of the use.

8-1. Standard Tightening Torques

As to the bolts and nuts without any special instruction, tighten them in appropriate tightening torque with proper tool.
Too much tightening may cause the looseness or damage of the screw.
The strength of tightening is determined by types of screws, strength, the friction of thread face or base face and others.
The table below is for the galvanized or parkerized bolts.
In case that the strength of internal thread is weak, it is not applied.
Do not use rusty or sand attached “screw.”
Otherwise, it may cause insufficient tightening even if you apply the specified tightening torque.
The friction of the screw face becomes higher and the tightening torque is canceled out by the friction, therefore sufficient tightening cannot be applied.
If “screw” is wet by water or oil, do not tighten it with normal tightening torque.
If the screw is wet, the torque coefficient will get smaller and it may result in too much tightening.
Too much tightening may cause looseness by the screw stretched or result in damage.
Do not use a bolt experienced too much burden.
Using the impact wrench requires the skill.
Do exercise as much as possible for steady tightening.

Nominal diameter	General bolt		
	Strength classification 4.8		
	N-m	kgf-cm	lb-in
M5	3 - 5	30.59 - 50.99	26.55 - 44.26
M6	7 - 9	71.38 - 91.77	61.96 - 79.66
M8	14 - 19	142.76 - 193.74	123.91 - 168.17
M10	29 - 38	295.71 - 387.49	256.68 - 336.34
M12	52 - 67	530.24 - 683.20	460.25 - 593.02
M14	70 - 94	713.79 - 958.52	619.57 - 831.99
M16	88 - 112	897.34 - 1142.06	778.89 - 991.31
M18	116 - 144	1,182.85 - 1,468.37	1,026.72 - 1,274.54
M20	147 - 183	1,498.96 - 1,866.05	1,301.10 - 1,619.73
M22	295	3,008.12	2,611.05
M24	370	3,772.89	3,274.87
M27	550	5,608.35	4,868.05
M30	740	7,545.78	6,549.74

Nominal diameter	Heat-treated bolt					
	Strength classification 8.8			Strength classification 10.9		
	N-m	kgf-cm	lb-in	N-m	kgf-cm	lb-in
M5	5 - 7	50.99 - 71.38	44.26 - 61.96	7 - 10	71.38 - 101.97	61.96 - 88.51
M6	8 - 11	81.58 - 112.17	70.81 - 97.36	14 - 18	142.76 - 183.55	123.91 - 159.32
M8	23 - 29	234.53 - 295.71	203.57 - 256.68	28 - 38	285.52 - 387.49	247.83 - 336.34
M10	45 - 57	458.87 - 581.23	398.30 - 504.51	58 - 76	591.43 - 774.97	513.36 - 672.68
M12	67 - 85	683.20 - 866.75	593.02 - 752.34	104 - 134	1,060.49 - 1,366.40	920.50 - 1186.03
M14	106 - 134	1,080.88 - 1,366.40	938.21 - 1,186.03	140 - 188	1,427.58 - 1,917.04	1,239.14 - 1,663.99
M16	152 - 188	1,549.94 - 1,917.04	1,345.35 - 1,663.99	210 - 260	2,141.37 - 2,651.22	1,858.71 - 2,301.26
M18	200 - 240	2,039.40 - 2,447.28	1,770.20 - 2,124.24	280 - 340	2,855.16 - 3,466.98	2,478.28 - 3,009.34
M20	245 - 295	2,498.27 - 3,008.12	2,168.50 - 2,611.05	370 - 450	3,772.89 - 4,588.65	3,274.87 - 3,982.95
M22	-	-	-	530	5,404.41	4,691.03
M24	-	-	-	670	6,831.99	5,930.17
M27	-	-	-	1,000	10,197.00	8,851.00
M30	-	-	-	1,340	14,628.78	11,860.34

https://truckmanualshub.com/

8-2. Tightening Torque by Model

TDA1200

Tighten the following bolts and nuts at the torque specified in the table.

For thread locking adhesive, apply a middle strength thread locker (ThreeBond 1322 or equivalent anaerobic sealant).

Location	Code	Part name	Tightening torque			Thread locking adhesive
			N-m	kgf-cm	lb-in	
Frame & Cover	K0013161201	BOLT, HT M16-120	210 - 260	2,141.37 - 2,651.22	1,858.71 - 2,301.26	-
	K0013160952	BOLT, HT M16-95	210 - 260	2,141.37 - 2,651.22	1,858.71 - 2,301.26	-
	K0013160601	BOLT, HT M16-60	210 - 260	2,141.37 - 2,651.22	1,858.71 - 2,301.26	-
	K0010120302	BOLT, HT M12-30	104 - 134	1,060.49 - 1,366.40	920.50 - 1,186.03	-
Front & Rear Rollers	K0071000372	BOLT, FOR HYDRAULIC MOTOR	52 - 67	530.24 - 683.20	460.25 - 593.02	-
	K0010120402	BOLT, HT M12-40	104 - 134	1,060.49 - 1,366.40	920.50 - 1,186.03	-
	K0010100252	BOLT, HT M10-25	58 - 76	591.43 - 774.97	513.36 - 672.68	-
	K0010140302	BOLT, HT M14-30	700 - 940	7,137.90 - 9,585.18	6195.70 - 8319.94	-
	K0010140452	BOLT, HT M14-45	700 - 940	7,137.90 - 9,585.18	6195.70 - 8319.94	-
Gear Box	K0013121002	BOLT, HT M12-100	104 - 134	1,060.49 - 1,366.40	920.50 - 1,186.03	-
Crank	K0013140502	BOLT, HT M14-50	140 - 188	1,427.58 - 1,917.04	1,239.14 - 1,663.99	-
	K0013120702	BOLT, HT M12-70	104 - 134	1,060.49 - 1,366.40	920.50 - 1,186.03	-
	TDA12000362Z8	NUT, 20 A	300 - 350	3,059.10 - 3,568.95	2,655.30 - 3,097.85	-
	TDA12000370Z8	NUT, 24 B	300 - 350	3,059.10 - 3,568.95	2,655.30 - 3,097.85	-
	K0010120602	BOLT, HT M12-60	104 - 134	1,060.49 - 1,366.40	920.50 - 1,186.03	-
	K0013140452	BOLT, HT M14-45	140 - 188	1,427.58 - 1,917.04	1,239.14 - 1,663.99	-
	K0145140002	NUT, W/F-RING M14 P1.5	140 - 188	1,427.58 - 1,917.04	1,239.14 - 1,663.99	-
	K0010120502	BOLT, HT M12-50	104 - 134	1,427.58 - 1,917.04	1,239.14 - 1,663.99	-
	K0010100602	BOLT, HT M10-60	58 - 76	591.43 - 774.97	513.36 - 672.68	-
	K001A100251	BOLT, 13T W/HEX HOLE M10-25	29 - 38	295.71 - 387.49	256.68 - 336.34	-
	K0010100402	BOLT, HT M10-40	29 - 38	295.71 - 387.49	256.68 - 336.34	-
Tine (Option)	K0013101302	BOLT, HT M10-130	29 - 38	295.71 - 387.49	256.68 - 336.34	-
	K0060080150	BOLT, SUS W/HEX HOLE M8-15	14 - 19	142.76 - 193.74	123.91 - 168.17	-
	K0060100800	BOLT, SUS W/HEX HOLE M10-80	29 - 38	295.71 - 387.49	256.68 - 336.34	-
	K0060080150	BOLT, SUS W/HEX HOLE M8-15	14 - 19	142.76 - 193.74	123.91 - 168.17	-
	K0010100402	BOLT, HT M10-40	29 - 38	295.71 - 387.49	256.68 - 336.34	-

https://truckmanualshub.com/

TDA1600

Tighten the following bolts and nuts at the torque specified in the table.

For thread locking adhesive, apply a middle strength thread locker (ThreeBond 1322 or equivalent anaerobic sealant).

Location	Code	Part name	Tightening torque			Thread locking adhesive
			N-m	kgf-cm	lb-in	
Frame & Cover	K0013161201	BOLT, HT M16-120	210 - 260	2,141.37 - 2,651.22	1,858.71 - 2,301.26	-
	K0013160952	BOLT, HT M16-95	210 - 260	2,141.37 - 2,651.22	1,858.71 - 2,301.26	-
	K0013160601	BOLT, HT M16-60	210 - 260	2,141.37 - 2,651.22	1,858.71 - 2,301.26	-
	K0010120302	BOLT, HT M12-30	104 - 134	1,060.49 - 1,366.40	920.50 - 1,186.03	-
Front & Rear Rollers	K0071000372	BOLT, FOR HYDRAULIC MOTOR	52 - 67	530.24 - 683.20	460.25 - 593.02	-
	K0010140302	BOLT, HT M14-30	700 - 940	7,137.90 - 9,585.18	6195.70 - 8319.94	-
	K0010140452	BOLT, HT M14-45	700 - 940	7,137.90 - 9,585.18	6195.70 - 8319.94	-
	K0010120402	BOLT, HT M12-40	104 - 134	1,060.49 - 1,366.40	920.50 - 1,186.03	-
	K0010100252	BOLT, HT M10-25	58 - 76	591.43 - 774.97	513.36 - 672.68	-
Gear Box	K0013121002	BOLT, HT M12-100	104 - 134	1,060.49 - 1,366.40	920.50 - 1,186.03	-
Crank	K0013140502	BOLT, HT M14-50	140 - 188	1,427.58 - 1,917.04	1,239.14 - 1,663.99	-
	K0013120702	BOLT, HT M12-70	104 - 134	1,060.49 - 1,366.40	920.50 - 1,186.03	-
	TDA12000370Z8	NUT, 24 B	300 - 350	3,059.10 - 3,568.95	2,655.30 - 3,097.85	-
	K0010120602	BOLT, HT M12-60	104 - 134	1,060.49 - 1,366.40	920.50 - 1,186.03	-
	K0013140452	BOLT, HT M14-45	140 - 188	1,427.58 - 1,917.04	1,239.14 - 1,663.99	-
	K0145140002	NUT, W/F-RING M14 P1.5	140 - 188	1,427.58 - 1,917.04	1,239.14 - 1,663.99	-
	K0010100602	BOLT, HT M10-60	58 - 76	591.43 - 774.97	513.36 - 672.68	-
	K0013100902	BOLT, HT M10-90	58 - 76	591.43 - 774.97	513.36 - 672.68	-
	K0010100402	BOLT, HT M10-40	29 - 38	295.71 - 387.49	256.68 - 336.34	-
	K0010120502	BOLT, HT M12-50	104 - 134	1,060.49 - 1,366.40	920.50 - 1,186.03	-
Tine (Option)	K0013101302	BOLT, HT M10-130	29 - 38	295.71 - 387.49	256.68 - 336.34	-
	K0060080150	BOLT, SUS W/HEX HOLE M8-15	14 - 19	142.76 - 193.74	123.91 - 168.17	-
	K0060100800	BOLT, SUS W/HEX HOLE M10-80	29 - 38	295.71 - 387.49	256.68 - 336.34	-
	K0060080150	BOLT, SUS W/HEX HOLE M8-15	14 - 19	142.76 - 193.74	123.91 - 168.17	-
	K0010100402	BOLT, HT M10-40	29 - 38	295.71 - 387.49	256.68 - 336.34	-

https://truckmanualshub.com/

9. Adjustment before Operation

9-1. Precautions about Adjustment

⚠ Warning

Make sure there is no one around the tractor and between this machine and the tractor.

⚠ Warning

Before adjusting the machine, apply the parking brake of the tractor, set the PTO speed change lever to the “Neutral” position and stop the engine.

9-2. Adjustment of Tine Depth

Important

Select an appropriate tine depth in consideration of the working condition. Work without taking the working condition into consideration may apply excessive force to the machine, causing damage to the tines and machine.

When the tine depth is deeper, slow down the working speed as necessary.

Important

When moving the front roller up and down, move the right and left up-down handles two turns alternately. When one side alone is moved up and down, the scraper and lawn pressing plate bracket will be deformed.

Important

The scale does not indicate the actual depth. It is just a rough indication. Judge the depth by actual work.

Turn the up-down handle to adjust the tine depth.

① Loosen the right and left roller holding fixtures.

② Turn the right and left up-down handles to adjust the tine depth.(Approx. 4 mm/turn)

- Turn the up-down handle clockwise to increase the coring depth. (The roller rises and the machine lowers.)
- Turn the up-down handle counter clockwise to decrease the coring depth. (The roller lowers and the machine rises.)
- A depth gauge and scale mark 150A are provided on both sides of the machine. One scale corresponds to 1 cm. When the tip of the depth gauge is at the uppermost edge of the scale, it shows the maximum depth of standard tine.

③ Tighten the right and left “roller holding fixtures.”

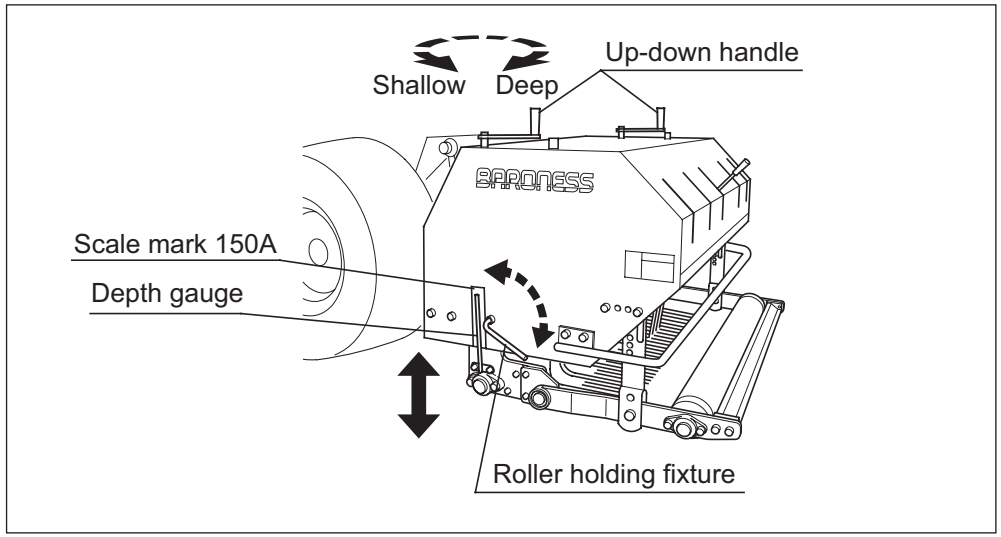

https://truckmanualshub.com/

10. Operation Method

10-1. Positions and Description of Operation Decals

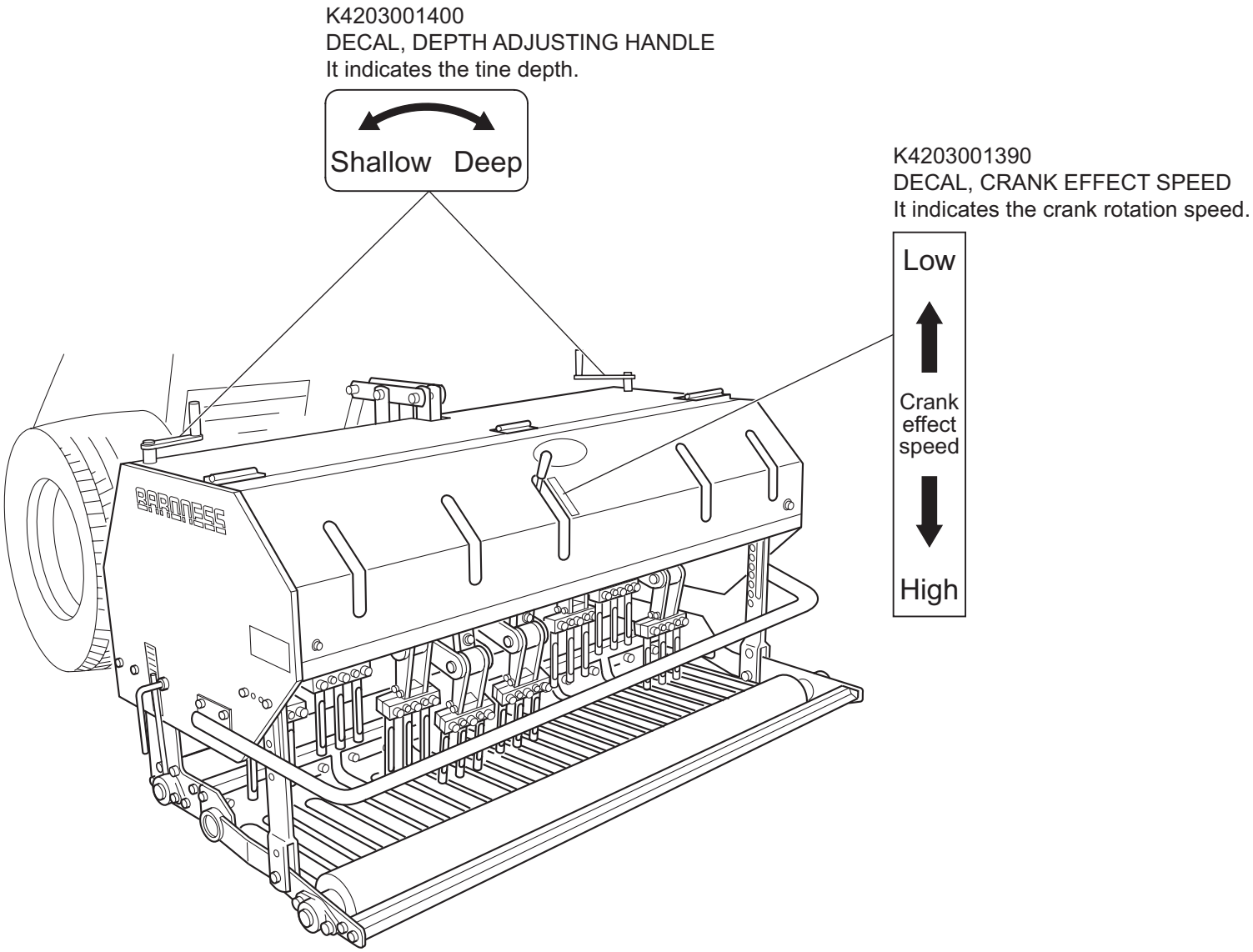

https://truckmanualshub.com/

10-2. Change Lever

⚠ Warning

Stop the PTO rotation before shifting the change lever.

Important

When the change lever for switching cannot be engaged easily, step on the clutch pedal of the tractor once again, then the change lever will be engaged easily. If you operate the change lever forcibly, the transmission and change lever can be damaged.

Operate the change lever for switching over crank rotation speed to change high and low speed.

Shift the lever to the appropriate position.

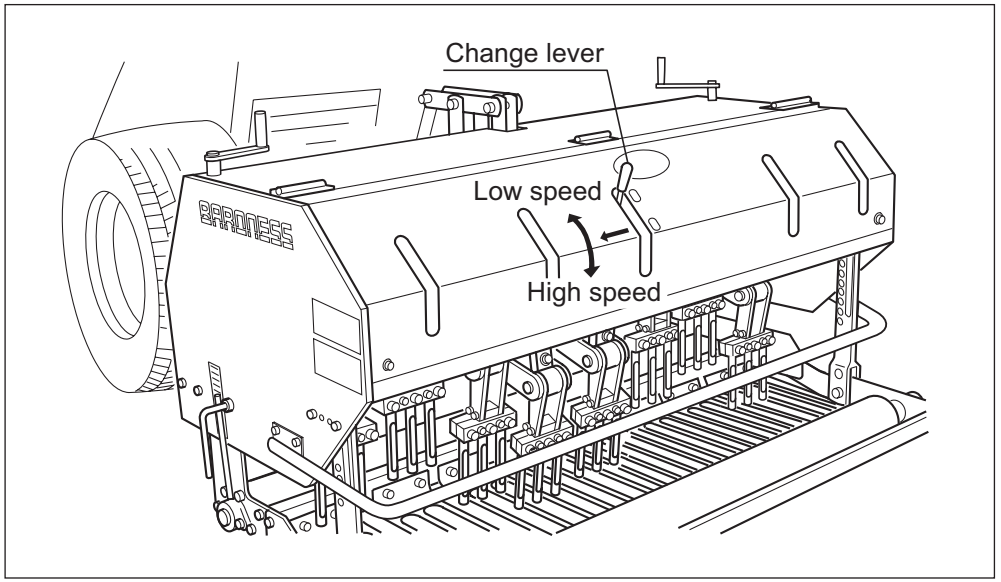

10-3. Up-Down Handle

Operate the up-down handle to adjust the tine depth.

Rotate the handle to the appropriate direction.

Rotate the handle clockwise to increase the coring depth.

Rotate the handle counterclockwise to decrease the coring depth.

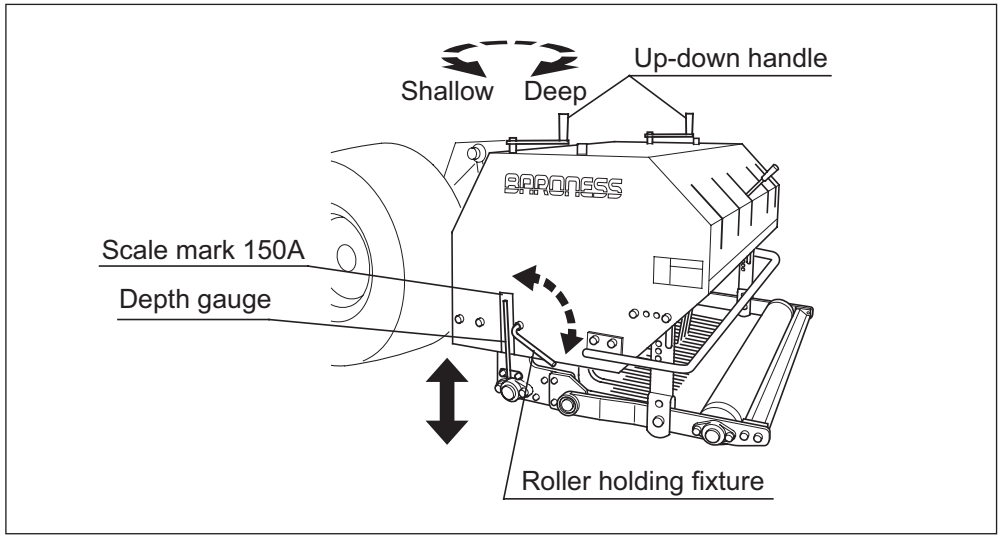

https://truckmanualshub.com/

10-4. Rear Roller

- If the rear roller is equipped, when using spike tines for coring, it functions to trample the lawn surface, so golfers will be possible to play immediately.
- When using side open tines for coring, keep the rear roller raised, to avoid to trample the grass and soil removed by the side open tines.

A : When using the rear roller

① Remove the snap pin and remove the flat head pin securing the rear roller from the hole B.

② Insert the flat head pin into the hole A on the roller holding plate and insert the snap pin to release the rear roller.

③ Do the same operation on the opposite side to release the rear roller.

B : When not using the rear roller

① Remove the snap pin and remove the flat head pin.

② Raise the roller hanger to the appropriate height where the rear roller cannot trample the grass and soil removed by the side open tines, and insert the flat head pin into the hole B of the roller holding plate and then insert the snap pin.

③ Raise the opposite side in the same way and fix it.

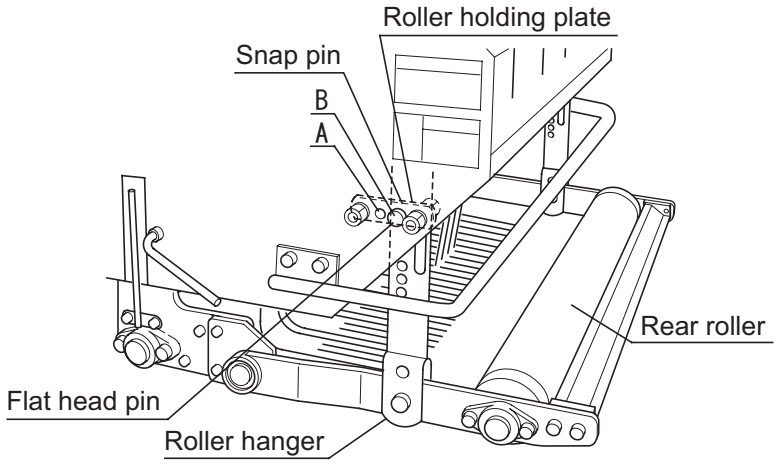

11. Traveling

11-1. Precautions before Traveling

⚠Warning

When the machine is attached to a tractor for transportation, drive the tractor so that the traveling speed will not exceed 10 km/h. When moving up and down on a slope, exercise special care to drive the tractor at a speed that will permit emergency stop at any time.

⚠Warning

When you feel that the front of the tractor is lifted on a slope, it is very likely that the steering wheel will not function or the tractor may be overturned. Be sure to add some balance weights in that case.

Important

Traveling with the tractor linked at a maximum speed will cause bounce and jounce, damaging the machine.

11-2. Traveling Operation

1. Start the tractor engine and rev it up.
2. Raise the machine to the maximum height with the tractor's up/down lever (hydraulic lever).
3. Travel slowly for transportation.

https://truckmanualshub.com/

12. Operations

12-1. Precautions before Operation

⚠Warning

- Do not operate the machine in places in danger of a land subsidence or landslide.
- The machine may overturn on a slope with an irregular surface. Do operate use the machine in such a place.
- Avoid operation on slopes.
- The machine is in danger of slipping and overturning on a wet slope. Do not operate the machine in such a condition.
- Check to see if someone is playing in the vicinity. There is a possibility of getting struck with a hit ball.
- Check the surroundings for safety (front, back, right, and left, as well as trees, ditches, irregular surface of the green, sprinklers, and cups etc.) during operation. Operate the machine at an appropriate speed so that you can stop the machine any time in an emergency. Avoid sudden acceleration, sudden braking, and abrupt steering. Drive the machine slowly especially when descending a slope.
- When the machine is attached, the total length of tractor will increase. Be careful of the people and objects around the machine when turning the machine.
- Do not touch the tines, crank, and other moving sections when the machine is in operation, otherwise your fingers or hands may get injured.
- Do not operate the machine at night time or in bad weather when the visibility is poor.

⚠Caution

- When abnormal vibration, abnormal sound (wire or vinyl coiling tangled in the tines), or other anomaly occurs in the machine during work, stop the engine immediately and investigate into the cause. Completely repair the machine before operating it again.
- When colliding with some obstacle, stop the tractor engine and check up whether respective parts are not damaged.
- Remove stone, wire, sticks, and other obstacles before work, otherwise not only machine trouble but also an accident due to the scattering of such objects may result.
- When leaving the machine, park the machine on a flat ground, stop the tractor engine and remove the key. Be sure to apply the parking brake and chock the tires.
  Lower the attached machine with care so that the tines cannot touch the ground.

Important

- Do not move forward when lowering the machine and without turning the PTO shaft, otherwise the lawn and machine will be damaged heavily.
- Lower the machine slowly so that the lawn and machine will not be damaged.
- Do not move backward nor turn when the machine has lowered and touched on the ground, otherwise the lawn and machine will be damaged heavily.
- When stone or rock is expected to exist under the ground, lower the speed of PTO rotation.

Important

Select an appropriate tine depth in consideration of the working condition. Work without taking the working condition into consideration will apply excessive force to the machine, possibly damaging the tines and machine.

Important

- Check that the front roller is in contact with the ground before work. When the coring depth is too deep, the roller may be lifted according to the condition of the soil, it possibly cause to damage the PTO of the tractor or the machine.
- Large tines or attachments may cause the tine mount holder to be lifted. Slow down the PTO speed or stop the machine before the tine mount holder overturns.
- Do not rotate the universal joint at an angle exceeding 30 degrees.
- Carefully select the coring depth according to the condition of the putting green. If the coring surface is too hard it will apply excessive force to the driving system of the machine, causing breakage. Decrease the tine depth in such a condition.
- Excessively high PTO rotation speed (TDA1200: more than 400 rpm/TDA1600: more than 1,000 rpm) will apply excessive force to the machine, causing breakage of the machine or spouting of oil from the gearbox.
- High-speed operation will lower the work effectiveness. Select an appropriate working speed according to the condition.
- Meandering operation is likely to damage the green. Move the machine straight.
- Do not turn the PTO in the reverse direction, otherwise the machine can be broken
- Operate the machine at appropriate speed, keeping the front roller from bouncing. If you operate with the front roller bouncing, the machine may break down..

https://truckmanualshub.com/

12-2. Aeration Procedure

① Transfer the machine with raising position to the location in front of the working point.
② Select the crank rotation speed using the change lever.
③ Select an appropriate working speed by combining the main transmission and auxiliary transmission of the tractor.
④ Lower the machine slowly.
⑤ Raise the engine speed up to the preset PTO rotation speed.
⑥ Move the machine forth during work.

- Keep the front roller in contact with the ground at all times during work. If the machine becomes unstable, change the PTO rotation speed to stabilize the machine. If it does not stabilize, change the coring depth, change the size of tines, or change the tines with new ones.

Important

Do not stop the engine.
The transmission will malfunction.

⑦ When the work is finished, stop the tractor, operate the tractor up-down lever to raise the machine.
⑧ When all tines get off the ground, stop the PTO rotation immediately.
⑨ Move to the next work place, and continue the work following the above procedure.

13. Transporting

Transporting the machine attached to a tractor:

When loading the machine into a trailer or a truck to transport it, drive the tractor in reverse. When unloading, drive the tractor forward.

Transporting only the machine:

When loading the machine into a trailer or a truck to transport it, put the machine with tines removed on a pallet and then load and unload the pallet.

Before transportation, fix the machine on board.

14. Long-Term Storage

- Remove dirt, grass clippings, debris, oil stains etc. completely.
- Supply oil and apply grease to appropriate parts.
- If loosen or lost bolts and nuts found, tighten or service the machine.
- Service defective parts and deteriorated paint.
- Storage location
  Cover the machine and store it in a dry place where it will not be exposed to rain.
  For storing the machine detached from the tractor, fix the machine with tines removed on a pallet and place it on a flat ground.

https://truckmanualshub.com/

Maintenance

15. Maintenance Precautions

⚠Caution

First, learn well the maintenance operations you plan to perform.

⚠Caution

For maintenance and repair works on the machine lifted up by the tractor, close the hydraulic stop valve of the tractor completely.

In addition, place blocks as appropriate supports under the machine.

Important

Use tools appropriate for each maintenance operation.

Important

For the safe and best performance of your machine, use Baroness genuine parts for replacement and accessories.

Please note that our product warranty may be void if you use non-genuine parts for replacement or accessories.

16. Maintenance Schedule

○・・・Inspection, adjustment, replenishment, and cleaning

●・・・Replacement

Maintenance item	Before use	Every 50 hours	Every 100 hours	Every 300 hours	Remarks
Condition of tines	○				(*)
Loose screws in respective sections	○				
Greasing		○			
Change of oil in gearbox			● (first time)	●	100 hours after initial operation
Removal of dust, etc.	○				

(*)When cracks, damage, or abrasion is found on the tines, replace them immediately.

◆ The operations in the table above should be performed whenever necessary, regardless of the time intervals specified.

◆ For tractor maintenance schedule, refer to the Tractor's Owner's Manual.

◆ The values for consumables are not guaranteed.

https://truckmanualshub.com/

17. Greasing

17-1. About Greasing

Since there may be adhesion or damage due to lack of grease on moving parts, they must be greased.

Add urea-based No. 2 grease in accordance with the Maintenance Schedule.

Other locations where the specified grease or lubricant is used are indicated in "Greasing Points".

Add grease using the specified grease or lubricant.

17-2. Greasing Points

Grease nipples are installed in the following locations.

Add grease every 50 hours of operation.

There is one point each on the left and right ends of the front and rear rollers.

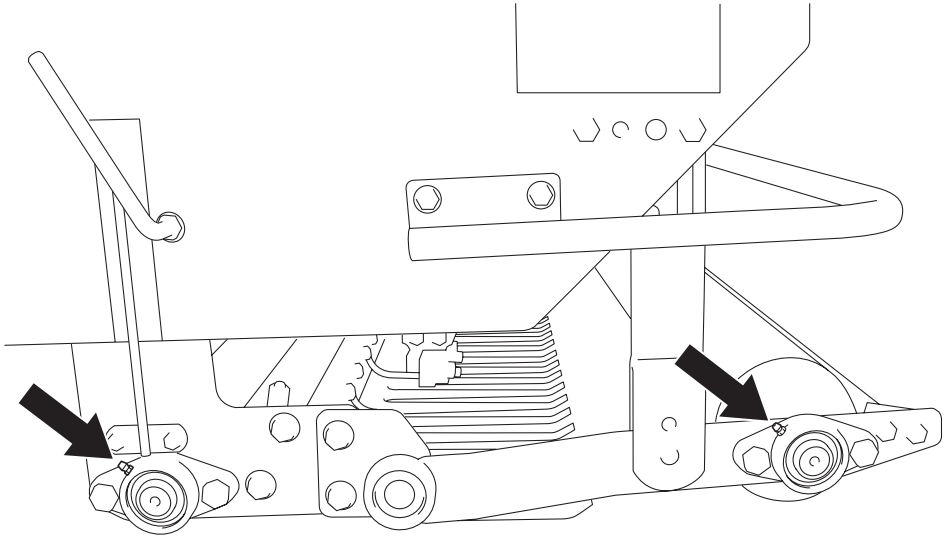

18. Maintenance Work

18-1. Cleaning of Aeration Section

Be sure to clean the aeration section after use.

1. Stop the tractor engine, and then remove the key.
2. Carefully clean the inside and outside of the aeration section with water or compressed air.

18-2. Change of Tines

⚠Caution

Wear gloves when touching tines to avoid cutting your hands.

Important

Replace all tines at the same time.

Mixing new and old tines will cause abnormal vibration.

1. Stop the tractor engine.
2. Loosen the bolts.
3. Remove the old tine.
4. Fully insert the new tine into the hole in the tine mount.
5. While holding the tine in place with your hand, firmly tighten the bolts.
6. Check that the tine does not fall out.

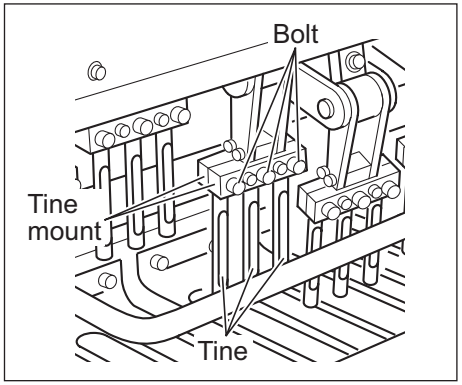

Note:

Use the optional tine mount and exclusive lawn pressing plate to aerate with a finer pitch.

https://truckmanualshub.com/

18-3. Change of Gear Oil

⚠Caution

Be careful with hot oil, which could cause burns if it contacts your skin.

Important

When you change the oil, be sure to drain it into a container and discard it in accordance with local laws and regulations.

Important

If the oil emulsifies or if it becomes even slightly less transparent, change the oil immediately.

Important

Use BONNOC TS680 (or equivalent) as oil.

1. Follow the steps below to remove the old oil.
   [1] Remove the drain plug and drain the old oil into a container.
   [2] Install the drain plug.
2. Open the oil filler cap, and then supply new oil through the oil filling port until the oil level reaches the middle of the oil gauge.
   The gear box capacity is approximately 3.8 dm^3 (3.8 L).
3. Tighten the oil filler cap securely.
4. On a level surface, check if the oil level is at the middle of the oil gauge. If necessary, supply oil.
5. Check underneath the machine for oil leakage.

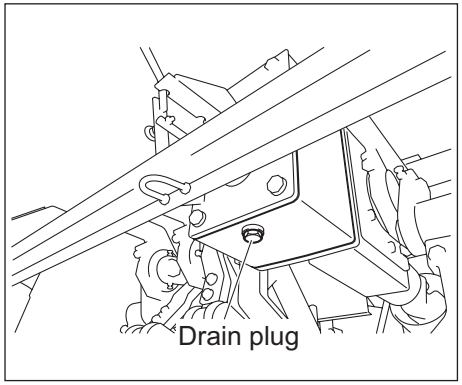

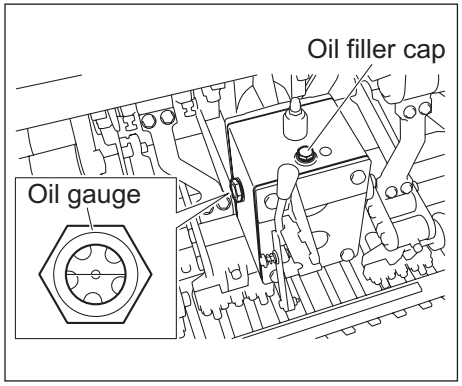

18-4. Disassembly of Crank

⚠Warning

When disassembling the crank section to replace bearings, exercise care so as not to have your fingers or hands caught in the crank metal fittings. Right after the crank section is separated, the respective crank metal fittings will rotate by their worn weight.

⚠Caution

When crank metal fittings are set out of position, vibration and noise will be generated, possibly damaging the machine.

Respective crank metal fittings are attached in a 45-degree turned state to ensure right timing. Follow the assembling timing ① - ⑧ shown in Timing chart.

https://truckmanualshub.com/

Timing Chart

TDA1200

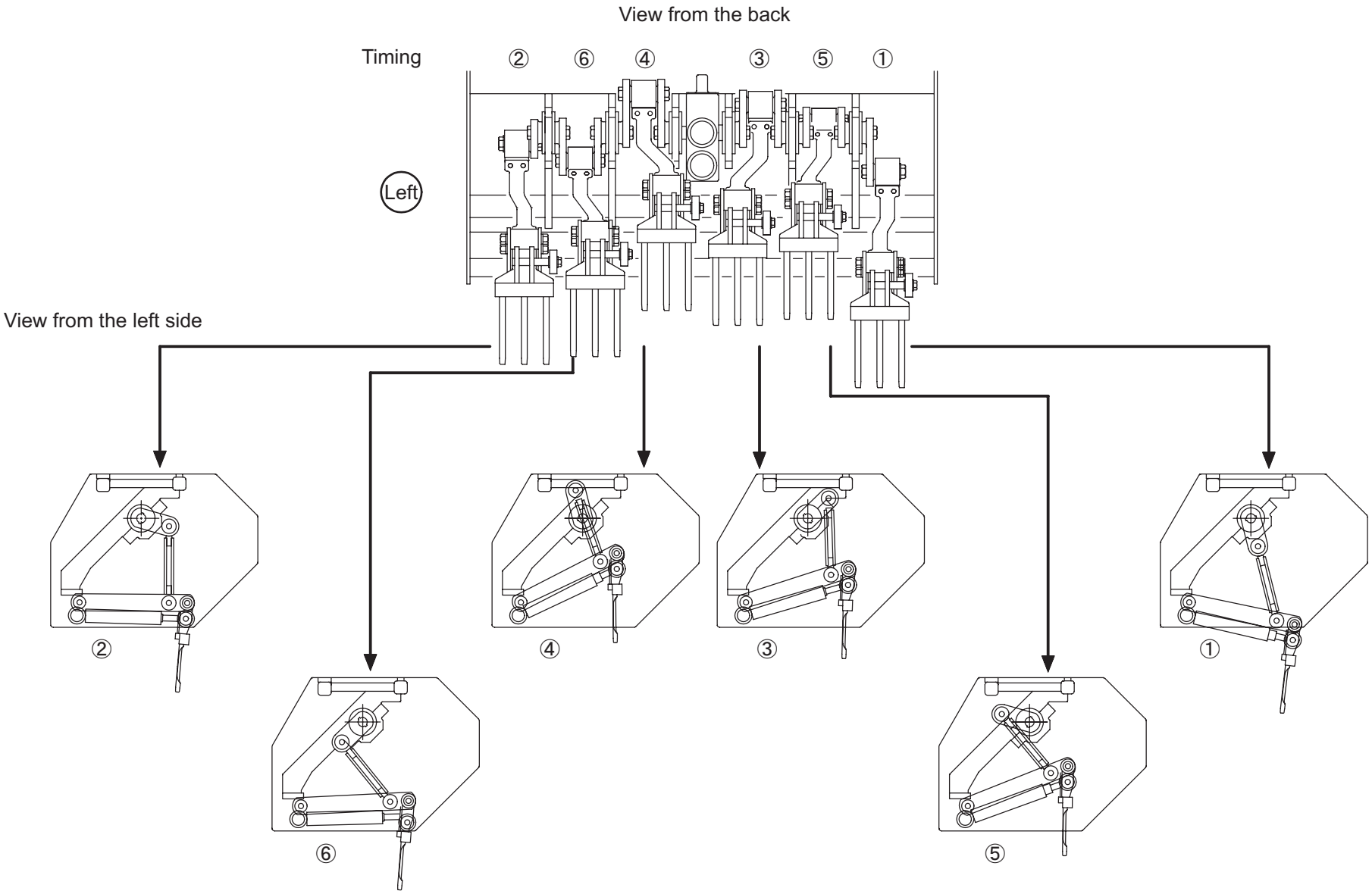

https://truckmanualshub.com/

TDA1600

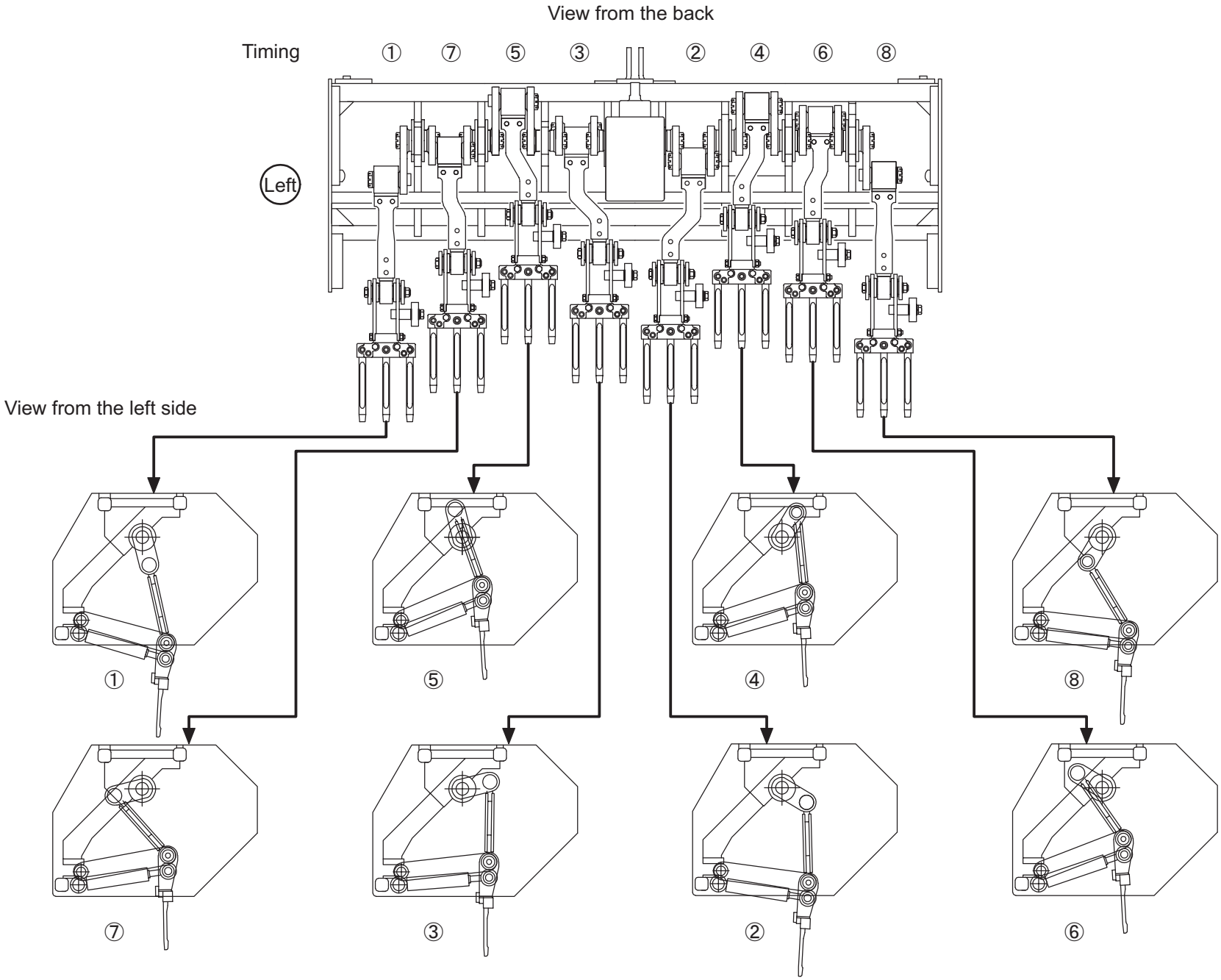

BARONESS
Quality on Demand

EU Declaration of Conformity

Product Identification

Product :	Deep Aerator	
Brand-Name :	BARONESS	
Type :	TDA1200	TDA1600
Starting Serial No. :	**21005**	**21001**
Manufacturer Name :	Kyoeisha Co., Ltd.	
Address :	1-26 Miyuki-cho, Toyokawa, Aichi-pref.,Japan	

Conforms to the following Directives
2006/42/EC Machinery (MD)

We have been designed and manufactured under the following specifications
ISO 12100 : 2010 (2006/42/EC)
ISO 4254-1 : 2013 (2006/42/EC)
ISO 4254-5 : 2018 (2006/42/EC)

Keeper of Technical Documentation
Name : Kyoeisha Co., Ltd.
Address : 1-26 Miyuki-cho, Toyokawa, Aichi-pref.,Japan

Compiler of the technical file (2006/42/EC)
Name: Friedrich E. Barthels Nachf. Glockzin KG (GmbH & Co.)
Address: Gerhard-Falk-Str. 1 21035 Hamburg Germany

Conformity assessment procedures
Internal production control : Module A (2006/42/EC)

Place : Japan
Date : 20 February 2021 (20 / 2 / 2021)

Signature : 林 昭男
Name : Akio Hayashi
Position : Quality Dept. Director

(fr)

Déclaration d'incorporation de UE

Identification du produit

Produit :	Aérateur profond	
Fabriquant :	BARONESS	
Type :	TDA1200	TDA1600
Numéro de série de début :	**21005**	**21001**
Fabricant Nom :	Kyoeisha Co., Ltd.	
Adresse :	1-26, Miyuki-cho, Toyokawa, préfecture d'Aichi, Japon	

Conforme aux directives suivantes :
2006/42/CE Machine (MD)

Conception et fabrication en respect des spécifications suivantes :
ISO 12100 : 2010 (2006/42/CE)
ISO 4254-1 : 2013 (2006/42/CE)
ISO 4254-5 : 2018 (2006/42/CE)

Fiche technique
Marque : Kyoeisha Co., Ltd.
Adresse de la marque : 1-26, Miyuki-cho, Toyokawa, préfecture d'Aichi, Japon

Compilateur de la fiche technique (2006/42/CE)
Nom : Friedrich E. Barthels Nachf. Glockzin KG (GmbH & Co.)
Adresse : Gerhard-Falk-Str. 1 21035 Hambourg Allemagne

Procédures d'évaluation de la conformité
Contrôle de production interne : module A (2006/42/CE)

https://truckmanualshub.com/

(es)

Declaración de incorporación de la UE

Identificación del producto

Producto:	Aireador profundo	
Marca:	BARONESS	
Tipo:	TDA1200	TDA1600
N.º de serie inicial:	**21005**	**21001**
Fabricante Nombre:	Kyoeisha Co., Ltd.	
Dirección:	1-26 Miyuki-cho, Toyokawa, Aichi-pref., Japón	

Cumple las siguientes Directivas
2006/42/CE Maquinaria (MD)

Se ha diseñado y fabricado utilizando las siguientes especificaciones
ISO 12100 : 2010 (2006/42/CE)
ISO 4254-1 : 2013 (2006/42/CE)
ISO 4254-5 : 2018 (2006/42/CE)

Documentación técnica

Nombre del responsable:	Kyoeisha Co., Ltd.
Dirección del responsable:	1-26 Miyuki-cho, Toyokawa, Aichi-pref., Japón

Compilador del archivo técnico (2006/42/CE)

Nombre:	Friedrich E. Barthels Nachf. Glockzin KG (GmbH & Co.)
Dirección:	Gerhard-Falk-Str. 1 21035 Hamburgo Alemania

Procedimientos de evaluación de conformidad
Control de fabricación interno: Módulo A (2006/42/CE)

https://truckmanualshub.com/

(de)

EU-Einbauerklärung

Produktbeschreibung

Produkt:	Tiefenbelüfter	
Marke:	BARONESS	
Modell:	TDA1200	TDA1600
Startseriennummer:	**21005**	**21001**
Hersteller Name:	Kyoeisha Co., Ltd.	
Adresse:	1-26 Miyuki-cho, Toyokawa, Aichi-pref.,Japan	

Entspricht den folgenden Richtlinien
2006/42/EG Maschinenrichtlinie

Unter Anwendung der folgenden Bestimmungen entwickelt und hergestellt
ISO 12100 : 2010 (2006/42/EG)
ISO 4254-1 : 2013 (2006/42/EG)
ISO 4254-5 : 2018 (2006/42/EG)

Technische Dokumentation

Name des Halters	Kyoeisha Co., Ltd.
Adresse des Halters	1-26 Miyuki-cho, Toyokawa, Aichi-pref.,Japan

Technische Unterlagen erstellt von (2006/42/EG)

Name:	Friedrich E. Barthels Nachf. Glockzin KG (GmbH & Co.)
Adresse:	Gerhard-Falk-Str. 1 21035 Hamburg Deutschland

Konformitätsbewertungsverfahren
Interne Produktionskontrolle : Modul A (2006/42/EG)

(sv)

EU-förklaring om införlivande

Produktidentifikation

Produkt :		Djup Aerator	
Märke:		BARONESS	
Typ:		TDA1200	TDA1600
Serienummer startar på:		**21005**	**21001**
Tillverkare	Namn:	Kyoeisha Co., Ltd.	
	Adress:	1-26 Miyuki-cho, Toyokawa, Aichi-pref., Japan	

Uppfyller följande direktiv
2006/42/EG Maskindirektivet

Följande kravspecifikationer har följts vid konstruktion och tillverkning
ISO 12100 : 2010 (2006/42/EG)
ISO 4254-1 : 2013 (2006/42/EG)
ISO 4254-5 : 2018 (2006/42/EG)

Teknisk dokumentation
Innehavarens namn: Kyoeisha Co., Ltd.
Innehavarens adress: 1-26 Miyuki-cho, Toyokawa, Aichi-pref., Japan

Den tekniska filen(2006/42/EG) har tagits fram av
Namn: Friedrich E. Barthels Nachf. Glockzin KG (GmbH & Co.)
Adress: Gerhard-Falk-Str. 1 21035 Hamburg Tyskland

Förfarande för bedömning av överensstämmelse
Intern produktionskontroll: Modul A (2006/42/EG)

(da)

EU-overensstemmelseserklæring

Produktidentificering

Produkt :		Dyb belufter	
Mærkenavn:		BARONESS	
Type:		TDA1200	TDA1600
Startende serienr.:		**21005**	**21001**
Producent	Navn:	Kyoeisha Co., Ltd.	
	Adresse:	1-26 Miyuki-cho, Toyokawa, Aichi-præf.,Japan	

Er i overensstemmelse med følgende direktiver
2006/42/EF Maskineri (MD)

Vi har designet og produceret under følgende specifikationer
ISO 12100 : 2010 (2006/42/EF)
ISO 4254-1 : 2013 (2006/42/EF)
ISO 4254-5 : 2018 (2006/42/EF)

Indehaver af teknisk dokumentation
Navn: Kyoeisha Co., Ltd.
Adresse: 1-26 Miyuki-cho, Toyokawa, Aichi-præf.,Japan

Kompilator af den tekniske fil (2006/42/EF)
Navn: Friedrich E. Barthels Nachf. Glockzin KG (GmbH & Co.)
Adresse: Gerhard-Falk-Str. 1 21035 Hamborg Tyskland

Procedurer for overensstemmelsesvurdering
Intern produktionskontrol : Modul A (2006/42/EF)

https://truckmanualshub.com/

BARONESS
Quality on Demand

UK Declaration of Conformity

Product Identification

Product :	Deep Aerator	
Brand-Name :	BARONESS	
Type :	TDA1200	TDA1600
Starting Serial No. :	**21005**	**21001**
Manufacturer Name :	Kyoeisha Co., Ltd.	
Address :	1-26 Miyuki-cho, Toyokawa, Aichi-pref.,Japan	

Conforms to the following Directives
Supply of Machinery (Safety) Regulations 2008 (SMD2008)

We have been designed and manufactured under the following specifications
ISO 12100 : 2010 (SMD2008)
ISO 4254-1 : 2013 (SMD2008)
ISO 4254-5 : 2018 (SMD2008)

Keeper of Technical Documentation
Name : Kyoeisha Co., Ltd.
Address : 1-26 Miyuki-cho, Toyokawa, Aichi-pref.,Japan

Compiler of the technical file
Name: Kyoeisha U.K.Ltd.
Address: Unit 5 Hatch Industrial Park Grewell Road,Basingstke Hampshire RG24 7NG, the United Kingdom

Conformity assessment procedures
Internal production control : Module A (SMD2008)

Place : Japan
Date : 20 February 2021 (20 / 2 / 2021)

Signature : 林 昭 男
Name : Akio Hayashi
Position : Quality Dept. Director

https://truckmanualshub.com/

https://truckmanualshub.com/

MEMO

https://truckmanualshub.com/

BARONESS®

Quality on Demand

KYOEISHA CO.,LTD.

Head Office 1-26, Miyuki-cho, Toyokawa-city, Aichi-pref, 442-8530 JAPAN

Tel : +81-533-84-1390
Fax : +81-533-84-1220

TDA1200-UM--GBZ/21D-00-S.K
DoC00[EU00a/UK00]