# Operation & Maintenance Manual

UEAM003201

# PW160-7K

## WHEELED EXCAVATOR

SERIAL NUMBER

**PW160-7K - K40001 and up**

**WARNING**

**Unsafe use of this machine may cause serious injury or death. Operators and maintenance personnel must read this manual before operating or maintaining this machine. This manual should be kept inside the cab for reference and periodically reviewed by all personnel who will come into contact with the machine.**

KOMATSU

# FOREWORD

# FOREWORD

This manual provides rules and guidelines which will help you use this machine safely and effectively. Keep this manual handy and have all personnel read it periodically. If this manual has been lost or has become dirty and can not be read, request a replacement manual from Komatsu or your Komatsu distributor.

If you sell the machine, be sure to give this manual to the new owners.

Continuing improvements in the design of this machine can lead to changes in detail which may not be reflected in this manual. Consult Komatsu or your Komatsu distributor for the latest available information for your machine or for questions regarding information in this manual.

**⚠ WARNING**

- **This operation & maintenance manual may contain attachments and optional equipment that are not available in your area. Please consult your local Komatsu distributor for those items you require.**
- **This machine complies with EC directive (89/392/EEC). Machines complying with this directive display the CE mark**
- **Improper operation and maintenance of this machine can be hazardous and could result in serious injury or death.**
- **Operators and maintenance personnel should read this manual thoroughly before beginning operation or maintenance.**
- **Some actions involved in operation and maintenance of the machine can cause a serious accident, if they are not done in a manner described in this manual.**
- **The procedures and precautions given in this manual apply only to intended uses of the machine. If you use your machine for any unintended uses that are not specifically prohibited, you must be sure that it is safe for you and others. In no event should you or others engage in prohibited uses or actions as described in this manual.**
- **Komatsu delivers machines that comply with all applicable regulations and standards of the country to which it has been shipped. If this machine has been purchased in another country or purchased from someone in another country, it may lack certain safety devices and specifications that are necessary for use in your country. If there is any question about whether your product complies with the applicable standards and regulations of your country, consult Komatsu or your Komatsu distributor before operating the machine.**
- **The description of safety is given, see "SAFETY INFORMATION (5)" and in "SAFETY" from page 19.**

# SAFETY INFORMATION

## SAFETY MESSAGES

Most accidents are caused by the failure to follow fundamental safety rules for the operation and maintenance of machines.

To avoid accidents, read, understand and follow all precautions and warnings in this manual and on the machine before performing operation and maintenance.

To identify hazards on the machine pictorial decals are used (see POSITION FOR ATTACHING SAFETY LABELS).

**RED WARNING TRIANGLE** - This is used on safety labels where there is a high probability of serious injury or death if the hazard is not avoided. These safety messages or labels usually describe precautions that must be taken to avoid the hazard. Failure to avoid this hazard may also result in serious damage to the machine.

**ORANGE WARNING TRIANGLE** - This is used on safety labels where there is a potentially dangerous situation which could result in serious injury or death if the hazard is not avoided. These safety messages or labels usually describe precautions that must be taken to avoid the hazard. Failure to avoid this hazard may also result in serious damage of the machine

**YELLOW SAFETY TRIANGLE** - This is used on safety labels for hazards which could result in minor or moderate injury if the hazard is not avoided. This word might also be used for a hazard where the only result could be damage to the machine.

NOTICE - This word is used for precautions that must be taken to avoid actions which could shorten the life of the machine.

Safety precautions are described in SAFETY from page 19.

Komatsu cannot predict every circumstance that might involve a potential hazard in operation and maintenance. Therefore the safety message in this manual and on the machine may not include all possible safety precautions. If any procedures or actions not specifically recommended or allowed in this manual are used, you must be sure that you and others can do such procedures and actions safely and without damaging the machine. If you are unsure about the safety of some procedures, contact Komatsu or your Komatsu distributor.

## NOISE

- Sound pressure level at the operator's station, measured according to ISO6396 (Dynamic test method, simulated working cycle).

- Sound power level emitted. This is the guaranteed value as specified in the European directive 2000/14/EC

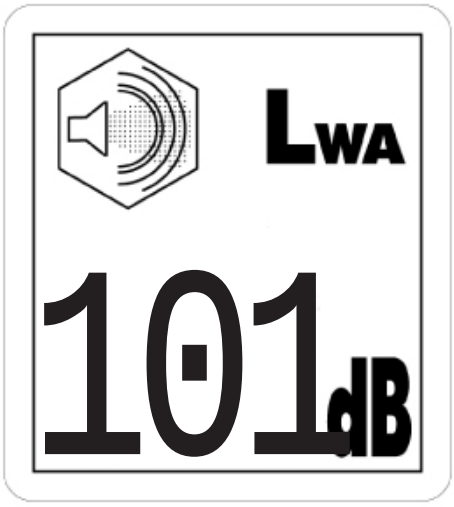


## VIBRATION

- The weighted root mean square acceleration value to which the operator's arms are subjected does not exceed 2.5 m/s²
- The weighted root mean square acceleration value to which the operator's body is subjected was measured at 0.64 m/s²

These results were obtained by accelerometers during trench digging.

## EMERGENCY STEERING

This machine is equipped with an emergency steering system and complies to ISO 5010 (BSEN 12643). In the advent of failure of the source of power for the steering system (engine failure) whilst travelling, the machine can be steered allowing the machine to be safely stopped.

In such a case, the effort required at the steering wheel and the number of turns to steer the machine will increase. To confirm function of emergency steering system, raise the front wheels off the ground (using the work equipment) and with the engine off, turn the steering wheel and check movement of the wheels.

## EMERGENCY BRAKING

This machine is equipped with an emergency braking system and complies to ISO 3450. In the advent of failure of the source of power for the braking system (engine failure) whilst travelling, the brakes can be actuated from stored energy in the accumulators to bring the machine safely to a stop.

In such a case, seven brake applications can be made before exhausting the energy in the accumulators. In the advent of service brake failure, the park brake can be used as an emergency brake to bring the machine to a stop.

# INTRODUCTION

## INTENDED USE

This Komatsu HYDRAULIC EXCAVATOR is designed to be used mainly for the following work:

- Digging
- Smoothing work
- Ditching work
- Loading work

**See the section see "WORK POSSIBLE USING HYDRAULIC EXCAVATOR (186)" for further details**

## FEATURES

- This Komatsu HYDRAULIC EXCAVATOR is equipped with various controls based on an advanced electronics system.
- The monitor panel greatly facilitates daily maintenance and self-diagnosis.
- Working mode & travel speed are selectable.
- Digging and lifting force can be increased by light-touch control. (For details, see operation section.)
- Adjustable wrist control levers make operations smooth and easy.
- Fresh filtered air conditioner assures comfortable operation.
- Low noise level and smart urban style design and colouring.
- Superb operation performance provided by powerful engine and high-performance hydraulic pump.
- Low fuel consumption controlled by an electronic control system provides an environment-friendly machine.
- Sophisticated drive train provides fast and smooth travelling on the highway and off road.

## BREAKING IN YOUR NEW MACHINE

Your Komatsu machine has been thoroughly adjusted and tested before shipment.

However, operating the machine under severe conditions at the beginning can adversely affect the performance and shorten the machine life.

Be sure to break in the machine for the initial 100 hours (as indicated by the hour meter.)

During breaking in:

- Idle the engine for 5 minutes after starting it up.
- Avoid operation with heavy loads or at high speeds.
- Sudden starting or acceleration, unnecessarily abrupt braking and sharp turning should be avoided except in cases of emergency.

Additionally for the first 20 hours

- Avoid operating engine for prolonged periods at constant speed (including idle.)
- Avoid high speed travelling for periods of more than 5 minutes.

Pay particular attention to oil pressure and temperature indicators & check coolant and oil levels frequently during breaking in.

The precautions given in this manual for operating, maintenance, and safety procedures are only those that apply when this product is used for the specified purpose. If the machine is used for a purpose that is not listed in this manual, Komatsu cannot bear any responsibility for safety. All consideration of safety in such operations is the responsibility of the user.

Operations that are prohibited in this manual must never be carried out under any circumstances.

# LOCATIONS OF PLATES, TABLE TO ENTER SERIAL NO. AND DISTRIBUTOR

## MACHINE SERIAL NO. PLATE POSITION

On the front left of the undercarriage

## ENGINE SERIAL NO. PLATE POSITION

On the gear case front corner.

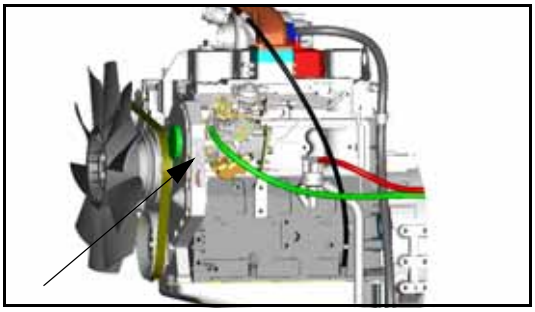

## TABLE TO ENTER SERIAL NO. AND DISTRIBUTOR

Machine serial No.:

Engine Serial No.:

Product Identification Number.

Manufacturer’s name: Komatsu UK Ltd.

Address

Durham Road
Birtley
Chester-Le-Street
County Durham DH32QX
United Kingdom

Distributor

Address

Phone

# MACHINE SERIAL PLATES

## STANDARD SERIAL PLATE

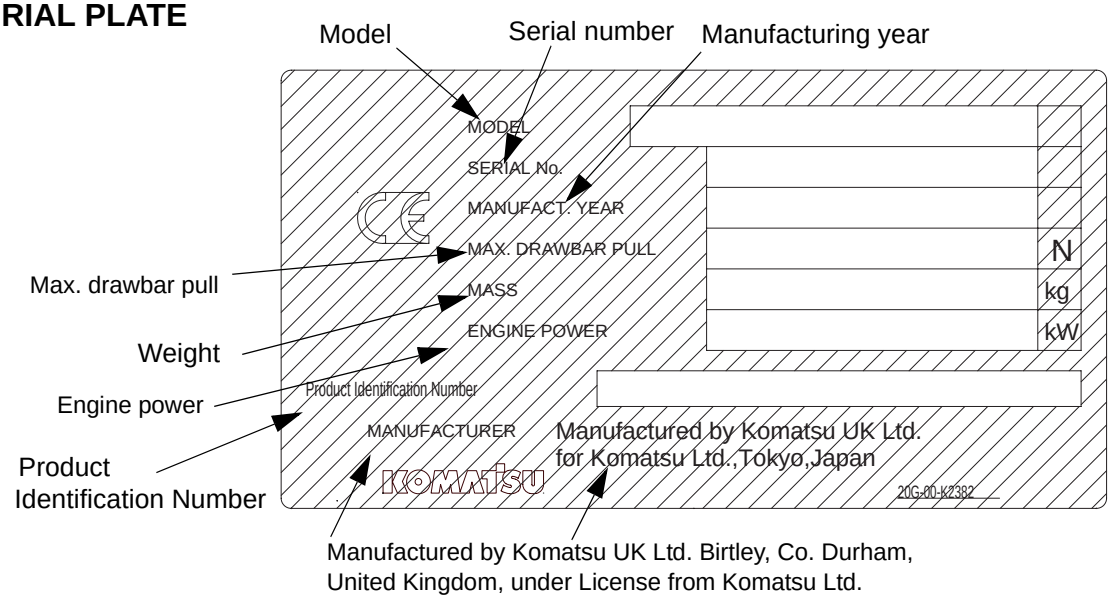


## GERMANY SERIAL PLATE

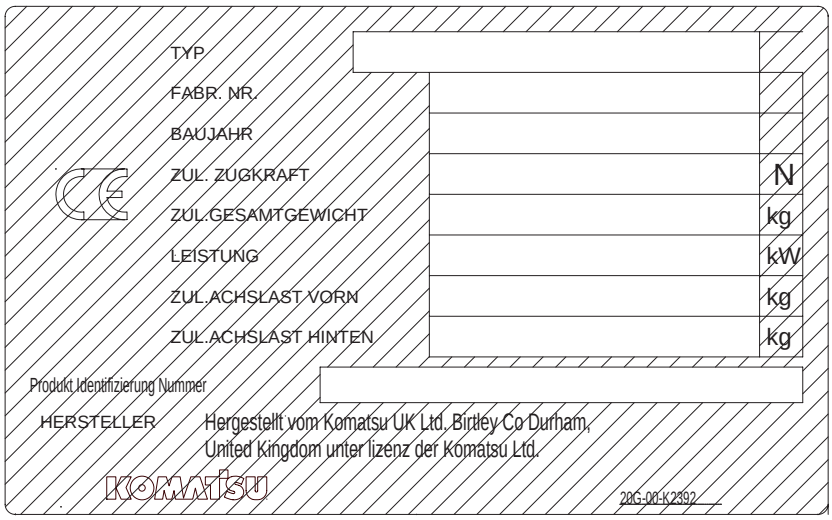


## ITALIAN SERIAL PLATE

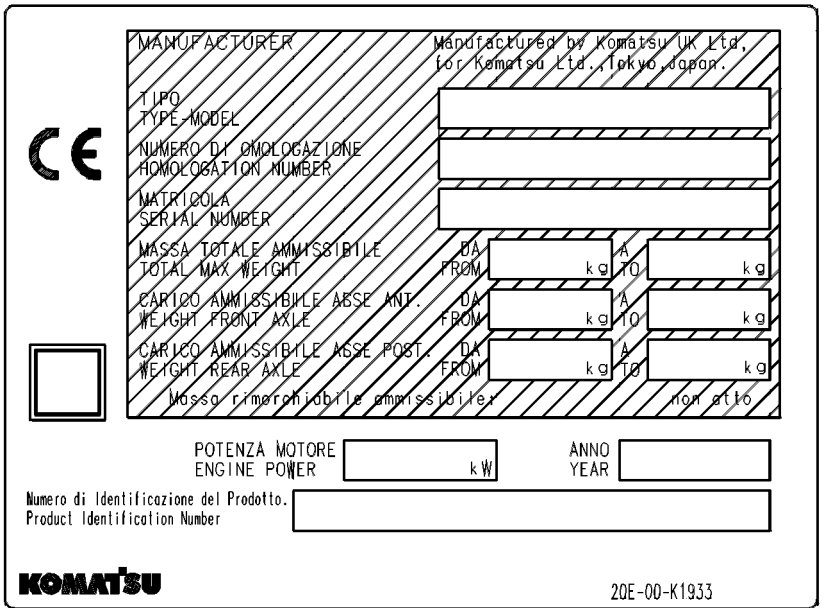

# CONTENTS


## FOREWORD ..... 3

**FOREWORD** ..... **4**

**SAFETY INFORMATION** ..... **5**

SAFETY MESSAGES ..... 5
NOISE ..... 6
VIBRATION ..... 6
EMERGENCY STEERING ..... 7

**INTRODUCTION** ..... **8**

INTENDED USE ..... 8
FEATURES ..... 8
BREAKING IN YOUR NEW MACHINE ..... 9

**LOCATIONS OF PLATES, TABLE TO ENTER SERIAL NO. AND DISTRIBUTOR** ..... **10**

MACHINE SERIAL NO. PLATE POSITION ..... 10
ENGINE SERIAL NO. PLATE POSITION ..... 10
TABLE TO ENTER SERIAL NO. AND DISTRIBUTOR ..... 10
MACHINE SERIAL PLATES ..... 11

## SAFETY ..... 19

**GENERAL PRECAUTIONS** ..... **20**

**PRECAUTION DURING OPERATION** ..... **27**

BEFORE STARTING ENGINE ..... 27
OPERATING MACHINE ..... 28
TRANSPORTATION ..... 35
BATTERY ..... 36
TOWING ..... 37
BUCKET WITH HOOK OR BUCKET LINK WITH LIFTING EYE ..... 38

**PRECAUTIONS FOR MAINTENANCE** ..... **42**

BEFORE CARRYING OUT MAINTENANCE ..... 42
DURING MAINTENANCE ..... 45

**POSITION FOR ATTACHING SAFETY LABELS** ..... **48**

POSITION FOR ATTACHING SAFETY LABELS ..... 48

**LIFTING CAPACITY CHART PW160-7K** ..... **56**

ONE PIECE BOOM Lift capacity tables ..... 56
TWO PIECE BOOM Lift capacity tables ..... 62
ROTATING ARM capacity tables ..... 68
OVERLOAD CAUTION ..... 70

# OPERATION ..... 71

**GENERAL VIEW ..... 72**

GENERAL VIEW OF MACHINE ..... 72
GENERAL VIEW OF CONTROLS AND GAUGES ..... 73

**EXPLANATION OF COMPONENTS ..... 74**

MACHINE MONITOR ..... 74
BASIC CHECK ITEMS ..... 77

**SWITCHES ..... 106**

**CONTROL LEVERS, PEDALS ..... 114**

FRONT WINDOW ..... 119
EMERGENCY EXIT FROM OPERATOR'S CAB ..... 123
DOOR LOCK ..... 124
CAP, COVER WITH LOCK ..... 125
FUSE ..... 126
LUGGAGE TRAY ..... 127
ASHTRAY ..... 127
CUP HOLDER ..... 127
HOT AND COOL BOX ..... 127
CAB RADIO ..... 128
POWER PICK-UP PORT ..... 128
HANDLING AIR CONDITIONER ..... 129
FUSIBLE LINK ..... 142
CONTROLLER ..... 142
TOOL BOX (CHASSIS) ..... 143
REFUELLING PUMP ..... 143
WARNING LAMPS ..... 145
HANDLING ACCUMULATORS ..... 146

**OPERATION ..... 147**

CHECK BEFORE STARTING ENGINE ..... 147

**OPERATIONS AND CHECKS BEFORE STARTING ENGINE ..... 158**

STARTING ENGINE ..... 160
MOVING MACHINE OFF ..... 169
STEERING ..... 172
TRAVELLING ON PUBLIC HIGHWAY ..... 173
STOPPING & PARKING ..... 174
SWINGING (Slewing the upper carriage) ..... 176
OPERATION OF WORK EQUIPMENT ..... 177
WORKING MODE SELECTION ..... 180
PROHIBITIONS FOR OPERATION ..... 181
PRECAUTIONS FOR OPERATION ..... 182
PRECAUTIONS WHEN TRAVELLING UP OR DOWN HILLS ..... 184
HOW TO ESCAPE FROM MUD ..... 185
WORK POSSIBLE USING HYDRAULIC EXCAVATOR ..... 186

REPLACEMENT AND INVERSION OF BUCKET ..... 187
STOPPING ENGINE ..... 189
CHECK AFTER FINISHING WORK ..... 189

**CHECK AFTER STOPPING ENGINE ..... 190**
LOCKING ..... 190
OVERLOAD WARNING DEVICE ..... 190
HANDLING THE WHEELS ..... 190

**TRANSPORTATION ..... 195**
LOADING, UNLOADING WORK ..... 195
PRECAUTIONS FOR LOADING ..... 197
PRECAUTIONS FOR TRANSPORTATION ..... 200
TRAVELLING POSTURE ..... 202

**COLD WEATHER OPERATION ..... 203**
PRECAUTIONS FOR LOW TEMPERATURE ..... 203
PRECAUTIONS AFTER COMPLETION OF WORK ..... 205
AFTER COLD WEATHER ..... 205

**LONG-TERM STORAGE ..... 206**
BEFORE STORAGE ..... 206
DURING STORAGE ..... 206
AFTER STORAGE ..... 207
STARTING MACHINE AFTER LONG-TERM STORAGE ..... 207

**TROUBLESHOOTING ..... 208**
PHENOMENA THAT ARE NOT FAILURES ..... 208
METHOD OF TOWING MACHINE ..... 209
PRECAUTIONS ON PARTICULAR JOBSITES ..... 209
DISCHARGED BATTERY ..... 210
OTHER TROUBLE ..... 214

## MAINTENANCE ..... 219

**GUIDES TO MAINTENANCE ..... 220**

**OUTLINE OF SERVICE ..... 223**
OUTLINE OF OIL, FUEL, COOLANT ..... 223
OUTLINE OF ELECTRIC SYSTEM ..... 226
OUTLINE OF HYDRAULIC SYSTEM ..... 227

**WEAR PARTS LIST ..... 229**

**USE FUEL, COOLANT AND LUBRICANTS ACCORDING TO AMBIENT TEMPERATURE ..... 230**
PROPER SELECTION OF FUEL, COOLANT AND LUBRICANTS ..... 230

**USE FUEL, COOLANT AND LUBRICANTS ACCORDING TO AMBIENT TEMPERATURE CONT. ..... 232**

**STANDARD TIGHTENING TORQUES FOR BOLTS AND NUTS ..... 234**

INTRODUCTION OF NECESSARY TOOLS ..... 234

**TIGHTENING TORQUE SPECIFICATIONS ..... 235**

TIGHTENING TORQUE LIST ..... 235

**PERIODIC REPLACEMENT OF SAFETY CRITICAL PARTS ..... 236**

SAFETY CRITICAL PARTS ..... 237

**MAINTENANCE SCHEDULE CHART ..... 238**

KEY TO LUBRICATION POINTS ..... 242

**SERVICE PROCEDURE ..... 244**

INITIAL 250 HOURS SERVICE ..... 244
WHEN REQUIRED ..... 245
CHECKING COOLANT LEVEL ..... 253
CHECK AND TIGHTEN WHEEL NUTS ..... 256
CHECK ELECTRICAL INTAKE AIR HEATER ..... 256
CHECK ALTERNATOR ..... 256
REPLACE BUCKET SIDE CUTTERS ..... 257
REPLACE BUCKET TEETH ..... 258
ADJUST BUCKET CLEARANCE ..... 262
CHECK WINDOW WASHER FLUID LEVEL, ADD FLUID ..... 263
CHECK AND ADJUST AIR CONDITIONER ..... 264
CHECK BEFORE STARTING ..... 265
CHECK COOLANT LEVEL, ADD WATER ..... 265
EVERY 50 HOURS ..... 270
EVERY 100 HOURS SERVICE ..... 270
EVERY 250 HOURS MAINTENANCE ..... 276
EVERY 500 HOURS SERVICE ..... 282
EVERY 1000 HOURS SERVICE ..... 290
EVERY 2000 HOURS SERVICE ..... 296
EVERY 4000 HOURS SERVICE ..... 297
EVERY 5000 HOURS SERVICE ..... 298

## SPECIFICATIONS ..... 301

**SPECIFICATIONS ..... 302**

1 - PIECE BOOM ..... 303
2 - PIECE BOOM ..... 304
WORKING RANGE: ONE PIECE BOOM ..... 305
WORKING RANGE: TWO PIECE BOOM ..... 306
WORKING RANGE: ROTATING ARM ..... 307

## OPTIONS, ATTACHMENTS ..... 309

**GENERAL PRECAUTIONS ..... 310**

PRECAUTIONS RELATED TO SAFETY ..... 310

**PRECAUTIONS WHEN INSTALLING ATTACHMENTS ..... 311**

**HANDLING BUCKET WITH HOOK ..... 313**

CHECKING FOR DAMAGE TO BUCKET WITH HOOK ..... 313
PROHIBITED OPERATIONS ..... 313
PRECAUTIONS DURING OPERATIONS ..... 313

**MACHINES READY FOR ATTACHMENTS ..... 314**

GENERAL LOCATIONS ..... 314
HANDLING THE CLAMSHELL BUCKET ..... 316
OPERATION ..... 318
METHOD FOR RELEASING PRESSURE IN CONTROL CIRCUIT OF MACHINES EQUIPPED WITH ACCUMULATOR ..... 321
LONG-TERM STORAGE ..... 321

**INTRODUCTION OF ATTACHMENTS AND EXTENDING MACHINE SERVICE LIFE ..... 322**

HYDRAULIC BREAKER ..... 322
POWER RIPPER ..... 325
FORK GRAB ..... 326
GRAPPLE BUCKET ..... 327
SCRAP GRAPPLE ..... 328
CRUSHER & SMASHER ..... 330
HYDRAULIC PILE DRIVER ..... 331
HYDRAULIC EXCAVATOR WITH MULTIPURPOSE CRANE ..... 332

**ROTATING ARM ..... 337**

GENERAL LOCATION AND SPECIFICATIONS. ..... 337
GENERAL VIEW OF CONTROLS ..... 339
TRAVELLING POSTURE ..... 341
MAINTENANCE ..... 343

# SAFETY

**⚠ WARNING**

**Read and follow all safety precautions. Failure to do so may result in serious injury or death.**

This safety section also contains precautions for optional equipment and attachments.

⚠ WARNING: For reasons of safety, always follow these safety precautions.

# GENERAL PRECAUTIONS

### SAFETY RULES

- ONLY trained and authorised personnel can operate and maintain the machine.
- Follow all safety rules, precautions and instructions when operating or performing maintenance on the machine.
- When working with another operator or a person on work site traffic duty, be sure all personnel understand all hand signals that are to be used.

### SAFETY FEATURES

- Be sure all guards and covers are in their proper position. Have guards and covers repaired if damaged.
- Use safety features such as safety lock lever at all times.
- NEVER remove any safety features. ALWAYS keep them in good operating condition.
- Always wear safety belt when operating machine.
- Improper use of safety features could result in serious bodily injury or death.

### CLOTHING AND PERSONAL PROTECTIVE ITEMS

- Avoid loose clothing, jewellery, and loose long hair. They can catch on controls or in moving parts and cause serious injury or death. Also, do not wear oily clothes because they are flammable.
- Wear a hard hat, safety glasses, safety shoes, mask or gloves when operating or maintaining the machine. Always wear safety goggles, hard hat and heavy gloves if your job involves scattering metal chips or minute materials, this is so particularly when driving pins with a hammer and when cleaning the air cleaner element with compressed air.
  Check also that there is no one near the machine.

  **Driving in pins, see"REPLACEMENT AND INVERSION OF BUCKET (187)"**

  **Cleaning of air cleaner element, see "WHEN REQUIRED (245)" in service procedure.**

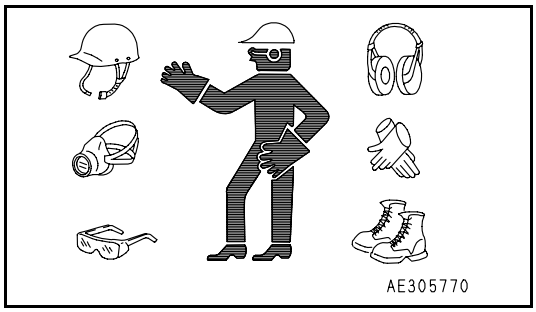


### UNAUTHORISED MODIFICATION

- Any modification made without authorisation from Komatsu can create hazards.
- Before making a modification, consult your Komatsu distributor. Komatsu will not be responsible for any injury or damage caused by any unauthorised modification.

⚠ WARNING: Failure to follow these safety precautions may lead to a serious accident.

**ALWAYS APPLY (RAISE) SAFETY LOCK LEVER WHEN LEAVING OPERATOR'S SEAT**

- When standing up from the operator's seat, always raise the safety lock lever to the LOCK position. If you accidentally touch the travel or swing lever when they are not locked, the machine may suddenly move and cause serious injury or damage.

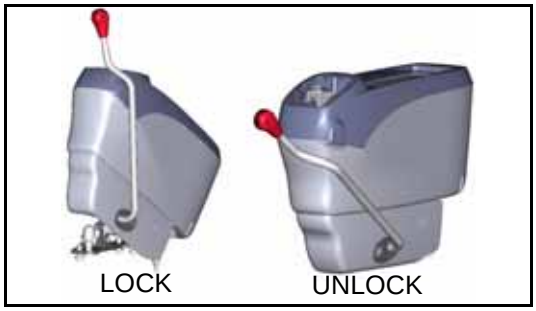


**REMARK**

In certain conditions it may be possible for the safety lock lever to contact the left hand arm rest on the operator seat.
to avoid this, always ensure that the left hand arm rest is stowed in the fully up position before operating the safety lock lever.

- When leaving the machine, lower the work equipment completely to the ground, set the safety lock lever to the LOCK position, then stop the engine and use the key to lock the machine. Always take the key with you.

**⚠ WARNING**

**If the control lever is touched by accident, the work equipment or the machine may move suddenly, and this may lead to a serious accident. Before leaving the operator's compartment, always raise the safety lock lever to lock the work equipment controls.**

**MOUNTING AND DISMOUNTING**

- NEVER jump on or off the machine. NEVER get on or off a moving machine.
- When mounting or dismounting, always face the machine and use the handrails (A), machine or chassis steps (B).
- Do not hold any control levers when getting on or off the machine.
- Ensure safety by always maintaining at least three-point contact of hands and feet with the handrails, steps or wheels.
- Always remove any oil or mud from the handrails, steps and track shoes. If they are damaged, repair them and tighten any loose bolts.
- If grasping the door handrail when mounting or dismounting or moving on the chassis steps, open and lock the door securely in the open position. Otherwise, the door may move suddenly, causing you to lose balance and fall.

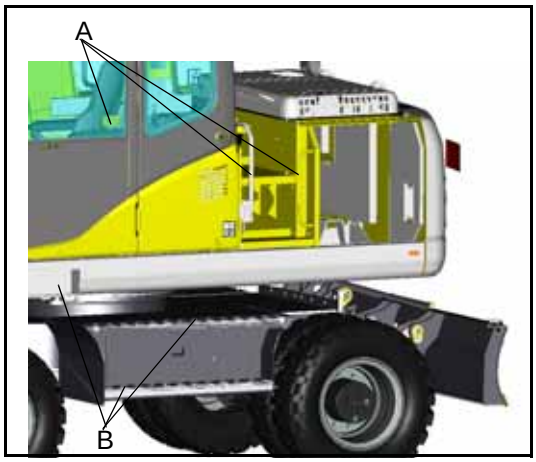


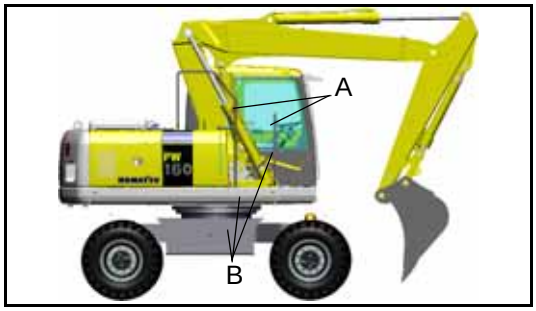

⚠ WARNING: For reasons of safety, always follow these safety precautions.

## FIRE PREVENTION FOR FUEL AND OIL

Fuel, oil, and antifreeze can be ignited by a flame. Fuel is particularly FLAMMABLE and can be HAZARDOUS.

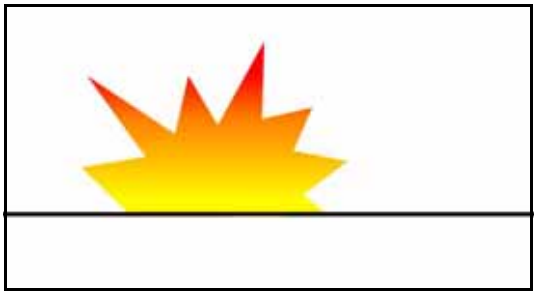

- Keep flames away from flammable fluids.
- Stop the engine and do not smoke when refuelling.
- Tighten all fuel and oil caps securely.

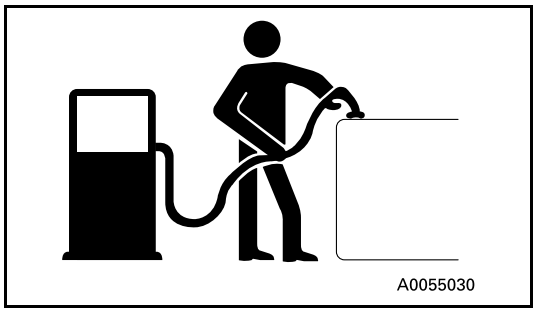


- Refuelling and oiling should be carried out in well ventilated areas.

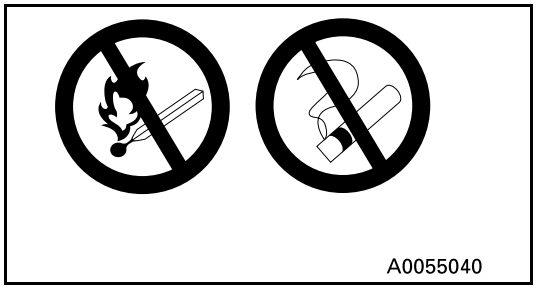


- Keep oil and fuel in a secure place and do not allow unauthorised persons to enter.

## PRECAUTIONS WHEN HANDLING AT HIGH TEMPERATURES

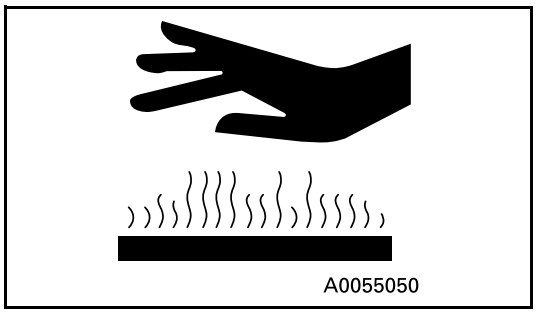


- Immediately after operations are stopped, the engine coolant, engine oil, and hydraulic oil are at high temperatures, and are still under pressure. Attempting to remove the cap, drain the oil or water, or replace the filters may lead to serious burns. Always wait for the temperature to go down, and follow the specified procedures when carrying out these operations.
- To prevent hot water from spurting out:

1. Turn engine off.
2. Allow water to cool.
3. Slowly loosen cap to relieve pressure before removing.

- To prevent hot oil from spurting out:

1. Turn engine off.
2. Allow oil to cool.
3. Slowly loosen cap to relieve pressure before removing.

⚠ WARNING: Failure to follow these safety precautions may lead to a serious accident.

### MACHINES FITTED WITH WHEELS

Never perform any repair work or modifications to wheel rims while the tyres are fitted, and never apply heat in the vicinity of the tyres.

### ASBESTOS DUST HAZARD PREVENTION

Asbestos dust can be HAZARDOUS to your health if it is inhaled.

Your Komatsu machine and genuine Komatsu spare parts do not contain any asbestos. Use only genuine Komatsu spare parts. If spare parts containing asbestos are used, the following precautions must be observed:

- NEVER use compressed air for cleaning.
- Use water for cleaning to keep down the dust.
- Operate the machine with the wind to your back, whenever possible.
- Use an approved respirator if necessary.

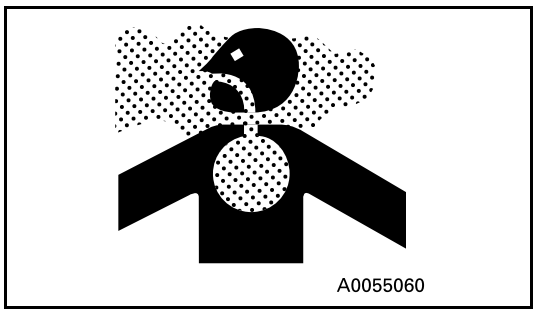
A0055060

### CRUSHING OR CUTTING PREVENTION

Do not enter, or put your hand or arm or any other part of your body between movable parts such as between the work equipment and cylinders, or between the machine and work equipment.
If the work equipment is operated, the clearance will change and this may lead to serious damage or personal injury.

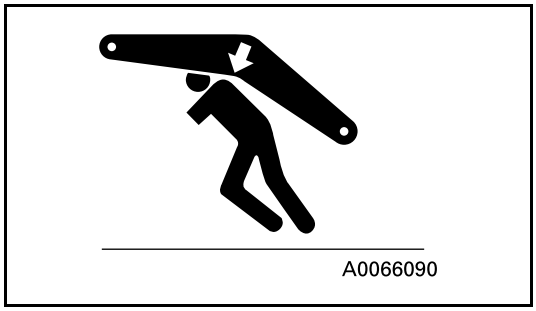
A0066090

### FIRE EXTINGUISHER AND FIRST AID KIT

- Know how to use fire extinguisher (if installed).
- Provide a first aid kit at the storage point.
- Know what to do in the event of a fire.
- Be sure you know the phone numbers of persons you should contact in case of an emergency.

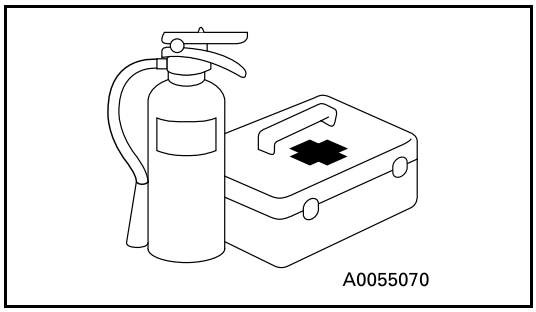
A0055070

⚠ WARNING: For reasons of safety, always follow these safety precautions.

## PROTECTION AGAINST FALLING OR FLYING OBJECTS

If there is any danger of falling or flying objects hitting the operator, install protective guards to protect the operator as required for each particular situation.

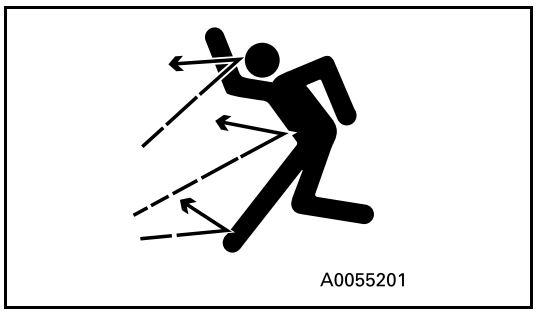


- For work with breakers, install a front guard on the windshield. Also, place a laminate coating sheet over the windshield.
- For demolition or shear work, install a front guard on the windshield and a top guard on the cab. Also, place a laminate coating sheet over the windshield.
- For work in mines, quarries, demolition, tunnels or other places where there is danger of falling rocks, put FOPS (falling object protective structure) in place. Also, place a laminate coating sheet over the windshield.

The above comments are made with regards to typical working conditions. By all means you should put on other guards if required by conditions at your particular site.
For details of safety guards, please contact your Komatsu distributor.

Also, even for other types of work, if there is any danger of being hit by falling or flying objects or of objects entering the operator's cab, select and install a guard that matches the working conditions.

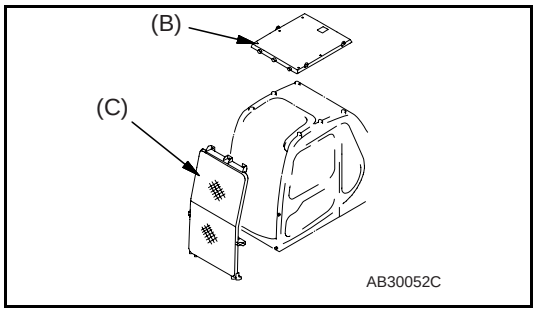


| | |
|---|---|
| (B): Top guard | (C): Front guard |

Be sure to close the front window before commencing work.

When carrying out the above operations, make sure to keep all persons other than the operator outside the range of falling or flying objects. Be particularly sure to maintain a proper distance when carrying out shear operations.

## PRECAUTIONS FOR ATTACHMENTS

- When installing and using an optional attachment, read the instruction manual for the attachment and the information related to attachments in this manual.
- Do not use attachments that are not authorised by Komatsu or your Komatsu distributor. Use of unauthorised attachments could create a safety problem and adversely affect the proper operation and useful life of the machine.
- Any injuries, accidents, product failures resulting from the use of unauthorised attachments will not be the responsibility of Komatsu.

## MACHINES WITH ACCUMULATOR

On machines equipped with an accumulator, for a short time after the engine is stopped, the work equipment will lower under its

⚠ WARNING: Failure to follow these safety precautions may lead to a serious accident.

own weight when the work equipment control lever is shifted to LOWER. After the engine is stopped, raise safety lock lever to the LOCK position.

When releasing the pressure inside the work equipment circuit on machines equipped with an accumulator, follow the procedure given in the inspection and maintenance section.

**Method of releasing pressure, see "HANDLING ACCUMULATORS (146)"**

The accumulator is filled with high-pressure nitrogen gas, and it is extremely dangerous if it is handled in the wrong way. Always observe the following precautions.

- Never make any hole in the accumulator or expose it to flame or fire.
- Do not weld anything to the accumulator.
- When carrying out disassembly or maintenance of the accumulator, or when disposing of the accumulator, it is necessary to release the gas from the accumulator. A special bleed valve is necessary for this operation, so please contact your Komatsu distributor.

  **Gas in accumulator, see "HANDLING ACCUMULATORS (146)"**

**EMERGENCY EXIT**

- When exit by normal means is prevented in an emergency you can get out through the emergency exit (rear window).
- Pull the ring at the bottom of the window and remove strip. This will allow you to push out glass.

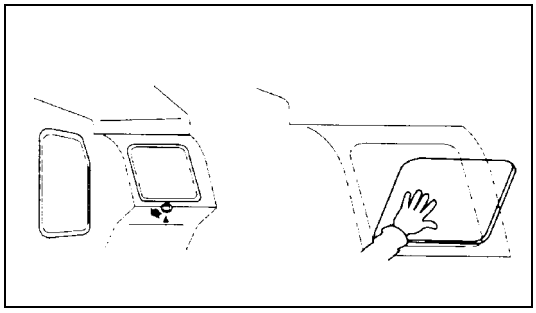

**ROTATING BEACON (Option)**

- When the machine is operated on or beside a road, a rotating beacon is required to avoid a traffic accident.
- Contact your Komatsu distributor to install beacon lamp.

**ELECTROMAGNETIC INTERFERENCE**

When this machine is operating close to a source of high electromagnetic interference, such as a radar station, some abnormal phenomena may be observed.

⚠ WARNING: For reasons of safety, always follow these safety precautions.

- The display on the monitor panel may behave erratically.
- The warning buzzer may sound.

These effects do not signify a malfunction and the machine will return to normal as soon as the source of interference is removed.

⚠ WARNING: Failure to follow these safety precautions may lead to a serious accident.

# PRECAUTION DURING OPERATION

## BEFORE STARTING ENGINE

### SAFETY AT WORKSITE

- Before starting the engine, thoroughly check the area for any unusual conditions that could be dangerous.
- Before starting the engine, examine the terrain and soil conditions of the work site. Determine the best and safest method of operation.
- Make the slope as horizontal as possible before continuing operations.
- If you need to operate on a street, protect pedestrians and cars by designating a person for work site traffic duty or by installing fences around the work site.
- If water lines, gas lines, and high-voltage electrical lines may be buried under the work site, contact each utility and identify their locations. Be careful not to sever or cut any of these lines.
- Check the depth and flow of water before operating in water or crossing a river. NEVER be in water which is in excess of the permissible water depth.

  **Permissible water depth, see "PRECAUTIONS FOR OPERATION (182)"**

### FIRE PREVENTION

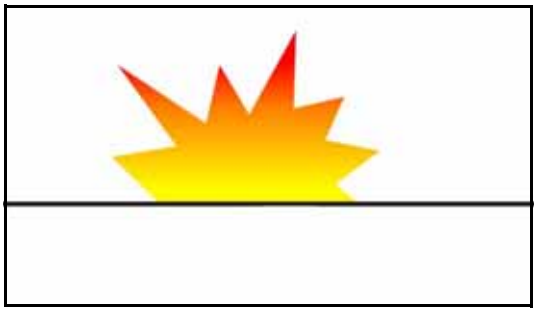

- Thoroughly remove wood chips, leaves, paper and other flammable things accumulated in the engine compartment. They could cause a fire.
- Check fuel, lubrication, and hydraulic systems for leaks. Have any leaks repaired. Wipe up any excess oil, fuel or other flammable fluids.

  **Check point, see "WALK-AROUND CHECK (147)"**

- Be sure a fire extinguisher is present and working.

### IN OPERATOR'S CAB

- Do not leave tools or spare parts lying around in the operator's compartment. They may damage or break the control levers or switches. Always put them in the tool box on the undercarriage.
- Keep the cab floor, controls, steps and handrails free of oil, grease, snow, and excess dirt.

⚠ WARNING: For reasons of safety, always follow these safety precautions.

### VENTILATION FOR ENCLOSED AREAS

If it is necessary to start the engine within an enclosed area, provide adequate ventilation. Exhaust fumes from the engine can KILL.

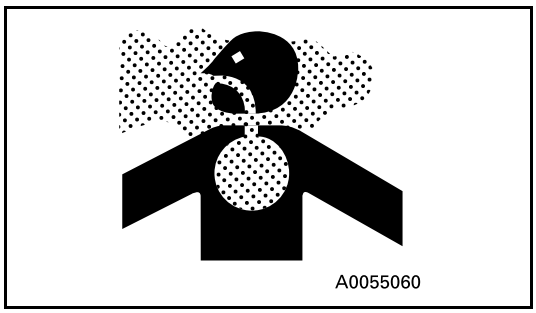


### PRECAUTIONS FOR MIRRORS, WINDOWS AND LIGHTS

- Remove all dirt from the surface of the windows and lights to ensure that you can see well.
- Adjust the rear view mirrors so that you can see clearly from the operator's seat, and always keep the surface of the mirrors clean. If any glass is broken, replace it with a new part.
- Check that the head lamps and working lamps are installed to match the operating conditions. Check also that they light up properly.

## OPERATING MACHINE

### WHEN STARTING THE ENGINE

- Walk around for machine again just before mounting it, to check for people and objects that might be in the way.
- NEVER start the engine if a warning tag has been attached to the wrist control.
- Before starting the engine, sound the horn as an alert.
- Start and operate the machine only while seated.
- Do not allow anyone other than the operator to ride in the cab or on the machine body.
- For machines equipped with a reverse alarm buzzer, check that the warning device operates correctly.

### CHECK DIRECTION BEFORE STARTING MACHINE

Before operating the travel pedal, check the direction of the under carriage.
If the fixed axle is at the front, the forward/neutral/reverse lever and steering will function in the opposite direction.

| | |
|---|---|
| A | Fixed axle |
| B | Oscillating axle |

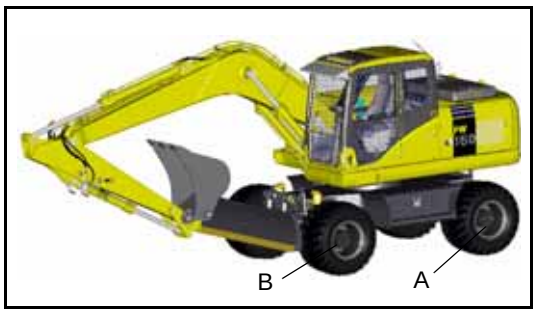


**Travel operations, see "MOVING MACHINE OFF (169)"**

⚠ WARNING: Failure to follow these safety precautions may lead to a serious accident.

**CHECK THAT NO ONE IS IN THE AREA BEFORE SWINGING OR TRAVELLING IN REVERSE**

- Always position a signalman when operating in dangerous places or places where the view is not clear.
- Make sure that no one comes inside the swing radius or direction of travel.
- Before starting to move, sound the horn or give a signal to warn people not to come close to the machine.

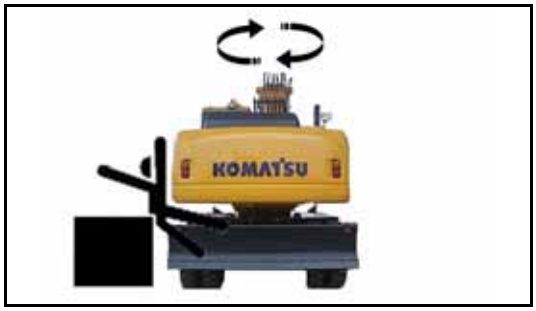


- There are blind spots behind the machine, so if necessary, swing the upper structure to check that there is no one behind the machine before travelling in reverse.

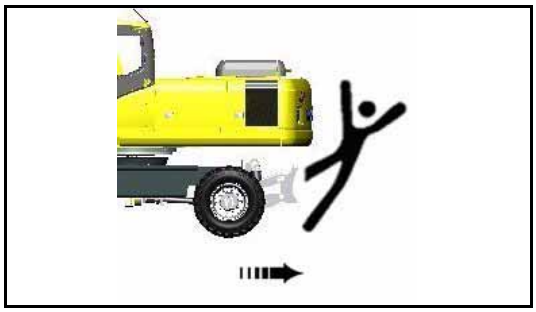

**PRECAUTIONS WHEN TRAVELLING**

- Fold in the work equipment as shown in the diagram, and keep it at a height of 40-50 cm from the ground level before starting to travel.
- Before travelling on public roads, fully raise dozer blade and outriggers, lock the outriggers in position with the safety pin, lock the bucket and arm cylinder with isolation valves, and insert swing lock pin.

  **For details, see "TRAVELLING ON PUBLIC HIGHWAY (173)"**

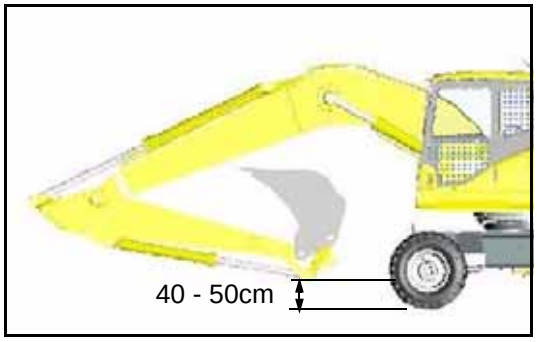


- When travelling on public roads the safety lock lever should be down (UNLOCKED) and lock lever switch engaged. This prevents operation of the control levers and activates the rear facing brake lamp circuit.
- When travelling on rough ground, travel at low speed, and avoid sudden changes in direction.
- Avoid travelling over obstacles as far as possible. If the machine has to travel over an obstacle, keep the work equipment as close to the ground as possible and travel at low speed. Never travel over obstacles which make the machine tilt strongly (10° or more).

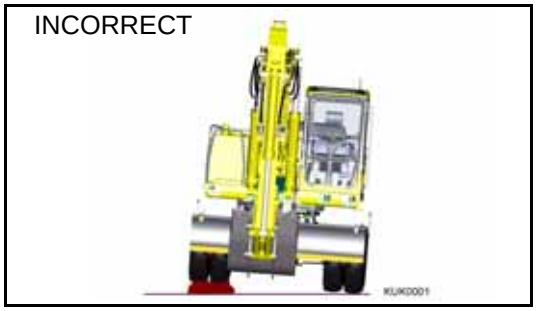

⚠ WARNING: For reasons of safety, always follow these safety precautions.

**TRAVELLING ON SLOPES**

- Travelling on hills, banks or slopes that are steep could result in the machine tipping over or slipping.
- On hills, banks or slopes, carry the bucket closer to the ground, approximately 20 to 30 cm above the ground. In case of emergency, quickly lower the bucket to the ground to help the machine stop and prevent it from tipping over.

- Do not turn on slopes or travel across slopes. Always go down to a flat place to perform these operations.

  **Method of travelling on slopes, see "PRECAUTIONS WHEN TRAVELLING UP OR DOWN HILLS (184)"**

Do not travel up and down on grass, fallen leaves, and wet steel plates. These materials may allow the machine to slip, if it is travelling sideways. Keep travel speed very low.

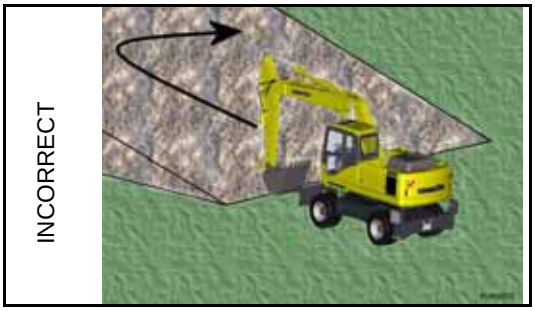


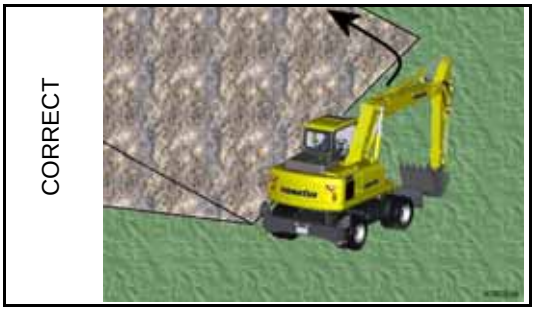

⚠ WARNING: Failure to follow these safety precautions may lead to a serious accident.

**PROHIBITED OPERATIONS**

- Do not dig the work face under an overhang. This may cause the overhang to collapse and fall on top of the machine.

- Do not carry out deep digging under the front of the machine. The ground under the machine may collapse and cause the machine to fall.

.

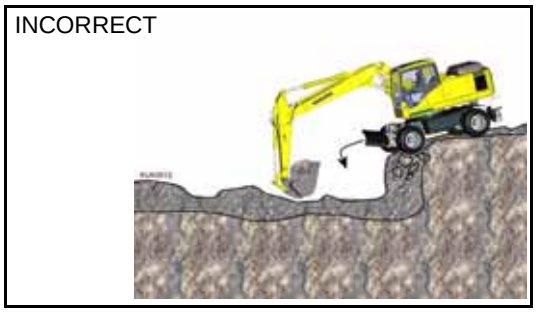


**DO NOT GO CLOSE TO HIGH-VOLTAGE CABLES**

Going close to high-voltage cables can cause electric shock. Always maintain the safe distance given below, between the machine and the electric cable.

- The following actions are effective in preventing accidents.
  1) Wear shoes with rubber or leather soles.
  2) Use a signalman to give warning if the machine approaches too close to the electric cable.
- If the work equipment should touch the electric cable, the operator should not leave the operator's compartment.
- When carrying out operations near high voltage cables, do not let anyone come close to the machine.
- Check with the electricity company about the voltage of the cables before starting operations.

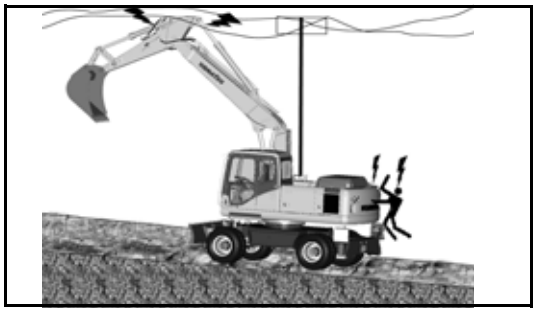

| Voltage | Min. safety distance |
|---|---|
| 6.6 kV | 3 m |
| 33.0 kV | 4 m |
| 66.0 kV | 5 m |
| 154.0 kV | 8 m |
| 275.0 kV | 10 m |

⚠ WARNING: For reasons of safety, always follow these safety precautions.

**DO NOT HIT WORK EQUIPMENT**

- When working in places where there are height limits, such as in tunnels, under bridges, under electric cables, or in garages, be extremely careful not to hit the boom or arm.

**ENSURE GOOD VISIBILITY**

- When working in dark places, install working lamps, and set up lighting in the work area if necessary.
- Stop operations if the visibility is poor, such as in mist, snow, or rain, and wait for the weather to improve to a condition that allows the operation to be carried out safely.

**OPERATE CAREFULLY ON SNOW**

- When working on snow or icy roads, even a slight slope may cause the machine to slip to the side, so always travel at low speed and avoid sudden starting, stopping, or turning.
- When there has been heavy snow, the road shoulder and objects placed beside the road are buried in the snow and cannot be seen, so always carry out snow-clearing operations carefully.

**WORKING ON LOOSE GROUND**

- Avoid operating your machine too close to the edge of cliffs, overhangs, and deep ditches. If these areas collapse, your machine could fall or tip over and result in serious injury or death. Remember that the soil after heavy rain or blasting is weakened in these areas.
- Earth laid on the ground and the soil near ditches are loose. They can collapse under the weight or vibration of your machine.
- Install the HEAD GUARD (FOPS) if working in areas where there is danger of falling rocks and dirt.

**DO NOT HIT THE OPERATOR CAB (for two piece boom only)**

- When the second boom cylinder is retracted, the bucket or the attachment can hit the operator cab or chassis.
- Operate work equipment slowly and carefully to avoid any injury and damage.

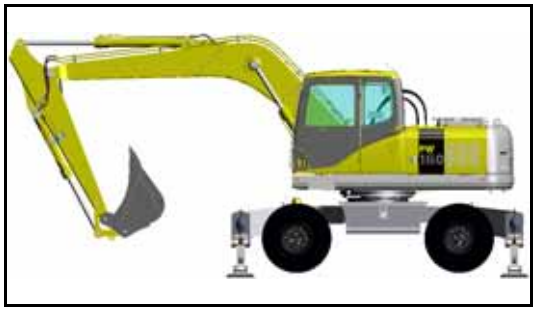

⚠ WARNING: Failure to follow these safety precautions may lead to a serious accident.

**OPERATIONS ON SLOPES**

- When working on slopes, there is danger that the machine may lose its balance and turn over when the swing or work equipment are operated. Always carry out these operations carefully.
- Do not swing the work equipment from the uphill side to the downhill side when the bucket is loaded. This operation is dangerous.
  (See the upper diagram on the right.)

- If the machine has to be used on a slope, pile the soil to make a platform that will keep the machine as horizontal as possible.
  (See the lower diagram on the right.)

  **Piled soil on slope, see "PRECAUTIONS WHEN TRAVELLING UP OR DOWN HILLS (184)"**

⚠ WARNING: For reasons of safety, always follow these safety precautions.

**PARKING THE MACHINE**

Park on level ground whenever possible. If not possible, chock the wheels, lower the bucket to the ground and thrust the bucket in the ground.

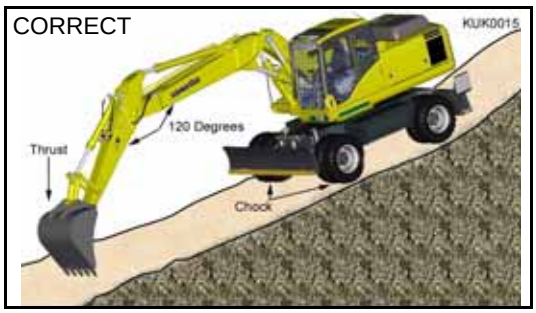


- When parking on public roads, provide fences and signs, such as flags or lights, on the machine to warn passers by to be careful. Be sure that the machine, flags or lights do not obstruct traffic.

**REMARK**

In certain conditions it may be possible for the safety lock lever to contact the left hand arm rest on the operator seat.
To avoid this, always ensure that the left hand arm rest is stowed in the fully up position before operating the safety lock lever.

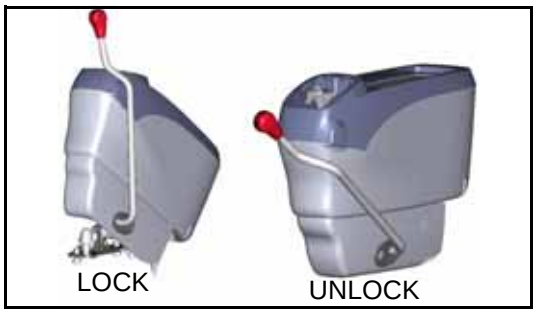


- When leaving the machine, lower the work equipment completely to the ground, raise the safety lock lever to the LOCK position, then stop the engine and use the key to lock the machine. Always take the key with you.

**⚠ WARNING**

**if the control lever is touched by accident, the work equipment or the machine may move suddenly, and this may lead to a serious accident. Before leaving the operator's compartment, always raise the safety lock lever to lock the work equipment controls.**

**Places to lock, see "LOCKING (190)"**

⚠ WARNING: Failure to follow these safety precautions may lead to a serious accident.

# TRANSPORTATION

## LOADING AND UNLOADING

- Loading and unloading the machine always involves potential hazards. EXTREME CAUTION SHOULD BE USED.
  When loading or unloading the machine, run the engine at low idling and travel at low speed.
- Perform loading and unloading on firm, level ground only. Maintain a safe distance from the edge of a road.
- ALWAYS block the wheels of the hauling vehicle and place blocks under both ramps before loading and unloading.
- ALWAYS use ramps of adequate strength. Be sure the ramps are wide and long enough to provide a safe loading slope.
- Be sure that the ramps are securely positioned and fastened, and that the two sides are at the same level as one another.
- Be sure the ramp surface is clean and free of grease, oil, ice and loose materials. Remove dirt from the machine wheels.
- NEVER correct your steering on the ramps. If necessary, drive away from the ramps and climb again.
- Swing the upper structure with extreme care on the trailer to avoid a possible accident caused by body instability.
- After loading, block the machine wheels and secure the machine with tie-downs.

**Loading and unloading, see "TRANSPORTATION (195)"**

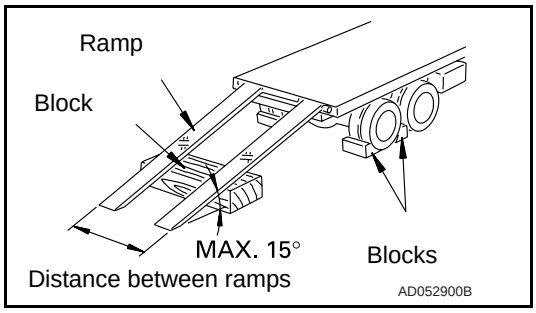


## SHIPPING

- When shipping the machine on a hauling vehicle, obey all state and local laws governing the weight, width, and length of a load. Also obey all applicable traffic regulations.
- Determine the shipping route while taking into account the width, height and weight of the load.

⚠ WARNING: For reasons of safety, always follow these safety precautions.

# BATTERY

## BATTERY HAZARD PREVENTION

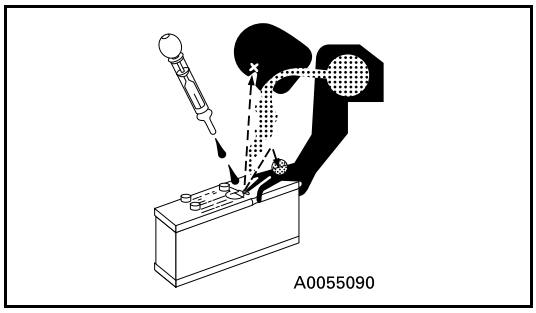


- Battery electrolyte contains sulphuric acid and can quickly burn the skin and eat holes in clothing. If you spill acid on yourself, immediately flush the area with water.
- Battery acid could cause blindness if splashed into the eyes. If acid gets into the eyes, flush them immediately with large quantities of water and see a doctor at once.
- If you accidentally drink acid, drink a large quantity of water or milk, beaten egg or vegetable oil. Call a doctor or poison prevention centre immediately.
- When working with batteries. ALWAYS wear safety glasses or goggles.

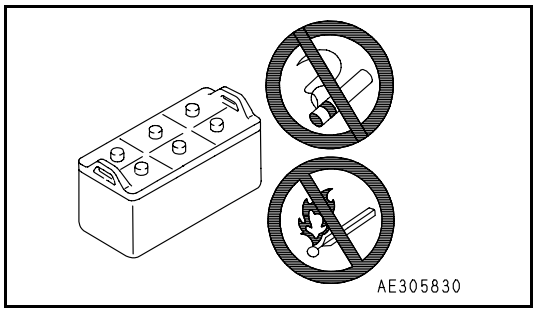


- Batteries generate hydrogen gas. Hydrogen gas is very EXPLOSIVE, and is easily ignited with a small spark or flame.
- Before working with batteries, stop the engine and turn the starting switch to the OFF position.
- Avoid short-circuiting the battery terminals through accidental contact with metallic objects, such as tools, across the terminals.

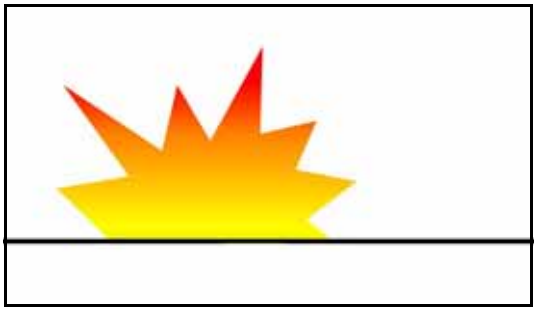

- When removing or installing, check which is the positive (+) terminal and negative (-) terminal.
- Tighten the battery cap securely.
- Tighten the battery terminals securely. Loosened terminals can generate sparks and lead to an explosion.
- When removing battery cap wear rubber groves to prevent electrolyte contact with skin.

⚠ WARNING: Failure to follow these safety precautions may lead to a serious accident.

### STARTING WITH BOOSTER CABLES

- ALWAYS wear safety glasses or goggles when starting the machine with booster cables.
- When starting from another machine, do not allow the two machines to touch.
- Be sure to connect the positive (+) cable first when installing the booster cables. Disconnect the ground or negative (-) cable first when removing them.
- If any tool touches between the positive (+) terminal and the chassis, it will cause sparks. This is dangerous, so be sure to work carefully.
- Connect the batteries in parallel: positive to positive and negative to negative.
- When connecting the ground cable to the frame of the machine to be started, be sure to connect it as far away as possible from the battery.

  **Starting with booster cables, see "DISCHARGED BATTERY (210)"**

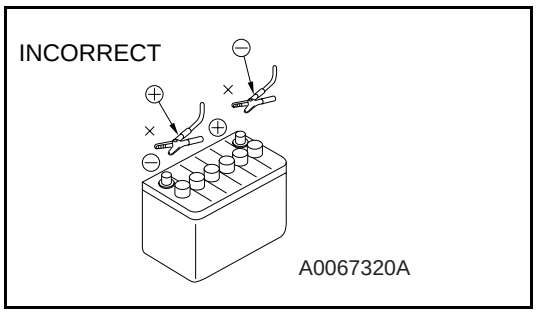


## TOWING

### WHEN TOWING, ATTACH WIRE TO FRAME

- Injury or death could result if a disabled machine is towed incorrectly.
- If your machine is towed by another machine, ALWAYS use a wire rope with a sufficient towing capacity.
- NEVER allow a disabled machine to be towed on a slope.
- Do not use a chinked or frayed wire rope.
- If towing on the highway, a rigid tow bar should be used and not a tow rope of any kind.
- Do not straddle the towing cable or wire rope.
- When connecting up a towing machine, do not let anyone enter the area between the towing machine and the equipment being towed.
- Set the towing machine and the towing connection of the equipment being towed in a straight line when connecting it.
- Place pieces of wood between the wire ropes and chassis body to protect them from wear of damage.

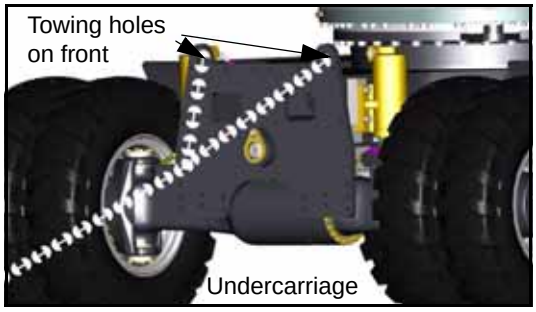


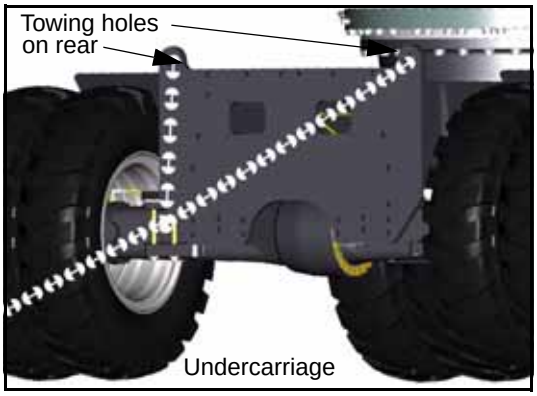


When towing the machine without the engine running or in the advent of loss of hydraulic pressure, its is necessary to manually release the park brake, as follows.

⚠ WARNING: For reasons of safety, always follow these safety precautions.

**View on transmission**

Releasing the park brake before towing:

1. Unscrew bolt (A) 2-3 turns which will allow bolt (B) to rotate (DO NOT REMOVE BOLT 'A').
2. Turn park brake release bolt (B) 180 degrees, the indicator mark located at the top, moves to the bottom, which will disengage the park brake.
3. Re-tighten bolt (A) to lock the park brake in the disengaged position for towing.

To reset the park brake:

1. Unscrew bolt (A) (Torque=20Nm)2~3 turns, this allows bolt (B) to rotate. (DO NOT REMOVE BOLT 'A')
2. Turn park brake release bolt (B) 180 degrees so that indicator mark is located at the top position.
3. Re-tighten bolt (A) (Torque 20Nm)

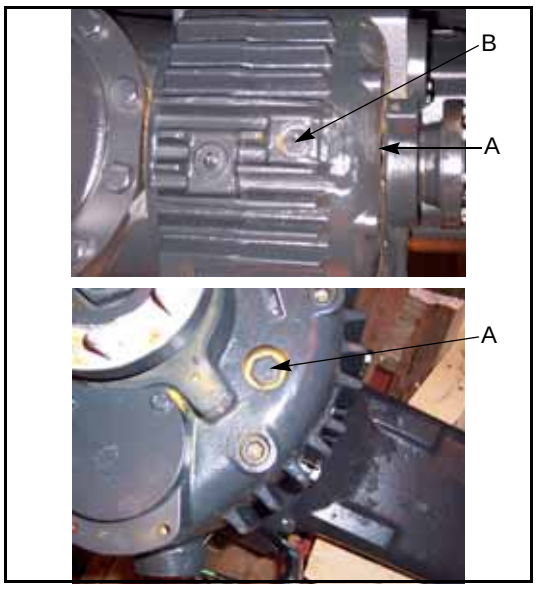


**⚠ WARNING**

**Operator must not operate the travel system (i.e rotate the travel motor) when the transmission disengagement pin is rotated to towing position.**

# BUCKET WITH HOOK OR BUCKET LINK WITH LIFTING EYE

## GENERAL PRECAUTIONS

### SPECIAL HOOK

- When carrying out lifting work, a special lifting hook or lifting eye is necessary.
- The lifting hook must be fitted with a safety latch to prevent accidental un-hooking of the load.

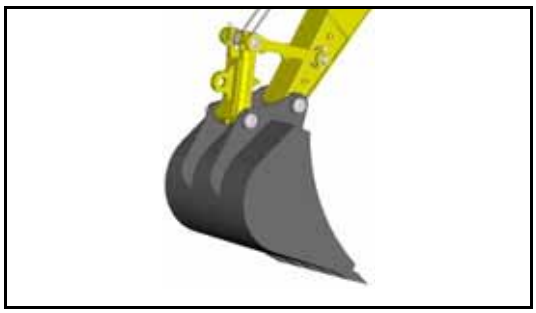

- The following operations are prohibited.
  - Lifting loads with a wire rope fitted around the bucket teeth.
  - Lifting loads with the wire rope wrapped directly around the boom or arm.
  - Check safe working load of lifting equipment.

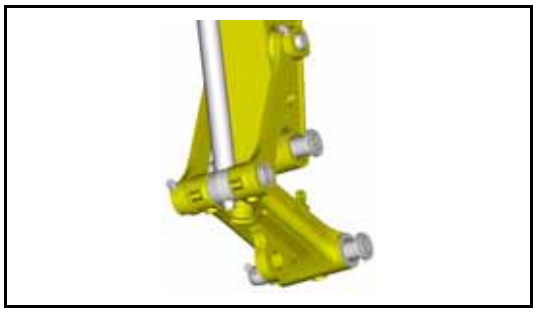

⚠ WARNING: Failure to follow these safety precautions may lead to a serious accident.

**CHECKING HOOK**

- When lifting a load, carry out the following checks to confirm that there is no abnormality before starting operations.
  - Check that there are no cracks or deformation in the lifting equipment.
  - Check that there is no abnormality in the safety latch of the hook.

**HOOKING WIRE ROPE SECURELY TO HOOK**

- When performing lifting operation, securely hook the wire rope onto the special lifting hook or lifting eye.

**PRECAUTIONS FOR MACHINE INSTALLATION**

- After carrying out a preliminary inspection of ground conditions, select a flat, solid location. Confirm that the machine can be safely operated without toppling or rolling.

**PROHIBITED OPERATIONS OTHER THAN MAIN APPLICATIONS**

- When performing lifting operation, never raise or lower a person.

**NO PERSONS SHALL BE PERMITTED TO ENTER THE WORKING AREA**

- Due to the possible danger of the load falling or of collision with the load, no persons shall be allowed in the working area.

**OPERATION SUPERVISOR**

- Before performing lifting operation, designate an operation supervisor.
  Always execute operation according to his instructions.
  - Execute operating methods and procedures under his direction.
  - Select a person responsible for signalling. Operate only on signals given by such person.

**HANDLING OF WIRE ROPES ETC.**

- Wear leather gloves when handling wire ropes.

**PROTECTING EYES**

- Some oils and fluids can damage eyes. Refer to manufactured data sheet for handling and storage instructions.

⚠ WARNING: For reasons of safety, always follow these safety precautions.

## PRECAUTIONS FOR LIFTING OPERATION

### GRADUAL LIFTING OPERATION

- When carrying out lifting operations, run the engine at low idling and use the L (lifting operation mode).
- Avoid sudden lever shifting and acceleration.
- Swing speed is three to four times that of mobile cranes. Therefore, be especially careful when performing swing operation.

### NEVER LEAVE THE OPERATOR'S SEAT

- Never leave the operator's seat while lifting a load.

### NEVER CARRY OUT EXCESSIVE OPERATIONS

- Operation exceeding machine performance may result in accident or failure.
- Carry out lifting operation within specified load limit of machine and lifting equipment.
- Never carry out operations which may damage the machine such as overload or over-impact-load.
- Never drag a load laterally or longitudinally, nor retract the arm, otherwise, a dangerous situation may result.

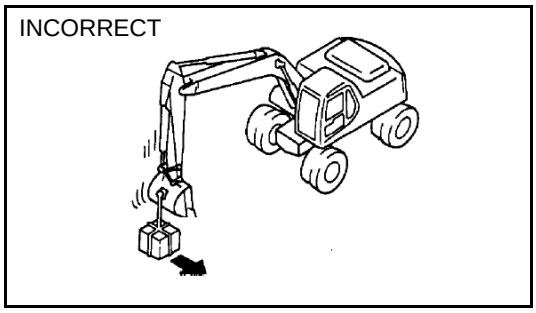


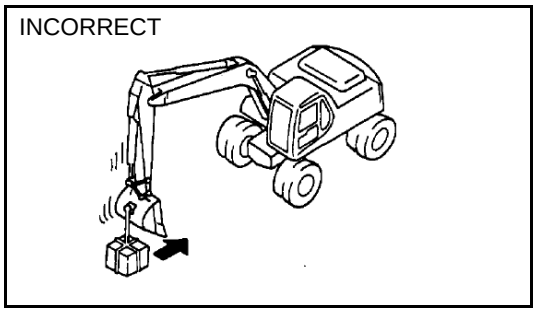


### NEVER TRAVEL WHILE LIFTING A LOAD

- Never travel while carrying a load.

### OPERATING POSTURE

- If the machine posture is not correct, the wire ropes or ring may detach from the hook. Confirm that the hook angle is correct to avoid this.

### HANDLING OF FLUIDS

- Some oils and other fluids, such as Antifreeze, can be harmful to you and the environment, you should therefore always follow the manufacturers instructions regarding storage, handling and disposal.

### HANDLING OF USED ENGINE OILS

- Avoid contact with used engine oils.
- Refer to engine oils data sheet for handling and storage precautions.

### HANDLING OF OILS

- For diesel oils, hydraulic oils and oils used in the swing machinery, PTO, transmission axles and hubs avoid prolonged or frequent contact with skin.

⚠ WARNING: Failure to follow these safety precautions may lead to a serious accident.

- Refer to manufacturers data sheet for handling and storage precautions.

**HANDLING OF FLUIDS**

- For antifreeze and grease refer to manufacturers data sheet for handling and storage precautions.

⚠ WARNING: For reasons of safety, always follow these safety precautions.

# PRECAUTIONS FOR MAINTENANCE

## BEFORE CARRYING OUT MAINTENANCE

### WARNING TAG

- If others start the engine or operate the controls while you are performing service or lubrication, you could suffer serious injury or death.
- ALWAYS attach the WARNING TAG to the control lever in the operator's cab to alert others that you are working on the machine. Attach additional warning tags around the machine, if necessary.
- These tags are available from your Komatsu distributor. (Part no. 20E-00-K1340)

### PROPER TOOLS

- Use only tools suited to the task. Using damaged, low quality, faulty, or makeshift tools could cause personal injury.

  **Tools, see "INTRODUCTION OF NECESSARY TOOLS (234)"**

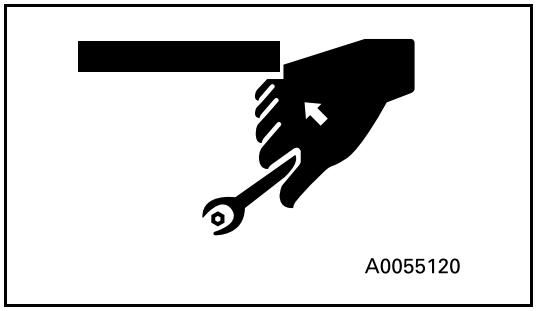


### PERIODIC REPLACEMENT OF SAFETY CRITICAL PARTS

- Replace the following fire-related components periodically:
  Fuel system: Fuel hose, spilling hose, and fuel tube cap.
  Hydraulic system: Pump outlet hose.
- Replace these components periodically with new ones, regardless of whether or not they appear to be defective. These components deteriorate over time.
- Replace or repair any such components if any defect is found, event though they have not reached the time specified.

  **Replacement of safety critical components, see "PERIODIC REPLACEMENT OF SAFETY CRITICAL PARTS (236)"**

### STOP THE ENGINE BEFORE CARRYING OUT INSPECTION AND MAINTENANCE

- Always stop the machine on firm flat ground and stop the engine before carrying out inspection and maintenance.
- If it is necessary to run the engine when carrying out maintenance, such as when cleaning the inside of the radiator, Raise the safety lock lever to the LOCK position and carry out the operation with two workers.

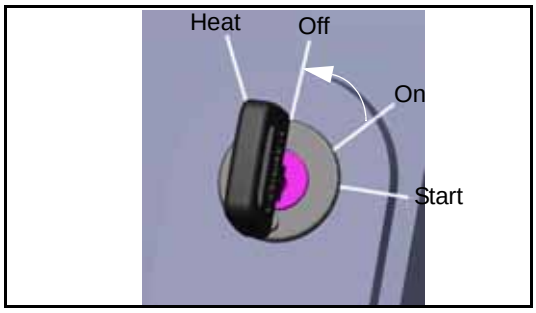

⚠ WARNING: Failure to follow these safety precautions may lead to a serious accident.

- One worker should sit in the operator's seat so that he can stop the engine immediately if necessary. He should also be extremely careful not to touch any lever by mistake. Touch the levers only when they have to be operated.
- The worker carrying out the maintenance should be extremely careful not to touch or get caught in the moving parts.

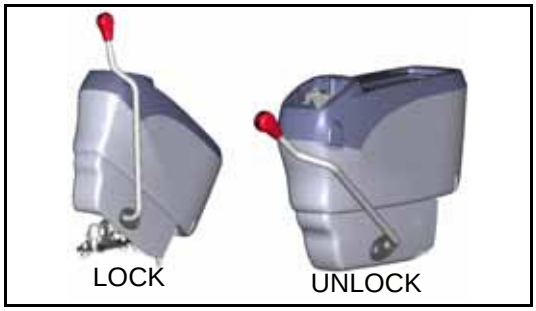


**RULES TO FOLLOW WHEN ADDING FUEL OR OIL**

- Spilt fuel and oil may cause you to slip, so always wipe it up immediately.
- Always tighten the cap of the fuel and oil fillers securely.

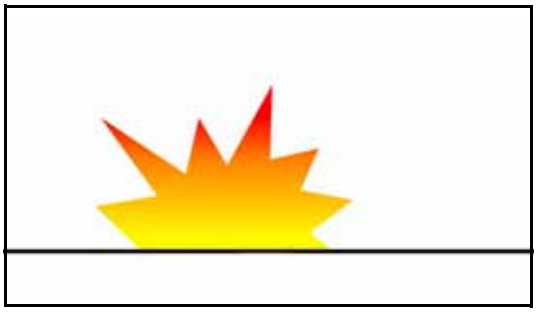

- Never use fuel for washing any parts.

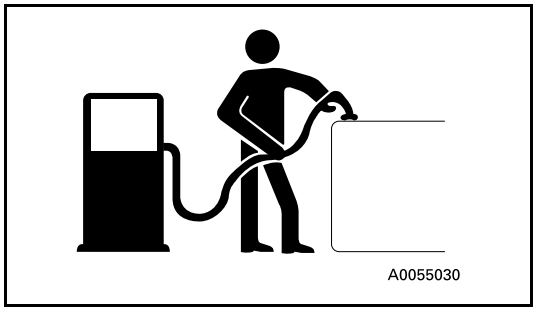


- Always add fuel and oil in a well-ventilated place.

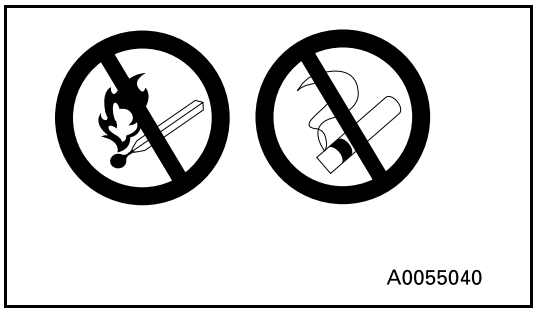

⚠ WARNING: For reasons of safety, always follow these safety precautions.

**RADIATOR WATER LEVEL**

- If it is necessary to add water to the radiator, stop the engine and allow the engine and radiator to cool down before adding the water.

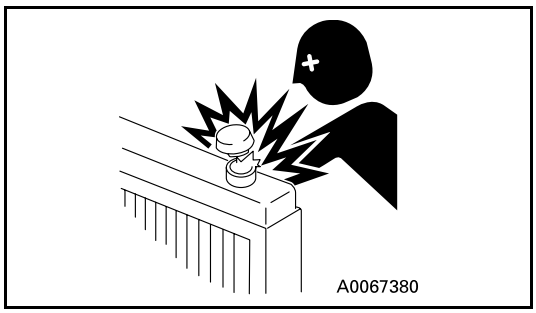


- Slowly loosen the caps to relieve pressure before removing the caps.

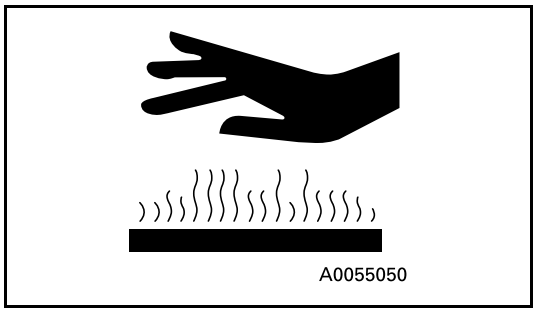


**USE OF LIGHTING**

- When checking fuel, oil, coolant, or battery electrolyte, always use lighting with anti-explosion specifications.
  If such lighting equipment is not used, there is danger of explosion.

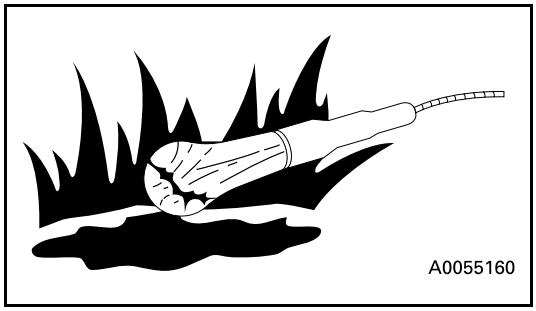

⚠ WARNING: Failure to follow these safety precautions may lead to a serious accident.

# DURING MAINTENANCE

### PERSONNEL

- Only authorised personnel can service and repair the machine. Extra precaution should be used when grinding, welding, and using a sledge-hammer.

### ATTACHMENTS

- Place attachments that have been removed from the machine in a safe place so that they do not fall. If they fall on you or others, serious injury could result.

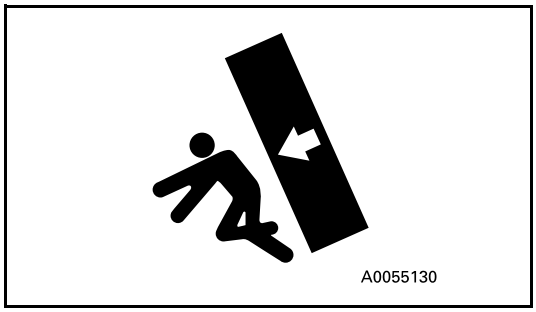


### WORK UNDER THE MACHINE

- Always lower all movable work equipment to the ground or to their lowest position before performing service or repairs under the machine.
- Always chock the wheels of the machine securely.
- Never work under the machine if the machine is poorly supported.

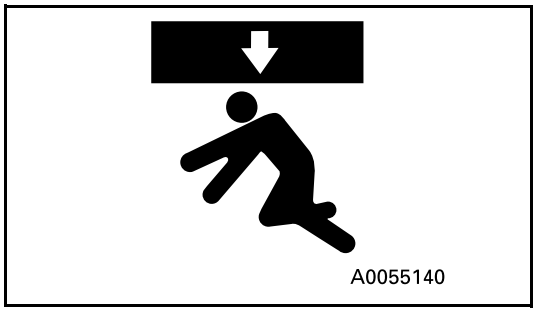


### KEEP THE MACHINE CLEAN

- Spilt oil or grease, or scattered tools or broken pieces are dangerous because they may cause you to slip or trip.
  Always keep your machine clean and tidy.
- If water gets into the electrical system, there is danger that the machine may not move or may move unexpectedly.
  Do not use water or steam to clean the sensors, connectors, or the inside of the operator's compartment.

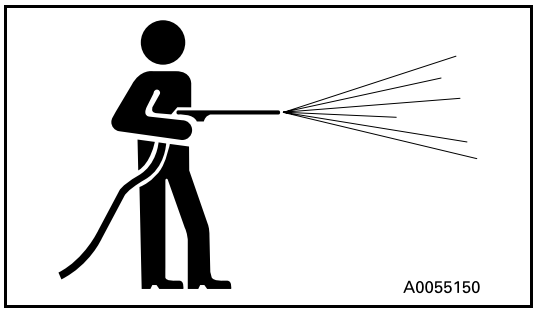


### PRECAUTIONS WITH BATTERY

- When repairing the electrical system or when carrying out electrical welding, remove the negative (-) terminal of the battery to stop the flow of current.

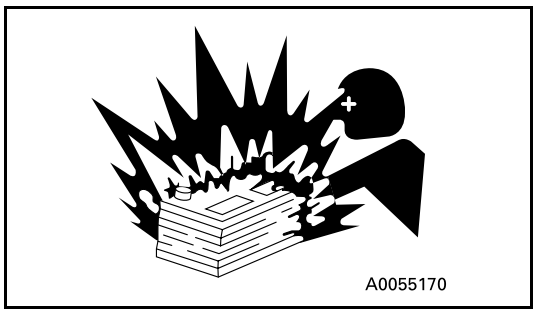

⚠ WARNING: For reasons of safety, always follow these safety precautions.

**HANDLING HIGH-PRESSURE HOSES**

- Do not bend high-pressure hoses or hit them with hard objects. Do not use any bent or cracked piping, tubes or hoses. They may burst during use.
- Always repair any loose or broken fuel hoses or oil hoses. If fuel or oil leaks, it may cause a fire.

**PRECAUTIONS WITH HIGH PRESSURE OIL**

- Do not forget that the work equipment circuits are always under pressure.
- Do not add oil, drain oil, or carry out maintenance or inspection before completely releasing the internal pressure.
- If oil is leaking under high pressure from small holes, it is dangerous if the jet of high-pressure oil hits your skin or enters your eyes. Always wear safety glasses and thick gloves, and use a piece of cardboard or a sheet of wood to check for oil leakage.
- If you are hit by a jet of high-pressure oil, consult a doctor immediately for medical attention.

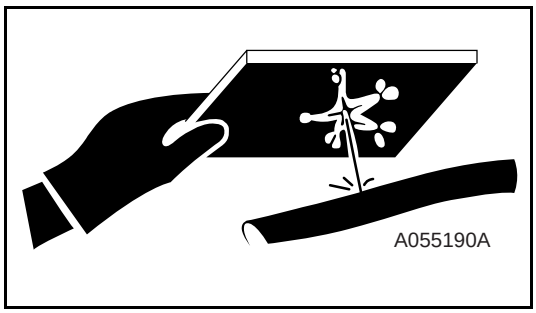


**PRECAUTIONS WHEN CARRYING OUT MAINTENANCE AT HIGH TEMPERATURE OR HIGH PRESSURE**

- Immediately after stopping operations, the engine cooling water and oil at all parts is at high temperature and under high pressure.
  In this condition, if the cap is removed, or the oil or water are drained, or the filters are replaced, this may result in burns or other injury. Wait for the temperature to go down, then carry out the inspection and maintenance in accordance with the procedures given in this manual.

  **Cleaning inside or cooling system, see "WHEN REQUIRED (245)"**

  **Checking cooling water level, hydraulic oil level, see "CHECK COOLANT LEVEL, ADD WATER (265)"**

  **Checking lubricating oil level, adding oil, see "MAINTENANCE SCHEDULE CHART (238)"**

  **Changing oil, replacing filters, see "MAINTENANCE SCHEDULE CHART (238)"**

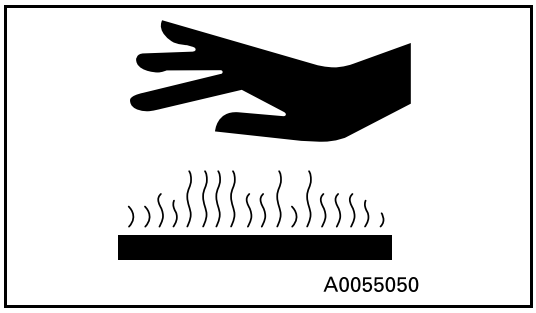

⚠ WARNING: Failure to follow these safety precautions may lead to a serious accident.

**ROTATING FAN AND BELT**

- Keep away from rotating parts and be careful not to let anything get caught in them.
- If your body or tools touch the fan blades or fan belt, they may be cut off or sent flying, so never touch any rotating parts.

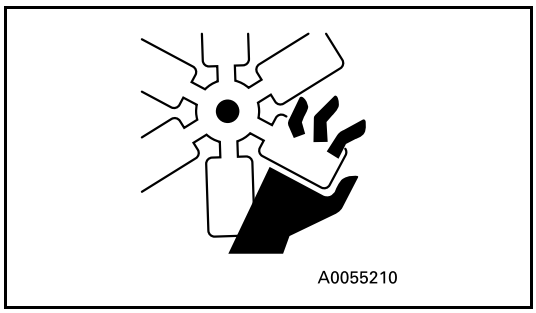


**WASTE MATERIALS**

- Never dump waste oil in a sewer system, rivers, etc.
- Always put oil drained from your machine in containers. Never drain oil directly on the ground.
- Obey appropriate laws and regulations when disposing of harmful materials such as oil, fuel, coolant, solvent, filters, batteries, and others.

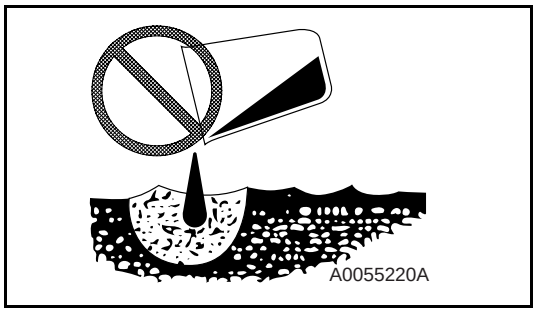

⚠ WARNING: For reasons of safety, always follow these safety precautions.

# POSITION FOR ATTACHING SAFETY LABELS

Always keep these labels clean. If they are lost or damaged, attach them again or replace them with a new label
There are other labels in addition to the safety labels listed as follows, so handle them in the same way.

Safety labels are available from your Komatsu distributor.

## POSITION FOR ATTACHING SAFETY LABELS

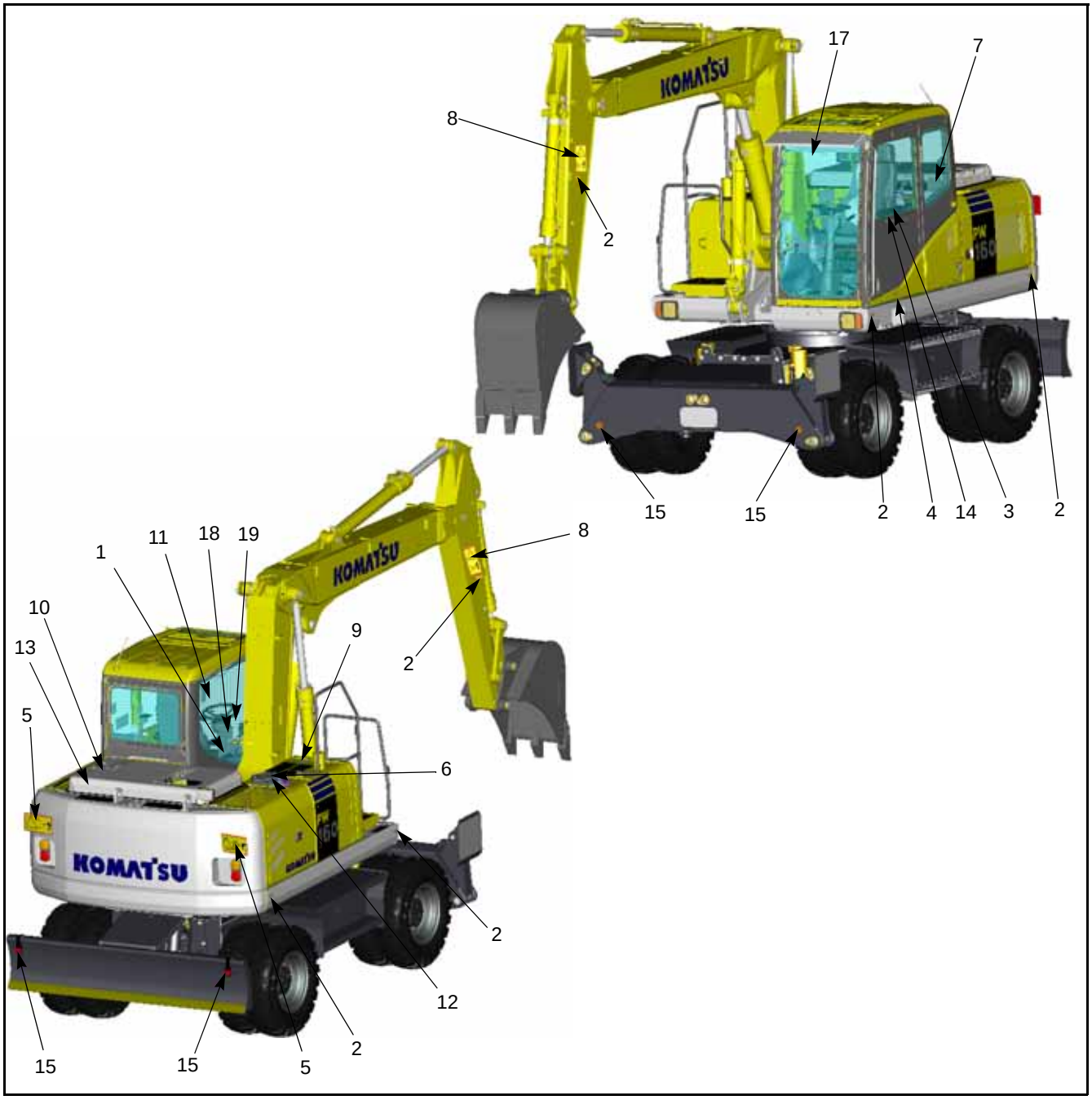

⚠ WARNING: Failure to follow these safety precautions may lead to a serious accident.

1. Warnings for read the manuals, safety lock, emergency steering, power lines, do not ride on machine, falling objects and bucket hitting cab. This is located on the right hand window inside the cab (20E-00-K1890)

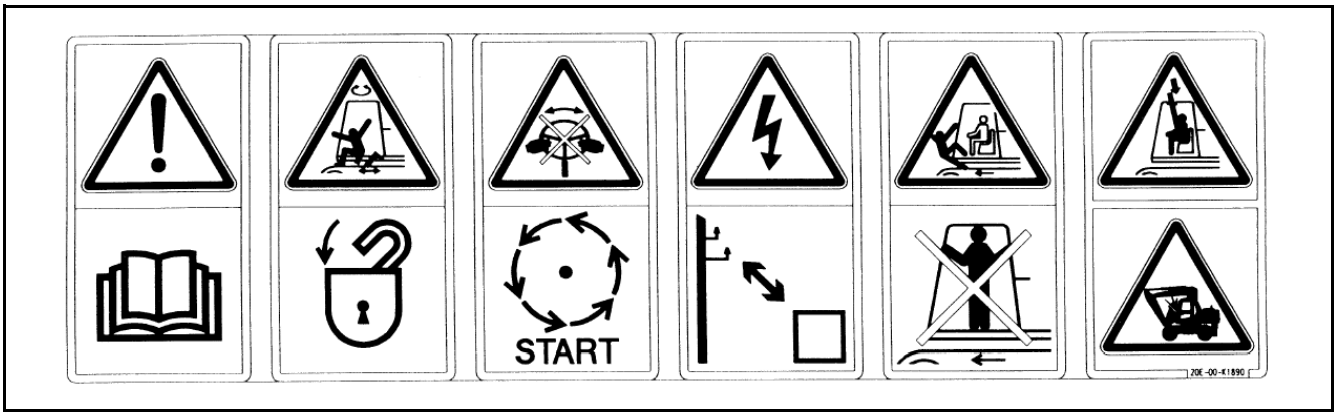


- Improper operation and maintenance can cause serious injury or death.
- Read the manuals before operation.
- Follow instructions and warnings in the manuals and labels on the machine.
- Keep this manual in the machine cab, near operator.
- If this manual is lost, please contact Komatsu distributor for replacement.
- Always raise safety lock lever when leaving operators seat.
- Normal steering can only be operated when the engine is running.
- Emergency steering is only to be used when stopping the machine safely.
- Serious injury or death can occur if the machine or attachments are not kept a safe distance away from electric lines.
- No passengers allowed to ride on machine while it is moving.
- Do not operate where a danger of falling objects exists. Consult your dealer for fitting of FOPS protection.
- Bucket hits operator cab. Read manual before operation.

2. There are 6 amber reflectors located on the revolving frame and arm of the machine (20G-46-K1681)

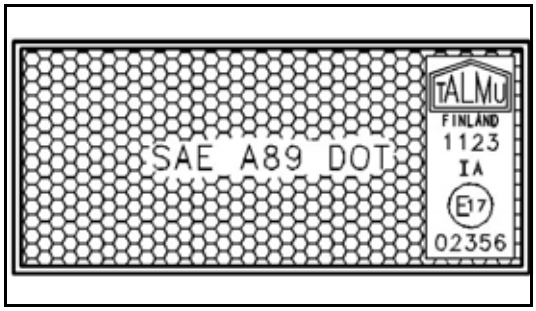


3. Warning for unsafe machine. Located on the left or right hand levers (20E-00-K1340)

- Do not start the engine.

4. Warning for accumulator is located below operator cab (20E-00-K1210)

   Warnings for handling accumulator.
   Explosion hazard

- Keep away from flame.
- Do not weld or drill.
- Read operation manual before operation.

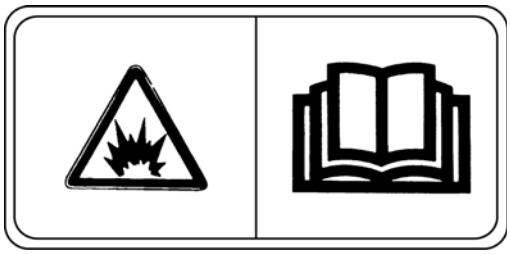

5. Warning for staying clear (20K-00-31280)

Keeping out of moving area.
To prevent SEVERE INJURY or DEATH.
Do the following before moving the machine or its attachments:

- Sound horn to alert people nearby.
- Be sure no one is on or near machine or in the swing area.
- Rotate cab for full view of travel path if it can be done safely.
- Use spotter if view is obstructed. Follow above even if machine equipped with travel alarm and mirrors.

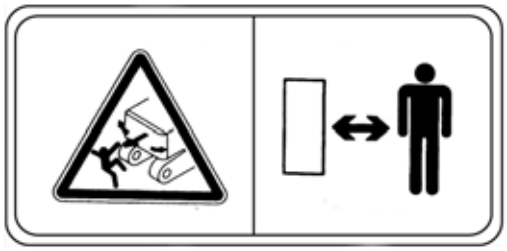

6. Warning for hot objects (20E-00-K1190)

Warning for high temperature coolant and oil, hot water and oil hazard.

To prevent hot water and oil from spurting out:

- Turn engine off.
- Allow water to cool.
- Slowly loosen cap to relieve pressure before removing.
- Read operation manual before operation.

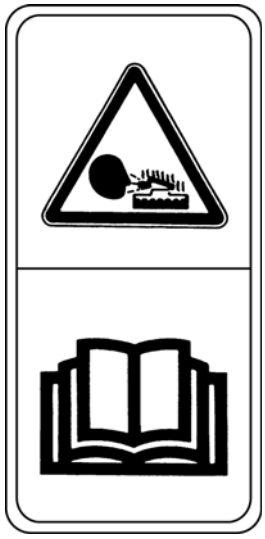

7. Safety lock. This is located on the right hand window of the machine (20K-00-31181)

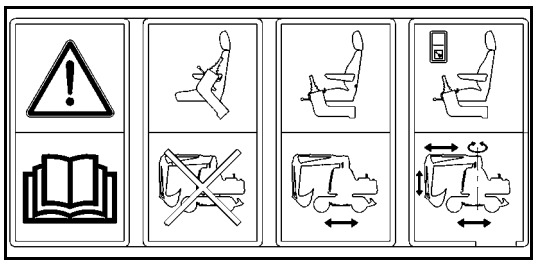

- Read operation manual before operation.
- With safety lock lever raised the control levers and pedals are disabled.
- With safety lock lever lowered and control lever lock switch on the machine can travel.
- With safety lock lever lowered and control lever lock switch off work equipment and travel can be operated.

**REMARK**

In certain conditions it may be possible for the safety lock lever to contact the left hand arm rest on the operator seat.
to avoid this, always ensure that the left hand arm rest is stowed in the fully up position before operating the safety lock lever.

8. Warning for staying clear. This is fitted on both sides of arm (20E-00-K1140)

Keeping out of moving area.

To prevent SEVERE INJURY or DEATH.

Do the following before moving the machine or its attachments:

- Sound horn to alert people nearby.
- Be sure no one is on or near machine or in the swing area.
- Rotate cab for full view of travel path if it can be done safely.
- Use spotter if view is obstructed. Follow above even if machine equipped with travel alarm and mirrors.

9. Falling from upper structure warning. This is located on the front of the fuel tank, on inside of walkway door, top of the counterweight.(20E-00-K1110)
(

- WARNING
  falling from upper structure.
- Keep away from sides of machine.
- Keep off counterweight.
- Do not ride on machine when it is moving.

10. Stop engine warning (20E-00-K1310)

- Do not open cover while engine is running.

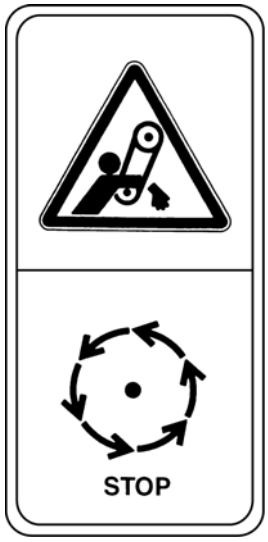


11. Front window lock warning. This is located on the rear window (09803-A0481)

- Always lock window in raised or lowered position.

12. High pressure oil warning (20E-00-K1270)

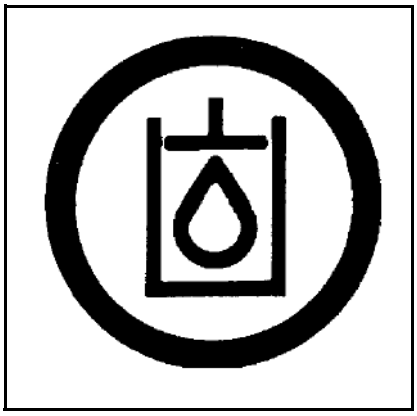

13. (20G-00-31030)

Radiator fill volume warning. This is located on top of the radiator unit.

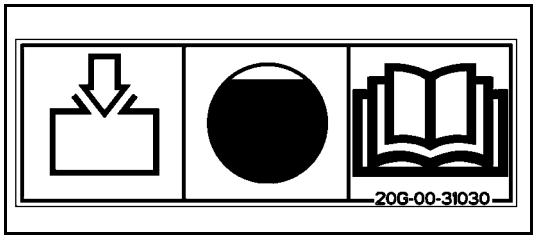


14. (20K-00-31360)

Read operation manual before operation.This is located inside the cab.

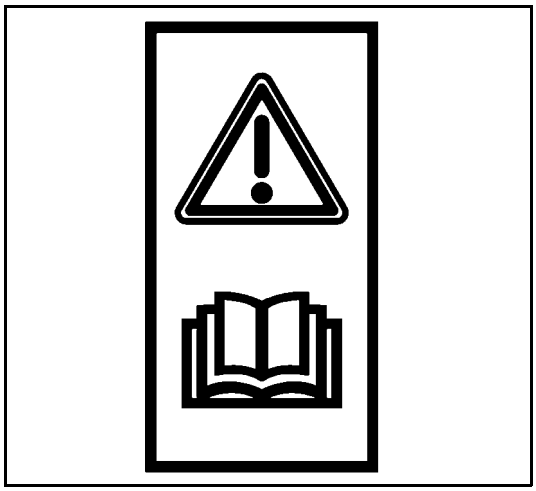

15. Red reflector (20G-47-K1690)

16. (20Y-00-K2220)

- Emergency exit
- Read operation manual before operation

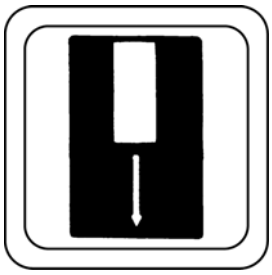

17. Travel Height -UK spec only. This is fitted to the top right hand corner of the front window (20E-00-K1720)

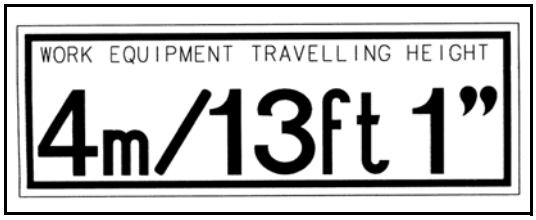

18. Operation of attachments is located on the right hand window (20K-00-31140)

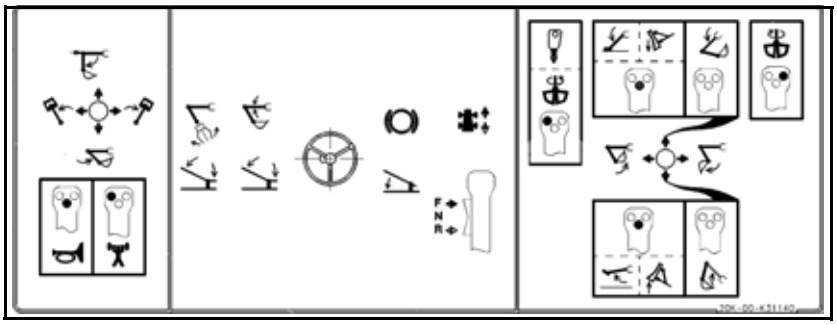

19. Lift warning plate. This is located on the right hand window (20E-00-K1450)

- Do not lift more than the specified load of the machine.

# LIFTING CAPACITY CHART PW160-7K

## ONE PIECE BOOM Lift capacity tables

When removing bucket, linkage or cylinder, lifting capacities can be increased by their respective weights.

A - Reach from swing center

B - Bucket hook height

C - Lifting capacities, including bucket (495 kg), linkage (120 kg) and bucket cylinder (109 kg)

OF: Lifting capacity (Rating over front)
OS: Lifting capacity (Rating over side)

- MAX: Rating at maximum reach

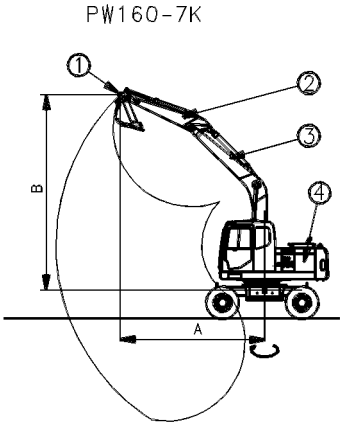


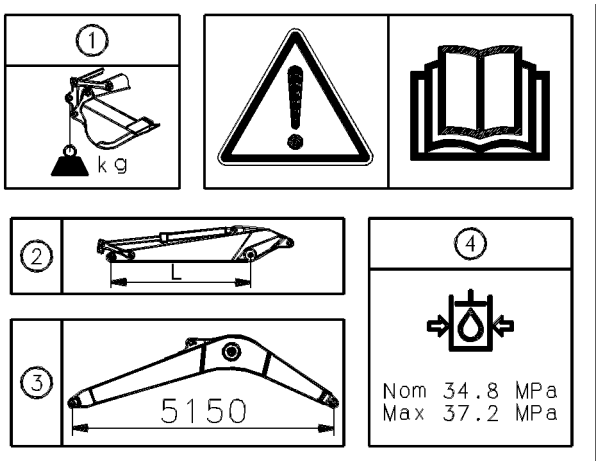

| Model | Arm length | Height (B) | Reach (A) | | | | | | | | | |
|---|---|---|---|---|---|---|---|---|---|---|---|---|
| | | | MAX | | 7.5m | | 6.0m | | 4.5m | | 3.0m | |
| | | | OF | OS | OF | OS | OF | OS | OF | OS | OF | OS |
| **No Attachments** | 2.1m | 7.5m | *2450 | *2450 | | | | | | | | |
| | | 6.0m | *2100 | *1800 | | | 3150 | 2200 | | | | |
| | | 4.5m | *1950 | 1450 | | | 3100 | 2150 | 5050 | 3500 | | |
| | | 3.0m | 1900 | 1250 | 2050 | 1350 | 2950 | 2050 | 4700 | 3200 | | |
| | | 1.5m | 1850 | 1200 | 2000 | 1300 | 2850 | 1900 | 4350 | 2900 | | |
| | | 0.0m | 1900 | 1250 | 1950 | 1250 | 2750 | 1800 | 4200 | 2750 | | |
| | | -1.5m | 2100 | 1400 | | | 2700 | 1750 | 4150 | 2700 | *6900 | 5000 |
| | | -3.0m | 2700 | 1800 | | | 2750 | 1850 | 4200 | 2750 | *6550 | 5150 |
| | 2.5m | 7.5m | *1800 | *1800 | | | | | | | | |
| | | 6.0m | *1600 | *1600 | | | 3150 | 2200 | | | | |
| | | 4.5m | *1550 | 1350 | *2000 | 1400 | 3100 | 2150 | | | | |
| | | 3.0m | *1600 | 1150 | 2050 | 1350 | 3000 | 2050 | 4750 | 3250 | 9500 | 6050 |
| | | 1.5m | *1700 | 1100 | 1950 | 1300 | 2850 | 1900 | 4450 | 2950 | | |
| | | 0.0m | 1750 | 1150 | 1900 | 1250 | 2750 | 1800 | 4250 | 2750 | *4400 | *4400 |
| | | -1.5m | 1950 | 1250 | | | 2700 | 1750 | 4150 | 2700 | *7100 | 5050 |
| | | -3.0m | 2400 | 1600 | | | 2700 | 1800 | 4200 | 2750 | *7550 | 5150 |
| | 3.0m | 7.5m | *1450 | *1450 | | | *2350 | 2150 | | | | |
| | | 6.0m | *1300 | *1300 | *1450 | 1350 | *2900 | 2200 | | | | |
| | | 4.5m | *1200 | 1100 | 2050 | 1350 | 3100 | 2150 | | | | |
| | | 3.0m | *1200 | 950 | 2000 | 1300 | 2950 | 2000 | 4800 | 3300 | | |
| | | 1.5m | *1300 | 900 | 1900 | 1250 | 2800 | 1850 | 4400 | 2900 | | |
| | | 0.0m | *1450 | 900 | 1850 | 1200 | 2650 | 1750 | 4150 | 2700 | *4050 | *4050 |
| | | -1.5m | 1650 | 1000 | 1800 | 1150 | 2600 | 1650 | 4050 | 2600 | *5950 | 4800 |
| | | -3.0m | 1950 | 1250 | | | 2600 | 1650 | 4050 | 2600 | 8100 | 4900 |

| Model | Arm length | Height (B) | Reach (A) | | | | | | | | | |
|---|---|---|---|---|---|---|---|---|---|---|---|---|
| | | | MAX | | 7.5m | | 6.0m | | 4.5m | | 3.0m | |
| | | | OF | OS | OF | OS | OF | OS | OF | OS | OF | OS |
| Front/Rear Dozer Blade Only | 2.1m | 7.5m | *2450 | *2450 | | | | | | | | |
| | | 6.0m | *2100 | *2100 | | | *3750 | 2600 | | | | |
| | | 4.5m | *1950 | 1750 | | | *4700 | 2550 | *5250 | 4150 | | |
| | | 3.0m | *1950 | 1550 | *3350 | 1650 | *5100 | 2450 | *6700 | 3800 | | |
| | | 1.5m | *2050 | 1500 | 4000 | 1600 | *5400 | 2300 | *7500 | 3500 | | |
| | | 0.0m | *2300 | 1500 | *3450 | 1550 | *5400 | 2200 | *7450 | 3350 | | |
| | | -1.5m | *2750 | 1700 | | | *4850 | 2200 | *6650 | 3300 | *6900 | 6250 |
| | | -3.0m | *2900 | 2200 | | | *3200 | 2250 | *5050 | 3350 | *6550 | 6400 |
| | 2.5m | 7.5m | *1800 | *1800 | | | | | | | | |
| | | 6.0m | *1600 | *1600 | | | *3200 | 2600 | | | | |
| | | 4.5m | *1550 | *1550 | *2000 | 1700 | *4100 | 2550 | | | | |
| | | 3.0m | *1600 | 1450 | *3300 | 1650 | *4900 | 2450 | *6400 | 3900 | *10050 | 7350 |
| | | 1.5m | *1700 | 1400 | 4000 | 1600 | *5300 | 2300 | *7350 | 3600 | | |
| | | 0.0m | *1950 | 1400 | 3950 | 1550 | *5400 | 2200 | *7550 | 3400 | *4400 | *4400 |
| | | -1.5m | *2400 | 1600 | | | *5050 | 2150 | *6950 | 3300 | *7100 | 6250 |
| | | -3.0m | *3150 | 1950 | | | *3850 | 2200 | *5550 | 3350 | *7550 | 6400 |
| | 3.0m | 7.5m | *1450 | *1450 | | | *2350 | *2350 | | | | |
| | | 6.0m | *1300 | *1300 | *1450 | *1450 | *2900 | 2650 | | | | |
| | | 4.5m | *1200 | *1200 | *2700 | 1650 | *3250 | 2550 | | | | |
| | | 3.0m | *1200 | 1200 | *3350 | 1600 | *4350 | 2450 | *5450 | 3900 | | |
| | | 1.5m | *1300 | 1150 | 3950 | 1550 | *5050 | 2250 | *6900 | 3500 | | |
| | | 0.0m | *1450 | 1200 | 3850 | 1500 | *5300 | 2150 | *7400 | 3300 | *4050 | *4050 |
| | | -1.5m | *1700 | 1300 | *3700 | 1450 | *5100 | 2050 | *7100 | 3200 | *5950 | *5950 |
| | | -3.0m | *2200 | 1600 | | | *4250 | 2050 | *6000 | 3200 | *8550 | 6150 |

| Model | Arm length | Height (B) | Reach (A) | | | | | | | | | |
|---|---|---|---|---|---|---|---|---|---|---|---|---|
| | | | MAX | | 7.5m | | 6.0m | | 4.5m | | 3.0m | |
| | | | OF | OS | OF | OS | OF | OS | OF | OS | OF | OS |
| Rear Outrigger Only | 2.1m | 7.5m | *2450 | *2450 | | | | | | | | |
| | | 6.0m | *2100 | *2100 | | | *3750 | 2950 | | | | |
| | | 4.5m | *1950 | *1950 | | *4700 | 2900 | *5250 | 4700 | | | |
| | | 3.0m | *1950 | 1800 | *3350 | 1900 | *5100 | 2800 | *6700 | 4350 | | |
| | | 1.5m | *2050 | 1700 | *4150 | 1850 | *5400 | 2650 | *7500 | 4050 | | |
| | | 0.0m | *2300 | 1800 | *3450 | 1850 | *5400 | 2550 | *7450 | 3900 | | |
| | | -1.5m | *2750 | 2000 | | | *4850 | 2500 | *6650 | 3850 | *6900 | *6900 |
| | | -3.0m | *2900 | 2500 | | | *3200 | 2600 | *5050 | 3900 | *6550 | *6550 |
| | 2.5m | 7.5m | *1800 | *1800 | | | | | | | | |
| | | 6.0m | *1600 | *1600 | | | *3200 | 2950 | | | | |
| | | 4.5m | *1550 | *1550 | *2000 | 1950 | *4100 | 2900 | | | | |
| | | 3.0m | *1600 | *1600 | *3300 | 1900 | *4900 | 2800 | *6400 | 4450 | *10050 | *8550 |
| | | 1.5m | *1700 | 1600 | *4150 | 1850 | *5300 | 2650 | *7350 | 4100 | | |
| | | 0.0m | *1950 | 1650 | *4050 | 1800 | *5400 | 2550 | *7350 | 3900 | *4400 | *4400 |
| | | -1.5m | *2400 | 1850 | | | *5050 | 2500 | *6950 | 3850 | *7100 | *7100 |
| | | -3.0m | *3150 | 2250 | | | *3850 | 2550 | *5550 | 3900 | *7550 | 7500 |
| | 3.0m | 7.5m | *1450 | *1450 | | | *2350 | *2350 | | | | |
| | | 6.0m | *1300 | *1300 | *1450 | *1450 | *2900 | 2800 | | | | |
| | | 4.5m | *1200 | *1200 | *2700 | 1800 | *3250 | 2750 | | | | |
| | | 3.0m | *1200 | *1200 | *3350 | 1750 | *4350 | 2600 | *5450 | 4200 | | |
| | | 1.5m | *1300 | 1250 | 4050 | 1650 | *5050 | 2450 | *6900 | 3800 | | |
| | | 0.0m | *1450 | 1250 | 3950 | 1600 | *5300 | 2300 | *7400 | 3550 | *4050 | *4050 |
| | | -1.5m | *1700 | 1400 | *3700 | 1550 | *5100 | 2200 | *7100 | 3450 | *5950 | *5950 |
| | | -3.0m | *2200 | 1700 | | | *4250 | 2200 | *6000 | 3450 | *8550 | 6800 |

| Model | Arm length | Height (B) | Reach (A) | | | | | | | | | |
|---|---|---|---|---|---|---|---|---|---|---|---|---|
| | | | MAX | | 7.5m | | 6.0m | | 4.5m | | 3.0m | |
| | | | OF | OS | OF | OS | OF | OS | OF | OS | OF | OS |
| Dozer & Outrigger | 2.1m | 7.5m | *2450 | *2450 | | | | | | | | |
| | | 6.0m | *2100 | *2100 | | | *3750 | *3750 | | | | |
| | | 4.5m | *1950 | *1950 | | | *4700 | 3800 | *5250 | *5250 | | |
| | | 3.0m | *1950 | *1950 | *3350 | 2550 | *5100 | 3700 | *6700 | 5800 | | |
| | | 1.5m | *2050 | *2050 | *4150 | 2500 | *5400 | 3550 | *7500 | 5500 | | |
| | | 0.0m | *2300 | *2300 | *3450 | 2450 | *5400 | 3450 | *7450 | 5300 | | |
| | | -1.5m | *2750 | 2700 | | | *4850 | 3400 | *6650 | 5250 | *6900 | *6900 |
| | | -3.0m | *2900 | *2900 | | | *3200 | *3200 | *5050 | *5050 | *6550 | *6550 |
| | 2.5m | 7.5m | *1800 | *1800 | | | | | | | | |
| | | 6.0m | *1600 | *1600 | | | *3200 | *3200 | | | | |
| | | 4.5m | *1550 | *1550 | *2000 | *2000 | *4100 | 3850 | | | | |
| | | 3.0m | *1600 | *1600 | *3300 | 2550 | *4900 | 3700 | *6400 | 5900 | *10050 | *10050 |
| | | 1.5m | *1700 | *1700 | *4150 | 2500 | *5300 | 3550 | *7350 | 5550 | | |
| | | 0.0m | *1950 | *1950 | *4050 | 2450 | *5400 | 3450 | *7550 | 5350 | *4400 | *4400 |
| | | -1.5m | *2400 | *2400 | | | *5050 | 3400 | *6950 | 5250 | *7100 | *7100 |
| | | -3.0m | *3150 | 3050 | | | *3850 | 3400 | *5550 | 5300 | *7550 | *7550 |
| | 3.0m | 7.5m | *1450 | *1450 | | | *2350 | *2350 | | | | |
| | | 6.0m | *1300 | *1300 | *1450 | *1450 | *2900 | *2900 | | | | |
| | | 4.5m | *1200 | *1200 | *2700 | 2600 | *3250 | *3250 | | | | |
| | | 3.0m | *1200 | *1200 | *3350 | 2500 | *4350 | 3700 | *5450 | *5450 | | |
| | | 1.5m | *1300 | *1300 | *4050 | 2450 | *5050 | 3500 | *6900 | 5500 | | |
| | | 0.0m | *1450 | *1450 | *4050 | 2350 | *5300 | 3350 | *7400 | 5250 | *4050 | *4050 |
| | | -1.5m | *1700 | *1700 | *3700 | 2350 | *5100 | 3300 | *7100 | 5150 | *5950 | *5950 |
| | | -3.0m | *2200 | *2200 | | | *4250 | 3300 | *6000 | 5150 | *8550 | *8550 |

| Model | Arm length | Height (B) | Reach (A) | | | | | | | | | |
|---|---|---|---|---|---|---|---|---|---|---|---|---|
| | | | MAX | | 7.5m | | 6.0m | | 4.5m | | 3.0m | |
| | | | OF | OS | OF | OS | OF | OS | OF | OS | OF | OS |
| 4 X Outrigger | 2.1m | 7.5m | *2450 | *2450 | | | | | | | | |
| | | 6.0m | *2100 | *2100 | | | *3750 | *3750 | | | | |
| | | 4.5m | *1950 | *1950 | | | *4700 | 4550 | *5250 | *5250 | | |
| | | 3.0m | *1950 | *1950 | *3350 | 3050 | *5100 | 4400 | *6700 | *6700 | | |
| | | 1.5m | *2050 | *2050 | *4150 | 3000 | *5400 | 4250 | *7500 | 6700 | | |
| | | 0.0m | *2300 | *2300 | *3450 | 2950 | *5400 | 4150 | *7450 | 6500 | | |
| | | -1.5m | *2750 | *2750 | | | *4850 | 4100 | *6650 | 6450 | *6900 | *6900 |
| | | -3.0m | *2900 | *2900 | | | *3200 | *3200 | *5050 | *5050 | *6550 | *6550 |
| | 2.5m | 7.5m | *1800 | *1800 | | | | | | | | |
| | | 6.0m | *1600 | *1600 | | | *3200 | *3200 | | | | |
| | | 4.5m | *1550 | *1550 | *2000 | *2000 | *4100 | *4100 | | | | |
| | | 3.0m | *1600 | *1600 | *3300 | 3050 | *4900 | 4400 | *6400 | *6400 | *10050 | *10050 |
| | | 1.5m | *1700 | *1700 | *4150 | 3000 | *5300 | 4250 | *7350 | 6750 | | |
| | | 0.0m | *1950 | *1950 | *4050 | 2950 | *5400 | 4150 | *7550 | 6550 | *4400 | *4400 |
| | | -1.5m | *2400 | *2400 | | | *5050 | 4100 | *6950 | 6450 | *7100 | *7100 |
| | | -3.0m | *3150 | *3150 | | | *3850 | *3850 | *5550 | *5550 | *7550 | *7550 |
| | 3.0m | 7.5m | *1450 | *1450 | | | *2350 | *2350 | | | | |
| | | 6.0m | *1300 | *1300 | *1450 | *1450 | *2900 | *2900 | | | | |
| | | 4.5m | *1200 | *1200 | *2700 | *2700 | *3250 | *3250 | | | | |
| | | 3.0m | *1200 | *1200 | *3350 | 3050 | *4350 | *4350 | *5450 | *5450 | | |
| | | 1.5m | *1300 | *1300 | *4050 | 2950 | *5050 | 4250 | *6900 | 6700 | | |
| | | 0.0m | *1450 | *1450 | *4050 | 2850 | *5300 | 4100 | *7400 | 6450 | *4050 | *4050 |
| | | -1.5m | *1700 | *1700 | *3700 | 2850 | *5100 | 4000 | *7100 | 6350 | *5950 | *5950 |
| | | -3.0m | *2200 | *2200 | | | *4250 | 4000 | *6000 | *6000 | *8550 | *8550 |

Note for lift capacity tables:
1. Ratings are based on ISO 10567
2. Lifting capacities are given for:
   a) 75% of tipping load
   b) rated hydraulic lift capacity 87% of max.
3. Capacities marked with an asterisk (*) are limited by hydraulic capacities

# TWO PIECE BOOM Lift capacity tables

When removing bucket, linkage or cylinder, lifting capacities can be increased by their respective weights.

A - Reach from swing center

B - Bucket hook height

C - Lifting capacities, including bucket (495 kg), linkage (120 kg) and bucket cylinder (109 kg)

OF: Lifting capacity (rating over front)
OS: Lifting capacity (Rating over side)

-MAX: Rating at maximum reach

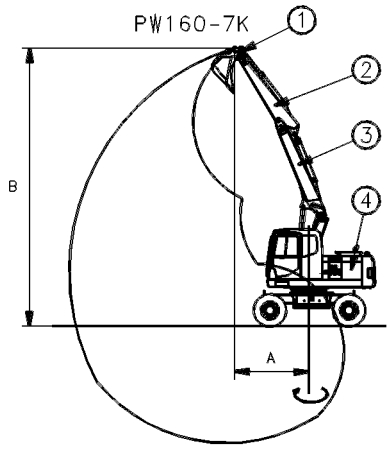


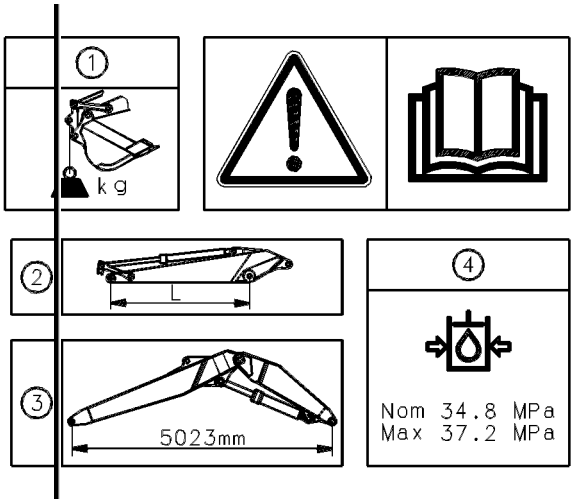

| Model | Arm length | Height (B) | Reach (A) | | | | | | | | | |
|---|---|---|---|---|---|---|---|---|---|---|---|---|
| | | | MAX | | 7.5m | | 6.0m | | 4.5m | | 3.0m | |
| | | | OF | OS | OF | OS | OF | OS | OF | OS | OF | OS |
| No Attachments | 2.1m | 7.5m | *2300 | *2300 | | | | | *3650 | *3650 | | |
| | | 6.0m | *1900 | *1900 | | | *3250 | 2200 | *4200 | 3700 | | |
| | | 4.5m | *1800 | 1500 | | | *4550 | 2150 | *5100 | 3600 | *5000 | *5000 |
| | | 3.0m | *1800 | 1300 | *2400 | 1350 | *5300 | 2050 | *6900 | 3300 | | |
| | | 1.5m | *1900 | 1250 | *3250 | 1300 | *5700 | 1950 | *7900 | 3050 | | |
| | | 0.0m | *2100 | 1300 | | | *5800 | 1850 | *8050 | 2900 | | |
| | | -1.5m | *2600 | 1450 | | | *5300 | 1850 | *7400 | 2850 | *7400 | 5450 |
| | | -3.0m | | | | | | | *5700 | 2900 | | |
| | 2.5m | 7.5m | *1750 | *1750 | | | | | *3350 | *3350 | | |
| | | 6.0m | *1500 | *1500 | | | *3150 | 2200 | *3450 | *3450 | | |
| | | 4.5m | *1400 | 1300 | *1750 | 1350 | *3850 | 2150 | *4000 | 3600 | *3500 | *3500 |
| | | 3.0m | *1400 | 1150 | *3150 | 1300 | *5000 | 2050 | *6450 | 3350 | | |
| | | 1.5m | *1500 | 1100 | *3900 | 1250 | *5500 | 1900 | *7550 | 3000 | | |
| | | 0.0m | *1650 | 1100 | *3850 | 1200 | *5700 | 1800 | *8000 | 2850 | *4050 | *4050 |
| | | -1.5m | *2000 | 1250 | | | *5400 | 1750 | *7550 | 2750 | *6900 | 5300 |
| | | -3.0m | | | | | *4150 | 1800 | *6150 | 2800 | | |
| | 3.0m | 7.5m | *1400 | *1400 | | | *2050 | *2050 | *2850 | *2850 | | |
| | | 6.0m | *1200 | *1200 | | | *2800 | 2250 | *2700 | *2700 | | |
| | | 4.5m | *1100 | *1100 | *2500 | 1400 | *3150 | 2200 | *2950 | *2950 | | |
| | | 3.0m | *1100 | 1000 | *3150 | 1350 | *4150 | 2100 | *5050 | 3400 | | |
| | | 1.5m | *1150 | 950 | *3900 | 1250 | *5300 | 1950 | *7200 | 3100 | | |
| | | 0.0m | *1300 | 950 | *4350 | 1200 | *5650 | 1800 | *7900 | 2850 | *4250 | *4250 |
| | | -1.5m | *1550 | 1100 | *3700 | 1200 | *5550 | 1750 | *7750 | 2750 | *6250 | 5250 |
| | | -3.0m | *2050 | 1350 | | | *4700 | 1750 | *6750 | 2750 | *9800 | 5300 |

| Model | Arm length | Height (B) | Reach (A) | | | | | | | | | |
|---|---|---|---|---|---|---|---|---|---|---|---|---|
| | | | MAX | | 7.5m | | 6.0m | | 4.5m | | 3.0m | |
| | | | OF | OS | OF | OS | OF | OS | OF | OS | OF | OS |
| Front/Rear Dozer Blade Only | 2.1m | 7.5m | *2300 | *2300 | | | | | *3650 | *3650 | | |
| | | 6.0m | *1900 | *1900 | | | *3250 | 2300 | *4200 | 3900 | | |
| | | 4.5m | *1800 | 1600 | | | *4550 | 2300 | *5100 | 3750 | *5000 | *5000 |
| | | 3.0m | *1800 | 1400 | *2400 | 1450 | *5300 | 2200 | *6900 | 3500 | | |
| | | 1.5m | *1900 | 1350 | *3250 | 1400 | *5700 | 2050 | *7900 | 3200 | | |
| | | 0.0m | *2100 | 1400 | | | *5800 | 2000 | *8050 | 3050 | | |
| | | -1.5m | *2600 | 1550 | | | *5300 | 1950 | *7400 | 3050 | *7400 | 5750 |
| | | -3.0m | | | | | | | *5700 | 3100 | | |
| | 2.5m | 7.5m | *1750 | *1750 | | | | | *3350 | *3350 | | |
| | | 6.0m | *1500 | *1500 | | | *3150 | 2300 | *3450 | *3450 | | |
| | | 4.5m | *1400 | 1400 | *1750 | 1450 | *3850 | 2250 | *4000 | 3750 | *3500 | *3500 |
| | | 3.0m | *1400 | 1200 | *3150 | 1400 | *5000 | 2150 | *6450 | 3500 | | |
| | | 1.5m | *1500 | 1150 | *3900 | 1350 | *5500 | 2000 | *7550 | 3200 | | |
| | | 0.0m | *1650 | 1200 | *3850 | 1300 | *5700 | 1900 | *8000 | 3000 | *4050 | *4050 |
| | | -1.5m | *2000 | 1350 | | | *5400 | 1850 | *7550 | 2900 | *6900 | 5500 |
| | | -3.0m | | | | | *4150 | 1900 | *6150 | 2950 | | |
| | 3.0m | 7.5m | *1400 | *1400 | | | *2050 | *2050 | *2850 | *2850 | | |
| | | 6.0m | *1200 | *1200 | | | *2800 | 2400 | *2700 | *2700 | | |
| | | 4.5m | *1100 | *1100 | *2500 | 1450 | *3150 | 2300 | *2950 | *2950 | | |
| | | 3.0m | *1100 | 1050 | *3150 | 1450 | *4150 | 2200 | *5050 | 3600 | | |
| | | 1.5m | *1150 | 1000 | *3900 | 1350 | *5300 | 2050 | *7200 | 3250 | | |
| | | 0.0m | *1300 | 1050 | *4350 | 1300 | *5650 | 1900 | *7900 | 3000 | *4250 | *4250 |
| | | -1.5m | *1550 | 1150 | *3700 | 1250 | *5550 | 1850 | *7750 | 2900 | *6250 | 5500 |
| | | -3.0m | *2050 | 1450 | | | *4700 | 1850 | *6750 | 2900 | *9800 | 5600 |

| Model | Arm length | Height (B) | Reach (A) | | | | | | | | | |
|---|---|---|---|---|---|---|---|---|---|---|---|---|
| | | | MAX | | 7.5m | | 6.0m | | 4.5m | | 3.0m | |
| | | | OF | OS | OF | OS | OF | OS | OF | OS | OF | OS |
| Rear Outrigger Only | 2.1m | 7.5m | *2300 | *2300 | | | | | *3650 | *3650 | | |
| | | 6.0m | *1900 | *1900 | | | *3250 | 2350 | *4200 | 3950 | | |
| | | 4.5m | *1800 | 1600 | | | *4550 | 2300 | *5100 | 3800 | *5000 | *5000 |
| | | 3.0m | *1800 | 1400 | *2400 | 1450 | *5300 | 2200 | *6900 | 3550 | | |
| | | 1.5m | *1900 | 1350 | *3250 | 1400 | *5700 | 2100 | *7900 | 3250 | | |
| | | 0.0m | *2100 | 1400 | | | *5800 | 2000 | *8050 | 3100 | | |
| | | -1.5m | *2600 | 1600 | | | *5300 | 2000 | *7400 | 3100 | *7400 | 5850 |
| | | -3.0m | | | | | | | *5700 | 3150 | | |
| | 2.5m | 7.5m | *1750 | *1750 | | | | | *3350 | *3350 | | |
| | | 6.0m | *1500 | *1500 | | | *3150 | 2350 | *3450 | *3450 | | |
| | | 4.5m | *1400 | *1400 | *1750 | 1450 | *3850 | 2300 | *4000 | 3800 | *3500 | *3500 |
| | | 3.0m | *1400 | 1250 | *3150 | 1450 | *5000 | 2200 | *6450 | 3550 | | |
| | | 1.5m | *1500 | 1200 | *3900 | 1400 | *5500 | 2050 | *7550 | 3250 | | |
| | | 0.0m | *1650 | 1200 | *3850 | 1350 | *5700 | 1950 | *8000 | 3050 | *4050 | *4050 |
| | | -1.5m | *2000 | 1400 | | | *5400 | 1900 | *7550 | 2950 | *6900 | 5650 |
| | | -3.0m | | | | | *4150 | 1950 | *6150 | 3000 | | |
| | 3.0m | 7.5m | *1400 | *1400 | | | *2050 | *2050 | *2850 | *2850 | | |
| | | 6.0m | *1200 | *1200 | | | *2800 | 2400 | *2700 | *2700 | | |
| | | 4.5m | *1100 | *1100 | *2500 | 1500 | *3150 | 2350 | *2950 | *2950 | | |
| | | 3.0m | *1100 | 1100 | *3150 | 1450 | *4150 | 2250 | *5050 | 3650 | | |
| | | 1.5m | *1150 | 1050 | *3900 | 1400 | *5300 | 2100 | *7200 | 3300 | | |
| | | 0.0m | *1300 | 1050 | *4350 | 1350 | *5650 | 1950 | *7900 | 3050 | *4250 | *4250 |
| | | -1.5m | *1550 | 1200 | *3700 | 1300 | *5550 | 1900 | *7750 | 2950 | *6250 | 5600 |
| | | -3.0m | *2050 | 1500 | | | *4700 | 1900 | *6750 | 2950 | *9800 | 5700 |

| Model | Arm length | Height (B) | Reach (A) | | | | | | | | | |
|---|---|---|---|---|---|---|---|---|---|---|---|---|
| | | | MAX | | 7.5m | | 6.0m | | 4.5m | | 3.0m | |
| | | | OF | OS | OF | OS | OF | OS | OF | OS | OF | OS |
| Dozer & Outrigger | 2.1m | 7.5m | *2300 | *2300 | | | | | *3650 | *3650 | | |
| | | 6.0m | *1900 | *1900 | | | *3250 | 2450 | *4200 | 4100 | | |
| | | 4.5m | *1800 | 1700 | | | *4550 | 2450 | *5100 | 3950 | *5000 | *5000 |
| | | 3.0m | *1800 | 1500 | *2400 | 1550 | *5300 | 2350 | *6900 | 3700 | | |
| | | 1.5m | *1900 | 1450 | 3250 | 1500 | *5700 | 2200 | *7900 | 3450 | | |
| | | 0.0m | *2100 | 1500 | | | *5800 | 2150 | *8050 | 3300 | | |
| | | -1.5m | *2600 | 1700 | | | *5300 | 2100 | *7400 | 3250 | *7400 | 6100 |
| | | -3.0m | | | | | | | *5700 | 3300 | | |
| | 2.5m | 7.5m | *1750 | *1750 | | | | | *3350 | *3350 | | |
| | | 6.0m | *1500 | *1500 | | | *3150 | 2450 | *3450 | *3450 | | |
| | | 4.5m | *1400 | *1400 | *1750 | 1550 | *3850 | 2400 | *4000 | 4000 | *3500 | *3500 |
| | | 3.0m | *1400 | 1350 | *3150 | 1500 | *5000 | 2300 | *6450 | 3700 | | |
| | | 1.5m | *1500 | 1250 | *3900 | 1450 | *5500 | 2150 | *7550 | 3400 | | |
| | | 0.0m | *1650 | 1300 | *3850 | 1400 | *5700 | 2050 | *8000 | 3200 | *4050 | *4050 |
| | | -1.5m | *2000 | 1450 | | | *5400 | 2000 | *7550 | 3150 | *6900 | 5950 |
| | | -3.0m | | | | | *4150 | 2050 | *6150 | 3200 | | |
| | 3.0m | 7.5m | *1400 | *1400 | | | *2050 | *2050 | *2850 | *2850 | | |
| | | 6.0m | *1200 | *1200 | | | *2800 | 2550 | *2700 | *2700 | | |
| | | 4.5m | *1100 | *1100 | *2500 | 1600 | *3150 | 2450 | *2950 | *2950 | | |
| | | 3.0m | *1100 | *1100 | *3150 | 1550 | *4150 | 2350 | *5050 | 3800 | | |
| | | 1.5m | *1150 | 1100 | *3900 | 1450 | *5300 | 2200 | *7200 | 3450 | | |
| | | 0.0m | *1300 | 1150 | *4350 | 1400 | *5650 | 2050 | *7900 | 3250 | *4250 | *4250 |
| | | -1.5m | *1550 | 1300 | *3700 | 1400 | *5550 | 2000 | *7750 | 3100 | *6250 | 5900 |
| | | -3.0m | *2050 | 1550 | | | *4700 | 2000 | *6750 | 3100 | *9800 | 6000 |

| Model | Arm length | Height (B) | Reach (A) | | | | | | | | | |
|---|---|---|---|---|---|---|---|---|---|---|---|---|
| | | | MAX | | 7.5m | | 6.0m | | 4.5m | | 3.0m | |
| | | | OF | OS | OF | OS | OF | OS | OF | OS | OF | OS |
| 4 X Outrigger | 2.1m | 7.5m | *2300 | *2300 | | | | | *3650 | *3650 | | |
| | | 6.0m | *1900 | *1900 | | | *3250 | 2500 | *4200 | 4150 | | |
| | | 4.5m | *1800 | 1750 | | | *4550 | 2450 | *5100 | 4000 | *5000 | *5000 |
| | | 3.0m | *1800 | 1550 | *2400 | 1550 | *5300 | 2350 | *6900 | 3750 | | |
| | | 1.5m | *1900 | 1450 | *3250 | 1550 | *5700 | 2250 | 7900 | 3500 | | |
| | | 0.0m | *2100 | 1500 | | | *5800 | 2150 | *8050 | 3350 | | |
| | | -1.5m | *2600 | 1700 | | | *5300 | 2150 | *7400 | 3300 | *7400 | 6200 |
| | | -3.0m | | | | | | | *5700 | 3350 | | |
| | 2.5m | 7.5m | *1750 | *1750 | | | | | *3350 | *3350 | | |
| | | 6.0m | *1500 | *1500 | | | *3150 | 2500 | *3450 | *3450 | | |
| | | 4.5m | *1400 | *1400 | *1750 | 1550 | *3850 | 2450 | *4000 | *4000 | *3500 | *3500 |
| | | 3.0m | *1400 | 1350 | *3150 | 1550 | *5000 | 2350 | *6450 | 3750 | | |
| | | 1.5m | *1500 | 1300 | *3900 | 1500 | *5500 | 2200 | *7550 | 3450 | | |
| | | 0.0m | *1650 | 1350 | *3850 | 1450 | *5700 | 2100 | *8000 | 3250 | *4050 | 4050 |
| | | -1.5m | *2000 | 1500 | | | *5400 | 2050 | *7550 | 3200 | *6900 | 6050 |
| | | -3.0m | | | | | *4150 | 2100 | *6150 | 3250 | | |
| | 3.0m | 7.5m | *1400 | *1400 | | | *2050 | *2050 | *2850 | *2850 | | |
| | | 6.0m | *1200 | *1200 | | | *2800 | 2550 | *2700 | *2700 | | |
| | | 4.5m | *1100 | *1100 | *2500 | 1600 | *3150 | 2500 | *2950 | *2950 | | |
| | | 3.0m | *1100 | *1100 | *3150 | 1550 | *4150 | 2400 | *5050 | 3850 | | |
| | | 1.5m | *1150 | 1150 | *3900 | 1500 | *5300 | 2250 | *7200 | 3500 | | |
| | | 0.0m | *1300 | 1150 | *4350 | 1450 | *5650 | 2100 | *7900 | 3300 | *4250 | *4250 |
| | | -1.5m | *1550 | 1300 | *3700 | 1400 | *5550 | 2050 | *7750 | 3150 | *6250 | 6000 |
| | | -3.0m | *2050 | 1600 | | | *4700 | 2050 | *6750 | 3150 | 9800 | 6050 |

Note for lift capacity tables:
1. Ratings are based on ISO 10567
2. Lifting capacities are given for:
   a) 75% of tipping load
   b) rated hydraulic lift capacity 87% of max.
3. Capacities marked with an asterisk (*) are limited by hydraulic capacities

# ROTATING ARM capacity tables

| | | MAX REACH | | 7.5m | | 6.0m | | 4.5m | | 3.0m | | 1.5m | | 0.0m | |
|---|---|---|---|---|---|---|---|---|---|---|---|---|---|---|---|
| | | OF | OS | OF | OS | OF | OS | OF | OS | OF | OS | OF | OS | OF | OS |
| 2PB Attachment Less | 7.5m | 1400 | 1400 | | | | | 2750 | 2750 | | | | | | |
| | 6.0m | 1150 | 850 | | | 1450 | 1450 | 3150 | 2800 | | | | | | |
| | 4.5m | 1050 | 600 | 1850 | 700 | 2000 | 1350 | 3350 | 2550 | 3000 | 3000 | | | | |
| | 3.0m | 1050 | 450 | 1700 | 650 | 1300 | 1200 | 1200 | 2150 | 5550 | 4450 | | | | |
| | 1.5m | 1100 | 400 | 1900 | 550 | 1700 | 1000 | 3150 | 1750 | 4700 | 3500 | 3700 | 3700 | | |
| | 0 m | 1200 | 400 | 2100 | 500 | 1800 | 850 | 3900 | 1500 | 3950 | 3000 | 2500 | 2500 | 3700 | 3700 |
| | -1.5 | 1450 | 500 | | | 4050 | 800 | 5350 | 1450 | 6600 | 3000 | 5700 | 15250 | 4900 | 4900 |
| | -3.0m | | | | | 3950 | 850 | 5550 | 1500 | 8250 | 3200 | 5700 | 7800 | 5700 | 5700 |
| 2PB Front Blade | 7.5m | 1400 | 1400 | | | | | 2750 | 2750 | | | | | | |
| | 6.0m | 1150 | 850 | | | 1450 | 1450 | 3150 | 2800 | | | | | | |
| | 4.5m | 1050 | 600 | 1850 | 700 | 2000 | 1350 | 3350 | 2550 | 3000 | 3000 | | | | |
| | 3.0m | 1050 | 450 | 1700 | 650 | 1300 | 1200 | 1200 | 2150 | 5550 | 4450 | | | | |
| | 1.5m | 1100 | 400 | 1900 | 550 | 1700 | 1000 | 3150 | 1750 | 4700 | 3500 | 3700 | 3700 | | |
| | 0 m | 1200 | 400 | 2100 | 500 | 1800 | 850 | 3900 | 1500 | 3950 | 3000 | 2500 | 2500 | 3700 | 3700 |
| | -1.5 | 1450 | 500 | | | 4050 | 800 | 5350 | 1450 | 6600 | 3000 | 5700 | 15250 | 4900 | 4900 |
| | -3.0m | | | | | 3950 | 850 | 5550 | 1500 | 8250 | 3200 | 5700 | 7800 | 5700 | 5700 |
| 2PB Rear Outrigger | 7.5m | 1400 | 1400 | | | | | 2750 | 2750 | | | | | | |
| | 6.0m | 1150 | 850 | | | 1450 | 1450 | 3150 | 2800 | | | | | | |
| | 4.5m | 1050 | 600 | 1850 | 700 | 2000 | 1350 | 3350 | 2550 | 3000 | 3000 | | | | |
| | 3.0m | 1050 | 450 | 1700 | 650 | 1300 | 1200 | 3200 | 2150 | 5550 | 4450 | | | | |
| | 1.5m | 1100 | 400 | 1900 | 550 | 1700 | 1000 | 3150 | 1750 | 4700 | 3500 | 3700 | 3700 | | |
| | 0 m | 1200 | 400 | 2100 | 500 | 1800 | 850 | 3900 | 1500 | 3950 | 3000 | 2500 | 2500 | 3700 | 3700 |
| | -1.5 | 1450 | 500 | | | 4050 | 800 | 5350 | 1450 | 6600 | 3000 | 5700 | 15250 | 4900 | 4900 |
| | -3.0m | | | | | 3950 | 850 | 5550 | 1500 | 8250 | 3200 | 5700 | 7800 | 5700 | 5700 |
| 2PB Front Blade Rear Outrigger | 7.5m | 1450 | 1450 | | | | | 2750 | 2750 | | | | | | |
| | 6.0m | 1150 | 850 | | | 1450 | 1450 | 3150 | 2800 | | | | | | |
| | 4.5m | 1050 | 600 | 1850 | 700 | 2000 | 1350 | 3350 | 2550 | 3000 | 3000 | | | | |
| | 3.0m | 1050 | 450 | 1700 | 650 | 1300 | 1200 | 1200 | 2150 | 5550 | 4450 | | | | |
| | 1.5m | 1100 | 400 | 1900 | 550 | 1700 | 1000 | 3150 | 1750 | 5200 | 3550 | 3700 | 3700 | | |
| | 0 m | 1200 | 400 | 2150 | 500 | 1850 | 850 | 3900 | 1500 | 3950 | 3000 | 2500 | 2500 | 3700 | 3700 |
| | -1.5 | 1450 | 500 | | | 4050 | 800 | 5350 | 1450 | 6600 | 3000 | 5700 | 15250 | 4900 | 4900 |
| | -3.0m | | | | | 3950 | 850 | 5600 | 1500 | 8250 | 3200 | 5700 | 7800 | 5700 | 5700 |

| | | | | | | | | | | | | | | | |
|---|---|---|---|---|---|---|---|---|---|---|---|---|---|---|---|
| 2PB 4 Outriggers | 7.5m | 1450 | 1450 | | | | | 2750 | 2750 | | | | | | |
| | 6.0m | 1150 | 850 | | | 1450 | 1450 | 3150 | 2800 | | | | | | |
| | 4.5m | 1050 | 600 | 1850 | 700 | 2000 | 1350 | 3350 | 2550 | 3000 | 3000 | | | | |
| | 3.0m | 1050 | 450 | 1700 | 650 | 1300 | 1200 | 1200 | 2150 | 5550 | 4450 | | | | |
| | 1.5m | 1100 | 400 | 1900 | 550 | 1700 | 1000 | 3150 | 1750 | 5200 | 3550 | 3700 | 3700 | | |
| | 0 m | 1200 | 400 | 2150 | 500 | 1850 | 850 | 3900 | 1500 | 3950 | 3000 | 2500 | 2500 | 3700 | 3700 |
| | -1.5 | 1450 | 500 | | | 4050 | 800 | 5350 | 1450 | 6600 | 3000 | 5700 | 15250 | 4900 | 4900 |
| | -3.0m | | | | | 3950 | 850 | 5600 | 1500 | 8250 | 3200 | 5700 | 7800 | 5700 | 5700 |

# OVERLOAD CAUTION

This machine is equipped with an overload caution system which gives a visual warning (on monitor) and an audible warning when lifting a load close to the lift capacity of the machine (active in L mode only).

A decal inside the operators cab shows the loads at which the caution warning is given for various work equipment positions.

Due to the simple nature of the system the overload warning is given at a lower load than actually allowable (see full lift capacity charts)

If lifting to the full capacity of the machine is required it is necessary to fit a full overload caution system (with work equipment position sensing to the machine.)

Decal showing lifting loads (in kg) at overload warning.

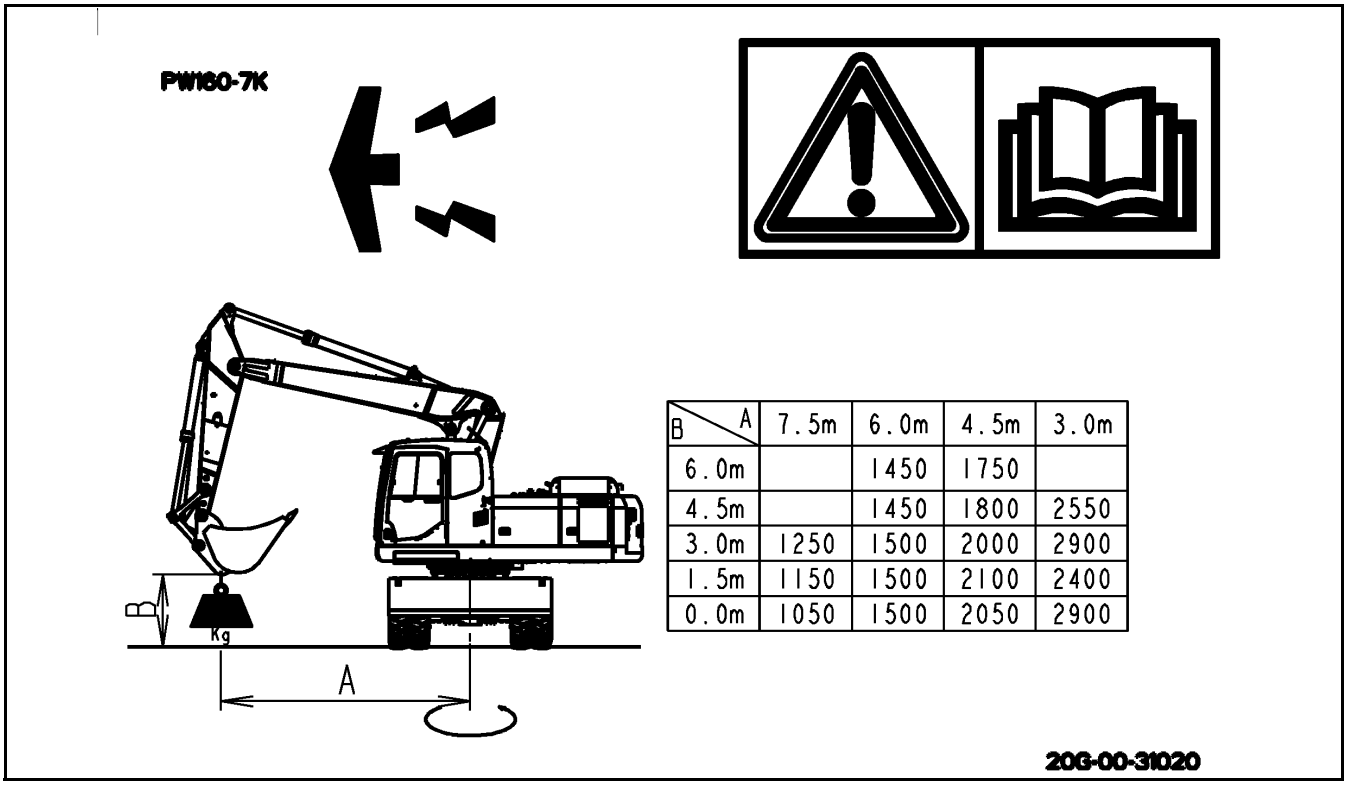


| B \ A | 7.5m | 6.0m | 4.5m | 3.0m |
|---|---|---|---|---|
| 6.0m | | 1450 | 1750 | |
| 4.5m | | 1450 | 1800 | 2550 |
| 3.0m | 1250 | 1500 | 2000 | 2900 |
| 1.5m | 1150 | 1500 | 2100 | 2400 |
| 0.0m | 1050 | 1500 | 2050 | 2900 |

# OPERATION

**⚠ WARNING**

**Please read and make sure that you understand the safety volume before reading this section.**

# GENERAL VIEW

## GENERAL VIEW OF MACHINE

If directions are indicated in this section, they refer to the directions shown by in the arrows in the diagram below.

| A: FRONT | B: REAR | C: RIGHT | D: LEFT |
|---|---|---|---|

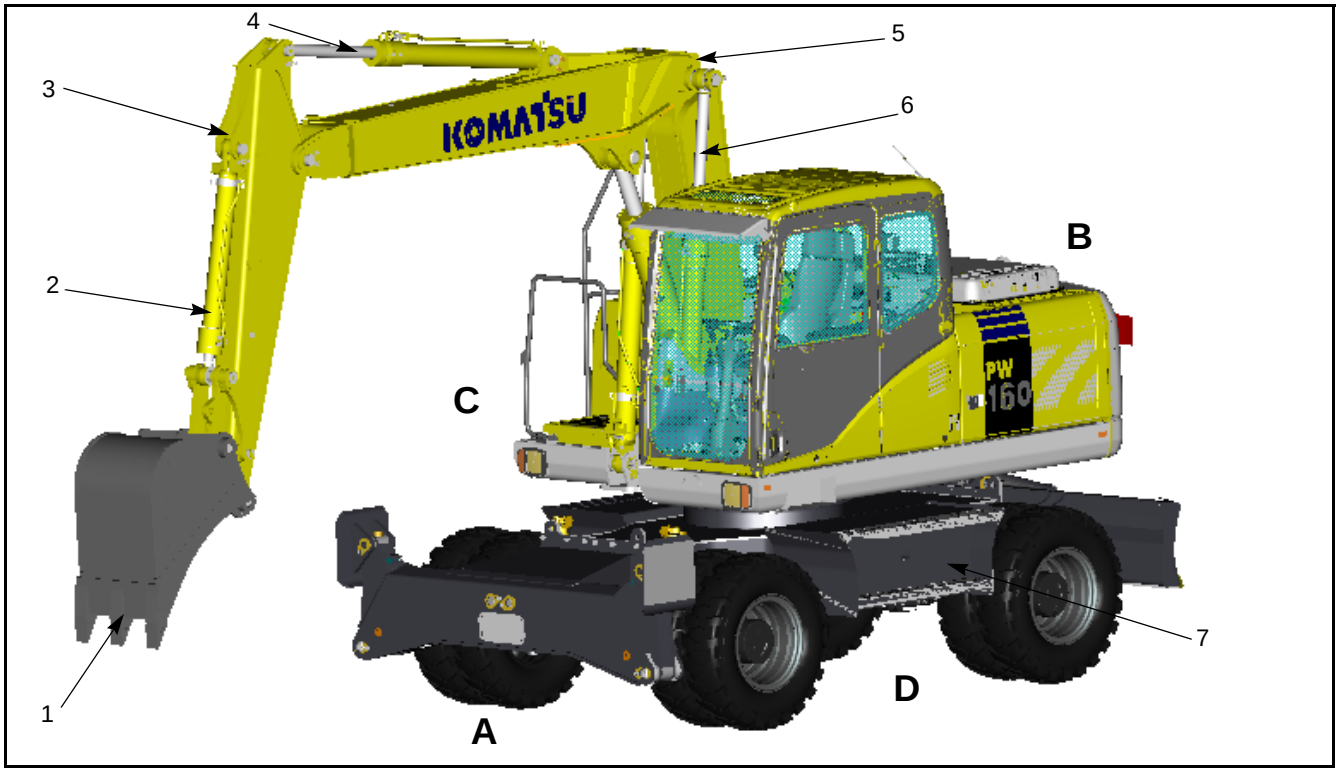


| | |
|---|---|
| 1. Bucket | 5. Boom |
| 2. Bucket cylinder | 6. Boom Cylinder |
| 3. Arm | 7. Undercarriage |
| 4. Arm cylinder | |

# GENERAL VIEW OF CONTROLS AND GAUGES

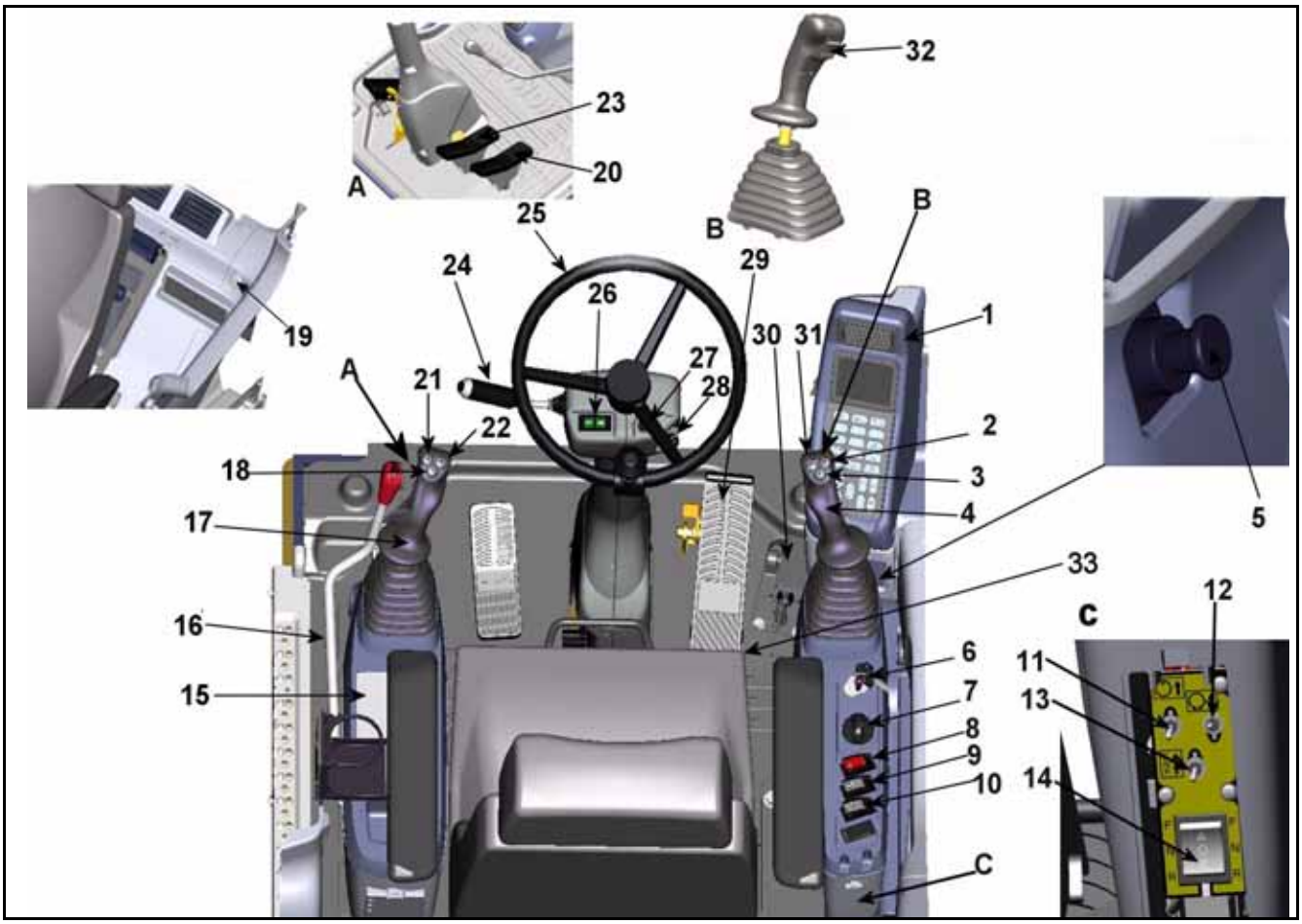


| | |
|---|---|
| 1. Machine monitor | 18. Horn |
| 2. Clamshell rotate right | 19. 12V power supply |
| 3. Boom and chassis attachment select | 20. HCU Pedal (Option extra) |
| 4. Right control lever | 21. Power max button |
| 5. Cigarette lighter | 22. Spare |
| 6. Starter switch | 23. Hydraulic Adjust Boom pedal (Option extra) |
| 7. Fuel control dial | 24. Indicator stalk (horn, windscreen wash/wipe, direction indicators, roadlight dip/main beam/flash) |
| 8. Park brake switch | 25. Steering wheel |
| 9. Swing lock | 26. Turn indicator warning lights |
| 10. Quick coupler | 27. Park light override |
| 11. Pump override | 28. Driving light |
| 12. Swing override | 29. Brake pedal |
| 13.Travel override | 30.Travel pedal |
| 14. Override F/N/R | 31. Clamshell rotate left |
| 15. Air conditioner location | 32. F/N/R switch |
| 16. Safety lock lever | 33. Mechanical swing lock |
| 17. Left control lever | |

# EXPLANATION OF COMPONENTS

The following is an explanation of the devices needed for operating the machine.

To carry out suitable operations correctly and safely, it is important to understand fully the methods of operating the equipment and the meanings of the displays.

## MACHINE MONITOR

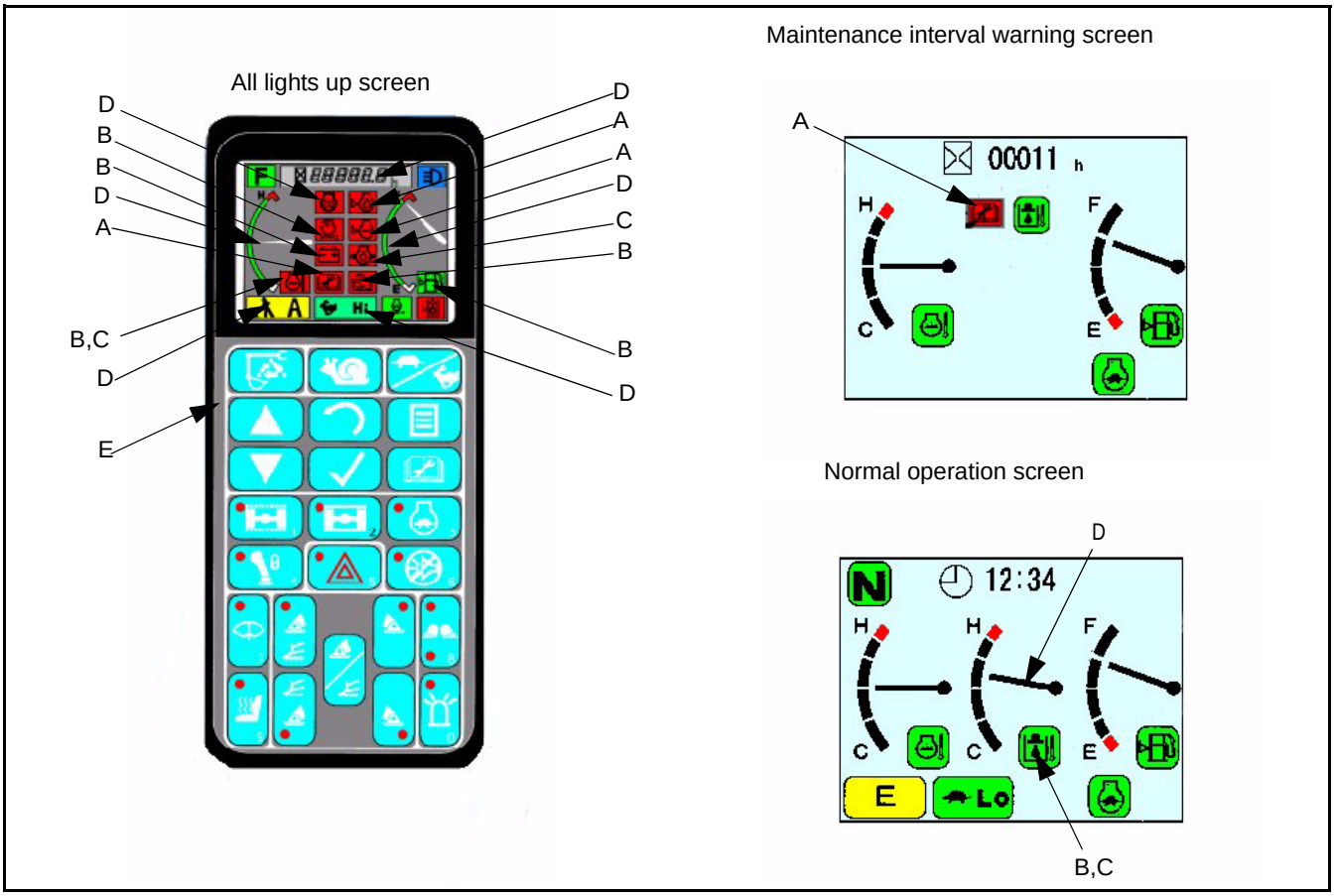


| | |
|---|---|
| A: Basic check Items | D: Meter Display Portion, Pilot Display Portion |
| B: Caution Items | E: Monitor Switches |
| C: Emergency Stop Items | |

## BASIC OPERATION OF MACHINE MONITOR

**If there is abnormality when starting engine**

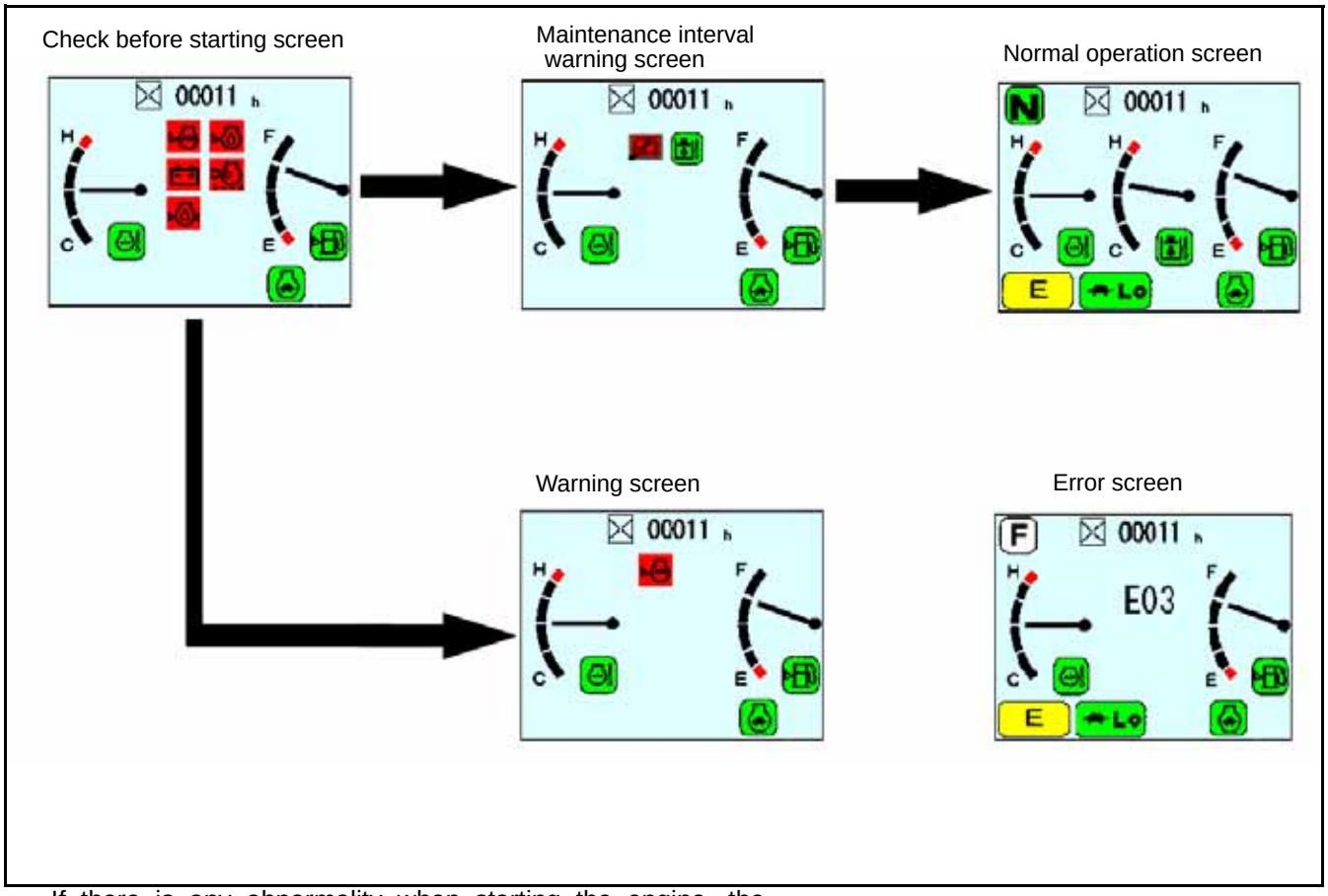


- If there is any abnormality when starting the engine, the check before starting screen changes to the maintenance interval warning screen, warning screen, or error screen.
- After displaying the check before starting screen for 2 seconds, the screen changes to the maintenance interval warning screen.
- After displaying the maintenance interval warning screen for 30 seconds, the screen returns to the normal screen.
- After displaying the check before starting screen for 2 seconds, the screen changes to the warning screen or error screen.

**If any abnormality occurs during operation**

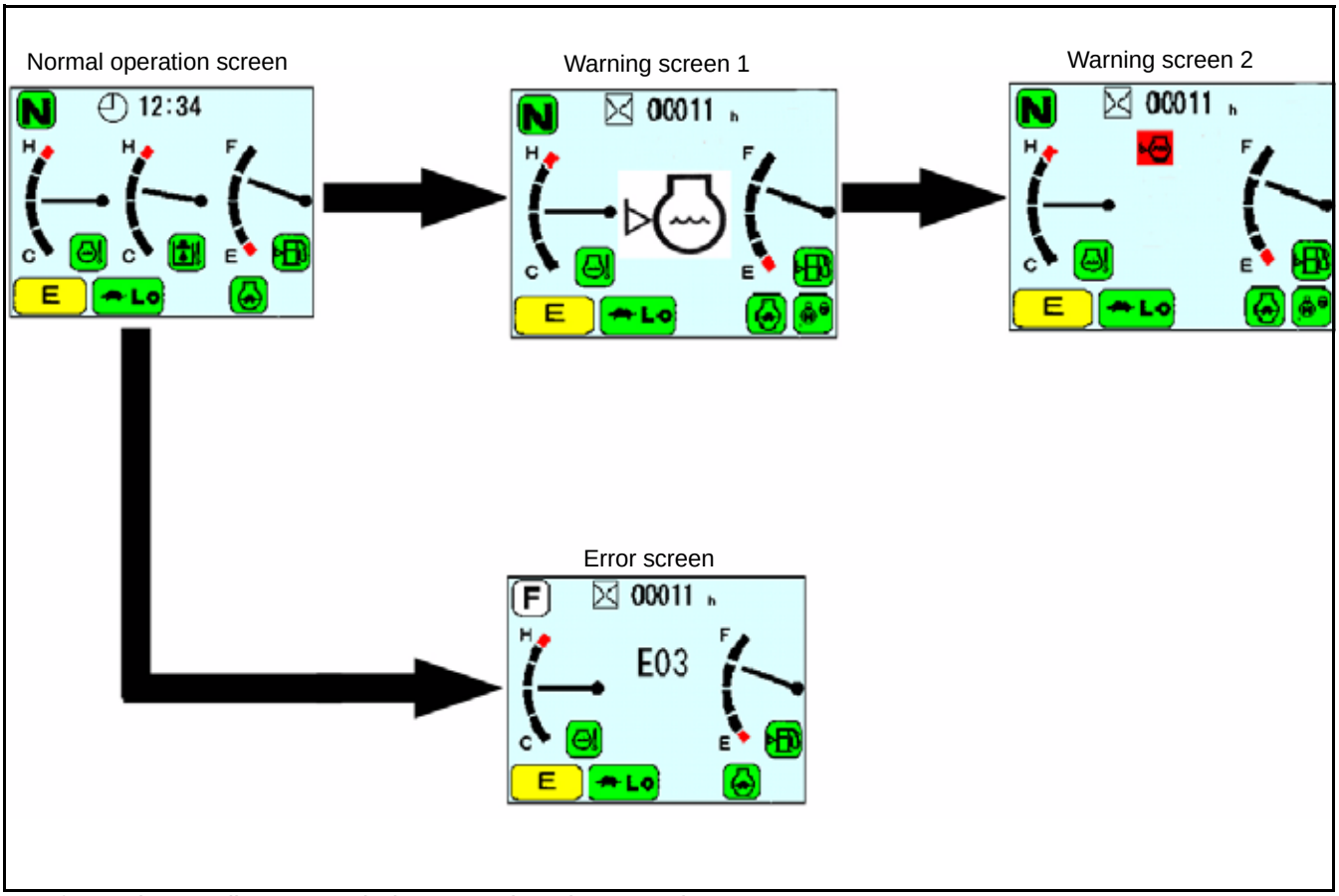


- If any abnormality occurs during operation, the normal operation screen changes to warning screen (1) or the error screen.
- After displaying warning screen (1) for 2 seconds, the screen automatically changes to warning screen (2), with exception of low brake pressure when warning screen (1) remains permanently active.

## BASIC CHECK ITEMS

**WARNING**

**These monitors are not a guarantee of the condition of the machine. Do not simply rely on the monitors when carrying out checks before starting (daily checks). Always get off the machine and check each item directly.**

This displays the basic items that must be checked before starting the engine. If there is any abnormality, the monitor for the location of the abnormality will light up.

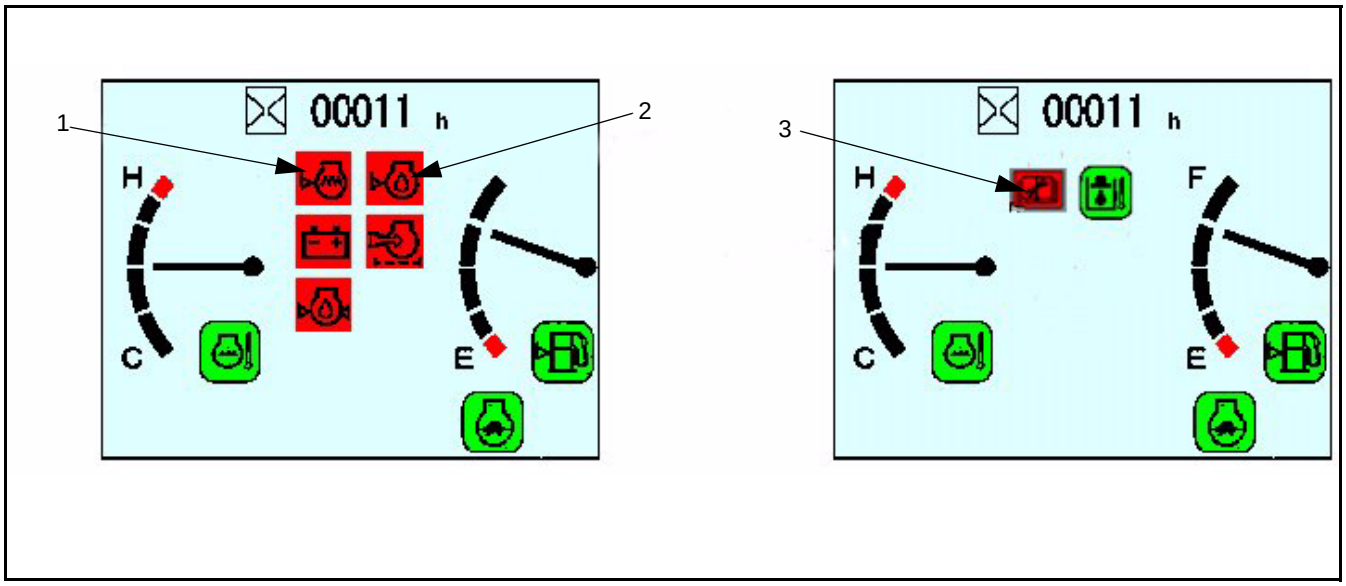


### 1. RADIATOR WATER LEVEL MONITOR

| | |
|---|---|
| (1) Radiator water level monitor | (3) Maintenance monitor |
| (2) Engine oil level monitor | |

This monitor (1) warns the operator that there has been a drop in the radiator water level. If the radiator water level is low, the lamp lights up red, so check the water level in the radiator and the sub-tank, and add water.

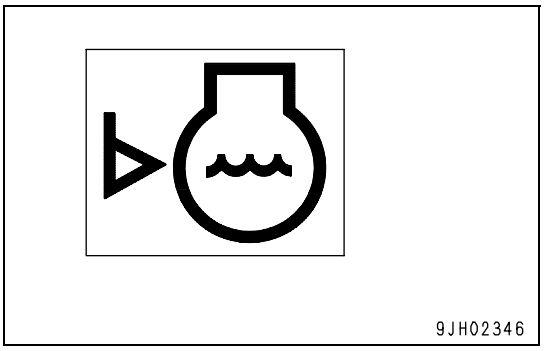

### 2. ENGINE OIL LEVEL MONITOR

This monitor (2) warns the operator that there has been a drop in the oil level in the engine oil pan. If the oil level in the engine oil pan is low, the lamp lights up red, so check the oil level in the engine oil pan, and add oil.

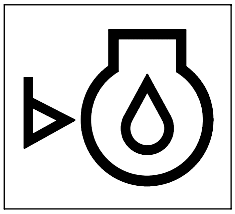

9JH01663

### 3. MAINTENANCE INTERVAL MONITOR

This monitor (3) lights up to warn the operator that the set time has passed since the maintenance was last carried out.

This monitor screen goes out after 30 seconds and returns to the normal operation screen.

**For details of the method of checking the maintenance interval, see "FRONT AND REAR WORKLIGHTS SWITCH (102)".**

If it is desired to change the setting of the maintenance interval, please consult your Komatsu distributor.

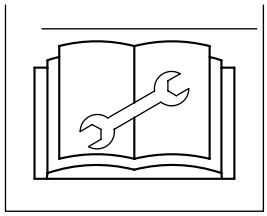

9JH02347

## CAUTION ITEMS

**⚠ CAUTION**

**If the warning monitor lights up red, stop operations as soon as possible and carry out inspection and maintenance at the applicable location. If the warning is ignored, it may lead to failure.**

These are items that should be observed while the engine is running. If any abnormality occurs, the screen displays the item that needs immediate action.

If there is an abnormality, the monitor for the abnormal location lights up red.

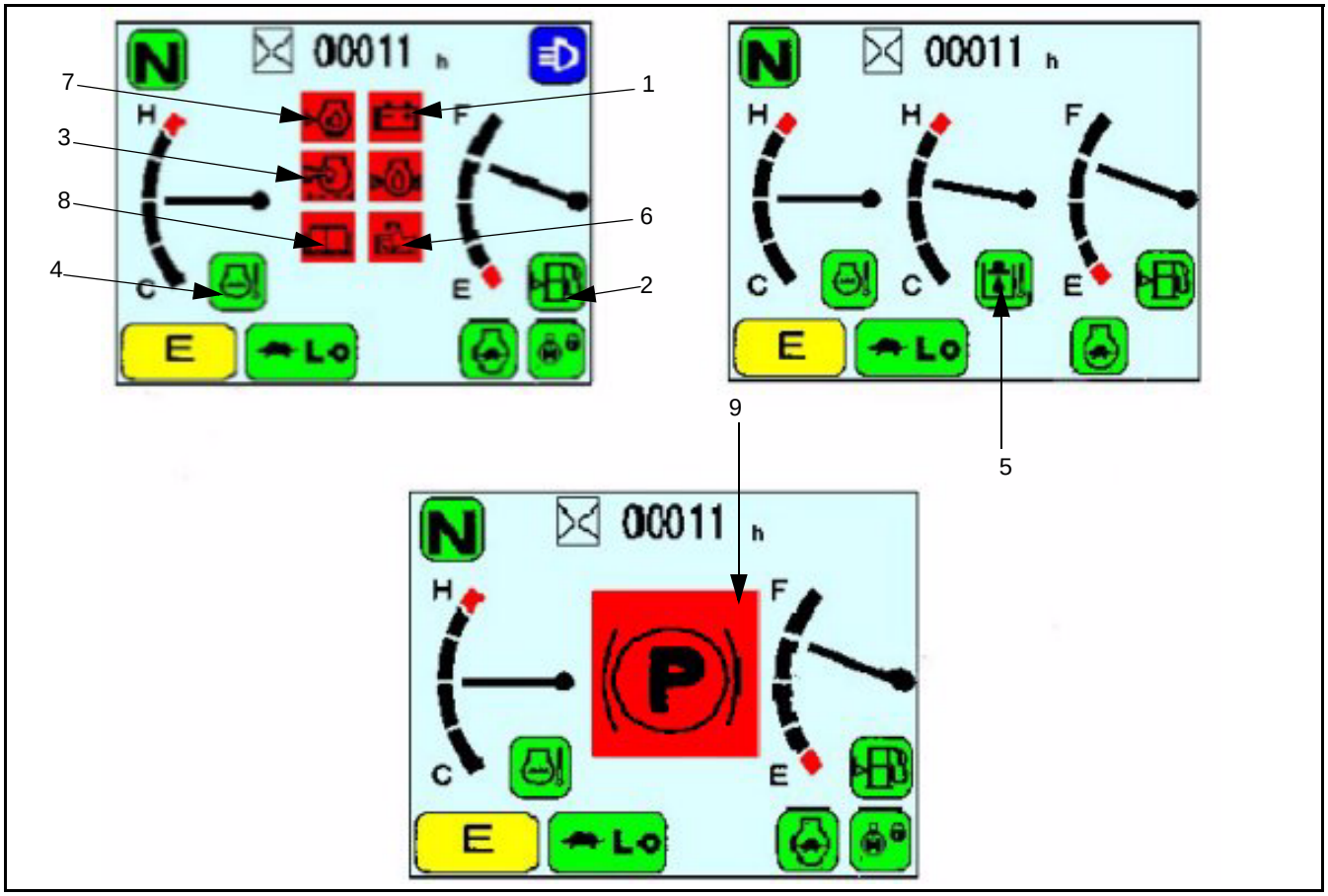


| | |
|---|---|
| (1) Charge level monitor | (6) Overload Caution Monitor |
| (2) Fuel level monitor | (7) Engine oil level low |
| (3) Air cleaner clogging monitor | (8) Service machine-over due |
| (4) Engine water temperature monitor | (9) Park brake |
| (5) Hydraulic oil temperature monitor | |

### 1. CHARGE MONITOR

This monitor (1) warns the operator that there is an abnormality in the charging system when the engine is running. If the battery is not being charged properly while the engine is running, it lights up red.

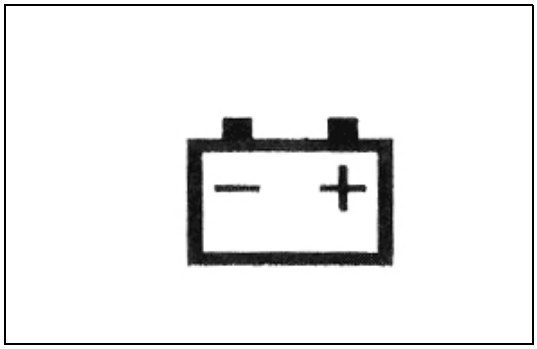

If it lights up red, check for looseness of the V-belt. If any abnormality is found, take the necessary action. For details, see "OTHER TROUBLE (214)".

**REMARK**

While the starting switch is ON, the lamp will remain lit and will go off once the engine is started.

**REMARK**

When the engine is started or stopped with the starting switch at the ON position, the lamp may light up and the buzzer may sound momentarily, but this does not indicate any abnormality.

### 2. FUEL LEVEL MONITOR

This monitor (2) lights up to warn the operator that the level in the fuel tank is low.

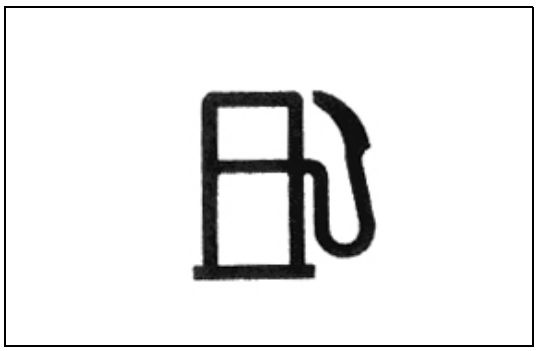

If the remaining amount of fuel goes down to 41 litres, the light changes from green to red, so add fuel as soon as possible.

### 3. AIR CLEANER CLOGGING MONITOR

This monitor (3) warns the operator that the air cleaner is clogged.

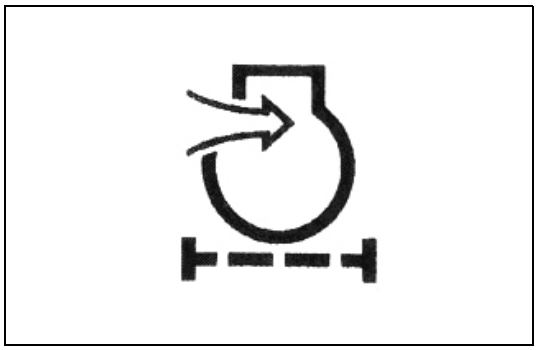

If it lights up red, stop the engine and inspect and clean the air cleaner.

### 4. ENGINE WATER TEMPERATURE MONITOR

If this monitor (4) lights up white in low temperatures, carry out the warming-up operation.

**For details, see "WARMING UP OPERATION (163)".**

Continue the warming-up operation until monitor (4) changes to green.

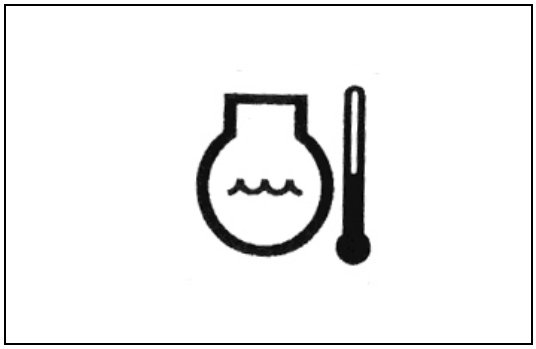

### 5. HYDRAULIC OIL TEMPERATURE MONITOR

If this monitor (5) lights up white in low temperatures, carry out the warming-up operation.

**For details, see "WARMING UP OPERATION (163)".**

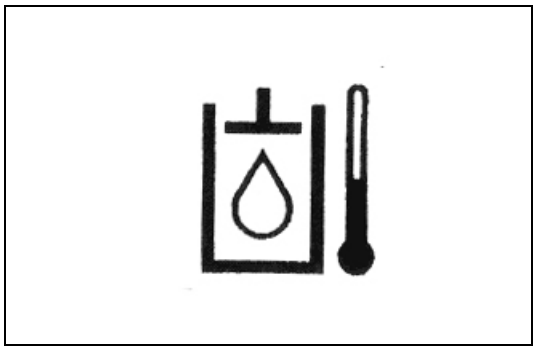

### 6. OVERLOAD CAUTION (When lifting)

This monitor warns that the machine is close to tipping due to the load (an audible warning is also given), if the warning is given lower the load.Refer the lifting capacity chart for safe load.

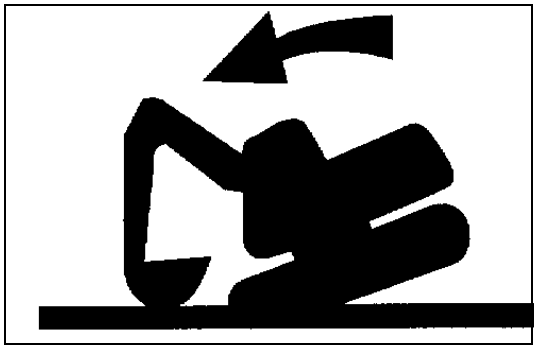

### 7. ENGINE OIL LEVEL LOW

When monitor (7) lights up, the engine oil level is insufficient. Stop machine immediately and refill to recommended levels

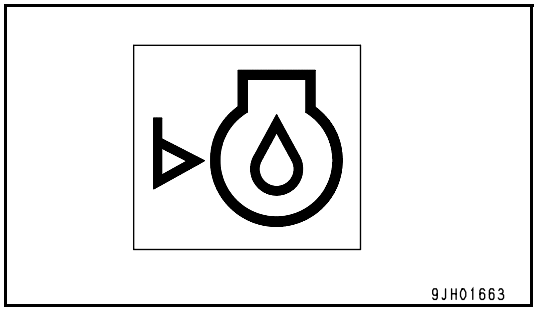

### 8. SERVICE MACHINE - OVERDUE

This monitor (8) lights red when the machine service is overdue. The machine should be serviced immediately or damage may occur.

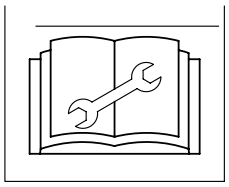


### 9. PARK BRAKE

When park brake is applied, this lamp will illuminate.

## EMERGENCY STOP ITEMS

**⚠ CAUTION**

**If the monitor lights up red, stop the engine immediately or run it at low idle, then check the applicable location and carry out the necessary action.**

These are items that should be observed while the engine is running. If there is an abnormality, the monitor for the abnormal location lights up red and the buzzer sounds, so carry out action immediately.

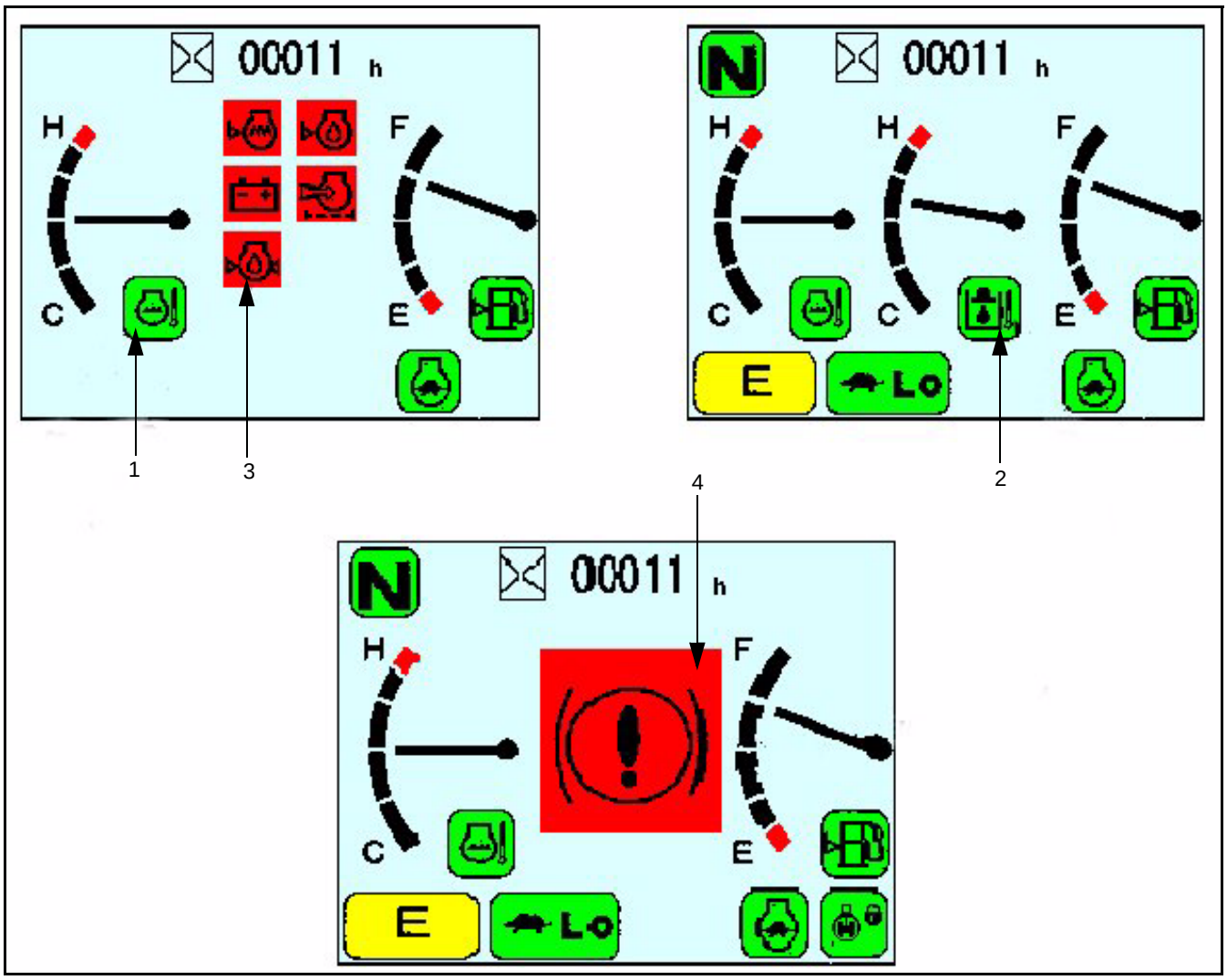


| | |
|---|---|
| (1) Engine water temperature monitor | (3) Engine oil pressure monitor |
| (2) Hydraulic oil temperature monitor | (4) Low brake pressure |

### 1. ENGINE WATER TEMPERATURE MONITOR

This monitor (1) warns the operator that the engine water temperature has risen.

If the engine water temperature becomes abnormally high, the monitor lights up red, the overheat prevention system is automatically actuated, and the engine speed goes down.

Stop operations and run the engine at low idle until monitor (1) changes to green.

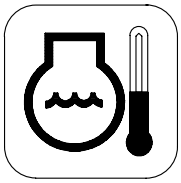


### 2. HYDRAULIC OIL TEMPERATURE MONITOR

This monitor (2) warns the operator that the hydraulic oil temperature has risen. If it lights up red during operations, run the engine at low idle or stop the engine and wait until the oil temperature goes down and the monitor changes to green.

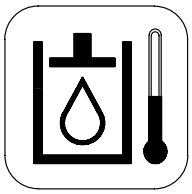


### 3. ENGINE OIL PRESSURE MONITOR

This monitor (3) lights up red if the engine lubrication oil pressure goes below the normal level. If it lights up red, stop the engine, and check the lubrication system and the level of oil in the oil pan.

**REMARK**

When the starting switch is ON, this lamp remains illuminated, and after the engine starts, it goes out. When the engine starts, the buzzer sounds momentarily, but this is not an abnormality.

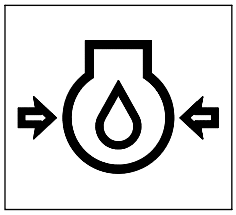

### 4. LOW BRAKE PRESSURE

When brake system hydraulic pressure is abnormal, this lamp will illuminate.

**⚠ CAUTION**

**Do not drive machine with low brake pressure warning lamp illuminated.**

**REMARK**

The color when the monitor lights up for the basic check items, caution items, and emergency stop items is as follows.

| Type of monitor | Color when monitor lights up | | |
|---|---|---|---|
| | When normal | When abnormal | At low temperature |
| Radiator water level monitor | OFF | Red | – |
| Engine oil level monitor | OFF | Red | – |
| Maintenance interval monitor | OFF | Red | – |
| Charge monitor | OFF | Red | – |
| Fuel level monitor | Green | Red | – |
| Air cleaner clogging monitor | OFF | Red | – |
| Engine water temperature monitor | Green | Red | White |
| Hydraulic oil temperature monitor | Green | Red | White |
| Engine oil pressure monitor | OFF | Red | – |
| Overload caution monitor | OFF | Red | – |
| Low brake pressure | OFF | Red | - |

## METER DISPLAY PORTION

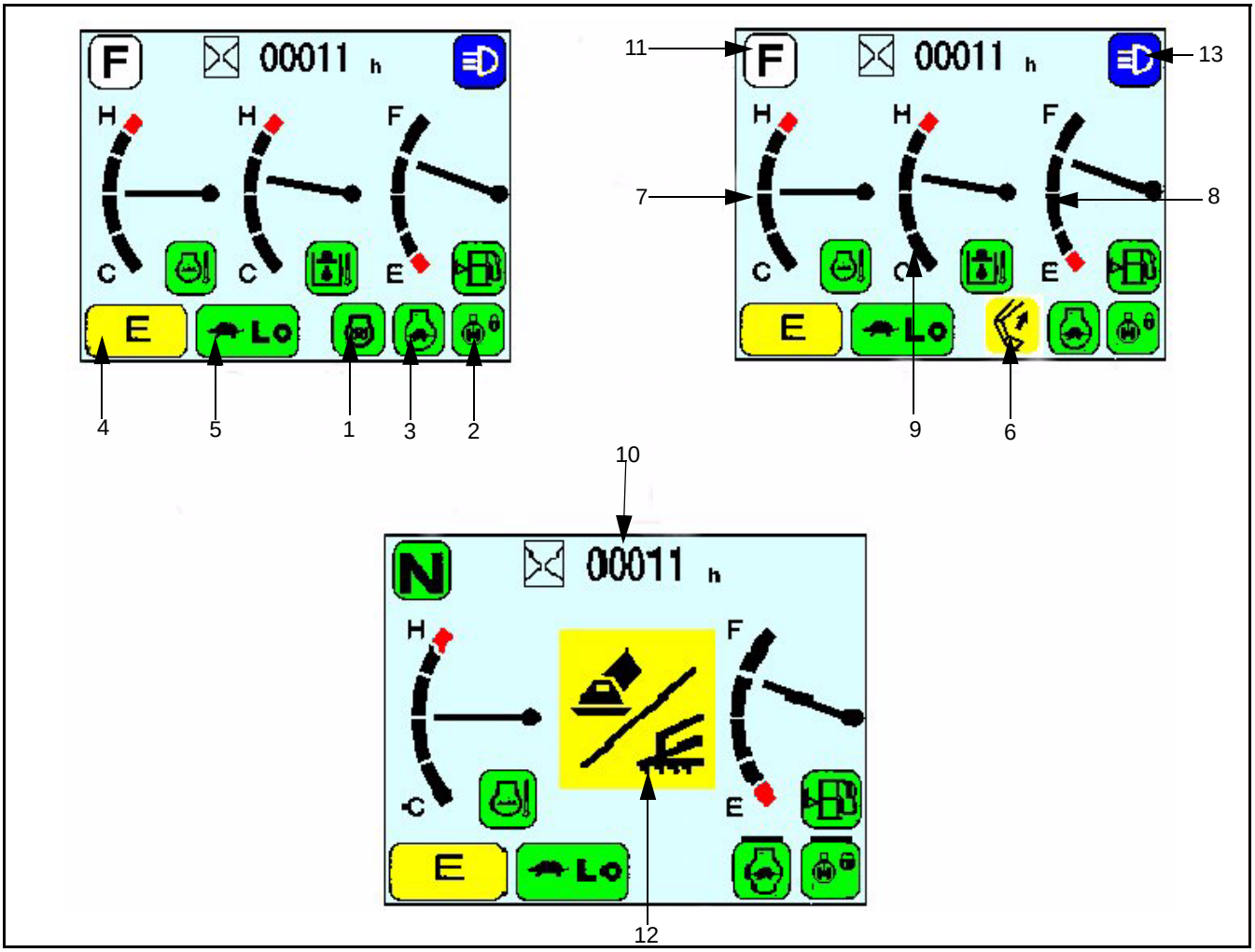


| | |
|---|---|
| (1) Engine Pre-heating Monitor | (8) Fuel Gauge |
| (2) Swing Lock Monitor | (9)Hydraulic oil temperature gauge |
| (3) Auto-deceleration monitor | (10) Service Meter and clock |
| (4) Working mode monitor | (11) Travel direction monitor |
| (5) Travel mode monitor | (12) Undercarriage attachment monitor |
| (6) One touch power up monitor | (13) Main beam monitor |
| (7) Engine water temperature gauge | |

### PILOT DISPLAY

When the starting switch is ON, the pilot display lights up when the display items are functioning.

### 1. ENGINE PRE-HEATING MONITOR

This monitor lamp (1) indicates the pre-heating time required when starting the engine at an ambient temperature below 0°C.

The monitor lamp lights when the starting switch is turned to the HEAT position and flashes after about 30 seconds to show that the pre-heating is completed. (The monitor lamp will go off after about 10 seconds.)

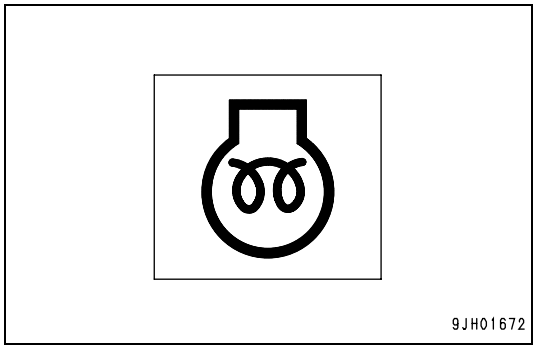


### 2. SWING LOCK MONITOR

This monitor (2) informs the operator that the swing lock is being actuated.

Actuated: Lights up

When the swing lock switch is turned ON (ACTUATED), the monitor lamp lights up.
This monitor flashes when the swing holding brake cancel switch is turned on.

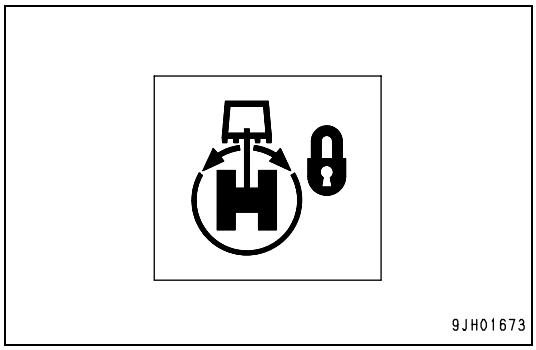


**REMARK**

The swing motor is equipped with a disc brake that mechanically stops the rotation. When the swing lock monitor lamp is lit up, the brake remains applied.

### 3. AUTO-DECELERATION MONITOR

This monitor (3) shows if the auto-deceleration function has been actuated.

The monitor display when the auto-deceleration switch is operated is as follows.

Auto-deceleration monitor ON: Auto-deceleration actuated.

Auto-deceleration monitor OFF: Auto-deceleration canceled.

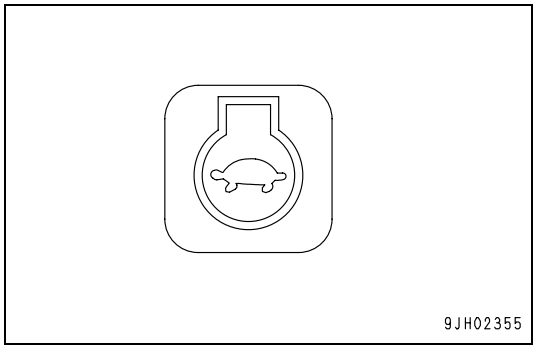


### 4. WORKING MODE MONITOR

This monitor (4) displays the set working mode.

The monitor display when the working mode switch is operated is as follows.

| | |
|---|---|
| A | A mode (for heavy-load operations) |
| E | E mode (for operations with emphasis on fuel economy) |
| L | L mode (for fine-control operations and lifting) |
| B | B mode (for breaker operations) |

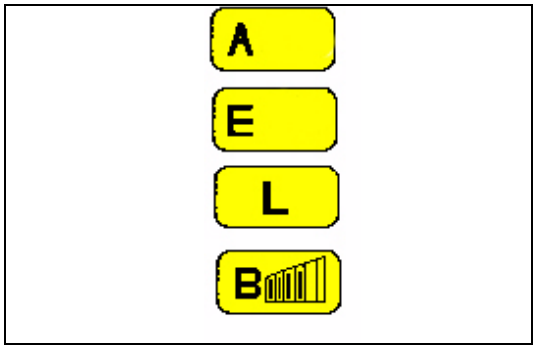

### 5. TRAVEL MODE MONITOR

This monitor (5) displays the set mode for the travel speed.

When one of the travel mode selector switches is operated the monitor displays one of the following selections.

| | |
|---|---|
| CR | Creep mode |
| Lo | Low mode |
| HI | High mode |
| AT | Automatic mode |

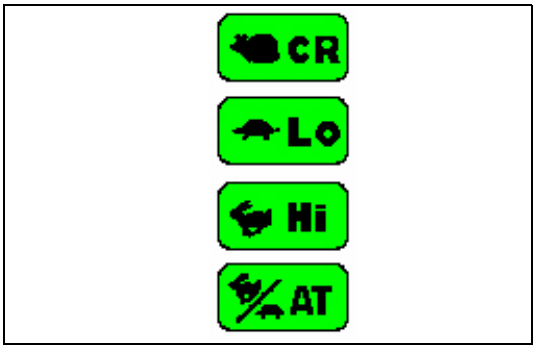


### 6. POWER MAX MONITOR

This monitor (6) shows if the power max function has been actuated.

The monitor display (when the knob switch on the left control lever is operated) is as follows.

Monitor lights up: Digging power is increased for 8.5 seconds.

**REMARK**

The digging power is increased while the knob switch is being pressed only for working modes A and E. Note that this operation should be used to overcome heavy operating conditions and not for continuous use.

Monitor goes out: Power max function stopped

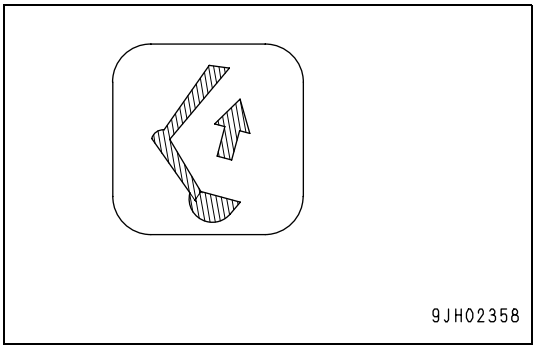


## METERS

### 7. ENGINE WATER TEMPERATURE GAUGE

This meter (7) indicates the engine cooling water temperature.

During normal operations, the indicator should be in the black range. If the indicator enters the red range during operations, the overheat prevention system is actuated.

The overheat prevention system acts as follows.

Red range position (A): Engine water temperature monitor (1) turns red.

Red range position (B): Engine speed is reduced to low idle, engine water temperature monitor lamp (C) turns red, and the alarm buzzer sounds at the same time.

The overheat prevention system remains actuated until the indicator returns to the black range.

When the engine is started, if the indicator is at position (C), engine water temperature monitor (1) lights up white.

In this case, carry out the warming-up operation. For details, see "WARMING UP OPERATION (163)".

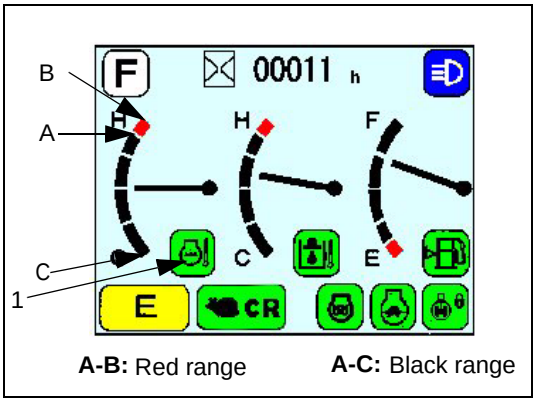

## 8. FUEL GAUGE

This meter (8) displays the level of fuel in the fuel tank.

During operations, the indicator should be in the black range.

If the indicator enters red range (A) during operations, there are less than 100 litres of fuel remaining in the tank, so check and add fuel.

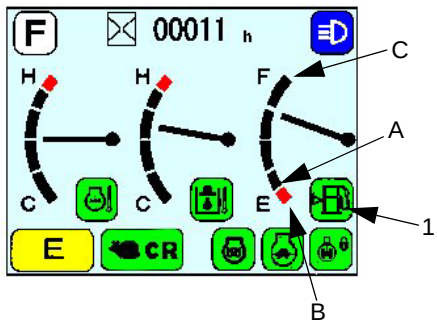


**A-B:** Red range **A-C:** Black range

**REMARK**

If the indicator enters red range (B), there are less than 41 litres of fuel remaining.

When the indicator is in the red range (A) to (B), fuel level monitor (1) lights up red. When indicator is between A and C the fuel level monitor (1) remains green.

The correct fuel level may not be displayed for a short time when the starting switch is turned ON, but this is not an abnormality.

## 9. HYDRAULIC OIL TEMPERATURE GAUGE

This meter (9) displays the hydraulic oil temperature.

During operations, the indicator should be in the black range.

If the indicator enters red range (A) during operations, the hydraulic oil temperature has gone above 102°C. Stop the engine or run it at low idle and wait for the hydraulic oil temperature to go down.

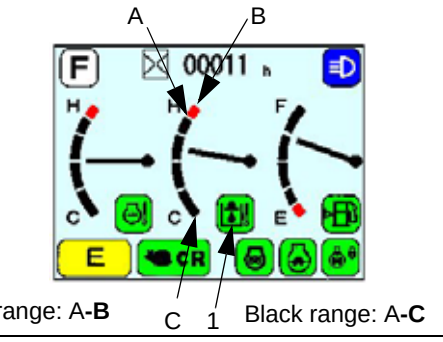


Red range: A-**B** Black range: A-**C**

**REMARK**

When the indicator is in the red range (A) to (B), the hydraulic oil temperature is as follows.

Red range position (A): More than 102°C.

Red range position (B): More than 105°C.

When the indicator is in the red range (A) to (B), hydraulic oil temperature monitor (1) lights up red. When indicator is between A and C the hydraulic oil temperature monitor (1) remains green.

If the indicator is at position (C) when the engine is started, the hydraulic oil temperature is more than 25°C, and hydraulic oil temperature monitor (1) lights up white. In this case, carry out the warming-up operation.

**For details, see "WARMING UP OPERATION (163)".**

**REMARK**

If other warnings are displayed, only monitor (1) is displayed and not the range indicator.

### 10. SERVICE METER AND CLOCK

This monitor (10) displays the total time that the machine has been operated. When the engine is running this display changes to a clock.

Use the time display to set the maintenance interval. When the starting switch is ON, the service meter advances even if the machine is not moving.

The service meter advances by 1 for every hour of operation, regardless of the engine speed.

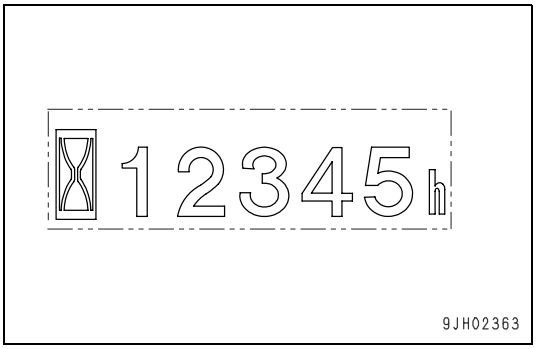


### 11. TRAVEL DIRECTION SELECTION

This monitor (11) displays the set travel direction.

When one of the travel direction switches is selected the monitor displays one of the following selections.

| | |
|---|---|
| F | Forward mode |
| N | Neutral mode |
| R | Reverse mode |

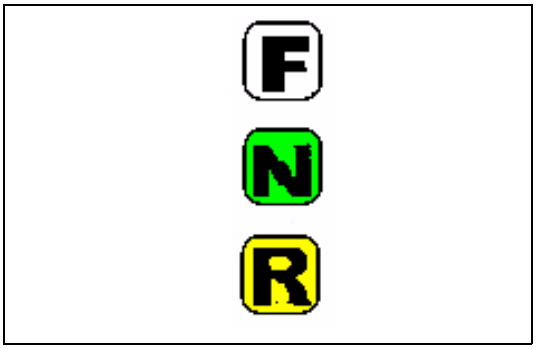


### 12. UNDERCARRIAGE ATTACHMENT MONITOR

When undercarriage attachment is selected from right control lever switch (3) monitor (12) will be displayed. This symbol will remain until undercarriage attachment has been deselected.

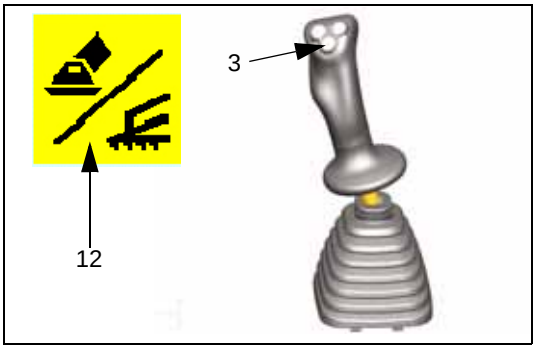


### 13. HIGH BEAM MONITOR

This lamp (13) will illuminate when the main beam is switched on.

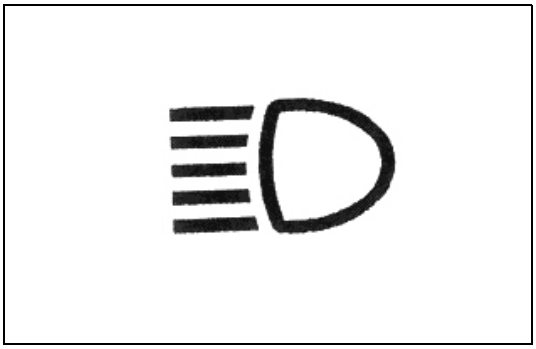

## MONITOR SWITCHES

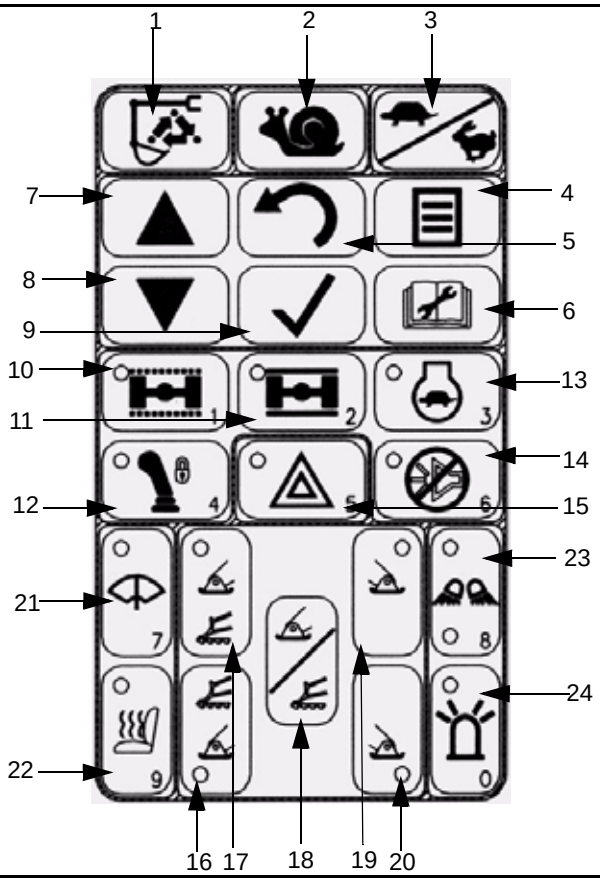


| | |
|---|---|
| (1) Working mode select | (13) Engine auto deceleration |
| (2) Creep speed | (14) Buzzer cancel |
| (3) High/low speed select | (15) Hazard warning |
| (4) Menu select key | (16) Rear left outrigger/blade |
| (5) Undo key | (17) Front left outrigger/blade |
| (6) Service menu | (18) Select all chassis attachment |
| (7) Scroll up | (19) Front right outrigger |
| (8) Scroll down | (20) Rear right outrigger |
| (9) Accept key | (21) Lower wiper |
| (10) Suspension auto lock | (22) Heated seat |
| (11) Suspension lock | (23) Front and rear worklights |
| (12) Control lever lock | (24) Beacon warning light |

### 1. WORKING MODE SELECTOR SWITCH (BASIC SWITCH)

This switch (1) is used to set the power and movement of the work equipment.

Operations can be carried out more easily by selecting the mode to match the type of operation.

A mode: For heavy-load operations

E mode: For operations with emphasis on fuel economy

L mode: For fine-control operations and lifting

B mode: For breaker operations

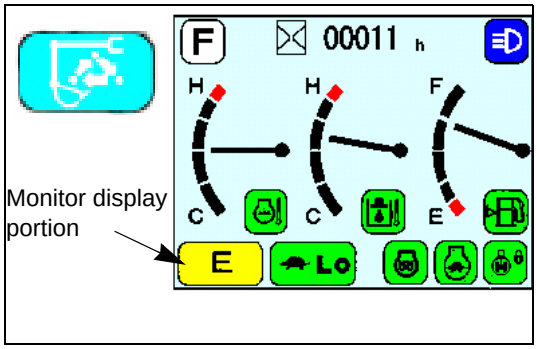


- When the engine is started, the working mode is set automatically to A mode. When the switch is pressed, the system will scroll through each mode in turn. The display on the monitor display portion changes for each mode.
- If you require a default setting other than 'A mode' please consult your Komatsu distributor or dealership to have the setting amended.

**REMARK**

When the mode selector switch is pressed, the mode is displayed in the centre of the monitor display, and the screen returns to the normal screen after 2 seconds. (The diagram on the right is an example of the display for the E mode.)

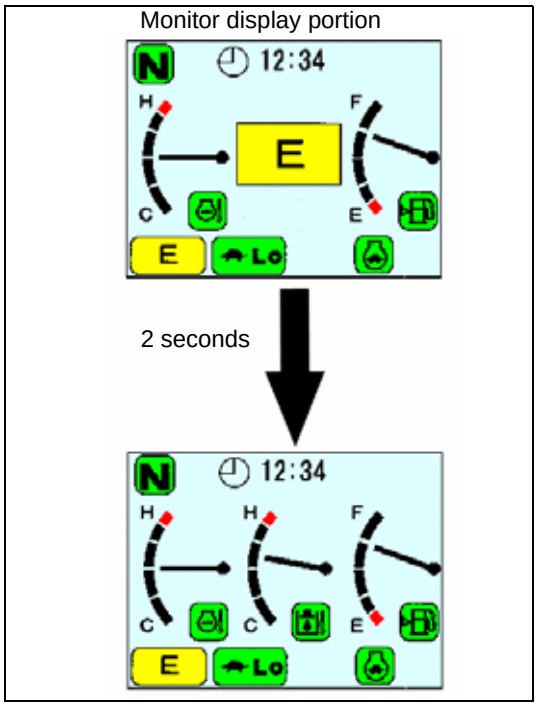


**WARNING**

**When using the breaker, do not use A mode. There is danger that the breaker may be damaged.**

## 2. CREEP SPEED SELECTOR SWITCH

This switch (2) is used to set the travel mode to creep.

CR lights up: Creep mode travel (0-1.5kph).

To cancel creep speed, press Hi/Lo switch.

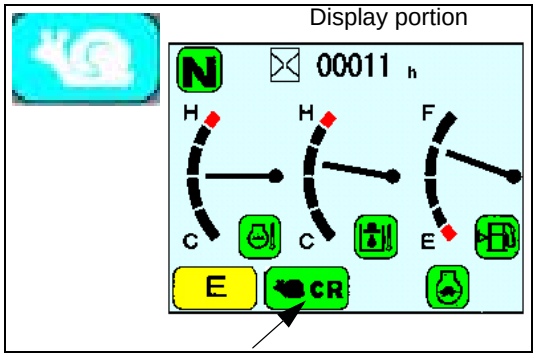


**REMARK**

When creep speed is selected the mode is displayed in the centre of the screen for 2 seconds before returning to the normal screen display.

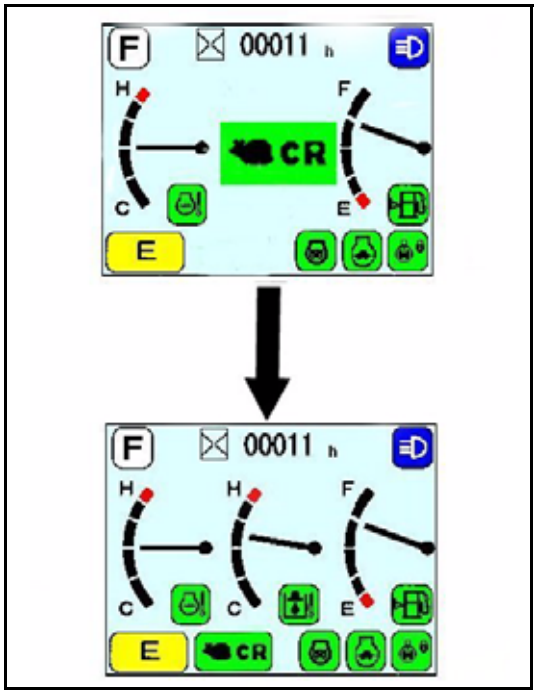


## 3. HIGH/LOW SPEED SELECTOR SWITCH

This switch (3) is used to set the travel speed to 3 stages.

| | |
|---|---|
| Lo lights up: | Low-mode travel |
| Hi lights up: | Hi-mode travel |
| At lights up: | Auto mode travel |

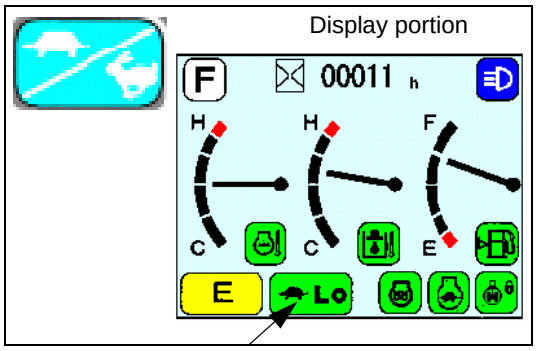


When the engine is started, the speed is automatically set to the last value before engine was stopped.

Each time that the switch is pressed, the display changes Lo→Hi→At→Lo in turn.

When travelling in auto mode (At), if more travel torque is needed, such as when traveling on soft ground or on slopes, the speed automatically switches to low speed (Lo), so there is no need to operate the switch.

- When loading or unloading from a trailer, always travel at low speed. Never operate the travel speed selector switch during the loading or unloading operation.

**REMARK**

Each time that the travel speed selector switch is operated, the mode is displayed in the centre of the monitor display, and the screen returns to the normal screen after 2 seconds.

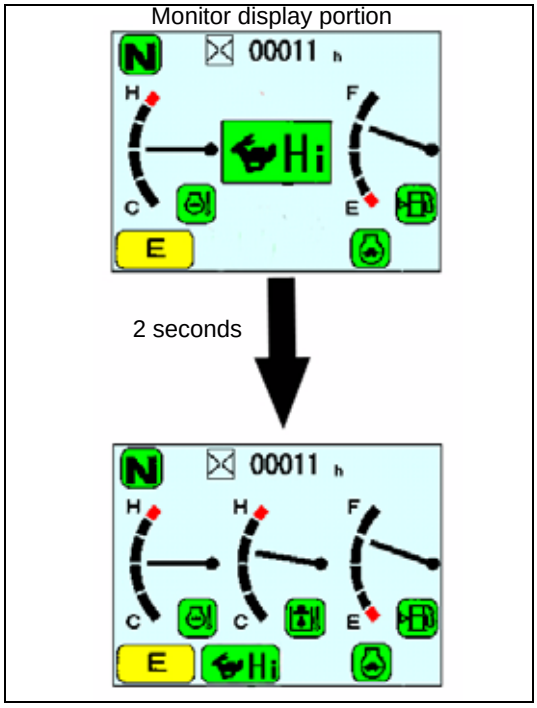


**4. MENU SELECT SWITCH**

This switch (4) is used to select the hydraulic flow setting in each of the working modes A, E, and B.

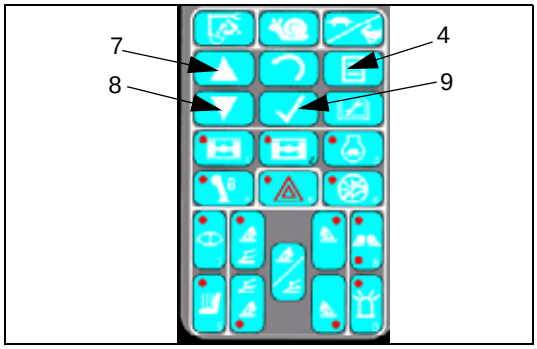


- When the working mode is A or E

1. Press select switch (4) and the normal screen on the monitor display changes to the flow setting screen shown in the diagram on the right.

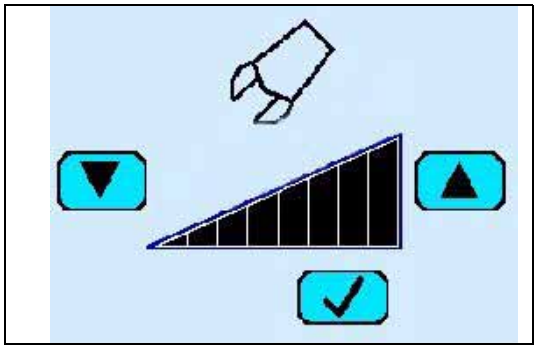

Press up switch (7) or down switch (8) to adjust to the desired flow. Each segments value is shown below.

2. After completing the flow setting, press input confirmation switch (9).
   The monitor display will return to the normal screen.

**REMARK**

The flow can be adjusted for the attachment installed.

- When the working mode is B mode

1. Press select switch (9) and the normal screen on the monitor display changes to the flow setting screen shown in the diagram on the right.
2. Press up switch (7) or down switch (8) to adjust to the desired flow.
3. After completing the flow setting, press input confirmation switch (9).

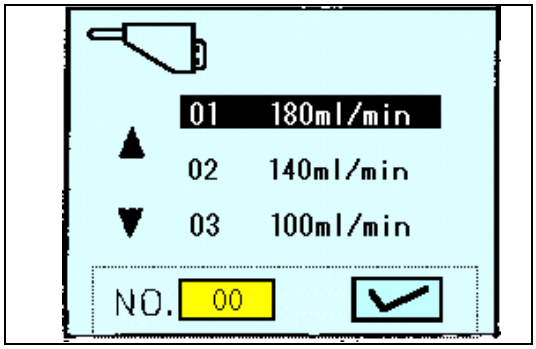


4. With the operation in Step (3), the flow setting screen changes to the fine flow adjustment screen shown in the diagram on the right.
5. Press up switch (7) or down switch (8) to adjust to the desired flow.
6. After completing the flow setting, press input confirmation switch (9).
   The monitor display will return to the normal screen.

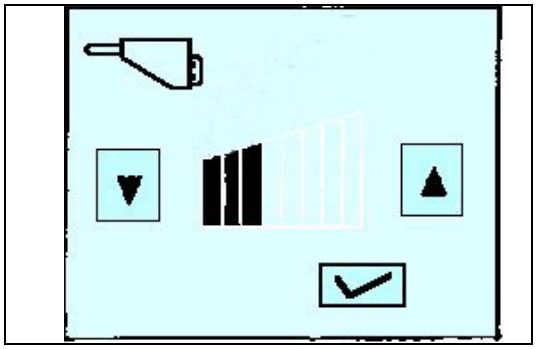

**5. UNDO SWITCH**

Pressing switch (5) whilst in the monitor menu screens, will return you back to the previous screen displayed.

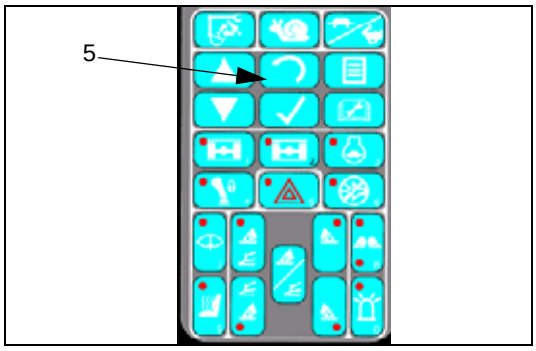

### 6. SERVICE MENU SWITCH

- This switch (6) is used to check the time remaining to maintenance.

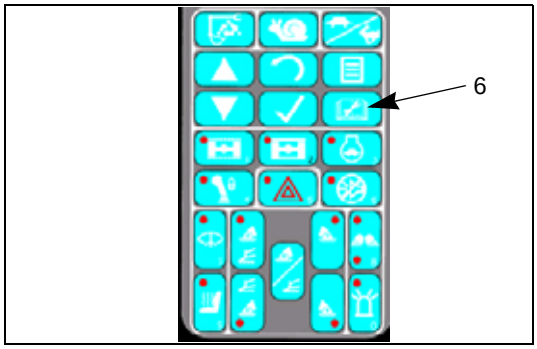


- When this switch (6) is pressed, the screen on the monitor display changes to the maintenance screen shown in the diagram on the right.

  Select the maintenance menu by selecting option 01.

  The time remaining to maintenance is indicated by the color of each monitor display. After confirming the maintenance time, carry out the maintenance.

  White display:More than 30 hours remaining to maintenance

  Yellow display:Less than 30 hours remaining to maintenance

  Red display:Maintenance time has already passed

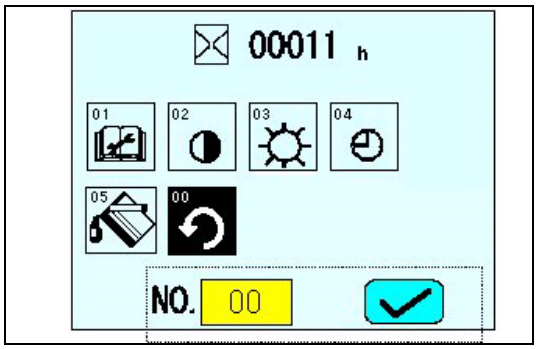


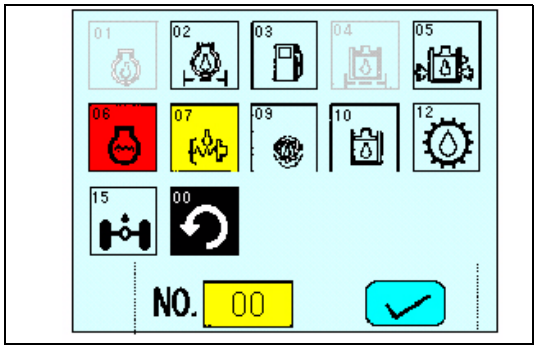


**NOTICE**

- **If the monitor display changes to the maintenance warning screen when the engine is started or when the machine is being operated, stop operations immediately. When this happens, the monitor corresponding to the maintenance warning screen will light up red.**
- **Press switch (6) to display the maintenance screen and check that there is no abnormality in any other monitor.**
- **If another monitor is lit up red on the maintenance screen, carry out maintenance for that item also.**

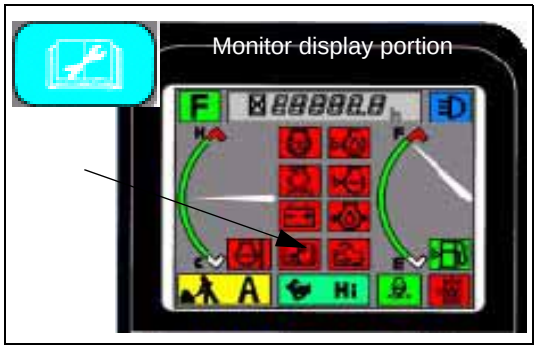

- The maintenance display items are as follows.

| Monitor No. | Maintenance item | Default set screen (H) |
|---|---|---|
| 01 | Change engine oil | 500 |
| 02 | Replace engine oil filter | 500 |
| 03 | Replace fuel filter | 500 |
| 04 | Replace hydraulic oil filter | 1000 |
| 05 | Replace hydraulic tank breather | 500 |
| 07 | Check damper case oil level, add oil | 1000 |
| 09 | Change swing machinery case oil | 1000 |
| 10 | Change hydraulic oil | 5000 |
| 12 | Transmission | 1000 |
| 15 | Axles | 1000 |

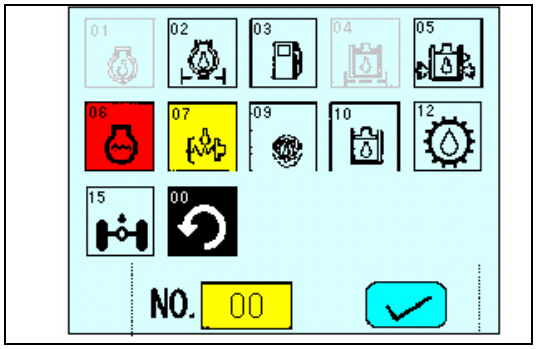


If it is desired to change the setting for the maintenance interval, please contact your Komatsu distributor.

- The method of checking the time remaining to maintenance is as follows.

1. Look at the maintenance screen, press up switch (7) or down switch (8) on the monitor switch portion, until required item is highlighted.
   (The colour of the monitor for the selected item is inverted to black.)

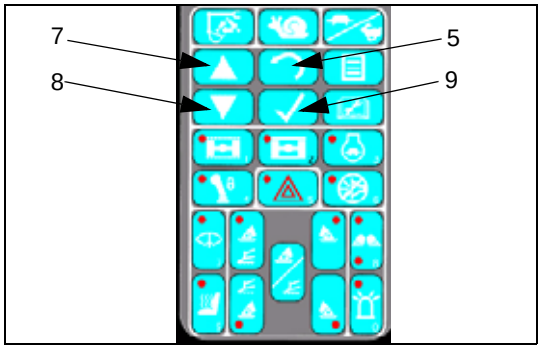


**REMARK**

It is possible to enter the number of the item from the keypad (i.e. enter 12 for transmission oil)

2. After highlighting the monitor item, press input confirmation switch (9). The display screen will switch to the time remaining to maintenance.
   (Press back switch (5) to return to the previous screen.)

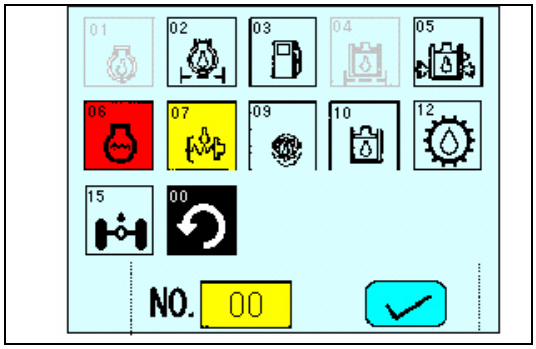

3. Check the time remaining to maintenance.

   (a): Time remaining to maintenance

   (b): Default setting for maintenance interval

   When only checking the time remaining to maintenance, press back switch (5) twice.

   The screen will return to the normal operation monitor screen.

   When canceling the time remaining to maintenance and returning to the default time setting, press input confirmation switch (9). The screen will switch to the default setting screen.

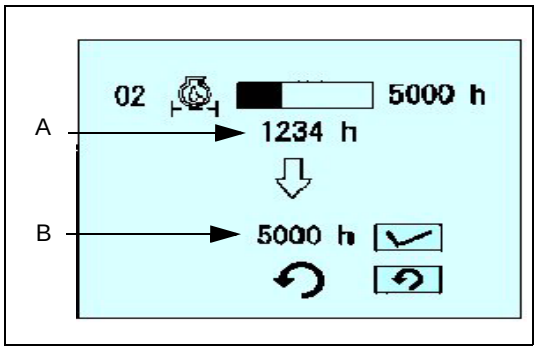


4. After checking the time on the default setting screen, press input confirmation switch (9).
   The screen will return to the maintenance screen.
   (Press back switch (5) to return to the previous screen.)

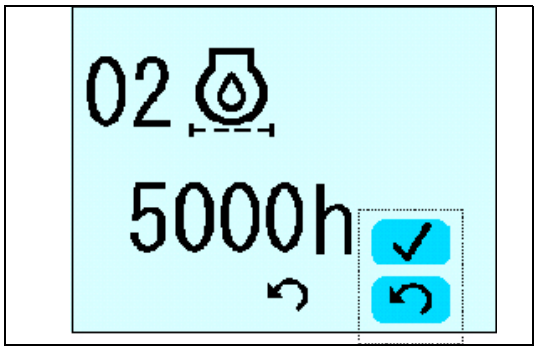


**7. SCROLL UP**
**8. SCROLL DOWN**

Press up switch (7) or down switch (8) when in the menu screens will allow you to move up and down the menu options.

In certain menus they can also be used to increase and decrease displayed values (i.e. breaker force)

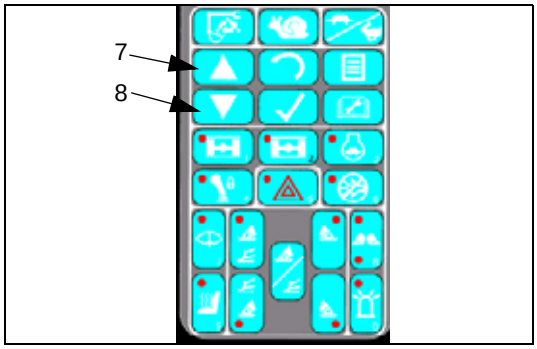


**9. INPUT CONFIRMATION SWITCH**

Press this switch (9) to confirm the selected mode when in the maintenance mode, brightness/contrast adjustment mode, or select mode.

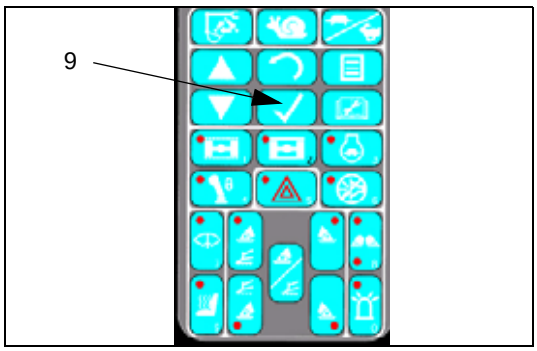

### 10. AUTOMATIC SUSPENSION LOCK SWITCH

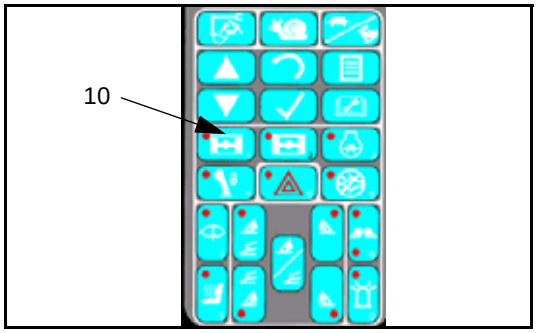


Release the front axle suspension lock, using switch.

Press switch (10) for Front axle suspension ‘auto’ mode i.e. when travel pedal is depressed, front axle suspension travels freely and when travel pedal is not depressed, front axle suspension is locked, as long as machine is stationary. To disengage press (10) again.

The lamp within the switch will illuminate when automatic suspension lock is selected.

**WARNING**

**Take care when using undercarriage attachments to stabilize the machine, and suspension lock simultaneously, as locked front axle may suddenly become free.**

**REMARK**

Permanent and automatic suspension lock cannot be active at the same time. Each mode can be turned on and off by their individual switches.

In the case that auto mode is on and permanent switch is pressed, auto mode will cancel to allow permanent activation and vice versa.

### 11. PERMANENT SUSPENSION LOCK SWITCH

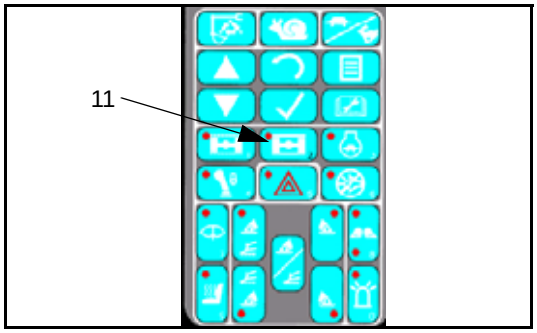


Press switch (11) in order to engage permanent front axle lock. Front axle will be fixed in place when engaged, red light will illuminate. To disengage lock, press switch (11) again.

**REMARK**

When front axle is locked it is not possible to travel in high. If high speed travel is selected, axle will not lock.

### 12. CONTROL LEVER LOCK SWITCH

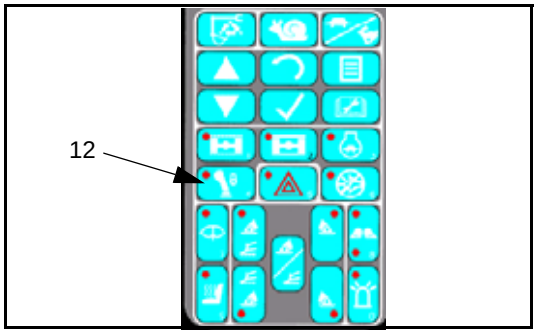


Depressing control lever lock switch will stop lever functionality. Lever lock switch must be engaged when machine travels on highway to prevent accidental use of work equipment.

Light on switch will illuminate when active.

### 13. AUTO-DECELERATION SWITCH

When this auto-deceleration switch (13) is depressed, the auto-deceleration is actuated, if the control levers and foot pedals are in the neutral position, the engine speed is automatically lowered to reduce fuel consumption.

Monitor display ON: Auto-deceleration actuated.

Monitor display OFF: Auto-deceleration cancelled.

When activated, the switch lamp is also illuminated.

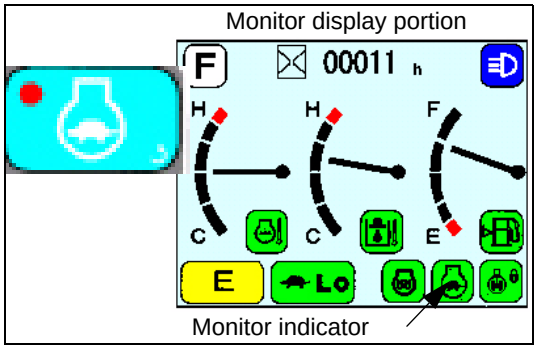


**REMARK**

When the auto-deceleration switch is pressed and the auto-deceleration is actuated, the mode is displayed in the centre of the monitor display, and the screen returns to the normal screen after 2 seconds.

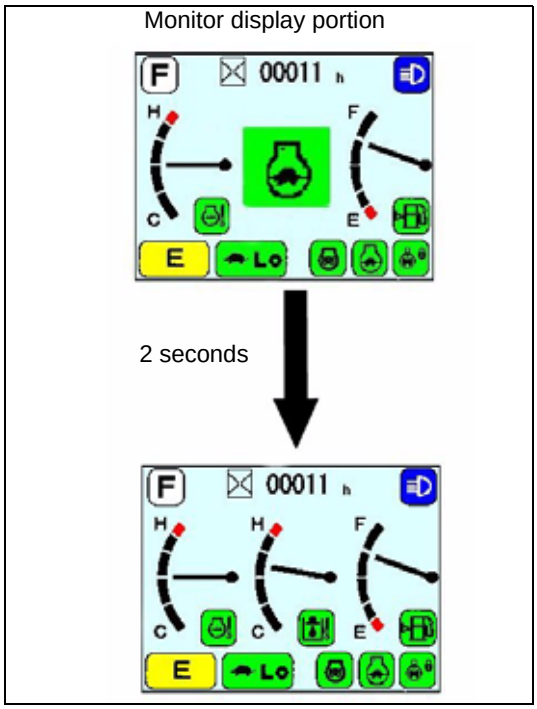


### 14. BUZZER CANCEL SWITCH

This is used to stop the alarm buzzer when it has sounded to warn of some abnormality that has occurred whilst the machine is operating.

**REMARK**

The lamp on the switch will illuminate when the warning buzzer is sounding.

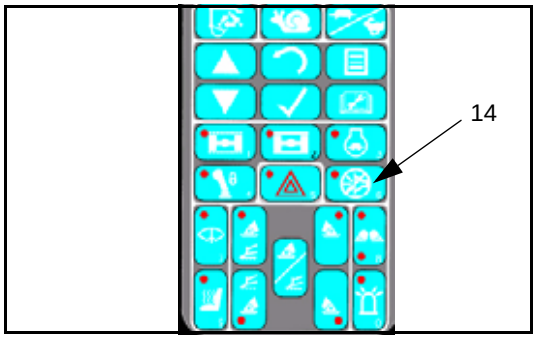

### 15. HAZARD WARNING SWITCH

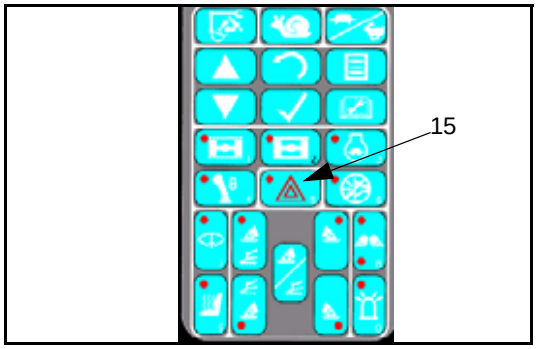


This button is used to switch on the hazard warning lights.

OFF: Hazard warning lights off.

ON: Hazard warning lights on.

(Warning light within switch will flash when switched on).

Keep pressing the switch for 2 seconds, when starter switch is off.

### 16. REAR LEFT OUTRIGGER/BLADE SWITCH

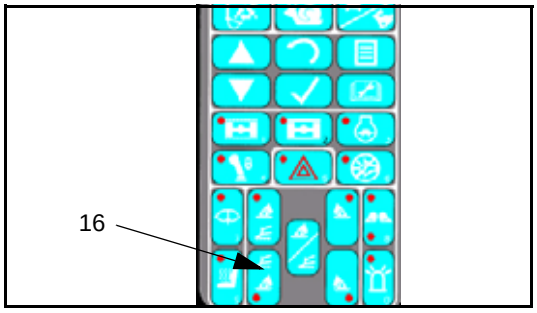


This switch enables selection of rear left outrigger or rear blade Light illuminates when active.

### 17. FRONT LEFT OUTRIGGER/BLADE SWITCH

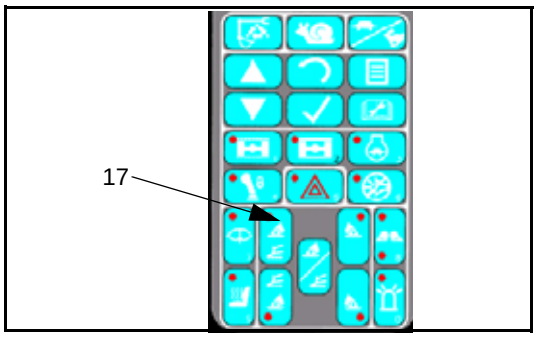


This switch enables selection of front left outrigger / front blade. Light illuminates when active.

### 18. SELECT ALL CHASSIS ATTACHMENT SWITCH

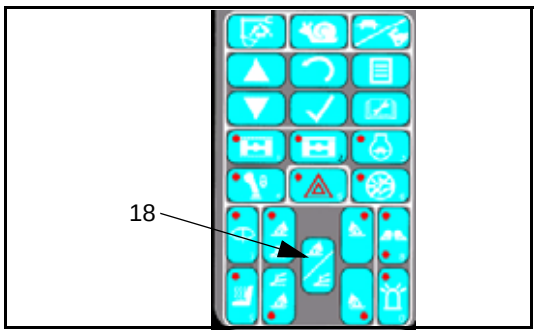


This switch enables selection of all outriggers and/or dozer blade simultaneously.

Lights on switches 16,17,19 and 20 will illuminate to show selection.

A second press will deactivate any currently active blade/outrigger combination.

### 19. FRONT RIGHT OUTRIGGER SWITCH

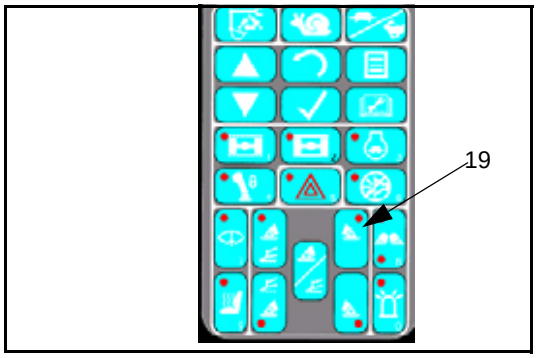


Allows operation of front right outrigger only.

Light on switch illuminates when activated.

### 20. REAR RIGHT OUTRIGGER SWITCH

Allows operation of rear right outrigger.

Light on switch illuminates when activated.

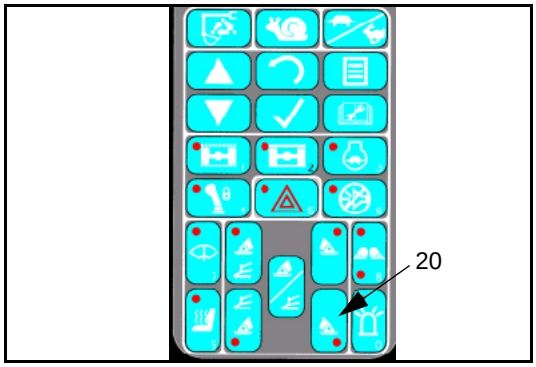


### 21. LOWER WIPER SWITCH

This switch (21) actuates the front lower wiper. The lamp on the switch will illuminate when wiper is activated.

OFF: wiper stops

ON: wiper moves continuously

NB. Do not operate with front lower screen removed.

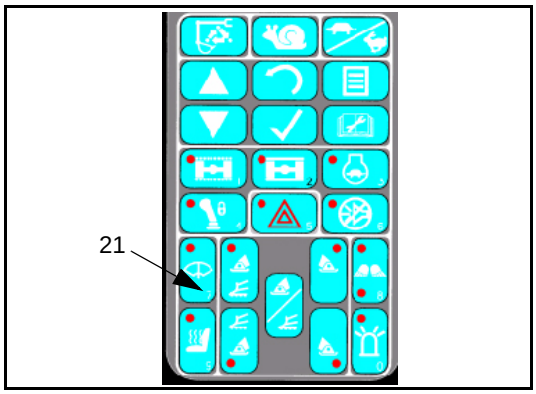


### 22. HEATED SEAT SWITCH

This switch is used to switch on the heated seat.

OFF: seat not heated

ON: seat heated

Light will illuminate when active.

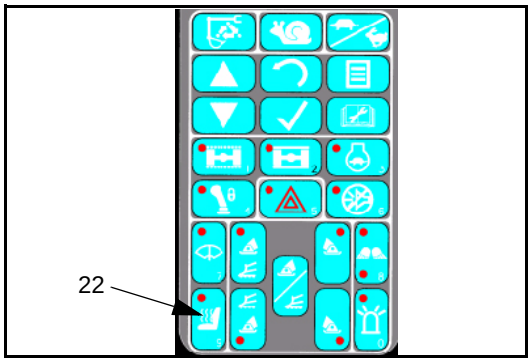


### 23. FRONT AND REAR WORKLIGHTS SWITCH

Switch operates the front and rear worklights of the machine. All optional extra lamp units will be included.

Machine at startup: Front lights off and rear lights off

1st button press: Front lights on and rear lights off

2nd button press: Front lights on and rear lights on

3rd button press: Front lights off and rear lights off

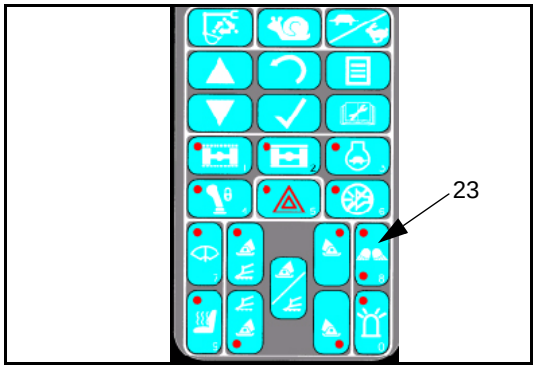


**REMARK**

The lights fitted for highway use (headlights, brake lights, etc.) are in no way effected by this switch.

### 24. BEACON WARNING LIGHT SWITCH

This switch is used to switch on the rotating beacon.

OFF: beacon light not illuminated.
ON: beacon light illuminates and rotates.

Light on switch illuminates when activated.

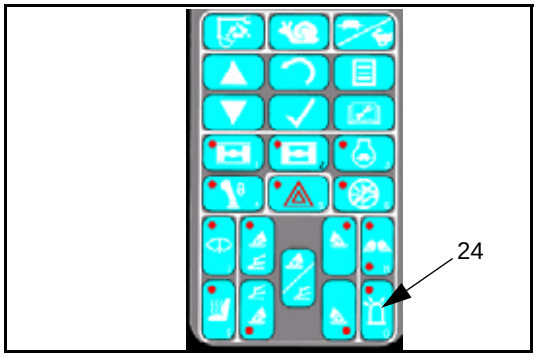


### LIQUID CRYSTAL MONITOR ADJUSTMENT SWITCH

Press this switch (6) to adjust the brightness and contrast of the monitor display screen.

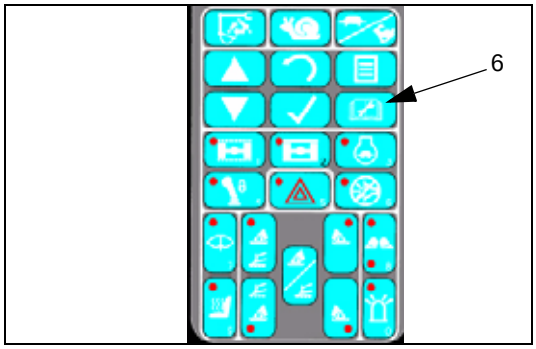


#### Adjustment screens

1. When monitor adjustment switch (6) is pressed, the monitor display screen changes to the screen shown in the diagram on the right.

| | |
|---|---|
| (A) | Contrast adjust |
| (B) | Brightness adjust |
| (C) | Clock adjust |
| (D) | Background adjust |

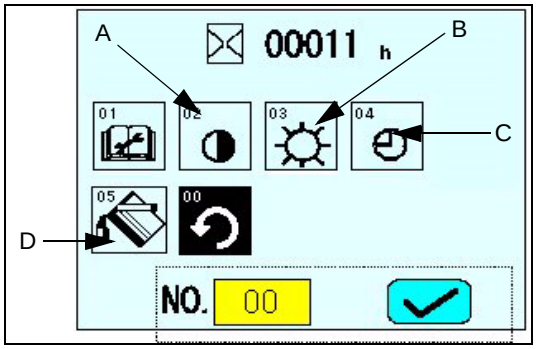


- (A).Adjusting contrast

2. Use the brightness/contrast screen and press up switch (7) or down switch (8) to select the contrast monitor.
(The selected monitor is inverted to black.)

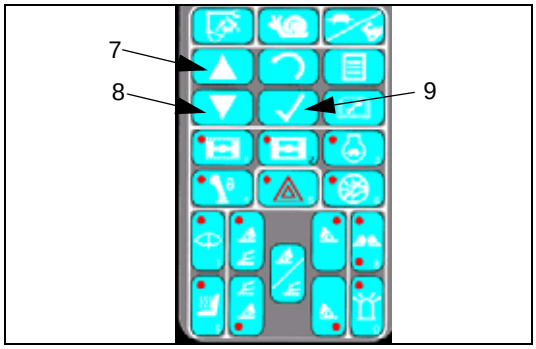

3. When the screen changes to the contrast adjustment screen, press up switch (7) or down switch (8) to adjust the contrast.

4. After completing adjustment of the contrast, press input confirmation switch (9). This will store the new setting and return you to the adjustment menu.

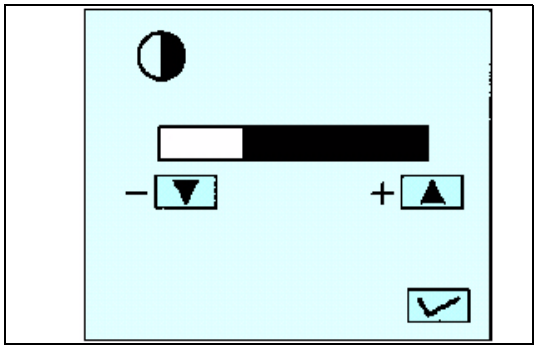

**REMARK**

As normal, within any menu, press switch (5) to return to the previous screen at any time.

- (B). Adjusting brightness

1. Use the adjustment screen and press up switch (7) or down switch (8) to select the brightness monitor.
   (The selected monitor is inverted to black.)

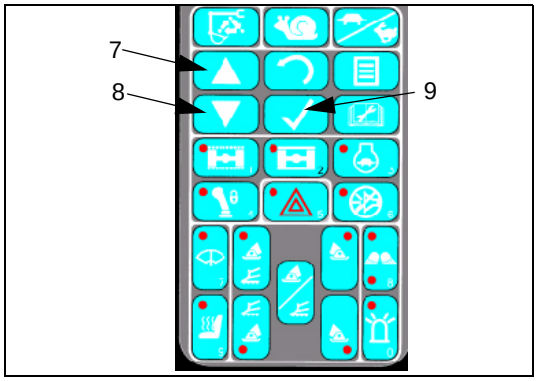


2. When the screen changes to the brightness adjustment screen, press up switch (7) or down switch (8) to adjust the brightness.

3. After completing adjustment of the brightness, press input confirmation switch (9). This will return you to the above menu and store the new setting.

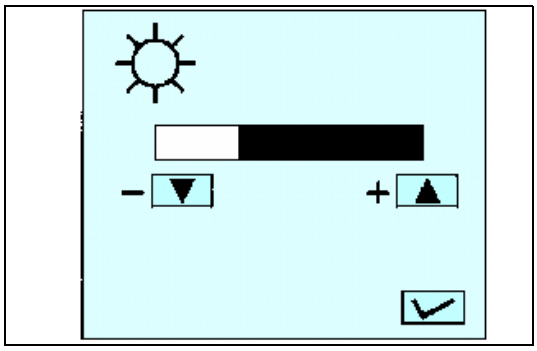

- (C). Adjusting the clock

1. Use the adjustment screen and press up switch (7) or down switch (8) to select the clock monitor.
   (The selected monitor is inverted to black.)
2. When the screen changes to the clock adjustment screen, press up switch (7) or down switch (8) to adjust the year, to move to the date press input confirmation switch (9), the order in which the cursor moves is shown below:

   Year → Month → Day → Hour → Minute

3. After completing adjustment of the clock, press input confirmation switch (9). This will return you to the above menu and store the new setting.

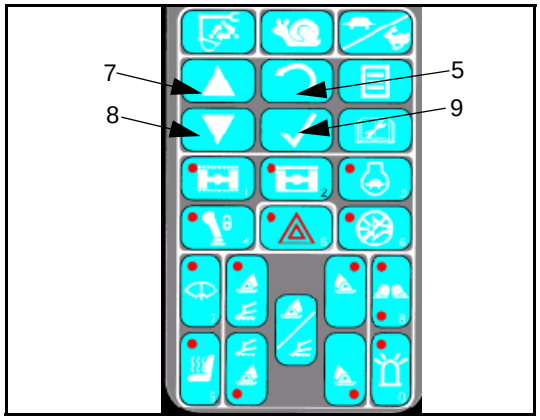


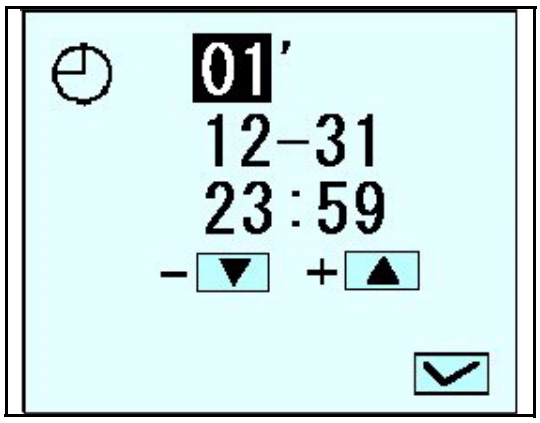


- (D). Adjusting background colour

1. Use the adjustment screen and press up switch (7) or down switch (8) to select the background colour monitor.
   (The selected monitor is inverted to black.)
2. When the screen changes to the background colour adjustment screen, press up switch (7) or down switch (8) to adjust the colour day time and for night time, the different combinations of colours are shown below: Day time/Night time.

   Light blue/Dark blue → Dark blue/Light blue

3. After completing adjustment of the background colour, press input confirmation switch (9). This will return you to the above menu and store the new setting.

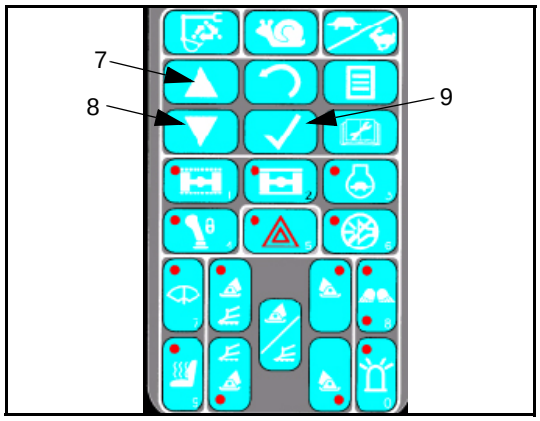


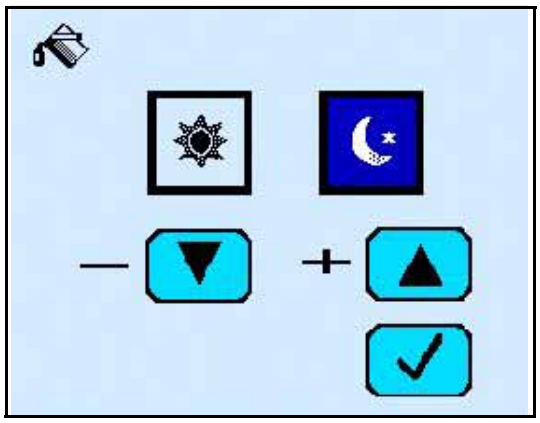

# SWITCHES

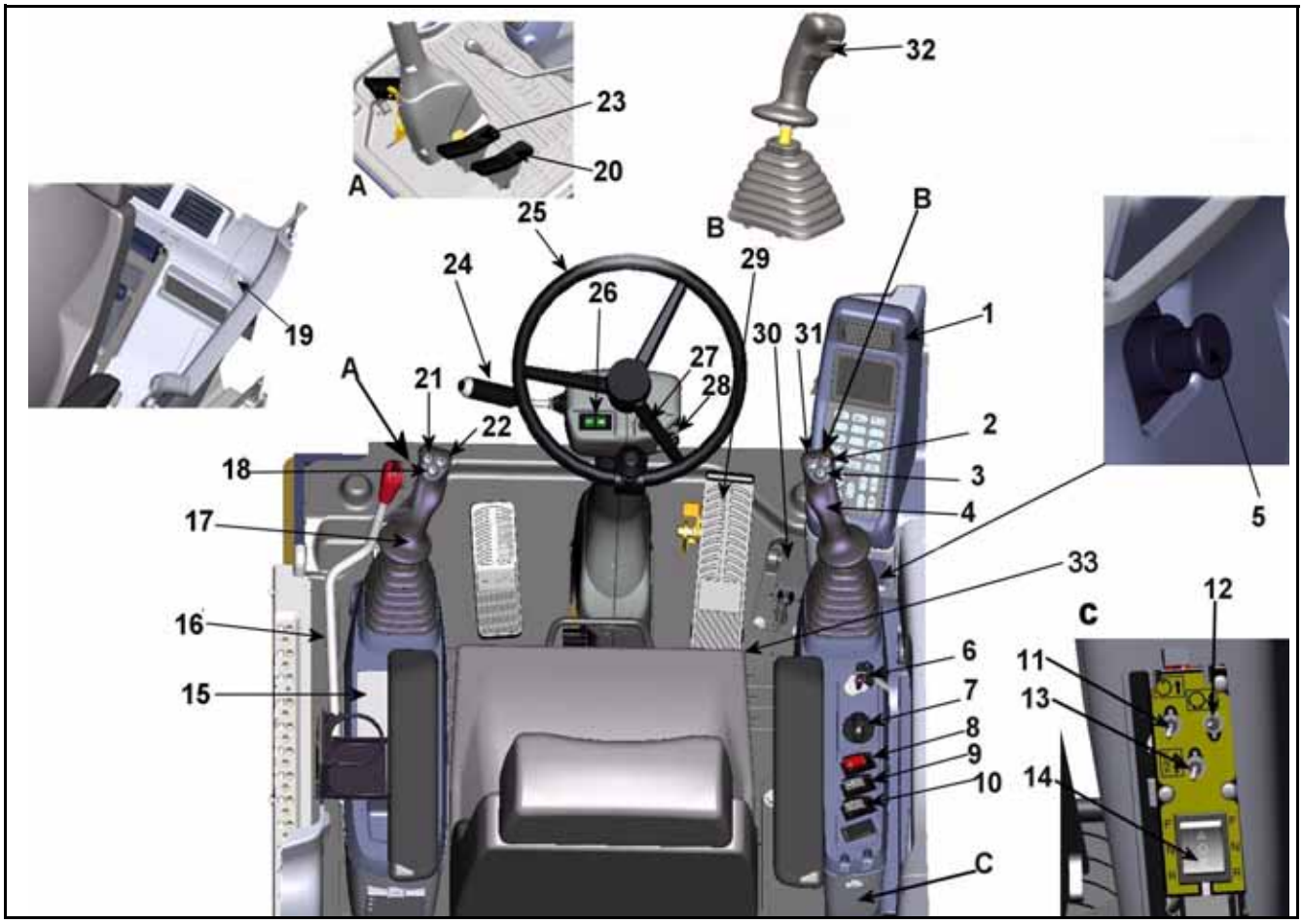


| | |
|---|---|
| 1. Machine monitor | 18. Horn |
| 2. Clamshell rotate right | 19. 12V power supply |
| 3. Boom and chassis attachment select | 20. HCU Pedal (Option extra) |
| 4. Right control lever | 21. Power max button |
| 5. cigarette lighter | 22. Spare |
| 6. Starter switch | 23. Hydraulic Adjust Boom pedal (Option extra) |
| 7. Fuel control dial | 24. Indicator stalk (horn, windscreen wash/wipe, direction indicators, roadlight dip/main beam/flash) |
| 8. Park brake switch | 25. Steering wheel |
| 9. Swing lock | 26. Turn indicator warning lights |
| 10. Quick coupler | 27. Park light override |
| 11. Pump override | 28. Driving light |
| 12. Swing override | 29. Brake pedal |
| 13.Travel override | 30.Travel pedal |
| 14. Override F/N/R | 31. Clamshell rotate left |
| 15. Air conditioner location | 32. F/N/R switch |
| 16. Safety lock lever | 33. Mechanical swing lock |

## STARTING SWITCH

This switch (6) is used to start or stop the engine.

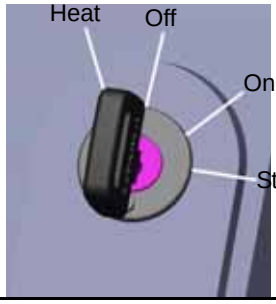


### OFF position

The key can be inserted or withdrawn. Except for the park light override switch,12V phone socket, seat compressor and interior light, the switches for the electric system are all turned off and the engine is stopped.

### ON position

Electric current flows in the charging and lamp circuits.
Keep the starting switch key at the ON position while the engine is running.

### START position

This is the engine-start position. Keep the key at this position during cranking. Immediately after starting the engine, release the key which will automatically return to the ON position.

### HEAT (preheat) position

When starting the engine in winter, set the key to this position. When the key is set to the HEAT position, the pre-heating symbol on the monitor lights up.

Keep the key at this position until the monitor lamp begins to flash. Immediately after the pre-heating symbol flashes, release the key. The key automatically returns to the OFF position. Then, start the engine by turning the key to the START position.

## FUEL CONTROL DIAL (WITH AUTO-DECELERATION MECHANISM)

Fuel Control Dial (7) adjusts the engine speed and output.

(1) Low idling (MIN): Turned fully to the left.
(2) Full speed (MAX): Turned fully to the right.

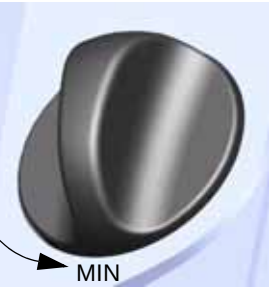


## CIGARETTE LIGHTER

This is used to light cigarettes. To use, push the lighter in. After a few seconds it will spring back.

Pull out the lighter (5) and light your cigarette.
No other equipment may be connected to the cigarette lighter without the prior permission of an authorized Komatsu distributor.

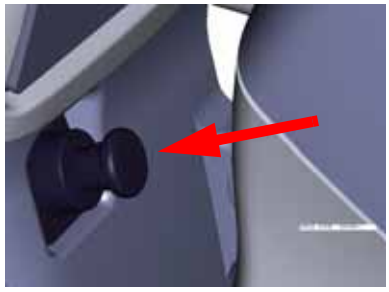

## SWING LOCK SWITCH

**WARNING**

- **When the machine is travelling under its own power, or when the swing is not being operated, always set the switch to the ON (ACTUATED) position.**
- **On a slope, the work equipment may swing to the down side even if the swing lock switch is located at the ON position. Be careful concerning this point.**

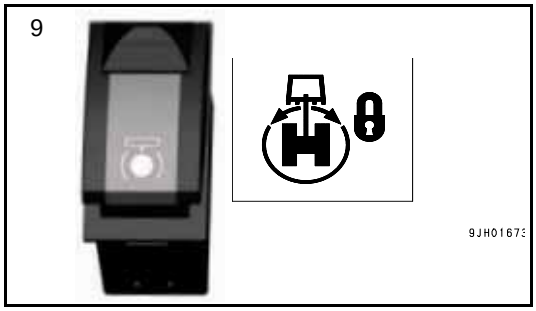


This switch is used to lock the upper structure so that it cannot swing. ON position (actuated):

When swing lock switch (9) is activated, the swing lock is always applied and the upper structure will not swing even if the swing lever is activated. In this condition the swing lock switch lamp and monitor switch light up.

OFF position (cancelled):

The swing lock switch should only be activated when the upper structure is motionless and with the swing lock lever in the neutral position.

## HORN BUTTON

When the lower button on the left control lever (18) is pressed, the horn will sound.
Note: Additional horn switch is on end of steering column stalk (24a).

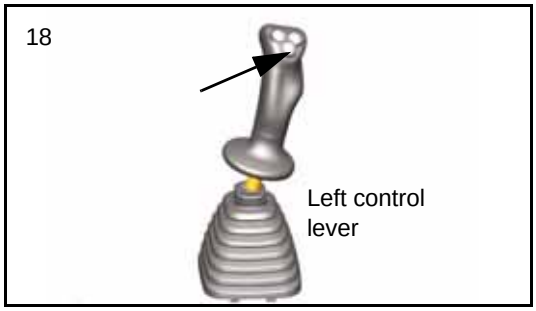


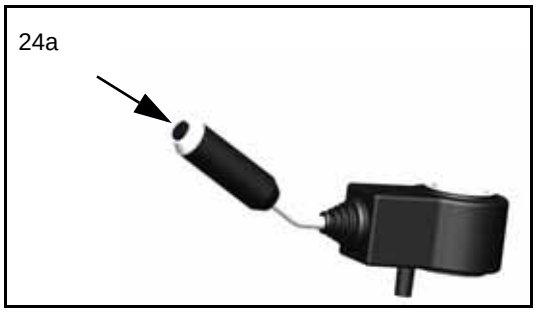


## POWER MAX BUTTON

The upper button (21) of the left control lever is used to actuate the power max function. Press the button once (single click) and keep it depressed the power max. function actuates for a max. 8.5 seconds in A and E mode.

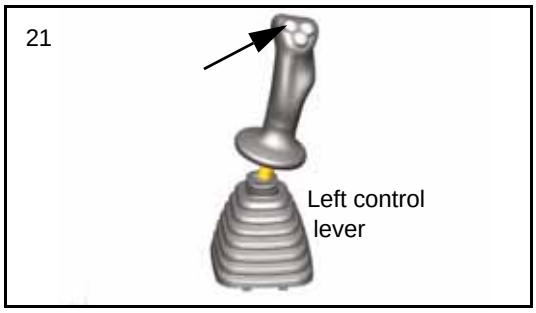

### CAB LAMP SWITCH

This lights up the cab lamp.

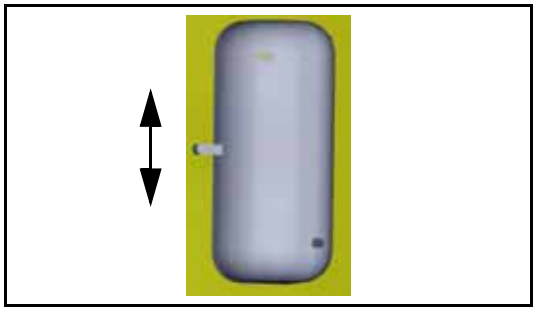

ON position: Lights up
The cab lamp can be turned on even when the starting switch is at the OFF position, so be careful not to leave it on by mistake.

### PUMP CONTROL OVERRIDE SWITCH

When normal: Switch (11) is down

| Position | Status |
|---|---|
| 1 | Abnormal |
| 2 | Normal |

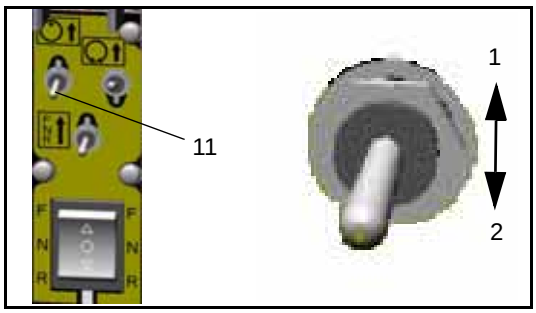


(1) When abnormal: When the monitor display shows E02 (EPC valve system error), it is possible to carry out operation when this switch is moved up. The pump control override switch is designed to allow operations to be carried out for a short period when there is an abnormality in the pump control system (EPC valve system error). The abnormality must be repaired immediately.

### SWING LOCK OVERRIDE SWITCH

When normal: Switch (12) is down

| Position | Status |
|---|---|
| 1 | Abnormal |
| 2 | Normal |

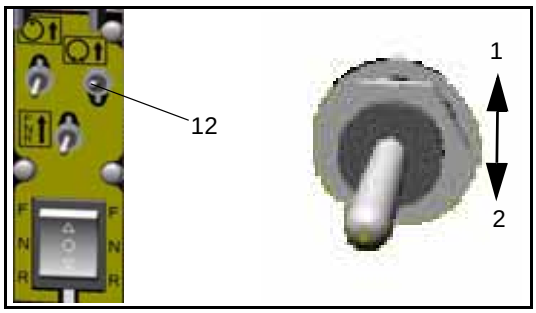


(1) When abnormal: When the monitor display shows E03 (swing brake system error), the brake is cancelled and it becomes possible to swing the upper structure when this switch is moved up, so normal operations can be carried out. However, the swing brake remains cancelled.

The swing lock override switch is designed to allow operations to be carried out for a short period when there is an abnormality in the swing brake electrical system (swing brake system error). The abnormality must be repaired immediately.

## TRAVEL OVERRIDE SWITCHES

Emergency Travel Switch - If there is a problem with the controller or the signals being supplied to the controller and travel is not possible, the Emergency Travel Switch (13) can be used to move the machine in a situation of emergency.

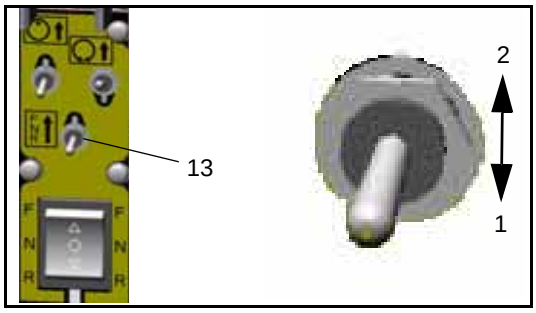


| Position | Status |
|---|---|
| 1 | Normal |
| 2 | Abnormal |

Emergency F / N / R Switch - When the Emergency Travel Switch has been activated the F / N / R switch on the right control lever will no longer function. The emergency F / N / R switch located at the rear of the right pod should be used in conjunction with the Emergency Travel Switch in a situation of emergency.

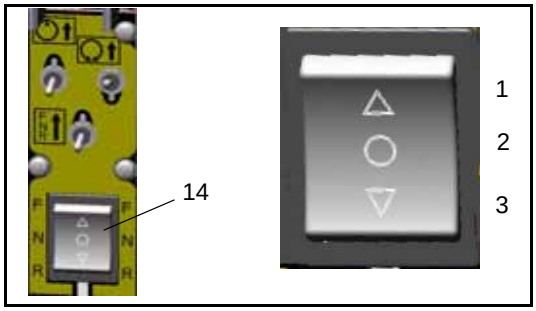


| Position | Status |
|---|---|
| 1 | Forward |
| 2 | Neutral |
| 3 | Reverse |

## PARK BRAKE SWITCH

This switch (8) is used to apply and release park brake.

OFF: Park brake released (warning light not illuminated)
ON: Park brake applied (warning light illuminated)

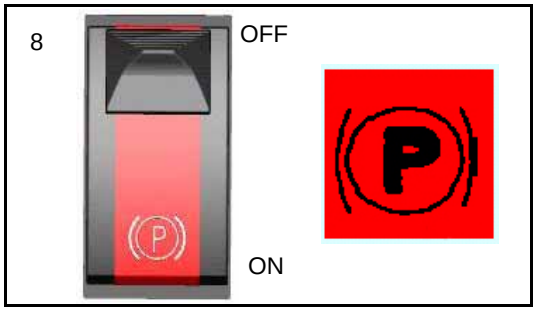


**REMARK**

When moving off from a standstill up an incline it will be necessary to depress the travel pedal slightly before releasing park brake to build pressure to the travel hydraulics and prevent initial rearwards movement

Do not apply the park brake while the machine is in motion except in an emergency or the park brake may be damaged.

### PARK LIGHT OVERRIDE

To operate the parking lights when the ignition is switched "OFF" use switch (27) located on the steering column cover.

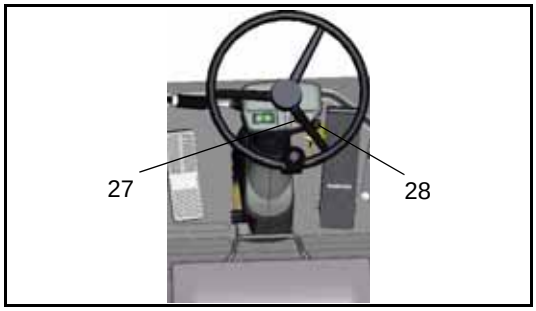


### ADDITIONAL DRIVING LIGHT SWITCH

Switch (28) has three functions
OFF
Sidelights
Dipped Headlights

**REMARK**
Engine compartment light will only illuminate when sidelights are on.

### FORWARD / NEUTRAL / REVERSE (F / N / R) SWITCH

The F / N / R switch (32) (located on the front of the right control lever) is used to select direction of travel. (1) Forward (2) Neutral (3) Reverse.

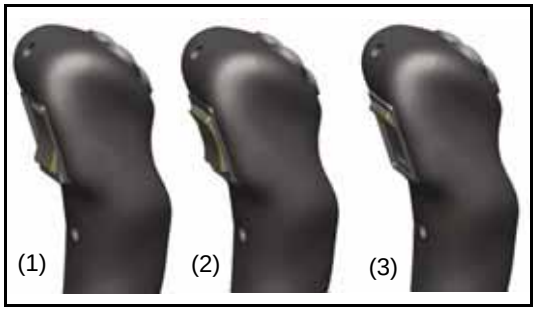


### QUICK COUPLER SWITCH - (when fitted)

The Quick Coupler Switch (10) is used for the quick changeover of the bucket.

### BOOM / UNDERCARRIAGE ATTACHMENT SWITCH

Switch (3) changes the function of the right control lever between boom and undercarriage attachment operation.

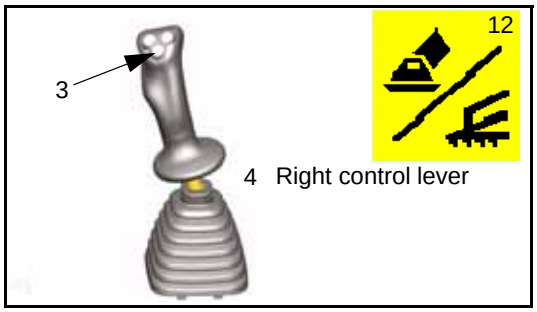


**WARNING**

**Lights on the monitor panel indicate when the undercarriage attachments are in operation.**

### CLAMSHELL ROTATION CLOCKWISE/BREAKER SWITCH

Switch (2) operates clockwise rotation of clamshell (if fitted) or operation of breaker (if fitted).

### CLAMSHELL ROTATION ANTI-CLOCKWISE

Switch (31) operates anti-clockwise rotation of clamshell (if fitted)

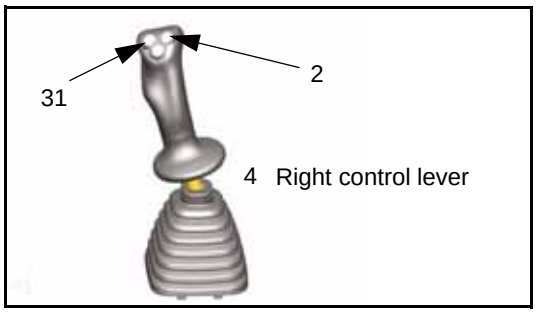


### HORN SWITCH

When the button at the tip of the steering column stalk (24a) is pressed the horn will sound.

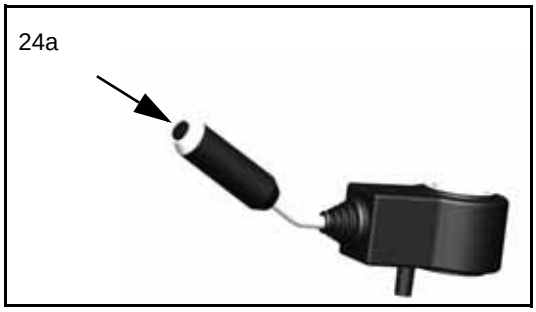


**REMARK**
Additional horn switch is switch (18).

## WINDSCREEN WASH SWITCH

When the sleeve switch on the steering column stalk (24b) is pushed towards the steering column the windscreen wash will operate.

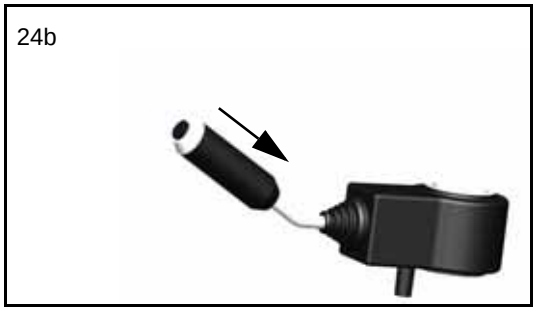


## DIRECTION INDICATOR SWITCH

This switch (24) is used to indicate the driver's intention to change direction.

(1) Turn right: push lever fully forward

(2) Turn left: pull lever fully back
(direction indicator (a) to the rear of the steering wheel hub will flash and buzzer will sound)

To cancel, return lever to neutral position.

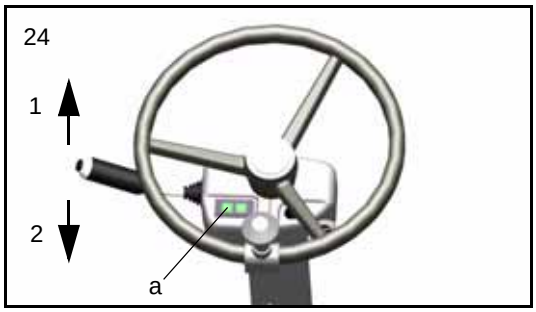


## ROADLIGHTS DIP/MAIN BEAM/FLASH SWITCH

This switch (24c) has two functions.

- To alternate between headlight dipped and main beams. For main beam push steering column stalk fully downwards. (Note road lights switch (28) must be at position (3) for this function) Reverse operation to return to dipped beam
  Warning light (13) will illuminate on the monitor panel when main beam headlights are illuminated.
- To flash headlights pull steering column stalk fully upwards and release.

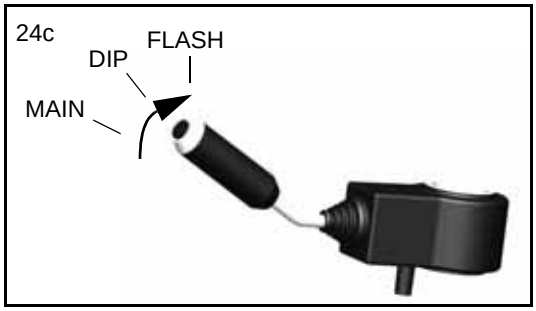


## MAIN WINDSCREEN WIPER SWITCH

This rotary switch (24d) on column stalk controls main windscreen wiper.

- Rotate switch 30° away.
  From operator for intermittent wipe
- Rotate switch a further 30° away
  From operator for continuous wipe.

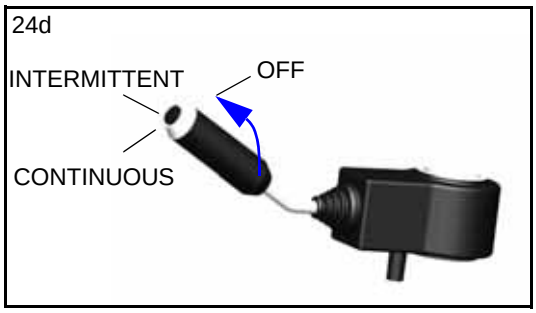

## 12V POWER SUPPLY

The 12V socket (19) provided on the cab rear left panel may be used only for electrical accessories drawing 1,5 A. maximum. Any accessories attached to this socket must carry the EC mark.

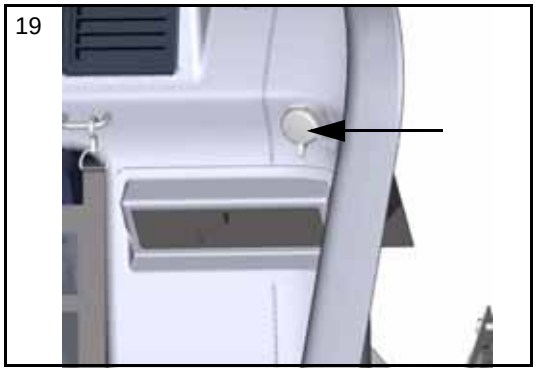

# CONTROL LEVERS, PEDALS

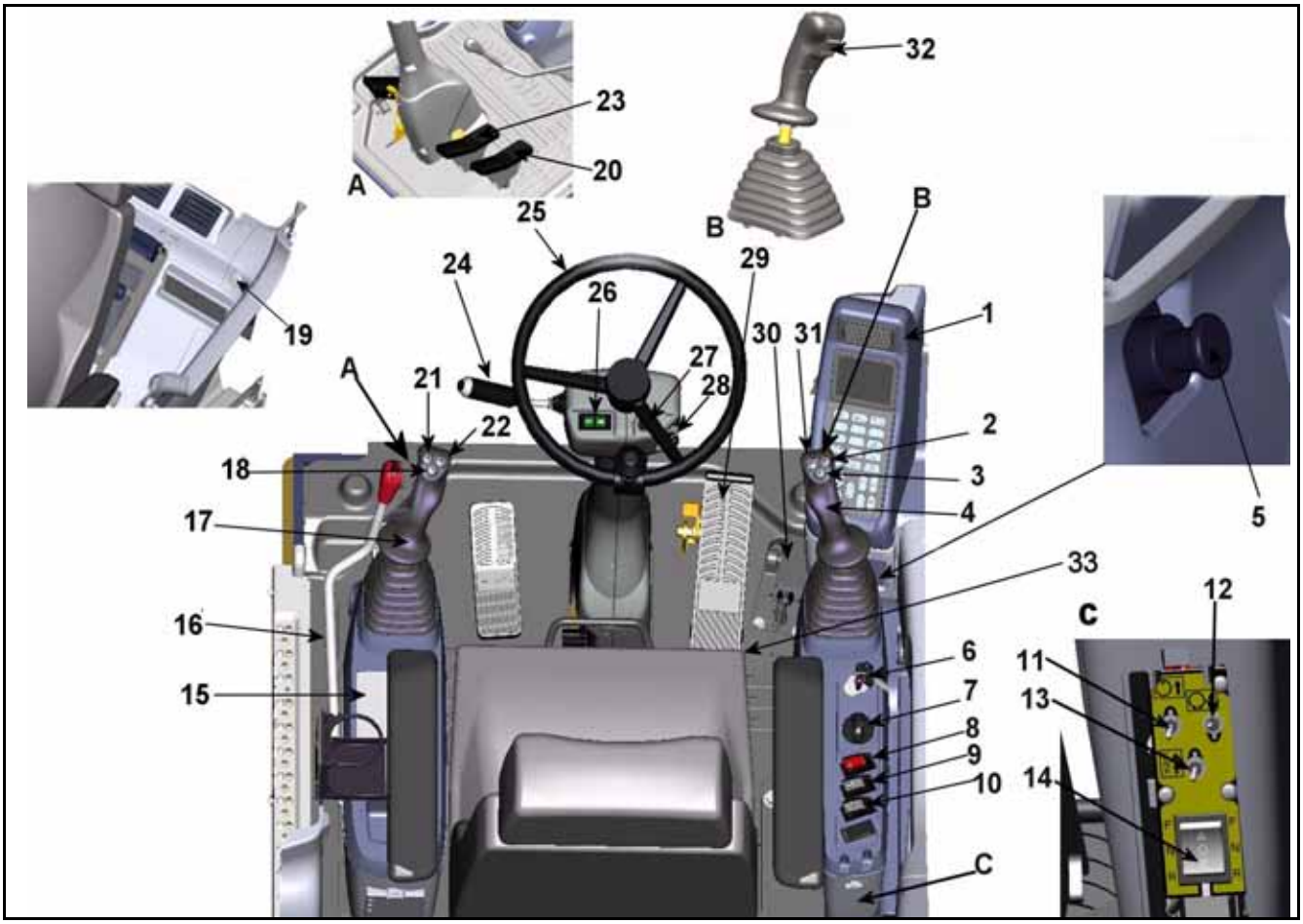


| | |
|---|---|
| 1. Machine monitor | 18. Horn |
| 2. Clamshell rotate right | 19. 12V power supply |
| 3. Boom and chassis attachment select | 20. HCU Pedal (Option extra) |
| 4. Right control lever | 21. Power max button |
| 5. cigarette lighter | 22. Spare |
| 6. Starter switch | 23. Hydraulic Adjust Boom pedal (Option extra) |
| 7. Fuel control dial | 24. Indicator stalk (horn, windscreen wash/wipe, direction indicators, roadlight dip/main beam/flash) |
| 8. Park brake switch | 25. Steering wheel |
| 9. Swing lock | 26. Turn indicator warning lights |
| 10. Quick coupler | 27. Park light override |
| 11. Pump override | 28. Driving light |
| 12. Swing override | 29. Brake pedal |
| 13.Travel override | 30.Travel pedal |
| 14. Override F/N/R | 31. Clamshell rotate left |
| 15. Air conditioner location | 32. F/N/R switch |
| 16. Safety lock lever | 33. Mechanical swing lock |

**⚠ WARNING**

- **When leaving the operator's compartment, switch control lever lock switch to OFF position, raise the safety lock lever to the LOCK position. If the control levers are not locked, and they are touched by mistake, this may lead to a serious accident.**
  **If the safety lock lever is not raised in the LOCK position and lock switch is not OFF, the control levers may not be properly locked. Check that the situation is as shown in the diagram.**
- **When the safety lock lever is being raised, take care not to touch the work equipment control lever. If the safety lock lever is not properly locked at the upper position, the work equipment and swing will move, creating a potentially dangerous situation.**
- **When the safety lock lever is lowered, take care not to touch the work equipment control lever.**
- **In certain conditions it may be possible for the safety lock lever to contact the left hand arm rest on the operator seat.**
  **to avoid this, always ensure that the left hand arm rest is stowed in the fully up position before operating the safety lock lever.**

## SAFETY LOCK LEVER

The safety lock lever LOCKS the work equipment, swing, attachment controls and travel functions.

This device is a hydraulic lock, so even if it is in the lock position, the work equipment control lever will move, but the work equipment and swing motor will not work.

16

## LEFT WORK EQUIPMENT CONTROL LEVER (with auto-deceleration device)

**⚠ WARNING**

**If any lever is operated when in the deceleration range, the engine speed will suddenly increase, so be careful when operating the levers.**

17

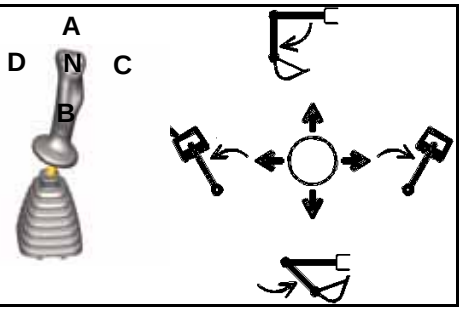


Lever (17) is used to operate the arm and upper structure.

| Arm operation | Swing operation |
|---|---|
| (A) Arm OUT | (C) Swing to right |
| (B) Arm IN | (D) Swing to left |
| N (Neutral) | |

When the lever in this position, the upper structure and the arm will be retained in the position in which they stop.

**RIGHT WORK EQUIPMENT CONTROL LEVER (with auto-deceleration device)**

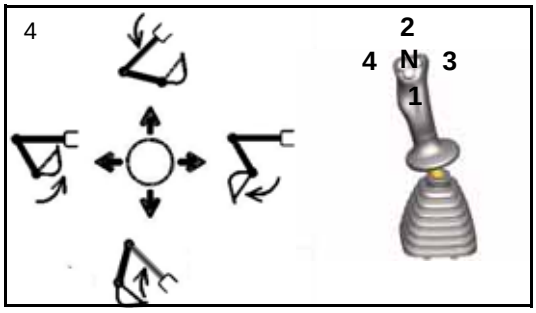


**WARNING**

**If an lever is operated when in the deceleration range, the engine speed will suddenly increase, so be careful when operating the levers.**

Lever (4) is used to operate the boom and bucket.

| Boom operation | Bucket operation |
|---|---|
| (1) RAISE | (3) DUMP |
| (2) LOWER | (4) CURL |
| N (Neutral) | |

When the lever in the N (neutral position), the boom and the bucket will be retained in the position in which they stop.

The engine speed changes as follows because of the auto-deceleration mechanism.

- When the travel pedal and work equipment control levers are at neutral, even if the fuel control dial is above the mid-range position, the engine speed will drop to a mid-range speed. If any of the levers are operated, the engine speed will rise to the speed set by the fuel control dial.
- If all control levers are set to neutral, the engine speed will drop by approx. 100 rpm, and after approx. 4 seconds, the engine speed will drop to the deceleration speed (approx. 1400 rpm).

**CONTROL LEVER LOCK SWITCH**

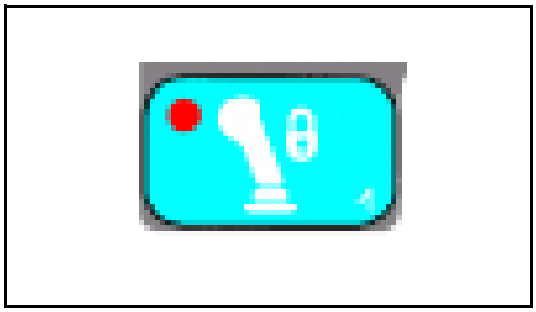

**WARNING**

**The Control lever lock switch (located on the monitor panel) should be engaged when travelling on the Public Highway to prevent accidental use of the work equipment.**

**For details, see "CONTROL LEVER LOCK SWITCH (99)" ON position (actuated).**

## TRAVEL PEDAL

The travel pedal is used in conjunction with the Forward / Neutral / Reverse (F / N / R) switch (32) located on the right control lever. Select the direction required using F / N / R switch then depress travel pedal (30) to commence travel.

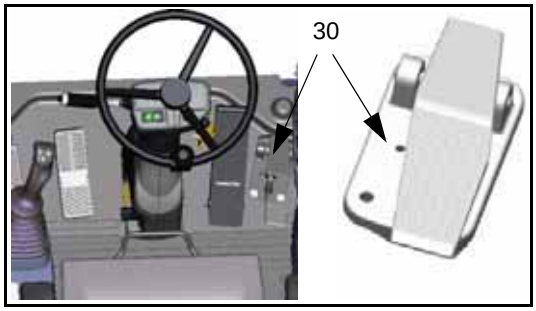


| | |
|---|---|
| (1) | Forward |
| (2) | Neutral |
| (3 | Reverse |

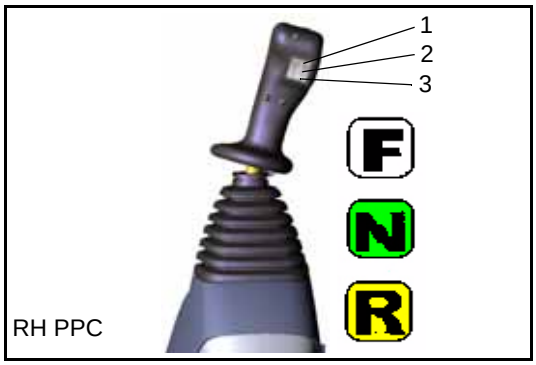


## BRAKE PEDAL

The service brakes are operated by depressing pedal (29). To lock the service brakes in the ON position fully depress the brake pedal. To unlock the service brakes depress latch (A).

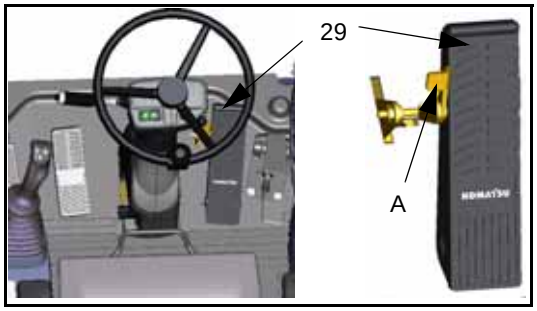


## STEERING WHEEL

The machine can be steered by turning steering wheel in the desired direction.

The position of the steering column can be adjusted fore and aft by depressing pedal (1), moving column to desired position and releasing pedal (1).

**WARNING**

**Steering actions will be reversed if undercarriage is facing opposite direction.**

### HYDRAULIC ADJUST BOOM PEDAL

Pedal (23) is used to operate the second boom.

| | |
|---|---|
| (1) Raise | Pedal pushed forward |
| (2) Lower | Pedal pushed back |

Neutral position: Boom is stopped and held in the same position.

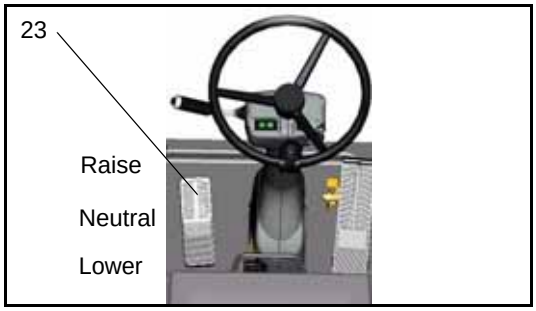


**⚠ CAUTION**

**Do not rest foot on the pedal unless in use.**

### HCU PEDAL (OPTION)

Pedal (20) is used to operate the attachment.

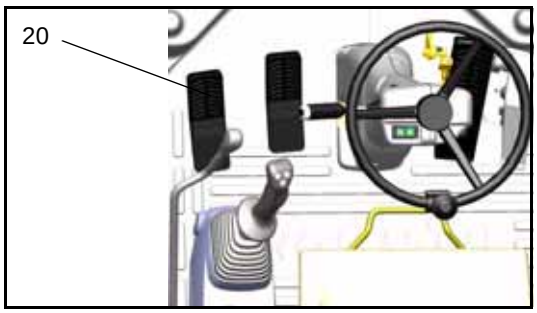


**REMARK**

Confirm with attachment manufacturer at time of installation, correct pedal and attachment operation before use.

### MECHANICAL SWING LOCK

Mechanical swing lock (33) located beneath front right of the operators seat, must engage prior to transportation and travelling on public roads. It is the legal requirement in some countries to use a mechanical swing lock when driving on public roads.

The mechanical swing lock should be operated as follows:
Line the machine up in the correct driving position with the pin in the raised, free position. Once the machine is correctly aligned lower the pin into the locked position.
To disengage the mechanical swing lock raise the pin from the 'lock' position to the 'free' position.

**REMARK**

Do not lower the pin to 'lock' position whilst aligning the machine. The pin does not self locate and therefore this action may result in damage to the machine.
The swing lock pin must be disengaged prior to swinging or damage to the machine may occur.

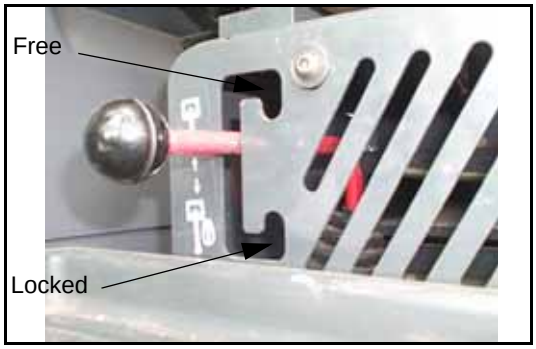

# FRONT WINDOW

**WARNING**

- **When opening or closing the ceiling window, front window, bottom window, or door, always set the safety lock lever to the LOCK position.**
  **If the control levers are not locked and they are touched by accident, a serious accident may occur.**
- **When opening or closing the window at the front of the cab, stop the machine on horizontal ground, lower the work equipment completely to the ground, stop the engine, then carry out the operation.**
- **When opening the front window, hold the grip securely with both hands, pull up, and do not let go until the automatic lock catch is locked.**
- **When closing the front window, the window will move quicker under its own weight. Hold the grips securely with both hands when closing it.**

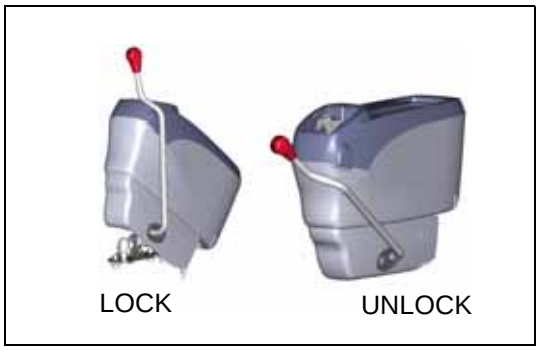


It is possible to store (pull up) the front window (top) in the roof of the operator's compartment.

**When opening**

1. Place the work equipment on flat ground and stop the engine.
2. Raise safety lock lever.

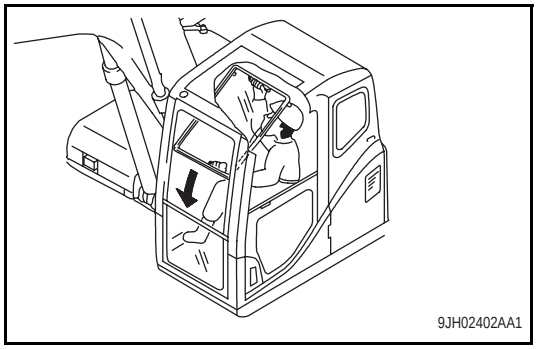


3. Check that the wiper blade (A) is stored in the right frame.

**WARNING**

**When the front window is open, there is danger that it will fall, so always lock it with left and right lock pins (A).**

4. Grip knobs (A) at the top, bottom, left, and right of the front window, and pull lock lever (B) to release the lock at the top of the front window. The top of the front window will come out.

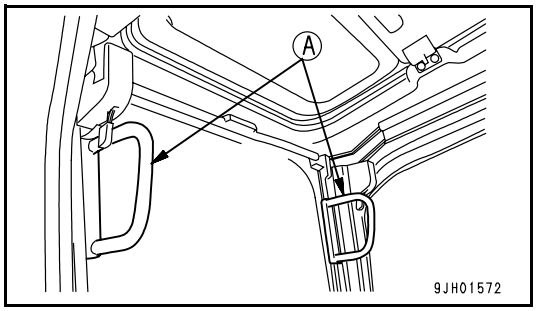


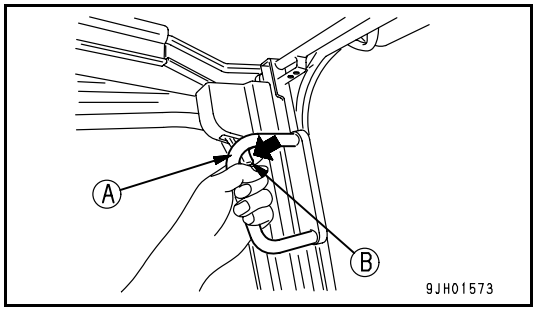


5. Hold lower knob (C) with your left hand from inside the operator's cab, and with your right hand, grip top knob (D), pull it up, and firmly push it against lock catch (E) at the rear of the cab to securely lock the window.

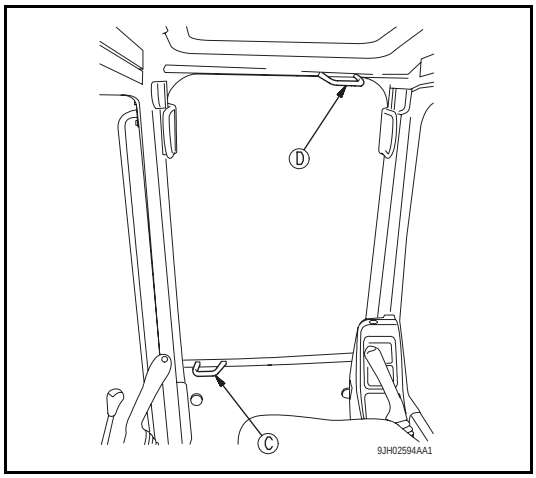


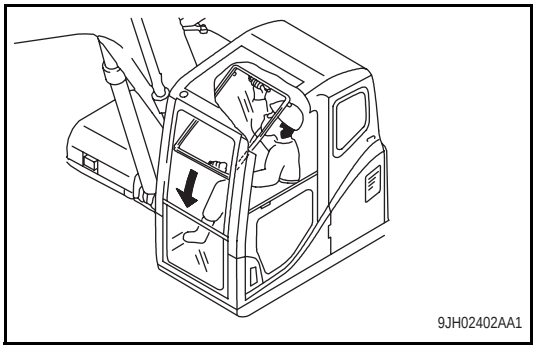

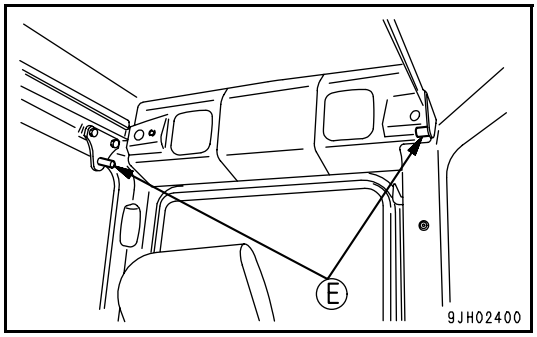


6. Check that lock lever (B) is secured at the LOCK position.

- The lock is engaged if the arrow on lock case (F) lines up with the arrow on lock lever (B). Check it visually.
- If the arrow on lock case (F) does not line up with the arrow on lock lever (B), the lock is not properly engaged. Repeat the operation in Step 5 to engage the lock.

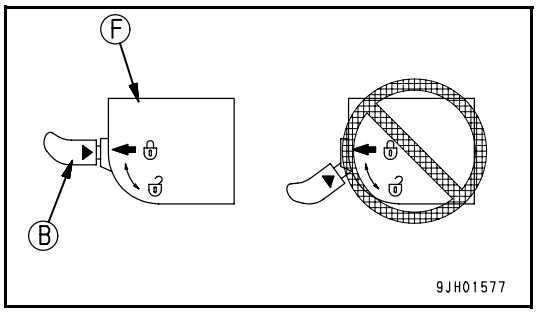


**When closing**

**WARNING**

**When closing the window, lower it slowly and be careful not to get your hand caught.**

1. Place the work equipment on flat ground and stop the engine.
2. Raise the safety lock lever.

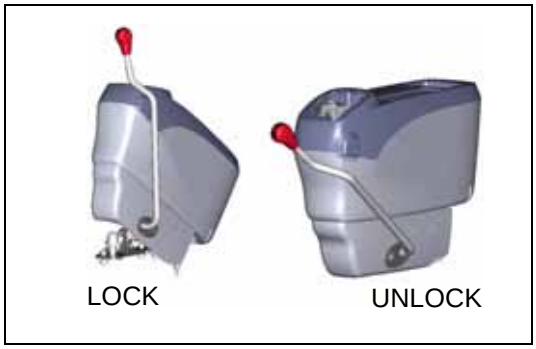


3. Grip left and right knobs (A), and pull down lock lever (B) to release the lock.

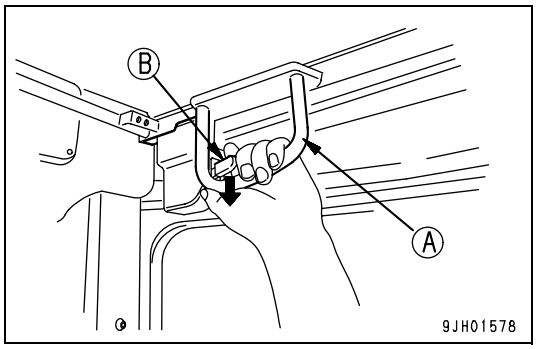

4. Grip knob (C) at the bottom of the front window with your left hand and knob (D) at the top with your right hand, push the window to the front, then lower it slowly.

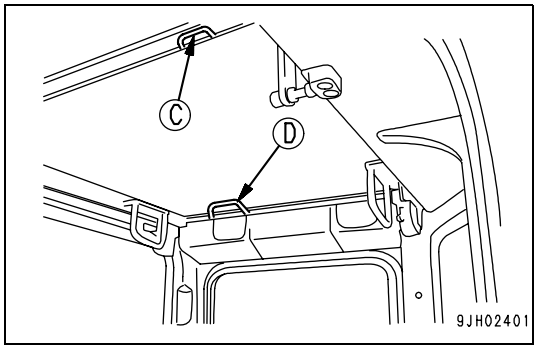


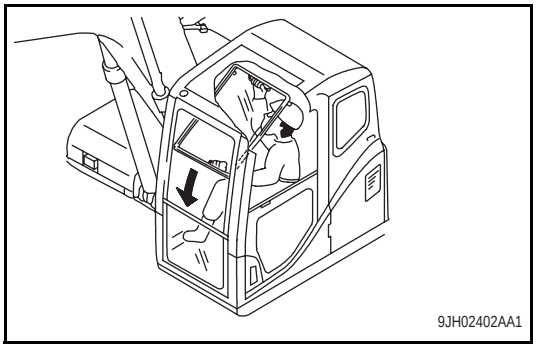


5. When the bottom of the window reaches the top of the lower window, push the top of the window forward to engage the locks against catches (G).

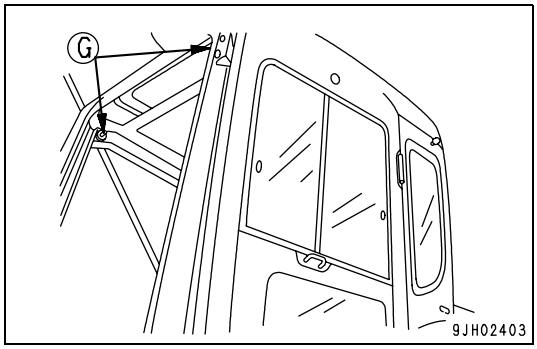


6. Check that lock lever (B) is secured at the LOCK position.

- The lock is engaged if the arrow on lock case (F) lines up with the arrow on lock lever (B). Check it visually.
- If the arrow on lock case (F) does not line up with the arrow on lock lever (B), the lock is not engaged. Repeat the operation in Step 5 to engage the lock.

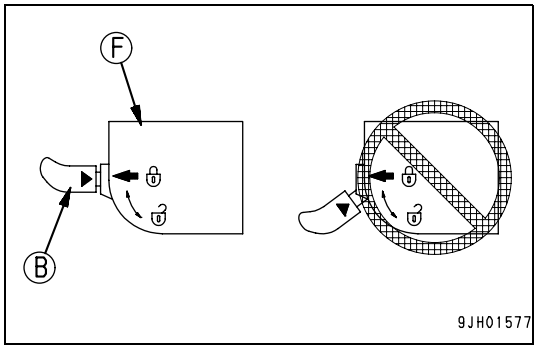

### Removing front bottom window

1. Open the front window, then hold grip (A), pull up, and remove the bottom window.

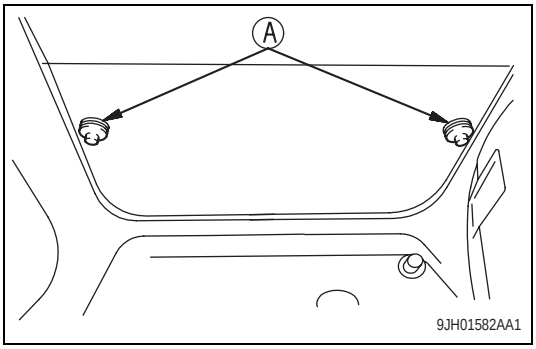


2. After removing the bottom window, store it at the rear of the operator's cab and lock it securely with left and right locks (B).

- When removing, always hold the glass with one hand and release the lock with the other hand.

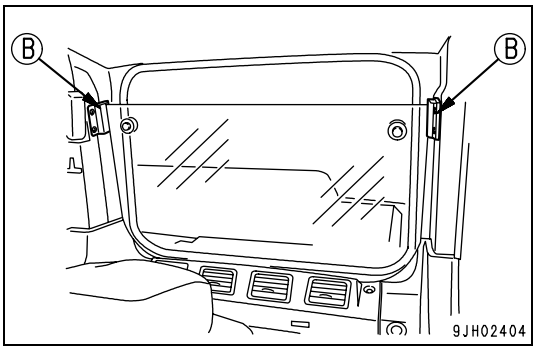


## EMERGENCY EXIT FROM OPERATOR'S CAB

- If for some reason, the cab door does not open, open the rear window and use it as an emergency escape exit.
- Remove the rear window as follows.

1. Pull ring (1) and completely remove seal (2) from the rubber core.
2. When the corner of the front window glass is pushed strongly, it can be removed to the outside.
3. Do not remove the rear window except when using it as an emergency exit.

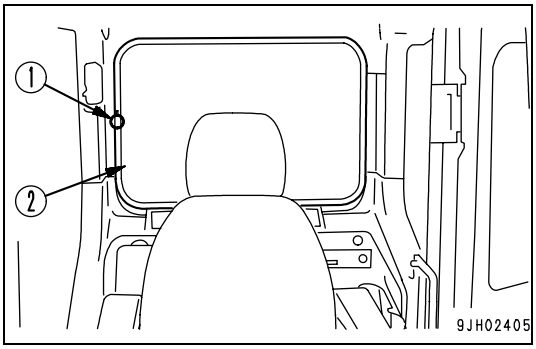


### CEILING WINDOW

The operator cab is provided with a fixed clear ceiling window for improved visibility. An optional guard can be provided for working in areas at risk from falling or flying objects.

### CLEAR RAIN VISOR

The cab is fitted with a clear rain visor to prevent rainfall on the windscreen above the area cleared by the wiper.

### PULL DOWN SUN VISOR

The operator cab is fitted with a pull down sun visor. The visor is simply pulled down and hooked into the retainers mounted on the front window. The position of the retainers can be adjusted to one of three pre-set locations by removing the bolts holding the brackets, and re-attaching to one of the other prepared locations.

A second set of retainers is positioned at the bottom of the front window to allow coverage of the clear roof when the front window is in the raised position.

## DOOR LOCK

Use the door lock to fix the door in position after opening it.

1. The door will become fixed in place when it is pressed against catch (1).
2. To release the lock, press knob (2) down at the left side of the operator's seat to release the catch.
   When fixing the door, fix it firmly to the catch.

# CAP, COVER WITH LOCK

The fuel filler, hydraulic tank filler, operator's cab, engine hood, tool box cover, right side door and left side door of the machine body are fitted with locks.
Use the starting switch key to lock or unlock these places.

## METHOD OF OPENING AND CLOSING CAP WITH LOCK (For the fuel tank filler port)

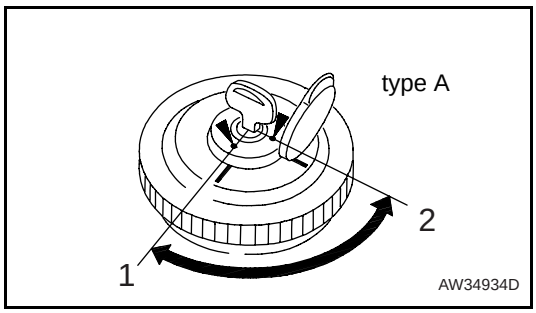


**To open the cap**

1. Insert the key into the cap.
2. Turn the key clockwise, align the match mark on the cap with the rotor groove, then remove the cap.

**To lock the cap**

1. Turn the cap into place.
2. Turn the key and take the key out.

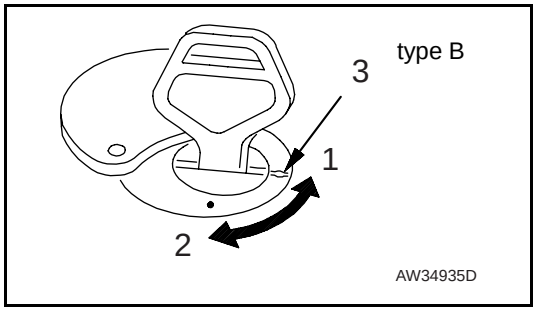


Insert the key as far as it will go. If the key is turned before it is inserted all the way, it may break.

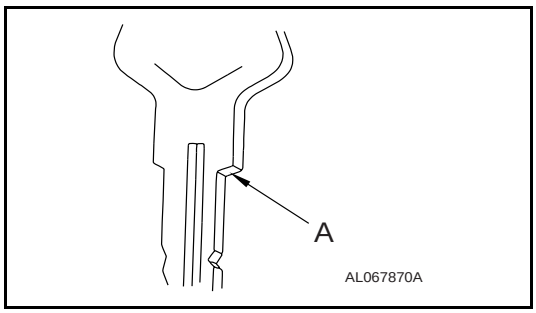


## METHOD OF OPENING AND CLOSING COVER WITH LOCK (cover with lock)

**To open the cover (locked cover)**

1. Insert the key.
2. Turn it counterclockwise and open the cover by pulling the cover grip.

**To lock the cover**

1. Close the cover and insert the key.
2. Turn the key clockwise and take the key out.

# FUSE

**REMARK**

Before replacing a fuse, be sure to turn off the starting switch.

The fuses protect the electrical equipment and wiring from burning out.

If the fuse becomes corroded, or white powder can be seen, or the fuse is loose in the fuse holder, replace the fuse.

Replace a fuse with another of the same capacity.

**Fuse capacity and name of circuit**

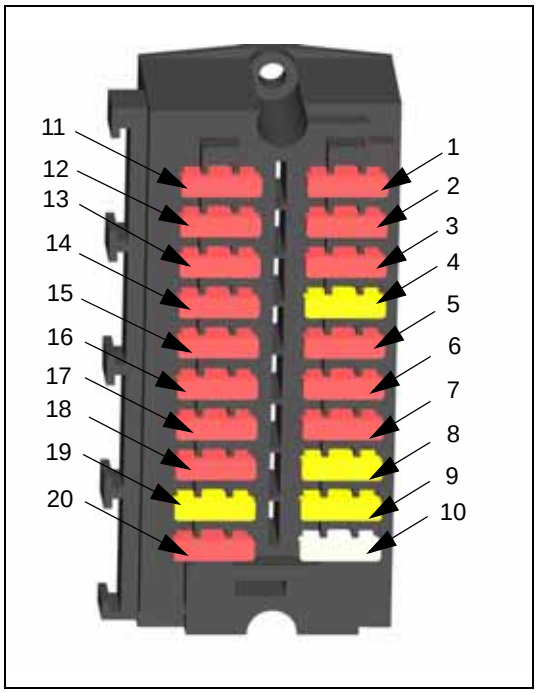


| No | Fuse capacity | Name of circuit |
|---|---|---|
| (1) | 10 A | Controller (switched power) |
| (2) | 20 A | Solenoid (controller) |
| (3) | 10 A | PPC lock, axle lock, park brake and f-n-r |
| (4) | 10 A | Window washer, cigar lighter and quick coupler |
| (5) | 30 A | Head lights, main beam and horn |
| (6) | 10 A | Lower wiper |
| (7) | 10 A | Beacon |
| (8) | 10 A | Travel sensor and low brake pressure |
| (9) | 5 A | Power max switch |
| (10) | 10 A | Refuelling pump |
| (11) | 25 A | A/C unit |
| (12) | 20 A | Monitor (switched power) |
| (13) | 20 A | Work lights |
| (14) | 10 A | Optional power supply (24V) |
| (15) | 15 A | Heated seat, clamshell and chassis attachments |
| (16) | 10 A | Radio, phone socket (12V) and seat compressor |
| (17) | 10 A | Monitor (regular power) |
| (18) | 10 A | Starter switch |
| (19) | 10 A | Cab interior light |
| (20) | 10 A | Hazard warning, wiper control and park lights |

## LUGGAGE TRAY

This tray is located to the rear of the operator's seat. Always keep the operation & maintenance manual in this tray for easy reading access.

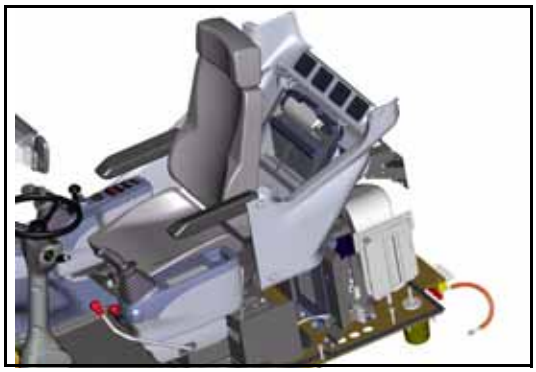

## ASHTRAY

The ashtray is under the machine monitor at the front right of the operator compartment. Always ensure when cigarettes are extinguished they are put in the ashtray and the lid closed.

## CUP HOLDER

A cup holder is provided to the left of the operator for holding cups or cans. Drinks should not be left in the cup holder whilst operating the machine, because spillage may occur.

## HOT AND COOL BOX

The box is at the rear right of the operator's seat. It is interconnected with the air conditioner, it warms when the heater is being used and cools when the air conditioner is being used.

# CAB RADIO

Located to rear left of the operator's seat.

Refer to the separate operations manual for radio cassette.

**REMARK**

Ensure radio is switched off when leaving the machine for long periods to prevent draining of battery charge.

**NOTICE**

**Before transporting the machine or putting inside a building store the antenna to prevent any interference.**

Antenna storage location

## PRECAUTION OF USE

- To ensure safe operation, adjust the volume level so that external noise is still audible.
- Ensure no water is splashed over the speaker case or cab radio to prevent malfunction.
- Never use solution such as benzine or thinners to clean the dial or buttons. These should be wiped with a dry, soft cloth. (Use a cloth dipped in alcohol for very dirty surfaces.)
- At battery replacement, all the memory pre-set with the pre-set buttons will be cleared. Perform pre-setting again.

# POWER PICK-UP PORT

24V power source.

**NOTICE**

**Do not use cigarette lighter as the power source for 12V equipment. It will cause damage to the equipment.**

If the cigarette lighter is removed, it can be used as a power source. The capacity of the cigarette lighter is 85W (24V x 3.5A).

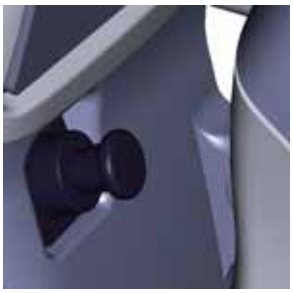

# HANDLING AIR CONDITIONER

## GENERAL LOCATIONS OF CONTROL PANEL

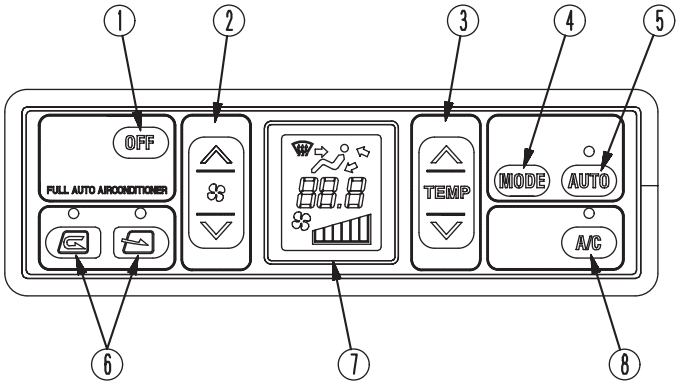


9EH02410AA1

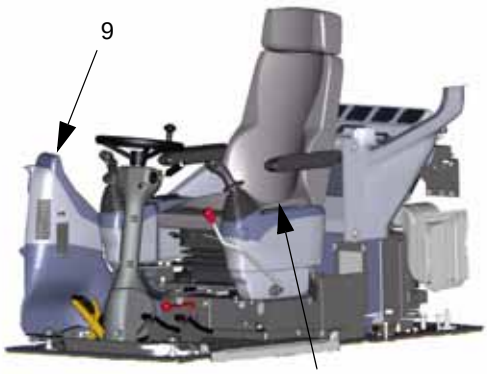


Air conditioner control panel

| | |
|---|---|
| (1) OFF switch | (6) FRESH/RECIRC selector switch |
| (2) Fan switch | (7) Display monitor |
| (3) Temperature control switch | (8) Air conditioner switch |
| (4) Vent selector switch | (9) Defroster selector lever |
| (5) Auto switch | |

### OFF SWITCH

This switch (1) is used to stop the fan and air conditioner.

- When OFF switch (1) is pressed, the set temperature and air flow display on display monitor (7) and the lamps above auto switch (5) and air conditioner switch (8) go out, and operation stops.

9JH02411

### FAN SWITCH

This switch (2) is used to adjust the air flow.

The air flow can be adjusted to six levels.

- Press the ∧ switch to increase the air flow; press the ∨ switch to reduce the air flow.
- During auto operation, the air flow is automatically adjusted.

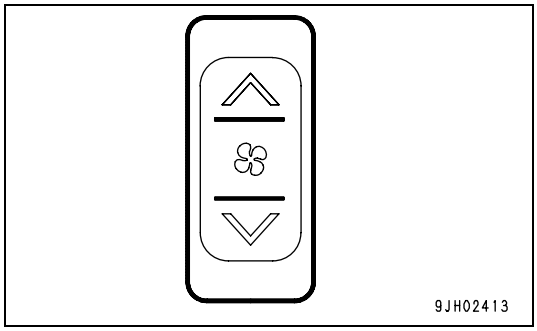


| Monitor display and air flow | |
|---|---|
| Liquid crystal display | Air flow |
| | Air flow "low" |
| | Air flow "medium 1" |
| | Air flow "medium 2" |
| | Air flow "medium 3" |
| | Air flow "medium 4" |
| | Air flow "high" |

### TEMPERATURE SET SWITCH

This switch (3) is used to control the temperature inside the cab. The temperature can be set between 18°C and 32°C.

- Press the ∧ switch to raise the set temperature; press the ∨ switch to lower the set temperature.
- The temperature is generally set at 25°C.
- The temperature can be set in stages of 0.5°C.

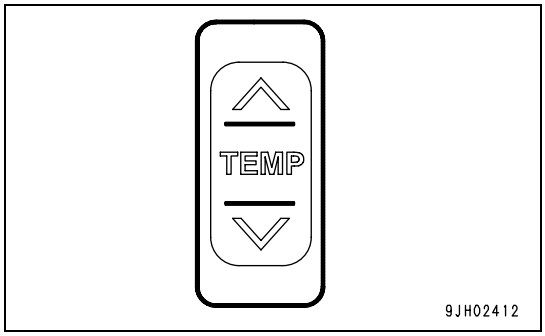


**<Monitor display and the function>**

| Monitor display (°C) | Set temperature |
|---|---|
| 18.0 | Max. cooling |
| 18.5 to 31.5 | Adjusts temperature inside cab to set temperature |
| 32.0 | Max. heating |

## VENT SELECTOR SWITCH

This switch (4) is used to select the vents.

- When switch (4) is pressed, the display on monitor display (7) switches and air blows out from the vents displayed.
- If AUTO operation is selected, the vents are selected automatically.

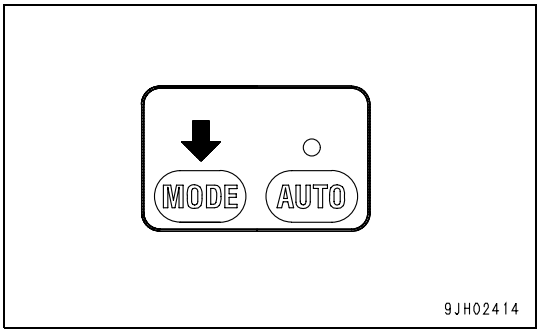


(A): Rear vents (4 places)

(B): Face vent (1 place)

(C): Foot vent (1 place)

(D1): Front window vent (1 place)

(D2): Front window vent (1 place)

- Front window vent (D2) can be opened or closed by hand.

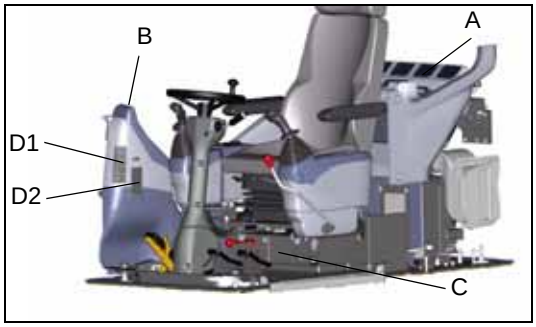


| Liquid crystal display | Vent mode | Vent | | | | Remarks |
|---|---|---|---|---|---|---|
| | | (A) | (B) | (C) | (D) | |
| | Front and rear vents (including defroster vent) | O | O | | (O) | - |
| | Front and rear vents (including defroster vent) | O | O | O | (O) | - |
| | Foot vent | | | O | | - |
| | Foot, foot vents (including defroster vent) | | O | O | (O) | Cannot be selected for automatic operation |
| | Front vents (including defroster vent) | | O | | (O) | Cannot be selected for automatic operation |

### AUTO SWITCH

With this switch (5), the air flow, vents, and air source (RECIRC/FRESH) are automatically selected according to the set temperature.

This switch also acts as the air conditioner main switch.

- When auto switch (5) is pressed, the lamp at the top of the auto switch lights up.
- Normally, press this switch, then use temperature control switch (3) to set the temperature, and run the air conditioner under automatic control.
- When the control is switched from automatic operation to manual operation, it is then possible to operate the switch to change the air flow, vents, and air source (RECIRC/FRESH). When the manual control is used, the lamp at the top of the auto switch goes out.

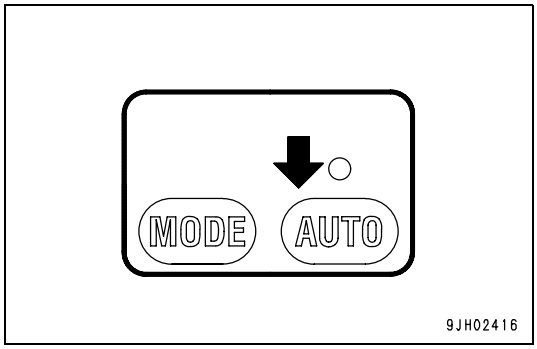


### RECIRC/FRESH SELECTOR SWITCH

This switch (6) is used to switch the air source between recirculation of the air inside the cab and intake of air from the outside.

- When switch (6) is pressed, the lamp at the top of the selector switch lights up to show that air is being blown out.
- During automatic operation, the selection of inside air (RECIRC) and outside air (FRESH) is carried out automatically.

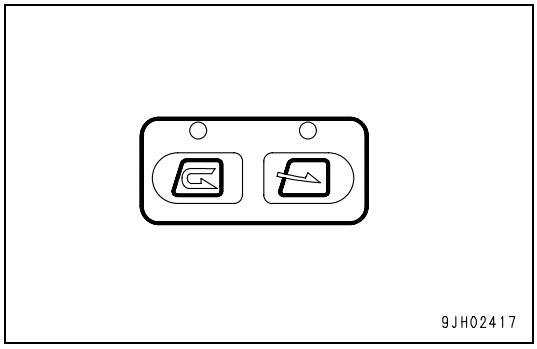


| | |
|---|---|
| RECIRC | The outside air is shut off and only the air inside the cab is circulated.<br>Use this position to carry out rapid cooling of the cab or when the outside air is dirty. |
| FRESH | Outside air is taken into the cab.<br>Use this position to take in fresh air or when carrying out demisting. |

### DISPLAY MONITOR

- This display monitor displays the status of temperature setting (a), air flow (b), and vents (c).
- When OFF switch (1) is pressed, the display of temperature setting (a) and air flow (b) goes out, and operation stops.

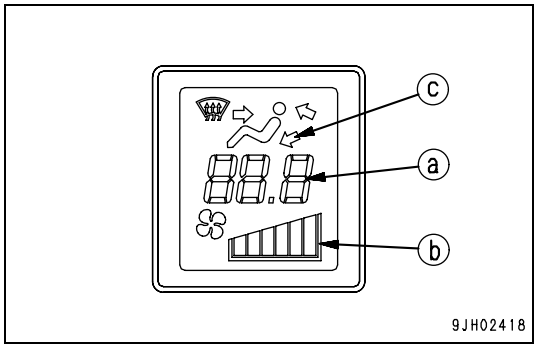

### AIR CONDITIONER SWITCH

This switch (8) is used to turn the air conditioner (cooling, dehumidifying, heating) ON or OFF.

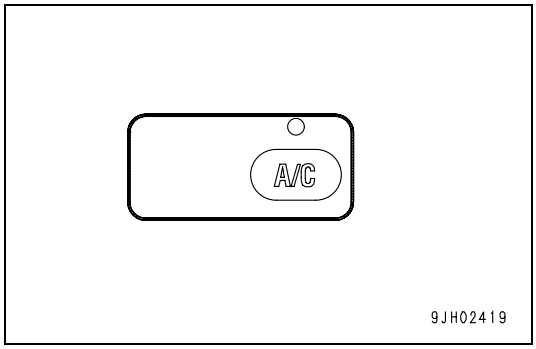


- When the fan is actuated (the display monitor shows (b)) and air conditioner switch (8) is pressed, the air conditioner is switched ON, the lamp at the top of the air conditioner switch lights up, and the air conditioner starts. When it is pressed again to the OFF position, the lamp at the top of the air conditioner switch goes out.
- The air conditioner cannot be operated while the fan is stopped.

### DEFROSTER SELECTOR LEVER

This switch (9) is used in cold or rainy weather to remove the mist that forms on the front glass.

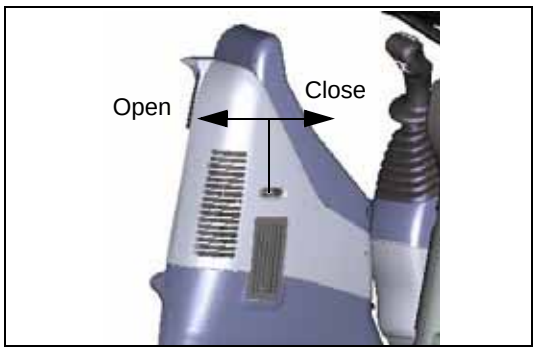


Selector lever forward: To defroster (open)

Selector lever back: Closed

The defroster can be used when the vent selector switch is set to face or face and foot.

## METHOD OF OPERATION

The air conditioner can be operated automatically or manually. Select the method of operation as desired.

### AUTOMATIC OPERATION

1. Turn auto switch (5) ON.
   - ❍ The lamp at the top of switch (5) lights up.
   - ❍ The set temperature (a) and air flow (b) are displayed on the monitor.

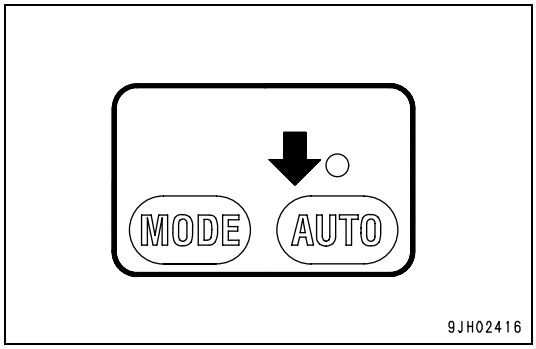


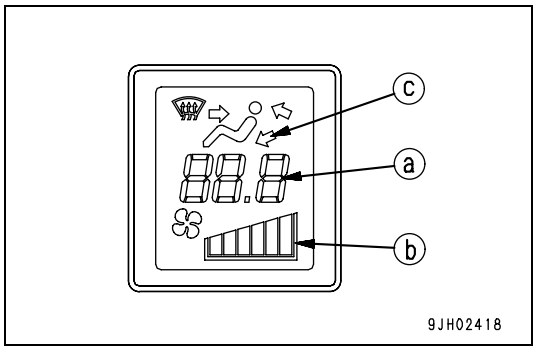

2. Use temperature set switch (3) to set to the desired temperature. The air flow, combination of vents, and selection of fresh or recirculated air is automatically selected according to the set temperature, and the air conditioner is operated automatically to provide the set temperature.

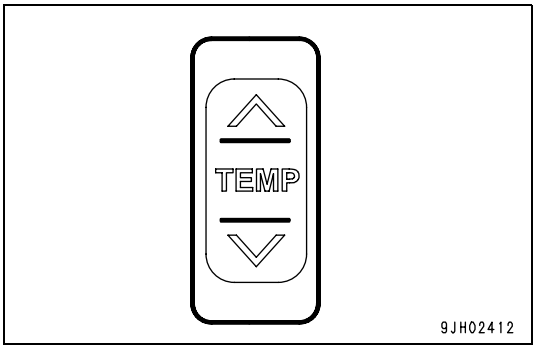


**REMARK**

When vent display monitor (c) displays (d) or (e), and the engine water temperature is low, the air flow is automatically limited to prevent cold air from blowing out.

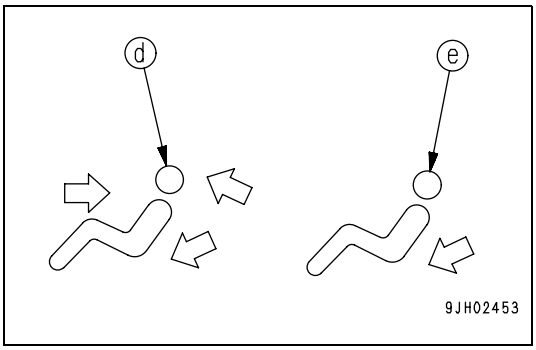


**STOPPING AUTOMATIC OPERATION**

Press OFF switch (1). The displays for temperature setting (a) and air flow (b) on the display monitor, and the lamps above auto switch (5) and air conditioner switch (8) go out, and the operation stops.

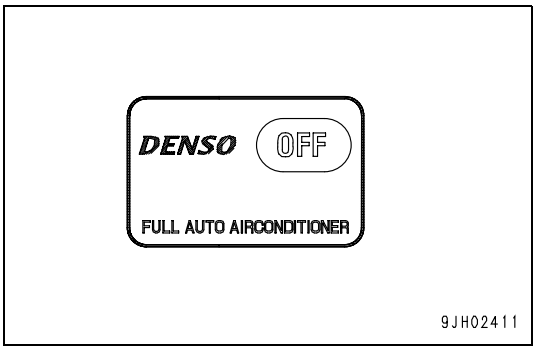

## MANUAL OPERATION

1. Press fan switch (2) and adjust the air flow. When doing this, check that temperature setting (a) and air flow (b) are displayed on the display monitor.

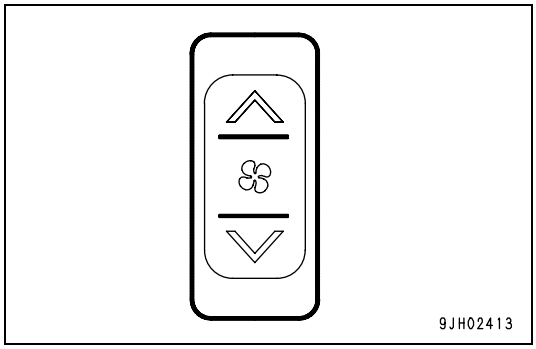


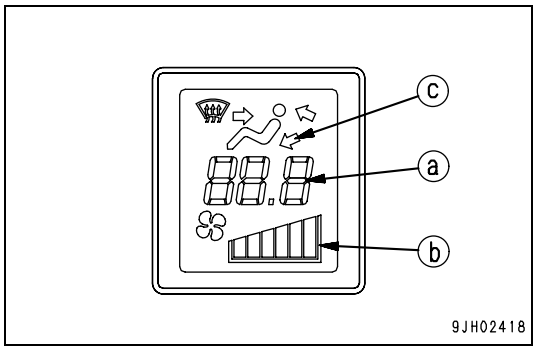


2. Turn air conditioner switch (8) ON. Check that the lamp at the top of the air conditioner switch lights up.

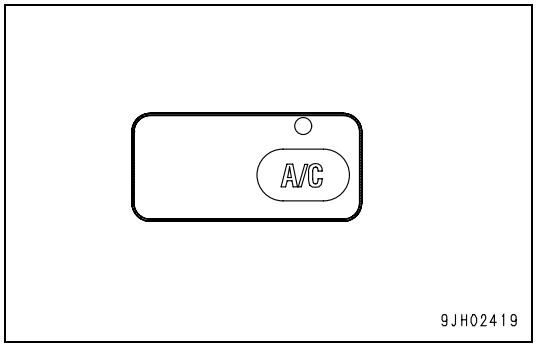


3. Press the temperature setting switch and adjust the temperature inside the cab.

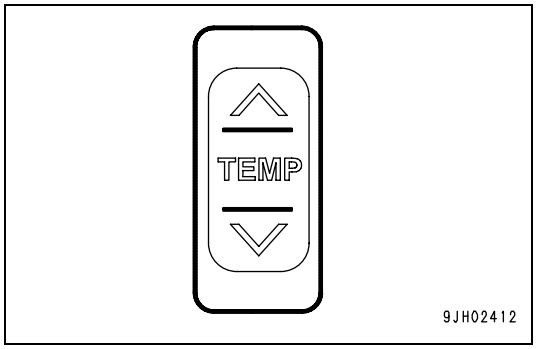

4. Press vent selector switch (4) and select the desired vents. When this is done, the display for vent (c) of the display monitor changes according to the selection.

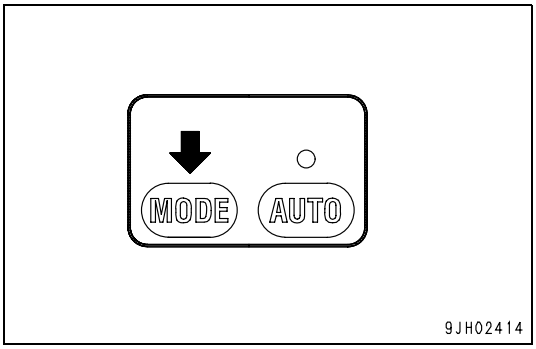


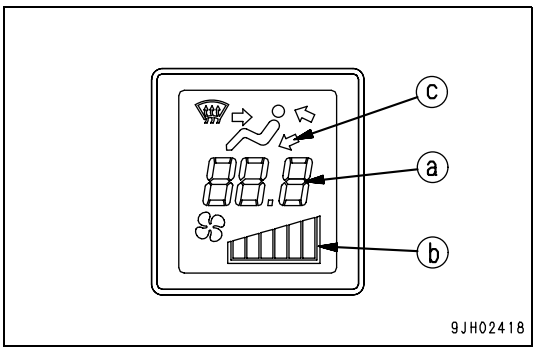


5. Press RECIRC/FRESH selector switch (6) and select recirculation of the air inside the cab (RECIRC) or intake of fresh air from outside (FRESH).

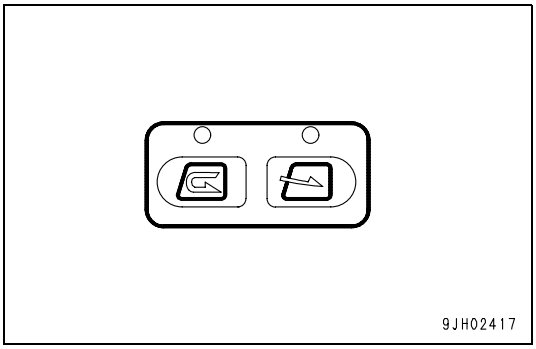


**STOPPING MANUAL OPERATION**

Press OFF switch (1). The displays for temperature setting (a) and air flow (b) on the display monitor, and the lamps above auto switch (5) and air conditioner switch (8) go out, and the operation stops.

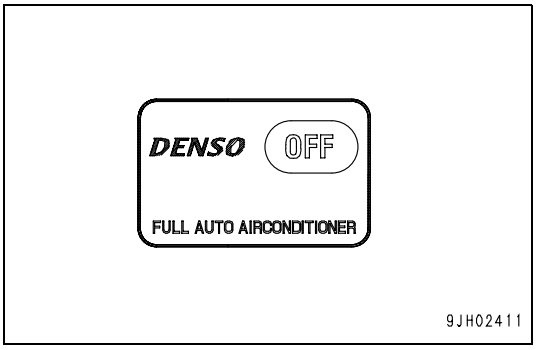

## OPERATION WITH COLD AIR TO FACE AND WARM AIR TO FEET

To operate with cold air blowing to the face and warm air blowing to the feet, set as follows.

1. Press fan switch (2) and adjust the air flow. When doing this, check that temperature setting (a) and air flow (b) are displayed on the display monitor.

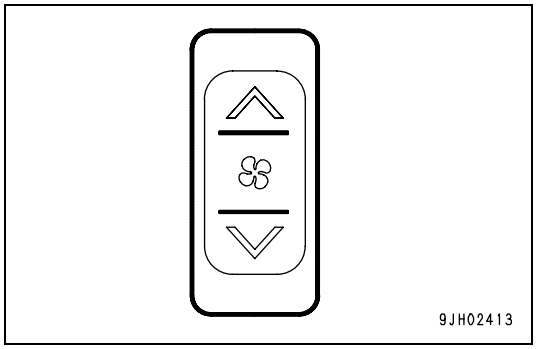


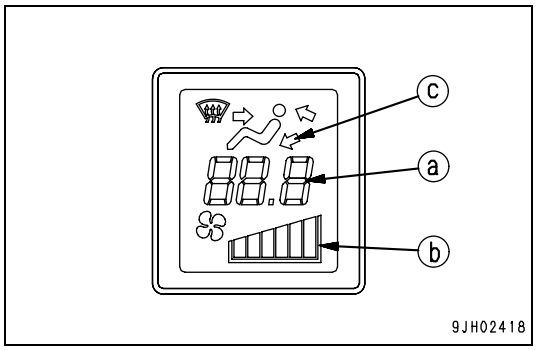


2. Press vent selector switch (4) and set the vent display on the display monitor to the display shown in the diagram on the right.

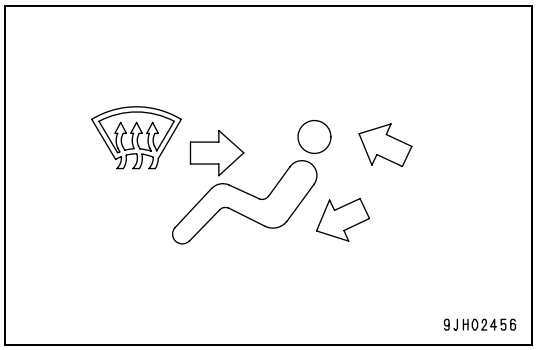


3. Turn air conditioner switch (8) ON. When this is done, the lamp above the air conditioner switch lights up.

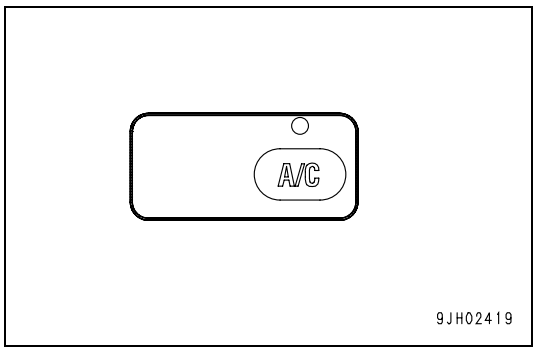

4. Adjust fan switch (2), temperature setting switch (3) and FRESH/RECIRC selector switch (6) to the desired positions.

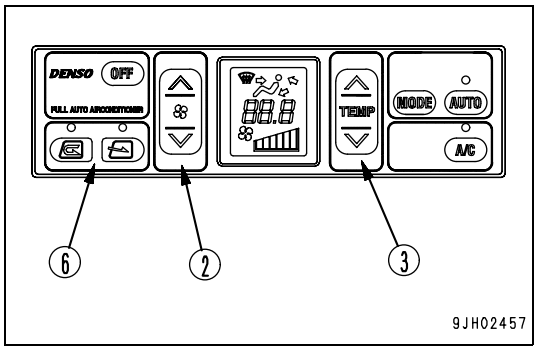


## DEFROSTER OPERATION

1. Press fan switch (2) and adjust the air flow. When doing this, check that temperature setting (a) and air flow (b) are displayed on the display monitor.

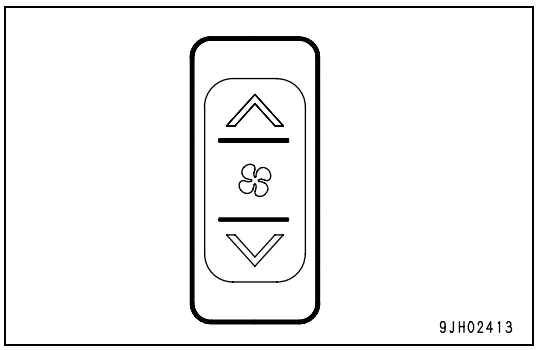


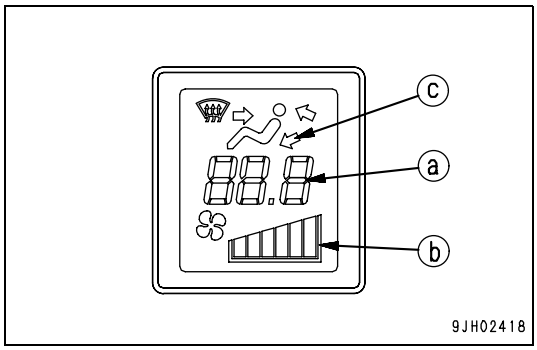

2. Press vent selector switch (4) and set the vent display on the display monitor to the display shown in (f) or (g) in the diagram on the right.

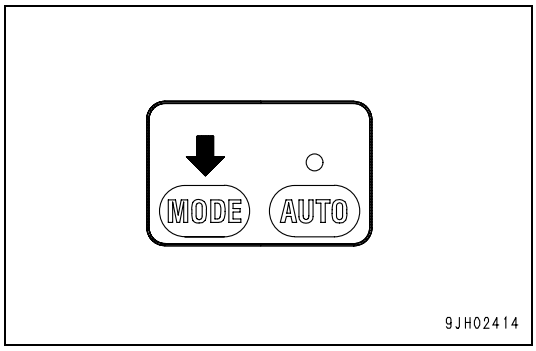


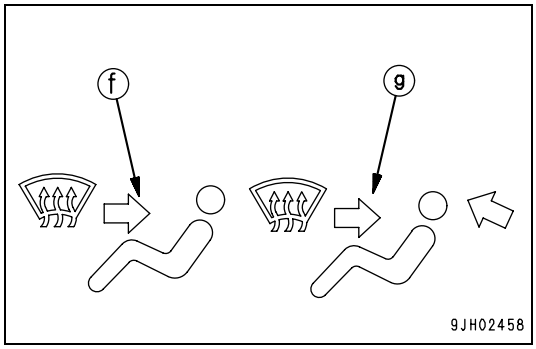


3. Press FRESH/RECIRC selector switch (6) and set it to take in fresh air.

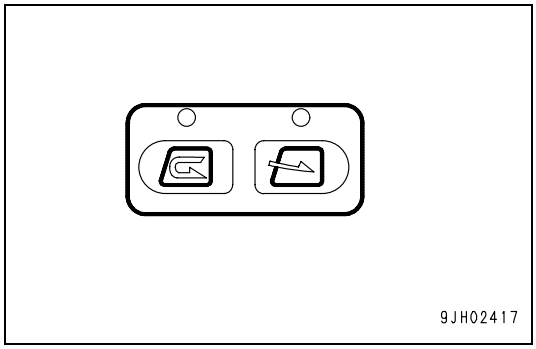


4. Press temperature setting switch (3) and set the set temperature display on the display monitor to the maximum heating temperature of 32°C.

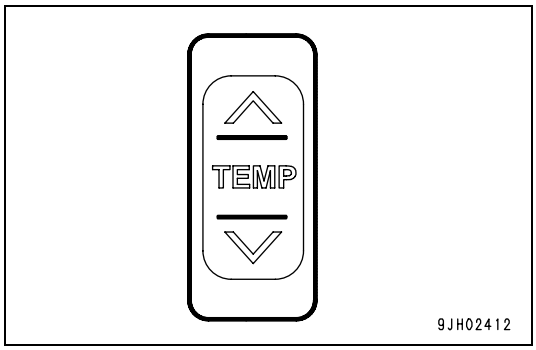

5. Adjust vents (A), (B), and (D2) so that the air blows onto the window glass.
   (Vents (C) and (D1) are fixed and cannot be adjusted.)

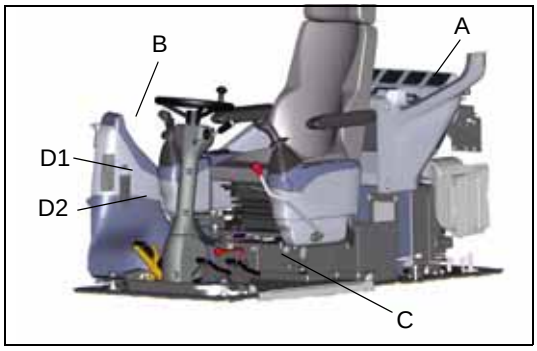


When operating in the rainy season or when it is desired to remove the mist from the window glass or to dehumidify the air, turn air conditioner switch (8) ON.

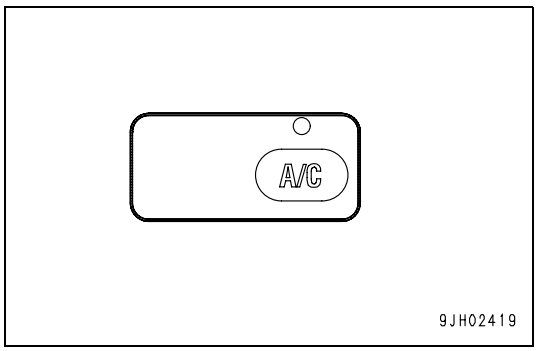


## PRECAUTIONS WHEN USING AIR CONDITIONER

**NOTICE**

- **When running the air conditioner, always start with the engine running at low speed. Never start the air conditioner when the engine is running at high speed. It will cause failure of the air conditioner.**
- **If water gets into the control panel or sunlight sensor, it may lead to unexpected failure, so be careful not to let water get on these parts. In addition, never bring any flame near these parts.**
- **For the auto function of the air conditioner to work properly, always keep the sunlight sensor clean and do not leave anything around the sunlight sensor that may interfere with its sensor function.**

**Ventilate the cab from time to time when using the cooler.**

- If you smoke when the cooler is on, the smoke may start to hurt your eyes, so open the window and carry out ventilation and cooling for a short time to remove the smoke.

When running the air conditioner for a long time, carry out ventilation and cooling together once each hour.

**Be careful not to make the temperature in the cab too low.**

When the cooler is on, set the temperature so that it feels slightly cool when entering the cab (5 - 6ºC) lower than the outside temperature). This temperature difference is considered to be the most suitable for your health. Adjust the temperature properly.

## CHECK, MAINTAIN MACHINE EQUIPPED WITH AIR CONDITIONER

When carrying out inspection of a machine equipped with an air conditioner, see the "MAINTENANCE SCHEDULE CHART (238)" and carry out inspection according to the table.

## OTHER FUNCTIONS

### SELF-DIAGNOSTIC FUNCTION

It is possible to carry out troubleshooting of the various sensors and equipment used on the air conditioner.

1. Press OFF switch (1). The temperature setting and air flow display on the liquid crystal display portion go out and operation stops.
2. If the "∧" and "∨" parts of temperature setting switch (3) are kept pressed at the same time for at least 3 seconds, the troubleshooting mode is displayed on the liquid crystal display.

<Monitor display and failure mode>

| Display | Failure mode |
|---|---|
| E-- | No failure |
| E11 | Disconnection in recirculated air sensor |
| E12 | Short circuit in recirculated air sensor |
| E13 | Disconnection in fresh air sensor |
| E14 | Short circuit in fresh air sensor |
| E15 | Disconnection in water temperature sensor |
| E16 | Short circuit in water temperature sensor |
| E18 | Short circuit in sunlight sensor |
| E21 | Disconnection in vent sensor |
| E22 | Short circuit in vent sensor |
| E43 | Abnormality in vent damper |
| E44 | Abnormality in air mix damper |
| E45 | Abnormality in FRESH/RECIRC air damper |
| E51 | Abnormality in refrigerant pressure |

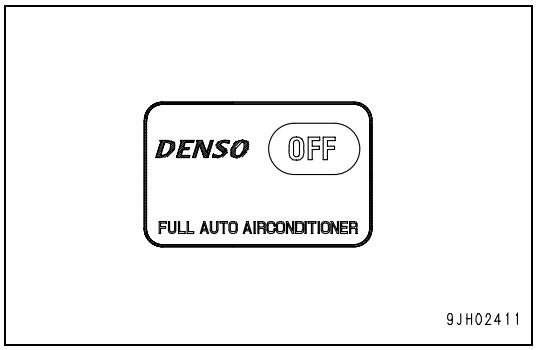


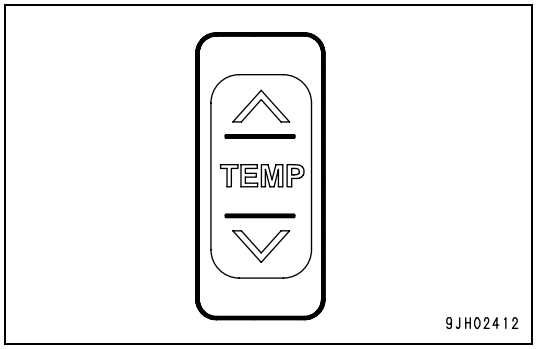


- When more than one failure is detected, press the "∧" or "∨" portion of temperature setting switch (3) to display the failures in turn.
- After completing the troubleshooting, press OFF switch (1) again to return to the normal display.

If any abnormality is detected by the self-diagnostic function, ask your Komatsu distributor to carry out inspection and repair.

### SWITCH SET TEMPERATURE DISPLAY BETWEEN °F AND °C

It is possible to switch the set temperature display between °F and °C.

If the "∧" and "∨" portions of temperature setting switch (3) are pressed at the same time for more than 5 seconds while the fan is running, the temperature display will switch between °F and °C. (Note that the unit is not displayed.)

| | Liquid crystal display range |
|---|---|
| °C | 18.0 to 32.0 |
| °F | 63 to 91 |

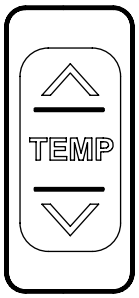


9JH02412

## FUSIBLE LINK

If the starting motor will not rotate when the starting switch is turned ON, a possible cause is disconnection of wire-type fusible link. Open the battery box cover (front right hand side of machine) to inspect the fusible link and, if necessary, replace it.

**REMARK**

A fusible link is a large-sized fuse wire installed in the high current flow portion of the circuit to protect electrical components and wiring from burning, similar to an ordinary fuse.

## CONTROLLER

A pump and governor controller is provided. It is located underneath the seat.

**NOTICE**

- **Never splash or spill water, mud or drink over the controller as this may cause a fault.**
- **If a fault occurs in the controller, do not attempt repair, but consult your Komatsu distributor.**

# TOOL BOX (CHASSIS)

This is used for keeping the tools.

# REFUELLING PUMP

## SAFETY

- Do not bring fire or sparks near fuel - smoking is prohibited.
- In event of ingested fuel - do not induce vomiting. Drink large quantity of milk or water and seek medical attention.
- Skin protection - wear protective gloves when dispensing fuel. Plastic gloves conforming to EN388 cat: 2 are recommended.
- Attendance - transfer of fuel must always take place under the supervision of the operator.
- Location for refuelling: Ensure that refueling takes place away from hazardous areas.

## PROCEDURE

1. When the machine is operated on sites with no fuel container and pump, the machine may be refuelled, using the refuelling pump, from fuel barrels.

2. The refuelling pump is located in the compartment at the rear right hand side of the machine.
3. Stop the machine engine.
4. Open the cap on the foot valve by unscrewing fully.
5. Check strainer on the fuel hose end is clean.
6. Place the fuel hose into the fuel barrel, ensuring that the foot valve is placed at the bottom of the barrel.
7. Open the cap on top of the tank.
8. Switch on the pump.
9. Check that the pump primes properly (should prime within 1 minute). If it does not, stop the pump and check that the strainer is clean and hose is immersed in the fuel.

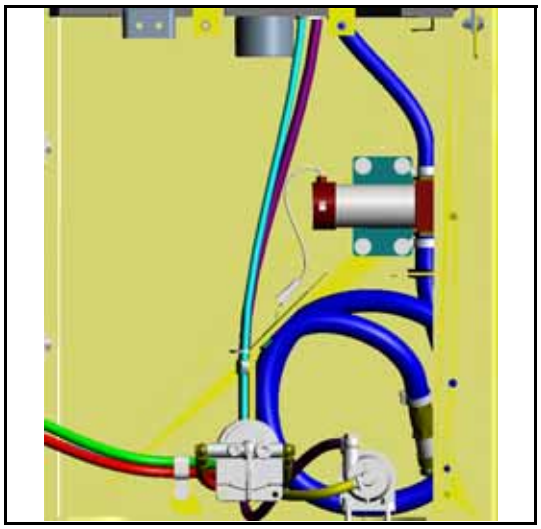

10. When the level indicator(1) shows the tank to be full, stop the pump. Take care not to allow fuel to overflow from the tank.

11. Close the cap on the foot valve by screwing fully.

12. Replace the hose and the tank cap.

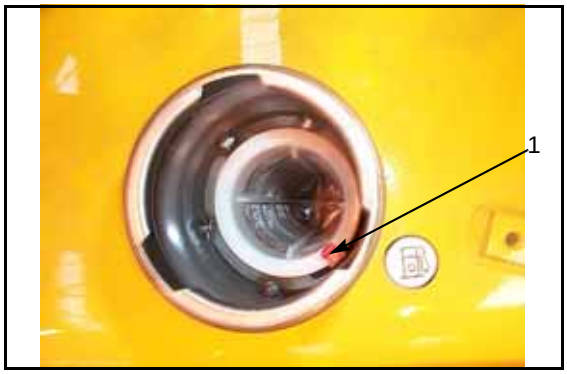


**REMARK**

The pump is protected by a fuse. If pump fails to function, check fuse (15A).
Do not allow the pump to run dry, as this will overheat the motor. If the barrel is emptied during the refuelling stop the pump immediately.
The maximum permitted running time for the pump is 30 minutes. The tank should be full well within this time. Do not allow the pump to run for longer than this as damage will occur to the motor.

## MAINTENANCE

Weekly: Clean the suction filter.
Monthly: Check hose joints, electrical cables and clean the pump body of impurities.
Storage: If the pump is not to be used for a period, ensure that fuel is sprayed into the motor housing every two weeks to prevent risk of rusting to the rotor.

# WARNING LAMPS

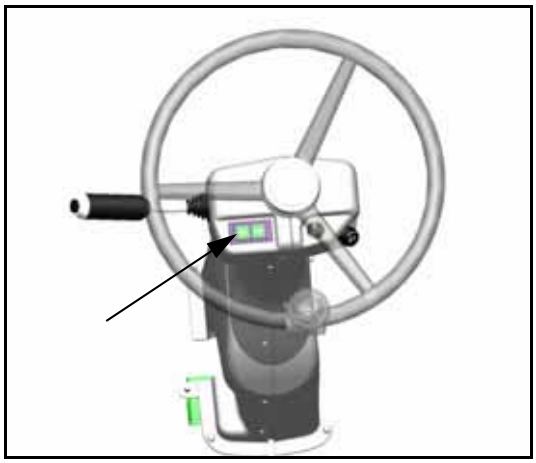

### 1. INDICATOR WARNING LAMP

When the indicator is pulled fully backward, warning light (A) will flash to indicate the driver's intention to turn to the left.

When the indicator is pushed fully forward, warning light (B) will flash to indicate the driver's intention to turn to the right.

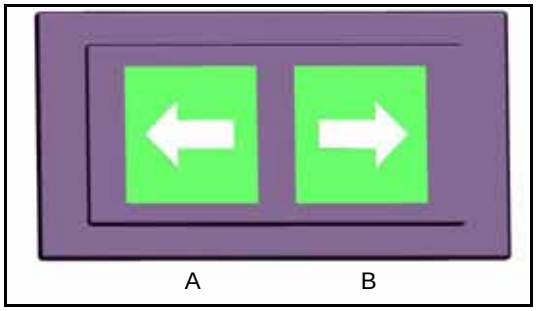

# HANDLING ACCUMULATORS

**⚠ WARNING**

**After stopping the engine, always raise the safety lock to the LOCK position.**

**The accumulators are filled with high-pressure nitrogen gas, and it is extremely dangerous if they are handled in the wrong way.**
**Always observe the following precautions.**

- **Never make any hole in the accumulators or expose them to flame or fire.**
- **Do not weld any boss to the accumulators.**
- **When disposing of accumulators, it is necessary to release the gas from the accumulators, so please contact your Komatsu distributor.**

### Brake circuit accumulators (A) X 3

This machine is equipped with accumulators in the brake circuits.

The accumulator is a device to store the pressure in the circuit, and when it is installed, the circuit can be operated for a short time even after the engine is stopped.

The accumulators are installed to the position shown in the diagram on the right.

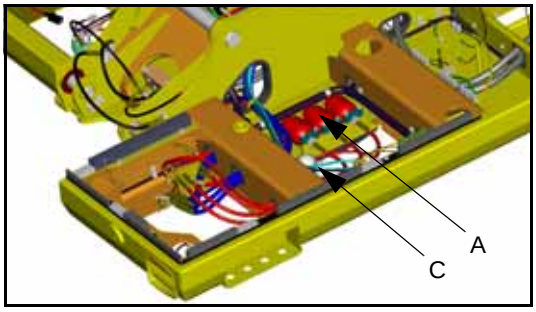


### Control circuit accumulator (B)

This machine is equipped with an accumulator in the control circuit. The accumulator is a device to store the pressure in the control circuit, and when it is installed, the control circuit can be operated for a short time even after the engine is stopped. Therefore, if the control lever is moved in the direction to lower the work equipment, it is possible for the work equipment to move under its own weight.

The accumulator is installed to the position shown in the diagram on the right.

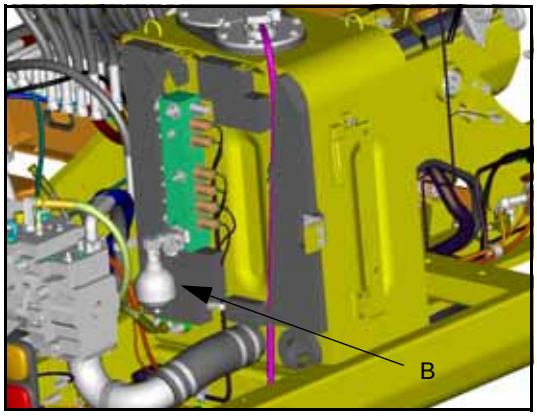


### Clutch control accumulators (C)

This machine is equiped with an accumulator in the transmission circuit.

The accumulator is installed to the position shown in the diagram.

# OPERATION

## CHECK BEFORE STARTING ENGINE

### WALK-AROUND CHECK

**WARNING**

**Dirt, oil or fuel around the parts of the engine which reach high temperatures may cause fire and damage to the machine.**
**Check carefully, and if any abnormality is found, always repair it or contact your Komatsu distributor.**

Before starting the engine, look around the machine and under the machine to check for loose nut or bolts, or leakage of oil, fuel, or coolant, and check the condition of the work equipment and hydraulic system.
Check also for loose wiring, play, and collection of dust at places which reach high temperatures.

Always carry out the items in this section before starting the engine each day.

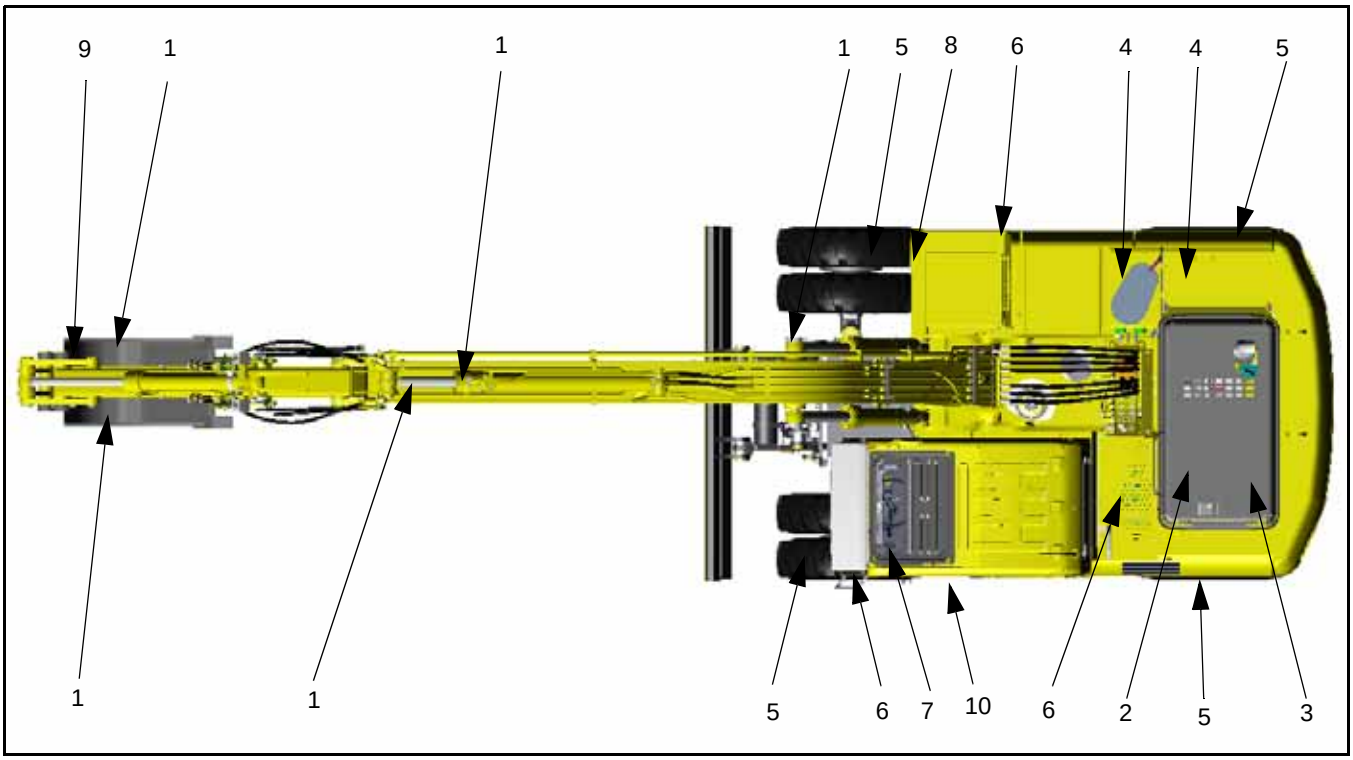


**1. Check for damage, wear, play in work equipment, cylinders, linkage, hoses.**

Check that there are no cracks, excessive wear, or play in the work equipment, cylinders, linkage, or hoses. If any abnormality is found, repair it.

**2. Remove dirt from around engine, radiator, battery**

Check that there is no dirt accumulated around the engine, battery or radiator. If any dirt is found, remove it. Also check for flammable material (rags, leaves, twigs, grass etc.) and remove.

**3. Check for leakage of water or oil around engine**

Check that there is no leakage of oil from the engine or leakage of water from the cooling system. If any abnormality is found, repair it.

**4. Check for oil leakage from hydraulic equipment, hydraulic tank, hoses, joints**

Check that there is no oil leakage. If any abnormality is found, repair the place where the oil is leaking.

**5. Check for damage to wheels and tyres**

**6. Check for damage to handrail and for loose bolts**

Repair any damaged handrails and tighten any loose bolts.

**7. Check for damage to gauges, monitor, loose bolts**

Check that there is no damage to the gauges and monitor in the operator's cab. If any abnormality is found, replace the parts. Clean off any dirt on the surface.

**8. Clean rear view mirror, check for damage**

Check that there is no damage to the rear view mirror. If it is damaged, replace it with a new mirror. Clean the surface of the mirror and adjust the angle so that the view to the rear can be seen from the operator's seat.

**9. Check lifting eye for damage**

Check the lifting eye (or hook and safety latch) for damage. If damage is found, contact your Komatsu distributor for repair.

**10. Check seat belt and mounting clamps.**

Check there is no abnormality in the seat belt or mounting clamps. If there is any damage, replace with new parts

## CHECK BEFORE STARTING

Always carry out the items in this section before starting the engine each day.

### CHECK COOLANT LEVEL, ADD WATER

**⚠ WARNING**

- **Do not open the radiator cap unless necessary. When checking the coolant, always check the radiator reserve tank when the engine is cold.**
- **Immediately after the engine is stopped, the coolant is at a high temperature and the radiator is under high internal pressure. If the radiator cap is removed to drain the coolant in this condition, there is danger of burns. Wait for the temperature to go down, then turn the cap slowly to release the pressure before removing it.**

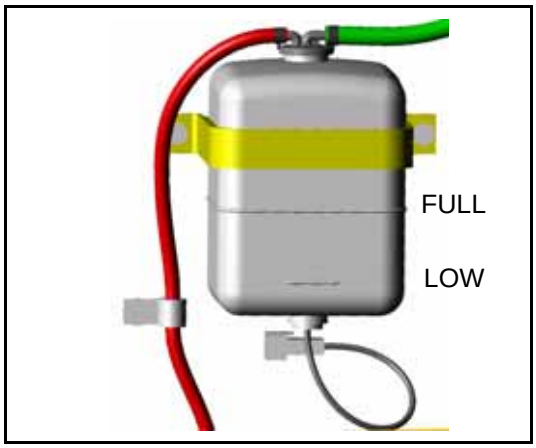


1. Open the rear door on the left side of the machine and check that the cooling water level is between the FULL and LOW marks on radiator reserve tank (1) (shown in the diagram on the right). If the water level is low, add water through the water filler of reserve tank to the FULL level.
2. After adding water, tighten the cap securely.
3. If the reserve tank becomes empty, first inspect for water leaks and then fill the radiator and the reserve tank with water.

### CHECK OIL LEVEL IN ENGINE OIL PAN, ADD OIL

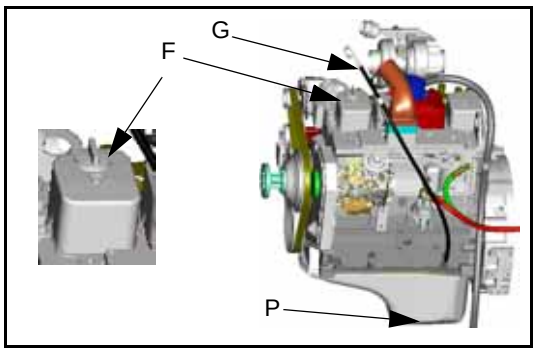


1. Open the engine hood.
2. Remove dipstick (G) and wipe the oil off with a cloth.
3. Insert dipstick (G) fully in the oil filler pipe, then take it out again.
4. The oil level should be between the H and L marks on dipstick (K)

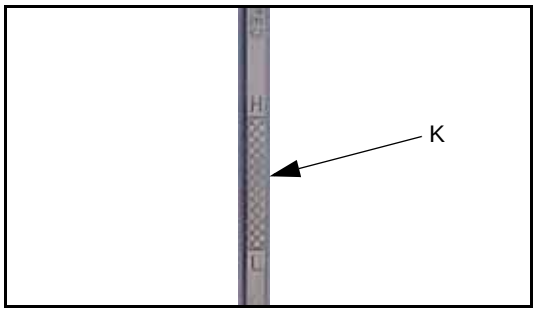


If the oil level is below the L mark, add engine oil through oil filler (F).

**For details of the oil to use, see "USE FUEL, COOLANT AND LUBRICANTS ACCORDING TO AMBIENT TEMPERATURE (230)"**

5. If the oil is above the H mark, drain the excess engine oil from drain plug (P), and check the oil level again.
6. If the oil level is correct, tighten the oil filler cap securely and close the engine hood.

**REMARK**

Ensure the machine is level when checking oil level and wait 15 minutes after stopping engine before checking the oil level.

**WARNING**

**Allow the engine to cool before checking the oil level to avoid burns by touching hot engine parts.**

## CHECK FUEL LEVEL, ADD FUEL

**WARNING**

**When adding fuel, never let the fuel overflow. This may cause a fire. If fuel is spilled, thoroughly clean up any spillage.**

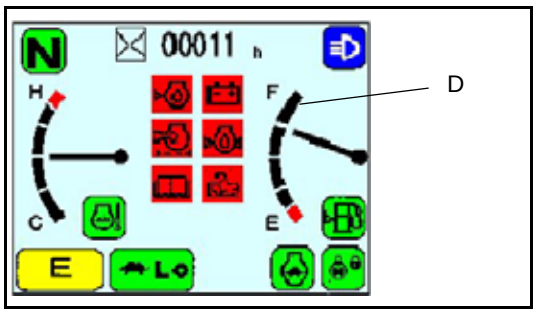


1. Check fuel level on monitor panel (D).

2. If fuel level is on the E marker you need to refill the tank.
3. Open fuel filler cap (F) on fuel tank.
4. When the fuel filler cap (F) is opened, float gauge within filler neck will rise according to fuel level. Check that the fuel tank is full by looking into tank and checking float gauge.
5. If the tank is not full, add fuel through the fuel filler until the float gauge (G) rises to the maximum position. Fuel tank capacity: 290 litres. Position of tip of float gauge (G) when tank is full: Approx. 50 mm from top of surface of fuel tank.
6. After adding fuel, push float gauge (G) straight down with fuel filler cap (F). Be careful not to get float gauge (G) caught in the tab of fuel filler cap (F), and tighten fuel filler cap (F) securely.

   **For details of the fuel to use, see "USE FUEL, COOLANT AND LUBRICANTS ACCORDING TO AMBIENT TEMPERATURE (230)"**

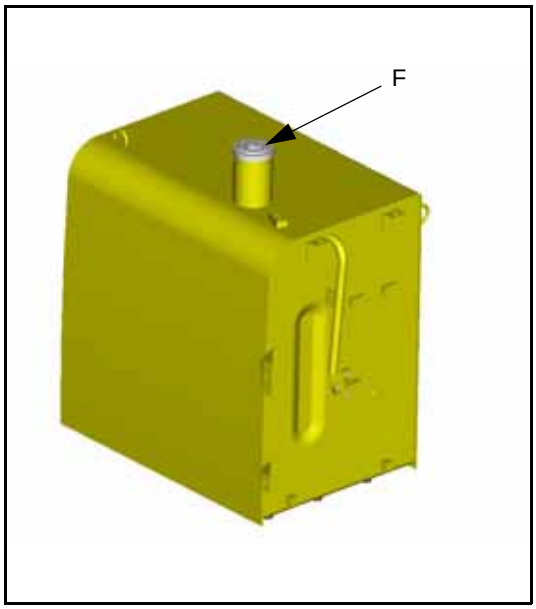


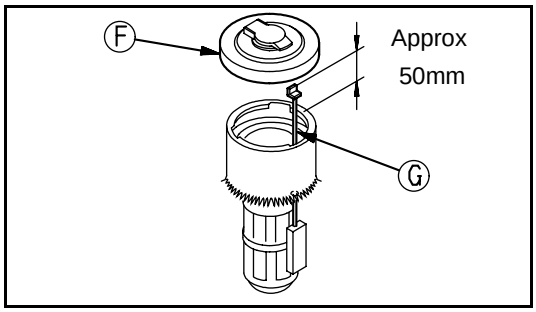

**REMARK**

If breather holes (1) on the cap is clogged, the pressure in the tank will drop and fuel will not flow.
Clean the holes from time to time.

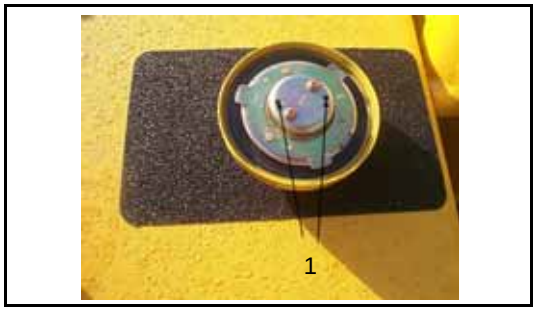


**CHECK OIL LEVEL IN HYDRAULIC TANK, ADD OIL**

**WARNING**

- **When removing the oil filler cap, oil may spurt out, so turn the cap slowly to release the internal pressure before removing the cap.**
- **If oil has been added to above the H mark, stop the engine and wait for the hydraulic oil to cool down, then drain the excess oil from the drain plug (P).**

1. If the work equipment is not in the condition shown in the diagram on the right, start the engine, run the engine at low speed, retract the arm and bucket cylinders, then lower the boom, set the bucket teeth in contact with the ground, and stop the engine.
2. Check sight gauge (G). The oil level is normal if midway between the H and L marks.

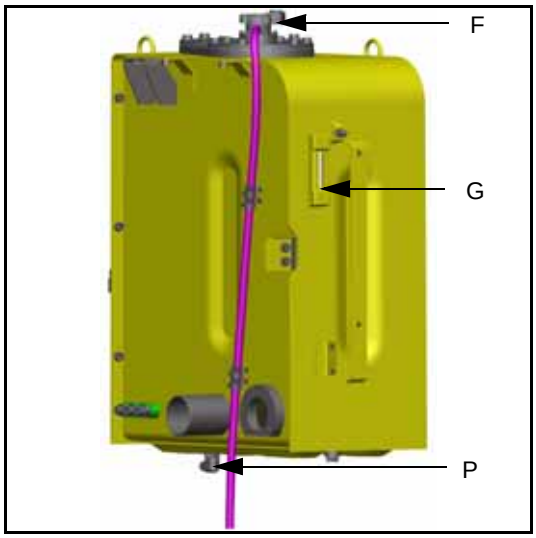


**NOTICE**

**Do not add oil if the level is above the H line. This will damage the hydraulic equipment and cause oil to spurt out.**

3. If the level is below the L mark, remove cap (F) from the hydraulic tank and add oil.

**For details of the oil to use, see "USE FUEL, COOLANT AND LUBRICANTS ACCORDING TO AMBIENT TEMPERATURE (230)"**

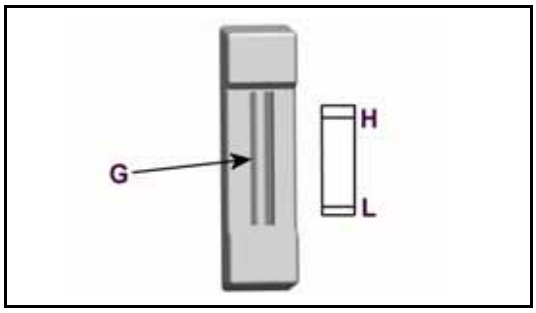


**REMARK**

The oil level will vary depending upon the oil temperature

Accordingly, use the following as a guide:

- Before operation: around midway between H and L
  (Oil temperature 10 to 30°C)
- Normal operation: around H level
  (Oil temperature 50 to 80°C)

### CHECK AIR CLEANER FOR CLOGGING

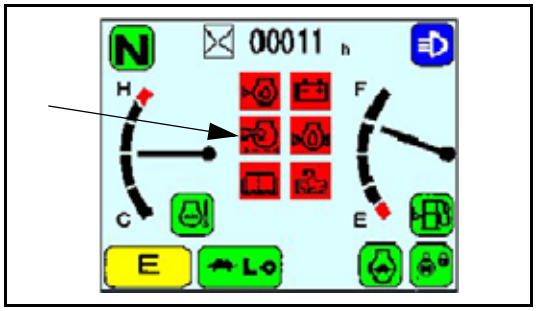


1. Confirm that the air cleaner clogging monitor is not lit
2. If lit, immediately clean or replace the element.

   **For details of the method of cleaning the element, see "CLEAN INSIDE OF COOLING SYSTEM (250)"**

### CHECK ELECTRIC WIRING

**⚠ WARNING**

- **If the fuses frequently blow, if there are traces of short circuits in the electrical wiring, locate the cause immediately and carry out repairs, or contact your Komatsu distributor for repairs.**
- **Keep the top surface of the battery clean and check the breather hole in the battery cap. If it is clogged with dirt or dust, wash the battery cap to clean the breather hole.**

Check for damage, wrong fuse capacity, and any sign of disconnection or short circuit in the electric wiring. Check for loose terminals and tighten any loose parts.

In particular check the wiring of the "battery", "starting motor" and "alternator" carefully.

When carrying out walk-around checks or checks before starting, always check if there is any accumulation of flammable material around the battery, and remove it.

Please contact your Komatsu distributor for investigation and correction of the cause.

### CHECK FUNCTION OF HORN

1. Turn the starting switch to the ON position.
2. Confirm that the horn sounds without delay when the horn button is pressed. If the horn does not sound, ask your Komatsu distributor for repair.

## CHECK FOR WATER AND SEDIMENT IN WATER SEPARATOR, DRAIN WATER

**Do not over tighten the valve. Over tightening can damage the threads.**

1. Open the door at the rear right of the machine.
2. Inspect the water separator (A), and check if the ring inside has risen to the marked line.
3. If the ring has risen to the marked line, carry out the procedure from Step 4.

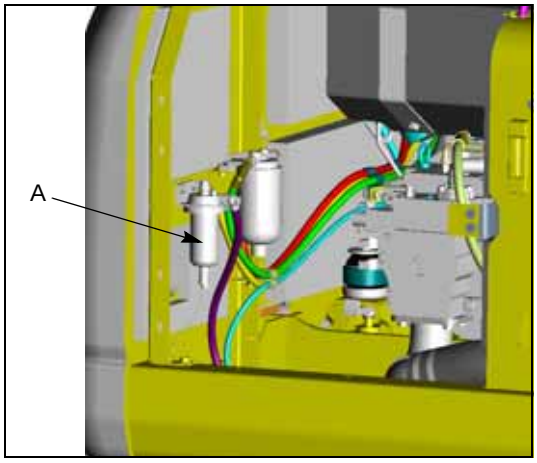


4. Set a container under the water separator to catch the drained FUEL.
5. Secure fuel line to prevent leakage.
6. Remove air bleed plug (5) at the top of the water separator.
7. Loosen drain valve (1) at the bottom of the water separator, and drain the water and sediment into the container.
8. Loosen ring nut (2), then remove filter case (3).
9. Remove element (4) from the separator base.
10. Wash element (4) in clean diesel oil.
11. Check element (4), and replace it if it is damaged.
12. When installing element (4), perform Steps 9 and 8 in the opposite order.
    Tightening torque of ring nut (2): 40 ± 3 N•m
    {4.1 ± 0.3 kgf•m}
13. Fill filter case (3) with fuel. When the fuel comes out from air bleed plug (5), tighten air bleed plug (5).

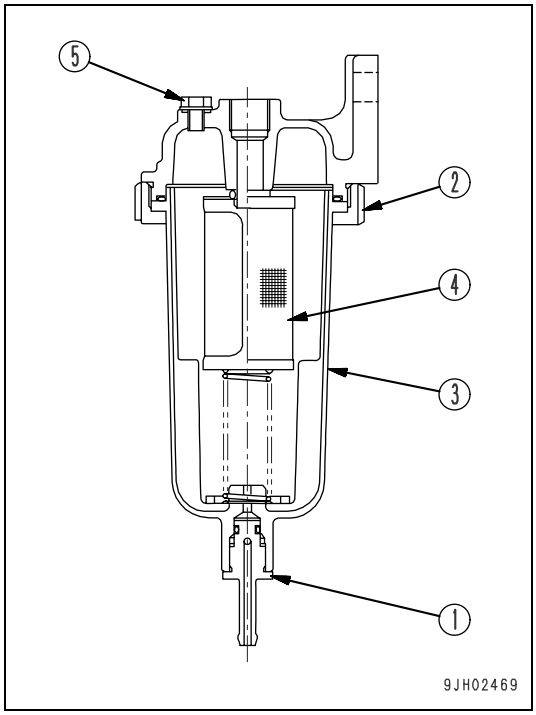

## ADJUSTMENT OF OPERATOR'S SEAT (AIR SUSPENSION SEAT)

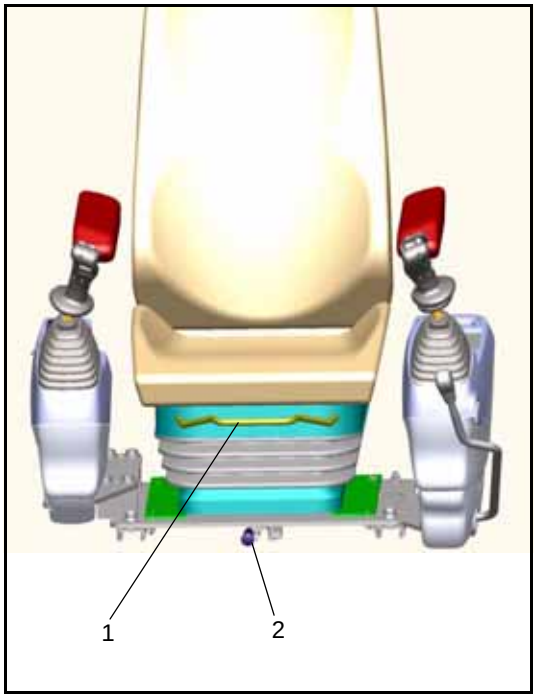


### (A) Fore-and-aft adjustment of seat

Pull lever (1) up. After the seat is set to the desired position, release the lever.

**REMARK**

This operation will affect relative position of seat and wrist control levers.

### (B) Forward/aft adjustment of seat and base

Pull lever (2) sideways. After the seat is set to the desired position release the lever.

**REMARK**

This operation will not affect relative position of seat and wrist control levers.

### (C) Adjustment of reclining seat

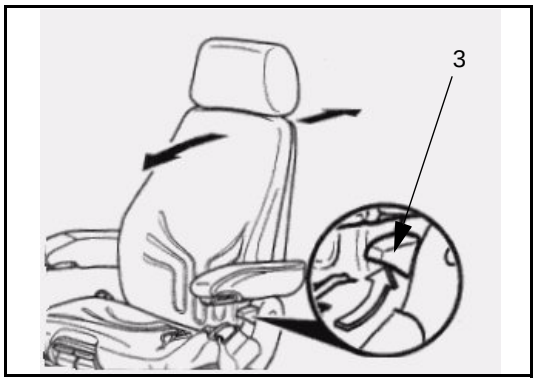


The backrest is adjusted using the locking lever (3). Once locking lever (3) is in locked position it should not be possible to move onto another position.

### (D) Adjustment of arm rest height

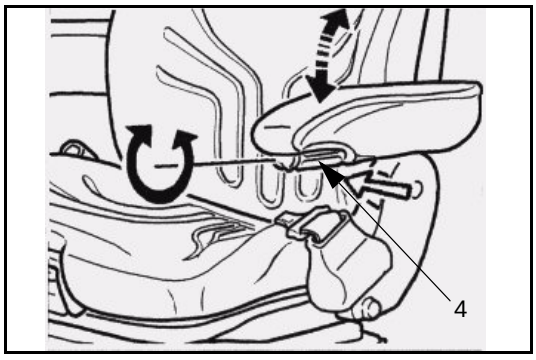


The inclination of the armrests can be modified by turning the adjustment knob.

**(E) Adjustment of tilting seat angle**

To adjust the tilt of the seat lift left hand handle (5). By exerting pressure on or off the seat it can be moved to the desired angle position.

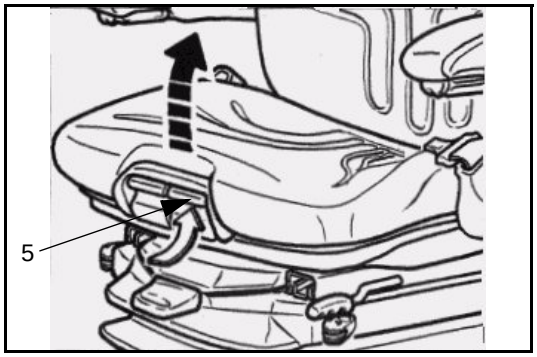


**(F) Suspension adjustment**

The seat should be adjusted for the drivers weight by briefly pulling the actuator lever of the automatic and height adjuster (6) with the vehicle at a standstill and the driver sitting on the seat, the driver must sit absolutely still during adjustment.

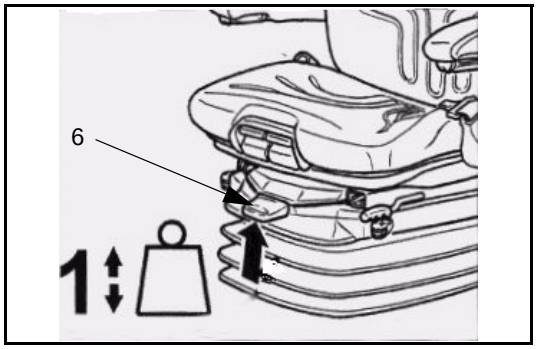


**(G) Lumbar adjustment**

The curve of the backrest cushion can be individually adjusted by pressing the upper and lower switches (7).

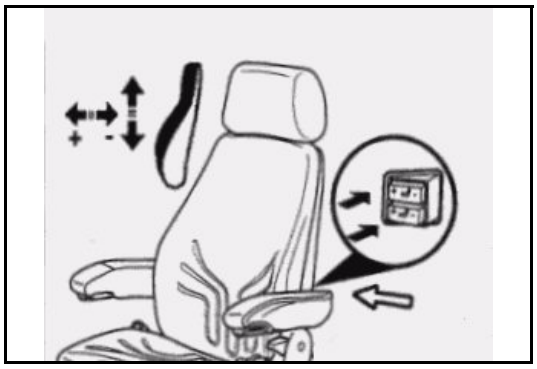

**(H) Height adjustment**

The height can be altered by pulling or pressing the actuator lever fully out or in (8) if the adjustment reaches the top or bottom end stop, the height is adjusted automatically in order to guarantee a minimum spring level.

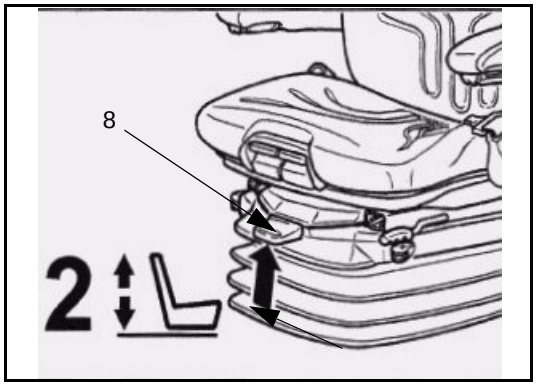

**(I) Seat depth adjustment**

To adjust the depth of the seat cushion, lift the right hand handle (9). By moving the seat cushion backwards or forwards the desired seating position can be reached.

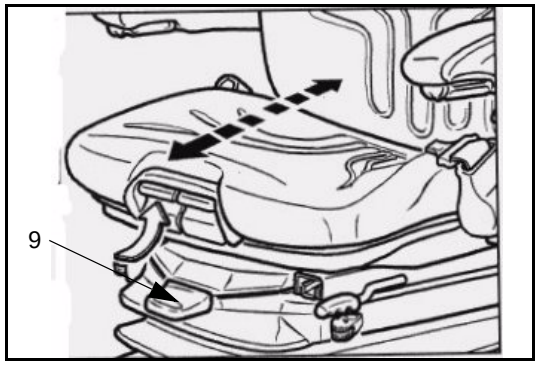


## SEAT BELT

- Before fitting the seat belt, check that there is no abnormality in the belt or its mounting bracket. If it is worn or damaged, replace the seat belt.
- Even if the seat belt appears normal, replace it every 3 years. The date of manufacture of the belt is shown on the back of the belt.
- Always wear the seat belt during operations.
- Fit the seat belt so that it is not twisted.

### FASTENING AND REMOVING SEAT BELT

This seat belt has a retractor, so it is not necessary to adjust the length.

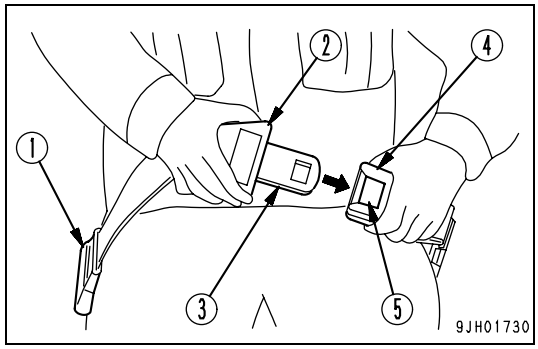


**Fastening seat belt**

Hold grip (2) and pull the belt out from the retractor (1), check that the belt is not twisted, then insert tongue (3) into buckle (4) securely.
Pull the belt lightly to check that it is properly locked.

**Removing belt**

Press button (5) in buckle (4), and remove tongue (3) from the buckle (4).
The belt is automatically spooled, hold grip (2) and return the belt slowly to the retractor (1).

## ADJUSTMENT OF OPERATOR'S SEAT (MECHANICAL SEAT)

**(A) Fore-and aft adjustment of seat**

**For details, see "(A) Fore-and-aft adjustment of seat (154)"**

**(B) Forward/aft adjustment of seat**

**For details, see "(B) Forward/aft adjustment of seat and base (154)"**

**(C) Adjusting of reclining seat**

**For details, see "(C) Adjustment of reclining seat (154)"**

**(D) Adjustment of arm rest height**

**For details, see "(D) Adjustment of arm rest height (154)"**

**(E) Adjustment of tilting seat angle**

**For details, see "(E) Adjustment of tilting seat angle (155)"**

**(F) Weight adjustment**

The seat should be adjusted for the drivers weight by turning the weight adjuster lever (6) with the seat empty. The set weight can be read from the indicator.

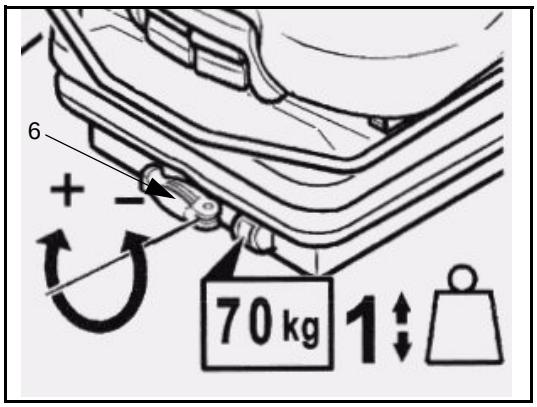


**(G) Lumbar adjustment**

By turning the adjustment knob (7) to the left or right, both the height and curvature of the backrest cushion can be individually adjusted.

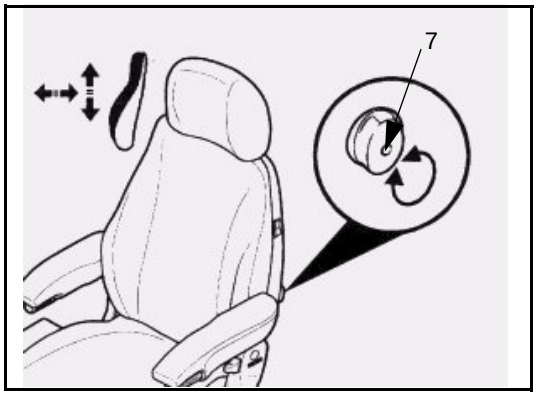


**(H) Height adjustment**

**For details, see "(H) Height adjustment (155)"**

**(I) Seat depth adjustment**

**For details, see "(I) Seat depth adjustment (156)"**

## SEAT BELT

**For details, see "SEAT BELT (156)"**

# OPERATIONS AND CHECKS BEFORE STARTING ENGINE

**⚠ WARNING**

- **If the control lever is touched by accident, the work equipment or the machine may move suddenly.**
- **When leaving the operator's compartment, always raise the safety lock lever to the LOCK position.**

1. Check that safety lock lever (16) is in the LOCK position.

**REMARK**

In certain conditions it may be possible for the safety lock lever to contact the left hand arm rest on the operator seat.
to avoid this, always ensure that the left hand arm rest is stowed in the fully up position before operating the safety lock lever.

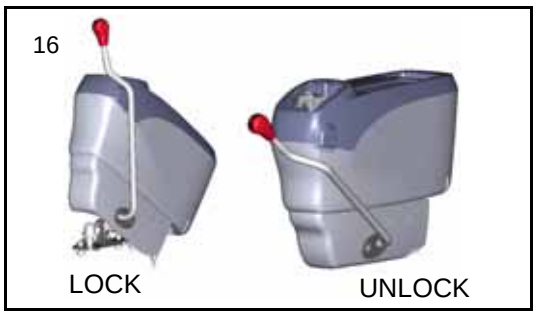


2. Select neutral on the right control lever.

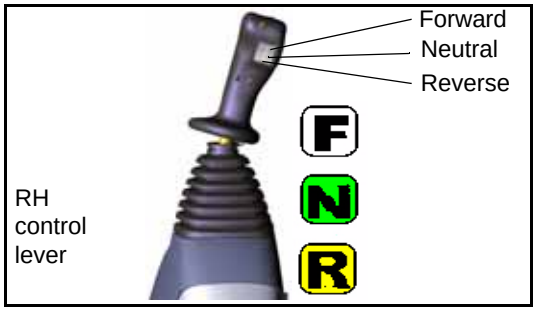


3. Insert the key in starting switch (7), turn the key to the ON position, then carry out the following checks.

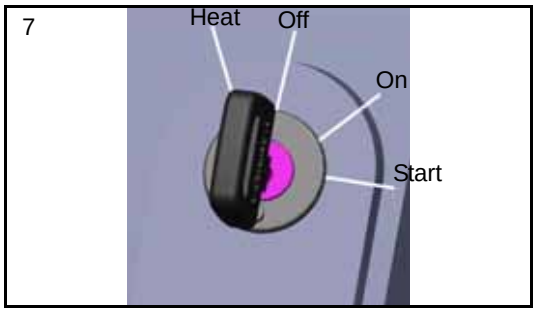

The buzzer will sound for approx. 1 sec., and the following switch lights will illuminate approx. 2 sec.

- Suspension Auto lock (1)
- Suspension lock (2)
- Control lever lock (3)
- Engine Auto Decel (4)
- Buzzer cancel (5)
- Hazard Warning (6)
- Rear Left Outrigger / Blade (7)
- Front Left Outrigger / Blade (8)
- Rear Right Outrigger (9)
- Front Right Outrigger (10)
- Front and Rear work light (11)
- Lower wiper (12))
- Heated Seat (13)
- Beacon Warning Light (14)
- Swing lock monitor (15)

If the monitors or gauges do not light up or the buzzer does not sound, there is probably a broken bulb or disconnection in the monitor wiring, so contact your Komatsu distributor for repairs.

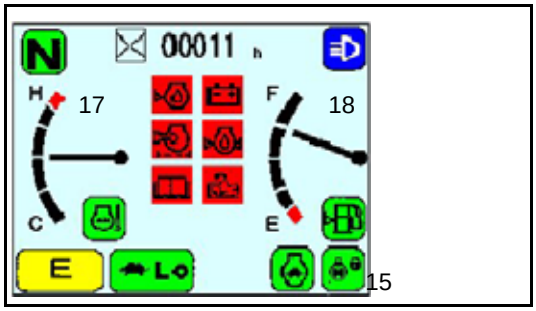


After approx. 3 sec., the following gauges will remain on and the other monitors will go out.

The buzzer will sound intermittently and the monitor will show the low brake pressure symbol if the machine has been idle for some time.

- Engine water temperature gauge (17)
- Fuel gauge (18)

The buzzer will sound intermittently and the monitor will show the low brake pressure symbol if the machine has been idle for some time.

- Engine water temperature gauge (17)
- Fuel gauge (18)

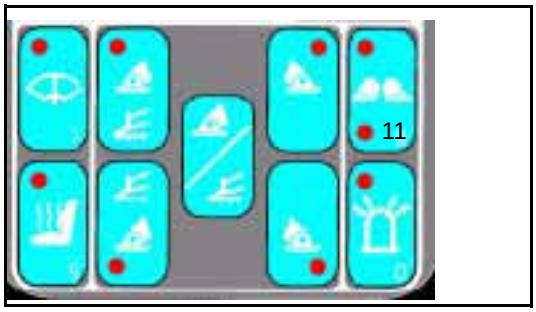


**⚠ CAUTION**

**It is illegal to travel on the road in certain countries with rearward facing worklights illuminated.**

# STARTING ENGINE

## NORMAL STARTING

**WARNING**

- **Check that there are no persons or obstacles in the surrounding area, then sound the horn and start the engine.**
- **Exhaust gas is toxic, when starting the engine in confined spaces, ensure adequate ventilation at all times.**

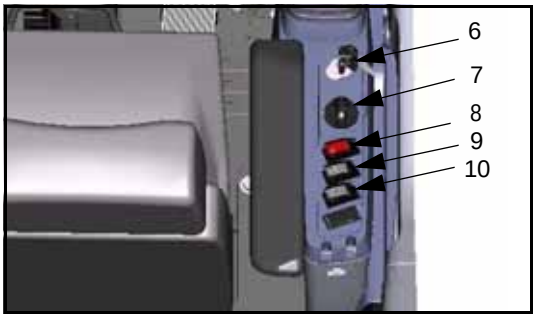


1. Set fuel control dial at the low idling (MIN) position.

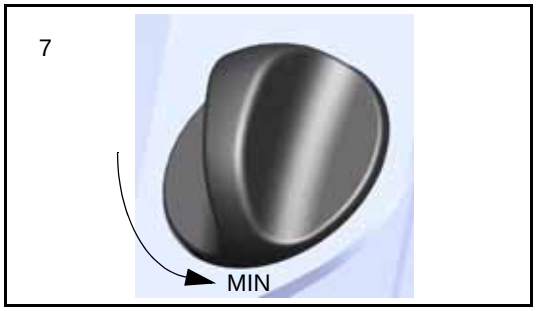


2. Turn the key in starting switch to the START position. The engine will start.

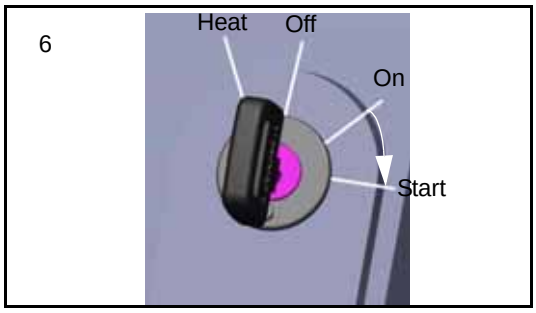


3. When the engine starts, release the key in starting switch. The key will return automatically to the ON position.

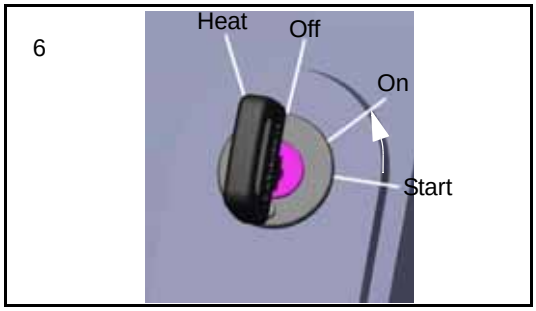

## STARTING IN COLD WEATHER

**WARNING**

- **Check that there are no persons or obstacles in the surrounding area, then sound the horn and start the engine.**
- **Never use starting aid fluids as they may cause explosions.**

**NOTICE**

**Do not keep the starting motor rotating continuously for more than 20 seconds.**
**If the engine fails to start, repeat steps from 2 after waiting for 2 minutes.**

When starting in low temperatures, do as follows.

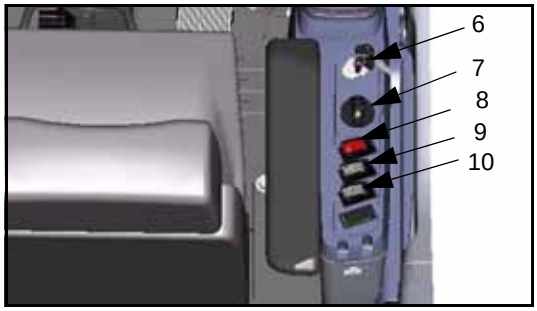


1. Set fuel control dial (7) at the low idling (MIN) position.

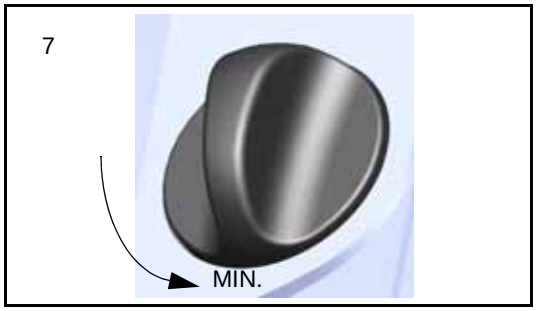


2. Hold the key in starting switch (6) at the HEAT position, and check that preheating monitor lights up.
   After about 30 seconds, preheating monitor will flash for about 10 seconds to indicate that preheating is finished.

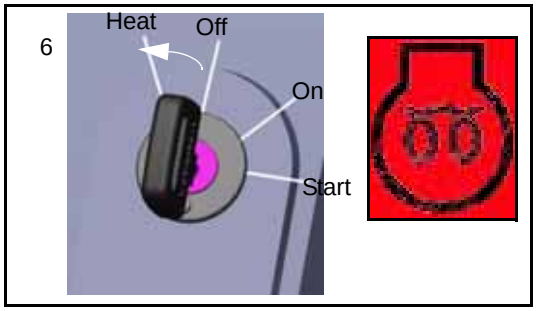


**REMARK**

The monitor and gauge also light up when the key is at the HEAT position, but this does not indicate any abnormality. If the temperature is low, the monitor screen may become dark or it may take time for the display to appear. This is normal.

3. When preheating monitor flashes, turn the key in starting switch (6) to the START position to start the engine.

| Ambient temperature | Preheating time |
|---|---|
| Above 0° C | - |
| 0°C to -10°C | 20 seconds |
| -10°C to -20°C | 30 seconds |

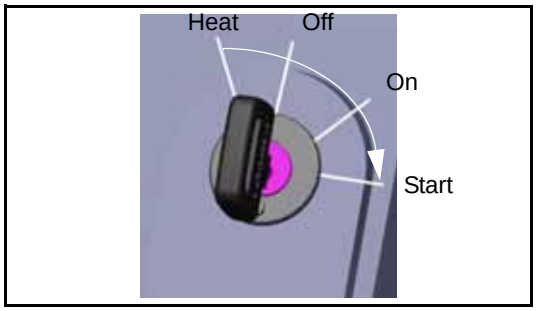


4. When the engine starts, release the key in starting switch(6). The key will return automatically to the ON position.

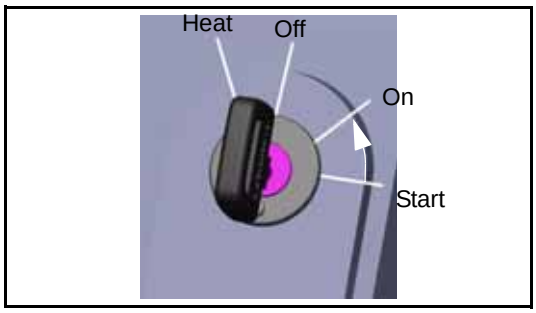

## OPERATIONS AND CHECKS AFTER STARTING ENGINE

**⚠ WARNING**

- **Emergency stop**
  **If there has been any abnormal actuation or trouble, turn the starting switch key to the OFF position.**
- **If the work equipment is operated without warming the machine up sufficiently, the response of the work equipment to the movement of the control lever will be slow, and the work equipment may not move as the operator desires, so always carry out the warming-up operation. Particularly in cold areas, be sure to carry out the warming-up operation fully.**

## WARMING UP OPERATION

**NOTICE**

- **When the hydraulic oil is at a low temperature, do not carry out operations or move the levers suddenly. Always carry out the warming-up operation. This will help to extend the machine life.**
  **Do not suddenly accelerate the engine before the warming-up operation is completed.**
- **Do not run the engine at low idling or high idling continuously for more than 20 minutes. This will cause leakage of oil from the turbocharger oil supply piping.**
  **If it is necessary to run the engine at idling, apply a load from time to time or run the engine at a mid-range speed.**

**REMARK**

If water temp is above 30°C, to protect the turbocharger, the engine speed does not rise for 2 seconds after starting, even if the fuel control dial is turned.
If the hydraulic oil temperature is low, the hydraulic oil temperature monitor display will be white

After starting the engine, do not immediately start operations. First, carry out the following operations and checks.

1. Turn fuel control dial (7) to the centre position between LOW IDLING (MIN) and HIGH IDLING (MAX) and run the engine at medium speed for about 5 minutes with no load.

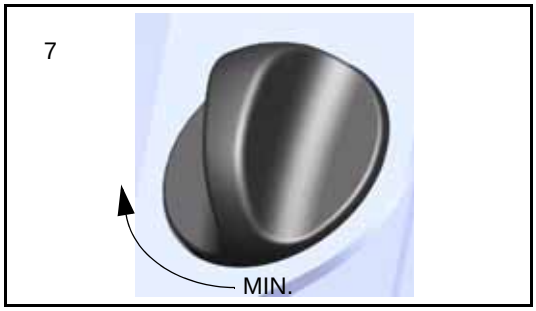

2. Lower the safety lock lever to the UNLOCK position, switch OFF the control lever lock switch and raise the bucket from the ground.

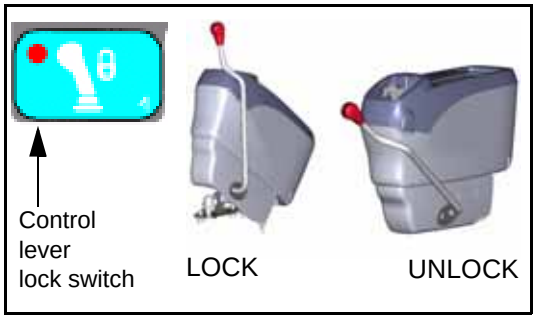


3. Operate bucket control - right control lever, and arm control - left control lever (slowly to move the bucket cylinder and arm cylinder to the end of the stroke.

| | |
|---|---|
| (A) Arm Out | (C) Bucket Curl |
| (B) Arm In | (D) Bucket Dump |

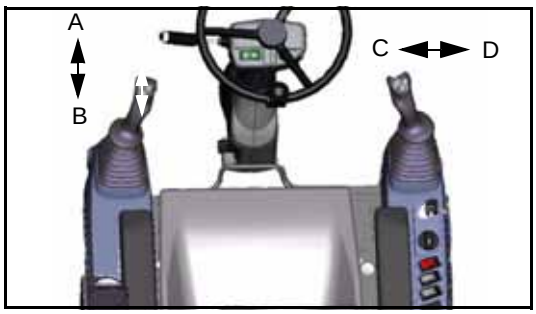


4. Carry out bucket and arm operation for 5 minutes at full stroke, alternating between bucket operation and arm operation at 30 second intervals.
   If the swing lock switch (9) is set to the ON (actuated) position and swing control lever is operated at full stroke, oil temperature rise can be increased quicker.

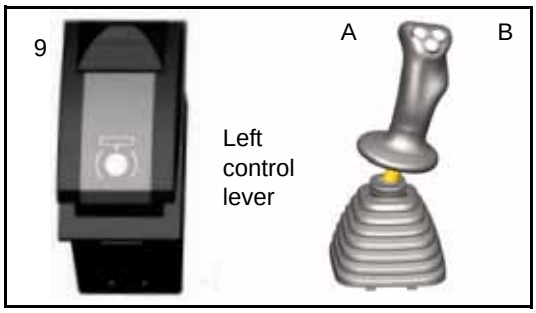


**NOTICE**

**When the work equipment is retracted, take care that it does not interfere with the machine body or ground.**

| | |
|---|---|
| A | Left swing |
| B | Right swing |

5. After carrying out the warming-up operation, check that each gauge and monitor lamp is in the following condition.

- Engine water temperature gauge (1): Inside black range
- Fuel gauge (2): Inside green range
- Engine water temperature monitor (3): green
- Radiator water level monitor (4): off
- Engine oil pressure monitor (5): off
- Charge level monitor (6): off
- Fuel level monitor (7): green
- Air cleaner clogging monitor (8): off
- Engine pre-heating lamp (9): green
- Engine oil level monitor (10): off
- Hydraulic oil temperature (11): green
- Hydraulic oil temperature gauge (12):inside black range
- Replacement monitor of engine oil: off (13)

6. Check that there is no abnormal exhaust gas colour, noise, or vibration. If any abnormality is found, repair it.

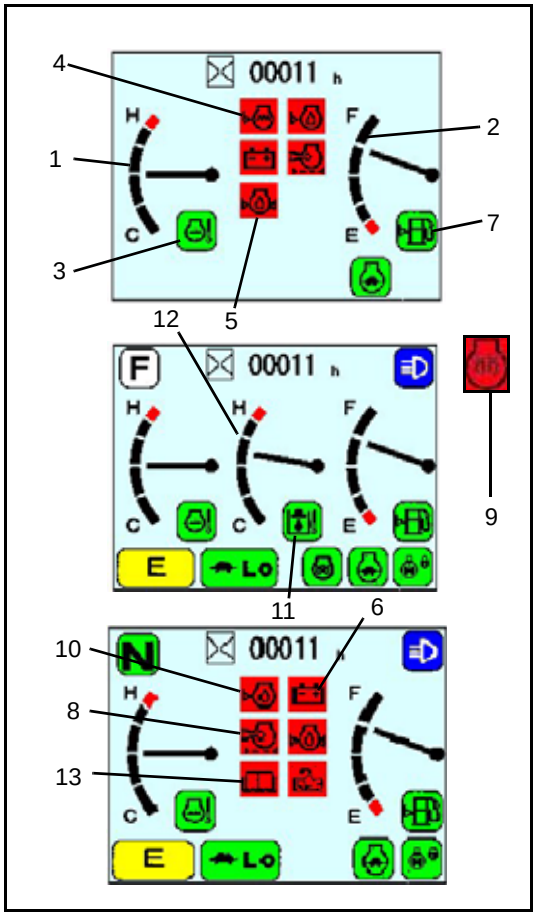


7. Press power mode select on the monitor panel until the lamp of the mode to be used lights up.

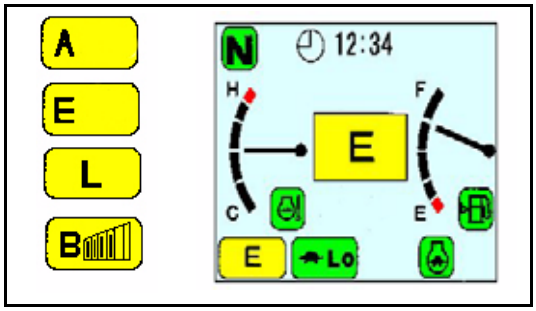

## IN COLD AREAS (AUTOMATIC WARMING-UP OPERATION)

When starting the engine in cold areas, carry out the automatic warming-up operation after starting the engine.

When the engine is started, if the engine water temperature is low (below 30°), the warming-up operation is carried out automatically.

The automatic warming-up operation is cancelled if the engine water temperature reaches the specified temperature (30°C) or if the warming-up operation is continued for 10 minutes. If the engine water temperature or hydraulic oil temperature are low after the automatic warming-up operation, warm the engine up further as follows.

**NOTICE**

- **When the hydraulic oil is at a low temperature do not carry out operations or move the levers suddenly. Work equipment control will be slower and less responsive than normal therefore always carry out the warming up operation first to ensure safe operation of the machine and help extend the machine life.**

- **Do not suddenly accelerate the engine before the warming-up operation is completed.**
  **Do not run the engine at low idling or high idling continuously for more than 20 minutes. This will cause leakage of oil from the turbocharger oil supply piping. If it is necessary to run the engine at idling, apply a load from time to time or run the engine at a mid-range speed.**

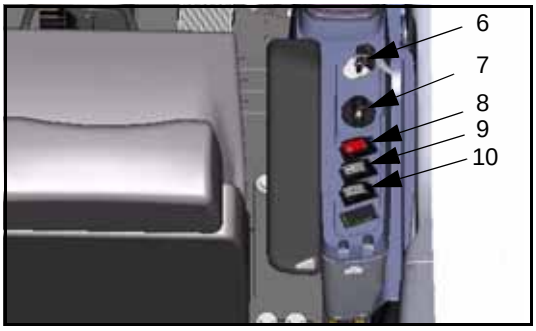


1. Set fuel control dial (7) at the low idling (MIN) position and run the engine for about 5 minutes without load.

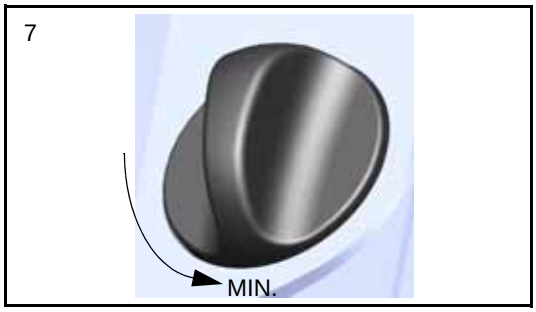


2. When the automatic warming-up operation is completed, press working mode switch on the monitor panel until the heavy-duty operation mode lamp lights up.

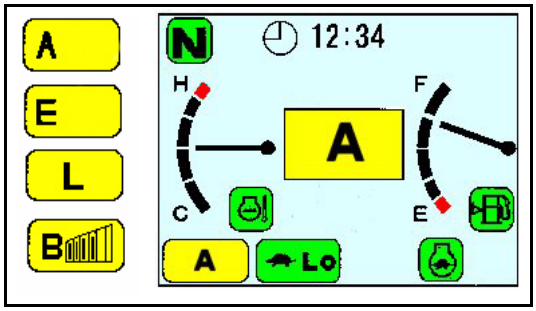

3. Turn fuel control dial to the mid-range speed position and turn swing lock switch ON.

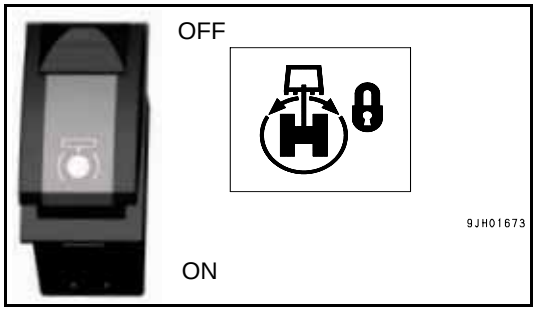


4. Lower safety lock lever to the UNLOCK position, put control lever lock switch to OFF position and raise the bucket from the ground.
5. Operate boom and bucket control lever and arm control lever slowly to operate the boom cylinder, bucket cylinder, and arm cylinder to the end of their stroke.

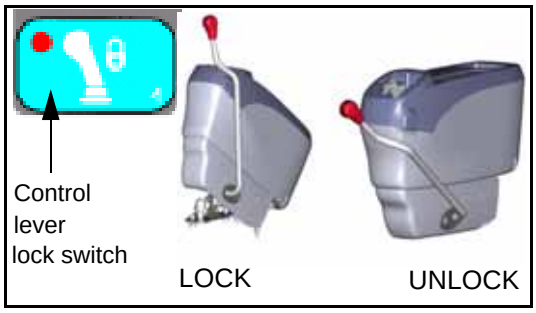


6. Operate the boom and arm slowly at the same time, and repeat this for 30 seconds.
   Next, repeat the same operation with the bucket and swing for 30 seconds. Operate both fully in turn for 5 minutes.

**NOTICE**

**When pulling in the work equipment, be careful not to let it hit the chassis or ground.**

7. Turn fuel control dial to the full speed (MAX) position and carry out the operation is Step 6 for 3 -5 minutes.
8. Repeat the following operation 3 - 5 times and operate slowly.

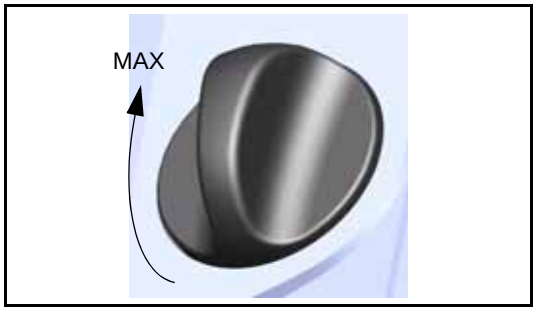


- Boom operation RAISE ↔ LOWER
- Arm operation IN↔ OUT
- Bucket operation CURL↔ DUMP
- Swing operation LEFT↔ RIGHT
- Travel (Lo) operation FORWARD↔ REVERSE

**NOTICE**

**When the hydraulic oil is at a low temperature the machine travel function may have very slow operation. Always carry out the warming up operation before travelling to ensure correct function of the travel system and help extend the life of the machine.**

**REMARK**

If the above operation is not carried out, there may be a delay in response when starting or stopping each actuator, so continue the operation until it becomes normal.

9. Use working mode switch (1) on the monitor panel to switch to the working mode to be used.

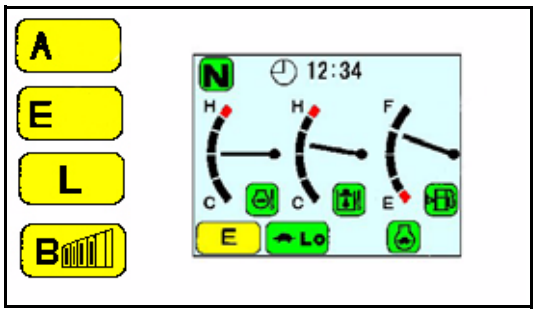


**NOTICE**

**Cancelling automatic warming-up operation**

**If it becomes necessary in an emergency to lower the engine speed to low idling, cancel the automatic warming-up operation as follows.**

1. Turn fuel control dial to the full speed (MAX) position and hold it for 3 seconds.

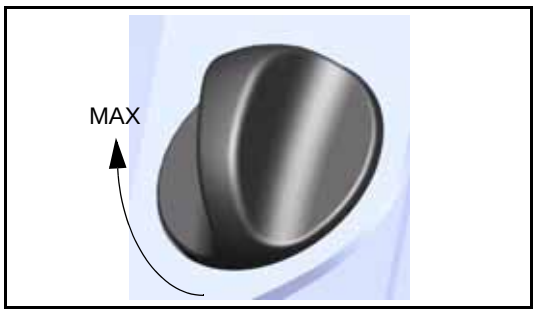


2. When fuel control dial is returned to the low idling (MIN) position, the engine speed will drop.

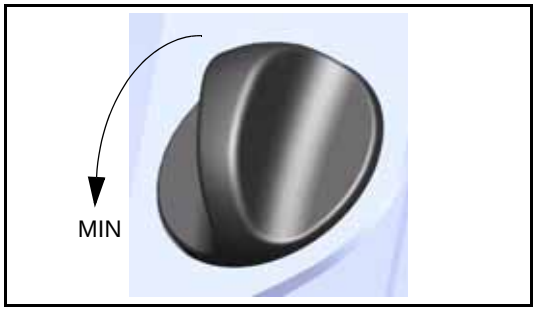

# MOVING MACHINE OFF

## MOVING MACHINE FORWARD

**WARNING**

- **When moving off, check that the area around the machine is safe, and sound the horn before moving.**
- **Clear all personnel from the machine and the area.**
- **Clear all obstacles from the path of the machine.**
- **If installed, ensure outriggers & dozer blade are up.**
- **If the lever is moved inside auto decel speed, engine speed will rise suddenly. Operate the levers carefully.**
- **Note the direction of undercarriage before moving off.**
- **Check that low brake pressure warning lamp is off**
- **Check service brake just after moving off.**
- **Always fasten seat belt**

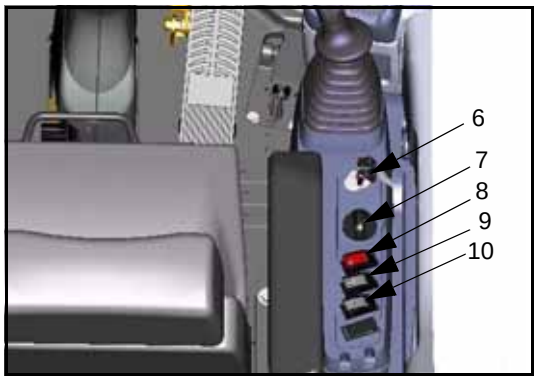


1. Set swing lock switch to the ON (actuated) position and confirm that swing lock monitor lamp lights up.

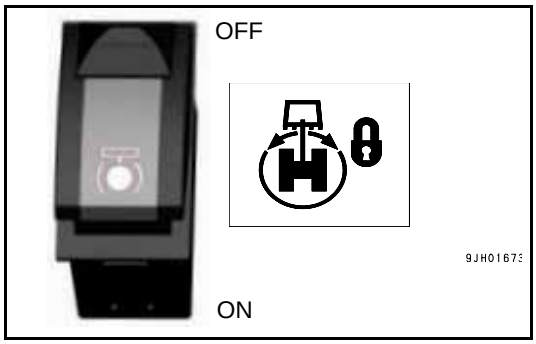


2. Turn fuel control dial to the min. idling position, engine speed is controlled automatically.

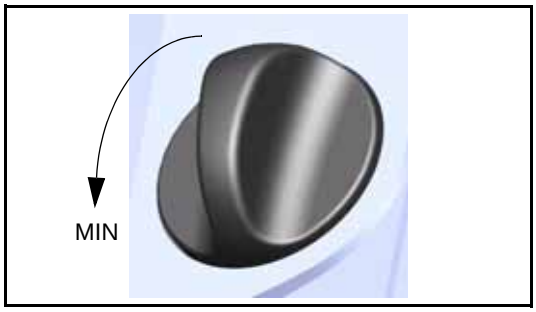

3. Lower the safety lock lever to the UNLOCK position, fold the work equipment, and raise it 40 - 50 cm from the ground.

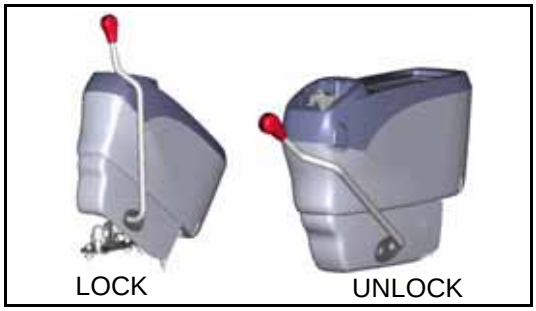


4. Raise the stabilisers/dozer blade (when fitted). See Section on operation of dozer & outriggers.
5. Ensure that the wheel brake is off by depressing service brake pedal (29) to release latch mechanism (29a).
6. Release the front axle suspension lock, using automatic suspension lock switch.

   **For details, see "AUTOMATIC SUSPENSION LOCK SWITCH (99)".**

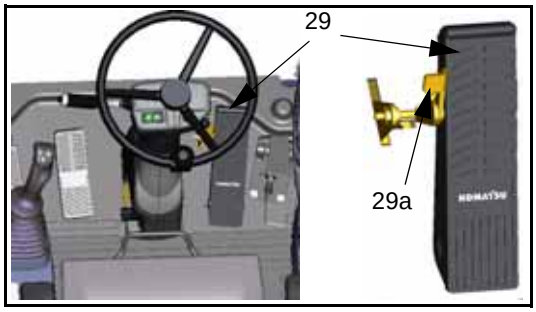


7. Select travel speed using switch. According to the ground conditions and type of operation required, as follows:

   **for details, see "CREEP SPEED SELECTOR SWITCH (93)"**

Creep mode: see **"CREEP SPEED SELECTOR SWITCH (93)"**: for fine control speed is restricted to 2.5 km/h.

**REMARK**

Creep can be engaged from any other mode by pressing the Creep button.Press High / Low speed select switch to dis-engage Creep.
Creep mode will only engage fully when the machine comes to a stop.

Lo mode: for travelling on rough surfaces and on steep slopes (up or down), e.g. work sites. Speed is restricted to 10 km/h

**REMARK**

Lo mode will only engage when machine speed is below 10 km/h

Hi mode is for high speed travel, on smooth surfaces with slopes up to 5 degrees.

Auto mode: for travelling on roads or job sites with varying terrain.

**⚠ WARNING**

**Do not use auto mode on steep downhill slopes - use Lo mode**

8. Select travel direction on right control lever (32)

- If the undercarriage is not facing the normal forward direction - then the travelling direction will be opposite to that which is selected.
- The front (steering) axle has two suspension locking cylinders mounted above the axle. These can be seen clearly from the operators seat, indicating that the undercarriage is facing in the normal forward direction.

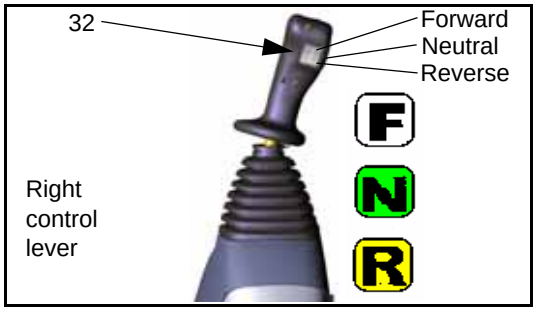


9. Release park brake by using switch (8). If on downhill slope hold machine on foot brake to prevent machine rolling.

**REMARK**

If starting to travel on a steep uphill slope, first press the travel pedal fully, then release the park brake, this will minimise rolling backwards when staring.

10. Press the travel pedal (30) smoothly. The machine will move off in the selected direction.

**REMARK**

Engine speed will automatically increase when travel pedal is depressed.

11. When changing direction from forward to reverse or vice versa, always allow the machine to stop before changing the position of the travel switch on right control lever.

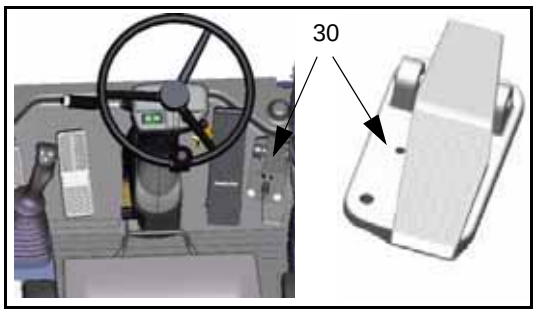


**REMARK**

When travelling in Auto mode a slight shock may occasionally be heard and/or felt as the automatic transmission clutch operates. This is normal.

## STEERING

**WARNING**

- **If the upper structure is turned 180 degrees (the under-carriage is reversed) the machine steers in the opposite direction of the steering wheel. Therefore, take care of the direction of the chassis.**
- **When auto-deceleration is selected, if the wrist control lever or travel pedal is operated at the reduced engine speed, the engine speed will rise suddenly.**
- **Before moving off turn steering wheel full lock in both directions and check wheels turn fully.**
- **Do not press travel pedal until the safety lock lever is fully down (UNLOCKED).**

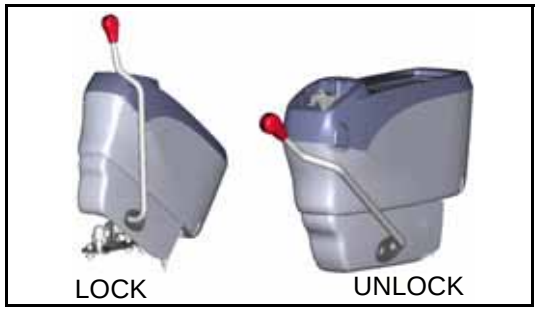


1. The machine can be steered by turning steering wheel in the desired direction.

The position of the steering column can be adjusted fore and aft by depressing pedal (1), moving column to desired position and releasing pedal (1).

**WARNING**

- **If it becomes necessary to tow the machine the operator must not operate the travel system when the transmission dis-engagement pin is rotated.**
  **Failure to comply with this notice will result in severe damage to the transmission unit.**
- **If you are uncertain about how to tow the machine, please contact your local komatsu distributor for advice.**

# TRAVELLING ON PUBLIC HIGHWAY

**WARNING**

- **When driving the machine on a road, raise the outriggers and/or dozer blade and insert the lock pins to prevent them from moving.**
- **Position Work Equipment to suit local road travel regulations.**
- **The control lever lock switch (located on the monitor panel) must be engaged when travelling on the Public Highway to prevent accidental use of the work equipment.**
- **Engage the mechanical swing lock when driving on public roads see "MECHANICAL SWING LOCK" on page 118.**
- **It is a legal requirement in some countries to use a mechanical swing lock when driving on public roads.**
- **Switch on warning beacon if applicable to local road travel regulations.**
- **Lock off (A) Bucket cylinder - both sides & (B) Arm Cylinder - rear of boom, with isolation valves provided.**

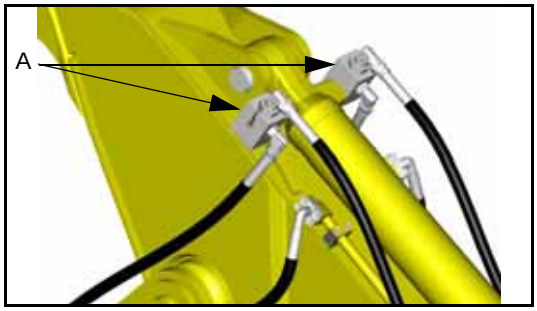


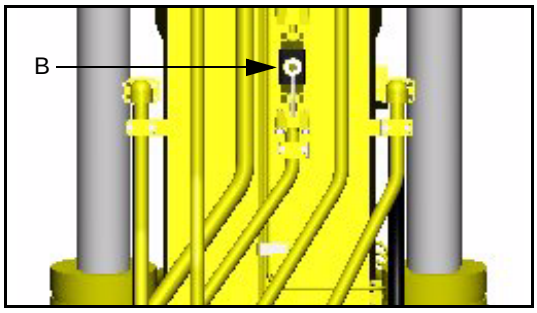


1. Before travelling on a Public Highway, with the safety lock lever lowered (in the UNLOCK position) engage the control lever lock switch to prevent accidental use of the work equipment, the rear brake lights will now become active.
2. Before travelling on a Public Highway fold the work equipment, and raise to 40 - 50 cm from the ground
3. Ensure machine is free of rocks and mud before travelling on a Public Highway.

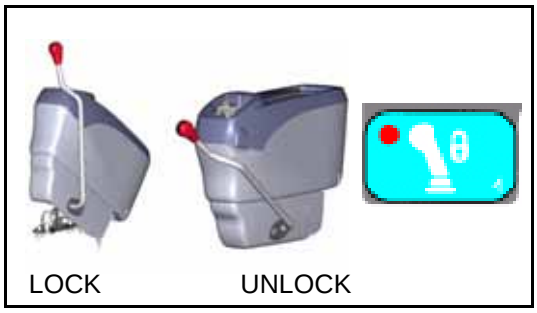


**WARNING**

- **If it becomes necessary to tow the machine the operator must not operate the travel system when the transmission dis-engagement pin is rotated.**
  **Failure to comply with this notice will result in severe damage to the transmission unit.**
- **If you are uncertain about how to tow the machine, please contact your local komatsu distributor for advice.**

# STOPPING & PARKING

**⚠ WARNING**

- **Avoid stopping suddenly. Give yourself ample room when stopping.**
- **If the control lever is touched by accident, the work equipment or the machine may move suddenly, and this may lead to a serious accident. Before leaving the operator's compartment, always raise the safety lock lever to LOCK the work equipment controls.**
- **In certain conditions it may be possible for the safety lock lever to contact the left hand arm rest on the operator seat.**
  **to avoid this, always ensure that the left hand arm rest is stowed in the fully up position before operating the safety lock lever.**
- **When parking the machine, select flat hard ground and avoid dangerous places. If it is unavoidable to park the machine on a slope, insert chocks underneath the wheels. As an additional safety measure, thrust the bucket into the ground.**
- **Before travelling re-apply the swing brake**
- **Do not latch the brake pedal when moving**

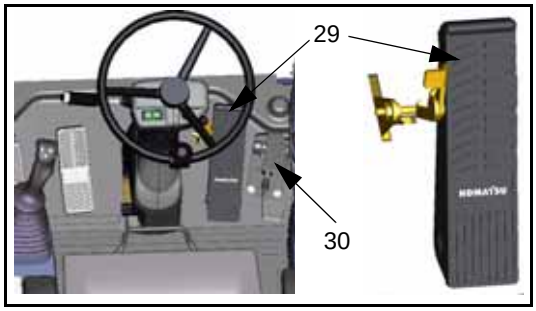


1. Release the travel pedal (30) and depress the service brake pedal (29) to stop the machine. (The service brakes may be locked by fully de-pressing the service brake pedal until it 'latches')

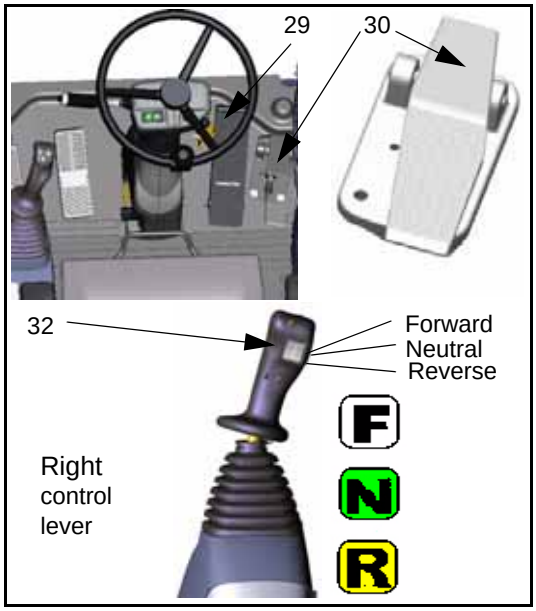

2. Select neutral on right control lever (32)
3. Select neutral on right control lever (32)
4. When parking, lower the work equipment until it touches the ground
5. Raise the safety lock lever to LOCK the work equipment controls.
6. Apply Park brake

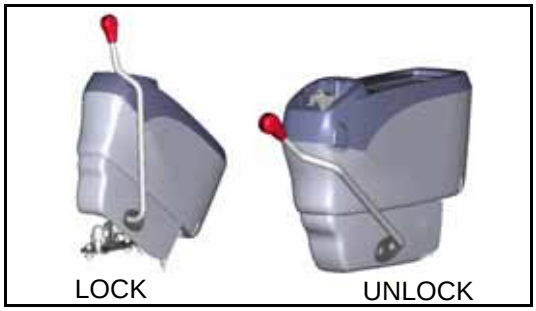


## STOPPING MACHINE (EMERGENCY)

**REMARK**

The park brake on this machine is a hydraulic-mechanical device which can be used to stop the machine if the service brakes do not work. (In an Emergency only)

**NOTICE**

**The park brake internal components may be destroyed during this operation & must be serviced prior to further operation.**
**ONLY USE IT IN AN EMERGENCY.**

**REMARK**

In the event of service brake failure:

1. Release travel pedal.
2. Depress service brake pedal. (to confirm no braking)
3. Brace yourself before engaging emergency brake (A seatbelt is fitted for your safety and comfort. Please wear this at all times.)
4. Press park break switch (8) to ‘on’ position, machine will very quickly come to a halt.

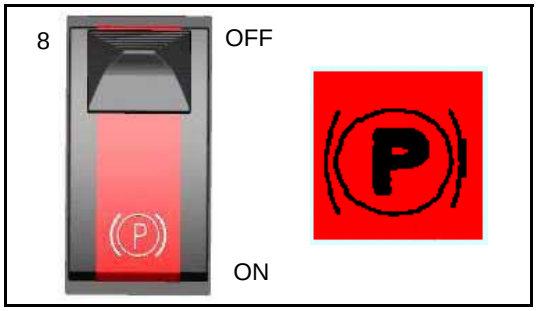


**WARNING**

- **If it becomes necessary to tow the machine the operator must not operate the travel system when the transmission dis-engagement pin is rotated.**
  **Failure to comply with this notice will result in severe damage to the transmission unit.**
- **If you are uncertain about how to tow the machine, please contact your local komatsu distributor for advice.**

## SWINGING (Slewing the upper carriage)

**WARNING**

**Never apply swing brake when machine is swinging as this is a static brake only. (damage may occur otherwise)**
**Ensure the mechanical swing lock pin is disengaged before swinging. Failure to do so may result in damage to the machine.**

When operating the swing, check that the area around the machine is safe.

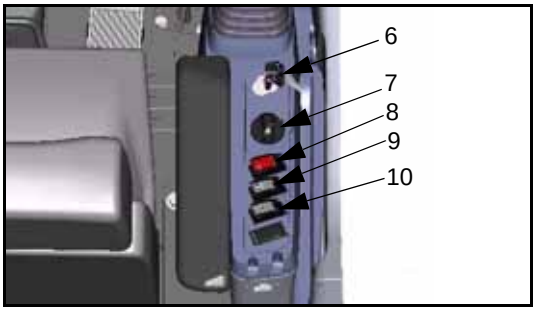


1. Before operating the swing, turn swing lock switch (9) OFF (CANCELLED).

**NOTICE**
**Check that swing lock monitor goes out at the same time.**

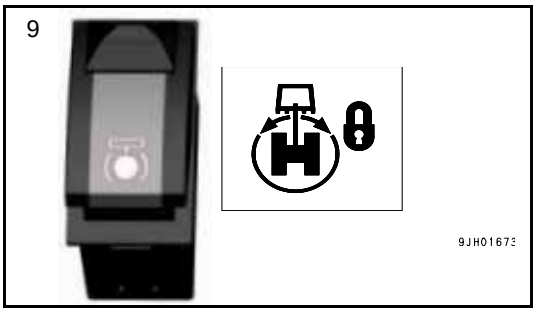


2. Operate left work equipment control lever to swing the upper structure.
3. When not operating the swing, turn swing lock switch (9) ON (ACTUATED)
4. Before travelling re-apply swing lock brake

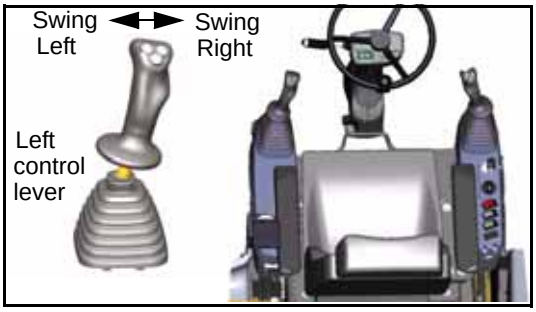

# OPERATION OF WORK EQUIPMENT

**WARNING**

**If any lever is operated when the engine is at auto deceleration speed, the engine speed will suddenly increase, so be careful when operating the levers.**

The work equipment is operated by the left and right work equipment control levers. The left work equipment control lever operates the arm and swing, and the right work equipment control lever operates the boom and bucket.

The movements of the lever and work equipment are as shown in the diagrams on the right. When the levers are released, they automatically return to the neutral position and the work equipment is held in place.

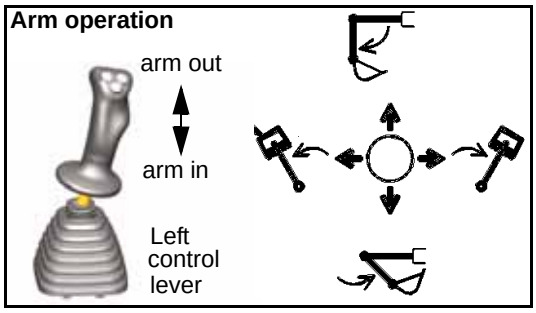


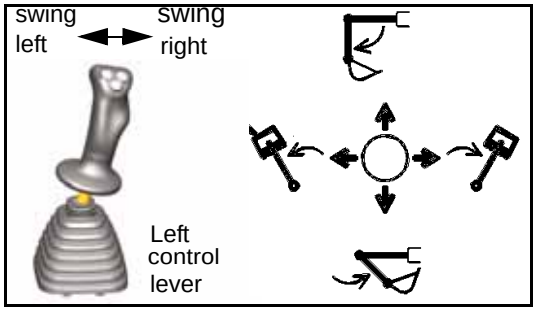


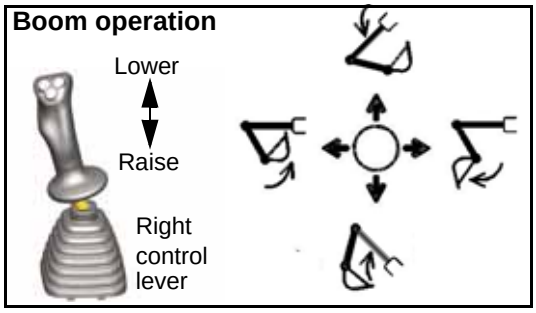


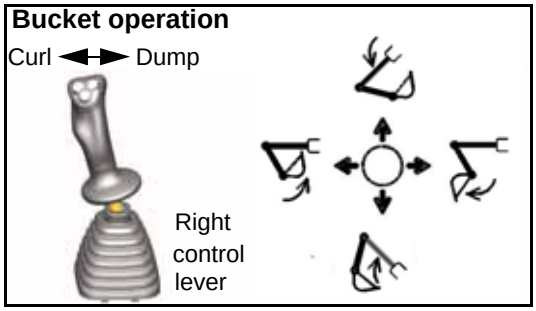


- If the work equipment control lever is returned to the neutral position for 4 seconds, even if the fuel control dial is set to FULL, the auto-deceleration mechanism will act to reduce the engine speed to auto-decel speed.

- If the levers are operated within 15 seconds after the engine stops, it's possible to lower the work equipment to the ground. In addition, the levers can also be operated to release any remaining pressure inside the hydraulic cylinder circuit and to lower the boom after loading the machine on a trailer.

- **Hydraulic adjust boom operation:** Depress front of pedal (23) to extend the boom and the rear of the pedal to retract the boom.

**Hydraulic adjust boom pedal**

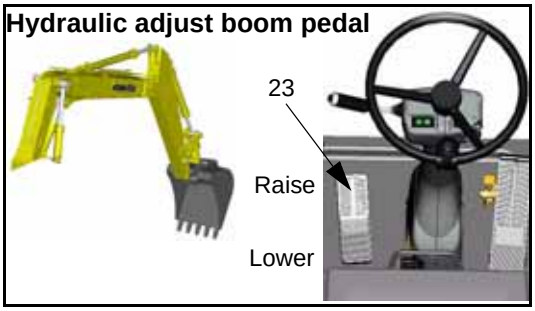

## OPERATION OF DOZER + OUTRIGGERS

**REMARK**

Ensure safety lock lever is lowered (UNLOCKED).

1. Press switch (3) on right control lever to change from boom operation to dozer/outrigger operation (attachment).The monitor will now display symbol (12) indicating the dozer/outrigger option has been selected

2. Using monitor panel switches (16~20) select the desired combination of dozer/outriggers required. A light will illuminate next to the switch to confirm selection

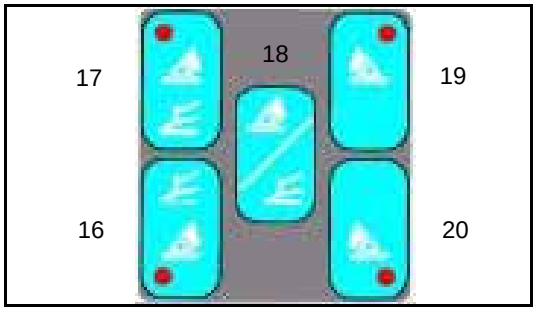


| | |
|---|---|
| 16 | Rear Left Outrigger / Blade |
| 17 | Front Left Outrigger / Blade |
| 18 | All Outriggers/Outrigger & Blade |
| 19 | Front Right Outrigger |
| 20 | Rear Right Outrigger |

3. Right control lever (4) will now operate the dozer/outriggers

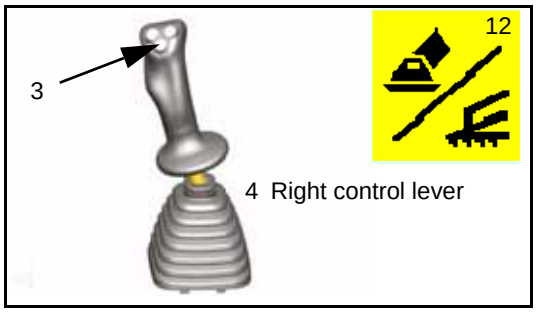


| | | |
|---|---|---|
| 1 | Lever forward | Attachment down |
| 2 | Lever back | Attachment up |

4. To return right control lever to boom operation activate switch (3). Symbol (12) will now disappear from the monitor panel display

**⚠ WARNING**

**When moving the machine, confirm that the chassis attachment is raised.**

## PRECAUTIONS FOR USING THE DOZER

1. When using the dozer blade as stabiliser.
   Use the dozer blade in the same way as an outrigger. However, use it only on level ground so that uneven loads will not be applied to the blade.

2. When using the dozer blade with the upper structure facing the rear of the undercarriage, the steering wheel acts in the opposite direction to normal travel.

3. Ensure that suspension lock system is fully free when required for dozing operations. see "AUTOMATIC SUSPENSION LOCK SWITCH (99)"

**REMARK**

Dozer blade is to be used only for stabilizing and light dozing.

# WORKING MODE SELECTION

## WORKING MODE

By using the working mode selector switch **"WORKING MODE SELECTOR SWITCH (BASIC SWITCH) (92)"** to select a working mode that matches the operating condition, it is possible to carry out operations efficiently.
Use the following procedures to make the most effective use of each mode.

When the starting switch is turned ON, the working mode is set to A mode (digging).

Use the working mode switch on the monitor panel to set the most efficient mode to match the type of work.

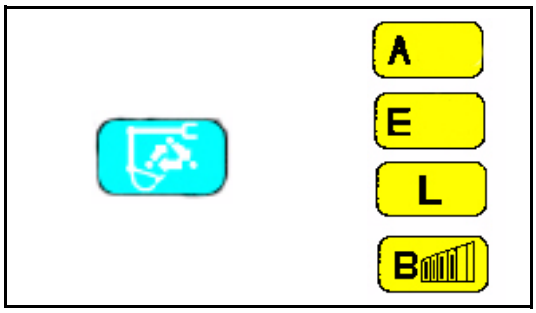


.

| Working mode | Applicable operations |
|---|---|
| A mode | Normal digging, loading operations (Operations with emphasis on productivity) |
| E mode | Normal digging, loading operations (with emphasis on efficiency) |
| L mode | Lifting operations |
| B mode | Breaker operations |

**NOTICE**

**If breaker operations are carried out in the heavy digging mode, the hydraulic equipment may be damaged. Operate the breaker only in B mode.**

## ONE TOUCH POWER MAX.SWITCH

The one-touch power max switch can be used during operations to increase the power. Make effective use of this function whenever necessary in combination with the working mode.

1. Press top right hand switch on the left lever. The power is increased for up to 8.5 seconds. The increased power is automatically cancelled after 8.5 seconds. After which the button can be re-pressed
   - This function is not actuated when the working mode is set to L mode or B mode.

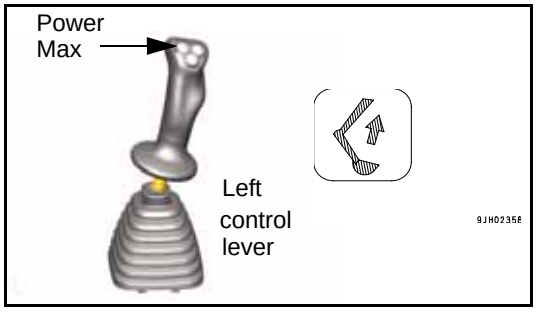


**⚠ CAUTION**

**Continuous use of this facility will raise the hydraulic oil temperature above normal.**

# PROHIBITIONS FOR OPERATION

**⚠ WARNING**

- **If it is necessary to operate the work equipment control lever when the machine is traveling, stop the machine before operating the work equipment control lever.**
- **Never operate the machine on a rock bed (hard or soft rock).**

### Prohibited operations using swing force

Do not use the swing force to compact soil or break earth mounds or walls.
When swinging, do not dig the bucket teeth into the soil. These operations will damage the work equipment.

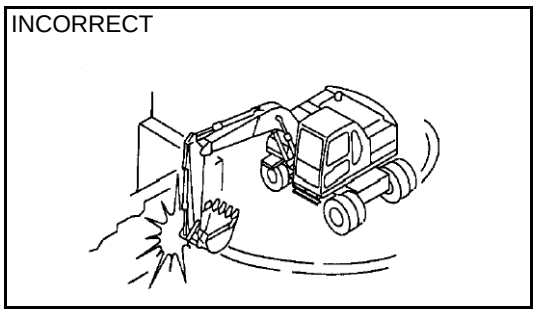


### Prohibited operations using travel force

Do not leave the bucket dug into the ground and use the travel force to excavate. This will bring excessive force to bear on the rear of the machine.

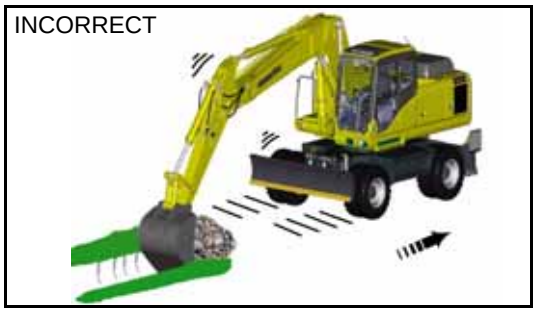


### Precautions when operating hydraulic cylinders to end of stroke

If the cylinder is operated to the end of its stroke during operations, force will be brought to bear on the stopper inside the cylinder, and this will reduce the life of the machine. To prevent this, always leave a small safety margin when operating the cylinders.

### Prohibited operations using dropping force of bucket

Do not use the dropping force of the bucket as a pickaxe, breaker, or pile driver. This will bring excessive force to bear on the rear of the machine, and will not only damage the machine, but is also dangerous.

### Prohibited operations using dropping force of machine

Do not use the dropping force of the machine for digging.

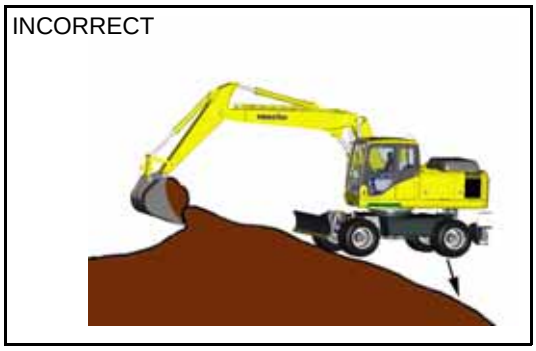


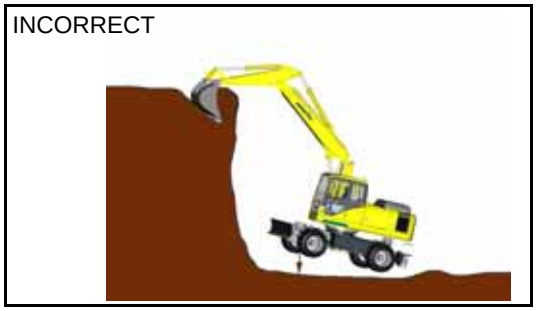


### Digging rocky ground

It is better to excavate hard rocky ground after breaking it up by some other means. This will not only reduce damage to the machine but make for better economy.

## PRECAUTIONS FOR OPERATION

### PRECAUTIONS WHEN TRAVELLING

When travelling over obstacles such as boulders or tree stumps, ensure sufficient clearance to avoid undercarriage damage. As far as possible, remove such obstacles or avoid travelling over them.

Do not operate machine (working or travelling) on 1 tyre (if twin tyres are fitted) after a puncture as this puts excessive load onto the one remaining tyre.

To prevent loss of control refrain from travelling fast over rough ground.

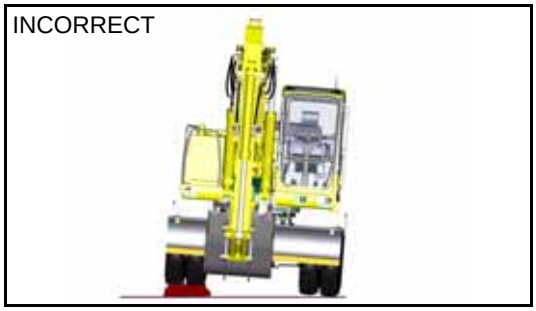

### PRECAUTIONS AT Hi-SPEED TRAVEL

On uneven roadbeds such as rock beds or uneven roads with large rocks, travel in Lo speed mode and adjust the speed of the machine to prevent loss of control.

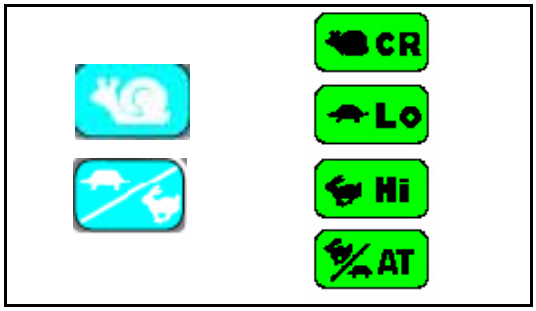


### PERMISSIBLE WATER DEPTH

Do not immerse the machine in water by more than the permissible depth (axle centre).
In addition, for parts that have been immersed in water for a long time, pump in grease until the old grease comes out from the bearings. (i.e. the bucket pins).

### WHEN LIFTING A LOAD

Front axle of machine must be locked as machine will become unstable.

### REMARK

Precautions when using the work equipment.
Do not use the park brake to reduce movement of the machine when using work equipment. This will result in premature failure of the park brake.

# PRECAUTIONS WHEN TRAVELLING UP OR DOWN HILLS

**⚠ WARNING**

- **When travelling, raise the bucket approx. 20 - 30 cm from the ground.**
- **Do not travel downhill with the upper carriage travelling in the reverse direction.**
- **When traveling over ridges or other obstacles, keep the work equipment close to the ground and travel slowly.**
- **It is dangerous to turn on slopes or to travel across slopes. Always go down to a flat place to perform these operations. It may be longer, but it will ensure safety.**
- **If the machine starts to slide or loses stability, lower the bucket immediately to the ground and brake the machine.**

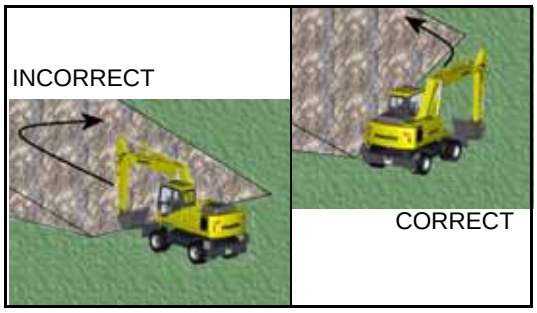


- **Turning or operating the work equipment when working on slopes may cause the machine to lose its balance and turn over, so avoid such operations. It is particularly dangerous to swing downhill when the bucket is loaded.**
  **If such operations have to be carried out, pile soil to make platform on the slope so that the machine can be kept horizontal when operating.**
- **Do not travel on slopes of over 20° as there is danger that the machine may overturn. (before travelling down steep slopes stop machine & engage low gear.)**

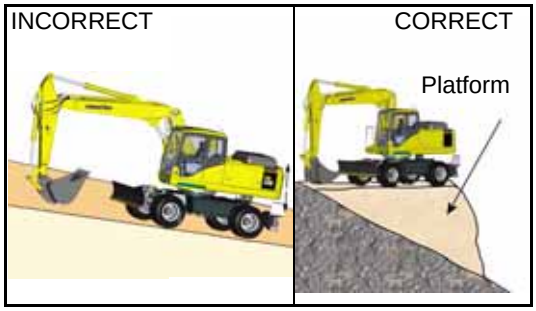


1. When travelling down hills of more than 5° first stop, and select Low travel mode. Release the service brake and proceed (full hydraulic braking will then be available).
2. When travelling down slopes of more than 15°, set the work equipment in the posture shown in the figure on the right, and lower the engine speed.

3. When travelling up a steep hill of more than 15°, set the work equipment in the posture shown in the diagram on the right.

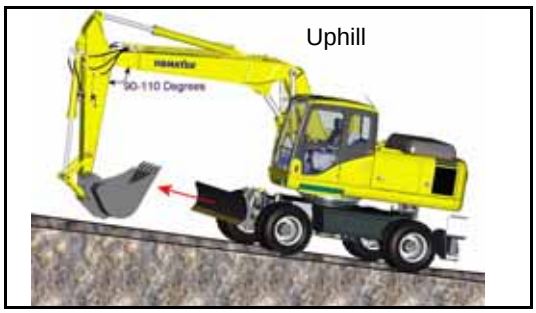


**Precautions on slopes**

- If the engine stops when the machine is on a slope, never use the left work equipment control lever to carry out swing operations. The upper structure will swing under its own weight.
- Do not open or close the door on the cab if the machine is on a slope. This may cause a sudden change in the door opening / closing force. Always keep the door locked.

**⚠ WARNING**

- **If it becomes necessary to tow the machine the operator must not operate the travel system when the transmission dis-engagement pin is rotated.**
  **Failure to comply with this notice will result in severe damage to the transmission unit.**
- **If you are uncertain about how to tow the machine, please contact your local komatsu distributor for advice.**

## HOW TO ESCAPE FROM MUD

Always operate carefully to avoid getting stuck in mud. If the machine does get stuck in mud, use the following procedures to get the machine out.

### WHEN ONE SIDE IS STUCK

When only one side is stuck in mud, use the bucket to raise the wheels then lay boards or logs and drive the machine out. If necessary, put a board under the bucket also.

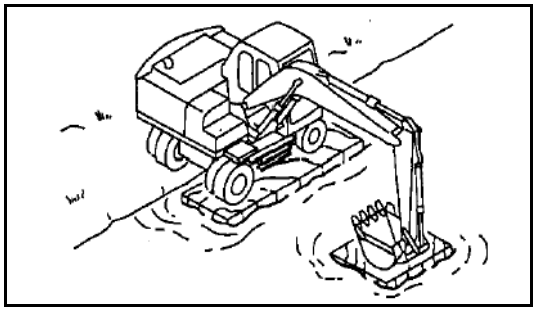

**NOTICE**

**When using the boom or arm to raise the machine, always have the bottom of the bucket in contact with the ground. (Never push with the teeth). The angle between the boom and arm should be 90° to 110°.**
**The same applies when using the inverting bucket.**

### WHEN BOTH SIDES ARE STUCK

When all wheels are stuck in mud and the machine will not move, lay boards as explained above, and dig the bucket into the ground in front. Then pull in the arm as in normal digging operations and drive machine in required direction to free it from the mud.

# WORK POSSIBLE USING HYDRAULIC EXCAVATOR

In addition to the following, it is possible to further increase the range of applications by using various attachments.

## BACKHOE WORK

When condition of the machine is as shown in the diagram at right, each cylinders maximum pushing excavation force is obtained when the bucket cylinder and link, arm cylinder and arm are at 90°.

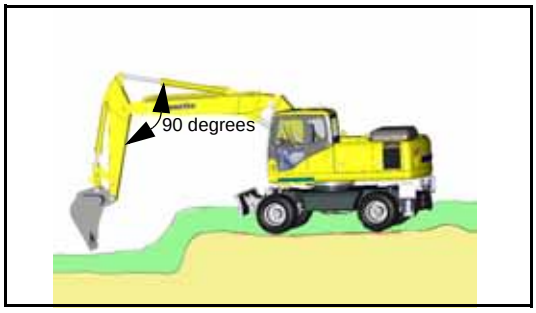


When excavating, use this angle effectively to optimize your work efficiency.
The range for excavating with the arm is from a 45° angle away from the machine to a 30° toward the machine.

There may be some differences depending on the excavation depth, but try to use within the above range rather than going all the way to the extreme end of the cylinder stroke.

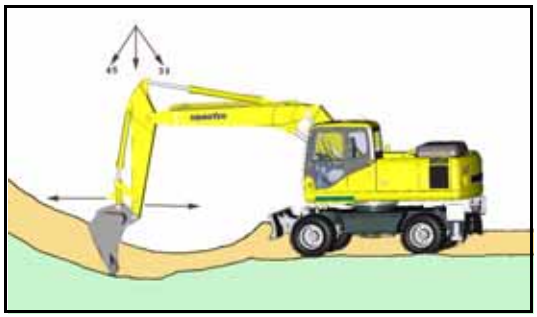

## SHOVEL WORK

A shovel is suitable for excavating at a position higher than the machine. Shovel work is performed by attaching the bucket in the reverse direction.

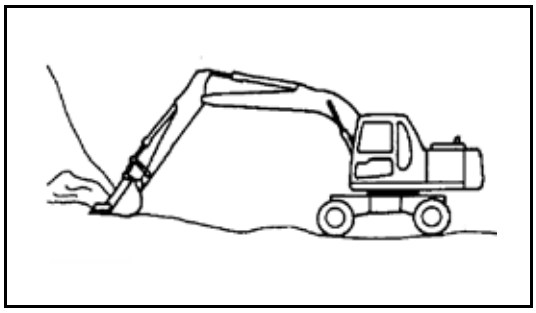

## DITCHING WORK

Ditching work can be performed efficiently by attaching a bucket to match the width of the ditch and then setting the wheels parallel to the line of the ditch to be excavated.
To excavate a wide ditch, first dig out both sides and then finally remove the center portion.

## LOADING WORK

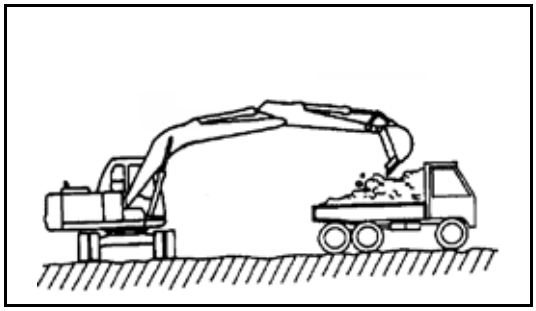

In places where the swing angle is small, work efficiency can be enhanced by locating the dump truck in a place easily visible to the operator.
Loading is easier and capacity greater if you begin from the front of the dump truck body than if loading is done from the side.

## LEVELLING WORK

Can be carried out with work equipment or dozer blade (if fitted).

# REPLACEMENT AND INVERSION OF BUCKET

**⚠ WARNING**

- **When knocking the pin in with a hammer, metal particles may fly and cause serious injury, particularly if they get into your eyes. When carrying out this operation, always wear goggles, helmet, gloves, and other protective equipment.**
- **When the bucket is removed, place it in a stable condition.**

Stop the machine on a firm, flat surface. When performing joint work, make clear signals to each other and work carefully for safety's sake.

## REPLACEMENT

1. Place the bucket in contact with a flat surface.

**REMARK**

When removing the pins, place the bucket so that it is in light contact with the ground.
If the bucket is lowered strongly to the ground, the resistance will be increased and it will be difficult to remove the pins.

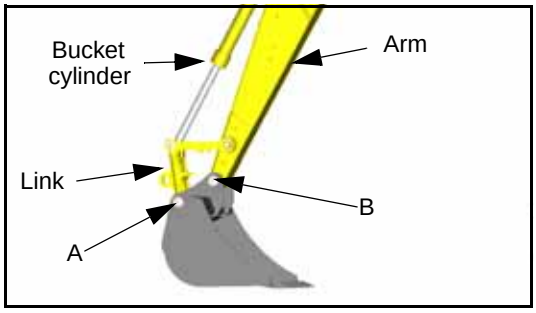


2. Remove the stopper bolts and nuts, then remove pins (A) and (B) and remove the bucket.

**NOTICE**

**After removing the pins, make sure that they do not become contaminated with sand or mud and that the seals of bushing on both sides do not become damaged.**

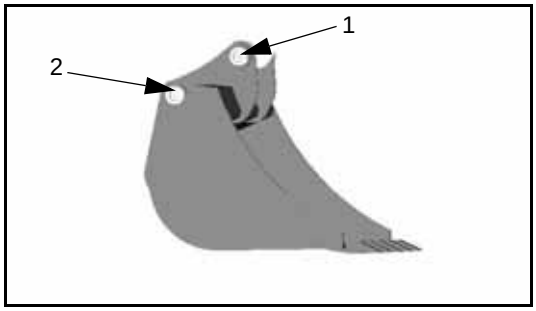


3. Align the arm with holes (1) and the link with holes (2), then install pins (A) and (B).

## INVERSION

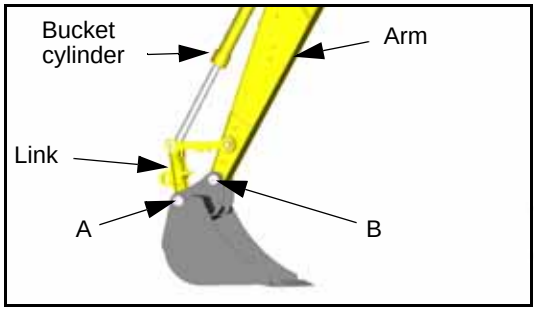


1. Place the bucket in contact with a flat surface.

**REMARK**

When removing the pins, place the bucket so that it is in light contact with the ground.
If the bucket is lowered strongly to the ground, the resistance will be increased and it will be difficult to remove the pins.

2. Remove the stopper bolts and nuts, then remove pins and, and remove the bucket.

**NOTICE**

**After removing the pins, make sure that they do not become contaminated with sand or mud and that the seals of bushing on both sides do not become damaged.**

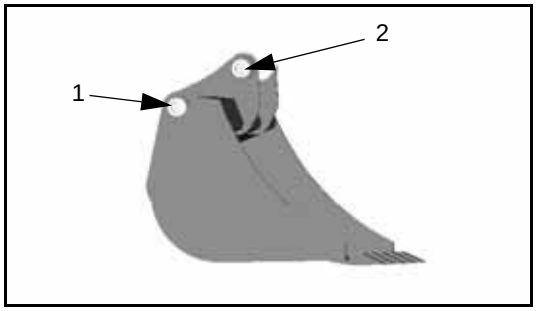


3. Install the bucket inversely.
   After the bucket is reversed, correct the inclination and direction of the retaining pin holes (1) and (2) and stabilise the bucket securely.

4. Align the arm with holes (1) and the link with holes (2), then install pins (A) and (B).

**⚠ WARNING**

- **If the control lever is touched by accident, the work equipment or the machine may move suddenly, and this may lead to a serious accident. Before leaving the operator's compartment, always raise the safety lock lever to LOCK the work equipment controls.**
- **In certain conditions it may be possible for the safety lock lever to contact the left hand arm rest on the operator seat.**
  **to avoid this, always ensure that the left hand arm rest is stowed in the fully up position before operating the safety lock lever.**

## STOPPING ENGINE

**NOTICE**

**If the engine is abruptly stopped before it has cooled down, engine life may be greatly shortened. Consequently, do not abruptly stop the engine apart from an emergency.**
**In particular, if the engine has overheated, do not abruptly stop it but run it at medium speed to allow it to cool gradually, then stop it.**

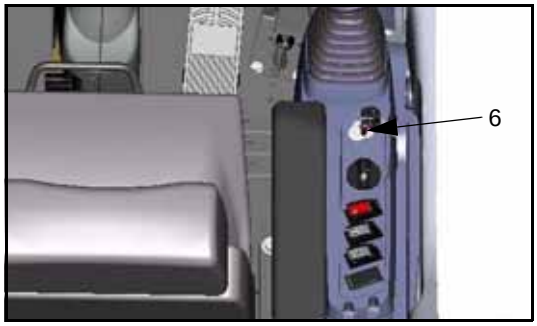


1. Run the engine at low idling speed for about 5 minutes to allow it to gradually cool down.
2. Turn the key in starting switch (6) to the OFF position and stop the engine.
3. Remove the key from starting switch (6).

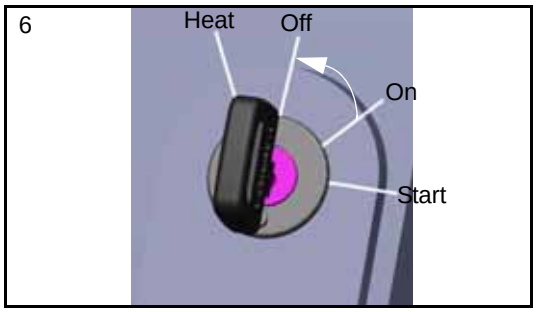


## CHECK AFTER FINISHING WORK

1. Check the engine water temperature, engine oil pressure and fuel level on the monitor.
2. Walk around the machine and check the work equipment, and undercarriage, and check also for leakage of oil or water. If any abnormalities are found, repair them.
3. Fill the fuel tank.
4. Check the engine compartment for paper and debris. Clean out any paper and debris to avoid a fire hazard.
5. Remove any mud stuck to the undercarriage.

**REMARK**

It is normal for water to drip from aircon drain hoses.

# CHECK AFTER STOPPING ENGINE

## LOCKING

Always lock the following places.

| | |
|---|---|
| (1) | Door of operator's cab.<br>Always remember to close the window. |
| (2) | Fuel tank filler port |
| (3) | Engine hood |
| (4) | Tool boxes within steps |
| (5) | Right & Left machine cab doors |
| (6) | Refuel pump locker cover (If applicable) |

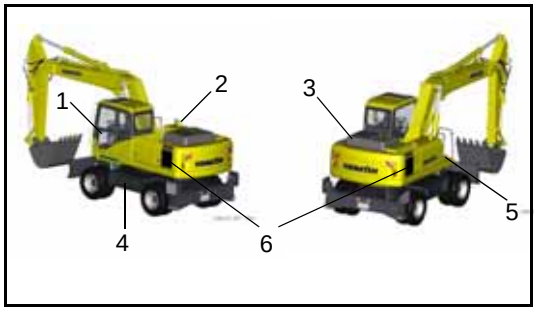


**REMARK**

Use the starting switch key to open and close all these places.

## OVERLOAD WARNING DEVICE

Excavators are provided with this device to warn the operator about tipping over while lifting loads. A buzzer will sound when the machine is in L mode and the machine nears its lifting capacity.

**REMARK**

Only conduct lifting operations in L mode as the overload warning system is only active in this mode.

## HANDLING THE WHEELS

**⚠ WARNING**

**Incorrect handling of wheels and tyres can result in serious injury or death.**
**Particular care is required when working on twin wheel assemblies.**
**Before any attempt is made to remove the road wheels the tyres must be fully deflated.**

**1. General information**

- Always replace damaged parts with new parts from your Komatsu distributor.
  Never attempt to repair damaged items.
- Use the appropriate tools in a good condition to remove the various pieces of the rim. Never use metallic hammer, use a mallet with a face made from Rubber, Plastic or Copper.

- On machines fitted with twin wheel assemblies a valve extension is fitted to the inner wheel to facilitate deflation. This part should always be refitted following disassembly as it ensures that the inner wheel assembly can be deflated whilst fitted to the hub.

| | | |
|---|---|---|
| Mitas | Front tyre pressure | 6.75 Bar |
| | Rear tyre pressure | 6.75 Bar |
| Nokian | Front tyre pressure | 7.25 Bar |
| | Rear tyre pressure | 7.25 Bar |
| Banden-markt | Front tyre pressure | 8.5 Bar |
| | Rear tyre pressure | 8.5 Bar |
| Michelin (Single) | Front tyre pressure | 8.0 Bar |
| | Rear tyre pressure | 8.0 Bar |

**2. Before starting to remove the wheels**

1. Depress the brake pedal fully until it locks.
2. Raise the chassis with the boom so that the tyres are raised above the ground. Then, place axle stands below the front and rear axles.
3. Loosen wheel nuts with a wheel wrench. Wheel nuts have right hand threads.
4. Proceed in accordance with the following procedure, paying attention to the information specific to the type of wheel assembly fitted to the machine on which you are working.

**⚠ WARNING**

**Failure to observe the following procedure may result in serious injury or death.**

**3. Twin wheel assembly - 3 part rim**

| | |
|---|---|
| A | Rim Base |
| B | Loose flange |
| C | Lockring |
| D | Rim Gutter (groove) |

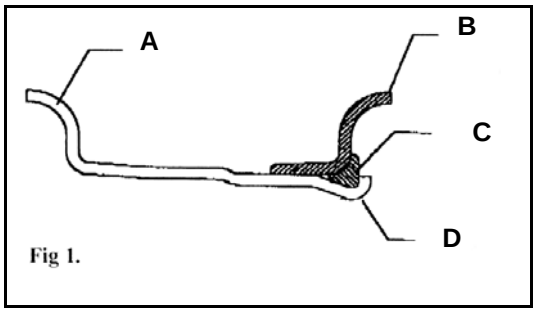

Fig 1.

**Deflation and removal:**

- Before loosening the wheel retaining nuts, completely deflate the tyres by removing the valve with the appropriate tool. Always stand to the side during the deflating operation.

- Release 8 of the wheel retaining nuts leaving 2 diagonally opposed nuts to hold the assembly in position. Check that there is no remaining pressure being exerted on these remaing nuts by either the internal or external wheel assembly. Once satisfied that the remaining nuts are under no pressure, remove them.
- In order to remove the tyre from the rim first remove the lock-ring by progressively levering it from the gutter (groove). Do not exert excessive force as this may deform the retaining ring.
- Remove the loose flange and then the tyre/tube.

**Re - assembly & inflation**

- Check thoroughly the condition of the wheel and rim for signs of wear or damage.
  Discard any defective or doubtful parts and replace with approved replacement parts.
  Clean the rims with a hard brush paying particular attention to the bottom of the rim gutter (groove).
- Fit the tyre to the rim base and fit the tube, ensuring that the valve is correctly located in its through hole.
- Place the loose flange against the tyre bead in the orientation shown in Fig. 1. Push it into place sufficient to clear the rim gutter (groove) to enable the lock-ring to be fitted.
- Insert the lock-ring with the aid of specific tools or with levers and a suitable mallet. Check correct seating of the lock-ring by measuring the dimension of the gap shown in Fig 2.

If it is not possible to achieve the stated gap with the lock-ring seated correctly renew the rim assembly.

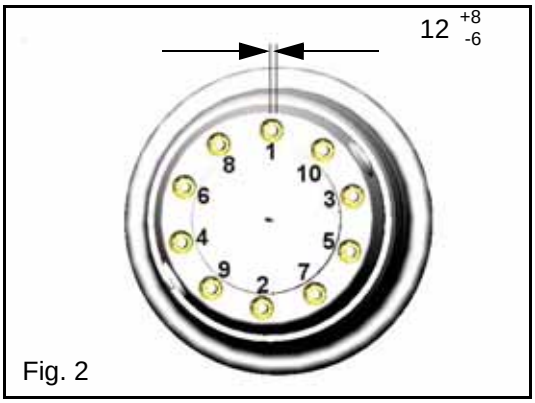

Fig. 2

**⚠ WARNING**

**It is essential that the lock-ring is seated correctly.**

- Put the wheel assembly into a safety cage and inflate the tyre to a pressure of 1 - 1.5 Bar.
- Visually check the lock-ring is still seated correctly and there is no clearance between it and the loose flange Fig. 3.

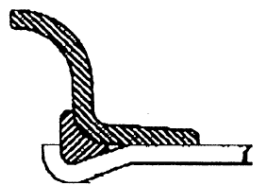

Fig 3.

YES CORRECT ASSEMBLY

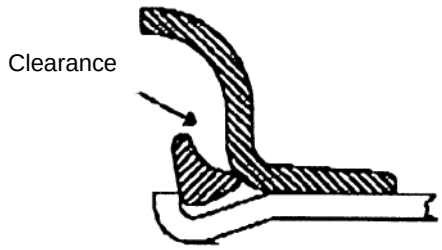


NO WRONG ASSEMBLY

- If the lock-ring is not in the correct position stop the procedure as the lock-ring may be ejected from the groove resulting in possible injury.
  Deflate the tyre and repeat the procedure.
  If the lock-ring is correctly positioned continue to inflate the tyre to the value given in the previous table.
- Before removing the wheel assembly from the safety cage repeat the visual check.
- When refitting the wheel assemblies, tighten at least 2 diagonally opposite wheel nuts and then tighten the tyres to the specified torque in the order shown in Fig. 4.
  Tightening torque: 80 Kg.m
- Retighten to the specified torque after 5 hours operation.

**4. Twin wheel assembly - 2 part rim**

Some Komatsu machines are fitted with a 2 piece wheel rim of the type shown in Fig. 5. In this case the loose flange and lock-ring are replaced by a single split flange.

| | |
|---|---|
| A | Split flange |
| B | Rim base |

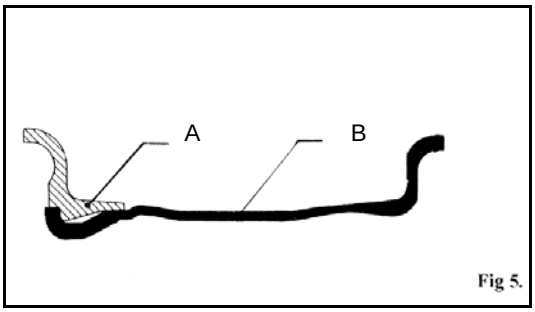

Fig 5.

Similar precautions are required to those for the 3 piece rim when removing and refitting the wheel assemblies. However when judging the condition of the split flange, the dimension in Fig 6.applies.

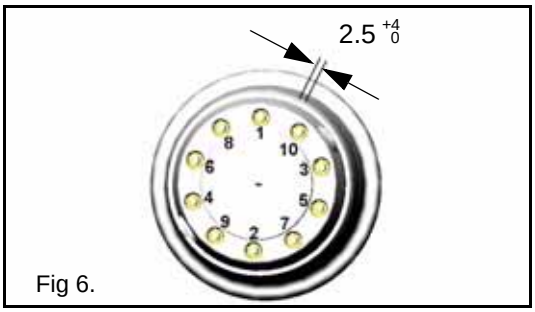

Fig 6.

**Maintenance**

Periodically remove the road-wheels, following the procedure detailed previously and perform the following checks.

- Remove all dirt especially in the area of the tyre bead seat and check the condition of the rim. If there are any signs of deformation or cracks the wheel must be replaced.
- Check carefully the wheel attachment holes, if you notice signs of ovalization or the presence of cracks the wheel must be replaced.
- If the fixing nuts or hub studs show signs of wear or corrosion they must be replaced.

**5. Wheel spacer**

**⚠ WARNING**

**Wheel spacers must not be used with radial ply tyres.**

**6. Rotating tyres**

Consult your local Komatsu distributor for advice on rotating tyres.

# TRANSPORTATION

When transporting the machine, observe all related laws and regulations, and be careful to assure safety.

## LOADING, UNLOADING WORK

**⚠ WARNING**

- **Loading or unloading the machine can be a dangerous operation, so be particularly careful.**
  **When loading or unloading the machine, run the engine at low idling and travel at low speed.**
- **Make sure the ramp has sufficient width, length and thickness to enable the machine to be safely loaded and unloaded. If the ramp sags appreciably, reinforce it with blocks, etc.**
- **When loading and unloading the machine, park the trailer on a flat firm road surface. Keep a fairly long distance between the road shoulder and the machine.**
- **Remove the mud from the undercarriage to prevent the machine from slipping to the side on slopes.**
  **Be sure the ramp surface is clean and free of grease, oil, ice and loose materials.**
- **Never change the direction of travel when on the ramps. If it is necessary to change direction, drive off the ramps and correct the direction, then drive on to the ramps again.**
- **Mechanical swing lock pin should always be engaged during transportation.**
- **When turning the machine on the trailer, the machine's footing is unstable, so carry out the operation slowly.**
- **Always check that the door on the cab is locked, regardless of whether it is open or closed.**
  **Do not open or close the door on ramps or on a platform. This may cause a sudden change in the operating force.**
- **When loading or unloading the machine with the automatic warming-up operation mode, if the automatic mode is released, the speed may change suddenly. Avoid loading or unloading during automatic warming-up operation.**

When loading or unloading, always use ramps or a platform and carry out the operations as follows.

1. Properly apply the brakes on the trailer and insert blocks(2) beneath the tyres to ensure that it does not move. Then fix the ramps in line with the centres of the trailer and the machine. Be sure that the two sides are at the same level as one another.

Make the angle of the ramps (3) a maximum of 15°.

Set the distance between the ramps (A) to match the centre of the wheels.

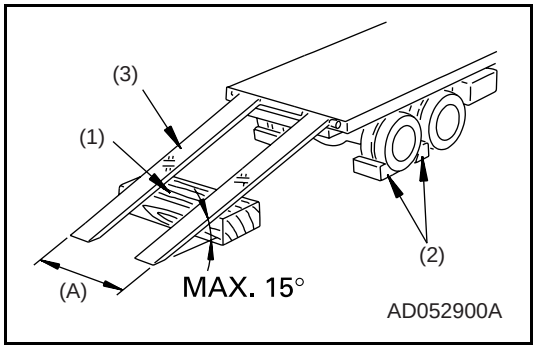


2. Set the travel speed switch to the Lo position.

   **For details, see "HIGH/LOW SPEED SELECTOR SWITCH (93)"**

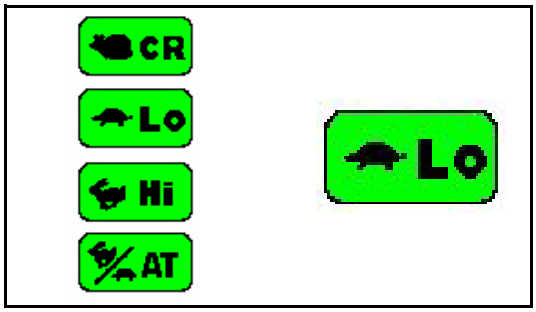


3. Turn the auto-deceleration switch OFF, and return the fuel control dial (7) to reduce the engine speed.

   **For details, see "AUTO-DECELERATION SWITCH (100)"**

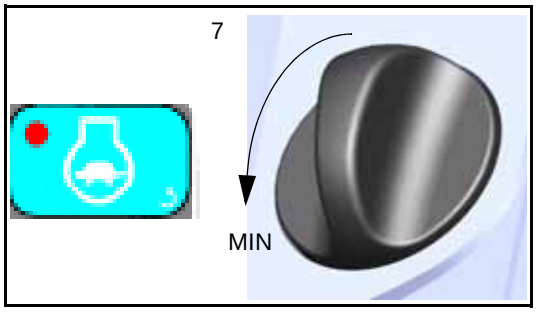


4. Turn the swing lock switch (9) ON to apply the swing lock.
5. Set in the direction of the ramps, lower the work equipment as far as possible without letting it hit the trailer, then travel slowly to load or unload the machine.

When on the ramps, do not operate any lever other than the travel lever.

6. Load the machine correctly in the specified position on the trailer.

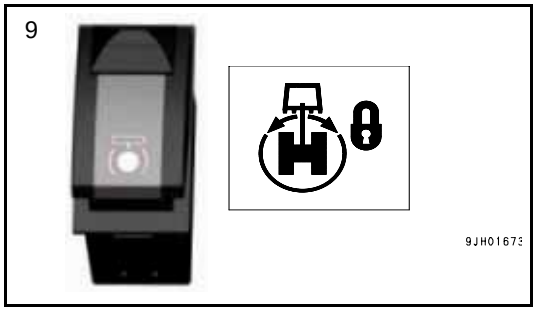


**REMARK**

When the work equipment is installed, load the machine from the front; when the work equipment is not installed, load the machine from the rear.

# PRECAUTIONS FOR LOADING

**WARNING**

**When loading the machine, park the trailer on a flat firm roadbed. Keep a fairly long distance between the road shoulder and the machine.**

After loading to the specified position, secure the machine as follows.

1. Fully extend the bucket and arm cylinders, then slowly lower the boom.
2. Stop the engine and remove the key from the starting switch.
3. Raise safety lock lever to LOCK position.

**REMARK**

In certain conditions it may be possible for the safety lock lever to contact the left hand arm rest on the operator seat.
to avoid this, always ensure that the left hand arm rest is stowed in the fully up position before operating the safety lock lever.

4. When transporting the machine, hold it down with chains or rope. Be particularly careful to ensure that the machine does not slip sideways.

**NOTICE**

**When transporting the machine, place rectangular timber under one end of the bucket cylinder to prevent it touching the ground, thereby saving it from possible damage.**

## HOW TO LIFT THE MACHINE

**⚠ CAUTION**

**Personnel who perform lifting using a crane must be qualified.**

**⚠ WARNING**

**Contact your distributor to get instructions of lifting a machine. Some parts are required and are available as optional parts.**

**⚠ WARNING**

- **Do not lift a vehicle with personnel in it.**
- **The rope used for lifting must have sufficient strength to with stand the weight of this machine.**
- **The machine must not be in a position other than that shown in the following procedure when lifting a vehicle. Otherwise, the machine may be unbalanced.**

Lifting a machine must be performed on a flat place with the following procedure.

1. Start the engine and set the machine in the position shown in the figure at the right (boom at the top stroke end, arm bucket fully retracted). Direct the top revolving super-structure straight forward.

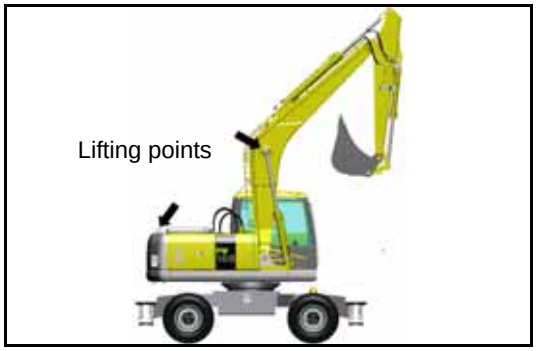


**REMARK**

When lifting a machine fitted with 2 piece boom you need to fully extend the adjust cylinder.

2. Engage mechanical swing lock.
3. Raise the safety lock lever to the LOCK position.
4. Stop the engine. Confirm safety around the operator seat. Get off the machine.
   Be sure to close the cab door, windshield, right and left doors, engine hood, etc.

5. Mount a shackle to boom pins and the counter weight. Hang the wire rope.
6. The length off the wire rope and the lifting angle must be as shown in the figure on the right.
7. When lifting, make sure that there is no change in the position due to possible leakage in the hydraulic circuit on the boom cylinder head side.
8. When the machine leaves the ground, stop the machine and make sure sufficiently that the machine is balanced.
   Then, lift the machine slowly.

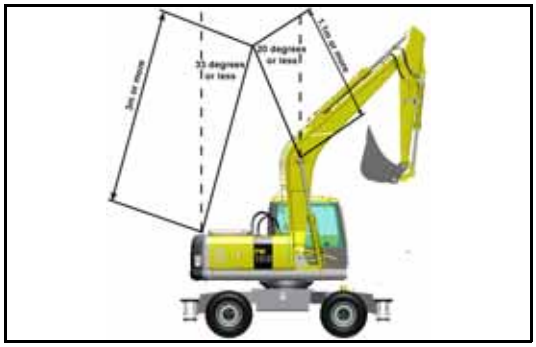

# PRECAUTIONS FOR TRANSPORTATION

**⚠ WARNING**

- **Determine the route for transporting the machine by taking into account the width, height and weight of the machine.**
- **Always ensure mechanical swing lock is engaged**
- **Always check that the door on the cab is closed and locked before transporting the machine.**
- **Always ensure machine covers/doors are closed and locked before transporting the machine.**

**NOTICE**

**Always retract the radio antenna, retract or remove the driving mirrors before transportation.**

Obey all state and local laws governing the weight, width and length of a load. Observe all regulations governing wide loads.

**Monoboom (with blade)**

| Arm Length (mm) | Driving Position | | Transport Position | | Weight |
|---|---|---|---|---|---|
| | A | B | C | D | |
| 2100 | 8,365 | 3,240 | 8,410 | 3,200 | 15,375 |
| 2500 | | | | | 15,410 |
| 3000 | | | | | 15,540 |

(1) Height for transport = (D) Overall height + (3) height of trailer platform
* Weights and dimensions: will vary according to specification. Consult your Komatsu distributor if in doubt.

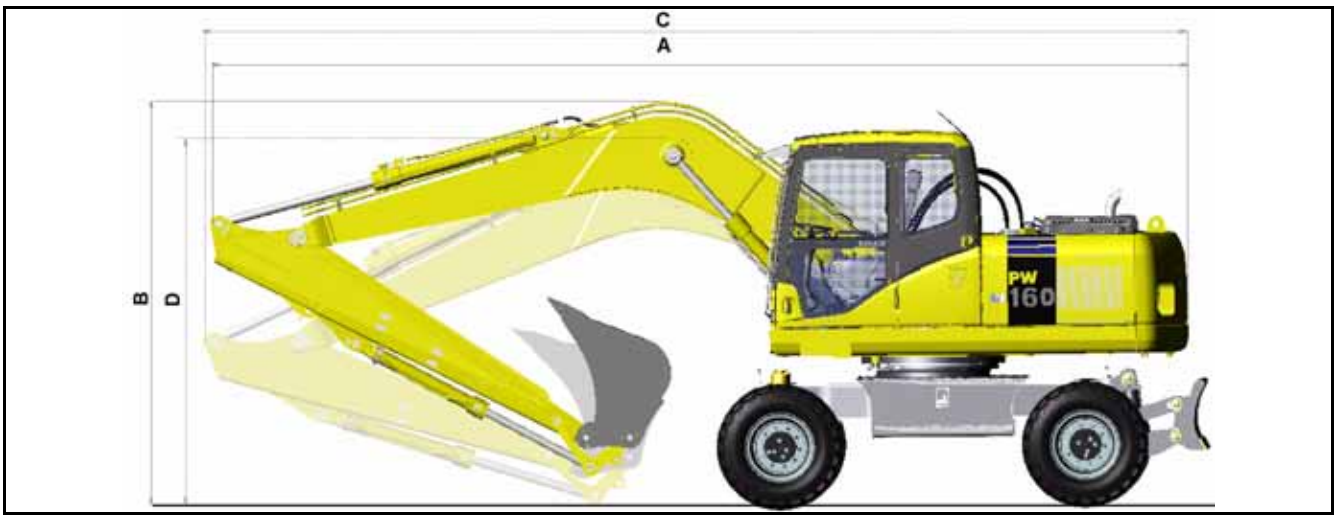

**Two Piece Boom (with blade)**

| Arm Length (mm) | Driving Position | | Transport Position | | Weight |
|---|---|---|---|---|---|
| | A | B | C | D | |
| 2100 | 6000 | 4211 | 8188 | 3439 | 15,765 |
| 2500 | 5862 | 3978 | 8225 | 3208 | 15,800 |
| 3000 | 5878 | 3978 | 8211 | 3191 | 15,930 |

(1) Height for transport = (D) Overall height + (3) height of trailer platform

* Weights and dimensions: will vary according to specification.

Consult your Komatsu distributor if in doubt.

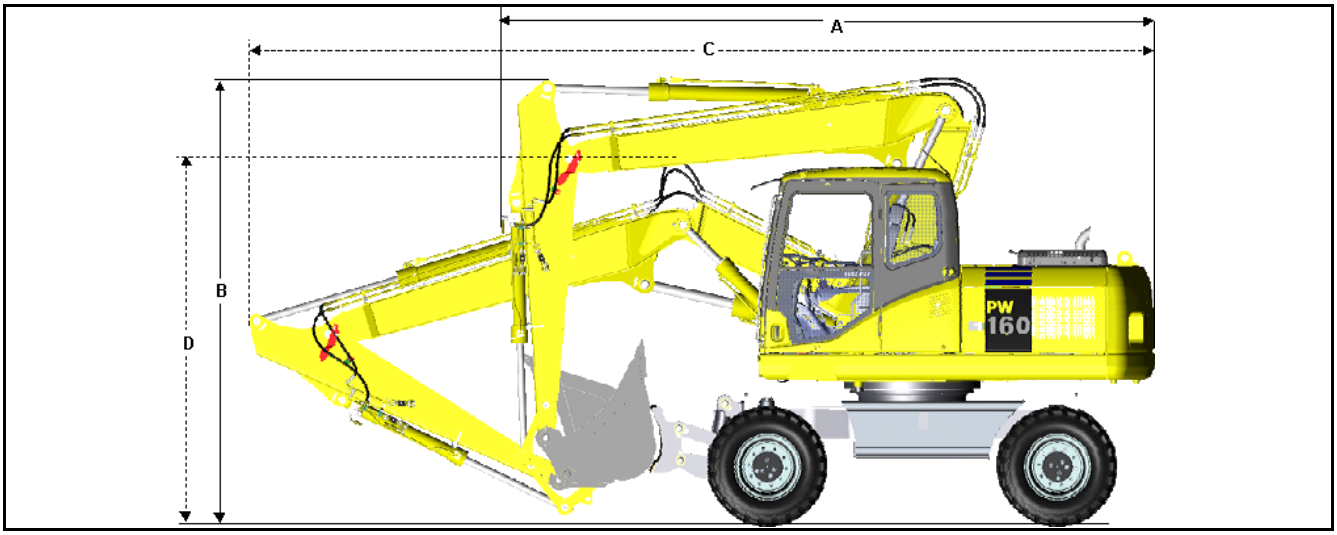

# TRAVELLING POSTURE

Before starting to travel, be sure to raise and lock the outriggers, and raise the dozer blade.

Before travelling on public roads, the work equipment should be positioned as follows.

1. Position the upper structure so that it is facing the front of the undercarriage (the oscillation lock cylinders can be seen) and insert the swing lock pin.
2. Fully extend the bucket cylinder.
3. Fully extend the first boom cylinders.
4. Fully retract the second boom cylinders.
5. Adjust the arm cylinder such that the front of the arm is verticle.
6. Disable the work equipment levers by switching on the control lever lock switch.
7. Close manual lock valves

   1) For the bucket cylinder, located on the arm.

   2) For the arm cylinder, located on the first boom.

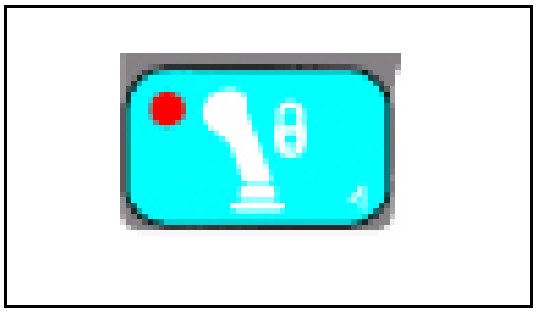

After setting the machine in the travelling posture, confirm that its overall height is below 4 m and that the distance between the centre of the steering wheel and the front of the work equipment is less than 3.5 m.

**REMARK**

This will necessitate removal of the bucket for machines fitted with 3.0 m arm.

Before moving off, lock all machine cover and toolbox doors to prevent accidental opening.

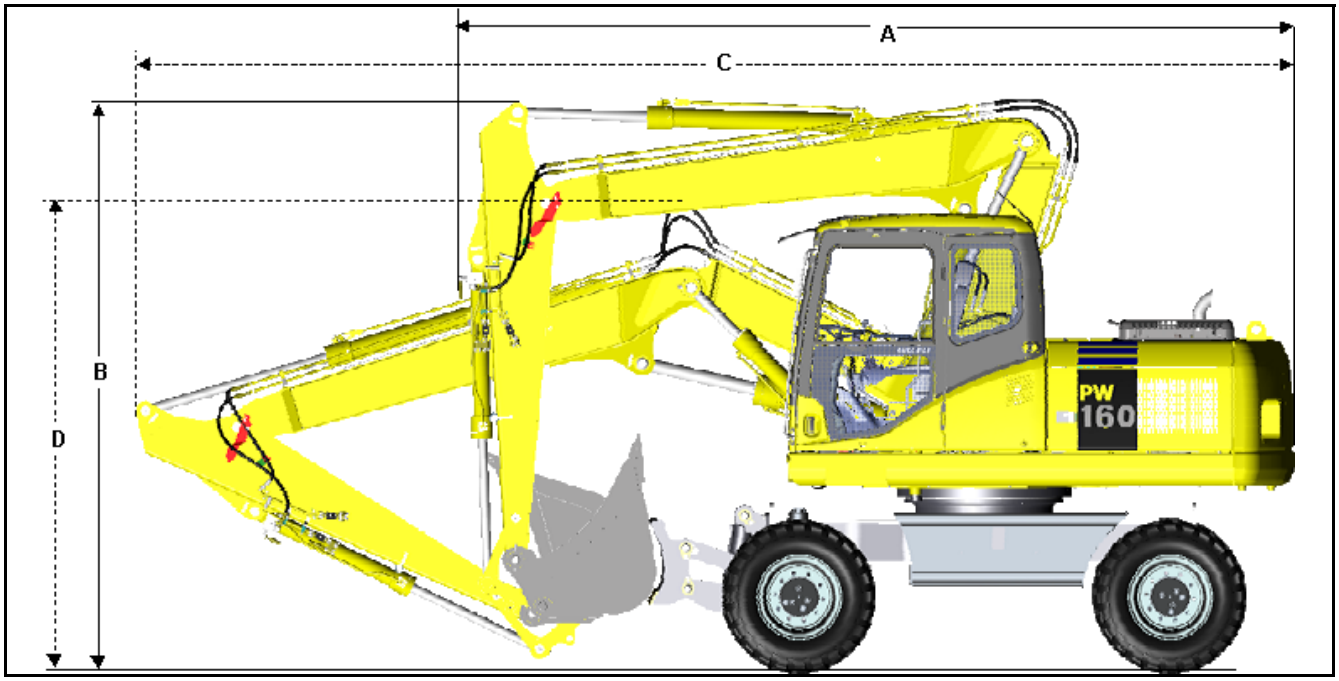

# COLD WEATHER OPERATION

## PRECAUTIONS FOR LOW TEMPERATURE

If the temperature becomes low, it becomes difficult to start the engine, and the coolant may freeze, so do as follows.

### FUEL AND LUBRICANTS

Change to fuel and oil with low viscosity for all components. For details of the specified viscosity.

**For details, see "USE FUEL, COOLANT AND LUBRICANTS ACCORDING TO AMBIENT TEMPERATURE (230)"**

**⚠ WARNING**

- **Antifreeze is toxic. Be careful not to get it into your eyes or on your skin. If it should get into your eyes or on your skin, wash it off with large quantities of fresh water and see a doctor at once.**
- **Antifreeze is toxic. Be extremely careful when handling it. When replacing coolant containing antifreeze or when handling coolant when repairing the radiator, contact your Komatsu distributor or ask your local antifreeze dealer. Be careful not to let the water flow into drainage ditches or spray on to the ground surface.**
- **Antifreeze is flammable, so do not bring any flame close. Do not smoke when handling antifreeze.**

**NOTICE**

- **Never use methanol, ethanol or propanol based antifreeze.**
- **Absolutely avoid using any water leak preventing agent, weather it is used independently or mixed with an antifreeze.**
- **Do not mix one antifreeze with a different brand.**

**For details of the antifreeze mixture when changing the coolant, see "CLEAN INSIDE OF COOLING SYSTEM (250)".**

**REMARK**

Where no permanent antifreeze is available, an ethylene glycol antifreeze without corrosion inhibitor may be used only for the cold season. In this case, clean the cooling system twice a year (in spring and autumn). When refilling the cooling system, add antifreeze in autumn, but do not add any in spring.

**For details of the antifreeze mixture when changing the coolant, see "CLEAN INSIDE OF COOLING SYSTEM (250)".**

## BATTERY

**⚠ WARNING**

- **The battery generates flammable gas, so do not bring fire or sparks near the battery.**
- **Battery electrolyte is dangerous. If it gets in your eyes or on your skin, wash it off with large amounts of water, and consult a doctor.**
- **Battery electrolyte dissolves paint. If it gets on to the bodywork, wash it off immediately with water.**
- **If the battery electrolyte is frozen, do not charge the battery or start the engine with a different power source. There is danger that the battery may explode.**

When the ambient temperature drops, the capacity of the battery will also drop. If the battery charge ratio is low, the battery electrolyte may freeze. Maintain the battery charge as close as possible to 100%, and insulate it against cold temperature so that the machine can be started easily the next morning.

**REMARK**

Measure the specific gravity and calculate the rate of charge from the following conversion table.

| | Temperature of fluid | | | |
|---|---|---|---|---|
| Rate of charge | 20ºC | 0ºC | -10ºC | -20ºC |
| 100 | 1.28 | 1.29 | 1.30 | 1.31 |
| 90 | 1.26 | 1.27 | 1.28 | 1.29 |
| 80 | 1.24 | 1.25 | 1.26 | 1.27 |
| 75 | 1.23 | 1.24 | 1.25 | 1.26 |

- Because the battery capacity drops markedly in low temperatures, cover the battery or remove it from the machine. Keep it in a warm place overnight, and install it again the next morning.
- If the electrolyte level is low, add distilled water in the morning before beginning work. To prevent fluid in the battery from freezing in the night, do not add the water after the day's work.

## PRECAUTIONS AFTER COMPLETION OF WORK

**WARNING**

**After completion of operations, fill the fuel tank to prevent the formation of water caused by condensation of moisture in the empty space in the tank when the temperature goes down.**

To prevent mud, water, or the undercarriage from freezing and making it impossible for the machine to move the following morning, always observe the following precautions.

- Mud and water on the machine body should be completely removed. This is to prevent damage to the seal caused by mud or dirt getting inside the seal with frozen drops of water.
- Park the machine on hard, dry ground. If this is impossible, park the machine on wooden boards. The boards help protect the wheels from being frozen in soil and the machine can start next morning.
- Open the drain valve and drain any water collected in the fuel system to prevent it from freezing.
- After operation in water or mud, remove water from undercarriage to extend undercarriage service life.

## AFTER COLD WEATHER

When season changes and the weather becomes warmer, do as follows.

- Replace the fuel and oil for all parts with oil of the viscosity specified.

  **For details, see "USE FUEL, COOLANT AND LUBRICANTS ACCORDING TO AMBIENT TEMPERATURE (230)"**

- If for any reason permanent antifreeze cannot be used, and an ethyl glycol base antifreeze (winter, one season type) is used instead, or if no antifreeze is used, drain the cooling system completely, then clean out the inside of the cooling system thoroughly, and fill with fresh water.

# LONG-TERM STORAGE

## BEFORE STORAGE

**NOTICE**

**To protect the cylinder rod when the machine is not being used, set the work equipment in the posture shown in the diagram. (This prevents rusting of the cylinder rod)**

When putting the machine in storage for a long time, do as follows.

- Clean and wash all parts, then store the machine indoors. If the machine has to be stored outdoors, select level ground and cover the machine with a sheet.
- Completely fill the fuel tank, lubricate and change the oil before storage.
- Apply a thin coat of grease to the metal surface of the hydraulic piston rods.
- Disconnect the negative terminals of the battery and cover it or remove it from the machine and store it separately.
- If the ambient temperature is expected to drop below 0ºC, add antifreeze to the cooling water.
- Raise safety lock lever to the LOCK position.
- Set the stop valve to the LOCK position on machines which can install attachments. Install a plug in the elbow.

## DURING STORAGE

**⚠ WARNING**

**If it is unavoidably necessary to carry out the rust preventive operation while the machine is indoors, open the doors and windows to improve ventilation and prevent gas poisoning.**

Operate the engine and move the machine for a short distance once a month so that a new film of oil will be coated over movable parts and component surfaces. At the same time, also charge the battery.

Also carry out cooler operation in the case of machines equipped with an air conditioner.

## AFTER STORAGE

**NOTICE**

**If the machine is stored without carrying out the monthly rust prevention operation, request your Komatsu distributor for service.**

Carry out the following procedure when taking the machine out of long-term storage.

- Wipe off the grease from the hydraulic cylinder rods.
- Add oil and grease to all places.
- When the machine has been stored for a long time, the moisture in the atmosphere will get into the oil. Check the oil at all parts before and after starting the engine. If there is water in the oil, change all the oil.

## STARTING MACHINE AFTER LONG-TERM STORAGE

When starting the machine after a long-term storage, first cancel the automatic warming-up function as follows.

1. Turn the starting switch key to the ON position.
2. Turn the fuel control dial from the low idling (MIN) position to the full (MAX) position, hold it there for 3 seconds, then return it to the low idling (MIN) position and start the engine.

# TROUBLESHOOTING

## PHENOMENA THAT ARE NOT FAILURES

Note that the following phenomena are not failures:

1. When the arm is pulled in, the speed of movement will drop momentarily when the arm is more or less vertical.
2. The arm speed will drop momentarily when the bucket teeth are more or less horizontal.

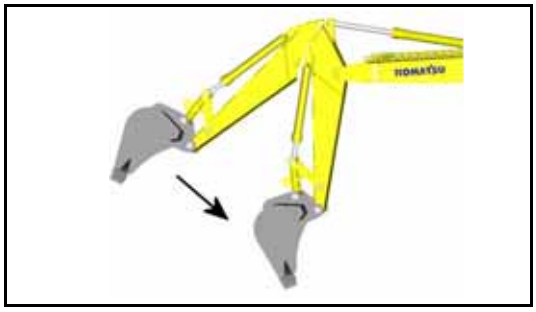

3. When starting or stopping the swing, noise will be emitted from the brake valve.
4. When going down a steep slope at low speed, a noise will be emitted from the travel motor.

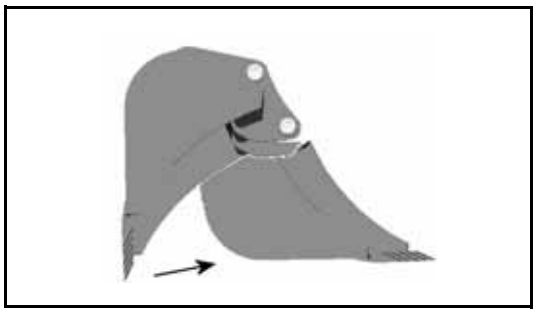

## METHOD OF TOWING MACHINE

**WARNING**

**When towing the machine, use a wire rope that has ample strength for the weight of the machine that is being towed.**

If the machine sinks in mud and cannot get out under its own power, or if the drawbar pull of the excavator is being used to tow a heavy object, use a wire rope as shown in the diagram.

**WHEN USING THE FRONT OF CHASSIS**

**WHEN USING THE REAR OF THE CHASSIS**

For towing method see “TOWING” on page 37.

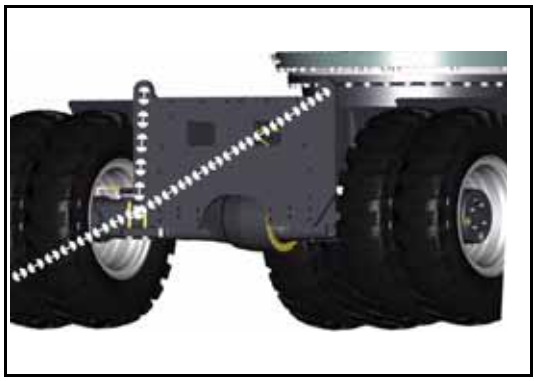

## PRECAUTIONS ON PARTICULAR JOBSITES

1. When carrying out digging operations in water, if the work equipment mounting pin goes into the water, carry out greasing every time the operation is carried out.
2. For heavy-duty operations and deep digging, carry out greasing of the work equipment mounting pins every time before operation.
3. After greasing, operate the boom, arm and bucket several times, then grease again.

# DISCHARGED BATTERY

**⚠ WARNING**

- **It is dangerous to charge the battery while it is still mounted on the machine. Always remove the battery before charging it.**
- **When checking or handling the battery, stop the engine and turn the starting switch key to the OFF position.**
- **The battery generates hydrogen gas, so there is danger of explosion.**
  **Do not bring lighted cigarettes near the battery, or do anything that will cause sparks.**
- **Battery electrolyte is diluted sulphuric acid, and it will attack your clothes and skin. If it gets on your clothes or on your skin, wash it off immediately with large amounts of water. If it gets into your eyes, wash it out with fresh water, and consult a doctor.**
- **When handling batteries, always wear protective goggles and rubber gloves.**
- **When removing the battery, first disconnect the cable from the ground (normally the negative (-) terminal). When installing, install the positive (+) terminal first.**
  **If a tool touches the positive terminal and the chassis, there is danger that it will cause a spark, be extremely careful.**
- **If the terminals are loose, there is danger that the defective contact may generate sparks that will cause an explosion.**
- **When installing the terminals, install them tightly.**
  **When removing or installing the terminals, check which is the positive (+) terminal and which is the negative (-) terminal.**
- **Green rust around the terminals is a cause of self-discharge of the battery. Clean the terminals with sandpaper. After removing the rust, coat the terminals thinly with grease before installing.**

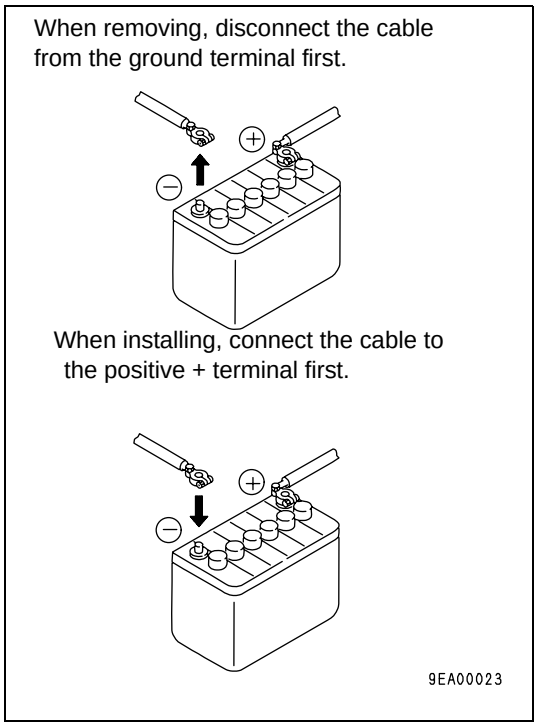


## REMOVAL AND INSTALLATION OF BATTERY

**NOTICE**

**After fastening the battery in position, check that it does not move. If it moves, tighten clamp bolts and re-check.**

- When removing, remove from the ground side terminal first (normally the (-) terminal).
  Be careful not to touch the positive (+) terminal and the machine with any tool. Letting a tool touch is dangerous as it causes sparks.
- When installing, connect the ground side last.

- When replacing the battery, attach the battery securely with the battery mounting clamp.
- Tightening torque of mounting bolts: 9.8 to 14.7 N•m (1 to 1.5 kgf•m)

## BATTERY CHARGES

When charging the battery, there is danger that the battery may explode if it is mishandled. Follow the instructions in ""WARMING UP OPERATION (163)" and the instruction manual supplied with the charger, and be sure to observe the following precautions.

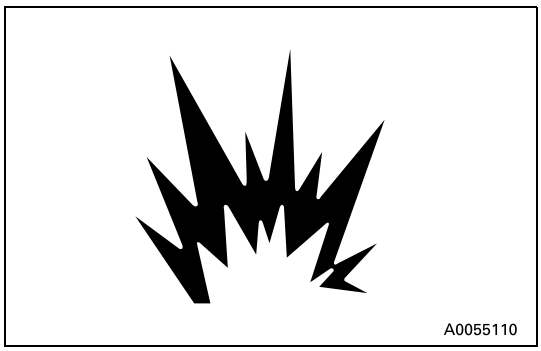


- Set the voltage of the charger to match the voltage of the battery to be charged. If the voltage is not selected correctly, the charger may overheat and cause an explosion.
- Connect the positive (+) charger clip of the charger to the positive (+) terminal of the battery, then connect the negative (-) charger clip of the charger to the negative (-) terminal of the battery. Be sure to connect the clips securely.
- Set the charging current to 1/10 of the value of the rated battery capacity; when doing rapid charging, set it to less than the rated battery capacity.
  If the charger current is too high, the electrolyte will leak or dry up, and this may cause the battery to catch fire and explode.
- If the battery electrolyte is frozen, do not charge the battery or start the engine with a different power source.
  There is a danger that this will ignite the battery electrolyte and cause the battery to explode.
- Do not use or charge the battery if the battery electrolyte level is below the LOWER LEVEL line. This may cause an explosion. Always check the battery electrolyte level periodically and add distilled water to bring the electrolyte level to the UPPER LEVEL

## STARTING ENGINE WITH BOOSTER CABLES

When starting the engine with a booster cable, do as follows:

### CONNECTING AND DISCONNECTING BOOSTER CABLES

**WARNING**

- **When connecting the cables, never contact the positive (+) and negative (-) terminals.**
- **When starting the engine with a booster cable, always wear safety glasses.**
- **Be careful not to let the normal machine and problem machine contact each other. This prevents sparks from generating near the battery which could ignite the hydrogen gas given off by the battery. If hydrogen gas explodes, it could cause serious injury.**
- **Make sure that there is no mistake in the booster cable connections.**
  **The final connection is to the upper structure frame, but sparks will be generated when this is done, so connect to a place as far as possible from the battery. (However, avoid connecting the cable to the work equipment, as conduction is poor.)**
- **Use care when removing the cables from a machine that has been started. To avoid hydrogen explosion, do not allow the cable ends to contact each other or the machine.**

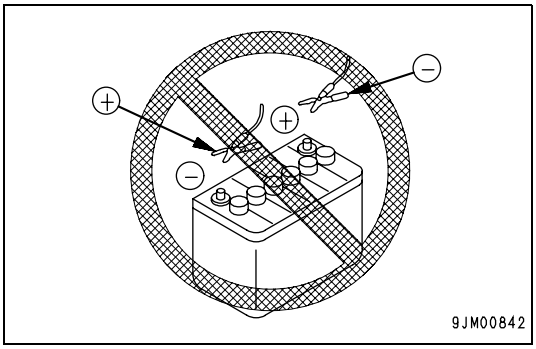


**NOTICE**

- **The starting system for this machine uses 24 Volts. For the normal machine, use a 24V battery.**
- **The size of the booster cable and clip should be suitable for the battery size.**
- **The battery of the normal machine must be the same capacity as that of the engine to be started.**
- **Check the cables and clips for damage or corrosion.**
- **Make sure that the cables and clips are firmly connected.**
- **Check that the safety lock lever is raised in the LOCK position and parking brake applied.**
- **Check that each lever is in the NEUTRAL position.**

## BOOSTER CABLE CONNECTION

Keep the starting switch of the normal machine and problem machine at the OFF position.

Connect the booster cable as follows, in the order of the numbers marked in the diagram.

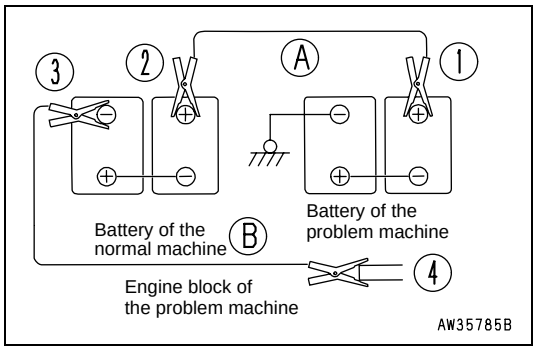


1. Make sure that the starting switches of the normal machine and problem machine are both at the OFF position.
2. Connect one clip of booster cable (A) to the positive (+) terminal of the problem machine.
3. Connect the other clip of booster cable (A) to the positive (+) terminal of the normal machine.
4. Connect one clip of booster cable (B) to the negative (-) terminal of the normal machine.
5. Connect the other clip of booster cable (B) to the upper structure of the problem machine.

## STARTING THE ENGINE

**⚠ WARNING**

- **Always check that the safety lock lever is raised in the LOCK position, regardless of whether the machine is working normally or has failed. Also check that all the control levers are at the HOLD or neutral position.**
- **In certain conditions it may be possible for the safety lock lever to contact the left hand arm rest on the operator seat.**
  **to avoid this, always ensure that the left hand arm rest is stowed in the fully up position before operating the safety lock lever.**

1. Make sure the clips are firmly connected to the battery terminals.
2. Start the engine of the normal machine and keep it to running at high idling speed.
3. Turn the starting switch of the problem machine to the START position and start the engine. If the engine doesn't start at first, try again after 2 minutes or so.

## BOOSTER CABLE DISCONNECTION

After the engine has started, disconnect the booster cables in the reverse order in which they were connected.

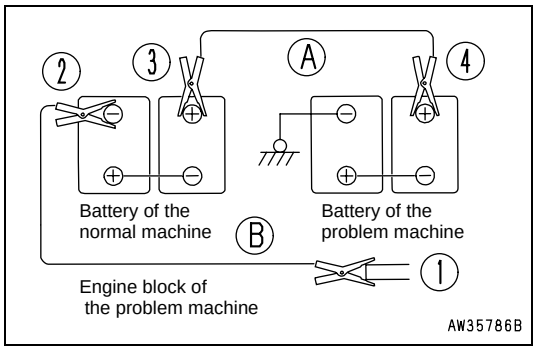


1. Remove one clip of booster cable (B) from the upper structure of the problem machine.
2. Remove the other clip of booster cable (B) from the negative (-) terminal of the normal machine.
3. Remove one clip of booster cable (A) from the positive (+) terminal of the normal machine.
4. Remove the other clip of booster cable (A) from the positive (+) terminal of the problem machine.

# OTHER TROUBLE

## ELECTRICAL SYSTEM

- ( ) Always contact your Komatsu distributor when dealing with these items.
- In cases of abnormalities or causes which are not listed below, please contact your Komatsu distributor for repairs.

| Problem | Main causes | Remedy |
|---|---|---|
| Lamp does not glow brightly even when the engine runs at high speed | ● Defective wiring, deterioration of battery | ● (Check, repair loose terminals, disconnections, replace battery) |
| Lamp flickers while engine is running | ● Loose fan belt | ● Check fan belt tension, replace |
| Charge level monitor does not go out even when engine is running | ● Defective alternator<br>● Defective wiring | ● ( Replace)<br>● ( Check, repair) |
| Abnormal noise is generated from alternator | ● Defective alternator | ● (Replace) |
| Starting motor does not turn when starting switch is turned to ON | ● Defective wiring<br>● Defective starting motor<br>● Insufficient battery charge | ● (Check, repair)<br>● (Replace)<br>● Charge |
| Pinion of starting motor keeps going and out | ● Insufficient battery charge<br>● Defective safety relay | ● Charge<br>● (Replace) |
| Starting motor turns engine sluggishly | ● Insufficient battery charge<br>● Defective starting motor | ● Charge<br>● (Replace) |
| Starting motor disengages before engine starts | ● Defective wiring, defective ring gear pinion<br>● Insufficient battery charge | ● ( Check, repair)<br>● Charge |
| Pre-heating monitor does not light | ● Defective wiring<br>● Defective heater relay<br>● Defective monitor | ● (Check, repair)<br>● (Replace)<br>● (Replace) |
| Oil pressure monitor does not light up when engine is stopped (starting switch at ON position) | ● Defective monitor<br>● Defective caution lamp switch | ● (Replace)<br>● (Replace) |
| Outside of electrical heater is not warm when touched by hand | ● Defective wiring<br>● Disconnection in electric heater<br>● Defective operation of heater relay switch | ● (Check, repair)<br>● (Replace)<br>● (Replace) |

## CHASSIS

- ( ) Always contact your Komatsu distributor when dealing with these items.
- In cases of abnormalities or causes which are not listed below, please contact your Komatsu distributor for repairs.

| Problem | Main causes | Remedy |
|---|---|---|
| Speed of travel, swing, boom, arm, bucket is slow | ● Lack of hydraulic oil | ● Add oil to specified level, see CHECK BEFORE STARTING |
| Pump generates abnormal noise (sucking in air) | ● Clogged element in hydraulic tank strainer, lack of oil | ● Clean, see EVERY 2000 HOURS SERVICE |
| Excessive rise in hydraulic oil temperature | ● Loose fan belt<br>● Dirty oil cooler<br>● Lack of hydraulic oil | ● Check fan belt tension, replace<br>● Clean, see EVERY 500 HOURS SERVICE<br>● Add oil to specified level, see CHECK BEFORE STARTING |
| Bucket rises slowly, does not rise | ● Lack of hydraulic oil | ● Add oil to specified level, CHECK BEFORE STARTING |
| Does not swing | ● Mechanical swing lock engaged<br>● Control lever lock ON | ● Release mechanical swing lock<br>● Turn OFF control lever lock switch |

## ENGINE

- ( ) Always contact your Komatsu distributor when dealing with these items.
- In cases of abnormalities or causes which are not listed below, please contact your Komatsu distributor for repairs.

| Problem | Main causes | Remedy |
|---|---|---|
| Engine oil pressure monitor lights up | ● Engine oil pan oil level is low (sucking in air)<br>● Clogged oil filter cartridge<br>● Defective tightening of oil pipe, pipe joint, oil leakage from damaged point<br>● Defective engine oil pressure sensor<br>● Defective monitor | ● Add oil to specified level, see CHECK BEFORE STARTING<br>● Replace cartridge, see EVERY 500 HOURS SERVICE<br>● (Check, repair)<br>● (Replace sensor)<br>● ( •Replace) |
| Steam spurts out from top of radiator (pressure valve) | ● Cooling water level low, leakage of water<br>● Loose fan belt<br>● Dirt or scale accumulated in cooling system | ● Check, add water, repair, see CHECK BEFORE STARTING<br>● Check fan belt tension, adjust, replace<br>● Change coolant, flush inside of cooling system, see WHEN REQUIRED |
| Radiator water level monitor lights up | ● Clogged radiator fins or damaged fins<br>● Defective thermostat<br>● Loose radiator filler cap (high-altitude operations)<br>● Defective water level sensor<br>● Defective monitor | ● Clean or repair, see EVERY 500 HOURS SERVICE<br>● (Replace thermostat)<br>● Tighten cap or replace packing<br>● (Replace sensor)<br>● (Replace sensor) |
| Engine does not start when starting motor is turned | ● Lack of fuel<br>● Air in fuel system<br>● Defective fuel injection pump or defective nozzle<br>● Starting motor cranks engine sluggishly<br>● Preheating monitor does not light up<br>● Defective compression<br>● Defective valve clearance | ● Add fuel, see CHECK BEFORE STARTING<br>● Repair place where air is sucked in, see EVERY 500 HOURS SERVICE<br>● (Replace pump or nozzle)<br>● See ELECTRICAL SYSTEM<br>● See ELECTRICAL SYSTEM<br>● (Adjust valve clearance) |
| Exhaust gas is white or blue | ● Too much oil in oil pan<br>● Improper fuel | ● Set oil to specified level, see CHECK BEFORE STARTING<br>● Change to specified fuel |

| Problem | Main causes | Remedy |
|---|---|---|
| Exhaust gas occasionally turns black | ● Clogged air cleaner element<br>● Defective nozzle<br>● Defective compression<br>● Defective turbocharger | ● Clean or replace, see WHEN REQUIRED<br>● (Replace nozzle)<br>● (See defective compression above)<br>● Clean or replace turbocharger |
| Combustion noise occasionally make breathing sound | ● Defective nozzle | ● (Replace nozzle) |
| Abnormal noise generated (combustion or mechanical) | ● Low-grade fuel being used<br>● Overheating<br>● Damage inside muffler<br>● Excessive valve clearance | ● Change to specified fuel<br>● Refer to "Radiator water level monitor lights up" as above<br>● Replace muffler<br>● (Adjust clearance) |

## ELECTRONIC CONTROL SYSTEM

If an error code appears on the machine monitor display (normally displays TIME), follow the countermeasure table as shown below in the self-diagnosis.

**Machine monitor trouble display**

| Monitor display | Error mode | Countermeasure |
|---|---|---|
| E01 | Suspension lock system error | Place the machine in a safe posture, then have it inspected immediately by your Komatsu distributor |
| E02 | TVC valve system error | If the pump override switch is set to the ON position, operation can be carried out. However, immediately have the PC-EPC valve system inspected by your Komatsu distributor. (*) |
| E03 | Swing brake system error | Turn the swing prolix switch ON to cancel the brake.<br>When applying the swing brake, operate the swing lock manually.Depending on the cause of the failure, it may be impossible to release the brake. In any case, have the system inspected immediately by your Komatsu distributor. (*) |
| E05 | Governor system error | Governor will not execute the control function. Manually operate the governor-lever. To fix the governor lever at the full stroke position, use the retaining bolt holes on bracket. In this case, immediately have the governor system inspected by your Komatsu distributor. |
| E20 | Travel system error | If the travel override switch is set to ON position, operation can be carried out. However, immediately have the TVC valve system inspected by your Komatsu distributor. |
| CALL | Error indicating that operation cannot be continued | Place the machine in a safe posture, then have it inspected immediately by your Komatsu distributor. |
| In the case where the monitor will not display error codes and work equipment operation and swing operation cannot be carried out. | | Have the machine inspected immediately by your Komatsu distributor. |

(*) For detail of operating the pump override switch and the swing override switch, refer to "SWITCHES"

# MAINTENANCE

**WARNING**

**Please read and make sure that you understand the safety volume before reading this section.**

# GUIDES TO MAINTENANCE

**Do not carry out any inspection and maintenance operation that is not given in this manual.**

**REMARK**

**Opening Engine Compartment Hood**

Whenever access is required to the engine compartment via the hood, always ensure that the work equipment is tipped as far forward as possible.
This will ensure that the hoses mounted on the work equipment do not impede the engine hood when it is opened/closed.

**Perform maintenance work on hard, flat ground.**

**Check service meter:**

Check the service meter reading every day to see if the time has come for any necessary maintenance to be carried out.

**Komatsu genuine replacement parts:**

Use Komatsu genuine parts specified in the Parts Book as replacement parts.

**Komatsu genuine oils:**

Use Komatsu genuine oils and grease. Choose oils and grease with proper viscosities specified for ambient temperature.
Always use clean washer fluid:
Use automobile window washer fluid and be careful not to let any dirt get into it.

**Always use clean oil and grease:**

Use clean oil and grease. Also, keep containers of the oil and grease clean. Keep foreign materials away from oil and grease.

**Keeping the machine clean:**

Always keep the machine clean. This makes is easier to find parts causing problems. Keep in particular grease fittings, breathers and oil level gauges clean and avoid foreign matter from getting in them.

**Be careful of hot water and oil:**

Draining hot oil and coolant and removing their filters immediately after the engine stops is hazardous. Allow the engine to cool.

If the oil has to be drained when it is cold, warm up the oil to a suitable temperature (approx. 20 - 40°C) before draining it.

**Checking foreign material in drained oil and on filter:**

After oil is changed or filters are replaced, check the oil and filters for metallic particles and foreign material. If large quantities of metallic particles or foreign material are found, consult your Komatsu distributor.

**Fuel strainer:**

If your machine is equipped with a fuel strainer, do not remove it while fueling.

**Oil change:**

Check or change oils in the places where dust is scarce to keep foreign materials away from oils.

**Warning tag:**

Attach the warning tag to the starting switch or other appropriate control lever to avoid someone who is not aware of the circumstances from starting the engine.

**Obey precautions:**

During the operation, always obey the precautions on the safety label attached to the machine.

**Welding instructions:**

- Turn off the engine starting switch.
- Do not apply more than 200 V continuously.
- Connect grounding cable within 1 m from the area to be welded.
- Avoid seals or bearings from being between the area to be welded and the position of grounding
- Do not use the area around the work equipment pins or the hydraulic cylinders as the grounding point.

**Fire prevention**

Use nonflammable cleaner or light oil for cleaning parts. Keep flame or cigarette light away from light oil.

**Clamp faces:**

When O-rings or gaskets are removed, clean the clamp faces and replace the 0-rings and gaskets with new ones.
Be sure to fit 0-rings and gaskets when assembling.

**Objects in your pockets:**

Keep your pockets free of loose objects which can fall out and drop into the machinery; especially when you work on the machinery while bending over it.

**Checking undercarriage:**

When working in rocky areas, check for damage to the undercarriage and for looseness, flaws, wear and damage in bolts and nuts.

**Precautions when washing machine:**

- Never spray steam or water directly on the connectors and mechatronics parts.

- Do not allow water to get on the monitors and controllers inside the operator's cab.
- Never spray steam or water directly at the radiator or oil cooler portions.

**Precautions when filling radiator**

- When refilling the cooling system with fluid via the radiator cap, always ensure that the header tank of the radiator is full prior to operating the machine.
- If the coolant level is low, it will cause overheating and will also cause problems with corrosion from the air in the coolant.

**Pre-and post-work checks:**

Before starting work in mud, rain, snow or at seashore, check plugs and valves for tightness. Wash the machine immediately after the work to protect components from rusting. Lubricate components more frequently than usual.
Be sure to lubricate work equipment pins daily if they are submerged in water.

**Dusty worksites:**

When working at dusty worksites, do as follows:

- Inspect the air cleaner clogging monitor to see whether the air cleaner is blocked. Clean the air cleaner at shorter intervals than specified.
- Clean the radiator core frequently to avoid clogging.
- Clean and replace the fuel filter frequently.
- Clean electrical components, especially the starting motor and alternator, to avoid accumulation of dust.

**Avoid mixing oils:**

Never mix oils of different brands. If you have only oil which is a different brand from the one that is used in the machine, do not add it but replace all the oil.

# OUTLINE OF SERVICE

- Use Komatsu genuine parts for replacement.
- When changing or adding oil, do not use a different type of oil.
- Unless otherwise specified, the oil and coolant used at the time of shipment from the factory are as shown in the table below.

| Item | Kind of fluid |
|---|---|
| Engine oil pan | SAE 15W-40<br>API classification CE |
| Swing machinery case<br>PTO gear case | SAE 30<br>API classification CD |
| Hydraulic tank | SAE 10 W<br>PI classification CD |
| Fuel tank | ASTM D975 No.2(However, ASTM D975 No.1 is used for the winter season (October to March) |
| Radiator | Komatsu Super Coolant (AF-ACL) 50% added to water |
| Axles, Hubs | Fuchs titan hydra 20W-40 |
| Transmission | BP tractran 8 |

## OUTLINE OF OIL, FUEL, COOLANT

### OIL

- Oil is used in the engine and work equipment under extreme severe conditions (high temperature, high pressure), and it deteriorates with use.
  Always use oil that matches the grade and temperature for use given in the Operation and Maintenance Manual. Even if the oil is not dirty, always replace the oil after the specified interval.
- Always be careful when handling oil to prevent any ingress of impurities (water, metal particles, dirt, etc.).
  The majority of problems with machine are caused by the entry of such impurities. Take particular care not to let any impurities get in when storing or adding oil.
- Never mix oils of different grades or brands.
- Always add the specified amount of oil.
  Having too much oil or too little oil are both causes of problems.
- If the oil in the work equipment is not clear, there is probably water or air getting into the circuit. In such cases, please contact your Komatsu distributor.

- When changing the oil, always replace the related filters at the same time.
- We recommend you to have an analysis made of the oil periodically to check the condition of the machine. For those who wish to use this service, please contact your Komatsu distributor.

## FUEL

- The fuel pump is a precision instrument, and if fuel containing water or dirt is used, it cannot work properly.
- Be extremely careful not to let impurities get in when storing or adding fuel.
- Always use the fuel specified in the Operation and Maintenance Manual.
- Fuel may congeal depending on the temperature when it is used (particularly in low temperature below-15°C), so it is necessary to change to a fuel that matches the temperature.
- To prevent the moisture in the air from condensing and forming water inside the fuel tank, always fill the fuel tank after completing the day's work.
- Before starting the engine, or when 10 minutes have passed after adding fuel, drain the sediment and water from the fuel tank.
- If the engine runs out of fuel, or if the filters have been replaced, it is necessary to bleed air from the circuit.

## COOLANT

- River water contains large amounts of calcium and other impurities, so if it is used, scale will stick to the engine and radiator, and this will cause defective heat exchange and overheating. Do not use water that is not suitable for drinking.
- When using anti-freeze, always observe the precautions given in the Operation and Maintenance Manual.
- Komatsu machines are supplied with Komatsu original anti-freeze in the coolant when the machine is shipped.
  This anti-freeze is effective in preventing corrosion of the cooling system.
  The anti-freeze can be used continuously for two years or 4000 hours. Therefore, it can be used as it is even in hot areas.
- Anti-freeze is inflammable, so be extremely careful not to expose it to flame or fire.
- The proportion of anti-freeze to water differs according to the ambient temperature.

  **For details of the mixing proportions, see "CLEAN INSIDE OF COOLING SYSTEM (251)"**
- If the engine overheats, wait for the engine to cool before adding coolant.

- If the coolant level is low, it will cause overheating and will also cause problems with corrosion from the air in the coolant.
- See "Precautions when filling radiator (222)".

## GREASE

- Grease is used to prevent corrosion and noise at the joints.
- The nipples not included in the maintenance section are nipples for overhaul, so they do not need grease.
  If any part becomes stiff after being used for long time, add grease.
- Always wipe off all of the old grease that is pushed out when greasing. Be particularly careful to wipe off the old grease in places where sand or dirt sticking in the grease would cause wear of the rotating parts.

## CARRYING OUT KOWA (Komatsu Oil Wear Analysis)

KOWA is a maintenance service that makes it possible to prevent machine failures and down-time. With KOWA, the oil is periodically sampled and analyzed. This enables early detection of wear of the machine drive parts and other abnormalities.

Periodic use of KOWA makes the following possible:

- It enables abnormalities to be detected early, leading to reduction of repair costs and machine downtime.
- It enables repair schedules to be planned, leading to improved machine availability.

## KOWA ANALYSIS ITEMS

- Analysis of metal wear particles
  This uses an ICP (Inductively Coupled Plasma) analyzer to measure the density of metal wear particles in the oil.

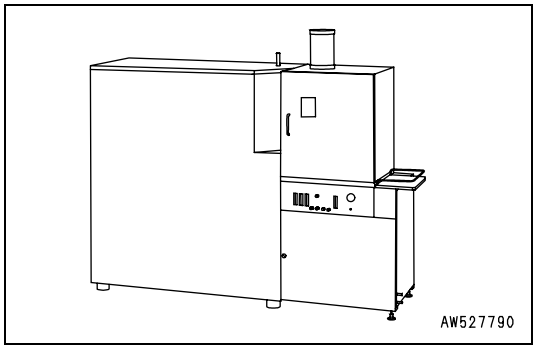


- Measurement of particle quantity
  This uses a PQI (Particle Quantifier Index) metre to measure the quantity of large iron particles in the oil.
- Others
  Measurements are made of items such as the ratio of water or fuel in the oil, and the dynamic viscosity.

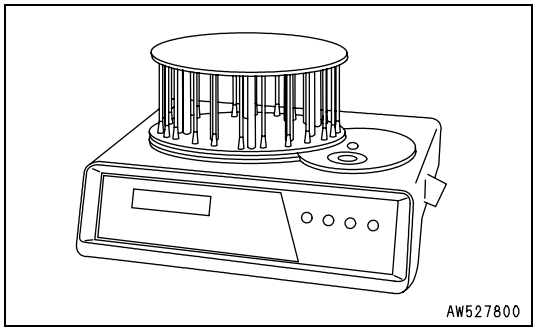

## OIL SAMPLING

- Sampling interval
  250 hours: Engine
  500 hours: Other components
- Precautions when sampling
  - Make sure that the oil is well mixed before sampling.
  - Carry out sampling regularly at fixed intervals.
  - Do not carry out sampling on rainy or windy days when water or dust can get into the oil.

For further details of KOWA, please contact your Komatsu distributor.

## STORING OIL AND FUEL

- Keep indoors to prevent ingress of water, dirt, or other impurities.
- When keeping drums for a long period, put the drum on its side so that the filler port of the drum is at the side (to prevent moisture from being sucked in)
  If drums have to be stored outside, cover them with a waterproof sheet or take other measures to protect them.
- To prevent any change in quality during long-term storage, be sure to use in the order of first in first out (use the oldest oil or fuel first).

## FILTERS

- Filters are extremely important safety parts. They prevent impurities in the fuel and air circuits from entering important equipment and causing problems.
  Replace all filters periodically. For details, see the Operation and Maintenance Manual.
  However, when working in severe conditions, it is necessary to consider replacing the filters at shorter intervals according to the oil and fuel (sulphur content) being used.
- Never try to clean the filters (cartridge type) and use them again. Always replace with new filters.
- When replacing oil filters, check if any metal particles are stuck to the old filter. If any metal particles are found, please contact your Komatsu distributor.
- Do not open packs of spare filters until just before they are to be used.
- Always use Komatsu genuine filters.

# OUTLINE OF ELECTRIC SYSTEM

- If the wiring gets wet or the insulation is damaged, the electric system leaks and this could result in hazardous malfunction of the machine.

- Services relating to the electric system are (1) check of fan belt tension, (2) check of damage or wear in the fan belt and (3) check of battery fluid level.
- Never remove or disassemble any electric components installed in the machine.
- Never install any electric components other than these specified by Komatsu.
- Be careful to keep the electric system free of water when washing the machine or when it rains.
- Since the controller for the control system may cause malfunction due to external wave interference, before installing a radio receiver and a walkie-talkie or citizen band, consult your Komatsu distributor.
- When working on the seashore, carefully clean the electric system to prevent corrosion.
- When installing a car cooler or an other electrical equipment, connect it to an independent power source connector. The optional power source must never be connected to the fuse, starting switch, or battery relay.

## OUTLINE OF HYDRAULIC SYSTEM

- During operation and immediately after operation is ended, the temperature of the hydraulic system still remains high.
  In addition, high hydraulic pressure is applied to the system. Take care when inspecting and maintaining the hydraulic system.
  - Stop the machine on level ground, lower the bucket to the ground, then set so that there is no pressure applied to the cylinder circuit.
  - Always stop the engine.
  - Immediately after operations, the hydraulic oil and lubricating oil are at high temperature and high pressure, so wait for the oil temperature to go down before starting maintenance. Even when the temperature goes down, the circuit may still be under internal pressure, so when loosening the plug or screw, or the hose joint, do not stand in front of the part. Loosen it slowly to release the internal pressure before removing it.
  - When carrying out inspection or maintenance of the hydraulic circuit, always bleed the air from the hydraulic tank to remove the internal pressure.
- Periodic maintenance includes the inspection of the hydraulic oil level, replacement of the filter and refilling of hydraulic oil.
- When a high pressure hose, etc. is removed, check the O-ring for damage. If necessary, replace it.
- After the hydraulic filter element and strainer are cleaned or replaced, or after the hydraulic system is repaired or replaced or the hydraulic piping is removed, bleed air from the hydraulic circuit.

- The accumulators are charged with high-pressure nitrogen gas. Incorrect handling may be dangerous.

  **For the handling procedure, see "HANDLING ACCUMULATORS (146)"**

# WEAR PARTS LIST

Wear parts such as the filter element, bucket tooth, etc. are to be replaced at the time of periodic maintenance or before their abrasion limits.

The wear parts should be changed correctly in order to use the machine economically. For part change, Komatsu genuine parts of excellent quality should be used.
When ordering parts, please check the part number in the parts book.

**The parts in parentheses are to be replaced at the same time.**

| Item | Part No. | Part Name | Q'ty | Replacement frequency |
|---|---|---|---|---|
| Hydraulic oil filter | 20Y-60-31171<br>(07000-15195) | Element (Strainer)<br>(O-ring) | 1<br>(1) | Every 1000 hours service |
| Air cleaner | 600-185-2520<br>600-185-2510<br>(600-184-1280) | Single element<br>Safety element<br>(O-ring) | 1<br>1<br>(1) | When required |
| Engine oil filter | 6736-51-5140 | Cartridge | 1 | Every 500 hours service |
| Fuel filter | 6737-71-6110 | Cartridge | 1 | Every 500 hours service |
| Hydraulic tank filter | 207-60-71180 | Element (Filter) | 1 | Every 500 hours service |

# USE FUEL, COOLANT AND LUBRICANTS ACCORDING TO AMBIENT TEMPERATURE

## PROPER SELECTION OF FUEL, COOLANT AND LUBRICANTS

| Reservoir | | Kind of fluid | AMBIENT TEMPERATURE | | Type OF OIL | CAPACITY | |
|---|---|---|---|---|---|---|---|
| | | | Min. | Max | | Specified | Refill |
| Engine oil pan | | Engine oil (API CE or CF-4) | 0°C<br>-20° C<br>-20°C<br>-15° C | 30°C<br>10° C<br>50° C<br>50° C | SAE 30 CD<br>SAE 10W<br>SAE 10W-30<br>SAE 15W-40 | 16 litre | 16 litre |
| Swing machinery case | | Engine oil | -20° C | 40° C | SAE 30 | 4.5 litre | 4.5 litre |
| Hydraulic system | | Bio-oil | -20° C | 30° C | Panolin HLP synth 46 | 160 litre | 120 litre |
| | | Hydr-oil API-CD | -20° C | 30° C | SAE 10W-30 | | |
| | | Engine oil API-CD | -20° C | 50° C | SAE 15W-40 | | |
| Fuel tank | | Diesel fuel | -10° C<br>-30° C | 40° C<br>-10° C | ASTM D975 No. 2<br>ASTM D975 No 1<br>(for winter use) | 290 litre | |
| Cooling system | | Water | Add antifreeze | | 50% Mix | 16.2 litre | |
| Axles | Front | Multi oil | -30° C | 40° C | Fuchs titan hydra 20W-40 | 11.5 litre | |
| | Rear | | | | | 9.5 litre | |
| Transmission + clutch | | | | | BP tractran 8 | 4.85 litre | 4.85 litre |
| Hubs | Front | | -20° C | 40° C | Fuchs titan hydra 20W-40 | 2.5 litre | |
| | Rear | | | | | 2.0 litre | |

**REMARK**

- We recommend Komatsu genuine oil which has been specifically formulated and approved for use in engine and hydraulic work equipment applications.
- Only use high quality oils which meet internationally recognized specifications.
- When starting the engine in an atmospheric temperature of lower than 0°C, be sure to use engine oil of SAE10W, SAE10W-30 and SAE15W-40, even though an atmospheric temperature goes up to 10° C more or less in the day time.
- Use API classification CE or CF-4 as engine oil. If API classification CD is used reduce the engine oil change interval to half.

- There is no problem if single grade oil is mixed with multi-grade oil (SAE10W-30, 15W-40), but be sure to add single grade oil that matches the temperature in the table.
- We recommend Komatsu genuine oil which has been specifically formulated and approved for use in engine and hydraulic work equipment applications.
- When fuel sulphur content is less than 0.5%, change oil in the oil pan every periodic maintenance hours described in this manual.
  Change oil according to the following table if fuel sulphur content is above 0.5%.

| Fuel sulphur content I | Change interval of oil in engine oil pan |
|---|---|
| 0.5 to 1.0% | 1/2 of regular interval |
| 1.0% to 1.5% | 1/4 of regular interval |

Specified capacity: Total amount of oil including oil for components and oil in piping.

Refill capacity: Amount of oil needed to refill system during normal inspection and maintenance.

Abbreviations:

ASTM: American Society of Testing and Material

SAE: Society of Automotive Engineers

API: American Petroleum Institute

**SPECTRUM XXX**

**KOMATSU GENUINE LUBRICANTS**

| TYPE | CLASS | VISCOSITY | REF.NO |
|---|---|---|---|
| Engine oil | CF - 4 | SAE15W - 40 | EO - 1540 |
| | CF - 4 | SAE10W - 30 | EO - 1030 |
| TRANSMISSION OIL | CD | SAE10W | TO - 10 |
| & GEAR BOX OIL | CD | SAE10W | STO - 10 |
| | | | HEAVY DUTY |
| | CD | SAE30 | TO - 30 |
| | CD | SAE50 | TO - 50 |
| HYDRAULIC OIL | CD | SAE10W | HO - 10 |
| BIO HYDRAULIC OIL | | SAE10W | BO - 10 |
| GREASE | | | LG - N2 |
| BIO GREASE | | | BIO - R2 |
| ANTI FREEZE | | | AF - 03 |
| BIO ANTI FREEZE | | | BIO - AF - 0 |

# USE FUEL, COOLANT AND LUBRICANTS ACCORDING TO AMBIENT TEMPERATURE CONT.

| No. | Supplier | **Engine Oil [CD or CE]** SAE10W, 30, 40 10W30, 15W40 (The 15W40 oil marked * is CE.) | **Gear Oil [GL-4 or GL-5]** SAE80, 90, 140 | **Grease [Lithium-Base]** NLGI No. 2 | **Anti-freeze Coolant [Ethylene Glycol Base] Permanent Type** |
|---|---|---|---|---|---|
| 1 | KOMATSU | EO10-CD<br>EO30-CD<br>EO10-30CD<br>EO15-40CD | GO90<br>GO140 | G2-LI<br>G2-LI-S | AF-ACL<br>AF-PTL<br>AF-PT (Winter, one season type) |
| 2 | AGIP | Diesel sigma S<br>Super diesel multi-grade<br>*Sigma turbo | Rotra MP | GR MU/EP | - |
| 3 | AMOCO | *Amoco 300 | Multi-purpose gear oil | RYKON premium grease | - |
| 4 | ARCO | *Arcofleet S3 plus | Arco HD gear oil | Litholine HEP 2<br>Arco EP moly D | - |
| 5 | BP | Vanellus C3 | Gear oil EP<br>Hypogear EP | Energrease LS-EP2 | Antifreeze |
| 6 | CALTEX | *RPM delo 400<br>RPM delo 450 | Universal thuban<br>Universal thuban EP | Marfak all purpose 2<br>Ultra-duty grease 2 | AF engine coolant |
| 7 | CASTROL | *Turbomax<br>*RX super<br>CRD | EP<br>EPX<br>Hypoy<br>Hypoy B<br>Hypoy C | MS3<br>Spheerol EPL2 | Anti-freeze |
| 8 | CHEVRON | *Delo 400 | Universal gear | Ultra-duty grease 2 | - |
| 9 | CONOCO | *Fleet motor oil | Universal gear lubricant | Super-sta grease | - |
| 10 | ELF | Multiperformance 3C<br>Performance 3C | - | Tranself EP<br>Tranself EP type 2 | Glacelf |
| 11 | EXXON (ESSO) | Essolube D3<br>*Essolube XD-3<br>*Essolube XD-3 Extra<br>*Esso heavy duty<br>Exxon heavy duty | Gear oil GP<br>Gear oil GX | Beacon EP2 | All season coolant |
| 12 | GULF | Super duty motor oil<br>*Super duty plus | Multi-purpose gear lubricant | Gulfcrown EP2<br>Gulfcrown EP special | Antifreeze and coolant |

| No. | Supplier | **Engine Oil [CD or CE]** SAE10W, 30, 40 10W30, 15W40 (The 15W40 oil marked * is CE.) | **Gear Oil [GL-4 or GL-5]** SAE80, 90, 140 | **Grease [Lithium-Base]** NLGI No. 2 | **Anti-freeze Coolant [Ethylene Glycol Base] Permanent Type** |
|---|---|---|---|---|---|
| 13 | MOBIL | Delvac 1300<br>*Delvac super 10W-30, 15W-40 | Mobilube GX<br>Mobilube HD | Mobilux EP2<br>Mobilgrease 77<br>Mobilgrease special | - |
| 14 | PENNZOIL | *Supreme duty fleet motor oil | Multi-purpose 4092<br>Multi-purpose 4140 | Multi-purpose white grease 705<br>707L White - bearing grease | Anti-freeze and summer coolant |
| 15 | PETROFINA | FINA kappa TD | FINA potonic N<br>FINA potonic NE | FINA marson EPL2 | FINA tamidor |
| 16 | SHELL | Rimula X | Spirax EP<br>Spirax heavy duty | Albania EP grease | - |
| 17 | SUN | - | Sunoco GL5 gear oil | Sunoco ultra prestige 2EP<br>Sun prestige 742 | Sunoco antifreeze and summer coolant |
| 18 | TEXACO | *Ursa super plus<br>Ursa premium | Multigear | Multifak EP2<br>Starplex 2 | Code 2055 startex antifreeze coolant |
| 19 | TOTAL | Rubia S<br>*Rubia X | Total EP<br>Total transmission TM | Multis EP2 | Antigel/antifreeze |
| 20 | UNION | *Guardol | MP gear lube LS | Unoba EP | - |
| 21 | VEEDOL | *Turbostar<br>*Diesel star<br>MDC | Multigear<br>Multigear B<br>Multigear C | - | Antifreeze |
| 22 | BP | | BP Tractran 8 | - | - |
| 23 | Fuchs | Fuchs Titan Hydra 20W-40 | | - | - |

# STANDARD TIGHTENING TORQUES FOR BOLTS AND NUTS

## INTRODUCTION OF NECESSARY TOOLS

The following tools are needed when carrying out maintenance.
(These tools are provided in tool box)

| No. | Name of tool | Part No. | Remarks |
|---|---|---|---|
| 1 | Wrench set | 09002-00810<br>09002-01214<br>09002-01317<br>09002-01922<br>09002-02427<br>09002-03032 | Applicable width across flats ($S_1$-$S_2$)<br>8mm - 10mm<br>12mm - 14mm<br>13mm - 17mm<br>19mm - 22mm<br>24mm - 27mm<br>30mm - 32mm |
| 2 | Screwdriver | 09033-00190 | Crosshead/flat head interchangeable type |
| 3 | Socket wrench set | 09020-10282 | Applicable width across flats<br>set 10 mm, 13 mm, 14 mm, 17 mm, 19 mm, 22 mm, 24 mm, 27 mm, 30 mm, 32 mm.<br>Extension, Handle, Joint, Ratchet handle bar |
| 4 | Wrench | 09002-03641 | Applicable width across flats 36 mm - 41 mm |
| 5 | Pliers | 09036-00150 | |
| 6 | Filter wrench | 09019-08035 | |
| 7 | Grease pump | 07950-90403 | For greasing work |
| 8 | Nozzle | 07951-11400 | |
| 9 | Grease cartridge | 07950-90403 | (Lithium base grease: 400 g) |
| 10 | Hammer | 09039-00150 | |
| 11 | Pinch bar | 09055-00520 | |
| 12 | Gauge | 09054-00009 | |
| 13 | Socket | 20E-98-K1110 | 33 mm drive socket |

If any of the above tools are broken, please order them from your Komatsu distributor.

# TIGHTENING TORQUE SPECIFICATIONS

## TIGHTENING TORQUE LIST

**⚠ CAUTION**

**If nuts, bolts, or other parts are not tightened to the specified torque, it will cause looseness or damage to the tightened parts, and this will cause failure of the machine or problems with operation.**
**Pay careful attention when tightening parts.**

Unless otherwise specified, tighten the metric nuts and bolts to the torque shown in the table below.

The tightening torque is determined by the width across the flats of the nut and bolt.

If it is necessary to replace any nut or bolt, use a Komatsu genuine part of the same size as the part that was replaced

| Thread diameter a (mm) | Width across flat b (mm) | Tightening torque | | | |
|---|---|---|---|---|---|
| | | Target value | | Service limit | |
| | | N•m | kgf•m | N•m | kgf•m |
| 6 | 10 | 13.2 | 1.35 | 11.8 - 14.7 | 1.2 - 1.5 |
| 8 | 13 | 31 | 3.2 | 27 - 34 | 2.8 - 3.5 |
| 10 | 17 | 66 | 6.7 | 59 - 74 | 6.0 - 7.5 |
| 12 | 19 | 11 | 11.5 | 98 - 123 | 10.0 - 12.5 |
| 14 | 22 | 177 | 18 | 157 - 196 | 16.0 - 20.0 |
| 16 | 24 | 279 | 28.5 | 245 - 309 | 25.0 - 31.5 |
| 18 | 27 | 382 | 39 | 343 - 425 | 35.0 - 43.5 |
| 20 | 30 | 549 | 56 | 490 - 608 | 50.0 - 62.0 |
| 22 | 32 | 745 | 76 | 662 - 829 | 67.5 - 84.5 |
| 24 | 36 | 927 | 94.5 | 824 - 1030 | 84.0 - 105.0 |
| 27 | 41 | 1320 | 135.0 | 1180 - 1470 | 120.0 - 150.0 |
| 30 | 46 | 1720 | 175.0 | 1520 - 1910 | 155.0 - 195.0 |
| 33 | 50 | 2210 | 225.0 | 1960 - 2450 | 200.0 - 250.0 |
| 36 | 55 | 2750 | 280.0 | 2450 - 3040 | 250.0 - 310.0 |
| 39 | 60 | 3280 | 335.0 | 2890 - 3630 | 295.0 - 370.0 |

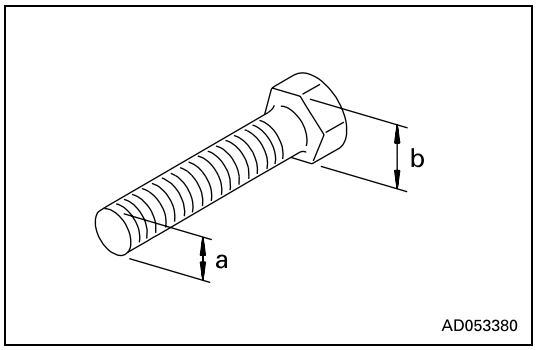


Apply the following table for Hydraulic Hose

.

| Thread diameter a (mm) | Width across flat b (mm) | Tightening torque | | | |
|---|---|---|---|---|---|
| | | Target value | | Service limit | |
| | | N•m | kgf•m | N•m | kgf•m |
| 14 | 19 | 29.4 | 3.0 | 27.5 - 39.2 | 2.8 - 4.0 |
| 18 | 24 | 78.5 | 8.0 | 58.8 - 98.1 | 6.0 - 10.0 |
| 22 | 27 | 117.7 | 12.0 | 88.3 - 137.3 | 9.0 - 14.0 |
| 24 | 32 | 147.1 | 15.0 | 117.7 - 176.5 | 12.0 - 18.0 |
| 30 | 36 | 215.7 | 22.0 | 176.5 - 245.2 | 18.0 - 25.0 |
| 33 | 41 | 255.0 | 26.0 | 215.7 - 284.4 | 22.0 - 29.0 |

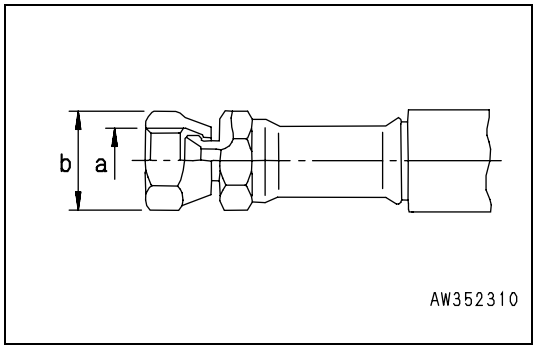

# PERIODIC REPLACEMENT OF SAFETY CRITICAL PARTS

To ensure safety at all times when operating or driving the machine, the user of the machine must always carry out periodic maintenance. In addition, to further improve safety, the user should also carry out periodic replacement of the parts given in the table. These parts are particularly closely connected to safety and fire prevention.

With these parts, the materials easily wear or deteriorate. However, it is difficult to judge the condition of the parts simply by periodic maintenance, so they should always be replaced after a fixed time has passed, regardless of their condition. This is necessary to ensure that they always maintain their function completely.

However, if these parts show any abnormality before the replacement interval has passed, they should be repaired or replaced immediately.

If the hose clamps show any deterioration, such as deformation or cracking, replace the clamps at the same as the hoses.

When replacing the hoses, always replace the O-rings, gaskets, and other such parts at the same time.

Ask your Komatsu distributor to replace the safety critical parts.

| Interval | Check items |
|---|---|
| Check before starting | Oil leakage from the connections or the clamps of fuel and hydraulic hose |
| Monthly inspection | Oil leakage from the connections or the clamps of fuel and hydraulic hose.<br>Damage (crack, wear and tear) of fuel and hydraulic hose. |
| Yearly inspection | Oil leakage from the connections or the clamps of fuel and hydraulic hose.<br>Interference, deformation, deterioration and damage (crack, wear and tear) of fuel and hydraulic hose. |

# SAFETY CRITICAL PARTS

| No. | Safety critical parts for periodic replacement | Q'ty | Replacement interval |
|---|---|---|---|
| 1 | Fuel hose (Fuel tank - Water separator) | 1 | Every 2 years or 4000 hours, whichever comes sooner |
| 2 | Fuel hose (Water separator - Fuel pump) | 1 | |
| 3 | Fuel return hose (Fuel injection pump - Fuel tank) | 1 | |
| 4 | Spill hose (Engine output connector - Fuel tank) | 1 | |
| 5 | Pump outlet hose (Pump - Control valve) | 2 | |
| 6 | Work equipment hose (Boom cylinder inlet) | 4 | |
| 7 | Work equipment hose (Bucket cylinder line - Boom foot section) | 2 | |
| 8 | Work equipment hose (Bucket cylinder inlet) | 2 | |
| 9 | Work equipment hose (Arm cylinder line - Boom foot section) | 2 | |
| 10 | Work equipment hose (Arm cylinder inlet) | 2 | |
| 11 | Additional attachment line hose (Boom foot section) | 2 | |
| 12 | Additional attachment line hose (Boom top section) | 2 | |
| 13 | Swing line hose (Swing motor inlet) | 2 | |
| 14 | Main suction hose | 1 | |
| 15 | Heater hose | 2 | |
| 16 | Travel line hose (Control valve - Swivel joint) | 4 | |
| 17 | Travel line hose (Swivel joint - Travel motor) | 4 | |
| 18 | Seat belt | 1 | Every 3 years |

# MAINTENANCE SCHEDULE CHART


| SERVICE ITEM | PAGE |
|---|---|
| **INITIAL 250 HOURS SERVICE (only after the first 250 hours)** | |
| "REPLACE FUEL FILTER CARTRIDGE" | 244 |
| "CHECK ENGINE VALVE CLEARANCE, ADJUST" | 244 |
| "CHANGE OIL IN TRANSMISSION, HUBS + AXLES." | 244 |
| **WHEN REQUIRED** | |
| "CHECK, CLEAN AND REPLACE AIR CLEANER ELEMENT" | 245 |
| "CLEAN INSIDE OF COOLING SYSTEM" | 250 |
| "CHECKING COOLANT LEVEL" | 253 |
| "CHECK AND TIGHTEN WHEEL NUTS" | 256 |
| "CHECK ELECTRICAL INTAKE AIR HEATER" | 256 |
| "CHECK ALTERNATOR" | 256 |
| "CHECK START MOTOR" | 257 |
| "REPLACE BUCKET SIDE CUTTERS" | 257 |
| "REPLACE BUCKET TEETH" | 258 |
| "ADJUST BUCKET CLEARANCE" | 262 |
| "CHECK WINDOW WASHER FLUID LEVEL, ADD FLUID" | 263 |
| "CHECK AND ADJUST AIR CONDITIONER" | 264 |
| "DRAIN ENGINE BREATHER OIL CATCHER" | 265 |
| **CHECK BEFORE STARTING** | |
| "CHECK COOLANT LEVEL, ADD WATER" | 265 |
| "CHECK OIL LEVEL IN ENGINE OIL PAN, ADD OIL" | 266 |
| "CHECK FUEL LEVEL, ADD FUEL" | 267 |
| "CHECK OIL LEVEL IN HYDRAULIC TANK, ADD OIL" | 268 |
| "CHECK AIR CLEANER FOR CLOGGING" | 268 |
| "CHECK ELECTRIC WIRING" | 269 |
| "CHECK FOR WATER AND SEDIMENT IN SEDIMENTOR. DRAIN WATER AND SEDIMENT" | 269 |
| **EVERY 50 HOURS SERVICE** | |
| "DRAIN WATER AND SEDIMENT FROM FUEL TANK" | 270 |
| **EVERY 100 HOURS SERVICE** | |
| "LUBRICATING" | |

| SERVICE ITEM | PAGE |
|---|---|
| ● "Boom cylinder foot pin (2 points)." | 271 |
| ● "Boom foot pin (2 points)." | 271 |
| ● "Boom cylinder rod end (2 points)." | 271 |
| ● "1st to 2nd boom pin (1 point)." | 271 |
| ● "1st to 2nd boom pin (2 points)." | 271 |
| ● "Arm cylinder foot pin (1 point)." | 271 |
| ● "Boom-Arm coupling pin (1point)." | 272 |
| ● "Arm cylinder rod end (1 point)." | 272 |
| ● "Bucket cylinder foot pin (1 point)." | 272 |
| ● "Arm-Link coupling pin (1 point)." | 272 |
| ● "Arm-Bucket coupling pin (1 point)." | 272 |
| ● "Link coupling pin (1 point)." | 272 |
| ● "Bucket cylinder rod end (1 point)." | 272 |
| ● "Bucket-Link coupling pin (2 points)." | 272 |
| ● "Outrigger cylinder foot pin (2 or 4 points)." | 272 |
| ● "Outrigger cylinder rod end (2 or 4 points)." | 272 |
| ● "Outrigger leg pivot (2 or 4 points)." | 272 |
| ● "Outrigger foot pivot (2 or 4 points)." | 272 |
| ● "Propshaft (3 points)." | 272 |
| ● "Boom adjust cylinder foot pin (1 point)." | 273 |
| ● "Boom adjust cylinder rod end (1 point)." | 273 |
| ● "Axle pivot (2 point) (with outriggers attached)" | 273 |
| ● "Axle pivot (2 point) (without outriggers)" | 273 |
| ● "Hub pivot (4 points)" | 274 |
| ● "Steer links (4 points)" | 274 |
| ● "Axle pads (If noise heard grease as necessary) (2 points)" | 274 |
| ● "Cylinder mount (2 points)" | 274 |
| ● "Top link blade pivot pin (2 points)" | 274 |
| ● "Lower link blade pivot (2 points)" | 274 |
| ● "Dozer blade cylinder rod end (2 points)" | 274 |
| ● "Lower link pivot pin (2 points)" | 274 |
| ● "Top link pivot pin (2 points)" | 274 |
| "CLEANING FRESH AIR FILTER" | 275 |
| | |

| SERVICE ITEM | PAGE |
|---|---|
| **EVERY 250 HOURS SERVICE** | |
| "CHECK OIL LEVEL IN MACHINERY CASE, ADD OIL" | 276 |
| "CHECK OIL LEVEL IN WHEEL HUBS, ADD OIL (Front Axle)" | 277 |
| "CHECK OIL LEVEL IN WHEEL HUBS, ADD OIL (Rear Axle)" | 277 |
| "CHECK OIL LEVEL IN AXLES, ADD OIL" | 277 |
| "CHECK OIL LEVEL IN TRANSMISSION, ADD OIL" | 278 |
| "CHECK LEVEL OF BATTERY ELECTROLYTE" | 278 |
| "BELTS, GENERAL" | 279 |
| "CHECK FAN BELT TENSION, ADJUST TENSION" | 279 |
| "CHECK, ADJUST TENSION OF AIR CONDITIONER COMPRESSOR BELT" | 280 |
| **EVERY 500 HOURS SERVICE** | |
| "LUBRICATE SWING CIRCLE (2 POINTS)" | 282 |
| "REPLACE FUEL FILTER CARTRIDGE" | 283 |
| "CHECK SWING PINION GREASE LEVEL, ADD GREASE" | 284 |
| "CHANGE OIL IN ENGINE OIL PAN, REPLACE ENGINE OIL FILTER CARTRIDGE" | 285 |
| "CLEAN AND INSPECT RADIATOR FINS, OIL COOLER FINS AND CONDENSER FINS" | 286 |
| "CLEAN INTERNAL AND EXTERNAL AIR FILTERS OF AIR CONDITIONER SYSTEM" | 287 |
| "CLEANING RECIRCULATED AIR FILTER" | 288 |
| "REPLACE HYDRAULIC TANK BREATHER ELEMENT" | 289 |
| "CHECK VALVE RUBBER MOUNTS" | 289 |
| **EVERY 1000 HOURS SERVICE** | |
| "REPLACE HYDRAULIC FILTER ELEMENT" | 290 |
| "CHANGE OIL IN SWING MACHINERY CASE." | 291 |
| "CHECK ALL TIGHTENING PARTS OF TURBOCHARGER." | 291 |
| "CHECK PLAY OF TURBOCHARGER ROTOR." | 292 |
| "CHECK & ADJUST VALVE CLEARANCE" | 292 |
| "CHECK FAN BELT TENSIONER BEARING BELT AND FAN HUB" | 292 |
| "CHECK FAN BELT TENSION AND REPLACE FAN BELT" | 292 |
| "CHANGE OIL IN AXLES" | 293 |
| "CHANGE OIL IN HUBS" | 294 |
| "CHANGE OIL IN TRANSMISSION ASSEMBLY" | 295 |
| **EVERY 2000 HOURS SERVICE** | |
| "CLEAN HYDRAULIC TANK STRAINER" | 296 |

| SERVICE ITEM | PAGE |
|---|---|
| "CLEAN, CHECK TURBOCHARGER" | 296 |
| "CHECK ALTERNATOR, STARTING MOTOR" | 296 |
| "CHANGE ANTIFREEZE" | 296 |
| "CHANGE ANTIFREEZE" | 296 |
| "CHECK AND ADJUST VALVE CLEARANCE" | 297 |
| **EVERY 4000 HOURS SERVICE** | |
| "CHECK WATER PUMP" | 297 |
| **EVERY 5000 HOURS SERVICE** | |
| "CHANGE OIL IN HYDRAULIC TANK" | 298 |

# KEY TO LUBRICATION POINTS

| | | | |
|---|---|---|---|
| 1. Engine oil | check level<br>change oil | 23.Rear propshaft | grease |
| 2. Hydraulic oil | check level<br>change oil | 24. Front propshaft | grease |
| 3. Boom cylinder foot pin | grease | 25. Cylinder mounts | grease |
| 4. Boom foot pin | grease | 26. Top link pins | grease |
| 5. Boom cylinder rod end | grease | 27. Lower link pins | grease |
| 6. Arm cylinder foot pin | grease | 28. Outrigger foot pivot | grease |
| 7. Boom arm coupling pin | grease | 29. Outrigger cylinder foot pin | grease |
| 8. Arm cylinder rod end | grease | 30. Outrigger cylinder rod end | grease |
| 9. Bucket cylinder foot pin | grease | 31. Outrigger leg pivot | grease |
| 10. Bucket cylinder rod end | grease | 32. Transmission oil | check level<br>change oil |
| 11. Link coupling pin | grease | 33. Wheel hubs (front) | check level<br>change oil |
| 12. Arm-bucket coupling pin | grease | 34. Wheel hubs (rear) | check level<br>change oil |
| 13. Arm-link coupling pin | grease | 35. Front axle | check level<br>change oil |
| 14. Bucket-link coupling pin | grease | 36. Rear axle | check level<br>change oil |
| 15. Swing machinery oil | check level<br>change oil | 37. Hydraulic filter element | change filter |
| 16. Adjust cylinder foot pin | grease | 38. Swing pinion | grease<br>change oil |
| 17. Adjust cylinder rod end | grease | 39. Swing circle | grease |
| 18. 1st boom - 2nd boom coupling pin | grease | 40. Engine oil filter | change filter |
| 19. 1st boom - 2nd boom coupling pin | grease | 41. Fuel filters | change filter |
| 20. Steer links | grease | 42. Hydraulic oil | change filter |
| 21. Axle pads | grease | 43. Axle pivot | grease |
| 22. King pin (top + bottom) | grease | | |

| | | | |
|---|---|---|---|
| | Interval of service | | Change filter |
| | Lubrication by greasing (G) | (LITRES) | Amount of oil required at change (litres) |
| | Check oil level/change (EO) | | |

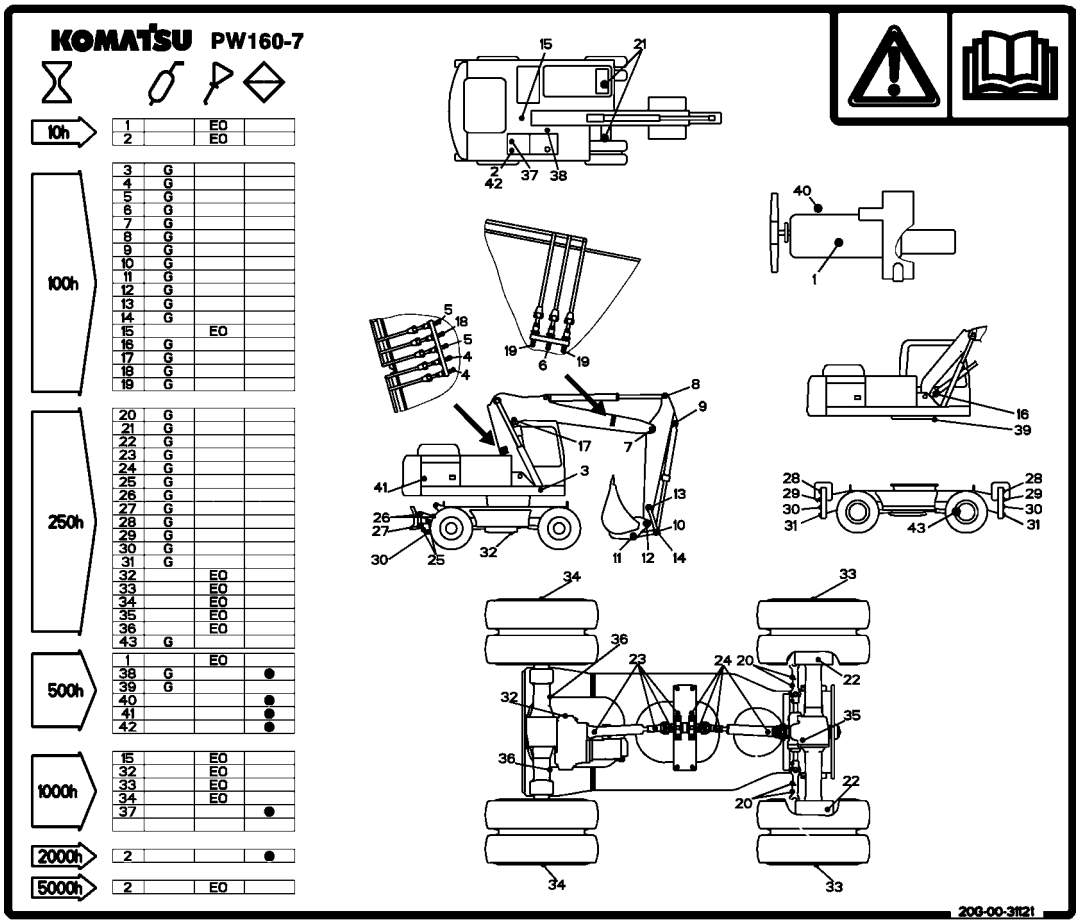

# SERVICE PROCEDURE

## INITIAL 250 HOURS SERVICE

**Carry out the following maintenance only after the first 250 hours.**

- REPLACE FUEL FILTER CARTRIDGE

  **For details, see "REPLACE FUEL FILTER CARTRIDGE (283)"**

- CHECK ENGINE VALVE CLEARANCE, ADJUST

  **For details, see "CHECK ENGINE VALVE CLEARANCE, ADJUST (244)"**

  **For details of the method of replacing or maintaining, see the section on EVERY 500 HOURS and 2000 HOURS SERVICE.**

- CHANGE OIL IN TRANSMISSION, HUBS + AXLES.

# WHEN REQUIRED

## CHECK, CLEAN AND REPLACE AIR CLEANER ELEMENT

**⚠ WARNING**

- **If inspection, cleaning, or maintenance is carried out with the engine running, dirt will enter the engine and cause damage to the engine. Stop the engine before carrying out these operations.**
- **When using compressed air, there is danger of dirt flying and causing personal injury.**
  **Wear protective glasses, dust mask, or other protective equipment.**
- **When removing the outer element from the air cleaner body, it is dangerous to pull it out by force. When working at high places or where the foothold is poor, be careful not to fall because of the reaction when pulling out the outer element.**

### Checking

If air cleaner clogging monitor (H) on the monitor panel lights up, clean the air cleaner element.

### Replacing

- Replacing element, O-ring
  If one year has passed since installing the element or if air cleaner clogging monitor (H) on the monitor panel flashes immediately after the element is cleaned, replace the outer element, inner element, and O-ring.
- Replacing evacuator valve
  Replace it if it is damaged or the rubber is markedly deformed.

**NOTICE**

**Do not clean the air cleaner element until the air cleaner clogging symbol on the monitor panel flashes. If the element is cleaned frequently before the clogging monitor flashes, the air cleaner will not be able to display its performance fully, and the cleaning efficiency will also go down.**
**In addition, during the cleaning operation, more dirt stuck to the element will fall inside the inner element.**

### Outer Element - Clean

1. Open the door at the left side of the machine, remove 3 hooks (2), then remove cover (6).

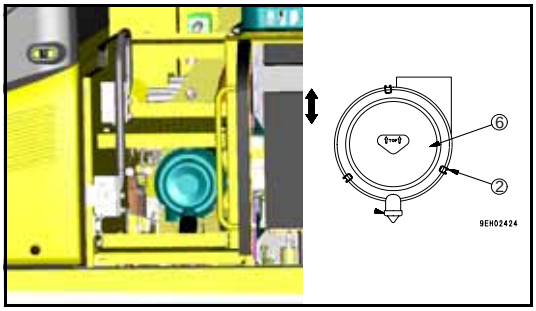


**NOTICE**

**Before and after cleaning the element, do not leave or keep it in direct sunlight.**

2. Hold the outer element, rock it lightly up and down and to the left and right, and rotate the element to the left and right to pull it out.

**NOTICE**

- **Never remove the inner element. It will allow dirt to enter and cause failure of the engine.**
- **Do not use a screwdriver or other tool.**

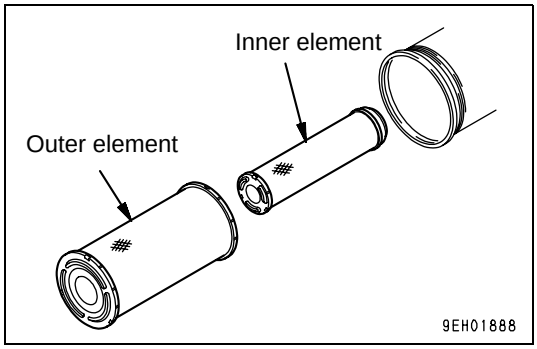


1. After removing the outer element, cover the air connector inside the air cleaner body with a clean cloth or tape to prevent dirt or dust from entering.

2. Wipe off or brush off the dirt stuck to cover (6) and the inside of the air cleaner body.

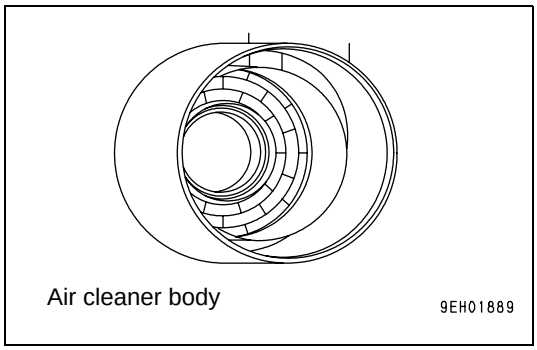


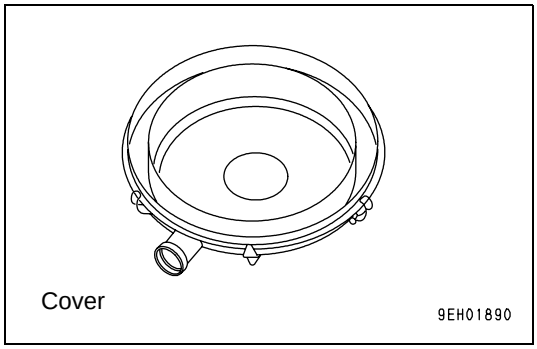

3. Remove any dirt or dust that is accumulated in the evacuator valve installed to cover.

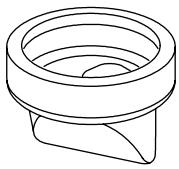

Evacuator valve

9EH01891

4. Direct dry compressed air (less than 0.69 MPa (7 kgf/cm$^2$) to the outer element from inside along its folds, then direct it from outside along its folds and again from inside.
   - ❍ Remove one seal from the element whenever the element has been cleaned.
   - ❍ Replace the outer element which has been cleaned 5 times repeatedly or used throughout a year. Replace the inner element at the same time.
   - ❍ Replace both inner and outer elements when the monitor lamp (H) lights up soon after installing the cleaned outer element even though it has not been cleaned 5 times.
   - ❍ When replacing the element, new stick-on-seal is packed in the same box as the element. Stick the seal in the position.

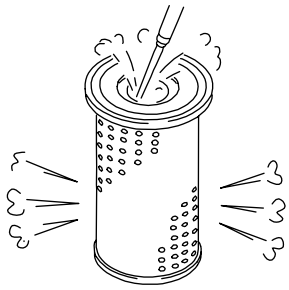

AD053020

5. Remove the cloth or tape cover installed in Step 3.

6. If small holes or thin cracks are found on the element when it is checked by shining a light through it after cleaning, replace the element.

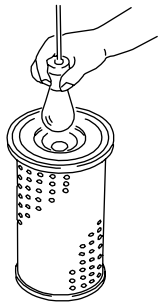

AD053040

**NOTICE**

- **When cleaning the element, do not hit or beat it against anything.**
- **Do not use an element whose folds or gasket or seal are damaged.**

## Air Cleaner Element - Install

**NOTICE**

- **Do not use any damaged gasket or seal or element with damaged pleats.**
- **Cleaning the element or O-ring after one year has passed and using them again will cause problems. Replace them with new parts.**
- **The seal portion on imitation parts lacks precision, and allows the entry of dust, which leads to damage of the engine. Do not use such imitation parts.**
- **Do not run the engine with the inner element removed. It will cause damage to the engine.**

1. Check that there is no dirt or oil stuck to the seal portion of the new element or cleaned element. Wipe off any dirt or oil.
2. When the outer element has been removed, check that the inner element has not come out of position and is not at an angle. If at an angle, insert your hand and push it in straight.
3. Push the outer element in straight with your hand when installing it to the air cleaner body.
   If the element is held and rocked lightly up and down and to the left and right while pushing it in, the element can be inserted easily.

**NOTICE**

**When inserting the element, if the rubber at the tip is swollen or the outer element is not pushed in straight, and cover (6) is assembled by force to hook (2), there is danger that the hook and air cleaner body may be damaged, so be careful when assembling.**

4. Install cover (6) as follows.
   - ❍ Align cover (6) with the element.
   - ❍ Hook the tip of hook (2) to the protruding part of the air cleaner body and lock it in position.
   - ❍ When locking hooks (2) in position, apply the hooks in turn on opposite sides (top, bottom, left, right) in the same way as when tightening bolts.
   - ❍ Install cover (6) so that the evacuator is facing the ground.
   - ❍ When cover (6) is installed, check that the clearance between the air cleaner body and cover (6) is not too large.
     If it is too large, install again.

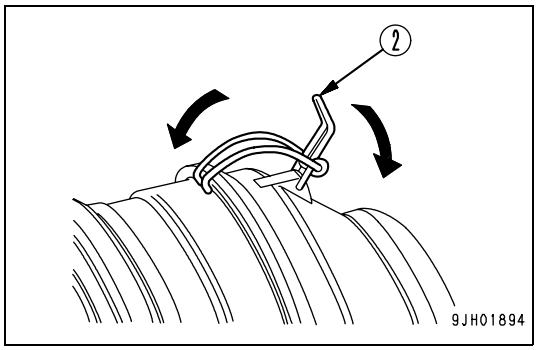


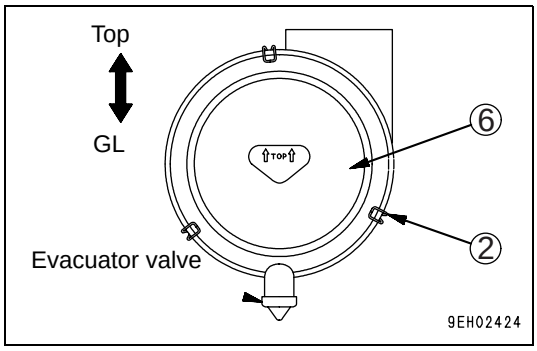

**Air Cleaner Inner Element - Replace**

1. First remove the outer element, and then remove the inner element.
2. Cover the air connector side (outlet side) with a clean cloth or tape.
3. Clean the air cleaner body interior, then remove the cover from the air intake port in Step 2.
4. Install a new inner element to the connector, then tighten the nut.

**NOTICE**

**The inner element must not be cleaned and used again. When replacing the outer element, replace the inner element at the same time.**

5. Set the outer element in position, then lock cover (6) with hooks (2).

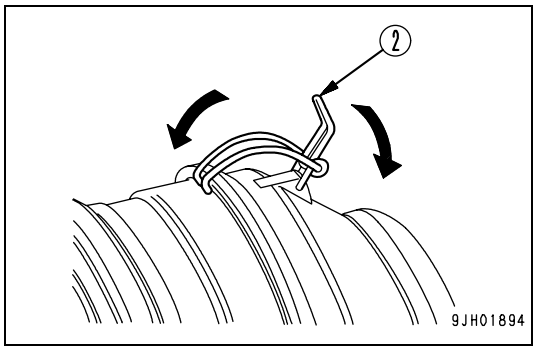


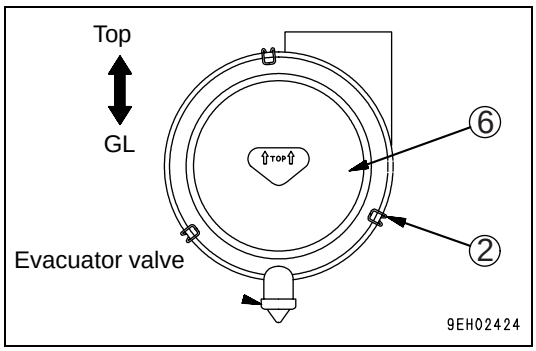

## CLEAN INSIDE OF COOLING SYSTEM

**⚠ WARNING**

- **Soon after the engine has been stopped, the coolant is hot and can cause personal injury. Allow the engine to cool before draining water.**
- **Since cleaning is performed while the engine is running, it is very dangerous to enter the rear side of the machine as the machine may suddenly start moving. If the under cover is left removed, it may interfere with the fan. While the engine is running, never enter the rearside of the machine.**
- **Never remove the radiator cap when the engine is at operating temperature. At operating temperature, the coolant is under pressure. Steam blowing up from the radiator could cause personal injury. Allow the engine to cool until the radiator filler cap is cool enough to touch with your hand. Remove the filler cap slowly to allow pressure to be relieved.**
- **Opening Engine Compartment Hood**
  **Whenever access is required to the engine compartment via the hood, always ensure that the work equipment is tipped as far forward as possible.**
  **This will ensure that the hoses mounted on the work equipment do not impede the engine hood when it is opened/closed.**

### GENERAL

The cooling system operates under pressure which is controlled by the pressure relief valve in the radiator cap.

The belt-driven water pump circulates the coolant through the engine block, cylinder heads, radiator and engine oil cooler. Circulation is controlled by the thermostat which by-passes coolant flow around the radiator until the engine reaches operating temperature.

Proper cooling is possible only when the system is sealed, the radiator cap gasket is in good condition, the pressure relief valve and thermostat are operating properly. The system is free of coolant and air flow restrictions and the system is filled to the proper level.

Selection and maintenance of the engine coolant is important to long engine life. The following information provides recommendations for selecting the engine coolant, maintaining the coolant inhibitors and servicing the cooling system.

The system operates successfully with a water/antifreeze mixture or inhibited/conditioned water as the coolant. Water alone allows rust, scale deposits, and corrosion to occur within the system.

Every 2000 hours, the cooling system should be drained, flushed, and refilled as described in this section.

## CLEAN INSIDE OF COOLING SYSTEM

**⚠ WARNING**

- **Immediately after the engine is stopped, the coolant is at a high temperature and the radiator is under high internal pressure.**
  **If the cap is removed to drain the coolant in this condition, there is a hazard of burns. Wait for the temperature to go down, then turn the cap slowly to release the pressure before removing it.**
- **Cleaning is carried out with the engine running. When standing up or leaving the operator's seat, raise the safety lock lever to the LOCK position.**
- **For details of starting the engine, see "CHECK BEFORE STARTING ENGINE (147)" and "STARTING ENGINE (160)" in the OPERATION section.**
- **There is danger of touching the fan if the undercover is left removed.**
  **Never enter behind the machine when the engine is running.**

Clean the inside of the cooling system, change the coolant and replace the corrosion resistor agent KI according to the table below.

| Kind of coolant | Cleaning inside of cooling system and changing coolant | Adding corrosion resistor agent KI |
|---|---|---|
| Permanent type antifreeze (All season type) | Every year (autumn) or every 2000 hours whichever comes first | Every 1000 hours and when cleaning the inside of the cooling system and when changing coolant. |
| Non permanent type antifreeze containing ethylene glycol (winter, one season type) | Every 6 months (spring, autumn) (Drain antifreeze in spring, add antifreeze in autumn) | |
| When not using antifreeze | Every 6 months or every 1000 hours whichever comes first | |

Stop the machine on level ground when cleaning or changing the coolant.

Use a permanent type of antifreeze.

If, for some reason, it is impossible to use permanent type antifreeze, use an antifreeze containing ethylene glycol.

Super Coolant (AF-ACL) has an anti-corrosion effect as well as an antifreeze effect.

The ratio of antifreeze to water depends on the ambient temperature, but to obtain the corrosion resistance effect, a minimum ratio of 30% by volume is necessary.

In areas where the water is hard, add Komatsu genuine corrosion resistor agent KI. One packet of corrosion resistor agent contains 100g. The standard density of the mixture should be 7 g/litres.

When deciding the ratio of antifreeze to water, check the lowest temperature in the past, and decide from the mixing rate table given below. For details, see "Mixing rate of water and antifreeze (252)"

It is actually better to estimate a temperature about 10°C lower when deciding the mixing rate.

**Mixing rate of water and antifreeze**

| Min. atmospheric temperature | º C | -5 | -10 | -15 | -20 | -25 | -30 |
|---|---|---|---|---|---|---|---|
| Amount of antifreeze | litres | 3.75 | 4.9 | 5.8 | 6.6 | 7.45 | 8.1 |
| Amount of water | litres | 12.45 | 11.3 | 10.4 | 9.6 | 8.75 | 8.1 |

**⚠ WARNING**

**Antifreeze is flammable, so keep it away from any flame.**

- Use city water for the cooling water.
  If river water, well water or other such water supply must be used, contact your Komatsu distributor.
- We recommend use of an antifreeze density gauge to control the mixing proportions.

**⚠ WARNING**

**When removing drain plug, avoid pouring coolant on yourself.**

**REMOVAL**

**⚠ WARNING**

- **Hot, scalding coolant can spray out if the radiator cap is removed suddenly. Relieve system pressure by slowly turning the cap to the first notch or lifting the safety lever (if equipped). Remove the cap only after the pressure is relieved.**
- **Use extreme caution when adding coolant to the radiator to avoid being burned. Wear gloves and goggles and keep face away from the filler neck.**

To remove the cap, turn the cap to the left, or counterclockwise up to the safety stop until the cap is free to be removed.

**INSTALLATION**

When installing the cap, the gasket and contacting surfaces must be clean. Turn the cap to the right, or clockwise until snug.

# CHECKING COOLANT LEVEL

**REMARK**

Check the coolant level before starting the engine.

1. Check the coolant level in the radiator reserve tank (5). The coolant level should be between the FULL and LOW markings on the tank.
2. If coolant must be added, remove the reserve tank cap (4) and add coolant until level is between the FULL and LOW markings on the tank.

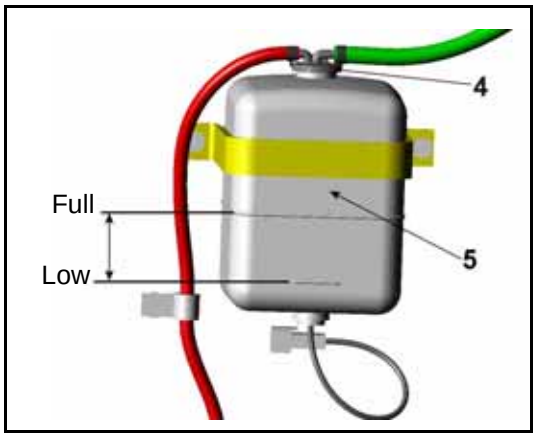


## DRAINING THE SYSTEM

**WARNING**

- **Before working on the engine or electrical system, disconnect the negative (ground) battery cable. Tag the cable and controls to warn against starting.**
- **Wear hand and eye protection when draining hot fluids.**

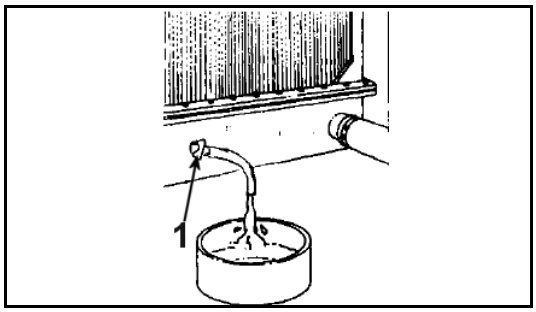


1. Run the engine until it reaches operating temperature then stop the engine.
2. Remove the radiator cap as outlined in this section.
3. Remove the undercover. Place a container below drain plug.
4. Remove the coolant drain plug located on the bottom of the radiator (1).
5. Allow the system to completely drain into the container.
   Do not let drain outlets clog up during draining.
6. Fit the radiator drain Plug (1)
7. Replace undercover.

## CLEANING THE SYSTEM

At 2000 hours clean the cooling system as follows:

1. Drain the system into a suitable container. Refer to "DRAINING THE SYSTEM (253)".
2. Drain and clean the reserve tank.
3. Close the radiator plug.
4. Fill the system with clean water, refer to "FILLING THE SYSTEM (254)" and add a flushing compound that is compatible with aluminium. Flush the system in accordance with the instructions furnished with the compound.
5. After flushing, rinsing and completely draining the system. Refill with clean coolant. Refer to "FILLING THE SYSTEM (254)".

## FILLING THE SYSTEM

**REMARK**

Be sure to fill the heater and heater supply lines with fresh coolant, even if the heater is not in use (warm weather). Leaving the heater core empty causes corrosion in the heater.

1. Be sure the radiator drain is closed and tightened.
2. Fill the cooling system to maximum capacity. Fill with anti-freeze. For coolant specifications, see "COOLANT (224)".

   See "Precautions when filling radiator (222)".
3. Start engine and run until normal operating temperature is reached. Add coolant when needed to keep proper level in reserve tank.
4. After all air is removed and level remains fixed, install the radiator cap.
5. Fill the radiator reserve tank with coolant until level is between the FULL and LOW markings on the tank.

## REFILLING AN OVERHEATED SYSTEM

Do not add coolant to the radiator of an overheated engine unless absolutely necessary. However, if necessary:

1. Remove the radiator cap. Refer to “RADIATOR CAP” in this section.
2. Be sure the drain plug is closed.

**⚠ WARNING**

**Use extreme caution when adding coolant to a hot radiator to avoid being burned. Wear gloves and goggles and keep away from the filler neck.**

3. Add coolant to the radiator slowly until full.

See "Precautions when filling radiator (222)".

4. Remove the reserve tank cap.
5. Add coolant to the reserve tank until the level is between FULL and LOW marking on the tank.
6. When coolant level remains fixed between the FULL and LOW on the reserve tank, install the reserve tank cap.
7. Run the engine.
8. Stop the engine.
9. Check for leaks and coolant level in the reserve tank.

## CLEANING THE RADIATOR

Minor internal sludge accumulations will be removed when flushing the cooling system.

When internal accumulations are found that cannot be removed by normal flushing methods, consult your distributor.

Remove all bugs and dirt from the radiator core, using air or water under pressure. Direct the flow through the core, opposite to the normal direction of air flow.

## THERMOSTAT

### REMOVAL

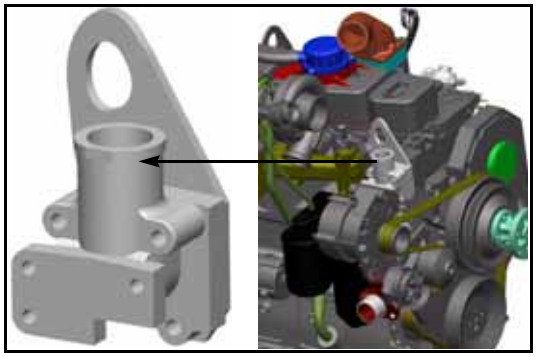

1. Drain the cooling system. Refer to "DRAINING THE SYSTEM (253)" in this section.
2. Remove the components and housing to access the thermostat.
3. Remove the thermostat and clean all gasket material from either mating surfaces.

### INSTALLATION

1. Install new thermostat with new gasket.
2. Re-install thermostat housing and all component parts.
3. Fill the cooling system. Refer to “COOLING THE SYSTEM” in this section.

## FAN

**WARNING**

**Personal injury can result from a fan blade failure. Never pull or pry on the fan. This can damage the fan blade(s) and cause fan failure.**

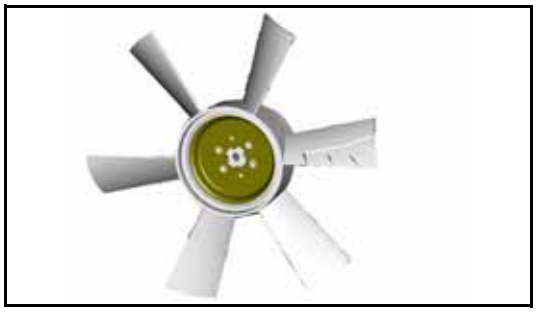

Check the fan for cracks, loose rivets (for metal fans) and bent or loose blades. Make sure it is securely mounted. Tighten the cap screws if loose. Replace damaged fans.

## CHECK AND TIGHTEN WHEEL NUTS

### Order for tightening

Tighten the bolts in the order shown in the diagram. Torque to 80kgm.

## CHECK ELECTRICAL INTAKE AIR HEATER

Before the start of the cold season (once a year), contact your Komatsu distributor to have the electrical intake air heater repaired or checked for dirt or disconnections.

## CHECK ALTERNATOR

### GENERAL

The alternator requires no lubrication since its bearings are factory lubricated for life and require attention only at the time of major overhaul.

The alternator is equipped with an integral, transistorized voltage regulator. If the alternator fails to operate properly, consult your distributor.

### PRECAUTIONS

**REMARK**

The unit electrical system is negative ground. Be CERTAIN the ground polarity is correct when:

a. Installing a new battery.

b. Connecting a battery charger.

c. Using a booster.

Failure to observe proper polarity will result in damage to the alternator.

NEVER use a fast charger as a booster to start the engine.

NEVER unhook a battery terminal while the engine is running.

NEVER disconnect the alternator cable while the engine is running.

**REMARK**

Do not short across or ground any terminals of the alternator. Do not connect any cable to the “R” terminal on the alternator. This will result in severe damage to the harness and radiator.

## CHECK START MOTOR

Under normal operating conditions, no maintenance is required between engine overhaul periods. At the time of engine overhaul, the motor should be disassembled, inspected, cleaned and tested. Contact your distributor for detailed information.

# REPLACE BUCKET SIDE CUTTERS

**⚠ WARNING**

- **It is dangerous if the work equipment moves by mistake when the teeth are being replaced. Set the work equipment in a stable condition, then stop the engine and apply the control lever pad safety lock.**
- **In certain conditions it may be possible for the safety lock lever to contact the left hand arm rest on the operator seat.**
  **to avoid this, always ensure that the left hand arm rest is stowed in the fully up position before operating the safety lock lever.**

1. loosen nuts (5) and bolts (3) and remove side cutters (1) and (2).
2. Clean cutter mounting face on bucket side plate.
3. Check nuts and bolts and replace if damaged.
4. Fit new side cutters.
5. Tighten bolts to 110 ± 10 kgm.

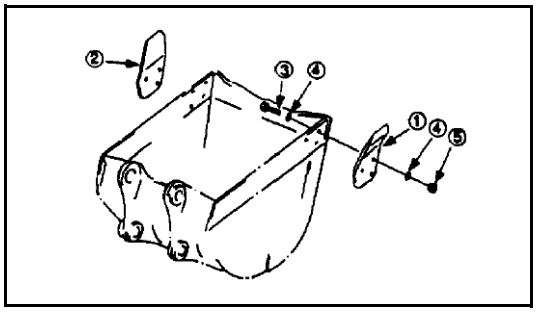


**REMARK**

When side cutters are not being used shrouds should be fitted to prevent wear of the bucket side plate.

# REPLACE BUCKET TEETH

## REPLACE BUCKET TEETH (VERTICAL PIN TYPE)

Replace the point before the adapter starts to wear.

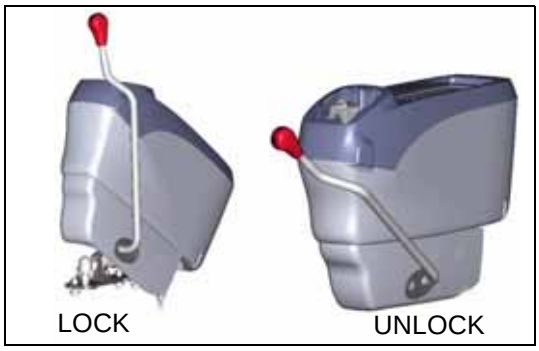


**⚠ WARNING**

- **It is dangerous if the work equipment moves by mistake when the teeth are being replaced. Set the work equipment in a stable position, then stop the engine and apply the locks securely to the levers.**
- **If the locking pin is knocked out with excessive force, there is a hazard that the pin may fly out. Check that there is no one in the surrounding area.**
- **Pieces will often fly during the replacement operation, so wear safety glasses, gloves, and other protective equipment.**

1. To make it possible to knock out the pin of tooth (1), set the bottom surface of the bucket on a block, check that the work equipment is in a stable condition, raise the safety lock lever to the LOCK position.

   Set so that the bottom face of the bucket is horizontal.

2. Use a hammer and drift to knock out lock pin (2). (If the drift is set against rubber pin lock (3) when it is hit, the rubber pin lock may break. Set it against the back of the pin.)
3. After removing lock pin (2) and rubber pin lock (3), check them.

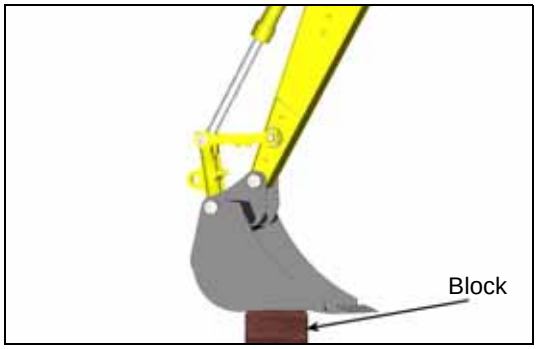


**REMARK**

If lock pins and rubber pin locks with the following defects are used, the teeth may come off the bucket. Replace them with new ones.

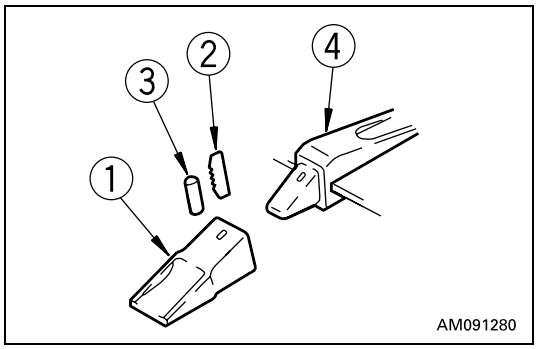


- The lock pin is too short.

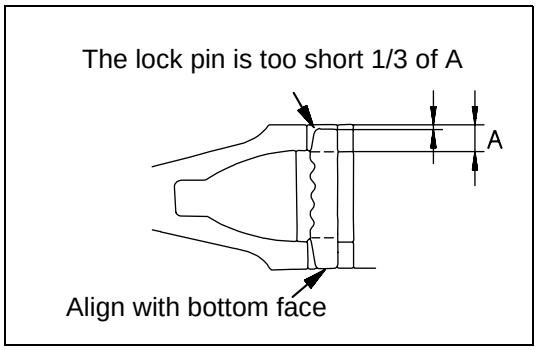

- The rubber of the rubber pin lock is torn, and the steel balls may come out.

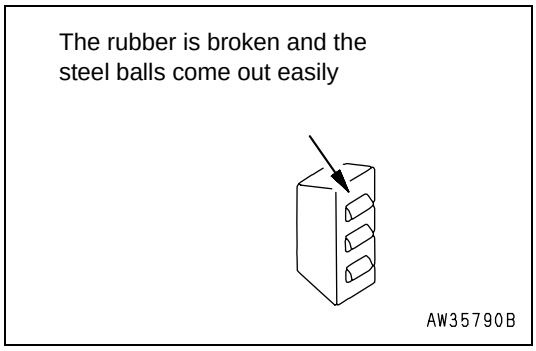


- The steel balls are buried when they are pressed by hand.

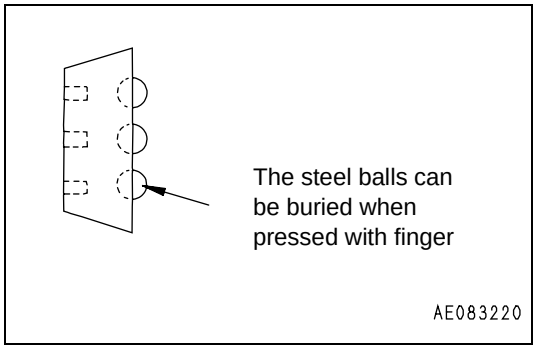


4. Clean the surface of adapter (4) and remove the soil with a knife.
5. Use your hand or a hammer to push rubber pin lock (3) into the hole of the adapter.

   When doing this, be careful that the rubber pin lock does not fly out from the adapter surface.
6. Clean the inside of teeth (1), then install it to adapter (4). If there is mud affixed to it or if there are other protrusions, the teeth will not enter the adapter properly, and there will not be proper contact at the mating portion.

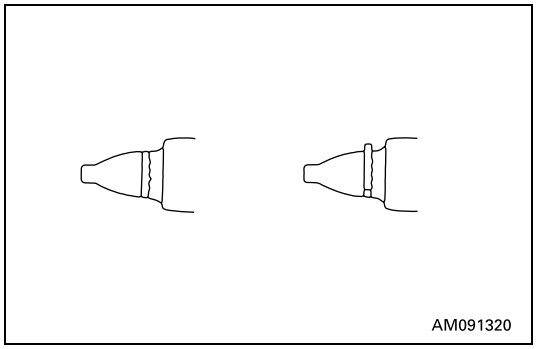


7. Fit tooth (1) to adapter (4), and confirm that when the tooth is pressed strongly, the rear face of the hole for the pin of the tooth (1) is at the same level as the rear face of the hole for the pin of the adapter.

   If the rear face of the hole for the pin of tooth (1) is protruding to the front from the rear face of the pin hole for adapter (4), do not try to knock the pin in.

   There is something preventing tooth (1) from entering adapter (4) fully, so remove the obstruction. When tooth (1) enters adapter (4) fully, knock in lock pin (2).

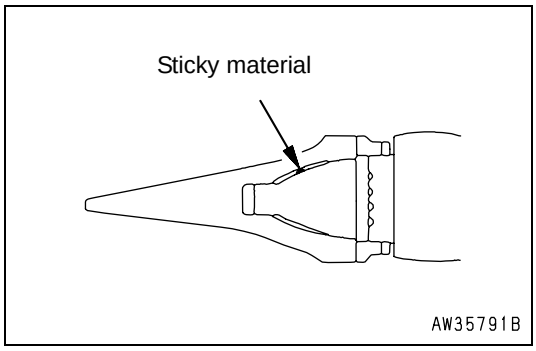

8. Insert lock pin (2) in the hole of the tooth and hit it until its top is the same level as the surface of tooth (1).

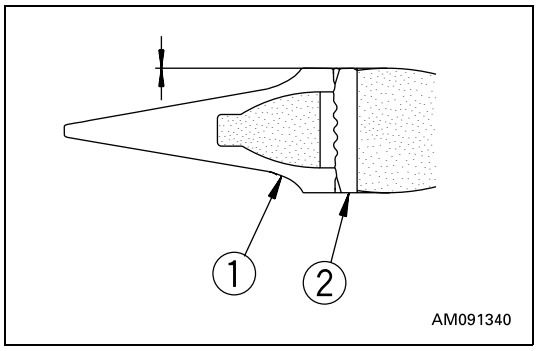


9. After replacing a bucket tooth, check the following.
   - After the lock pin has been knocked in completely, check that it is secured by the point and surface.
   - Lightly hit lock pin (2) in the reverse direction from which it was hit in.
   - Lightly hit the tip of the point from above and below, and hit its sides from right and left.
   - Confirm that rubber pin lock (3) and lock pin (2) are set as shown in the figure.

   The life of the teeth can be lengthened and the frequency of their replacement can be reduced by turning them upside down so that they will wear evenly.

   Replace the rubber pin lock and locking pin at the same time as replacing the teeth. This makes it possible to prevent the teeth from falling out.

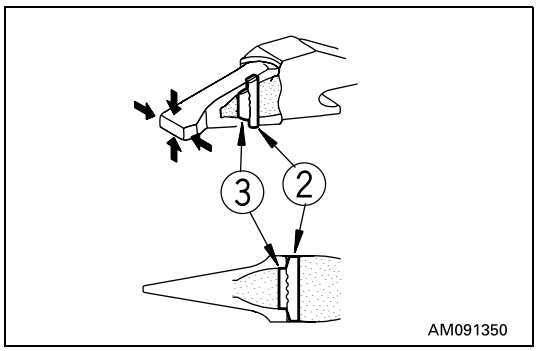

## REPLACE BUCKET TEETH (HORIZONTAL PIN TYPE)

Replace the point before the wear reaches the adapter.

**WARNING**

- **It is dangerous if the work equipment moves by mistake when the teeth are being replaced. Set the work equipment in a stable position, then stop the engine and raise the safety lock lever to the LOCK position.**
- **If the locking pin is knocked out with excessive force, there is a hazard that the pin may fly out. Check that there is no one in the surrounding area.**
- **Pieces will often fly during the replacement operation, so wear safety glasses, gloves, and other protective equipment.**

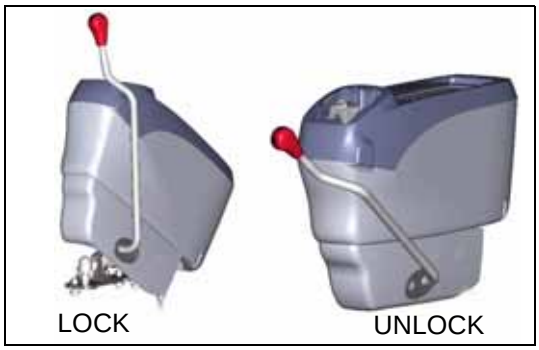


1. Set the bottom of the bucket on a block to make it possible to remove pin (1), check that the work equipment is stable, then raise the safety lock lever to the LOCK position.

   Set so that the bottom of the bucket is horizontal.

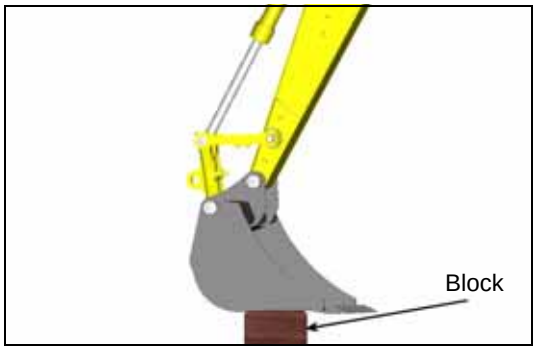


2. Place a bar on the pin head and strike the bar with a hammer to knock out pin (1). Remove tooth (2).

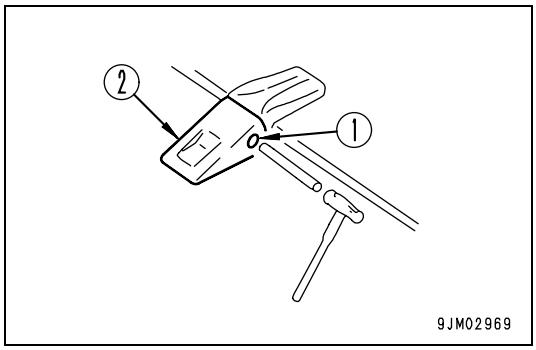


**REMARK**

Use a round bar with a smaller diameter than that of the pin.

3. Clean the mounting face. Fit a new tooth (2) in the adapter, push in pin (1) partially by hand, then lock it with a hammer to install the tooth to the bucket.

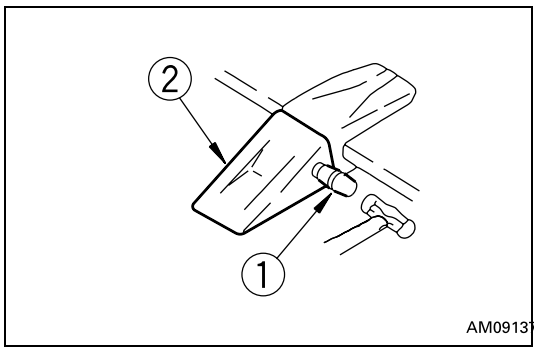

# ADJUST BUCKET CLEARANCE

**⚠ WARNING**

- **It is dangerous if the work equipment moves by mistake when the clearance is being adjusted.**
- **Set the work equipment in a stable position, then stop the engine and raise the safety lock lever to the LOCK position.**
- **In certain conditions it may be possible for the safety lock lever to contact the left hand arm rest on the operator seat.**
  **to avoid this, always ensure that the left hand arm rest is stowed in the fully up position before operating the safety lock lever.**

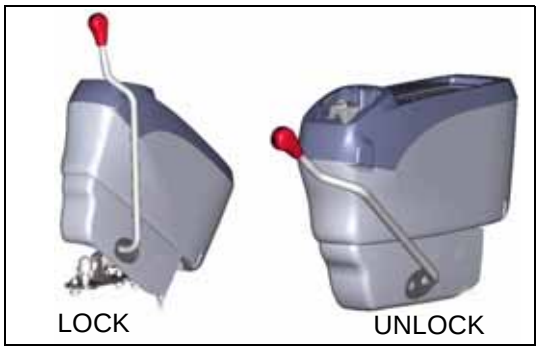


1. Set the work equipment to the position shown in the diagram at right, stop the engine and raise the safety lock lever to the LOCK position.
2. Shift O-ring (1) of the linkage and measure the amount of play "a".

   Measurement is easier if you move the bucket to one side or the other so all the play can be measured in one place. (In the diagram this is on the left-hand side)

   Use a gap (clearance) gauge for easy and accurate measurement.
3. Loosen the four plate fixing bolts (2) and loosen plate (3).

   Because it uses split shims, you can carry out the operation without removing the bolts entirely.
4. Remove shim (4) corresponding to the amount of play "a" measured above.

   [Example]
   In the case of play of 3 mm, remove two 1.0 mm shims and one 0.5 mm shim. Play becomes 0.5 mm. For shim (4), two types of 1.0 mm and 0.5 mm are used.

   When play a is smaller than one shim, do not carry out any maintenance.
5. Tighten the four bolts (2).

   If the bolts (2) are too stiff to tighten, pull out pin stopper bolt (5) for easier tightening.

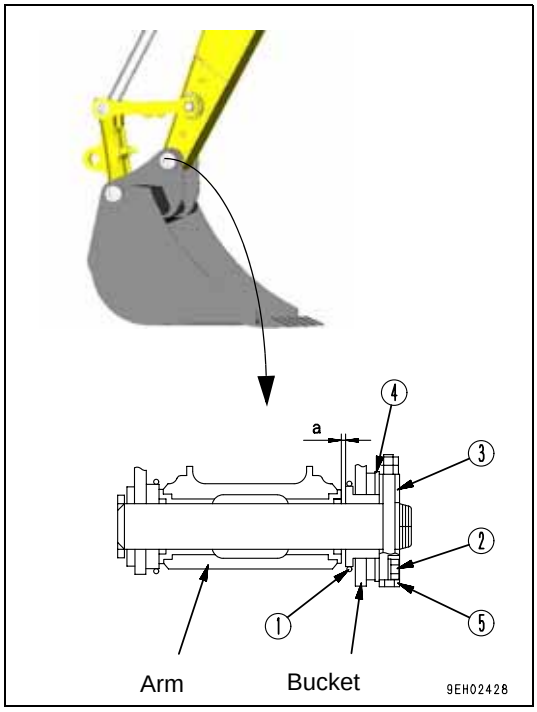

# CHECK WINDOW WASHER FLUID LEVEL, ADD FLUID

If there is air in the window washer fluid, check the level of the fluid in window washer tank (1). Add automobile window washer fluid if necessary.

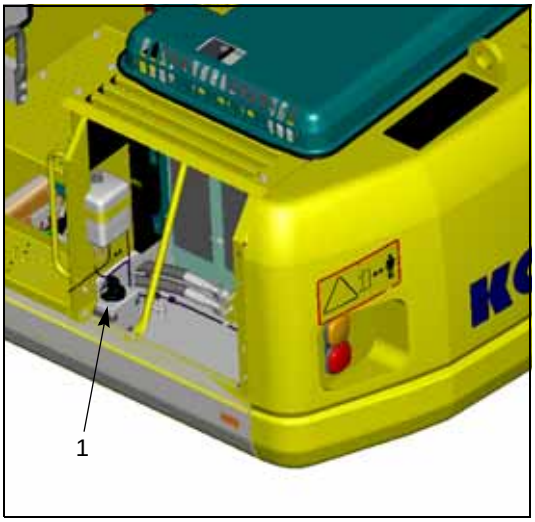


When adding fluid, be careful not to let any dust get in.

**Mixture ratio of pure washer fluid and water**

Since the ratio should be varied depending on atmospheric temperature, replenish washer fluid at the following mixture ratio, taking temperature into account.

| Operation area and season | Mixture ratio | Freezing temperature |
|---|---|---|
| Normal | Pure washer fluid 1/3: water 2/3 | - 10ºC |
| Winter in cold region | Pure washer fluid 1/2: water 1/2 | - 20ºC |
| Winter in extremely cold region | Pure washer fluid | - 30ºC |

Pure washer fluid comes in two types: for -10ºC (for general use) and for -30ºC (cold regions).

Use pure washer fluid according to operation area and season.

# CHECK AND ADJUST AIR CONDITIONER

## CHECK LEVEL OF REFRIGERANT (GAS)

**⚠ WARNING**

**If the refrigerant used in the cooler gets into your eyes or on your hands, it may cause loss of sight or frostbite. Do not touch the refrigerant. Never loosen any part of the refrigerant circuit.**
**Do not bring any flame close to any point where the refrigerant gas is leaking.**

If there is a lack of refrigerant (Freon 134a), the cooling performance will be poor.

When operating the cooler at high speed, there should be no bubbles in the sight glass (inspection window) mounted on the condenser unit receiver.

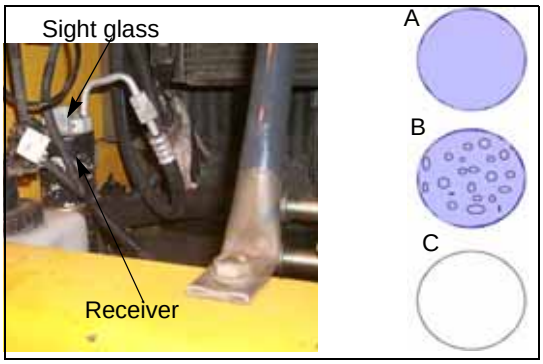


- A: No bubbles in refrigerant flow: Correct
- B: Bubbles in refrigerant flow (bubbles continuously pass through): Refrigerant level low
- C: Colorless, transparent: No refrigerant

**REMARK**
When there are bubbles, the refrigerant gas level is low, so contact your refrigerant dealer to have refrigerant added. If the air conditioner is run with the refrigerant gas level low, it will cause damage to the compressor.

### Check in off-season

When not being used for a long period, operate the cooler for 3 to 5 minutes once a month to supply lubricant to each component of the compressor.

### Inspection and maintenance items list for cooler

| Inspection and maintenance items | Contents | Maintenance interval |
|---|---|---|
| Refrigerant (gas) | Filling quantity | Twice a year; spring and autumn |
| Condenser | Clogging of fin | Every 500 hours |
| Compressor | Function | Every 4000 hours |
| V belt | Damage and tension | Every 250 hours |
| Blower motor and fan | Function (Check for abnormal sound) | When required |
| Control mechanism | Function (Check for normal function) | When required |
| Piping for connection | Installation condition looseness of tightening connection portions gas leakage, damage | When required |

## DRAIN ENGINE BREATHER OIL CATCHER

Periodically drain oil from the engine breather catcher and whenever it is necessary to remove the engine undercover.

1. Remove undercover (1) and allow oil to drain out.
2. Remove plug (2).

Replace undercover (1).

**REMARK**
Drain oil at every 500 hour service.

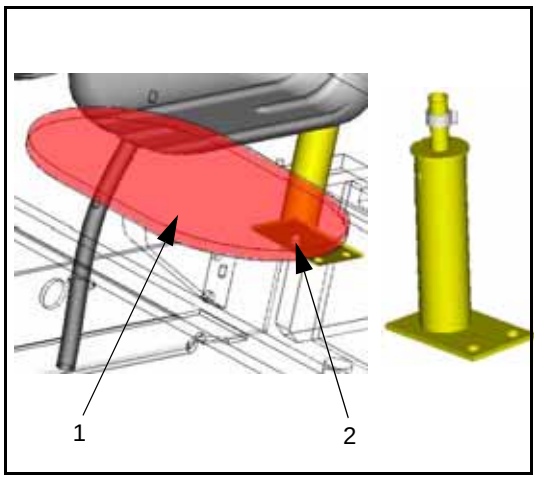


# CHECK BEFORE STARTING

## CHECK COOLANT LEVEL, ADD WATER

**WARNING**

**Do not open the radiator cap unless necessary. When checking the coolant, always check the radiator reserve tank when the engine is cold.**

1. Open the rear door on the left side of the machine and check that the cooling water level is between the FULL and LOW marks on radiator reserve tank (1) (shown in the diagram on the right).
   If the water level is low, add water through the water filler of reserve tank (1) to the FULL level.
2. After adding water, tighten the cap securely.
3. If the reserve becomes empty, first inspect for water leaks and then fill the radiator and the reserve tank with water.

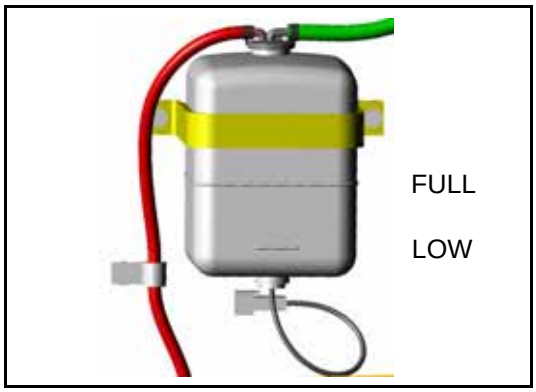

## CHECK OIL LEVEL IN ENGINE OIL PAN, ADD OIL

1. Open the engine hood.

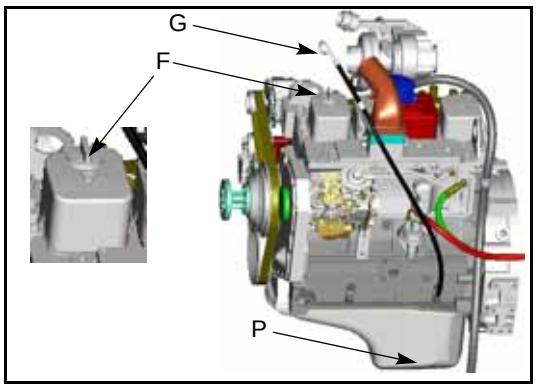


**REMARK**

**Opening Engine Compartment Hood**

Whenever access is required to the engine compartment via the hood, always ensure that the work equipment is tipped as far forward as possible.
This will ensure that the hoses mounted on the work equipment do not impede the engine hood when it is opened/closed.

2. Remove dipstick (G) and wipe the oil off with a cloth.
3. Insert dipstick (G) fully in the oil gauge pipe, then take it out again.
4. The oil level should be between the H and L marks on dipstick (K). If the oil level is below the L mark, add engine oil through oil filler (F).

   **For details of the oil to use, Refer to "USE FUEL, COOLANT AND LUBRICANTS ACCORDING TO AMBIENT TEMPERATURE (230)"**

5. If the oil is above the H mark, drain the excess engine oil from drain plug (P), and check the oil level again.
6. If the oil level is correct, tighten the oil filler cap securely and close the engine hood.

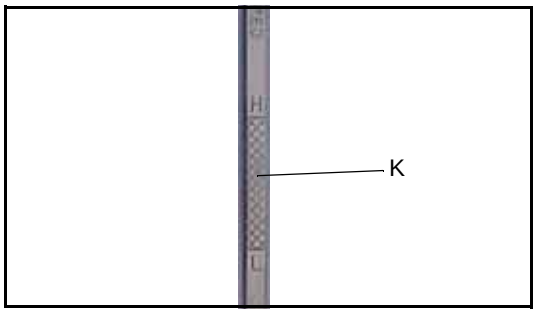


**REMARK**

Ensure that the machine is level when checking oil level.

**⚠ WARNING**

**Allow the engine to cool before checking the oil level to avoid burns by touching hot engine parts.**

## CHECK FUEL LEVEL, ADD FUEL

**WARNING**

**When adding fuel, never let the fuel overflow. This may cause a fire. If fuel is spilled, thoroughly clean up any spillage.**

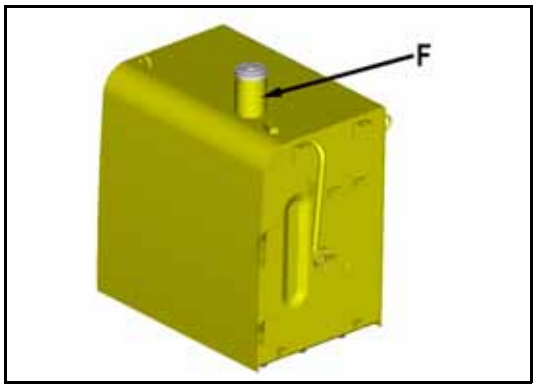


1. Use fuel gauge (G) on the monitor panel to check that the tank is full.
2. If the fuel level is below the E mark on the fuel gauge, add fuel through filler port (F) while watching the float in the filler port.

Fuel capacity: 290 litres

**For details of the fuel to use, see "USE FUEL, COOLANT AND LUBRICANTS ACCORDING TO AMBIENT TEMPERATURE (230)"**

3. After adding fuel, tighten the cap securely.

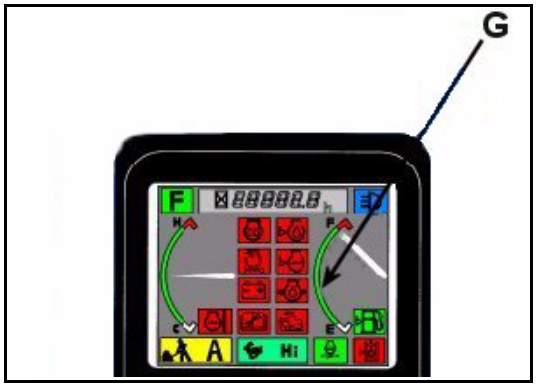


**REMARK**

If breather hole (1) on the cap is clogged, the pressure in the tank will drop and fuel will not flow.
Clean the holes from time to time.

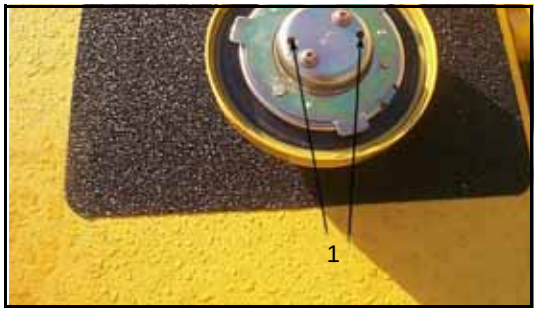

## CHECK OIL LEVEL IN HYDRAULIC TANK, ADD OIL

**WARNING**

- **When removing the oil filler cap, oil may spurt out, so turn the cap slowly to release the internal pressure before removing the cap.**
- **If oil has been added to above the H mark, stop the engine and wait for the hydraulic oil to cool down, then drain the excess oil from drain plug (P).**

1. If the work equipment is not in the condition shown in the diagram on the right, start the engine run the engine at low speed, retract the arm and bucket cylinders, then lower the boom, set the bucket teeth in contact with the ground, and stop the engine.
2. Check sight gauge (G). The oil level is normal if between the H and L marks.

**REMARK**

Do not add oil if the level is above the H line. This will damage the hydraulic equipment and cause the oil to spurt out.

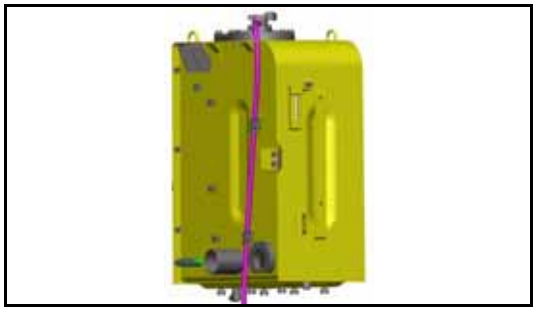

3. If the level is below the L mark, remove cap (F) from the hydraulic tank and add oil.

   **For details of the oil to use, see "USE FUEL, COOLANT AND LUBRICANTS ACCORDING TO AMBIENT TEMPERATURE (230)"**

**REMARK**

The oil level will vary depending upon the oil temperature. Accordingly, use the following as a guide:

- Before operation: midway between H & L level
  (Oil temperature 10 to 30°C)
- Normal operation: around H level
  (Oil temperature 50 to 80°C).

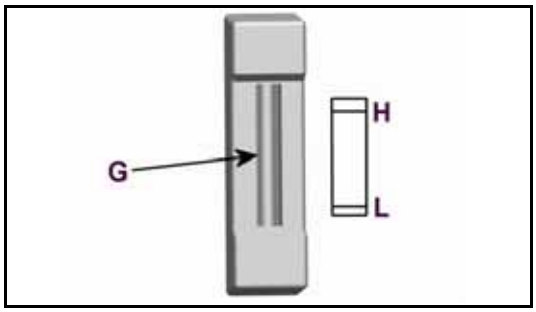


## CHECK AIR CLEANER FOR CLOGGING

1. Confirm that the air cleaner clogging monitor does not light up (H).
2. If it lights up, immediately clean or replace the element.

   **For details of the method of cleaning the element, see "CLEAN INSIDE OF COOLING SYSTEM (251)"**

## CHECK ELECTRIC WIRING

**WARNING**

**If the fuse blows frequently, or there are traces of short-circuiting in the electric wiring, always locate and repair the cause.**

Check for damage of the fuse and any sign of disconnection or short circuit in the electric wiring. Check also for loose terminals and tighten any loose parts. Check the following points carefully.

- Battery
- Starting motor
- Alternator

Please contact your Komatsu distributor for investigation and correction of the cause.

## CHECK FOR WATER AND SEDIMENT IN SEDIMENTOR. DRAIN WATER AND SEDIMENT

1. Open the cover at the rear right of the machine.
2. Inspect the water separator, and check if the ring inside has risen to the marked line.
3. If the ring has risen to the marked line, carry out the procedure from Step 4.
4. Set a container under the water separator to catch the drained fuel.
5. Secure fuel line to prevent leakage.
6. Remove air bleed plug (5) at the top of the water separator.
7. Loosen drain valve (1) at the bottom of the water separator, and drain the water and sediment into the container.
8. Loosen ring nut (2), then remove filter case (3).
9. Remove element (4) from the separator base.
10. Wash element (4) in clean diesel oil.
11. Check element (4), and replace it if it is damaged.
12. When installing element (4), perform Steps 9 and 8 in the opposite order.
    Tightening torque of ring nut (2): 40 ± 3 N•m
    {4.1 ± 0.3 kgf•m}
13. Fill filter case (3) with fuel. When the fuel comes out from air bleed plug (5), tighten air bleed plug (5).

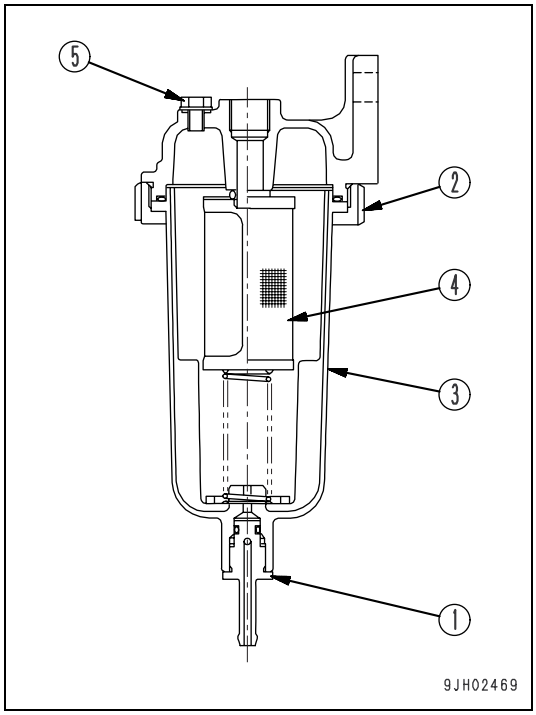

### CHECK FOR WATER IN PRIMARY FUEL FILTER, DRAIN WATER

**For information on this see "CHECK FOR WATER IN FUEL SEDIMENTOR".**

## EVERY 50 HOURS

### DRAIN WATER AND SEDIMENT FROM FUEL TANK

1. Carry out this procedure before operating the machine.
2. Prepare a container to catch the fuel that is drained.
3. Open valve (1) at the bottom of the tank and drain the sediment and water that has accumulated at the bottom together with fuel. When doing this, be careful not to get fuel on yourself.
4. When only clean fuel comes out, close drain valve (1).

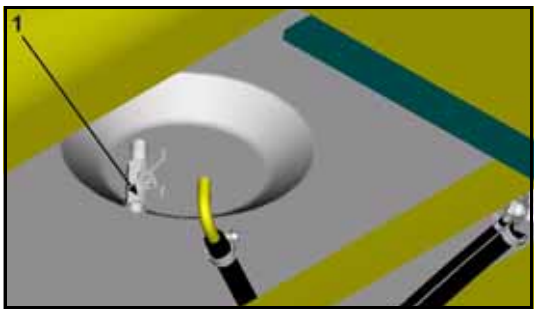


**REMARK**
Never use trichlene for washing the inside of the tank.

## EVERY 100 HOURS SERVICE

**Maintenance every 50 hours should be carried out at the same time.**

### LUBRICATING

The minimum greasing interval is 100 hours, however more frequent greasing will be required depending on conditions/environment.

1. Set the work equipment in the greasing posture below, then lower the work equipment to the ground and stop the engine.
2. Using a grease pump, pump in grease through the grease fittings shown by arrows.

3. After greasing, wipe off any old grease that was pushed out.

1. Boom cylinder foot pin (2 points).

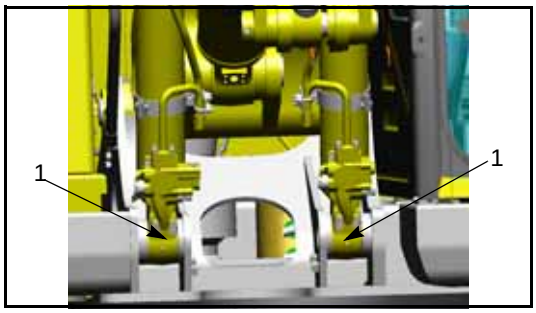


2. Boom foot pin (2 points).
3. Boom cylinder rod end (2 points).
4. 1st to 2nd boom pin (1 point).

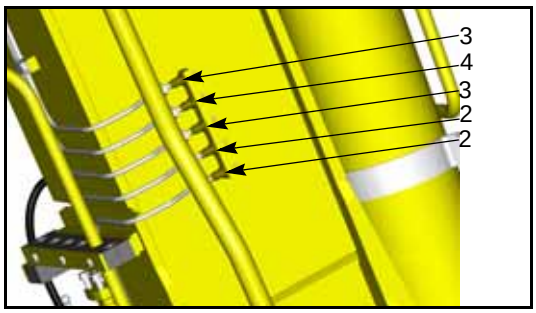


5. 1st to 2nd boom pin (2 points).
6. Arm cylinder foot pin (1 point).

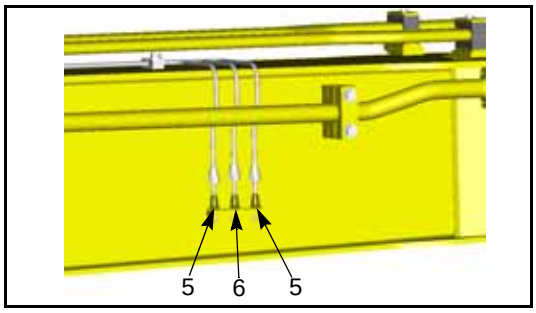

7. Boom-Arm coupling pin (1point).
8. Arm cylinder rod end (1 point).
9. Bucket cylinder foot pin (1 point).

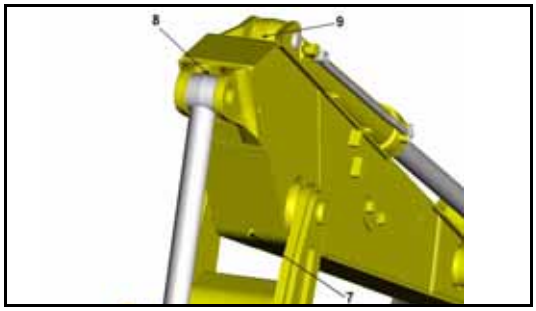


10. Arm-Link coupling pin (1 point).
11. Arm-Bucket coupling pin (1 point).

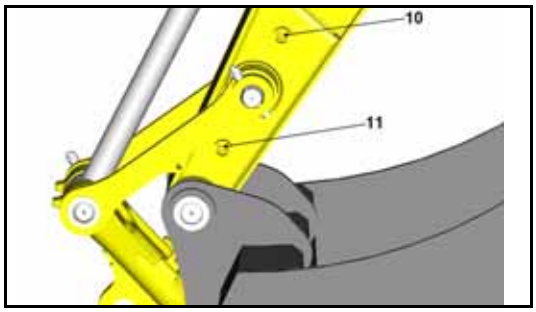


12. Link coupling pin (1 point).
13. Bucket cylinder rod end (1 point).
14. Bucket-Link coupling pin (2 points).

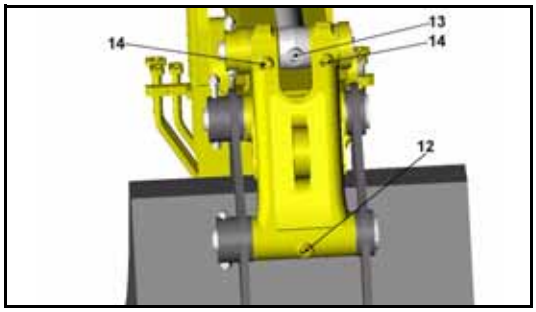


15. Outrigger cylinder foot pin (2 or 4 points).
16. Outrigger cylinder rod end (2 or 4 points).
17. Outrigger leg pivot (2 or 4 points).
18. Outrigger foot pivot (2 or 4 points).

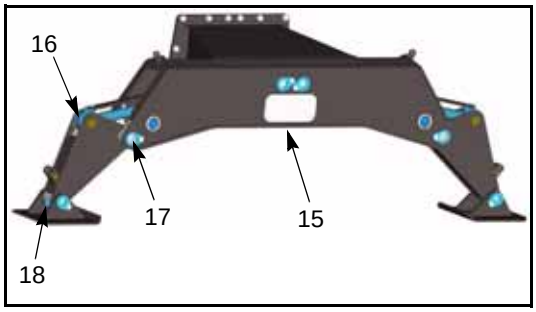


19. Propshaft (3 points).

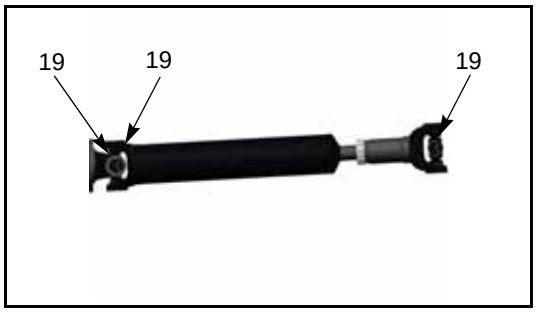

20. Boom adjust cylinder foot pin (1 point).
21. Boom adjust cylinder rod end (1 point).

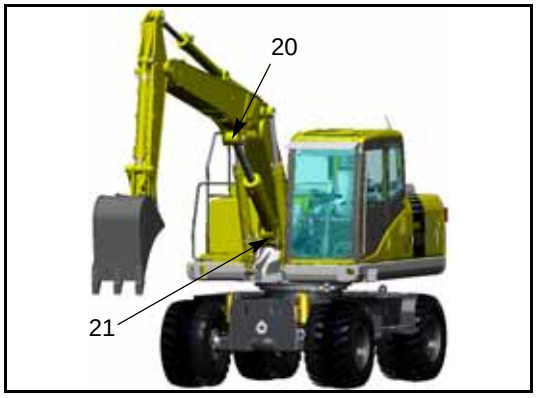


22. Axle pivot (2 point) (with outriggers attached)

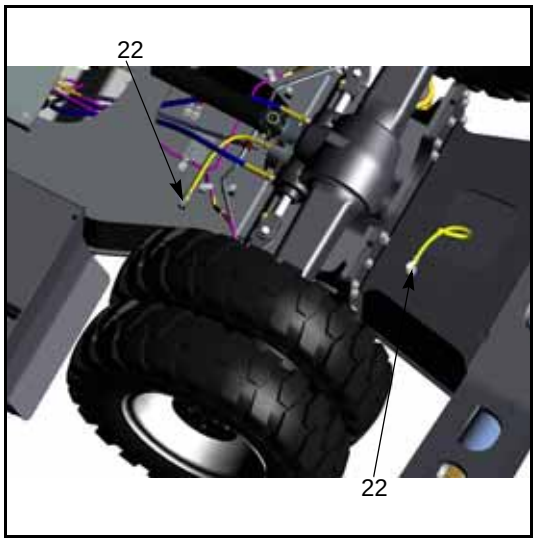


23. Axle pivot (2 point) (without outriggers)

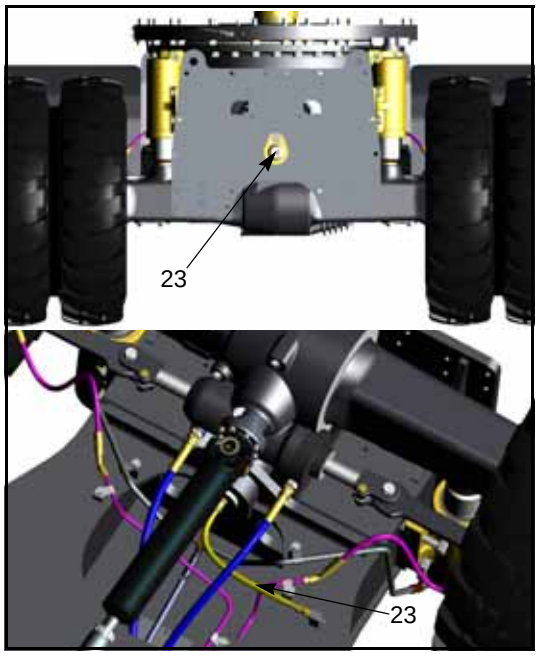

24. Hub pivot (4 points)
25. Steer links (4 points)
26. Axle pads (If noise heard grease as necessary) (2 points)

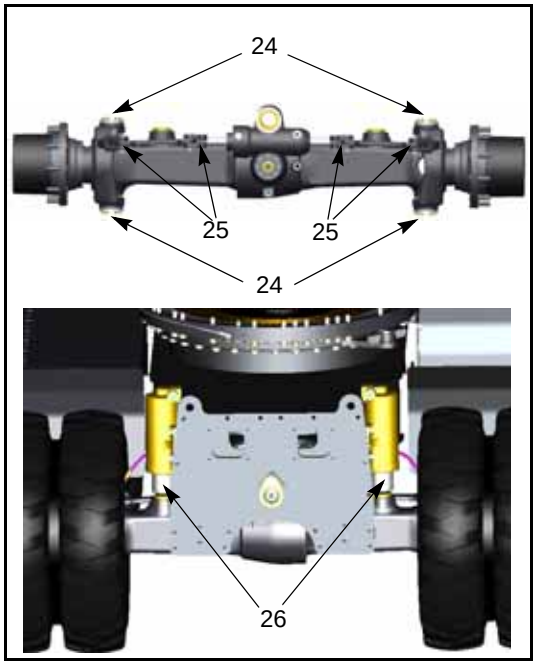


27. Cylinder mount (2 points)
28. Top link blade pivot pin (2 points)
29. Lower link blade pivot (2 points)
30. Dozer blade cylinder rod end (2 points)

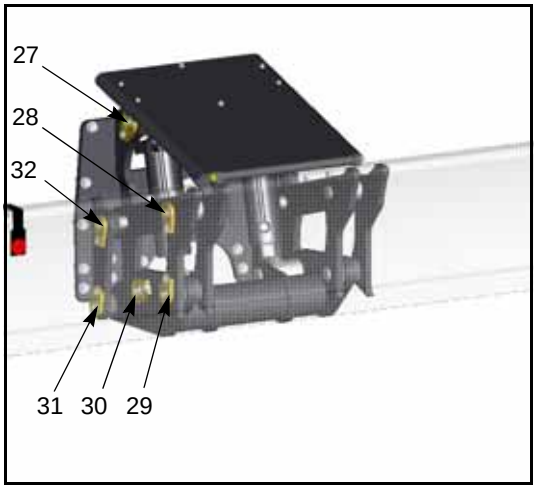


31. Lower link pivot pin (2 points)
32. Top link pivot pin (2 points)
33. Cylinder guard pin (remove and apply coating of grease)

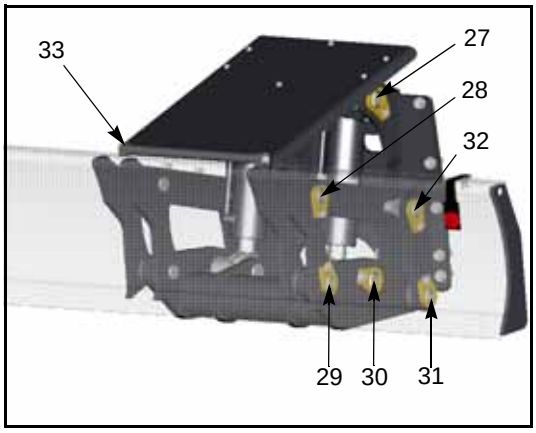

## CLEANING FRESH AIR FILTER

1. Pull up the lock release lever under the door release lever to release the lock.

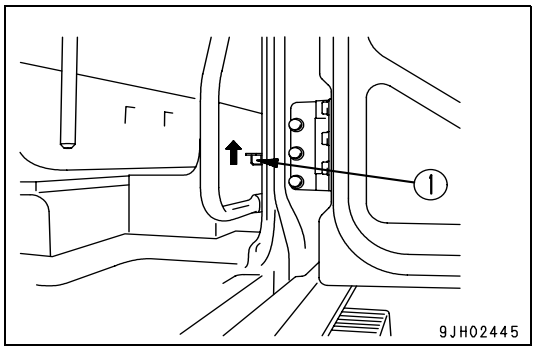


2. Open cover (2) at the bottom left of the operator's cab by hand, pull out filter case (3) from the inside, then remove the filter.
3. Clean the filter with compressed air. If there is oil on the filter, or if the filter is extremely dirty, wash it in a neutral agent. After rinsing it in water, dry it thoroughly before using it again. If the clogging of the filter cannot be removed by blowing with air or washing in water, replace the filter with a new part.
4. After cleaning, insert the filter in filter case (3) again, open the cover at the bottom left of the operator's cab by hand, return the filter case to its original position, then close the cover. When doing this, check that the lock is applied.

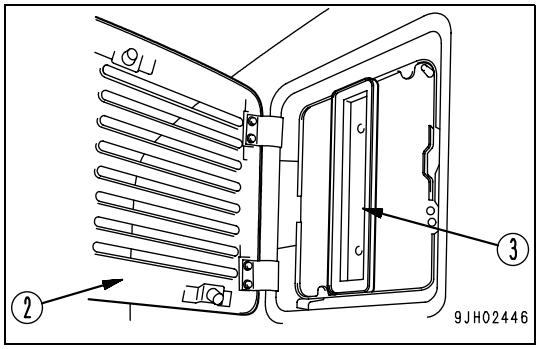

# EVERY 250 HOURS MAINTENANCE

## CHECK OIL LEVEL IN MACHINERY CASE, ADD OIL

**⚠ WARNING**

**The parts and oil are at high temperature after the engine is stopped, and may cause serious burns. Wait for the temperature to go down before starting the operation.**

1. Remove dipstick (G) and wipe the oil from the dipstick with a cloth.
2. Insert dipstick (G) fully in the guide.
3. When dipstick (G) is pulled out, if the oil level is between the H and L marks of the gauge, oil level is correct.
4. If the oil does not reach the L mark on dipstick (G), remove oil filler (F), and add engine oil.
5. If the oil level exceeds the H mark on the dipstick, loosen drain plug (P) to drain the excess oil.
6. After checking oil level or adding oil, insert the dipstick into the hole and install oil filler cap.

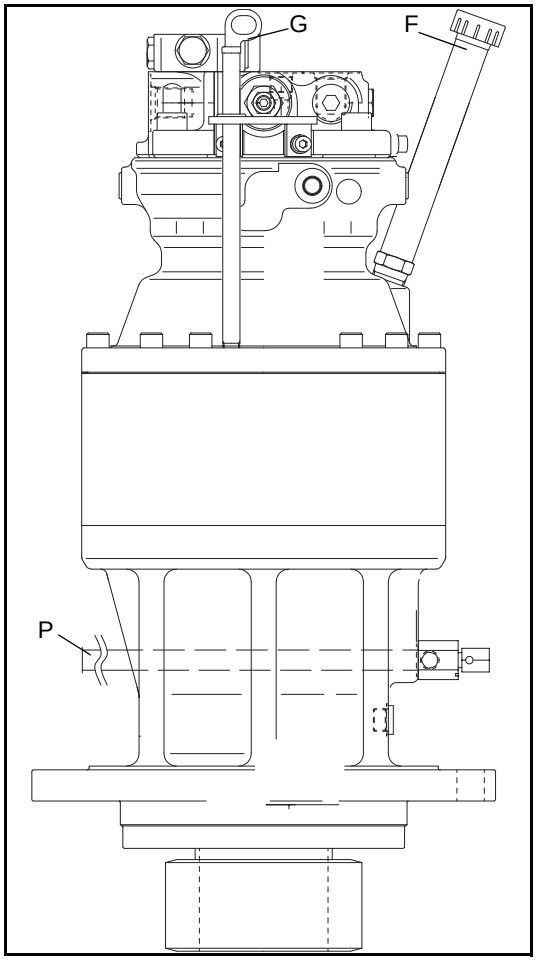

## CHECK OIL LEVEL IN WHEEL HUBS, ADD OIL (Front Axle)

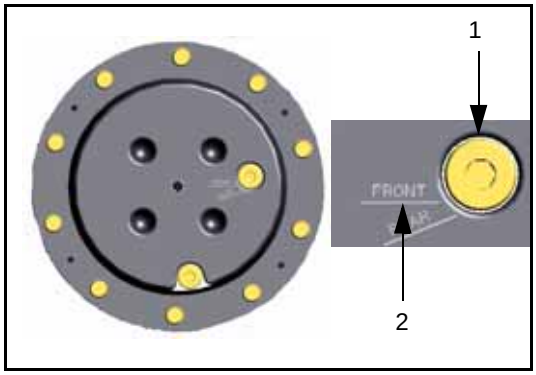


- Prepare a hexagonal wrench

1. Rotate hub until the oil level line marked front is horizontal (2).
2. Remove plug (1).
3. If no oil emerges, add oil until there is an excess. Allow excess to drain off and re-install plug (1).

   **For details of the oil to use, see "USE FUEL, COOLANT AND LUBRICANTS ACCORDING TO AMBIENT TEMPERATURE (230)"**

## CHECK OIL LEVEL IN WHEEL HUBS, ADD OIL (Rear Axle)

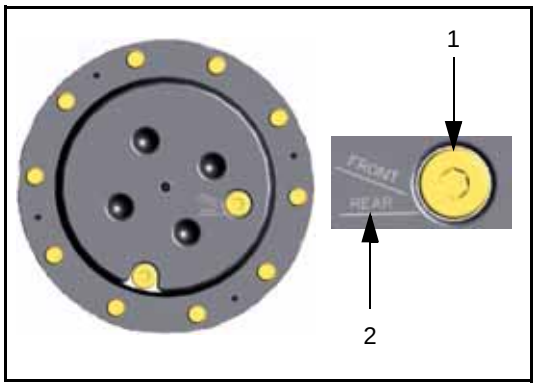


- Prepare a hexagonal wrench

1. Rotate hub until the oil level line marked rear is horizontal (2).
2. Remove plug (1).
3. If no oil emerges, add oil until there is an excess. Allow excess to drain off and re-install plug (1).

   **For details of the oil to use, see "USE FUEL, COOLANT AND LUBRICANTS ACCORDING TO AMBIENT TEMPERATURE (230)"**

## CHECK OIL LEVEL IN AXLES, ADD OIL

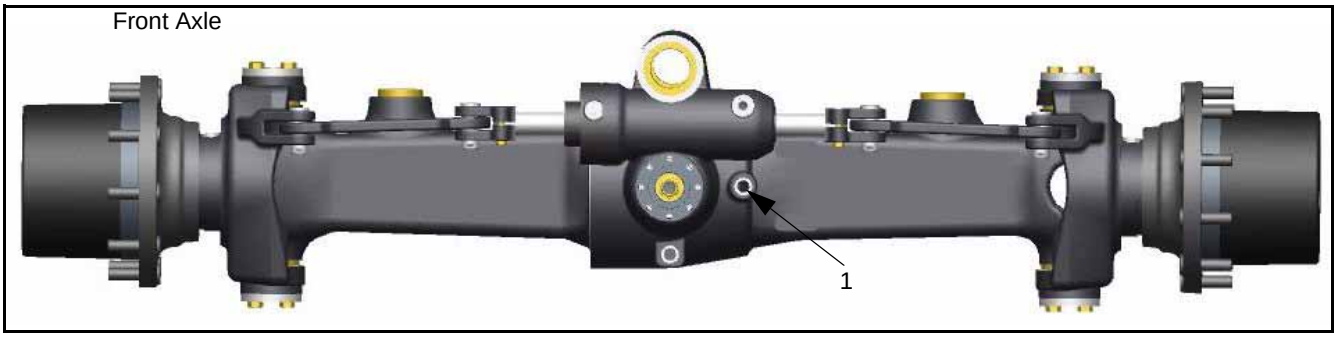


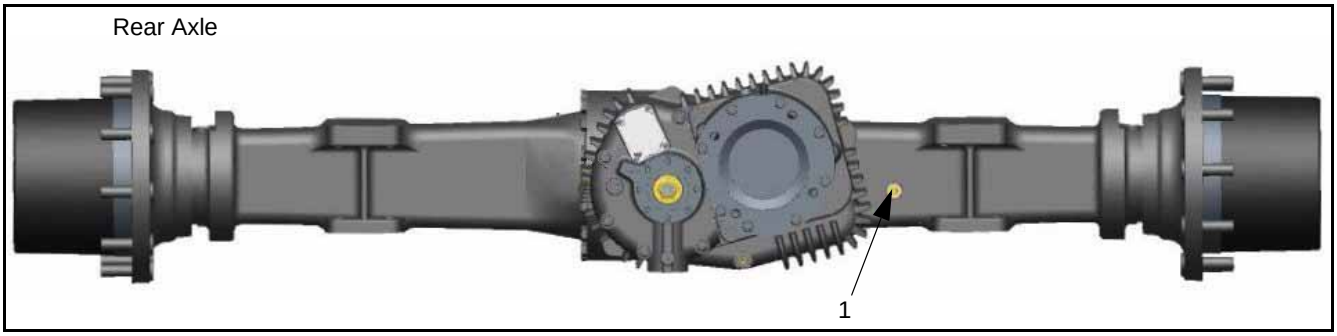


1. Ensure axle is horizontal and remove plug (1).
2. If no oil emerges attach tube and funnel and add oil until oil emerges from the hole after removing tube.

3. Replace plug (1).

   **For details of the oil to use, see "USE FUEL, COOLANT AND LUBRICANTS ACCORDING TO AMBIENT TEMPERATURE (230)"**

## CHECK OIL LEVEL IN TRANSMISSION, ADD OIL

1. Remove level plug (1).
2. If oil emerges replace plug (1)
3. If no oil emerges remove plug (1) and add oil until oil emerges from plug hole (1).
4. Replace plug (1).

   **For details of the oil to use, see "USE FUEL, COOLANT AND LUBRICANTS ACCORDING TO AMBIENT TEMPERATURE (230)"**

## CHECK LEVEL OF BATTERY ELECTROLYTE

**WARNING**

- **To avoid gas explosions, do not bring fire or sparks near the battery.**
- **Battery electrolyte is dangerous. If it gets in your eyes or on your skin, wash it off with large amounts of water, and consult a doctor.**

Carry out this check before operating the machine.

1. Open the battery box door on the front right hand side of the machine.
2. Remove cap (1), and check that the electrolyte is at the specified level (10 to 12 mm above the plate). If the electrolyte level is low, add distilled water to the specified level.

If the battery electrolyte is spilled, have dilute sulphuric acid added.

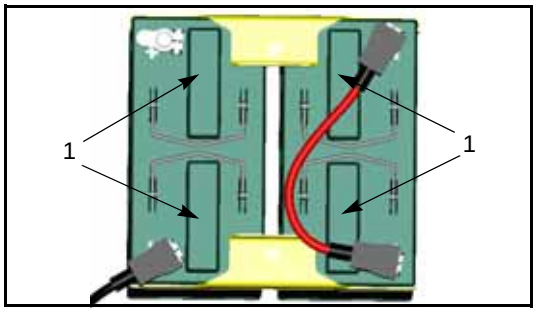

3. Clean the air hole in the battery cap, then tighten the cap securely.

When adding distilled water in cold weather, add it before starting operations in the morning to prevent the electrolyte from freezing.

## BELTS, GENERAL

**⚠ WARNING**

**Before working on the engine or electrical system, disconnect the negative (ground) battery cable. Tag the cable and controls to warn against starting.**

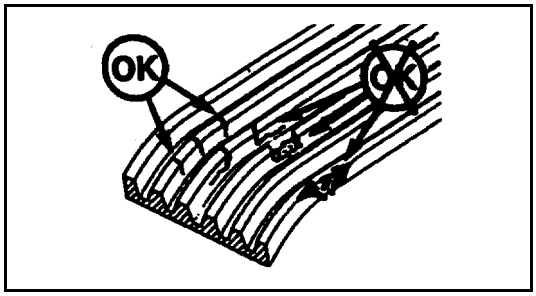


Replace badly worn, greasy or severely cracked belts immediately. These conditions prevent the belt from functioning correctly.

Prior to installing new belts, make sure all pulley grooves are clean and not worn. If a pulley is damaged or if the grooves are worn, it should be replaced.

All pulley support bearings, shafts and brackets must be in working order.

When replacing belts and pulleys, pulley alignment must be checked with belts tensioned and brackets securely clamped. A misalignment that can be detected by the naked eye is detrimental to belt performance.

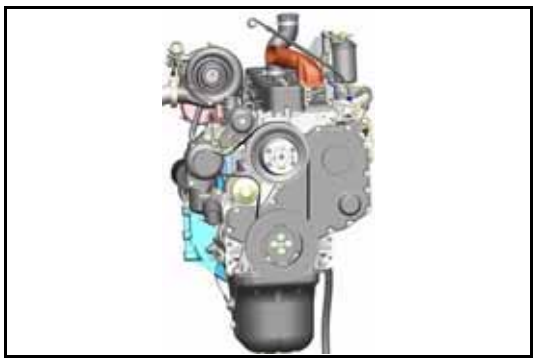

During belt installation, do not force the belts into the pulley grooves by prying with a screwdriver on pry bar. This will damage the belt side cords which will cause the belts to turn and result in complete destruction of the belts in operation.

Belts on new machines and replacement belts lose their tension as they seat into the pulley grooves. Check the tension of new belts at 20 hour intervals until tension is stabilized and thereafter, every 250 hours. If the tension falls below the required minimum, the belt slips, and damages the belts and pulley grooves.

**REMARK**

When operating in abrasive conditions, check tension every 100 hours.

Visually inspect the belts for intersecting cracks. Transverse (across the belt width) cracks are acceptable. Longitudinal (direction of belt length) cracks that intersect with transverse cracks are not acceptable. Replace the belt if it is frayed or has pieces of material missing.

## CHECK FAN BELT TENSION, ADJUST TENSION

The engine is equipped with an automatic belt tensioner that maintains correct tension on the drive belt. To check belt tension a Gates type gauge must be used because of the wide drive belt. Proper tension should be 355 to 455 N.m gauge value.

If a Gates type gauge is not available, tension may be checked by belt deflection. Press the belt with your finger at the longest span and measure the deflection. Maximum deflection 9.5 to 12.7 mm.

### ADJUSTING

With the automatic belt tensioner, no adjustment is required.

### REPLACEMENT

To replace the drive belt, place a 3/8 in. drive rachet (2) in the 3/8 in. square drive hole in the belt tensioner. Push the rachet “UP” to loosen the tensioner. Remove the old belt (1). Inspect belt tensioner. The tensioner pulley should spin freely with no rough spots detected under hand pressure. Install the new belt.

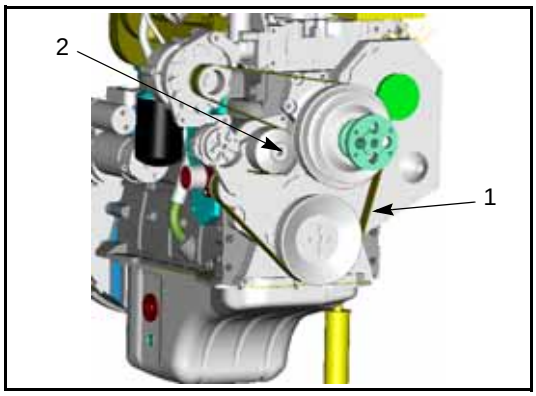


**REMARK**

The belt tensioner is spring loaded and must be pivoted away from the belt. Pivoting in the wrong direction can result in damage to the belt tensioner.

## CHECK, ADJUST TENSION OF AIR CONDITIONER COMPRESSOR BELT

### Checking

Press the belt at a point midway between the drive pulley and compressor pulley with a finger force of approx. 58.8 N (6 kgf) and check that the deflection is 5 - 8 mm.

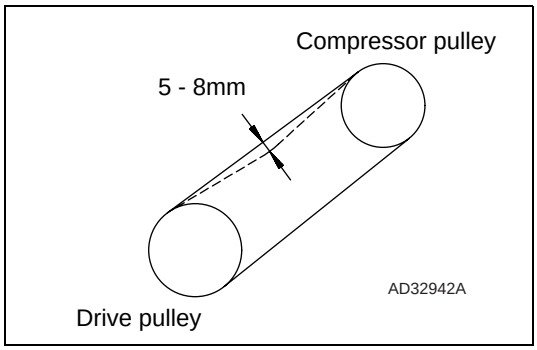


### Adjusting

1. Loosen bolts (1) and (2).

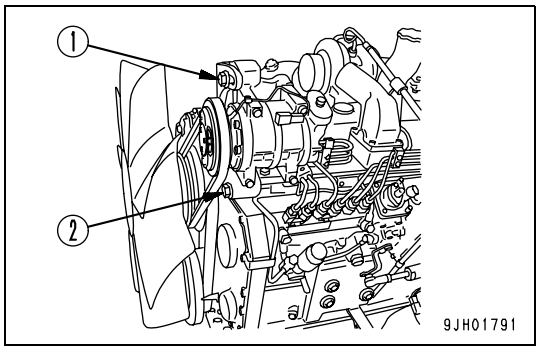

- ❍ Bracket (4) holds the compressor in place. When bolts (1) and (2) are loosened, bracket (4) moves with the securing position of bolt (2) as a fulcrum.

2. Loosen nut (5) attached to fixed bracket (3), and then tighten bolt (6).
   - ❍ Tighten bolt (6) so that the deflection of the belt will be 5 ~ 8 mm (approx. 58.8N (6kgf)
3. Tighten bolts (1) and (2) to secure bracket (4).
4. Loosen bolt (6) to remove from bracket (4).
5. Tighten nut.
6. Check for damage to the pulleys, and wear of the V-groove and V-belt. Be particularly careful to check that the V-belt is not in contact with the bottom of the V-groove.
7. If the belt has elongated and there is no more allowance for adjustment, or if the belt is cut or cracked, replace the belt.
8. After replacing the V-belt, operate for one hour, then adjust again.

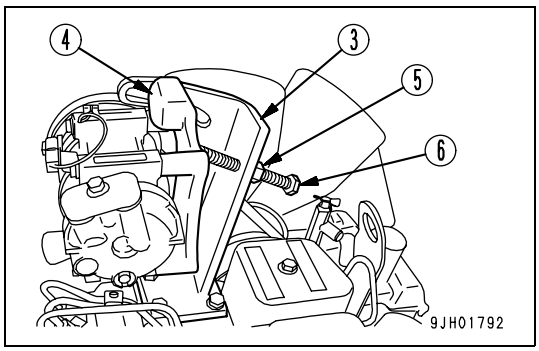

# EVERY 500 HOURS SERVICE

**Maintenance for every 50, 100 and 250 hours should be carried out at the same time.**

**⚠ WARNING**

- **Engine is at high temperature immediately after the machine has been operated. Wait for engine to cool down before replacing the filter.**
- **Keep naked flames - sparks away from fuel.**
- **When cranking the engine, ensure all safety procedures have been followed, as the engine may start.**

## LUBRICATE SWING CIRCLE (2 POINTS)

1. Lower the work equipment to the ground.
2. Use a grease gun to pump grease in through the grease fittings shown by the arrows.
3. After greasing, wipe off all the old grease that was pushed out.

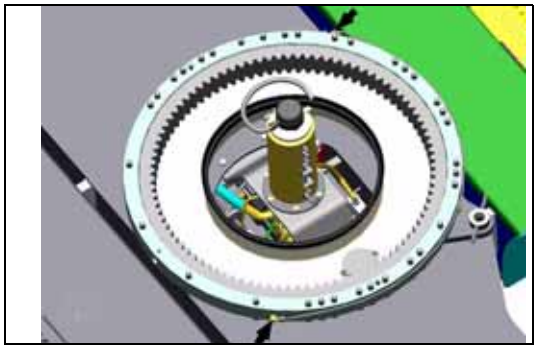

## REPLACE FUEL FILTER CARTRIDGE

**WARNING**

- **The parts are at high temperature immediately after the engine has been operated. Wait for all parts to cool down before replacing the filter.**
- **Do not bring fire or sparks near the fuel.**

Prepare a filter wrench and a container to catch the fuel.
Use a genuine Komatsu filter cartridge.

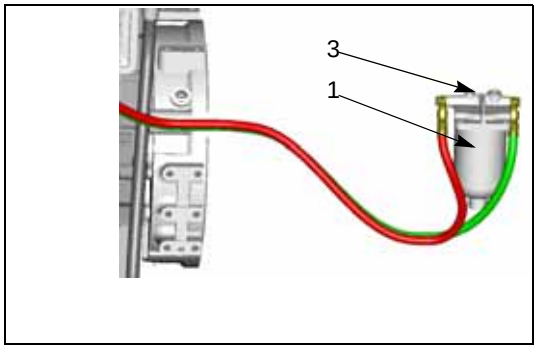


1. Set the container to catch the fuel under the filter cartridge.
2. Using a filter wrench, turn filter cartridge (1) counterclockwise to remove it.
3. Clean the filter holder, fill a new filter cartridge with clean fuel, coat the packing surface with engine oil, then install it to the filter holder.
4. After bringing the packing surface into contact with the seal surface of the filter holder, tighten it a further 1/2 turns.
   If the filter cartridge is tightened too far, the packing will be damaged and this will lead to leakage of fuel. If the filter cartridge is too loose, fuel will leak from the packing, so tighten it carefully.
5. After replacing the fuel filter cartridge, bleed the air from the system. Bleed the air as follows.
6. Fill the fuel tank with fuel (to the position where the float is at the highest position).
7. After replacing filter cartridge (1), loosen air bleed plug (3).
8. Operate the hand lever (2) until the fuel flowing from the fitting is free of air.
9. Tighten air bleed plug (3).
   Torque value: 9 Nm
   - After replacing the filter cartridge, start the engine and check for any leakage of oil from the filter seal surface.

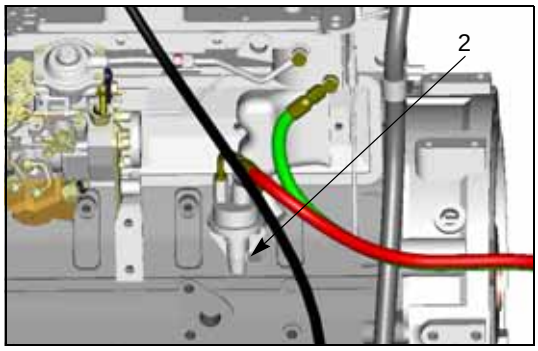


**REMARK**

Use the feed pump to bleed air from the fuel system, when the machine has run out of fuel, too.

## CHECK SWING PINION GREASE LEVEL, ADD GREASE

Prepare a scale.

1. Remove bolts (1) (2 bolts) on the top of the revolving frame and remove cover (A).
2. Check the colour of the grease. If it is milky white, it is necessary to change the grease. Please contact your Komatsu distributor.

The total amount of grease is 10.5 litres.

3. Insert a rule into the grease and check that the depth of the grease is at least 25 mm. Add more grease if necessary.
4. Replace cover (A) with bolts (1) (2 bolts).

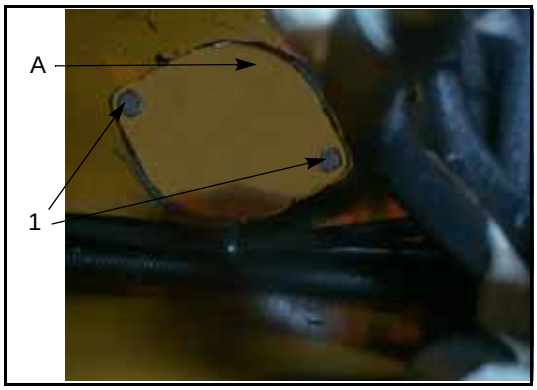

## CHANGE OIL IN ENGINE OIL PAN, REPLACE ENGINE OIL FILTER CARTRIDGE

**WARNING**

**The parts and oil are at high temperature after the engine is stopped, and may cause serious burns. Wait for the temperature to go down before starting the operation.**

Prepare the following:

- Refill capacity of oil pan: 16 litres
- Filter wrench

1. Remove undercover at the bottom of the machine, then set a container under drain plug (P) to catch the drained oil.
2. To prevent getting oil on yourself, loosen drain plug (P) slowly, drain the oil, then install the plug tightly.

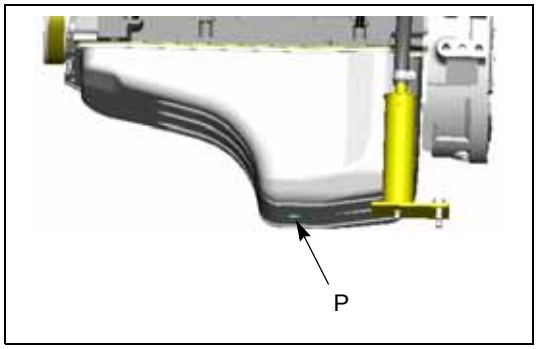


3. Remove centre partition, then use a filter wrench to turn filter cartridge (1) counter clockwise to remove it.
4. Clean the filter holder, fill the new filter cartridge with clean engine oil, coat the packing surface and thread of the filter cartridge with engine oil (or coat it thinly with grease), then install the filter cartridge to the filter holder.
5. Drain breather bottle at same time. For details, see "DRAIN ENGINE BREATHER OIL CATCHER (265)"

**REMARK**

Check that there is no old packing stuck to the filter holder. If there is any old packing remaining, it will cause oil leakage.

6. When installing, bring the packing surface into contact with the seal surface of the filter holder, then tighten it further 3/4 - 1 turn.

7. After replacing the filter cartridge, open the engine hood and add engine oil through oil filler (F) to between the H and L marks on dipstick (G).

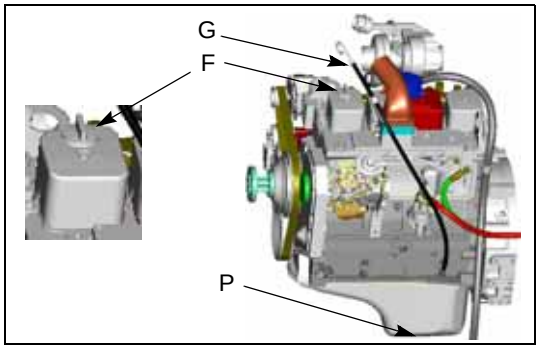


**REMARK**

**Opening Engine Compartment Hood**

Whenever access is required to the engine compartment via the hood, always ensure that the work equipment is tipped as far forward as possible.
This will ensure that the hoses mounted on the work equipment do not impede the engine hood when it is opened/closed.

8. Run the engine at idle for a short time, then stop the engine and check that the oil level is between the H and L marks on dipstick (G).
   For details, see "CHECK OIL LEVEL IN ENGINE OIL PAN, ADD OIL (266)".

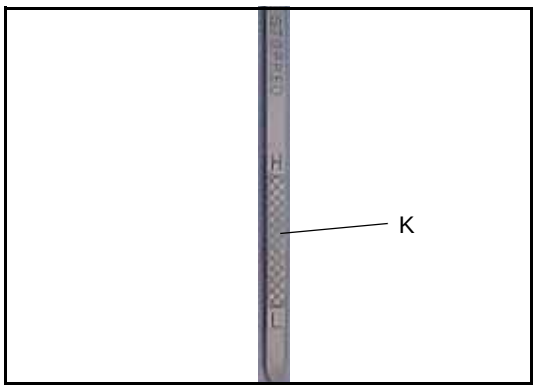


9. Install the undercover.

## CLEAN AND INSPECT RADIATOR FINS, OIL COOLER FINS AND CONDENSER FINS

**WARNING**

**If compressed air, high-pressure water, or steam hit your body directly, or they cause dirt or dust to be blown up, there is a danger of serious injury. Use safety glasses, dust mask, or other protective equipment.**

**NOTICE**

**When using compressed air, if the nozzle is brought too near the fins, the fins may be damaged. Use compressed air from a reasonable distance to prevent damage to the fins.**
**Do not direct the jet directly at the core. If the fins are damaged, it will cause leakage of water and overheating. On dusty job sites, inspect fins every day, regardless of the maintenance interval.**

1. Open engine hood.

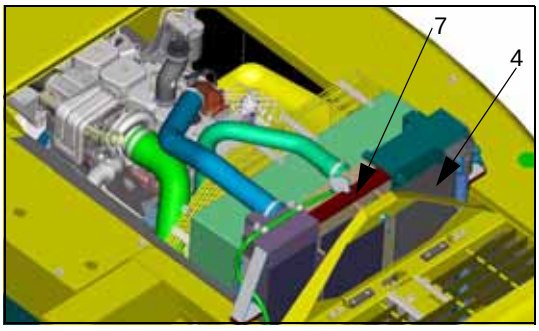

2. Inspect the front and rear of the oil cooler fins (4), radiator fins (7), after-cooler fins (8), and condenser fins (9) for dirt, dust, dry leaves, etc. Blow them away with compressed air. Steam or water may be used instead of compressed air.
3. Check the rubber hose. Replace it with a new one, if the hose is found to have cracks or to be hardened by age. Also check the hose clamps for looseness.

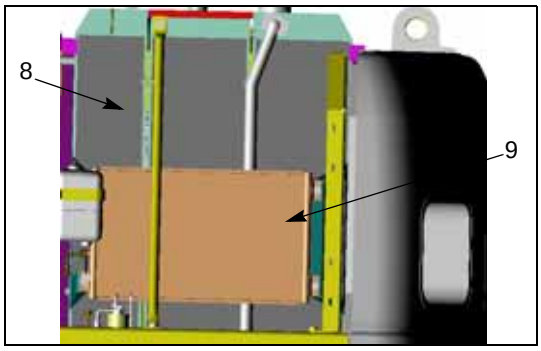


4. Remove cover (10) from underneath and dispose of the dirt, dust, dry leaves, etc., which have fallen on it.

## CLEAN INTERNAL AND EXTERNAL AIR FILTERS OF AIR CONDITIONER SYSTEM

**⚠ WARNING**

**If compressed air, high-pressure water, or steam hit your body directly, or they cause dirt or dust to be blown up, there is danger of serious injury. Use safety glasses, dust mask, or other protective equipment.**

**NOTICE**

**The interval for cleaning the filter is 500 hours, but if the machine is used on an extremely dusty job site, reduce the maintenance interval and clean the filter more frequently.**

**REMARK**

If the filter is clogged, the air flow is reduced and a muffled sound can be heard from the air conditioner unit.

## CLEANING RECIRCULATED AIR FILTER

1. Remove wing bolts (1) from the inspection window at the bottom rear left on the inside of the operator's cab, then take out the recirculated air filter.
2. Clean the filter with compressed air. If there is oil on the filter, or if the filter is extremely dirty, wash and dry it thoroughly before using it again.
   If the clogging of the filter cannot be removed by blowing with air or washing with water, replace with new one.

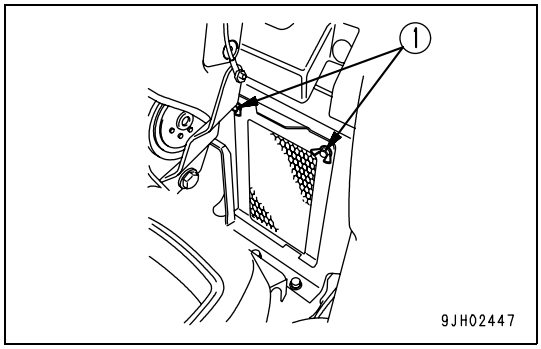

## REPLACE HYDRAULIC TANK BREATHER ELEMENT

**WARNING**

**Wait for the oil to cool down before replacing the breather element. When removing the oil filler cap, turn it slowly to release the internal pressure, then remove it carefully.**

1. Remove the cap of oil filter (F).

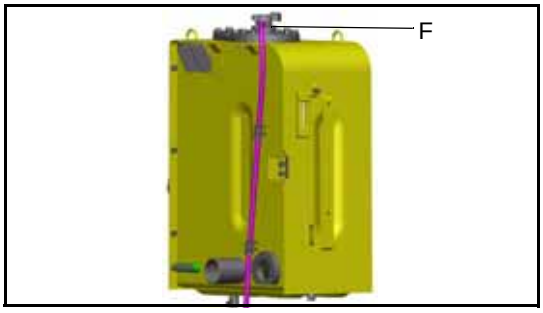


2. Replace element (1) inside the cap with a new one.
   For component part numbers, see “WEAR PARTS LIST” on page 229.

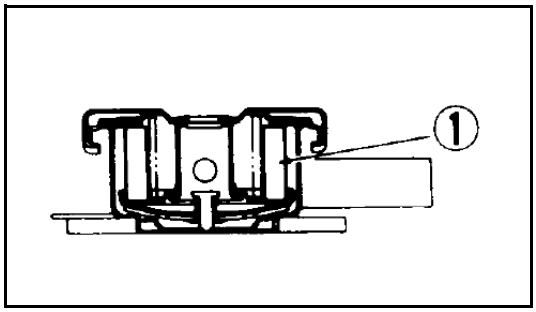


## CHECK CONDITION OF MAIN VALVE RUBBER MOUNTS

If main valve bracket mounting rubbers (1) appear cracked or worn, replace them.

If unsure then contact your komatsu distributor for advice.

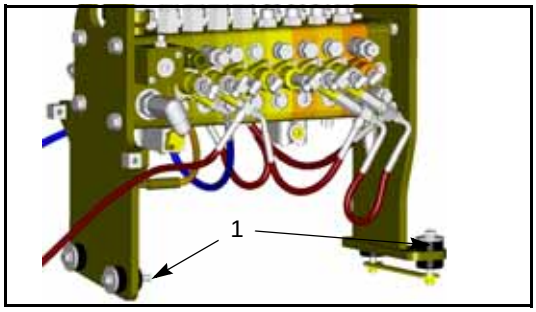

# EVERY 1000 HOURS SERVICE

**Maintenance for every 100, 250 and 500 hours should be carried out at the same time.**

## REPLACE HYDRAULIC FILTER ELEMENT

**⚠ WARNING**

- **The parts and oil are at high temperature after the engine is stopped, and may cause serious burns. Wait for the temperature to go down before cleaning the hydraulic tank strainer.**
- **When the oil filler cap is removed, oil may spurt out, so turn the cap slowly to release the internal pressure, then remove it carefully.**

1. Set the work equipment on hard and flat ground in the maintenance posture as shown in the figure. Then lower it to the ground and stop the engine.

2. Remove the cap from oil filler (F), and release the internal pressure.
3. Loosen 6 bolts, then remove cover (1). When doing this, the cover may fly out under the force of spring (2), so hold the cover down when removing the bolts.
4. After removing spring (2), valve (3) and strainer (4), take out element (5).
   - ❍ Inspect the bottom of the filter case for dirt, and remove it, if any. Be very careful not to let dirt fall into the hydraulic tank.

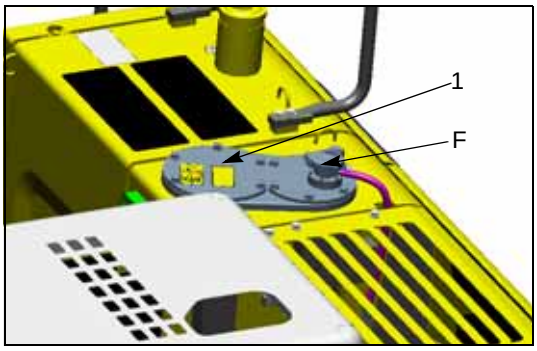


5. Clean the removed parts in diesel oil.
6. Install the new element in the place where old element (5) was installed.
7. Set valve (3), strainer (4) and spring (2) on top of the element.
8. Set cover (1) in position, push it down by hand, and install the cover with the mounting bolts.
9. Install the oil filler cap.
10. To bleed the air, start the engine according to "STARTING ENGINE (160)" and run the engine at low idle for 10 minutes.
11. Stop the engine.

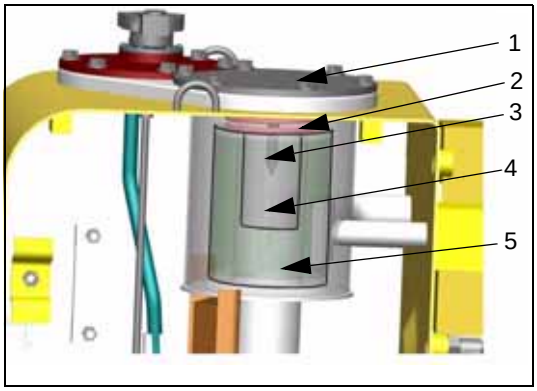

12. Check for oil leakage and wipe off any spilled oil.

When the hydraulic breaker is installed, the hydraulic oil deteriorates earlier than in normal bucket digging work.

The first element replacement should be at 100 to 150 hours for new machines. Thereafter, replace the element, see "WEAR PARTS LIST (229)".

## CHANGE OIL IN SWING MACHINERY CASE.

**WARNING**

**The parts and oil are at high temperature after the engine is stopped, and may cause serious burns. Wait for the temperature to go down before starting the operation.**

- Refill capacity: 4.5 litres

1. Remove cover (A) of the inspection hole.
2. Set an oil container under drain valve (P) under the machine body and feed the drain hose from the drain valve into the container.
3. Loosen drain valve (P) and drain the oil. Then tighten the drain valve again.
4. Remove the cap from oil filler (F) and add the specified amount of engine oil through oil filler (F).
5. Pull out dipstick (G) and wipe the off oil from it with a clean cloth.
6. Insert dipstick (G) into the gauge pipe as far as it will go and then pull out it again.
7. If the oil level is between the H and L marks on dipstick (G), it is normal. If the oil does not reach the L mark, add more oil through oil filler (F).
8. If the oil level exceeds the H mark, drain the excess oil from drain valve (P), and check the oil level again.
9. Close the drain valve and allow excess oil to drain from the drain tube. Stow the hose and reinstall the undercover.

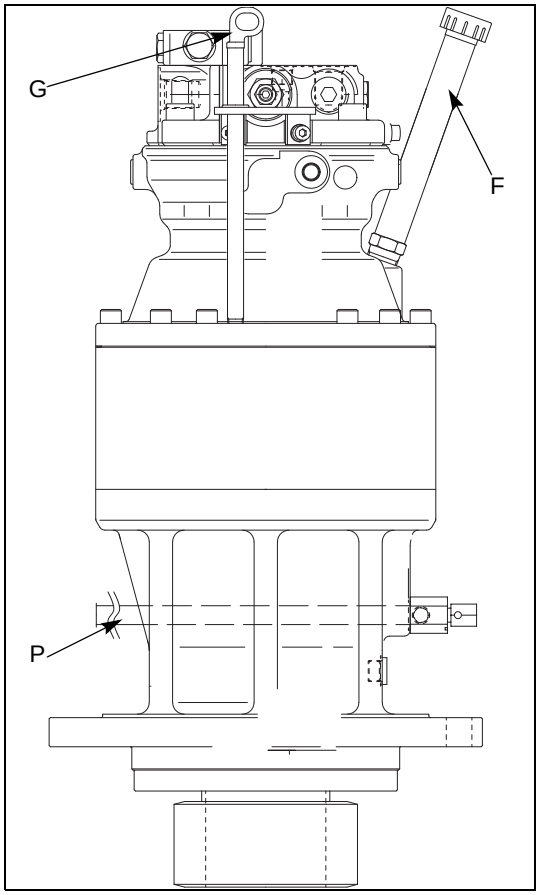


## CHECK ALL TIGHTENING PARTS OF TURBOCHARGER.

Contact your Komatsu distributor to have the tightening portions checked.

## CHECK PLAY OF TURBOCHARGER ROTOR.

Ask Komatsu distributor to check the play of the turbocharger rotor.

## CHECK & ADJUST VALVE CLEARANCE

As a special tool is required for removing and adjusting the parts contact your Komatsu distributor for service.

## CHECK FAN BELT TENSIONER BEARING BELT AND FAN HUB

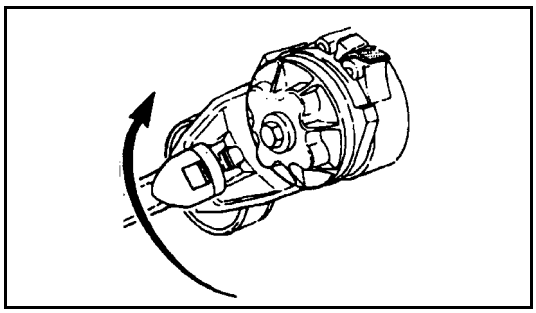

- Check the tensioner bearing
  With the fan belt removed rotate fan hub.
  The tensioned pulley should spin freely with no rough spots defected under hand pressure.
- Check the tensioner bearing.
- Replace bearing if damaged.
- Check fan hub. With the drive belt removed, rotate fan hub.

**REMARK**

The fan hub should spin freely without excessive end play.

- Check the fan hub bearing.
- Replace bearing if damaged.

## CHECK FAN BELT TENSION AND REPLACE FAN BELT

- Special tools are required for inspection and replacement of the fan belt. Contact your Komatsu distributors for inspection and replacement.

**REMARK**

An installed auto fan belt tension adjuster, "Auto Tensional Fan Belt", dispenses with the belt deflection adjustment.

## CHANGE OIL IN AXLES

### Front Axle

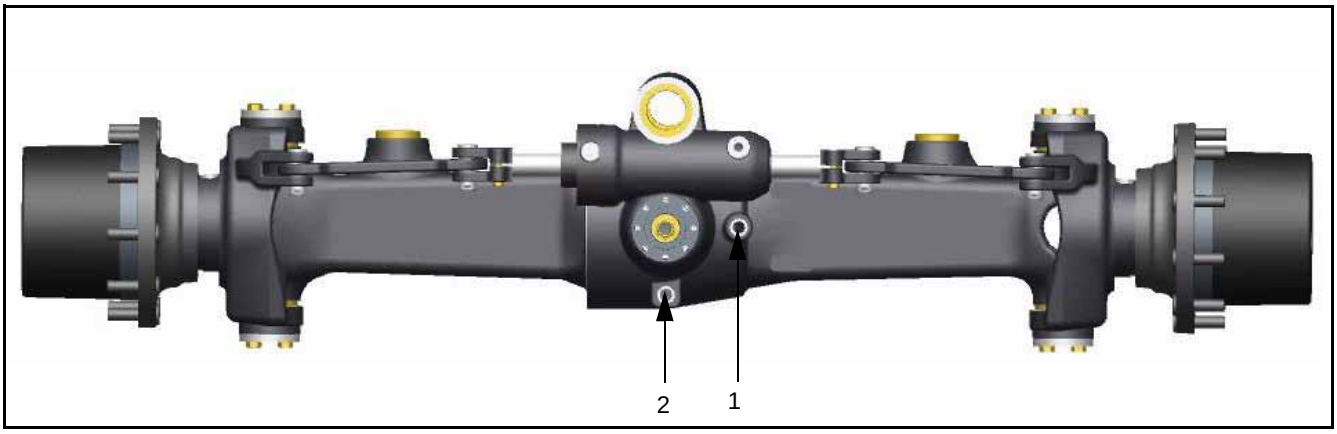


1. Remove plugs (1) and (2) to drain oil.
2. Replace plug (2).
3. Attach tube and funnel to plug (1) hole and add oil until oil emerges when tube is removed.
4. Replace plug (1).

**REMARK**

The oil must be replaced after first hundred hours then maintenance is thousand hours.

### Rear Axle

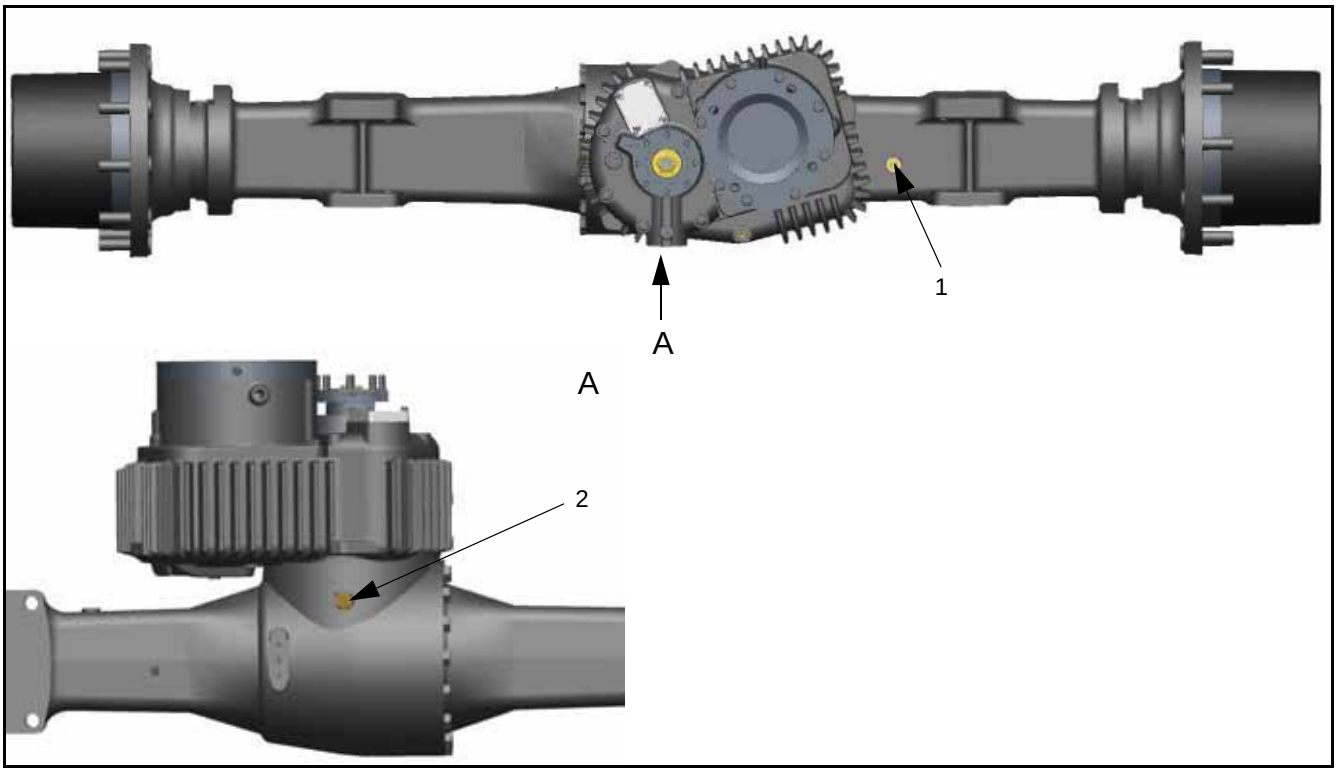


1. Remove plugs (1) and (2) to drain oil.
2. Replace plug (2).

3. Attach tube and funnel to plug (1) hole and add oil until oil emerges when tube is removed.
4. Replace plug (1).

**REMARK**
The oil must be replaced after first hundred hours then maintenance is thousand hours.

## CHANGE OIL IN HUBS

### 1. Front Axle

1. Position hub with plug (2) at bottom and remove plug (1) and (2).
2. When all oil has drained out, re-install plug (2).
3. Rotate hub until the oil level line marked Front is horizontal
4. Add oil (2.85 l each hub).
5. If oil emerges, allow excess to drain off and re-install plug (1).
6. If no oil emerges, add oil until there is an excess. Allow excess to drain off and re-install plug (1).

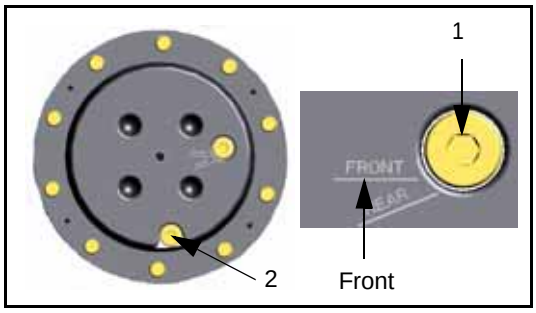


**REMARK**
The oil must be replaced after first hundred hours then maintenance is thousand hours.

### 2. Rear Axle

1. Position hub with plug (2) at bottom and remove plug (1) and (2).
2. When all oil has drained out, re-install plug (2).
3. Rotate hub until the oil level line marked Rear is horizontal
4. Add oil (2.0 l each hub).
5. If oil emerges, allow excess to drain off and re-install plug (1).
6. If no oil emerges, add oil until there is an excess. Allow excess to drain off and re-install plug (1).

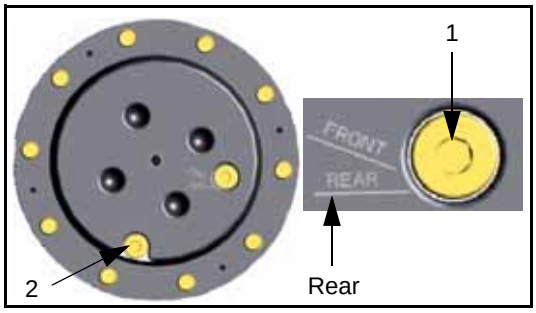


**REMARK**
The oil must be replaced after first hundred hours then maintenance is thousand hours.

## CHANGE OIL IN TRANSMISSION ASSEMBLY

**TRANSMISSION**

1. Remove plugs (1)+(2) and allow oil to drain out.
2. Replace plug (2).
3. Add oil (approx. 4.85 l) until oil emerges from plug (1) hole.
4. Replace plug (1).

**REMARK**

The oil must be replaced after first hundred hours then maintenance is thousand hours.

# EVERY 2000 HOURS SERVICE

**Maintenance for every 100, 250, 500 and 1000 hours should be carried out at the same time.**

## CLEAN HYDRAULIC TANK STRAINER

**WARNING**

- **The parts and oil are at high temperature after the engine is stopped, and may cause serious burns. Wait for the temperature to go down before cleaning the hydraulic tank strainer.**
- **When the oil filler cap is removed, oil may spurt out, turn the cap slowly to release the internal pressure, then remove it carefully.**

1. Loosen 6 bolts, then remove cover (1).
2. When doing this, the cover may fly out under the force of spring (2), so push the cover down when removing the bolts.
3. Pull up the top of rod (3), and remove spring (2) and strainer (4).
4. Remove the dirt stuck to strainer (4), then wash it in clean diesel oil or flushing oil.
5. If strainer (4) is damaged, replace it with a new one.
6. Refit strainer (4) by inserting it into the tank projecting part (5).
7. Assemble it so that the protruding part at the bottom of cover (1) holds spring (2), then tighten the cover with the bolts.

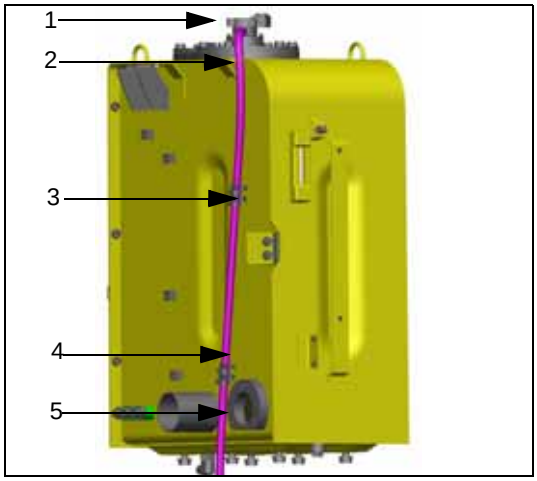


## CLEAN, CHECK TURBOCHARGER

Contact your Komatsu distributor for cleaning or inspection.

## CHECK ALTERNATOR, STARTING MOTOR

The brush may be worn, or the bearing may have run out of grease, so contact your Komatsu distributor for inspection or repair. If the engine is started frequently, carry out inspection every 1000 hours.

## CHANGE ANTIFREEZE

**Follow the procedure of "CLEAN INSIDE OF COOLING SYSTEM (251)" for draining and refilling the cooling system.**

## CHECK AND ADJUST VALVE CLEARANCE

A special tool is required for removing and adjusting the parts, call your Komatsu distributor for service.

# EVERY 4000 HOURS SERVICE

**Maintenance for every 100, 250, 500, 1000 and 2000 hours should be carried out at the same time.**

## CHECK WATER PUMP

Since the pulley may have play, oil may leak, water may leak and the drain hole (A) may be clogged, contact your Komatsu distributor for inspection, overhaul or replacement.

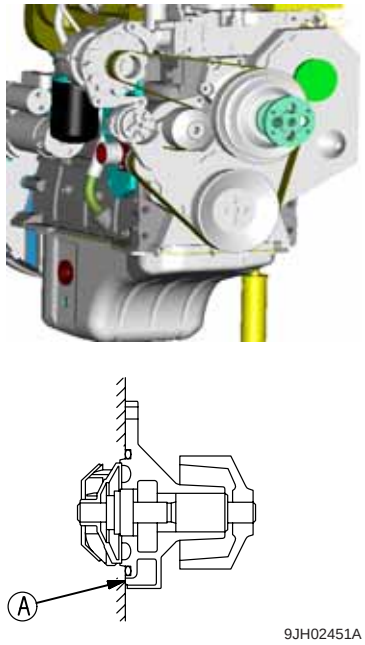

# EVERY 5000 HOURS SERVICE

**Maintenance for every 100, 250, 500 and 1000 hours should be carried out at the same time.**

## CHANGE OIL IN HYDRAULIC TANK

**WARNING**

- **The parts and oil are still at high temperature after the engine is stopped, and may cause serious burns. Wait for the temperature to go down before servicing the hydraulic tank.**
- **When the oil filler cap is removed, oil may spurt out, so turn the cap slowly to release the internal pressure, then remove it carefully.**

Prepare the following.

- Refill, capacity: 120 litres
- Prepare a handle for the socket wrench set.

1. Retract the arm and bucket cylinders to the stroke end, then lower the boom and put the bucket teeth in contact with the ground.
2. Lock the safety lock lever and stop the engine.

3. After the tank has cooled, remove the cap from oil filler (F) on the hydraulic tank.
4. Set an empty oil container under the drain plug under the machine. Remove drain plug (P) and drain the oil.

   Check the O-ring installed on plug (P). If it is damaged, replace the O-ring. After draining the oil, tighten drain plug (P).
   Tightening torque: 69 ± 10 N•m.

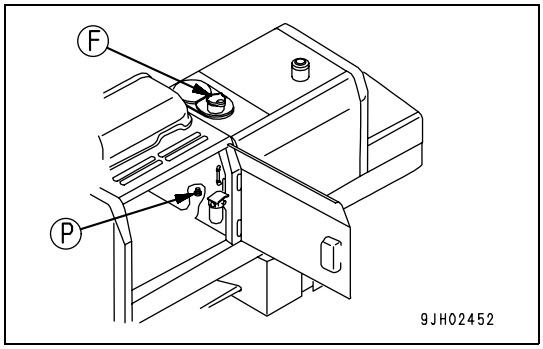


When removing drain plug (P), be careful not to get oil on yourself.

5. Add the specified amount of engine oil through oil filler port (F).

   Check that the oil level is midway between H and L on the sight gauge.

   **For details of the method of bleeding the air, see "CHECK OIL LEVEL IN HYDRAULIC TANK, ADD OIL (268)".**

**Procedure for bleeding air**

Follow steps 1 & 2 to bleed the air.

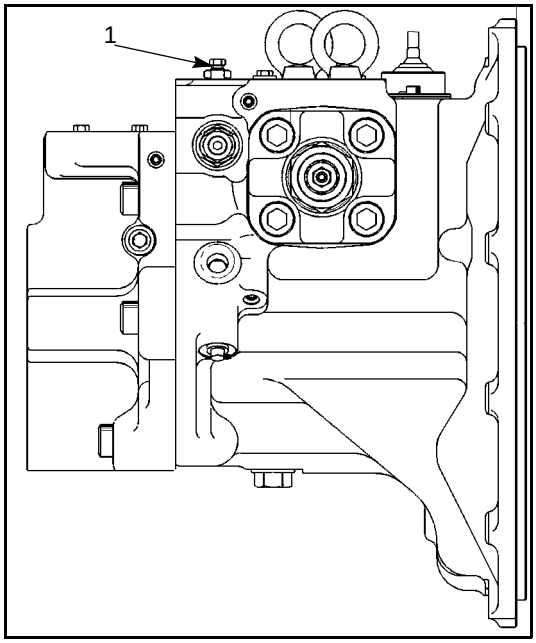


**1. Bleeding air from pump**

1. Loosen air bleeder (1) installed to the drain port, and check that oil oozes out. (Completion of air bleeding)
2. After completing the air bleeding operation, tighten the air bleeder.

**NOTICE**

**Be sure to insert seat before inserting plug.**

**REMARK**

If the pump is operated without filling the pump case with hydraulic oil, abnormal heat will be generated and this may lead to premature damage of the pump.

**2. Starting engine**

Start the engine according to "STARTING ENGINE (160)" keep running the engine at low idling for 10 minutes, and carry out the following procedure.

**3. Bleeding air from cylinders**

1. Run the engine at low idling, for 5 minutes after engine start. Extend and retract each cylinder 4 - 5 times without operating it to the end of its stroke. (Stop approx. 100 mm before the end of the stroke)
2. Next alter engine speed to Max., and operate each cylinder to the end of its stroke 3 - 4 times.
3. After this, operate each cylinder 4 - 5 times to the end of its stroke to completely bleed the air.

**NOTICE**

**If, at first, the engine is run at high speed or the cylinder is operated to the end of its stroke, the air inside the cylinder may cause damage to the piston packing or other parts.**

# SPECIFICATIONS

# SPECIFICATIONS

| | | | |
|---|---|---|---|
| **WEIGHT** | | | PW160-7K |
| ● Operation weight (without operator) | | | * 15800 kg |
| **PERFORMANCE** | | | |
| ● Bucket capacity (standard bucket) SAE | | | 0.8 m³ |
| ● Travel speed | Creep speed | | 2.5 km/h** |
| | Low speed | | 10 km/h** |
| | High speed | Non German specification | 35 km/h** |
| | | German specification | 20 km/h** |
| ● Swing speed | | | 11.5 rpm |
| **ENGINE** | | | |
| ● Model | | | Komatsu SAA4D102E-2 diesel engine |
| ● Flywheel horsepower (NET) | | | 87.5 kW (119 PS /2200 rpm) |
| ● Starting motor | | | 24 V 4.5 kW |
| ● Alternator | | | 24 V 45 A |
| ● Battery | | | 12 V 95 AH x 2 (STD)<br>12 V 120AH x 2 (OPTION) |

* Weight will vary depending on specification

# 1 - PIECE BOOM

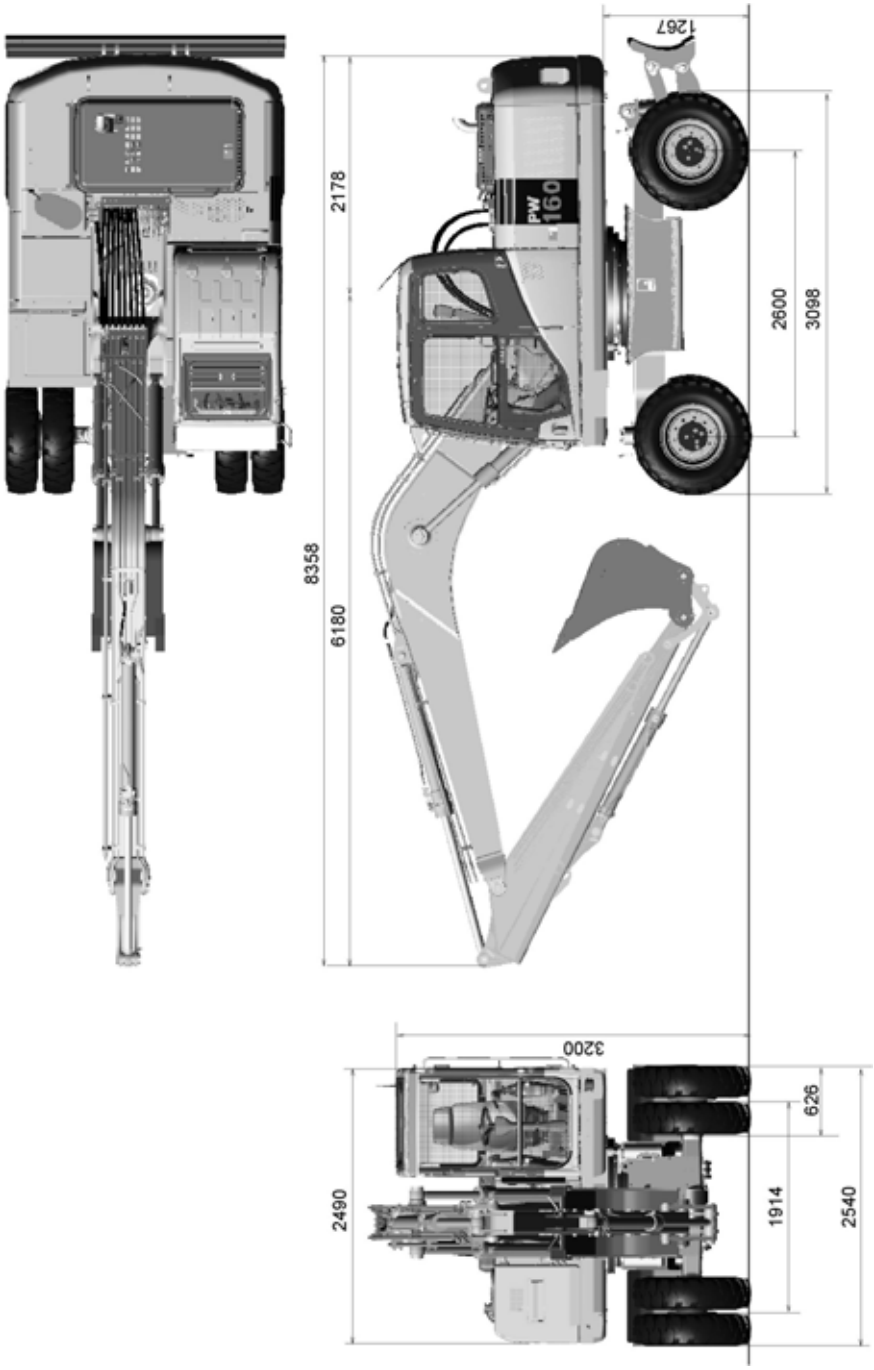

## 2 - PIECE BOOM

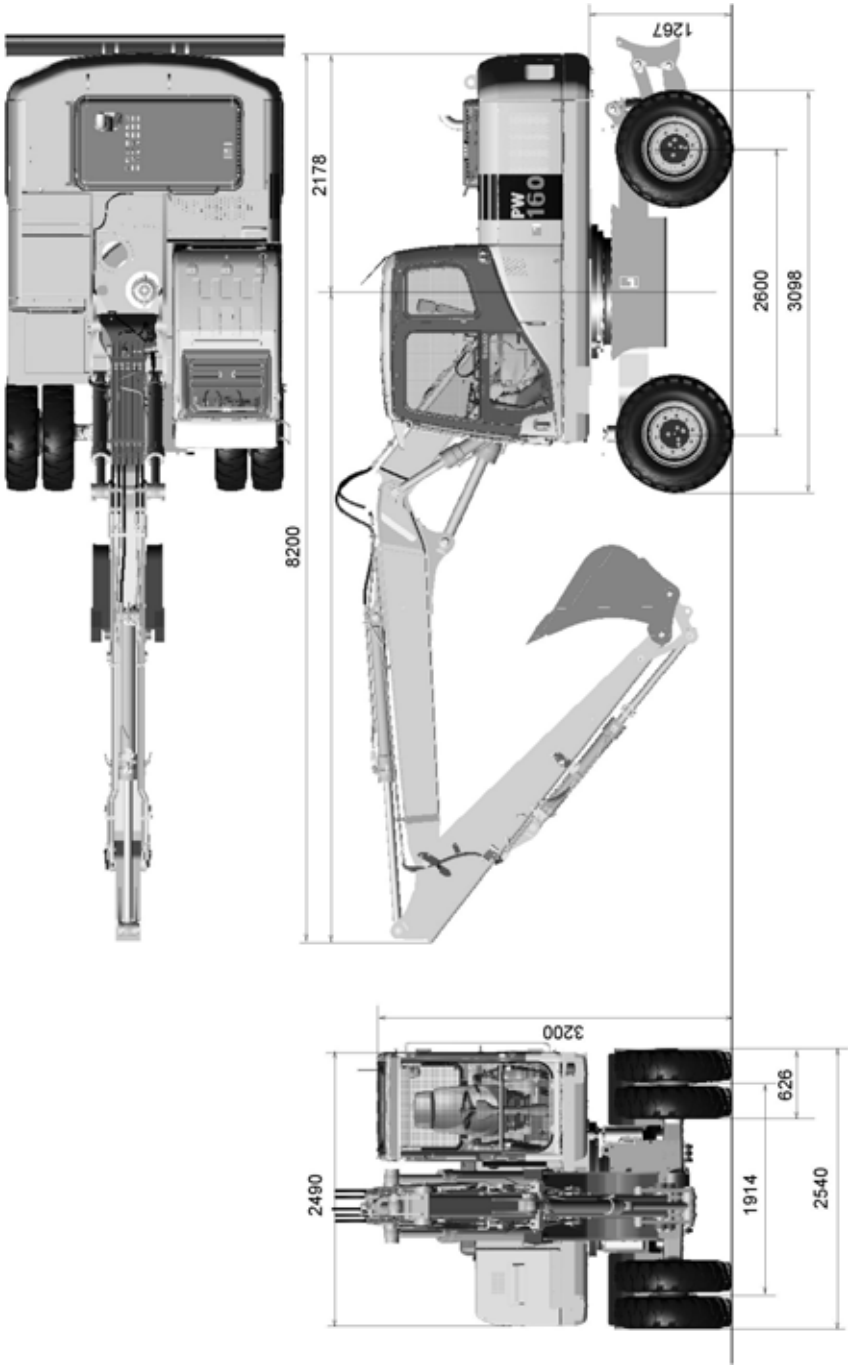

## WORKING RANGE: ONE PIECE BOOM

| Arm length mm | | 2100 | 2500 | 3000 |
|---|---|---|---|---|
| A | Max. digging height | 8,730 | 8,930 | 9,285 |
| B | Max. dumping height | 6,335 | 6,555 | 6,911 |
| C | Max. digging depth | 4,925 | 5,320 | 5,600 |
| D | Min. swing radius | 3,205 | 3,160 | 3,180 |
| E’ | Max. digging reach GL | 8,620 | 8,885 | 9,315 |
| E | Max. digging reach | 8,640 | 9,070 | 9,485 |

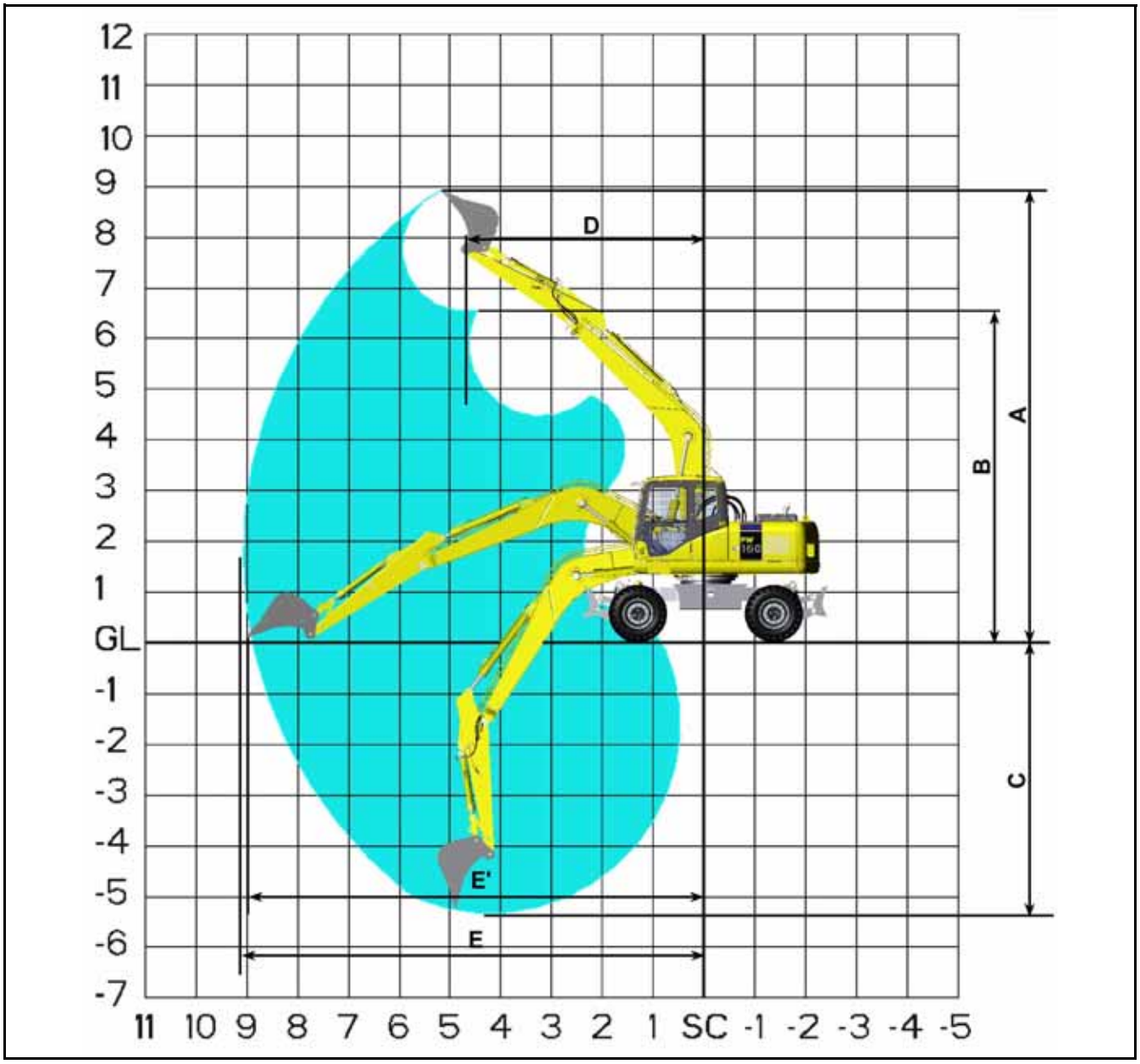

## WORKING RANGE: TWO PIECE BOOM

| Arm length mm | | 2100 | 2500 | 3000 |
|---|---|---|---|---|
| A | Max.digging height | 9,745 | 10,118 | 10,575 |
| B | Max.dumping height | 7,285 | 7,655 | 8,117 |
| C | Max digging depth | 4,960 | 5,465 | 5,770 |
| D | Min. swing radius | 2,215 | 2,385 | 2,590 |
| E’ | Max. digging reach GL | 8,310 | 8,745 | 9,225 |
| E | Max. digging reach | 8,505 | 8,930 | 9,410 |

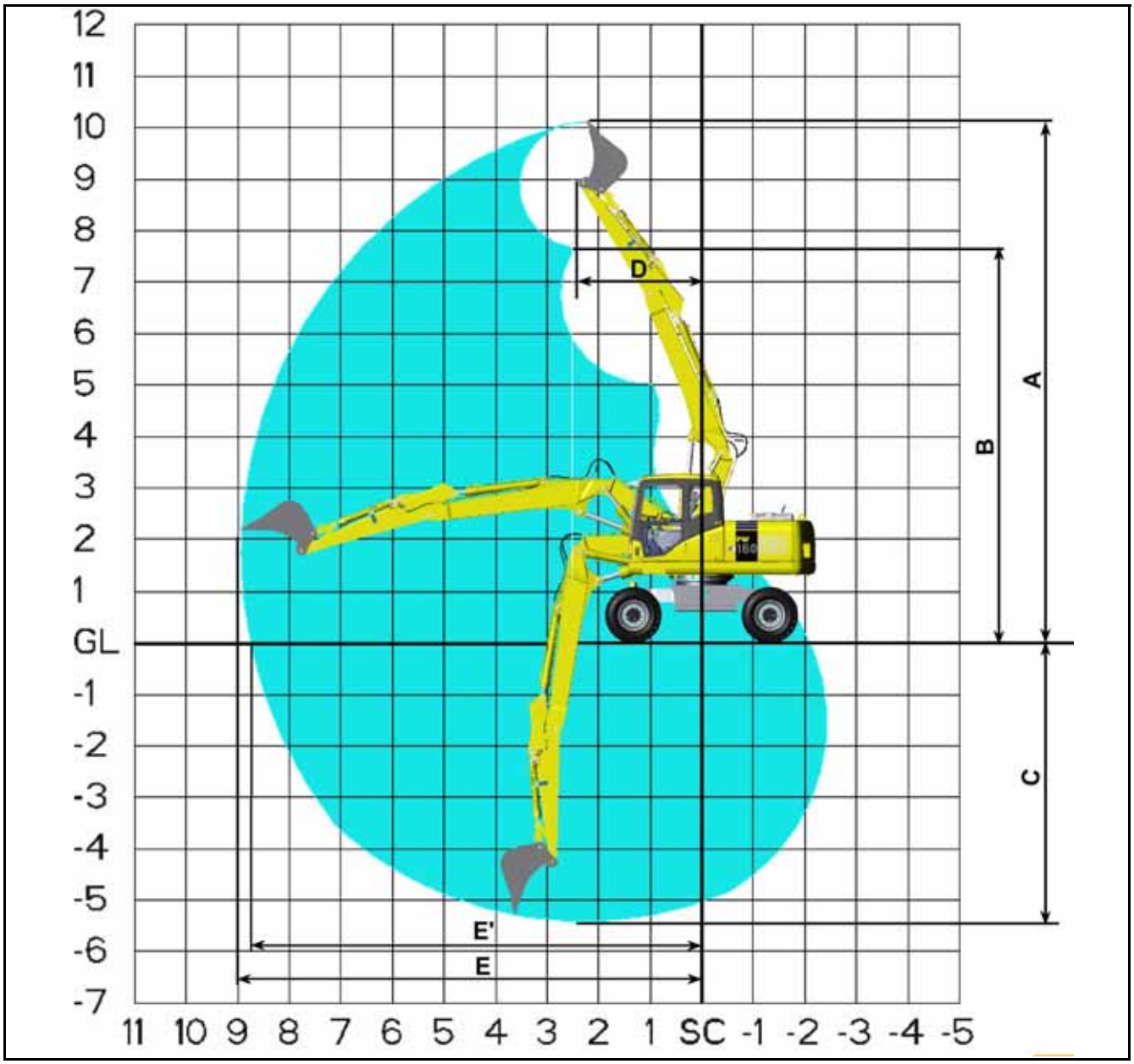

## WORKING RANGE: ROTATING ARM

| Arm length mm | | |
|---|---|---|
| A | Max.digging height | 10,170 |
| B | Max.dumping height | 7,695 |
| C | Max digging depth | 5,525 |
| D | Min. swing radius | 2,345 |
| E’ | Max. digging reach GL | 8,825 |
| E | Max. digging reach | 9,005 |

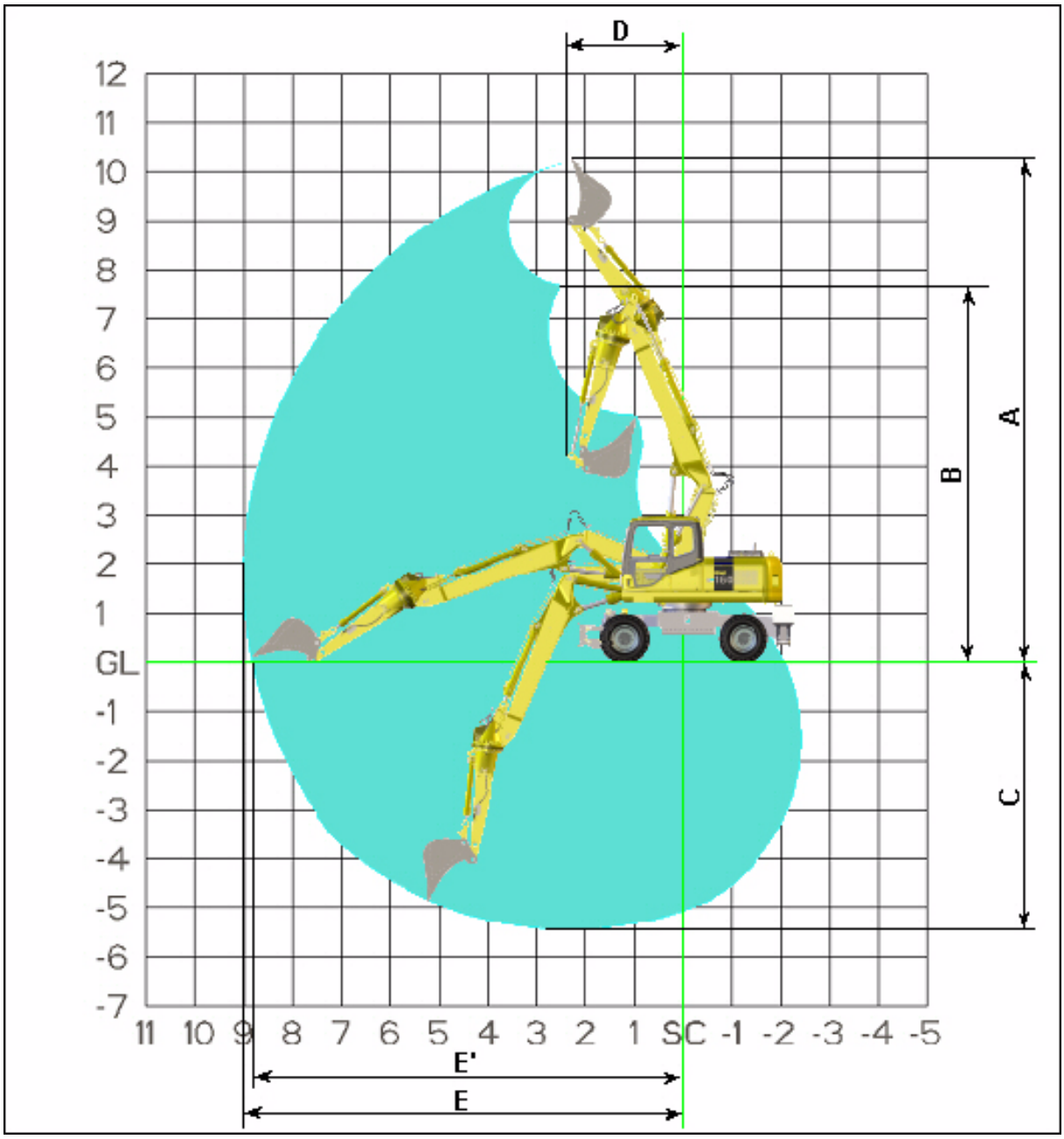

# OPTIONS, ATTACHMENTS

**WARNING**

**Please read and make sure that you understand the safety volume before reading this section.**

# GENERAL PRECAUTIONS

## PRECAUTIONS RELATED TO SAFETY

If attachments or options other than those authorized by Komatsu are installed, this will not only affect the life of the machine, but will also cause problems with safety.

When installing attachments not listed in this Operation and Maintenance Manual, please contact your Komatsu distributor first.

If you do not contact Komatsu, we cannot accept any responsibility for any accident or failure.

**⚠ WARNING**

**Precautions for removal and installation operations**
**When removing or installing attachments, obey the following precautions and take care to ensure safety during the operation.**

- **Carry out the removal and installation operations on a flat, firm ground surface.**
- **When the operation is carried out by two or more workers, determine signals and follow these during the operation.**
- **When carrying heavy objects (more than 25 kg), use a crane.**
- **When removing heavy parts, always support the part before removing it.**
  **When lifting such heavy parts with a crane, always pay careful attention to the position of the centre of gravity.**
- **It is dangerous to carry out operations with the load kept suspended. Always set the load on a stand, and check that it is safe.**
- **When removing or installing attachments, make sure that they are in a stable condition and will not fall over.**
- **Never go under a load suspended from a crane.**
  **Always stand in a position that is safe even if the load should fall.**

**NOTICE**

**Qualifications are required to operate a crane. Never allow the crane to be operated by unqualified person.**
**For details of the removal and installation operations, please contact your Komatsu distributor.**

# PRECAUTIONS WHEN INSTALLING ATTACHMENTS

If options or attachments are modified or changed, the driving characteristics of the machine may change. Always read this section as a refresher every time attachments change.

**WARNING**

**Long work equipment reduces the stability of the chassis, so if the swing is operated on a slope, or when going down a steep hill, the machine may lose its balance and overturn. The following operations are particularly dangerous, so never operate the machine in these ways.**

- **Going downhill with the work equipment raised**

- **Traveling across slopes**

- **Swinging the upper structure on slopes**
- **If heavy work equipment is installed, the overrun of the swing becomes greater (the distance from the point where the operator operates the left control lever to stop the swing to the point where the upper structure stops completely), so there is danger of mistaking the distance and hitting something.**
  **Always operate so that there is an ample margin to the stopping point.**
  **Furthermore, the hydraulic drift also becomes larger when the work equipment is stopped in mid-air, it will gradually move down under its own weight).**
- **Always follow the correct procedure when installing the boom and arm. If the correct procedure is not followed, this may lead to serious damage or injury, so please consult your Komatsu distributor before carrying out installation.**
- **If long work equipment is installed, the working range will suddenly become larger, so there is danger of mistaking the distance and hitting something.**
  **Always operate the work equipment so that there is ample space from any obstacles in the area**

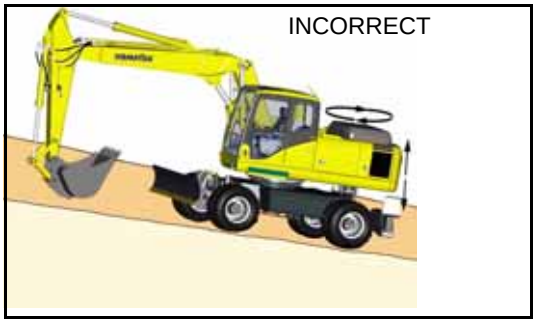


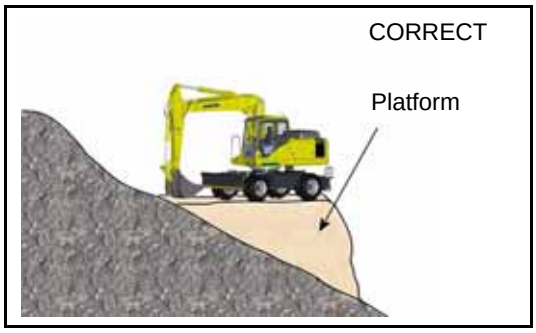

# HANDLING BUCKET WITH HOOK

## CHECKING FOR DAMAGE TO BUCKET WITH HOOK

Check that there is no damage to the hook, stopper, or hook mount. If any abnormality is found, please contract your Komatsu distributor.

## PROHIBITED OPERATIONS

The standard work equipment must not be used for lifting loads. If this machine is to be used for lifting loads, it is necessary to install the special bucket with hook.

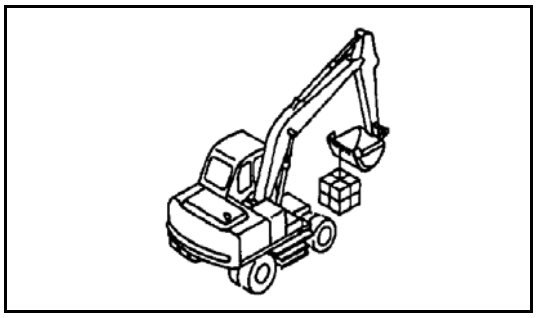

## PRECAUTIONS DURING OPERATIONS

- When carrying out lifting operations, reduce the engine speed and use the lifting operation mode.
- Depending on the posture of the work equipment, there is danger that the wire or load may slip off the hook. Always be careful to maintain the correct hook angle to prevent this from happening.
- Never steer the machine while lifting a load.

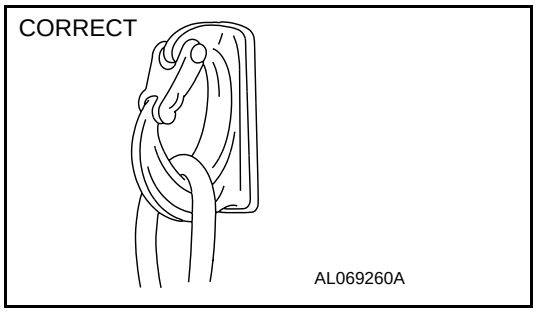


- If the bucket with hook is turned and used for operations, it will hit the arm during dumping operations, so be careful when using it.
- The loads must never exceed those specified in the lifting capacity chart when carrying out lifting operations.
- If you wish to install a hook in the future, please contact your Komatsu distributor.

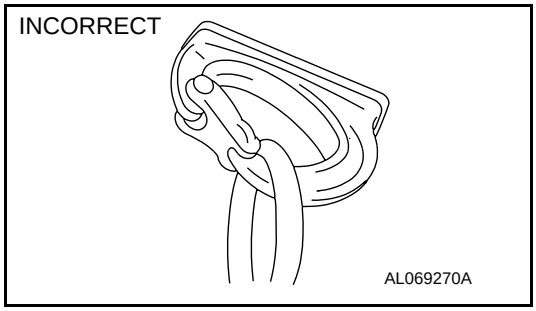

# MACHINES READY FOR ATTACHMENTS

## GENERAL LOCATIONS

**Clamshell Operation**

Selector valves to be in position shown for clamshell operation.

Selector valve in normal position to bucket cylinder

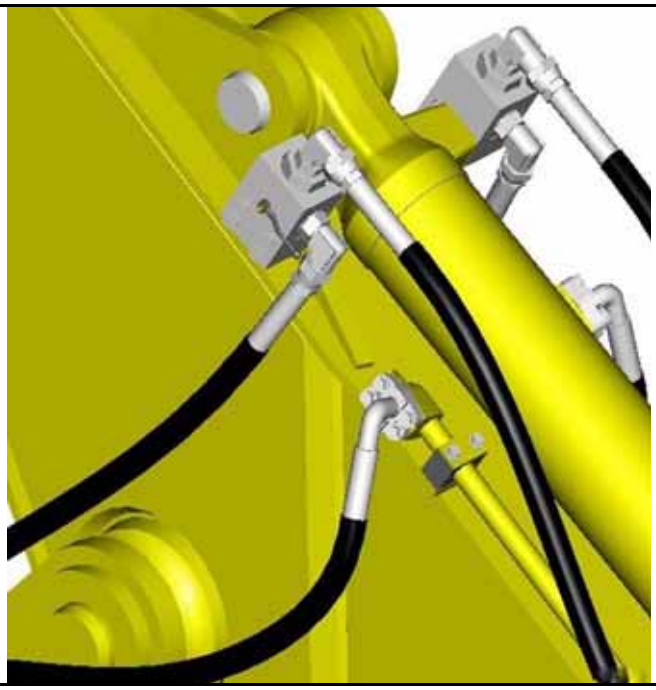

Selector valve turned to clamshell operation. Both valves must be in same position

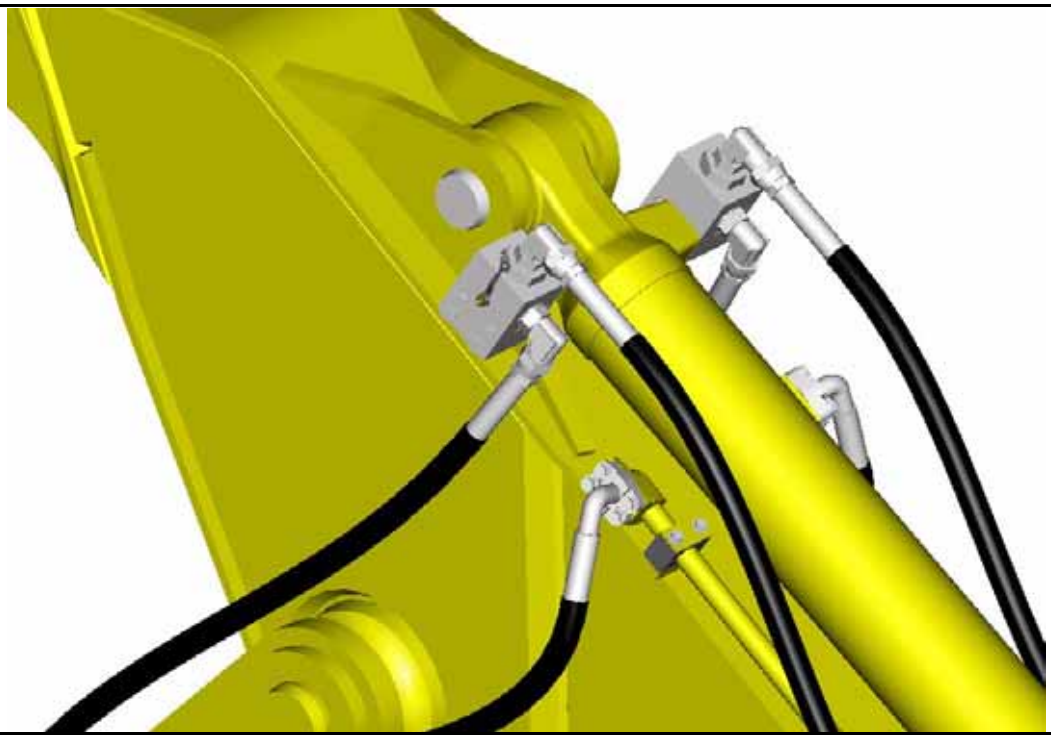

### 1. STOP VALVE (1)

This valve stops the flow of the hydraulic oil. There is one on both sides of the arm

(1) FREE: Hydraulic oil flows.

(2) LOCK: Hydraulic oil stops.

When removing or installing attachments, set this valve to the LOCK position.

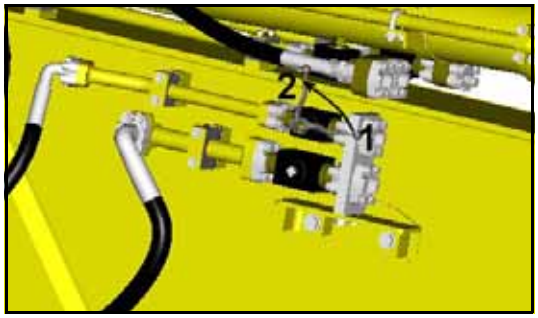


### 2. SELECTOR VALVE (2)

This switches the flow of the hydraulic oil.

Position (1): When clamshell is used

Position (2): When normal operation to bucket cylinder

| | |
|---|---|
| A | To/from main valve |
| B | Clamshell feed |

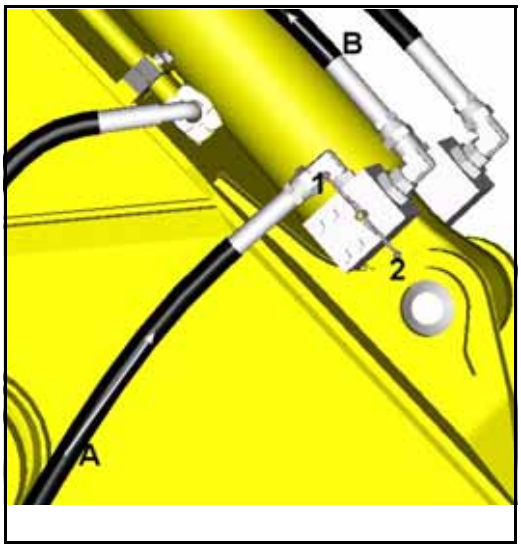


### 3. CONTROL PEDAL (20)

This is used to operate the attachment.

Pedal for two line attachment (with auto deceleration mechanism)

The breaker is operated by right control lever button (2) and (31).

The breaker is operated with right pedal (1).

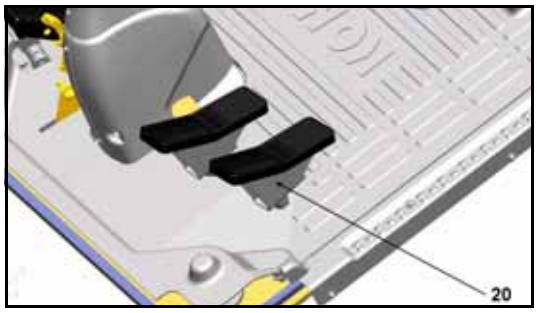


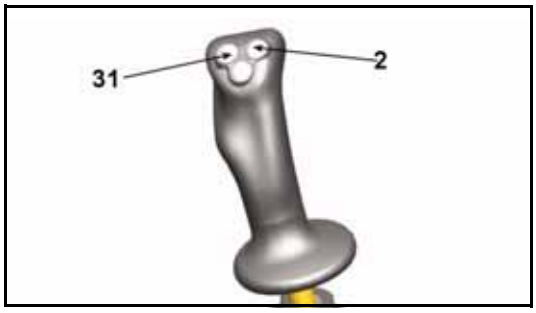

**4. ACCUMULATOR (FOR CONTROL CIRCUIT) (4)**

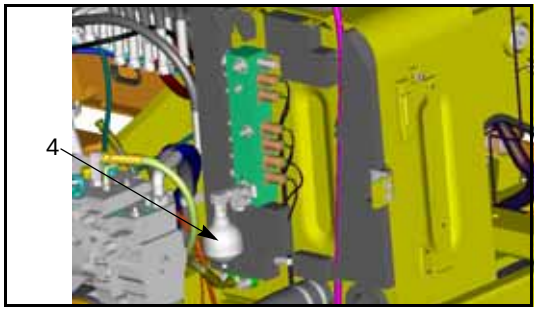


**WARNING**

**The accumulator is charged with high-pressure nitrogen gas, and it is extremely dangerous if it is handled mistakenly.**

**For details of handling, see "HANDLING ACCUMULATORS (146)"**

This is installed to release any remaining pressure in the attachment circuit after the engine is stopped. Normally, do not touch it.

## HANDLING THE CLAMSHELL BUCKET

**This bucket is used for digging and loading in side-ditches or confined spaces.**

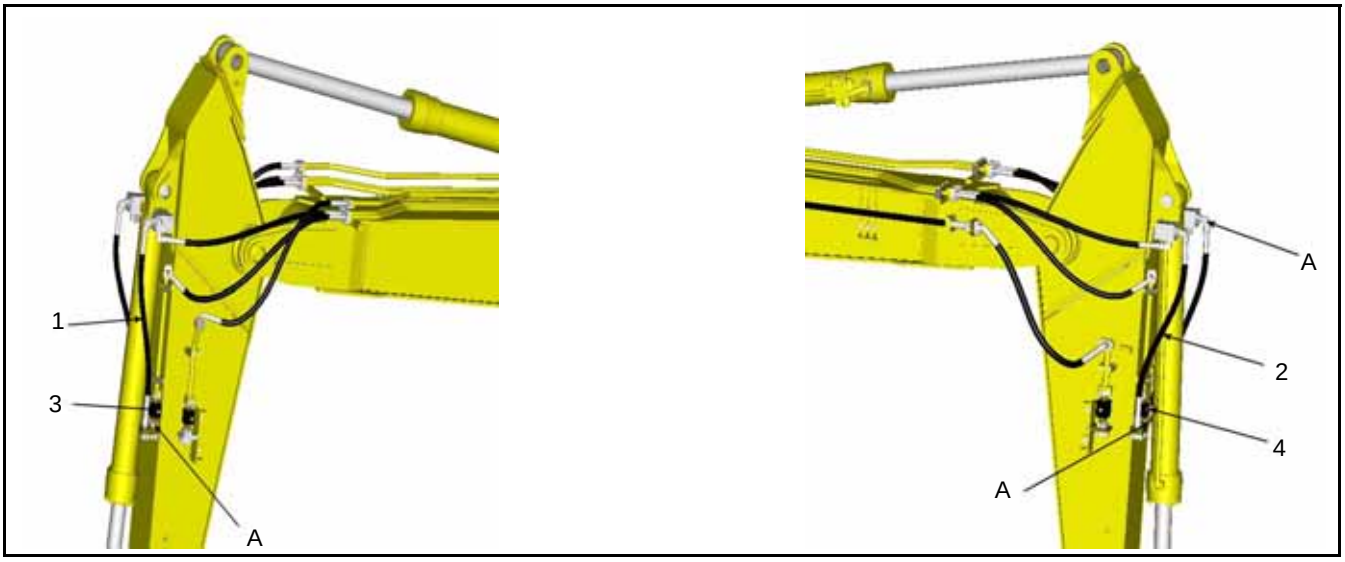


### How to install clamshell bucket

1. Clamshell cylinder head (feed)
2. Clamshell cylinder bottom (return)
3. Rotate left
4. Rotate right

Ensure valves (A) are open on both sides. Ensure selector is in correct position.

## HOW TO OPERATE

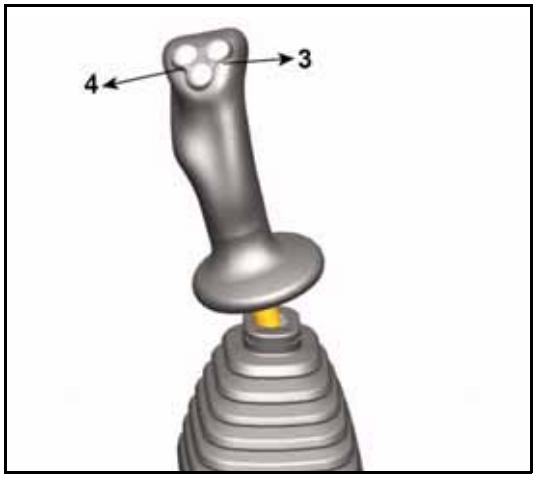


### Open and close

Move the right control lever to operate clamshell

3. Open (move to right)

4. Close (move to left)

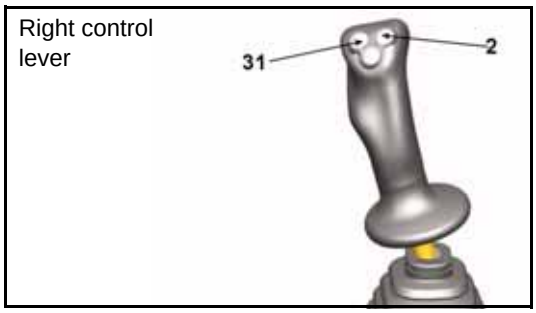

Right control lever

### Rotate

Press button on right control lever

2. Clockwise

31. Counter clockwise

- For safety, always avoid abrupt travelling, swing and stopping.
- When mounting a clamshell bucket, the bucket cylinder must be positioned at mid-stroke to allow access to quick release couplers.
  Connect couplers and retract bucket cylinder

**REMARK**

Isolate cylinder using lock valve and secure bucket links.

- Do not swing the bucket to crush the rock or to cut through soil.
- Do not use the bucket for hammering or pulling out piles, etc.
- Before leaving the machine, open the bucket and lower it to the ground.

# OPERATION

**⚠ WARNING**

- **Be careful when pressing the switch in the deceleration range. The engine speed will rise suddenly.**
- **Do not press the switch except when operating the attachment. If the switch is depressed by accident, the attachment may move suddenly and cause serious damage or injury.**

The operation of the attachment is as follows.

When the B mode control switch is ON and the lock pin position makes only the front of the pedal free, if the front of the pedal is depressed, the breaker is actuated.

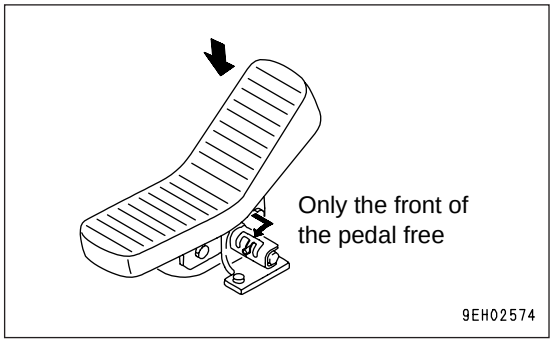


1. Set the working mode to B mode.
2. When select switch (1) on the monitor is pressed, the screen changes to screen (A). Select a suitable oil flow for the breaker from among 140 litres/min, 100 litres/min, and 60 litres/min, then press input confirmation switch (2).
3. The monitor screen changes to screen (B), so if it is necessary to make fine adjustment, press up switch (3) or down switch (4) to move the bar graph showing the oil flow up or down, then press input confirmation switch (2).

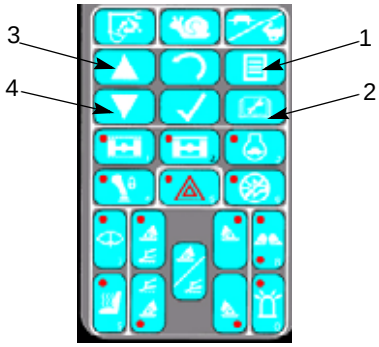


- It is possible to change the oil flow in segments of approx. 10 litres/min.
- If fine adjustment is not necessary, simply press input confirmation switch (2).
- The default setting is 140 litres/min.
- Even if the starting switch is turned OFF, the set oil flow when the engine is next started will be the value set by the above procedure.

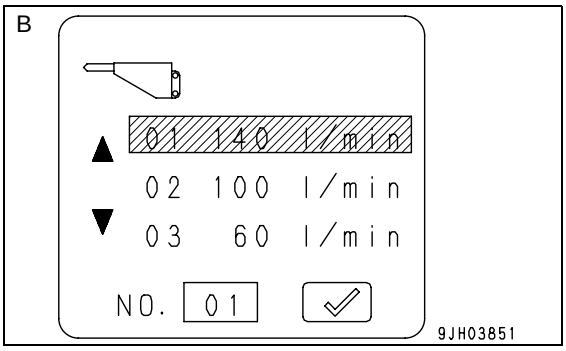


### Precautions when using

- Check that the stop valve is at the FREE position.
- Check that the selector valve is in the position for using the breaker and check that working mode is in B mode.
- When considering whether it is necessary to install an accumulator for the attachment circuit, contact the attachment manufacturer and then decide.
- For other precautions when handling the breaker, follow the instruction manual from the breaker manufacturer and use the breaker correctly.

- The deterioration of the hydraulic oil when using the breaker is much faster than for normal operations, so reduce the maintenance interval for the hydraulic oil and element.
  For details, see "MAINTENANCE SCHEDULE CHART (238)".

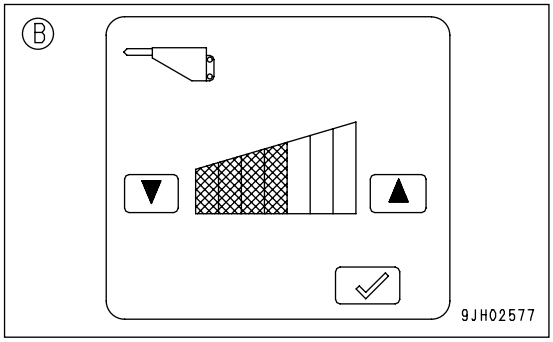


## WHEN USING CRUSHER OR OTHER GENERAL ATTACHMENT

When the A mode or E mode control switch is ON and the lock pin position makes both the front and the rear of the pedal free, if the front or rear of the pedal is depressed, the attachment is actuated.

1. Set the working mode to A mode or E mode.
2. When select switch (1) on the monitor is pressed, the screen changes to screen (C), so press up switch (3) or down switch (4) to move the bar graph showing the oil flow up or down, then press input confirmation switch (2).

- The default setting is the full flow (approx. 320 litres/min.
- Even if the starting switch is turned OFF, the set oil flow when the engine is next started will be the value set by the above procedure.

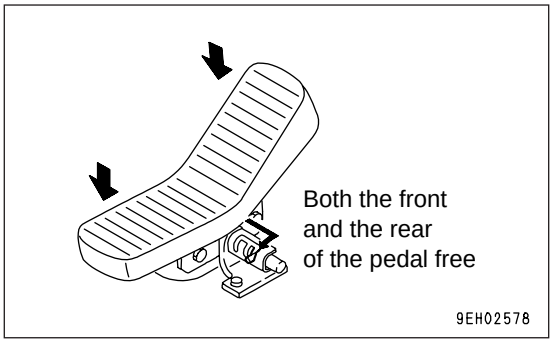


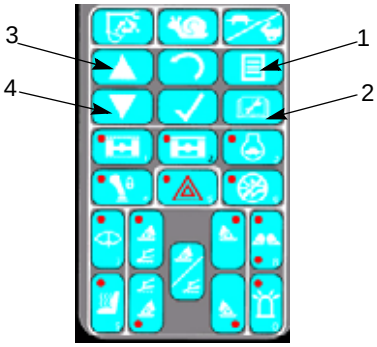


### Precautions when using

- Check that the stop valve is at the FREE position.
- Check that the selector valve is in the position for general attachments such as crusher, check that working mode is A mode or E mode.
- For other precautions when handling the attachment, follow the instruction manual from the attachment manufacturer and use the attachment correctly.

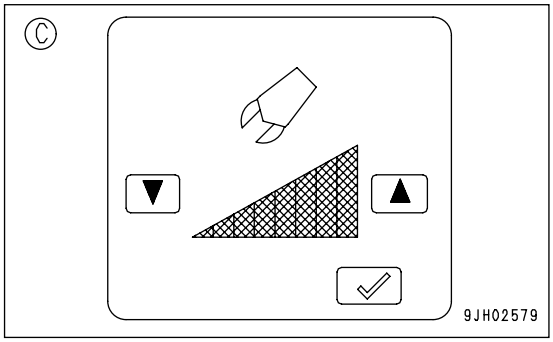

## WHEN USING BREAKER

Depress the switch (2) of the right control lever to operate the breaker.
Set the working mode to the B (breaker mode) mode.

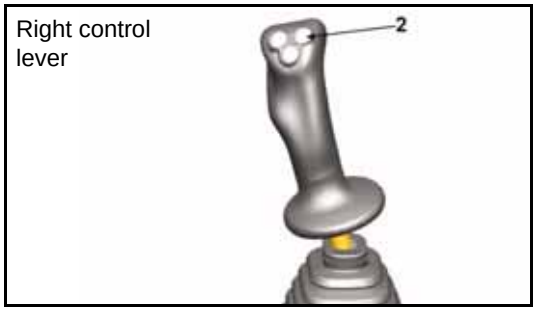


**NOTICE**

**Do not use the heavy-duty operation mode for breaker operations. If the breaker is used in the heavy-duty operation mode there is danger that the hydraulic equipment may be damaged.**

**Precautions when using**

- Check that the stopper valve is in the OPEN position.
- Consult with the attachment maker to decide whether it is necessary to install an accumulator for the attachment circuit.
- For details of other precautions when handling the breaker, read and use correctly the instruction manual provided by the breaker manufacturer.

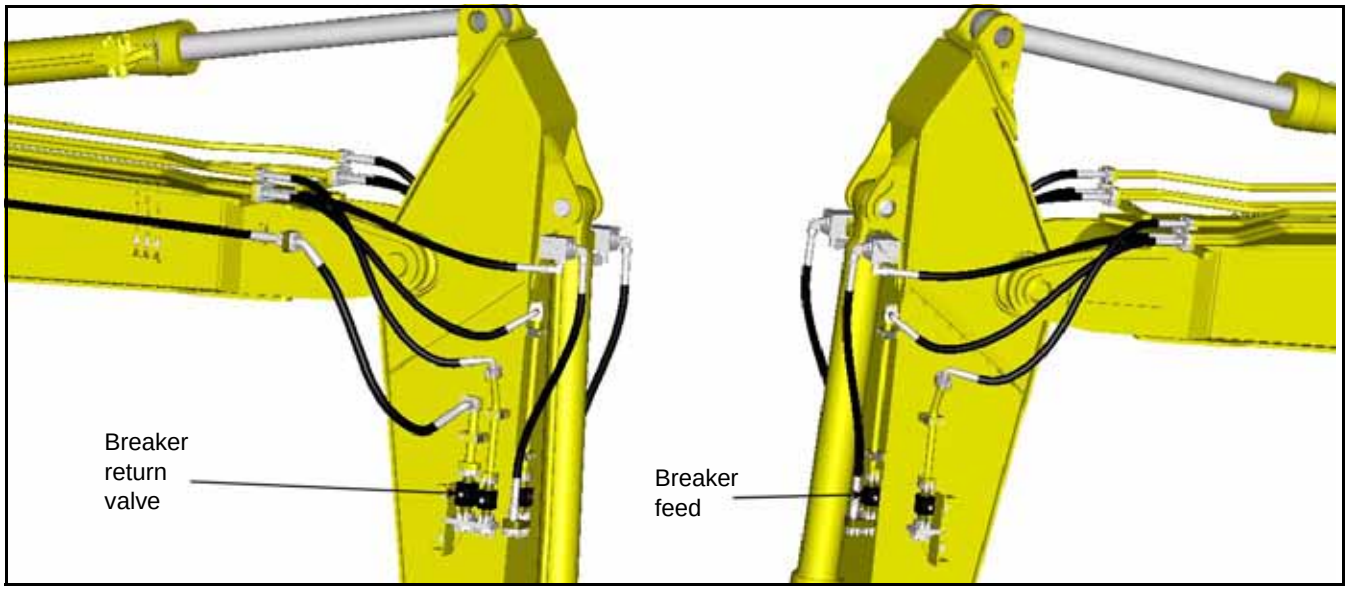

# METHOD FOR RELEASING PRESSURE IN CONTROL CIRCUIT OF MACHINES EQUIPPED WITH ACCUMULATOR

1. Lower the work equipment to the ground. Close any attachment such as the crusher.
2. Stop the engine.
3. Set the safety lock lever completely in the FREE position, operate the right control lever and attachment control pedal fully to the front, rear, left, and right, to release the pressure in the control circuit.
4. Set the safety lock lever completely in the LOCK position, then lock the control levers and attachment control pedal. Note that this does not completely release the pressure, so when removing the accumulator in the control circuit, loosen the connections slowly and do not stand in the direction where the oil spurs out.

# LONG-TERM STORAGE

If the machine is not to be used for a long time, do as follows.

- Set the stop valve in the LOCK condition.
- Install a blind plug to the valve.
- Set the selector valve to the position for general attachments such as the crusher.

If there is no breaker or general attachment installed, operating the pedal may cause overheating.

## SPECIFICATIONS

Hydraulic specifications

- Oil flow - Refer to clamshell and breaker manufacturers recommendations for oil flow for specific attachment.
- Main safety valve set pressure
  When using breaker: 24.5+/- 0.5 MPa (250 +/-5 kg/cm²).

# INTRODUCTION OF ATTACHMENTS AND EXTENDING MACHINE SERVICE LIFE

This section describes the necessary precautions to be observed when operating a hydraulic excavator equipped with an attachment.

**NOTICE**

**Select the attachment most suited to the machine body.**

- **The machine models to which attachments can be mounted vary. For selection of attachment and machine model, consult your Komatsu distributor.**

## HYDRAULIC BREAKER

### MAIN FIELDS OF APPLICATION

- Crushed rock
- Demolition work
- Road construction

This attachment can be used for a wide range of work including demolition of buildings, breaking up of road surfaces, tunnel work, breaking up slag, rock crushing, and breaking operations in quarries.

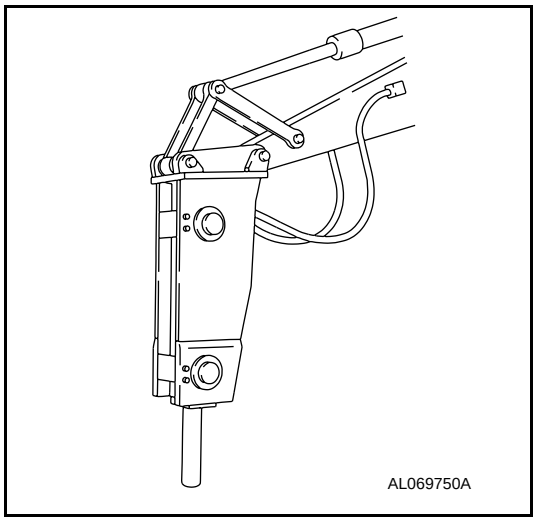


Keep the chisel pushed perpendicularly against the impact surface when carrying out breaking operations.

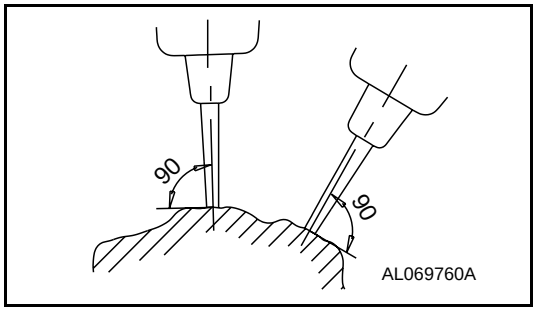


When applying impact, push the chisel against the impact surface and operate so that the chassis rises approx. 5 cm off the ground. Do not let the machine come further off the ground than necessary.

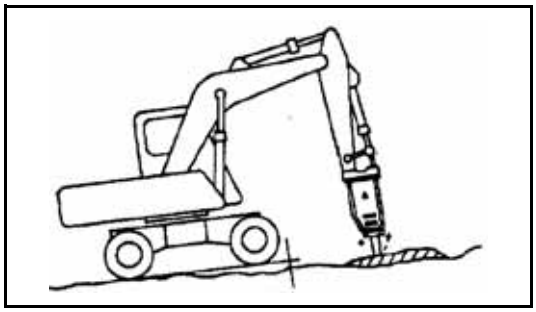

When applying continuous impact to the same impact surface, if the chisel does not penetrate or break the surface within 1 minute, change the point of impact and carry out breaking operations closer to the edge.

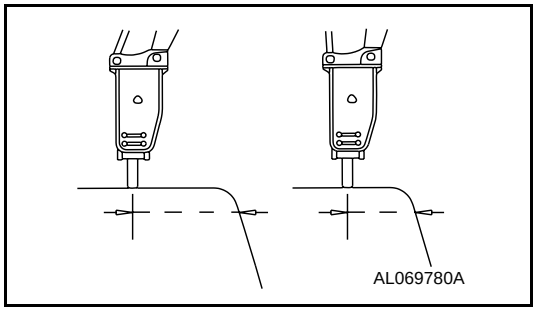


The direction of penetration of the chisel and the direction of the breaker body will gradually move out of line with each other, so always adjust the bucket cylinder to keep them aligned.

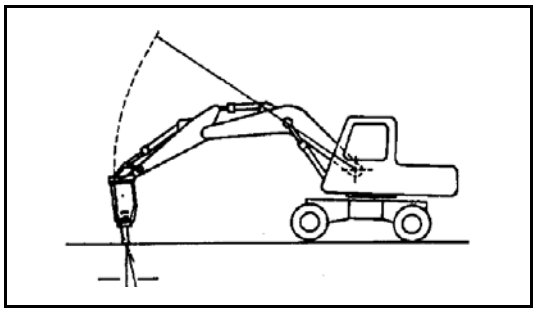

Always keep the chisel pressed against the impact surface properly to prevent using the impact force when there is no resistance.

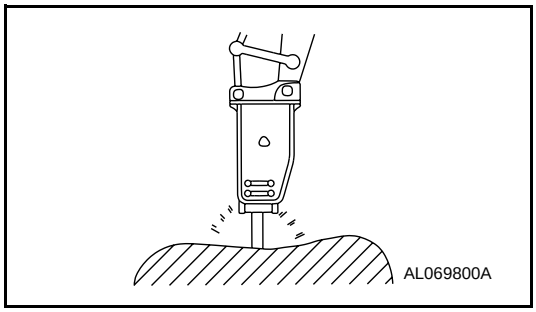


**MISTAKEN METHODS OF USE**

To ensure that the machine has a long life, and to ensure that operations are carried out in safety, do not operate the machine in any of the following ways.

- Do not operate the cylinder to the end of its stroke.
  Always leave approx. 5 cm to spare.

Using the mount to gather in pieces of rock

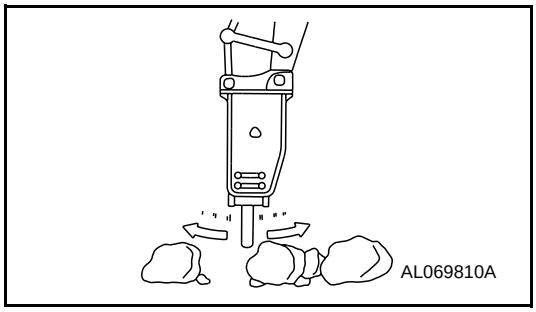


Operations using the swing force

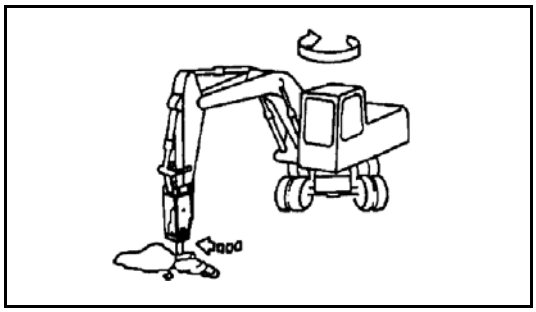

Moving the chisel while carrying out impacting operations

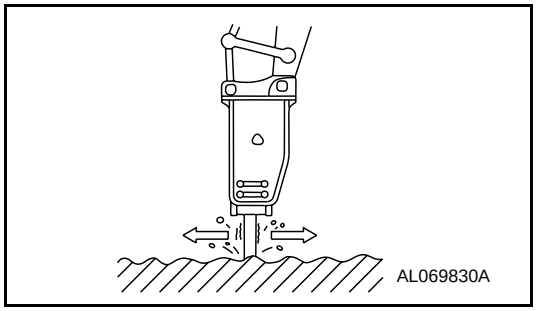


Holding the chisel horizontal or pointed up when carrying out impacting operations

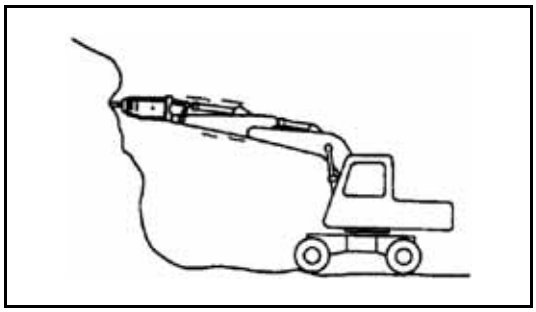

Twisting the chisel when it has penetrated the rock

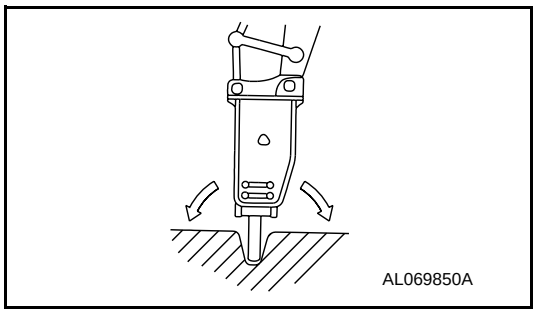


Pecking operations

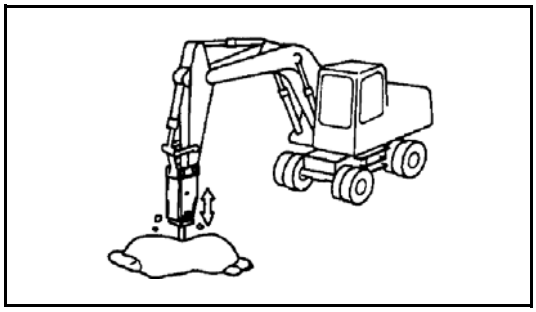

Extending the bucket cylinder fully and thrusting to raise the machine off the ground

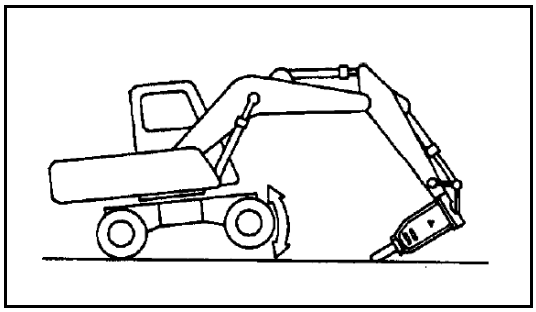

# POWER RIPPER

## MAIN FIELDS OF APPLICATIONS

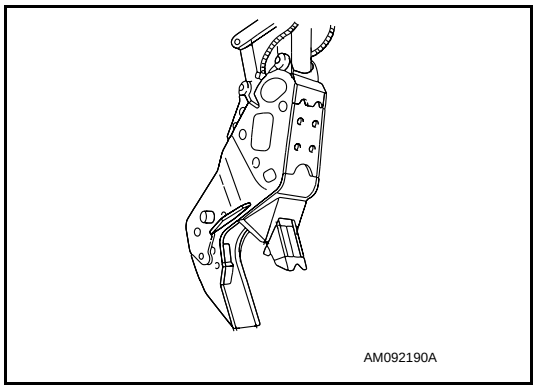


- Road repair work
- Demolition work

This attachment can be used for a wide range of work including peeling off and crushing pavement roads, demolishing wooden houses and buildings, and crushing foundation and roadbeds.

## MISTAKEN METHODS OF USE

To ensure that the machine has a long life, and to ensure that operations are carried out in safety, do not operate the machine in any of the following ways.

- Do not operate the cylinder to the end of its stroke.
  Always leave approx. 5 cm to spare.

Impact operations using attachment

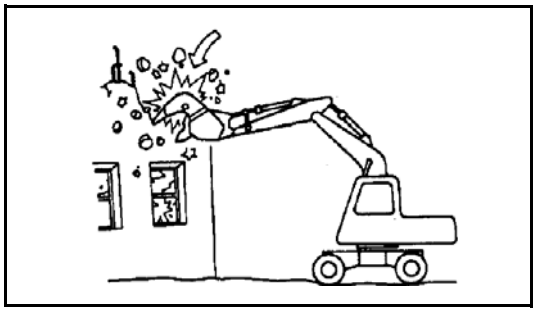

Impact operations using swing force

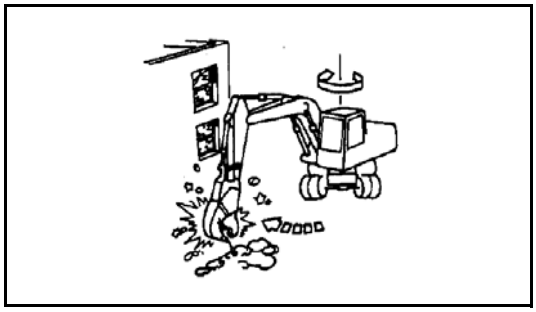

Overloading work equipment during lifting and loading operations

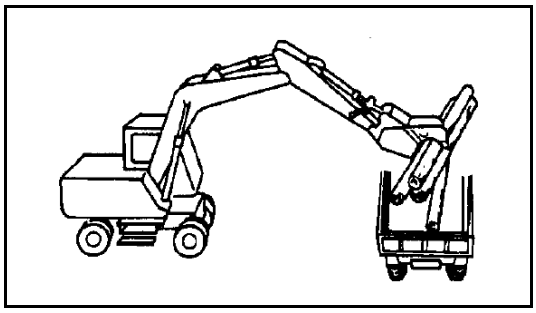

Operations using attachment to grip at an angle.

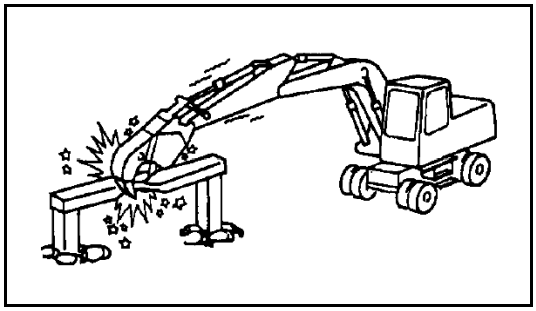

## FORK GRAB

### MAIN FIELDS OF APPLICATION

- Disposing of industrial waste
- Disposing of demolition waste

This can be used for a wide range of work including collecting or loading demolition waste materials and debris, timber, grass.

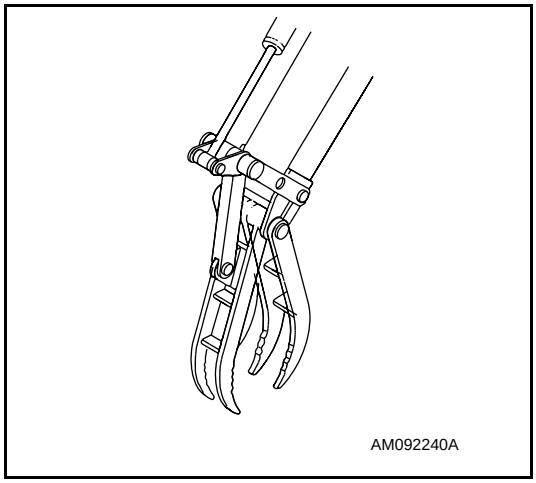


### MISTAKEN METHODS OF USE

To ensure that the machine has a long life, and to ensure that operations are carried out in safety, do not operate the machine in any of the following ways.

- Do not operate the cylinder to the end of its stroke.
  Always leave approx. 5 cm to spare.

Operations using the swing force

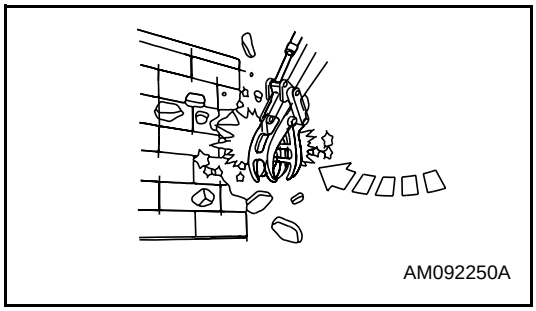


Operations using one side of work equipment

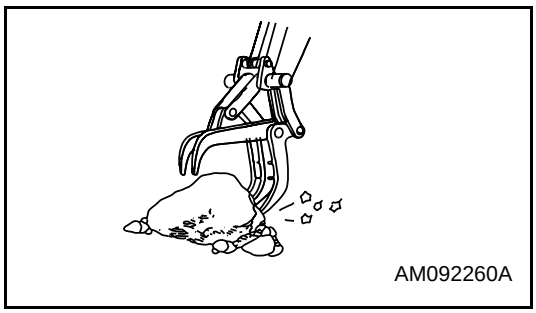

Pushing fork into ground surface to jack up and change direction of machine

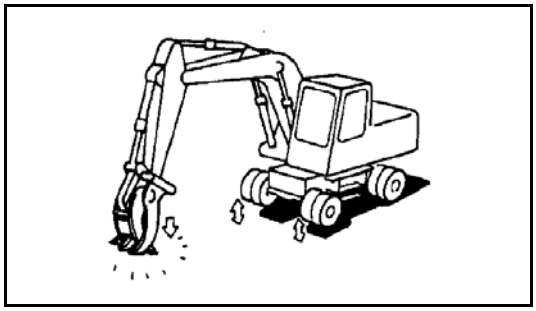

Impact operation with no load.

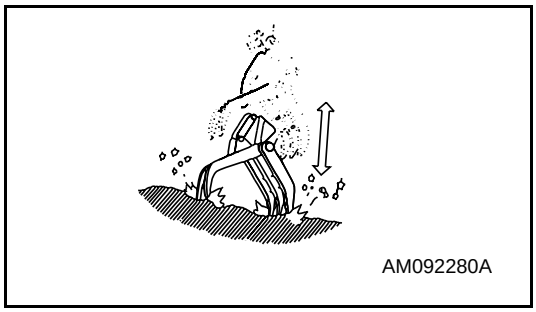


## GRAPPLE BUCKET

### MAIN FIELDS OF APPLICATION

- Demolition
- Disposing of industrial waste
- Forestry

This bucket is widely used for demolition including breaking-up work, grading and digging, clean-up work after natural disasters, dumping industrial waste, and forestry work, etc.

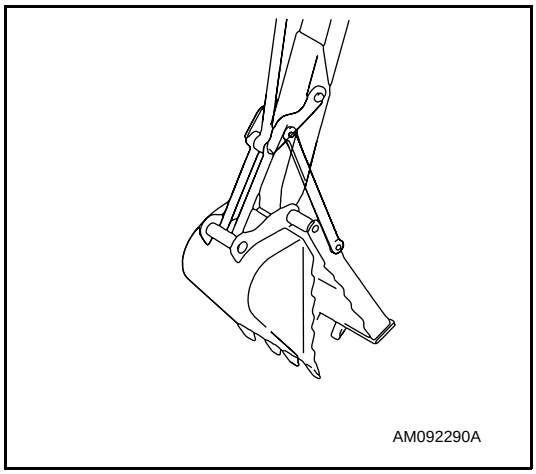


### MISTAKEN METHODS OF USE

To ensure that the machine has a long life, and to ensure that operations are carried out in safety, do not operate the machine in any of the following ways.

- Do not operate the cylinder to the end of its stroke.
  Always leave approx. 5 cm to spare.

Operations using the swing force

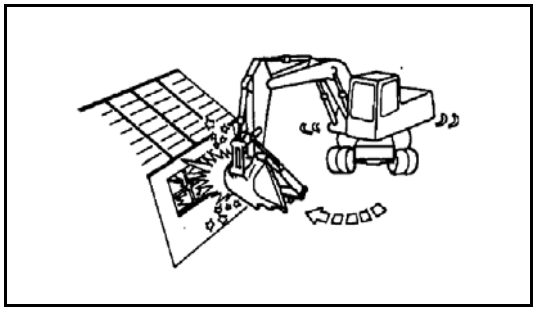

Grabbing a object using buckets on only one side

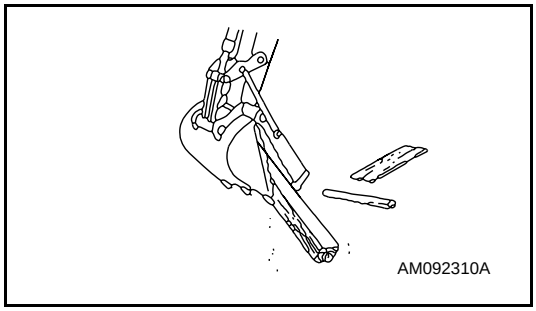


Closing the sub-bucket with the boom and arm fully extended.

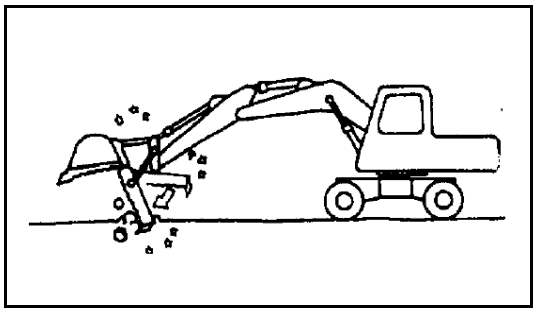

Impact operation with no load.

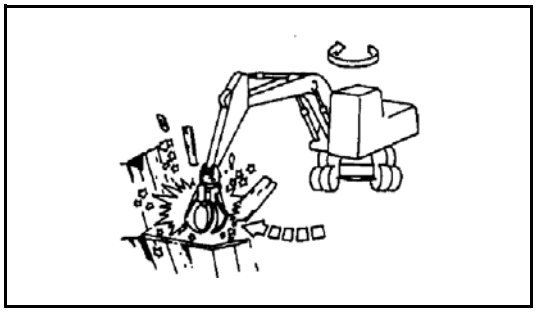

## SCRAP GRAPPLE

### MAIN FIELDS OF APPLICATION

- Disposal of rock or debris

This attachment is mounted to the arm end and used to grasp rock, debris etc. by opening and closing the claws (3 to 5) corresponding to the extension and retraction of the hydraulic cylinder.

### MISTAKEN METHODS OF USE

To ensure that the machine has a long life, and to ensure that operations are carried out in safety, do not operate the machine in any of the following ways.

- Do not operate the cylinder to the end of its stroke.
  Always leave approx. 5 cm to spare.

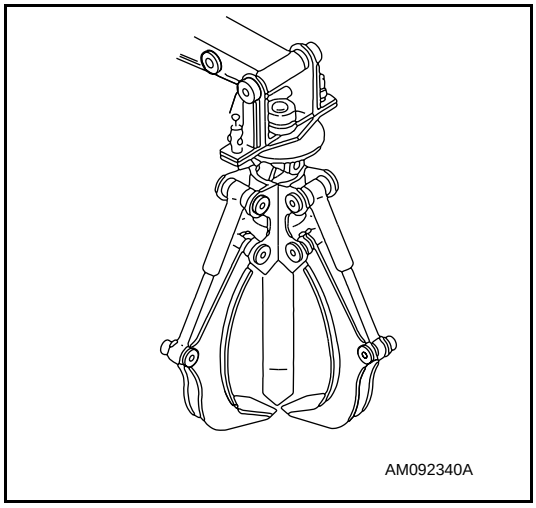

Operations using the swing force

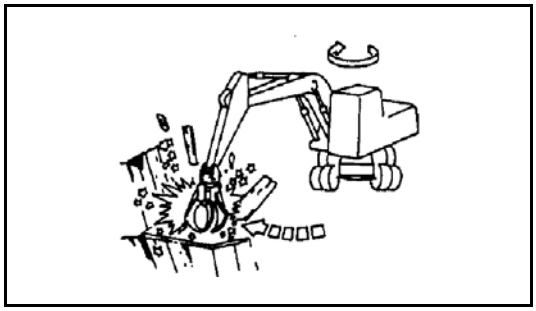

Operations using one side of work equipment

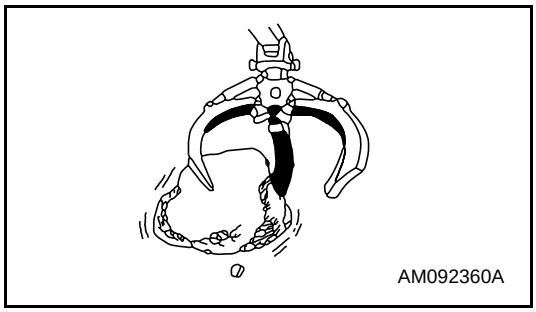


Catching and dragging with claw end

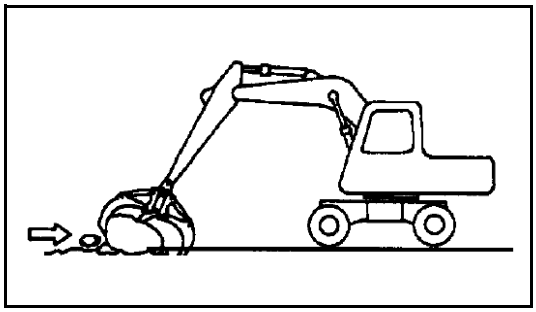

Gouging.

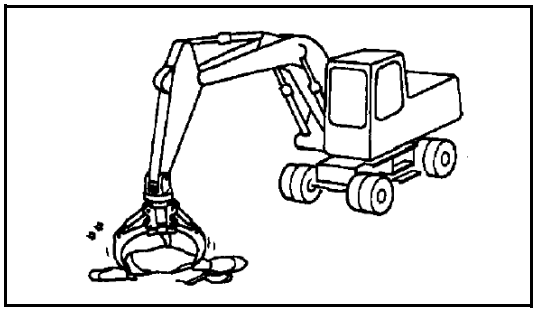

# CRUSHER & SMASHER

### MAIN FIELDS OF APPLICATION

- Demolition
- Road repair work

This is the optimum attachment for demolition of steel frame reinforced structures, and for crushing of concrete blocks and rock, etc. The unique blade shape provides heavy crushing power.

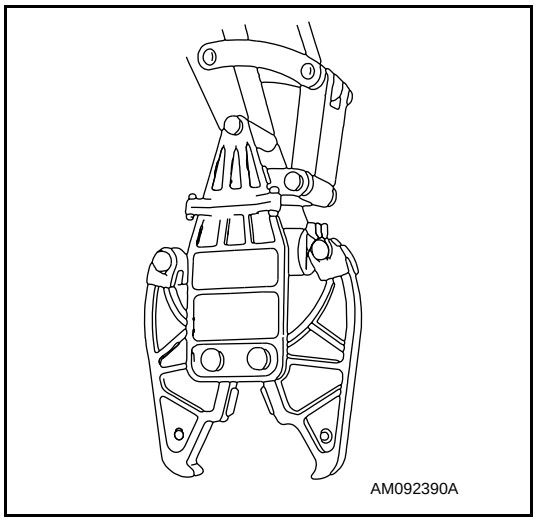


### MISTAKEN METHODS OF USE

To ensure that the machine has a long life, and to ensure that operations are carried out in safety, do not operate the machine in any of the following ways.

- Do not operate the cylinder to the end of its stroke.
  Always leave approx. 5 cm to spare.

Operations using cutting tip on one side only

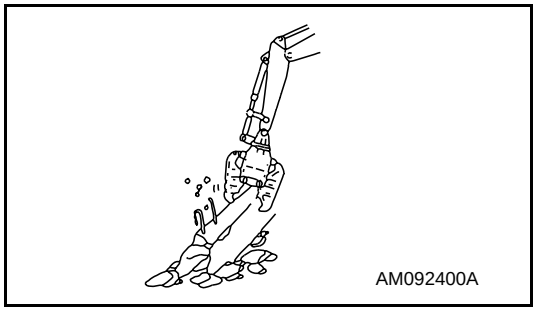


Impact operation with no load

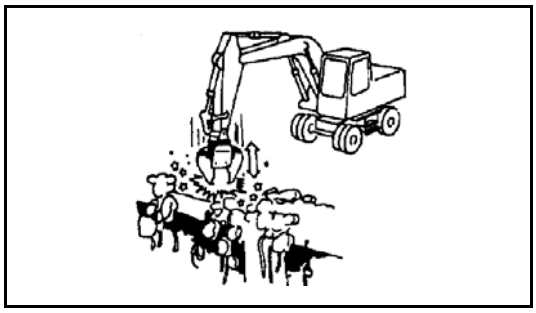

Twisting operations at end of cylinder stroke

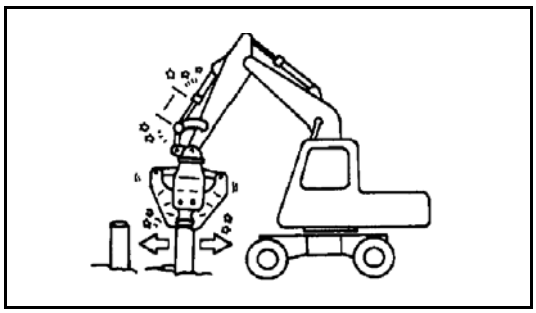

Sudden gripping and breaking operations.

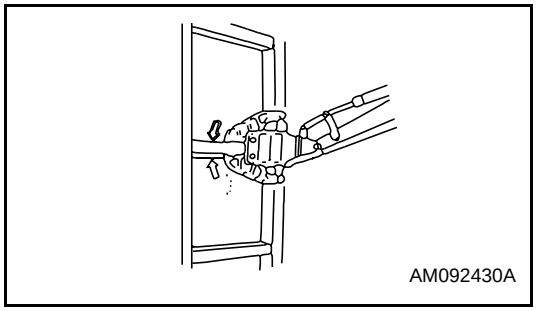


## HYDRAULIC PILE DRIVER

### MAIN FIELDS OF APPLICATION

- Foundation work
- River work
- Water supply and sewerage

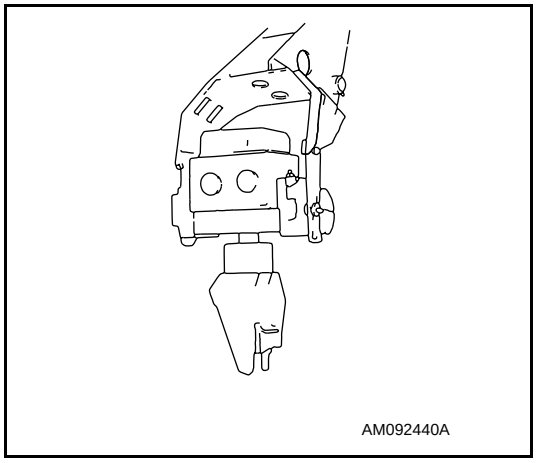


This is a piling machine employing the hydraulic power source of the excavator. The machine features a long arm and a chuck unit. This facilitates operations such as driving and movable by 360° corners, vertical driving and removing long piles, driving in piles at corners, vertical driving etc.

### MISTAKEN METHODS OF USE

To ensure that the machine has a long life, and to ensure that operations are carried out in safety; do not operate the machine in any of the following ways.

- Do not operate the cylinder to the end of its stroke.
  Always leave approx. 5 cm to spare.

Forward or swing motion while grasping a pile

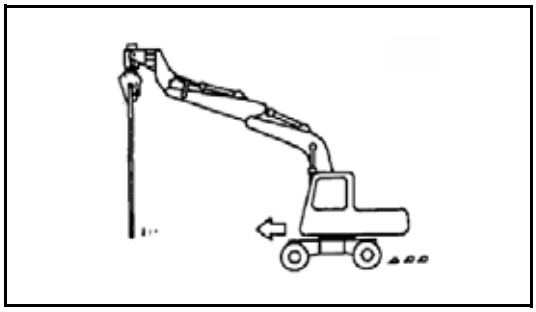

Lifting more than two piles at the same time

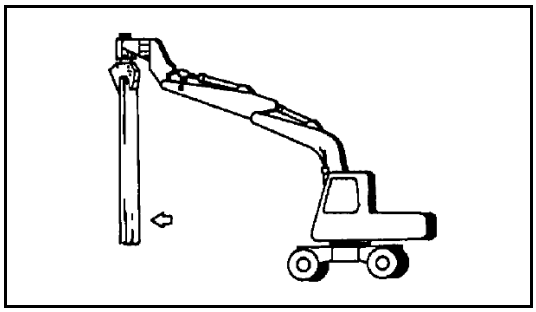

Work other than standard works

Loading or unloading a machine equipped with hydraulic pile driver.

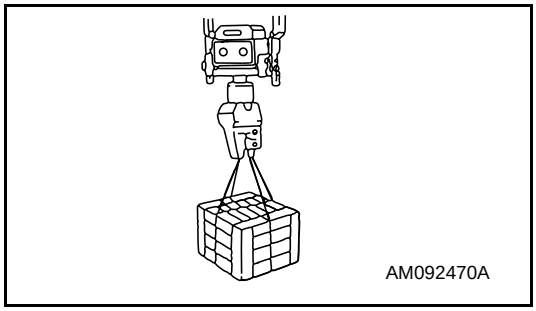


# HYDRAULIC EXCAVATOR WITH MULTIPURPOSE CRANE

## MAIN FIELDS OF APPLICATION

- Site preparation
- Water supply and sewerage
- River work
- Agricultural, civil engineering work

Crane operation can be carried out without removing the bucket. This machine is used for laying U section gutters and hume pipes for water supply and sewerage as well as river and canal work, agricultural, civil engineering work and site preparation.

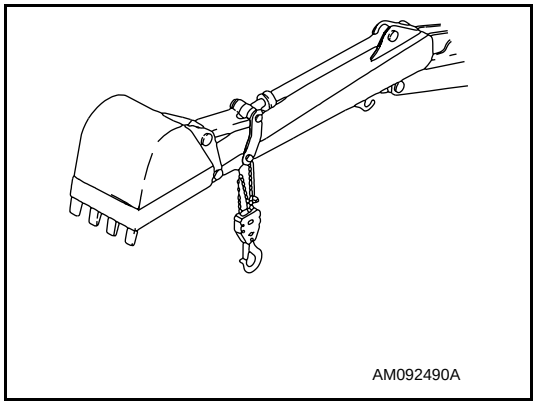


## MISTAKEN METHODS OF USE

To ensure that the machine has a long life, and to ensure that operations are carried out in safety, do not operate the machine in any of the following ways.

- Do not operate the cylinder to the end of its stroke.
  Always leave approx. 5 cm to spare.

Abrupt lever operation

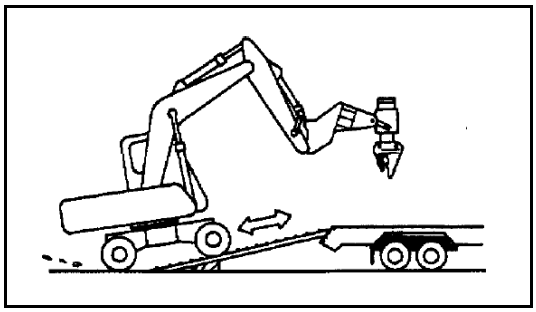

Traveling with a suspended load

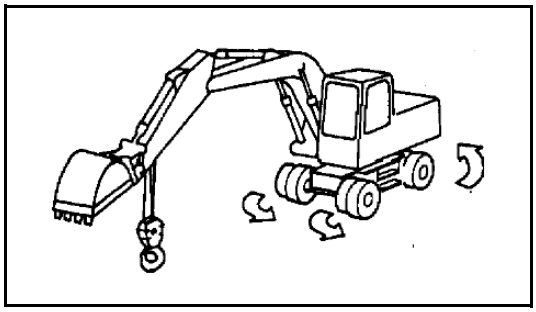

Operating other work equipment during crane operation

Excessive lengthening of wire rope.

## GENERAL VIEW OF CONTROLS

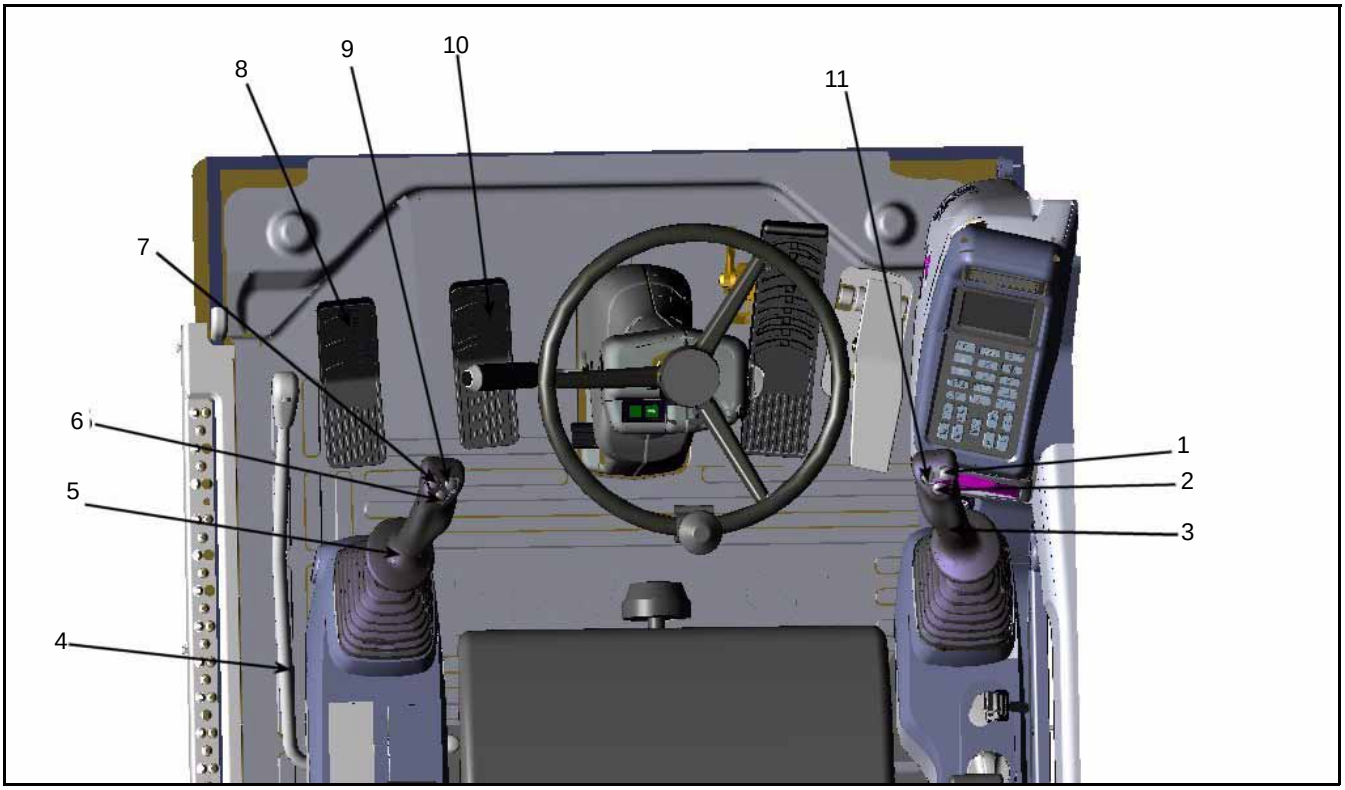


| | |
|---|---|
| 1. Clamshell rotate right | 7.Power max button |
| 2. Boom and chassis attachment select | 8. HCU pedal (option) |
| 3. Right control lever | 9. Spare |
| 4. Safety lock lever | 10. Boom pedal |
| 5. Left control lever | 11. Clamshell rotate left |
| 6. Horn | |

## LEFT CONTROL LEVER (with auto-deceleration device)

**WARNING**

**If any lever is operated when in the deceleration range, the engine speed will suddenly increase, so be careful when operating the levers.**

This lever is used to operate the arm and upper structure.

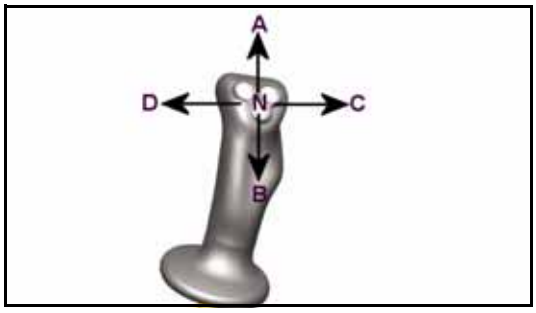


| Arm operation | Swing operation |
|---|---|
| (A) Arm OUT | (C) Swing to right |
| (B) Arm IN | (D) Swing to left |
| N (Neutral) | |

When the left control lever in this position, the upper structure and the arm will be retained in the position in which they stop.

## RIGHT CONTROL LEVER (with auto-deceleration device)

**WARNING**

**If any lever is operated when in the deceleration range, the engine speed will suddenly increase, so be careful when operating the levers.**

This lever is used to operate the boom and bucket.

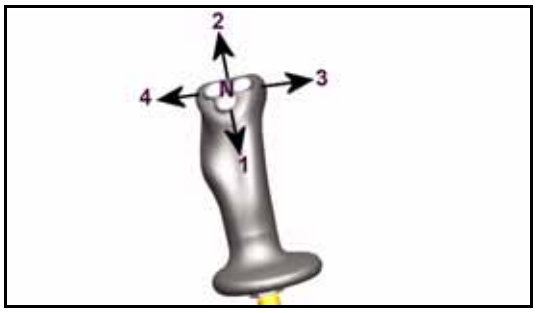


| Boom operation | Bucket operation |
|---|---|
| (1) RAISE | (3) DUMP |
| (2) LOWER | (4) CURL |
| N (Neutral) | |

When the right control lever in this position, the boom and the bucket will be retained in the position in which they stop.

For levers (3) and (5), the engine speed changes as follows because of the auto-deceleration mechanism.

- When the right control levers are at neutral, even if the fuel control dial is above the mid-range position, the engine speed will drop to a mid-range speed. If any of the levers are operated, the engine speed will rise to the speed set by the fuel control dial.

- If all control levers are set to neutral, the engine speed will drop by approx. 100 rpm, and after approx. 4 seconds, the engine speed will drop to the deceleration speed (approx. 1400 rpm).

## UPPER BOOM CONTROL PEDAL

This is used to operate the upper boom.

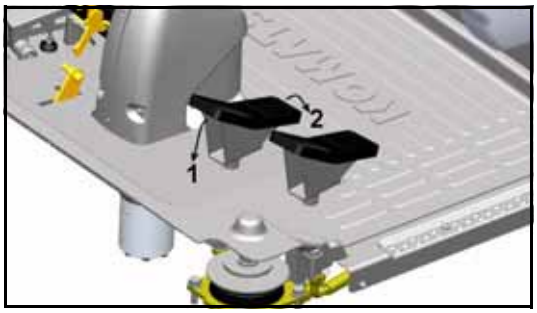


| | |
|---|---|
| (1)RAISE: | Pedal pushed forward |
| (2) LOWER: | Pedal pushed back |

NEUTRAL: The upper boom is stopped and held in the same position.

**⚠ CAUTION**

**Do not rest your food on the pedal unless using the pedal.**

# ROTATING ARM

## GENERAL LOCATION AND SPECIFICATIONS.

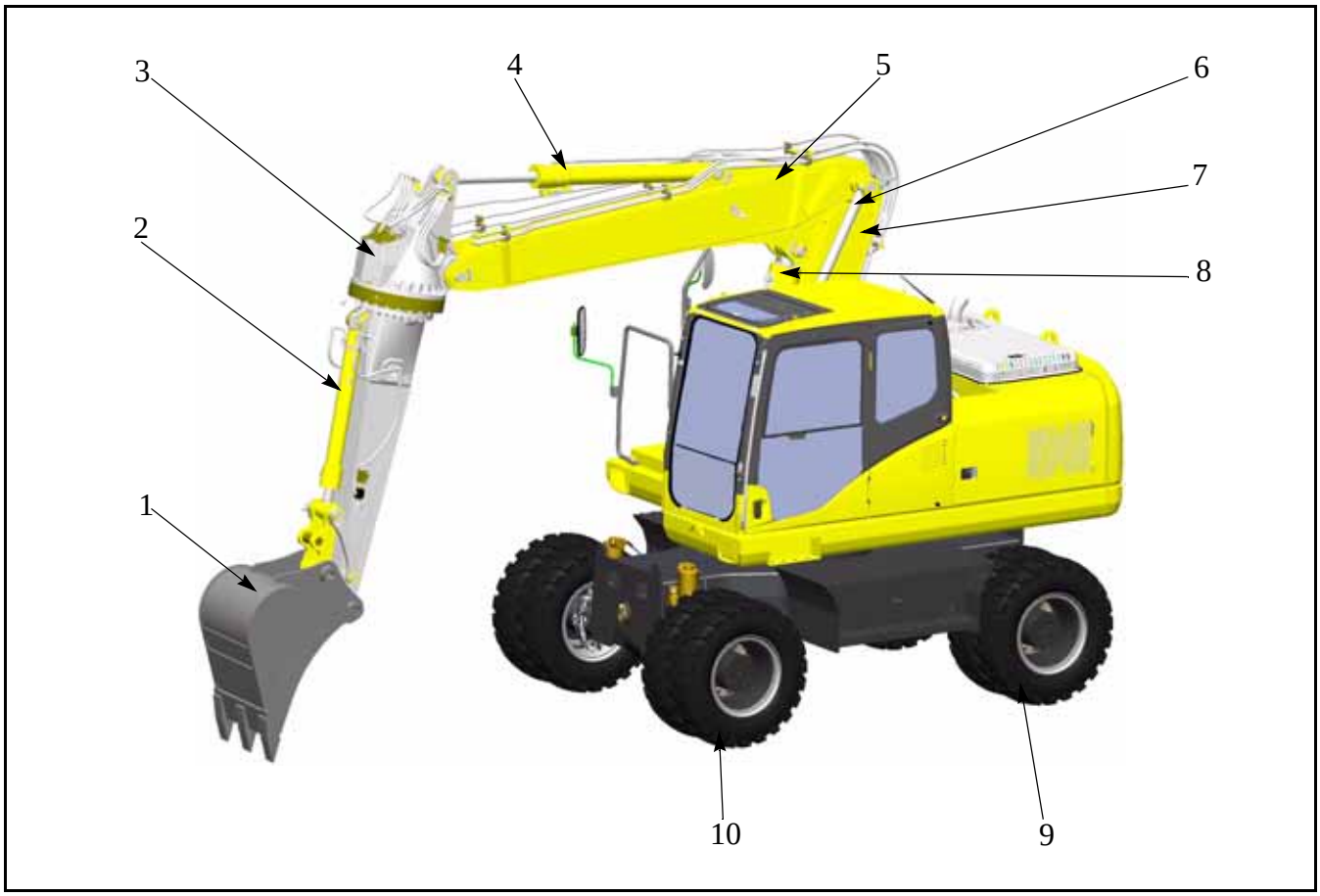


| | |
|---|---|
| 1. Bucket | 6. Boom lift cylinders |
| 2. Bucket cylinder | 7. Lower boom |
| 3. Rotating arm | 8. Boom adjusting cylinder |
| 4. Arm cylinder | 9. Rear wheel |
| 5. Upper boom | 10. Front wheel |

| | | | |
|---|---|---|---|
| **WEIGHT** | | | |
| ● Operating weight (without operator) | | | 16,400 kg |
| **PERFORMANCE** | | | |
| ● Bucket capacity (standard bucket) SAE | | | 0.8 $m^3$ |
| Travel speed | Creep speed | | 1.5 km/h* |
| | Low speed | | 10 km/h* |
| | High speed | Non German specification | 35 km/h |
| | | German specification | 20 km/h |
| Swing speed | | | 11.5 RPM |
| Arm rotation speed | | | 7 ~ 8 RPM |
| Engine | | | Komatsu SAA4102E-2 diesel engine |
| | Flywheel horsepower | | 87.5 KW (119 PS) 2200 RPM |

**NOTE:** Specifications are subject to change without notice.
* Dependent on machine specification.

# GENERAL VIEW OF CONTROLS

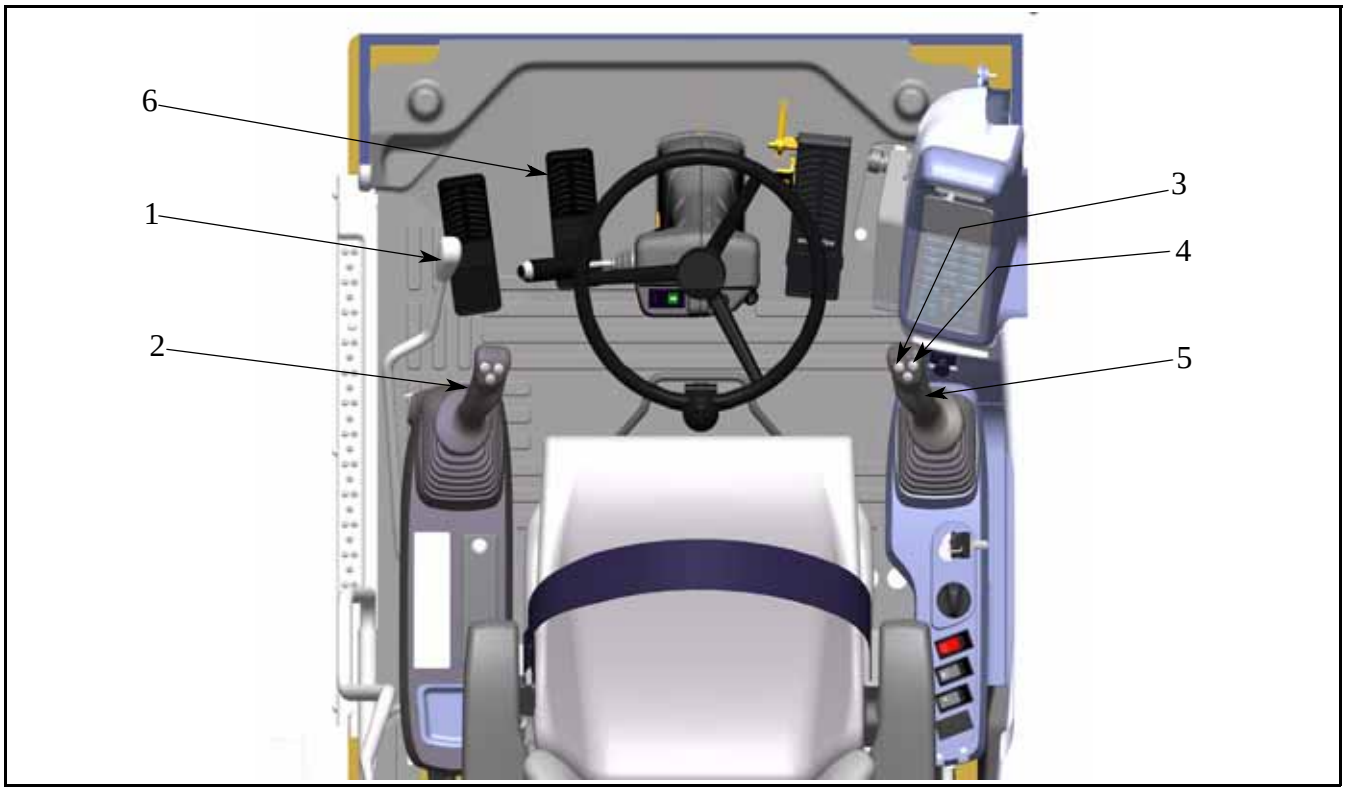


| | |
|---|---|
| 1. Safety lock lever | 4. Rotate left |
| 2. Left control lever | 5. Rotate right |
| 3. Right control lever | 6. Two piece boom pedal |

## LEFT WORK EQUIPMENT CONTROL LEVER (with auto-deceleration device)

**WARNING**

**If any lever is operated when in the deceleration range, the engine speed will suddenly increase, so be careful when operating the levers.**

This lever is used to operate the arm and upper structure.

| Arm operation | Swing operation |
|---|---|
| (A) Arm OUT | (C) Swing to right |
| (B) Arm IN | (D) Swing to left |
| N (Neutral) | |

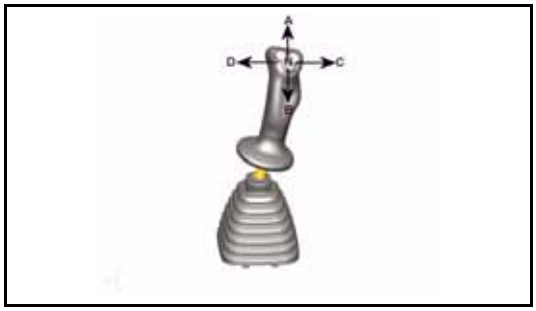

When the lever in this position, the upper structure and the arm will be retained in the position in which they stop.

## RIGHT WORK EQUIPMENT CONTROL LEVER (with auto-deceleration device)

**WARNING**

**If an lever is operated when in the deceleration range, the engine speed will suddenly increase, so be careful when operating the levers.**

This lever is used to operate the boom and bucket.

| Boom operation | Bucket operation |
|---|---|
| (1) RAISE | (3) DUMP |
| (2) LOWER | (4) CURL |
| N (Neutral) | |

When the lever in this position, the boom and the bucket will be retained in the position in which they stop.

For levers (2), (3) and (4), the engine speed changes as follows because of the auto-deceleration mechanism.

- When the travel lever and work equipment control levers are at neutral, even if the fuel control dial is above the mid-range position, the engine speed will drop to a mid-range speed. If any of the levers are operated, the engine speed will rise to the speed set by the fuel control dial.
- If all control levers are set to neutral, the engine speed will drop by approx. 100 rpm, and after approx. 4 seconds, the engine speed will drop to the deceleration speed (approx. 1400 rpm).

## ARM ROTATION CONTROL

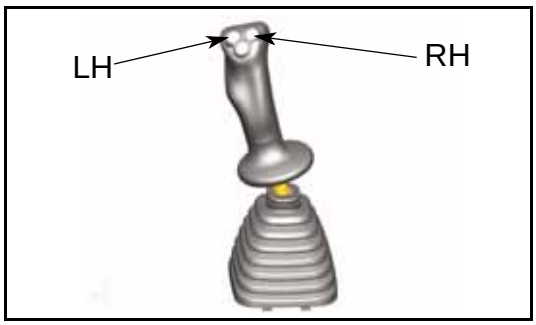


The switches on the front of the right control levers control arm rotation.

(1) Press the left button to rotate the arm anticlockwise facing the ground.

(2) Pres. the right button to rotate the arm clockwise facing the ground.

When neither switch is pressed the arm is stopped and held in position.

## UPPER BOOM CONTROL PEDAL

This is used to operate the upper boom.

| | |
|---|---|
| (1) RAISE: | Pedal pushed forward |
| (2) LOWER: | Pedal pushed back |

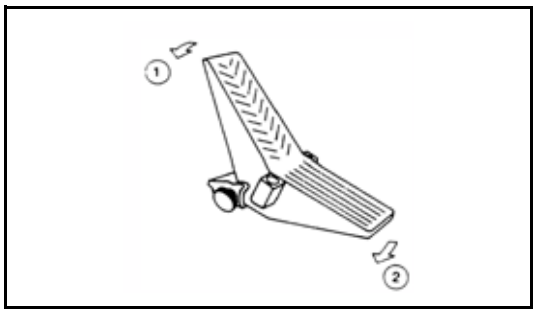


NEUTRAL: The upper boom is stopped and held in the same position.

**⚠ CAUTION**

**Do not rest your food on the pedal unless using the pedal.**

## PEDAL LOCK FOR BOOM ADJUST

1. With the pedal in the neutral position screw in the pin to lock the pedal.
2. Screw out the pin to unlock the pedal.

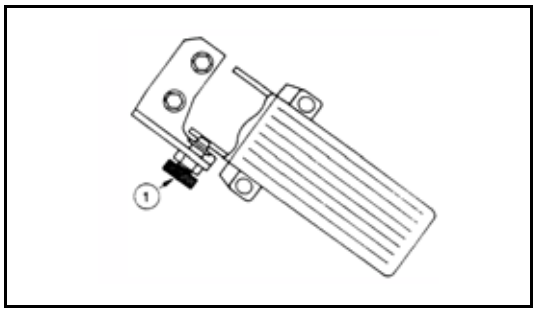


**⚠ CAUTION**

**When the machine is stopped, when leaving the machine or when carrying out maintenance, always lock the boom adjust and arm rotation pedal.**

# TRAVELLING POSTURE

Before starting to travel, be sure to pull in and lock the outriggers, and or raise the dozer blade.

Before travelling on public roads, the work equipment should be positioned as follows:

1. Remove the bucket or attachment (refer to section see “REPLACEMENT OF BUCKET” on page 347.)
2. Position the upper structure so that it is facing the front of the undercarriage (the oscillation lock cylinders can be seen) and insert the swing lock pin.
3. Fit link plate and spacers (Fig. 1)

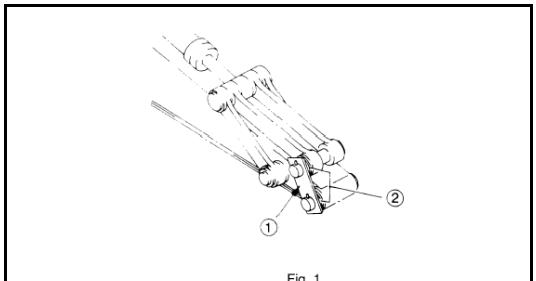


Fig. 1

4. Fully retract the bucket cylinder.
5. Align arrows & on swing circle. (Fig. 2)
6. Retract the arm cylinder approximately half-way. (Fig. 2)
7. Fully retract first and second boom cylinders.

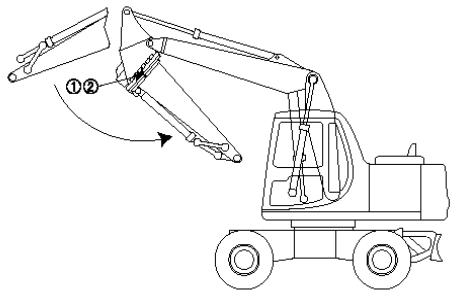

Fig. 2

8. Carefully lower the arm down onto the undercarriage. (Fig. 3)
9. Disable the work equipment levers by disengaging ppc lock switch.
10. Screw in the lock pin on the Boom Adjust and Arm Rotate pedals.
11. Close manual lock valves.

    1) For the bucket cylinder, located on the arm.

    2) For the arm cylinder, located on the first boom.

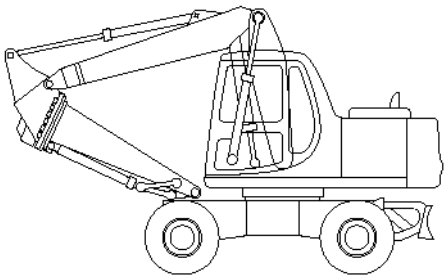
Fig. 3

After setting the machine in the travel posture, confirm that its height is below 4 m and that the distance between the centre of the steering wheel and the front of the work equipment is less than 3.5 m. Before moving off, lock all machine cover and toolbox doors to prevent accidents.

# MAINTENANCE

## MAINTENANCE REQUIREMENT

The following maintenance should be carried out in addition to that in the PW160-7K Operation & Maintenance Manual.

| NO | ITEM | SERVICE | PAGE |
|---|---|---|---|
| **EVERY 100 HOURS SERVICE** | | | |
| 1 | Arm rotation machinery case | Check and supply | 343 |
| **EVERY 250 HOURS SERVICE** | | | |
| 2 | Arm rotation circle | Lubricate 1 point | 344 |
| **EVERY 500 HOURS SERVICE** | | | |
| 3 | Arm rotation machinery case | Check and supply | 345 |
| **EVERY 1000 HOURS SERVICE** | | | |
| 4 | Arm rotation machinery case | Change oil | 345 |

## EVERY 100 HOURS SERVICE

**1. Arm rotation machinery case**

1. Set the arm horizontal.
2. Remove plug (1) and check whether final drive case is filled with oil to lower edge of plughole. If oil level is below this point, refill with SAE 90 gear oil through plug hole.(see “EVERY 1000 HOURS SERVICE” on page 345.)

- Tightening torque: 56 kgm
- The type of lubricant used depends on the ambient temperature.

  **Select according to the table see “USE FUEL, COOLANT AND LUBRICANTS ACCORDING TO AMBIENT TEMPERATURE” on page 230.**

## EVERY 250 HOURS SERVICE

### 1. ARM ROTATING CIRCLE

#### LUBRICATING

Apply grease to the grease fittings shown by the arrows (3 points).

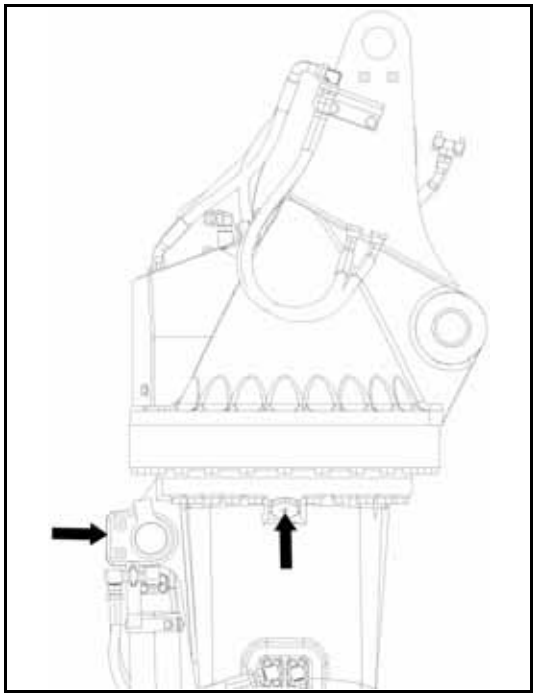

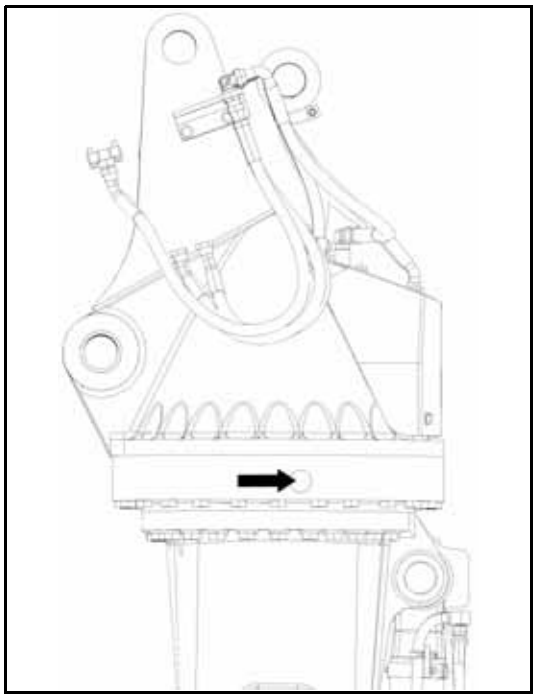

## EVERY 500 HOURS SERVICE

**Maintenance for every 100 and 250 hours service should be carried out at the same time.**

### 2. ARM ROTATION MACHINERY CASE

1. Disconnect hoses (2), (5) and (6) from the swing motor.
2. Plug the ends of the hoses and the ports in the motor.
3. Remove 14 bolts (3 x4), (4 x2) then remove 8 bolts (1) from the swing motor and lift off.
4. Refill the greasebath with grease.
5. Replace the swing motor an and tighten the 14 bolts (Apply liquid gasket LG-6 to the mating faces and bolt holes).
6. Reconnect the hoses (2), (5) and (6) to the swing motor.

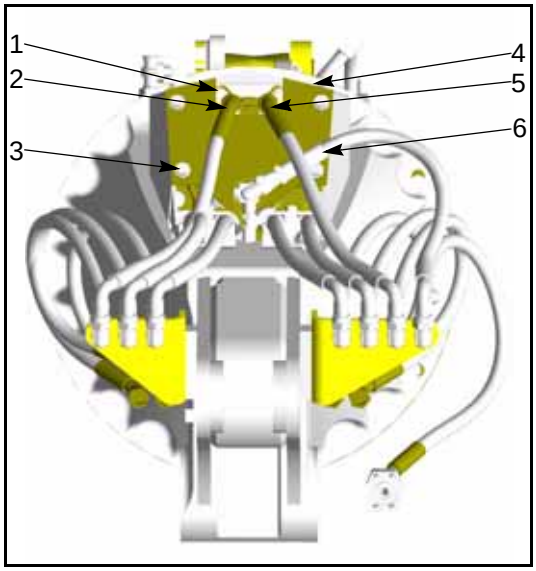


## EVERY 1000 HOURS SERVICE

**Maintenance for every 250 and 500 hours service should be carried out at the same time.**

### 3. ARM ROTATION MACHINERY CASE

1. Remove plug (1), drain the oil.
2. Add 1.6 liters of SAE 90 Gear Oil through the plug hole.
3. After adding the oil, check that it is at the specified level (Refer to See "").
4. Replace the plug and retighten.

* Tightening torque: 56 kgm

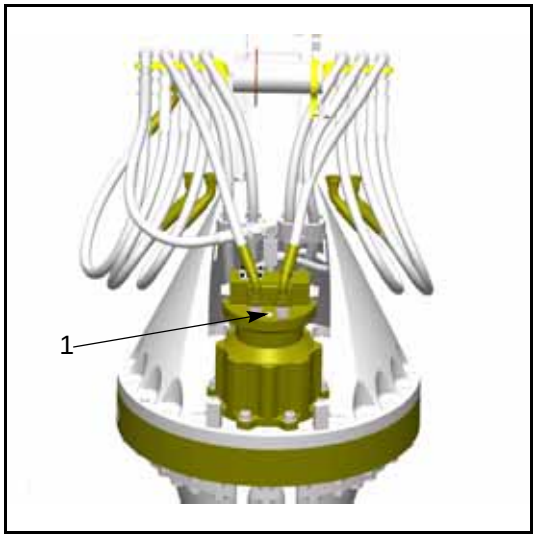


## EXCAVATOR'S WORK

In addition to the following, it is possible to further increase the range of applications by using various attachments.

### BACK HOE WORK

A back hoe is suitable for excavation at a position lower the machine.It is possible to effectively move the arm through 30° in the direction towards the machine and 45° in the direction away from the machine, making for efficient work.

### SHOVEL WORK

A shovel is suitable for excavating at a position higher than the machine.

### LOADING WORK

About half of the time spent during excavating and loading work is taken up by swinging. Maximum work efficiency can be attained by carrying out work is such a way that the swinging angle is kept as small as possible in accordance with the terrain.

### SPECIAL OPERATIONS

The rotating arm and 2-piece boom facilitate the following special operations.

### PIT EXCAVATION FOR FOUNDATIONS OF BUILDINGS

Shafts with vertical walls can be excavated in all directions and soil can be removed from around sheet piles.

### SIDE DITCHING

The direction of the bucket teeth can be altered to facilitate the excavation of parallel sided ditches.

### OPERATION ON SLOPES

Vertical ditches can be dug on sloping surfaces.

### DITCH DIGGING

Combination of rotating arm and upper boom make possible the precise digging of offset ditch.

### STATIONARY DIGGING

The excavation of trenches for main and branch water supply and drainage pipes can be done without changing the machines position.

### LIFTING SPOIL

The rotating arm enables working from all directions. Even if there is a structure between the excavator and the bucket the work can be done without hitting it.

### BOX DIGGING

Perfect corners can be dug without having to change position of excavators.

### SCRAPING

With bucket reversed the excavator can scrape faces upward.

## REPLACEMENT OF BUCKET

Stop the machine on a firm, flat surface. When performing work with another person, make clear signals to each other and work carefully for safety's sake.

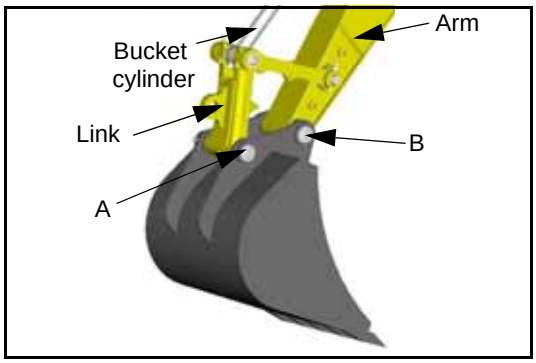


1. Select a flat surface and stabilize the bucket.
2. After removing the stop bolt and nut for each pin, extract pins A and B.

- After removing the pins, make sure that they do not become contaminated with sand or mud and that the seals of bushing on both sides do not become damaged.

**⚠ CAUTION**

**Bucket size & bucket weight**
**Do not fit a bucket larger than those listed overleaf for combination of undercarriage attachments, material to be excavated. Fitting of lager bucket will cause machine to tip over.**

3. Couple the arm to hole (1), then connect the link to hole (2)
4. After mounting the stop bolt and nut for each pin, apply grease to each pin.c.

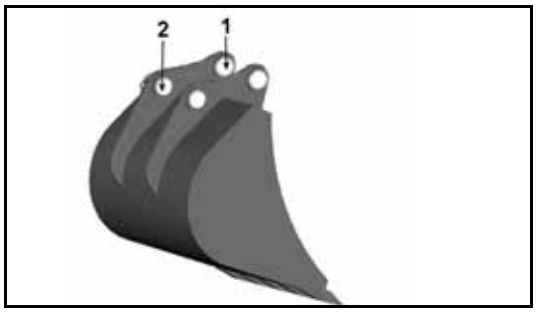

## HANDLING THE TRAPEZOIDAL BUCKET (If equipped)

This bucket is used in sloped ditch digging work.

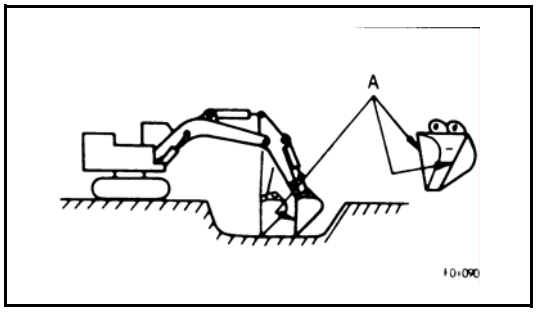


The three different ditch inclination can be obtained by changing the angle of the attached plate.

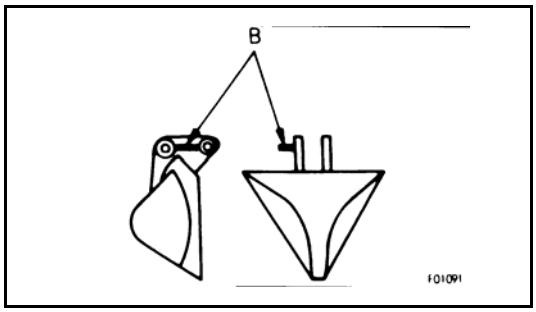


The angles available are 45°, 40° and 38°.

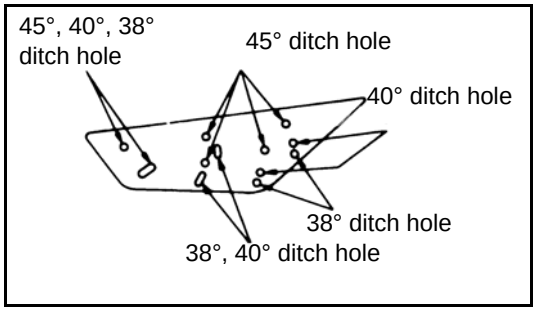


Shape of ditch by 45° bucket

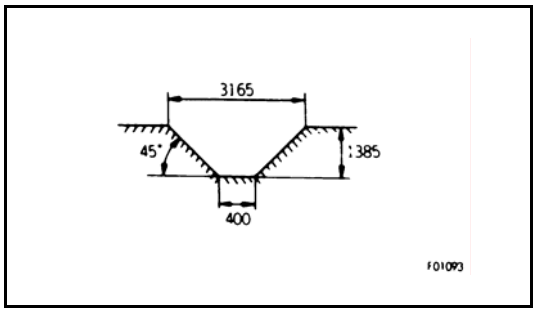


Shape of ditch 40° bucket

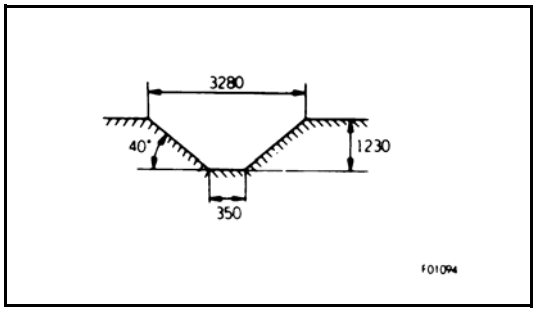

Shape of ditch 38° bucket

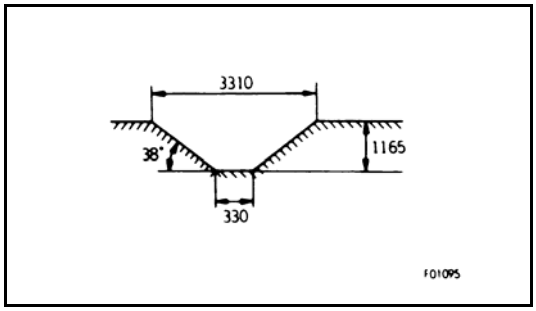


**How to perform excavation**

Operate the boom, the arm and the bucket to make the line A of the side-plate of the bucket vertical.

To check this position guide plate B is installed beside the bucket pins.

Hold this plate horizontal when digging.

# INDEX

## Numerics

12V POWER SUPPLY ..... 113
24V power source. ..... 128

## <A>

ACCUMULATOR (FOR CONTROL CIRCUIT) .... 316
ACCUMULATORS ..... 146
AFTER COLD WEATHER ..... 205
AIR CONDITIONER ..... 129
ASBESTOS DUST HAZARD PREVENTION ..... 23
AUTO-DECELERATION SWITCH ..... 100

## <B>

BASIC CHECK ITEMS ..... 77
BATTERY ..... 204
BATTERY HAZARD PREVENTION ..... 36
BELTS, GENERAL ..... 279

## <C>

CAB RADIO ..... 128
CAR RADIO ..... 142
CAUTION ITEMS ..... 79
CHECK BEFORE STARTING ..... 265
CHECK BEFORE STARTING ENGINE ..... 147
CHECKING COOLANT LEVEL ..... 253
CLOTHING ..... 20
COLD WEATHER OPERATION ..... 203
CONTROL LEVERS, PEDALS ..... 114
COOLAN ..... 224

## <D>

DISCHARGED BATTERY ..... 210
DOOR LOCK ..... 124

## <E>

ELECTROMAGNETIC INTERFERENCE ..... 25
EMERGENCY BRAKING ..... 7
EMERGENCY EXIT ..... 25
EMERGENCY EXIT FROM OPERATOR'S CAB . 123
EMERGENCY STEERING ..... 7
EMERGENCY STOP ITEMS ..... 83
ENGINE PRE-HEATING MONITOR ..... 87
ENGINE SERIAL NO. PLATE POSITION ..... 10
EVERY 100 HOURS SERVICE ..... 270
EVERY 1000 HOURS SERVICE ..... 290
EVERY 2000 HOURS SERVICE ..... 296
EVERY 250 HOURS MAINTENANCE ..... 276
EVERY 4000 HOURS SERVICE ..... 297
EVERY 50 HOURS ..... 270
EVERY 500 HOURS SERVICE ..... 282
EVERY 5000 HOURS SERVICE ..... 298
EXPLANATION OF COMPONENTS ..... 74

## <F>

FEATURES ..... 8
FILTERS ..... 226
FIRE EXTINGUISHER ..... 23
FIRE PREVENTION ..... 22
FIRST AID KIT ..... 23
FOREWORD ..... 3, 4
FRONT WINDOW ..... 119
FUEL ..... 224
FUEL GAUGE ..... 89
FUSE ..... 126
FUSIBLE LINK ..... 142

## <G>

GENERAL VIEW OF CONTROLS AND GAUGES 73
GREASE ..... 225

## <H>

HANDLING ACCUMULATORS ..... 146
HANDLING THE CLAMSHELL BUCKET ..... 316

## <I>

INITIAL 250 HOURS SERVICE ..... 244

## <K>

KEY TO LUBRICATION POINTS ..... 242

## <L>

LIFTING CAPACITY CHART PW200-7K ..... 56
LONG-TERM STORAGE ..... 206

## <M>

MACHINE MONITOR ..... 74
MACHINE SERIAL NO. PLATE POSITION ..... 10
MACHINES READY FOR ATTACHMENTS ..... 314
MAINTENANCE SCHEDULE CHART ..... 238
METER DISPLAY PORTION ..... 86
METERS ..... 88
MONITOR SWITCHES ..... 91
MOUNTING AND DISMOUNTING ..... 21
MOVING MACHINE OFF ..... 169

## <N>

NOISE ..... 6

## <O>

OIL ..... 223
OPERATION OF WORK EQUIPMENT ..... 177
OPTIONS, ATTACHMENTS ..... 309
OTHER TROUBLE ..... 214

OVERLOAD CAUTION ..... 81
OVERLOAD CAUTION (When lifting) ..... 81

**<P>**
POSITION FOR ATTACHING SAFETY LABELS .. 48
POWER PICK-UP PORT ..... 128
PRECAUTION DURING OPERATION ..... 27
PRECAUTIONS FOR MAINTENANCE ..... 42
PRECAUTIONS WHEN INSTALLING ATTACHMENTS ..... 311
PRECAUTIONS WHEN TRAVELLING ..... 29
PROHIBITED OPERATIONS ..... 31
PROPER SELECTION OF FUEL, COOLANT AND LUBRICANTS ..... 230

**<R>**
REFUELLING PUMP ..... 143
REPLACEMENT OF BUCKET ..... 347

**<S>**
SAFETY CRITICAL PARTS ..... 237
SAFETY LOCK LEVER ..... 115
SAFETY MESSAGES ..... 5
SAFETY RULES ..... 20
SEAT BELT ..... 156
SPECIFICATIONS ..... 302
STARTING ENGINE ..... 160
STARTING IN COLD WEATHER ..... 161
STARTING SWITCH ..... 107
STEERING ..... 172
STOPPING & PARKING ..... 174
STOPPING MACHINE (EMERGENCY) ..... 175
STORING OIL AND FUEL ..... 226
SWITCHES ..... 106

**<T>**
TIGHTENING TORQUE LIST ..... 235
TIGHTENING TORQUE SPECIFICATIONS ..... 235
TOWING ..... 37
TRANSPORTATION ..... 195
TRAVELLING ON PUBLIC HIGHWAY ..... 173
TRAVELLING POSTURE ..... 202
TROUBLESHOOTING ..... 208

**<U>**
UNAUTHORISED MODIFICATION ..... 20

**<V>**
VIBRATION ..... 6

**<W>**
WARNING LAMPS ..... 145
WEAR PARTS LIST ..... 229
WORKING MODE MONITOR ..... 87
WORKING MODE SELECTION ..... 180
WORKING RANGE
ONE PIECE BOOM ..... 305
TWO PIECE BOOM ..... 306

PW160-7K WHEELED EXCAVATOR

Form No. UEAM003201

©2004 KOMATSU
All Rights Reserved
Printed in Belgium 11-04