https://truckmanualshub.com/

OPERATOR'S MANUAL

ENGLISH

KUBOTA
ZERO TURN MOWER

MODELS ZD1011
ZD1021

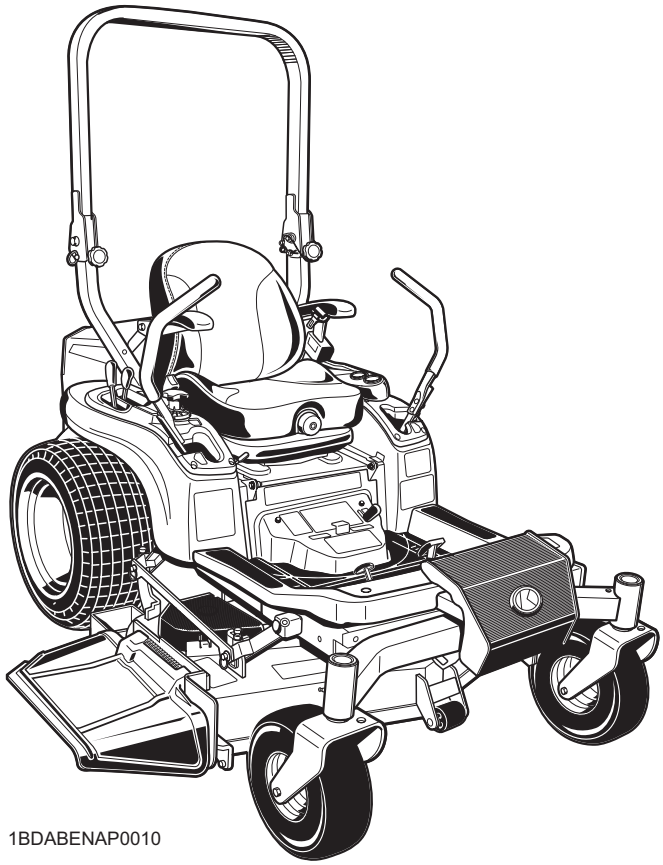

1BDABENAP0010

K3411-7121-2

READ AND SAVE THIS MANUAL

Kubota

https://truckmanualshub.com/

ABBREVIATION LIST

Abbreviations	Definitions
API	American Petroleum Institute
PTO	Power Take Off
RH/LH	Right-hand and left-hand sides are determined by facing in the direction of forward travel
ROPS	Roll-Over Protective Structures
rpm	Revolutions Per Minute
SAE	Society of Automotive Engineers

UNIVERSAL SYMBOLS

As a guide to the operation of your machine, various universal symbols have been utilized on the instruments and controls. The symbols are shown below with an indication of their meaning.

- Safety Alert Symbol
- Diesel Fuel
- Fuel-Level
- Parking Brake
- Engine-Stop
- Preheat
- Engine-Run
- Starter Control
- Power Take-Off Clutch Control-Off Position (Disengaged)
- Power Take-Off Clutch Control-On Position (Engaged)
- Cutting Height
- Mower-Lowered position
- Mower-Raised position
- Fast
- Slow
- Engine Speed Control
- Neutral
- Battery
- Oil Pressure
- Coolant Temperature

California Proposition 65

⚠ WARNING ⚠

Engine exhaust, some of its constituents, certain vehicle components and fluids, contain or emit chemicals known to the State of California to cause cancer and birth defects or other reproductive harm.

IMPORTANT

The engine in this machine is not equipped by the manufacturer with a standard spark arrester.
It is a violation of California Public Resource Code Section 4442 to use or operate this engine on or near any forest-covered, brush-covered land, or grass- covered land unless the exhaust system is equipped with a working spark arrester meeting state laws. Other states or federal areas may have similar laws.

https://truckmanualshub.com/

FOREWORD

You are now the proud owner of a KUBOTA ZERO TURN MOWER. This machine is a product of KUBOTA's quality engineering and manufacturing. It is made of excellent materials and under a rigid quality control system. It will give you long, satisfactory service. To obtain the best use of your machine, please read this manual carefully. It will help you become familiar with the operation of the machine and contains many helpful hints about machine maintenance. It is KUBOTA's policy to utilize, as quickly as possible, every advance in our research. The immediate use of new techniques in the manufacturing of products may cause some small parts of this manual to become outdated. KUBOTA distributors and dealers will have the most up-to-date information. Please do not hesitate to consult them.

SAFETY FIRST

This symbol, the industry's "Safety Alert Symbol", is used throughout this manual and on labels on the machine itself to warn of the possibility of personal injury. Read these instructions carefully. It is essential that you read the instructions and safety regulations before you attempt to assemble or use this unit.

DANGER : Indicates an imminently hazardous situation which, if not avoided, will result in death or serious injury.

WARNING : Indicates a potentially hazardous situation which, if not avoided, could result in death or serious injury.

CAUTION : Indicates a potentially hazardous situation which, if not avoided, could result in minor or moderate injury.

IMPORTANT : Indicates that equipment or property damage could result if instructions are not followed.

NOTE : Gives helpful information.

https://truckmanualshub.com/

ENGLISH

CONTENTS

⚠SAFE OPERATION ..... ⚠-1

SERVICING OF MACHINE 1

SPECIFICATIONS 3

IMPLEMENT LIMITATIONS 6

INSTRUMENT PANEL AND CONTROLS 7

MOWER MOUNTING 9
- MOUNTING THE MOWER DECK 9
- ADJUSTING THE MOWER 10
- DISMOUNTING THE MOWER DECK 10

OPERATING THE ENGINE 11
- GET ON AND GET OFF MACHINE SAFELY 11
- STARTING THE ENGINE 11
  - Key Switch 13
- STOPPING THE ENGINE 14
  - Engine Stop Lever (Inside the Hood) 14
- CHECK DURING OPERATING 14
  - Immediately Stop the Engine if: 14
  - Easy Checker (TM) 14
  - Fuel Gauge 15
  - Coolant Temperature Gauge 15
  - Hour Meter 15
- COLD WEATHER STARTING 15
- BLOCK HEATER (OPTION) 15
- WARMING UP 16
  - Warm-up and Transmission Oil in the Low Temperature Range 16
- JUMP STARTING 16

OPERATING THE MACHINE 18
- OPERATING NEW MACHINE 18
  - Changing Lubricating Oil for New Machines 18
  - Engine Break-in 18
  - Machine Break-in 18
- OPERATING FOLDABLE ROPS 19
  - To Fold the ROPS 19
  - To Raise the ROPS to Upright Position 20
  - Adjustment of Foldable ROPS 20
- STARTING 21
  - Operator's Seat 21
  - Seat Belt 21
  - Hydraulic Lift Control Pedal 22
  - Throttle Lever 22
  - Parking Brake Pedal 22
  - Motion Control Lever 23
- STOPPING 25

https://truckmanualshub.com/

ENGLISH

FIXING FRONT AXLE 26
OSCILLATING FRONT AXLE 26
PARKING 26
TRANSPORTING 27
OPTION 27

OPERATING THE MOWER 28
MAKING THE MOST OF YOUR MOWER 28
ADJUSTING CUTTING HEIGHT 28
OPERATING MOWER 30
PTO Lever 30
Starting 31

TIRES AND WHEELS 32
TIRES 32
Inflation Pressure 32
WHEELS 32
Remove and Install Front Caster Wheels 33

PERIODIC SERVICE 34
HOW TO OPEN THE HOOD, FRONT COVER & STEP 34
Hood 34
Front Cover 34
Step 34
HOW TO RAISE THE OPERATOR'S SEAT 35
HOW TO OPEN THE LEVER GUIDE 36
LIFT-UP POINT 36
Front side: 36
Rear side: 37
DAILY CHECK 37
LUBRICANTS, FUEL AND COOLANT 39
Checking Engine Oil Level 41
Checking Amount of Fuel and Refueling 41
Checking Transmission Fluid Level 42
Checking Coolant Level 42
Checking and Cleaning Radiator Screen and Hood Screen 43
Checking Tire Pressure 44
Inflation Pressure 44
Lubricating All Grease Fittings 45

MAINTENANCE 46
SERVICE INTERVALS 46
PERIODIC SERVICE CHART LABEL 48
EVERY 50 HOURS 49
Checking Engine Start System 49
Checking OPC System 50
Checking Gear Box Oil Level 50
Greasing 51
Oiling 52
EVERY 100 HOURS 53
Cleaning Air Cleaner Primary Element 53
Checking Fuel Filter 53

https://truckmanualshub.com/

Adjusting Fan Drive Belt Tension 54
Adjusting Parking Brake 55
Greasing 56
Checking Battery Condition 56
EVERY 150 HOURS 58
Changing Gear Box Oil 58
EVERY 200 HOURS 58
Changing Engine Oil 58
Replacing Engine Oil Filter 59
Replacing Transmission Oil Filter [HST] 59
Adjusting Front Axle Pivot 60
EVERY 400 HOURS 60
Changing Transmission Fluid and Rear Axle Gear Case Oil (RH and LH) 60
Cleaning Transmission Strainer 61
Replacing Fuel Filter 61
EVERY 1000 HOURS or EVERY 1 YEAR 62
Replacing Air Cleaner Primary Element and Secondary Element 62
EVERY 1500 HOURS 62
Checking Fuel Injection Nozzle (Injection Pressure) 62
EVERY 2000 HOURS or EVERY 2 YEARS 62
Flushing Cooling System and Changing Coolant 62
Anti-freeze 63
EVERY 3000 HOURS 64
Checking Injection Pump 64
EVERY 1 YEAR 64
Checking Fuel Lines 64
Checking Radiator Hose and Clamp 64
Checking Hydraulic Hose 65
Checking Intake Air Line 65
Checking Engine Breather Hose 65
Checking Mower Gear Box Oil Seal 65
EVERY 4 YEARS 66
Replacing Hydraulic Hose 66
Replacing Fuel Lines 66
Replacing Engine Breather Hose 66
Replacing Radiator Hose 66
Replacing Mower Gear Box Oil-Seal 66
Replacing Intake Air Line 66
SERVICE AS REQUIRED 66
Replacing Fuses 66
Bleeding Fuel System 66
Checking and Replacing Blade 67
Replacing Mower Belt 68

ADJUSTMENT 69
MOTION CONTROL LEVER 69
HST NEUTRAL 69
MAXIMUM SPEED (FORWARD) 69
MOTION CONTROL LEVER OPERATING FORCE 70
MOTION CONTROL LEVER ALIGNMENT 70
MOWER DECK LEVEL 71
ANTI-SCALP ROLLERS 71

https://truckmanualshub.com/

LEVEL MOWER DECK (Side-to-Side) 72
LEVEL MOWER DECK (Front-to-Rear) 73
GENERAL TORQUE SPECIFICATION 74
TIGHTENING TORQUE CHART 75

STORAGE 76
MACHINE STORAGE 76
REMOVING THE MACHINE FROM STORAGE 76

TROUBLESHOOTING 77
ENGINE TROUBLESHOOTING 77
BATTERY TROUBLESHOOTING 78
MACHINE TROUBLESHOOTING 78
MOWER TROUBLESHOOTING 79

INDEX 81

https://truckmanualshub.com/

SAFE OPERATION

Careful operation is your best insurance against an accident. The owner/user can prevent and is responsible for accidents or injuries occurring to themselves, other people or property. Read and understand this manual carefully before operating the machine. All operators, no matter how much experience they may have had, must read this and other related manuals before operating the machine or any implement attached to it. It is the owner's obligation to instruct all operators in safe operation.
If the operator(s) or mechanic(s) cannot read English it is the owner's responsibility to explain this material to them.
This mowing machine is capable of amputating hands and feet and throwing objects. Failure to observe the following safety instructions could result in serious injury or death.

1. BEFORE OPERATING

1. The ZERO TURN MOWING MACHINE has different steering characteristics than other machines with a steering wheel and does not have a service brake pedal (but, has a parking brake lock pedal that can be used to stop the machine in an emergency. Normal slowing down and stopping is done with the motion control levers.). Read and understand the operators manual before operating the machine. Practice operating machine at low engine speed without mower engaged in an unobstructed area.
2. Know your equipment and its limitations. Read all instructions in this manual before attempting to start and operate the machine.
3. Pay special attention to the danger, warning and caution labels on the machine itself.
4. The ROPS is an integral and effective safety device.
   KUBOTA recommends the use of a Roll Over Protective Structures (ROPS) and seat belt in almost all applications. This combination will reduce the risk of serious injury or death, should the machine be upset.
   The machine is equipped with a Foldable ROPS, which may be temporarily folded down only when absolutely necessary for areas with height constraints. There is no operator protection provided by the ROPS in the folded position. For operator safety you must set the ROPS in the upright and locked position and put on the seat belt for all other operations.
   DO NOT remove the ROPS.
   If the ROPS is loosened or removed for any reason, make sure that all parts are reinstalled correctly before operating the machine.
   Never modify or repair a ROPS because welding, bending, drilling, grinding, or cutting may weaken the structure.
   If any structural member of the ROPS is damaged, replace the entire structure at your local KUBOTA Dealer. Any alterations to a ROPS must be approved by the manufacturer.
   Check the area to be mowed and never fold down a folding ROPS in areas where there are slopes, drop offs or water.
   Check carefully for overhead clearances (i.e. branches, doorways, electrical wires) before driving under any objects and do not contact them.
   Keep the ROPS in safe operating condition by periodically thoroughly inspecting for damage and keeping all mounting fasteners tight.

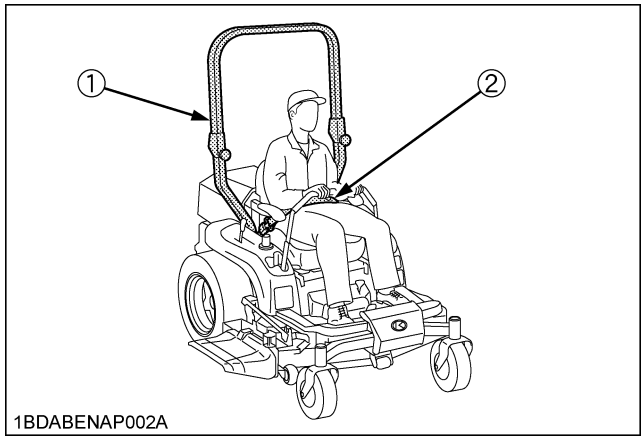

(1) ROPS
(2) Seat belt

https://truckmanualshub.com/

5. Always use the seat belt when the ROPS is upright. Do not use the seat belt if the ROPS is down or if there is no ROPS. Check the seat belt regularly and replace if frayed or damaged. Be certain that the seat belt can be released quickly in the event of an emergency.
6. Do not operate the machine or any attachments while under the influence of alcohol, medication, controlled substances or when fatigued.
7. Do not wear loose, torn, or bulky clothing around machine. The clothing may catch on moving parts or controls, leading to the risk of accident. Wear and use any additional safety items such as hard hat, safety boots or shoes, eye and hearing protection, gloves, etc., as appropriate or required.
8. Do not wear radio or music headphones while operating the machine.
   Safe operation requires your full attention.
9. Carefully check the vicinity before operating machine or any implement attached to it. Clear the work area of objects (wires, rocks, etc.) that might be picked up and thrown. Check for overhead clearance which may interfere with a grass catcher.
10. Check brakes and other mechanical parts for correct adjustment and wear. Replace worn or damaged parts promptly. Check the tightness of all nuts and bolts regularly. (For further details, see "PERIODIC SERVICE" and "ADJUSTMENT" section.)
11. Keep all shields and guards in place. Replace any that are damaged or missing. Do not operate unless they are functioning properly.
12. Before allowing other people to use your machine, explain how to operate and have them read this manual before operation.
13. Do not allow any bystanders around or near machine during operation.
14. Do not allow passengers, children or non-qualified operators on the machine at any time. The operator must remain in the machine seat throughout operation.
15. In addition to the design and configuration of equipment, hazard control and accident prevention are dependent upon the awareness, concern, and prudence of personnel involved in the operation, transport, maintenance of facilities.
16. Evaluate the terrain to determine what accessories and attachments are needed to properly and safely perform the job. Keep the machine and attachments in good operating condition and keep safety devices in place and in proper working condition. Do not operate unless they are functioning properly.
17. Do not modify the machine. Unauthorized modification may affect the function of the machine, which may result in personal injury.
18. Use only implements recommended by KUBOTA. Use proper ballast to front or rear of machine to reduce the risk of upsets. Follow the "SAFE OPERATION" procedures, specified in the manuals with equipment.
19. Keep your machine clean. Accumulations of dirt, grease, and trash can contribute to fires and lead to personal injury.
20. The exhaust gas from the muffler is very hot. To prevent fire, do not expose dry grass, mowed grass, oil and any other combustible materials to exhaust gas. Use a spark arrester where required. Also keep the engine and muffler clean all the time.

2. OPERATING

◆ Starting

1. Always sit in the operator's seat when starting engine or operating levers or controls.
2. Before starting the engine make sure that the motion control levers are in neutral lock, the parking brake is applied, and Power Take Off (PTO) is disengaged (OFF).
3. Do not start engine by shorting across starter terminals. The machine may start in gear and move if normal starting circuitry is bypassed.
4. Do not operate or idle engine in a non-ventilated area. Carbon monoxide gas is colorless, odorless, and deadly.

◆ Working

1. Do not turn sharply when driving at high speed.
2. To avoid tip over, slow down when turning on uneven terrain or before stopping.
3. Do not operate near ditches, holes, embankments, or other terrain, which may collapse under the machine weight. The risk of machine tip over increases when the ground is loose or wet.
4. Park the machine on a firm and level surface.
5. Watch where you are going at all times. Watch for and avoid obstacles. Be alert at curbs, shrubs, near trees, and other obstructions and hidden hazards. Obstacles can damage machine (fuel hoses, wire harness etc.).
6. Know what is behind you before backing up. Look to the rear before and when backing. Do not mow while in reverse unless absolutely necessary and make sure the area immediately behind you is clear of obstructions or holes and small children. Use extra caution when machine is equipped with Grass Catcher. Your view to the rear is restricted.
7. When working in groups, always let others know what you are doing ahead of time.
8. Do not drive machine on streets or highways. Watch for traffic when you cross roads or operate near roads.
9. Be aware of the mower discharge direction and do not point it at anyone.
   Never operate with the discharge deflector raised, removed or altered, unless using a grass catcher.

https://truckmanualshub.com/

10. When using any attachments, never direct discharge material toward bystanders. Do not allow anyone and pets near the attachments while in operation.
    Do not mow when bystanders are present in the mowing area.
11. To reduce fire hazards, keep the engine exhaust area free of grass or leaves.
12. Be sure rotating blades and engine are stopped and the key is removed before placing hands or feet near blades and cleaning blockages or unclogging chute.
13. Keep hands and feet away from the cutting units. Shut the engine off and wait for all movement to stop before removing grass catcher or unclogging chute.
14. Always inspect the mower for damage after striking a foreign object. Repair or replace any damaged parts before restarting.
15. Operate during daylight or in bright artificial light.
16. If the machine starts to vibrate abnormally, disengage the drive to the attachments, stop the engine and remove the key. Then check the machine immediately.
17. Do not operate the machine when there is a possibility of lightning. Even if the machine is equipped with a cabin, the operator is not protected from lightning.
18. Never raise the deck with the blades running.
    Stop blades if not mowing.

◆ Children

Tragic accidents can occur if the operator is not alert to the presence of children. Children are attracted to the machine and mowing activity.

Never assume that children will remain where you last saw them.

1. Keep children out of the mowing area and under the watchful care of another responsible adult.
2. Be alert and turn machine off if children enter the area.
3. Before and when backing, look behind and down for small children.
4. Never carry children. They may fall off and be seriously injured or interfere with safe machine operation.
5. Never allow children to operate the machine, even under adult supervision. Local regulation can restrict the age of the operator.
6. Use extra care when approaching blind corners, shrubs, trees, or other obstructions that might hide children from sight.
7. Do not mow in reverse unless it is absolutely necessary.

◆ Operators, age 60 years and above

Data indicates that operators, age 60 years and above, are involved in a large percentage of machine-related injuries. These operators must evaluate their ability to operate the machine safely enough to protect themselves and others from serious injury.

◆ Pulling loads

Use extra care when pulling loads to reduce the risk of serious personal injury or death due to a machine tip-over.

a) Pull only from the hitch. Never attach loads to the axle housing or any other point above hitch.
b) Limit loads to those you can safely control.
c) Do not turn sharply.
d) Use care when backing.
e) Use front ballast or wheel weights when suggested in this Operator's Manual.

- Stopping distance increases with speed and weight of towed load. Travel slowly and allow extra time and distance to stop.
- Never allow children or others in or on towed equipment.
- Use additional caution when turning or operating under adverse surface conditions.

◆ Operation on slopes

Slopes are major factor related to loss-of-control and tip-over accidents, which can result in severe injury or death. All slopes require extra caution.

If you cannot back up the slope or if you feel uneasy on it, do not mow it.

If the engine stops when operating on a slope apply the parking brake immediately to prevent machine run away.

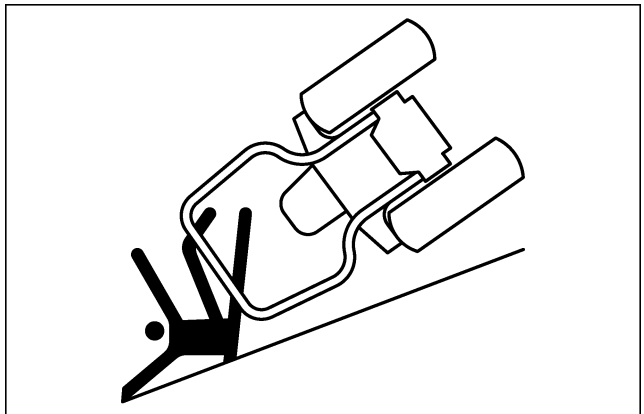

1BDABEJAP077A

DO

1. To avoid tip over, operate across the slopes not up and down. Stay off hills and slopes too steep for safe operation.
2. Remove obstacles such as rocks, tree limbs, etc.
3. Stay alert for holes in the terrain and other hidden hazards. Keep away from drop-offs. Uneven terrain could overturn the machine. Tall grass can hide obstacles.
4. Follow the manufacturer's recommendations for wheel weight or counterweights to improve stability.
5. Keep all movement on the slopes slow and gradual. Do not make sudden changes in speed or direction.
   If tires lose traction, disengage PTO and proceed slowly straight down the slope.
6. Reduce speed and exercise extreme caution on slopes and in sharp turns to prevent tip-over or loss of control.

https://truckmanualshub.com/

7. Use special caution when changing direction on slopes. Slow down, and use extra caution when changing direction on a slope.

DO NOT

1. Do not turn on slopes unless necessary. If necessary, turn uphill slowly and gradually.
2. Do not mow near drop-offs, ditches, or embankments. The mower could suddenly turn over if a wheel is over the edge of cliff or ditch, or if an edge caves in.
3. Do not mow on wet grass. Reduced traction could cause sliding and loss of control.
4. Do not try to stabilize the machine by putting your foot on the ground.
5. Do not use grass catcher on steep slopes.
6. Do not start or stop suddenly on slopes. If tires lose traction, disengage PTO and proceed slowly straight down the slope.
7. Never "freewheel". Do not let the machine travel downhill with motion control levers at neutral lock position or in neutral.
8. Do not operate machine without the mower deck installed.

◆ **Stopping**

1. Park the machine on level ground.
2. Make sure that the machine and all attachments have come to a complete stop before you get off.
3. Before you get off, apply parking brake, place the motion control levers in their neutral lock positions, disengage the PTO, lower all attachments to the ground, turn off the engine, and remove the key.
4. Do not park the machine on dry grass or leaves.

3. USING THE PTO

1. Before installing or using PTO-driven equipment, read the manufacturer's manual and review the safety labels attached to the equipment.
2. Wait until all moving components have completely stopped before connecting, disconnecting, adjusting, cleaning, or servicing any PTO-driven equipment.
3. Use the PTO with KUBOTA approved attachments.

The speed of PTO:
ZD1011 / ZD1021 Without mower: 2450 to 2550 rpm at 3200 engine rpm

4. USING THE LIFT LINK

1. Use lift link only with authorized attachments designed for lift link usage.

5. TRANSPORTING

1. Disengage power to attachment(s) when transporting or not in use.
2. Do not tow this machine. Use a suitable truck or trailer when transporting on public roads.
3. Use extra care when loading or unloading the machine into a trailer or truck. Use full width ramps for loading machine into trailer or truck.
4. This machine is not allowed to be used on public roads.
5. Shut off fuel while storing or transporting.
6. Tie the machine down securely using straps, chains, cable, or ropes.
7. Both front and rear straps must be directed down and outward from the machine.

6. SERVICING AND STORAGE

◆ **Servicing**

1. Before servicing, park the machine on a firm, level surface and apply the parking brake. Remove the key to prevent accidental start-up.
2. Allow the machine time to cool before touching the engine, muffler, radiator, etc.
3. Always stop the engine before refueling. Avoid spills and overfilling. Wipe up spilled fuel immediately.

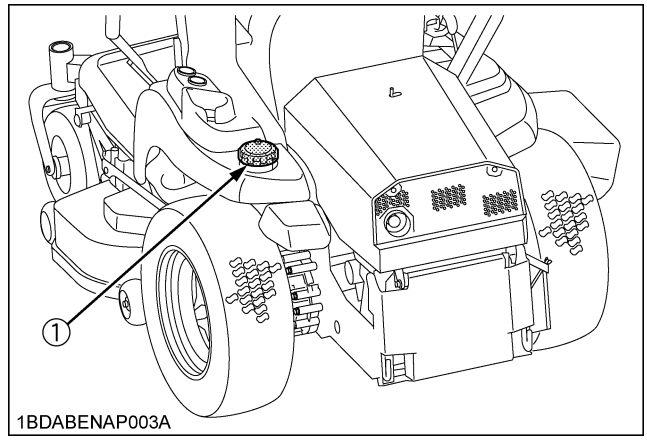

(1) Fuel tank cap

4. Use extra care in handling diesel fuels. They are flammable.
   (1) Use only an approved container.
   (2) Do not remove fuel cap or refuel with the engine running. Allow engine to cool before refueling. Do not smoke while refueling or when standing near fuel.
   (3) Do not refuel the machine indoors and always clean up spilled fuel or oil.
   (4) Do not store the machine or fuel container inside where there is an open flame, such as in a water heater.

https://truckmanualshub.com/

5. Do not smoke when working around battery or when refueling. Extinguish all cigarettes, cigars, pipes, and other sources of ignition. Keep all sparks and flames away from battery and fuel tank.

1BDABARAP121A

Never fill containers inside a vehicle or on a truck or trailer bed with a plastic liner.
Always place containers on the ground away from your vehicle before filling.
Remove equipment from the truck or trailer and refuel it on the ground.
If this is not possible, then refuel such equipment with a portable container, rather than from a fuel dispenser nozzle.
Keep the nozzle in contact with the rim of the fuel tank or container opening at all times until fueling is complete.
Do not use a nozzle lock open device.
If fuel is spilled on clothing, change clothing immediately.
Replace fuel cap and tighten securely.
Charge batteries in an open well ventilated area, away from spark and flames.
A battery, especially when charging, will give off hydrogen and oxygen gases, which can explode and cause serious personal injury.
Unplug charger before connecting or disconnecting from battery.

6. Before "jump starting" a dead battery, read and follow all the instructions.
7. Disconnect battery or remove spark plug wire before making any repairs. Disconnect the negative terminal first and the positive last. Reconnect positive first and negative last. Wear protective clothing and use insulated tools.

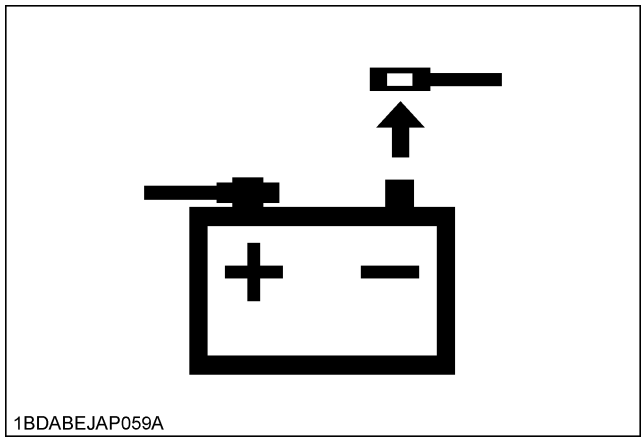
1BDABEJAP059A

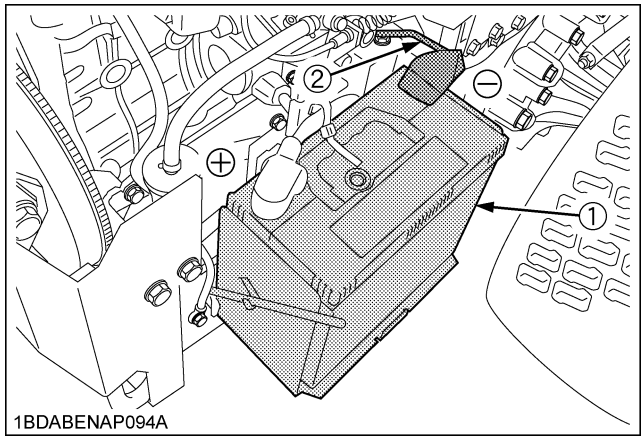

1BDABENAP094A

(1) Battery *(+): Positive terminal*
(2) Ground cable *(-): Negative terminal*

8. Do not use or charge the refillable type battery if the fluid level is below the LOWER (lower limit level) mark. Otherwise, the battery component parts may prematurely deteriorate, which may shorten the battery's service life or cause an explosion. Check the fluid level regularly and add distilled water as required so that the fluid level is between the UPPER and LOWER levels.
9. Keep first aid kit and fire extinguisher handy at all times.

1BDABEJAP071A

https://truckmanualshub.com/

10. Do not remove the radiator cap while coolant is hot. When cool, slowly rotate cap to the first stop and allow sufficient time for excess pressure to escape before removing the cap completely. If the machine has a coolant recovery tank, add coolant there instead of the radiator.
11. Do not attempt to mount a tire on a rim unless qualified to do so and all proper safety precautions are followed. Never allow untrained personnel to service machine.
12. Always maintain the correct tire inflation pressure. Do not inflate tires above the recommended pressure shown in the Operator's Manual.

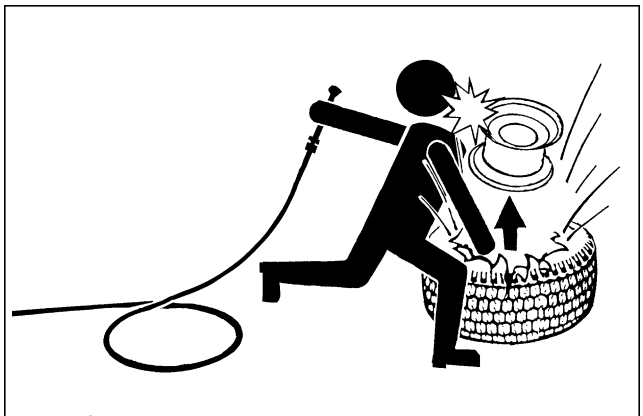

1BDABBSAP035A

13. Provide adequate support when changing wheels.
14. Make sure that wheel nuts and bolts have been tightened to the specified torque.
15. Escaping hydraulic fluid under pressure has sufficient force to penetrate the skin causing serious personal injury. Before disconnecting lines, be sure to relieve all pressure. Before applying pressure to the system, make sure all connections are tight and that lines, pipes, and hoses are not damaged.

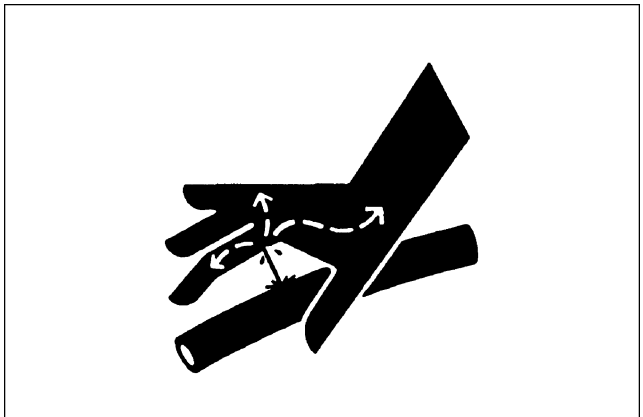

1BAACAAAP010B

16. Fluid escaping from pinholes may be invisible. Use a piece of cardboard or wood to search for suspected leaks: do not use hands. Use safety goggles or other eye protection.
    If you get injured by escaping fluid, see a medical doctor at once. Serious infection or reaction will result if proper medical treatment is not administered immediately. This fluid can produce gangrene or severe allergic reaction.

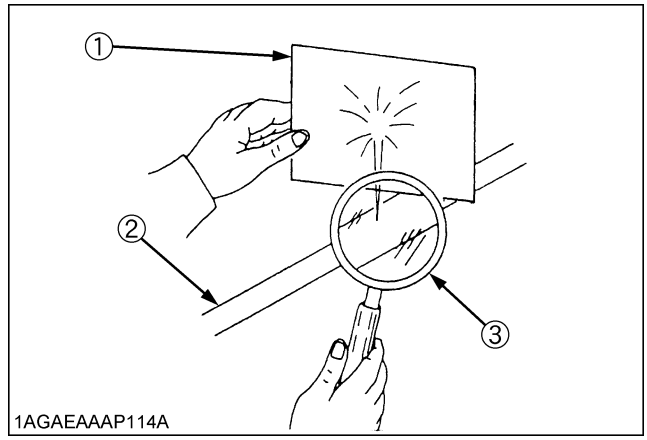

1AGAEAAAP114A

(1) Cardboard
(2) Hydraulic line
(3) Magnifying glass

17. Keep hands and feet away from moving parts. If possible, do not make adjustments or repairs with the engine running.
18. Keep machine free of grass, leaves, or other debris build-up.
19. Do not change the engine governor setting or overspeed the engine.
20. Do not run a machine inside a closed area.
21. Mower blades are sharp and can cut your hands. Wrap the blade(s) or wear gloves, and use extra caution when servicing them. Never straighten or weld blades.
22. Keep nuts and bolts, especially blade attachment bolts, tight and keep equipment in good condition.
23. Never tamper with safety devices. Check their operation for proper function regularly.
24. Waste products such as used oil, fuel, coolant, brake fluid, and batteries, can harm the environment, people, pets and wildlife. Please dispose of properly.
25. Do not use beverage containers for waste fluids or other products. Someone, particularly children, may drink them by mistake.
26. Securely support machine or any machine elements with stands or suitable blocking before working underneath. For your safety do not rely on hydraulically supported devices, they may leak down, suddenly drop or be accidently lowered.
27. See your local Recycling Center or KUBOTA Dealer to learn how to recycle or get rid of waste products.

https://truckmanualshub.com/

- A Material Safety Data Sheet (MSDS) provides specific details on chemical products; physical and health hazards, safety procedures, and emergency response techniques. The seller of the chemical products used with your machine is responsible for providing the MSDS for that product upon request.

◆ **Storage**

1. Keep the machine and supply of fuel in locked storage and remove the ignition key to prevent children or others from playing or tampering with them.
2. To avoid sparks from an accidental short circuit, always disconnect the battery's ground cable (-) first and reconnect it last.

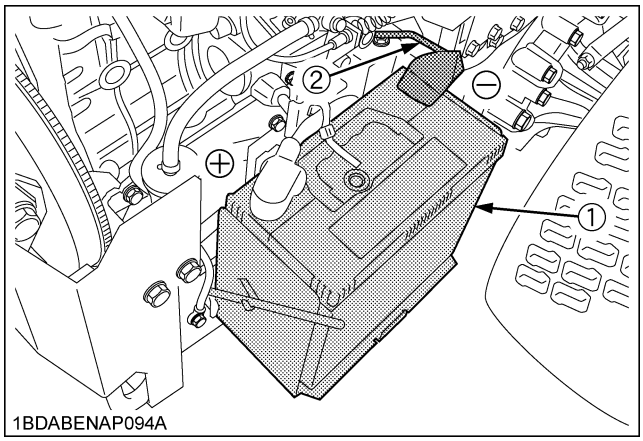

(1) Battery *(+): Positive terminal*
(2) Ground cable *(-): Negative terminal*

3. To avoid the danger of exhaust fume poisoning, do not operate the engine in a closed building without adequate ventilation.
4. To reduce fire hazards, clean the machine thoroughly before storage. Dry grass and leaves around the engine and muffler may ignite.
5. Let engine cool before storing and do not store near flame.
6. Shut off fuel while storing or transporting.

https://truckmanualshub.com/

7. DANGER, WARNING AND CAUTION LABELS

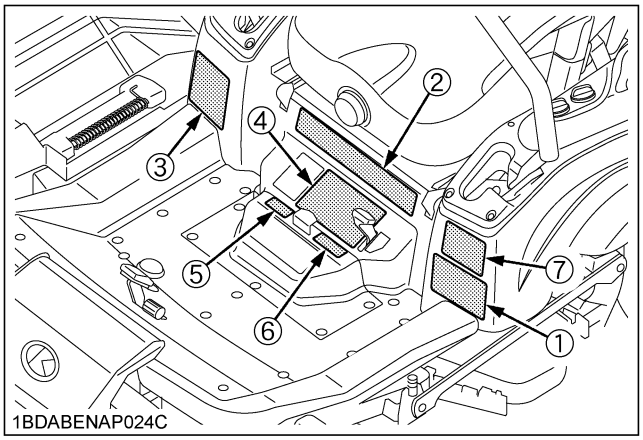

1BDABENAP024C

(1) Part No. K3181-6585-1

⚠WARNING

TO AVOID SERIOUS INJURY OR DEATH

1. Park the machine on level ground.
2. If necessary to park on an incline.
   ① Stop the machine.
   ② Apply the parking brake.
   ③ Stop the engine.
   If you stop the engine on an incline without applying the parking brake, the machine could move and runaway.
3. If the engine stops suddenly during operation, apply the parking brake immediately to prevent machine runaway.

⚠ADVERTENCIA

PARA EVITAR LESIONES PERSONALES GRAVES O LA MUERTE

1. Estacione la máquina en la tierra del nivel.
2. Si es necesario estacionar en una cuesta,
   ① Apagar la máquina.
   ② Aplique el freno de estacionamiento.
   ③ Luego apague el motor.
   Si apaga el motor en una cuesta sin aplicar el freno de estacionamiento, la máquina puede moverse sin control.
3. Si la máquina se detiene repentinamente durante la operación, enganche el freno de estacionamiento inmediatamente para evitar la pérdida de control.

1BDABCQAP093A

(2) Part No. K3411-6585-1

⚠ WARNING **TO AVOID SERIOUS INJURY OR DEATH**

1. Read and understand the operator's manual before operation.
2. Do not operate this machine unless you are trained.
3. Before allowing other people to use themachine, have them read the operator's manual.
4. Check the tightness of all nuts and bolts regularly.
5. Before starting the engine, make certain that everyone is at a safe distance from the machine, PTO is disengaged, and motion control levers are in neutral lock.
6. Remove objects that could be thrown by the blade.
7. Do not operate the machine when children and/or others are around.
8. Do not carry children or others on the machine at any time.
9. Before dismounting, disengage PTO clutch, lower the implement, place motion control levers in neutral lock position, set the parking brake, stop the engine and remove the key.
10. Keep safety devices (guards, shields, and switches) in place, and working.
11. To reduce the fire hazard, keep the exhaust clear of dry grass, dry leaves or other combustible materials.
12. This machine is not for street or highway use.
13. Securely support the machine and implement before working underneath.

1BDABENAP066A

(3) Part No. K3411-6582-2

⚠WARNING

TO AVOID SERIOUS INJURY OR DEATH

1. Mow across slopes-Not up and down.
2. Use extreme caution when operating on slopes.
3. Loss of traction may occur when opertaing on slopes.
4. Drive slowly on slopes.
5. Do not operate on wet slopes.
6. Avoid sudden starts.
7. Execute turns slowly.

⚠ADVERTENCIA

PARA EVITAR LESIONES PERSONALES GRAVES O LA MUERTE

1. Corte el césped de manera transversal en las colinas - No de arriba hacia abajo.
2. Tenga mucho cuidado durante la operación en colinas.
3. Se puede perder tracción durante la operación en colinas.
4. Conduzca lentamente en las colinas.
5. No use la máquina en colinas húmedas.
6. Evite arranques súbitos.
7. Realice las vueltas lentamente.

1BDABENAP064A

(4) Part No. K3411-6587-1

⚠ ADVERTENCIA **PARA EVITAR LESIONES PERSONALS GRAVES O LA MUERTE**

1. Lea y entienda el manual del operador antes de efectuar la operación.
2. No ponga en funcionamiento la máquina a menos que esté capacitado para hacerlo.
3. Antes de permitir que otras personas usen la máquina, indíqueles que lean el manual del operador.
4. Verifique con regularidad el apriete de todas las tuercas y pernos.
5. Antes de arrancar el motor, asegúrese de que todos estén a una distancia segura de la máquina. La toma de fuerza debe estar desactivada y las palancas de control de movimiento bloqueadas en neutro.
6. Retire los objetos que pueden ser lanzados por la cuchilla.
7. No opere la máquina cuando hayan niños u otras personas alrededor.
8. No lleve a niños ni a otras personas en la máquina en ningún momento.
9. Antes de desmontar, desenganche el embrague de la toma de fuerza, baje el implemento, cambie a neutro, aplique el freno de estacionamiento, apague el motor y retire la llave.
10. Mantenga los dispositivos de protección(guardas, barreras de protección e interruptores) en su lugar y en buen estado de funcionamiento.
11. Para reducir los riesgos de incendio, mantenga el escape exento de hierba seca, hojas secas u otros materiales combustibles.
12. Esta máquina no está diseñada para uso en calles ni carreteras.
13. Use un soporte seguro para la máquina y el implemento antes de trabajar debajo de los mismos.

1BDABENAP067A

(5) Part No. K3411-6568-1

⚠WARNING

When Engine is running, do not open this cover.

1BDABENAP068A

(6) Part No. K3411-6569-1

⚠ADVERTENCIA

Nunca abra el capó mientras el motor está en funcionamiento.

1BDABENAP069A

(7) Part No. K3271-6571-1

⚠WARNING

Operation of this equipment may create sparks that can start fires around dry vegetation.
A spark arrester may be required.
The operator should contact local fire agencies for laws or regulations relating to fire prevention requirements.

⚠ADVERTENCIA

La operación de este equipo puede generarchispas que pueden iniciar incendios en cercanías de vegetación seca.
Podría requerirse un parachispas.
El operador debería contactar a las agencias de bomberos locales para informarse sobre leyes o normas relacionadas con los requisitos de prevención de incendios.

1BDABCQAP1570

1BDABENAP073A

https://truckmanualshub.com/

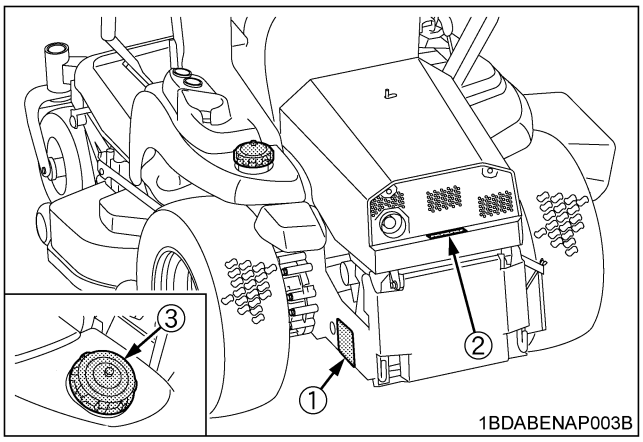

1BDABENAP003B

(1) Part No. K3271-6583-1

1BDABCYAP066A

(2) Part No. K3411-6532-1

1BDABENAP070A

(3) Part No. K3181-2491-4

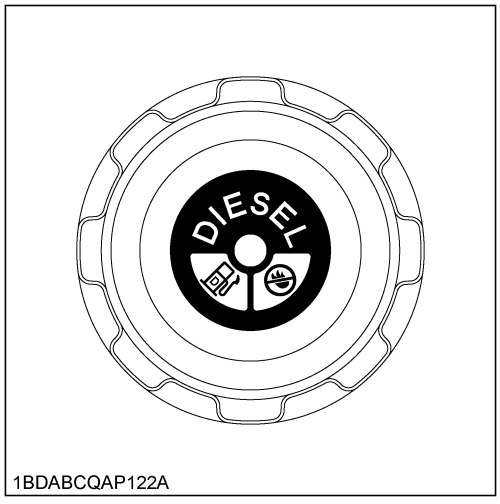

1BDABCQAP122A

1BDABENAP074A

https://truckmanualshub.com/

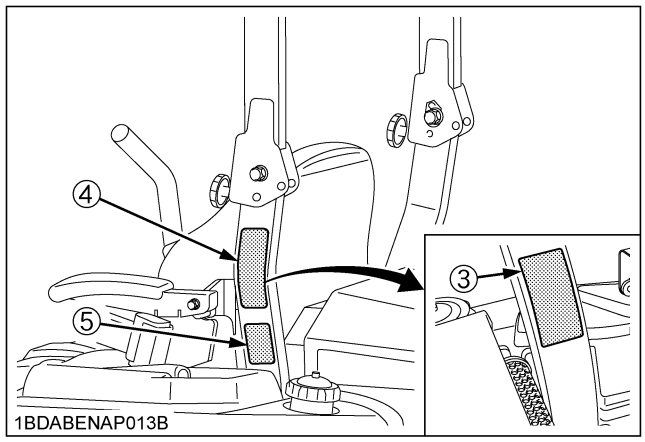

1BDABENAP013B

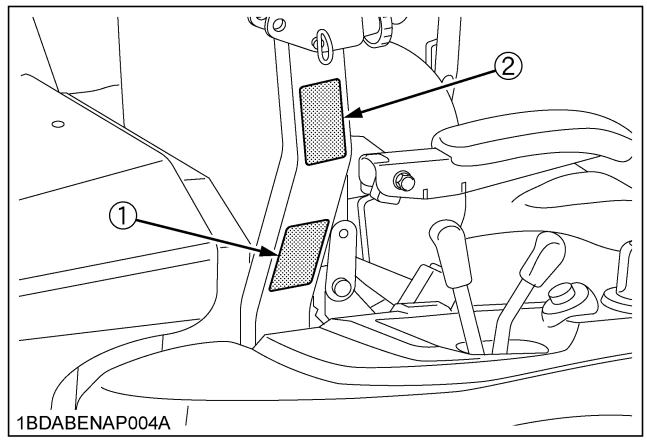

1BDABENAP004A

(1) Part No. K3441-6566-1

1BDABENAP071A

(2) Part No. K3181-6563-1

1BDABCQAP101A

(3) Part No. K3441-6568-1

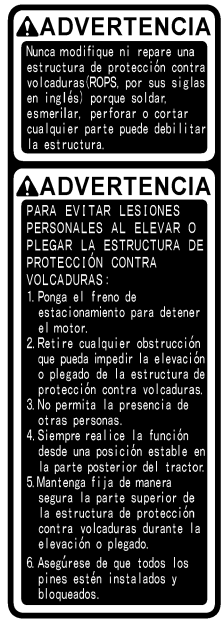

1BDABENAP072A

(4) Part No. K3181-6565-1

1BDABCQAP134A

(5) Part No. K3131-6587-1

Diesel fuel only

No fire

1BDABDEAP087A

1BDABENAP075A

https://truckmanualshub.com/

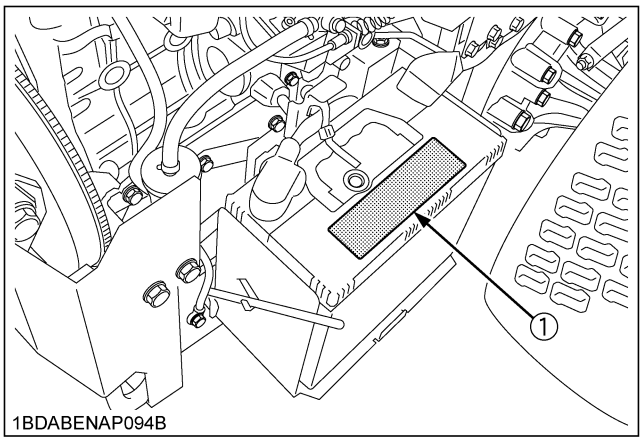

1BDABENAP094B

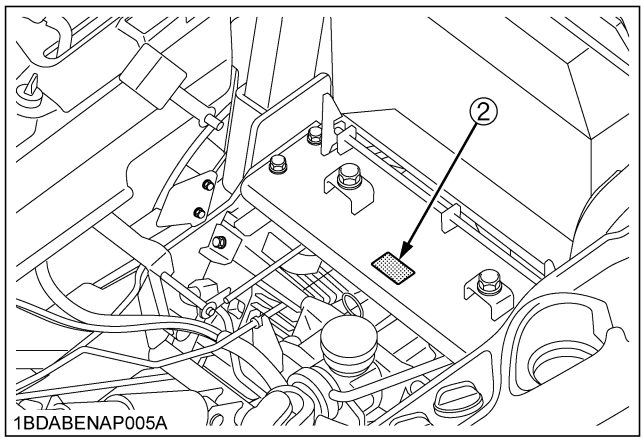

1BDABENAP005A

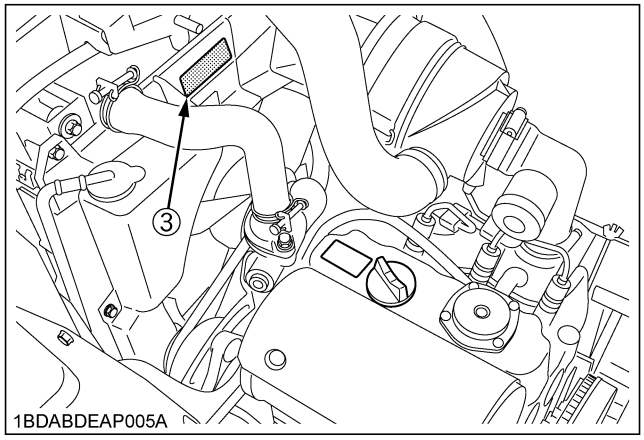

1BDABDEAP005A

(1) Part No. K3181-6116-1

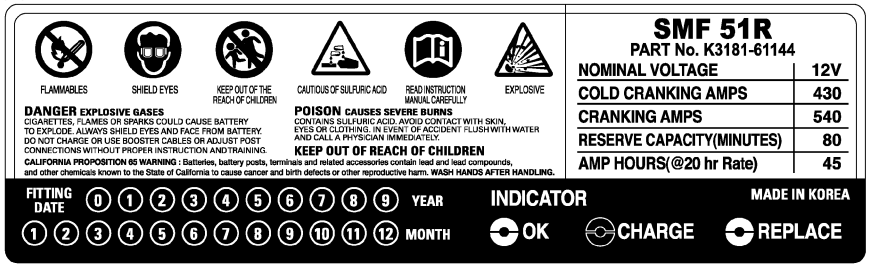

1BDAHAGAP127A

(2) Part No. K3111-6591-1

Do not get your hands close to fan.

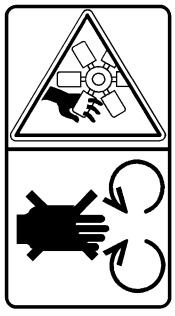

1BDABCQAP107A

1BDABENAP076A

(3) Part No. K3181-6586-1

Do not get your hands close to engine fan and fan belt.

1BDABCQAP108A

TO AVOID INJURY FROM BATTERY GASES AND ACIDES

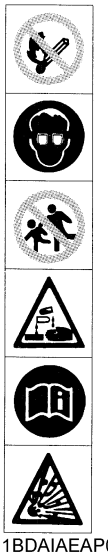

- Keep away cigarettes, flames or sparks.
- Always shield eyes and face from battery.
- Keep out of reach of children.
- Poison causes severe burns.
- Contains sulfuric acid.
- Read and understand operator's manual.
- Danger explosive gases.

1BDAIAEAP0200

https://truckmanualshub.com/

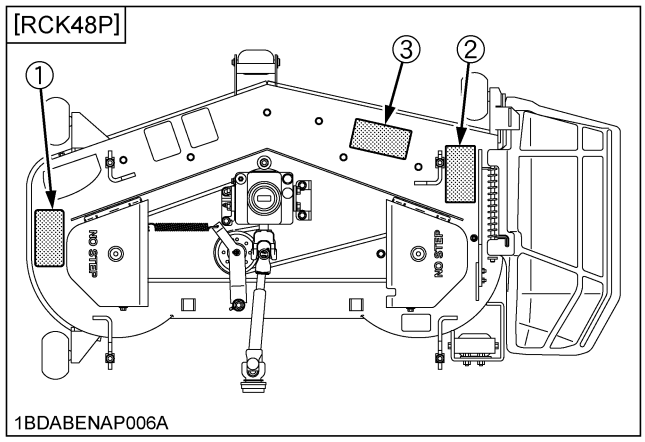

1BDABENAP006A

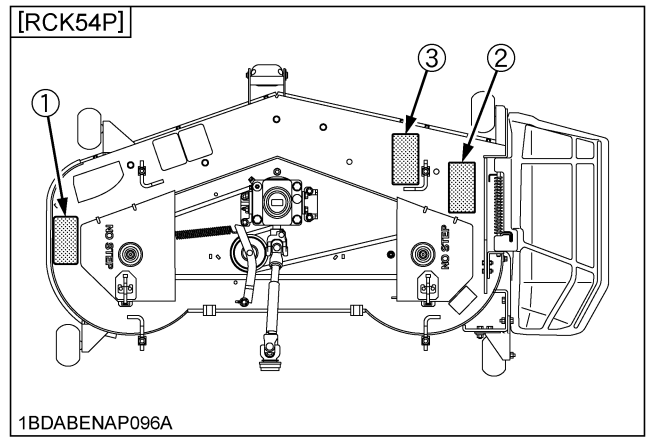

1BDABENAP096A

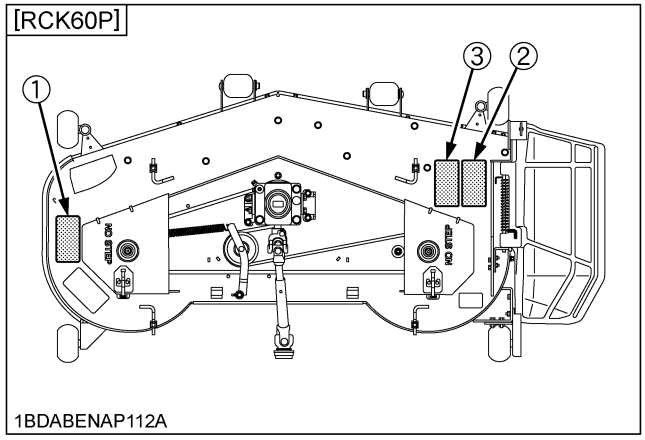

1BDABENAP112A

(1) Part No. K5681-7312-2

1BDACAEAP015B

(2) Part No. K5681-7311-2

1BDACAEAP016B

(3) Part No. K5681-7310-1

1BDACAEAP017B

1BDABENAP113A

8. CARE OF DANGER, WARNING, AND CAUTION LABELS

1. Keep danger, warning and caution labels clean and free from obstructing material.
2. Clean danger, warning and caution labels with soap and water, and dry with a soft cloth.
3. Replace damaged or missing danger, warning and caution labels with new labels from your local KUBOTA Dealer.
4. If a component with danger, warning and caution label(s) affixed is replaced with new part, make sure new label(s) is (are) attached in the same location(s) as the replaced component.
5. Mount new danger, warning and caution labels by applying on a clean dry surface and pressing any bubbles to outside edge.

https://truckmanualshub.com/

SERVICING OF MACHINE

After reading this manual thoroughly, you will find that you can do some of the regular maintenance yourself. Your dealer is interested in helping you get the best performance from your new machine and wants to help you get the most value from it. When in need of parts or major service, be sure to see your KUBOTA Dealer with the machine, engine and mower serial numbers.

Locate the serial numbers now and record them in the space provided.

	Type	Serial No.
Machine		
ROPS		
Engine		
Mower		
Date of Purchase		
Name of Dealer		
(To be filled in by purchaser)		

◆ **Warranty**

This machine is warranted under the Kubota Limited Express warranty, a copy of which may be obtained from your selling dealer. No warranty shall, however, apply if the machine has not been handled according to the instruction given in the Operator's Manual even it is within the warranty period.

◆ **Scrapping the machine and its procedure**

To put the machine out of service, correctly follow the local rules and regulations of the country or territory where you scrap it. If you have questions, consult your local KUBOTA Dealer.

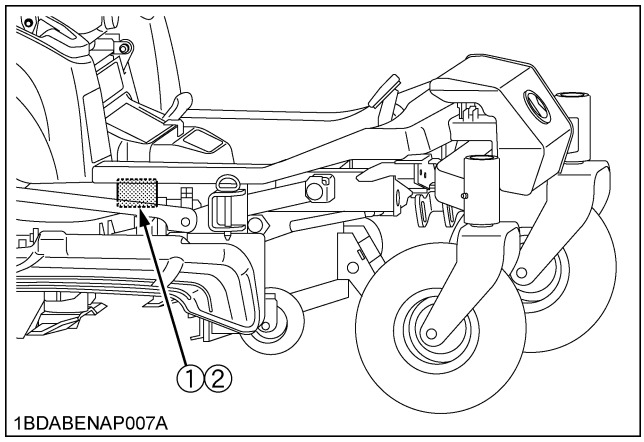

(1) Machine identification plate
(2) Machine serial No.

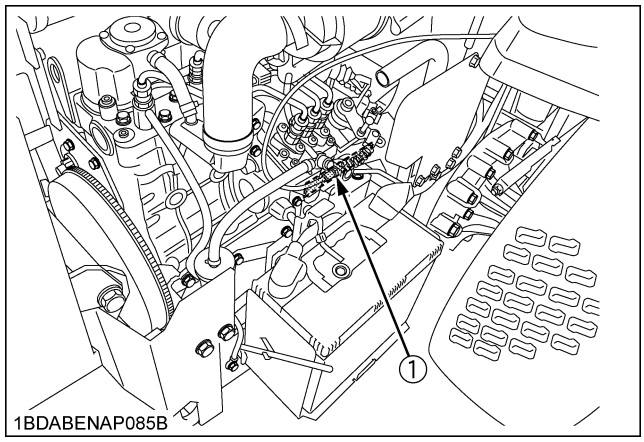

(1) Engine serial No.

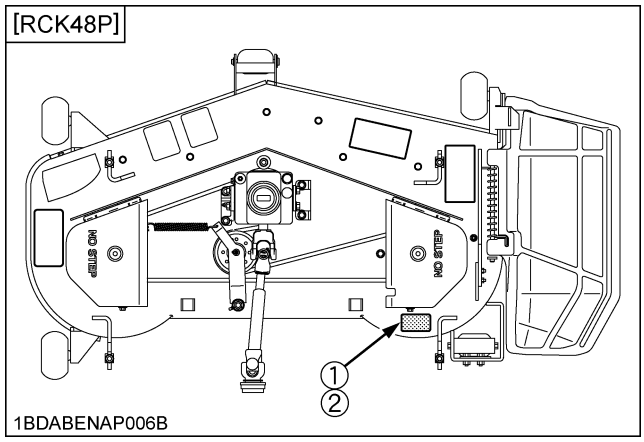

(1) Mower identification plate
(2) Mower serial No.

https://truckmanualshub.com/

[RCK54P]

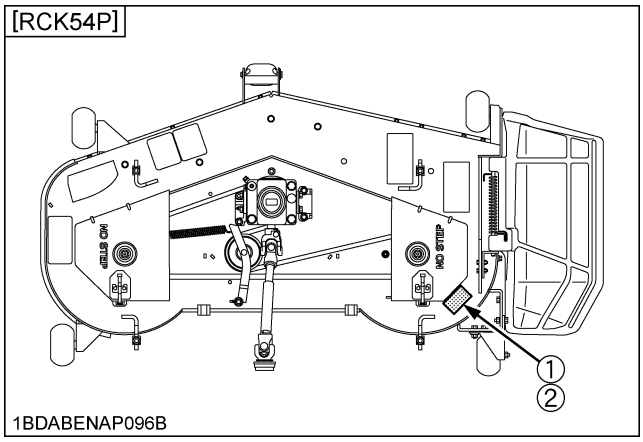

(1) Mower identification plate
(2) Mower serial No.

[RCK60P]

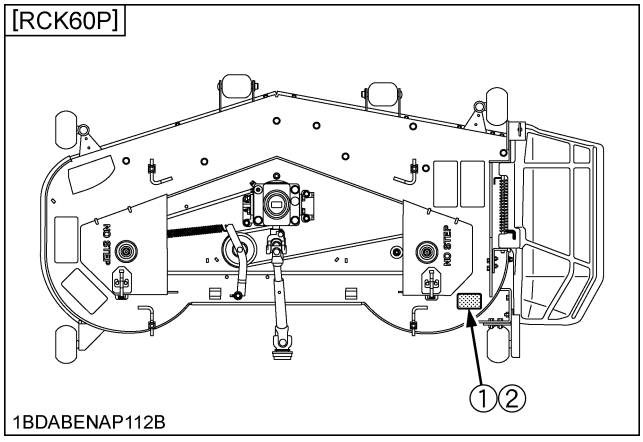

(1) Mower identification plate
(2) Mower serial No.

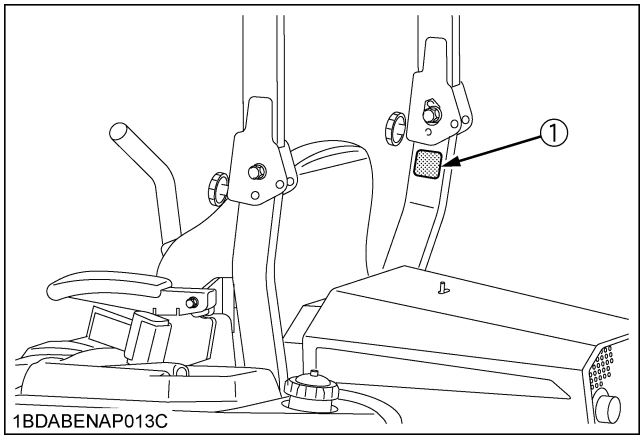

(1) ROPS serial No.

https://truckmanualshub.com/

SPECIFICATIONS

Model				ZD1011		ZD1021
Engine	Model			D782-E4		D902-E4
	Max. engine power (Gross)		kW (HP)	14.4 (19.3) (*1)(*2)		16.1 (21.6) (*1)(*2)
	Type			Indirect injection, Liquid-cooled		
	Number of cylinders			3		
	Bore and stroke		mm (in.)	67 x 73.6 (2.64 x 2.90)		72 x 73.6 (2.83 x 2.90)
	Total displacement		cm^3 (cu. in.)	778 (47.5)		898 (54.8)
	Rated revolution		rpm	3200		
	Low idling revolution		rpm	1400 to 1500		1450 to 1550
	Fuel			Diesel fuel No. 2 Diesel fuel No. 1 [below -10℃ (14℉)]		
	Starter			Electric starter with battery, glow plug, 12 V, 1.2 kW		
	Lubrication			Forced lubrication by trochoidal pump		
	Cooling			Liquid with pressurized radiator		
	Battery			51R (12 V, RC: 80 min, CCA: 430 A)		
Capacities	Fuel tank		L (U.S.gals.)	23 (6)		
	Engine crankcase (with filter)		L (U.S.qts.)	2.8 (3.0)		3.4 (3.6)
	Engine coolant		L (U.S.qts.)	2.7 (2.85)		
	Recovery tank		L (U.S.qts.)	0.25 (0.26)		
	Transmission case including Rear axle gear case		L (U.S.qts.)	7.5 (7.9) (*3)		
Dimensions	Overall length		mm (in.)	2230 (87.8)		2255 (88.6)
	Overall width w/o mower deck		mm (in.)	1210 (47.7)		1406 (55.4)
	Overall height	With ROPS upright	mm (in.)	1890 (74.4)		
		With ROPS folded	mm (in.)	1430 (56.3)		
	Wheelbase		mm (in.)	1380 (54.3)		
	Min. ground clearance		mm (in.)	130 (5.12) W/48", W/54", W/60"		
	Tread	Front	mm (in.)	890 (35.0)		1030 (40.6)
		Rear	mm (in.)	930 (36.6)		980 (38.6)
Weight (W/MOWER DECK)			kg (lbs.)	588 (1296) with 48"	600 (1323) with 54"	630 (1389) with 60"

https://truckmanualshub.com/

Model				ZD1011	ZD1021
Traveling system	Tires	Front		13 x 5.0 - 6 Smooth Pneumatic	13 x 6.5 - 6 Smooth Pneumatic
		Rear		24 x 9.5 - 14 Low profile	24 x 12 - 14 Low profile
	Traveling speeds (*2)	Forward	mph (km/h)	0 to 9.0 (0 to 14.5)	
		Reverse	mph (km/h)	0 to 5.0 (0 to 8.0)	
	Steering			2 - Hand levers	
	Transmission			2 - HST w / Gear	
	Parking brake			Wet multi disks / Foot applied, released	
	Min. turning radius		mm (in.)	0 (0)	
PTO	Revolution			1 speed (2530 rpm at 3200 engine rpm)	
	Drive system			Shaft drive, KUBOTA 10 tooth involute spline	
	Clutch type			Wet multi disks	
	PTO brake			Wet single disk	

(Specifications and design subject to change without notice)

NOTE:

*1: Manufacturer's estimate, SAE J1940

*2: At 3200 engine rpm

*3: Oil amount when the oil level is at the upper level.

https://truckmanualshub.com/

Model				RCK48P-1000Z	RCK54P-1000Z	RCK60P-1000Z
PRO Commercial Deck (Fabricated deck)	Suitable machine			ZD1011		ZD1021
	Mounting method			Quick joint, Parallel linkage		
	Adjustment of cutting height			Dial gauge		
	Cutting width		mm (in.)	1225 (48)	1375 (54)	1524 (60)
	Cutting height		mm (in.)	25 to 127 (1.0 to 5.0)		
	Weight (Approx.)		kg (lbs.)	107 (235)	119 (262)	138 (304)
	Blade spindle speed		r/s (rpm)	64.8 (3890) *1	58.0 (3480) *1	56.0 (3360) *1
	Blade tip velocity		m/s (fpm)	86.9 (17100) *1		92.5 (18200) *1
	Blade length		mm (in.)	424 (16.7)	475 (18.7)	523 (20.6)
	Number of blades			3		
	Dimensions	Total length	mm (in.)	880 (34.6)	925 (36.4)	963 (37.9)
		Total width	mm (in.)	1565 (61.6)	1710 (67.3)	1875 (73.8)
		Total height	mm (in.)	340 (13.3)		

*1: Engine Max rpm

https://truckmanualshub.com/

ENGLISH

IMPLEMENT LIMITATIONS

The KUBOTA Machine has been thoroughly tested for proper performance with implements sold or approved by KUBOTA. Use with implements below may result in malfunctions or failures of the machine, damage to other property and injury to the operator or others.

- Implements are not sold or approved by KUBOTA
- Implements exceed the maximum specifications listed below, or
- Implements are otherwise unfit for use with the KUBOTA Machine

[Any malfunctions or failures of the machine resulting from use with improper implements are not covered by the warranty.]

UNIT	Maximum loading weight		Implement weight W_1	Maximum total weight
	Front axle Wf	Rear axle Wr		
ZD1011-54, ZD1011-48	156 kg (344 lbs.)	550 kg (1213 lbs.)	140 kg (308 lbs.)	706 kg (1556 lbs.)
ZD1021-60	162 kg (357 lbs.)	576 kg (1270 lbs.)	160 kg (353 lbs.)	738 kg (1627 lbs.)

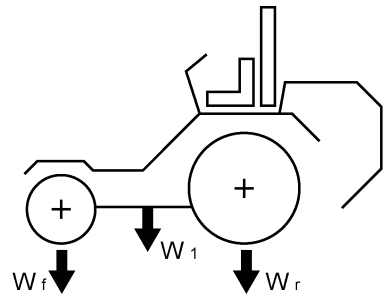

1BDABCQAP132C

OPTION: When using the hitch kit.

IMPORTANT :

- Do not operate on slope when pulling loads.
- Total towed weight must not exceed combined weight of pulling machine, ballast and operator.
- Follow the manufacturer's recommendations for weight limits for towed equipment.

UNIT	Maximum loading weight		Maximum total weight	Tongue weight W_1	Towing capacity W_2
	Front axle Wf	Rear axle Wr			
ZD1011-54, ZD1011-48	120 kg (265 lbs.)	480 kg (1058 lbs.)	600 kg (1323 lbs.)	30 kg (66 lbs.)	100 kg (220 lbs.)
ZD1021-60	121 kg (266 lbs.)	509 kg (1122 lbs.)	630 kg (1389 lbs.)	30 kg (66 lbs.)	100 kg (220 lbs.)

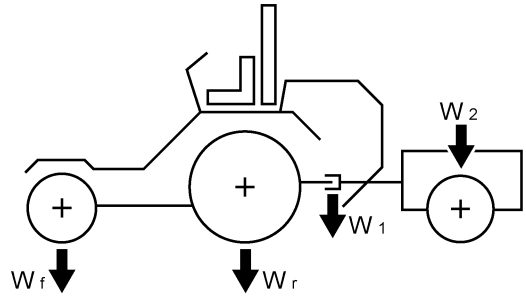

1BDABEJAP011B

https://truckmanualshub.com/

INSTRUMENT PANEL AND CONTROLS

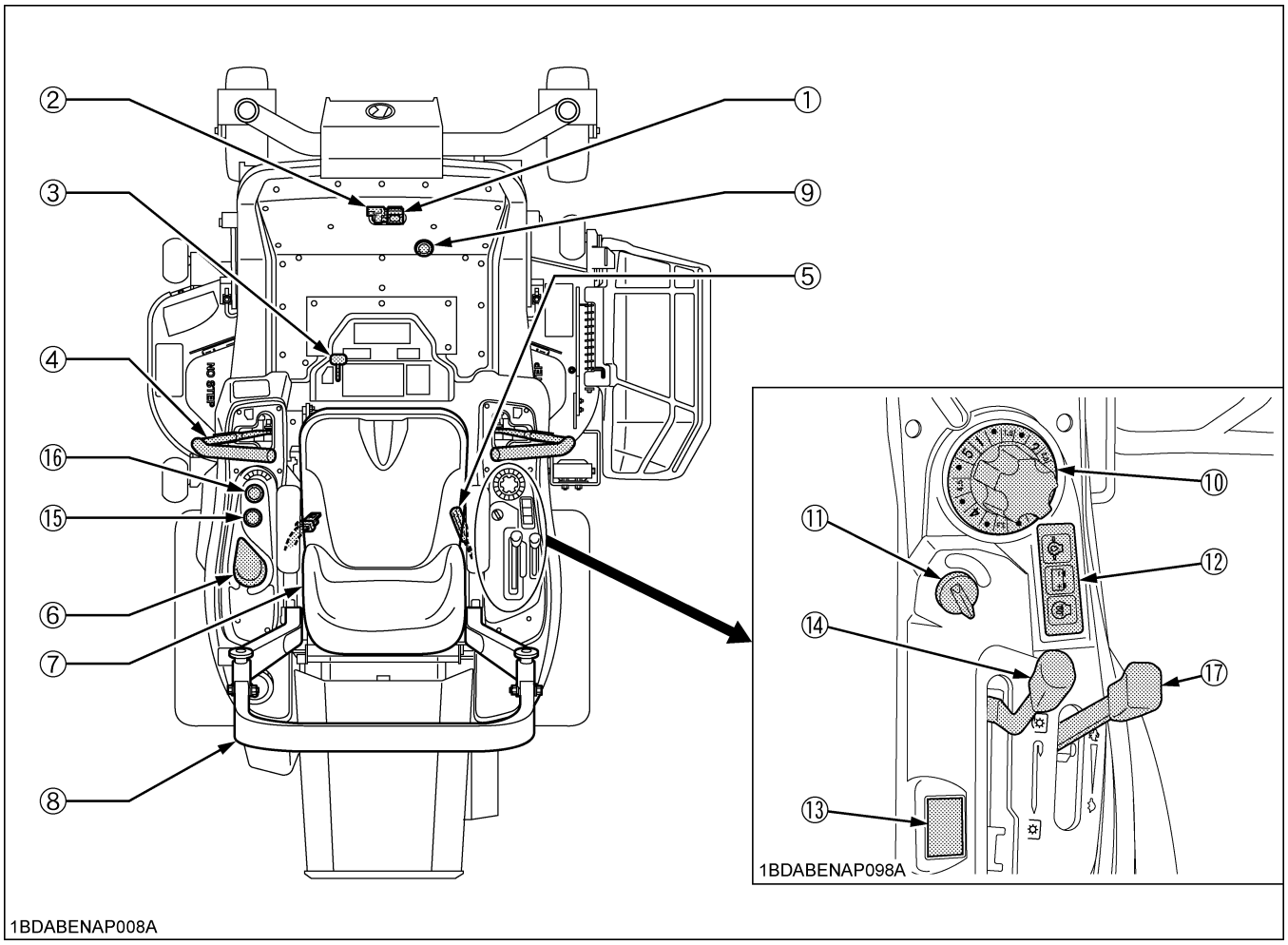

ILLUSTRATED CONTENTS

(1)	Parking brake pedal	11, 22
(2)	Parking brake lock pedal	11, 22
(3)	Lift lock lever	27
(4)	Motion control lever	11, 23
(5)	Seat belt	21
(6)	Cup holder	-
(7)	Operator's seat	21
(8)	ROPS	19
(9)	Hydraulic lift control pedal	22

ILLUSTRATED CONTENTS

(10)	Cutting height control dial	28
(11)	Key switch	13
(12)	Easy Checker (TM)	14
(13)	Hour meter	15
(14)	PTO lever	30
(15)	Fuel gauge	15
(16)	Coolant temperature gauge	15
(17)	Throttle lever	22

https://truckmanualshub.com/

ENGLISH

[RCK48P]

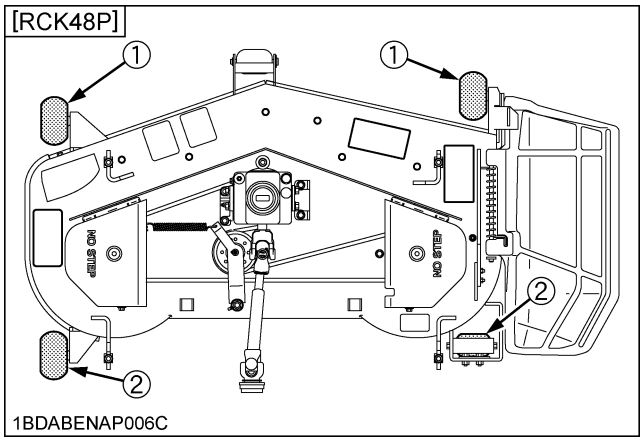

1BDABENAP006C

ILLUSTRATED CONTENTS

(1) *Anti-scalp roller (Front)..... 28*

(2) *Anti-scalp roller (Rear)..... 28*

[RCK60P]

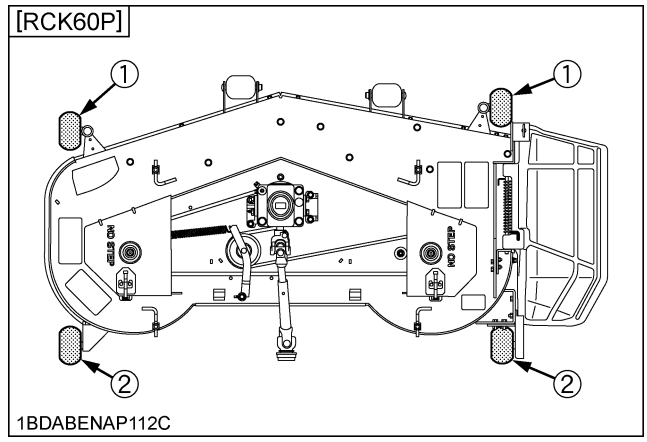

1BDABENAP112C

ILLUSTRATED CONTENTS

(1) *Anti-scalp roller (Front)..... 28*

(2) *Anti-scalp roller (Rear)..... 28*

[RCK54P]

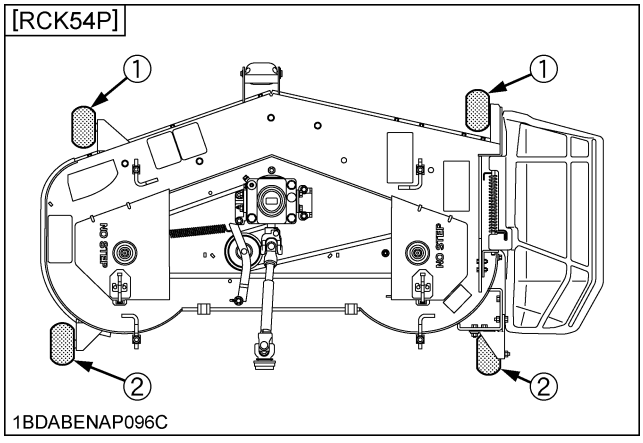

1BDABENAP096C

ILLUSTRATED CONTENTS

(1) *Anti-scalp roller (Front)..... 28*

(2) *Anti-scalp roller (Rear)..... 28*

https://truckmanualshub.com/

MOWER MOUNTING

MOUNTING THE MOWER DECK

WARNING

To avoid serious injury or death:

- **Park the machine on a firm and level surface.**
- **Apply the parking brake.**
- **Stop the engine and remove the key.**

1. Before mounting the mower deck, raise the lift links to the full up position.
2. Adjust the cutting height control dial to 1 in. position.
3. Change the direction of the front tires as shown in the figure.
4. Place the mower deck at the right side of the machine.

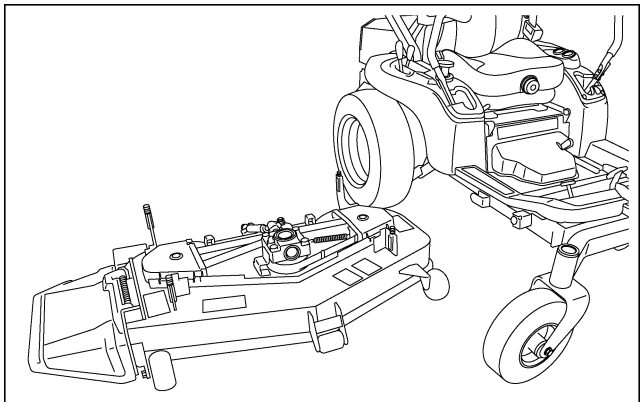

1BDABENAP087A

NOTE :

- RCK60P only: For easy installation, set the anti scalp roller as shown below.

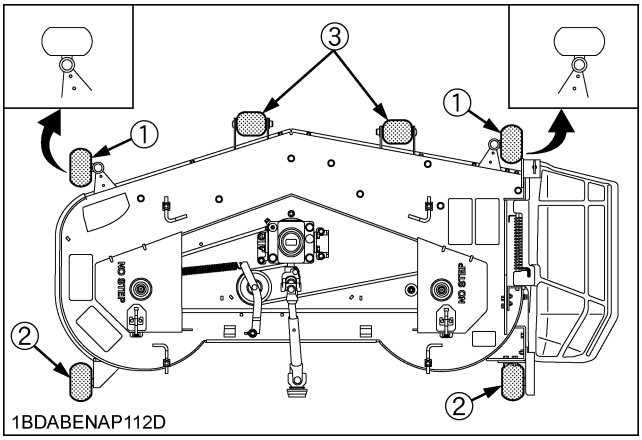

(1) Anti scalp roller (Front, swivel type)
(2) Anti scalp roller (Rear, bolt shift type)
(3) Anti scalp roller (Rear, pin shift type)

5. Slide the mower deck under the machine, and make sure that the mower gear case is placed properly in the center of the machine.
6. Adjust the lift pedal to the lowest position and pull down the lift links.
7. Attach the lift links to the mower deck with attaching hardwares.

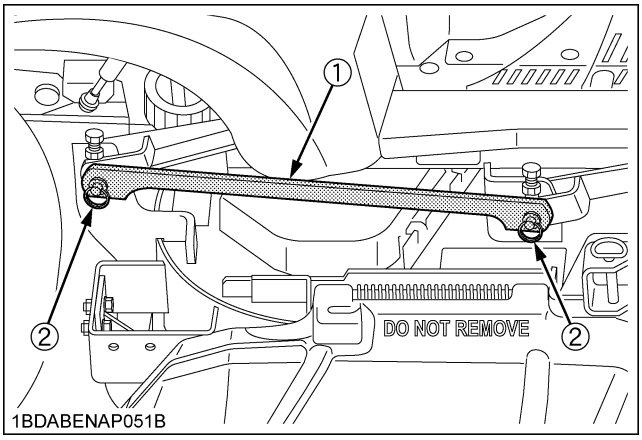

(1) Lift link
(2) Clevis pin, Plain washer, Snap ring

8. Install universal joint.
   Pull back the coupler of the universal joint.
   Push the universal joint onto the PTO shaft until the coupler locks.

https://truckmanualshub.com/

IMPORTANT :
- Tug the universal joint backward and forward to make sure it is locked securely.

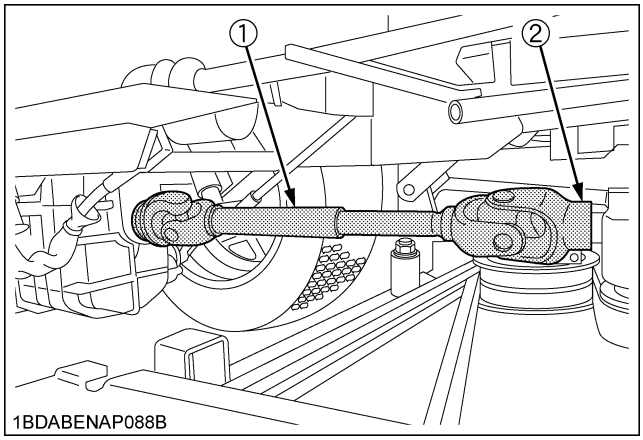

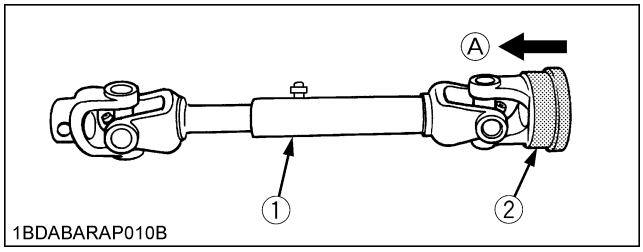

(1) Universal joint *(A) "PULL"*
(2) Coupler

9. After mounting the mower, check the mower level. If necessary, adjust the mower level and anti-scalp rollers.

ADJUSTING THE MOWER

See "OPERATING THE MOWER" and "ADJUSTMENT" section.

DISMOUNTING THE MOWER DECK

For dismounting the mower deck, reverse the above procedures.

https://truckmanualshub.com/

OPERATING THE ENGINE

WARNING

To avoid serious injury or death:

- **Read and understand "SAFE OPERATION" in the front of this manual.**
- **Read and understand the danger and warning labels located on the machine.**
- **To avoid danger of exhaust fume poisoning, do not operate the engine in a closed building without proper ventilation.**
- **Never start the engine while standing on the ground. Start the engine only from operator's seat.**

GET ON AND GET OFF MACHINE SAFELY

DO NOT step on either side of the mower deck when getting on and getting off the machine. When getting on the machine from either side, step over the mower deck.

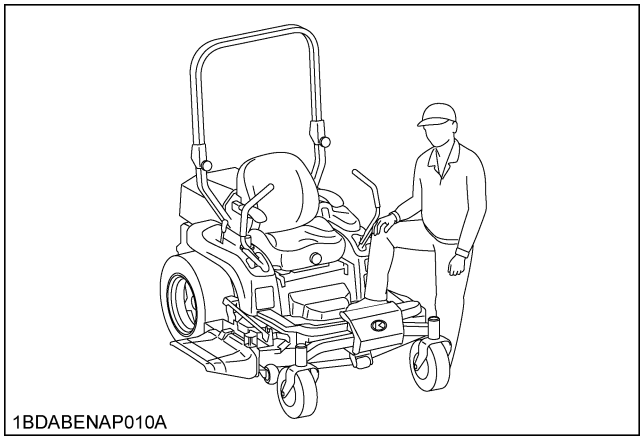

STARTING THE ENGINE

1. **Sit on the operator's seat. Put on the seat belt.**
2. **Apply the parking brake.**

To apply the parking brake:
Depress the parking brake pedal firmly with your right foot and the parking brake lock pedal simultaneously with your left foot. Then release the parking brake pedal while holding the parking brake lock pedal down.

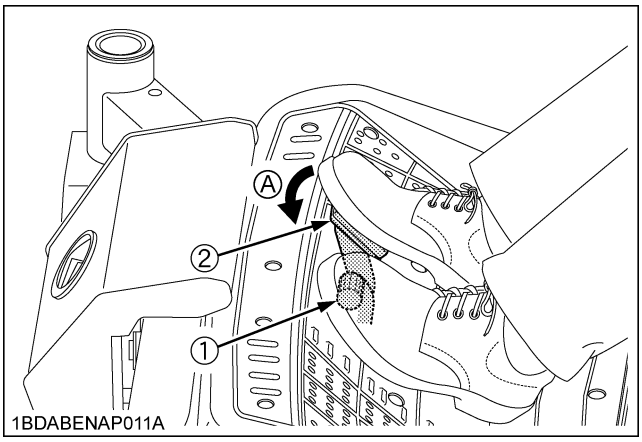

(1) Parking brake lock pedal *(A) "DEPRESS"*
(2) Parking brake pedal

To release the parking brake:
Depress the brake pedal and release slowly with your right foot without pressing the parking brake lock pedal.

https://truckmanualshub.com/

3. Make sure that the PTO lever is in the "DISENGAGED" (OFF) position.

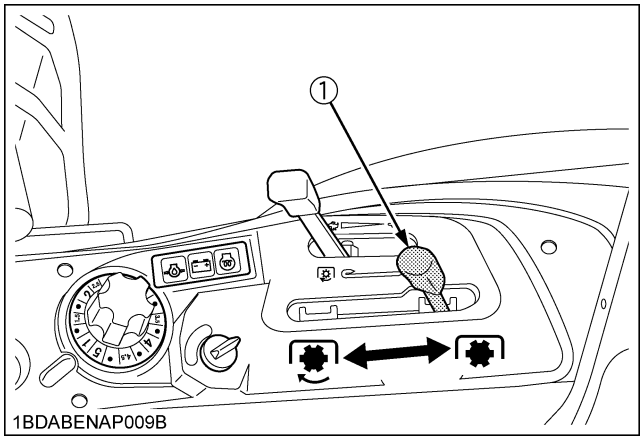

(1) PTO lever

"ENGAGED" (ON)
"DISENGAGED" (OFF)

4. Place the motion control levers in the "NEUTRAL LOCK" position.

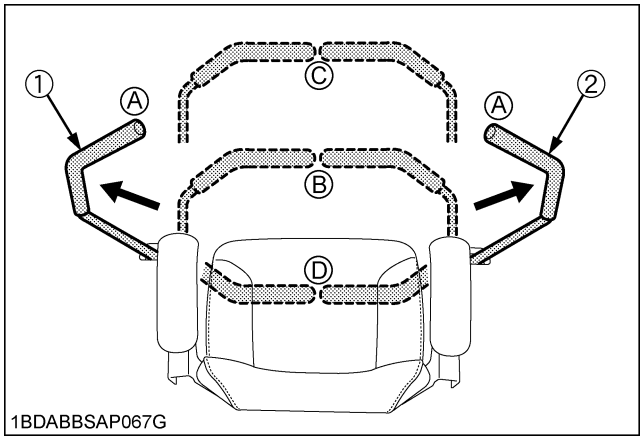

(1) Motion control lever (LH)
(2) Motion control lever (RH)

(A) "NEUTRAL LOCK" Position
(B) "NEUTRAL" Position (held by hands)
(C) "FORWARD"
(D) "REVERSE"

5. Release the hydraulic lift control pedal to the "DOWN" position.

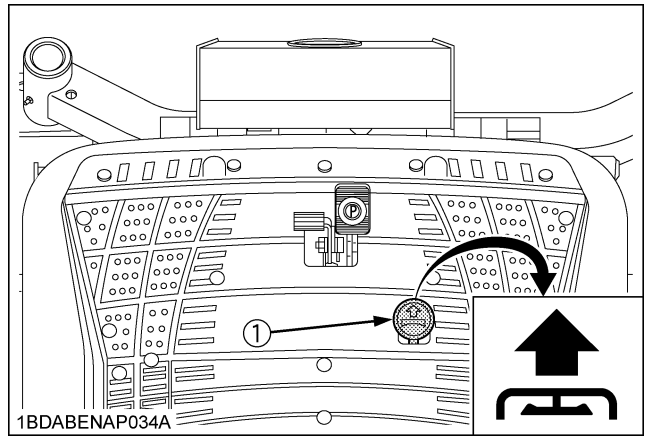

(1) Hydraulic lift control pedal

"DOWN": Release the pedal
"UP": Keep depressing the pedal

6. Set the throttle lever 1/2 way forward.

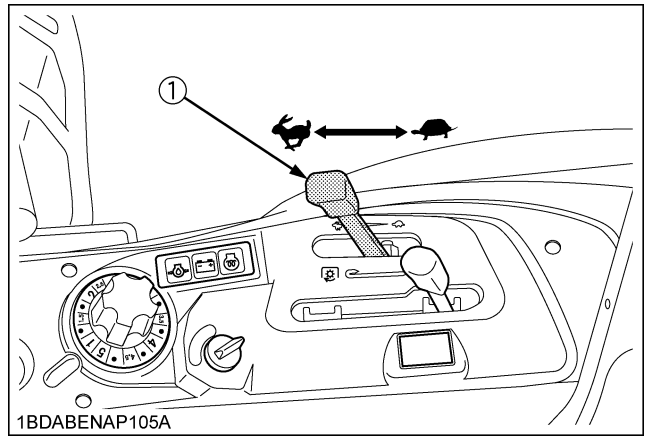

(1) Throttle lever

"FAST"
"SLOW"

7. Insert the key into the key switch and turn clockwise one notch.
Make sure the Easy Checker (TM) lights are ON.

IMPORTANT :

- Do not depress the hydraulic lift control pedal.
  When the engine is off, depressing the hydraulic lift control pedal (UP or DOWN) will lower the implement.

https://truckmanualshub.com/

■Key Switch

IMPORTANT :

- Because of the engine start system, the engine may not be started except when the PTO clutch is "DISENGAGED" (OFF), the parking brake lock pedal is applied, motion control levers are in "NEUTRAL LOCK" position and the operator is sitting in the seat.

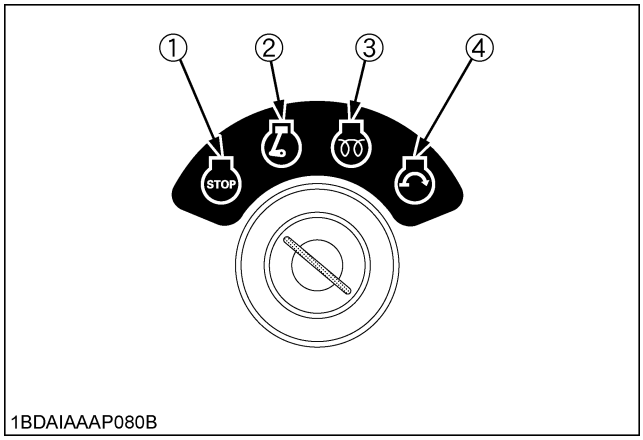

(1)	OFF.....	The position where the key can be inserted into or removed from the key switch. [When the key is turned to this position, the engine shuts off.]
(2)	ON.....	The engine keeps running.
(3)	PREHEAT...	The super glow plug is heated.
(4)	START.....	Apply the parking brake and turn the key switch to this position to start the engine.

8. Turn the key switch clockwise, and hold it for about 5 seconds. (at the "PREHEAT" position)

For the appropriate preheating time, refer to the table below:

Temperature	Preheating Time
Over 0℃ (32℉)	5 sec.
Below 0℃ (32℉)	10 sec.

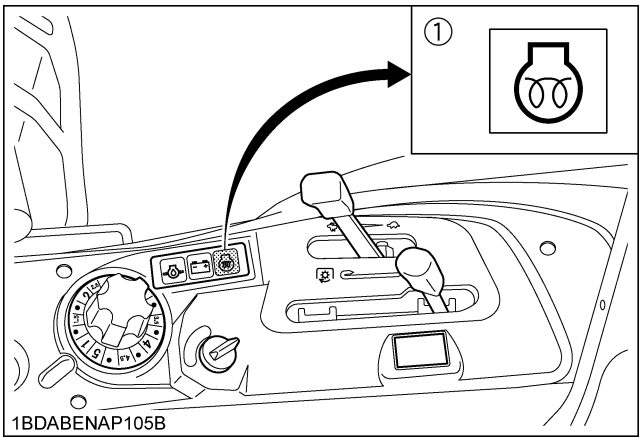

(1) Glow plug indicator

NOTE :

- Glow plug indicator (1) comes on while the engine is being preheated.

9. Turn the key switch to the "START" position and release the key to the "ON" position when the engine starts.

IMPORTANT :

- Do not use starting fluid or ether.
- To protect the battery and the starter, make sure that the starter is not continuously turned for more than 10 seconds.
- Do not turn the key switch while the engine is running.
- When the temperature is below 0℃ (32℉), run the engine at medium speed to warm up the lubricant of the engine and transmission for at least 10 minutes. If the machine is operated before the lubricant is warm enough, the machine life will be shortened.
- Do not operate the machine under full load until it is sufficiently warmed up.
- When the ambient temperature is less than -15℃ (5℉), remove the battery from the machine and store it somewhere warm until next operation.

10. Make sure that the Easy Checker (TM) lights have gone off. If the light is still on, immediately stop the engine and check the remedy following the instruction. (See "CHECK DURING OPERATING" in "OPERATING THE ENGINE" section.)

11. Warm the engine by running at medium speed.

https://truckmanualshub.com/

STOPPING THE ENGINE

1. **After idling the engine, turn the key switch to the "OFF" position.**
2. **Remove the key.**
3. **Do not leave the key switch "ON" (key in the "ON" position) as the battery will discharge when the engine is not running.**
4. **Apply the parking brake.**

■Engine Stop Lever (Inside the Hood)

The engine stops when the key switch is turned "OFF". If the engine does not stop, make sure the motion control levers are in the "NEUTRAL LOCK" position, the PTO lever is "OFF", the mower lowered to the ground and apply the parking brake, then carefully get off the machine. Then open the hood and pull engine stop lever (Red mark) and hold it until the engine stops. Then contact your local KUBOTA Dealer immediately.

WARNING

To avoid serious injury or death:

- **Do not operate the machine until the engine stop system is repaired.**

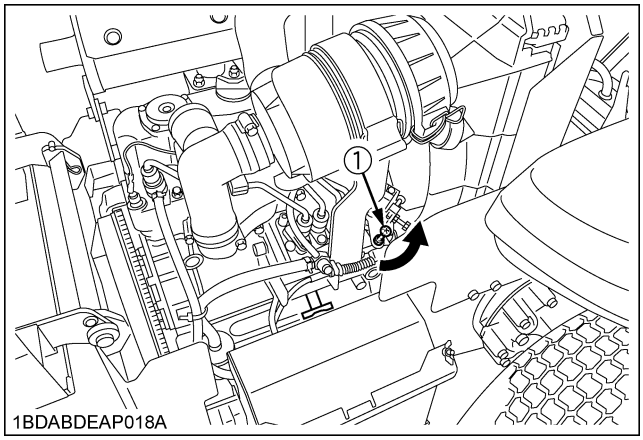

(1) Engine stop lever

CHECK DURING OPERATING

While operating, make the following checks to see that all the parts are functioning normally.

■Immediately Stop the Engine if:

- The engine suddenly slows down or accelerates.
- Unusual noises are suddenly heard.
- Exhaust fumes suddenly become discolored.

■Easy Checker (TM)

If the warning lamps in the Easy Checker (TM) come on during operation, stop the engine immediately, and find the cause as shown below.

Never operate the machine while Easy Checker (TM) lamp is "ON".

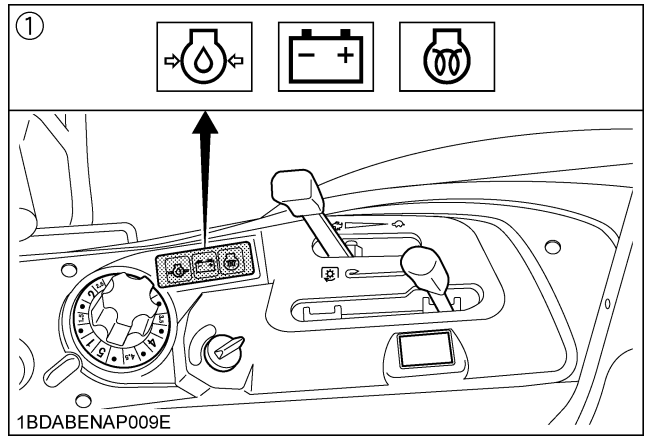

(1) Easy checker (TM)

Engine oil pressure

If the oil pressure in the engine goes below the prescribed level, the warning lamp in the Easy Checker (TM) will come on.

If this should happen during operation, stop the engine immediately and check level of engine oil.

Electrical charge

If the dynamo is not charging the battery, the warning lamp in the Easy Checker (TM) will come on.

If this should happen during operation, check the electrical charging system or consult your local KUBOTA Dealer.

Glow plug Indicator (Pre-heating Indicator)

When the key switch is in the "PREHEAT" position, the glow plug indicator illuminates.

https://truckmanualshub.com/

■Fuel Gauge

Be careful not to empty the fuel tank. Otherwise air may enter the fuel system.
If this should happen, the fuel system must be bled. (See "SERVICE AS REQUIRED" in "MAINTENANCE" section.)

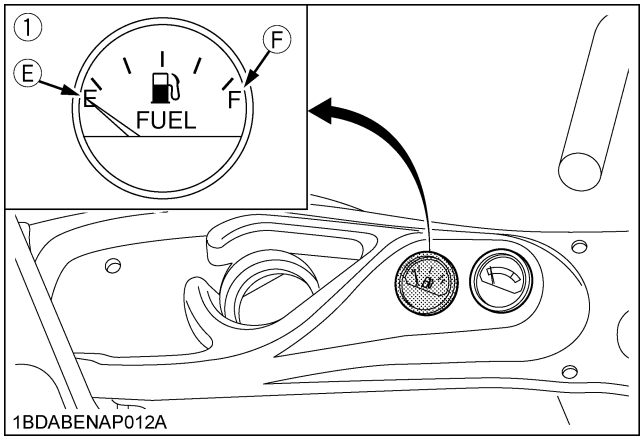

(1) Fuel gauge *(E) "EMPTY"*
(F) "FULL"

IMPORTANT :
- Do not refuel over "F". Fill the tank only to the bottom of the filler neck in the fuel tank.

■Coolant Temperature Gauge

WARNING

To avoid serious injury or death:
- **Do not remove radiator cap until coolant temperature is well below its boiling point. Then loosen cap slightly to the stop to relieve any excess pressure before removing cap completely.**

If the indicator reaches red zone, horn sounds.

1. Place the PTO lever in the "DISENGAGE" (OFF) position.
2. Move the machine to the level surface, and apply the parking brake.
3. Place the throttle lever in the engine idle position, and let the engine run for a few minutes.
4. Check the Cooling System, after it has sufficient time to cool down.

Check the following items:
1. Shortage or leakage of the coolant.
2. Foreign matter on the radiator net or dust and dirt between the radiator fins.
3. Looseness of fan belt.
4. Blockage in the radiator tube.

(See "PERIODIC SERVICE" section.)

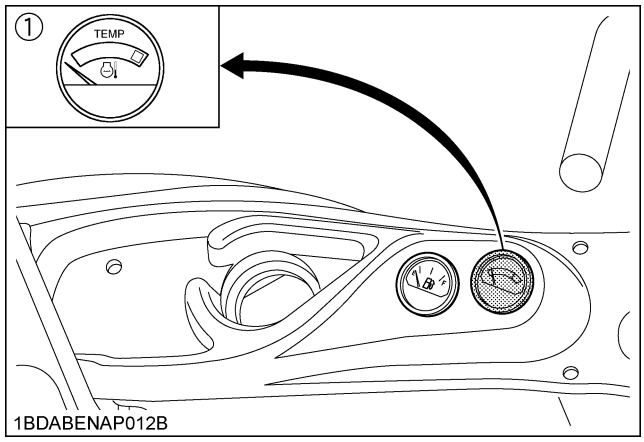

(1) Coolant temperature gauge

■Hour Meter

This meter gives readings for the hours the machine has been operated for.

NOTE :
- As the hour meter works electrically, it starts to work when the key switch is turned to "ON", regardless of the engine running or not.

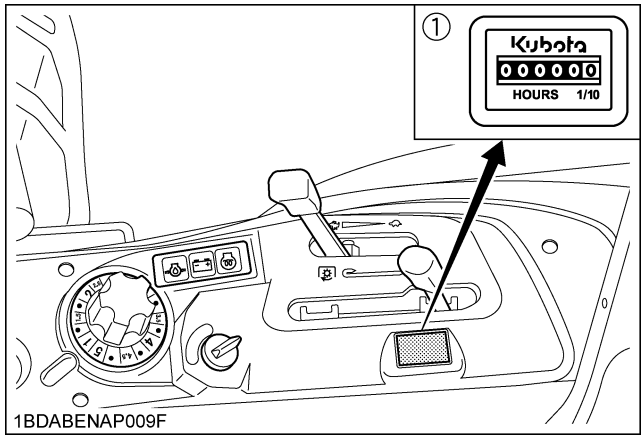

(1) Hour meter

COLD WEATHER STARTING

When the ambient temperature is below -5℃ (23℉) and the engine is very cold. (If the engine fails to start after 10 seconds, turn off the key for 30 seconds. Then repeat steps 8 and 9 in "STARTING THE ENGINE". To protect the battery and the starter, make sure that the starter is not continuously turned for more than 10 seconds.)

BLOCK HEATER (OPTION)

A block heater is available as an option from your local dealer. It will assist you in starting your machine when the ambient temperature is below freezing.

https://truckmanualshub.com/

WARMING UP

WARNING

To avoid serious injury or death:

- **Be sure to apply the parking brake during warm-up.**

For 5 minutes after engine start-up, allow the engine to warm up without applying any load. This is to allow oil to reach every engine part. If load should be applied to the engine without this warm-up period, the troubles such as seizure, breakage or premature wear may develop.

■Warm-up and Transmission Oil in the Low Temperature Range

Hydraulic oil serves as transmission oil. In cold weather, the oil may be cold with increased viscosity. This can cause delayed oil circulation or abnormally low hydraulic pressure for some time after engine start-up. This in turn can result in a trouble in the hydraulic system or a damage to the hydraulic clutch.
To prevent the above, observe the following instructions:
Warm up the engine at about 50% of rated rpm according to the table below:

Ambient temperature	Warm-up time requirement
Higher than 0℃ (32℉)	Approx. 5 minutes
-10 to 0℃ (14 to 32℉)	5 to 10 minutes
-20 to -10℃ (-4 to 14℉)	10 to 15 minutes
Below -20℃ (-4℉)	More than 15 minutes

IMPORTANT :

- Do not operate unless the engine is well warmed up. If operation is attempted while the engine is still cold, the hydraulic mechanism will not function properly and its service life will be shortened.
- If noises are heard after the hydraulic control lever has been activated and the implement is lifting, the hydraulic mechanism is not adjusted properly. Unless corrected, the unit will be damaged. Contact your local KUBOTA Dealer for adjustment.

JUMP STARTING

WARNING

To avoid serious injury or death:

- **Battery gases can explode. Keep cigarettes, sparks, and flames away from battery.**
- **If the machine battery is frozen, do not jump start the engine.**
- **Do not connect the other end of negative jumper cable to the negative terminal of the machine battery.**

When jump starting the engine, follow the instructions below to start the engine safely.

1. Bring a helper vehicle with a battery of the same voltage as the disabled machine within easy cable reach. "THE VEHICLES MUST NOT TOUCH".
2. Apply the parking brakes of both vehicles and put the shift levers in neutral. Shut the engine off.
3. Put on safety goggles and rubber gloves.
4. Ensure vent caps are securely in place (if equipped).
5. Attach the red clamp to the positive (red, (+) or pos.) terminal of the dead battery and clamp the other end of the same cable to the positive (red, (+) or pos.) terminal of the helper battery.
6. Clamp the other cable to the negative (black, (-) or neg.) terminal of the helper battery.
7. Clamp the other end to the engine block or the frame of the disabled machine as far from the dead battery as possible.
8. Start the helper vehicle and let its engine run for a few moments. Start the disabled machine.
9. Disconnect the jumper cables in the exact reverse order of attachment. (Steps 7, 6 and 5)

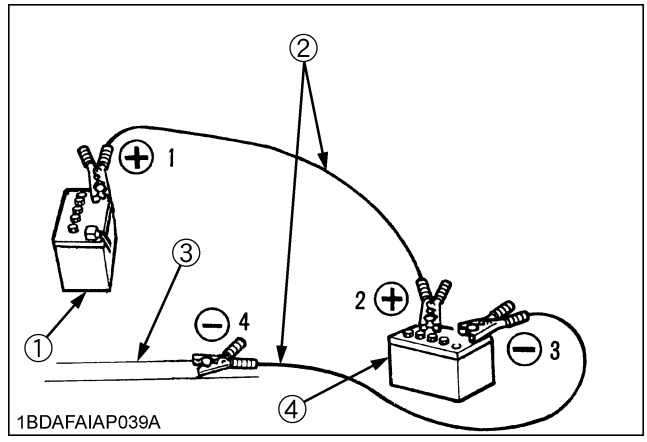

(1) Dead battery
(2) Jumper cables
(3) Engine block or frame
(4) Helper battery

Connect cables in numerical order. Disconnect in reverse order after use.

IMPORTANT :

- This machine has a 12 volt negative (-) ground starting system.
- Use only same voltage for jump starting.

https://truckmanualshub.com/

- Use of a higher voltage source on a machine could result in severe damage to the machine electrical system.
  Use only matching voltage source when "jump-starting" a low or dead battery condition.

https://truckmanualshub.com/

OPERATING THE MACHINE

OPERATING NEW MACHINE

How a new machine is operated and maintained determines the life of the machine.

A new machine just off the factory production line has been, of course, tested, but the various parts are not "broken-in" and are not accustomed to each other, so care must be taken to operate the machine for the first 50 hours at a slower speed and avoid excessive work or operation until the various parts become "broken-in." The manner in which the machine is handled during the "breaking-in" period greatly affects the life of your machine. Therefore, to obtain the maximum performance and the longest life of the machine, it is very important to properly break-in your machine. In handling a new machine, the following precautions must be observed.

■Changing Lubricating Oil for New Machines

The lubricating oil is especially important in the case of a new machine. The various parts are not "broken-in" and are not accustomed to each other; small metal grit may develop during the operation of the machine; and this may wear out or damage the parts. Therefore, care must be taken to change the lubricating oil a little earlier than would ordinarily be required.

For further details of change interval hours.

(See "SERVICE INTERVALS" in "MAINTENANCE" section.)

■Engine Break-in

After the first 50 hours of operation, change the engine oil and filter. (See "EVERY 200 HOURS" in "MAINTENANCE" section.)

■Machine Break-in

After the first 400 hours of operation, change the transmission fluid. (See "EVERY 400 HOURS" in "MAINTENANCE" section.)

After the first 50 hours of operation, change the oil filter. (See "EVERY 200 HOURS" in "MAINTENANCE" section.)

DANGER

To avoid serious injury or death:

- **Do not operate the mower without the deflector shield in the down position.**

WARNING

To avoid serious injury or death:

- **The machine relies upon the engine driven transmission for speed, direction and steering control. If the engine is not running, the machine cannot be driven or controlled.**
  If the engine stops when operating on a slope, apply the parking brake immediately to prevent machine runaway.
- **Do not allow any person other than the driver to ride on the machine.**
- **Do not drive the machine close to the edges of ditches or banks which may collapse under the weight of the machine, especially when the ground is loose or wet.**
- **When turning the machine, be sure to reduce the travel speed and operate motion control levers carefully.**
- **To avoid tip over, operate across slopes, not up and down. Avoid sudden starts and stops on slopes. Slow down, and use extra caution when changing direction on a slope.**
  Park the machine on a firm and level surface.
- **Watch where you are going at all times. Watch for and avoid obstacles. Be alert at curbs, near trees, and other obstructions and hidden hazards.**
- **Do not mow near drop-offs, ditches or embankments. The mower could turn over if a wheel is over the edge of cliff or ditch, or if an edge caves in.**
- **Do not drive machine on streets or highways. Watch for traffic when you cross roads or operate near roads.**
- **Look to the rear before and when backing. Make sure the area immediately behind you is clear of obstructions or holes and small children. Use extra caution when machine is equipped with Grass Catcher.**

WARNING

To avoid serious injury or death:

- **Clear the work area of objects which might be picked up and thrown by blades.**
- **Do not direct the opening of the chute at bystanders or animals. Discharged objects may cause injury. Plan your mowing carefully before starting operation.**
- **Keep bystanders especially children and animals away from the mowing area.**
- **Be sure to disengage the PTO and sit on the operator's seat before starting the engine.**

https://truckmanualshub.com/

OPERATING FOLDABLE ROPS

WARNING

To avoid serious injury or death:

- **Always use the seat belt when the ROPS is installed.**
- **Do not use the seat belt if a foldable ROPS is down or there is no ROPS.**

■To Fold the ROPS

1. Loosen the knob bolts 1 to 2 turns.
2. Remove both lock pins.

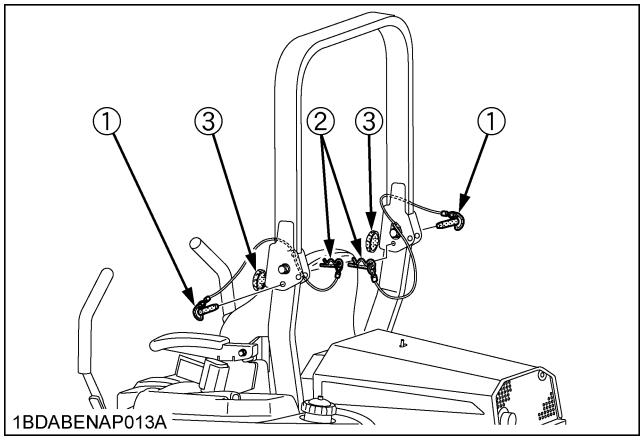

(1) Lock pin
(2) Snap pin
(3) Knob bolt

3. Fold the ROPS.

CAUTION

To avoid personal injury:

- **Hold the ROPS tightly with both hands and fold the ROPS slowly and carefully.**

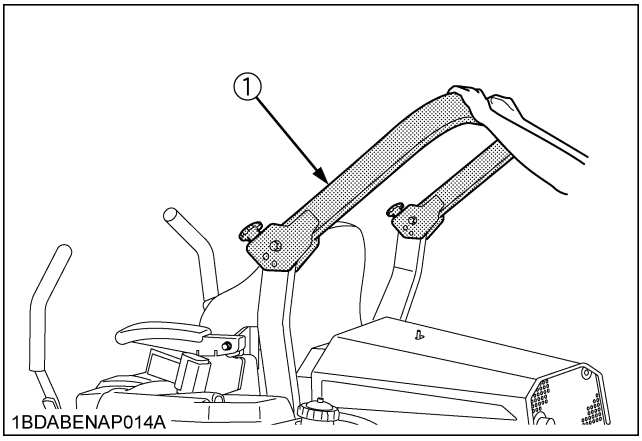

(1) ROPS

4. Align lock pin holes and insert both lock pins and secure them with the snap pins.

CAUTION

To avoid personal injury:

- **Make sure that both lock pins are properly installed and secured with the snap pins.**

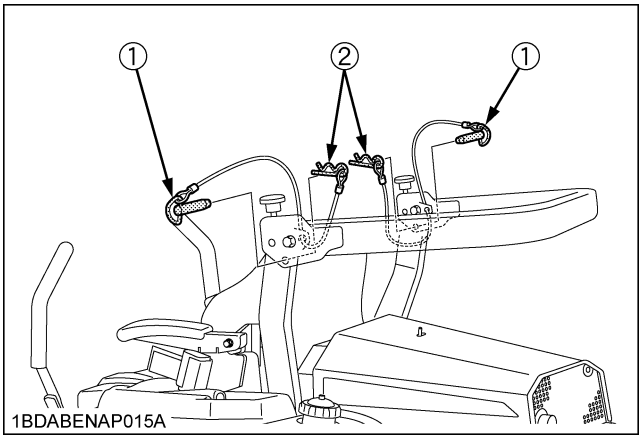

(1) Lock pin
(2) Snap pin

https://truckmanualshub.com/

■To Raise the ROPS to Upright Position

1. Remove both snap pins and lock pins.

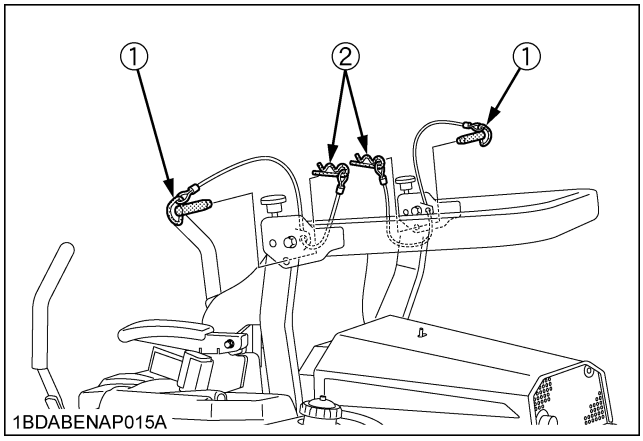

(1) Lock pin
(2) Snap pin

2. Raise ROPS to the upright position.

CAUTION

To avoid personal injury:

- **Hold the ROPS tightly with both hands and raise the ROPS slowly and carefully.**

3. Align lock pin holes, insert both lock pins and secure them with the snap pins.
4. Tighten the knob bolts slightly.

CAUTION

To avoid personal injury:

- **Make sure that both lock pins are properly installed as soon as the ROPS is in the upright position and secured with the snap pins.**

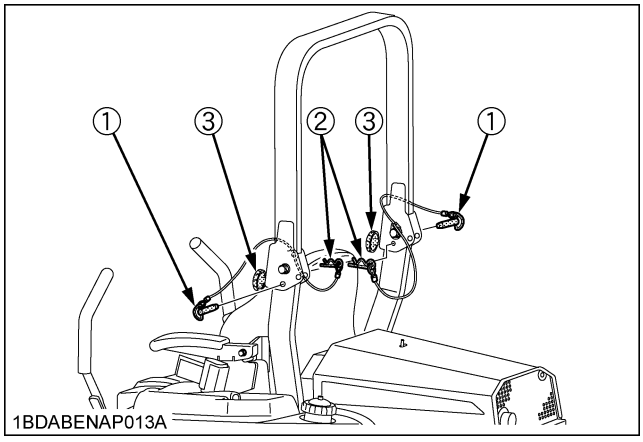

(1) Lock pin
(2) Snap pin
(3) Knob bolt

■Adjustment of Foldable ROPS

- Adjust free fall of the ROPS upper frame regularly.
- If you feel less friction when folding the ROPS, tighten the nut (1) until you feel the right friction in the movement and then replace the cotter pin.

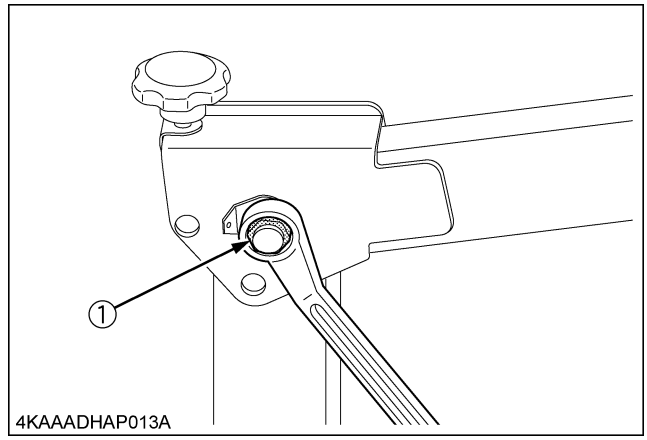

(1) Nut

https://truckmanualshub.com/

STARTING

1. **Adjust the operator's position and apply the seat belt.**

■Operator's Seat

WARNING

To avoid serious injury or death:

- **Make adjustments to the seat only while the machine is stopped.**
- **Make sure that the seat is completely secured after each adjustment.**
- **Do not allow any person other than the driver to ride on the machine.**

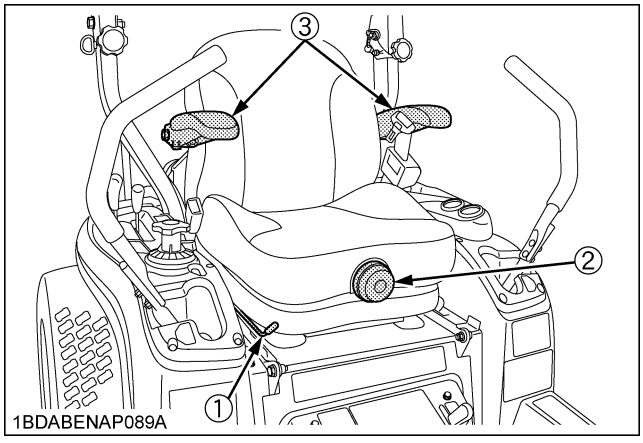

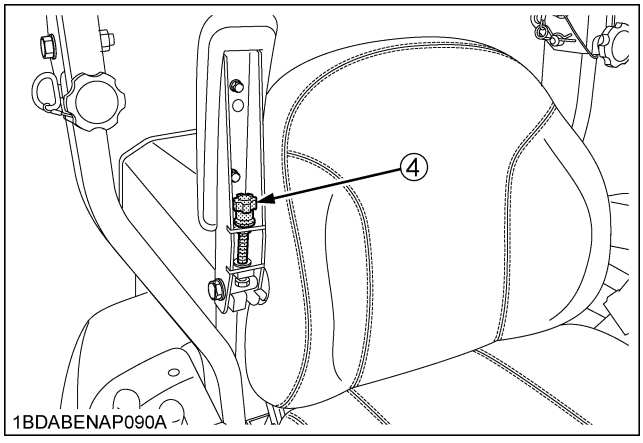

(1) Travel adjust lever
(2) Suspension adjust knob
(3) Arm rest
(4) Arm rest angle adjuster

WARNING

To avoid serious injury or death:

- **Use extra caution when unlocking the travel adjust lever because the seat might slide forward by itself.**

◆ **Travel adjustment**

Unlock the travel adjust lever and slide the seat backward or forward, as required. The seat will lock in position when the lever is released.

◆ **Suspension adjustment**

Turn the suspension adjust knob to achieve the optimum suspension setting.

◆ **Arm rest**

Arm rest may be set at upright position if desired.

◆ **Arm rest angle adjustment**

Turn the arm rest angle adjuster to the desired angle.

IMPORTANT :

- After adjusting the operator's seat, be sure to check to see that the seat is properly locked.

■Seat Belt

WARNING

To avoid serious injury or death:

- **Always use the seat belt when the ROPS is installed.**
- **Do not use the seat belt if a foldable ROPS is down or there is no ROPS.**

Adjust the seat belt for proper fit and connect to the buckle. The seat belt is an auto-locking retractable type.

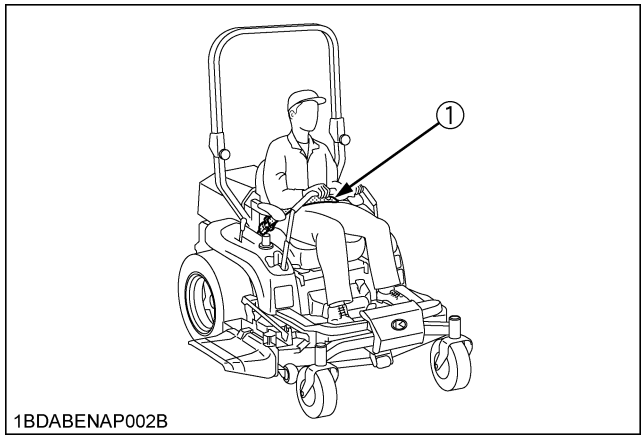

(1) Seat belt

https://truckmanualshub.com/

2. Start the engine.
See "OPERATING THE ENGINE" section.

3. Raise the implement.

■Hydraulic Lift Control Pedal

The hydraulic lift control pedal is used to raise the mower.
To raise the mower, keep depressing the pedal.
To lower it, release the pedal.

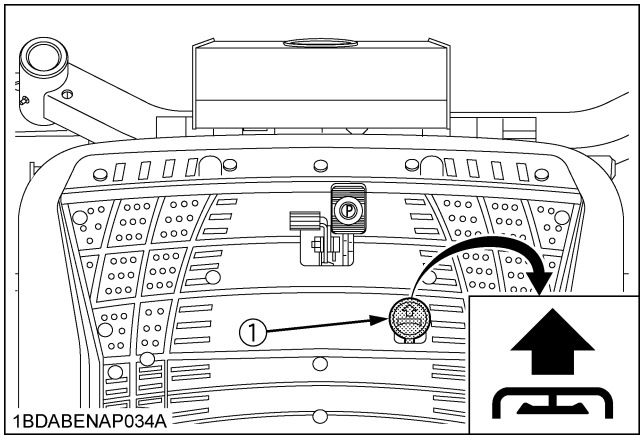

(1) Hydraulic lift control pedal *"DOWN": Release the pedal*
"UP": Keep depressing the pedal

IMPORTANT :

- Do not operate until the engine is warmed up. If operation is attempted when the engine is still cold, the hydraulic system may be damaged.
- Do not operate at slow engine rpm. Move the throttle lever above 1/2.
- If noises are heard when implement is lifting after the hydraulic lift control pedal has been activated, the hydraulic mechanism is not adjusted properly. Contact your local KUBOTA Dealer for adjustment.
- Do not depress the hydraulic lift control pedal continuously while operating the machine.

4. Accelerate the engine.

■Throttle Lever

Moving the throttle lever backward decreases the engine speed and moving it forward increases the engine speed.

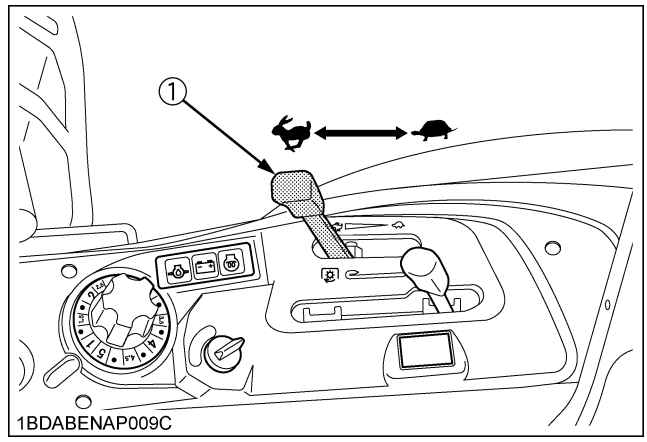

(1) Throttle lever *"INCREASE"*
"DECREASE"

5. Unlock the parking brake.

■Parking Brake Pedal

To release the parking brake:

Depress the brake pedal and release slowly with your right foot, without pressing the parking brake lock pedal.

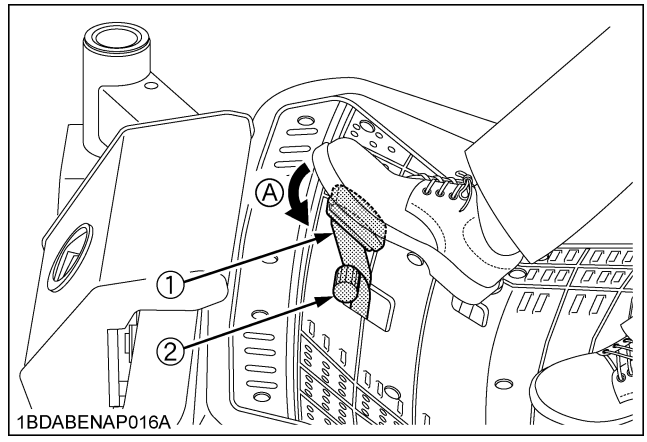

(1) Parking brake pedal *(A) "DEPRESS"*
(2) Parking brake lock pedal

https://truckmanualshub.com/

6. Operate the machine.

■Motion Control Lever

WARNING

To avoid serious injury or death:

- **Understand how to use the motion control levers and practice in an unrestricted area at a little more than an idle speed without the mower engaged until becoming proficient in the operation of the machine.**
- **Do not move motion control levers from forward to reverse or reverse to forward position rapidly.**
  Sudden direction changes could cause loss of control or damage to the machine or property.
- **Do not make sharp turns at high speeds.**
  Fast and sharp turns could cause loss of control.
- **Motion control levers must be in "NEUTRAL LOCK" position to safely enter and exit the operator's seat or to carry out maintenance and safety checks.**

Stop position

◆ **Neutral lock position**

- Forward and reverse movement of the motion control levers are prevented when levers are in "NEUTRAL LOCK" position. (Engine can only be started with levers in this position.)

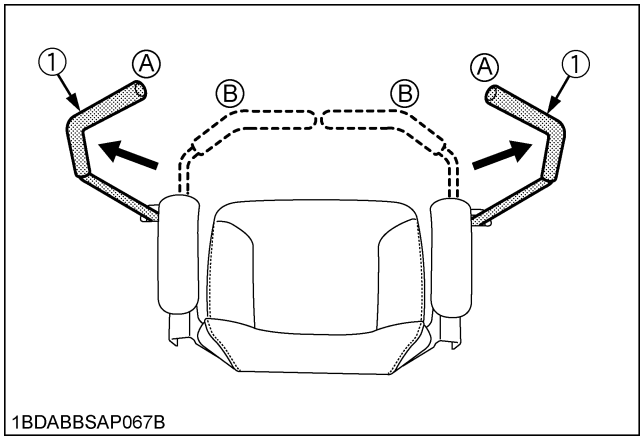

(1) Motion control levers
(A) "NEUTRAL LOCK" position
(B) "NEUTRAL" position (held by hand)

Operating position

Machine speed and steering is controlled by the motion control levers, when the engine is running and the parking brake is released.

WARNING

To avoid serious injury or death:

- **No control is provided by the motion control levers when the engine is off.**

◆ **Neutral position**

- Grasp the motion control levers and move them inward from the "NEUTRAL LOCK" position so that the machine is in "NEUTRAL". (Engine cannot be restarted.)

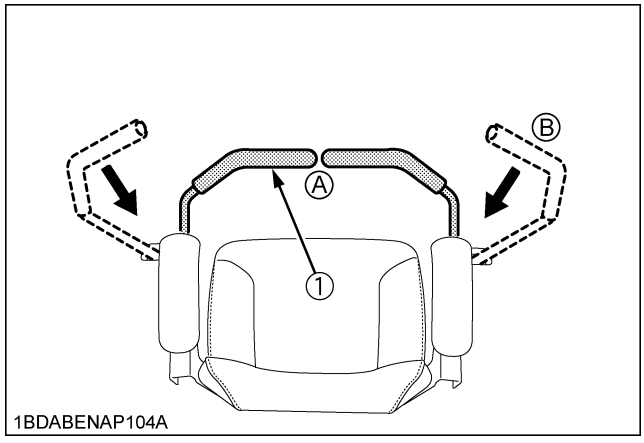

(1) Motion control levers
(A) "NEUTRAL" position
(B) "NEUTRAL LOCK" position

◆ **Forward and Reverse Motion:**

1. Move throttle lever to the "FAST" position.
2. Release the parking brake.
3. Move both motion control levers from the "NEUTRAL LOCK" position inward to the "NEUTRAL" position.
4. Push the control levers slowly forward to begin forward motion.
   To move reverse:
   Pull both control levers slowly rearward at the same time to start reverse motion.
   To stop:
   Move by hand and hold both motion control levers to the "NEUTRAL" position until the machine comes to a stop.

WARNING

To avoid serious injury or death:

- **The motion control lever adjustment is important to ensure the machine operates properly.**

https://truckmanualshub.com/

NOTE :
- The motion control linkages are adjustable.
  If adjustment is required, see "ADJUSTMENT" section. We recommend you to contact your local KUBOTA Dealer.

◆ **Re-start on the slopes**

WARNING

To avoid serious injury or death:
- **Do not stop or change directions on the slopes. These operations could cause loss of the machine traction or control.**
  Starting procedure on the slopes is different from the usual start mode on a flat surface, understand how to re-start on the slopes and use extra caution.

If a situation occurs where it is necessary to stop and re-start on a slope, refer to the following operational steps.

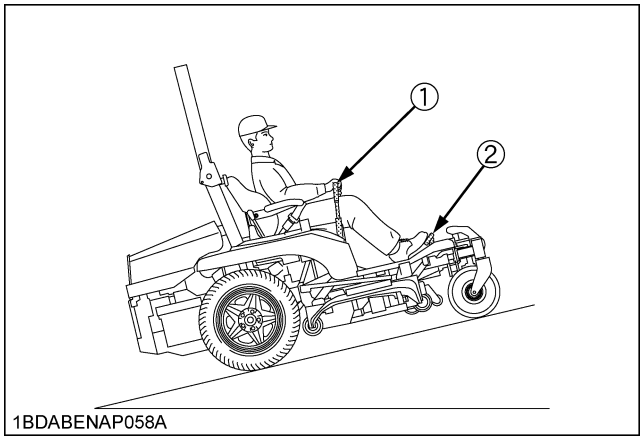

(1) Motion control lever
(2) Parking brake pedal

How to re-start on the slopes:
1. Firmly apply parking brake (enough to prevent movement).
2. Start the engine.
3. Set the throttle lever to the middle position.
4. Place the control levers inward to the "NEUTRAL" position gradually.
5. Release the parking brake within about 3 seconds.
   If you take more time, the engine will suddenly stop because of a safety device. (This is to prevent the machine from being operated with the parking brake applied.)
   When the engine stops, start over by firmly reapplying the parking brake, and repeat steps 2 through 5 and then 6.
6. Move the machine slowly and carefully.

FORWARD:
- Push both motion control levers forward equally at the same time. For travel forward in a straight line.

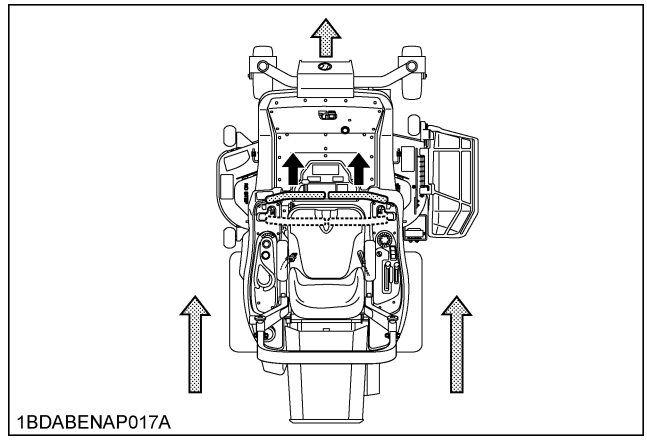

REVERSE:
- Pull both motion control levers past center rearward equally at the same time. For rearward travel in a straight line.

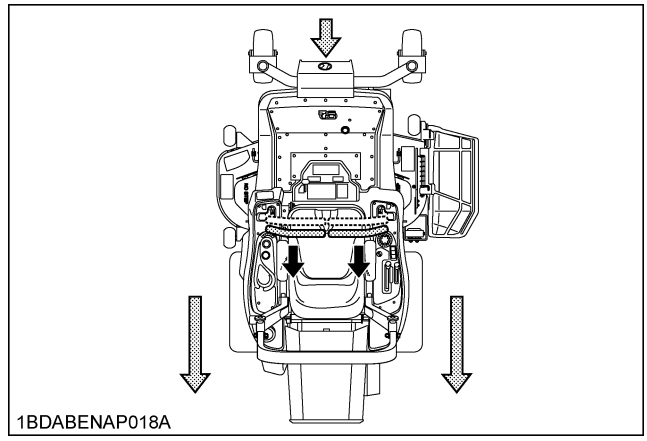

GENERAL LEFT TURN:
- Push right motion control lever further forward than the left motion control lever. For forward travel to the left.

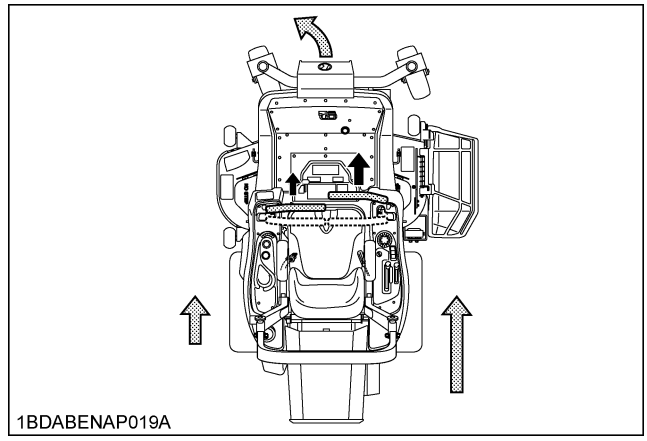

https://truckmanualshub.com/

GENERAL RIGHT TURN:

- Push left motion control lever further forward than the right motion control lever. For forward travel to the right.

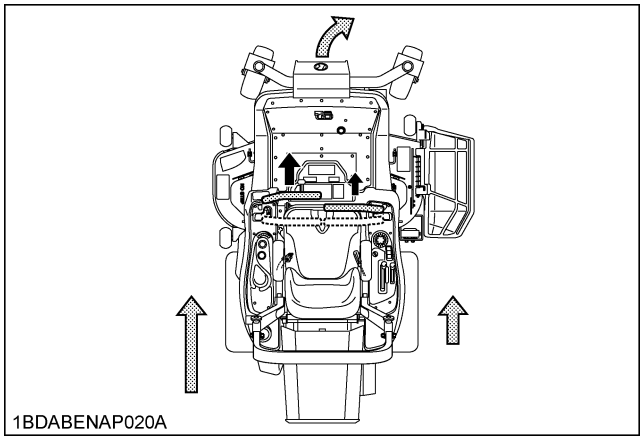

SHARP (ZERO) LEFT TURN:

- Push right motion control lever forward and pull left motion control lever rearward at the same time.

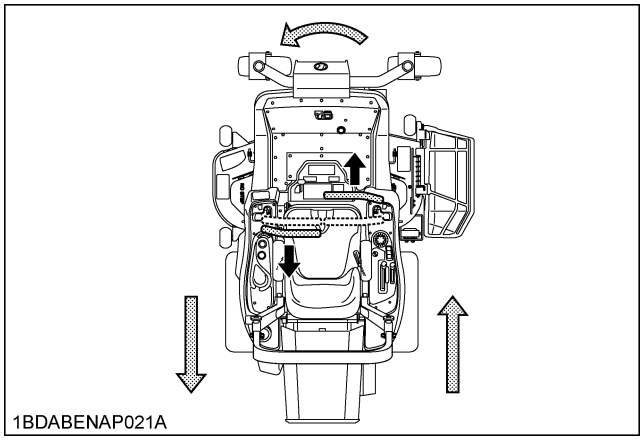

SHARP (ZERO) RIGHT TURN:

- Push left motion control lever forward and pull right motion control lever rearward at the same time.

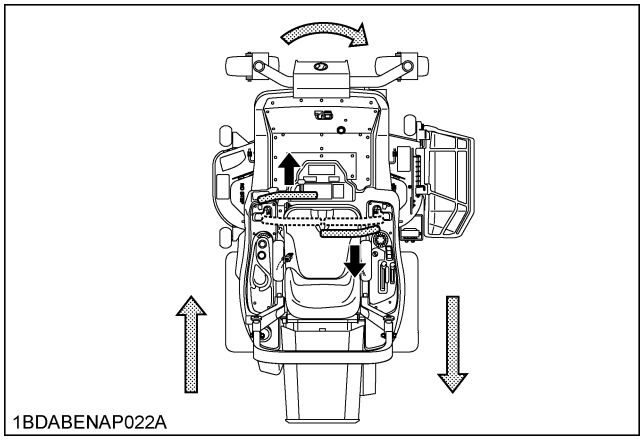

STOPPING

WARNING

To avoid serious injury or death:

- **Park the machine on level ground.**
  If necessary to park on an incline,
  (1) Stop the machine,
  (2) Apply the parking brake, then
  (3) Stop the engine.
- **If you stop the engine on an incline without applying the parking brake, the machine could move and run away.**

IMPORTANT :

- The parking brake pedal is for parking and emergency use only. If the parking brake is applied when the motion control levers are not in "NEUTRAL LOCK" position, the engine will stop within approximately 3 seconds. This feature is to prevent brake and transmission damage during operation.

1. Move both motion control levers to the "NEUTRAL" position to stop the machine.
2. Apply parking brake.
3. Move both motion control levers to "NEUTRAL LOCK" position.
4. Throttle lever in slow position and shift PTO lever to the "DISENGAGE" (OFF) position.
5. Lower all implements to the ground.
6. Turn off the engine and remove the key.

https://truckmanualshub.com/

FIXING FRONT AXLE

WARNING

To avoid serious injury or death:

- **Park the machine on a firm and level surface.**
- **Stop the engine, remove the key and engage the parking brake.**

A rigid front axle is recommended for a more even cut under mowing the rough terrain.

1. Open the front cover.
2. Remove the two L-pins from their original position.
3. Insert L-pins into the holes on the front axle as shown below.

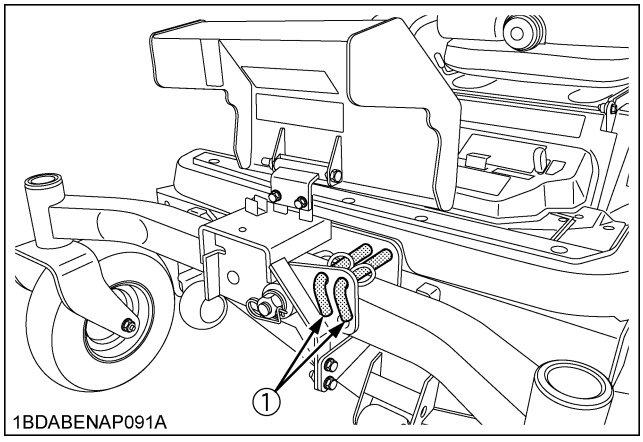

(1) L-pin

4. Install the hairpins between the axle mount frame and the front axle.

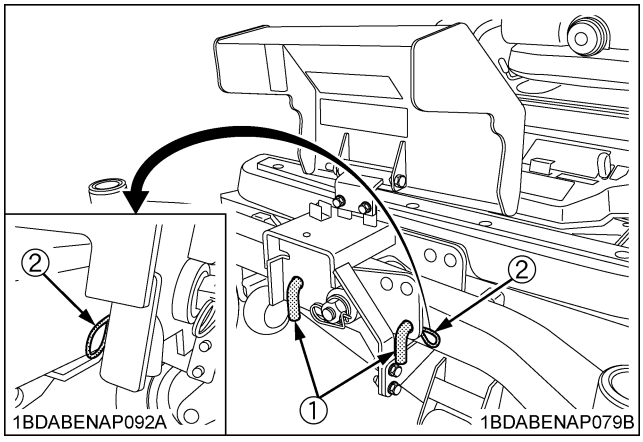

(1) L-pin *(2) Hairpin*

OSCILLATING FRONT AXLE

For oscillating the front axle, reverse the above procedures.

The oscillating front axle provides a smoother ride than the rigid front axle and oscillates with the terrain.

PARKING

TO LOCK:

Depress the parking brake pedal firmly with your right foot, and the parking brake lock pedal simultaneously with your left foot. Then release the parking brake pedal while handling the parking brake lock pedal down.

TO UNLOCK:

Depress the parking brake pedal and release slowly with your right foot, without pressing the parking brake lock pedal.

WARNING

To avoid serious injury or death:

Before leaving the operator's position,

- **Apply parking brake.**
- **Lower all implements to the ground.**
- **Shut off the engine.**
- **Remove the key.**
- **Place the motion control levers in the "NEUTRAL LOCK" position.**

If necessary to park on an incline, be sure to chock the wheels on the downhill side to prevent accidental rolling of the machine.

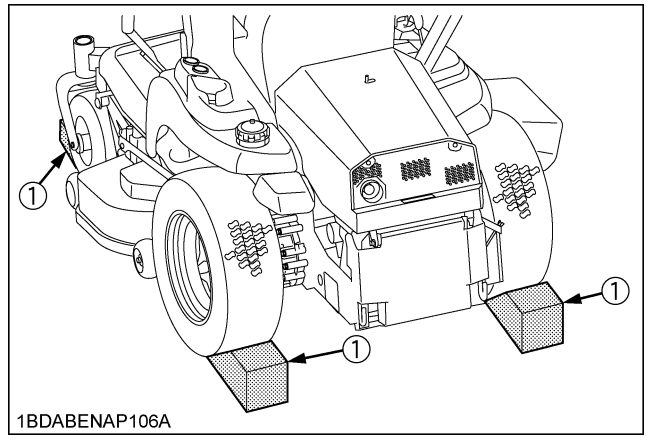

(1) Chocks

https://truckmanualshub.com/

TRANSPORTING

IMPORTANT :

1. Transport the machine on a suitable trailer.
   - To prevent the hood from opening by wind while in transit, it is necessary to either load the machine backward or use a suitable tie down for the hood.
   - Apply the parking brake and lift down the mower deck to the lowest position.
   - Remove the key.
   - Secure the portions of the machine, which are shown in the figure below, by using heavy duty straps.
   - For a long distance transit, set the mower deck to the 5 inch position.

[FRONT]

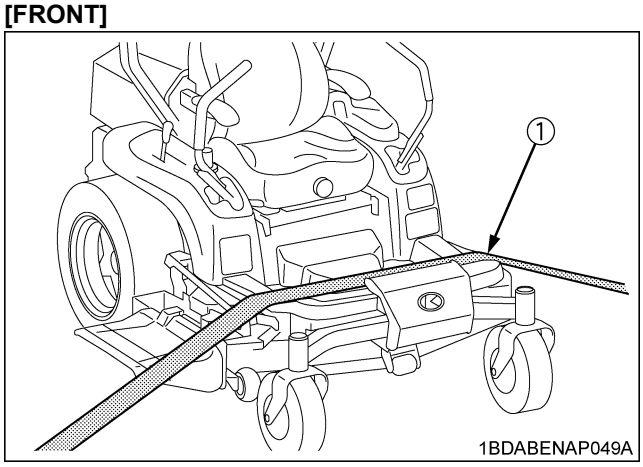

(1) Heavy-duty strap

[REAR]

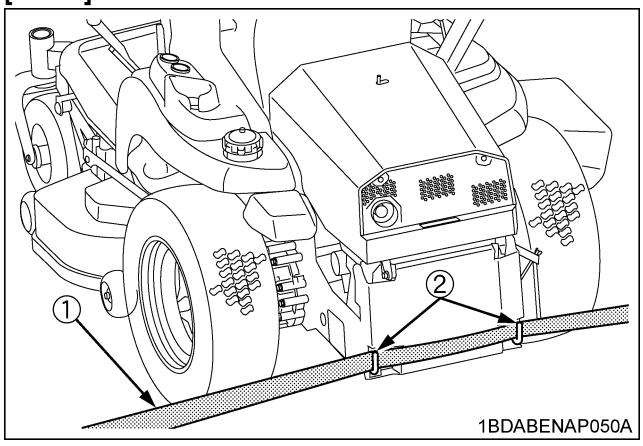

(1) Heavy-duty strap
(2) Rear frame

2. Do not attempt to tow this machine, or damage to the transmission may result.
3. During the long distance transporting, make sure to lift the mower by the hydraulic lift control pedal and move the lift lock lever in the "TRANSPORT LOCK" position.

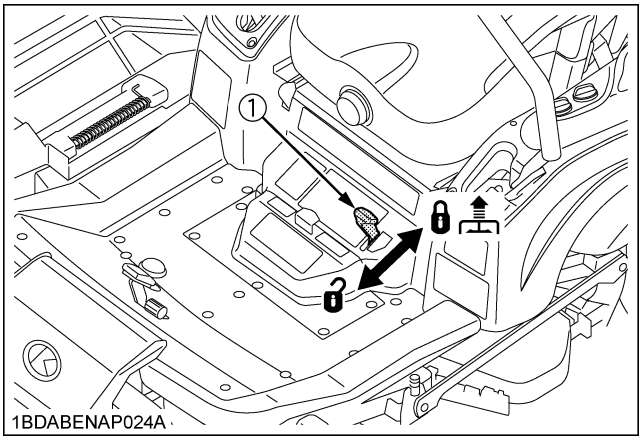

(1) Lift lock lever

: "LOCK"
: "UNLOCK"

4. Follow all federal and local regulations for securement.

OPTION

- For the operation and precautions of option kit, obey the instructions of the manuals attached in the option kit.

https://truckmanualshub.com/

ENGLISH

OPERATING THE MOWER

MAKING THE MOST OF YOUR MOWER

WARNING

To avoid serious injury or death:

- **Clear the work area of objects which might be picked up and thrown by blades.**
- **Keep bystanders and animals away from the mowing area.**
- **Be sure to disengage the PTO and sit on the operator's seat before starting the engine.**

1. When using your mower for the first time, choose a smooth level area and cut in straight and slightly overlapping strips.
2. The size and type of the area to be mowed will determine the proper mowing pattern. Take into account obstructions, such as trees, fences and buildings. To keep grass clippings off fences, sidewalks, etc., it is advisable to go over the outside of the area to be mowed several times in a clockwise direction. To mow the area remaining, work in a counterclockwise direction so that the clippings are dispersed onto the previously cut area.

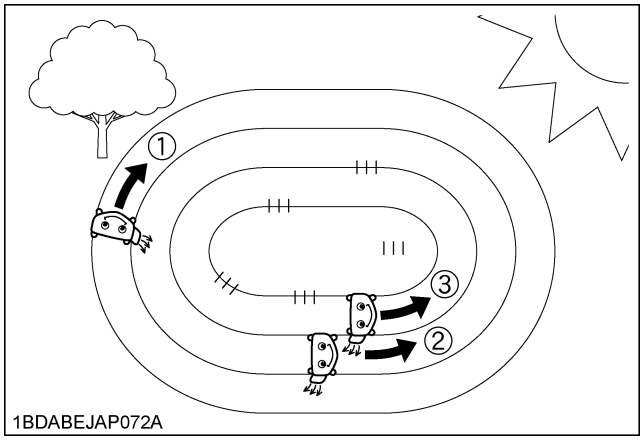

1BDABEJAP072A

3. Always keep the left side of the mower toward trees, posts or other obstacles on the first trip around the obstacle.
4. Most lawns must be mowed to keep the grass approximately 50 to 80 mm (2 to 3 in.) high. Best results are obtained by cutting often and not too short. To keep a green lawn, never mow more than 1/3 of the height of the grass or a maximum of 25 mm (1 in.) in 1 mowing.
   For extremely tall grass, set the cutting height at maximum cutting height for the first mowing, then reset to the desired height and mow again. Allow the grass to grow to 80 mm (3 in.), then cut off only the top inch.
5. For best appearance, grass must be cut in the afternoon or evening when it is free of moisture.

ADJUSTING CUTTING HEIGHT

DANGER

To avoid serious injury or death:

- **Do not engage the mower in the transport position.**

1. Before adjusting cutting height, check that all tire pressures are correct. If necessary adjust to the correct tire pressure.

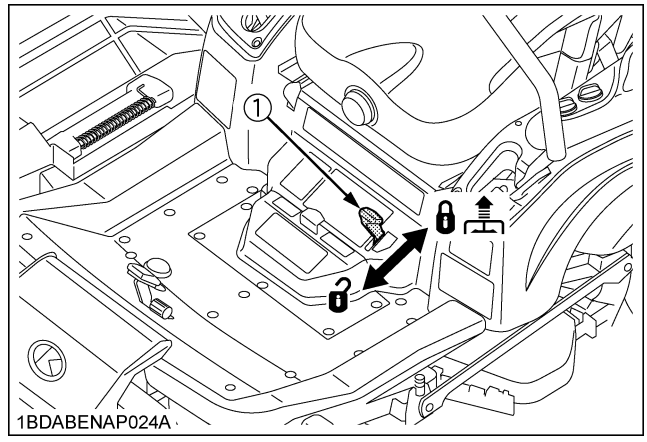

1BDABENAP024A

(1) Lift lock lever

: "LOCK"
: "UNLOCK"

2. To set the cutting height, keep depressing the hydraulic lift control pedal firmly to raise mower deck to the top position. Make sure that the lift lock lever is in unlock position. Adjust the cutting height control dial to desired height.

https://truckmanualshub.com/

3. Use the higher settings for mowing in a rough area or when mowing tall grass. Lower settings must be used only for smooth lawns where short grass is desired.

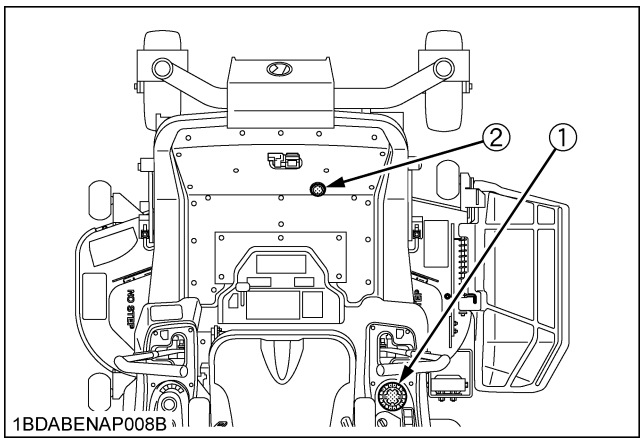

(1) Cutting height control dial
(2) Hydraulic lift control pedal

4. Lower the mower deck by releasing the hydraulic lift control pedal. This lowers the mower deck from the "TRANSPORT" position to the "OPERATING" position.
5. Adjust the anti-scalp rollers' height as recommended below for normal operating condition. To minimize gouging and roller damage or wear, the anti-scalp rollers will maintain the ground clearance of 19 mm (3/4 in.).

IMPORTANT :
- Never allow roller to contact the ground continuously as premature roller wear may develop if set incorrectly.
- Anti-scalp rollers must maintain a minimum clearance of 6 mm (0.24 in.) to the ground.

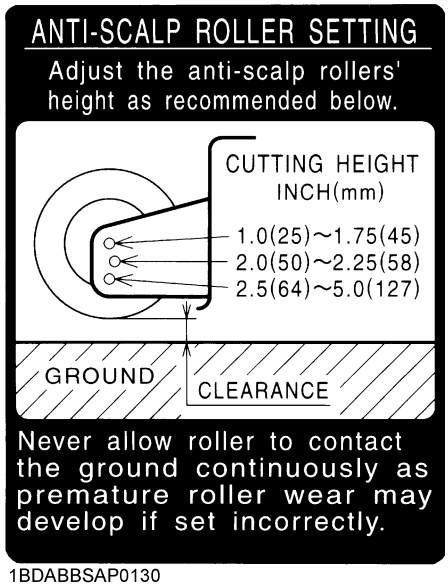

1BDABBSAP0130

[RCK48P]

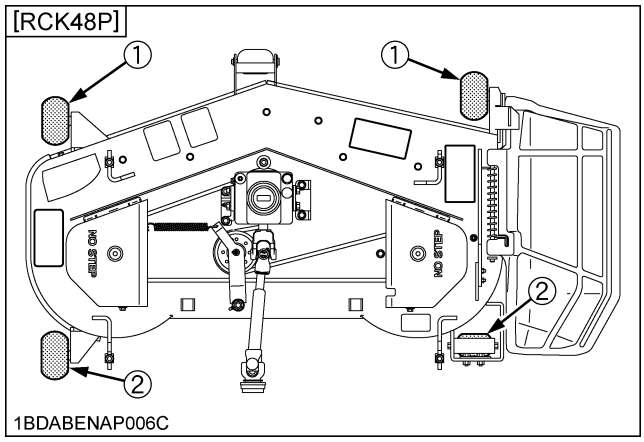

(1) Anti-scalp roller (Front)
(2) Anti-scalp roller (Rear)

[RCK54P]

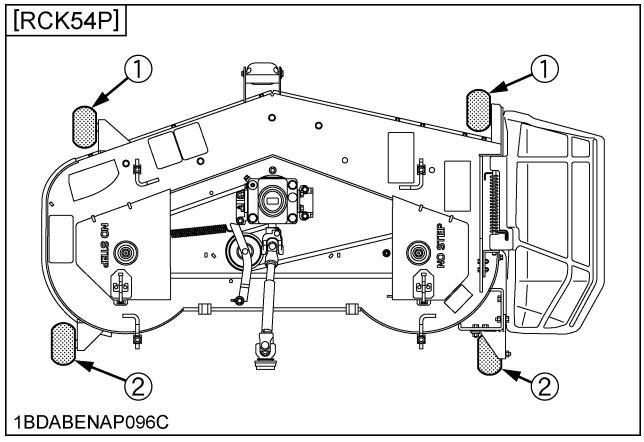

(1) Anti-scalp roller (Front)
(2) Anti-scalp roller (Rear)

[RCK60P]

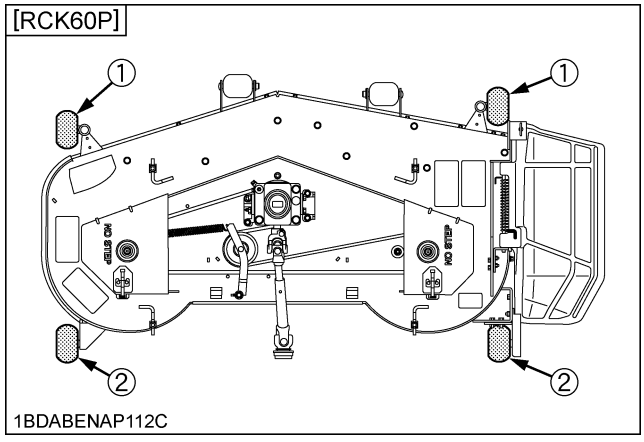

(1) Anti-scalp roller (Front)
(2) Anti-scalp roller (Rear)

https://truckmanualshub.com/

Reference

- Set the position for a recommended ground clearance of 19 mm (3/4 in.).
  (Figure shows a setting position of cutting height 2.0" or 2.25")

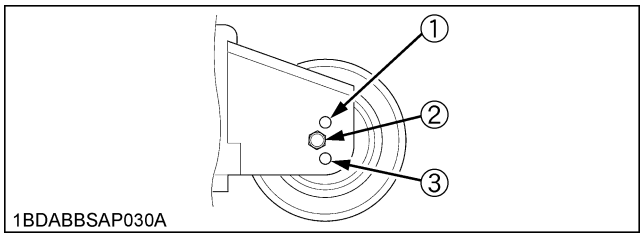

Cutting height inch (mm)	Position of bolts	(Ref.) Ground clearance between rollers and the ground
1.00" (25) *2	1	6 mm
1.25" (32) *3		12.4 mm
1.50" (38)		19.0 mm
1.75" (44)		25.4 mm
2.00" (50)	2	19.0 mm
2.25" (58)		25.4 mm
2.50" (64)	3	19.0 mm
2.75" (70)		25.4 mm
3.00" (76) *1		(31.8 mm)
3.25" (83) *1		(38.2 mm)
3.50" (89) *1		(44.6 mm)
3.75" (95) *1		(51.0 mm)
4.00" (102) *1		(57.4 mm)
4.25" (108) *1		(63.8 mm)
4.50" (114) *1		(70.2 mm)
4.75" (121) *1		(76.5 mm)
5.00" (127) *1		(83.0 mm)

*1. For cutting heights above 3.0". The anti-scalp rollers will still be effective against scalping.

*2. Cutting height 1" is a ground clearance of 6 mm.

*3. Cutting height 1.25" is a ground clearance of 12.4 mm.

OPERATING MOWER

DANGER

To avoid serious injury or death:

- **Do not operate the mower without the discharge deflector being in place properly.**

WARNING

To avoid serious injury or death:

- **Clear the work area of objects which might be picked up and thrown.**
- **Do not direct the opening of the deflector at bystanders especially children or animals. Discharged objects may cause injury. Plan your mowing carefully before starting operations.**
- **Keep bystanders and animals away from the mowing area.**
- **Be sure to disengage the PTO clutch of the mower before attempting to start the engine.**

■PTO Lever

To engage the PTO, move the PTO lever to the "ENGAGED" (ON) position.

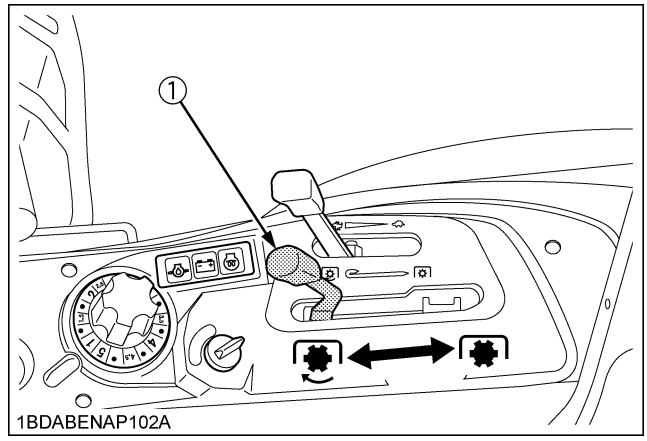

(1) PTO lever *"ENGAGED" (ON)* *"DISENGAGED" (OFF)*

1. If you get off the seat while the PTO is running, the engine will stop automatically. (Operator presence control)
2. Before starting the engine, pull the PTO lever to the "DISENGAGED" (OFF) position. If it is at the "ENGAGED" (ON) position, the engine will not start.

NOTE :

- These safety features are built-in.

https://truckmanualshub.com/

■Starting

WARNING

To avoid serious injury or death:

- **Engine components can get extremely hot from operation. To prevent severe burns, do not touch these areas while the engine is running, or immediately after it is turned off.**
  Never operate the engine without heat shields or guards.

1. Sit on the operator's seat.
2. Start the engine.
3. Engage the PTO lever.
4. Disengage the parking brake.
5. Speed up the engine by moving the throttle lever forward.
6. Push or pull the motion control levers to move forward or backward.

IMPORTANT :

- Never attempt to move the machine with the parking brake "ON".

NOTE :

- Keep the engine running at full throttle for best results. Control travel speed with the motion control levers.
- During heavy duty use, operate the machine at a slower ground speed or go over the area twice.
- Keep the mower deck in the raised position when the mower is disengaged.
- The mower will not cut cleanly if the ground speed is too high or if the blade speed drops due to an overload.
- To prevent the engine from overheating, keep the radiator and radiator screen clean. Check the radiator and radiator screen as often as needed.

https://truckmanualshub.com/

TIRES AND WHEELS

TIRES

WARNING

To avoid serious injury or death:

- **Do not attempt to mount a tire. This must be done by a qualified person with the proper equipment.**
- **Always maintain the correct tire pressure. Do not inflate tires above the recommended pressure shown in the Operator's Manual.**
- **Inflation pressure in front tires rises quickly when using compressed air.**

WARNING

To avoid serious injury or death:

- **Never operate machine with a loose rim, wheel, or axle.**
- **Whenever bolts are loosened, retighten to specified torque.**
- **Check all bolts frequently and keep them tightened.**

■Inflation Pressure

Though the inflation pressure is factory-set to the prescribed level, it naturally drops slowly in the course of time. Thus, check it and inflate as necessary.

		Tire sizes	Recommended Inflation Max. Pressure
ZD1011	Front	13 x 5.0 - 6 Smooth pneumatic	172 kPa (1.75 kgf/cm², 24.9 psi)
	Rear	24 x 9.5 - 14 Low profile type	83 kPa (0.84 kgf/cm², 12.0 psi)
ZD1021	Front	13 x 6.5 - 6 Smooth pneumatic	172 kPa (1.75 kgf/cm², 24.9 psi)
	Rear	24 x 12 - 14 Low profile type	83 kPa (0.84 kgf/cm², 12.0 psi)

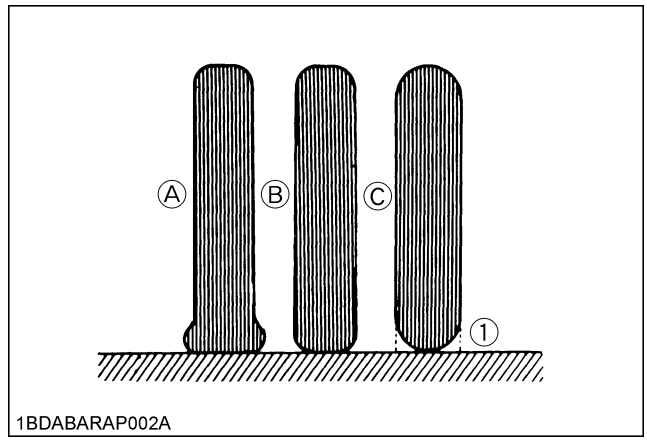

(1) Ground

(A) "INSUFFICIENT"
(B) "NORMAL"
(C) "EXCESSIVE"

WHEELS

IMPORTANT :

- When re-fitting a wheel, tighten the wheel bolt to the following torques then recheck after traveling 200 m (200 yards) changing directions several times.

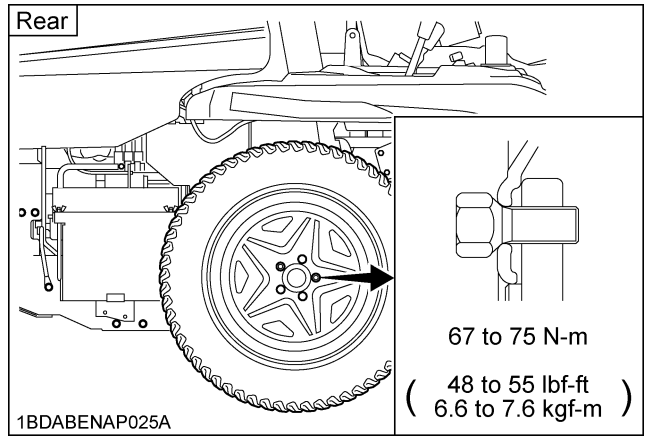

Wheels with beveled or tapered holes:
Use the tapered wheel bolt.

https://truckmanualshub.com/

■Remove and Install Front Caster Wheels

◆ **Removing**

1. Park the machine on a firm and level surface.
2. Stop the engine and apply parking brake.
3. Lift the front of machine with a safe lifting device.
4. Remove the lock nut and the wheel bolt.
   Then remove the nylon sleeve.
5. Remove the wheel from assembly yoke.

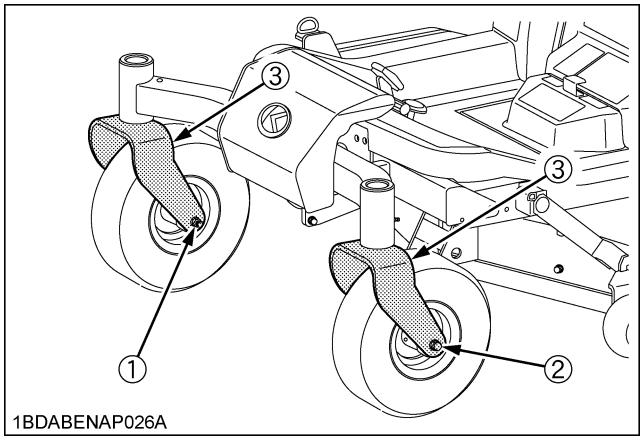

(1) Lock nut
(2) Wheel bolt
(3) Yoke

◆ **Installing**

1. Install the replacement wheel.
2. Install the nylon sleeve with the wheel bolt and the lock nut.
3. Tighten the nut.

IMPORTANT :

- Insert the wheel bolt from the outside of the yoke.
- Tighten the nut gradually until wheel bearing play is eliminated and wheel turns freely by hand.

Reference

Tightening torque	20 to 25 N-m (14.8 to 18.4 lbf-ft) (2 to 2.5 kgf-m)

4. Lower machine.

https://truckmanualshub.com/

ENGLISH

PERIODIC SERVICE

HOW TO OPEN THE HOOD, FRONT COVER & STEP

WARNING

To avoid serious injury or death from contact with moving parts:

- **Never open the hood while the engine is running.**
- **Never open the step while the engine is running.**
- **Do not touch muffler or exhaust pipes while they are hot; Severe burns could result.**

■Hood

To open the hood, pull the lever sideward, and then open.

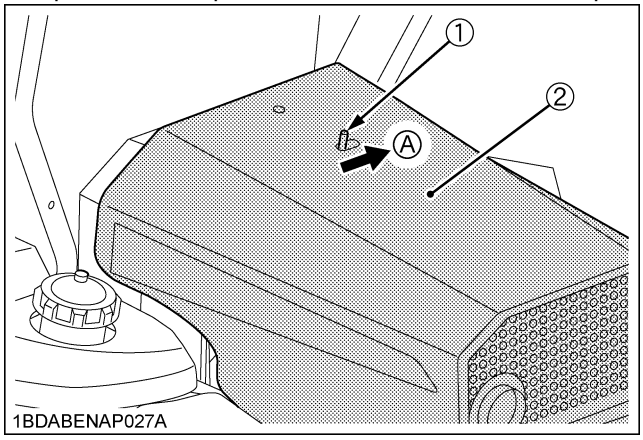

(1) Lever *(A) "RELEASE"*
(2) Hood

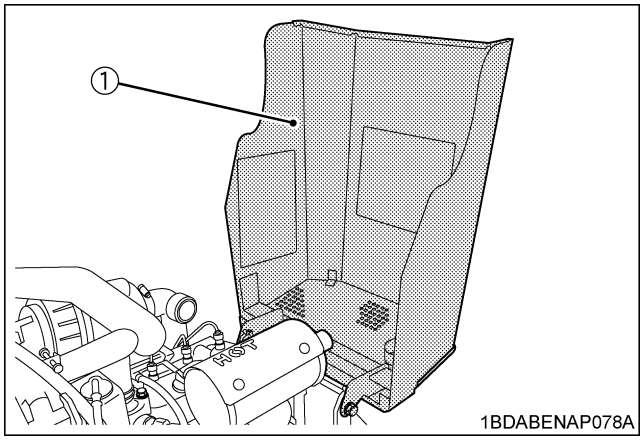

(1) Hood

■Front Cover

To open the front cover, pull the bottom edge of the front cover.

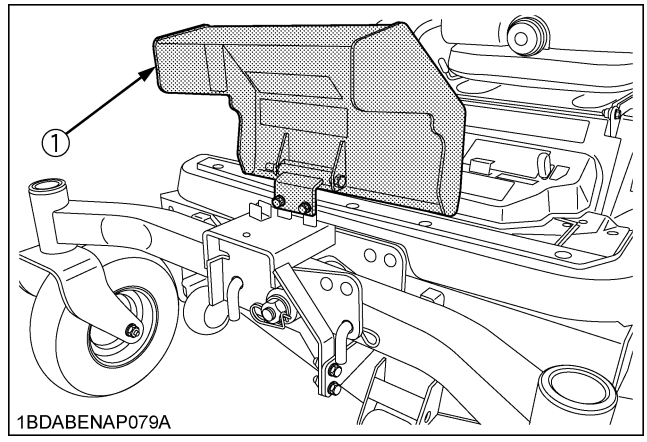

(1) Front cover

■Step

To open the step, pull the grip.

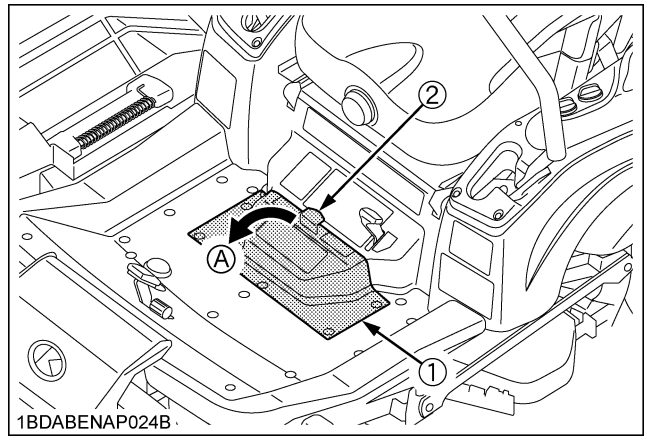

(1) Step *(A) "PULL"*
(2) Grip

https://truckmanualshub.com/

HOW TO RAISE THE OPERATOR'S SEAT

◆ **Raise**

WARNING

To avoid serious injury or death:

- **Fully raise the operator's seat.**
  (To the locked position)
  Do not keep the seat halfway.

1. Seat must be all the way back before raising.
2. Pull the latch lever on the seat panel frontward.

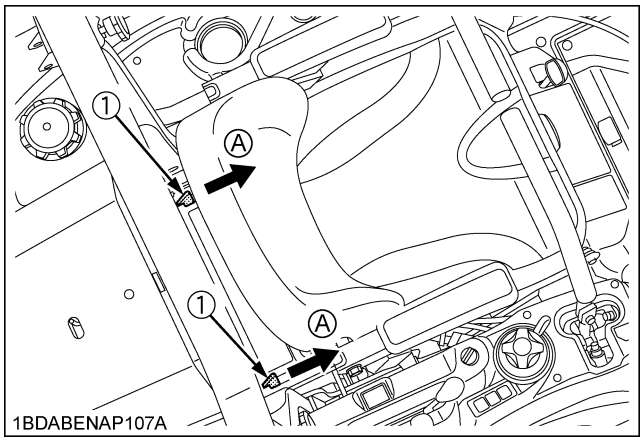

(1) Latch lever *(A) "PULL"*

3. Raise the operator's seat to the "LOCK" position.

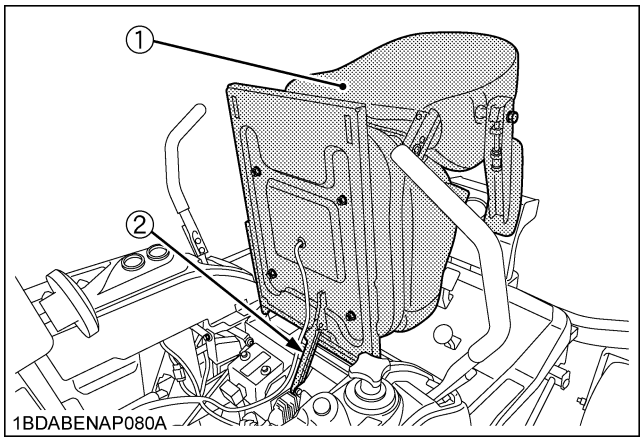

(1) Operator's seat
(2) Seat support

◆ **Lower**

WARNING

To avoid serious injury or death:

- **Do not drop the seat to close it.**
- **Watch your hands. Do not place your hands under the seat, when closing.**

1. Pull up the seat support and release the "LOCK".
2. Lower the seat slowly to lock.
3. Slide the seat to proper position.

https://truckmanualshub.com/

HOW TO OPEN THE LEVER GUIDE

WARNING

To avoid serious injury or death:
- **Park the machine on a firm and level surface.**
- **Stop the engine, remove the key and apply the parking brake.**

1. Remove the 4 screws of the lever guide.
2. Pull up the lever guide.

How to install the lever guide.
1. Install the lever guide.
2. Tighten the screws.

IMPORTANT :
- If the lever guide is out of alignment with the motion lever, move the lever guide to align it with the motion lever.

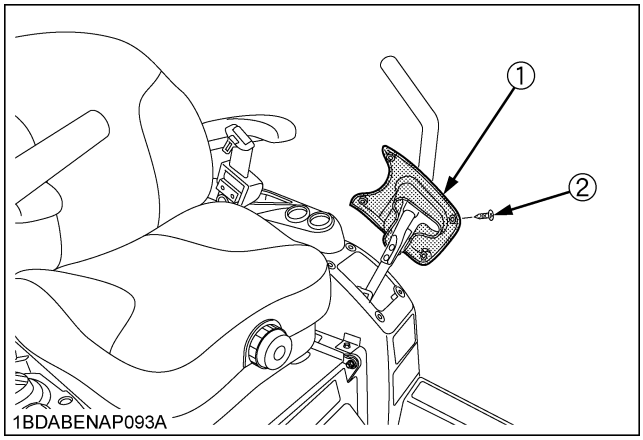

(1) Lever guide
(2) Screw

LIFT-UP POINT

WARNING

To avoid serious injury, death or machine damage:
- **Do not work under the machine unless it is secured by safe stands or suitable blocking.**

■Front side:

Lift the front axle with nylon slings.

IMPORTANT :
- When you use nylon slings, make sure to block rear wheels with chocks.
- Never lift up anything except the front axle.

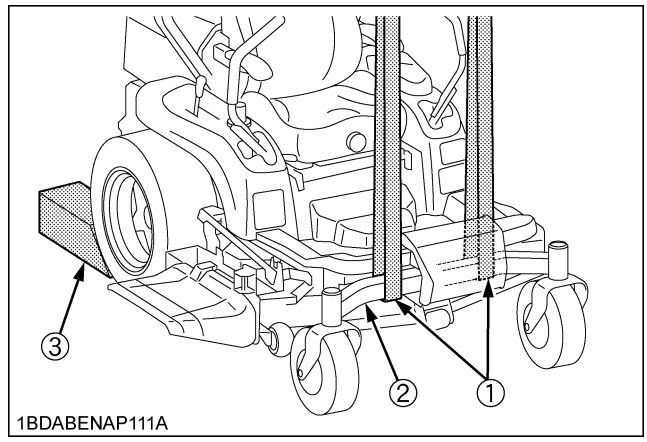

(1) Nylon sling
(2) Front axle
(3) Chock

https://truckmanualshub.com/

■Rear side:

Lift the rear frame with nylon slings. Or jack up the bottom plate.
(See the following figure.)

IMPORTANT :
- When you use nylon slings or a jack, make sure to block front wheels with chocks.
- Never lift up or jack up in any other way except as explained in the following figure.

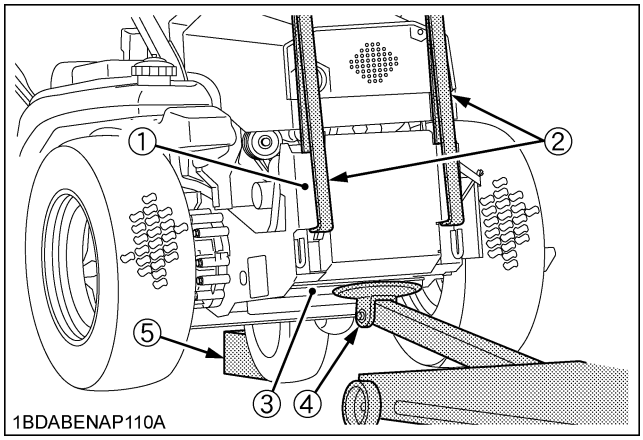

(1) Rear frame
(2) Nylon sling
(3) Bottom plate
(4) Jack
(5) Chock

DAILY CHECK

To prevent trouble from occurring, it is important to know the condition of the machine. Check it before starting.

WARNING

To avoid serious injury or death:
- **Be sure to check and service the machine on a level surface with the engine shut off, the key removed and the parking brake securely set or chock the rear wheels.**

	No.	Check item	Ref. Page
Walking around the machine	1	Tire pressure, wear and damage	32 44
	2	Oil and water leak	-
	3	Fuel level	41
	4	Engine oil level	41
	5	Transmission fluid level	42
	6	Coolant level in the radiator and the recovery tank	42
	7	Damage of machine body, tightness of all bolts and nuts	-
	8	Radiator screen and area around panel screen	43
	9	Brake play	55
	10	Oiling	52
	11	Air cleaner primary element	53
Mower	1	Oil leak	50
	2	Make sure blade cap bolts are tight	67
	3	Blades and belt wear or damage	67
	4	Check all hardware.	-
	5	Make sure all pins are in place	-
	6	Mower deck cleaning	-
	7	Greasing ● Universal joint ● Three spindle shafts ● Belt tension pulley ● Belt tension pivot	45

https://truckmanualshub.com/

	No.	Check item	Ref. Page
While sitting in the operator's seat	1	Motion control lever	-
	2	Parking brake	-
Turning the key switch "ON"	1	Performance of the Easy Checker (TM) light	14
Starting the engine	1	Color of the exhaust fumes	-
	2	Safety start switch, seat safety control and other safety devices. If either of these do not operate properly, contact your local KUBOTA Dealer immediately.	49 50
	3	Check for abnormal noise and vibration.	-
Others	1	Check the areas where previous trouble was experienced.	-

https://truckmanualshub.com/

LUBRICANTS, FUEL AND COOLANT

Place	Capacities **ZD1011**, **ZD1021**	Lubricants
Fuel	23 L (6.1 U.S. gals.)	● No.2-D diesel fuel ● No.1-D diesel fuel if temperature is below -10 ℃ (14 ℉)
Coolant	2.7 L (2.85 U.S.qts.)	Fresh clean water with anti-freeze
Recovery tank	0.25 L (0.26 U.S.qts.)	
Engine crankcase	3.5 L (3.7 U.S.qts.)*1	● Engine oil: API service Classification CF or better Above 25 ℃ ...SAE30, SAE10W-30 or 15W-40 (77 ℉) 0 to 25 ℃ .....SAE20, SAE10W-30 or 15W-40 (32 to 77 ℉) Below 0 ℃ .....SAE10W, SAE10W-30 or 15W-40 (32 ℉)
Transmission case with filter & hose Rear axle gear case (RH &LH)	7.5 L (7.9 U.S.qts.)	● KUBOTA SUPER UDT-2 fluid*2
Mower gear box	0.4 L (0.42 U.S.qts.)	Engine oil: API service Classification SH, SJ or higher SAE10W-30

Greasing	No. of greasing points	Capacity	Type of grease
Front axle	2	Until grease overflows	● Multi purpose EP2 Grease (NLGI Grade No. 2)
Front wheel	2		
Parking brake lock pedal	1		
Front lift arm	2		
Universal joint	3		
Seat adjuster	2		
Cable (throttle cable, mower lift cable)	3	Moderate amount	● Oil
Motion control lever pivot bushing, and contact position	6		
[MOWER]			
Universal joint	3	Until grease overflows	● Multi purpose EP2 Grease (NLGI Grade No. 2)
Three spindle shafts	3		
Belt tension pulley	1		
Belt tension pivot	1		
Anti scalp roller	1		
Front anti scalp roller pivot boss	2		

Note *1 Oil amount when the oil level is at the upper level of the oil level gauge.
*2 The product name of KUBOTA genuine UDT fluid may be different from that in the Operator's Manual depending on countries or territories. Consult your local KUBOTA Dealer for further detail.

IMPORTANT :
- To prevent serious damage to hydraulic systems, use only KUBOTA genuine fluid or its equivalent.

https://truckmanualshub.com/

NOTE :

◆ **Fuel:**

- Cetane number of 45 is minimum. Cetane number greater than 50 is preferred, especially for temperatures below -20℃ (-4℉) or elevations above 1500 m (5000 ft).
- Diesel fuels specified to EN 590 or ASTM D975 are recommended.
- No.2-D is a distillate fuel of lower volatility for engines in industrial and heavy mobile service. (SAE J313 JUN87)

◆ **Engine Oil:**

- Oil used in the engine must have an American Petroleum Institute (API) service classification and Proper SAE Engine Oil according to the ambient temperatures as shown above:

- Refer to the following table for the suitable API classification engine oil according to the engine type (with internal EGR, external EGR or non-EGR) and the fuel.

Fuel used	Engine oil classification (API classification)	
	Oil class of engines except external EGR	Oil class of engines with external EGR
Ultra Low Sulfur Fuel [<0.0015% (15 ppm)]	**CF, CF-4, CG-4, CH-4** or **CI-4**	**CF** or **CI-4** (Class CF-4, CG-4 and CH-4 engine oils cannot be used on EGR type engines)

EGR: Exhaust Gas Re-circulation

- The CJ-4 engine oil is intended for DPF (Diesel Particulate Filter) type engines, and cannot be used on this machine.

	except external EGR	with external EGR
Models	ZD1011, ZD1021	---

◆ **Transmission Oil:**

KUBOTA Super UDT-2: For an enhanced ownership experience, we highly recommend Super UDT-2 to be used instead of standard hydraulic/transmission fluid.
Super UDT-2 is a proprietary KUBOTA formulation that deliveries superior performance and protection in all operating conditions.
Regular UDT is also permitted for use in this machine.

- Indicated capacities of water and oil are manufacturer's estimate.

https://truckmanualshub.com/

■Checking Engine Oil Level

WARNING

To avoid serious injury or death:

- **Always stop the engine and remove the key before checking oil.**

1. Check engine oil before starting and 5 minutes or more after the engine has stopped.
2. Wipe dipstick area clean.
3. To check the oil level, remove the dipstick, wipe it clean, replace it, and draw it out again. Check to see that the oil level is between the 2 notches.
4. Add new oil to the prescribed level at the oil port if necessary.

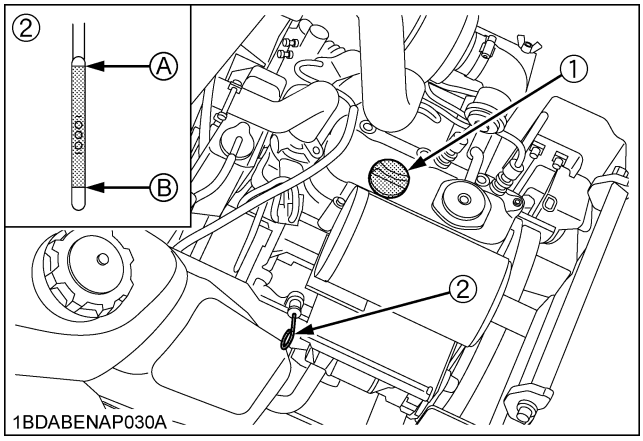

(1) Engine oil port *(A) "UPPER LEVEL"*
(2) Oil level dipstick *(B) "LOWER LEVEL"*

5. When using a different brand or viscosity oil from the previous one, remove all of the old oil and oil filter. Never mix 2 different types of oil.
6. Use the proper Engine Oil SAE according to the ambient temperatures. (See "LUBRICANTS, FUEL AND COOLANT" in "PERIODIC SERVICE" section.)

■Checking Amount of Fuel and Refueling

WARNING

To avoid serious injury or death:

- **Handle fuel carefully. If the engine is running, do not fill the fuel tank. If engine is hot, let engine cool several minutes before adding fuel. Do not smoke while filling the fuel tank or servicing the fuel system. Fill fuel tank only to bottom of filler neck.**

Check the fuel level. Take care that the fuel tank does not become empty.

Fuel tank capacity	23 L (6.1 U.S.gals.)

IMPORTANT :

- Use Diesel Fuel Only

1. Use No.2 diesel fuel.
2. Use No.1 diesel fuel if the temperature is below -10℃ (14℉).
3. Always use a strainer when refueling to prevent fuel injection pump contamination.

IMPORTANT :

- Do not permit dirt or trash or water to get into the fuel system.
- Be careful not to let the fuel tank become empty, otherwise air will enter the fuel system, necessitating bleeding before next engine start.
- Be careful not to spill fuel during refueling. If a spill should occur, wipe it off at once, or it may cause a fire.
- To prevent condensation (water accumulation) in the fuel tank, fill the tank before parking overnight.

https://truckmanualshub.com/

■Checking Transmission Fluid Level

WARNING

To avoid serious injury or death:

- **Allow the transmission case to cool down sufficiently when cleaning its surface.**

1. Park the machine on a flat surface, lower the implement to the ground and shut off the engine and remove the key.
   Allow the machine to idle for 1-3 minutes, and then check fluid.
2. Raise and lock the operator's seat.
3. To check the oil level, draw out the dipstick, wipe it clean, replace it, and draw it out again. Check to see that the oil level lies between the two notches.
   If the level is too low, add the new oil to the prescribed level at the oil inlet.
   (See "LUBRICANTS, FUEL AND COOLANT" in "PERIODIC SERVICE" section.)

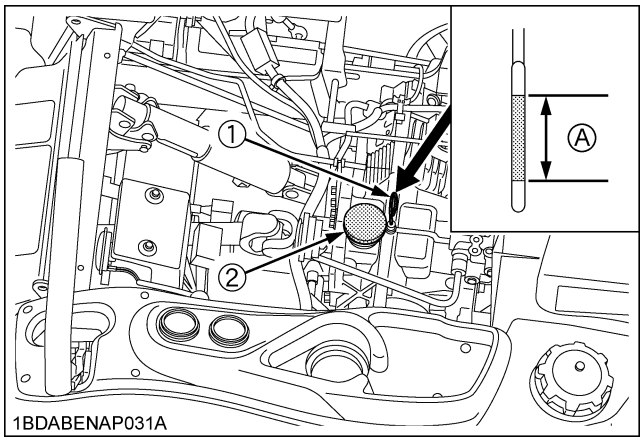

(1) Oil level dipstick
(2) Oil plug and breather cup
(A) Oil level is acceptable within this range.

IMPORTANT :

- If oil level is low, do not run engine.

■Checking Coolant Level

WARNING

To avoid serious injury or death:

- **Do not remove the radiator cap when the engine is hot. Then loosen cap slightly to the stop to relieve any excess pressure before removing cap completely.**

Check the coolant level daily for both the radiator and the recovery tank before starting engine.

1. Remove the radiator cap and check to see that the coolant level is just below the fill port.
2. Check to see that the coolant level is between the "FULL" and "LOW" marks of recovery tank.
3. When the coolant level drops due to evaporation, add water only up to just below the fill port of the radiator and the full level of the recovery tank.
   In case of leakage, add anti-freeze and water in the specified mixing ratio up to the full level.
   (See "Flushing Cooling System and Changing Coolant" in "EVERY 2000 HOURS or EVERY 2 YEARS" in "MAINTENANCE" section.)
4. Check radiator hoses for wear, cracks, bubbles or leaks. If any such are founded, repair immediately.
   (See "Replacing Radiator Hose" in "EVERY 4 YEARS" in "MAINTENANCE" section.)

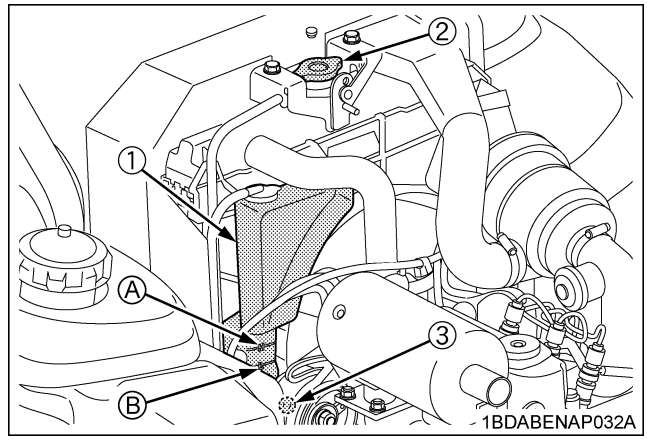

(1) Recovery tank
(2) Radiator cap
(3) Drain plug
(A) "FULL"
(B) "LOW"

IMPORTANT :

- Start engine with the hood closed.
- If the radiator cap has to be removed, follow the caution above and securely retighten the cap.
- Use clean, distilled water and anti-freeze to fill the radiator and the recovery tank.
- If water should leak, consult your local KUBOTA Dealer.

https://truckmanualshub.com/

■Checking and Cleaning Radiator Screen and Hood Screen

WARNING

To avoid serious injury or death:

- **Engine components can get extremely hot from operation. To prevent severe burns, do not touch these areas while the engine is running, or immediately after it is turned off.**
  Never operate the engine without heat shields or guards.

WARNING

To avoid serious injury or death:

- **Be sure to stop the engine and remove the key before cleaning.**

IMPORTANT :

- The air intake area must be clear of debris to prevent the engine from overheating.

Daily or after every 5 hours of operation, check to be sure the radiator screen and the hood screen are clean.

Dirt or chaff on the radiator screen, hood screen or radiator decrease cooling performance.

1. Remove the radiator screen and the hood screen, and remove all foreign material.
2. Remove the dust from between the fins and the tube.
3. Tighten the fan drive belt as necessary. For this, refer to "EVERY 100 HOURS" in "MAINTENANCE" section.
4. If the scale forms in the tube, clean with the scale inhibitor or its equivalent.
5. Each time the hood screen is covered with grass during operation, rub it off the screen with the hand.
   Check the radiator screen from time to time if grass accumulates.
6. If the dust or chaff has accumulated inside of the hood, remove the radiator screen and clean inside completely.
   After cleaning, replace the radiator screen properly.
7. Check the radiator for dust or chaff build up.
   If the dust or chaff has accumulated in the radiator, clear with air pressure (not to exceed 30 psi) or a hose.

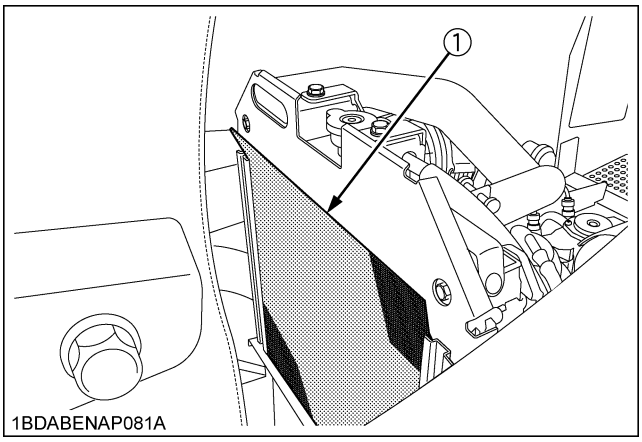

(1) Radiator screen

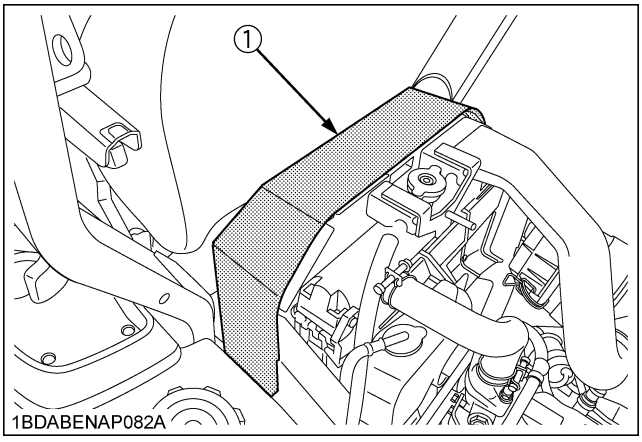

(1) Hood screen

https://truckmanualshub.com/

■Checking Tire Pressure

WARNING

To avoid serious injury or death:

- **Do not attempt to mount a tire on a rim. This must be done by a qualified person with the proper equipment.**
- **Always maintain the correct tire pressure. Inflation pressure in tires rises quickly when using compressed air.**
  Do not inflate tires above the recommended pressure shown in the Operator's Manual.

IMPORTANT :

- Do not use tires larger than specified.

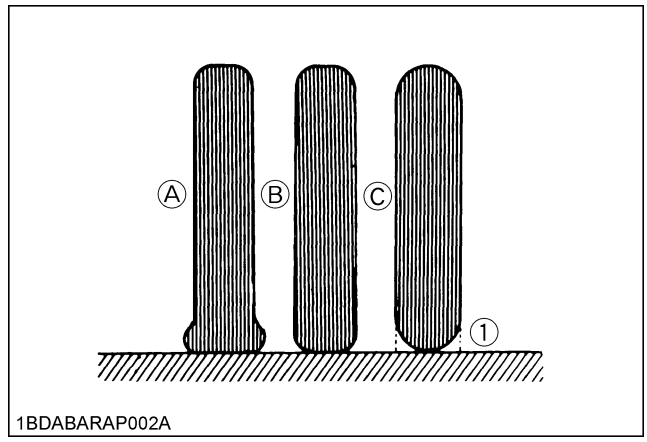

(1) Ground

(A) "INSUFFICIENT"
(B) "NORMAL"
(C) "EXCESSIVE"

■Inflation Pressure

Though the inflation pressure is factory-set to the prescribed level, it naturally drops slowly in the course of time. Thus, check it and inflate as necessary.

		Tire sizes	Recommended Inflation Max. Pressure
ZD1011	Front	13 x 5.0 - 6 Smooth pneumatic	172 kPa (1.75 kgf/cm^2, 24.9 psi)
	Rear	24 x 9.5 - 14 Low profile type	83 kPa (0.84 kgf/cm^2, 12.0 psi)
ZD1021	Front	13 x 6.5 - 6 Smooth pneumatic	172 kPa (1.75 kgf/cm^2, 24.9 psi)
	Rear	24 x 12 - 14 Low profile type	83 kPa (0.84 kgf/cm^2, 12.0 psi)

https://truckmanualshub.com/

■Lubricating All Grease Fittings

WARNING

To avoid serious injury or death:

- **Be sure to stop the engine and remove the key before greasing.**

Grease the following location.

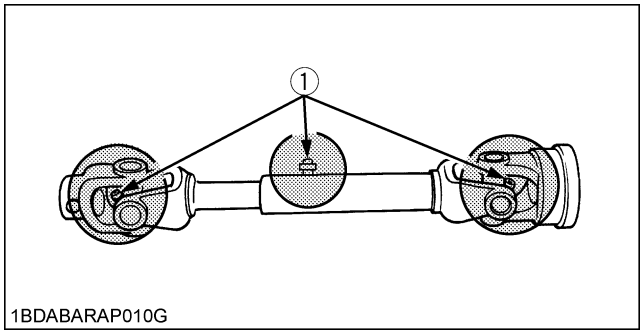

(1) Mower universal joint

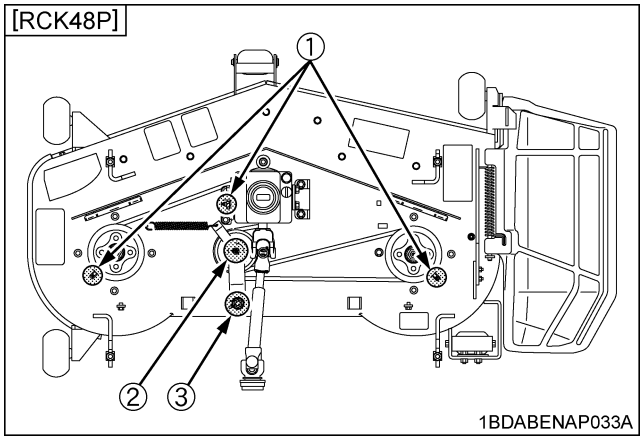

(1) Spindle shaft
(2) Belt tension pulley
(3) Belt tension pivot

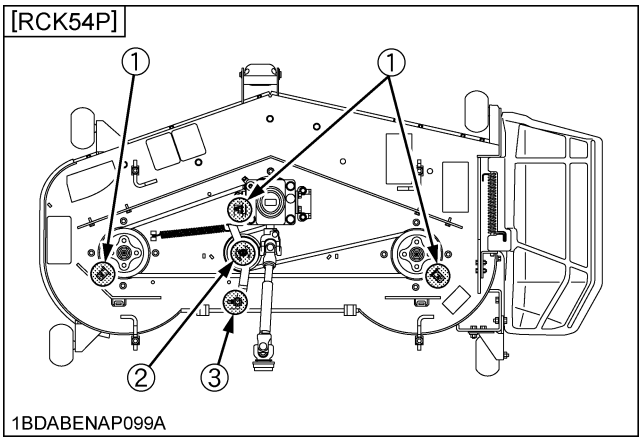

(1) Spindle shaft
(2) Belt tension pulley
(3) Belt tension pivot

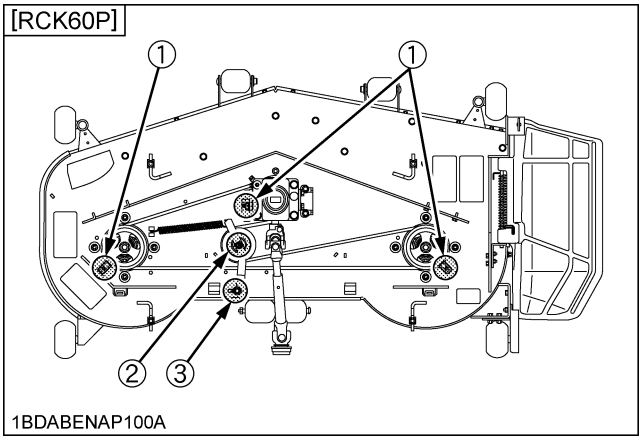

(1) Spindle shaft
(2) Belt tension pulley
(3) Belt tension pivot

https://truckmanualshub.com/

ENGLISH

MAINTENANCE

SERVICE INTERVALS

You must do the following servicing jobs on the machine at the stated running-time intervals.

No.	Items		Indication hour meter (Hr)													Ref. Page		
			50	100	150	200	250	300	350	400	450	500	550	600	After since			
1	Engine start system	Check	○	○	○	○	○	○	○	○	○	○	○	○	every 50Hr	49		
2	OPC system	Check	○	○	○	○	○	○	○	○	○	○	○	○	every 50Hr	50		
3	Mower gear box oil	Check	○	○	○	○	○	○	○	○	○	○	○	○	every 50Hr	50		
		Change			○			○			○			○	every 150Hr	58		
4	Greasing (except mower and mower link bushings)	-	○	○	○	○	○	○	○	○	○	○	○	○	every 50Hr	51		
5	Throttle Cable	Oil	○	○	○	○	○	○	○	○	○	○	○	○	every 50Hr	52		
6	Greasing (mower link bushings, pivot)	-		○		○		○		○		○		○	every 100Hr	56		
7	Air cleaner primary element	Clean		○		○		○		○		○		○	every 100Hr	53	*2	@
		Replace													every 1000Hr or 1 year	62	*3	
	Secondary element	Replace													every 1000Hr or 1 year	62	*3	
8	Fuel filter element	Check		○		○		○		○		○		○	every 100Hr	53		@
		Replace								○					every 400Hr	61	*6	
9	Fan belt	Adjust		○		○		○		○		○		○	every 100Hr	54		
10	Parking brake	Adjust		○		○		○		○		○		○	every 100Hr	55	*9	
11	Battery condition	Check		○		○		○		○		○		○	every 100Hr	56	*7	
12	Engine oil	Change	◎			○				○				○	every 200Hr	58	*1	
13	Engine oil filter	Replace	◎			○				○				○	every 200Hr	59	*1	
14	Transmission oil filter [HST]	Replace	◎			○				○				○	every 200Hr	59	*1	
15	Front axle pivot	Adjust		◎		○				○				○	every 200Hr	60	*8	

https://truckmanualshub.com/

No.	Items		Indication hour meter (Hr)													Ref. Page		
			50	100	150	200	250	300	350	400	450	500	550	600	After since			
16	Transmission fluid and Rear axle gear case (RH & LH) fluid	Change								◎					every 400Hr	60		
17	Transmission strainer	Clean								○					every 400Hr	61		
18	Fuel injection nozzle injection pressure	Check													every 1500Hr	62	*6	@
19	Radiator	Clean													every 2000Hr or 2 years	62	*5	
20	Coolant	Change													every 2000Hr or 2 years	62	*5	
21	Injection pump	Check													every 3000Hr	64	*6	@
22	Fuel line	Check													every 1 year	64	*4 *9	@
		Replace													every 4 years	66	*6	
23	Radiator hose and clamp	Check													every 1 year	64	*4 *9	
		Replace													every 4 years	66	*9	
24	Hydraulic hose	Check													every 1 year	65	*4 *9	
		Replace													every 4 years	66	*6	
25	Intake air line	Check													every 1 year	65	*4 *9	@
		Replace													every 4 years	66	*9	
26	Engine breather hose	Check													every 1 year	65	*4 *6	
		Replace													every 4 years	66	*6	
27	Mower gear box oil seal	Check													every 1 year	65	*4 *6	
		Replace													every 4 years	66	*6	
28	Fuel system	Bleed													Service as required	66		
29	Fuse	Replace														66		
30	Blade	Replace														67		
31	Mower belt	Replace														68		

IMPORTANT :
- The jobs indicated by ◎ must be done initially.

https://truckmanualshub.com/

*1 The initial 50 hours should not be a replacement (change) cycle.
*2 Air cleaner must be cleaned more often in dusty conditions than in normal conditions.
*3 Every 1000 hours or every 1 year whichever comes faster.
*4 Replace if any deterioration (crack, hardening, scar, or deformation) or damage occurred.
*5 Every 2000 hours or every 2 years whichever comes faster.
*6 Consult your local KUBOTA Dealer for this service.
*7 When the battery is used for less than 100 hours per year, check the battery condition by reading the indicator annually.
*8 The initial 100 hours should not be an adjustment cycle.
*9 If you feel you are unable to make the following service correctly and safely, contact your local KUBOTA Dealer.

- The items listed above (@ marked) are registered as emission related critical parts by KUBOTA in the U.S.EPA non-road emission regulation. As the engine owner, you are responsible for the performance of the required maintenance on the engine according to the above instruction.
  Please see the Warranty Statement in detail.

PERIODIC SERVICE CHART LABEL

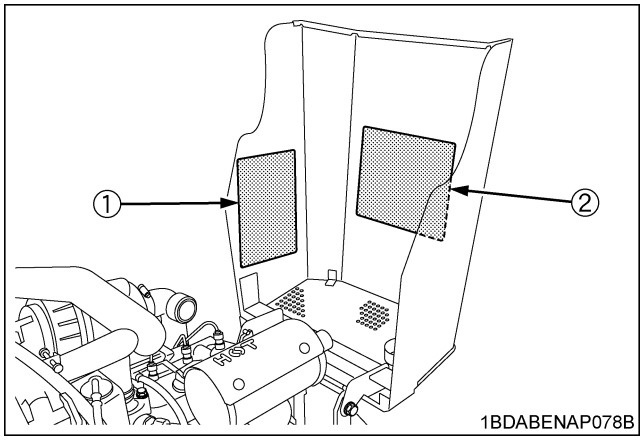

(1) Part No. K3411-6552-3 (ENGLISH)

PERIODIC SERVICE CHART

INTERVAL		RECOMMENDED SERVICE ※
DAILY	CHECK	1. Tire pressure, wear, or damage. 2. Oil and water leakage from machine and mower. 3. Engine and transmission oil, radiator and recovery tank coolant and fuel level. 4. Damage to machine body, tightness of all bolts, nuts and pins, etc. 5. Mower blades and belt for wear or damage. 6. Parking brake, speed control levers, all safety switches and easy checker functions. 7. Color of the exhaust fumes, abnormal noise and vibrations.
	CLEAN	・Radiator screen and core, panel screen, air cleaner primary element and mower deck.
	GREASE	・Mower U-joint(3 places)/ Spindle shaft(3 places)/ Belt tension pulley(1 place)/ Belt tension pivot(1 place)
FIRST 50 Hr. (BREAK-IN) (MUST BE DONE.)	REPLACE	・Engine & Transmission oil filters(2 places)
	CHANGE	・Engine oil
FIRST 100 Hr. (BREAK-IN) (MUST BE DONE.)	ADJUST	・Front axle pivot
FIRST 400 Hr. (MUST BE DONE.)	CLEAN	・Transmission strainer
	CHANGE	・Transmission & Rear axle gear case(RH & LH) fluid

INTERVAL		RECOMMENDED SERVICE ※
EVERY 50 Hr.	CHECK	・Mower gear box oil / Engine start system / OPC system
	OIL	・Throttle cable(2 places)/ Motion control lever pivot bushing and contact position(2 places each) ・Mower lift cable(1 place)
	GREASE	・Front axle and wheel(4 places)/ Universal joint(3 places)/ Seat adjuster(2 places)/Parking brake lock pedal
EVERY 100 Hr.	CHECK	・Fuel filter element / Battery condition
	CLEAN	・Air cleaner primary element ★
	ADJUST	・Fan belt / Parking brake ☆
EVERY 150 Hr.	CHANGE	・Mower gear box oil
EVERY 200 Hr.	REPLACE	・Engine oil filter / Transmission oil filter
	CHANGE	・Engine oil
	ADJUST	・Front axle pivot / Motion control lever pivot
EVERY 400 Hr.	CLEAN	・Transmission strainer
	REPLACE	・Fuel filter element ☆
	CHANGE	・Transmission & Rear axle gear case(RH & LH) fluid
EVERY 1500 Hr.☆	CHECK	・Fuel Injection Nozzle Injection Pressure
EVERY 3000 Hr.☆	CHECK	・Injection Pump
EVERY 1 year	CHECK ※■●	・Radiator hose and clamp / Hydraulic hose / Fuel line / Mower gear box oil seal / Intake Air Line /Engine throttler base
1 year/1000Hr.▲	REPLACE	・Air cleaner both elements
2 year/2000Hr.▲	CLEAN	・Radiator
	CHANGE	・Coolant

Approximate fluid capacities.
unit:L(qts.)

	ZD1011	ZD1021
Engine	3.5(3.70)	
Radiator	2.7(2.85)	
Transmission	7.5(7.9)	
Reserve tank	0.25(0.26)	
Mower gear box	0.4(0.42)	

※ : See Operator's Manual in details.
☆ : Should be serviced by KUBOTA Dealer.
★ : Required more often in dusty conditions.
■ : Replace if necessary.
● : Replace for maximum of every 4 years.
▲ : Whichever comes first.

Tire pressure and tightening torque recommendation.

Front	13x 5.0- 6	172 KPa (24.9 psi)	83 KPa (12.0 psi)	Ensure smooth rotation of wheel. <Do not over tighten>
	13x 6.5- 6			
Rear	24x 9.5-14			
	24x12.0-14			

65-75 N·m(48.0-55.0 ft·lbs)

1BDABENAP065A

(2) Part No. K3411-6553-2 (SPANISH)

TABLA DE SERVICIO PERIÓDICO

INTERVALO		SERVICIO RECOMENDADO ※
DIARIO	REVISAR	1. Presión, desgaste y daño de los neumáticos. 2. Fugas de aceite y agua de la máquina y del cortacéspedes. 3. Aceite del motor, fluido de transmisión, refrigerante del tanque de recuperación y nivel de combustible. 4. Daño a la carrocería de la máquina, ajuste de todos los pernos, tuercas y pines, etc. 5. Hojas de cortar, desgaste o daño de la correa del cortacéspedes. 6. Freno de estacionamiento, palancas de control de velocidad, todos los interruptores de seguridad y funciones para una fácil inspección. 7. Color del humo del escape, ruido y vibraciones anormales.
	LIMPIAR	・Filtro del radiador, centro del radiador, filtro del panel y elemento primario del filtro de aire.
	ENGRASAR	・Junta universal del cortacéspedes (3lugares)/ Eje de husillo (3lugares)/Polea de tensión de la correa (1lugar)/Pivote de tensión de la correa (1lugar)
PRIMERAS 50 hrs. [Uso inicial] (Debe hacerse)	REEMPLAZAR	・Filtros de aceite del motor y transmisión (2lugares)
	CAMBIAR	・Aceite del motor
PRIMERAS 100 hrs. (Debe hacerse)	AJUSTAR	・Pivote del eje frontal
PRIMERAS 400 hrs. (Debe hacerse)	LIMPIAR	・Filtro de la transmisión
	CAMBIAR	・Fluido de la caja de transmisión y cambio del eje posterior (DER. e IZQ.)

INTERVALO		SERVICIO RECOMENDADO ※
C 50 hr.	REVISAR	・Aceite de la caja de cambios del cortacéspedes / Sistema de arranque del motor / Sistema OPC
	ACEITAR	・Cable de estrangulamiento (2lugares)/Buje de pivote de la palanca de control de movimiento y posición de contacto (2 lugares cada uno) ・Cable de elevación de la segadora (1lugar)
	ENGRASAR	・Eje frontal y rueda (4lugares) / Junta universal (3lugares)/ Regulador del asiento (2lugares) / Pedal de bloqueo del freno de aparcamiento
C 100 hr.	REVISAR	・Elemento de filtro de combustible / Condición de la batería
	LIMPIAR	・Elemento primario del filtro de aire ★
	AJUSTAR	・Correa del ventilador / Freno de estacionamiento ☆
A 150 hr.	CAMBIAR	・Aceite de la caja de cambios del cortacéspedes
A 200 hr.	REEMPLAZAR	・Filtro de aceite del motor / Filtro de aceite de la transmisión
	CAMBIAR	・Aceite del motor
	AJUSTAR	・Pivote de la palanca de control de movimiento
D 400 hr.	LIMPIAR	・Filtro de la transmisión
	REEMPLAZAR	・Elemento de filtro de combustible ☆
	CAMBIAR	・Fluido de la caja de transmisión y cambio del eje posterior (DER. e IZQ.)
A 1500hr.☆	REVISAR	・Presión de inyección de la boquilla de inyección de combustible
A 3000hr.☆	REVISAR	・Bomba de inyección
1 año	REVISAR ☆■●	・Manguera y abrazadera del radiador / Manguera del sistema hidráulico / Línea de combustible / Sello del aceite de la caja de cambios del cortacéspedes / Línea de toma de aire /Manguera de respiradero del motor
1 año/1000hr.▲	REEMPLAZAR	・Ambos elementos filtro de aire
2 año/2000hr.▲	LIMPIAR	・Radiador
	CAMBIAR	・Refrigerante

※ : Consulte el Manual del Operador para obtener más información.
☆ : El servicio de mantenimiento debe proporcionarlo un distribuidor de KUBOTA.
★ : Se requiere más seguido en condiciones polvorosas.
■ : Reemplace si es necesario.
● : Reemplace todos los 4 años al menos.
▲ : lo que ocurra primero.

Recomendación de presión para neumáticos y par de ajuste.

Frontal	13x 5.0- 6	172 kPa (24.9 psi)	83 kPa (12.0 psi)	Asegure rotación libre de la rueda <No apriete en exceso.>
	15x 6.5- 6			
Posterior	24x 9.5-14			
	24x12.0-14			

65-75 N·m(48.0-55.0 pies·lbs)

Capacidades de fluido (aproximadas).
unidad:L(cuartos de galón)

	ZD1011	ZD1021
Motor	3.5(3.70)	
Radiador	2.7(2.85)	
Transmisión	7.5(7.9)	
Tanque de reserva	0.25(0.26)	
Caja de cambios del cortacéspedes	0.4(0.42)	

1BDABENAP065B

https://truckmanualshub.com/

EVERY 50 HOURS

■Checking Engine Start System

The Engine Start System in your machine is designed to protect you while operating. Please check these Engine Start System periodically. It is recommended to check the Engine Start System before daily operation.

WARNING

To avoid serious injury or death:

- **Do not allow anyone near the machine while testing.**
- **If the machine does not pass one of the following tests, do not operate the machine. See your local KUBOTA Dealer.**
- **Sit on operator's seat for all tests except for Test 1.**

IMPORTANT :

- Check the following tests before operating the machine.

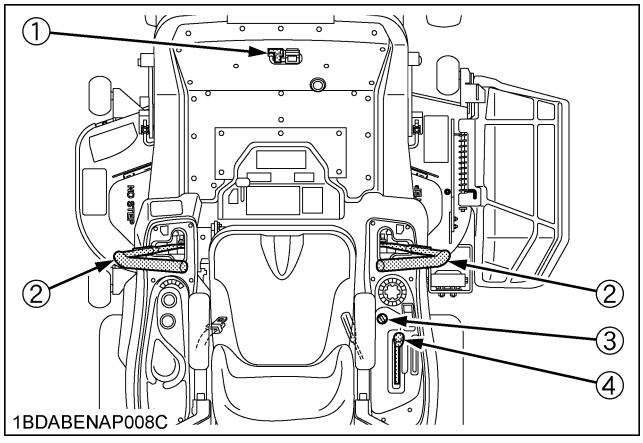

(1) Parking brake lock pedal
(2) Motion control lever
(3) Key switch
(4) PTO lever

Test 1 (OPERATOR NOT ON THE SEAT)

1. Securely set the parking brake.
2. Shift the PTO lever to "DISENGAGE" (OFF) position.
3. Set the motion control levers to the "NEUTRAL LOCK" position.
4. Turn the key switch to "START" position.
5. The engine must not crank.

Test 2 (OPERATOR ON THE SEAT)

1. Do not set the parking brake. (release it from test 1)
2. Shift the PTO lever to "DISENGAGE" (OFF) position.
3. Set the motion control levers to the "NEUTRAL LOCK" position.
4. Turn the key switch to "START" position.
5. The engine must not crank.

Test 3 (OPERATOR ON THE SEAT)

1. Securely set the parking brake.
2. Shift the PTO lever to "DISENGAGE" (OFF) position.
3. Hold the motion control levers and move then inward from "NEUTRAL LOCK" position to "NEUTRAL" position and then release the levers.
4. Turn the key switch to "START" position.
5. The engine must not crank.

Test 4 (OPERATOR ON THE SEAT)

1. Securely set the parking brake.
2. Shift the PTO lever to "ENGAGE" (ON) position.
3. Set the motion control levers to the "NEUTRAL LOCK" position.
4. Turn the key switch to "START" position.
5. The engine must not crank.

NOTE :

- If the engine cranks Test 1 through 4, consult your local KUBOTA Dealer to have the unit checked before operation.

Test 5 (OPERATOR ON THE SEAT)

1. Start the engine.
2. Keep the parking brake securely set.
3. Shift the PTO lever to "DISENGAGE" (OFF) position.
4. Hold the motion control levers and move then inward from "NEUTRAL LOCK" position to "NEUTRAL" position and then release the levers.
5. The engine must shut off after a short time delay.

IMPORTANT :

- For this test only, the engine will shut off in a few seconds.

NOTE :

- If the engine remains running in Test 5, consult your local KUBOTA Dealer to have the unit checked before operation.

https://truckmanualshub.com/

■Checking OPC System

The OPC (Operator Presence Control) system in your machine is designed to protect you while operating. Please check these OPC system periodically. It is recommended to check the OPC system before daily operation.

WARNING

To avoid serious injury or death:

- **Do not allow anyone near the machine while testing.**
- **If the machine does not pass one of the following tests, do not operate the machine. See your local KUBOTA Dealer.**

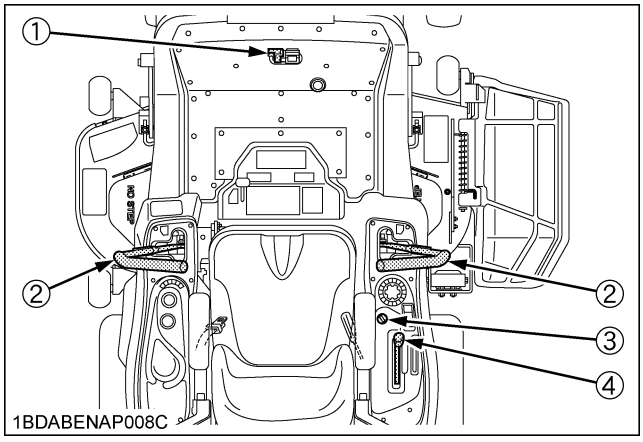

(1) Parking brake lock pedal
(2) Motion control lever
(3) Key switch
(4) PTO lever

Test 1 (OPERATOR ON THE SEAT)

1. Start the engine.
2. Do not set the parking brake.
3. Shift the PTO lever to "DISENGAGE" (OFF) position.
4. Hold the motion control levers and move them inward from "NEUTRAL LOCK" position to "NEUTRAL" position and then release the levers.
5. Stand up. (Do not get off the machine.)
6. The engine must shut off.

Test 2 (OPERATOR ON THE SEAT)

1. Start the engine.
2. Do not set the parking brake.
3. Shift the PTO lever to "ENGAGE" (ON) position.
4. Stand up. (Do not get off the machine.)
5. The engine must shut off.

NOTE :

- If the engine remains running in Test 1 or 2, consult your local KUBOTA Dealer to have the unit checked before operation.

■Checking Gear Box Oil Level

WARNING

To avoid serious injury or death:

- **Always stop the engine and remove the key before checking oil.**

1. Park the machine on a flat surface and lower the mower to the ground.
   To check the oil level, loosen the oil inlet plug with gauge, wipe it clean, reinstall it and loosen it again.
   Check to see if the oil level is between the notch and tip.
   If the level is too low, add new oil to the prescribed level at the oil inlet.
   (See "LUBRICANTS, FUEL AND COOLANT" in "PERIODIC SERVICE" section.)
2. After checking, reinstall the oil inlet plug with gauge securely.

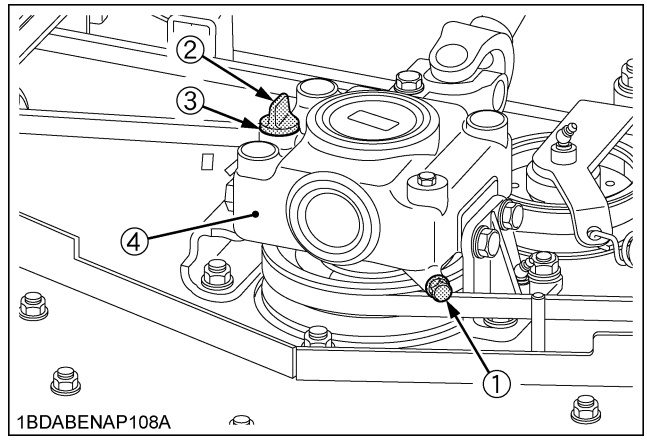

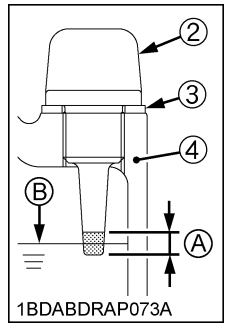

(1) Drain plug
(2) Oil inlet plug with gauge
(3) Seal washer
(4) Gear case
(A) Oil level is acceptable within this range.
(B) Oil level

https://truckmanualshub.com/

■Greasing

WARNING

To avoid serious injury or death:

- **Be sure to stop the engine and remove the key before greasing.**

Grease the following locations.

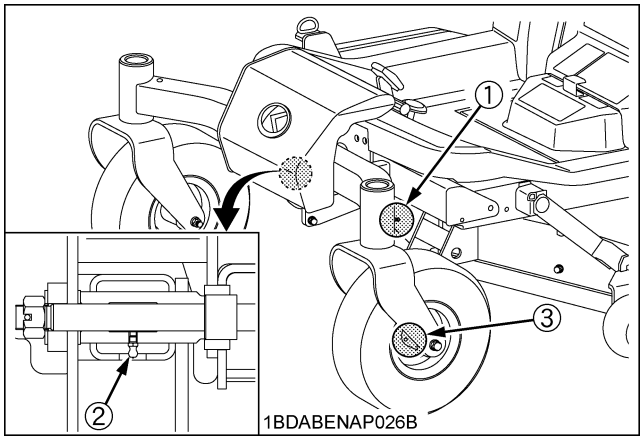

(1) King pin (LH, RH)
(2) Center pin
(3) Front wheel (LH, RH)

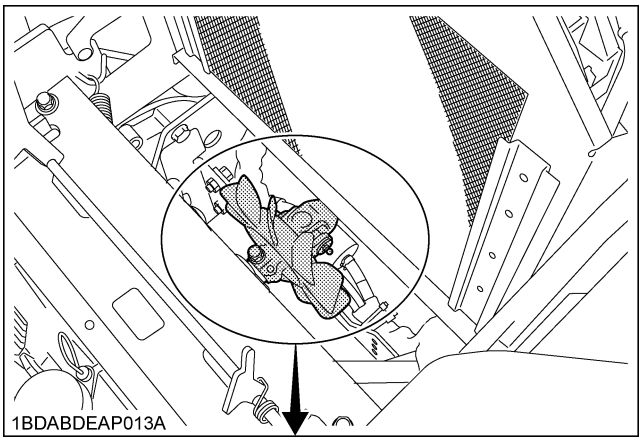

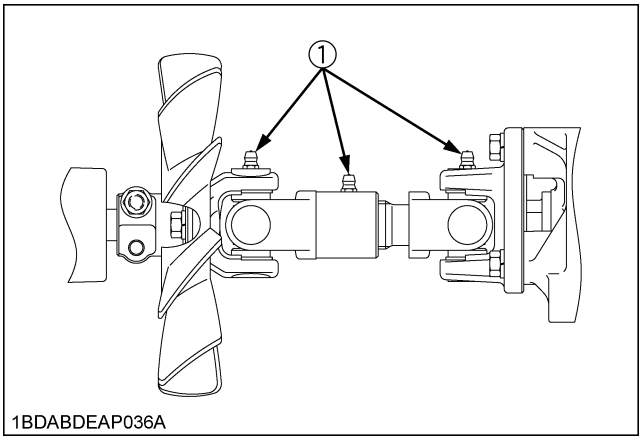

(1) Machine universal joint

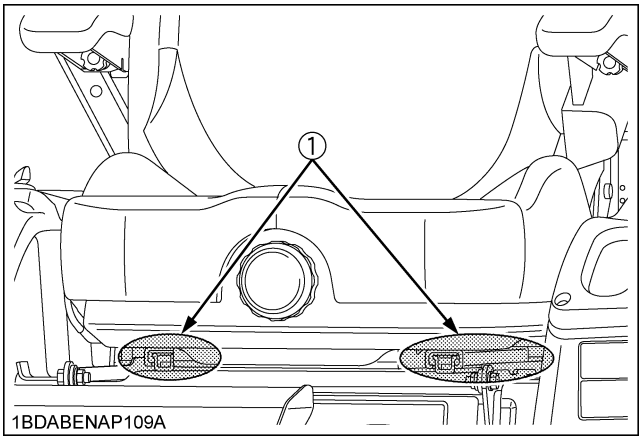

(1) Seat adjuster

https://truckmanualshub.com/

■Oiling

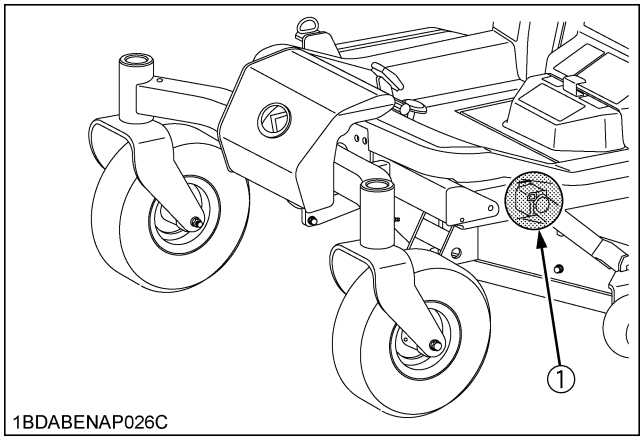

(1) Front lift arm (LH, RH)

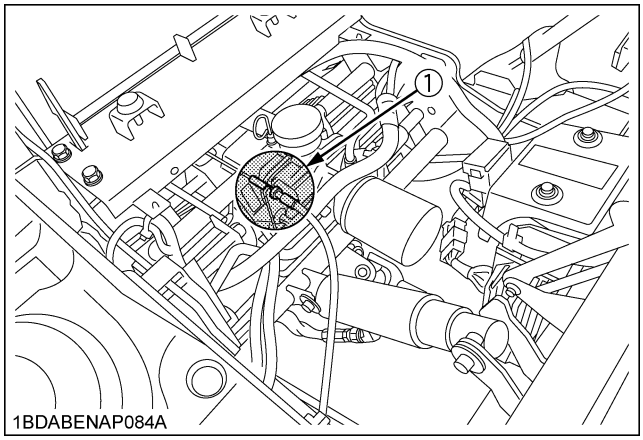

(1) Lift control cable (oil)

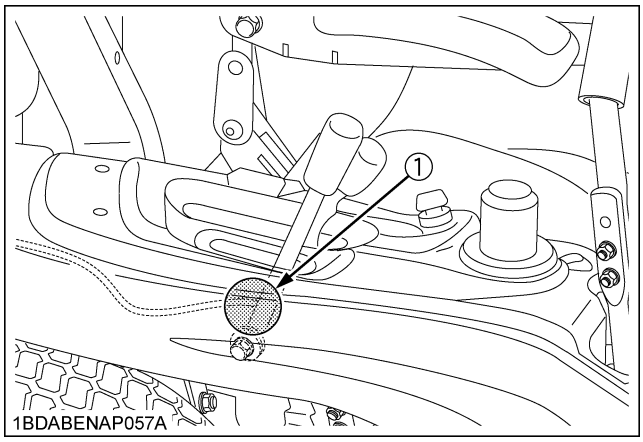

(1) Throttle cable (oil)

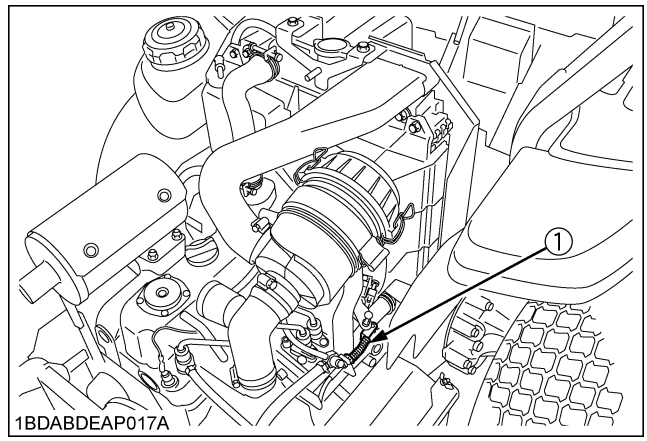

(1) Throttle cable (oil)

https://truckmanualshub.com/

EVERY 100 HOURS

■Cleaning Air Cleaner Primary Element

WARNING

To avoid serious injury or death:

- **Be sure to stop engine and remove the key before cleaning air cleaner element.**

1. Remove the air cleaner cover and primary element.
2. Clean the primary element:
   - When dry dust adheres to the element, blow compressed air from the inside, turning the element. Pressure of compressed air must be under 205 kPa (2.1 kgf/cm^2, 30 psi).
3. Replace air cleaner primary element:
   Once yearly or every 1000 hours whichever comes first.

NOTE :

- Check to see if the evacuator valve is blocked with dust.

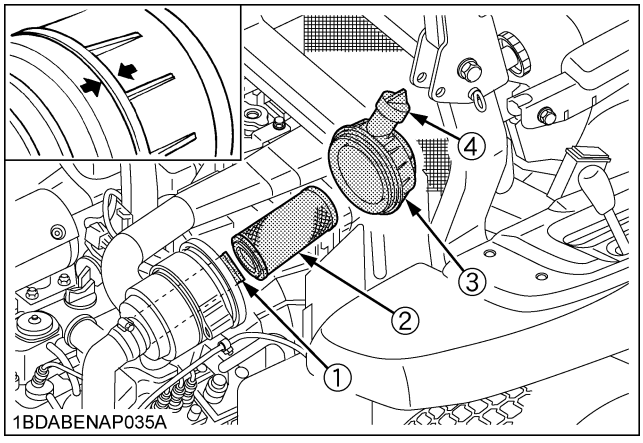

(1) Secondary element
(2) Primary element
(3) Cover
(4) Evacuator valve

NOTE :

- The air cleaner uses a dry element, never apply oil.
- Do not run the engine with filter element removed.
- Operating in dusty conditions requires more frequent maintenance.
- Align the arrow marks when reinstalling the air cleaner cover.
- Do not touch the secondary element except in cases where replacing is required.
  (See "Replacing Air Cleaner Primary Element and Secondary Element" in "EVERY 1000 HOURS or EVERY 1 YEAR" in "MAINTENANCE" section.)

◆ **Evacuator Valve**

Open the evacuator valve once a week under ordinary conditions - or daily when used in a dusty place - to get rid of large particles of dust and dirt.

■Checking Fuel Filter

WARNING

To avoid serious injury or death:

- **Be sure to stop the engine and remove the key when attempting to make the following checks and changes.**
- **Never fail to check the fuel lines periodically. The fuel lines are subject to wear and aging. Fuel may leak out onto the running engine, causing a fire.**

1. Open the hood.
2. The fuel line is made of rubber and ages regardless of service period.
3. If the fuel line and clamps are found damaged or deteriorated, replace them.
4. Check fuel filter, if it is clogged by debris or contaminated with water, replace it.

IMPORTANT :

- When the fuel line is disconnected for maintenance or repair, close both ends of the fuel line with a piece of clean cloth or paper to prevent dust and dirt from entering. In addition, particular care must be taken not to admit dust and dirt into the fuel pump. Entrance of even a small amount dust or dirt cause premature wear and malfunction of the fuel pump and injector components.

https://truckmanualshub.com/

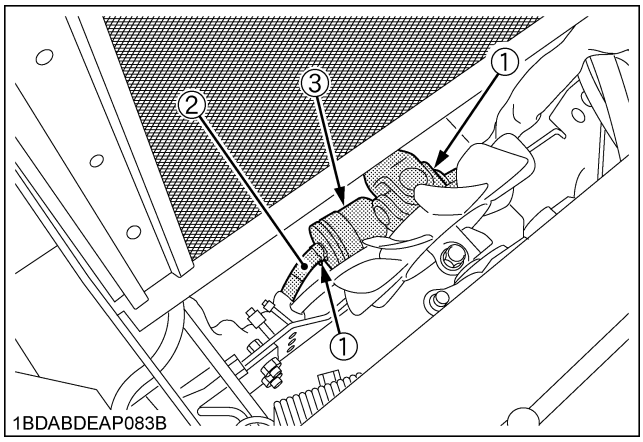

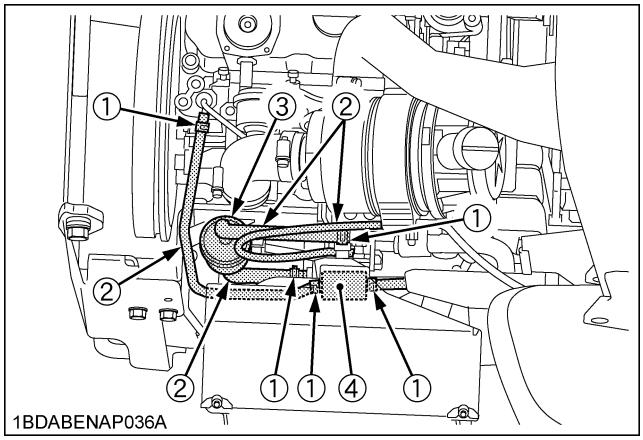

(1) Pipe clamps
(2) Fuel line
(3) Fuel filter
(4) Fuel pump

■Adjusting Fan Drive Belt Tension

WARNING

To avoid serious injury or death:

- **Be sure to stop the engine and remove the key before checking belt tension.**

If the fan drive belt becomes loose, the engine may overheat. To adjust, loosen bolts and move the alternator outward to tighten the belt. After adjustment, securely tighten the bolts.

Moderate belt tension:
The belt must deflect approx. 10 mm (0.4 in.) when the center of the belt is depressed with finger pressure of 98N (10kgf, 22 lbs.).

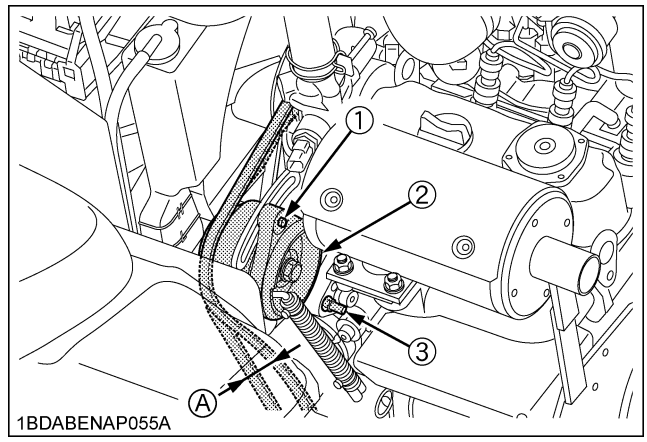

(1) Tension bolt
(2) Alternator
(3) Adjusting bolt
(A) 10 mm (0.4 in.)

https://truckmanualshub.com/

■Adjusting Parking Brake

If you feel you are unable to make the following service correctly and safely, contact your local KUBOTA Dealer.

WARNING

To avoid serious injury or death:

- **Park the machine on a firm and level surface.**
- **Stop the engine and chock the wheels before checking or adjusting.**

IMPORTANT :

- Wrong adjustment may cause machine damage.

(1) Check brake spring

1. Place the motion control levers to the "NEUTRAL LOCK" position.
2. Be sure to chock the rear wheels.
3. Apply the parking brake to the lock position.
4. Check the length of the brake springs on both sides.

(A): Proper brake spring length with the brake applied to the lock position	115 to 117 mm (4.53 to 4.61 in.)

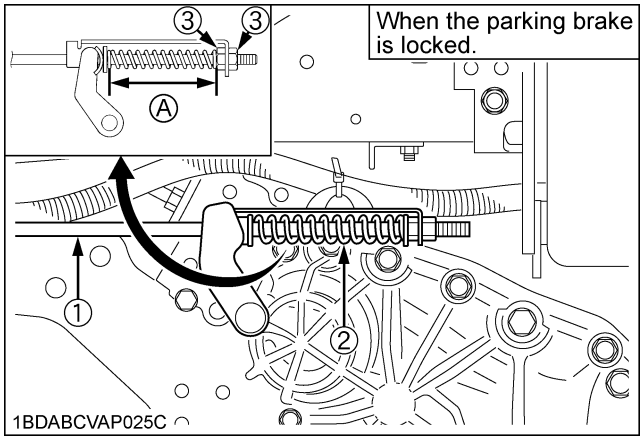

(1) Brake rod
(2) Brake spring
(3) Lock nut
(A) "Parking brake spring length"

5. If the length of the brake spring is not correct, adjust it. (See "Adjustment of brake spring length" below.)
6. Release the parking brake completely.
7. Hold the brake rod lightly.
8. Check the brake spring play.

(B): Proper brake spring play	Reference: 0.5 to 1.0 mm (0.02 to 0.04 in.)

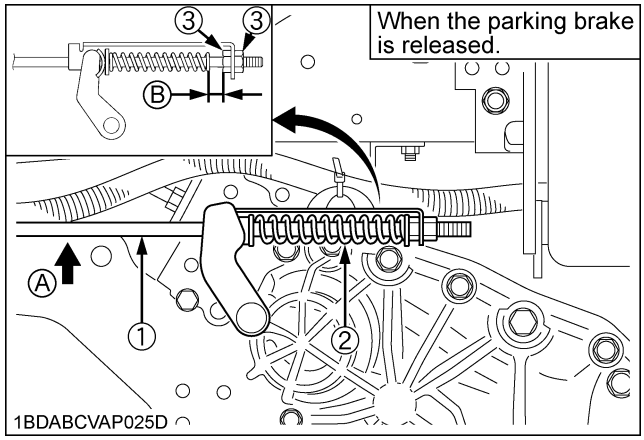

(1) Brake rod
(2) Brake spring
(3) Lock nut
(A) "Hold the brake rod"
(B) "Parking brake spring play"

9. If the brake spring play is not correct, adjust it. (See "Adjustment of brake spring play" below.)

◆ **Adjustment of brake spring length**

1. Place the motion control lever to the "NEUTRAL LOCK" position.
2. Apply the parking brake to the lock position.
3. Loosen the lock nuts.
4. Adjust the spring length to the recommendation.
5. Lock the nuts.
6. Check the brake spring play to the recommendation. If there is no play, adjust the brake spring play again. (See "Adjustment of brake spring play" below.)
7. Adjust the other side spring to the same dimension.

◆ **Adjustment of brake spring play**

1. Place the motion control lever to the "NEUTRAL LOCK" position.
2. Be sure to chock the rear wheels.
3. Release the parking brake completely.
4. Loosen the lock nuts.
5. Hold the brake rod by hand.
6. Tighten the nut to the correct space between the end of the spring and the nut.
7. Lock the nuts.
8. Adjust the other side spring to the same dimension.

(2) Check on the slope

1. Place the machine on a 17° ramp.
2. Apply the parking brake.
3. Place the motion control levers in "NEUTRAL LOCK" position and shut off the engine.

https://truckmanualshub.com/

4. Check that the machine does not move.

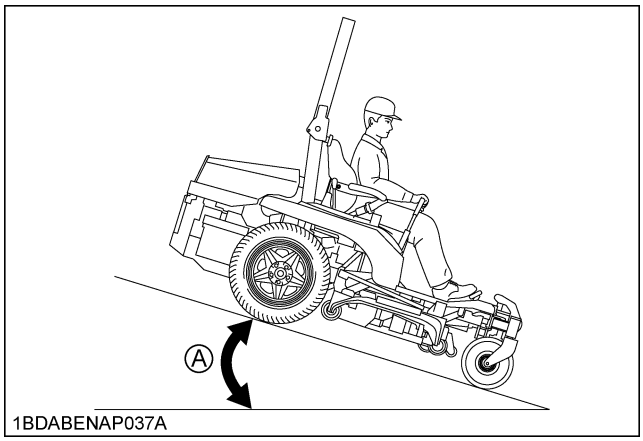

(A) 17° ramp

NOTE :
- For parking brake test purposes, only use 17° ramp.

■Greasing

WARNING

To avoid serious injury or death:
- **Be sure to stop the engine and remove the key before greasing.**

Grease the following location.
If you operated the machine in extremely wet and muddy conditions, lubricate grease fittings more often.

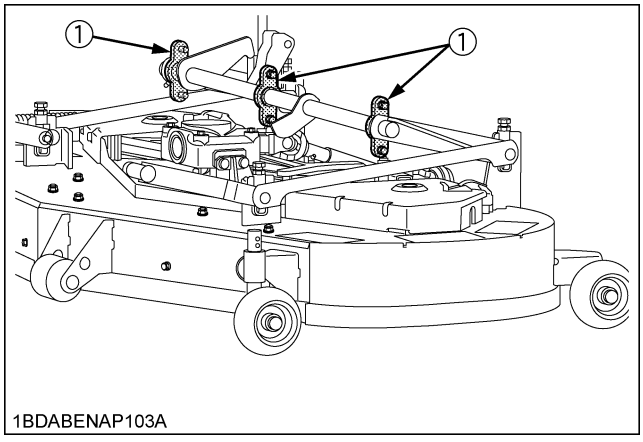

(1) Mower link bushing

■Checking Battery Condition

DANGER

To avoid the possibility of battery explosion:
For the refillable type battery, follow the instructions below.
- **Do not use or charge the refillable type battery if the fluid level is below the LOWER (lower limit level) mark. Otherwise, the battery component parts may prematurely deteriorate, which may shorten the battery's service life or cause an explosion. Check the fluid level regularly and add distilled water as required so that the fluid level is between the UPPER and LOWER levels.**

DANGER

To avoid serious injury or death:
- **When the battery is being activated, hydrogen and oxygen gases in the battery are extremely explosive. Keep open sparks and flames away from the battery at all times, especially when charging the battery.**

WARNING

To avoid serious injury or death:
- **Batteries, battery posts, terminals and related accessories contain lead and lead compounds, and other chemicals known to the State of California to cause cancer and birth defects or other reproductive harm. WASH HANDS AFTER HANDLING.**
- **Never remove the battery cap while the engine is running.**
- **Keep electrolyte away from eyes, hands and clothes. If you are spattered with it, wash it away completely with water immediately and get medical attention.**
- **Keep open sparks and flames away from the battery at all times. Hydrogen gas mixed with oxygen becomes very explosive.**
- **Wear eye protection and rubber gloves when working around battery.**

The factory-installed battery is of non-refillable type.
If the battery is weak, charge the battery or replace it with new one.

https://truckmanualshub.com/

IMPORTANT :

- Mishandling the battery shortens the service life and adds to maintenance costs.
  The original battery is maintenance free, but needs some servicing.
  If the battery is weak, the engine will be difficult to start and the lights will be dim. It is important to check the battery periodically.
- When exchanging an old battery for a new one, use battery of equal specification in table below.

Battery Type	Volts (V)	Reserve Capacity (min)	Cold Cranking Amps	Normal Charging Rate(A)
51R	12	80	430	4.5

(For non-accessible maintenance-free type batteries.)
Maintenance-free, non-accessible batteries are designed to eliminate the need to add water. Yet the volume of electrolyte above plates may eventually become depleted due to abnormal conditions such as high heat or improper regulator setting. Use a voltmeter to check the state of charge. (See reference chart below to determine if charging is necessary.)

Battery voltage	Reference state of charge
12.6	100% (Full charge)
12.4	75%
12.2	50%
12.0	25%
11.8	0%

◆ **How to read the indicator**

Check the battery condition by reading the indicator.

State of indicator display	
Green	Specific gravity of electrolyte and quality of electrolyte are both in good condition.
Black	Needs charging battery.
White	Needs replacing battery.

◆ **Battery Charging**

DANGER

To avoid serious injury or death:

- **When the battery is being activated, hydrogen and oxygen gases in the battery are extremely explosive. Keep open sparks and flames away from the battery at all times, especially when charging the battery.**

WARNING

To avoid serious injury or death:

- **When disconnecting the cable from the battery, start with the negative terminal first. When connecting the cable to the battery, start with the positive terminal first.**
- **Never check battery charge by placing a metal object across the posts.**
  Use a voltmeter or hydrometer.

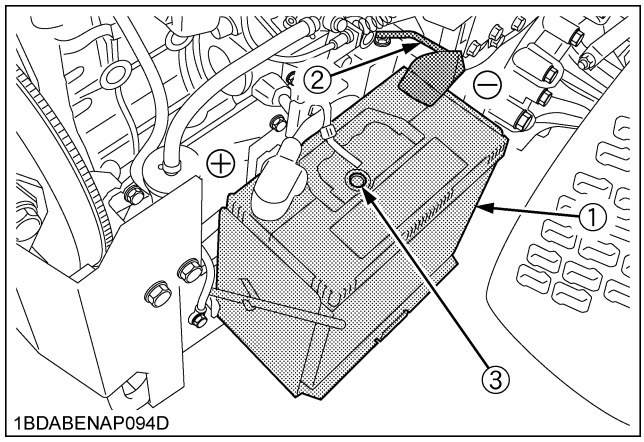

(1) Battery
(2) Ground cable
(3) Indicator
(+): Positive terminal
(-): Negative terminal

1. To slow charge the battery, connect the battery positive terminal to the charger positive terminal and the negative to the negative, then charge for at least 1 hour at 4.5 amperes.
2. A boost charge is only for emergencies. It will partially charge the battery at a high rate and in a short time.
   When using a boost-charged battery, it is necessary to recharge the battery as early as possible.
   Failure to do this will shorten the battery's service life.
3. When the specific gravity of electrolyte is between 1.27 and 1.29 the charging is completed.

◆ **Battery for storage**

1. When storing the machine for a long period, remove the battery from machine, adjust the electrolyte to the proper level and store in a dry place out of direct sunlight.
2. The battery self-discharges while it is stored.
   Recharge it once every 3 months in hot seasons and once every 6 months in cold seasons.

https://truckmanualshub.com/

EVERY 150 HOURS

■Changing Gear Box Oil

WARNING

To avoid serious injury or death:

- **Be sure to stop the engine and remove the key before changing the oil.**

1. To drain the used oil, remove the drain plug and oil inlet plug with gauge at the gear box and drain the oil completely into the oil pan.
2. After draining reinstall the drain plug.
3. Remove the oil level check plug.
4. Fill with the new oil up to the check plug port. (See "LUBRICANTS, FUEL AND COOLANT" in "PERIODIC SERVICE" section.)
5. After filling reinstall the check plug and oil inlet plug with gauge securely.

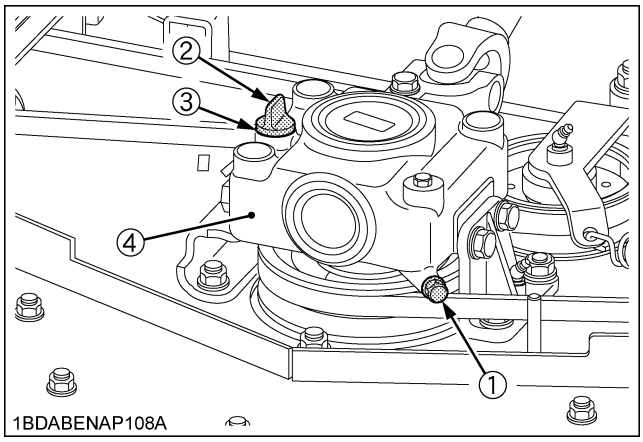

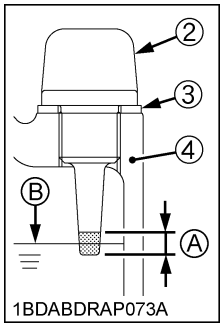

(1) Drain plug
(2) Oil inlet plug with gauge
(3) Seal washer
(4) Gear case
(A) Oil level is acceptable within this range.
(B) Oil level

EVERY 200 HOURS

■Changing Engine Oil

WARNING

To avoid serious injury or death:

- **Be sure to stop the engine and remove the key before changing the oil.**
- **Allow engine to cool down sufficiently; oil can be hot and may cause burns.**

1. To change the used oil, remove the drain plug at the bottom of the engine and drain the oil completely. The used oil can be drained out more easily if the engine is warm.
2. Fill with the new oil up to the upper notch on the dipstick.

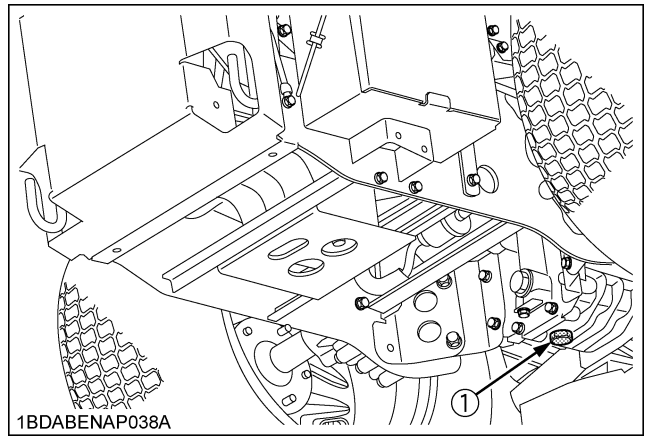

(1) Drain plug

3. To check the oil level. Remove the dipstick, wipe it clean, insert it and draw it out again. Check to see that the oil level is between the two marks.

https://truckmanualshub.com/

■Replacing Engine Oil Filter

WARNING

To avoid serious injury or death:

- **Be sure to stop the engine and remove the key before changing the oil and the oil filter.**
- **Allow engine to cool down sufficiently; oil can be hot and may cause burns.**

1. The oil filter must be changed every 200 service hours.
2. Apply a slight coat of oil onto the rubber gasket of new filter.
3. Tighten the filter quickly until it contacts the mounting surface. Tighten filter by hand an additional 1/2 turn only.
4. After the new filter has been replaced, the engine oil level normally lowers a little. Add engine oil to proper level. Check for oil leaks around filter gasket.

IMPORTANT :

- To prevent serious damage to the engine, replacement element of the recommended type must be used. Use only a genuine KUBOTA filter or its equivalent.

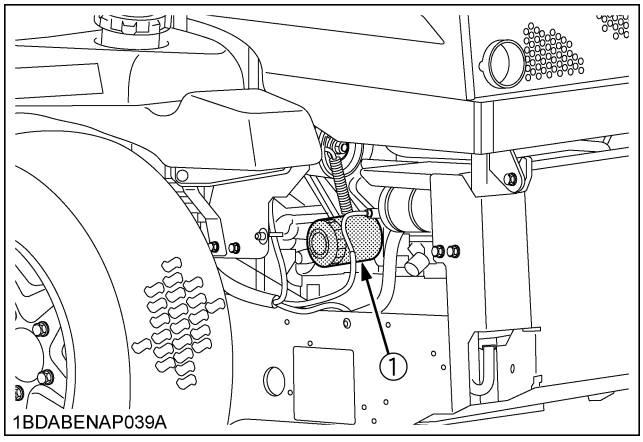

(1) Engine oil filter

■Replacing Transmission Oil Filter [HST]

WARNING

To avoid serious injury or death:

- **Be sure to stop the engine and remove the key before changing the oil filter.**
- **Allow transmission case to cool down sufficiently; oil can be hot and may cause burns.**

1. The oil filter must be changed every 200 service hours.

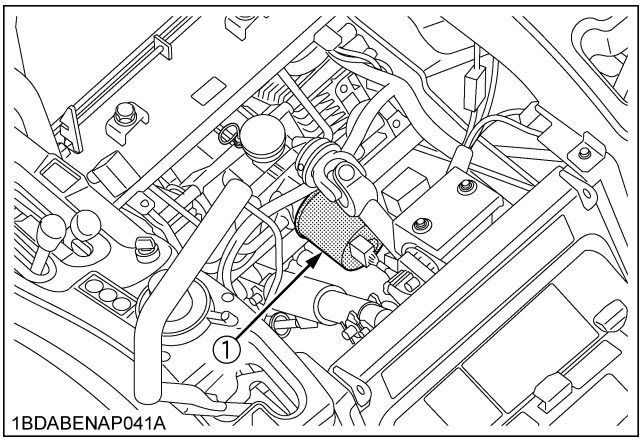

(1) Transmission oil filter [HST]

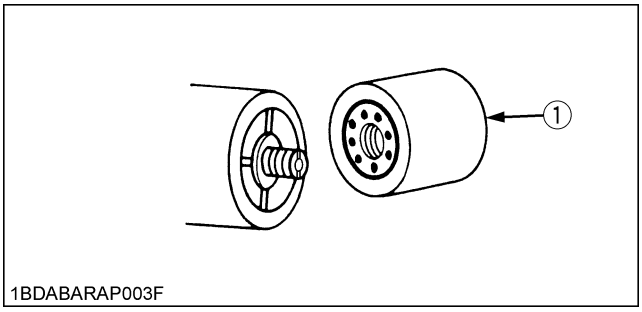

(1) Transmission oil filter [HST]

2. Place an oil pan underneath the oil filter. (Do not drain oil.)
3. Remove the oil filter by using the filter wrench.
4. Apply a slight coat of oil onto the filter gasket.
5. Tighten the filter quickly until it contacts the mounting surface. Tighten filter by hand an additional 1/2 turn only.
6. After the new filter has been replaced, the transmission fluid level normally lowers a little. Add fluid to proper level. Check for oil leaks around filter gasket.

IMPORTANT :

- To prevent serious damage or premature failure to the hydraulic system, use only a KUBOTA genuine filter.

https://truckmanualshub.com/

■Adjusting Front Axle Pivot

If the front axle pivot pin adjustment is not correct, vibration in the front wheel can occur.

◆ **Check and Adjustment of the Front Axle End Play**

1. Lift up and securely block the front of the machine.
2. Measure the clearance (L) between the front axle (4) and front axle support (3).
3. If the measurement exceeds the allowable limit, adjust the nut (1).

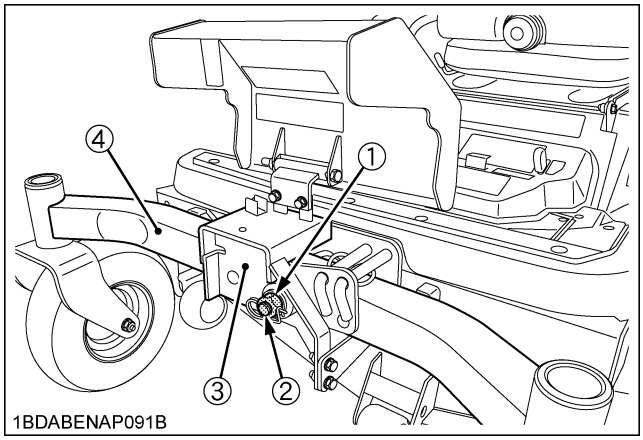

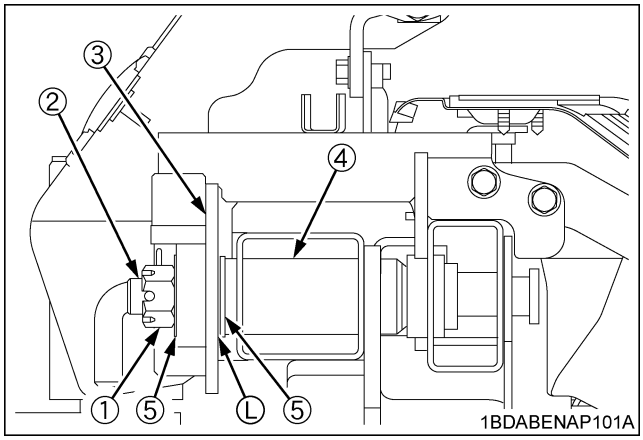

(1) Nut
(2) Center pin
(3) Front axle support
(4) Front axle
(5) Plain washer
(L) Front axle end play

NOTE :

- When fastening the center pin (2), tighten the nut so that the front axle maybe oscillated smoothly by hand.

Front axle end play (L)	Factory spec.	0 to 0.2 mm (0 to 0.008 in.)
	Allowable limit	0.5 mm (0.02 in.)

EVERY 400 HOURS

■Changing Transmission Fluid and Rear Axle Gear Case Oil (RH and LH)

WARNING

To avoid serious injury or death:

- **Be sure to stop the engine and remove the key before changing or checking the oil.**
- **Allow transmission case to cool down sufficiently; oil can be hot and may cause burns.**

The fluid in the transmission case is also used for the hydrostatic drive system.

1. To drain the transmission oil, place oil pan underneath the transmission case and the rear axle gear case (RH&LH) and remove the drain plug at the bottom of the transmission case and the rear axle gear case (RH&LH).
2. After draining, reinstall the drain plugs.
3. Fill with UDT or SUPER UDT hydrostatic transmission fluid or its equivalent up to the upper line of the gauge.

IMPORTANT :

- It takes time to send the oil from the transmission case to the rear axle case (RH&LH).
  Pour the regulated amount of oil slowly.

4. After running the engine for a few minutes, stop it and check the oil level again; add oil to the prescribed level.

IMPORTANT :

- Operate only at low rpms immediately after changing the transmission fluid and filter.
  Keep the engine at medium speed for a few minutes to insure proper lubrication of all parts so there is no damage to transmission.

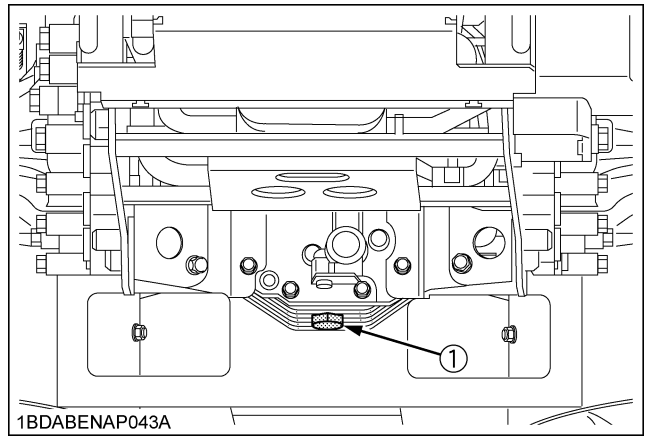

(1) Drain plug

https://truckmanualshub.com/

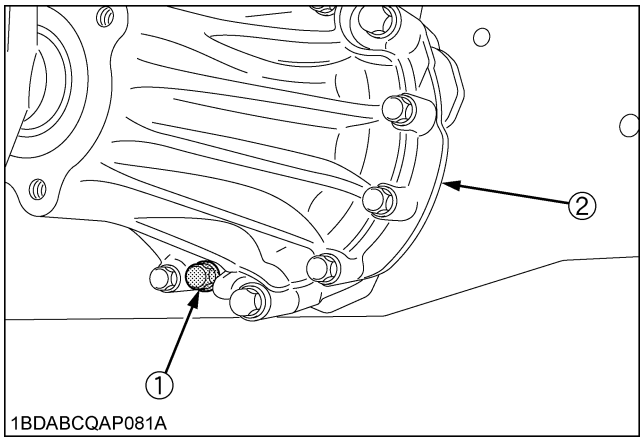

(1) Drain plug
(2) Rear axle gear case LH

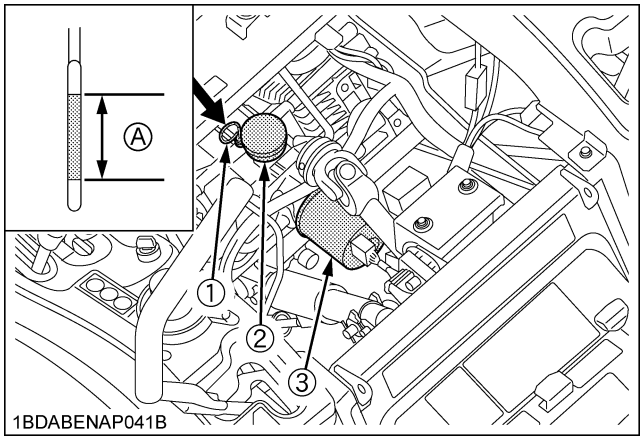

(1) Oil level dipstick
(2) Oil plug and breather cup
(3) Transmission oil filter
(A) Oil level is acceptable within this range.

■Cleaning Transmission Strainer

When changing the transmission fluid, disassemble and rinse the strainer with nonflammable solvent to completely clean off filings.
Check O-rings, replace if damaged, cracked or hardened.
When reassembling be careful not to damage the parts.

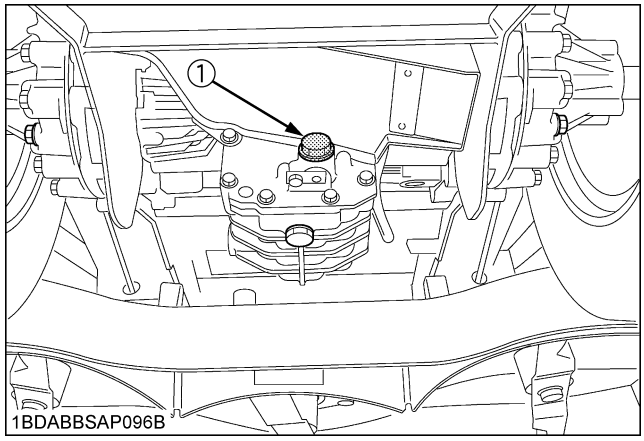

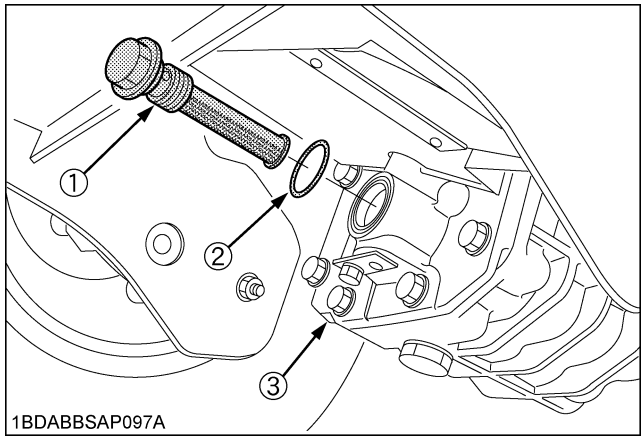

(1) Strainer
(2) O-ring
(3) Center case cover

NOTE :
- Since the fine filings in the oil can damage the precision component parts of the hydraulic system, the end of the suction line is provided with an oil strainer.

■Replacing Fuel Filter

Consult your local KUBOTA Dealer for this service.

https://truckmanualshub.com/

EVERY 1000 HOURS or EVERY 1 YEAR

Replace every 1000 hours or every 1 year whichever comes faster.

■Replacing Air Cleaner Primary Element and Secondary Element

(See "Cleaning Air Cleaner Primary Element" in "EVERY 100 HOURS" in "MAINTENANCE" section.)

IMPORTANT :

- To prevent serious damage to the engine, use only a KUBOTA genuine filter.

[How to remove the secondary element]

1. While turning slightly, pull out the secondary element.

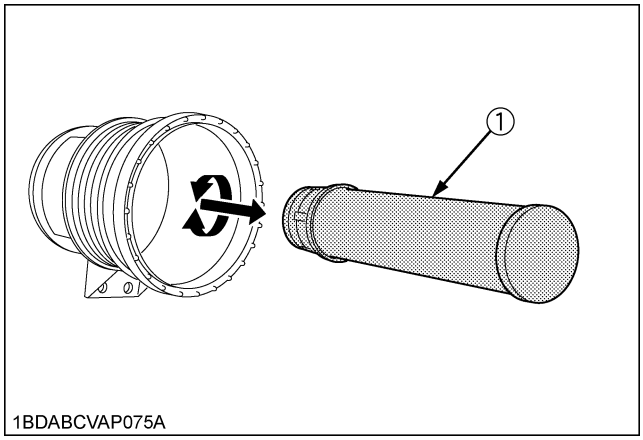

1BDABCVAP075A

(1) Secondary element

EVERY 1500 HOURS

■Checking Fuel Injection Nozzle (Injection Pressure)

Consult your local KUBOTA Dealer for this service.

EVERY 2000 HOURS or EVERY 2 YEARS

Be sure to do the following service once every 2000 hours or every 2 years whichever comes faster.

■Flushing Cooling System and Changing Coolant

WARNING

To avoid serious injury or death:

- **Do not remove the radiator cap when the engine is hot. Then loosen cap slightly to the stop to relieve any excess pressure before removing cap completely.**

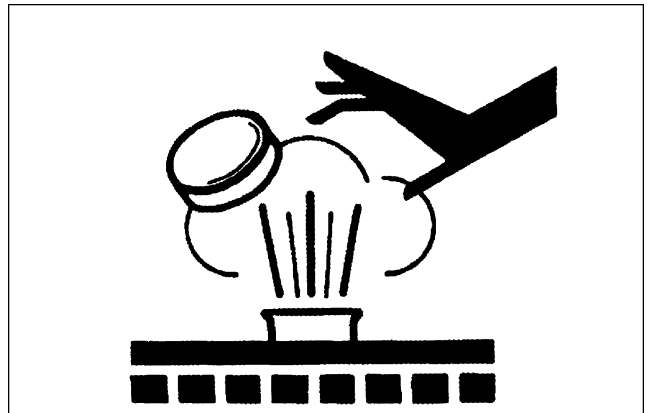

1ARAEABAP016A

1. Stop the engine and let cool down.
2. To drain the coolant, open the radiator drain valve and remove the radiator drain plug and remove radiator cap. The radiator cap must be removed to completely drain the coolant. (See the following figure.)
3. After all coolant is drained, close the drain valve and install the drain plug.
4. Fill with clean water and cooling system cleaner.
5. Follow directions of the cleaner instruction.
6. After flushing, fill with clean water and anti-freeze until the coolant level is just below the fill port on the radiator.
   Install the radiator cap securely.
7. Fill with coolant up to the "FULL" mark on the recovery tank.
8. Start and operate the engine for a few minutes.
9. Stop the engine and let cool.
10. Check coolant level of recovery tank, add coolant if necessary.

https://truckmanualshub.com/

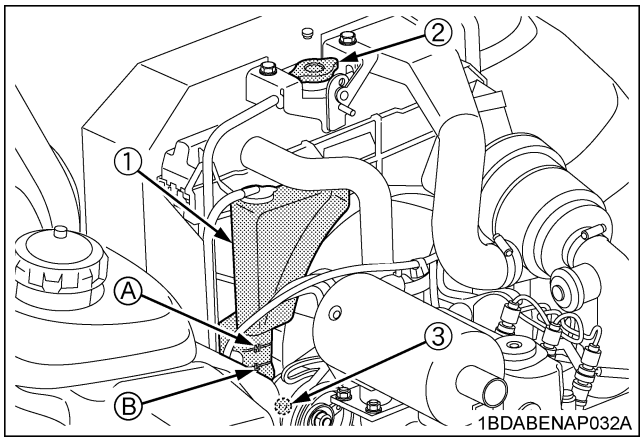

(1) Recovery tank
(2) Radiator cap
(3) Drain plug
(A) "FULL"
(B) "LOW"

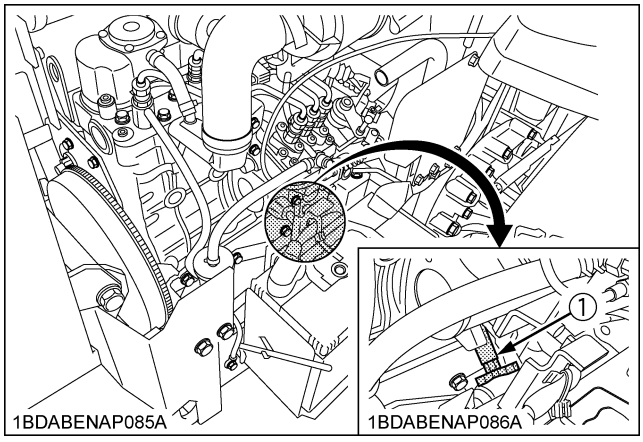

(1) Drain valve

IMPORTANT :
- Do not start engine without coolant.
- Start engine with the hood closed.
- Use clean, distilled water and anti-freeze to fill the radiator and recovery tank.
- When the anti-freeze is mixed with water, the anti-freeze mixing ratio must be less than 50%.
- Securely tighten radiator cap. If the cap is loose or improperly fitted, water may leak out and the engine could overheat.

■Anti-freeze

WARNING

To avoid serious injury or death:
- **When using anti-freeze, put on some protection such as rubber gloves. (Anti-freeze contains poison.)**
- **If someone drank anti-freeze, seek immediate medical help. Do NOT make a person throw up unless told to do so by poison control or a health care professional. Use standard first aid and CPR for signs of shock or cardiac arrest. Call your local Poison Control Center or your local emergency number for further assistance.**
- **When anti-freeze comes in contact with the skin or clothing, wash it off immediately.**
- **Do not mix different types of Anti-freeze. The mixture can produce chemical reaction causing harmful substances.**
- **Anti-freeze is extremely flammable and explosive under certain conditions. Keep fire and children away from anti-freeze.**
- **When draining fluids from the engine, place some container underneath the engine body.**
- **Do not pour waste onto the ground, down a drain, or into any water source.**

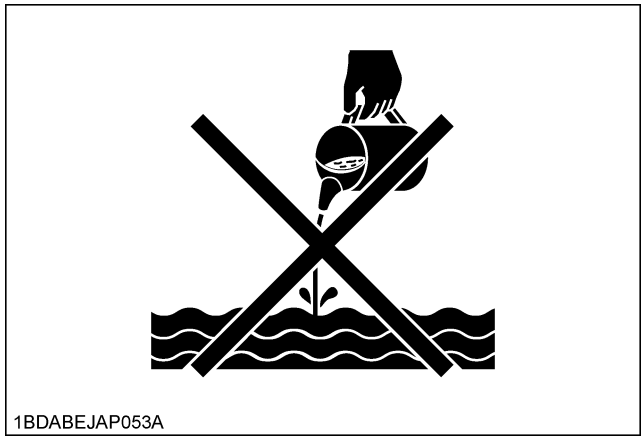

- **Also, observe the relevant environmental protection regulations when disposing of anti-freeze.**

Always use a 50/50 mix of long-life coolant and clean soft water in KUBOTA engines.
Consult your local KUBOTA dealer concerning coolant for extreme conditions.

1. Long-life coolant (hereafter LLC) comes in several types. Use ethylene glycol (EG) type for this engine.
2. Before employing LLC-mixed cooling water, fill the radiator with fresh water and empty it again.
   Repeat this procedure 2 or 3 times to clean up the inside.

https://truckmanualshub.com/

3. Mixing the LLC
   Premix 50% LLC with 50% clean soft water. When mixing, stir it up well, and then fill into the radiator.
4. The procedure for the mixing of water and anti-freeze differs according to the make of the anti-freeze and the ambient temperature. Refer to SAE J1034 standard, more specifically also to SAE J814c.

IMPORTANT :
- When mixing the anti-freeze with water, the anti-freeze mixing ratio is 50%.

Vol % Anti-freeze	Freezing Point		Boiling Point*	
	℃	℉	℃	℉
50	-37	-34	108	226

* At 1.013 x 10^5Pa (760 mmHg) pressure (atmospheric).

A higher boiling point is obtained by using a radiator pressure cap which permits the development of pressure within the cooling system.

5. Adding the LLC
   (1) Add only water if the coolant level reduces in the cooling system by evaporation.
   (2) If there is a mixture leak, add the LLC of the same manufacturer and type in the mixing ratio 50%.

   * Never add any long-life coolant of different manufacturer. (Different brands may have different additive components, and the engine may fail to perform as specified.)

6. When the LLC is mixed, do not employ any radiator cleaning agent. The LLC contains anti-corrosive agent. If mixed with the cleaning agent, sludge may build up, adversely affecting the engine parts.
7. Kubota's genuine long-life coolant has a service life of 2 years. Be sure to change the coolant every 2000 hours or every 2 years whichever comes faster.

NOTE :
- The above data represent industry standards that necessitate a minimum glycol content in the concentrated anti-freeze.

EVERY 3000 HOURS

■Checking Injection Pump

Consult your local KUBOTA Dealer for this service.

EVERY 1 YEAR

■Checking Fuel Lines

If you feel you are unable to make the following service correctly and safely, contact your local KUBOTA Dealer.

(See "Checking Fuel Filter" in "EVERY 100 HOURS" in "MAINTENANCE" section.)

■Checking Radiator Hose and Clamp

If you feel you are unable to make the following service correctly and safely, contact your local KUBOTA Dealer.

WARNING

To avoid serious injury or death:
- **Be sure to stop the engine and remove the key before checking radiator hose and clamps.**

1. If hose clamps are loose or water leaks, tighten clamps securely.
2. Replace hoses and tighten hose clamps securely. If radiator hoses are swollen, hardened or cracked, then replace them immediately.

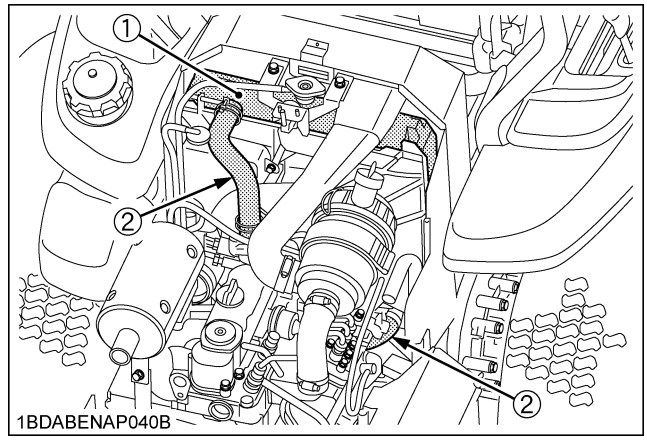

(1) Radiator core
(2) Radiator hose

https://truckmanualshub.com/

■Checking Hydraulic Hose

If you feel you are unable to make the following service correctly and safely, contact your local KUBOTA Dealer.

WARNING

To avoid serious injury or death:

- **Be sure to stop the engine and remove the key before checking and replacing the hydraulic hose.**
- **Allow the transmission case to cool down sufficiently; oil can be hot and may cause burns.**
- **Escaping hydraulic fluid under pressure has sufficient force to penetrate the skin causing serious personal injury. Before disconnecting lines, be sure to relieve all pressure. Before applying pressure to the system, make sure all connections are tight and that lines, pipes, and hoses are not damaged.**

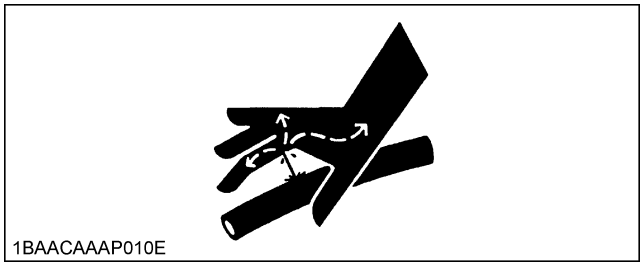

1. Check to see that all lines and hose clamps are tight and not damaged.
2. If hoses and clamps are found worn or damaged, replace or repair them at once.

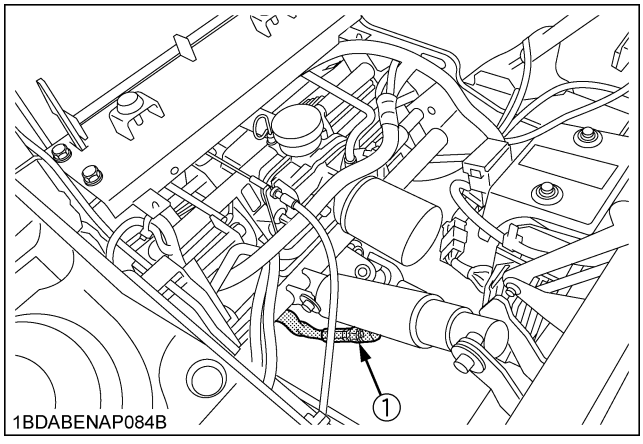

(1) Mower lift cylinder hose

■Checking Intake Air Line

If you feel you are unable to make the following service correctly and safely, contact your local KUBOTA Dealer.

1. Check to see that hoses and hose clamps are tight and not damaged.
2. If hoses and clamps are found worn or damaged, replace or repair them at once.

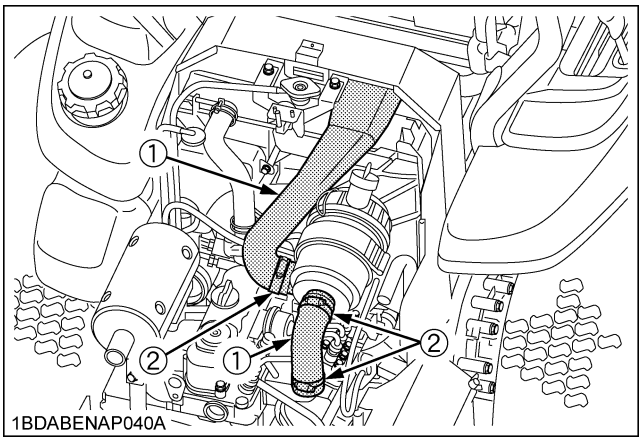

(1) Hose
(2) Clamp

■Checking Engine Breather Hose

Consult your local KUBOTA Dealer for this service.

■Checking Mower Gear Box Oil Seal

Consult your local KUBOTA Dealer for this service.

https://truckmanualshub.com/

EVERY 4 YEARS

■Replacing Hydraulic Hose

Consult your local KUBOTA Dealer for this service.

■Replacing Fuel Lines

Consult your local KUBOTA Dealer for this service.

■Replacing Engine Breather Hose

Consult your local KUBOTA Dealer for this service.

■Replacing Radiator Hose

If you feel you are unable to make the following service correctly and safely, contact your local KUBOTA Dealer.

See "Checking Radiator Hose and Clamp" in "EVERY 1 YEAR" in "MAINTENANCE" section.

■Replacing Mower Gear Box Oil-Seal

Consult your local KUBOTA Dealer for this service.

■Replacing Intake Air Line

If you feel you are unable to make the following service correctly and safely, contact your local KUBOTA Dealer.

See "Checking Intake Air Line" in "EVERY 1 YEAR" in "MAINTENANCE" section.

SERVICE AS REQUIRED

■Replacing Fuses

1. Raise the operator's seat.
2. Remove the blown fuse.
3. Place a new fuse of the same capacity in position.

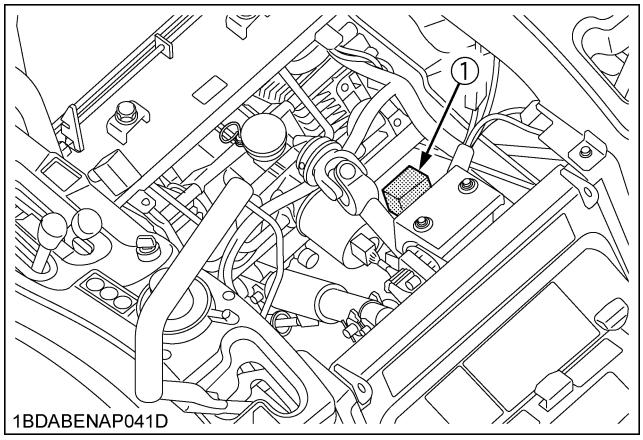

(1) Fuse location

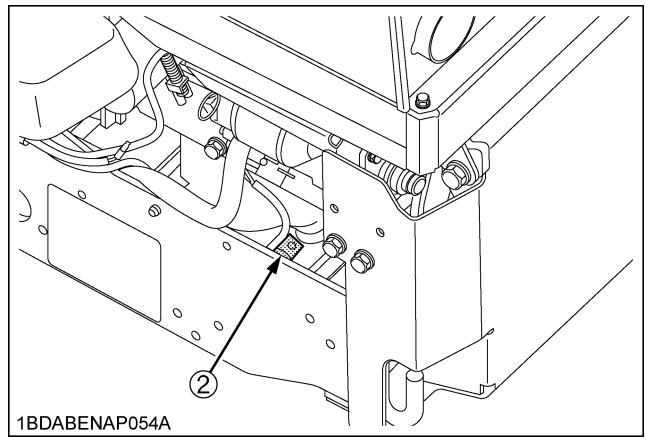

(2) Slow blow fuse

IMPORTANT :

- If the new fuse happens to blow out within a short time, contact your dealer for inspection and repair. Never "jump" the fuse with wire or foil, or install a larger capacity fuse than is recommended.

◆ **Protected circuit**

FUSE NO.	CAPACITY (A)	Protected circuit
(1)	20 A	Engine stop
	15 A	Charge system
	15 A	Main system
	15 A	Aux. outlet
	10 A	Control system
	(20 A)	*(Work light)
(2)	Slow blow fuse 40 A	Check circuit against wrong battery connection

*Option: The fuse must be in only when the work light is attached.

■Bleeding Fuel System

Air must be removed:

1. When the fuel filter or lines are removed.
2. When tank is completely empty.
3. After the machine has not been used for a long period of time.

◆ **Bleeding procedure is as follows:**

1. Fill the fuel tank with fuel.
2. Start the engine and run for about 30 seconds, and then stop the engine.

https://truckmanualshub.com/

■Checking and Replacing Blade

WARNING

To avoid serious injury or death:

- **Be sure to stop the engine and remove the key.**
- **Blades may be sharp. When you handle blades, wear heavy gloves or wrap end of blade with a rag.**

NOTE :

- Before checking or replacing the blade, wipe grass and mud off the top and inside of the mower.
  Especially clean up the inside of the belt cover, because otherwise the belt life will be reduced.

◆ Checking

The blade cutting edges must be kept sharp at all times. Sharpen the cutting edges, if they resemble blade (B). Replace the blades if they appear similar to blade (C).

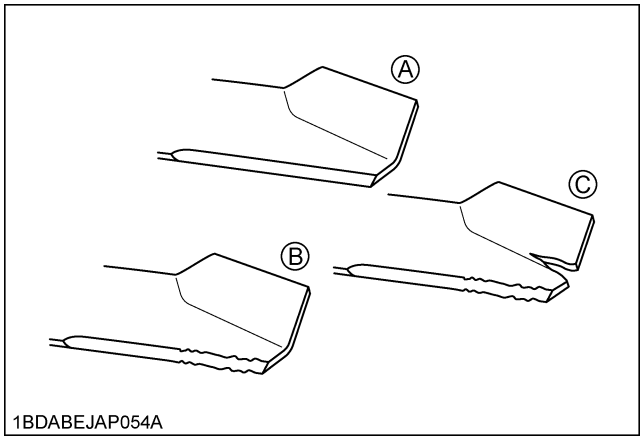

(A) New blade
(B) Worn blade
(C) Cracked blade

◆ Replacing

1. Dismounting the mower deck.
   (See "DISMOUNTING THE MOWER DECK" in "MOWER MOUNTING" section.)
   Then turn it over to expose the blades.
2. Wedge a block of wood between the blade and mower housing or use a box wrench over the pulley nut to prevent the spindle from rotating while removing the blade bolts; loosen the blade bolt as illustrated.

IMPORTANT :

- Use the proper metric size box or socket wrench to tighten or loosen the blade mounting bolt.

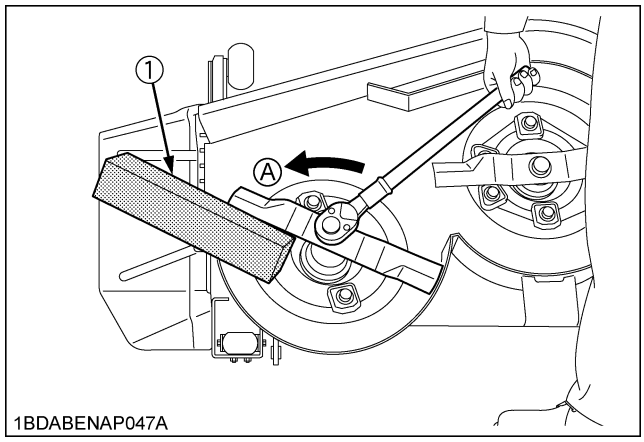

(1) Block *(A) "LOOSEN"*

3. To sharpen the blades yourself, clamp the blade securely in a vise.
   Use a large mill file and file along the original bevel until sharp.
4. To check the blade for balance, place a small rod through the center hole. If the blade is not balanced, file the heavy side of the blade until balance is achieved.
5. Pass the spline boss through the blade and 2 cup washers, and tighten the bolt.

NOTE :

- Make sure that the cup washer is not flattened out or worn; this cause blade to slip excessively.
  Replace the 2 cup washers if either is damaged.

[RCK60P]

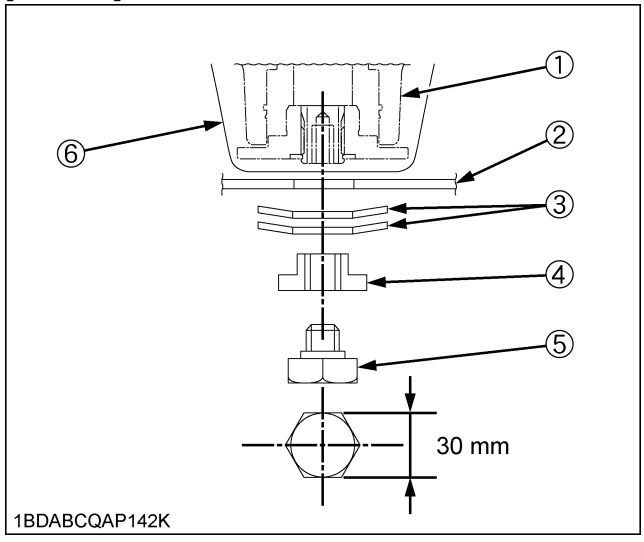

(1) Spindle holder
(2) Blade
(3) 2-Cup washers
(4) Lock washer
(5) Bolt
(6) Spindle guard

https://truckmanualshub.com/

[RCK48P, RCK54P]

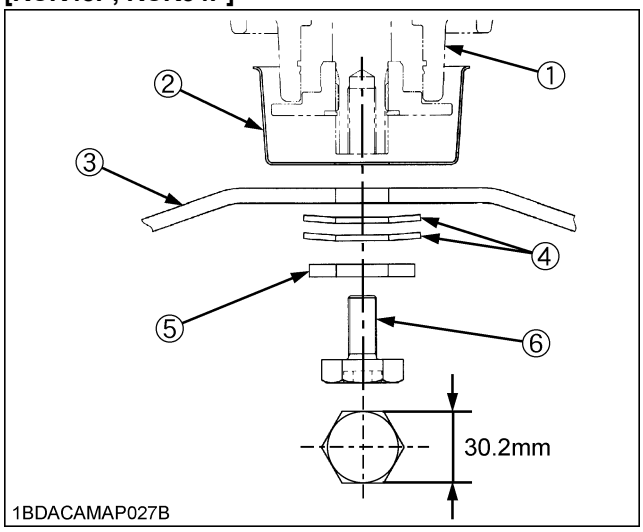

(1) Spindle holder
(2) Spindle guard
(3) Blade
(4) 2-Cup washer
(5) Lock washer
(6) Bolt

IMPORTANT :
- Tighten the three blade bolts to 102.9 to 117.6 N-m (10.5 to 12 kgf-m, 75.9 to 87 lbf-ft) of torque.
- The blade bolts have Right hand threads. Turn them counterclockwise to loosen.
- To prolong the service life of the blades, reposition them as shown in the figure below periodically.

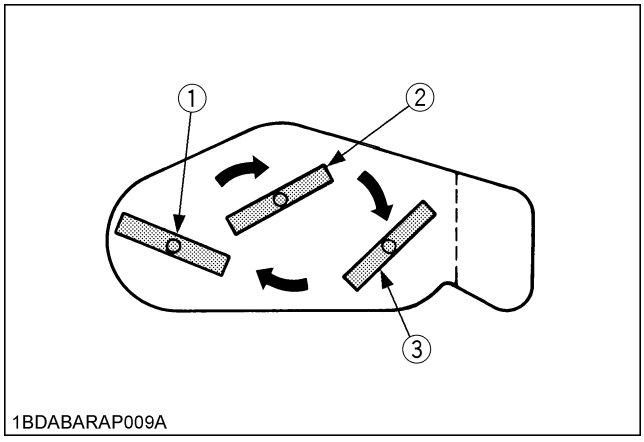

(1) LH blade
(2) Center blade
(3) RH blade

■Replacing Mower Belt

1. Remove the mower deck from the machine according to the procedure "DISMOUNTING THE MOWER DECK".
2. Remove the left and right hand shield from the mower deck.
3. Clean around the gear box.
4. Remove the belt from the tension pulley.
5. Remove the right hand bracket which mounts the gear box to the mower deck and slip the belt over the top of the gear box.
6. To install a new belt, reverse the above procedure.

NOTE :
- Tighten bracket bolts securely 77.5 to 90.2 N-m (8.0 to 9.2 kgf-m, 57.1 to 66.5 lbf-ft).

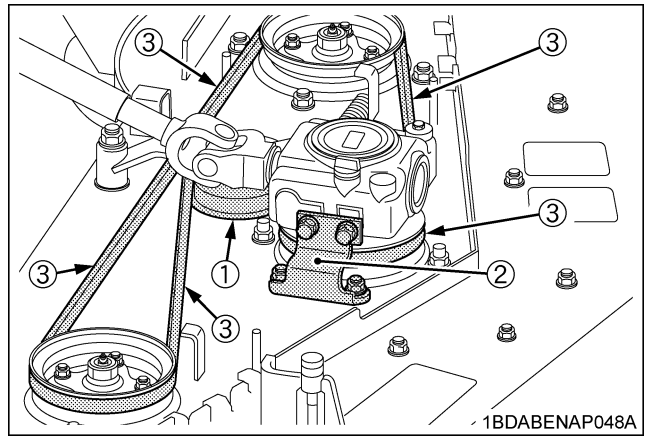

(1) Tension pulley
(2) Bracket (RH)
(3) Belt

https://truckmanualshub.com/

ADJUSTMENT

MOTION CONTROL LEVER

WARNING

To avoid serious injury or death:

- **Park the machine on a firm and level surface.**
- **If it is necessary to run the engine in an enclosed area, use a gas tight exhaust pipe extension to remove the fumes.**
- **Always try to work in a well-ventilated area.**
- **Lift up and secure with jack stands or blocking the rear of the machine, do not run the machine while adjusting.**
  Remove rear wheels.
- **Do not adjust only one of the following adjustments; exclude "MOTION CONTROL LEVER ALIGNMENT".**
  They are interlinked.
- **If you feel you are unable to make the following adjustments correctly and safely, please contact your local KUBOTA Dealer.**

IMPORTANT :

- Right and left motion control levers can be adjusted independently.

■HST NEUTRAL

1. Lift up and secure with jack stands or blocking the rear of the machine frame.
2. Remove both rear wheels.
3. Set the engine speed maximum.
4. Place the motion control lever in the "NEUTRAL LOCK" position.
5. After forward and backward operation, tighten the guide control at the position when wheel axis stops.
6. Adjust the rod length L of the damper 28 to 30 mm (1.1 to 1.2 in.) and tighten.

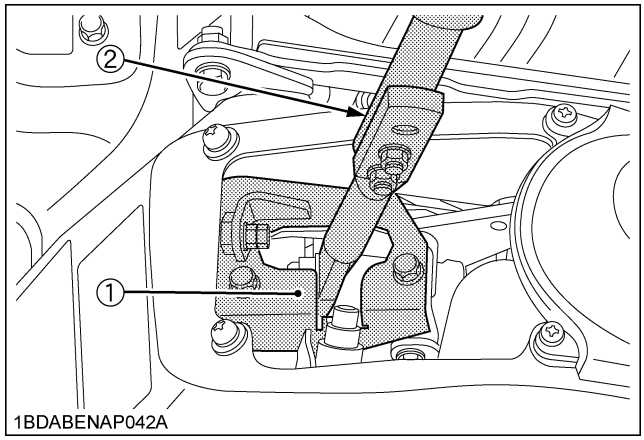

(1) Guide control
(2) Motion control lever

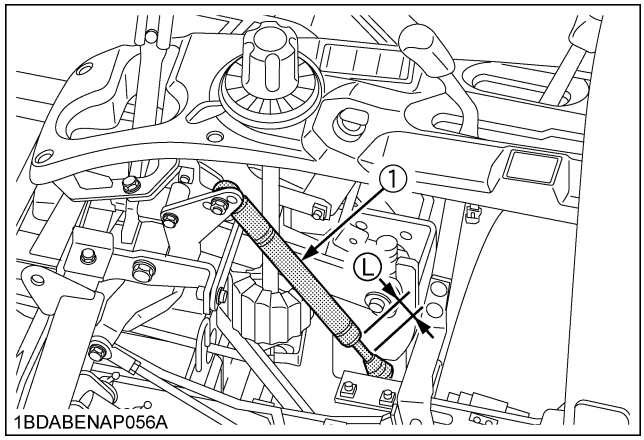

(1) Damper *(L) 28 to 30 mm (1.1 to 1.2 in.)*

■MAXIMUM SPEED (FORWARD)

Consult your local KUBOTA Dealer for this service.

https://truckmanualshub.com/

■MOTION CONTROL LEVER OPERATING FORCE

The operating force of the motion control levers can be adjusted to one of 3 levels depending on operator preference.

IMPORTANT :
- Adjust the dampers after adjusting HST neutral.
- Adjusting the motion control lever force will affect the maneuverability.
- For adjustment of LH and RH, use the same hole location.

1. Open the lever guide. (See "HOW TO OPEN THE LEVER GUIDE" in "PERIODIC SERVICE" section.)
2. Change the front side of the damper to the desired hole location.
   Tighten the front side damper nut.

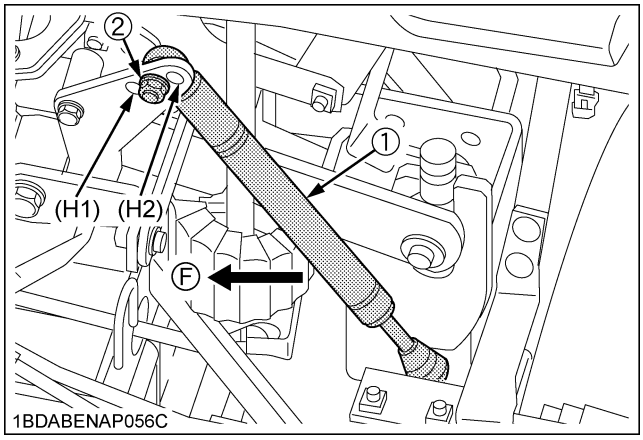

(1) Damper
(2) Damper nut
(F) Front
(H1) Hole for lighter setting
(H2) Hole for heavier setting

3. Install the lever guide. (See "HOW TO OPEN THE LEVER GUIDE" in "PERIODIC SERVICE" section.)

■MOTION CONTROL LEVER ALIGNMENT

◆ **Check the alignment**

Check the gap and space between the levers, at the maximum forward position.

Recommendation	Gap: 0 to 4 mm (0 to 0.16 in.)

If positions of the control levers are unequal, an adjustment is necessary.

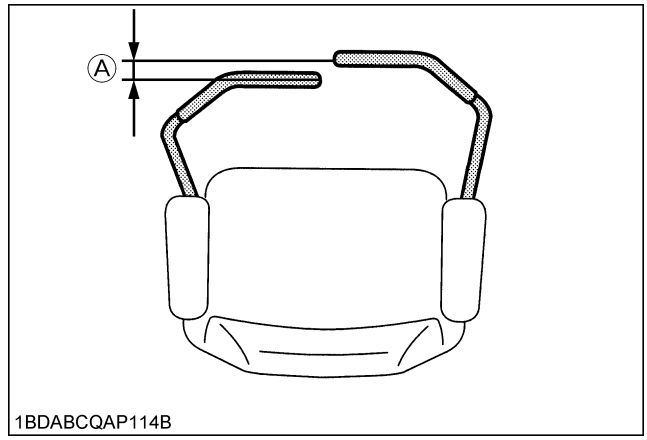

(A) "GAP"

WARNING

To avoid serious injury or death:
- **Park the machine on a firm and level surface.**
- **Stop the engine, remove the key and apply the parking brake.**

◆ **Aligning the control levers**

Lever position (High or Low)

1. Remove the nut and select the motion control lever position, high or low.
2. Tighten the nut.

https://truckmanualshub.com/

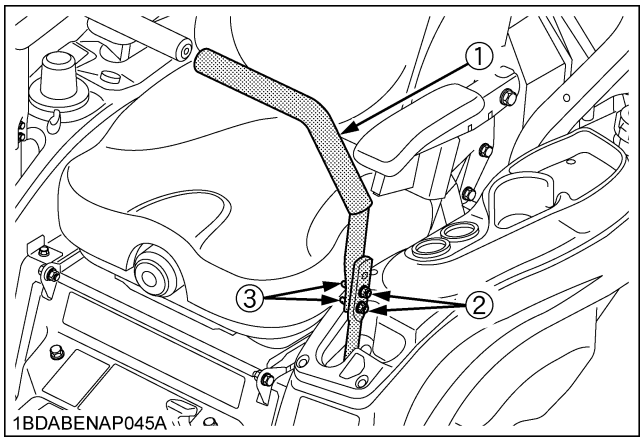

(1) Motion control lever
(2) Nut, washer
(3) Bolt

Lever alignment (Right and Left)

3. Loosen the nut.
4. Slide both levers forward or rearward to desired position within tab slots until levers are aligned.
5. Tighten the nut.

NOTE :

- If the ends of the levers strike against each other while in the "NEUTRAL" position, move the levers outward to the "NEUTRAL LOCK" position and carefully bend them outward.
  Move them back to the "NEUTRAL" position and check for the recommended space.

MOWER DECK LEVEL

■ANTI-SCALP ROLLERS

WARNING

To avoid serious injury or death:

- **Park the machine on a firm and level surface.**
- **Apply the parking brake.**
- **Stop the engine and remove the key.**
- **Wait for all moving parts to stop.**

IMPORTANT :

- The flattest cut can be achieved by having the anti-scalp rollers adjusted off the ground.
  Check anti-scalp roller adjustments each time the mower deck cutting height is changed.
  It is recommended that all the anti-scalp rollers be kept off the ground to minimize scuffing.

1. Check the machine tire pressure.
   Inflate tires to the correct pressure. (See "TIRES AND WHEELS" section.)
2. Start the engine.
3. Raise up the mower deck to the transport position. (Also the top end of the lift.)
4. Turn the cutting height control dial to adjust height.
5. Lower the mower deck.

Front side anti-scalp roller

6. Adjust the height of the front side anti-scalp roller to one of three positions to approximately 19 mm (3/4 in.) between rollers and the ground.
   Adjust both side rollers to the same height.

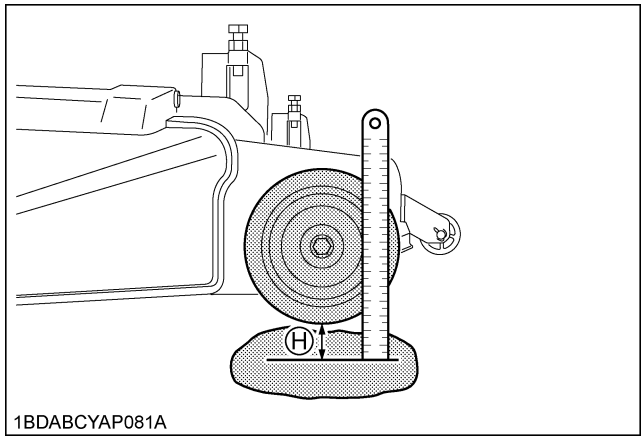

(H) 19 mm (3/4 in.)

Rear side anti-scalp roller

7. Adjust the height of the rear side anti-scalp roller to one of three positions to approximately 19 mm (3/4 in.) between rollers and the ground.
   Adjust both side rollers to the same height.

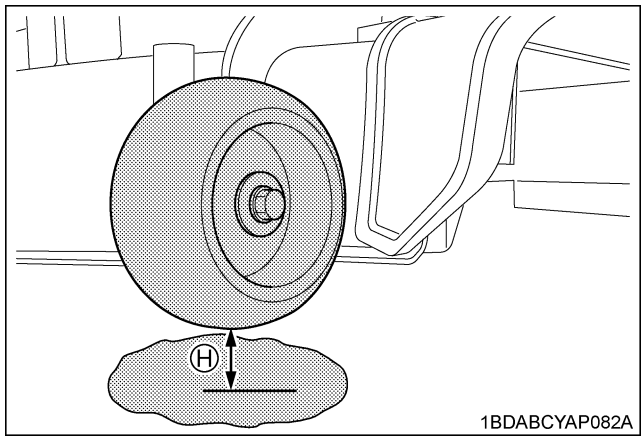

(H) 19 mm (3/4 in.)

https://truckmanualshub.com/

■LEVEL MOWER DECK (Side-to-Side)

WARNING

To avoid serious injury or death:
- **Park the machine on a firm and level surface.**
- **Apply the parking brake.**
- **Disengage PTO (OFF).**
- **Stop the engine, remove the key and remove the mower u-joint while checking or adjusting the level of the mower deck.**

IMPORTANT :
- Check the machine tire pressure.
  Inflate tires to the correct pressure.
  (See "TIRES AND WHEELS" section.)

◆ Checking level (Side-to-Side)

NOTE :
- Mower deck anti-scalp rollers must not contact the ground.

1. Raise the mower deck to the transport position. (Also the top end).
2. Turn the cutting height set dial to the 3 in. cutting height position.
3. Lower the mower deck.
4. Position the right mower blade in the Side-to-Side position.
5. Measure from outside blade tip to the level surface with a short ruler or leveling gauge.

Reference

Height of the blade at the concrete surface	76 mm (3 in.)

NOTE :
- There is a difference of the blade height between on the concrete and ground.

6. Check that the left side blade is same height.
   The difference between both measurements must be less than 3 mm (0.12 in.).
7. If the Side-to-Side adjustment is not within the given tolerance, adjustment necessary.

Side-to-Side adjustment	Less than 3 mm (0.12 in.)

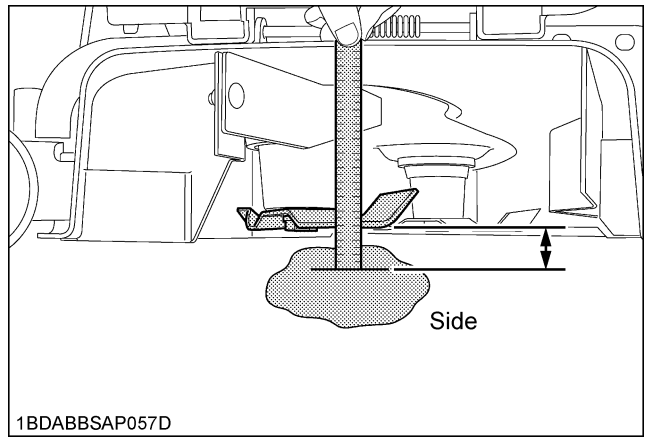

◆ Adjusting level (Side-to-Side)

1. Raise up the mower deck to the transport position. (Also the top end).
2. Turn the cutting height set dial to the 3 in. cutting height position.
3. Place 51 mm (2 in.) height wood blocks under each side of the mower deck.
   Anti-scalp rollers must not rest on the wood block.
4. Lower the mower deck.
5. Position mower blade in the Side-to-Side position.
6. Loosen the lock nuts of the right side of the machine.
7. Adjust the cutting height fine tuning bolts to set 76 mm (3 in.) height.
   Front and rear side bolts must be adjusted.
8. Lock the nuts.
9. Adjust the left side equally.
10. Check the side-to-side level and if it is not level, adjustment necessary.

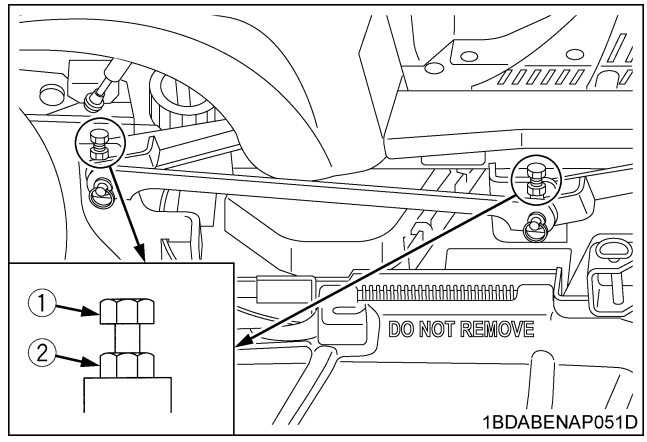

(1) Cutting height fine tuning bolt
(2) Lock nut

https://truckmanualshub.com/

■LEVEL MOWER DECK (Front-to-Rear)

WARNING

To avoid serious injury or death:
- **Park the machine on a firm and level surface.**
- **Engage the parking brake.**
- **Disengage PTO.**
- **Stop the engine, remove the key and remove the mower u-joint while checking or adjusting the level of the mower deck.**

IMPORTANT :
- Check the machine tire pressure.
  Inflate tires to the correct pressure.
  (See "TIRES AND WHEELS" section.)

◆ **Checking level (Front-to-Rear)**

NOTE :
- Mower deck anti-scalp rollers must not contact the ground.

1. Raise the mower deck to the transport position. (Also the top end).
2. Turn the cutting height set dial to the 3 in. cutting height position.
3. Lower the mower deck.
4. Position the right mower blade in the Front-to-Rear position.
5. Measure from the right front blade tip to the level surface with a short ruler or leveling gauge.
6. Turn the blade 180° and measure from right rear blade tip to the level surface.
7. Check that the left side blade has the same dimension.
   The difference between both measurements must be less than 6 mm (0.24 in.).
   Front side must be lower than rear side.
8. If the Front-to-Rear adjustment is not within the given tolerance, adjustment is necessary.

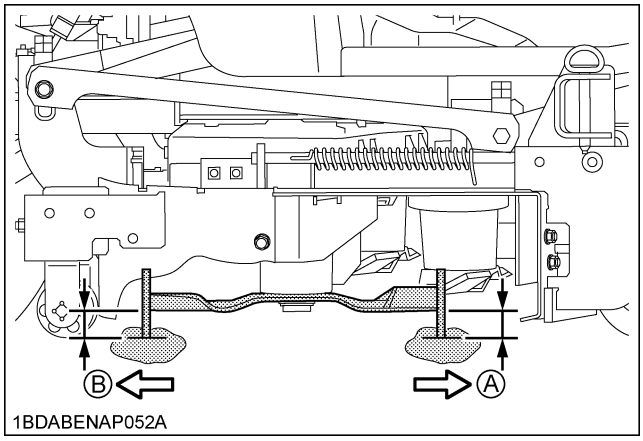

(A) Front
(B) Rear

Front-to-Rear adjustment	Less than 6 mm (0.24 in.) Front side must be lower than Rear side.

◆ **Adjusting level (Front-to-Rear)**
1. Raise up the mower deck to the transport position. (Also the top end).
2. Turn the cutting height set dial to the 3 in. cutting height position.
3. Place 51 mm (2 in.) height wood blocks under each side of the mower deck.
   Anti-scalp rollers must not rest on the wood block.
4. Lower the mower deck.
5. Loosen the lock nuts of the front side of the machine.
6. Adjust the cutting height fine tuning bolts to set 76 mm (3 in.) height.
   Both front side bolts must be adjusted.
7. Lock the nuts.
8. Adjust the other side equally.

IMPORTANT :
- The difference between both measurements must be less than 6 mm (0.24 in.).
  Front side must be lower than rear side.

9. Check the front-to-rear level and if it is not level, adjustment necessary.

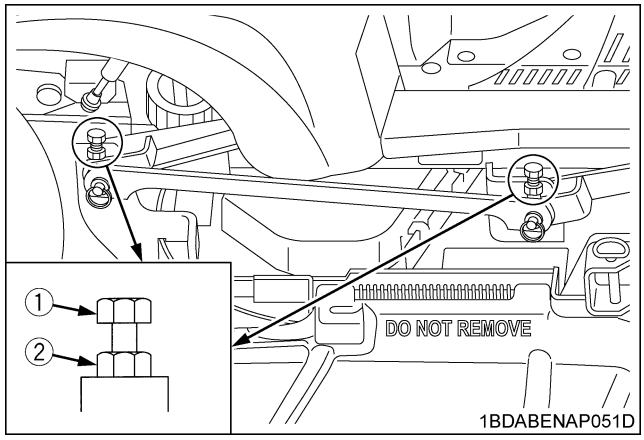

(1) Cutting height fine tuning bolt
(2) Lock nut

https://truckmanualshub.com/

GENERAL TORQUE SPECIFICATION

American standard cap screws with UNC or UNF threads				Metric cap screws			
SAE grade No.		GR.5	GR.8	Property class		Class 8.8	Class 10.9
5/16	(lbf-ft)	17 - 20.5	24 - 29	M6	(lbf-ft)	7.2 - 8.3	
	(N-m)	23.1 - 27.8	32.5 - 39.3		(N-m)	9.81 - 11.3	
	(kgf-m)	2.35 - 2.84	3.31 - 4.01		(kgf-m)	1.0 - 1.15	
3/8	(lbf-ft)	35 - 42	45 - 54	M8	(lbf-ft)	17.4 - 20.2	21.7 - 25.3
	(N-m)	47.5 - 57.0	61.0 - 73.2		(N-m)	23.5 - 27.5	29.4 - 34.3
	(kgf-m)	4.84 - 5.82	6.22 - 7.47		(kgf-m)	2.4 - 2.8	3.0 - 3.5
1/2	(lbf-ft)	80 - 96	110 - 132	M10	(lbf-ft)	35.5 - 41.2	44.9 - 52.1
	(N-m)	108.5 - 130.2	149.2 - 179.0		(N-m)	48.1 - 55.9	60.8 - 70.5
	(kgf-m)	11.07 - 13.29	15.22 - 18.27		(kgf-m)	4.9 - 5.7	6.2 - 7.2
9/16	(lbf-ft)	110 - 132	160 - 192	M12	(lbf-ft)	57.2 - 66.5	76.0 - 86.8
	(N-m)	149.2 - 179.0	217.0 - 260.4		(N-m)	77.5 - 90.2	103 - 117
	(kgf-m)	15.22 - 18.27	22.14 - 26.57		(kgf-m)	7.9 - 9.2	10.5 - 12.0
5/8	(lbf-ft)	150 - 180	220 - 264	M14	(lbf-ft)	91.2 - 108	123 - 144
	(N-m)	203.4 - 244.1	298.3 - 358.0		(N-m)	124 - 147	167 - 196
	(kgf-m)	20.75 - 24.91	30.44 - 36.53		(kgf-m)	12.6 - 15.0	17.0 - 20.0
				M16	(lbf-ft)	145 - 166	192 - 224
					(N-m)	196 - 226	260 - 303
					(kgf-m)	20.0 - 23.0	26.5 - 31.0

https://truckmanualshub.com/

TIGHTENING TORQUE CHART

Thread size d (mm)	Hexa-Bolt Head size B (mm)	7T		
		lbf-ft	N-m	kgf-m
M8	12 or 13	**17.5 - 20.3** (18.9 ± 1.4)	**23.5 - 27.5** (25.5 ± 2.0)	**2.4 - 2.8** (2.6 ± 0.2)
M10	14 or 17	**35.4 - 41.2** (38.3 ± 2.9)	**48.1 - 55.9** (52.0 ± 3.9)	**4.9 - 5.7** (5.3 ± 0.4)
M12	17 or 19	**57.1 - 66.5** (61.8 ± 4.7)	**77.5 - 90.2** (83.9 ± 6.3)	**8.0 - 9.2** (8.6 ± 0.6)
M14	19 or 22	**91.1 - 108.5** (99.8 ± 8.7)	**123.6 - 147.0** (135.3 ± 11.7)	**12.6 - 15.0** (13.8 ± 1.2)

NOTE :
- Figure "7" on the top of the bolt indicates that the bolt is of special material.
- Before tightening, check the figure on the top of bolt.

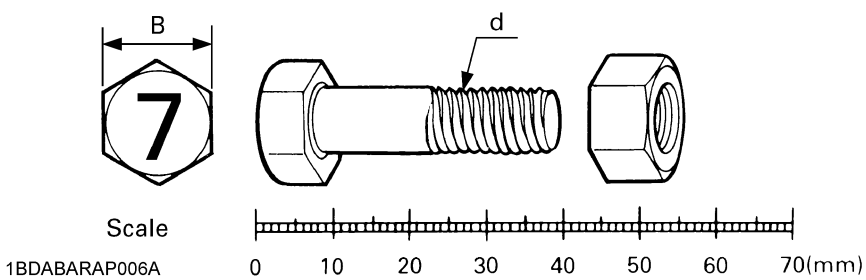

https://truckmanualshub.com/

STORAGE

WARNING

To avoid serious injury or death:

- **Do not clean the machine with engine running.**
- **To avoid the danger of exhaust fume poisoning, do not operate the engine in a closed building without proper ventilation.**
- **When storing, remove the key to avoid unauthorized persons from operating the machine and getting injured.**

MACHINE STORAGE

If you intend to store your machine for an extended period of time, follow the procedures outlined below. These procedures will insure that the machine is ready to operate with minimum preparation when it is removed from storage,

1. Check for loose bolts and nuts, and tighten if necessary.
2. Apply grease to machine areas where bare metal will rust also to pivot areas.
3. Inflate the tires to a pressure a little higher than usual.
4. Change the engine oil and run the engine to circulate oil throughout the engine block and internal moving parts for about 5 minutes.
5. With all implements lowered to the ground, coat any exposed hydraulic cylinder piston rods with grease.
6. Remove the battery from the machine. When disconnecting the cables from the battery, start with the negative terminal first. When connecting the cables to the battery, start with the positive terminal first.

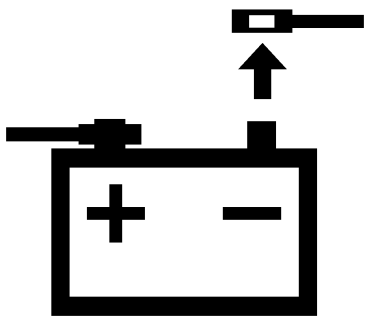

1BDABEJAP059A

7. Keep the machine in a dry place where the machine is sheltered from rain. Cover the machine.
8. Store the machine indoors in a dry area that is protected from sunlight and excessive heat. If the machine must be stored outdoors, cover it with a waterproof tarpaulin.
9. Jack the machine up and place blocks under the front and rear axles so that all 4 tires are off the ground. Keep the tires out of direct sunlight and extreme heat.

IMPORTANT :

- When washing the machine, be sure to stop the engine. Allow sufficient time for the engine to cool before washing.
- Cover the machine after the muffler and the engine have cooled down.

REMOVING THE MACHINE FROM STORAGE

1. Check the tire air pressure and inflate the tires if they are low.
2. Jack the machine up and remove the support blocks.
3. Install the battery. Before installing the battery, make sure it is fully charged.
4. Check the fan belt tension.
5. Check all fluid levels (engine oil, transmission/ hydraulic oil, engine coolant and any attached implements).
6. Check all coolant, hydraulic and fuel hoses for cracks, hardening, bubbles and leaks.
7. Check all control levers and the brake for proper function, repair or lubricate as necessary.
8. Start the engine. Observe all gauges. If all gauges are functioning properly and reading normal, move the machine outside.
9. Once outside, park the machine securely set the parking brake, place the control levers in the neutral lock position and let the engine idle for at least 5 minutes.
10. Shut the engine off and walk around machine and make a visual inspection looking for evidence of oil or water leaks.
11. With the engine fully warmed up, release the parking brake and test the brakes for proper adjustment as you move forward. Adjust the brakes as necessary.

https://truckmanualshub.com/

TROUBLESHOOTING

ENGINE TROUBLESHOOTING

If something is wrong with the engine, refer to the table below for the cause and its corrective measure.

Trouble		Cause	Countermeasure
Engine is difficult to start or won't start		● No fuel flow.	● Check the fuel tank and the fuel filter. Replace filter if necessary.
		● Air or water is in the fuel system.	● Check to see if the fuel line coupler bolt and nut are tight. ● Bleed the fuel system. (See "SERVICE AS REQUIRED" in "MAINTENANCE" section.)
		● In winter, oil viscosity increases, and engine revolution is slow.	● Use oils of different viscosities, depending on ambient temperatures.
		● Battery becomes weak and the engine does not turn over quick enough.	● Clean battery cables and terminals. ● Charge the battery. ● In cold weather, always remove the battery from the engine, charge and store it indoors. Install it on the machine only when the machine is going to be used.
Insufficient engine power.		● Insufficient or dirty fuel. ● The air cleaner is clogged.	● Check the fuel system. ● Clean the element.
Engine stops suddenly.		● Insufficient fuel.	● Refuel. ● Bleed the fuel system if necessary.
Exhaust fumes are colored.	**Black**	● Fuel quality is poor. ● Too much oil. ● Engine is overloaded.	● Change the fuel and fuel filter. ● Check the proper amount of oil. ● Reduce engine load.
	Blue white	● The inside of exhaust muffler is damp from fuel. ● Injection nozzle trouble. ● Fuel quality is poor.	● Heat the muffler by applying load to the engine. ● Check the injection nozzle. ● Change the fuel and fuel filter.
Engine overheats.		● Engine overloaded.	● Lower speed or reduce load.
		● Low coolant level.	● Fill cooling system to the correct level; check radiator and hoses for loose connections or leaks.
		● Loose or damaged fan belt.	● Adjust or replace fan belt.
		● Dirty radiator core or grille screens.	● Remove all trash.
		● Coolant flow route corroded.	● Flush cooling system.

If you have any questions, contact your local KUBOTA Dealer.

https://truckmanualshub.com/

BATTERY TROUBLESHOOTING

Trouble	Cause	Countermeasure	Preventive measure
Starter does not function.	● Battery overused until lights are dim.	● Charge battery sufficiently.	● Charge the battery properly.
	● Battery has not been recharged.		
	● Poor terminal connection.	● Clean the terminal and tighten securely.	● Keep the terminal clean and tight. Apply grease and treat with anti-corrosives.
	● Battery life expired.	● Replace battery.	
From beginning starter does not function, and lights soon become dim.	● Insufficient charging.	● Charge battery sufficiently.	● Battery must be serviced properly before initial use.
	● Insufficient charging.	● Adjust fan belt.	
When viewed from top, the top of plates look whitish.	● Battery was used with an insufficient amount of electrolyte.	● Add distilled water and charge the battery.	● Regularly check the electrolyte level.
	● Battery was used too much without recharging.	● Charge battery sufficiently.	● Charge the battery properly.
Recharging is impossible.	● Battery life expired.	● Replace battery.	
Terminals are severely corroded and heat up.	● Poor terminal connection.	● Clean the terminal and tighten securely.	● Keep the terminal clean and tight. Apply grease and treat with anti-corrosives.
Battery electrolyte level drops rapidly.	● There is a crack or pin holes in the electrolytic cells.	● Replace battery.	
	● Charging system trouble.	● Contact your local KUBOTA Dealer.	

If you have any questions, contact your local KUBOTA Dealer.

MACHINE TROUBLESHOOTING

Trouble	Cause	Countermeasure
Machine operation is not smooth.	● Hydrostatic transmission fluid is insufficient.	● Fill oil.
	● Filter is clogged.	● Replace the filter.
Machine dose not move while engine is running.	● Parking brake is on.	● Release the parking brake.
	● Transmission fluid level is insufficient.	● Fill oil.
Machine moves when motion control levers are in "NEUTRAL LOCK" position. (Engine is operated.)	● Hydrostatic lever is not correctly adjusted.	● Consult your dealer for hydrostatic lever linkage adjustment or pressure adjustment.
	● Control linkage pivots are sticking.	● Full up and lubricate linkage.

https://truckmanualshub.com/

If you have any questions, contact your local KUBOTA Dealer.

MOWER TROUBLESHOOTING

Trouble	Cause	Countermeasure
Blade does not rotate.	● PTO system is not normal: PTO system malfunctioning.	● Consult your KUBOTA Dealer.
	● PTO system is normal: Broken mower belt.	● Replace mower belt.
Mower belt slipping.	● Weaken tension spring.	● Replace tension spring.
	● Worn mower belt.	● Replace mower belt.
	● Mower plugged.	● Unplug and clean mower deck.
	● Debris in pulleys.	● Clean pulleys.
Discharge chute plugged.	● Grass too wet.	● Wait for grass to dry.
	● Grass too long.	● Raise cutting height and cut grass twice.
	● Cutting too low.	● Raise cutting height.
	● Engine rpm too low.	● Mow at full throttle.
	● Ground speed too fast.	● Slow down.
Streaking of grass uncut.	● Ground speed too fast.	● Slow down.
	● Engine rpm too low.	● Mow at full throttle, check and reset engine rpm.
	● Grass too long.	● Cut grass twice.
	● Blades dull or damaged.	● Replace blades or have blades sharpened.
	● Debris in mower deck.	● Clean mower deck.
Uneven cut.	● Mower deck not level.	● Level mower deck.
	● Ground speed too fast.	● Slow down.
	● Blades dull.	● Have blades sharpened.
	● Blades worn or damaged.	● Replace blades.
	● Low tire inflation.	● Add air to correct pressure.
	● Anti-scalp rollers not adjusted correctly.	● Adjust anti-scalp rollers.
	● Wheels pressure not adjusted correctly.	● Set both tire pressure to the correct pressure. (See "TIRES" in "TIRES AND WHEELS" section.)
Blades scalping grass.	● Cutting height too low.	● Raise cutting height.
	● Turning speed too fast.	● Reduce speed on turns.
	● Ridges in terrain.	● Change mowing pattern.
	● Rough or uneven terrain.	● Adjust wheels pressure and anti-scalp rollers.
	● Anti-scalp rollers not adjusted correctly.	● Adjust wheels pressure and anti-scalp rollers.
	● Bend blade(s).	● Replace blade(s).

https://truckmanualshub.com/

Trouble	Cause	Countermeasure
Excessive vibration.	● Debris on mower deck or in pulleys.	● Clean mower deck and pulleys.
	● Damaged mower belt.	● Replace mower belt.
	● Damaged pulleys.	● Replace pulleys.
	● Pulleys out of alignment.	● Consult your KUBOTA Dealer.
	● Blades out of balance.	● Have blades balanced.
Mower loads down machine.	● Engine rpm too low.	● Mow at full throttle, check and reset engine rpm.
	● Ground speed too fast.	● Slow down.
	● Debris wrapped around mower spindles.	● Clean mower.
	● Front of deck too low.	● Adjust mower deck. (See "MOWER DECK LEVEL" in "ADJUSTMENT" section.)

If you have any questions, contact your local KUBOTA Dealer.

https://truckmanualshub.com/

INDEX

Adjustment of Foldable ROPS 20
Air Cleaner Primary Element.....53
Air Cleaner Primary Element and Secondary Element 62
Amount of Fuel and Refueling.....41
Anti-freeze 63
ANTI-SCALP ROLLERS 71
Battery Condition.....56
Blade 67
Coolant Level 42
Coolant Temperature Gauge.....15
Easy Checker (TM) 14
Engine Break-in.....18
Engine Breather Hose 65
Engine Breather Hose 66
Engine Oil.....58
Engine Oil Filter.....59
Engine Oil Level 41
Engine Start System.....49
Engine Stop Lever (Inside the Hood) 14
Fan Drive Belt Tension.....54
Flushing Cooling System and Coolant 62
Front Axle Pivot.....60
Front Cover 34
Front side: 36
Fuel Filter 53
Fuel Filter 61
Fuel Gauge.....15
Fuel Injection Nozzle (Injection Pressure).....62
Fuel Lines.....64
Fuel Lines.....66
Fuel System 66
Fuses.....66
Gear Box Oil.....58
Gear Box Oil Level 50
Greasing.....51
Greasing.....56
Hood.....34
Hour Meter 15
HST NEUTRAL 69
Hydraulic Hose 65
Hydraulic Hose 66
Hydraulic Lift Control Pedal.....22
Immediately Stop the Engine if:.....14
Inflation Pressure 32
Inflation Pressure 44
Injection Pump.....64
Intake Air Line 65
Intake Air Line..... 66
Key Switch 13
LEVEL MOWER DECK (Front-to-Rear) 73
LEVEL MOWER DECK (Side-to-Side) 72
Lubricating All Grease Fittings..... 45
Lubricating Oil for New Machines 18
Machine Break-in..... 18
MAXIMUM SPEED (FORWARD) 69
Motion Control Lever 23
MOTION CONTROL LEVER ALIGNMENT ... 70
MOTION CONTROL LEVER OPERATING FORCE 70
Mower Belt..... 68
Mower Gear Box Oil Seal 65
Mower Gear Box Oil-Seal 66
Oiling 52
OPC System 50
Operator's Seat..... 21
Parking Brake 55
Parking Brake Pedal..... 22
PTO Lever 30
Radiator Hose..... 66
Radiator Hose and Clamp 64
Radiator Screen and Hood Screen..... 43
Rear side: 37
Remove and Install Front Caster Wheels..... 33
Seat Belt 21
Starting 31
Step 34
Throttle Lever 22
Tire Pressure 44
To Fold the ROPS 19
To Raise the ROPS to Upright Position..... 20
Transmission Fluid and Rear Axle Gear Case Oil (RH and LH)..... 60
Transmission Fluid Level 42
Transmission Oil Filter [HST]..... 59
Transmission Strainer..... 61
Warm-up and Transmission Oil in the Low Temperature Range 16