https://truckmanualshub.com/
www.truck-freeworkshop.com

Genie®
A TEREX COMPANY

Service Manual

Serial Number Range

AWP SS
from SN 3896-101

IWP SS
from SN 4096-101

Part No. 38139
Rev B6
January 2011

https://truckmanualshub.com/
www.truck-freeworkshop.com

Important

Read, understand and obey the safety rules and operating instructions in the *Genie AWP Super Series* and *IWP Super Series Operator's Manual* before attempting any maintenance or repair procedure.

This manual provides detailed scheduled maintenance information for the machine owner and user. It also provides troubleshooting and repair procedures for qualified service professionals.

Basic mechanical, hydraulic and electrical skills are required to perform most procedures. However, several procedures require specialized skills, tools, lifting equipment and a suitable workshop. In these instances, we strongly recommend that maintenance and repair be performed at an authorized Genie dealer service center.

Compliance

Machine Classification
Group A/Type 1 as defined by ISO 16368

Machine Design Life
Unrestricted with proper opeation, inspection and scheduled maintenance.

Technical Publications

Genie Industries has endeavored to deliver the highest degree of accuracy possible. However, continuous improvement of our products is a Genie policy. Therefore, product specifications are subject to change without notice.

Readers are encouraged to notify Genie of errors and send in suggestions for improvement. All communications will be carefully considered for future printings of this and all other manuals.

Contact Us:

www.genieindustries.com
e-mail: techpub@terex.com

Copyright © 1996 by Genie Industries

First Edition: Second Printing, December 2001

"Genie" is a registered trademarks of Genie Industries in the USA and many other countries.

Printed on recycled paper

Printed in U.S.A.

https://truckmanualshub.com/
www.truck-freeworkshop.com

Safety Rules

Danger

Failure to obey the instructions and safety rules in this manual and the appropriate Operator's Manual on your machine will result in death or serious injury.

Many of the hazards identified in the operator’s manuals are also safety hazards when maintenance and repair procedures are performed.

Do Not Perform Maintenance Unless:

☑ You are trained and qualified to perform maintenance on this machine.

☑ You read, understand and obey:
- manufacturer’s instructions and safety rules
- employer’s safety rules and worksite regulations
- applicable governmental regulations

☑ You have the appropriate tools, lifting equipment and a suitable workshop.

https://truckmanualshub.com/
www.truck-freeworkshop.com

SAFETY RULES

Personal Safety

Any person working on or around a machine must be aware of all known safety hazards. Personal safety and the continued safe operation of the machine should be your number one priority.

Read each procedure thoroughly. This manual and the decals on the machine use signal words to identify the following:

Safety alert symbol–used to alert personenel to potential personal injury hazards. Obey all safety messages that follow this symbol to avoid possible injury or death

DANGER Indicates an imminently hazardous situation which, if not avoided, will result in death or serious injury.

WARNING Indicates a potentially hazardous situation which, if not avoided, could result in death or serious injury.

CAUTION Indicates a potentially hazardous situation which, if not avoided, may cause minor or moderate injury.

NOTICE Indicates a potentially hazardous situation which, if not avoided, may result in property damage.

Be sure to wear protective eye wear and other protective clothing if the situation warrants it.

Be aware of potential crushing hazards such as moving parts, free-swinging or unsecured components when lifting or placing loads. Always wear approved steel-toed shoes.

Workplace Safety

Be sure to keep sparks, flames and lighted tobacco away from flammable and combustible materials like battery gases. Always have an approved fire extinguisher within easy reach.

Be sure that all tools and working areas are properly maintained and ready for use. Keep work surfaces clean and free of debris that could get into machine components and cause damage.

Be sure any forklift, overhead crane or other lifting or supporting device is fully capable of supporting and stabilizing the weight to be lifted. Use only chains or straps that are in good condition and of ample capacity.

Be sure that fasteners intended for one-time use (i.e., cotter pins and self-locking nuts) are not reused. These components may fail if they are used a second time.

Be sure to properly dispose of old oil or other fluids. Use an approved container. Please environmentally safe.

Be sure that your workshop or work area is properly ventilated and well lit.

https://truckmanualshub.com/
www.truck-freeworkshop.com

Table of Contents

Introduction

Important Information ..... *ii*

Section One **Safety Rules**

General Safety Rules ..... *iii*

Section Two **Specifications**

AWP Super Series Standard Base Models ..... 2 - 1
AWP Super Series Narrow Base Models ..... 2 - 3
AWP Super Series Rough Terrain Base Models ..... 2 - 4
IWP-20S ..... 2 - 5
IWP-25S ..... 2 - 5
IWP-30S ..... 2 - 5
Performance Specifications ..... 2 - 6
Hydraulic Hose and Fitting Torque Specification ..... 2 - 7

Section Three **Theory of Operation**

Theory of Operation ..... 3 - 1

https://truckmanualshub.com/
www.truck-freeworkshop.com

TABLE OF CONTENTS

Section Four **Scheduled Maintenance Procedures**

Introduction ..... 4 - 1
Pre-delivery Preparation Report ..... 4 - 3
Maintenance Inspection Report ..... 4 - 5
A-1 Inspect the Operator's and Safety Manuals ..... 4 - 6
A-2 Inspect the Decals and Placards ..... 4 - 7
A-3 Inspect for Damage and Loose or Missing Parts ..... 4 - 7
A-4 Check for Hydraulic Leaks ..... 4 - 8
A-5 Check the Hydraulic Oil Level ..... 4 - 9
A-6 Test the Base Operation - IWPS Models ..... 4 - 9
A-7 Check the Auxiliary Platform Lowering Operation ..... 4 - 10
A-8 Check the Manual Platform Lowering Operation ..... 4 - 10
A-9 Inspect the Battery and Battery Charger - DC Models ..... 4 - 11
A-10 Inspect the Columns for Damage ..... 4 - 11
A-11 Check the Sequencing Cables ..... 4 - 12
A-12 Check the Interlock System for Proper Operation ..... 4 - 12
A-13 Test the Power and Function Controls ..... 4 - 13
A-14 Inspect the Lifting Chains and Idler Wheels ..... 4 - 14
A-15 Inspect the Breather Cap ..... 4 - 15
A-16 Check the Tire Pressure - AWPS Models with Rough Terrain Base Option ..... 4 - 15
A-17 Check the Air Supply Lubricator Oil Level - Air Models ..... 4 - 15
A-18 Check the Air Supply Lubricator Canister Drip Rate - Air Models ..... 4 - 16
A-19 Check the Air Filter/Regulator Canister - Air Models ..... 4 - 16

https://truckmanualshub.com/
www.truck-freeworkshop.com

TABLE OF CONTENTS

Section Four **Scheduled Maintenance Procedures**, continued

B-1 Inspect the Electrical Wiring ..... 4 - 17
B-2 Inspect All Welds ..... 4 - 18
B-3 Test the Tilt-back Operation (if equipped) ..... 4 - 18
B-4 Check the Lifting Chain Adjustments ..... 4 - 19
B-5 Check the Battery - DC Models ..... 4 - 20
B-6 Clean and Lubricate the Columns ..... 4 - 21
B-7 Test the Lifting Capacity ..... 4 - 22
B-8 Adjust the Sequencing Cables ..... 4 - 22
B-9 Inspect for Proper Outrigger Length - AWPS Models ..... 4 - 24
B-10 Inspect and Lubricate the Outrigger Leveling Jack Footpads - AWPS Models ..... 4 - 25
B-11 Test the Level Sensing Operation - IWPS Models ..... 4 - 26
B-12 Check the Chain Adjustment, IWP-20S Models with Outreach Option ..... 4 - 27
C-1 Inspect and Lubricate the Casters and Wheels ..... 4 - 28
C-2 Inspect the Mast Assembly for Wear ..... 4 - 28
C-3 Inspect and Lubricate the Lifting Chains ..... 4 - 30
C-4 Replace the Hydraulic Oil ..... 4 - 30
C-5 Replace the Auxiliary Platform Lowering Batteries ..... 4 - 32
C-6 Remove and Inspect the Lifting Chains ..... 4 - 32

https://truckmanualshub.com/
www.truck-freeworkshop.com

TABLE OF CONTENTS

Section Five **Troubleshooting Flow Charts**

Introduction ..... 5 - 1

1 Power Light Will Not Turn On - AC Models ..... 5 - 3

2 Power Light Will Not Turn On - DC Models ..... 5 - 5

3 Interlock Lights Will Not Turn On - AWPS AC and DC Models ..... 5 - 6

4 Foot Pad Interlock Lights Will Not Turn On - IWPS Models ..... 5 - 7

5 Level Sensor Interlock Lights Will Not Turn On - IWPS Models ..... 5 - 8

6 Platform Up Function Inoperative - AC Models ..... 5 - 10

7 Platform Up Function Inoperative, But Power Unit Runs - AC Models ..... 5 - 13

8 Platform Up Function Inoperative - DC Models ..... 5 - 15

9 Platform Up Function Inoperative, But Power Unit Runs - DC Models ..... 5 - 17

10 Platform Down Inoperative ..... 5 - 19

11 Base Will Not Raise With Foot Pump - IWPS Models ..... 5 - 20

12 Base Will Raise, But Will Not Hold In Up Position - IWPS Models ..... 5 - 21

13 Base Will Not Lower - IWPS Models ..... 5 - 22

14 Platform Will Not Hold In Up Position ..... 5 - 23

15 Power Unit Will Not Lift Rated Load ..... 5 - 24

16 Auxiliary Platform Lowering Will Not Operate ..... 5 - 25

17 Power Wheel Assist Will Not Operate -
IWPS Models with Power Wheel Assist ..... 5 - 26

https://truckmanualshub.com/
www.truck-freeworkshop.com

TABLE OF CONTENTS

Section Six **Repair Procedures**

Introduction ..... 6 - 1

Base Assembly

1-1 Interlocks ..... 6 - 2

1-2 Base Components - IWPS Models ..... 6 - 3

1-3 Foot Pump Manifold Components - IWPS Models ..... 6 - 7

1-4 Power Wheel Assist Manifold Components - IWPS Models (before serial number 4097-991) ..... 6 - 8

1-5 Power Wheel Assist Manifold Components - IWPS Models (from serial number 4097-991 to 4099-2532) ..... 6 - 9

1-6 Power Wheel Assist Manifold Components - IWPS Models (after serial number 4099-2532) ..... 6 - 10

Ground Control Box

2-1 How to Test the Transformer - AC Models ..... 6 - 12

2-2 How to Test the AC Contactor - AC Models ..... 6 - 13

Hydraulic Power Unit

3-1 Hydraulic Power Unit Components - AC Models ..... 6 - 14

3-2 Hydraulic Power Unit Components - DC Models ..... 6 - 16

3-3 Hydraulic Power Unit Components - Air Powered Models ..... 6 - 18

3-4 Hydraulic Power Unit ..... 6 - 20

3-5 Hydraulic Pump ..... 6 - 22

3-6 Valve Adjustment ..... 6 - 23

3-7 How to Test the Motor Start Solenoid - DC Models ..... 6 - 24

https://truckmanualshub.com/
www.truck-freeworkshop.com

TABLE OF CONTENTS

Section Six **Repair Procedures,** continued

Power Pack

4-1 Power Pack ..... 6 - 25

Mast Components

Mast Illustrations ..... 6 - 26

5-1 Lift Cylinder ..... 6 - 27

5-2 Mast Assembly ..... 6 - 28

5-3 Glide Pads ..... 6 - 33

5-4 Lifting Chains ..... 6 - 34

Tilt-back Frame, AWP-36S and 40S Models

6-1 Tilt-back Frame ..... 6 - 38

Platform

7-1 Platforms ..... 6 - 40

7-2 Platform Control Box ..... 6 - 41

7-3 Platform Outreach Chain ..... 6 - 42

https://truckmanualshub.com/
www.truck-freeworkshop.com

TABLE OF CONTENTS

Section Seven **Schematics**

Introduction ..... 7 - 1

Electrical Components ..... 7 - 2

Electrical Symbols Legend ..... 7 - 3

Electrical Schematic - AWP Super Series DC Models
(from serial number 3896-101 to 3896-300) ..... 7 - 5

Electrical Schematic - AWP Super Series DC Models
(from serial number 3896-301 to 3896-430) ..... 7 - 6

Electrical Schematic - AWP Super Series DC Models
(from serial number 3896-301 to 3896-431 to AWP07-54898) ..... 7 - 7

Electrical Schematic - AWP Super Series DC Models Standard Base
(after serial number AWP07-54898) ..... 7 - 8

Electrical Schematic - AWP Super Series DC Models Narrow Base
(after serial number AWP07-54898) ..... 7 - 9

Electrical Schematic - AWP Super Series DC CE Models
(from serial number 3896-432 to AWP07-54898) ..... 7 - 10

Electrical Schematic - AWP Super Series DC CE Models Standard Base
(after serial number AWP07-54898) ..... 7 - 11

Electrical Schematic - AWP Super Series DC CE Models Narrow Base
(after serial number AWP07-54898) ..... 7 - 12

Electrical Schematic - AWP Super Series DC TUV Models
(after serial number 3896-430) ..... 7 - 13

Electrical Schematic - AWP Super Series AC Models
(from serial number 3894-103 to 3896-303) ..... 7 - 14

Electrical Schematic - AWP Super Series AC Models
(from serial number 3894-304 to 3896-450) ..... 7 - 15

Electrical Schematic - AWP Super Series AC Models
(from serial number 3894-451 to AWP07-54898) ..... 7 - 16

Electrical Schematic - AWP Super Series AC Models Standard Base
(from serial number AWP07-54898 to AWP07-57594) ..... 7 - 17

Electrical Schematic - AWP Super Series AC Models Narrow Base
(from serial number AWP07-54898 to AWP07-57594) ..... 7 - 18

Electrical Schematic - AWP Super Series AC Models Standard Base
(after serial number AWP07-57594) ..... 7 - 19

Electrical Schematic - AWP Super Series AC Models Narrow Base
(after serial number AWP07-57594) ..... 7 - 20

https://truckmanualshub.com/
www.truck-freeworkshop.com

TABLE OF CONTENTS

Section Seven **Schematics,** continued

Electrical Schematic - AWP Super Series AC CE Models
(from serial number 3896-451 to AWP07-54898) ..... 7 - 21

Electrical Schematic - AWP Super Series AC CE Models Standard Base
(from serial number AWP07-54899 to AWP07-57594) ..... 7 - 22

Electrical Schematic - AWP Super Series AC CE Models Narrow Base
(from serial number AWP07-54899 to AWP07-57594) ..... 7 - 23

Electrical Schematic - AWP Super Series AC CE Models Standard Base
(after serial number AWP07-57594) ..... 7 - 24

Electrical Schematic - AWP Super Series AC CE Models Narrow Base
(after serial number AWP07-57594) ..... 7 - 25

Electrical Schematic - AWP Super Series AC TUV Models
(after serial number 3896-460) ..... 7 - 26

Electrical Schematic - IWP Super Series DC Models
(from serial number 4096-101 to 4096-287) ..... 7 - 27

Electrical Schematic - IWP Super Series DC Models
(from serial number 4096-288 to 4096-341) ..... 7 - 28

Electrical Schematic - IWP Super Series DC Models
(from serial number 4096-342 to IWP07-7065) ..... 7 - 29

Electrical Schematic - IWP Super Series DC Models
(after serial number IWP07-7065) ..... 7 - 30

Electrical Schematic - IWP Super Series DC Models with Power Assist ..... 7 - 31

Electrical Schematic - IWP Super Series DC Models with Power Assist
(Directional Valve Coils Powering Function Manifold) ..... 7 - 32

Electrical Schematic - IWP Super Series DC TUV Models ..... 7 - 33

Electrical Schematic - IWP Super Series DC TUV Models with Outreach ..... 7 - 34

Electrical Schematic - IWP Super Series DC TUV Models with Power Assist ..... 7 - 35

Electrical Schematic - IWP Super Series DC TUV
Models with Power Assist and Outreach ..... 7 - 36

Electrical Schematic - IWP Super Series DC TUV Models with Power Assist
(Directional Valve Coils Powering Function Manifold) ..... 7 - 37

https://truckmanualshub.com/
www.truck-freeworkshop.com

Section Seven **Schematics,** continued

Electrical Schematic - IWP Super Series AC Models
(from serial number 4096-105 to 4096-285) ..... 7 - 38

Electrical Schematic - IWP Super Series AC Models
(from serial number 4096-286 to 4096-355) ..... 7 - 39

Electrical Schematic - IWP Super Series AC Models
(from serial number 4096-356 to IWP07-7065) ..... 7 - 40

Electrical Schematic - IWP Super Series AC Models
(from serial number IWP07-7066 to IWP07-57594) ..... 7 - 41

Electrical Schematic - IWP Super Series AC Models
(after serial number IWP07-57594) ..... 7 - 42

Electrical Schematic - IWP Super Series AC TUV
(Models with Base-mounted Junction Box) ..... 7 - 43

Electrical Schematic - IWP Super Series AC TUV
(Models without Base-mounted Junction Box) ..... 7 - 44

Electrical Schematic - IWP Super Series AC TUV Models with Outreach ..... 7 - 45

Hydraulic Schematic Legend ..... 7 - 46

Hydraulic Schematic - AWP Super Series Models ..... 7 - 47

Hydraulic/Pneumatic Schematic - AWP Super Series Models ..... 7 - 48

Hydraulic Schematic - IWP Super Series Models without Power Assist ..... 7 - 49

Hydraulic Schematic - IWP Super Series Models with Power Assist ..... 7 - 50

Hydraulic Schematic - IWP Super Series Models with Power Assist and Brakes ... 7 - 51

Hydraulic Schematic - IWP Super Series
(Models with Power Assist, Brakes and Cross Port Relief) ..... 7 - 52

https://truckmanualshub.com/
www.truck-freeworkshop.com

This page intentionally left blank.

https://truckmanualshub.com/
www.truck-freeworkshop.com

Specifications

Model	AWP-15S	AWP-20S	AWP-25S
Standard Base			
Height, working maximum	21 ft 4 in 6.5 m	26 ft 1 in 8.0 m	30 ft 9 in 9.4 m
Height, platform maximum	15 ft 4 in 4.7 m	20 ft 1 in 6.1 m	24 ft 9 in 7.6 m
Lift capacity all models except Canada	350 lbs 159 kg	350 lbs 159 kg	350 lbs 159 kg
Lift capacity models sold in Canada only	300 lbs 136 kg	300 lbs 136 kg	300 lbs 136 kg
Power source DC model AC model Air motor	 12V 110V or 220V 100 psi / 6.9 bar	 12V 110V or 220V 100 psi / 6.9 bar	 12V 110V or 220V 100 psi / 6.9 bar
Ambient Operating Temperature	-20°F to 135°F -29°C to 57°C	-20°F to 135°F -29°C to 57°C	-20°F to 135°F -29°C to 57°C
Machine weight (DC / AC and Air models)	718 / 628 lbs 326 / 285 kg	764 / 674 lbs 347 / 306 kg	817 / 727 lbs 371 / 330 kg
Height, stowed	78 in 198 cm	78 in 198 cm	78 in 198 cm
Width	29 in 73.6 cm	29 in 73.6 cm	29 in 73.6 cm
Length	46 in 117 cm	46 in 117 cm	46 in 117 cm
Outrigger footprint (l x w) Domestic	60 3/4 x 52 3/4 in 154 x 134 cm	60 3/4 x 52 3/4 in 154 x 134 cm	60 3/4 x 52 3/4 in 154 x 134 cm
Outrigger footprint (l x w) CSA	60 3/4 x 52 3/4 in 154 x 134 cm	69 1/4 x 61 1/4 in 175.6 x 155.3 cm	83 1/2 x 75 1/2 in 212 x 191 cm
Outrigger footprint (l x w) CE Indoor	60 3/4 x 52 3/4 in 154 x 134 cm	60 3/4 x 52 3/4 in 154 x 134 cm	69 1/4 x 61 1/4 in 175.6 x 155.3 cm
Outrigger footprint (l x w) CE Outdoor	69 1/4 x 61 1/4 in 175.6 x 155.3 cm	83 1/4 x 75 1/4 in 211.5 x 191.2 cm	89 x 81 in 225.9 x 205.6 cm
Corner access/wall access* Domestic	15 3/4 / 8 in 39.7 / 20.3 cm	14 1/2 / 5 1/2 in 36.9 / 7.4 cm	14 / 3 in 35.1 / 7.4 cm
Corner access/wall access* CSA	15 3/4 / 8 in 39.7 / 20.3 cm	20 1/4 / 9 3/4 in 51.2 / 24.5 cm	28 3/4 / 14 1/4 in 72.6 / 36.2 cm
Corner access/wall access* CE Indoor	15 3/4 / 8 in 39.7 / 20.3 cm	14 1/2 / 5 1/2 in 36.9 / 7.4 cm	19 1/4 / 7 1/4 in 48.6 / 18.2 cm
Corner access/wall access* CE Outdoor	21 1/2 / 12 1/4 in 54.6 / 30.8 cm	30 / 16 3/4 in 76 / 42.4 cm	32 1/2 / 17 in 82.5 / 43.4 cm

* Corner of platform top rail to corner of wall with ability to rotate leveling jack.

Platform dimensions - all models			
Standard platform (l x w x h) gated or sliding mid-rail	27 x 26 x 44 3/4 in 69 x 66 x 114 cm	Gated narrow platform (l x w x h)	26 x 20 x 44 3/4 in 66 x 51 x 114 cm
Gated ultra-narrow platform (l x w x h)	22 x 18 x 44 3/4 in 56 x 46 x 114 cm	Standard fiber platform (l x w x h)	29 x 26 1/2 x 43 1/2 in 74 x 67 x 110 cm

https://truckmanualshub.com/
www.truck-freeworkshop.com

SPECIFICATIONS

Model	AWP-30S	AWP-36S	AWP-40S
Standard Base			
Height, working maximum	35 ft 6 in 10.8 m	42 ft 5 in 12.9 m	46 ft 3 in 14.1 m
Height, platform maximum	29 ft 6 in 9.0 m	36 ft 6 in 11.1 m	40 ft 3 in 12.3 m
Lift capacity all models except Canada	350 lbs 159 kg	350 lbs 159 kg	300 lbs 136 kg
Lift capacity models sold in Canada only	300 lbs 136 kg	300 lbs 136 kg	300 lbs 136 kg
Power source DC model AC model Air motor	 12V 110V or 220V 100 psi / 6.9 bar	 12V 110V or 220V 100 psi / 6.9 bar	 12V 110V or 220V 100 psi / 6.9 bar
Ambient Operating Temperature	-20°F to 135°F -29°C to 57°C	-20°F to 135°F -29°C to 57°C	-20°F to 135°F -29°C to 57°C
Machine weight (DC / AC and Air models)	831 / 741 lbs 377 / 336 kg	1107 / 1017 lbs 502 / 461 kg	1130 / 1040 lbs 513 / 472 kg
Height, stowed	78 in 198 cm	109 1/2 in 278 cm	109 1/2 in 278 cm
Width	29 in 73.6 cm	29 in 73.6 cm	29 in 73.6 cm
Length	46 in 117 cm	55 in 140 cm	55 in 140 cm
Outrigger footprint (l x w) Domestic	69 1/4 x 61 1/4 in 175.6 x 155.3 cm	83 1/4 x 75 1/4 in 211.6 x 191.2 cm	89 x 81 in 225.9 x 205.6 cm
Outrigger footprint (l x w) CSA	97 1/2 x 89 1/2 in 247.5 x 227.2 cm	117 1/4 x 109 1/4 in 297.8 x 278 cm	117 1/4 x 109 1/4 in 297.8 x 278 cm
Outrigger footprint (l x w) CE Indoor	75 1/2 x 67 1/2 in 192 x 171.4 cm	83 1/4 x 75 1/4 in 211.6 x 191.2 cm	89 x 81 in 225.9 x 205.6 cm
Outrigger footprint (l x w) CE Outdoor	117 1/4 x 109 1/2 in 297.8 x 278 cm	117 1/4 x 109 1/2 in 297.8 x 278 cm	117 1/4 x 109 1/2 in 297.8 x 278 cm
Corner access/wall access* Domestic	18 1/2 / 4 3/4 in 46.6 / 11.9 cm	28 1/2 / 14 1/4 in 72.7 / 36.2 cm	31 1/4 / 14 1/2 in 79.4 / 37.1 cm
Corner access/wall access* CSA	37 / 18 3/4 in 94.1 / 47.8 cm	52 / 31 1/4 in 132.5 / 79.3 cm	50 3/4 / 28 3/4 in 128.8 / 73 cm
Corner access/wall access* CE Indoor	22 1/4 / 8 in 56.5 / 20.3 cm	28 1/2 / 14 1/4 in 72.7 / 36.2 cm	31 1/4 / 14 1/2 in 79.4 / 37.1 cm
Corner access/wall access* CE Outdoor	50 3/4 / 28 3/4 in 128.8 / 73 cm	52 / 31 1/4 in 132.5 / 79.3 cm	50 3/4 / 28 3/4 in 128.8 / 73 cm

* Corner of platform top rail to corner of wall with ability to rotate leveling jack.

Platform dimensions - all models			
Narrow fiber platform (l x w x h)	26 x 22 x 43 1/2 in 66 x 56 x 110 cm	Extra large platform (l x w x h)	30 x 28 x 44 3/4 in 76 x 71 x 114 cm
Front and side entry platform (l x w x h)	30 x 28 x 44 3/4 in 76 x 71 x 114 cm		

https://truckmanualshub.com/
www.truck-freeworkshop.com

SPECIFICATIONS

Model	AWP-15S	AWP-20S	AWP-25S	AWP-30S
Narrow Base				
Machine weight (DC / AC and Air models)	711 / 621 lbs 322 / 282 kg	745 / 655 lbs 338 / 297 kg	780 / 690 lbs 353 / 313 kg	814 / 724 lbs 369 / 328 kg
Height, stowed	78 in 198 cm	78 in 198 cm	78 in 198 cm	78 in 198 cm
Width	22 in 55.8 cm	22 in 55.8 cm	22 in 55.8 cm	22 in 55.8 cm
Length	49 1/2 in 125.7 cm	49 1/2 in 125.7 cm	49 1/2 in 125.7 cm	49 1/2 in 125.7 cm
Outrigger footprint (l x w) Domestic	64 x 48 1/4 in 162.5 x 122.5 cm	64 x 48 1/4 in 162.5 x 122.5 cm	64 x 48 1/4 in 162.5 x 122.5 cm	71 1/2 x 58 in 181.6 x 147.3 cm
Outrigger footprint (l x w) CSA	71 1/2 x 58 in 181.6 x 147.3 cm	74 1/2 x 65 1/2 in 189.2 x 166.3 cm	83 1/4 x 74 in 211.4 x 187.9 cm	95 1/4 x 89 3/4 in 241.9 x 227.9 cm
Outrigger footprint (l x w) CE Indoor	64 x 48 1/4 in 162.5 x 122.5 cm	71 1/4 x 58 in 181.6 x 147.3 cm	71 1/4 x 58 in 181.6 x 147.3 cm	74 1/2 x 65 1/2 in 189.2 x 166.3 cm
Outrigger footprint (l x w) CE Outdoor	83 1/4 x 74 in 211.4 x 187.9 cm	83 1/4 x 74 in 211.4 x 187.9 cm	95 1/4 x 89 3/4 in 241.9 x 227.9 cm	112 x 112 in 284.4 x 284.4 cm
Corner access/wall access* Domestic	16 / 11 in 40.6 / 27.9 cm	14 1/4 / 8 1/2 in 36.2 / 21.6 cm	13 / 6 in 33 / 15.2 cm	18 1/2 / 7 1/4 in 47 / 18.4 cm
Corner access/wall access* CSA	22 1/2 / 14 3/4 in 57.1 / 37.5 cm	24 1/2 / 14 in 62.2 / 35.5 cm	28 3/4 / 15 in 73 / 38.1 cm	37 1/2 / 18 1/2 in 95.2 / 47 cm
Corner access/wall access* CE Indoor	16 / 11 in 40.6 / 27.9 cm	21 / 12 1/4 in 53.3 / 31.1 cm	19 1/2 / 9 3/4 in 49.5 / 24.7cm	22 / 9 in 55.8 / 22.8 cm
Corner access/wall access* CE Outdoor	31 1/2 / 20 in 80 / 50.8 cm	30 / 17 1/2 in 76.2 / 44.4 cm	38 3/4 / 21 in 98.4 / 53.3 cm	51 / 26 1/2 in 129.5 / 67.3 cm

* Corner of platform top rail to corner of wall with ability to rotate leveling jack.

Platform dimensions	
Gated ultra-narrow platform (l x w x h)	22 x 18 x 44 3/4 in 56 x 46 x 117 cm
Gated narrow platform (l x w x h)	26 x 20 x 44 3/4 in 66 x 51 x 114 cm
Narrow fiber platform (l x w x h)	26 x 22 x 43 1/2 in 66 x 56 x 110 cm

https://truckmanualshub.com/
www.truck-freeworkshop.com

SPECIFICATIONS

Model	AWP-15S	AWP-20S	AWP-25S	AWP-30S
Rough Terrain Base				
Machine weight (DC / AC and Air models)	715 / 625 lbs 324.5 / 283.7 kg	750 / 660 lbs 339.7 / 298.9 kg	784 / 694 lbs 355.3 / 314.6 kg	819 / 729 lbs 371 / 330.2 kg
Height, stowed	79 in 201 cm	79 in 201 cm	79 in 201 cm	79 in 201 cm
Width	29 1/2 in 75 cm	29 1/2 in 75 cm	29 1/2 in 75 cm	29 1/2 in 75 cm
Length	58 in 147 cm	58 in 147 cm	58 in 147 cm	58 in 147 cm
Outrigger footprint (l x w) Domestic	64 x 48 1/4 in 162.5 x 122.5 cm	64 x 48 1/4 in 162.5 x 122.5 cm	64 x 48 1/4 in 162.5 x 122.5 cm	71 1/2 x 58 in 181.6 x 147.3 cm
Outrigger footprint (l x w) CSA	71 1/2 x 58 in 181.6 x 147.3 cm	74 1/2 x 65 1/2 in 189.2 x 166.3 cm	83 1/4 x 74 in 211.4 x 187.9 cm	95 1/4 x 89 3/4 in 241.9 x 227.9 cm
Outrigger footprint (l x w) CE Indoor	64 x 48 1/4 in 162.5 x 122.5 cm	71 1/4 x 58 in 181.6 x 147.3 cm	71 1/4 x 58 in 181.6 x 147.3 cm	74 1/2 x 65 1/2 in 189.2 x 166.3 cm
Outrigger footprint (l x w) CE Outdoor	83 1/4 x 74 in 211.4 x 187.9 cm	83 1/4 x 74 in 211.4 x 187.9 cm	95 1/4 x 89 3/4 in 241.9 x 227.9 cm	112 x 112 in 284.4 x 284.4 cm
Corner access/wall access* Domestic	16 / 11 in 40.6 / 27.9 cm	14 1/4 / 8 1/2 in 36.2 / 21.6 cm	13 / 6 in 33 / 15.2 cm	18 1/2 / 7 1/4 in 47 / 18.4 cm
Corner access/wall access* CSA	22 1/2 / 14 3/4 in 57.1 / 37.5 cm	24 1/2 / 14 in 62.2 / 35.5 cm	28 3/4 / 15 in 73 / 38.1 cm	37 1/2 / 18 1/2 in 95.2 / 47 cm
Corner access/wall access* CE Indoor	16 / 11 in 40.6 / 27.9 cm	21 / 12 1/4 in 53.3 / 31.1 cm	19 1/2 / 9 3/4 in 49.5 / 24.7cm	22 / 9 in 55.8 / 22.8 cm
Corner access/wall access* CE Outdoor	31 1/2 / 20 in 80 / 50.8 cm	30 / 17 1/2 in 76.2 / 44.4 cm	38 3/4 / 21 in 98.4 / 53.3 cm	51 / 26 1/2 in 129.5 / 67.3 cm

* Corner of platform top rail to corner of wall with ability to rotate leveling jack.

Platform dimensions

Standard platform (l x w x h) gated or sliding mid-rail	27 x 26 x 44 3/4 in 69 x 66 x 114 cm
Gated ultra-narrow platform (l x w x h)	22 x 18 x 44 3/4 in 56 x 46 x 117 cm
Gated narrow platform (l x w x h)	26 x 20 x 44 3/4 in 66 x 51 x 114 cm
Standard fiber platform (l x w x h)	29 x 26 1/2 x 43 1/2 in 74 x 67 x 110 cm
Narrow fiber platform (l x w x h)	26 x 22 x 43 1/2 in 66 x 56 x 110 cm
Front and side entry platform (l x w x h)	30 x 28 x 44 3/4 in 76 x 71 x 110 cm
Extra large platform (l x w x h)	30 x 28 x 44 3/4 in 76 x 71 x 110 cm

https://truckmanualshub.com/
www.truck-freeworkshop.com

SPECIFICATIONS

Model	IWP-20S	IWP-25S	IWP-30S
Height, working maximum	26 ft 5 in 8.1 m	30 ft 5 in 9.3 m	35 ft 6 in 10.8 m
Height, platform maximum	20 ft 5 in 6.2 m	24 ft 5 in 7.4 m	29 ft 6 in 9.0 m
Lift capacity	350 lbs 159 kg	350 lbs 159 kg	350 lbs 159 kg
Lift capacity with outreach option	300 lbs 136 kg	— —	— —
Power source DC model AC model	 12V 110V or 220V	 12V 110V or 220V	 12V 110V or 220V
Machine weight (AC / DC models)	1245 / 1345 lbs 565 / 610 kg	1290 / 1390 lbs 585 / 630 kg	1290 / 1390 lbs 585 / 630 kg
Height, stowed base fully lowered/base raised	76 in / 78 in 198 / 203 cm	76 in / 78 in 198 / 203 cm	76 in / 78 in 198 / 203 cm
Width - Standard base	32 in 81 cm	32 in 81 cm	— —
Length - Standard base	60 in 152 cm	60 in 152 cm	— —
Width - Wide base	— —	— —	40 in 102 cm
Length - Wide base	— —	— —	60 in 69 cm
Platform length	27 in 69 cm	27 in 69 cm	27 in 69 cm
Platform width	26 in 66 cm	26 in 66 cm	26 in 66 cm
Platform height	44 3/4 in 114 cm	44 3/4 in 114 cm	44 3/4 in 114 cm
Corner access	6 in 15 cm	6 in 15 cm	7 in 18 cm

https://truckmanualshub.com/
www.truck-freeworkshop.com

SPECIFICATIONS

Platform function speed, maximum		
AWP-15S	AC	DC
Platform up	40 seconds	30 seconds
Platform down	28 seconds	28 seconds
AWP-20S	AC	DC
Platform up	40 seconds	30 seconds
Platform down	28 seconds	28 seconds
AWP-25S	AC	DC
Platform up	40 seconds	30 seconds
Platform down	28 seconds	28 seconds
AWP-30S	AC	DC
Platform up	40 seconds	30 seconds
Platform down	28 seconds	28 seconds
AWP-36S	AC	DC
Platform up	40 seconds	52 seconds
Platform down	42 seconds	42 seconds
AWP-40S	AC	DC
Platform up	65 seconds	48 seconds
Platform down	38 seconds	38 seconds
Hydraulic pressure, maximum - All Models	1600 psi	110 bar

Platform function speed, maximum		
IWP - all models	AC	DC
Platform up	40 seconds	30 seconds
Platform down	28 seconds	28 seconds
Hydraulic pressure, maximum - All Models	1600 psi	110 bar

https://truckmanualshub.com/
www.truck-freeworkshop.com

SPECIFICATIONS

Hydraulic Hose and Fitting Torque Specifications

Your machine is equipped with either 37° flared fittings and hose ends OR Parker Seal-Lok® fittings and hose ends. Genie specifications require that fittings and hose ends be torqued to specification when they are removed and installed or when new hoses or fittings are installed.

SAE O-ring Boss Port
(tube fitting - installed into Aluminum)

SAE Dash size	Torque
-4	11 ft-lbs / 14.9 Nm
-6	23 ft-lbs / 31.2 Nm
-8	40 ft-lbs / 54.2 Nm
-10	69 ft-lbs / 93.6 Nm
-12	93 ft-lbs / 126.1 Nm
-16	139 ft-lbs / 188.5 Nm
-20	172 ft-lbs / 233.2 Nm
-24	208 ft-lbs / 282 Nm

SAE O-ring Boss Port
(tube fitting - installed into Steel)

SAE Dash size	Torque
-4	16 ft-lbs / 21.7 Nm
-6	35 ft-lbs / 47.5 Nm
-8	60 ft-lbs / 81.3 Nm
-10	105 ft-lbs / 142.4 Nm
-12	140 ft-lbs / 190 Nm
-16	210 ft-lbs / 284.7 Nm
-20	260 ft-lbs / 352.5 Nm
-24	315 ft-lbs / 427.1 Nm

Seal-Lok® Fittings
(hose end)

SAE Dash size	Torque
-4	18 ft-lbs / 24.4 Nm
-6	27 ft-lbs / 36.6 Nm
-8	40 ft-lbs / 54.2 Nm
-10	63 ft-lbs / 85.4 Nm
-12	90 ft-lbs / 122 Nm
-16	120 ft-lbs / 162.7 Nm
-20	140 ft-lbs / 190 Nm
-24	165 ft-lbs / 223.7 Nm

JIC 37° Fittings
(swivel nut or hose connection)

SAE Dash size	Thread Size	Flats
-4	7/16-20	2
-6	9/16-18	1 1/4
-8	3/4-16	1
-10	7/8-14	1
-12	1 1/16-12	1
-16	1 5/16-12	1
-20	1 5/8-12	1
-24	1 7/8-12	1

www.truck-freeworkshop.com
https://truckmanualshub.com/

SPECIFICATIONS

Torque Procedure

JIC 37° fittings

1 Align the tube flare (hex nut) against the nose of the fitting body (body hex fitting) and tighten the hex nut to the body hex fitting to hand-tight, approximately 30 in-lbs / 3.4 Nm.

2 Make a reference mark on one of the flats of the hex nut, and continue it on to the body hex fitting with a permanent ink marker.

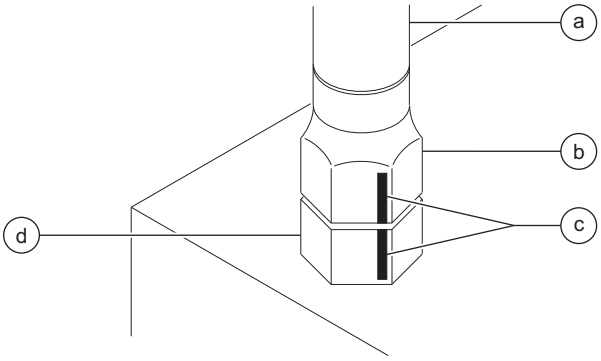

a hydraulic hose
b hex nut
c reference mark
d body hex fitting

3 Working clockwise on the body hex fitting, make a second mark with a permanent ink marker to indicate the proper tightening position.

NOTICE Use the *JIC 37° Fittings* table on the previous page to determine the correct number of flats for the proper tightening position.

NOTICE The marks indicate that the correct tightening positions have been determined. Use the second mark on the body hex fitting to properly tighten the joint after it has been loosened.

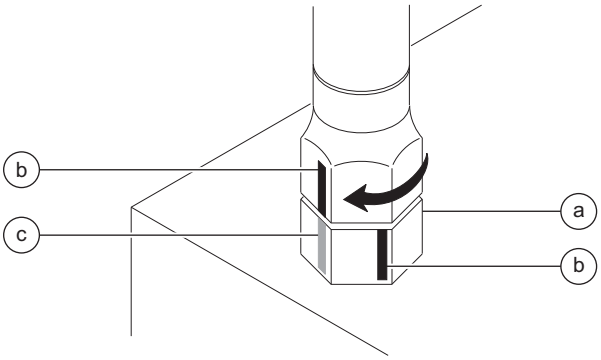

a body hex fitting
b reference mark
c second mark

4 Tighten the hex nut until the mark on the hex nut is aligned with the second mark on the body hex fitting.

5 Operate all machine functions and inspect the hoses and fittings and related components to confirm that there are no leaks.

https://truckmanualshub.com/
www.truck-freeworkshop.com

Seal-Lok® fittings

1 Replace the O-ring. The O-ring must be replaced anytime the seal has been broken. The O-ring cannot be re-used if the fitting or hose end has been tightened beyond finger tight.

NOTICE The O-rings used in the Parker Seal Lok® fittings and hose ends are custom-size O-rings. They are not standard SAE size O-rings. They are available in the O-ring field service kit (Genie part number 49612).

2 Lubricate the O-ring before installation.

3 Be sure that the face seal O-ring is seated and retained properly.

4 Position the tube and nut squarely on the face seal end of the fitting and tighten the nut finger tight.

5 Tighten the nut or fitting to the appropriate torque per given size as shown in the table.

6 Operate all machine functions and inspect the hoses and fittings and related components to confirm that there are no leaks.

https://truckmanualshub.com/
www.truck-freeworkshop.com

SPECIFICATIONS

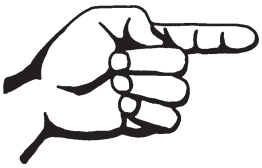

This page intentionally left blank.

https://truckmanualshub.com/
www.truck-freeworkshop.com

Theory of Operation

Power Source

The Genie AWP Super Series and Genie IWP Super Series have multiple power options:
AC models: 110V AC or 220V AC
DC models: 12V DC
Air motor: 100 psi / 6.9 bar @ 80 cfm / 37760 cc/sec

Hydraulic System

All machine functions are performed by the hydraulic system, which contains either a hydraulic pump and an electric power unit or a hydraulic pump and an air motor power unit.

Platform elevate and the Power Wheel Assist (Option) functions are powered by a single-section gear pump, rated at 0.5 to 0.6 gpm at 2000 psi / 1.89 to 2.27 L/min at 138 bar for AC and Air models, 0.7 to 1 gpm at 2000 psi / 2.6 to 3.76 L/min at 138 bar for DC models. The pump supplies hydraulic fluid under pressure to the hydraulic manifold, where the directional and flow control valves are located, and to the drive manifold (if equipped). To protect from over-pressurization of the system, the hydraulic pump is provided with a pressure relief valve, set at 2700 psi / 186 bar.

The power wheel assist function is managed by a bi-directional hydraulic motor connected to a single drive/steer wheel. By first raising the chassis using the foot pump, the drive/steer wheel will lower, then by activating the directional rocker switch on the steer handle, you can move the machine in the direction desired while steering with the steer handle.

Electrical System

All functions are accomplished by first pressing a control activate button and then pushing a button on the control panel, which sends voltage or air to the appropriate directional control valve. These directional valves determine which direction the hydraulic fluid will travel.

Limit Switches

There is one limit switch for all IWP CE models with Platform Outreach (Option). This limit switch is located on the carriage mount. When the platform outreach is extended, the limit switch is activated and cuts power to the up/down functions.

Machine Controls

The Genie AWP Super Series and Genie IWP Super Series machines are equipped with operational controls which are found in two locations: the ground controls, located in two positions, on the side of the mast (standard base models), and in the front of the mast opposite the platform (narrow and rough terrain models), and the platform controls, located in the platform.

Ground controls: Only auxiliary platform lowering is available by pressing the auxiliary platform lowering button. For models with Power Wheel Assist Option, pull and hold the function enable lever to either side of the switch, and press the thumb rocker switch and drive the machine in the desired direction of travel. When releasing the thumb rocker switch, the machine will continue to roll. To set the brake, you must release the function enable lever. To move a machine without power wheel assist, pull and hold the function enable lever to release the brake. Release the function enable lever to stop the machine and set the brake. The brake will hold the machine on inclines of less than 3°.

Platform controls are activated by pressing the control activate button, then rotating the mast up/down function switch in the direction indicated on the control panel decal.

NOTICE Washing electronic components is not suggested. Instead, use compressed air to remove debris.

https://truckmanualshub.com/
www.truck-freeworkshop.com

This page intentionally left blank.

https://truckmanualshub.com/
www.truck-freeworkshop.com

Scheduled Maintenance Procedures

Observe and Obey:

- ☑ Maintenance inspections shall be completed by a person trained and qualified on the maintenance of these machines.
- ☑ Scheduled maintenance inspections shall be completed daily, quarterly and annually as specified on the *Maintenance Inspection Report.*

WARNING Failure to properly complete each inspection when required may result in death, serious injury or substantial machine damage.

- ☑ Immediately tag and remove from service a damaged or malfunctioning machine.
- ☑ Repair any machine damage or malfunction before operating machine.
- ☑ Use only Genie approved replacement parts.
- ☑ Machines that have been out of service for a period longer than 3 months must complete the quarterly inspection.
- ☑ Unless otherwise specified, perform each procedure with the machine in the following configuration:
  - Machine parked on a firm, level surface
  - Platform in the stowed position
  - Key switch in the off position with the key removed
  - The red Emergency Stop button in the off position at both ground and platform controls
  - Wheels chocked

About This Section

This section contains detailed procedures for each scheduled maintenance inspection.

Each procedure includes a description, safety warnings and step-by-step instructions.

Symbols Legend

Safety alert symbol–used to alert personnel to potential personal injury hazards. Obey all safety messages that follow this symbol to avoid possible injury or death

DANGER Indicates an imminently hazardous situation which, if not avoided, will result in death or serious injury.

WARNING Indicates a potentially hazardous situation which, if not avoided, could result in death or serious injury.

CAUTION Indicates a potentially hazardous situation which, if not avoided, may cause minor or moderate injury.

NOTICE Indicates a potentially hazardous situation which, if not avoided, may result in property damage.

⊙ Indicates that a specific result is expected after performing a series of steps.

⊠ Indicates that an incorrect result has occurred after performing a series of steps.

https://truckmanualshub.com/
www.truck-freeworkshop.com

SCHEDULED MAINTENANCE PROCEDURES

Maintenance Symbols Legend

Note: The following symbols have been used in this manual to help communicate the intent of the instructions. When one or more of the symbols appears at the beginning of a maintenance procedure, it conveys the meaning below.

Indicates that tools will be required to perform this procedure.

Indicates that new parts will be required to perform this procedure.

Indicates that dealer service is required to perform this procedure.

Pre-delivery Preparation Report

The pre-delivery preparation report contains checklists for each type of scheduled inspection.

Make copies of the *Pre-delivery Preparation* report to use for each inspection. Store completed forms as required.

Maintenance Schedule

There are three types of maintenance inspections that must be performed according to a schedule—daily, quarterly, and annual. The *Scheduled Maintenance Procedures Section* and the *Maintenance Inspection Report* have been divided into three subsections—A, B, and C. Use the following chart to determine which group(s) of procedures are required to perform a scheduled inspection.

Inspection	Table or Checklist
Daily or every 8 hours	A
Quarterly or every 250 hours	A + B
Annual Inspection or every 1000 hours	A + B + C

Maintenance Inspection Report

The maintenance inspection report contains checklists for each type of scheduled inspection.

Make copies of the *Maintenance Inspection Report* to use for each inspection. Maintain completed forms for a minimum of 4 years or in compliance with your employer, jobsite and governmental regulations and requirements.

https://truckmanualshub.com/
www.truck-freeworkshop.com

Pre-Delivery Preparation

Fundamentals

It is the responsibility of the dealer to perform the Pre-delivery Preparation.

The Pre-delivery Preparation is performed prior to each delivery. The inspection is designed to discover if anything is apparently wrong with a machine before it is put into service.

A damaged or modified machine must never be used. If damage or any variation from factory delivered condition is discovered, the machine must be tagged and removed from service.

Repairs to the machine may only be made by a qualified service technician, according to the manufacturer's specifications.

Scheduled maintenance inspections shall be performed by qualified service technicians, according to the manufacturer's specifications and the requirements listed in the responsibilities manual.

Instructions

Use the operator's manual on your machine.

The Pre-delivery Preparation consists of completing the Pre-operation Inspection, the Maintenance items and the Function Tests.

Use this form to record the results. Place a check in the appropriate box after each part is completed. Follow the instructions in the operator's manual.

If any inspection receives an N, remove the machine from service, repair and re-inspect it. After repair, place a check in the R box.

Legend

Y = yes, completed
N = no, unable to complete
R = repaired

Comments

Pre-Delivery Preparation	Y	N	R
Pre-operation inspection completed			
Maintenance items completed			
Function tests completed			

Model

Serial number

Date

Machine owner

Inspected by (print)

Inspector signature

Inspector title

Inspector company

Genie®
A TEREX BRAND

Genie Industries USA
18340 NE 76th Street
PO Box 97030
Redmond, WA 98073-9730
(425) 881-1800

Genie UK
The Maltings, Wharf Road
Grantham, Lincolnshire
NG31- 6BH England
(44) 1476-584333

Copyright © 2002 by Genie Industries. Genie® is a registered trademark of Genie Industries. Rev A

https://truckmanualshub.com/
www.truck-freeworkshop.com

This page intentionally left blank.

https://truckmanualshub.com/
www.truck-freeworkshop.com

Maintenance Inspection Report

Model

Serial number

Date

Machine owner

Inspected by (print)

Inspector signature

Inspector title

Inspector company

Instructions

- Make copies of this report to use for each inspection.
- Select the appropriate checklist(s) for the type of inspection to be performed.

☐	**Daily or 8 hour Inspection: A**
☐	**Quarterly or 250 hour Inspection: A + B**
☐	**Annual or 1000 hour Inspection: A + B + C**

- Place a check in the appropriate box after each inspection procedure is completed.
- Use the step-by-step procedures in this section to learn how to perform these inspections.
- If any inspection receives an "N", remove the machine from service, repair and re-inspect it. After repair, place a check in the "R" box.

Legend

Y = yes, acceptable
N = no, unacceptable
R = repaired

Comments

Checklist A		Y	N	R
A-1	Manuals and decals			
A-2	Pre-operation inspection			
A-3	Function tests			
A-4	Damage, loose or missing parts			
A-5	Hydraulic leaks			
A-6	Check Hydraulic oil Level			
A-7	Test base operation-IWPS models			
A-8	Auxiliary lowering operation			
A-9	Manual lowering operation			
A-10	Columns			
A-11	Sequencing cables			
A-12	Interlock system operation			
A-13	Power and function controls			
A-14	Lifting chains and idler wheels			
A-15	Breather cap			
A-16	Tire pressure			
A-17	Air line lubricator oil level - Air models			
A-18	Oil drip rate - Air models			
A-19	Air filter/regulator - Air models			

Checklist B		Y	N	R
B-1	Battery			
B-2	Electrical wiring			
B-3	Welds			
B-4	Tilt-back operation - if equipped			
B-5	Lifting chain adjustments			
B-6	Clean and lubricate columns			
B-7	Lifting capacity			
B-8	Sequencing cables			
B-9	Proper outrigger length - AWPS models			
B-10	Inspect and lubricate the outrigger leveling jack footpads - AWPS models			
B-11	Level sensing - IWPS models			
B-12	Chain adjustment - IWP-20S models with outreach			

Checklist C		Y	N	R
C-1	Casters and wheels			
C-2	Mast assembly			
C-3	Lifting chains			
C-4	Hydraulic oil			
C-5	Auxiliary platform lowering batteries			
C-6	Lifting chains			

https://truckmanualshub.com/
www.truck-freeworkshop.com

Checklist A Procedures

A-1
Inspect the Manuals and Decals

Maintaining the operator's and safety manuals in good condition is essential to safe machine operation. Manuals are included with each machine and should be stored in the container provided in the platform. An illegible or missing manual will not provide safety and operational information necessary for a safe operating condition.

In addition, maintaining all of the safety and instructional decals in good condition is mandatory for safe machine operation. Decals alert operators and personnel to the many possible hazards associated with using this machine. They also provide users with operation and maintenance information. An illegible decal will fail to alert personnel of a procedure or hazard and could result in unsafe operating conditions.

1 Check to make sure that the operator's and safety manuals are present and complete in the storage container on the platform.

2 Examine the pages of each manual to be sure that they are legible and in good condition.

⊙ Result: The operator's manual is appropriate for the machine and all manuals are legible and in good condition.

⊠ Result: The operator's manual is not appropriate for the machine or all manuals are not in good condition or is illegible. Remove the machine from service until the manual is replaced.

3 Open the operator's manual to the decals inspection section. Carefully and thoroughly inspect all decals on the machine for legibility and damage.

⊙ Result: The machine is equipped with all required decals, and all decals are legible and in good condition.

⊠ Result: The machine is not equipped with all required decals, or one or more decals are illegible or in poor condition. Remove the machine from service until the decals are replaced.

4 Always return the manuals to the storage container after use.

Note: Contact your authorized Genie distributor or Genie Industries if replacement manuals or decals are needed.

https://truckmanualshub.com/
www.truck-freeworkshop.com

A-2
Perform Pre-operation Inspection

Completing a Pre-operation Inspection is essential to safe machine operation. The Pre-operation Inspection is a visual inspection performed by the operator prior to each work shift. The inspection is designed to discover if anything is apparently wrong with a machine before the operator performs the function tests. The Pre-operation Inspection also serves to determine if routine maintenance procedures are required.

Complete information to perform this procedure is available in the appropriate operator's manual. Refer to the Operator's Manual on your machine.

A-3
Perform Function Tests

Completing the function tests is essential to safe machine operation. Function tests are designed to discover any malfunctions before the machine is put into service. A malfunctioning machine must never be used. If malfunctions are discovered, the machine must be tagged and removed from service.

Complete information to perform this procedure is available in the appropriate operator's manual. Refer to the Operator's Manual on your machine.

https://truckmanualshub.com/
www.truck-freeworkshop.com

CHECKLIST A PROCEDURES

A-4
Inspect for Damage and Loose or Missing Parts

Genie specifications require that this procedure be performed every 8 hours or daily, whichever comes first.

Daily machine condition inspections are essential to safe machine operation and good machine performance. Failure to locate and repair damage, and discover loose or missing parts may result in an unsafe operating condition.

1 Inspect the entire machine for damage and improperly installed or missing parts including:
   - Electrical components, wiring and electrical cables
   - Electrical cable anchors and pulleys
   - Hydraulic power unit, hoses, fittings, cylinder(s) and manifolds
   - Sequencing cables, anchors and pulleys
   - Lifting chains and idler wheels
   - Adjustable glide pads
   - Mast columns and counterweight(s)
   - Mast covers
   - Nuts, bolts and other fasteners
   - Platform entry mid-rail or gate
   - Breather cap
   - IWPS models: Hydraulic manifolds and foot pump
   - IWPS models: Foot pads
   - AWPS models: Outriggers, leveling jacks and foot pads
   - Dents or damage to machine
   - Corrosion or oxidation
   - Cracks in welds or structural components

IWPS models with Power Wheel Assist Option:

- Steer handle
- Hydraulic motor and hoses

IWP-20S models with Outreach Option:

- Locking bracket
- Handle and handle lock
- Outreach extension arms
- Chain and sprocket

https://truckmanualshub.com/
www.truck-freeworkshop.com

A-5
Check for Hydraulic Leaks

Genie specifications require that this procedure be performed every 8 hours or daily, whichever comes first.

Detecting hydraulic fluid leaks is essential to operational safety and good machine performance. Undiscovered leaks can develop into hazardous conditions, impair machine functions and damage machine components.

1 Inspect for hydraulic oil puddles, dripping or residue on or around the following areas:

- Hydraulic power unit—tank, valves, fittings
- Hydraulic cylinder(s)
- Flow control valve
- Ground area under the machine
- Hydraulic hoses and fittings
- IWPS models: Hydraulic manifolds and foot pump

IWPS models with Power Wheel Assist Option:

- Hydraulic motor and hoses

A-6
Check the Hydraulic Oil Level

Genie specifications require that this procedure be performed every 8 hours or daily, whichever comes first.

Maintaining the hydraulic oil at the proper level is essential to machine operation. Improper hydraulic oil levels can damage hydraulic components. Daily checks allow the inspector to identify changes in oil level that might indicate the presence of hydraulic system problems.

1 Be sure the platform is fully lowered.

2 Remove the fasteners from the hydraulic power unit cover.

3 Remove the cover.

4 Check the sight gauge on the side of the hydraulic tank.

⊙ Result: The hydraulic oil level should be visible in the middle of the sight gauge.

5 Add oil if needed. Do not overfill.

6 Replace the cover.

Hydraulic System	
Hydraulic fluid	Chevron Rando HD equivalent
Hydraulic tank capacity - all models	3 quarts 2.8 liters

https://truckmanualshub.com/
www.truck-freeworkshop.com

CHECKLIST A PROCEDURES

A-7
Test the Base Operation - IWPS Models

Genie specifications require that this procedure be performed every 8 hours or daily, whichever comes first.

Testing the base for proper operation is essential for safe machine operation. An unsafe working condition exists if the base fails to operate properly. The base should operate smoothly and be free of hesitation, jerking and binding.

1 Pump the foot pedal 7 to 9 complete strokes.

⊙ Result: The non-adjustable foot pads should raise 1 1/2 to 2 inches / 4 to 5 cm off the ground.

2 Pull the base lowering handle.

⊙ Result: The base should lower, putting all four foot pads in firm contact with the ground.

3 Raise the platform slightly.

⊙ Result: The inner frame wheels should lift off the ground.

A-8
Check the Auxiliary Platform Lowering Operation

Genie specifications require that this procedure be performed every 8 hours or daily, whichever comes first.

The auxiliary platform lowering is powered by a secondary battery pack that is located in the ground control box. The auxiliary platform lowering can be activated from the ground or platform controls. Detection of an auxiliary lowering malfunction is essential for safe machine operation. An unsafe working condition exists if the auxiliary platform lowering function does not operate in the event of a main power failure.

1 Raise the platform slightly.

2 Disconnect the power source from the machine.

3 Push in the auxiliary platform lowering button at the ground controls.

⊙ Result: Platform should lower.

4 Connect the power source to the machine.

5 Raise the platform slightly.

6 Disconnect the power source from the machine.

7 Push in the control activate button and rotate the up/down switch in the down direction.

⊙ Result: Platform should lower.

https://truckmanualshub.com/
www.truck-freeworkshop.com

A-9
Check the Manual Platform Lowering Operation

Genie specifications require that this procedure be performed every 8 hours or daily, whichever comes first.

Detection of a manual lowering malfunction is essential for safe machine operation. An unsafe working condition exists if the manual lowering function does not operate in the event of a main and auxiliary power failure.

1 Raise the platform slightly.

2 Activate the manual lowering valve located at the bottom of the hydraulic cylinder.

⊙ Result: The platform should lower.

A-10
Inspect the Columns for Damage

Genie specifications require that this procedure be performed every 8 hours or daily, whichever comes first.

Detection of damage to columns is essential for safe machine operation. An unsafe working condition exists if the columns are damaged and do not operate smoothly, free of hesitation and binding. A daily check of the columns allows the inspector to identify changes in the operating condition of the column assembly that might indicate damage.

1 Visually inspect each column for the following:
- Dents, gouges or abrasions
- Bends or warping
- Excessive wear

2 Raise and lower the platform through a complete cycle.

⊙ Result: The platform should raise and lower smoothly, free of hesitation and binding.

https://truckmanualshub.com/
www.truck-freeworkshop.com

CHECKLIST A PROCEDURES

A-11
Check the Sequencing Cables

Genie specifications require that this procedure be performed every 8 hours or daily, whichever comes first.

Detection of damage to sequencing cables or components is essential for safe machine operation. An unsafe working condition exists if the sequencing components are damaged and do not operate smoothly. A daily check of the sequencing system allows the inspector to identify changes in the operating condition that might indicate damage.

1 Visually inspect the cables and components for the following:
   - Frayed or broken wire strands
   - Kinks in the cable
   - Corrosion
   - Paint or foreign materials
   - Broken or damaged pulleys
   - Unusual or excessive pulley wear
   - Split or cracked threaded swage ends

2 Confirm the following:
   - Cables are on the pulleys
   - Upper and lower cable ends are properly secured
   - Upper and lower mounting brackets are properly secured

A-12
Check the Interlock System for Proper Operation

Genie specifications require that this procedure be performed every 8 hours or daily, whichever comes first.

Testing the interlock system for malfunctions is essential for safe machine operation. An unsafe working condition exists if any interlock display light fails to operate properly.

AWPS models

1 Turn the key switch to ground control and pull out the red Emergency Stop button to the ON position. Twist to release the red Emergency Stop button at the platform controls.

⊙ Result: AC & DC models: The power light should be on.
Air models: The air pressure gauge should read 80 - 110 psi / 5.5 - 7.8 bar

2 Slide each outrigger into a base socket until the outrigger lock pin snaps into place. Adjust outriggers to level using the outrigger screw jack until the base casters are slightly off the ground.

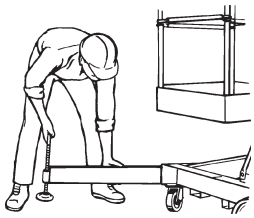

3 Check the interlock display lights at the ground controls.

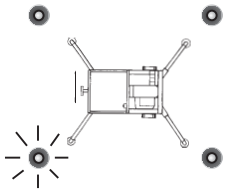

⊙ Result: Confirm that the corresponding light is on.

4 Repeat steps 2 and 3 for each of the remaining outriggers.

IWPS models

https://truckmanualshub.com/
www.truck-freeworkshop.com

1 Turn the key switch to ground control and pull out the red Emergency Stop button to the ON position. Twist to release the red Emergency Stop button at the platform controls.

⊙ Result: The power light should be on.

2 Pull the base lowering handle to fully lower the base.

3 Use the bubble level and adjust the leveling jacks until the machine is level and all four foot pads are in firm contact with the ground.

⊙ Result: Within 1 to 3 seconds, all four interlock display lights should turn on and remain on.

4 Pump the foot pedal to raise the base.

⊙ Result: Both foot pad interlock display lights should be off.

5 Pull the base lowering handle to lower the base.

⊙ Result: The base will lower and both foot pad interlock display lights should be on.

6 Pump the foot pedal to raise the base.

7 Turn both leveling jacks clockwise to the full/extended position.

8 Pull the base lowering handle to lower the base.

⊙ Result: The base will lower and the two level sensor interlock display lights should be off and remain off.

9 Push in the red Emergency Stop button at the platform controls.

10 Push in the control activate button and rotate the up/down switch in the UP position, then the DOWN position.

⊙ Result: Platform up/down functions should not operate.

A-13 Test the Power and Function Controls

Genie specifications require that this procedure be performed every 8 hours or daily, whichever comes first.

Testing the machine functions and the Emergency Stop buttons for malfunctions is essential for safe machine operation. An unsafe working condition exists if any function fails to operate properly or either red Emergency Stop button fails to stop all the machine functions. Each function should operate smoothly and be free of hesitation, jerking and unusual noise.

1 Turn the key switch to ground control and pull out the red Emergency Stop button to the ON position. Twist to release the red Emergency Stop button at the platform controls.

⊙ Result: The power light should be on.

2 Push in the control activate button and rotate the up/down switch in the UP position, then the DOWN position.

⊙ Result: Platform up/down functions should operate.

3 Push in the red Emergency Stop button at the platform controls to the OFF position.

4 Push in the control activate button and rotate the up/down switch in the UP position, then the DOWN position.

⊙ Result: The up/down functions should not operate.

5 Push in the red Emergency Stop button at both platform and ground controls.

6 Push in the control activate button and rotate the up/down switch in the UP position, then the DOWN position.

⊙ Result: The up/down functions should not operate.

https://truckmanualshub.com/
www.truck-freeworkshop.com

CHECKLIST A PROCEDURES

A-14
Inspect the Lifting Chains and Idler Wheels

Genie specifications require that this procedure be performed every 8 hours or daily, whichever comes first.

Maintaining the lifting chains and idler wheels in good condition is essential to safe machine operation. Failure to find and replace damaged chains or idler wheels could result in unsafe operating conditions and may cause component damage.

1 Raise the platform approximately 3 feet / 1 m.

2 Visually inspect the chains and idler wheels near the top of each column for the following:

- Excessive corrosion
- Broken or missing chain leafs and pins
- Tight or kinked joints in the chain
- Missing or damaged idler wheels and related components

3 Inspect the chain terminations near the bottom of each column to confirm that each termination has a lock nut.

4 Inspect the chain terminations near the bottom of each column to confirm that the chain tensioner bracket is centered in the inspection hole.

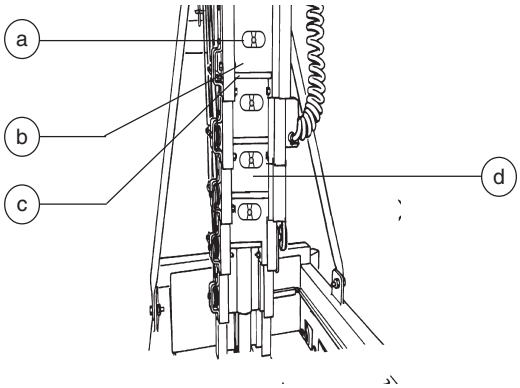

a chain tensioner bracket
b adjustment nut (hidden from view)
c termination rod (hidden from view)
d column

https://truckmanualshub.com/
www.truck-freeworkshop.com

A-15
Inspect the Breather Cap

Genie specifications require that this procedure be performed every 8 hours or daily, whichever comes first.

The hydraulic tank is vented to the atmosphere. The breather cap has an internal air filter that can clog and may cause the power unit to operate improperly. If the breather cap is not properly installed and checked daily, impurities can enter the hydraulic system and may cause component damage.

1 Be sure the breather cap is installed on the hydraulic power unit tank and is not damaged. Do not remove it.

A-16
Check the Tire Pressure - AWPS Models with Rough Terrain Base Option

Genie specifications require that this procedure be performed every 8 hours or daily, whichever comes first.

It is essential to maintain proper pressure in all air-filled tires. Improperly inflated tires can affect machine handling.

1 Check the tire pressure with an air pressure gauge. Add air as needed.

Models before serial number 3899-11837.

⊙ Tire pressure should be 30 psi / 2 bar in the front and rear tires.

Models after serial number 3899-11836.

⊙ Tire pressure should be 50 psi / 3.4 bar in the front and rear tires.

A-17
Check the Air Supply Lubricator Oil Level - Air Models

Genie specifications require that this procedure be performed every 8 hours or daily, whichever comes first.

Maintaining the proper oil level in the lubricator canister is essential to safe operation and good machine performance. Failure to keep the lubricator canister at the proper oil level could result in unsafe operating conditions and may cause component damage.

1 Be sure the platform is fully lowered.

2 Inspect the lubricator canister for proper oil level.

⊙ Result: The oil level must be within 1/2 inch / 12.7 mm from the top of the lubricator canister.

3 To add oil, remove the oil lubricator canister from the lubricator base and fill with oil. Install the canister back onto the lubricator base.

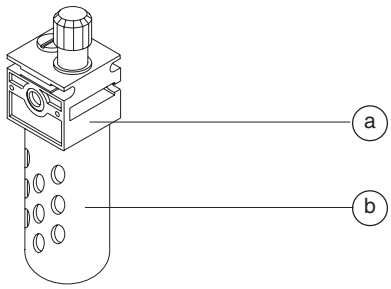

a oil lubricator base
b oil lubricator canister

Oil Specification	
Oil Type	10W automotive engine oil

https://truckmanualshub.com/
www.truck-freeworkshop.com

CHECKLIST A PROCEDURES

A-18
Check the Air Supply Lubricator Drip Rate - Air Models

Genie specifications require that this procedure be performed every 8 hours or daily, whichever comes first.

Maintaining the proper oil drip rate into the air supply is essential to safe operation and good machine performance. Failure to maintain the proper drip rate could result in machine component damage.

1 While raising the platform, visually inspect the oil lubricator sight gauge.

⊙ Result: There should be a maximum of 1 to 2 drops of oil visible in the sight gauge.

2 To adjust the drip rate, turn the oil flow control valve clockwise to decrease the flow or counterclockwise to increase the flow.

3 Repeat this procedure until the proper oil drip rate is achieved.

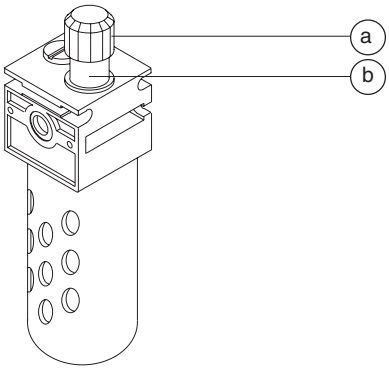

a oil lubricator flow control valve
b oil lubricator sight gauge

A-19
Check the Air Filter/Regulator Canister - Air Models

Genie specifications require that this procedure be performed every 8 hours or daily, whichever comes first.

It is essential to drain the air filter/regulator canister of water to ensure good air motor performance and service life. A water-filled canister could cause the air motor to perform poorly and continued use may cause component damage.

1 Check the air filter/regulator canister for any water accumulation.

2 If water is visible, loosen the drain plug at the bottom of the canister and allow the water to drain out.

3 Tighten the drain plug.

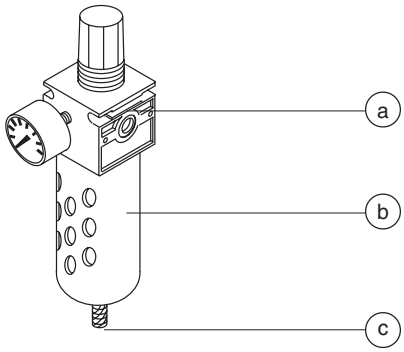

a air filter/regulator
b air filter/regulator canister
c air filter/regulator canister drain plug

https://truckmanualshub.com/
www.truck-freeworkshop.com

Checklist B Procedures

REV B

B-1
Inspect the Battery

Genie specifications require that this procedure be performed every 250 hours or quarterly, whichever comes first.

Proper battery condition is essential to good machine performance and operational safety. Improper fluid levels or damaged cables and connections can result in component damage and hazardous conditions.

WARNING Electrocution/burn hazard. Contact with hot or live circuits could result in death or serious injury. Remove all rings, watches and other jewelry.

WARNING Bodily injury hazard. Batteries contain acid. Avoid spilling or contacting battery acid. Neutralize battery acid spills with baking soda and water.

1 Put on protective clothing and eye wear.

2 Be sure that the battery cable connections are tight and free of corrosion.

Note: Adding terminal protectors and a corrosion preventative sealant will help eliminate corrosion on the battery terminals and cables.

3 Remove the battery vent caps and check the specific gravity of each battery cell with a hydrometer.

⊙ Result: If any battery cell displays a specific gravity of less than 1.026, the battery must be replaced.

4 Check the battery acid level. If needed, replenish with distilled water to the bottom of the battery fill tube. Do not overfill.

5 Install the battery vent caps.

6 If equipped: Set the battery charger AC Selector switch to the proper voltage.

7 Set the power switch to the AUTO position.

⊙ Result: The charger ammeter should be ON.

https://truckmanualshub.com/
www.truck-freeworkshop.com

B-2
Inspect the Electrical Wiring

Genie specifications require that this procedure be performed every 250 hours or quarterly, whichever comes first.

Maintaining electrical wiring in good condition is essential to safe operation and good machine performance. Failure to find and replace burnt, chafed, corroded or pinched wires could result in unsafe operating conditions and may cause component damage.

WARNING Electrocution/burn hazard. Contact with hot or live circuits could result in death or serious injury. Remove all rings, watches and other jewelry.

1 Inspect the following areas for burnt, chafed, corroded and loose wires:
   - All base wiring
   - Inside ground control box
   - Hydraulic power unit
   - All external electrical cables
   - Inside platform control box
   - DC models: battery pack
   - AC power supply cord
   - IWPS models: inside base junction box
   - IWPS models: power wheel assist manifold (if equipped)

B-3
Inspect All Welds

Genie specifications require that this procedure be performed every 250 hours or quarterly, whichever comes first.

Weld inspections are essential to safe machine operation and good machine performance. Failure to locate and repair damage may result in an unsafe operating condition.

1 Visually inspect the welds in the following locations:
   - Platform
   - Base
   - Mast brace mounting bracket

   AWPS models:
   - Loading pivot bar
   - Outrigger storage sockets
   - Tilt-back frame (if equipped)
   - Tilt-back frame mounting bracket (if equipped)

   IWPS models:
   - Foot pads
   - Power wheel assist (if equipped)

https://truckmanualshub.com/
www.truck-freeworkshop.com

B-4
Test the Tilt-back Operation (if equipped)

Genie specifications require that this procedure be performed every 250 hours or quarterly, whichever comes first.

A tilt-back frame is standard equipment on AWP-36S and 40S and optional on AWP-15S, 20S, 25S and 30S. The tilt-back frame allows the machine to be rolled through a standard doorway. Failure to detect improper tilt-back operation could result in unsafe operating conditions and may cause injury and component damage.

1 Fully lower the platform.

2 Remove the outriggers from the base and place in the storage sockets.

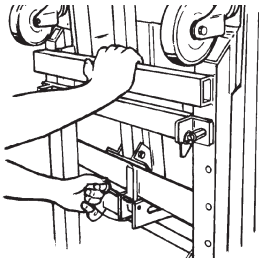

3 Maintain a firm grasp on the tilt-back frame and remove the retaining pin.

4 Lower the tilt-back frame and guide the tilt-back strut into the strut socket.

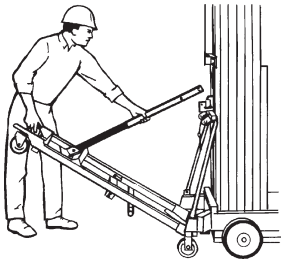

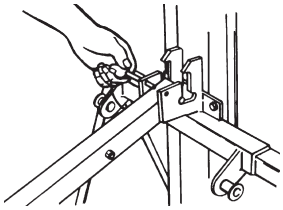

5 Insert the retaining pin into the strut socket.

⚠WARNING Crushing hazard. The machine will fall if the retaining pin is not locked into the strut socket.

6 Slide out the T-handle until the lock pin snaps into the locked position.

⚠WARNING Crushing hazard. The machine could fall if the T-handle lock pin is not locked into the base.

7 Lift the machine with the T-handle to the mid-tilt position (casters on tilt-back frame contact the floor, and machine supported by the extended tilt-back strut). Use the appropriate number of people and proper lifting techniques.

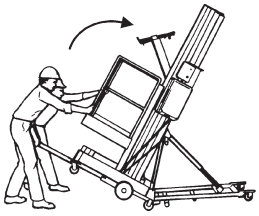

8 Continue lifting until telescoping tilt-back strut is completely compressed.

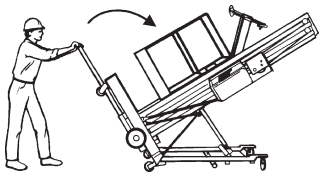

9 Return the machine to the standing position. Carefully pull down T-handle until machine rests at mid-tilt position.

10 Lower the machine with the T-handle until base casters are in contact with the ground. Use the appropriate number of people and proper lifting techniques.

11 Return the sliding T-handle to stowed position.

12 Stow the tilt-back frame in the upright position and insert the retaining pin.

https://truckmanualshub.com/
www.truck-freeworkshop.com

B-5
Check the Lifting Chain Adjustments

Genie specifications require that this procedure be performed every 250 hours or quarterly, whichever comes first.

Maintaining proper adjustment of the lifting chains is essential to safe machine operation. Failure to maintain proper chain adjustment could result in unsafe operating conditions and may cause component damage.

1 Fully lower the platform and measure the maximum height of the machine.

IWPS models: Turn the screw jacks counterclockwise to the full up position. Pull the base lowering handle to lower the base.

⊙ Result: The machine should be no taller than specification.

Note: If measurement does not meet specification, adjust the chains. See Repair procedure 5-4, *How to Adjust the Lifting Chains*.

2 **AWPS models**: Measure the distance between the top of the base frame and the bottom edge of the platform.

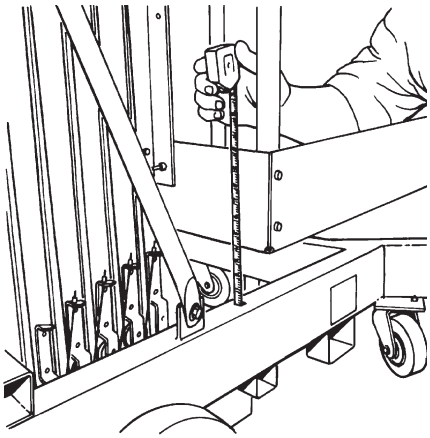

IWPS models: Measure the distance between the bottom edge of the platform to the top of the counterweight.

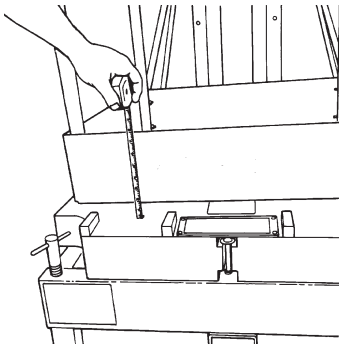

⊙ Result: The measurement should be no less than specification.

Note: If measurement does not meet specification, adjust the chains. See Repair procedure 5-4, *How to Adjust the Lifting Chains*.

https://truckmanualshub.com/
www.truck-freeworkshop.com

Specifications

Model	Height	Measurement (step 2)
IWP-20S	76 in 193 cm	3 in 7.6 cm
IWP-25S	76 in 193 cm	3 in 7.6 cm
IWP-30S	76 in 193 cm	3 in 7.6 cm
AWP-15S	78 in 198 cm	3 in 7.6 cm
AWP-20S	78 in 198 cm	3 in 7.6 cm
AWP-25S	78 in 198 cm	3 in 7.6 cm
AWP-30S	78 in 198 cm	3 in 7.6 cm
AWP-36S	109 1/2 in 278 cm	3 in 7.6 cm
AWP-40S	109 1/2 in 278 cm	3 in 7.6 cm

B-6
Clean and Lubricate the Columns

Genie specifications require that this procedure be performed every 250 hours or quarterly, whichever comes first.

Clean and properly lubricated columns are essential to good machine performance and safe operation. Extremely dirty conditions may require that the columns be cleaned and lubricated more often.

1 Raise the platform to the maximum height.

2 Visually inspect the inner and outer channels of the columns for debris or foreign material. If necessary, use a mild cleaning solvent to clean the columns.

WARNING Bodily injury hazard. This procedure will require the use of additional access equipment. Do not place ladders or scaffold on or against any part of the machine. Performing this procedure without the proper skills and tools could result in death or serious injury. Dealer service is strongly recommended.

3 If needed, apply a generous amount of Boe-lube wax (Genie part number 90337) to the inside and outside channels of each column.

https://truckmanualshub.com/
www.truck-freeworkshop.com

CHECKLIST B PROCEDURES REV B

B-7
Test the Lifting Capacity

Genie specifications require that this procedure be performed every 250 hours or quarterly, whichever comes first.

Proper lifting capacity is essential to safe machine operation. Improper lifting capacity adjustment could allow machine to be overloaded and may cause death or serious injury.

WARNING Bodily injury hazard. This procedure requires specific repair skills, lifting equipment and a suitable workshop. Attempting this procedure without these skills and tools could result in death or serious injury and significant component damage. Dealer service is strongly recommended.

1 Place the maximum rated load in the platform. Secure the load to the platform.

Note: Refer to the operator's manual or the load capacity decal on the machine to determine the maximum load capacity.

2 Raise the platform slightly.

⊙ Result: The hydraulic power unit should raise the platform.

3 Fully lower the platform.

4 Add an additional 30 pounds / 14 kg to the platform. Secure the additional weight.

5 Raise the platform slightly.

⊙ Result: The hydraulic power unit should not be able to raise the platform.

Note: If the hydraulic power unit is unable to lift rated load or lifts more than rated load, see Repair procedure 3-6, *Valve Adjustment.*

B-8
Adjust the Sequencing Cables

Genie specifications require that this procedure be performed every 250 hours or quarterly, whichever comes first.

Maintaining proper adjustment of the sequencing cables is essential for safe machine operation. An unsafe working condition exists if the sequencing cables are improperly adjusted. A daily check of the sequencing cables allows the inspector to identify changes in the operating condition that might indicate damage.

Before serial number 3899-11844

1 Fully lower the platform.

2 Check the deflection on each sequencing cable by grasping the cable halfway down the column and pulling the cable to one side then the other. Measure the total distance between the two points (this is the maximum deflection).

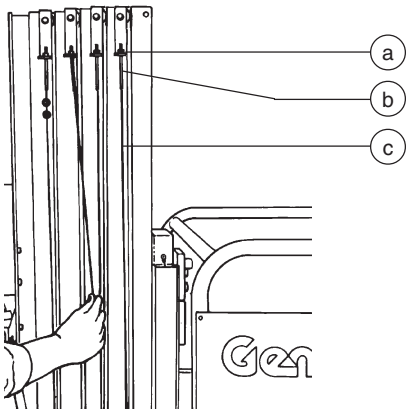

a adjustment (tension) nut
b threaded swage end
c sequencing cable

https://truckmanualshub.com/
www.truck-freeworkshop.com

3 If needed, adjust the sequencing cable deflection.

4 Hold the threaded swage end of the cable from turning and adjust the tension nut to obtain correct deflection. Turn the adjustment nut clockwise to decrease the deflection or counterclockwise to increase the deflection.

NOTICE Component damage hazard. Do not exceed the recommended deflection.

5 Raise and lower the platform through three complete cycles and confirm deflection.

6 Repeat adjustment for each cable as required.

Specification	
Deflection, Maximum	1 1/2 to 2 1/2 inches 3.8 to 6.4 cm

After serial number 3899-11843

1 Fully lower the platform.

2 Check for proper deflection of each sequencing cable by inspecting the spring compression. The spring is located between the nylock nut and the upper sequencing bracket.

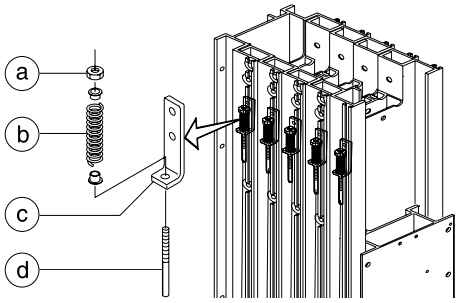

a nylock nut
b spring
c upper sequencing bracket
d sequencing cable

3 Compress the spring to 15/16 in / 2.4 cm by turning the nylock nut clockwise to increase the spring compression or counterclockwise to decrease the spring compression.

NOTICE Component damage hazard. Do not exceed the recommended spring compression.

4 Confirm the spring measurement on each sequencing cable.

5 Raise and lower the platform through three complete cycles and confirm the spring compression.

6 Repeat the adjustment for each cable as required.

https://truckmanualshub.com/
www.truck-freeworkshop.com

B-9
Inspect for Proper Outrigger Length - AWPS Models

Genie specifications require that this procedure be performed every 250 hours or quarterly, whichever comes first.

Proper outrigger length is essential to safe machine operation. Operating a machine with outriggers different from those originally designed for the model will result in death or serious injury.

1 Measure each outrigger and verify for proper length.

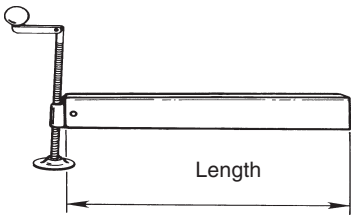

ANSI Models		
AWP-15S (including narrow and rough terrain base options)	20 inches	50.8 cm
AWP-20S (including narrow and rough terrain base options)	20 inches	50.8 cm
AWP-25S (including narrow and rough terrain base options)	20 inches	50.8 cm
AWP-30S (including narrow and rough terrain base options)	26 inches	66 cm
AWP-36S	36 inches	91.4 cm
AWP-40S	40 inches	101.6 cm
CSA Models		
AWP-15S (including narrow and rough terrain base options)	20 inches	50.8 cm
AWP-20S (including narrow and rough terrain base options)	26 inches	66 cm
AWP-25S (including narrow and rough terrain base options)	36 inches	91.4 cm
AWP-30S (including narrow and rough terrain base options)	46 inches	117 cm
AWP-36S	60 inches	152 cm
AWP-40S	60 inches	152 cm

https://truckmanualshub.com/
www.truck-freeworkshop.com

CE Indoor Models		
AWP-15S (including narrow and rough terrain base options)	20 inches	50.8 cm
AWP-20S	20 inches	50.8 cm
AWP-20S (narrow and rough terrain base options)	26 inches	66 cm
AWP-25S (including narrow and rough terrain base options)	26 inches	66 cm
AWP-30S	30.5 inches	77 cm
AWP-30S (narrow and rough terrain base options)	36 inches	91.4 cm
AWP-36S	36 inches	91.4 cm
AWP-40S	40 inches	102 cm
CE Outdoor Models		
AWP-15S (including narrow and rough terrain base options)	46 inches	117 cm
AWP-20S	46 inches	117 cm
AWP-20S (narrow and rough terrain base options)	60 inches	152 cm
AWP-25S (including narrow and rough terrain base options)	60 inches	152 cm
AWP-30S	60 inches	152 cm
AWP-30S (narrow and rough terrain base options)	75 inches	191 cm
AWP-36S	75 inches	191 cm
AWP-40S	85 inches	216 cm

B-10
Inspect and Lubricate the Outrigger Leveling Jack Footpads - AWPS Models

Genie specifications require that this procedure be performed every 250 hours or quarterly, whichever comes first.

Detection of unusual wear of the leveling jack footpads is essential for safe machine operation. An improperly lubricated and or damaged footpad could result in an unsafe condition.

1 Visually inspect the leveling jack footpads for any unusual wear.

2 Liberally apply grease to the top of the footpads at the swivel point and the leveling jack threads.

a outrigger leveling jack threads

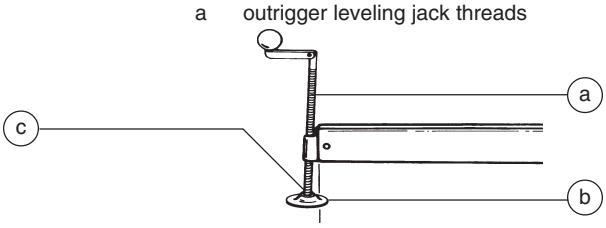

b outrigger footpad
c outrigger footpad swivel point

Grease Type	Lithium-based

https://truckmanualshub.com/
www.truck-freeworkshop.com

CHECKLIST B PROCEDURES REV B

B-11
Test the Level Sensing Operation - IWPS Models

Genie specifications require that this procedure be performed every 250 hours or quarterly, whichever comes first.

Detection of level sensing malfunctions is essential for safe machine operation. An improperly functioning level sensing system could result in unsafe operating conditions.

1 Position the machine on a firm, level surface

2 Turn the key switch to ground control and pull out the red Emergency Stop button to the ON position. Twist to release the red Emergency Stop button at the platform controls.

⊙ Result: The power light should be on.

3 Adjust the leveling jacks until the bubble is in the center ring of the bubble level and all four foot pads are in firm contact with the ground.

⊙ Result: Within 1 to 4 seconds, all four interlock display lights should turn on and remain on.

4 Pump the foot pedal to raise the base.

5 Place a 1/4 inch / 6.35 mm thick spacer under one adjustable and one non-adjustable foot pad on the same side of the machine.

6 Pull the base lowering handle to lower the base.

⊙ Result: Within 1 to 4 seconds, all four interlock display lights should turn on and remain on.

7 Repeat steps 4 and 5 using a 1/2 inch / 12.7 mm spacer.

8 Pull the base lowering handle to lower the base.

⊙ Result: Within 1 to 4 seconds, two interlock display lights should turn off and remain off.

9 Repeat steps 4 through 8 to test the opposite side of the machine.

10 Pump the foot pedal to raise the base.

11 Place a 3/4 inch / 19 mm thick spacer under both adjustable foot pads.

12 Pull the base lowering handle to lower the base.

⊙ Result: Within 1 to 4 seconds, all four interlock display lights should turn on and remain on.

13 Pump the foot pedal to raise the base.

14 Turn the leveling jacks counterclockwise enough to fit a 1 1/2 inch / 3.8 cm spacer under each adjustable foot pad.

15 Turn the leveling jacks clockwise until the foot pads just touch the spacers.

16 Pull the base lowering handle to lower the base.

⊙ Result: Within 1 to 4 seconds, two interlock display lights should turn off and remain off.

17 Pump the foot pedal to the raise the base.

18 To test the non-adjustable foot pads, turn the leveling jacks counterclockwise all the way.

19 Place a 1 1/2 inch / 3.8 cm spacer under each non-adjustable foot pad.

20 Pull the base lowering handle to lower the base.

⊙ Result: Within 1 to 4 seconds, two interlock display lights should turn off and remain off.

https://truckmanualshub.com/
www.truck-freeworkshop.com

B-12
Check the Chain Adjustment, IWP-20S Models with Outreach Option

Genie specifications require that this procedure be performed every 250 hours or quarterly, whichever comes first.

Detection of a improperly adjusted platform outreach chain is essential for safe machine operation. Failure to detect an improperly adjusted platform outreach chain could result in unsafe operating conditions and may cause injury and component damage.

1 Fully lower the platform.

2 Lower the base and turn the key switch off.

3 Fully extend the outreach and lock the handle.

4 Locate the chain between the lower sprocket and the lower brace.

5 Grasp the two chain sections and lightly pinch them together.

⊙ Result: There should be a minimum of a 1/4 inch / 6.4 mm gap between the chain sections.

Note: If measurement does not meet specification, adjust the chains. See Repair procedure 7-3, *How to Adjust the Platform Outreach Chain.*

https://truckmanualshub.com/
www.truck-freeworkshop.com

Checklist C Procedures

REV B

C-1
Inspect and Lubricate the Casters and Wheels

Genie specifications require that this procedure be performed every 1000 hours or annually, whichever comes first.

Extremely dirty conditions may require that the casters and wheels be inspected and lubricated more often.

1 Visually inspect each caster and wheel for cuts, cracks or unusual wear.

2 Push the machine on a flat smooth surface and check that the casters and wheels roll smoothly.

3 Pump grease into the zerk fitting on each caster and wheel until it can be seen coming out of the bearing seal gap.

Grease Type	Lithium-based

C-2
Inspect the Mast Assembly for Wear

Genie specifications require that this procedure be performed every 1000 hours or annually, whichever comes first.

Detection of excessive or unusual wear in the mast assembly is essential for safe machine operation. An unsafe working condition exists if the mast assembly has excessive wear or does not operate smoothly, free of hesitation and binding.

1 Remove the mast covers.

2 Raise the platform until 3 to 5 inches / 7.6 to 12.7 cm of each column is visible.

3 Visually inspect the top of each column for clearance between the roller wheels and the adjacent column surface.

⊙ Result: There should be a equal amount of distance between the roller wheel and the column on each side.

Note: If mast inspection results in a measurement that is not within specification, refer to Repair procedure 5-3, *How to Adjust the Glide Pads.*

4 Loosen but do not remove the adjustment nut on the sequencing cable located at the top of the first column.

https://truckmanualshub.com/
www.truck-freeworkshop.com

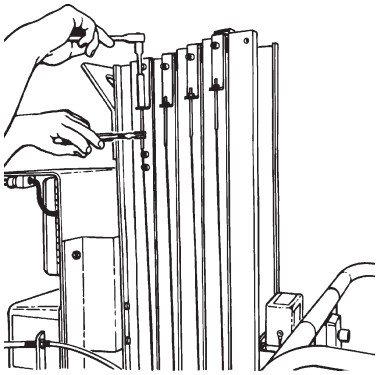

5 Raise the platform approximately 3 feet / 1 m above the top of the base.

6 Place a jack stand on the top of the base, centered under the platform. Adjust the jack stand to 24 inches / 61 cm.

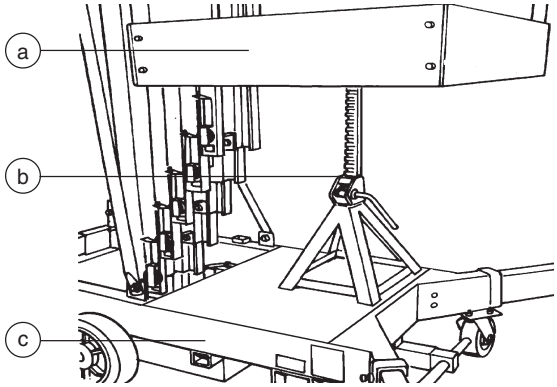

a platform
b jack stand
c base

7 Lower the platform onto the jack stand just enough to take the weight off the lifting chains.

WARNING Crushing hazard. Keep away from lowering platform.

8 Inspect each idler wheel for the following:

- Excessive wear on the side flanges
- Unusual wear
- Movement side to side in excess of 0.079 inch / 2 mm
- Any movement of wheel front to back

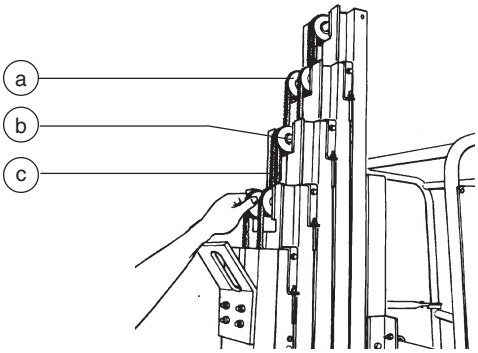

a idler wheel
b spacer
c lifting chain

Note: If idler wheel inspection results in a measurement that is not within specification, replace the idler spacers. Refer to Repair procedure 5-2, *How to Assemble the Mast.*

9 Raise the platform and remove the jack stand and the support blocks. Then lower the platform.

10 Install the mast covers and adjust the sequencing cable. See B-8, *Adjust the Sequencing Cables.*

https://truckmanualshub.com/
www.truck-freeworkshop.com

C-3
Inspect and Lubricate the Lifting Chains

Genie specifications require that this procedure be performed every 1000 hours or annually, whichever comes first.

Lubricated chains are essential to good machine performance and safe operation. Extremely dirty conditions may require that the chains be cleaned and lubricated more often.

1 Raise the platform to the maximum height.

2 Inspect each lifting chain. Refer to Repair procedure 5-4, *How to Inspect the Lifting Chains.*

3 Lubricate each chain with a dry-type spray lubricant.

WARNING Bodily injury hazard. This procedure will require the use of additional access equipment. Do not place ladders or scaffold on or against any part of the machine. Performing this procedure without the proper skills and tools could result in death or serious injury. Dealer service is strongly recommended.

C-4
Replace the Hydraulic Oil

Genie specifications require that this procedure be performed every 1000 hours or annually, whichever comes first.

Replacement of the hydraulic oil is essential for good machine performance and service life. Dirty oil and a dirty suction strainer may cause the machine to perform poorly and continued use may cause component damage. Extremely dirty conditions may require oil changes to be performed more often.

1 Fully lower the platform.

2 Remove the plastic cover from the power unit.

3 Remove the drain plug from the tank and allow all of the oil from the tank to drain into a suitable container. See capacity specifications.

WARNING Bodily injury hazard. Spraying hydraulic oil can penetrate and burn skin. Loosen hydraulic connections very slowly to allow the oil pressure to dissipate gradually. Do not allow oil to squirt or spray.

4 **IWPS models with Power Wheel Assist Option:** Tag and disconnect the hose at the bottom of the tank and drain oil into a suitable container.

WARNING Bodily injury hazard. Spraying hydraulic oil can penetrate and burn skin. Loosen hydraulic connections very slowly to allow the oil pressure to dissipate gradually. Do not allow oil to squirt or spray.

https://truckmanualshub.com/
www.truck-freeworkshop.com

5 Remove the tank from the hydraulic power unit.

6 Remove the suction strainer from the pick-up tube and the magnet from inside the tank and clean them using a mild solvent.

7 Install the suction strainer.

8 Install the drain plug using thread sealer on the threads.

9 Install the hydraulic tank.

10 Fill the tank with hydraulic oil until the level is visible in the sight gauge on the side of the tank. Do not overfill.

11 Replace the breather cap (Genie part number 38159) with a new one.

12 Raise and lower the platform through three complete cycles. Add hydraulic oil if needed to allow platform to reach full height. Clean up any oil that may have spilled. Properly discard the used oil.

NOTICE Component damage hazard. Do not allow the hydraulic tank to completely empty when raising the platform. Pressurized air in the hydraulic system can damage hydraulic components.

Hydraulic System		
Hydraulic fluid	Chevron Rando HD equivalent	
Hydraulic tank capacity - all models		3 quarts 2.8 liters
Hydraulic system capacity (includes tank)		
AC and DC models		
IWP-20S	3.7 quarts	3.5 liters
IWP-25S	3.7 quarts	3.5 liters
IWP-30S	3.7 quarts	3.5 liters
AC, DC and Air powered models		
AWP-15S	3.7 quarts	3.5 liters
AWP-20S	3.7 quarts	3.5 liters
AWP-25S	3.7 quarts	3.5 liters
AWP-30S	3.7 quarts	3.5 liters
AWP-36S	4.0 quarts	3.8 liters
AWP-40S	3.9 quarts	3.7 liters

https://truckmanualshub.com/
www.truck-freeworkshop.com

C-5
Replacing the Auxiliary Platform Lowering Batteries

Genie specifications require that this procedure be performed every 1000 hours or annually, whichever comes first.

1 Turn the key switch off and remove the key.

2 Remove the ground control box cover fasteners.

3 Open the ground control box and locate the auxiliary battery pack inside.

4 Remove the fasteners that hold the battery pack in place.

5 Carefully slide the battery pack out of the holder.

Note: The wires connected to the battery pack are very small. Be careful not to damage the wires.

6 Remove the old batteries from the pack.

7 Insert new batteries into the pack.

Note: Make sure the batteries are installed correctly by following the diagram on the inside of the battery pack.

8 Install the battery pack into the ground control box and tighten the fasteners.

9 Close the ground control box cover and tighten the fasteners. Do not overtighten.

C-6
Remove and Inspect the Lifting Chains

Genie specifications require that this procedure be performed every 5 years.

The lifting chains are responsible for the raising and lowering of the platform. Performing a careful and thorough inspection of the chains on a regular basis is essential to good machine performance and safe machine operation. The lifting chains should operate smoothly and be free of hesitation, jerking and unusual noise.

1 Remove the lifting chains from the mast. Refer to Repair procedure 5-2, *How to Disassemble the Mast.*

2 Inspect each lifting chain. Refer to Repair procedure 5-4, *How to Inspect the Lifting Chains.*

https://truckmanualshub.com/
www.truck-freeworkshop.com

Troubleshooting Flow Charts

Observe and Obey:

- ☑ Troubleshooting and repair procedures shall be completed by a person trained and qualified on the repair of this machine.
- ☑ Immediately tag and remove from service a damaged or malfunctioning machine.
- ☑ Repair any machine damage or malfunction before operating the machine.

Before Troubleshooting:

- ☑ Read, understand and obey the safety rules and operating instructions printed in the *Genie AWP Super Series Operator's Manual* OR the *Genie IWP Super Series Operator's Manual*.
- ☑ Be sure that all necessary tools and test equipment are available and ready for use.
- ☑ Read each appropriate flow chart thoroughly. Attempting shortcuts may produce hazardous conditions.
- ☑ Be aware of the following hazards and follow generally accepted safe workshop practices.

DANGER Electrocution hazard. Contact with electrically charged circuits may result in death or serious injury. Remove all rings, watches and other jewelry.

WARNING Bodily injury hazard. Spraying hydraulic oil can penetrate and burn skin. Loosen hydraulic connections very slowly to allow the oil pressure to dissipate gradually. Do not allow oil to squirt or spray.

NOTICE Perform all troubleshooting on a firm level surface.

NOTICE Two persons will be required to safely perform some troubleshooting procedures.

https://truckmanualshub.com/
www.truck-freeworkshop.com

TROUBLESHOOTING FLOW CHARTS

About This Section

When a malfunction is discovered, the flow charts in this section will help a service professional pinpoint the cause of the problem. To use this section, basic hand tools and certain pieces of test equipment are required—voltmeter, ohmmeter, pressure gauges.

The location of terminals mentioned in this section can be found on the appropriate electrical or hydraulic schematics provided in Section 7, *Schematics*.

Since various degrees of a particular function loss may occur, selecting the appropriate flow chart may be troublesome. When a function will not operate with the same speed or power as a machine in good working condition, refer to the flow chart which most closely describes the problem.

General Repair Process

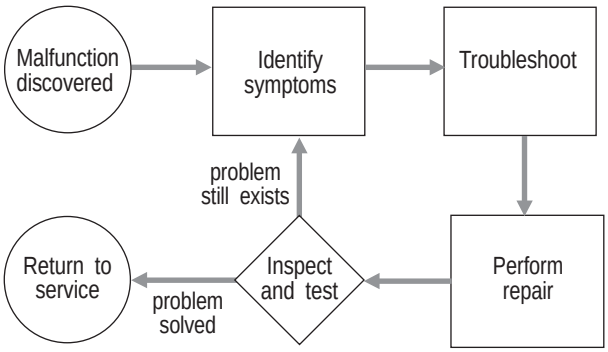

https://truckmanualshub.com/
www.truck-freeworkshop.com

Chart 1

Power Light Will Not Turn On - AC Models

Be sure the key switch is in the appropriate position.

Be sure both red Emergency Stop buttons are pulled out to the ON position.

Be sure the ground control box printed circuit board fuse is not blown.

Be sure the AC power supply cord is plugged into a live outlet.

Be sure the ground control box circuit breaker has not been tripped.

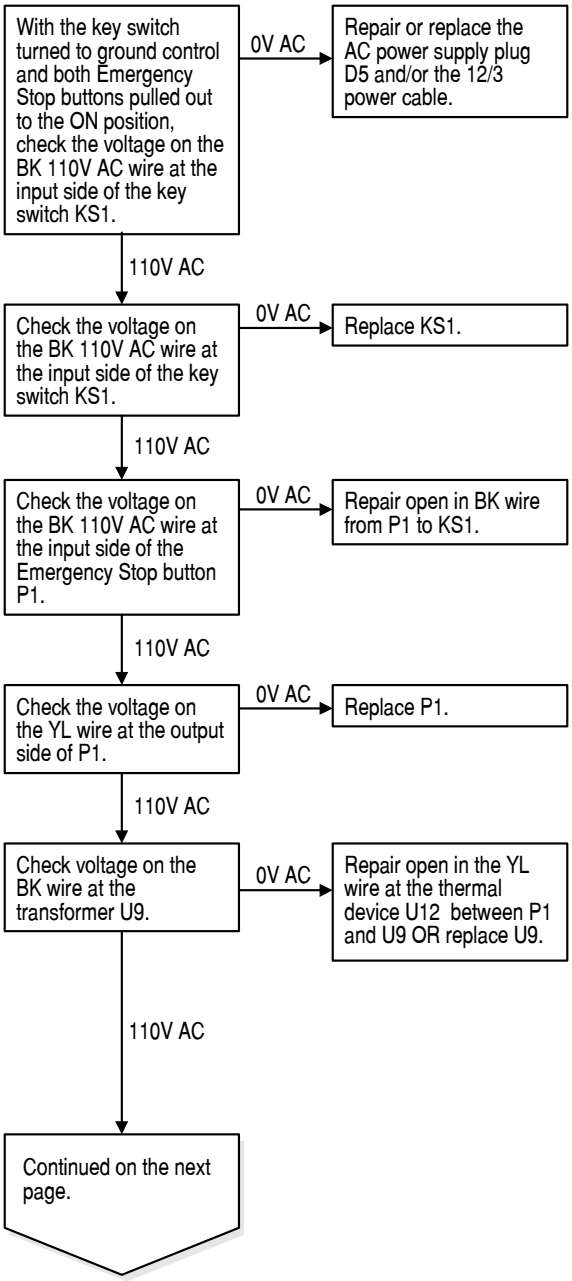

https://truckmanualshub.com/
www.truck-freeworkshop.com

CHART 1

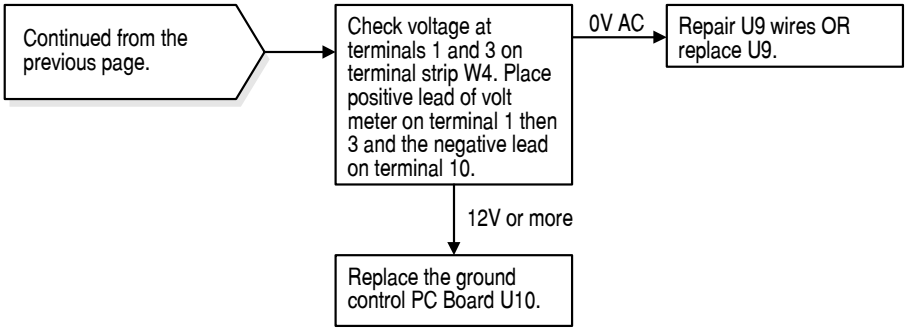

https://truckmanualshub.com/
www.truck-freeworkshop.com

Chart 2

Power Light Will Not Turn On - DC Models

Be sure the key switch is in the appropriate position.

Be sure both red Emergency Stop buttons are pulled out to the ON position.

Be sure the ground control box PC board fuse is not blown.

Be sure the battery cables are connected.

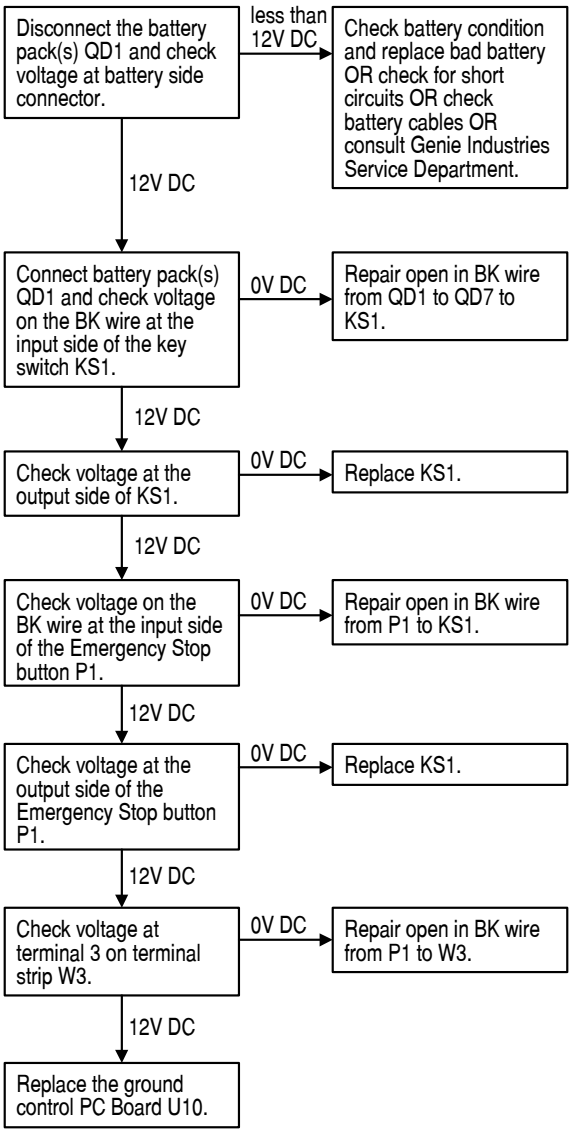

https://truckmanualshub.com/
www.truck-freeworkshop.com

Chart 3

Interlock Lights Will Not Turn On - AWPS AC and DC Models

Be sure the key switch is in the appropriate position.

Be sure both red Emergency Stop buttons are pulled out to the ON position.

Be sure the outriggers are the correct length.

Be sure the leveling jacks are in firm contact with the ground.

Be sure the ground control box PC board fuse is not blown.

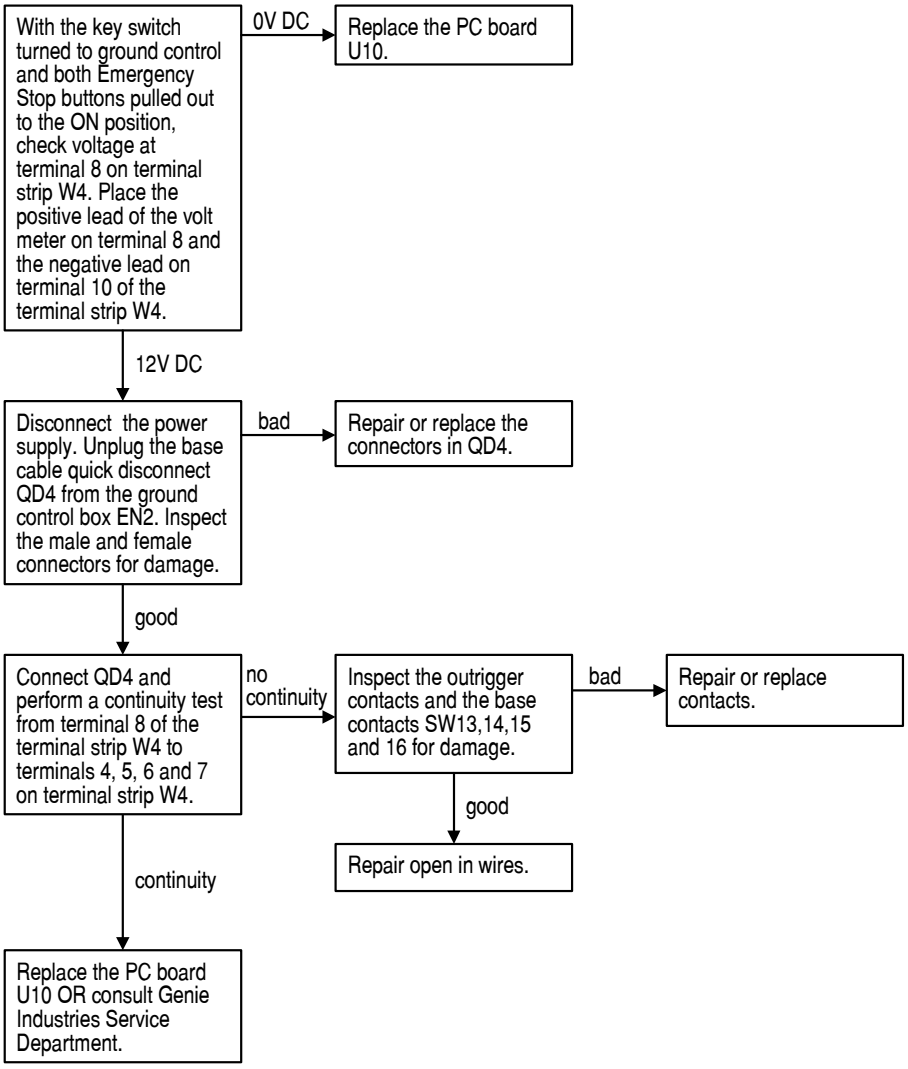

https://truckmanualshub.com/
www.truck-freeworkshop.com

Chart 4

Foot Pad Interlock Lights Will Not Turn On - IWPS Models

Be sure the key switch is in the appropriate position.

Be sure both red Emergency Stop buttons are pulled out to the ON position.

Be sure the power light is on.

Be sure the unit is set up according to the operator's manual.

Be sure the ground control box PC board fuse is not blown.

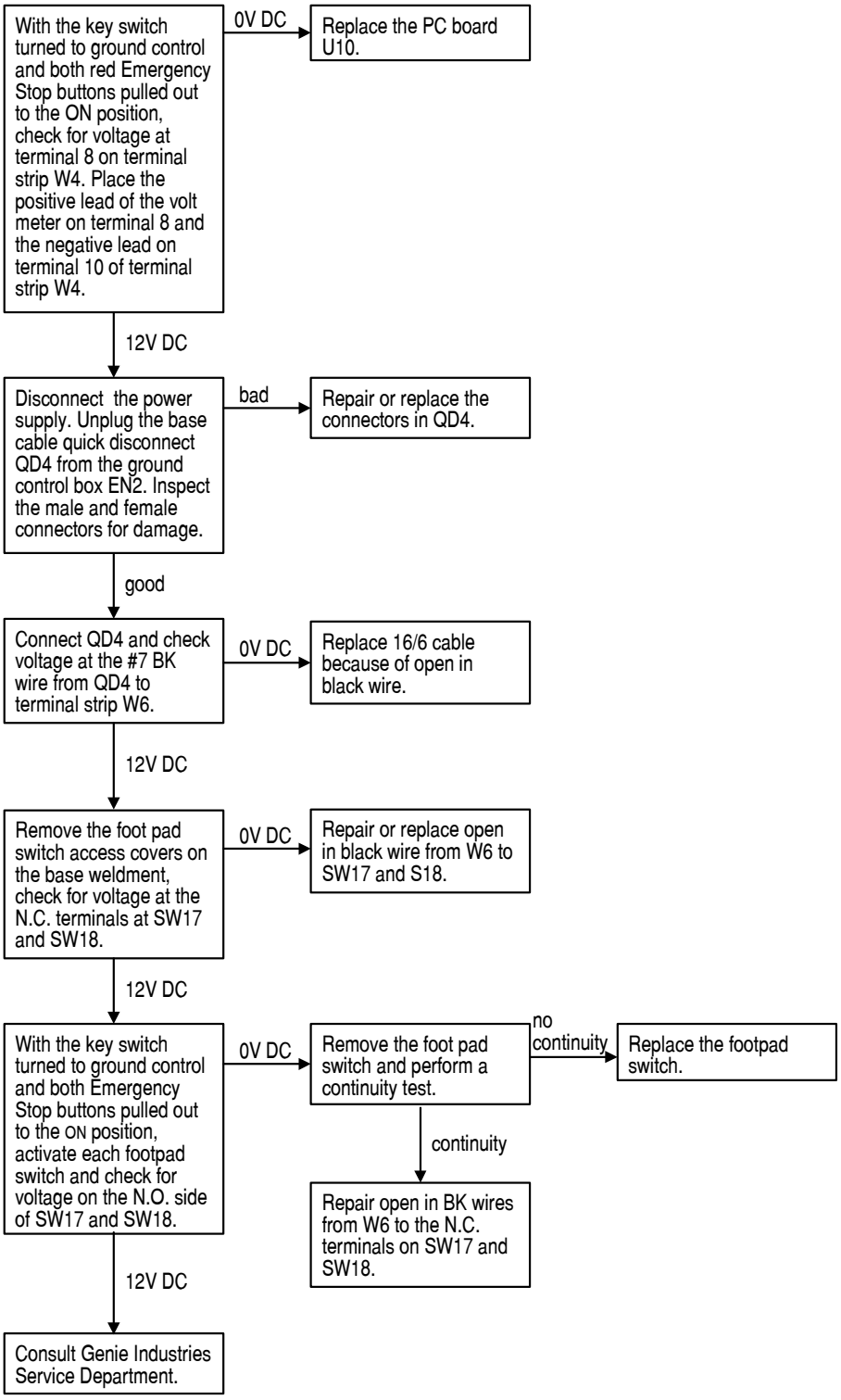

https://truckmanualshub.com/
www.truck-freeworkshop.com

Chart 5

Level Sensor Interlock Lights Will Not Turn On - IWPS Models

Be sure the key switch is in the appropriate position.

Be sure both red Emergency Stop buttons are pulled out to the ON position.

Be sure the power light is on.

Be sure the unit is set up according to the operator's manual.

Be sure the ground control box PC board fuse is not blown.

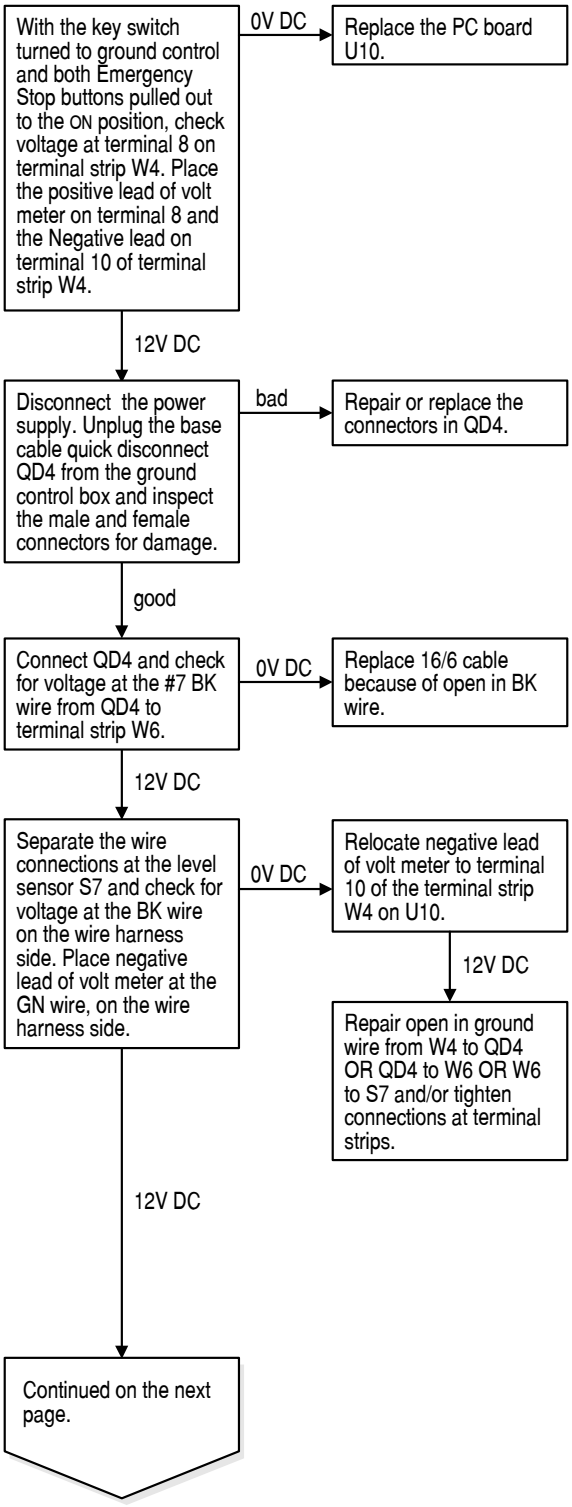

https://truckmanualshub.com/
www.truck-freeworkshop.com

CHART 5

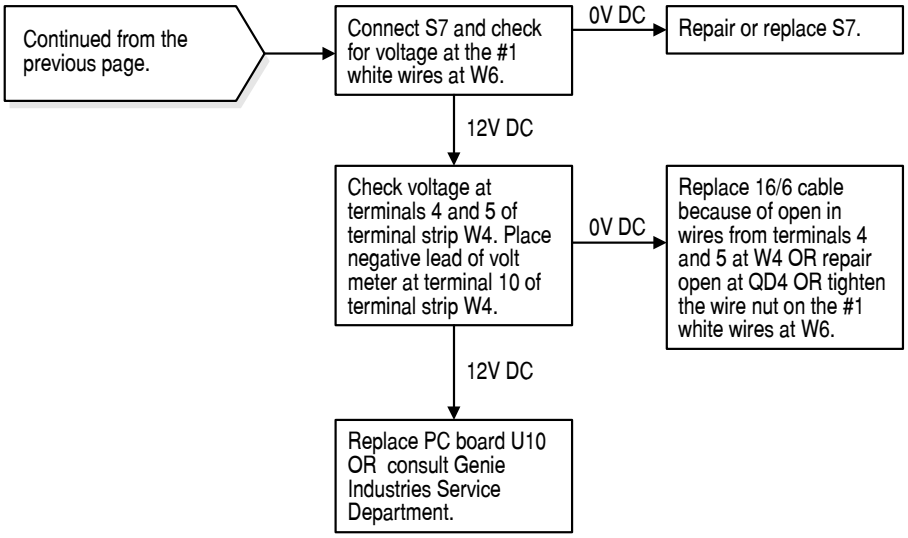

https://truckmanualshub.com/
www.truck-freeworkshop.com

Chart 6

Platform Up Function Inoperative - AC Models

Be sure the key switch is in the appropriate position.

Be sure both red Emergency Stop buttons are pulled out to the ON position.

Be sure the ground control box circuit breaker has not been tripped.

Be sure the ground control box PC board fuse is not blown.

Be sure all interlock display lights are on.

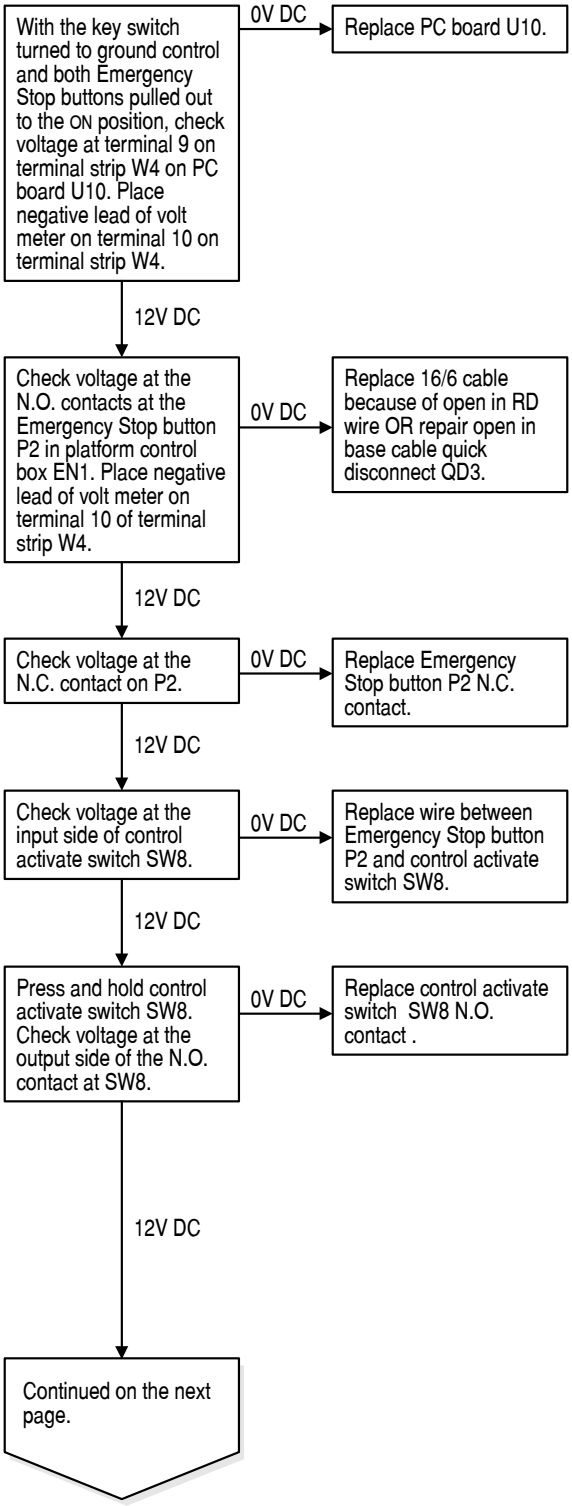

https://truckmanualshub.com/
www.truck-freeworkshop.com

CHART 6

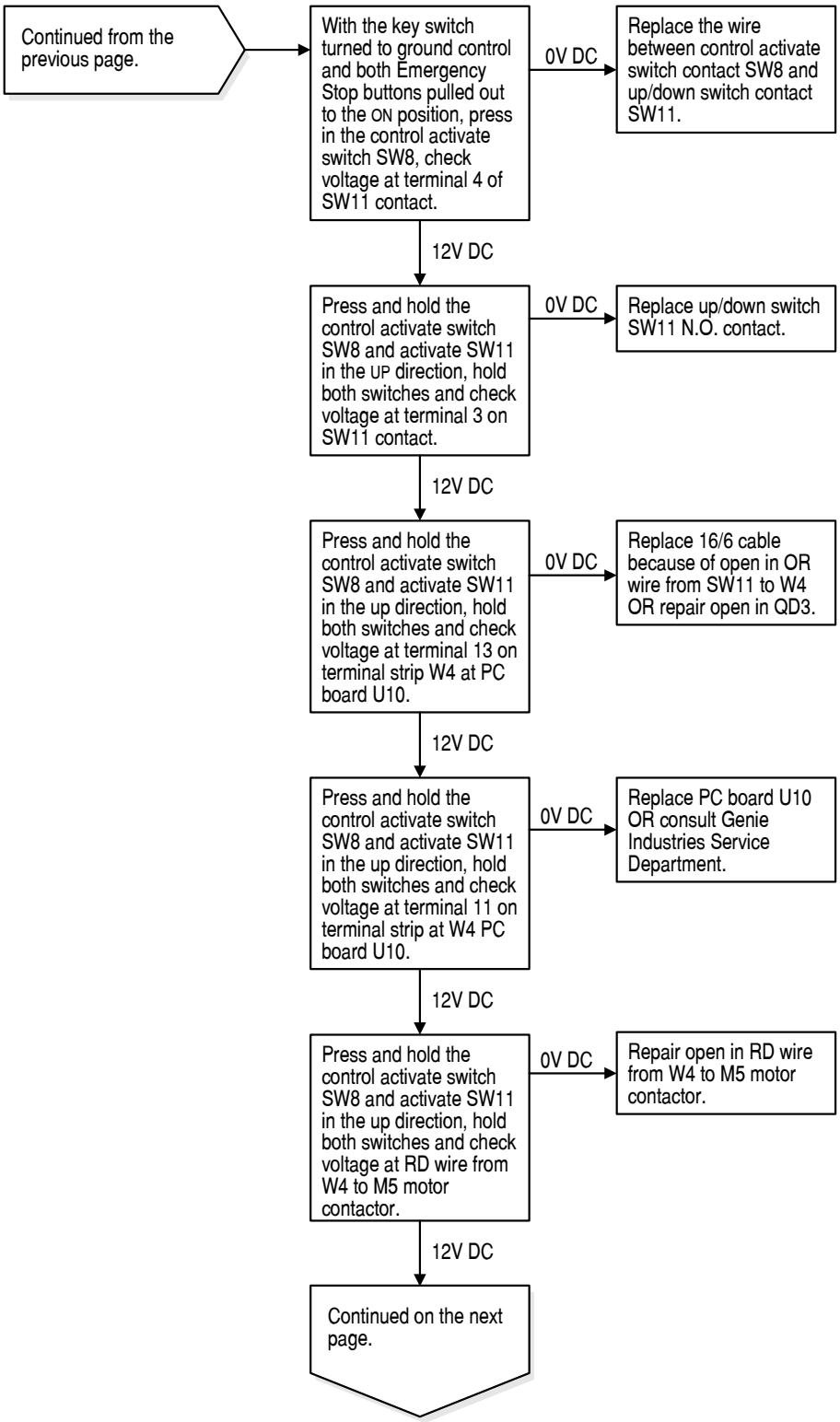

https://truckmanualshub.com/
www.truck-freeworkshop.com

CHART 6

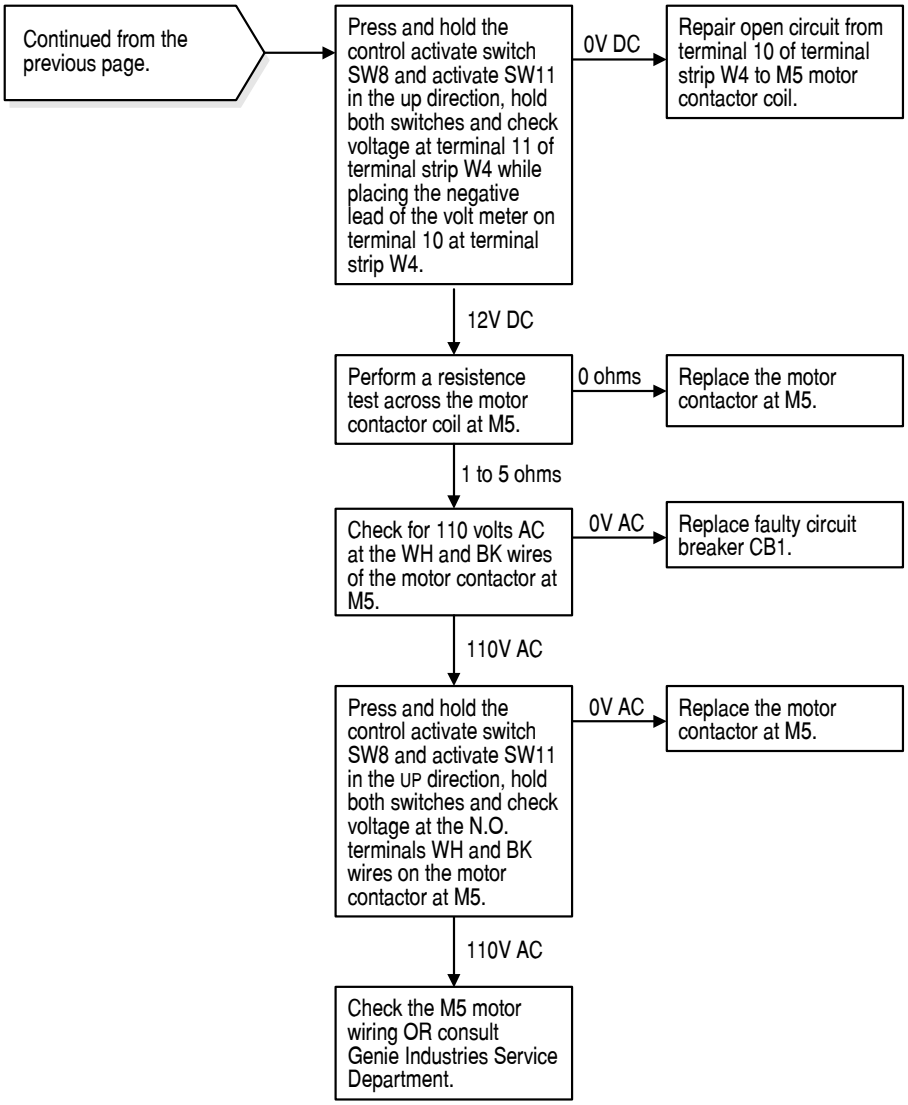

https://truckmanualshub.com/
www.truck-freeworkshop.com

Chart 7

Platform UP Function Inoperative, But Power Unit Runs - AC Models

Be sure the power unit hydraulic tank is full and the breather cap has been installed.

Be sure the key switch is in the appropriate position.

Be sure both red Emergency Stop buttons are pulled out to the ON position.

Be sure the ground control box PC board fuse is not blown.

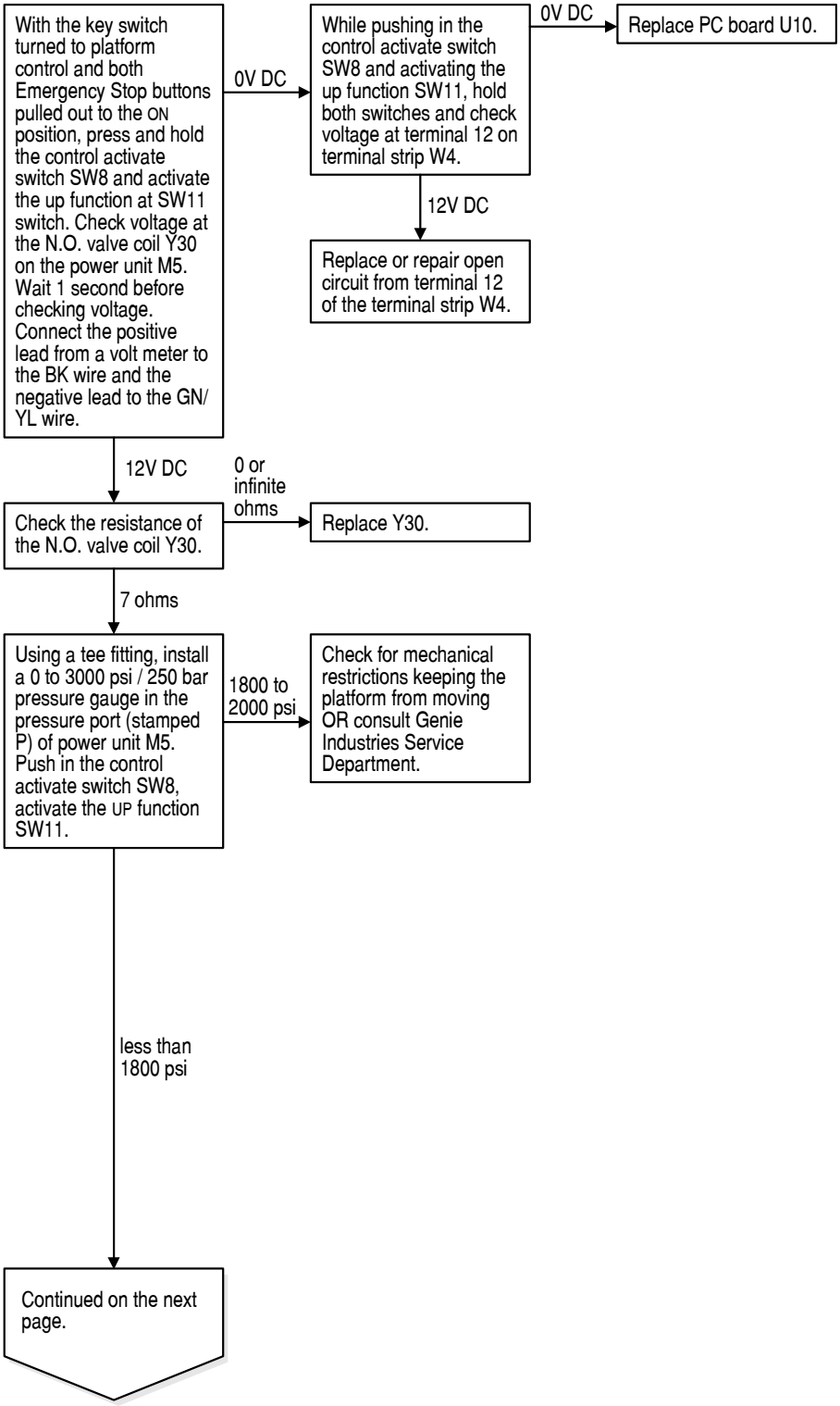

https://truckmanualshub.com/
www.truck-freeworkshop.com

CHART 7

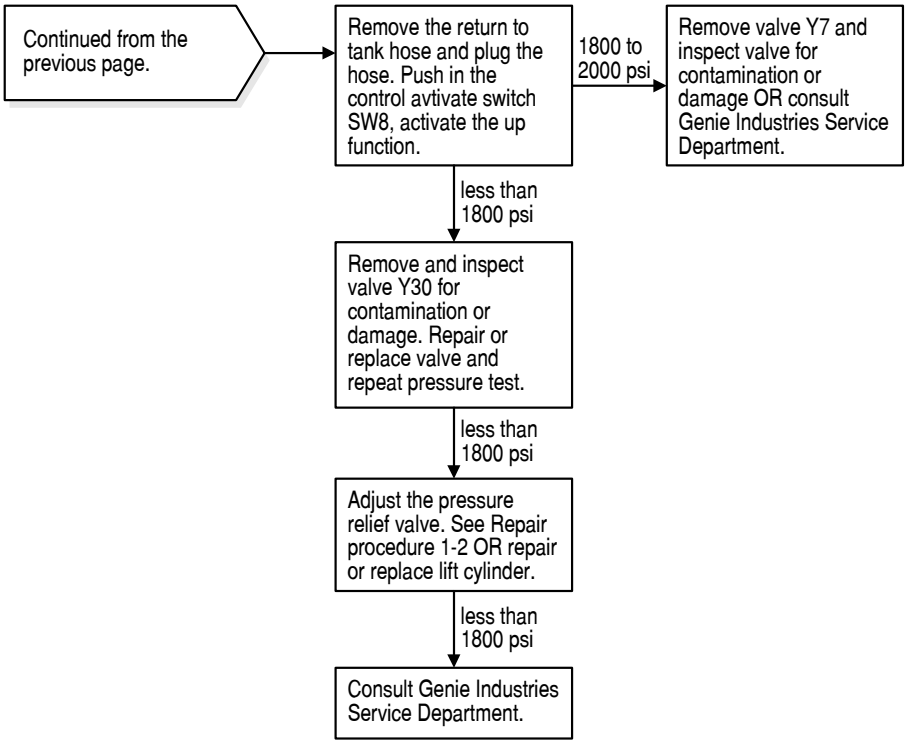

https://truckmanualshub.com/
www.truck-freeworkshop.com

Chart 8

Pump Motor Will Not Operate - DC Models

Be sure the key switch is in the appropriate position.

Be sure both red Emergency Stop buttons are pulled out to the ON position.

Be sure the ground control box PC board fuse is not blown.

Be sure all interlock display lights are on.

Be sure the battery(s) is fully charged and properly connected.

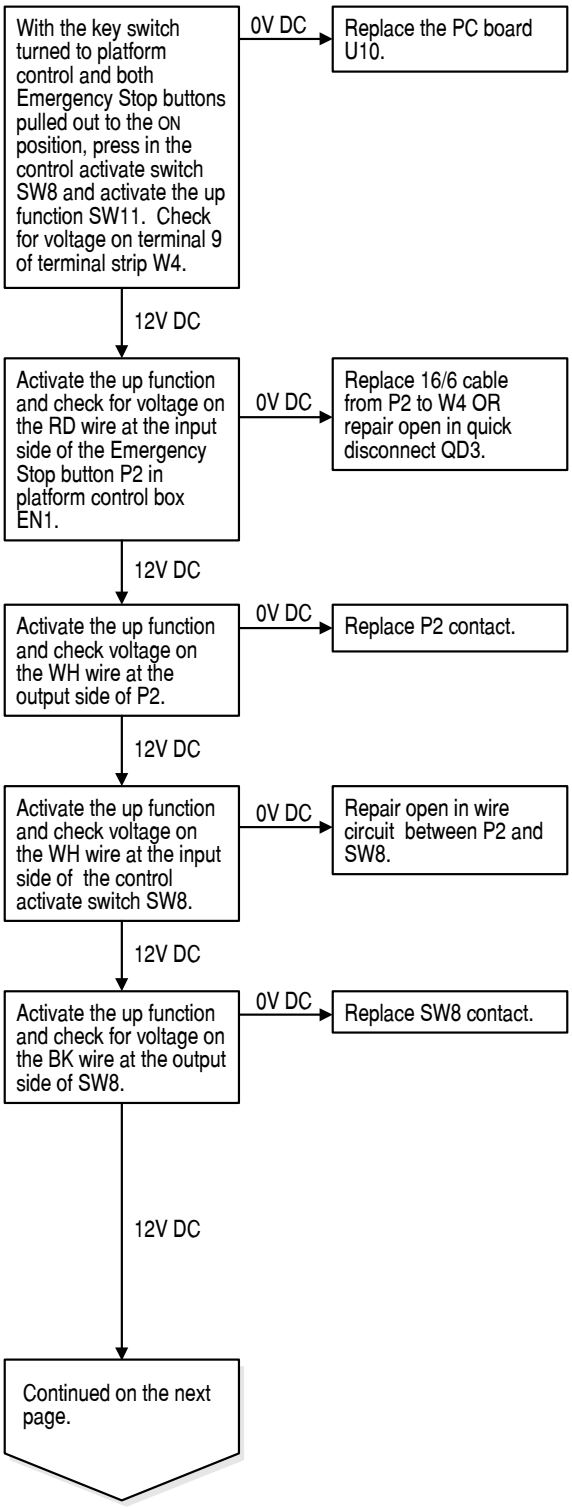

https://truckmanualshub.com/
www.truck-freeworkshop.com

CHART 8

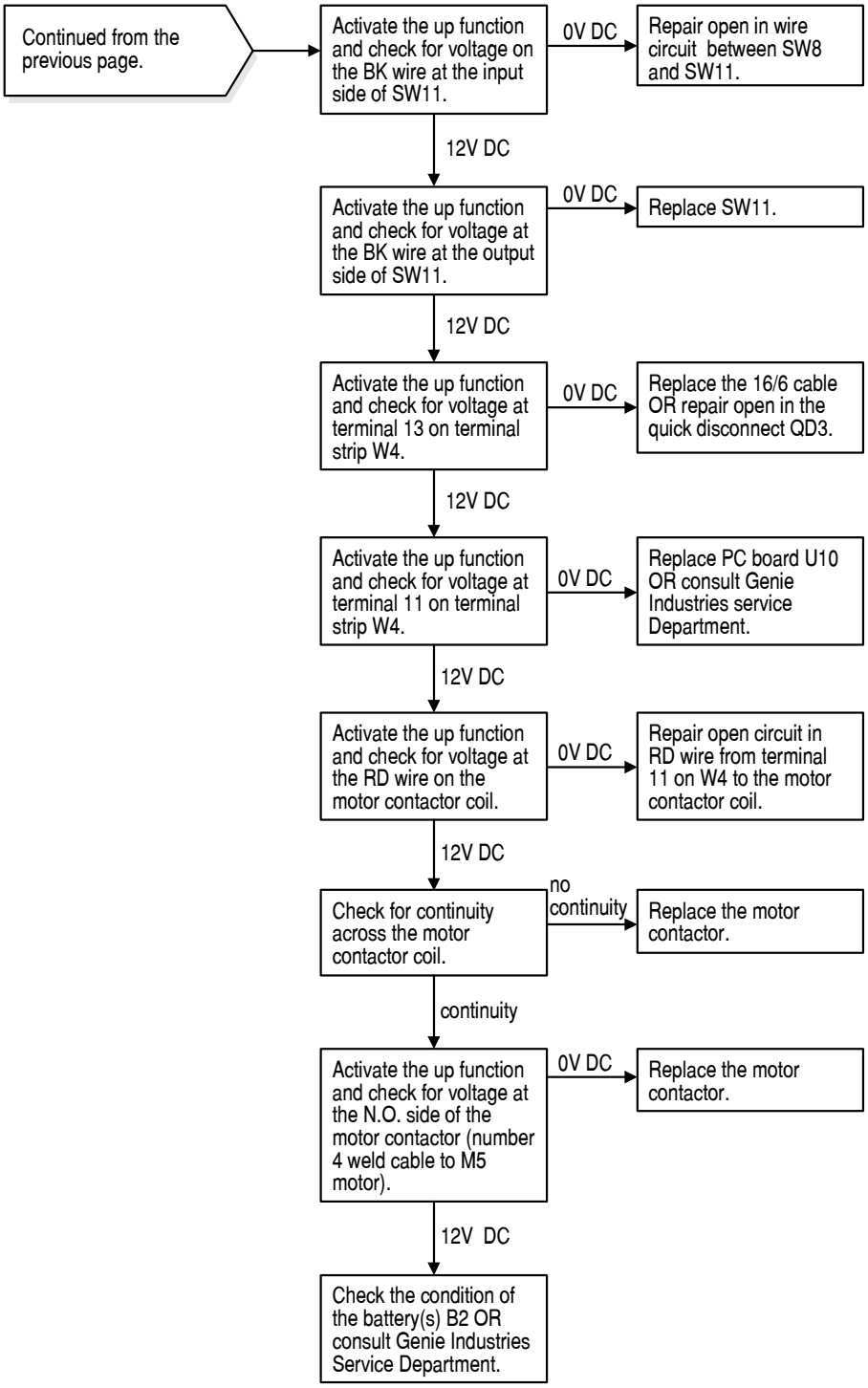

https://truckmanualshub.com/
www.truck-freeworkshop.com

Chart 9

Platform Up Inoperative, Power Unit Runs - DC Models

Be sure all other functions operate normally.

Be sure the power unit reservoir is full and the breather cap has been installed.

Be sure the key switch is in the appropriate position.

Be sure both red Emergency Stop buttons are pulled out to the on position.

Be sure the ground control box PC board fuse is not blown.

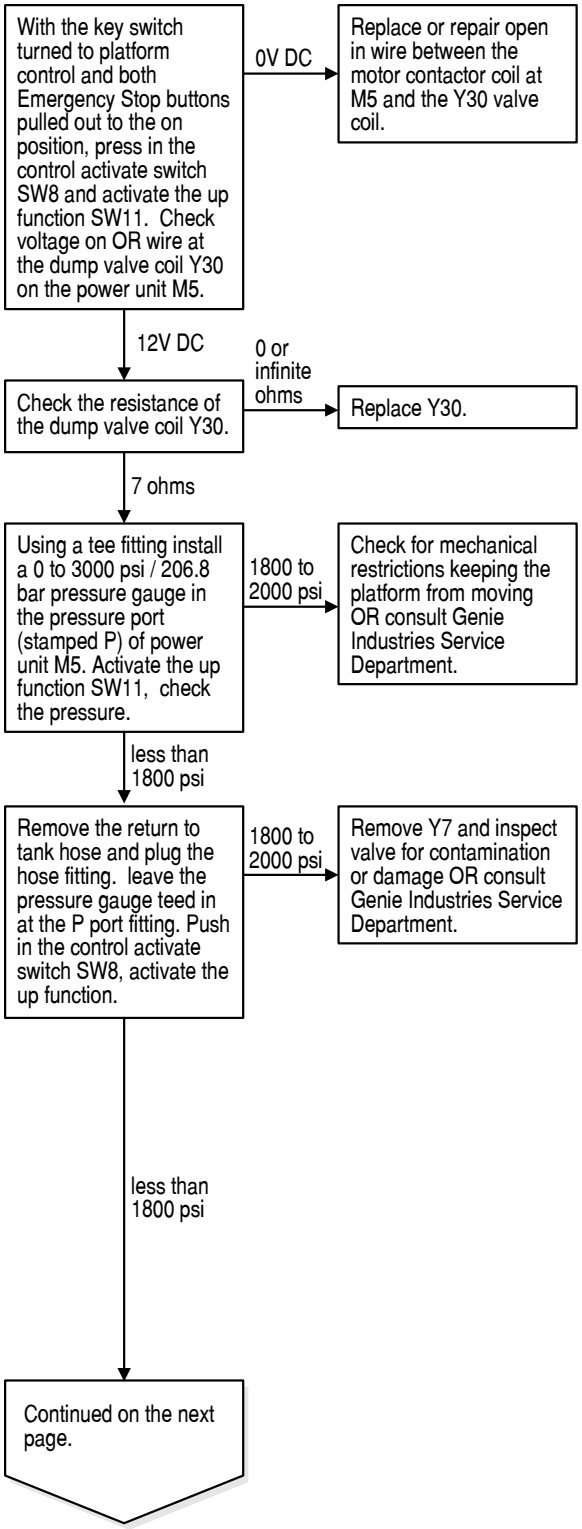

https://truckmanualshub.com/
www.truck-freeworkshop.com

CHART 9

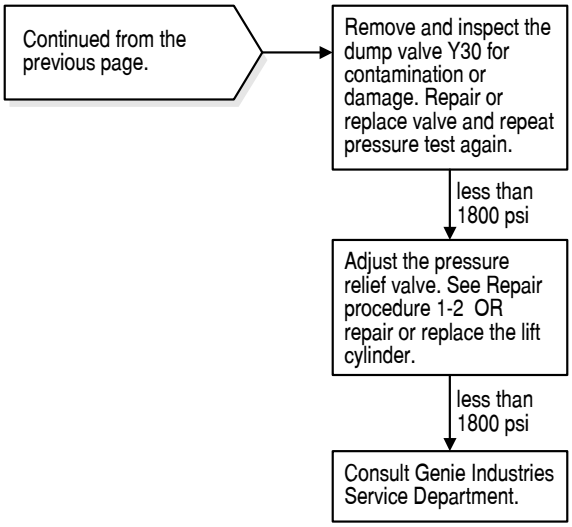

https://truckmanualshub.com/
www.truck-freeworkshop.com

Chart 10

Platform Down Function Inoperative

Be sure all other functions operate normally.

Be sure the key switch is in the appropriate position.

Be sure both red Emergency Stop buttons are pulled out to the ON position.

Be sure the ground control box PC board fuse is not blown.

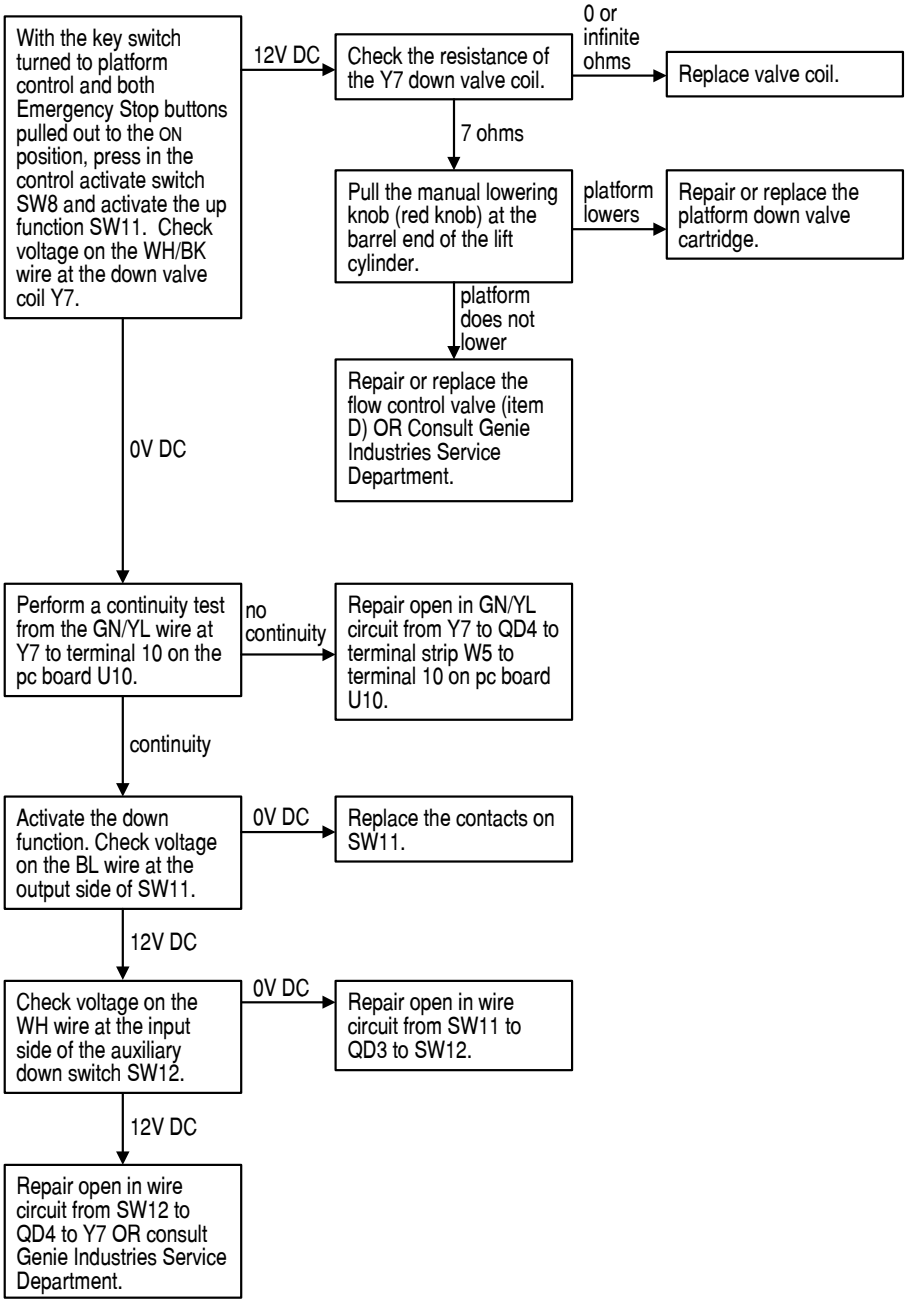

https://truckmanualshub.com/
www.truck-freeworkshop.com

Chart 11

Base Will Not Raise With Foot Pump - IWPS Models

Be sure the platform is fully lowered.

Be sure to pump the foot pedal with slow, even strokes.

Be sure the power unit reservoir is full and the breather cap has been installed.

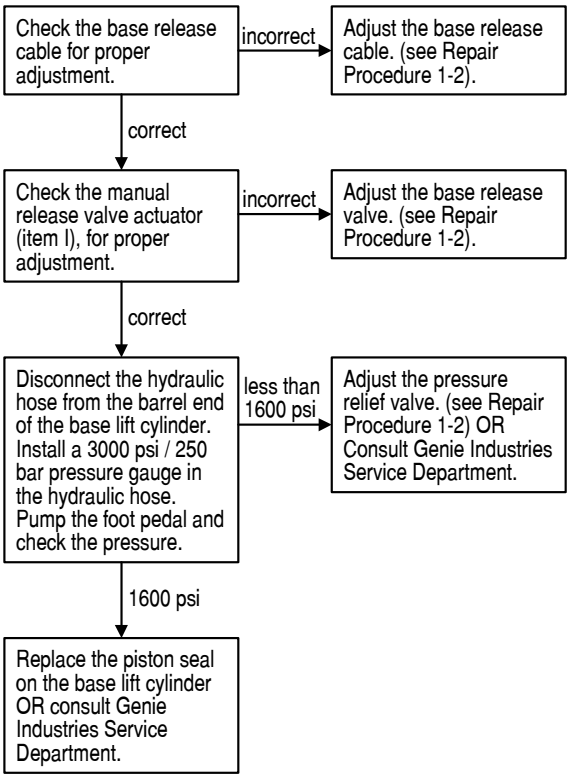

https://truckmanualshub.com/
www.truck-freeworkshop.com

Chart 12

Base Will Raise, But Will Not Hold In Up Position - IWPS Models

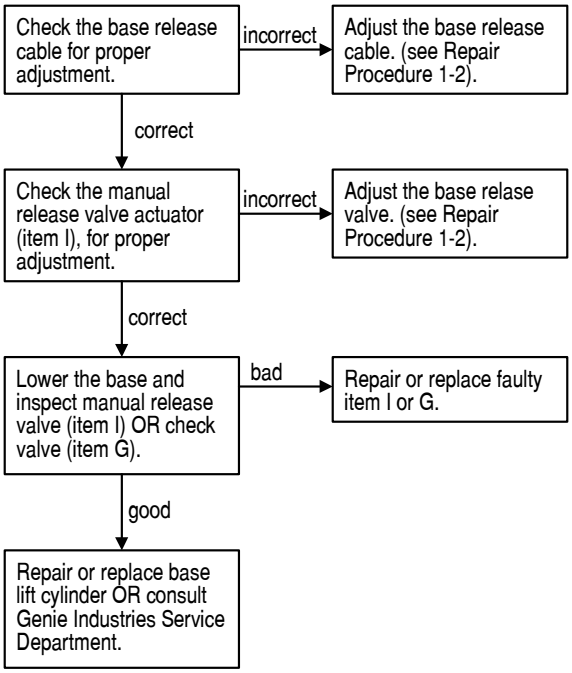

https://truckmanualshub.com/
www.truck-freeworkshop.com

Chart 13

Base Will Not Lower - IWPS Models

Be sure there are no obstructions under the base.

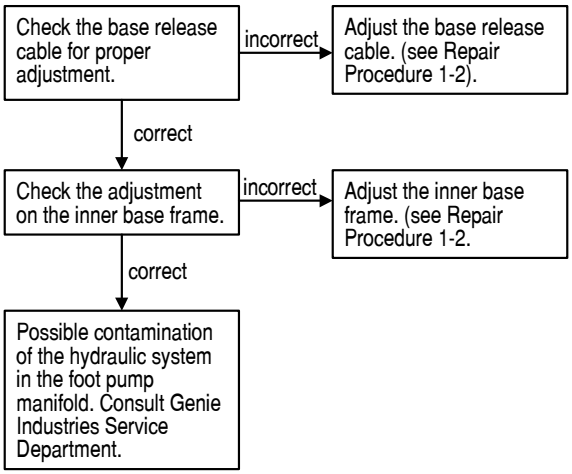

https://truckmanualshub.com/
www.truck-freeworkshop.com

Chart 14

Platform Will Not Hold In Up Position

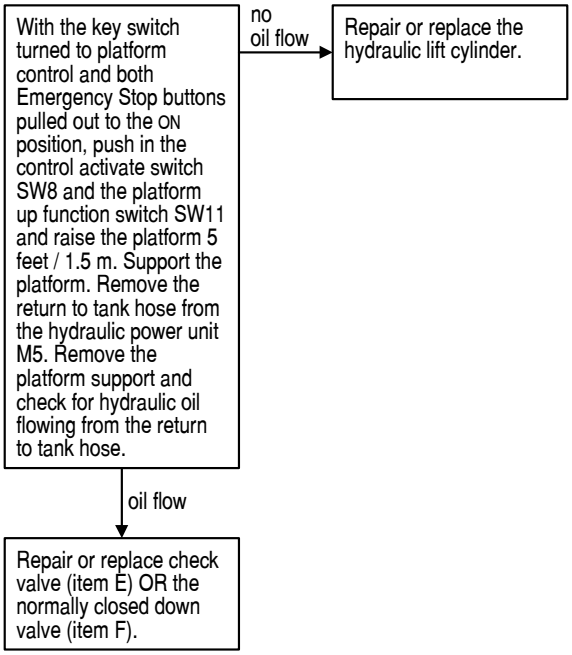

https://truckmanualshub.com/
www.truck-freeworkshop.com

Chart 15

Power Unit Will Not Lift Rated Load

DC Models: Be sure the battery is fully charged and properly connected

AC Models: Be sure machine is connected to a proper power supply.

Adjust the pressure relief valve (see Repair Procedure 1-2) OR consult Genie Industries Service Department.

https://truckmanualshub.com/
www.truck-freeworkshop.com

Chart 16

Auxiliary Platform Lowering Will Not Operate

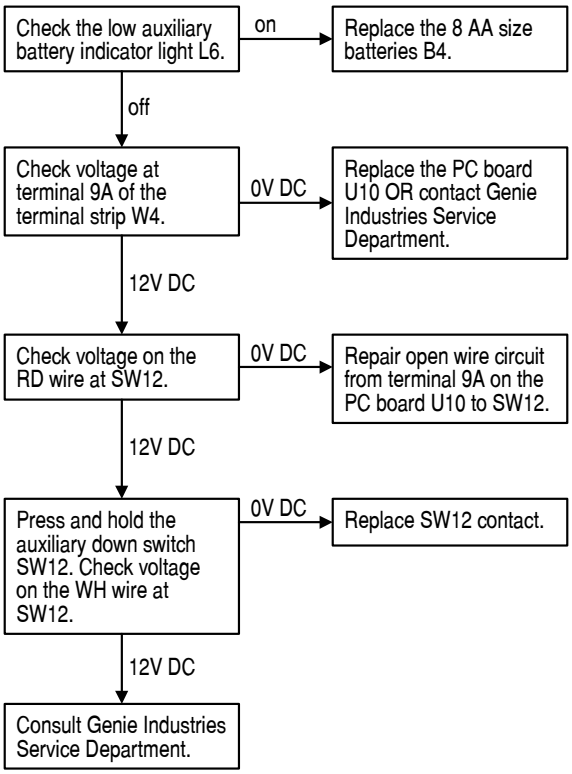

https://truckmanualshub.com/
www.truck-freeworkshop.com

Chart 17

Power Wheel Assist Will Not Operate - IWPS Models with Power Wheel Assist

Be sure the base foot pads are not contacting the ground.

Be sure the power unit tank is full and the breather cap has been installed.

Be sure the key switch is in the appropriate position.

Be sure both red Emergency Stop buttons are pulled out to the ON position.

Be sure the ground control box PC board fuse is not blown.

Consult Genie Industries Service Department.

https://truckmanualshub.com/
www.truck-freeworkshop.com

Repair Procedures

Observe and Obey:

- ☑ Repair procedures shall be completed by a person trained and qualified on the repair of this machine.
- ☑ Immediately tag and remove from service a damaged or malfunctioning machine.
- ☑ Repair any machine damage or malfunction before operating the machine.

Before Repairs Start:

- ☑ Read, understand and obey the safety rules and operating instructions in the appropriate operator's manual on your machine.
- ☑ Be sure that all necessary tools and parts are available and ready for use.
- ☑ Use only Genie approved replacement parts.
- ☑ Read each procedure completely and adhere to the instructions. Attempting shortcuts may produce hazardous conditions.
- ☑ Unless otherwise specified, perform each repair procedure with the machine in the following configuration:
  - Machine parked on a firm, level surface
  - Mast in the stowed position
  - Key switch in the off position with the key removed
  - Wheels chocked

About This Section

Most of the procedures in this section should only be performed by a trained service professional in a suitably equipped workshop. Select the appropriate repair procedure after troubleshooting the problem.

Perform disassembly procedures to the point where repairs can be completed. Then to re-assemble, perform the disassembly steps in reverse order.

Symbols Legend

Safety alert symbol—used to alert personnel to potential personal injury hazards. Obey all safety messages that follow this symbol to avoid possible injury or death.

DANGER Indicates an imminently hazardous situation which, if not avoided, will result in death or serious injury.

WARNING Indicates a potentially hazardous situation which, if not avoided, could result in death or serious injury.

CAUTION Indicates a potentially hazardous situation which, if not avoided, may cause minor or moderate injury.

NOTICE Indicates a potentially hazardous situation which, if not avoided, may result in property damage.

⊙ Indicates that a specific result is expected after performing a series of steps.

⊠ Indicates that an incorrect result has occurred after performing a series of steps.

https://truckmanualshub.com/
www.truck-freeworkshop.com

Base Assembly

1-1 Interlocks

AWPS models: The interlock contacts indicate proper installation of the outriggers and only allow the machine to operate when the outriggers are properly installed and adjusted.

IWPS models: The base interlock switches indicate that the foot pads are in firm contact with the ground.

How to Remove an Interlock Contact - AWP Models

1 Fully lower the platform. Turn the key switch off and remove the key.

2 Store the outriggers in the storage sockets.

3 Remove the rear base cover.

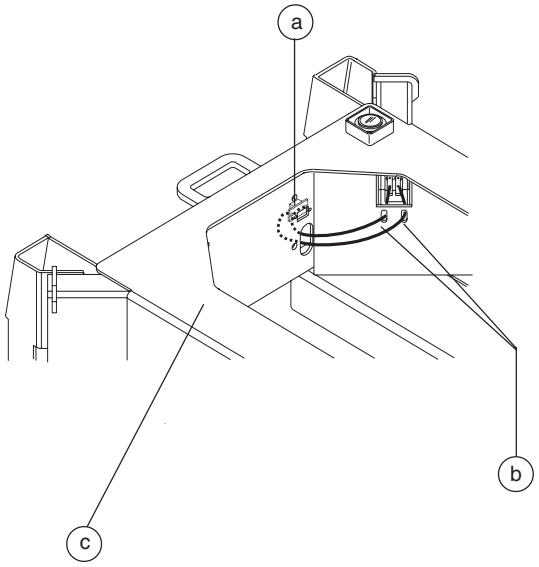

a terminal strip
b interlock contact bracket fastener
c base

4 Trace the interlock contact wires to the rear of the base.

5 Locate the terminal strip.

6 Label and remove the contact wires by inserting a small screwdriver into the hole below the wire and gently push in while pulling on the wire.

7 Follow the wires to the grommets where the wire enters and exits the base. Pull the wires through the grommets and the base.

Note: Only pull the wires out far enough to access the interlock contact bracket mounting fasteners.

8 Remove the interlock contact bracket mounting fasteners from the outrigger base socket.

https://truckmanualshub.com/
www.truck-freeworkshop.com

How to Remove a Base Interlock Switch - IWPS Models

1 Fully lower the platform. Turn the key switch off and remove the key.

2 Pull the base lowering handle to fully lower the base.

3 Remove the foot pad switch bracket fasteners.

4 Pull the foot pad switch bracket out of the base.

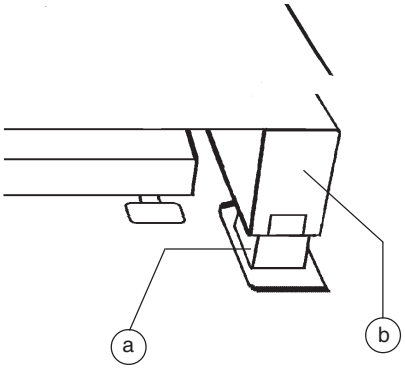

a switch bracket fasteners
b switch bracket cover

5 Remove the wires from the switch. Note the wire positions.

6 Remove the fastener that attaches the switch to the switch bracket.

1-2 Base Components - IWPS Models

How to Remove the Inner Base Frame

WARNING Bodily injury hazard. This procedure requires specific repair skills, lifting equipment and a suitable workshop. Attempting this procedure without these skills and tools may result in death or serious injury and significant component damage. Dealer service is strongly recommended.

1 Pull the base lowering handle to fully lower the base.

2 Attach an overhead crane to the lifting eye at the top of the mast.

3 Remove the mounting fastener from the lift cylinder rod end. Lift the rod end of the cylinder up and attach it to the base.

4 Tag, disconnect and plug the three hydraulic hoses from the base manifold. Cap the ports on the manifold.

WARNING Bodily injury hazard. Spraying hydraulic oil can penetrate and burn skin. Loosen hydraulic connections very slowly to allow the oil pressure to dissipate gradually. Do not allow oil to squirt or spray.

https://truckmanualshub.com/
www.truck-freeworkshop.com

BASE ASSEMBLY

5 Pull the hoses through the channel of the base inner frame.

6 From under the base, remove the inner frame support tube mounting fasteners. The tube is mounted directly under the number 1 column.

7 Carefully lift the machine off of the inner base frame. Do not allow the inner base frame to fall when lifting the machine.

⚠WARNING Crushing hazard. The machine may fall, if it is not properly supported by the overhead crane when removed from the base.

How to Adjust the Base Release Cable - IWPS Models

1 Pull the base lowering handle to fully lower the base.

2 Remove the cover from the base manifold.

3 Be sure the cable is properly connected to the manual valve at the base manifold.

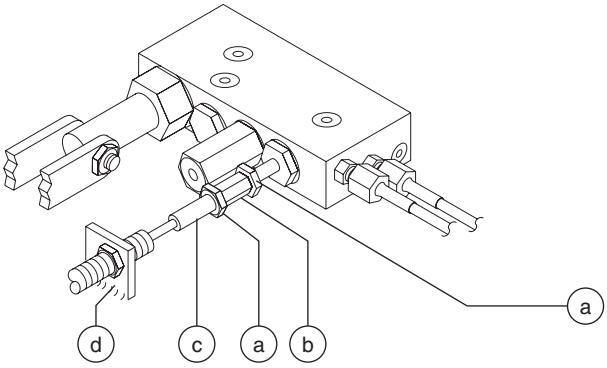

a lock nut
b coupler
c base release cable
d cable mounting bracket

4 Be sure the cable is attached to the cable mounting bracket with a lock nut on each side. There should be 1/4 to 1/2 inch / 6.35 to 12.7 mm of threads on the manifold side of the bracket.

5 Locate the base release cable mounting bracket on the bottom side of the number 1 column.

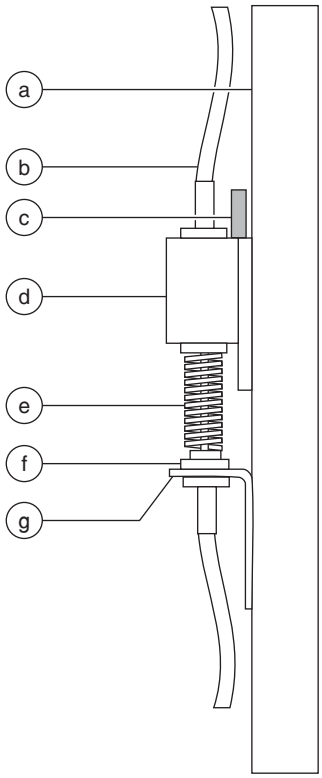

a number 1 column
b base release cable
c cable striker bracket
d slider bracket
e spring
f lock nut
g cable mounting bracket

6 Loosen the mounting fasteners on the cable mounting bracket and the cable striker bracket on the number 1 column. Do not remove the fasteners.

https://truckmanualshub.com/
www.truck-freeworkshop.com

7 Measure from the bottom of the number 1 column, make a reference mark 6 inches / 15.2 cm up the column.

8 Slide the cable mounting bracket up, until the top of the bracket is even with the reference mark from step 7. Tighten the mounting fasteners.

9 Measure from the bottom of the number 2 column, make a reference mark 10 inches / 25.4 cm up the column.

10 Slide the cable striker bracket down until the top of the bracket is even with the reference mark from step 9. The spring will need to be compressed, when the cable striker bracket is pulled down. Tighten the mounting fasteners.

11 Pump the foot pedal to raise the base.

12 Pull the base release handle to be sure the base lowers. Adjust if necessary.

How to Adjust the Foot Pump Pressure Relief Valve

NOTICE Component damage hazard. The work area and surfaces where this procedure will be performed must be clean and free of debris that could get into the hydraulic system and cause severe component damage. Dealer service is recommended.

1 Pull the base lowering handle to fully lower the base.

2 Tag and disconnect the hydraulic hose from the port at the rod end of the base cylinder. Cap the cylinder port.

WARNING Bodily injury hazard. Spraying hydraulic oil can penetrate and burn skin. Loosen hydraulic connections very slowly to allow the oil pressure to dissipate gradually. Do not allow oil to squirt or spray.

3 Connect a 0 to 3000 psi / 0 to 250 bar pressure gauge to the hydraulic hose.

4 Slowly pump the foot pedal and note the pressure.

⊙ Result: The pressure gauge should read 1600 psi ± 50 psi / 110 bar ± 3.4 bar. Adjust if necessary.

5 Remove the manifold cover.

https://truckmanualshub.com/
www.truck-freeworkshop.com

BASE ASSEMBLY

6 Hold the relief valve and remove the hex cap (item J).

7 Adjust the internal hex socket. Turn it clockwise to increase the pressure or counterclockwise to decrease the pressure. Install the relief valve cap.

DANGER Tip-over hazard. Do not adjust the relief valve higher than specified.

8 Repeat step 4 to confirm the relief valve setting. Re-adjust if necessary.

How to Remove the Foot Pump

CAUTION Component damage hazard. The work area and surfaces where this procedure will be performed must be clean and free of debris that could get into the hydraulic system and cause severe component damage. Dealer service is recommended.

1 Pull the base lowering handle to fully lower the base.

2 Remove the linkage mounting fasteners from the foot pump.

3 Remove the foot pump from the manifold. Plug the port in the manifold.

Note: The foot pump must be bled after installation.

How to Bleed the Foot Pump

1 Pull the base lowering handle to fully lower the base.

2 Place a container under the base lowering cylinder, and remove the bleed screw from the barrel-end of the base lowering cylinder.

3 Pump the foot pedal until air stops coming out of the bleed screw hole.

4 While holding the foot pedal down, install the bleed screw.

5 Release the foot pedal.

6 Clean up any oil that may have spilled.

7 Check the hydraulic oil level in the power unit tank. Add oil if necessary.

https://truckmanualshub.com/
www.truck-freeworkshop.com

1-3
Foot Pump Manifold Components
IWPS Models (before serial number IWP09-8270)

Index No.	Description	Schematic Item	Function	Torque
1	Check valve	G	System pressure	8-10 ft-lbs / 11-14 Nm
2	Check valve	H	Directs flow to the tank	
3	Manual release valve	I	Lowers base	8-10 ft-lbs / 11-14 Nm
4	Relief valve, 1600 psi / 110 bar	J	Base lift cylinder	35-40 ft-lbs / 47-54 Nm
5	Pilot to open check valve	K	Base lift cylinder	35-40 ft-lbs / 47-54 Nm
6	Foot pump	L	Base lift cylinder	8-10 ft-lbs / 11-14 Nm

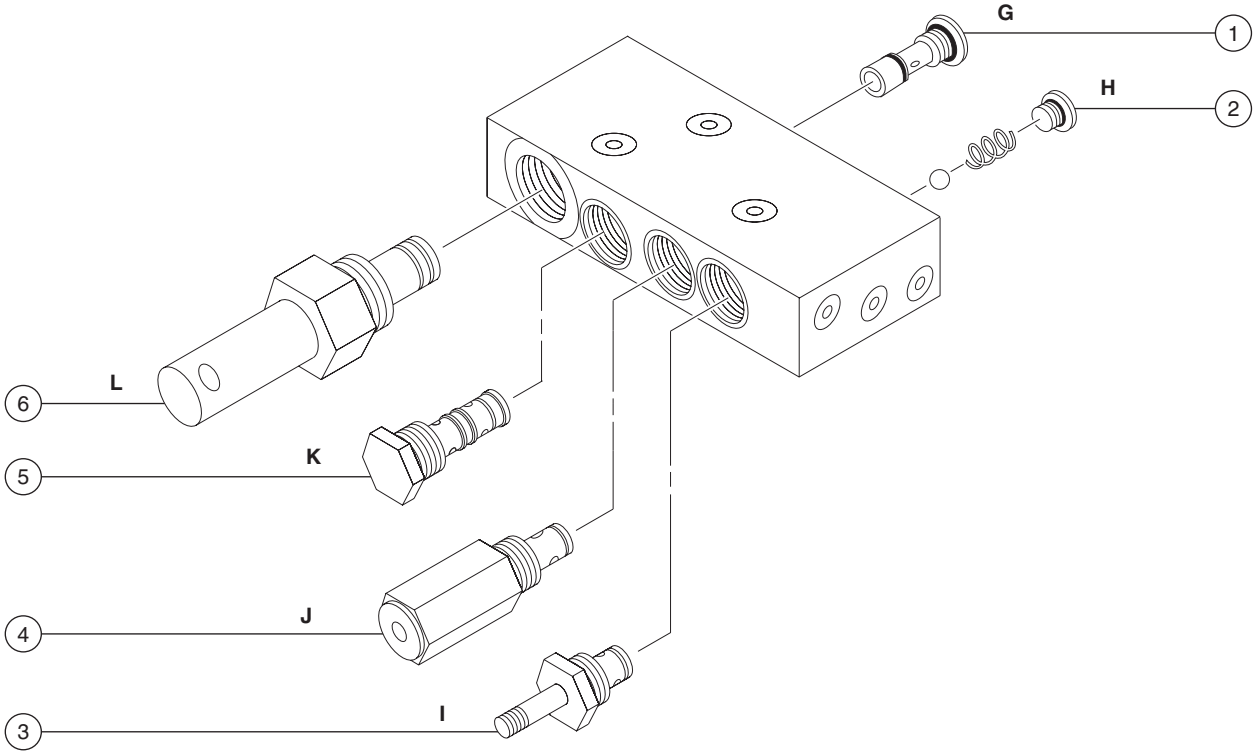

Plug Torque Specifications

Description	Hex Size	Torque
SAE No. 2	1/8	50 in-lbs / 6 Nm
SAE No. 4	3/16	13 ft-lbs / 18 Nm
SAE No. 6	1/4	18 ft-lbs / 24 Nm

Description	Hex Size	Torque
SAE No. 8	5/16	50 ft-lbs / 68 Nm
SAE No. 10	9/16	55 ft-lbs / 75 Nm
SAE No. 12	5/8	75 ft-lbs / 102 Nm

https://truckmanualshub.com/
www.truck-freeworkshop.com

BASE ASSEMBLY

1-3
Foot Pump Manifold Components
IWPS Models (after serial number IWP09-8269)

Index No.	Description	Schematic Item	Function	Torque
1	Check valve	G	System pressure	8-10 ft-lbs / 11-14 Nm
2	Check valve	H	Directs flow to the tank	
3	Plug, SAE No. 4			12-14 ft-lbs / 17-19 Nm
4	Manual release valve	J	Lowers base	8-10 ft-lbs / 11-14 Nm
5	Plug, SAE No. 6			17-19 ft-lbs / 23-25 Nm
5	Pilot to open check valve	K	Base lift cylinder	35-40 ft-lbs / 47-54 Nm
6	Relief valve, 1600 psi / 110 bar	L	Base lift cylinder	8-10 ft-lbs / 11-14 Nm
7	Orifice, 0.3 inch / 0.76 mm	M	System pressure	8-10 ft-lbs / 11-14 Nm
8	Orifice, 0.3 inch / 0.76 mm	M	System pressure	8-10 ft-lbs / 11-14 Nm
9	Orifice, 0.3 inch / 0.76 mm	M	System pressure	8-10 ft-lbs / 11-14 Nm
10	Orifice, 0.3 inch / 0.76 mm	M	System pressure	8-10 ft-lbs / 11-14 Nm
11	Orifice, 0.3 inch / 0.76 mm	M	Foot Pump	

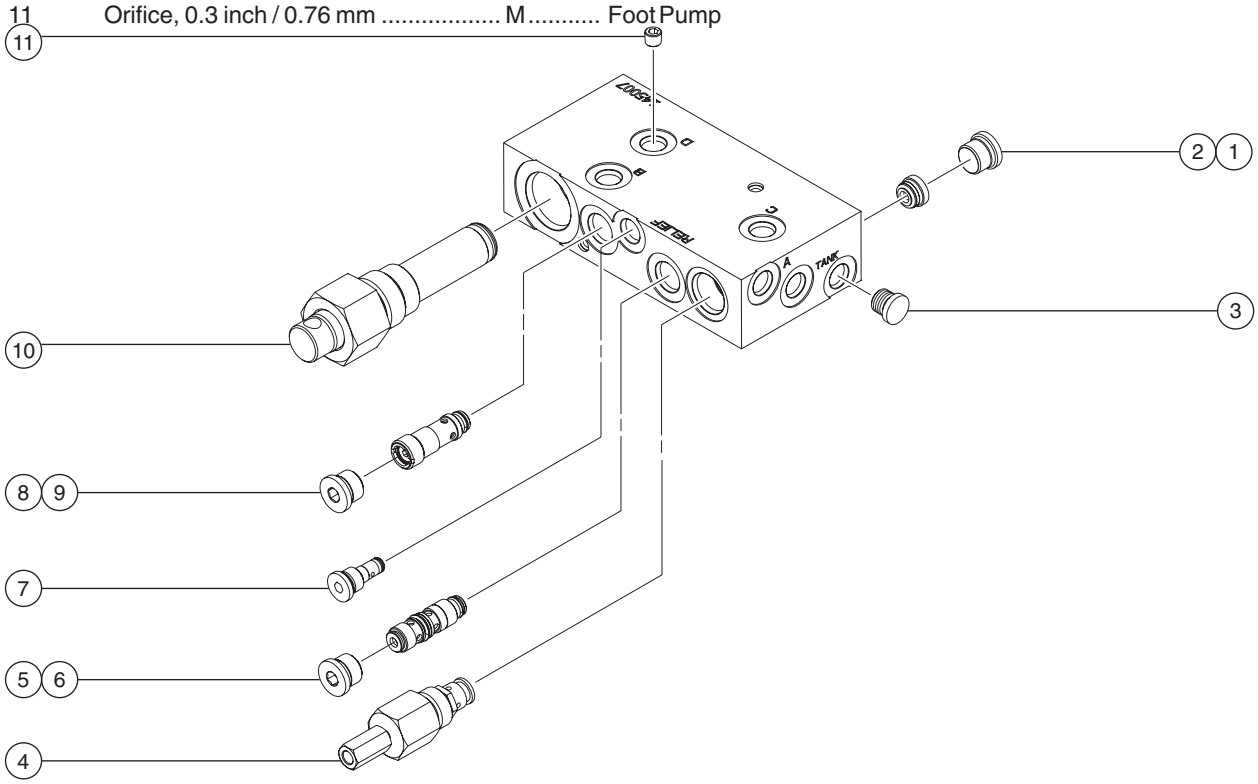

https://truckmanualshub.com/
www.truck-freeworkshop.com

BASE ASSEMBLY

1-4
Power Wheel Assist Manifold Components - IWPS Models (before serial number 4097-991)

Index No.	Description	Schematic Item	Function	Torque
1	Check valve	AA	System pressure	25-35 ft-lbs / 34-41 Nm
2	Solenoid valve, 2 position 3 way	AB	Reverse	25-35 ft-lbs / 34-41 Nm
3	Solenoid valve, 2 position 3 way	AC	Forward	25-35 ft-lbs / 34-41 Nm
4	Solenoid valve, 2 position 3 way	AD	All functions	25-35 ft-lbs / 34-41 Nm

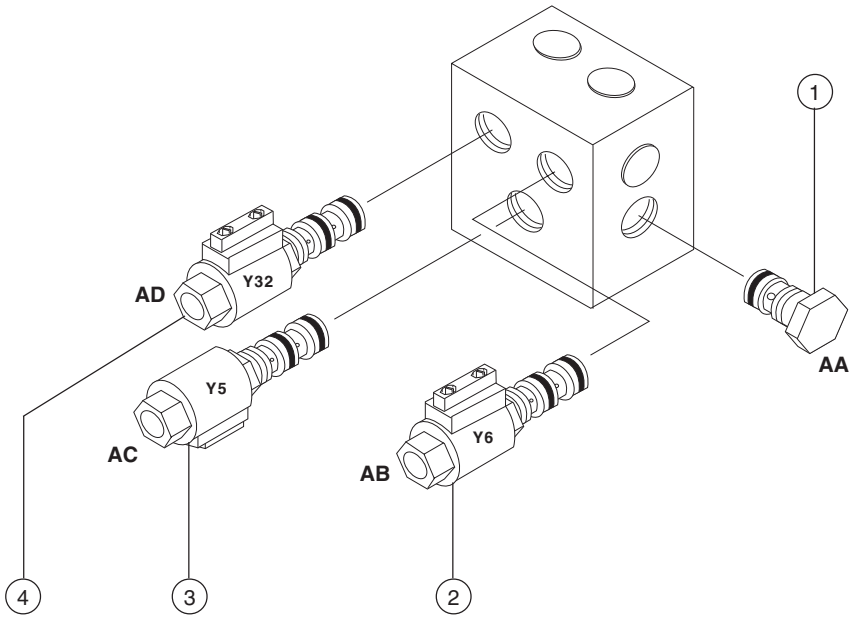

Plug Torque Specifications

Description	Hex Size	Torque
SAE No. 2	1/8	50 in-lbs / 6 Nm
SAE No. 4	3/16	13 ft-lbs / 18 Nm
SAE No. 6	1/4	18 ft-lbs / 24 Nm
SAE No. 8	5/16	50 ft-lbs / 68 Nm
SAE No. 10	9/16	55 ft-lbs / 75 Nm
SAE No. 12	5/8	75 ft-lbs / 102 Nm

Valve Coil Resistance Specifications

Valve coil specifications	
Solenoid valve, 2 position 3 way 10V DC (schematic items AB, AC and AD)	6 to 8Ω

https://truckmanualshub.com/
www.truck-freeworkshop.com

BASE ASSEMBLY

1-5
Power Wheel Assist Manifold Components - IWPS Models (from serial number 4097-991 to 4099-2532)

Index No.	Description	Schematic Item	Function	Torque
1	Check valve	BA	System pressure	25-35 ft-lbs / 34-41 Nm
2	Solenoid Valve, 2 position 2 way	BB	All Functions	25-35 ft-lbs / 34-41 Nm
3	Solenoid Valve, 3 position 4 way	BC	Forward/Reverse	25-35 ft-lbs / 34-41 Nm
4	Relief Valve 1600 psi / 110 bar	BD	System relief	25-35 ft-lbs / 34-41 Nm

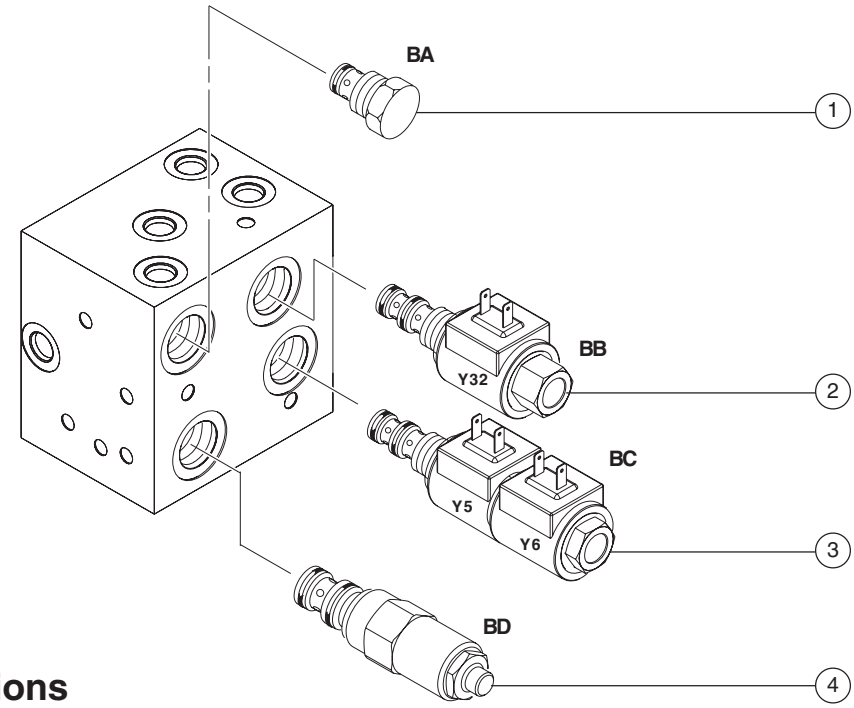

Plug Torque Specifications

Description	Hex Size	Torque
SAE No. 2	1/8	50 in-lbs / 6 Nm
SAE No. 4	3/16	13 ft-lbs / 18 Nm
SAE No. 6	1/4	18 ft-lbs / 24 Nm
SAE No. 8	5/16	50 ft-lbs / 68 Nm
SAE No. 10	9/16	55 ft-lbs / 75 Nm
SAE No. 12	5/8	75 ft-lbs / 102 Nm

Valve Coil Resistance Specifications

Valve coil specifications	
Solenoid valve, 2 position 2 way 10V DC (schematic item BA)	6 to 8Ω
Solenoid valve, 3 position 4 way 10V DC (schematic item BC)	6 to 8Ω

https://truckmanualshub.com/
www.truck-freeworkshop.com

1-6
Power Wheel Assist Manifold Components - IWPS Models (after serial number 4099-2532)

Index No.	Description	Schematic Item	Function	Torque
1	Check valve	CA	System pressure	25-35 ft-lbs / 34-41 Nm
2	Solenoid valve, 2 position 2 way	CB	All functions	25-35 ft-lbs / 34-41 Nm
3	Solenoid valve, 3 position 4 way	CC	Forward/Reverse	25-35 ft-lbs / 34-41 Nm
4	Relief valve 1600 psi / 110 bar	CD	System relief	25-35 ft-lbs / 34-41 Nm
5	Cross-port relief valve	CE	Brake	25-35 ft-lbs / 34-41 Nm

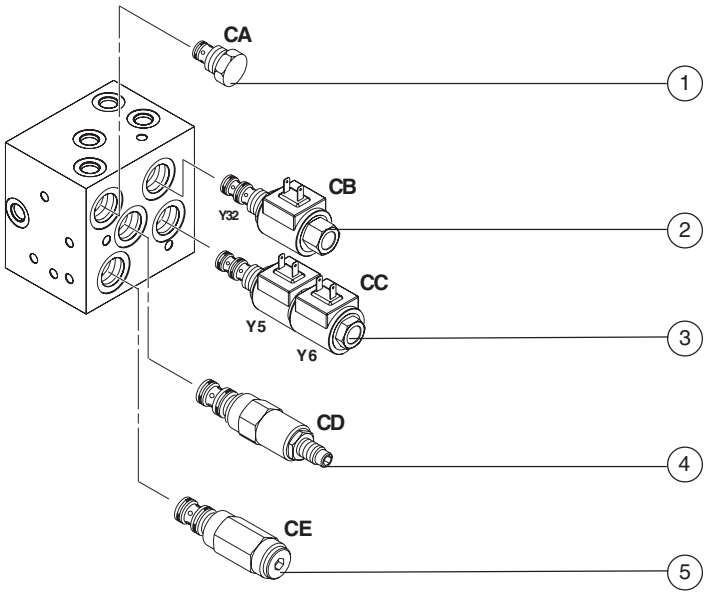

Plug Torque Specifications

Description	Hex Size	Torque
SAE No. 2	1/8	50 in-lbs / 6 Nm
SAE No. 4	3/16	13 ft-lbs / 18 Nm
SAE No. 6	1/4	18 ft-lbs / 24 Nm
SAE No. 8	5/16	50 ft-lbs / 68 Nm
SAE No. 10	9/16	55 ft-lbs / 75 Nm
SAE No. 12	5/8	75 ft-lbs / 102 Nm

Valve Coil Resistance Specifications

Valve coil specifications	
Solenoid valve, 2 position 2 way 10V DC (schematic item CB)	6 to 8Ω
Solenoid valve, 3 position 4 way 10V DC (schematic item CC)	6 to 8Ω

https://truckmanualshub.com/
www.truck-freeworkshop.com

Ground Control Box

2-1 How to Test the Transformer - AC Models

1 Fully lower the platform. Turn the key switch off and disconnect the power supply.

2 Open the ground control box and locate the transformer.

3 Tag and disconnect all wiring from the transformer.

4 Connect the leads from an ohmmeter to the following terminal combinations and check the continuity/resistance.

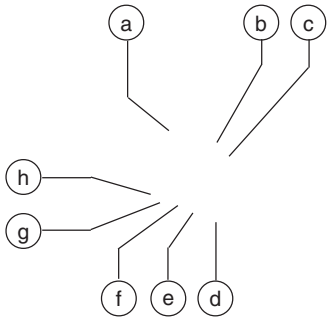

a red wire #2
b red/yellow wire
c red wire #1
d yellow wire
e black wire
f white wire
g brown wire
h blue wire

Test	Desired result
brown wire to blue wire	20 to 22Ω
black wire to white wire	16 to 19Ω
yellow wire to white wire	16 to 19Ω
red/yellow wire to red wire #1	0.5 to 1.5Ω
red/yellow wire to red wire #2	0.5 to 1.5Ω
red wire #1 to red wire #2	0.5 to 1.5Ω
yellow wire to black wire	0.5 to 1.5Ω
all other wire combinations	no continuity (infinite Ω)

https://truckmanualshub.com/
www.truck-freeworkshop.com

2-2
How to Test the AC Contactor - AC Models

1 Fully lower the platform. Turn the key switch off and disconnect the power supply.

2 Open the ground control box and locate the AC contactor.

3 Tag and disconnect all wiring from the contactor.

4 Connect the leads from an ohmmeter to the following terminal combinations and check the continuity/resistance.

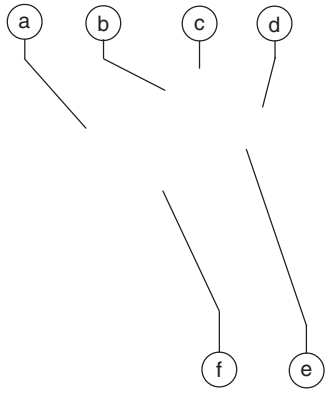

a terminal no. 1
b terminal no. 8
c terminal no. 6
d terminal no. 2
e terminal no. 4
f terminal no. 0

Test	Desired result
terminal 0 to 1	80 to 85Ω
all other terminal combinations	no continuity (infinite Ω)

https://truckmanualshub.com/
www.truck-freeworkshop.com

Hydraulic Power Unit

3-1A
Hydraulic Power Unit Components - AC Models
(before serial number s AWP03-27389 and IWP03-5151)

Index No.	Description	Function
1	115-230V AC electric motor	Single phase - 2850/3450 rpm, 50/60 Hz
2	Capacitor	Motor start circuit
3	Relief valve	Lift relief
4	Solenoid operated N.O. dump valve	Diverts pump output back to tank during motor start up
5	10V DC coil	Activates N.O. dump valve
6	Hydraulic reservoir	3 quarts / 2.8 liters
7	Drain plug	Drains hydraulic tank
8	Sight gauge	Hydraulic fluid level
9	Breather cap	Hydraulic tank vent/filler
10	Suction strainer	Filters hydraulic fluid
11	O-ring	Seals tank
12	Pump	0.5 to 0.6 gallons per minute at 2000 psi / 1.89 to 2.27 liters per minute at 138 bar
13	Check valve	Pump output
14	Motor seal	Seals motor from contaminants
15	Motor bearing	Aligns motor shaft into pump

https://truckmanualshub.com/
www.truck-freeworkshop.com

HYDRAULIC POWER UNIT

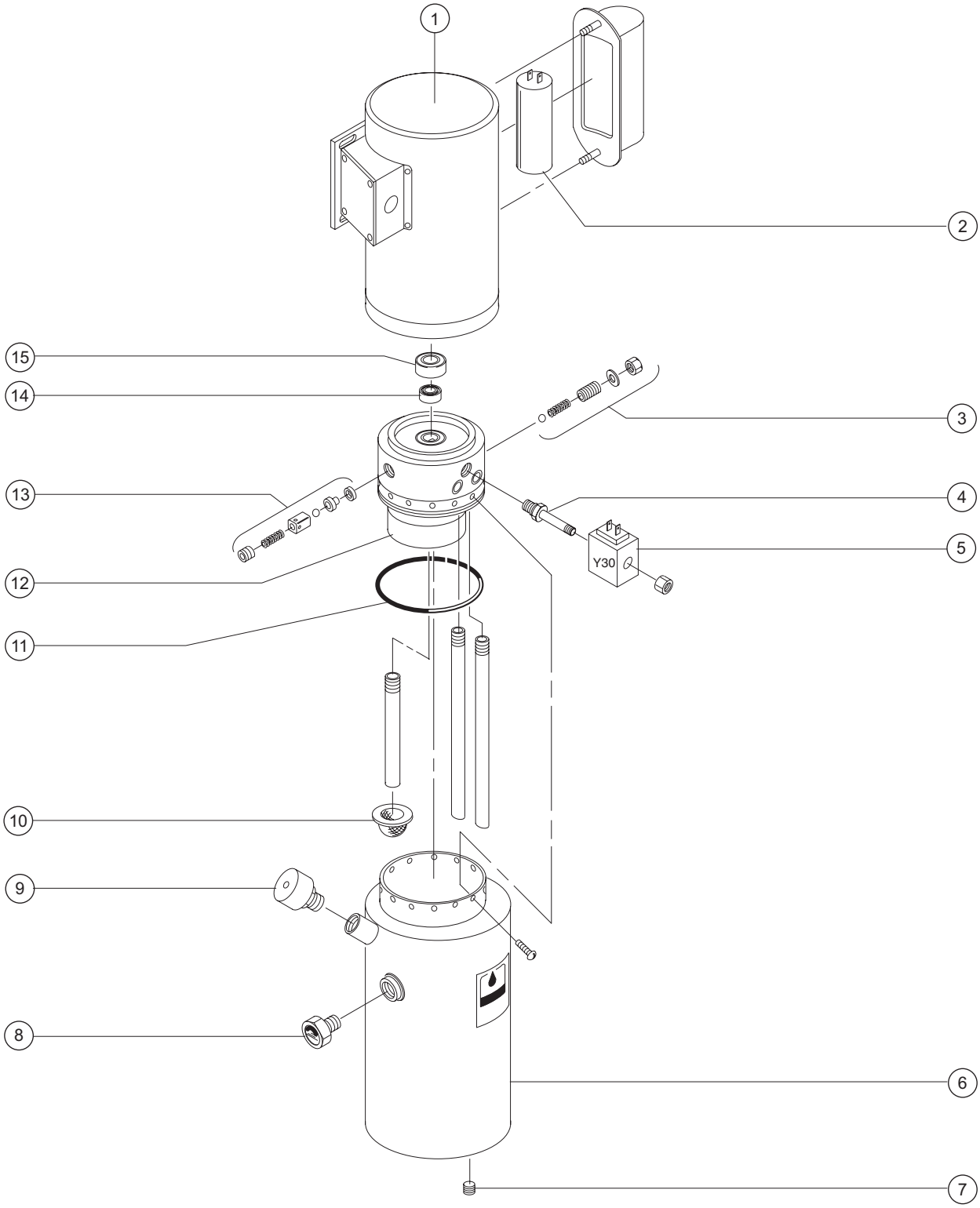

https://truckmanualshub.com/
www.truck-freeworkshop.com

HYDRAULIC POWER UNIT

3-1B
Hydraulic Power Unit Components - AC Models
(from serial number AWP03-27390 to AWP08-60145)

Index No.	Description	Function
1	115-230V AC electric motor	Single phase - 2850/3450 rpm, 50/60 Hz
2	Capacitor	Motor start circuit
3	Motor bearing	Aligns motor shaft into pump
4	Motor seal	Seals motor from contaminants
5	Relief valve	Lift relief
6	Pump	0.5 to 0.6 gallons per minute at 2000 psi / 1.89 to 2.27 liters per minute at 138 bar
7	Solenoid operated N.O. dump valve	Diverts pump output back to tank during motor start up
8	10V DC coil	Activates N.O. dump valve
9	O-ring	Seals tank
10	Return tube	Returns fluid to tank
11	Hydraulic tank	3 quarts / 2.8 liters
12	Drain plug	Drains hydraulic tank
13	Breather cap	Hydraulic tank vent/filler
14	Filter pick-up screen	Filters hydraulic fluid
15	Suction tube	Sends fluid to pump
16	Check valve	Pump output

www.truck-freeworkshop.com
https://truckmanualshub.com/

HYDRAULIC POWER UNIT

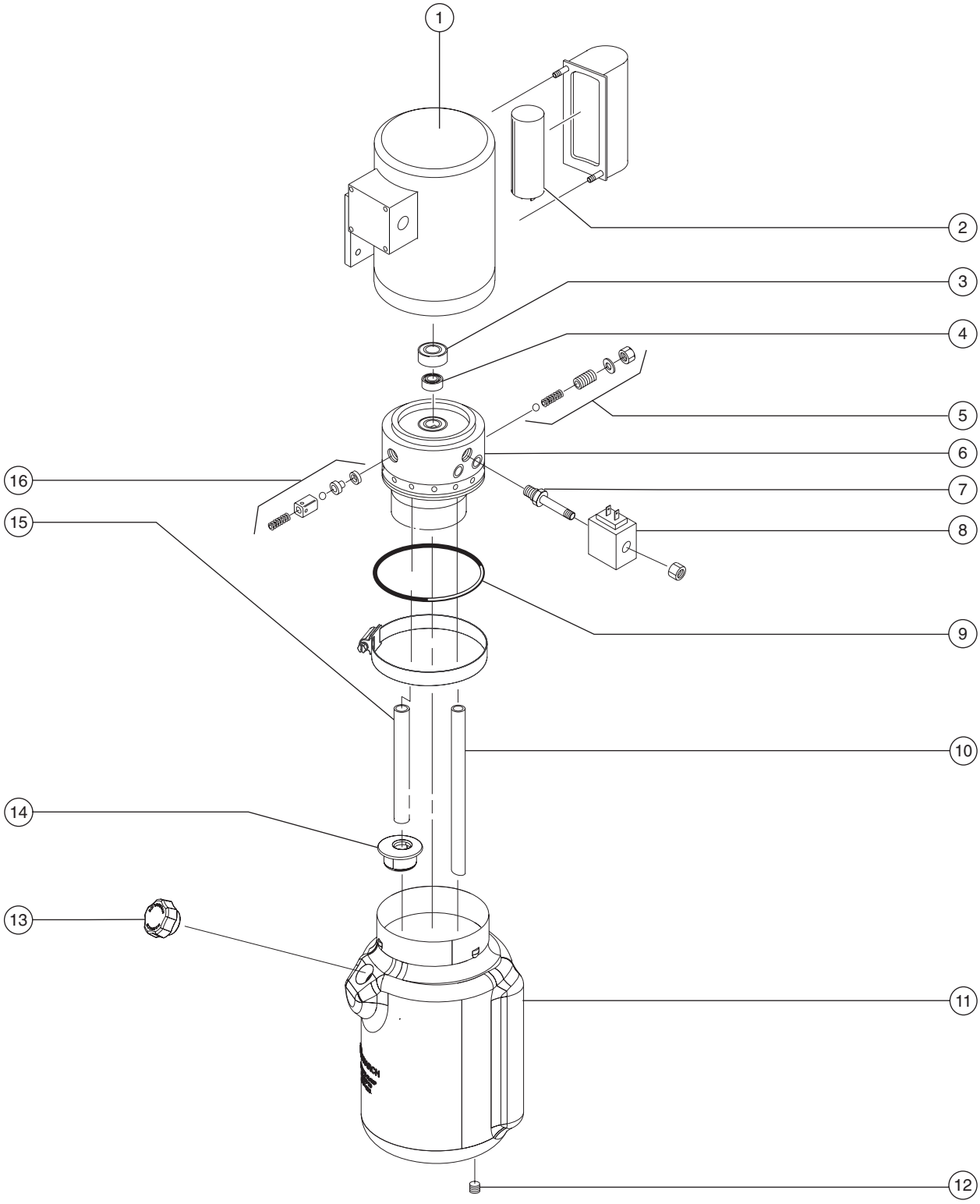

https://truckmanualshub.com/
www.truck-freeworkshop.com

HYDRAULIC POWER UNIT

3-2
Hydraulic Power Unit Components - DC Models
(before serial number s AWP03-27402 and IWP03-5123)

Index No.	Description	Function
1	12V DC electric motor	12V DC standard duty 1 terminal 180 A at 2650 psi / 183 bar
2	Motor starter solenoid	Power supply to electric motor
3	Relief valve	Lift relief
4	Solenoid operated N.O. dump valve	Diverts pump output back to tank during motor start up
5	10V DC coil	Activates N.O. dump valve
6	Hydraulic tank	3 quarts / 2.8 liters
7	Drain plug	Drains hydraulic tank
8	Sight gauge	Hydraulic fluid level
9	Breather cap	Hydraulic tank vent/filler
10	Suction strainer	Filters hydraulic fluid
11	O-ring	Seals tank
12	Pump	0.7 to 1 gpm at 2000 psi / 2.6 to 3.76 L/min at 138 bar
13	Check valve	Pump output
14	Motor seal	Seals motor from contaminants
15	Motor bearing	Aligns motor shaft into pump

https://truckmanualshub.com/
www.truck-freeworkshop.com

HYDRAULIC POWER UNIT

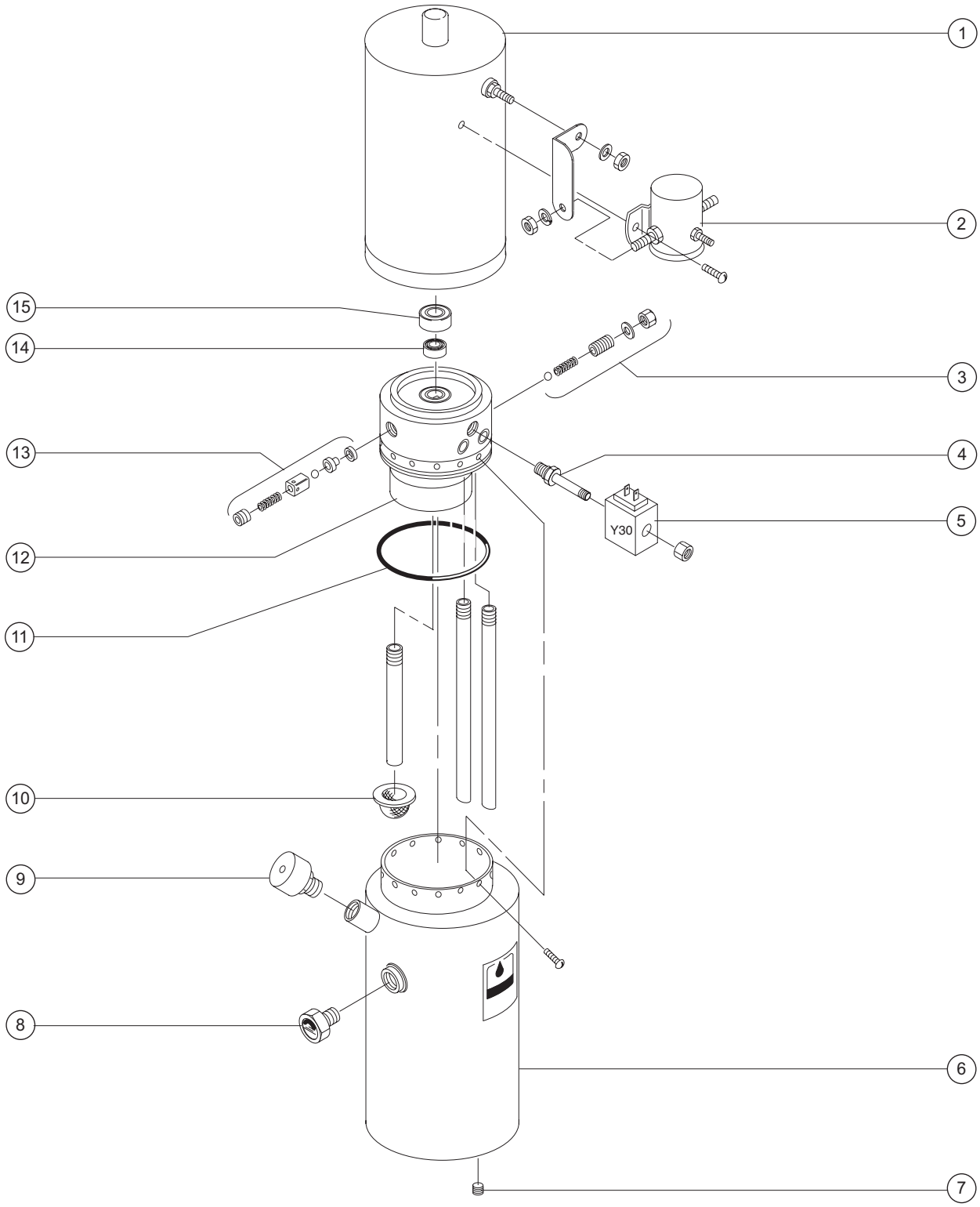

https://truckmanualshub.com/
www.truck-freeworkshop.com

HYDRAULIC POWER UNIT

3-3
Hydraulic Power Unit Components - Air Powered Models
(before serial number AWP04-27779)

Index No.	Description	Function
1	Air motor	100 psi / 6.9 bar @ 80 cfm / 37760 cc/sec
2	Exhaust Muffler	Controls sound emissions
3	Relief valve	Relief valve
4	Valve N.O. Air Pilot	Diverts pump output back to tank during motor start up
5	O-ring	Seals tank
6	Tank	3 quarts / 2.8 liters
7	Drain plug	Drains tank
8	Sight gauge	Hydraulic fluid level
9	Tee fitting (models with Narrow or Rough Terrain Base Option)	Tank vent adaptor
10	Plug fitting (models with Narrow or Rough Terrain Base Option)	Plug
11	Suction strainer	Filters hydraulic fluid
12	Breather cap (after serial number 3897-4544)	Tank vent/filler
13	Breather cap (before serial number 3897-4545)	Tank vent/filler
14	Check Valve	Pump output
15	Pump	0.7 to 1 gpm at 2000 psi / 2.6 to 3.76 L/min at 138 bar
16	Pump/Motor Adaptor Housing	Protects coupling components
17	Pump adaptor	Connects pump to spider coupler
18	Spider coupler	Connects motor to pump
19	Motor adaptor	Connects motor to spider coupler

https://truckmanualshub.com/
www.truck-freeworkshop.com

HYDRAULIC POWER UNIT

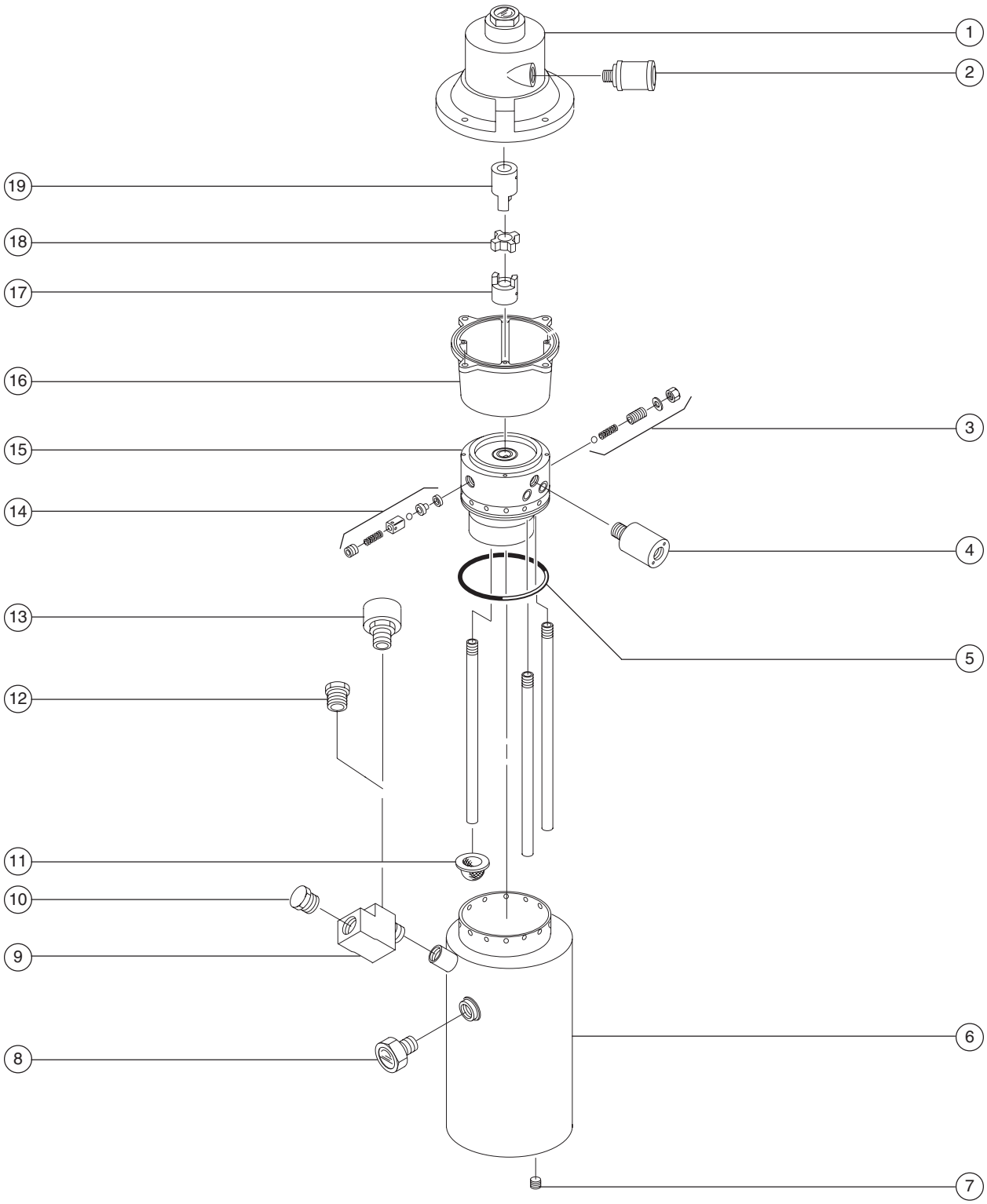

https://truckmanualshub.com/
www.truck-freeworkshop.com

HYDRAULIC POWER UNIT

3-4
Hydraulic Power Unit

How to Remove the Hydraulic Power Unit - AC Models

1 Fully lower the platform, turn the key switch off and remove the key and disconnect the power supply.

2 **IWPS models**: Pull the base lowering handle to fully lower the base.

3 Remove the power unit cover.

4 Tag, disconnect and plug the hydraulic hoses. Cap the fittings on the power unit.

WARNING Bodily injury hazard. Spraying hydraulic oil can penetrate and burn skin. Loosen hydraulic connections very slowly to allow the oil pressure to dissipate gradually. Do not allow oil to squirt or spray.

5 Tag and disconnect the electrical wiring from the valve coil.

6 Remove the cover from the junction box on the motor. Tag and disconnect the electrical wiring in the junction box. Loosen the squeeze connector on the junction box and pull the wiring out through the squeeze connector.

DC models: Tag and disconnect the electrical wiring from the starter solenoid.

Air models: Tag and disconnect the pneumatic hoses from the power unit

7 Support the hydraulic power unit with a lifting device.

8 Remove the power unit mounting fasteners, then remove the power unit from the machine.

WARNING Crushing hazard. The power unit will fall unless it is properly supported.

Note: If a new power unit is installed, the pressure relief valve must be properly adjusted. See 3-6, *How to Adjust the Pressure Relief Valve.*

https://truckmanualshub.com/
www.truck-freeworkshop.com

How to Remove the Hydraulic Power Unit - DC Models

1 Fully lower the platform. Turn the key switch off and remove the key and disconnect the power supply.

2 **IWPS models**: Pull the base lowering handle to fully lower the base.

3 Remove the power unit cover.

4 Tag, disconnect and plug the hydraulic hoses. Cap the fittings on the power unit.

⚠WARNING Bodily injury hazard. Spraying hydraulic oil can penetrate and burn skin. Loosen hydraulic connections very slowly to allow the oil pressure to dissipate gradually. Do not allow oil to squirt or spray.

5 Tag and disconnect the electrical wiring from the valve coil.

6 Tag and disconnect the electrical wiring from the motor start solenoid.

7 Support the hydraulic power unit with a lifting device.

8 Loosen the power unit mounting plate mounting fasteners. Do not remove them.

9 Rotate the mounting plate away from the mast to access the power unit mounting fasteners.

10 Remove the power unit mounting fasteners. Remove the power unit from the machine.

⚠WARNING Crushing hazard. The power unit will fall unless it is properly supported.

Note: If a new power unit is installed, the pressure relief valve must be properly adjusted. See 3-6, *How to Adjust the Pressure Relief Valve.*

https://truckmanualshub.com/
www.truck-freeworkshop.com

HYDRAULIC POWER UNIT

How to Remove the Hydraulic Power Unit - Air Models

1 Fully lower the platform, turn the key switch off and remove the key and disconnect the power supply.

2 Tag, disconnect and plug the hydraulic hoses. Cap the fittings on the power unit.

⚠WARNING Bodily injury hazard. Spraying hydraulic oil can penetrate and burn skin. Loosen hydraulic connections very slowly to allow the oil pressure to dissipate gradually. Do not allow oil to squirt or spray.

3 Support the hydraulic power unit with a lifting device.

4 Loosen the power unit mounting plate mounting fasteners. Do not remove them.

5 Rotate the mounting plate away from the mast to access the power unit mounting fasteners.

6 Remove the power unit mounting fasteners. Remove the power unit from the machine.

⚠WARNING Crushing hazard. The power unit will fall if it is not properly supported when it is removed from the machine.

Note: If a new power unit is installed, the pressure relief valve must be properly adjusted. See 3-6, *How to Adjust the Pressure Relief Valve.*

3-5 Hydraulic Pump

How to Remove the Hydraulic Pump

Note: When removing a hose assembly or fitting, the O-ring on the fitting and/or hose end must be replaced and then torqued to specification during installation. Refer to Section Two, Hydraulic Hose and Fitting Torque Specifications.

1 Fully lower the platform, turn the key switch off and remove the key.

2 **IWPS models**: Pull the base lowering handle to fully lower the base.

3 Remove the power unit cover.

4 Remove the power unit. See 3-4, *How to Remove the Power Unit.*

5 Support the hydraulic tank with a lifting device.

6 Remove the mounting fasteners from the tank. Remove the tank from the power unit. Do not allow the hydraulic oil to spill.

Note: It may be necessary to tap the side of the tank with a soft rubber mallet to loosen it.

7 Remove the mounting fastener from the suction cover assembly on the pump. Then remove the suction cover.

8 Remove the mounting fasteners from the pump. Then remove the pump from the power unit.

Note: When installing the tank, be sure not to damage the o-ring.

https://truckmanualshub.com/
www.truck-freeworkshop.com

3-6
Valve Adjustment

How to Adjust the Platform Lift Relief Valve

Note: Be sure the hydraulic oil level is between the FULL and ADD marks on the oil level indicator.

1 Remove the power unit cover.

2 Loosen the locknut on the relief valve located on the right side of the motor.

3 Follow the appropriate operator's manual to set up the machine for operation.

4 Place the maximum rated load into the platform. Secure the load to the platform. *See specifications, Section 2*.

5 Hold the relief valve screw and loosen the lock nut.

6 While activating the platform up function, turn the relief valve screw clockwise, just until the platform begins to raise.

7 Fully lower the platform.

8 Add an additional 30 pounds / 14 kg to the platform. Secure the additional weight.

9 Activate the platform up function.

10 The power unit should not be able to lift the platform. If the power unit lifts the platform, turn the relief valve counterclockwise until the platform does not lift. Repeat steps 11 and 12 until the lift relief valve is properly adjusted.

11 Hold the relief valve screw and tighten the lock nut. Be sure the relief valve screw does not turn.

12 Remove the weight from the platform.

13 Bleed the hydraulic system by raising the platform to full height. If the pump cavitates or platform fails to reach full height, add hydraulic oil until the pump is functioning correctly. Do not overfill the hydraulic tank.

NOTICE Component damage hazard. Do not continue to operate the machine if the hydraulic pump is cavitating.

14 Install the breather cap and the power unit cover.

https://truckmanualshub.com/
www.truck-freeworkshop.com

HYDRAULIC POWER UNIT

3-7
How to Test the Motor Start Solenoid - DC Models

⚠WARNING Electrocution hazard. Contact with electrically charged circuits may result in death or serious injury. Remove all rings, watches and other jewelry.

⚠WARNING Electrocution hazard. Disconnect the ground cable from the battery before performing this procedure.

1 Tag and disconnect all wiring from the motor start solenoid.

2 Connect the leads from an ohmmeter to the following terminal combinations and check the continuity/resistance.

Test	Desired result
Small post to ground	13 to 17Ω
2 large posts	no continuity (infinite Ω)

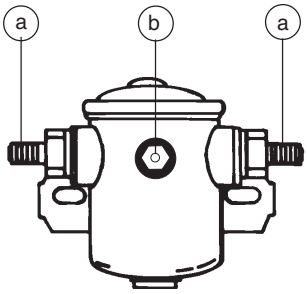

a high amp power terminal (large posts)
b solenoid coil terminal (small post)

3 Connect 12V DC to the small post and a ground wire to the case of the solenoid, then test the following terminal combinations.

Test	Desired result
2 large posts	continuity (zero Ω)

https://truckmanualshub.com/
www.truck-freeworkshop.com

Power Pack

4-1
Power Pack

How to Change a Power Pack

1 Fully lower the platform. Turn the key switch off and disconnect the machine from the power supply.

IWP models: Pull the base lowering handle to lower the base.

2 Remove the power unit cover.

3 **AC and DC models:** Separate both control cable quick disconnect couplers from the ground control box.

Air models: Disconnect the air lines from the air valve container, filter regulator and air lubricator.

4 **AC and DC models:** Separate the battery quick disconnects.

5 **DC models:** Disconnect the battery cables from the motor start solenoid.

6 **AWPS models with Narrow Base or Rough Terrain Base:** Remove the loading wheels.

8 Remove the breather cap from the hydraulic power unit and install a pipe plug in the filler hole.

9 Tag, disconnect and plug the hydraulic hoses from the power unit.

WARNING Bodily injury hazard. Spraying hydraulic oil can penetrate and burn skin. Loosen hydraulic connections very slowly to allow the oil pressure to dissipate gradually. Do not allow oil to squirt or spray.

10 Support the power pack and remove the power pack mounting bolts.

WARNING Crushing hazard. The power pack will fall if not properly supported when removed from the machine.

11 Remove the power pack.

Installation

To assemble, reverse the disassemble steps.

DANGER Tip-over hazard. On Narrow Base and Rough Terrain Base models, the counterweights must be installed on the new power pack.

NOTICE Component damage hazard. Do not overtighten the hydraulic fittings.

Note: Do not install the motor cover until the relief valve adjustment is complete. Refer to 3-6, *How to adjust the Pressure Relief Valve.*

https://truckmanualshub.com/
www.truck-freeworkshop.com

Mast Components

REV B

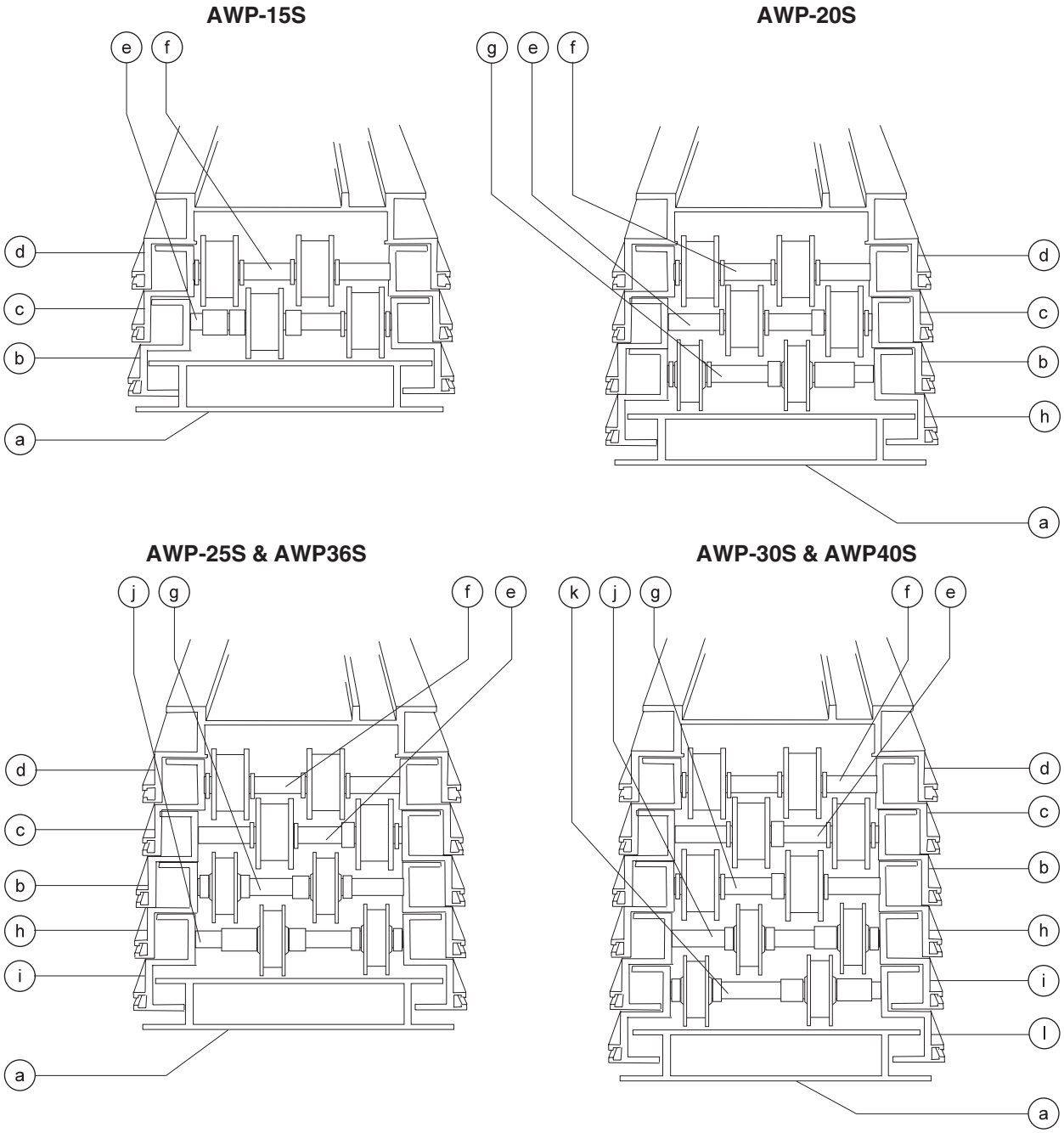

Mast Components

a carriage
b number 3 column
c number 2 column
d number 1 column
e number 3 column idler wheel assembly
f number 2 column idler wheel assembly
g number 4 column idler wheel assembly
h number 4 column
i number 5 column
j number 5 column idler wheel assembly
k number 6 column idler wheel assembly
l number 6 column

https://truckmanualshub.com/
www.truck-freeworkshop.com

5-1
Lift Cylinder

How to Remove the Lift Cylinder

⚠WARNING Bodily injury hazard. This procedure requires specific repair skills, lifting equipment and a suitable workshop. Attempting this procedure without these skills and tools may result in death or serious injury and significant component damage. Dealer service is strongly recommended.

Note: When removing a hose assembly or fitting, the O-ring on the fitting and/or hose end must be replaced and then torqued to specification during installation. Refer to Section Two, Hydraulic Hose and Fitting Torque Specifications.

1 Fully lower the platform. Turn the key switch to the off position..

AWPS models: Remove the outriggers from the outrigger storage socket.

DC models: Remove the battery pack.

2 Remove the breather cap from the hydraulic power unit and install a pipe plug in the filler hole.

3 Attach an overhead crane to the lifting eye at the top of the mast.

4 Lift the machine off the ground then while lowering it, guide it over onto the saw horse. Before the platform reaches the ground, place a saw horse under the mast above the platform. Lower the machine onto the saw horse. Be sure the saw horse is of ample capacity.

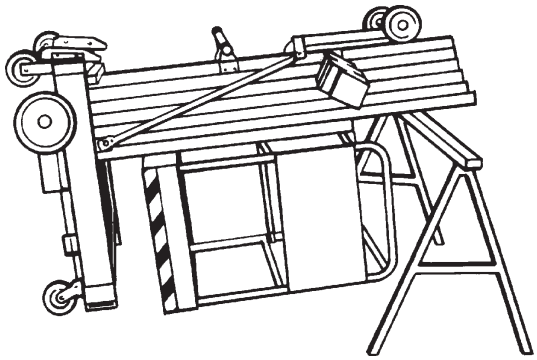

⚠CAUTION Crushing hazard. The machine will fall unless it is properly supported by the saw horse.

5 Remove the socket head retaining bolt from the clevis block on the lift cylinder rod end.

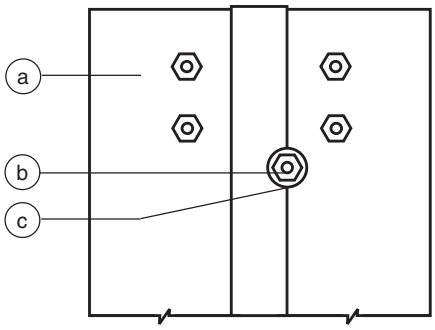

a top of no. 1 column
b retaining fastener
c clevis block

https://truckmanualshub.com/
www.truck-freeworkshop.com

6 Tag, disconnect and plug the lift cylinder hydraulic hoses. Cap the fittings on the lift cylinder.

WARNING Bodily injury hazard. Spraying hydraulic oil can penetrate and burn skin. Loosen hydraulic connections very slowly to allow the oil pressure to dissipate gradually. Do not allow oil to squirt or spray.

7 Remove the cylinder mounting fasteners from the barrel end of the cylinder.

8 Loosen the cylinder mounting bracket fasteners.

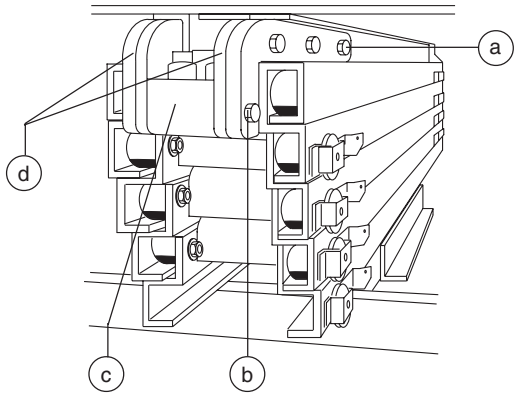

a bracket mounting fasteners
b cylinder mounting fasteners
c hydraulic cylinder
d cylinder mounting plate

9 Support the cylinder and carefully slide it out of the bottom of the mast.

CAUTION Crushing hazard. The lift cylinder will fall unless it is properly supported.

5-2 Mast Assembly

How to Remove the Mast Assembly - AWPS Models

WARNING Bodily injury hazard. This procedure requires specific repair skills, lifting equipment and a suitable workshop. Attempting this procedure without these skills and tools may result in death or serious injury and significant component damage. Dealer service is strongly recommended.

1 Fully lower the platform. Turn the key switch to the off position and remove the key.

2 Remove the platform. See 7-1, *How to Remove an Aluminum Platform.*

3 Remove the power pack. See 4-1, *How to Change a Power Pack.*

4 **AWP-36S and 40S models:** Remove the tilt-back frame. See 6-1, *How to Remove the Tilt-back Frame.*

5 Attach an overhead crane to the lifting eye at the top of the mast.

https://truckmanualshub.com/
www.truck-freeworkshop.com

6 Place a saw horse in front of the machine where the top of the mast will rest.

7 Lift the machine off the ground and then while lowering it, guide it over onto the saw horse. Be sure the saw horse is of ample capacity.

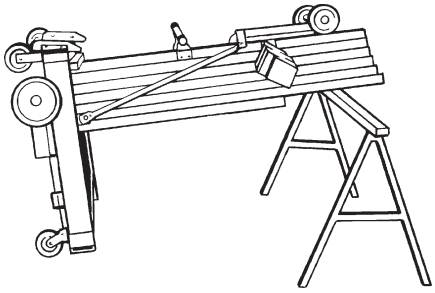

⚠CAUTION Crushing hazard. The machine will fall unless it is properly supported by the saw horse.

8 Attach the overhead crane to the base.

9 Lift the base until the mast is level then place a second saw horse under the mast near the base. Lower the mast onto the saw horse.

10 Remove the cover on the rear of the base.

11 Tag, disconnect and plug the lift cylinder hydraulic hoses. Remove the flow control valve from the cylinder. Cap the cylinder ports.

⚠WARNING Bodily injury hazard. Spraying hydraulic oil can penetrate and burn skin. Loosen hydraulic connections very slowly to allow the oil pressure to dissipate gradually. Do not allow oil to squirt or spray.

12 Remove the mast brace mounting bracket fasteners.

13 Remove the four mast mounting fasteners. Push the fasteners toward the mast for clearance during mast removal.

14 **AWP-15S, 20S, 25S, and 30S models:** Remove the power cable brackets from the side of the mast.

AWP-36S and 40S models: Remove the rubber grommet from the access hole in the mast stiffener. Carefully pull the electrical cables and hydraulic hoses down and out through the bottom of the mast.

15 Attach an overhead crane to the base.

16 Carefully lift and remove the base from the mast. Do not damage the lift cylinder hydraulic fittings when removing the base.

⚠CAUTION Crushing hazard. The base will fall unless it is properly supported when it is removed from the mast.

https://truckmanualshub.com/
www.truck-freeworkshop.com

How to Remove the Mast Assembly - IWPS Models

⚠WARNING This procedure requires specific repair skills, lifting equipment and a suitable workshop. Attempting this procedure without these skills and tools may result in death or serious injury and significant component damage. Dealer service is strongly recommended.

1 Fully lower the platform. Turn the key switch off and remove the key.

2 Pull the base lowering handle to fully lower the base.

3 Remove the platform. See 7-1, *How to Remove an Aluminum Platform.*

4 Remove the power pack. See 4-1, *How to Change a Power Pack.*

5 Tag, disconnect and plug the lift cylinder hydraulic hoses. Cap the cylinder ports.

⚠WARNING Bodily injury hazard. Spraying hydraulic oil can penetrate and burn skin. Loosen hydraulic connections very slowly to allow the oil pressure to dissipate gradually. Do not allow oil to squirt or spray.

6 Remove the level sensor assembly mounting fasteners.

7 Remove the base lowering cable mounting fasteners from the side of the mast.

8 Disconnect the control cable tension spring.

9 Attach an overhead crane to the lifting eye at the top of the mast.

10 Remove the four mast mounting fasteners.

11 Carefully lift the mast out of the base.

⚠CAUTION Crushing hazard. The mast will fall unless it is properly supported when it is removed from the base.

12 Place two saw horses under the mast.

13 Lower the mast onto the saw horse with the carriage facing down.

https://truckmanualshub.com/
www.truck-freeworkshop.com

How to Disassemble the Mast

WARNING Bodily injury hazard. This procedure requires specific repair skills, lifting equipment and a suitable workshop. Attempting this procedure without these skills and tools may result in death or serious injury and significant component damage. Dealer service is strongly recommended.

1 Remove the mast. See 5-2, *How to Remove the Mast Assembly.*

2 Remove the mounting fasteners from the cylinder mounting plates.

3 Remove the socket head retaining fastener from the clevis block on the lift cylinder rod end.

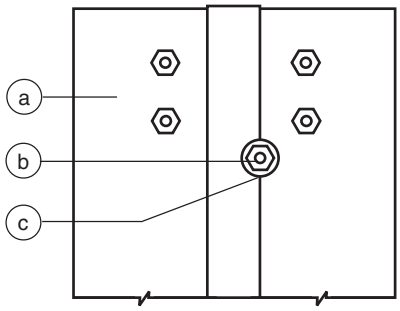

a top of no. 1 column
b retaining fastener
c clevis block

4 Support the cylinder and carefully slide the lift cylinder out from the bottom of the mast.

5 Carefully rotate the mast until the carriage is facing up.

6 Remove the mast covers.

7 Remove the cover from the platform control box. Remove the control box mounting fasteners.

8 Remove the control box and control cable and set them aside.

9 **IWPS models:** Remove the base lowering cable bracket from the mast.

10 Remove the adjustment nuts from all of the sequencing cables.

11 Slide the carriage towards the top of the mast assembly enough to remove the tension on the lifting chain.

12 Slide the column below the carriage toward the top of the mast about 6 inches / 15.2 cm to access the idler wheel mounting fasteners.

13 Hold the idler wheel axle from turning by placing a screwdriver in the hole of the axle. Remove the axle mounting fasteners and remove the idler wheel assembly.

NOTICE Be sure to label the location and orientation of each idler wheel assembly.

14 Remove the adjustment nuts from the chain tension rocker on the carriage.

15 Slide the carriage out the bottom of the mast assembly.

16 Lay the chains out on the floor at the top of the mast. Do not allow the chains to become twisted or dirty.

17 Remove the adjustment nuts from the chain tension rocker on the column.

https://truckmanualshub.com/
www.truck-freeworkshop.com

18 Slide the column out the bottom of the mast.

19 Push the next column toward the top of the mast to access the idler wheel assembly mounting fasteners.

20 Hold the idler wheel axle from turning by placing a screwdriver in the hole of the axle. Remove the axle mounting fasteners, and remove the idler wheel assembly.

21 Remove the adjustment nuts from the chain tension rocker on the column.

22 Slide the column out the bottom of the mast.

23 Repeat steps 19 through 22 for each remaining column.

Note: If the chains are removed, mark the location and label each chain before removal.

How to Assemble the Mast

⚠WARNING Bodily injury hazard. This procedure requires specific repair skills, lifting equipment and a suitable workshop. Attempting this procedure without these skills and tools may result in death or serious injury and significant component damage. Dealer service is strongly recommended.

1 Thoroughly clean all columns.

2 Secure the number 1 column to the saw horses and lay the chains out on the floor at the top. Do not allow the chains to become twisted or dirty.

3 Apply a generous amount of Boe-lube wax (Genie part number 90337) to the inside and outside channels of each column.

4 Slide the number 2 column into the number 1 column.

5 Lay the number 2 column chains on the floor. Do not allow the chains to become twisted or dirty.

6 Lay the number 1 column chains inside the number 2 column.

7 Slide the number 3 column into the number 2 column.

8 When the number 3 column is almost all the way in, guide the number 1 column chains into the chain tension rocker on the number 3 column.

9 Install the adjustment nuts on the number 1 column chains. Tighten the adjustment nuts until the lifting chains have equal tension and the chain tension rocker is centered in the inspection hole in the column.

10 Lay the number 3 column chains on the floor. Do not allow the chains to become twisted or dirty.

11 Lay the number 2 column chains inside the number 3 column.

12 Follow steps 4 through 11 for each remaining column and the carriage.

13 After all the columns are assembled, the idler wheel assemblies can be installed.

14 Remove the tension from the lifting chains on the number 2 column by pushing the number 3 column towards the top of the mast.

https://truckmanualshub.com/
www.truck-freeworkshop.com

15 Install the idler wheel assembly into the top of the number 2 column. Securely tighten the mounting fasteners. Do not over tighten.

Note: Confirm that all idler wheels rotate with no excessive side movement. Confirm that they do not rub on the inside of the column. Replace worn spacers if necessary. Refer to Maintenance procedure C-2, *Inspect the Mast Assembly for Wear.*

Specification	
Side movement, Maximum	0.079 inch 2 cm

16 Repeat steps 14 and 15 for each remaining idler wheel assembly.

17 Confirm that all of the idler wheel axle mounting fasteners are flush with the column.

CAUTION Component damage hazard. The roller wheels may be damaged if the idler wheel axle mounting fasteners are not flush with the column.

18 Install the mast assembly on the base.

19 Adjust the lifting chains. See 5-4, *How to Adjust the Lifting Chains.*

Note: **IWPS Models:** Adjust the base release cable. See 1-2, *How to Adjust the Base Release Cable.*

5-3 Glide Pads

How to Adjust the Glide Pads

1 Fully lower the platform, turn the key switch off and remove the key.

2 Locate the upper and lower glide pad adjustment bolts below each upper roller bolt on both sides of each column.

3 Hold the glide pad bolt and loosen the lock nut on all the glide pads.

4 Turn all the glide pad adjustment bolt clockwise until the glide pad makes contact with the column. Adjust the slide pads on both sides of all column mast. Be sure the sides of the columns are even to within 1/8 inch / 3.17 mm of each other.

https://truckmanualshub.com/
www.truck-freeworkshop.com

5 Starting at the number 1 column, torque the upper and lower glide pad bolts to 12 in-lbs / 1.35 Nm. Hold the glide pad adjustment bolt and tighten the lock nut. Be sure the glide pad bolt does not turn.

6 Repeat step 5 for each remaining upper and lower glide pad on both sides of the mast. Start at the number 1 column and work toward the carriage.

7 Repeat step 5 for all of the upper and lower glide pads.

Note: Make sure glide pad bolts are adjusted evenly on each side to maintain squareness of the columns.

5-4 Lifting Chains

How to Adjust the Lifting Chains

1 Fully lower the machine and check to see if all the columns (except the carriage) are even at the top. The chains are adjusted correctly if all the columns are even at the top.

To adjust column chains:

2 Mark the column to be adjusted.

3 Raise the platform 6 feet / 2 m.

4 Turn the adjustment lock nuts evenly on both chain terminals clockwise to raise the column or counterclockwise to lower the column.

5 Fully lower the machine and confirm the alignment of the columns. Adjust if necessary.

6 Confirm that the chain terminals on each column have equal tension and the lock nuts are tight.

https://truckmanualshub.com/
www.truck-freeworkshop.com

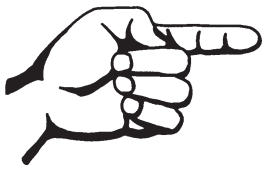

This page intentionally left blank.

https://truckmanualshub.com/
www.truck-freeworkshop.com

How to Inspect the Lifting Chains

Inspection	Procedure	Inspection Failure	Inspection Remedy
Wear	Count out 16 chain links and measure pin to pin centerline dimension with a steel measuring tape. Note: Measure a section of chain that moves over the idler wheels.	When the length of the 16 links (pin to pin) measure more than 8.25 inches / 21 cm for 1/2 inch / 12.7mm chain or 10.31 inches / 26.1 cm for 5/8 inch / 15.9 mm chain.	Replace both chains on that column. Replace entire chain. Do not repair just the affected portion of the chain.
Rust and Corrosion	Visually inspect the chains for rust and corrosion.	Evidence of rust or corrosion.	Remove chain and inspect for cracked plates (see inspection of cracked plates). If no cracks are found, lubricate chain with motor oil (SAE 40) and install chain.
	Visually inspect the chains for lubrication.	When external surfaces are not protected with a layer of oil.	Lubricate chain with motor oil (SAE 40W).
Tight Joints	Inspect chain link joints for easy movement.	Joints that do not flex freely or are binding.	If rust and corrosion is found, refer to Failure Remedy for rust and corrosion. If link plates or pins are bent or deformed, replace entire chain. Replace both chains on that column. Do not repair just the affected portion of the chain.

https://truckmanualshub.com/
www.truck-freeworkshop.com

REV B

MAST COMPONENTS

Inspection	Procedure	Inspection Failure	Inspection Remedy
Raised or Turned Pins	Visually inspect for raised pins.	Raised pins. 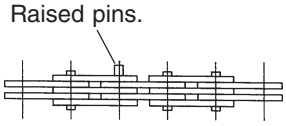	Replace both chains on that column section. Do not repair just the affected portion of the chain.
	Visually inspect for turned pins by insuring all the flats on the "V" heads are aligned.	Misalignment of flats on all "V" heads.	Replace both chains on that column section. Do not repair just the affected portion of the chain.
Chain Side	Visually inspect for wear patterns on heads of link pins and outside link plates where they contact the idler wheel.	Wear on pin heads or noticeable wear in the profile of the outside link plate. 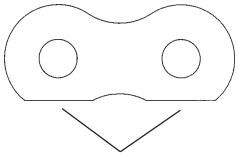 link plate wear	Replace both chains on that column section. Do not repair just the affected portion of the chain. Check alignment of chain anchors and idler wheels.
Chain Anchors 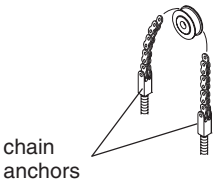 chain anchors	Visually inspect chain anchors. 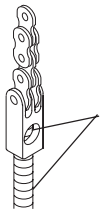 threaded rod	Broken chain anchor fingers.	Replace chain anchor.
		Bent or damaged anchor.	Replace chain anchor.
		Twisted or misaligned chain anchor.	Re-align chain anchor to ensure even loading of chain.
		Threaded rod not visible in inspection hole.	Replace chain anchor and threaded rod.
Idler Wheels idler wheel	Visually inspect chain idler wheels.	Idler wheels have badly worn flanges.	Replace idler wheel and check chain alignment.
		Idler wheels have grooves worn into chain contact surface.	Replace idler wheel.
Cracked Link Plates	Visually inspect chain link plates for cracks.	Cracks in any chain link plate.	Replace both chains on that column section. Replace entire chain. Do not repair just the affected portion of the chain.

https://truckmanualshub.com/
www.truck-freeworkshop.com

Tilt-back Frame, AWP-36S and 40S Models

6-1
Tilt Back Frame

How to Remove the Tilt-back Frame

1 Fully lower the platform Turn the key switch off and remove the key.

2 Maintain a firm grasp on the tilt-back frame and remove the retaining pin. Lower the tilt-back frame to the ground.

3 Remove the fasteners that mount the tilt-back frame hinges to the base.

Note: Note the amount of shims used between the hinges and the base.

4 Remove the frame from the machine.

How to Adjust the Loading Pivot or Stop Bracket

Note: Check for side-to-side movement of the pivot slider or stop bracket. They should have no side-to-side clearance and not be too tight to cause dragging or binding. Adjust if necessary.

1 Remove the tilt-back frame. See 6-1, *How to Remove the Tilt-back Frame.*

2 Remove the mounting fasteners from the tilt-back frame hinges.

3 Slide the pivot slider and the stop bracket out of the frame and add shims as necessary to obtain zero clearance and zero drag.

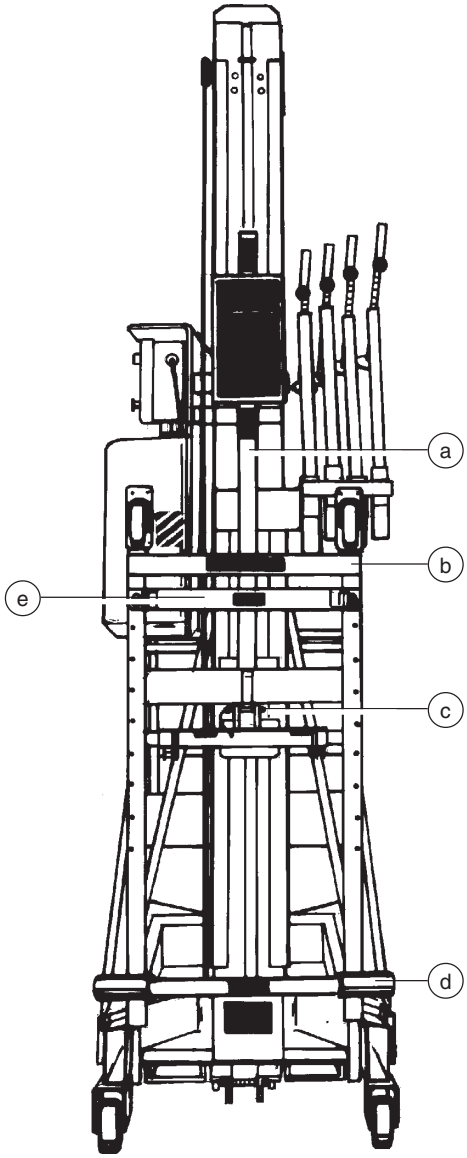

a shock absorber assembly
b tilt-back frame
c shock absorber mounting bolt
d loading pivot bar
e loading stop bracket

https://truckmanualshub.com/
www.truck-freeworkshop.com

TILT-BACK FRAME - AWP-36S AND 40S

How to Disassemble the Shock Absorber Assembly

1 Fully lower the platform. Turn the key switch off and remove the key.

2 Maintain a firm grasp on the tilt-back frame and remove the retaining pin. Lower the tilt-back frame to the ground.

3 Remove the fastener that mounts the shock absorber assembly to the frame.

4 Remove the shock absorber assembly from the frame and separate the lower tube from the assembly.

5 Pull the shock absorber out of the upper tube.

6 Remove the metric nut from each end of the shock absorber and remove the mounting blocks.

⚠WARNING Bodily injury hazard. Contents of the shock absorber are under pressure. Use care during removal.

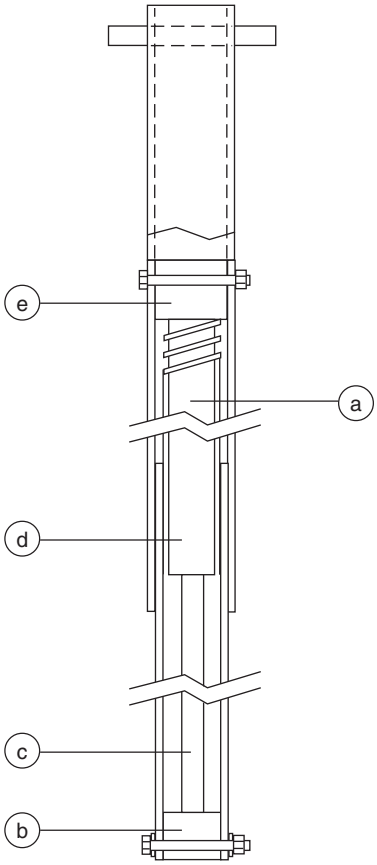

a shock absorber
b lower shock mounting block
c lower tube
d upper tube
e upper shock mounting block

https://truckmanualshub.com/
www.truck-freeworkshop.com

Platform

7-1 Platforms

How to Remove an Aluminum Platform

1 Place support blocks between the platform and base. Lower the platform onto the blocks.

⚠WARNING Crushing hazard. Keep away from the lowering platform.

2 Remove the mounting fasteners from the platform.

3 Pull the platform away from the mast and remove it from the machine.

⚠WARNING Bodily injury hazard. Safety decals are essential to safe machine operation. Failure to replace all safety and instructional decals could result in death or serious injury. If a platform must be replaced, be sure that all appropriate safety and instructional decals are applied to the new platform.

How to Install a Fiberglass Platform

1 Remove the aluminum platform. See 7-1, *How to Remove an Aluminum Platform.*

2 Support the platform with a lifting device, place the platform against the mounting angles.

3 Install the mounting fasteners.

⚠WARNING Bodily injury hazard. Safety decals are essential to safe machine operation. Failure to replace all safety and instructional decals could result in death or serious injury. If a platform must be replaced, be sure that all appropriate safety and instructional decals are applied to the new platform.

https://truckmanualshub.com/
www.truck-freeworkshop.com

7-2 Platform Control Box

How to Test the Contacts

1 Fully lower the platform. Turn the key switch off and disconnect the power supply.

2 Remove the platform control box cover fasteners and open the control box.

3 Note the markings on the contact to be tested. N.O. designates the contact as normally open. N.C. designates the contact as normally closed.

4 Connect a continuity tester to the exposed screw terminals.

⊙ Result: Normally open contacts should read no continuity. Normally closed contacts should read continuity.

5 Push the small triangular button on the top of the contactor.

⊙ Result: Normally open contactor should read continuity. Normally closed contacts should read no continuity.

How to Test Power to Platform GFCI outlet

1 Fully lower the platform. Turn the key switch off and remove the key.

2 **AC and DC models**: Be sure the AC power supply is properly connected.

3 Connect a volt meter or a small electric powered tool to the platform GFCI receptacle.

4 Confirm the voltage or test the electric powered tools operation.

⊙ Result: The voltage should be 115V AC nominal or the electric powered tool should operate normally.

5 Push the black TEST button on the GFCI receptacle.

⊙ Result: The voltage should be 0V or the electric powered tool should not operate.

6 Push the red RESET button on the GFCI receptacle.

⊙ Result: The voltage should be 115V AC nominal or the hand tool should operate normally.

https://truckmanualshub.com/
www.truck-freeworkshop.com

PLATFORM

7-3 Platform Outreach Chain

How to Adjust the Platform Outreach Chain, IWP-20S Models

1 Fully lower the platform. Turn the key switch off and remove the key.

2 Fully extend the platform outreach. Lock the handle in position.

3 Place a block of wood between the carriage and the platform outreach to prevent the outreach from collapsing when the fasteners are loosened.

WARNING Crushing hazard. The platform outreach will collapse it is not properly supported when the fasteners are loosened.

4 Locate the lower sprocket housing fasteners.

5 Loosen but do not remove both sprocket housing fasteners.

6 Push downward on the sprocket housing to remove excess slack from the chain.

7 Tighten the sprocket housing fasteners.

8 Confirm proper chain adjustment. Refer to maintenance procedure B-12, *Check the Chain Adjustment.*

How to Replace the Outreach Chain, IWP-20S Models

1 Fully lower the platform. Turn the key switch off.

2 Fully lower the base and disconnect the power supply and remove the key.

3 Remove the platform. See 7-1, *How to Remove an Aluminum Platform.*

4 Remove the platform control box cover fasteners and open the control box.

5 Remove the platform control box mounting fasteners. Remove the platform control box and set it aside.

6 Extend the outreach approximately 14 inches /36 cm. Lock the handle in position.

7 Attach a overhead crane to the center brace pivot pin on the outreach assembly.

8 Remove the assembly mounting fasteners.

WARNING Crushing hazard. When the mounting fasteners are removed, the platform outreach will become unbalanced and may fall if it is not properly supported.

9 Lay the outreach assembly onto a workbench or table of ample capacity. Be sure the chain is facing up.

https://truckmanualshub.com/
www.truck-freeworkshop.com

10 Place a block of wood under the inner frame assembly for support while removing the chain.

⚠WARNING Crushing hazard. The platform outreach will collapse if it is not properly supported when the chain is removed.

11 Remove the lower sprocket housing mounting fasteners. Do not allow the chain to become twisted.

12 Remove the upper sprocket housing mounting fasteners. Do not allow the chain to become twisted.

13 Remove the fasteners from the outreach locking bracket.

14 Slide the platform mount off the inner frame extension arms and set it aside.

15 Locate the two allen head screws in the platform mount slide pad.

16 Remove the roller from the same side of the slide pad.

17 Remove the two allen head screws.

18 Remove the master link from the chain.

19 Pull the chain out of the slide pad and both sprocket housings.

20 Install the new chain through the slidepad.

21 Push the chain through the slide pad until approximately 2 inches / 5 cm of the chain is extended past the slide pad.

22 Install the two allen head screws. Install the roller wheel.

23 Thread the chain through the upper sprocket housing over the sprocket, then back through the housing.

24 Thread the chain through the lower sprocket housing over the sprocket, then back through the housing. Don't allow the chain to become twisted.

25 Do not re-use the old master link. Install a new master link.

26 Slide the platform mount onto the extension arms.

27 Install the outreach locking bracket on the platform mount.

28 Install the upper sprocket housing to the platform mount.

Note: When fasteners are installed, be sure the center bolt is in between the two chains inside the housing.

29 Pull the slack out of the chain by pushing down on the lower sprocket housing.

30 Install the lower sprocket housing fasteners.

31 Adjust the chain. See procedure 7-3 above, *How to Adjust the Platform Outreach Chain.*

32 Install the outreach assembly onto the carriage.

https://truckmanualshub.com/
www.truck-freeworkshop.com

PLATFORM

This page intentionally left blank.

https://truckmanualshub.com/
www.truck-freeworkshop.com

Schematics

Observe and Obey:

- ☑ Troubleshooting and repair procedures shall be completed by a person trained and qualified on the repair of this machine.
- ☑ Immediately tag and remove from service a damaged or malfunctioning machine.
- ☑ Repair any machine damage or malfunction before operating the machine.

Before Troubleshooting:

- ☑ Read, understand and obey the safety rules and operating instructions printed in the *Genie AWP Super Series Operator's Manual and the Genie IWP Super Series Operator's Manual*.
- ☑ Be sure that all necessary tools and test equipment are available and ready for use.

About This Section

There are two groups of schematics in this section. An alpha numeric legend and wire color legend for each schematic is located on the fold of the opposing page.

Electrical Schematics

WARNING Electrocution hazard. Contact with electrically charged circuits may result in death or serious injury. Remove all rings, watches and other jewelry.

Hydraulic Schematics

WARNING Bodily injury hazard. Spraying hydraulic oil can penetrate and burn skin. Loosen hydraulic connections very slowly to allow the oil pressure to dissipate gradually. Do not allow oil to squirt or spray.

General Repair Process

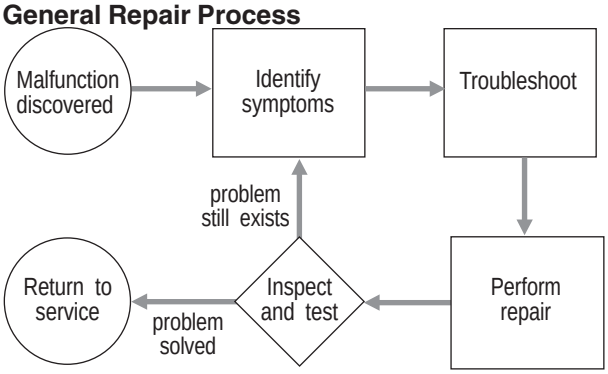

https://truckmanualshub.com/
www.truck-freeworkshop.com

Electrical Components

Item	Description	Genie Part Number	Manufacturer	Manufacturer Part Number	Qty
B2	Battery, 130AH, 12V DC	75442	Trojan Battery Co.	SCS 225 DRY	1
B4	Battery, Size AA, 1.5V	38018	Wesco	AA 1.5 Alkaline 815	8
CB4	Circuit breaker, 15A,110V	38020	H D Cambell	1140-G111-P1M1-15.0	1
CB4	Circuit breaker, 15A, 220V CE	38021	H D Cambell	1140-G151-P7M1-8.0	1
*F1	Fuse, 5A	69864	Avnet	ATC-5	1
*F1	Fuse, 5A	35039	Wesco	AGC5	1
KS1	Contact - key switch, N.O.	33320	H D Cambell	ZA2-BG2	1
LS1	Contact - limit switch, N.C.	46409	H D Cambell	#XCK-P110H7	1
P1	Contact, N.C.	33321	H D Cambell	ZA2-BT4	1
P2	Contact, N.C.	35613	H D Cambell	ZA2-BS44	1
P3	Contact, N.C.	33321	H D Cambell	ZA2-BT4	1
QD1	Battery connector	19436	Anderson	6325-G1	1
Y5, Y6,	Coil, 10V DC	46215	Hydra Power Systems	6301010	2
Y7	Coil, 10V DC	40417	Hydra Power Systems	10148-53	1
Y30	Coil, 10V DC	40319	Monarch Hydraulics	07277	1
Y32	Coil, 12V DC	21444	Hydraulic Components	321362	1

* F1 * NOTE: The AWP Super Series Models were produced using two different fuses on the PC Board in the ground control box. A serial number break is not available. Refer to the specific PC board to determine the correct fuse type.

https://truckmanualshub.com/
www.truck-freeworkshop.com

Symbols Legend

Electrical Symbols

Wire with description

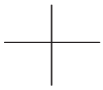

Circuits crossing no connection

Diode

Connection with no terminal

Connector

Limit Switch

Led

Toggle Switch

Red Emergency Stop Button

F1
Fuse

M5
Motor

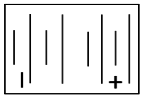

8 AA
Batteries

12V
Battery(s)

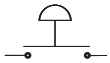

Switch

Circuit Breaker

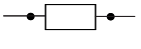

U12
Thermal Device

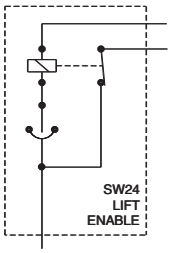

Lift Enable

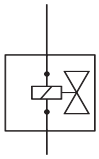

Solenoid Valve

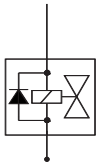

Solenoid Valve with Diode

https://truckmanualshub.com/
www.truck-freeworkshop.com

ABBREVIATION LEGEND	
Item	**Description**
B	Battery
	B2 = 12V DC B4 = 8 AA batteries
D5	Power supply AC
EN	Enclosure
	EN1 = Platform control box EN2 = Ground control box EN4 = Power to platform GFCI receptacle
GND	Ground
KS1	Key switch - ground/platform
L	Led or light
	L5 = Power indicator (ground) L6 = Low battery indicator for auxiliary (ground) L7 = Low battery indicator – main (ground) L12 = Outrigger – front left (ground) L13 = Outrigger – front right (ground) L14 = Outrigger – rear left (ground) L15 = Outrigger – rear right (ground)
M5	Hydraulic power unit
*N17	Narrow platform units: WH and BK wires replace BL and OR wires
N.C.	Normally closed
N.O	Normally open
P	Power switch
	P1 = Emergency Stop button at ground controls P2 = Emergency Stop button at platform controls
QD	Quick disconnect
	QD1 = Battery quick disconnect QD3 = Control cable – to platform control box QD4 = Control cable – to base QD7 = Control cable – to motor
SW	Switch
	SW 8 = Control activate SW11 = Platform up/down SW12 = Auxiliary down SW13 = Outrigger interlock – front left SW14 = Outrigger interlock – front right SW15 = Outrigger interlock – rear left SW16 = Outrigger interlock – rear right
U	Electronic component
	U10 = PC board
W	Wiring component
	W3 = Terminal strip – 3 pole 3 pin (U10) W4 = Terminal strip – 14 pole 14 pin (U10) W5 = Terminal strip – 4 pole 8 pin W6 = Terminal strip – 6 pole 12 pin (base)
Y	Valve coil
	Y7 = Platform down Y30 = Normally open dump valve

WIRE COLOR LEGEND	
Color	**Description**
BL	Blue
BK	Black
GN/YL	Green/Yellow
OR	Orange
RD	Red
WH	White
WH/BK	White/Black

Note: Use these 2 legends for the schematic on the opposing page.

www.truck-freeworkshop.com
https://truckmanualshub.com/

Electrical Schematic

AWP Super Series DC Models
(from serial number 3896-101 to 3896-300)

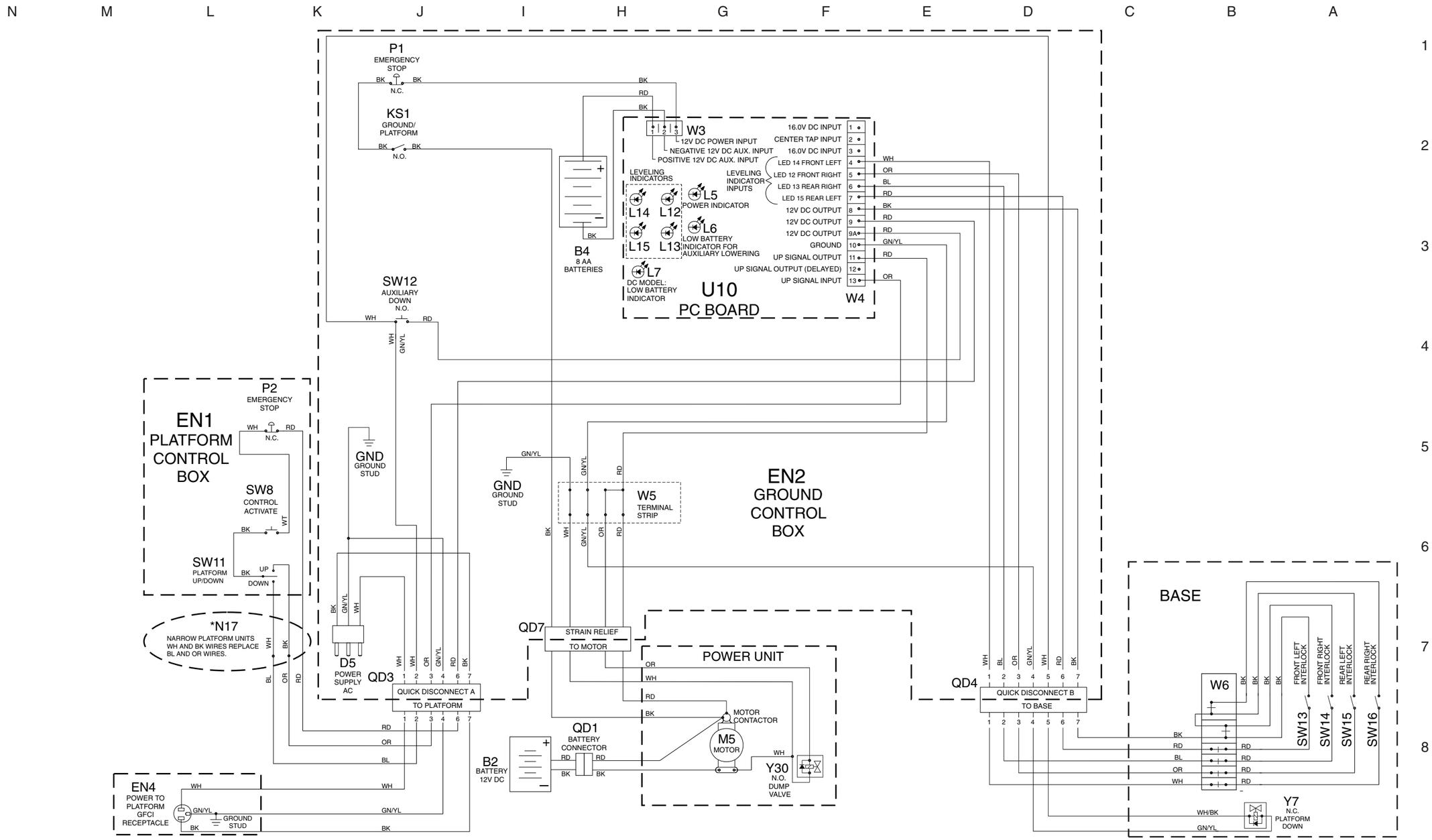

https://truckmanualshub.com/
www.truck-freeworkshop.com

Electrical Schematic

AWP Super Series DC Models
(from serial number 3896-101 to 3896-300)

ABBREVIATION LEGEND	
Item	**Description**
B	Battery
	B2 = 12V DC B4 = 8 AA batteries
D5	Power supply AC
EN	Enclosure
	EN1 = Platform control box EN2 = Ground control box EN4 = Power to platform GFCI receptacle
GND	Ground
KS1	Key switch - ground/platform
L	Led or light
	L5 = Power indicator (ground) L6 = Low battery indicator for auxiliary (ground) L7 = Low battery indicator – main (ground) L12 = Outrigger – front left (ground) L13 = Outrigger – front right (ground) L14 = Outrigger – rear left (ground) L15 = Outrigger – rear right (ground)
M5	Hydraulic power unit
N.C.	Normally closed
N.O.	Normally open
P	Power switch
	P1 = Emergency Stop button at ground controls P2 = Emergency Stop button at platform controls
QD	Quick disconnect
	QD1 = Battery quick disconnect QD3 = Control cable – to platform control box QD4 = Control cable – to base QD7 = Control cable – to motor
SW	Switch
	SW 8 = Control activate SW11 = Platform up/down SW12 = Auxiliary down SW13 = Outrigger interlock – front left SW14 = Outrigger interlock – front right SW15 = Outrigger interlock – rear left SW16 = Outrigger interlock – rear right
U	Electronic component
	U10 = PC board
W	Wiring component
	W3 = Terminal strip – 3 pole 3 pin (U10) W4 = Terminal strip – 14 pole 14 pin (U10) W5 = Terminal strip – 4 pole 8 pin W6 = Terminal strip – 6 pole 12 pin (base)
Y	Valve coil
	Y7 = Platform down Y30 = Normally open dump valve

WIRE COLOR LEGEND	
Color	**Description**
BL	Blue
BK	Black
GN/YL	Green/Yellow
OR	Orange
RD	Red
WH	White
WH/BK	White/Black

Note: Use these 2 legends for the schematic on the opposing page.

www.truck-freeworkshop.com
https://truckmanualshub.com/

Electrical Schematic

AWP Super Series DC Models
(from serial number 3896-301 to 3896-430)

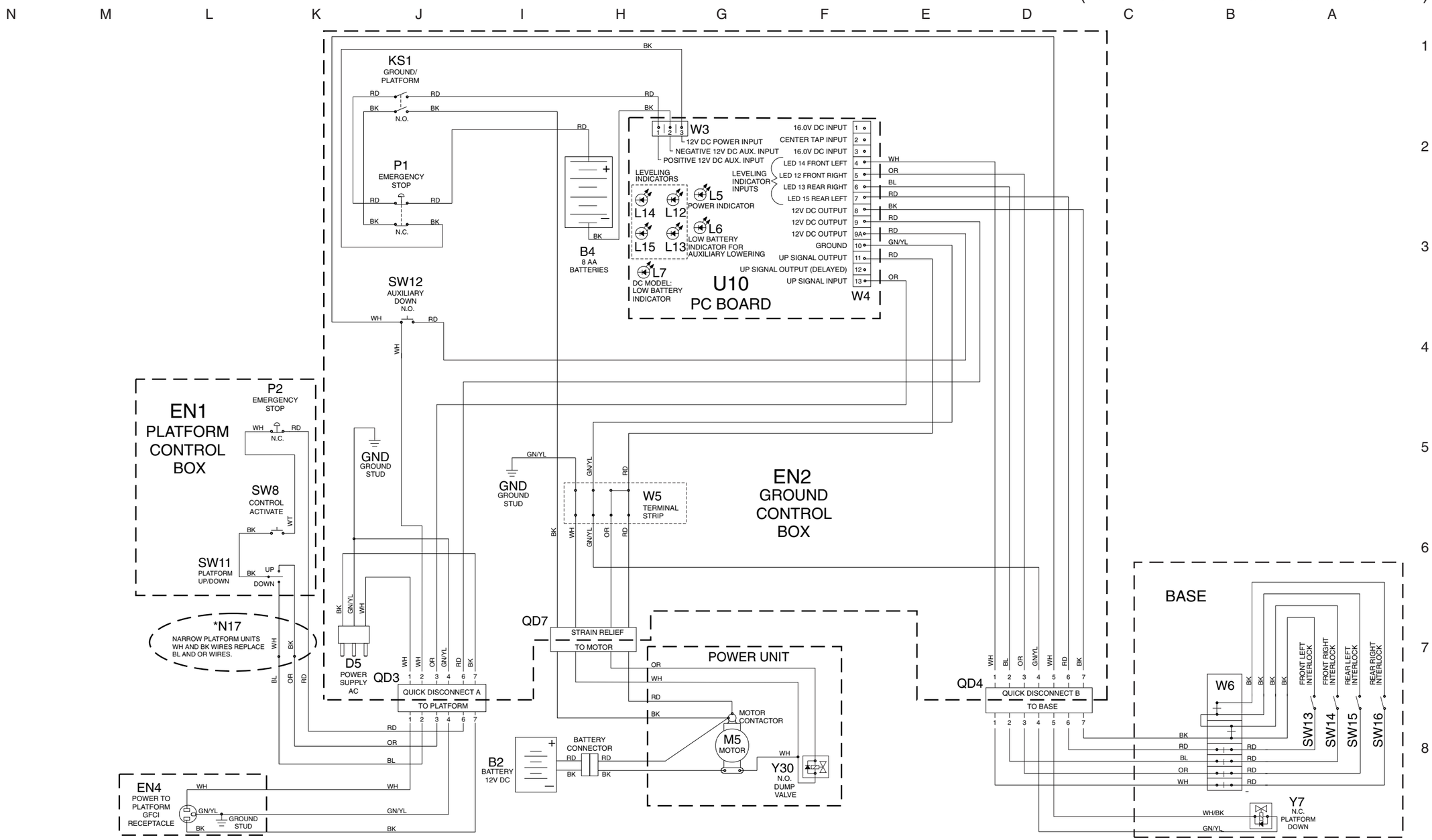

www.truck-freeworkshop.com https://truckmanualshub.com/

Electrical Schematic

AWP Super Series DC Models
(from serial number 3896-301 to 3896-430)

ABBREVIATION LEGEND	
Item	**Description**
B	Battery
	B2 = 12V DC B4 = 8 AA batteries
D5	Power supply AC
EN	Enclosure
	EN1 = Platform control box EN2 = Ground control box EN4 = Power to platform GFCI receptacle
GND	Ground
KS1	Key switch - ground/platform
L	Led or light
	L5 = Power indicator (ground) L6 = Low battery indicator for auxiliary (ground) L7 = Low battery indicator – main (ground) L12 = Outrigger – front left (ground) L13 = Outrigger – front right (ground) L14 = Outrigger – rear left (ground) L15 = Outrigger – rear right (ground)
M5	Hydraulic power unit
N.C.	Normally closed
N.O.	Normally open
P	Power switch
	P1 = Emergency Stop button at ground controls P2 = Emergency Stop button at platform controls
QD	Quick disconnect
	QD1 = Battery quick disconnect QD3 = Control cable – to platform control box QD4 = Control cable – to base QD7 = Control cable – to motor
SW	Switch
	SW 8 = Control activate SW11 = Platform up/down SW12 = Auxiliary down SW13 = Outrigger interlock – front left SW14 = Outrigger interlock – front right SW15 = Outrigger interlock – rear left SW16 = Outrigger interlock – rear right
U	Electronic component
	U10 = PC board
W	Wiring component
	W3 = Terminal strip – 3 pole 3 pin (U10) W4 = Terminal strip – 14 pole 14 pin (U10) W5 = Terminal strip – 4 pole 8 pin W6 = Terminal strip – 6 pole 12 pin (base)
Y	Valve coil
	Y7 = Platform down Y30 = Normally open dump valve

WIRE COLOR LEGEND	
Color	**Description**
BL	Blue
BK	Black
GN/YL	Green/Yellow
OR	Orange
RD	Red
WH	White
WH/BK	White/Black

Note: Use these 2 legends for the schematic on the opposing page.

www.truck-freeworkshop.com
https://truckmanualshub.com/

Electrical Schematic

AWP Super Series DC Models
(from serial number 3896-431 to AWP07-54898)

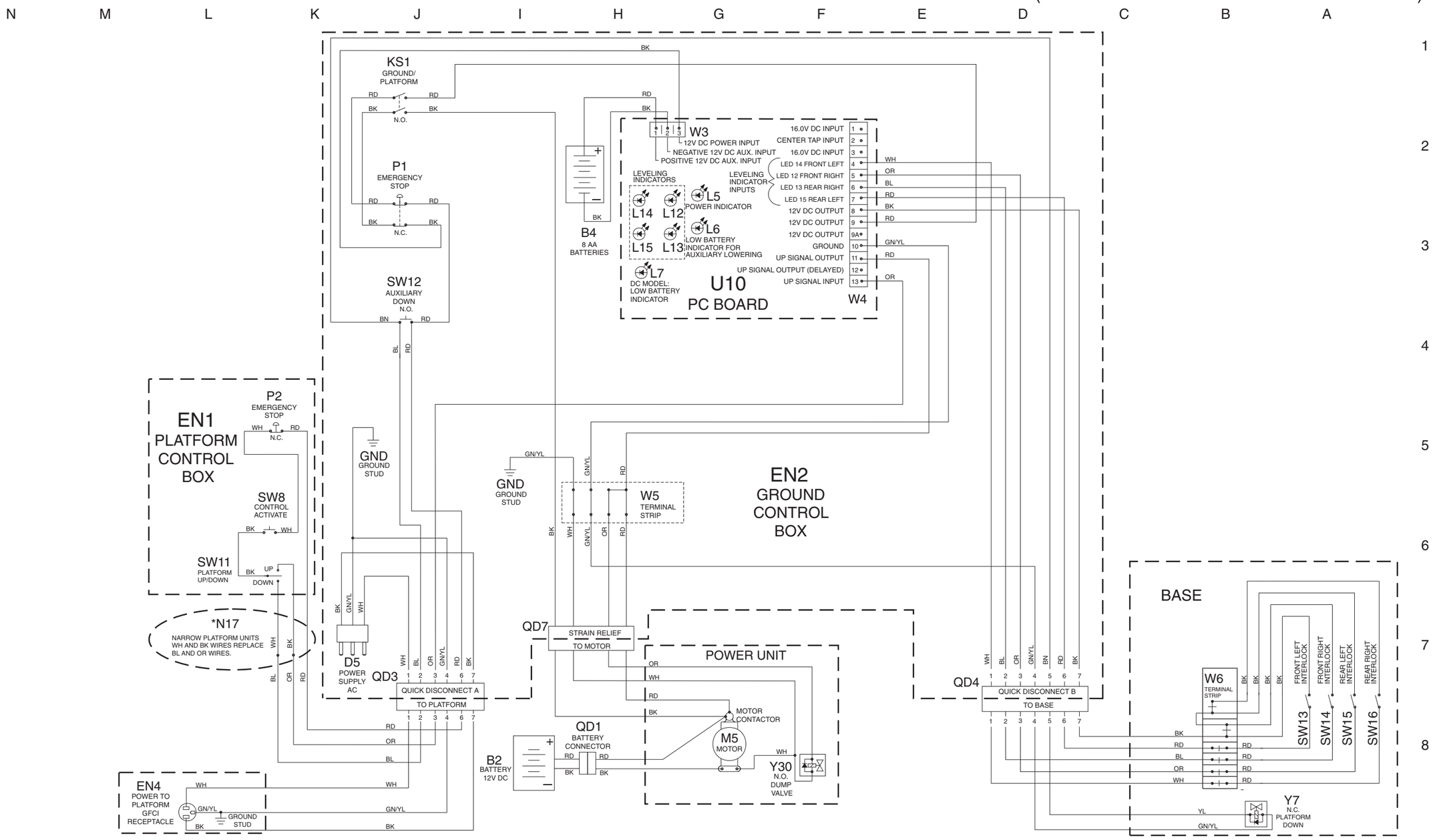

https://truckmanualshub.com/
www.truck-freeworkshop.com

Electrical Schematic

AWP Super Series DC Models
(from serial number 3896-4311 to AWP07-54898)

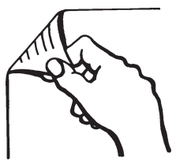

ABBREVIATION LEGEND	
Item	**Description**
B	Battery
	B2 = 12V DC B4 = 8 AA batteries
D5	Power supply AC
EN	Enclosure
	EN1 = Platform control box EN2 = Ground control box EN4 = Power to platform GFCI receptacle
F11	Fuse – 175 Amp
FB2	Warning light
GND	Ground
H4	Descent alarm
KS1	Key switch - ground/platform
L	Led or light
	L5 = Power indicator (ground) L6 = Low battery indicator for auxiliary (ground) L7 = Low battery indicator – main (ground) L12 = Outrigger – front left (ground) L13 = Outrigger – front right (ground) L14 = Outrigger – rear left (ground) L15 = Outrigger – rear right (ground)
M5	Hydraulic power unit
*N	Note with description *N17 = Narrow platform units: WH and BK wires replace BL and OR wires *N27 = Units without plug: WH and BK wires replace BL and BN wires
N.C.	Normally closed
N.O.	Normally open
P	Power switch
	P1 = Emergency Stop button at ground controls P2 = Emergency Stop button at platform controls
QD	Quick disconnect
	QD1 = Battery quick disconnect QD3 = Control cable – to platform control box QD4 = Control cable – to base
SW	Switch
	SW 8 = Control activate SW11 = Platform up/down SW12 = Auxiliary down SW13 = Outrigger interlock – front left SW14 = Outrigger interlock – front right SW15 = Outrigger interlock – rear left SW16 = Outrigger interlock – rear right
U	Electronic component
	U 9 = Battery charger U10 = PC board
W	Wiring component
	W3 = Terminal strip – 3 pole 3 pin (U10) W4 = Terminal strip – 14 pole 14 pin (U10) W5 = Terminal strip – 5 pole 10 pin W6 = Terminal strip – 6 pole 12 pin (base)
Y	Valve coil
	Y7 = Platform down Y30 = Normally open dump valve

WIRE COLOR LEGEND	
Color	**Description**
BL	Blue
BK	Black
BN	Brown
GN/YL	Green/Yellow
OR	Orange
RD	Red
RD/BK	Red/Black
WH	White
YL	Yellow

Note: Use these 2 legends for the schematic on the opposing page.

www.truck-freeworkshop.com https://truckmanualshub.com/

Electrical Schematic

AWP Super Series DC Models with Standard Base
(after serial number AWP07-54898)

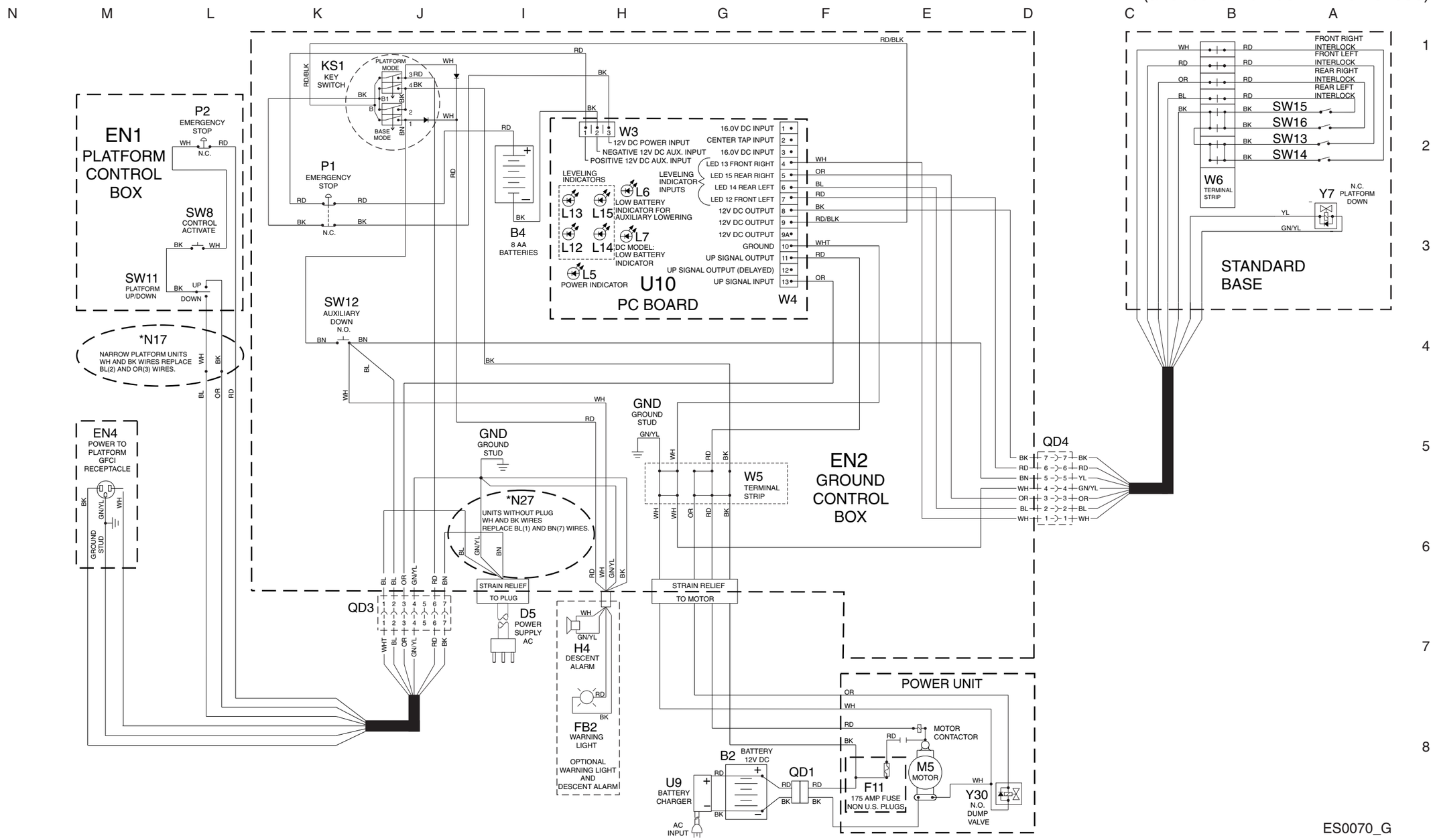

ES0070_G

https://truckmanualshub.com/
www.truck-freeworkshop.com

Electrical Schematic

AWP Super Series DC Models with Standard Base
(after serial number AWP07-54898)

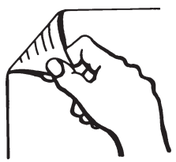

ABBREVIATION LEGEND	
Item	**Description**
B	Battery
	B2 = 12V DC B4 = 8 AA batteries
D5	Power supply AC
EN	Enclosure
	EN1 = Platform control box EN2 = Ground control box EN4 = Power to platform GFCI receptacle
F11	Fuse – 175 Amp
FB2	Warning light
GND	Ground
H4	Descent alarm
KS1	Key switch - ground/platform
L	Led or light
	L5 = Power indicator (ground) L6 = Low battery indicator for auxiliary (ground) L7 = Low battery indicator – main (ground) L12 = Outrigger – front left (ground) L13 = Outrigger – front right (ground) L14 = Outrigger – rear left (ground) L15 = Outrigger – rear right (ground)
M5	Hydraulic power unit
*N	Note with description *N17 = Narrow platform units: WH and BK wires replace BL and OR wires *N27 = Units without plug: WH and BK wires replace BL and BN wires
N.C.	Normally closed
N.O.	Normally open
P	Power switch
	P1 = Emergency Stop button at ground controls P2 = Emergency Stop button at platform controls
QD	Quick disconnect
	QD1 = Battery quick disconnect QD3 = Control cable – to platform control box QD4 = Control cable – to base
SW	Switch
	SW 8 = Control activate SW11 = Platform up/down SW12 = Auxiliary down SW13 = Outrigger interlock – front left SW14 = Outrigger interlock – front right SW15 = Outrigger interlock – rear left SW16 = Outrigger interlock – rear right
U	Electronic component
	U 9 = Battery charger U10 = PC board
W	Wiring component
	W3 = Terminal strip – 3 pole 3 pin (U10) W4 = Terminal strip – 14 pole 14 pin (U10) W5 = Terminal strip – 5 pole 10 pin W6 = Terminal strip – 6 pole 12 pin (base)
Y	Valve coil
	Y7 = Platform down Y30 = Normally open dump valve

WIRE COLOR LEGEND	
Color	**Description**
BL	Blue
BK	Black
BN	Brown
GN/YL	Green/Yellow
OR	Orange
RD	Red
RD/BK	Red/Black
WH	White
YL	Yellow

Note: Use these 2 legends for the schematic on the opposing page.

www.truck-freeworkshop.com
https://truckmanualshub.com/

Electrical Schematic

AWP Super Series DC Models with Narrow Base
(after serial number AWP07-54898)

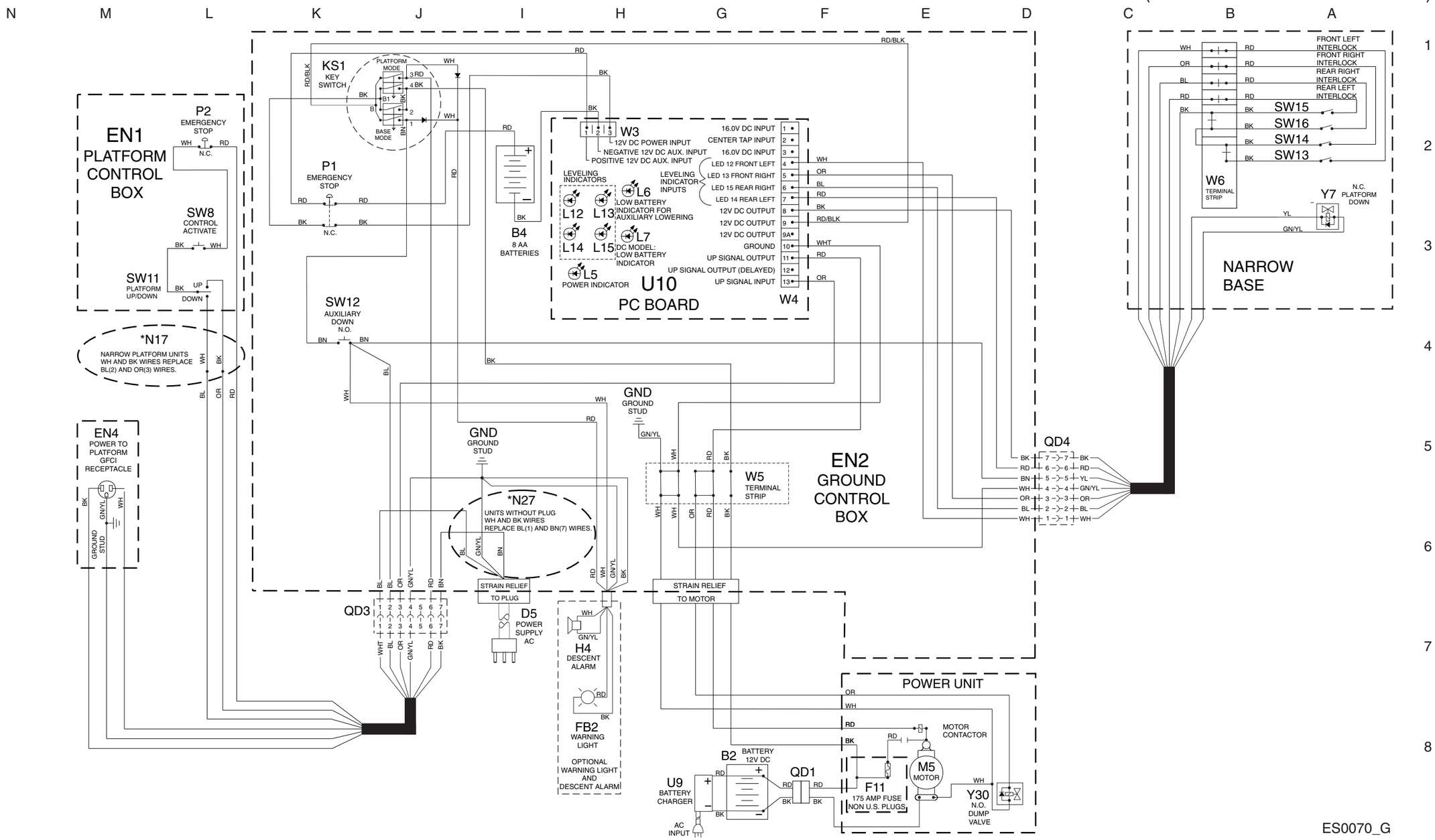

https://truckmanualshub.com/
www.truck-freeworkshop.com

Electrical Schematic

AWP Super Series DC Models with Narrow Base
(after serial number AWP07-54898)

ABBREVIATION LEGEND	
Item	**Description**
B	Battery
	B2 = 12V DC B4 = 8 AA batteries
C3	Radio noise reduction
D5	Power supply AC
EN	Enclosure
	EN1 = Platform control box EN2 = Ground control box EN4 = Power to platform GFCI receptacle
F	Fuse
	F1 = 175A fuse
GND	Ground
KS1	Key switch - ground/platform
L	Led or light
	L5 = Power indicator (ground) L6 = Low battery indicator for auxiliary (ground) L7 = Low battery indicator – main (ground) L12 = Outrigger – front left (ground) L13 = Outrigger – front right (ground) L14 = Outrigger – rear left (ground) L15 = Outrigger – rear right (ground)
M5	Hydraulic power unit
KS1	Key switch
M5	Hydraulic power unit
*N17	Narrow platform units: WH and BK wires replace BL and OR wires
N.C.	Normally closed
N.O	Normally open
P	Power switch
	P1 = Emergency Stop button at ground controls P2 = Emergency Stop button at platform controls
QD	Quick disconnect
	QD1 = Battery quick disconnect QD3 = Control cable – to platform control box QD4 = Control cable – to base QD7 = Control cable – to motor
SW	Switch
	SW 8 = Control activate SW11 = Platform up/down SW12 = Auxiliary down SW13 = Outrigger interlock – front left SW14 = Outrigger interlock – front right SW15 = Outrigger interlock – rear left SW16 = Outrigger interlock – rear right
U	Electronic component
	U10 = PC board
W	Wiring component
	W3 = Terminal strip – 3 pole 3 pin (U10) W4 = Terminal strip – 14 pole 14 pin (U10) W5 = Terminal strip – 4 pole 8 pin W6 = Terminal strip – 6 pole 12 pin (base)
Y	Valve coil
	Y7 = Platform down Y30 = Normally open dump valve

Note: Use these 2 legends for the schematic on the opposing page.

www.truck-freeworkshop.com
https://truckmanualshub.com/

Electrical Schematic

AWP Super Series DC CE Models
(from serial number 3896-432 to AWP07-54898)

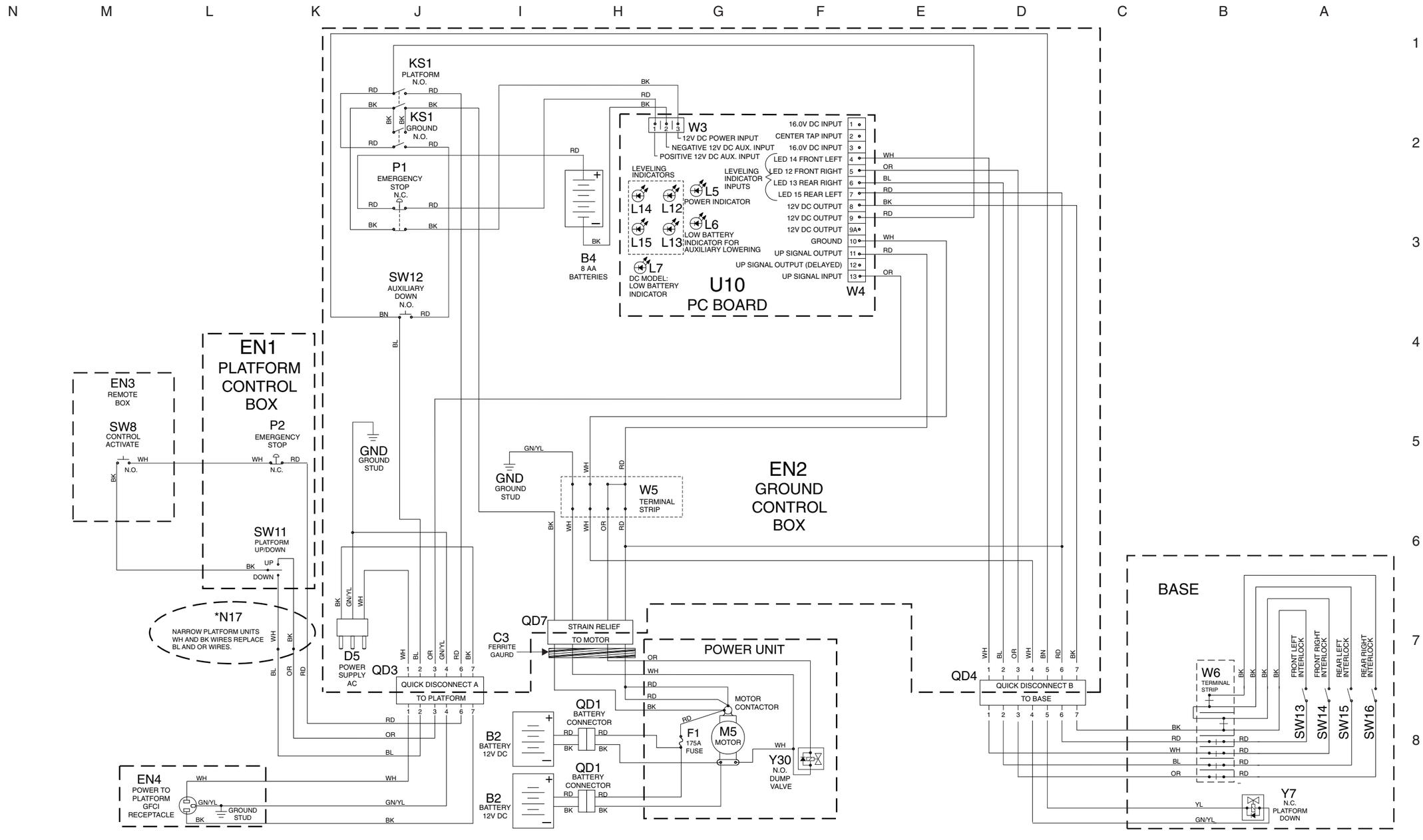

https://truckmanualshub.com/
www.truck-freeworkshop.com

Electrical Schematic

AWP Super Series DC CE Models
(from serial number 3896-432 to AWP07-54898)

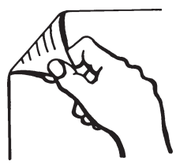

ABBREVIATION LEGEND	
Item	**Description**
B	Battery
	B2 = 12V DC B4 = 8 AA batteries
D5	Power supply AC
EN	Enclosure
	EN1 = Platform control box EN2 = Ground control box EN4 = Power to platform GFCI receptacle
F11	Fuse – 175 Amp
FB2	Warning light
GND	Ground
H4	Descent alarm
KS1	Key switch - ground/platform
L	Led or light
	L5 = Power indicator (ground) L6 = Low battery indicator for auxiliary (ground) L7 = Low battery indicator – main (ground) L12 = Outrigger – front left (ground) L13 = Outrigger – front right (ground) L14 = Outrigger – rear left (ground) L15 = Outrigger – rear right (ground)
M5	Hydraulic power unit
*N	Note with description *N17 = Narrow platform units: WH and BK wires replace BL and OR wires *N27 = Units without plug: WH and BK wires replace BL and BN wires
N.C.	Normally closed
N.O.	Normally open
P	Power switch
	P1 = Emergency Stop button at ground controls P2 = Emergency Stop button at platform controls
QD	Quick disconnect
	QD1 = Battery quick disconnect QD3 = Control cable – to platform control box QD4 = Control cable – to base
SW	Switch
	SW 8 = Control activate SW11 = Platform up/down SW12 = Auxiliary down SW13 = Outrigger interlock – front left SW14 = Outrigger interlock – front right SW15 = Outrigger interlock – rear left SW16 = Outrigger interlock – rear right
U	Electronic component
	U 9 = Battery charger U10 = PC board
W	Wiring component
	W3 = Terminal strip – 3 pole 3 pin (U10) W4 = Terminal strip – 14 pole 14 pin (U10) W5 = Terminal strip – 5 pole 10 pin W6 = Terminal strip – 6 pole 12 pin (base)
Y	Valve coil
	Y7 = Platform down Y30 = Normally open dump valve

WIRE COLOR LEGEND	
Color	**Description**
BL	Blue
BK	Black
BN	Brown
GN/YL	Green/Yellow
OR	Orange
RD	Red
RD/BK	Red/Black
WH	White
YL	Yellow

Note: Use these 2 legends for the schematic on the opposing page.

www.truck-freeworkshop.com
https://truckmanualshub.com/

Electrical Schematic

AWP Super Series DC CE Models with Standard Base
(after serial number AWP07-54898)

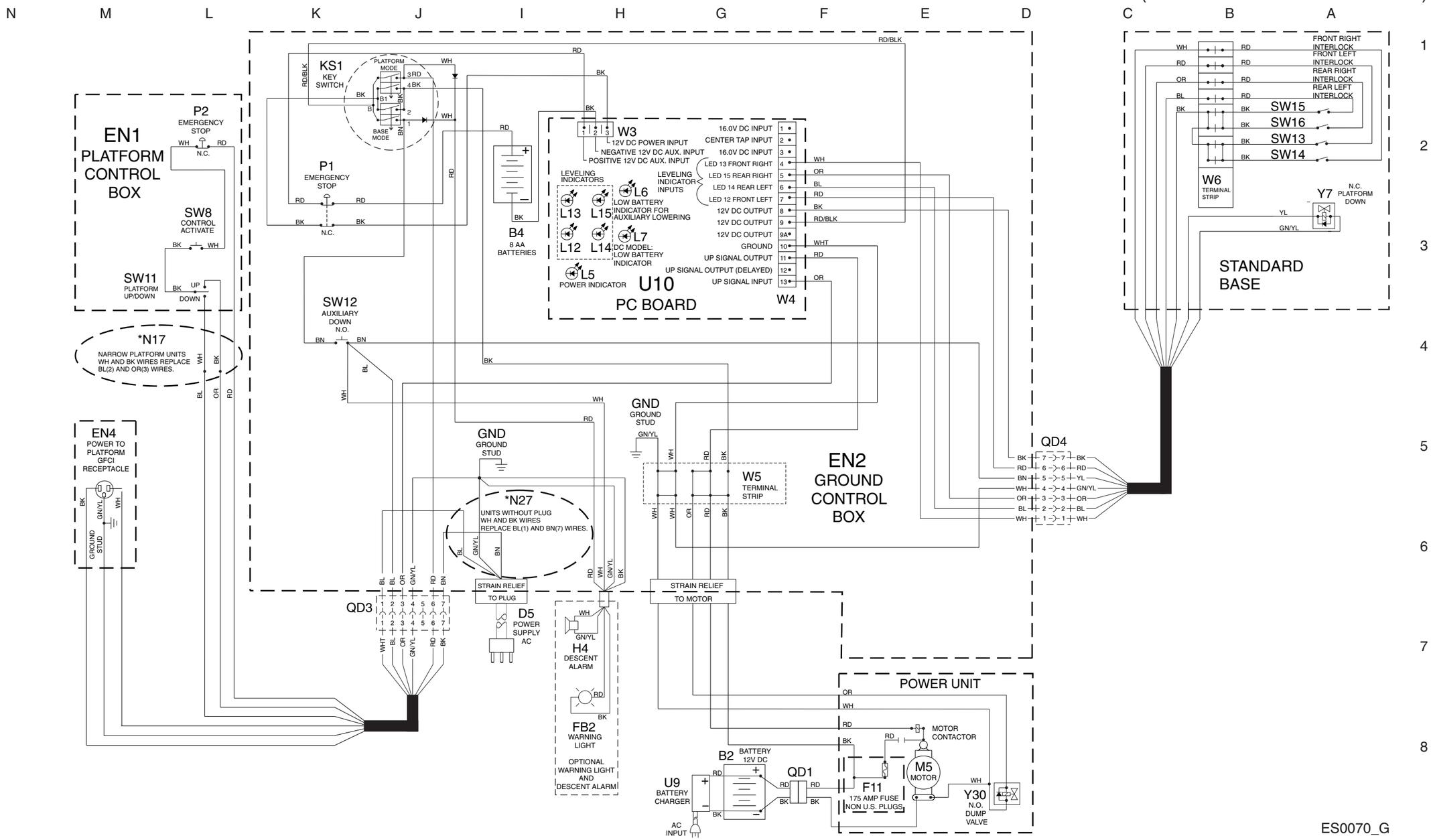

ES0070_G

https://truckmanualshub.com/
www.truck-freeworkshop.com

Electrical Schematic

AWP Super Series DC CE Models with Standard Base
(after serial number AWP07-54898)

ABBREVIATION LEGEND	
Item	**Description**
B	Battery
	B2 = 12V DC B4 = 8 AA batteries
D5	Power supply AC
EN	Enclosure
	EN1 = Platform control box EN2 = Ground control box EN4 = Power to platform GFCI receptacle
F11	Fuse – 175 Amp
FB2	Warning light
GND	Ground
H4	Descent alarm
KS1	Key switch - ground/platform
L	Led or light
	L5 = Power indicator (ground) L6 = Low battery indicator for auxiliary (ground) L7 = Low battery indicator – main (ground) L12 = Outrigger – front left (ground) L13 = Outrigger – front right (ground) L14 = Outrigger – rear left (ground) L15 = Outrigger – rear right (ground)
M5	Hydraulic power unit
*N	Note with description *N17 = Narrow platform units: WH and BK wires replace BL and OR wires *N27 = Units without plug: WH and BK wires replace BL and BN wires
N.C.	Normally closed
N.O.	Normally open
P	Power switch
	P1 = Emergency Stop button at ground controls P2 = Emergency Stop button at platform controls
QD	Quick disconnect
	QD1 = Battery quick disconnect QD3 = Control cable – to platform control box QD4 = Control cable – to base
SW	Switch
	SW 8 = Control activate SW11 = Platform up/down SW12 = Auxiliary down SW13 = Outrigger interlock – front left SW14 = Outrigger interlock – front right SW15 = Outrigger interlock – rear left SW16 = Outrigger interlock – rear right
U	Electronic component
	U 9 = Battery charger U10 = PC board
W	Wiring component
	W3 = Terminal strip – 3 pole 3 pin (U10) W4 = Terminal strip – 14 pole 14 pin (U10) W5 = Terminal strip – 5 pole 10 pin W6 = Terminal strip – 6 pole 12 pin (base)
Y	Valve coil
	Y7 = Platform down Y30 = Normally open dump valve

WIRE COLOR LEGEND	
Color	**Description**
BL	Blue
BK	Black
BN	Brown
GN/YL	Green/Yellow
OR	Orange
RD	Red
RD/BK	Red/Black
WH	White
YL	Yellow

Note: Use these 2 legends for the schematic on the opposing page.

www.truck-freeworkshop.com
https://truckmanualshub.com/

Electrical Schematic

AWP Super Series DC CE Models with Narrow Base
(after serial number AWP07-54898)

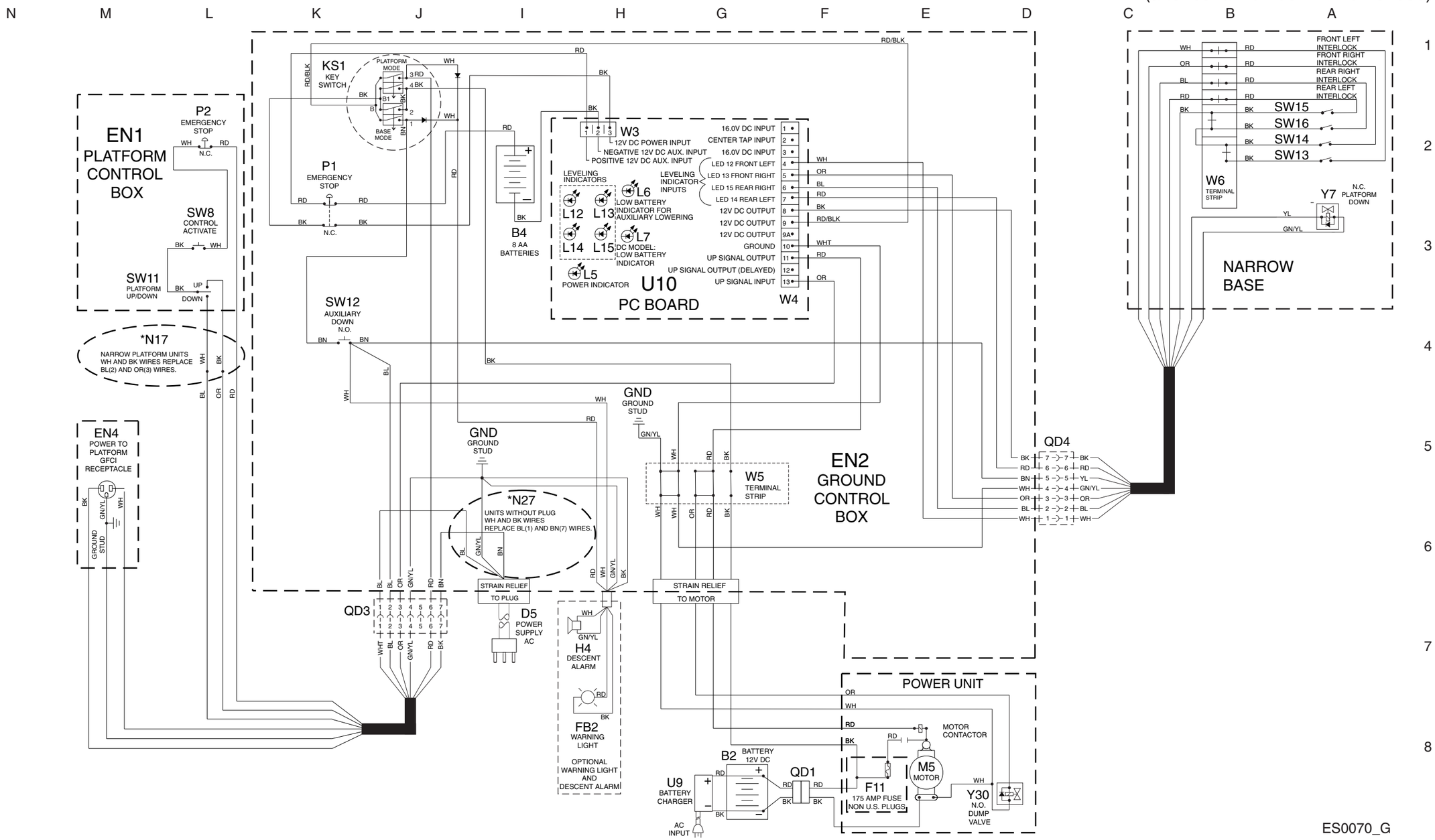

ES0070_G

https://truckmanualshub.com/
www.truck-freeworkshop.com

Electrical Schematic

AWP Super Series DC CE Models with Narrow Base
(after serial number AWP07-54898)

ABBREVIATION LEGEND	
Item	**Description**
B	Battery
	B2 = 12V DC
	B4 = 8 AA batteries
D5	Power supply AC
EN	Enclosure
	EN1 = Platform control box
	EN2 = Ground control box
	EN4 = Power to platform GFCI receptacle
F	Fuse
	F1 = 175A fuse
GND	Ground
KS1	Key switch - ground/platform
L	Led or light
	L5 = Power indicator (ground)
	L6 = Low battery indicator for auxiliary (ground)
	L7 = Low battery indicator – main (ground)
	L12 = Outrigger – front left (ground)
	L13 = Outrigger – front right (ground)
	L14 = Outrigger – rear left (ground)
	L15 = Outrigger – rear right (ground)
M5	Hydraulic power unit
KS1	Key switch
M5	Hydraulic power unit
*N17	Narrow platform units: WH and BK wires replace BL and OR wires
N.C.	Normally closed
N.O	Normally open
P	Power switch
	P1 = Emergency Stop button at ground controls
	P2 = Emergency Stop button at platform controls
QD	Quick disconnect
	QD1 = Battery quick disconnect
	QD3 = Control cable – to platform control box
	QD4 = Control cable – to base
	QD7 = Control cable – to motor
SW	Switch
	SW 8 = Control activate
	SW11 = Platform up/down
	SW12 = Auxiliary down
	SW13 = Outrigger interlock – front left
	SW14 = Outrigger interlock – front right
	SW15 = Outrigger interlock – rear left
	SW16 = Outrigger interlock – rear right
U	Electronic component
	U10 = PC board
W	Wiring component
	W3 = Terminal strip – 3 pole 3 pin (U10)
	W4 = Terminal strip – 14 pole 14 pin (U10)
	W5 = Terminal strip – 4 pole 8 pin
	W6 = Terminal strip – 6 pole 12 pin (base)
Y	Valve coil
	Y7 = Platform down
	Y30 = Normally open dump valve

WIRE COLOR LEGEND	
Color	**Description**
BL	Blue
BK	Black
GN/YL	Green/Yellow
OR	Orange
RD	Red
WH	White

Note: Use these 2 legends for the schematic on the opposing page.

www.truck-freeworkshop.com
https://truckmanualshub.com/

Electrical Schematic

AWP Super Series DC TUV Models
(after serial number 3896-430)

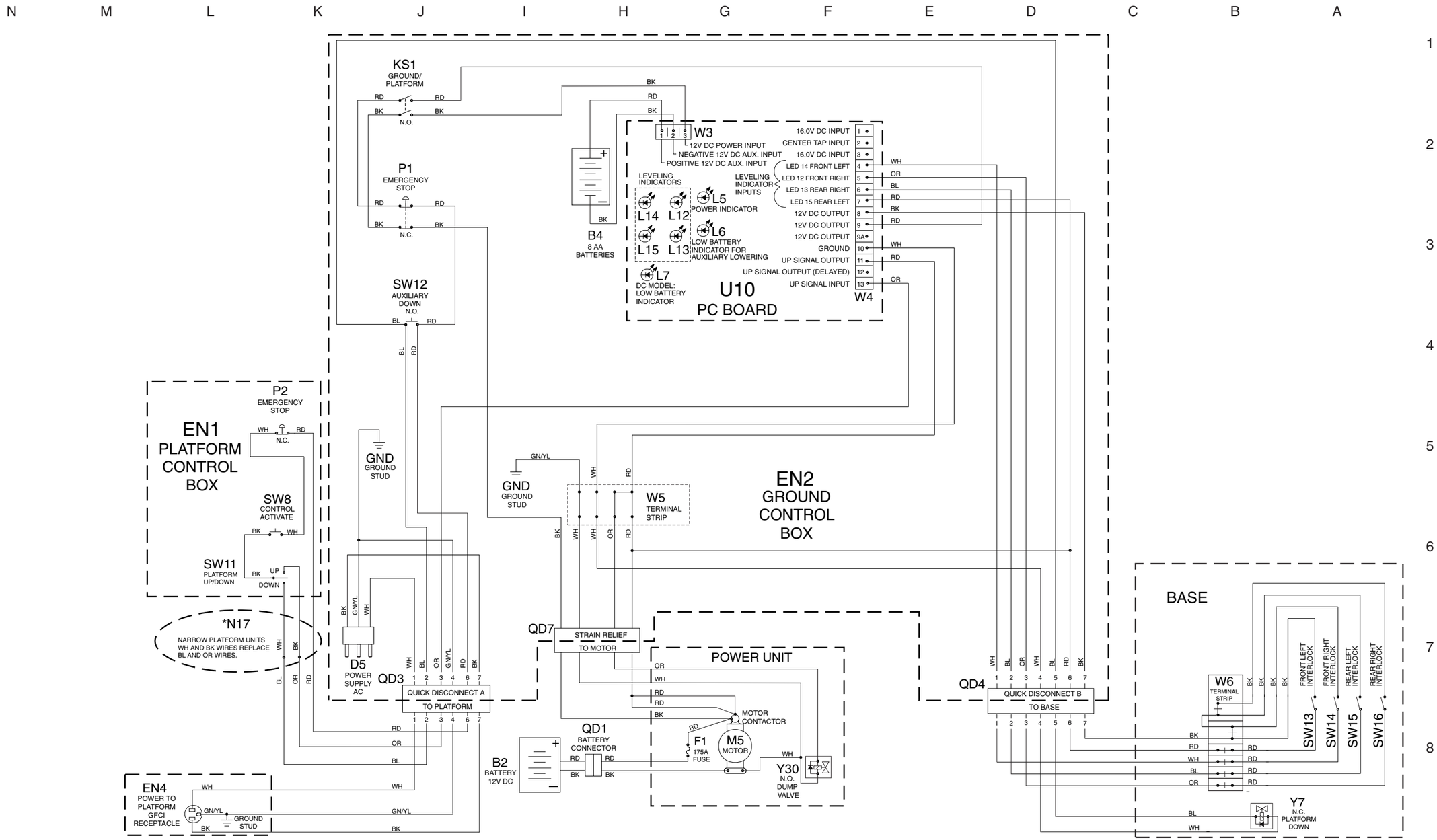

https://truckmanualshub.com/
www.truck-freeworkshop.com

Electrical Schematic

AWP Super Series DC TUV Models (after serial number 3896-430)

ABBREVIATION LEGEND	
Item	**Description**
B1	Battery – 8 AA batteries
CB4	Circuit breaker, 15A-110V / 8A-220V
D5	Power supply AC
EN	Enclosure
	EN1 = Platform control box EN2 = Ground control box EN4 = Power to platform GFCI receptacle EN5 = Power unit – 110V AC EN6 = Power unit – 220V AC
GND	Ground
KS1	Key switch ground/platform
L	Led or light
	L5 = Power indicator (ground) L6 = Low battery indicator for auxiliary (ground) L7 = Low battery indicator – main (ground) L12 = Outrigger – front left (ground) L13 = Outrigger – front right (ground) L14 = Outrigger – rear left (ground) L15 = Outrigger – rear right (ground)
M5	Hydraulic power unit
KS1	Key switch
M5	Hydraulic power unit
N.C.	Normally closed
N.O	Normally open
*N	Note with description
	*N7 = 110V AC terminal strip detail *N8 = 110V AC motor detail *N9 = 220V AC terminal strip detail *N10 = 220V AC motor detail *N17 = Narrow platform units: WH and BK wires replace BL and OR wires
P	Power switch
	P1 = Emergency Stop button at ground controls P2 = Emergency Stop button at platform controls
PR	Power relay
	PR4 = Function pump (M5)
QD	Quick disconnect
	QD3 = Control cable – to platform control box QD4 = Control cable – to base QD7 = Control cable – to motor
SW	Switch
	SW 8 = Control activate SW11 = Platform up/down SW12 = Auxiliary down SW13 = Outrigger interlock – front left SW14 = Outrigger interlock – front right SW15 = Outrigger interlock – rear left SW16 = Outrigger interlock – rear right
U	Electronic component
	U9 = Transformer U10 = PC board U12 = Thermal device
W	Wiring component
	W3 = Terminal strip – 3 pole 3 pin (U10) W4 = Terminal strip – 14 pole 14 pin (U10) W5 = Terminal strip – 7 pole 14 pin (*N7,*N9) W6 = Terminal strip – 6 pole 12 pin (base)
Y	Valve coil
	Y7 = Platform down Y30 = Normally open dump valve

WIRE COLOR LEGEND	
Color	**Description**
BL	Blue
BK	Black
BN	Brown
GN	Green
GN/YL	Green/Yellow
OR	Orange
RD	Red
RD/YL	Red/Yellow
WH	White
WH/BK	White/Black
YL	Yellow

Note: Use these 2 legends for the schematic on the opposing page.

www.truck-freeworkshop.com
https://truckmanualshub.com/

Electrical Schematic

AWP Super Series AC Models
(from serial number 3896-103 to 3896-303)

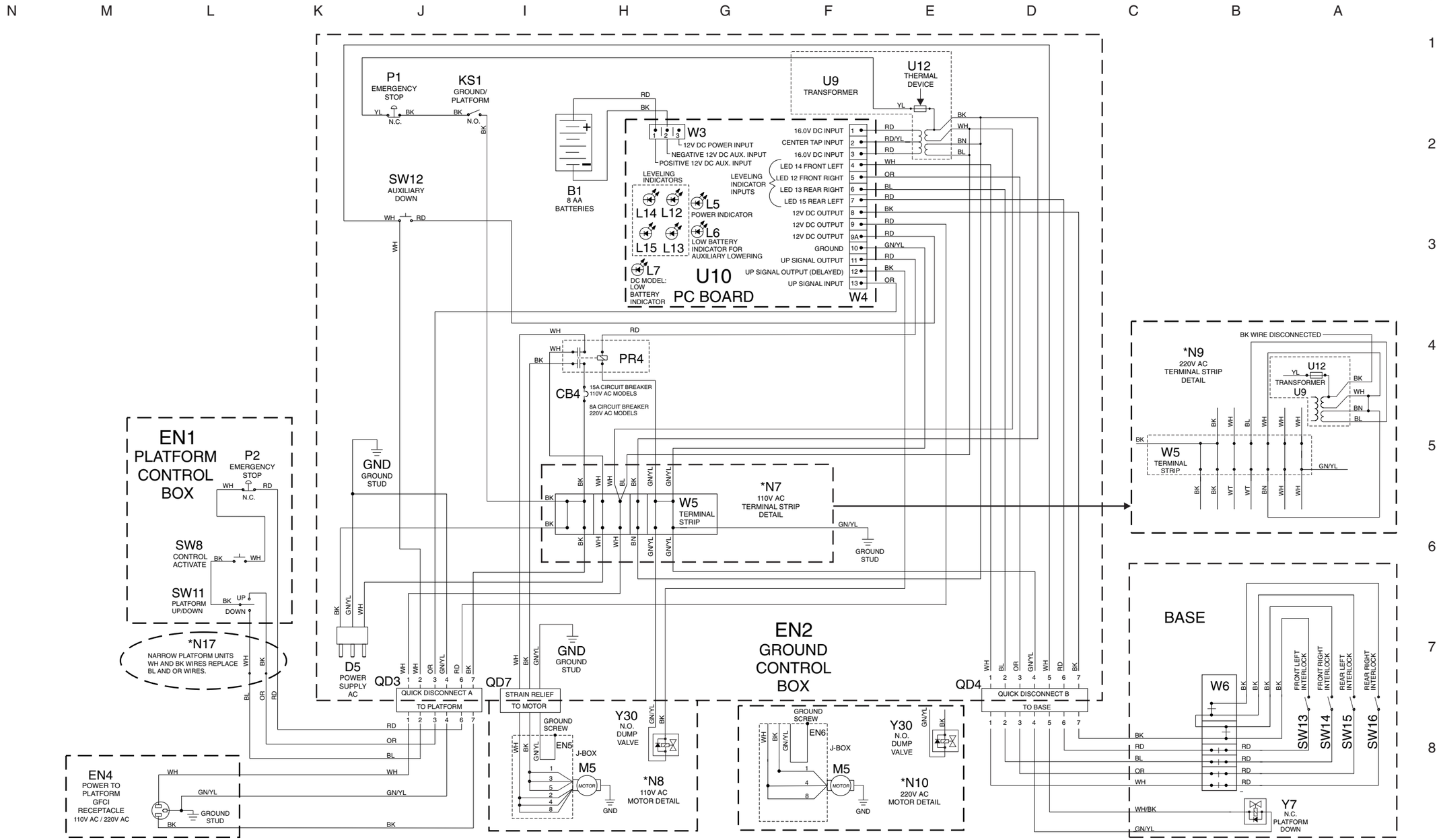

https://truckmanualshub.com/
www.truck-freeworkshop.com

Electrical Schematic

AWP Super Series AC Models
(from serial number 3896-103 to 3896-303)

ABBREVIATION LEGEND	
Item	**Description**
B1	Battery – 8 AA batteries
CB4	Circuit breaker, 15A-110V / 8A-220V
D5	Power supply AC
EN	Enclosure
	EN1 = Platform control box EN2 = Ground control box EN4 = Power to platform GFCI receptacle EN5 = Power unit – 110V AC EN6 = Power unit – 220V AC
GND	Ground
KS1	Key switch ground/platform
L	Led or light
	L5 = Power indicator (ground) L6 = Low battery indicator for auxiliary (ground) L7 = Low battery indicator – main (ground) L12 = Outrigger – front left (ground) L13 = Outrigger – front right (ground) L14 = Outrigger – rear left (ground) L15 = Outrigger – rear right (ground)
M5	Hydraulic power unit
KS1	Key switch
M5	Hydraulic power unit
N.C.	Normally closed
N.O	Normally open
*N	Note with description
	*N7 = 110V AC terminal strip detail *N8 = 110V AC motor detail *N9 = 220V AC terminal strip detail *N10 = 220V AC motor detail *N17 = Narrow platform units: WH and BK wires replace BL and OR wires
P	Power switch
	P1 = Emergency Stop button at ground controls P2 = Emergency Stop button at platform controls
PR	Power relay
	PR4 = Function pump (M5)
QD	Quick disconnect
	QD3 = Control cable – to platform control box QD4 = Control cable – to base QD7 = Control cable – to motor
SW	Switch
	SW 8 = Control activate SW11 = Platform up/down SW12 = Auxiliary down SW13 = Outrigger interlock – front left SW14 = Outrigger interlock – front right SW15 = Outrigger interlock – rear left SW16 = Outrigger interlock – rear right
U	Electronic component
	U9 = Transformer U10 = PC board U12 = Thermal device
W	Wiring component
	W3 = Terminal strip – 3 pole 3 pin (U10) W4 = Terminal strip – 14 pole 14 pin (U10) W5 = Terminal strip – 7 pole 14 pin (*N7,*N9) W6 = Terminal strip – 6 pole 12 pin (base)
Y	Valve coil
	Y7 = Platform down Y30 = Normally open dump valve

WIRE COLOR LEGEND	
Color	**Description**
BL	Blue
BK	Black
BN	Brown
GN	Green
GN/YL	Green/Yellow
OR	Orange
RD	Red
RD/YL	Red/Yellow
WH	White
WH/BK	White/Black
YL	Yellow

Note: Use these 2 legends for the schematic on the opposing page.

www.truck-freeworkshop.com
https://truckmanualshub.com/

Electrical Schematic

AWP Super Series AC Models
(from serial number 3896-304 to 3896-450)

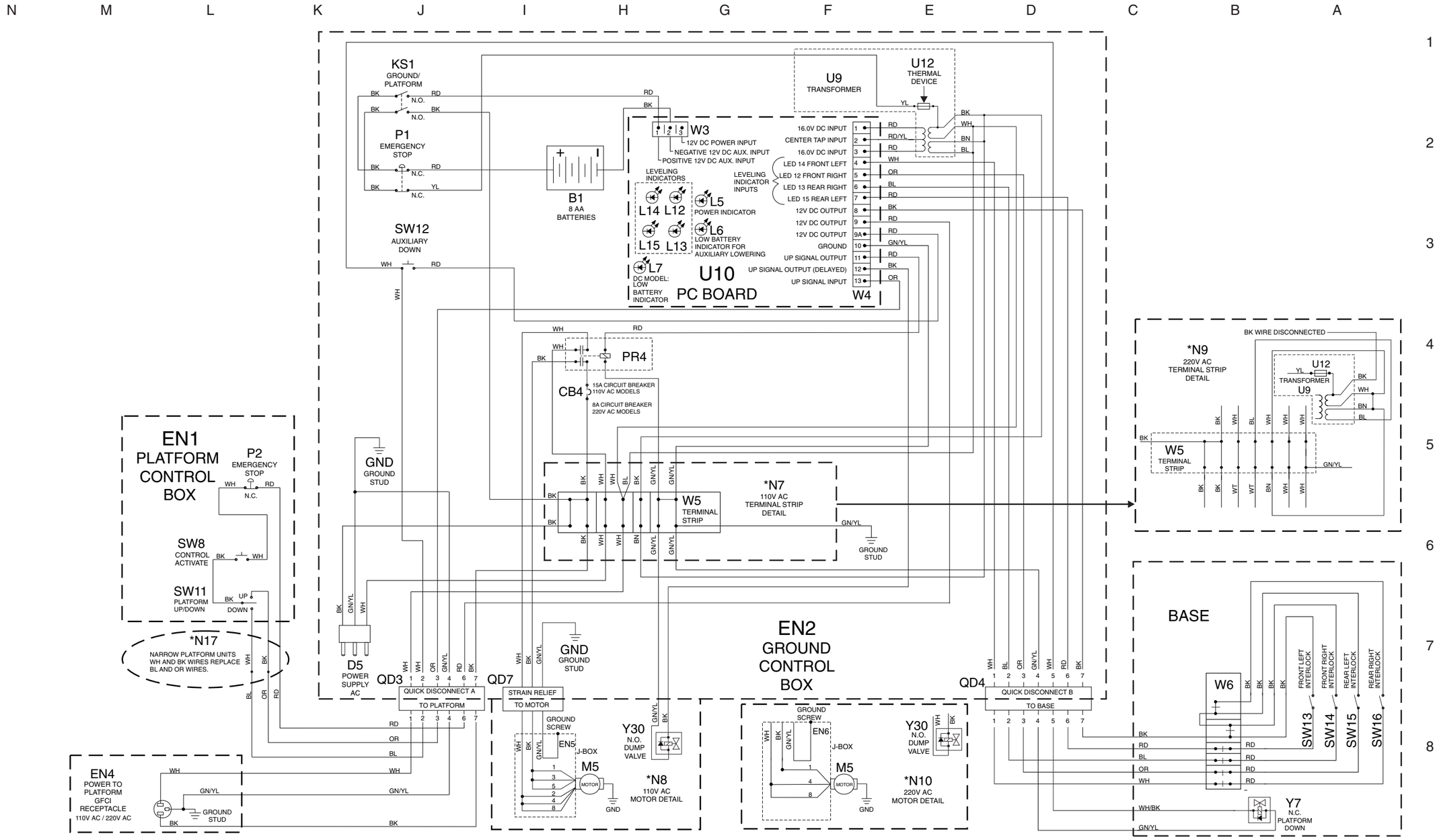

https://truckmanualshub.com/
www.truck-freeworkshop.com

Electrical Schematic

AWP Super Series AC Models
(from serial number 3896-304 to 3896-450)

ABBREVIATION LEGEND	
Item	**Description**
B1	Battery – 8 AA batteries
CB4	Circuit breaker, 15A-110V / 8A-220V
D5	Power supply AC
EN	Enclosure
	EN1 = Platform control box EN2 = Ground control box EN4 = Power to platform GFCI receptacle EN5 = Power unit – 110V AC EN6 = Power unit – 220V AC
GND	Ground
KS1	Key switch ground/platform
L	Led or light
	L5 = Power indicator (ground) L6 = Low battery indicator for auxiliary (ground) L7 = Low battery indicator – main (ground) L12 = Outrigger – front left (ground) L13 = Outrigger – front right (ground) L14 = Outrigger – rear left (ground) L15 = Outrigger – rear right (ground)
M5	Hydraulic power unit
KS1	Key switch
M5	Hydraulic power unit
N.C.	Normally closed
N.O	Normally open
*N	Note with description
	*N7 = 110V AC terminal strip detail *N8 = 110V AC motor detail *N9 = 220V AC terminal strip detail *N10 = 220V AC motor detail *N17 = Narrow platform units: WH and BK wires replace BL and OR wires
P	Power switch
	P1 = Emergency Stop button at ground controls P2 = Emergency Stop button at platform controls
PR	Power relay
	PR4 = Function pump (M5)
QD	Quick disconnect
	QD3 = Control cable – to platform control box QD4 = Control cable – to base QD7 = Control cable – to motor
SW	Switch
	SW 8 = Control activate SW11 = Platform up/down SW12 = Auxiliary down SW13 = Outrigger interlock – front left SW14 = Outrigger interlock – front right SW15 = Outrigger interlock – rear left SW16 = Outrigger interlock – rear right
U	Electronic component
	U9 = Transformer U10 = PC board U12 = Thermal device
W	Wiring component
	W3 = Terminal strip – 3 pole 3 pin (U10) W4 = Terminal strip – 14 pole 14 pin (U10) W5 = Terminal strip – 7 pole 14 pin (*N7,*N9) W6 = Terminal strip – 6 pole 12 pin (base)
Y	Valve coil
	Y7 = Platform down Y30 = Normally open dump valve

WIRE COLOR LEGEND	
Color	**Description**
BL	Blue
BK	Black
BN	Brown
GN	Green
GN/YL	Green/Yellow
OR	Orange
RD	Red
RD/YL	Red/Yellow
WH	White
WH/BK	White/Black
YL	Yellow

Note: Use these 2 legends for the schematic on the opposing page.

www.truck-freeworkshop.com
https://truckmanualshub.com/

Electrical Schematic

AWP Super Series AC Models
(from serial number 3896-451 to AWP07-54898)

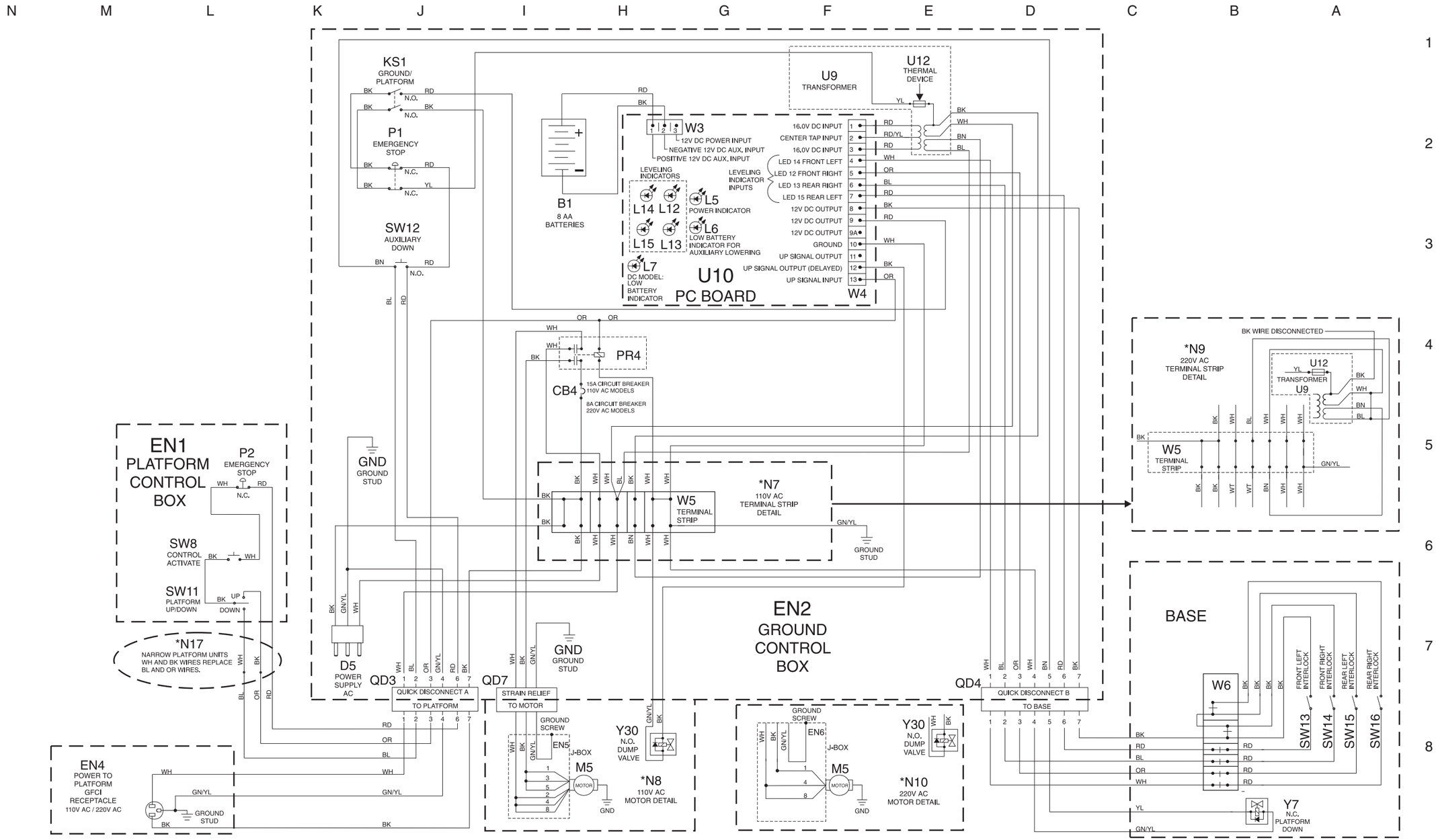

https://truckmanualshub.com/
www.truck-freeworkshop.com

Electrical Schematic

AWP Super Series AC Models
(from serial number 3896-451 to AWP07-54898)

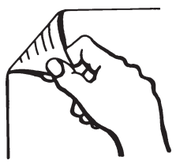

ABBREVIATION LEGEND	
Item	**Description**
B4	Battery – 8 AA batteries
CB4	Circuit breaker, 15A-110V / 8A-220V
D5	Power supply AC
EN	Enclosure
	EN1 = Platform control box EN2 = Ground control box EN4 = Power to platform GFCI receptacle EN5 = Power unit – 110V AC EN6 = Power unit – 220V AC
FB2	Warning light
GND	Ground
H4	Descent alarm
KS1	Key switch ground/platform
L	Led or light
	L5 = Power indicator (ground) L6 = Low battery indicator for auxiliary (ground) L7 = Low battery indicator – main (ground) L12 = Outrigger – front left (ground) L13 = Outrigger – front right (ground) L14 = Outrigger – rear left (ground) L15 = Outrigger – rear right (ground)
M5	Hydraulic power unit
KS1	Key switch
M5	Hydraulic power unit
N.C.	Normally closed
N.O	Normally open
*N	Note with description
	*N7 = 110V AC terminal strip detail *N8 = 110V AC motor detail *N9 = 220V AC terminal strip detail *N10 = 220V AC motor detail *N17 = Narrow platform units: WH and BK wires replace BL and OR wires *N27 = Units with out plug: WH and BK wires replace BL and BN wires
P	Power switch
	P1 = Emergency Stop button at ground controls P2 = Emergency Stop button at platform controls
PR	Power relay
	PR4 = Function pump (M5)
QD	Quick disconnect
	QD3 = Control cable – to platform control box QD4 = Control cable – to base
SW	Switch
	SW 8 = Control activate SW11 = Platform up/down SW12 = Auxiliary down SW13 = Outrigger interlock – front left SW14 = Outrigger interlock – front right SW15 = Outrigger interlock – rear left SW16 = Outrigger interlock – rear right
U	Electronic component
	U9 = Transformer U10 = PC board
W	Wiring component
	W3 = Terminal strip – 3 pole 3 pin (U10) W4 = Terminal strip – 14 pole 14 pin (U10) W5 = Terminal strip – 7 pole 14 pin (*N7,*N9) W6 = Terminal strip – 8 pole 16 pin (base)
Y	Valve coil
	Y7 = Platform down Y30 = Normally open dump valve

WIRE COLOR LEGEND	
Color	**Description**
BL	Blue
BK	Black
BN	Brown
GN/YL	Green/Yellow
OR	Orange
RD	Red
RD/BK	Red/Black
RD/YL	Red/Yellow
WH	White
YL	Yellow

Note: Use these 2 legends for the schematic on the opposing page.

www.truck-freeworkshop.com https://truckmanualshub.com/

Electrical Schematic

AWP Super Series AC Models with Standard Base
(from serial number AWP07-54899 to AWP07-57594)

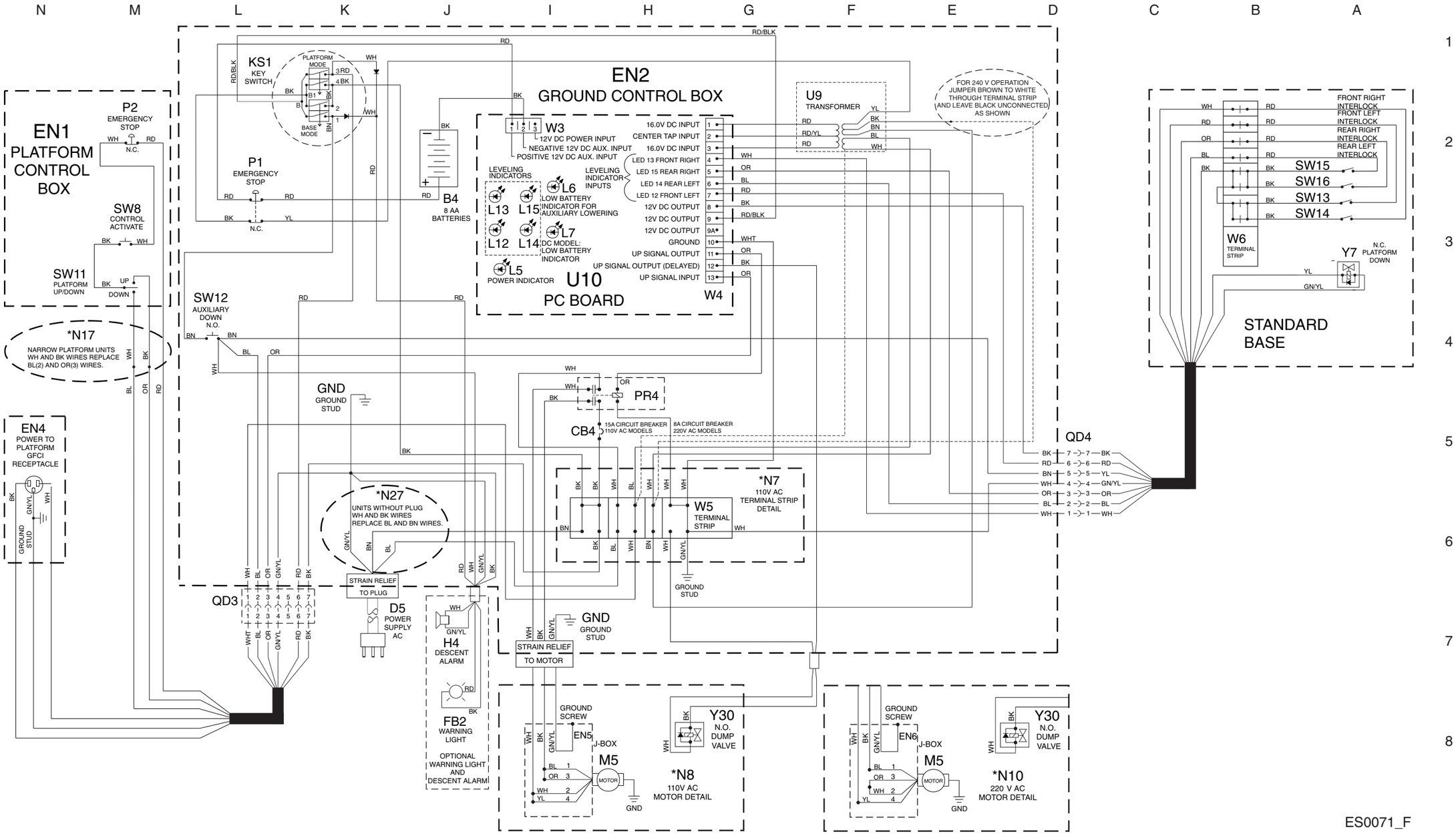

https://truckmanualshub.com/
www.truck-freeworkshop.com

Electrical Schematic

AWP Super Series AC Models with Standard Base
(from serial number AWP07-54899 to AWP07-57594)

ABBREVIATION LEGEND	
Item	**Description**
B4	Battery – 8 AA batteries
CB4	Circuit breaker, 15A-110V / 8A-220V
D5	Power supply AC
EN	Enclosure
	EN1 = Platform control box EN2 = Ground control box EN4 = Power to platform GFCI receptacle EN5 = Power unit – 110V AC EN6 = Power unit – 220V AC
FB2	Warning light
GND	Ground
H4	Descent alarm
KS1	Key switch ground/platform
L	Led or light
	L5 = Power indicator (ground) L6 = Low battery indicator for auxiliary (ground) L7 = Low battery indicator – main (ground) L12 = Outrigger – front left (ground) L13 = Outrigger – front right (ground) L14 = Outrigger – rear left (ground) L15 = Outrigger – rear right (ground)
M5	Hydraulic power unit
KS1	Key switch
M5	Hydraulic power unit
N.C.	Normally closed
N.O	Normally open
*N	Note with description
	*N7 = 110V AC terminal strip detail *N8 = 110V AC motor detail *N9 = 220V AC terminal strip detail *N10 = 220V AC motor detail *N17 = Narrow platform units: WH and BK wires replace BL and OR wires *N27 = Units with out plug: WH and BK wires replace BL and BN wires
P	Power switch
	P1 = Emergency Stop button at ground controls P2 = Emergency Stop button at platform controls
PR	Power relay
	PR4 = Function pump (M5)
QD	Quick disconnect
	QD3 = Control cable – to platform control box QD4 = Control cable – to base
SW	Switch
	SW 8 = Control activate SW11 = Platform up/down SW12 = Auxiliary down SW13 = Outrigger interlock – front left SW14 = Outrigger interlock – front right SW15 = Outrigger interlock – rear left SW16 = Outrigger interlock – rear right
U	Electronic component
	U9 = Transformer U10 = PC board
W	Wiring component
	W3 = Terminal strip – 3 pole 3 pin (U10) W4 = Terminal strip – 14 pole 14 pin (U10) W5 = Terminal strip – 7 pole 14 pin (*N7,*N9) W6 = Terminal strip – 8 pole 16 pin (base)
Y	Valve coil
	Y7 = Platform down Y30 = Normally open dump valve

WIRE COLOR LEGEND	
Color	**Description**
BL	Blue
BK	Black
BN	Brown
GN/YL	Green/Yellow
OR	Orange
RD	Red
RD/BK	Red/Black
RD/YL	Red/Yellow
WH	White
YL	Yellow

Note: Use these 2 legends for the schematic on the opposing page.

www.truck-freeworkshop.com https://truckmanualshub.com/

Electrical Schematic

AWP Super Series AC Models with Narrow Base
(from serial number AWP07-54899 to AWP07-57594)

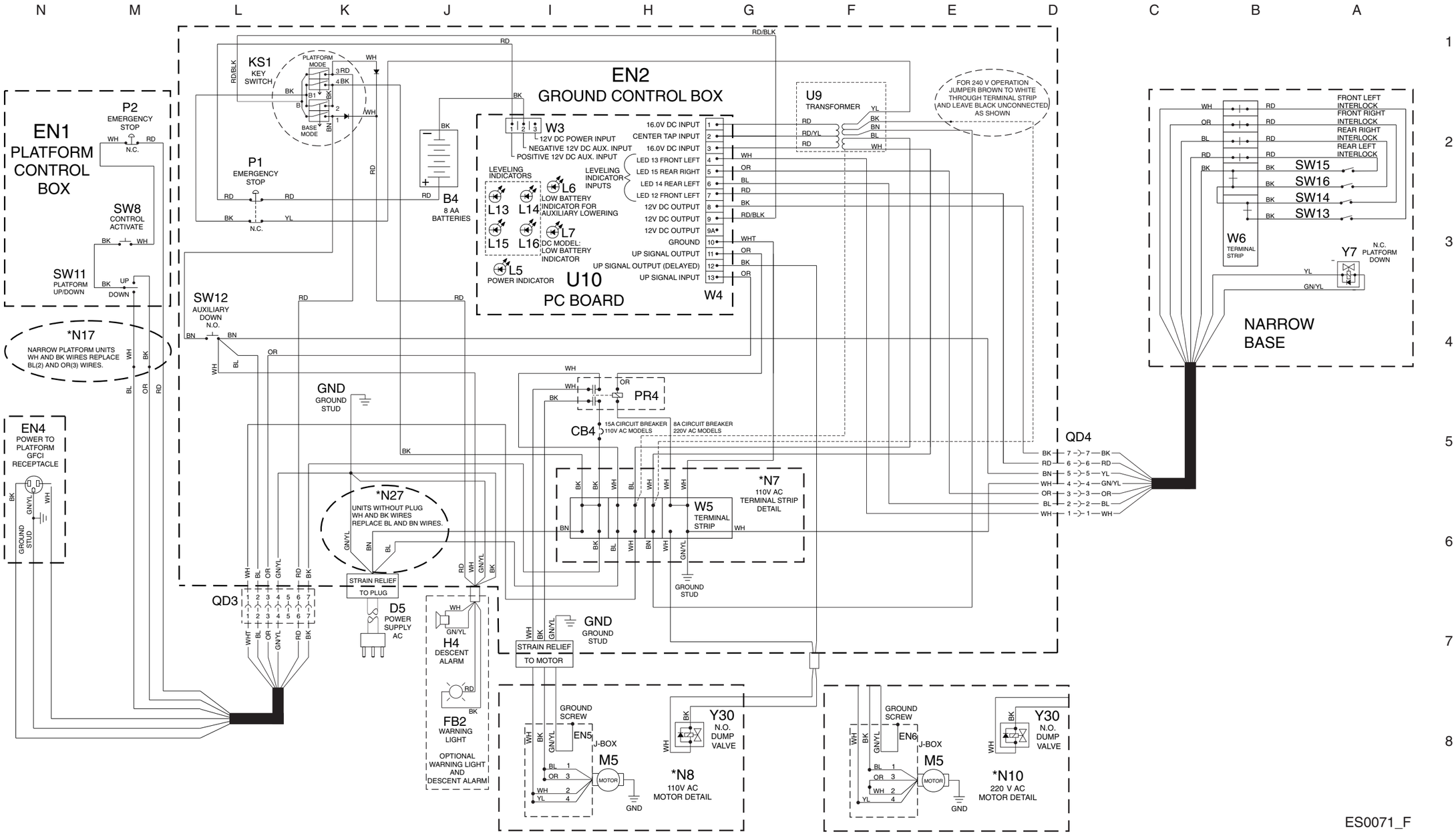

https://truckmanualshub.com/
www.truck-freeworkshop.com

Electrical Schematic

AWP Super Series AC Models with Narrow Base
(from serial number AWP07-54899 to AWP07-57594)

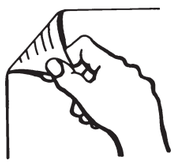

ABBREVIATION LEGEND	
Item	**Description**
B4	Battery – 8 AA batteries
CB4	Circuit breaker, 15A-110V / 8A-220V
D5	Power supply AC
EN	Enclosure
	EN1 = Platform control box EN2 = Ground control box EN4 = Power to platform GFCI receptacle EN5 = Power unit – 110V AC EN6 = Power unit – 220V AC
FB2	Warning light
GND	Ground
H4	Descent alarm
KS1	Key switch ground/platform
L	Led or light
	L5 = Power indicator (ground) L6 = Low battery indicator for auxiliary (ground) L7 = Low battery indicator – main (ground) L12 = Outrigger – front left (ground) L13 = Outrigger – front right (ground) L14 = Outrigger – rear left (ground) L15 = Outrigger – rear right (ground)
M5	Hydraulic power unit
KS1	Key switch
M5	Hydraulic power unit
N.C.	Normally closed
N.O	Normally open
*N	Note with description
	*N7 = 110V AC terminal strip detail *N8 = 110V AC motor detail *N9 = 220V AC terminal strip detail *N10 = 220V AC motor detail *N17 = Narrow platform units: WH and BK wires replace BL and OR wires *N27 = Units with out plug: WH and BK wires replace BL and BN wires
P	Power switch
	P1 = Emergency Stop button at ground controls P2 = Emergency Stop button at platform controls
PR	Power relay
	PR4 = Function pump (M5)
QD	Quick disconnect
	QD3 = Control cable – to platform control box QD4 = Control cable – to base
SW	Switch
	SW 8 = Control activate SW11 = Platform up/down SW12 = Auxiliary down SW13 = Outrigger interlock – front left SW14 = Outrigger interlock – front right SW15 = Outrigger interlock – rear left SW16 = Outrigger interlock – rear right
U	Electronic component
	U9 = Transformer U10 = PC board
W	Wiring component
	W3 = Terminal strip – 3 pole 3 pin (U10) W4 = Terminal strip – 14 pole 14 pin (U10) W5 = Terminal strip – 7 pole 14 pin (*N7,*N9) W6 = Terminal strip – 8 pole 16 pin (base)
Y	Valve coil
	Y7 = Platform down Y30 = Normally open dump valve

WIRE COLOR LEGEND	
Color	**Description**
BL	Blue
BK	Black
BN	Brown
GN/YL	Green/Yellow
OR	Orange
RD	Red
RD/BK	Red/Black
RD/YL	Red/Yellow
WH	White
YL	Yellow

Note: Use these 2 legends for the schematic on the opposing page.

www.truck-freeworkshop.com https://truckmanualshub.com/

Electrical Schematic

AWP Super Series AC Models with Standard Base
(after serial number AWP07-57594)

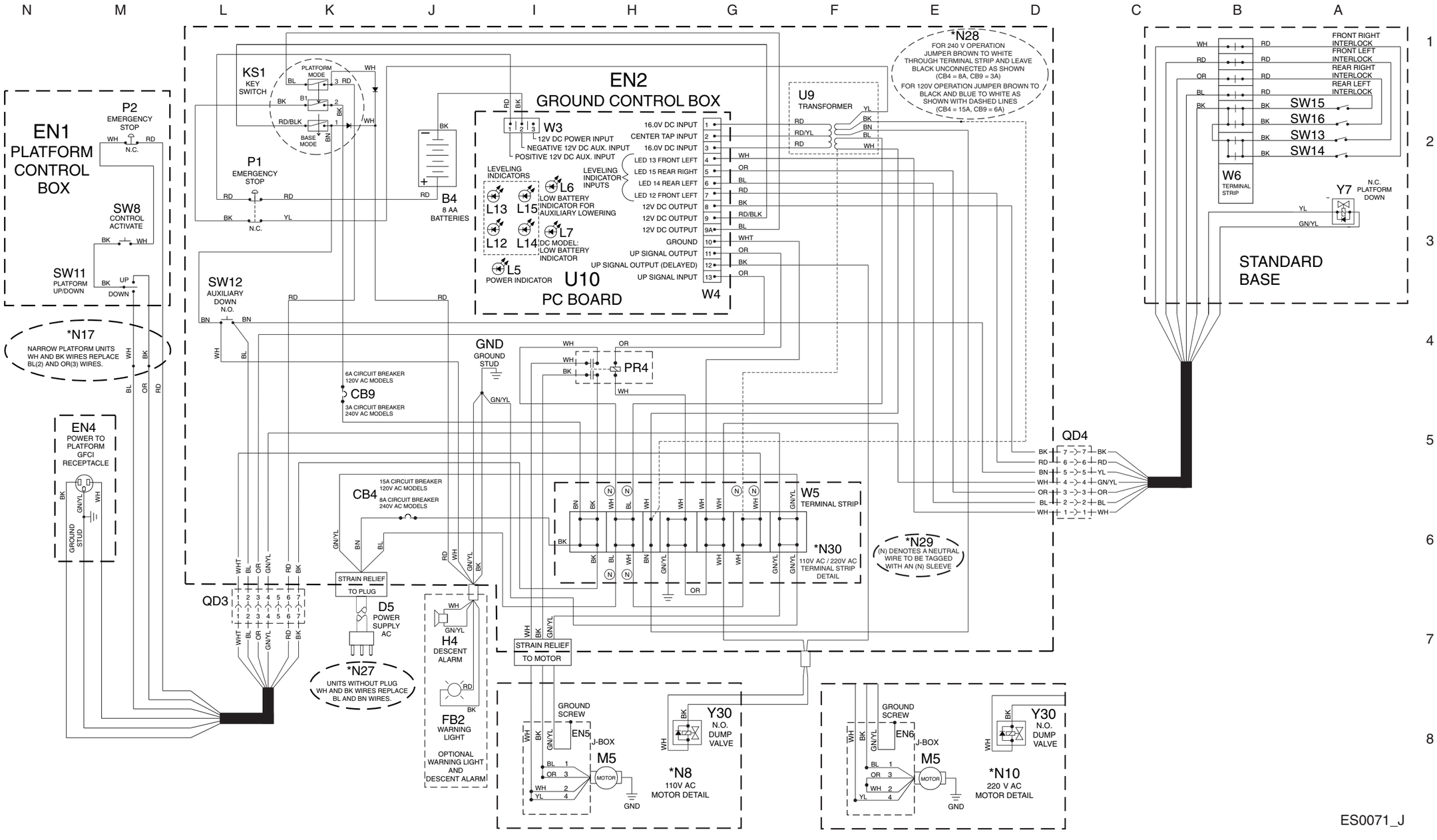

https://truckmanualshub.com/
www.truck-freeworkshop.com

Electrical Schematic

AWP Super Series AC Models with Standard Base
(after serial number AWP07-57594)

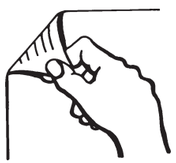

ABBREVIATION LEGEND	
Item	**Description**
B4	Battery – 8 AA batteries
CB4	Circuit breaker, 15A-110V / 8A-220V
D5	Power supply AC
EN	Enclosure
	EN1 = Platform control box EN2 = Ground control box EN4 = Power to platform GFCI receptacle EN5 = Power unit – 110V AC EN6 = Power unit – 220V AC
FB2	Warning light
GND	Ground
H4	Descent alarm
KS1	Key switch ground/platform
L	Led or light
	L5 = Power indicator (ground) L6 = Low battery indicator for auxiliary (ground) L7 = Low battery indicator – main (ground) L12 = Outrigger – front left (ground) L13 = Outrigger – front right (ground) L14 = Outrigger – rear left (ground) L15 = Outrigger – rear right (ground)
M5	Hydraulic power unit
KS1	Key switch
M5	Hydraulic power unit
N.C.	Normally closed
N.O	Normally open
*N	Note with description
	*N7 = 110V AC terminal strip detail *N8 = 110V AC motor detail *N9 = 220V AC terminal strip detail *N10 = 220V AC motor detail *N17 = Narrow platform units: WH and BK wires replace BL and OR wires *N27 = Units with out plug: WH and BK wires replace BL and BN wires
P	Power switch
	P1 = Emergency Stop button at ground controls P2 = Emergency Stop button at platform controls
PR	Power relay
	PR4 = Function pump (M5)
QD	Quick disconnect
	QD3 = Control cable – to platform control box QD4 = Control cable – to base
SW	Switch
	SW 8 = Control activate SW11 = Platform up/down SW12 = Auxiliary down SW13 = Outrigger interlock – front left SW14 = Outrigger interlock – front right SW15 = Outrigger interlock – rear left SW16 = Outrigger interlock – rear right
U	Electronic component
	U9 = Transformer U10 = PC board
W	Wiring component
	W3 = Terminal strip – 3 pole 3 pin (U10) W4 = Terminal strip – 14 pole 14 pin (U10) W5 = Terminal strip – 7 pole 14 pin (*N7,*N9) W6 = Terminal strip – 8 pole 16 pin (base)
Y	Valve coil
	Y7 = Platform down Y30 = Normally open dump valve

WIRE COLOR LEGEND	
Color	**Description**
BL	Blue
BK	Black
BN	Brown
GN/YL	Green/Yellow
OR	Orange
RD	Red
RD/BK	Red/Black
RD/YL	Red/Yellow
WH	White
YL	Yellow

Note: Use these 2 legends for the schematic on the opposing page.

www.truck-freeworkshop.com https://truckmanualshub.com/

Electrical Schematic

AWP Super Series AC Models with Narrow Base
(after serial number AWP07-57594)

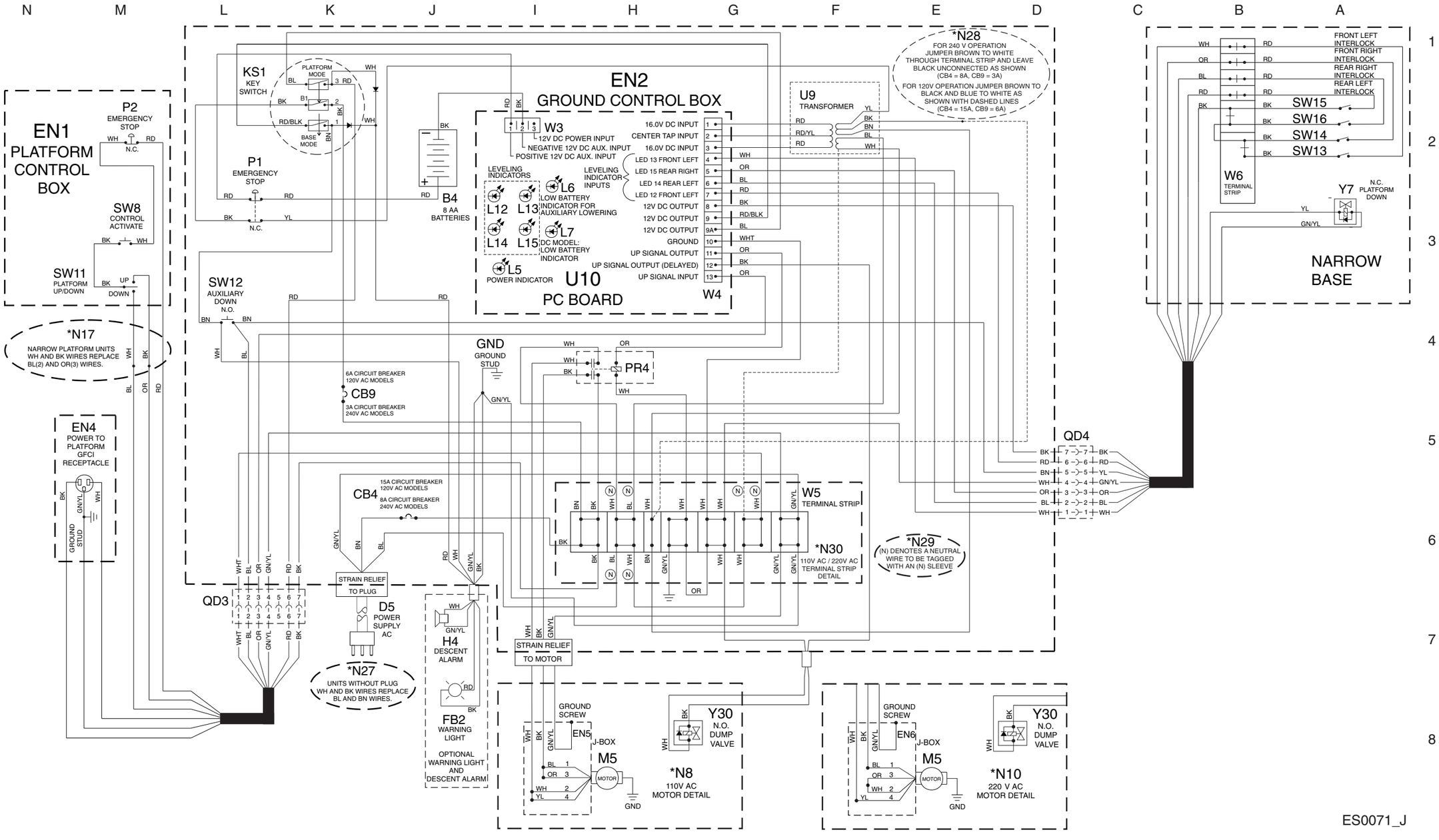

https://truckmanualshub.com/
www.truck-freeworkshop.com

Electrical Schematic

AWP Super Series AC Models with Narrow Base (after serial number AWP07-57594)

ABBREVIATION LEGEND	
Item	**Description**
B1	Battery – 8 AA batteries
CB4	Circuit breaker, 15A-110V / 8A-220V
D5	Power supply AC
EN	Enclosure
	EN1 = Platform control box EN2 = Ground control box EN3 = Remote box (ce option) EN4 = Power to platform GFCI receptacle EN5 = Power unit – 110V AC EN6 = Power unit – 220V AC
GND	Ground
KS1	Key switch - ground/platform
L	Led or light
	L5 = Power indicator (ground) L6 = Low battery indicator for auxiliary (ground) L7 = Low battery indicator – main (ground) L12 = Outrigger – front left (ground) L13 = Outrigger – front right (ground) L14 = Outrigger – rear left (ground) L15 = Outrigger – rear right (ground)
M5	Hydraulic power unit
KS1	Key switch
M5	Hydraulic power unit
N.C.	Normally closed
N.O	Normally open
*N	Note with description
	*N7 = 110V AC terminal strip detail *N8 = 110V AC motor detail *N9 = 220V AC terminal strip detail *N10 = 220V AC motor detail *N17 = Narrow platform units: WH and BK wires replace BL and OR wires
P	Power switch
	P1 = Emergency Stop button at ground controls P2 = Emergency Stop button at platform controls
PR	Power relay
	PR4 = Function pump (M5)
QD	Quick disconnect
	QD3 = Control cable – to platform control box QD4 = Control cable – to base QD7 = Control cable – to motor
SW	Switch
	SW 8 = Control activate SW11 = Platform up/down SW12 = Auxiliary down SW13 = Outrigger interlock – front left SW14 = Outrigger interlock – front right SW15 = Outrigger interlock – rear left SW16 = Outrigger interlock – rear right
U	Electronic component
	U9 = Transformer U10 = PC board U12 = Thermal device
W	Wiring component
	W3 = Terminal strip – 3 pole 3 pin (U10) W4 = Terminal strip – 14 pole 14 pin (U10) W5 = Terminal strip – 7 pole 14 pin (*N7,*N9) W6 = Terminal strip – 6 pole 12 pin (base)
Y	Valve coil
	Y7 = Platform down Y30 = Normally open dump valve

WIRE COLOR LEGEND	
Color	**Description**
BL	Blue
BN	Brown
BK	Black
GN/YL	Green/Yellow
OR	Orange
RD	Red
RD/YL	Red/Yellow
WH	White
Y	Yellow

Note: Use these 2 legends for the schematic on the opposing page.

www.truck-freeworkshop.com
https://truckmanualshub.com/

Electrical Schematic

AWP Super Series AC CE Models
(from serial number 3896-451 to AWP07-54898)

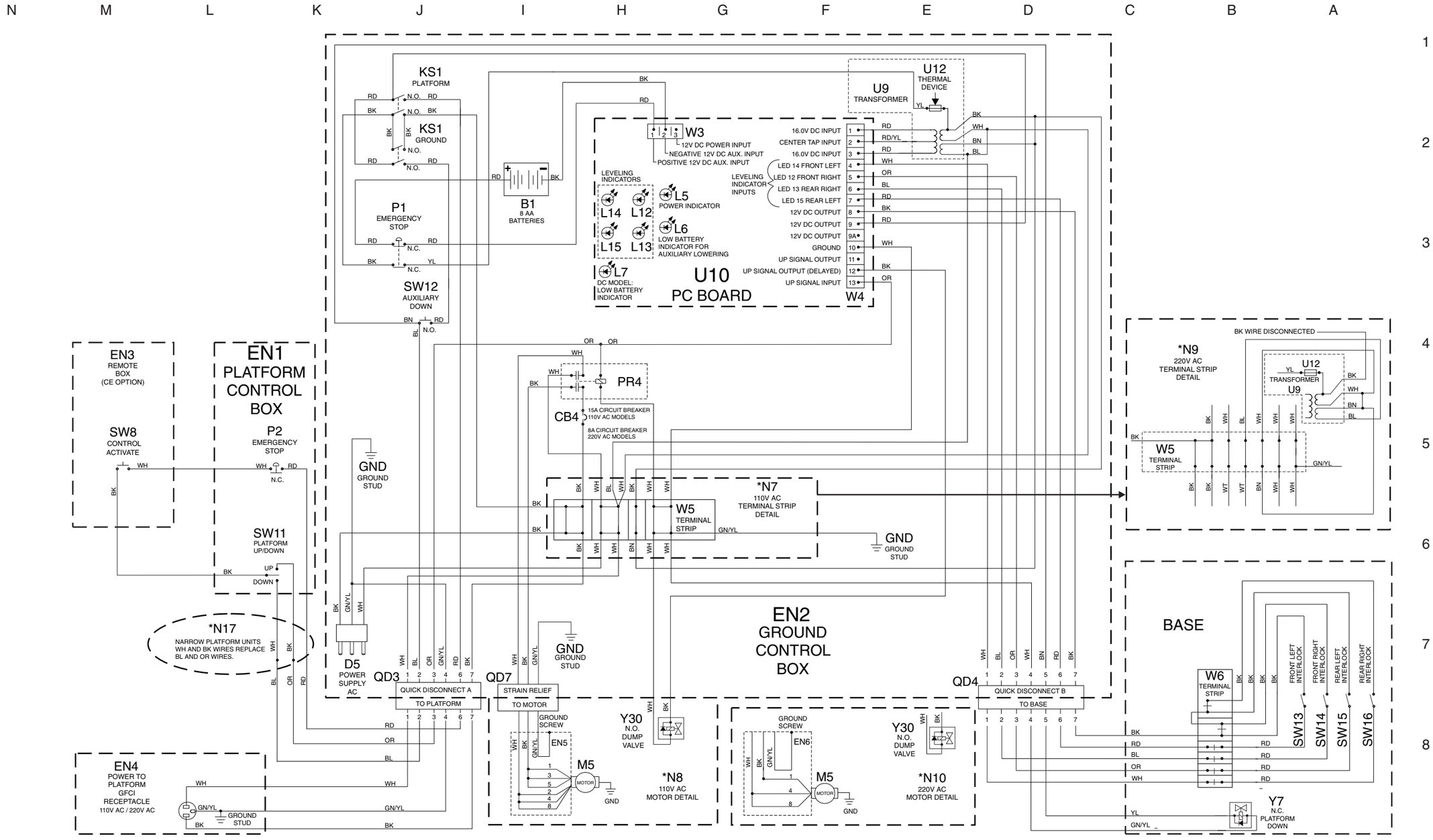

www.truck-freeworkshop.com https://truckmanualshub.com/

Electrical Schematic

AWP Super Series AC CE Models
(from serial number 3896-451 to AWP07-54898)

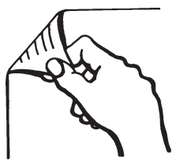

ABBREVIATION LEGEND	
Item	**Description**
B4	Battery – 8 AA batteries
CB4	Circuit breaker, 15A-110V / 8A-220V
D5	Power supply AC
EN	Enclosure
	EN1 = Platform control box EN2 = Ground control box EN4 = Power to platform GFCI receptacle EN5 = Power unit – 110V AC EN6 = Power unit – 220V AC
FB2	Warning light
GND	Ground
H4	Descent alarm
KS1	Key switch ground/platform
L	Led or light
	L5 = Power indicator (ground) L6 = Low battery indicator for auxiliary (ground) L7 = Low battery indicator – main (ground) L12 = Outrigger – front left (ground) L13 = Outrigger – front right (ground) L14 = Outrigger – rear left (ground) L15 = Outrigger – rear right (ground)
M5	Hydraulic power unit
KS1	Key switch
M5	Hydraulic power unit
N.C.	Normally closed
N.O	Normally open
*N	Note with description
	*N7 = 110V AC terminal strip detail *N8 = 110V AC motor detail *N9 = 220V AC terminal strip detail *N10 = 220V AC motor detail *N17 = Narrow platform units: WH and BK wires replace BL and OR wires *N27 = Units with out plug: WH and BK wires replace BL and BN wires
P	Power switch
	P1 = Emergency Stop button at ground controls P2 = Emergency Stop button at platform controls
PR	Power relay
	PR4 = Function pump (M5)
QD	Quick disconnect
	QD3 = Control cable – to platform control box QD4 = Control cable – to base
SW	Switch
	SW 8 = Control activate SW11 = Platform up/down SW12 = Auxiliary down SW13 = Outrigger interlock – front left SW14 = Outrigger interlock – front right SW15 = Outrigger interlock – rear left SW16 = Outrigger interlock – rear right
U	Electronic component
	U9 = Transformer U10 = PC board
W	Wiring component
	W3 = Terminal strip – 3 pole 3 pin (U10) W4 = Terminal strip – 14 pole 14 pin (U10) W5 = Terminal strip – 7 pole 14 pin (*N7,*N9) W6 = Terminal strip – 8 pole 16 pin (base)
Y	Valve coil
	Y7 = Platform down Y30 = Normally open dump valve

WIRE COLOR LEGEND	
Color	**Description**
BL	Blue
BK	Black
BN	Brown
GN/YL	Green/Yellow
OR	Orange
RD	Red
RD/BK	Red/Black
RD/YL	Red/Yellow
WH	White
YL	Yellow

Note: Use these 2 legends for the schematic on the opposing page.

www.truck-freeworkshop.com https://truckmanualshub.com/

Electrical Schematic

AWP Super Series AC CE Models with Standard Base
(from serial number AWP07-54899 to AWP07-57594)

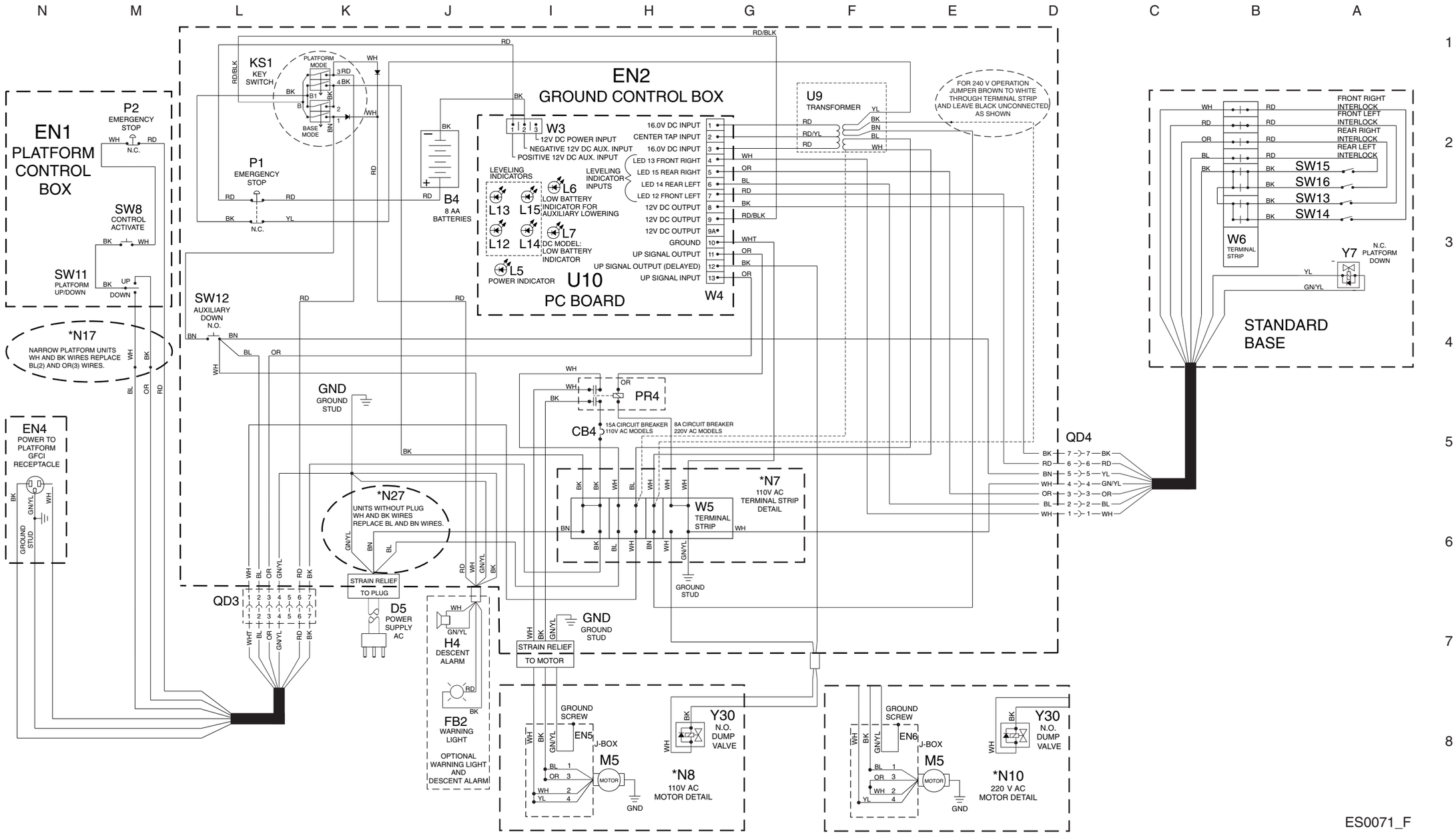

https://truckmanualshub.com/
www.truck-freeworkshop.com

Electrical Schematic

AWP Super Series AC CE Models with Standard Base
(from serial number AWP07-54899 to AWP07-57594)

ABBREVIATION LEGEND	
Item	**Description**
B4	Battery – 8 AA batteries
CB4	Circuit breaker, 15A-110V / 8A-220V
D5	Power supply AC
EN	Enclosure
	EN1 = Platform control box EN2 = Ground control box EN4 = Power to platform GFCI receptacle EN5 = Power unit – 110V AC EN6 = Power unit – 220V AC
FB2	Warning light
GND	Ground
H4	Descent alarm
KS1	Key switch ground/platform
L	Led or light
	L5 = Power indicator (ground) L6 = Low battery indicator for auxiliary (ground) L7 = Low battery indicator – main (ground) L12 = Outrigger – front left (ground) L13 = Outrigger – front right (ground) L14 = Outrigger – rear left (ground) L15 = Outrigger – rear right (ground)
M5	Hydraulic power unit
KS1	Key switch
M5	Hydraulic power unit
N.C.	Normally closed
N.O	Normally open
*N	Note with description
	*N7 = 110V AC terminal strip detail *N8 = 110V AC motor detail *N9 = 220V AC terminal strip detail *N10 = 220V AC motor detail *N17 = Narrow platform units: WH and BK wires replace BL and OR wires *N27 = Units with out plug: WH and BK wires replace BL and BN wires
P	Power switch
	P1 = Emergency Stop button at ground controls P2 = Emergency Stop button at platform controls
PR	Power relay
	PR4 = Function pump (M5)
QD	Quick disconnect
	QD3 = Control cable – to platform control box QD4 = Control cable – to base
SW	Switch
	SW 8 = Control activate SW11 = Platform up/down SW12 = Auxiliary down SW13 = Outrigger interlock – front left SW14 = Outrigger interlock – front right SW15 = Outrigger interlock – rear left SW16 = Outrigger interlock – rear right
U	Electronic component
	U9 = Transformer U10 = PC board
W	Wiring component
	W3 = Terminal strip – 3 pole 3 pin (U10) W4 = Terminal strip – 14 pole 14 pin (U10) W5 = Terminal strip – 7 pole 14 pin (*N7,*N9) W6 = Terminal strip – 8 pole 16 pin (base)
Y	Valve coil
	Y7 = Platform down Y30 = Normally open dump valve

WIRE COLOR LEGEND	
Color	**Description**
BL	Blue
BK	Black
BN	Brown
GN/YL	Green/Yellow
OR	Orange
RD	Red
RD/BK	Red/Black
RD/YL	Red/Yellow
WH	White
YL	Yellow

Note: Use these 2 legends for the schematic on the opposing page.

www.truck-freeworkshop.com https://truckmanualshub.com/

Electrical Schematic

AWP Super Series AC CE Models with Narrow Base
(from serial number AWP07-54899 to AWP07-57594)

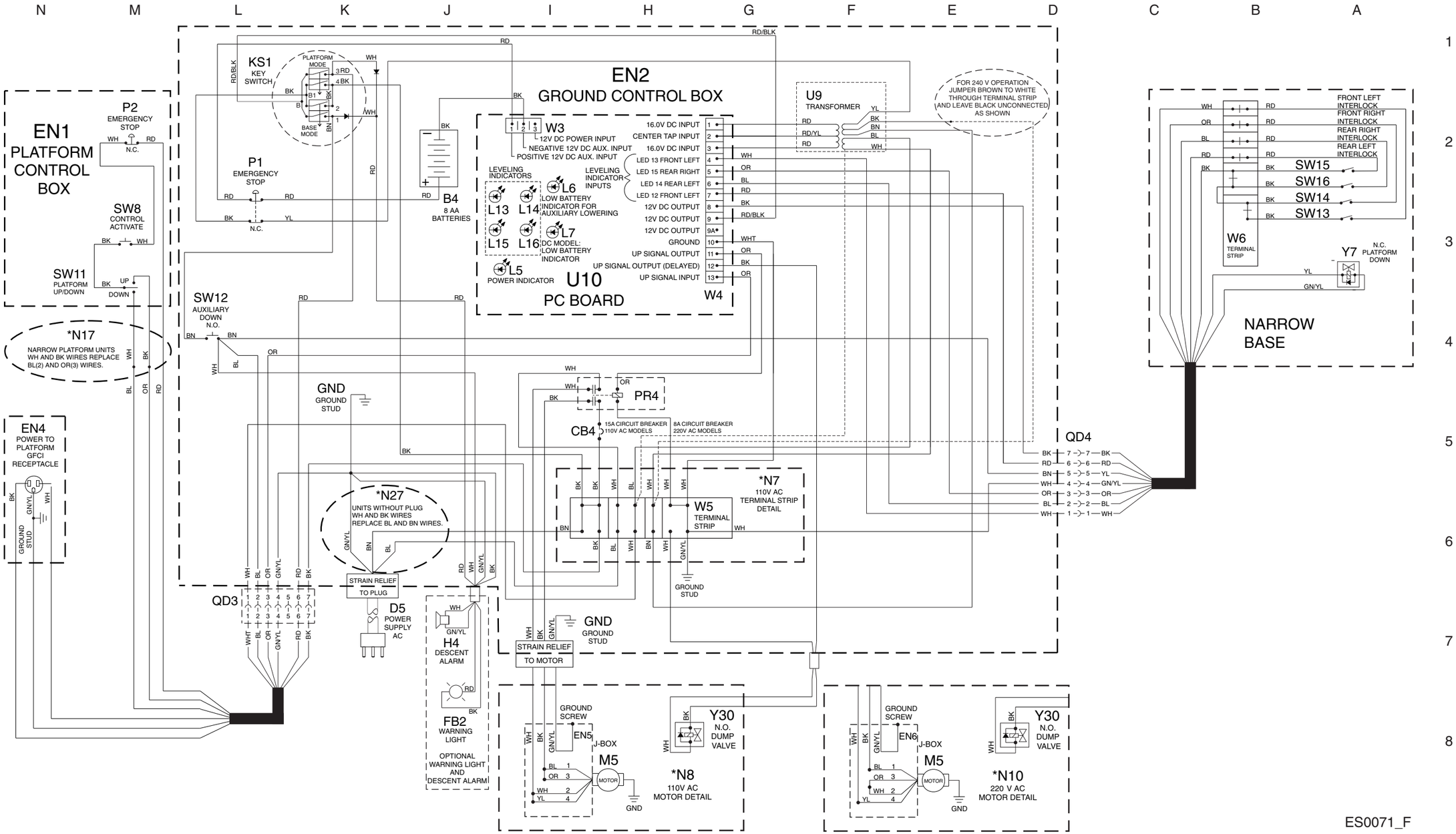

https://truckmanualshub.com/
www.truck-freeworkshop.com

Electrical Schematic

AWP Super Series AC CE Models with Narrow Base
(from serial number AWP07-54899 to AWP07-57594)

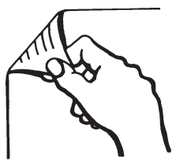

ABBREVIATION LEGEND	
Item	**Description**
B4	Battery – 8 AA batteries
CB4	Circuit breaker, 15A-110V / 8A-220V
D5	Power supply AC
EN	Enclosure
	EN1 = Platform control box EN2 = Ground control box EN4 = Power to platform GFCI receptacle EN5 = Power unit – 110V AC EN6 = Power unit – 220V AC
FB2	Warning light
GND	Ground
H4	Descent alarm
KS1	Key switch ground/platform
L	Led or light
	L5 = Power indicator (ground) L6 = Low battery indicator for auxiliary (ground) L7 = Low battery indicator – main (ground) L12 = Outrigger – front left (ground) L13 = Outrigger – front right (ground) L14 = Outrigger – rear left (ground) L15 = Outrigger – rear right (ground)
M5	Hydraulic power unit
KS1	Key switch
M5	Hydraulic power unit
N.C.	Normally closed
N.O	Normally open
*N	Note with description
	*N7 = 110V AC terminal strip detail *N8 = 110V AC motor detail *N9 = 220V AC terminal strip detail *N10 = 220V AC motor detail *N17 = Narrow platform units: WH and BK wires replace BL and OR wires *N27 = Units with out plug: WH and BK wires replace BL and BN wires
P	Power switch
	P1 = Emergency Stop button at ground controls P2 = Emergency Stop button at platform controls
PR	Power relay
	PR4 = Function pump (M5)
QD	Quick disconnect
	QD3 = Control cable – to platform control box QD4 = Control cable – to base
SW	Switch
	SW 8 = Control activate SW11 = Platform up/down SW12 = Auxiliary down SW13 = Outrigger interlock – front left SW14 = Outrigger interlock – front right SW15 = Outrigger interlock – rear left SW16 = Outrigger interlock – rear right
U	Electronic component
	U9 = Transformer U10 = PC board
W	Wiring component
	W3 = Terminal strip – 3 pole 3 pin (U10) W4 = Terminal strip – 14 pole 14 pin (U10) W5 = Terminal strip – 7 pole 14 pin (*N7,*N9) W6 = Terminal strip – 8 pole 16 pin (base)
Y	Valve coil
	Y7 = Platform down Y30 = Normally open dump valve

WIRE COLOR LEGEND	
Color	**Description**
BL	Blue
BK	Black
BN	Brown
GN/YL	Green/Yellow
OR	Orange
RD	Red
RD/BK	Red/Black
RD/YL	Red/Yellow
WH	White
YL	Yellow

Note: Use these 2 legends for the schematic on the opposing page.

www.truck-freeworkshop.com https://truckmanualshub.com/

Electrical Schematic

AWP Super Series AC CE Models with Standard Base
(after serial number AWP07-57594)

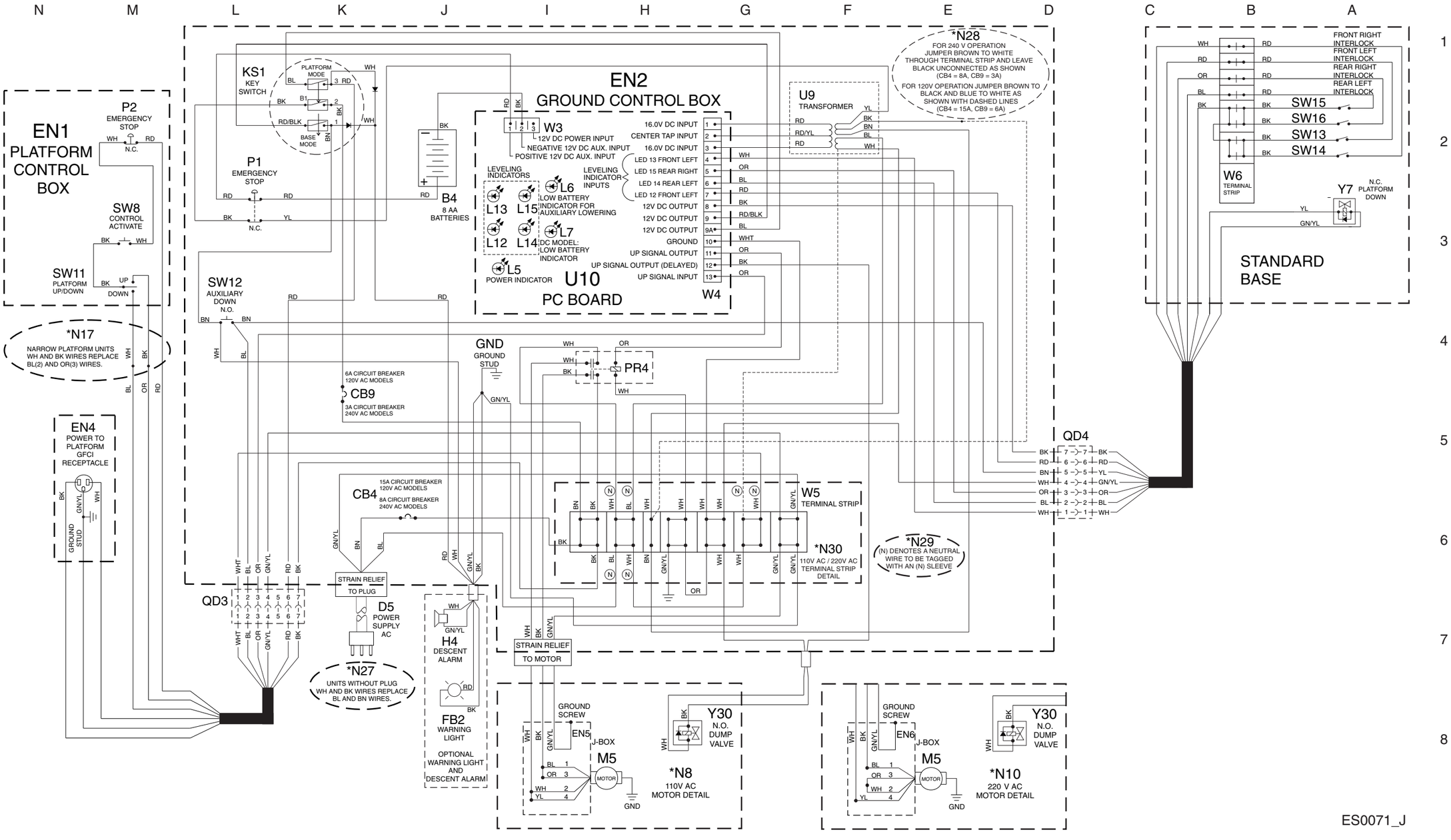

ES0071_J

www.truck-freeworkshop.com https://truckmanualshub.com/

Electrical Schematic

AWP Super Series AC CE Models with Standard Base
(after serial number AWP07-57594)

ABBREVIATION LEGEND	
Item	**Description**
B4	Battery – 8 AA batteries
CB4	Circuit breaker, 15A-110V / 8A-220V
D5	Power supply AC
EN	Enclosure
	EN1 = Platform control box EN2 = Ground control box EN4 = Power to platform GFCI receptacle EN5 = Power unit – 110V AC EN6 = Power unit – 220V AC
FB2	Warning light
GND	Ground
H4	Descent alarm
KS1	Key switch ground/platform
L	Led or light
	L5 = Power indicator (ground) L6 = Low battery indicator for auxiliary (ground) L7 = Low battery indicator – main (ground) L12 = Outrigger – front left (ground) L13 = Outrigger – front right (ground) L14 = Outrigger – rear left (ground) L15 = Outrigger – rear right (ground)
M5	Hydraulic power unit
KS1	Key switch
M5	Hydraulic power unit
N.C.	Normally closed
N.O	Normally open
*N	Note with description
	*N7 = 110V AC terminal strip detail *N8 = 110V AC motor detail *N9 = 220V AC terminal strip detail *N10 = 220V AC motor detail *N17 = Narrow platform units: WH and BK wires replace BL and OR wires *N27 = Units with out plug: WH and BK wires replace BL and BN wires
P	Power switch
	P1 = Emergency Stop button at ground controls P2 = Emergency Stop button at platform controls
PR	Power relay
	PR4 = Function pump (M5)
QD	Quick disconnect
	QD3 = Control cable – to platform control box QD4 = Control cable – to base
SW	Switch
	SW 8 = Control activate SW11 = Platform up/down SW12 = Auxiliary down SW13 = Outrigger interlock – front left SW14 = Outrigger interlock – front right SW15 = Outrigger interlock – rear left SW16 = Outrigger interlock – rear right
U	Electronic component
	U9 = Transformer U10 = PC board
W	Wiring component
	W3 = Terminal strip – 3 pole 3 pin (U10) W4 = Terminal strip – 14 pole 14 pin (U10) W5 = Terminal strip – 7 pole 14 pin (*N7,*N9) W6 = Terminal strip – 8 pole 16 pin (base)
Y	Valve coil
	Y7 = Platform down Y30 = Normally open dump valve

WIRE COLOR LEGEND	
Color	**Description**
BL	Blue
BK	Black
BN	Brown
GN/YL	Green/Yellow
OR	Orange
RD	Red
RD/BK	Red/Black
RD/YL	Red/Yellow
WH	White
YL	Yellow

Note: Use these 2 legends for the schematic on the opposing page.

www.truck-freeworkshop.com https://truckmanualshub.com/

Electrical Schematic

AWP Super Series AC CE Models with Narrow Base
(after serial number AWP07-57594)

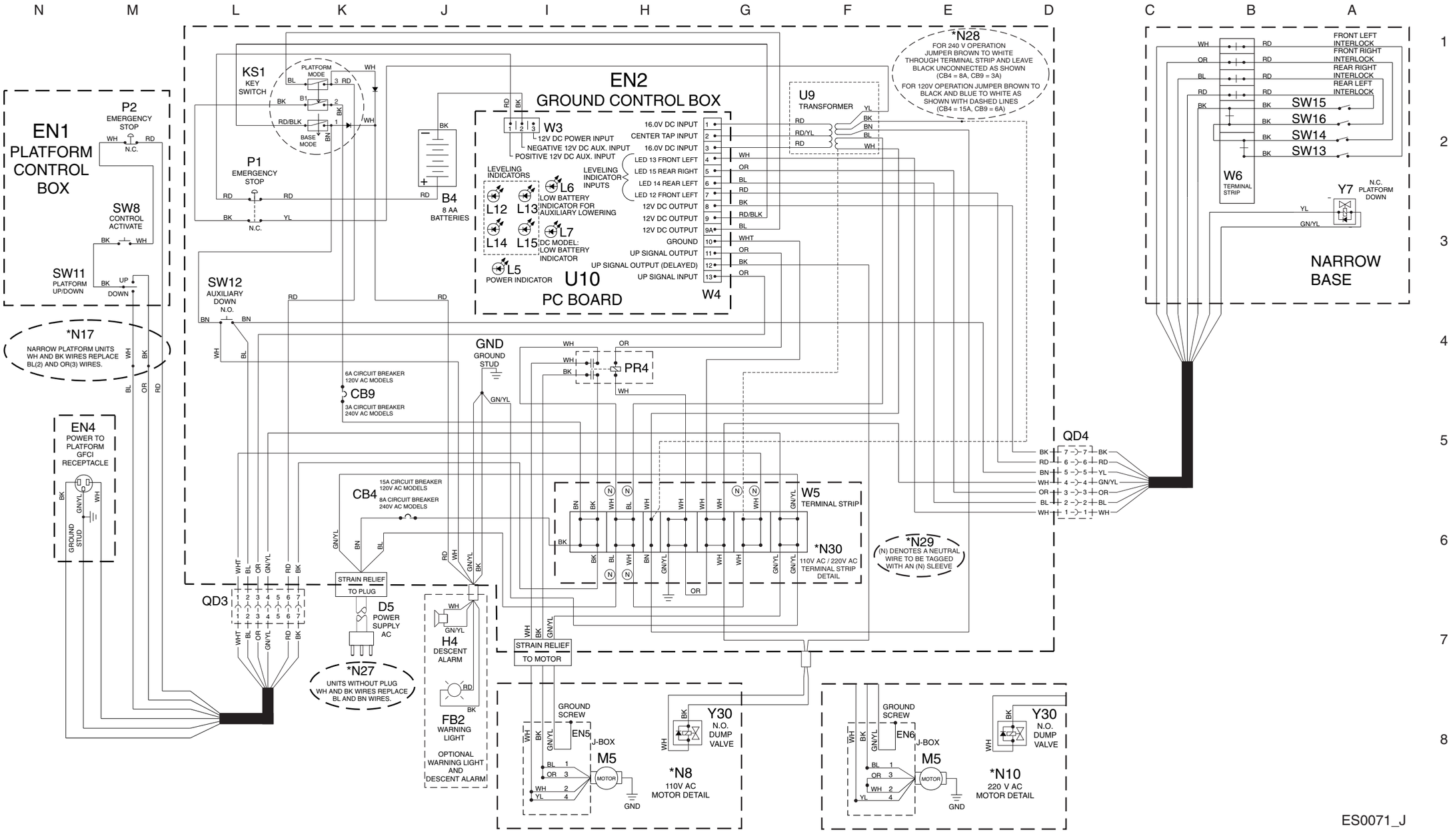

https://truckmanualshub.com/
www.truck-freeworkshop.com

Electrical Schematic

AWP Super Series AC CE Models with Narrow Base
(after serial number AWP07-57594)

ABBREVIATION LEGEND	
Item	**Description**
B1	Battery – 8 AA batteries
CB4	Circuit breaker, 8A-220V
D5	Power supply AC
EN	Enclosure
	EN1 = Platform control box EN2 = Ground control box EN3 = Remote box (ce option) EN4 = Power to platform GFCI receptacle EN6 = Power unit – 220V AC
GND	Ground
KS1	Key switch ground/platform
L	Led or light
	L5 = Power indicator (ground) L6 = Low battery indicator for auxiliary (ground) L7 = Low battery indicator – main (ground) L12 = Outrigger – front left (ground) L13 = Outrigger – front right (ground) L14 = Outrigger – rear left (ground) L15 = Outrigger – rear right (ground)
M5	Hydraulic power unit
KS1	Key switch
M5	Hydraulic power unit
N.C.	Normally closed
N.O	Normally open
*N	Note with description
	*N9 = 220V AC terminal strip detail *N10 = 220V AC motor detail *N17 = Narrow platform units: WH and BK wires replace BL and OR wires
P	Power switch
	P1 = Emergency Stop button at ground controls P2 = Emergency Stop button at platform controls
PR	Power relay
	PR4 = Function pump (M5)
QD	Quick disconnect
	QD3 = Control cable – to platform control box QD4 = Control cable – to base QD7 = Control cable – to motor
SW	Switch
	SW 8 = Control activate SW11 = Platform up/down SW12 = Auxiliary down SW13 = Outrigger interlock – front left SW14 = Outrigger interlock – front right SW15 = Outrigger interlock – rear left SW16 = Outrigger interlock – rear right
U	Electronic component
	U9 = Transformer U10 = PC board U12 = Thermal device
W	Wiring component
	W3 = Terminal strip – 3 pole 3 pin (U10) W4 = Terminal strip – 14 pole 14 pin (U10) W5 = Terminal strip – 7 pole 14 pin (*N7,*N9) W6 = Terminal strip – 6 pole 12 pin (base)
Y	Valve coil
	Y7 = Platform down Y30 = Normally open dump valve

WIRE COLOR LEGEND	
Color	**Description**
BL	Blue
BN	Brown
BK	Black
GN/YL	Green/Yellow
OR	Orange
RD	Red
RD/YL	Red/Yellow
WH	White
Y	Yellow

Note: Use these 2 legends for the schematic on the opposing page.

www.truck-freeworkshop.com https://truckmanualshub.com/

Electrical Schematic

AWP Super Series AC TUV Models
(after serial number 3896-460)

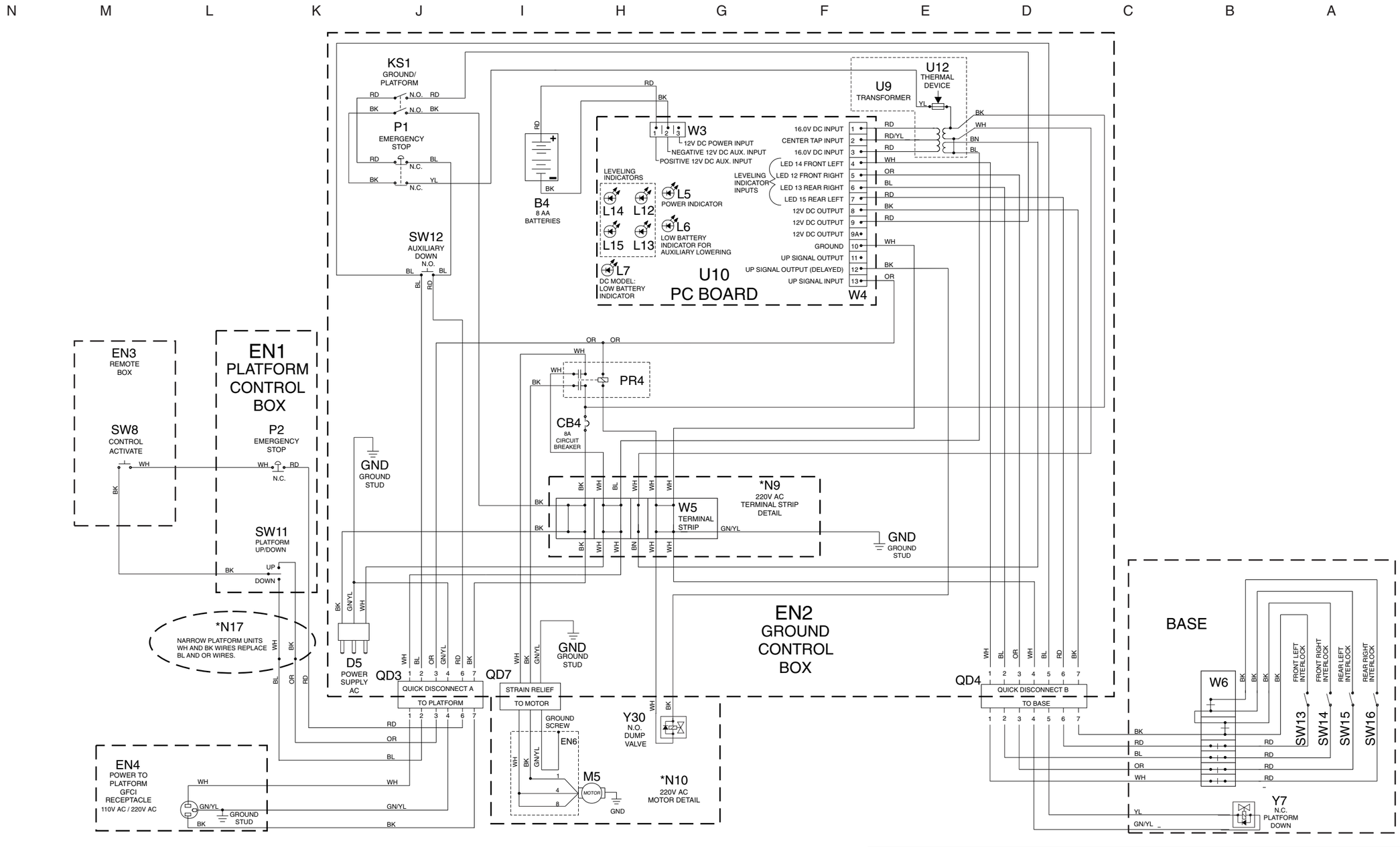

https://truckmanualshub.com/
www.truck-freeworkshop.com

Electrical Schematic

AWP Super Series AC TUV Models
(after serial number 3896-460)

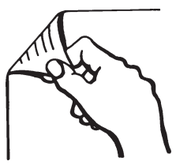

ABBREVIATION LEGEND	
Item	**Description**
B	Battery
	B2 = 12V DC B4 = 8 AA batteries
D5	Power supply AC
EN	Enclosure
	EN1 = Platform control box EN2 = Ground control box EN4 = Power to platform GFCI receptacle
GND	Ground
KS1	Key switch - ground/platform
L	Led or light
	L5 = Power indicator (ground) L6 = Low battery indicator for auxiliary (ground) L7 = Low battery indicator – main (ground) L12 = Outrigger – front left (ground) L13 = Outrigger – front right (ground) L14 = Outrigger – rear left (ground) L15 = Outrigger – rear right (ground)
LS1	Limit switch - platform extension (option)
M5	Hydraulic power unit
*N17	Narrow platform units: WH and BK wires replace BL and OR wires
N.C.	Normally closed
N.O.	Normally open
P	Power switch
	P1 = Emergency Stop button at ground controls P2 = Emergency Stop button at platform controls
QD	Quick disconnect
	QD3 = Control cable – to platform control box QD4 = Control cable – to base QD7 = Control cable – to motor
S7	Tilt sensor
SW	Switch
	SW 8 = Control activate SW11 = Platform up/down SW12 = Auxiliary down SW17 = Foot pad, left side SW18 = Foot pad, right side SW24 = Lift enable
U	Electronic component
	U10 = PC board
W	Wiring component
	W3 = Terminal strip – 3 pole 3 pin (U10) W4 = Terminal strip – 14 pole 14 pin (U10) W6 = Terminal strip – 10 pole 20 pin (base)
Y	Valve coil
	Y7 = Platform down Y30 = Normally open dump valve

WIRE COLOR LEGEND	
Color	**Description**
BL	Blue
BK	Black
GN	Green
GN/YL	Green/Yellow
OR	Orange
RD	Red
WH	White
WH/BK	White/Black
YL	Yellow

Note: Use these 2 legends for the schematic on the opposing page.

www.truck-freeworkshop.com https://truckmanualshub.com/

Electrical Schematic

IWP Super Series DC Models
(from serial number 4096-101 to 4096-287)

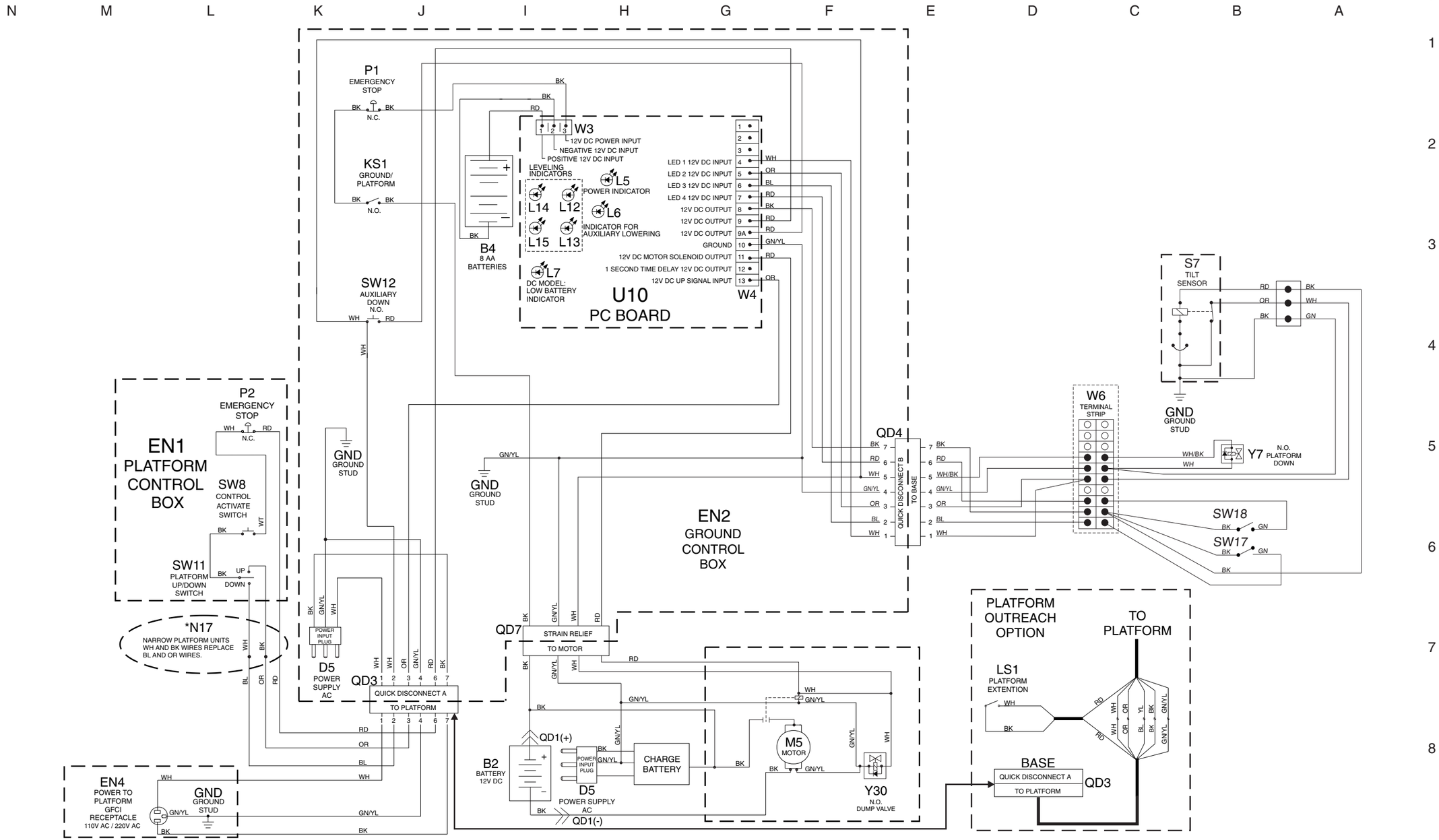

https://truckmanualshub.com/
www.truck-freeworkshop.com

Electrical Schematic

IWP Super Series DC Models
(from serial number 4096-101 to 4096-287)

ABBREVIATION LEGEND	
Item	**Description**
B	Battery
	B2 = 12V DC B4 = 8 AA batteries
D5	Power supply AC
EN	Enclosure
	EN1 = Platform control box EN2 = Ground control box EN4 = Power to platform GFCI receptacle
GND	Ground
KS1	Key switch - ground/platform
L	Led or light
	L5 = Power indicator (ground) L6 = Low battery indicator for auxiliary (ground) L7 = Low battery indicator – main (ground) L12 = Outrigger – front left (ground) L13 = Outrigger – front right (ground) L14 = Outrigger – rear left (ground) L15 = Outrigger – rear right (ground)
LS1	Limit switch - platform extension (option)
M5	Hydraulic power unit
*N17	Narrow platform units: WH and BK wires replace BL and OR wires
N.C.	Normally closed
N.O.	Normally open
P	Power switch
	P1 = Emergency Stop button at ground controls P2 = Emergency Stop button at platform controls
QD	Quick disconnect
	QD3 = Control cable – to platform control box QD4 = Control cable – to base QD7 = Control cable – to motor
S7	Tilt sensor
SW	Switch
	SW 8 = Control activate SW11 = Platform up/down SW12 = Auxiliary down SW17 = Foot pad, left side SW18 = Foot pad, right side SW24 = Lift enable
U	Electronic component
	U10 = PC board
W	Wiring component
	W3 = Terminal strip – 3 pole 3 pin (U10) W4 = Terminal strip – 14 pole 14 pin (U10) W6 = Terminal strip – 10 pole 20 pin (base)
Y	Valve coil
	Y7 = Platform down Y30 = Normally open dump valve

WIRE COLOR LEGEND	
Color	**Description**
BL	Blue
BK	Black
GN	Green
GN/YL	Green/Yellow
OR	Orange
RD	Red
WH	White
WH/BK	White/Black
YL	Yellow

Note: Use these 2 legends for the schematic on the opposing page.

www.truck-freeworkshop.com https://truckmanualshub.com/

Electrical Schematic

IWP Super Series DC Models
(from serial number 4096-288 to 4096-341)

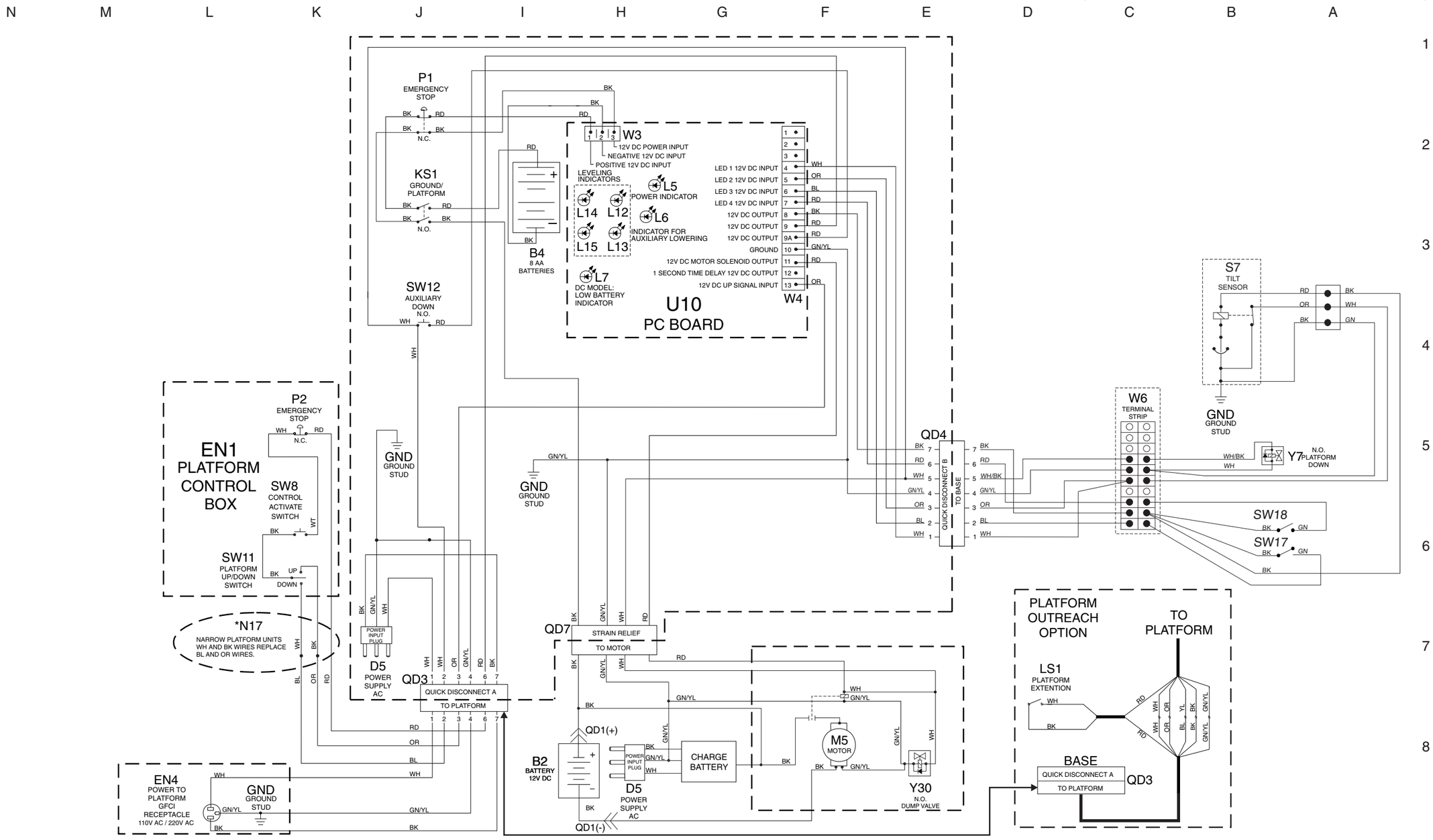

https://truckmanualshub.com/
www.truck-freeworkshop.com

Electrical Schematic

IWP Super Series DC Models
(from serial number 4096-288 to 4096-341)

ABBREVIATION LEGEND	
Item	**Description**
B	Battery
	B2 = 12V DC B4 = 8 AA batteries
D5	Power supply AC
EN	Enclosure
	EN1 = Platform control box EN2 = Ground control box EN4 = Power to platform GFCI receptacle
GND	Ground
KS1	Key switch - ground/platform
L	Led or light
	L5 = Power indicator (ground) L6 = Low battery indicator for auxiliary (ground) L7 = Low battery indicator – main (ground) L12 = Outrigger – front left (ground) L13 = Outrigger – front right (ground) L14 = Outrigger – rear left (ground) L15 = Outrigger – rear right (ground)
LS1	Limit switch - platform extension (option)
M5	Hydraulic power unit
*N17	Narrow platform units: WH and BK wires replace BL and OR wires
N.C.	Normally closed
N.O.	Normally open
P	Power switch
	P1 = Emergency Stop button at ground controls P2 = Emergency Stop button at platform controls
QD	Quick disconnect
	QD3 = Control cable – to platform control box QD4 = Control cable – to base QD7 = Control cable – to motor
S7	Tilt sensor
SW	Switch
	SW 8 = Control activate SW11 = Platform up/down SW12 = Auxiliary down SW17 = Foot pad, left side SW18 = Foot pad, right side SW24 = Lift enable
U	Electronic component
	U10 = PC board
W	Wiring component
	W3 = Terminal strip – 3 pole 3 pin (U10) W4 = Terminal strip – 14 pole 14 pin (U10) W6 = Terminal strip – 10 pole 20 pin (base)
Y	Valve coil
	Y7 = Platform down Y30 = Normally open dump valve

WIRE COLOR LEGEND	
Color	**Description**
BL	Blue
BK	Black
GN	Green
GN/YL	Green/Yellow
OR	Orange
RD	Red
WH	White
WH/BK	White/Black
YL	Yellow

Note: Use these 2 legends for the schematic on the opposing page.

https://truckmanualshub.com/
www.truck-freeworkshop.com

Electrical Schematic

IWP Super Series DC Models
(from serial number 4096-342 to IWP07-7065)

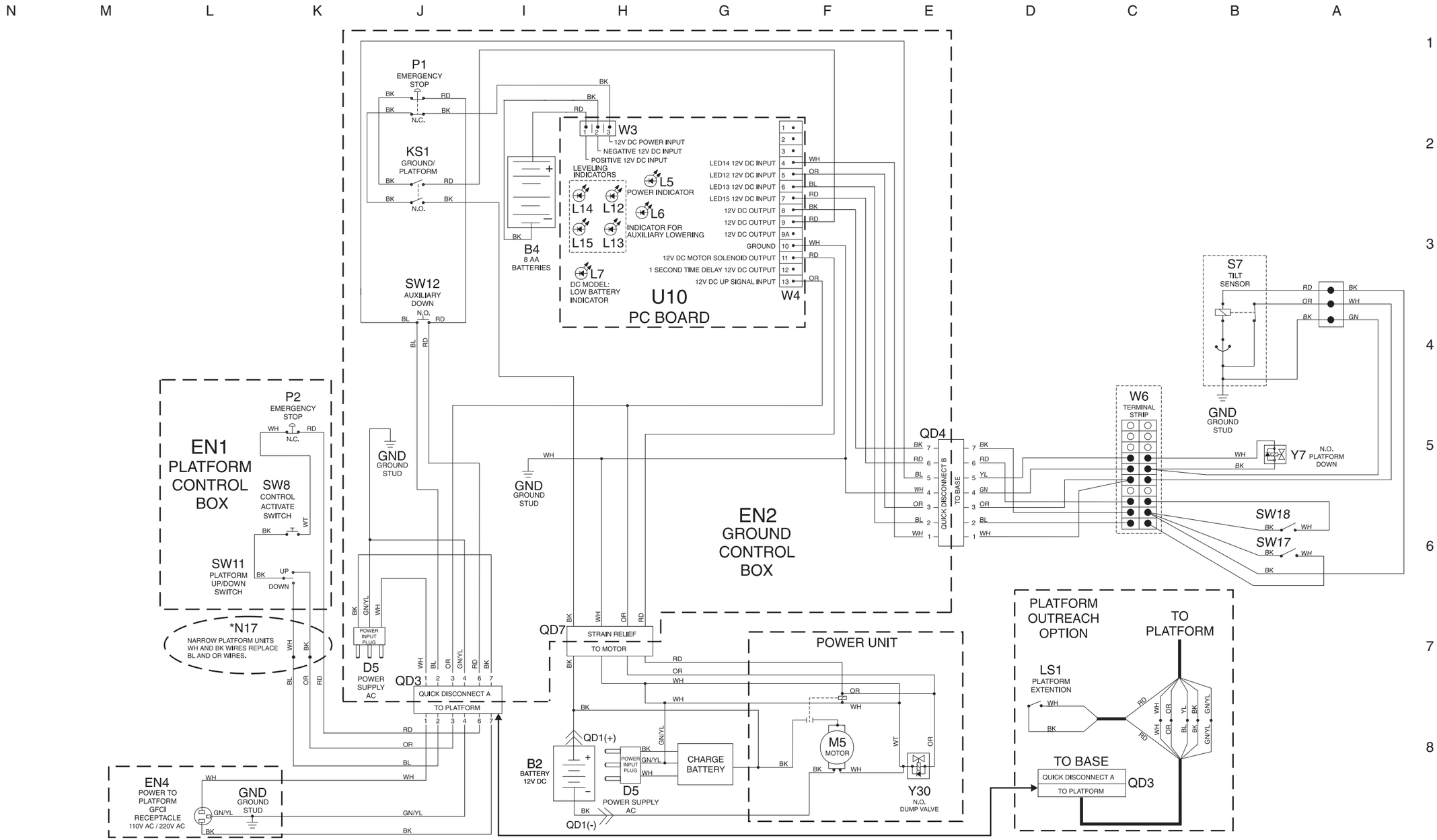

https://truckmanualshub.com/
www.truck-freeworkshop.com

Electrical Schematic

IWP Super Series DC Models
(from serial number 4096-342 to IWP07-7065)

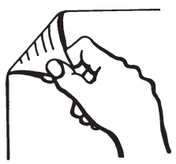

ABBREVIATION LEGEND	
Item	**Description**
B	Battery B2 = 12V DC B4 = 8 AA batteries
CR96	Power wheel
D5	Power supply AC
EN	Enclosure EN1 = Platform control box EN2 = Ground control box EN4 = Power to platform GFCI receptacle
F11	Fuse – 175 Amp
FB2	Warning light
GND	Ground
H4	Descent alarm
KS1	Key switch - ground/platform
L	Led or light L5 = Power indicator (ground) L6 = Low battery indicator for auxiliary (ground) L7 = Low battery indicator – main (ground) L66 = Level sensor interlock L67 = Footpad interlock
M5	Hydraulic power unit
*N	Note with description *N17 = Narrow platform units: WH and BK wires replace BL and OR wires *N27 = Units without plug: WH and BK wires replace BL and BN wires
N.C.	Normally closed
N.O.	Normally open
P	Power switch P1 = Emergency Stop button at ground controls P2 = Emergency Stop button at platform controls P3 = Emergency Stop button at steer handle controls
QD	Quick disconnect QD1 = Battery quick disconnect QD3 = Control cable – to platform control box QD4 = Control cable – to base
S7	Tilt sensor
SW	Switch SW11 = Platform up/down SW12 = Auxiliary down SW17 = Foot pad, left side SW18 = Foot pad, right side SW21 = Power assist, direction reversing safety SW22 = Power assist, forward/reverse SW41 = Power assist, drive enable
U	Electronic component U9 = Battery charger U10 = PC board
W	Wiring component W3 = Terminal strip – 3 pole 3 pin (U10) W4 = Terminal strip – 14 pole 14 pin (U10) W5 = Terminal strip – 5 pole 10 pin
Y	Valve coil Y5 = Drive manifold, drive forward Y6 = Drive manifold, drive reverse Y7 = Platform down Y30 = Normally open dump valve Y32 = Drive enable, drive function

WIRE COLOR LEGEND	
Color	**Description**
BL	Blue
BK	Black
BN	Brown
GN/YL	Green/Yellow
OR	Orange
RD	Red
RD/BK	Red/Black
WH	White
YL	Yellow

Note: Use these 2 legends for the schematic on the opposing page.

www.truck-freeworkshop.com https://truckmanualshub.com/

Electrical Schematic

IWP Super Series DC Models
(after serial number IWP07-7065)

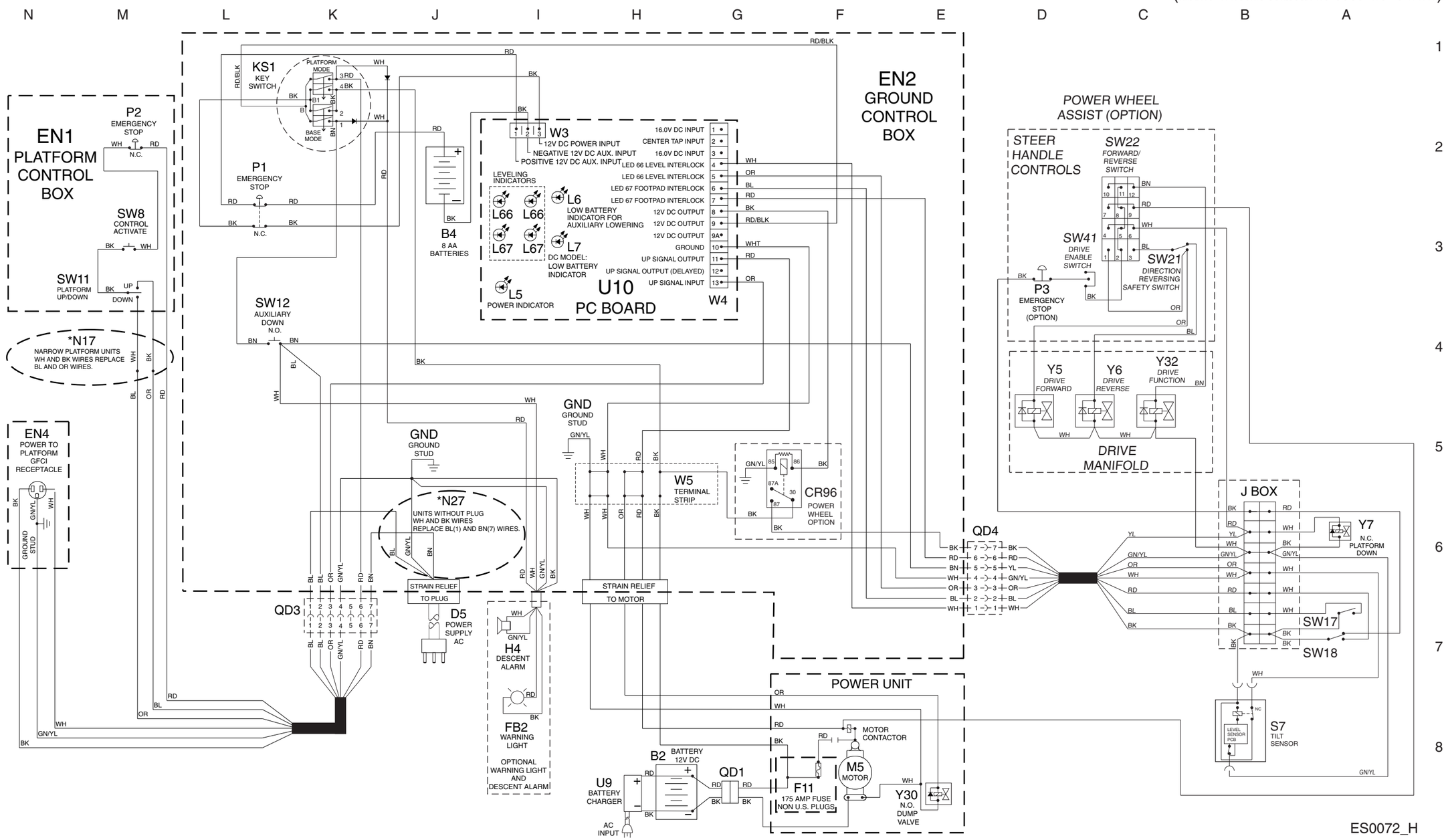

https://truckmanualshub.com/
www.truck-freeworkshop.com

Electrical Schematic

IWP Super Series DC Models
(after serial number IWP07-7065)

ABBREVIATION LEGEND	
Item	**Description**
B1	Battery
	B2 = 12V DC B4 = 8 AA batteries
D5	Power supply AC
EN	Enclosure
	EN1 = Platform control box EN2 = Ground control box EN4 = Power to platform GFCI receptacle
GND	Ground
KS1	Key switch - ground/platform
L	Led or light
	L5 = Power indicator (ground) L6 = Low battery indicator for auxiliary (ground) L7 = Low battery indicator – main (ground) L12 = Outrigger – front left (ground) L13 = Outrigger – front right (ground) L14 = Outrigger – rear left (ground) L15 = Outrigger – rear right (ground)
LS1	Limit switch - platform extension (option)
M5	Hydraulic power unit
*N17	Narrow platform units: WH and BK wires replace BL and OR wires
N.C.	Normally closed
N.O.	Normally open
P	Power switch
	P1 = Emergency Stop button at ground controls P2 = Emergency Stop button at platform controls P3 = Emergency Stop button at steer handle controls
QD	Quick disconnect
	QD3 = Control cable – to platform control box QD4 = Control cable – to base QD7 = Control cable – to motor
S7	Tilt sensor
SW	Switch
	SW 8 = Control activate SW11 = Platform up/down SW12 = Auxiliary down SW17 = Foot pad, left side SW18 = Foot pad, right side SW21 = Direction – reversing safety switch SW22 = Forward/Reverse switch SW24 = Lift enable
U	Electronic component
	U10 = PC board
W	Wiring component
	W3 = Terminal strip – 3 pole 3 pin (U10) W4 = Terminal strip – 14 pole 14 pin (U10) W6 = Terminal strip – 10 pole 20 pin (base)
Y	Valve coil
	Y5 = Drive forward Y6 = Drive reverse Y7 = Platform down Y30 = Normally open dump valve Y32 = Function solenoid

WIRE COLOR LEGEND	
Color	**Description**
BL	Blue
BK	Black
GN	Green
GN/YL	Green/Yellow
OR	Orange
RD	Red
WH	White
YL	Yellow

Note: Use these 2 legends for the schematic on the opposing page.

www.truck-freeworkshop.com
https://truckmanualshub.com/

Electrical Schematic

IWP Super Series DC Models with Power Assist

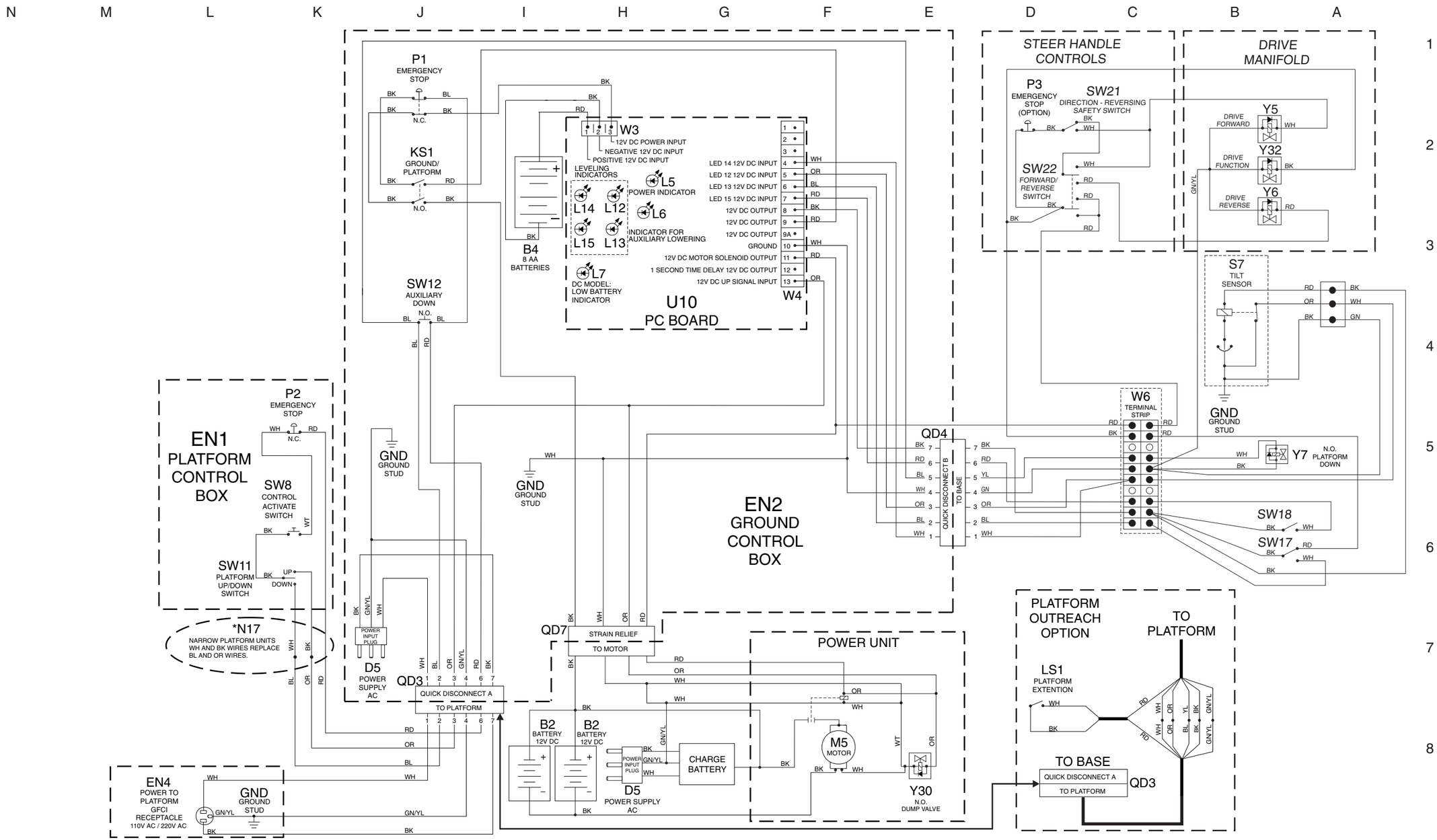

www.truck-freeworkshop.com https://truckmanualshub.com/

Electrical Schematic

IWP Super Series DC Models with Power Assist

ABBREVIATION LEGEND	
Item	**Description**
B1	Battery
	B2 = 12V DC
	B4 = 8 AA batteries
D5	Power supply AC
EN	Enclosure
	EN1 = Platform control box
	EN2 = Ground control box
	EN4 = Power to platform GFCI receptacle
F1	15A fuse
GND	Ground
KS1	Key switch - ground/platform
L	Led or light
	L5 = Power indicator (ground)
	L6 = Low battery indicator for auxiliary (ground)
	L7 = Low battery indicator – main (ground)
	L12 = Outrigger – front left (ground)
	L13 = Outrigger – front right (ground)
	L14 = Outrigger – rear left (ground)
	L15 = Outrigger – rear right (ground)
LS1	Limit switch - platform extension (option)
M5	Hydraulic power unit
*N17	Narrow platform units: WH and BK wires replace BL and OR wires
N.C.	Normally closed
N.O.	Normally open
P	Power switch
	P1 = Emergency Stop button at ground controls
	P2 = Emergency Stop button at platform controls
	P3 = Emergency Stop button at steer handle controls
QD	Quick disconnect
	QD3 = Control cable – to platform control box
	QD4 = Control cable – to base
	QD7 = Control cable – to motor
S7	Tilt sensor
SW	Switch
	SW 8 = Control activate
	SW11 = Platform up/down
	SW12 = Auxiliary down
	SW17 = Foot pad, left side
	SW18 = Foot pad, right side
	SW21 = Direction – reversing safety switch
	SW22 = Forward/Reverse switch
	SW24 = Lift enable
U	Electronic component
	U10 = PC board
W	Wiring component
	W3 = Terminal strip – 3 pole 3 pin (U10)
	W4 = Terminal strip – 14 pole 14 pin (U10)
	W6 = Terminal strip – 10 pole 20 pin (base)
Y	Valve coil
	Y5 = Drive forward
	Y6 = Drive reverse
	Y7 = Platform down
	Y30 = Normally open dump valve
	Y32 = Function solenoid

WIRE COLOR LEGEND	
Color	**Description**
BL	Blue
BK	Black
GN	Green
GN/YL	Green/Yellow
OR	Orange
RD	Red
WH	White
YL	Yellow

Note: Use these 2 legends for the schematic on the opposing page.

www.truck-freeworkshop.com https://truckmanualshub.com/

Electrical Schematic

IWP Super Series DC Models with Power Assist
(Directional Valve Coils Powering Function Solenoid)

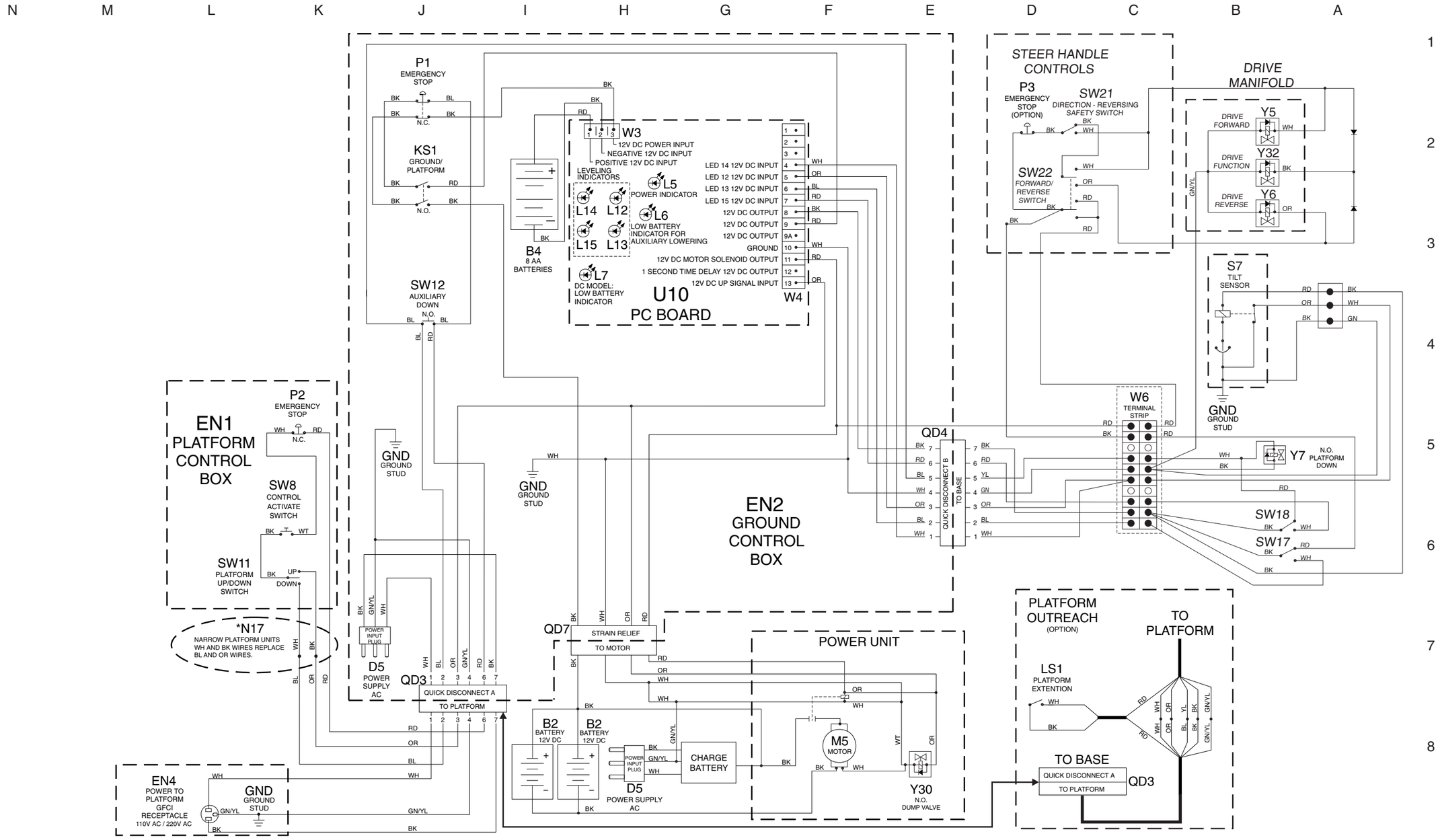

https://truckmanualshub.com/
www.truck-freeworkshop.com

Electrical Schematic

IWP Super Series DC Models with Power Assist (Directional Valve Coils Powering Function Solenoid)

ABBREVIATION LEGEND	
Item	**Description**
B	Battery
	B2 = 12V DC
	B4 = 8 AA batteries
D5	Power supply AC
EN	Enclosure
	EN1 = Platform control box
	EN2 = Ground control box
	EN4 = Power to platform GFCI receptacle
F1	15A fuse
GND	Ground
KS1	Key switch - ground/platform
L	Led or light
	L5 = Power indicator (ground)
	L6 = Low battery indicator for auxiliary (ground)
	L7 = Low battery indicator – main (ground)
	L12 = Outrigger – front left (ground)
	L13 = Outrigger – front right (ground)
	L14 = Outrigger – rear left (ground)
	L15 = Outrigger – rear right (ground)
LS1	Limit switch - platform extension (option)
M5	Hydraulic power unit
*N17	Narrow platform units: WH and BK wires replace BL and OR wires
N.C.	Normally closed
N.O.	Normally open
P	Power switch
	P1 = Emergency Stop button at ground controls
	P2 = Emergency Stop button at platform controls
QD	Quick disconnect
	QD3 = Control cable – to platform control box
	QD4 = Control cable – to base
	QD7 = Control cable – to motor
S7	Tilt sensor
SW	Switch
	SW 8 = Control activate
	SW11 = Platform up/down
	SW12 = Auxiliary down
	SW17 = Foot pad, left side
	SW18 = Foot pad, right side
	SW24 = Lift enable
U	Electronic component
	U10 = PC board
W	Wiring component
	W3 = Terminal strip – 3 pole 3 pin (U10)
	W4 = Terminal strip – 14 pole 14 pin (U10)
	W6 = Terminal strip – 10 pole 20 pin (base)
Y	Valve coil
	Y7 = Platform down
	Y30 = Normally open dump valve

WIRE COLOR LEGEND	
Color	**Description**
BL	Blue
BK	Black
GN	Green
GN/YL	Green/Yellow
OR	Orange
RD	Red
WH	White
YL	Yellow

Note: Use these 2 legends for the schematic on the opposing page.

www.truck-freeworkshop.com https://truckmanualshub.com/

Electrical Schematic

IWP Super Series DC TUV Models

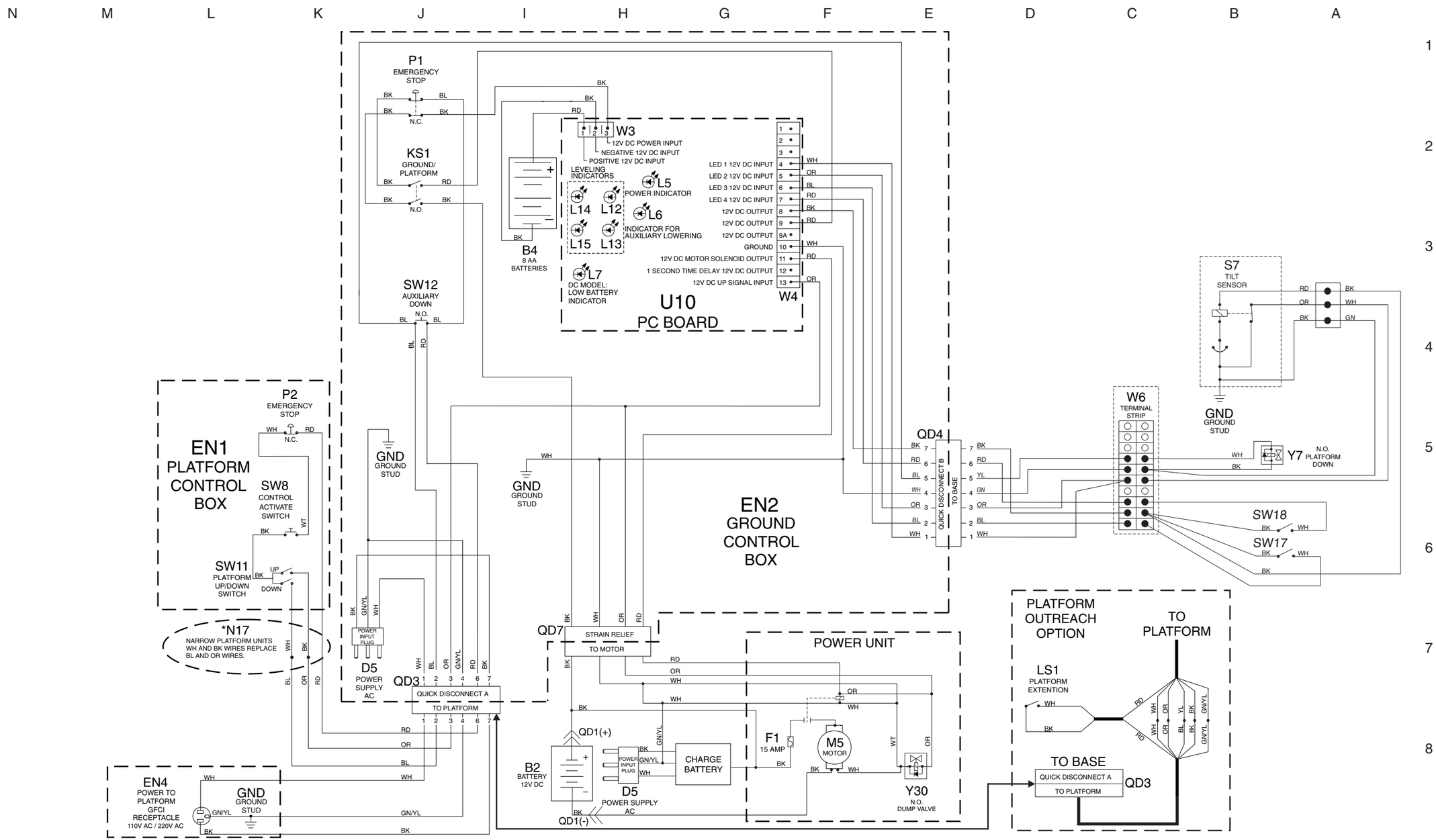

https://truckmanualshub.com/
www.truck-freeworkshop.com

Electrical Schematic

IWP Super Series DC TUV Models

ABBREVIATION LEGEND	
Item	**Description**
B	Battery
	B2 = 12V DC
	B4 = 8 AA batteries
D5	Power supply AC
EN	Enclosure
	EN1 = Platform control box
	EN2 = Ground control box
	EN4 = Power to platform GFCI receptacle
F1	15A fuse
GND	Ground
KS1	Key switch - ground/platform
L	Led or light
	L5 = Power indicator (ground)
	L6 = Low battery indicator for auxiliary (ground)
	L7 = Low battery indicator – main (ground)
	L12 = Outrigger – front left (ground)
	L13 = Outrigger – front right (ground)
	L14 = Outrigger – rear left (ground)
	L15 = Outrigger – rear right (ground)
LS1	Limit switch - platform extension (option)
M5	Hydraulic power unit
*N17	Narrow platform units:
	WH and BK wires replace BL and OR wires
N.C.	Normally closed
N.O.	Normally open
P	Power switch
	P1 = Emergency Stop button at ground controls
	P2 = Emergency Stop button at platform controls
QD	Quick disconnect
	QD3 = Control cable – to platform control box
	QD4 = Control cable – to base
	QD7 = Control cable – to motor
S7	Tilt sensor
SW	Switch
	SW 8 = Control activate
	SW11 = Platform up/down
	SW12 = Auxiliary down
	SW17 = Foot pad, left side
	SW18 = Foot pad, right side
	SW24 = Lift enable
U	Electronic component
	U10 = PC board
W	Wiring component
	W3 = Terminal strip – 3 pole 3 pin (U10)
	W4 = Terminal strip – 14 pole 14 pin (U10)
	W6 = Terminal strip – 10 pole 20 pin (base)
Y	Valve coil
	Y7 = Platform down
	Y30 = Normally open dump valve

WIRE COLOR LEGEND	
Color	**Description**
BL	Blue
BK	Black
GN	Green
GN/YL	Green/Yellow
OR	Orange
RD	Red
WH	White
YL	Yellow

Note: Use these 2 legends for the schematic on the opposing page.

www.truck-freeworkshop.com https://truckmanualshub.com/

Electrical Schematic

IWP Super Series DC TUV Models with Outreach

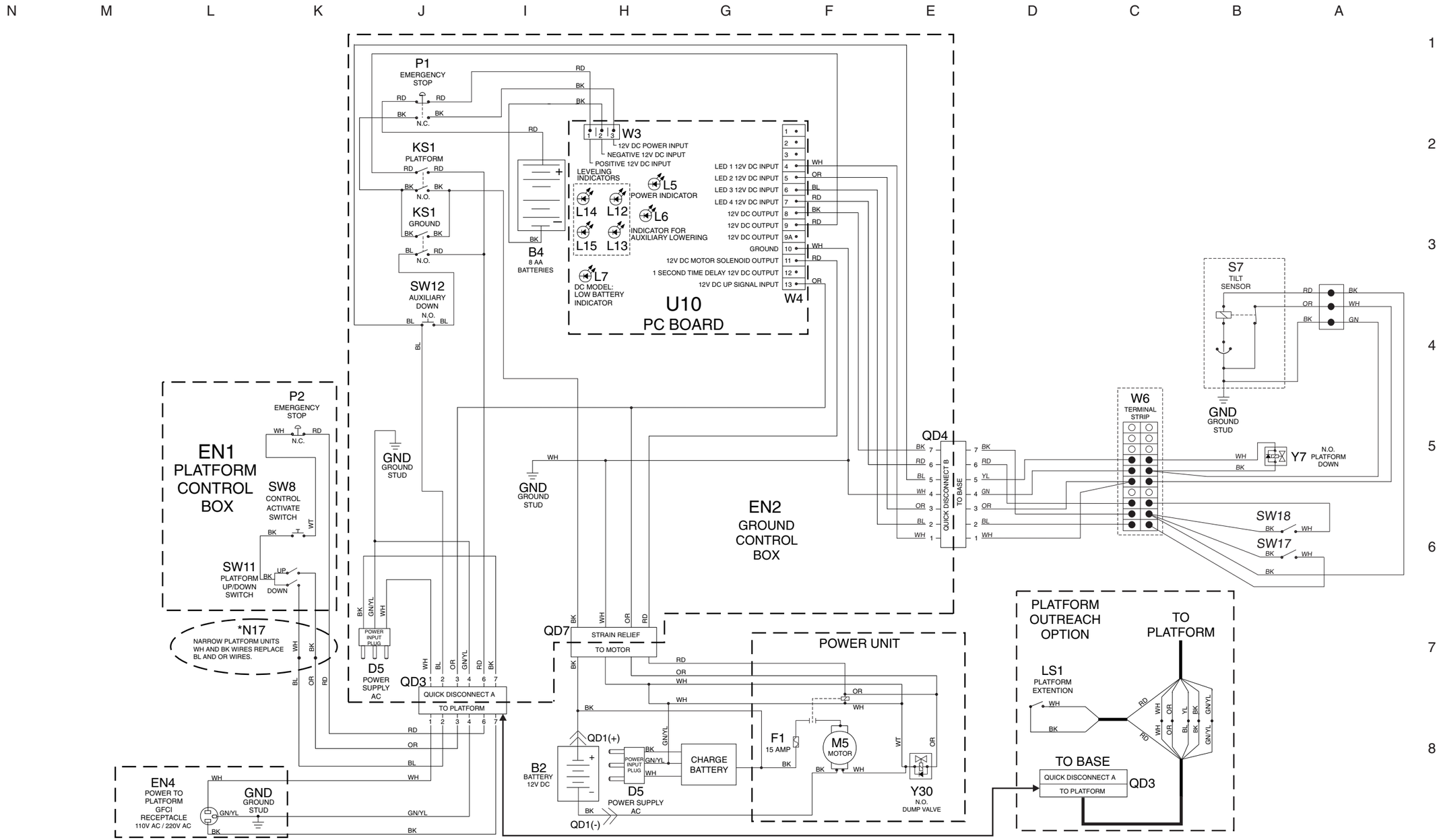

https://truckmanualshub.com/
www.truck-freeworkshop.com

Electrical Schematic

IWP Super Series DC TUV Models with Outreach

ABBREVIATION LEGEND	
Item	**Description**
B1	Battery
	B2 = 12V DC
	B4 = 8 AA batteries
D5	Power supply AC
EN	Enclosure
	EN1 = Platform control box
	EN2 = Ground control box
	EN4 = Power to platform GFCI receptacle
F1	15A fuse
GND	Ground
KS1	Key switch - ground/platform
L	Led or light
	L5 = Power indicator (ground)
	L6 = Low battery indicator for auxiliary (ground)
	L7 = Low battery indicator – main (ground)
	L12 = Outrigger – front left (ground)
	L13 = Outrigger – front right (ground)
	L14 = Outrigger – rear left (ground)
	L15 = Outrigger – rear right (ground)
LS1	Limit switch - platform extension (option)
M5	Hydraulic power unit
*N17	Narrow platform units: WH and BK wires replace BL and OR wires
N.C.	Normally closed
N.O.	Normally open
P	Power switch
	P1 = Emergency Stop button at ground controls
	P2 = Emergency Stop button at platform controls
	P3 = Emergency Stop button at steer handle controls
QD	Quick disconnect
	QD3 = Control cable – to platform control box
	QD4 = Control cable – to base
	QD7 = Control cable – to motor
S7	Tilt sensor
SW	Switch
	SW 8 = Control activate
	SW11 = Platform up/down
	SW12 = Auxiliary down
	SW17 = Foot pad, left side
	SW18 = Foot pad, right side
	SW21 = Direction – reversing safety switch
	SW22 = Forward/Reverse switch
	SW24 = Lift enable
U	Electronic component
	U10 = PC board
W	Wiring component
	W3 = Terminal strip – 3 pole 3 pin (U10)
	W4 = Terminal strip – 14 pole 14 pin (U10)
	W6 = Terminal strip – 10 pole 20 pin (base)
Y	Valve coil
	Y5 = Drive forward
	Y6 = Drive reverse
	Y7 = Platform down
	Y30 = Normally open dump valve
	Y32 = Function solenoid

WIRE COLOR LEGEND	
Color	**Description**
BL	Blue
BK	Black
GN	Green
GN/YL	Green/Yellow
OR	Orange
RD	Red
WH	White
YL	Yellow

Note: Use these 2 legends for the schematic on the opposing page.

www.truck-freeworkshop.com
https://truckmanualshub.com/

Electrical Schematic

IWP Super Series DC TUV Models with Power Assist

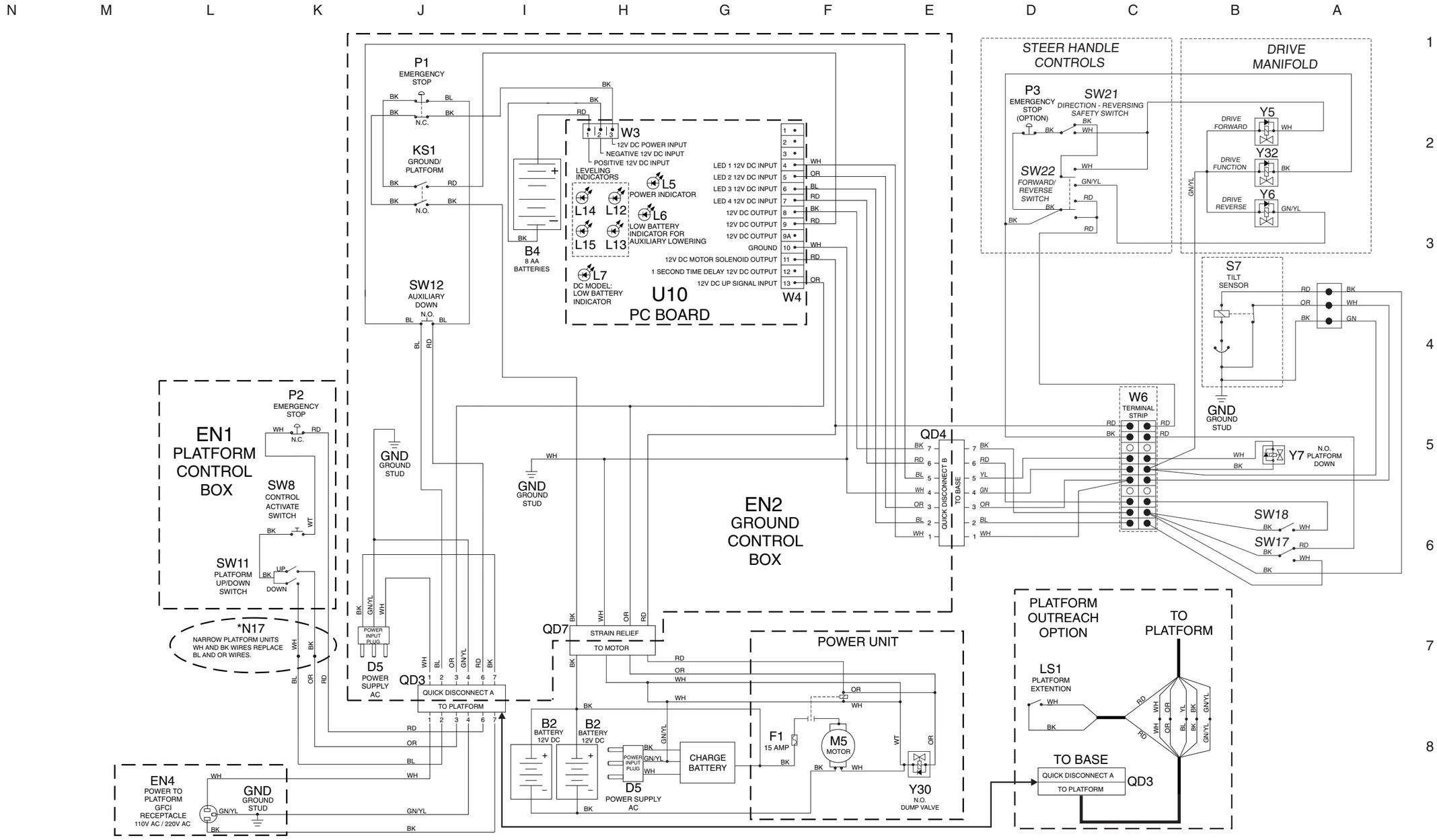

https://truckmanualshub.com/
www.truck-freeworkshop.com

Electrical Schematic

IWP Super Series DC TUV Models with Power Assist

ABBREVIATION LEGEND	
Item	**Description**
B1	Battery
	B2 = 12V DC B4 = 8 AA batteries
D5	Power supply AC
EN	Enclosure
	EN1 = Platform control box EN2 = Ground control box EN4 = Power to platform GFCI receptacle
F1	15A fuse
GND	Ground
KS1	Key switch - ground/platform
L	Led or light
	L5 = Power indicator (ground) L6 = Low battery indicator for auxiliary (ground) L7 = Low battery indicator – main (ground) L12 = Outrigger – front left (ground) L13 = Outrigger – front right (ground) L14 = Outrigger – rear left (ground) L15 = Outrigger – rear right (ground)
LS1	Limit switch - platform extension (option)
M5	Hydraulic power unit
*N17	Narrow platform units: WH and BK wires replace BL and OR wires
N.C.	Normally closed
N.O.	Normally open
P	Power switch
	P1 = Emergency Stop button at ground controls P2 = Emergency Stop button at platform controls P3 = Emergency Stop button at steer handle controls
QD	Quick disconnect
	QD3 = Control cable – to platform control box QD4 = Control cable – to base QD7 = Control cable – to motor
S7	Tilt sensor
SW	Switch
	SW 8 = Control activate SW11 = Platform up/down SW12 = Auxiliary down SW17 = Foot pad, left side SW18 = Foot pad, right side SW21 = Direction – reversing safety switch SW22 = Forward/Reverse switch SW24 = Lift enable
U	Electronic component
	U10 = PC board
W	Wiring component
	W3 = Terminal strip – 3 pole 3 pin (U10) W4 = Terminal strip – 14 pole 14 pin (U10) W6 = Terminal strip – 10 pole 20 pin (base)
Y	Valve coil
	Y5 = Drive forward Y6 = Drive reverse Y7 = Platform down Y30 = Normally open dump valve Y32 = Function solenoid

WIRE COLOR LEGEND	
Color	**Description**
BL	Blue
BK	Black
GN	Green
GN/YL	Green/Yellow
OR	Orange
RD	Red
WH	White
YL	Yellow

Note: Use these 2 legends for the schematic on the opposing page.

https://truckmanualshub.com/
www.truck-freeworkshop.com

Electrical Schematic

IWP Super Series DC TUV Models with Power Assist and Outreach

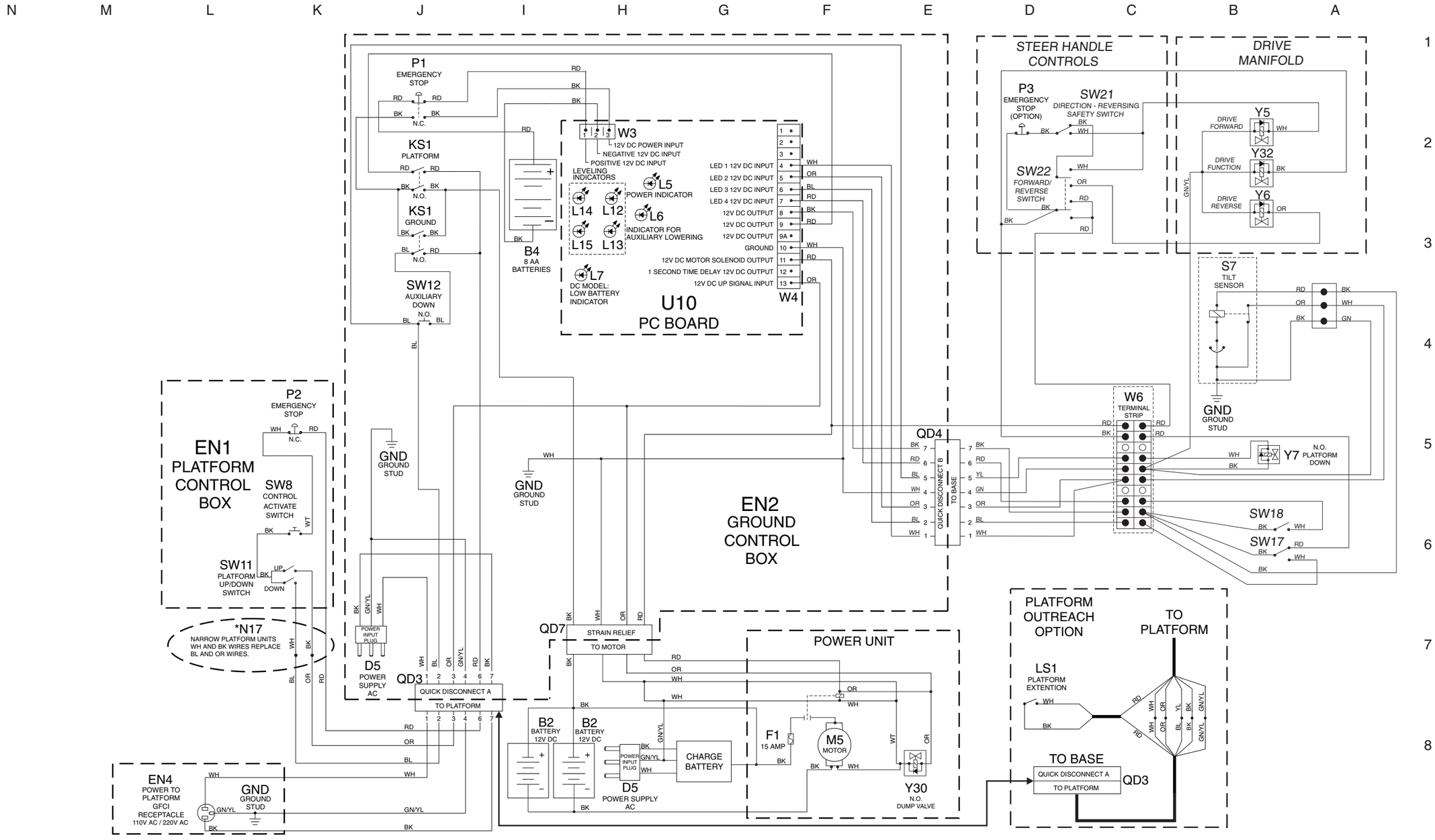

https://truckmanualshub.com/
www.truck-freeworkshop.com

Electrical Schematic

IWP Super Series DC TUV Models with Power Assist and Outreach

ABBREVIATION LEGEND	
Item	**Description**
B1	Battery
	B2 = 12V DC B4 = 8 AA batteries
D5	Power supply AC
EN	Enclosure
	EN1 = Platform control box EN2 = Ground control box EN4 = Power to platform GFCI receptacle
F1	15A fuse
GND	Ground
KS1	Key switch - ground/platform
L	Led or light
	L5 = Power indicator (ground) L6 = Low battery indicator for auxiliary (ground) L7 = Low battery indicator – main (ground) L12 = Outrigger – front left (ground) L13 = Outrigger – front right (ground) L14 = Outrigger – rear left (ground) L15 = Outrigger – rear right (ground)
LS1	Limit switch - platform extension (option)
M5	Hydraulic power unit
*N17	Narrow platform units: WH and BK wires replace BL and OR wires
N.C.	Normally closed
N.O.	Normally open
P	Power switch
	P1 = Emergency Stop button at ground controls P2 = Emergency Stop button at platform controls P3 = Emergency Stop button at steer handle controls
QD	Quick disconnect
	QD3 = Control cable – to platform control box QD4 = Control cable – to base QD7 = Control cable – to motor
S7	Tilt sensor
SW	Switch
	SW 8 = Control activate SW11 = Platform up/down SW12 = Auxiliary down SW17 = Foot pad, left side SW18 = Foot pad, right side SW21 = Direction – reversing safety switch SW22 = Forward/Reverse switch SW24 = Lift enable
U	Electronic component
	U10 = PC board
W	Wiring component
	W3 = Terminal strip – 3 pole 3 pin (U10) W4 = Terminal strip – 14 pole 14 pin (U10) W6 = Terminal strip – 10 pole 20 pin (base)
Y	Valve coil
	Y5 = Drive forward Y6 = Drive reverse Y7 = Platform down Y30 = Normally open dump valve Y32 = Function solenoid

WIRE COLOR LEGEND	
Color	**Description**
BL	Blue
BK	Black
GN	Green
GN/YL	Green/Yellow
OR	Orange
RD	Red
WH	White
YL	Yellow

Note: Use these 2 legends for the schematic on the opposing page.

www.truck-freeworkshop.com https://truckmanualshub.com/

Electrical Schematic

IWP Super Series DC TUV Models with Power Assist
(Directional Valve Coils Powering Function Solenoid)

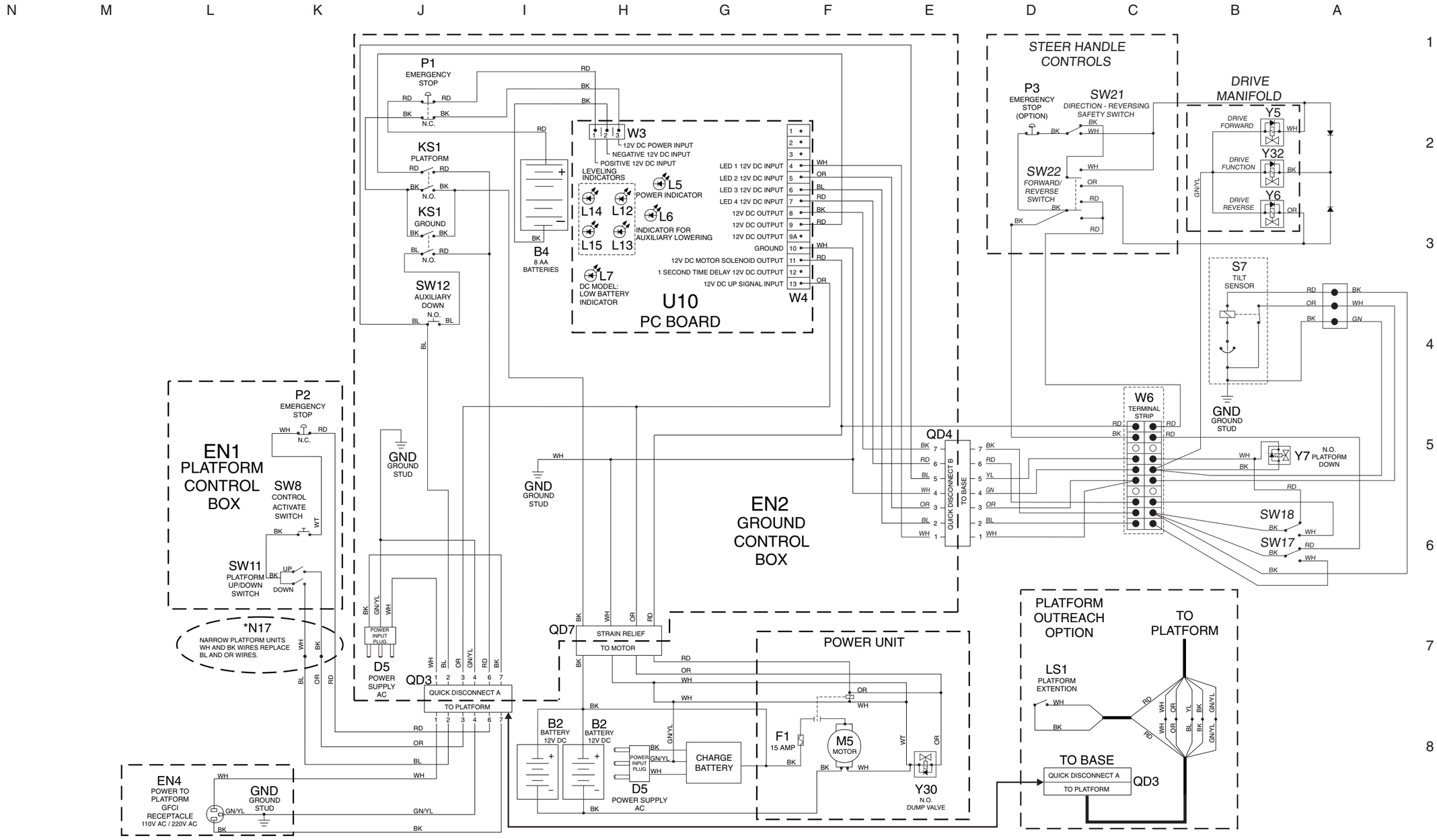

https://truckmanualshub.com/
www.truck-freeworkshop.com

Electrical Schematic

IWP Super Series DC TUV Models with Power Assist (Directional Valve Coils Powering Function Solenoid)

ABBREVIATION LEGEND	
Item	**Description**
B	Battery
	B4 = 8 AA batteries
CB1	15A circuit breaker
D5	Power supply AC
EN	Enclosure
	EN1 = Platform control box EN2 = Ground control box EN4 = Power to platform GFCI receptacle
GND	Ground
KS1	Key switch - ground/platform
L	Led or light
	L5 = Power indicator (ground) L6 = Low battery indicator for auxiliary (ground) L7 = Low battery indicator – main (ground) L12 = Outrigger – front left (ground) L13 = Outrigger – front right (ground) L14 = Outrigger – rear left (ground) L15 = Outrigger – rear right (ground)
LS1	Limit switch - platform extension (option)
M5	Hydraulic power unit
N.C.	Normally closed
N.O.	Normally open
P	Power switch
	P1 = Emergency Stop button at ground controls P2 = Emergency Stop button at platform controls
QD	Quick disconnect
	QD3 = Control cable – to platform control box QD4 = Control cable – to base QD7 = Control cable – to motor
S7	Tilt sensor
SW	Switch
	SW 8 = Control activate SW11 = Platform up/down SW12 = Auxiliary down SW17 = Foot pad, left side SW18 = Foot pad, right side SW24 = Lift enable
U	Electronic component
	U9 = Transformer U10 = PC board U12 = Thermal device
W	Wiring component
	W3 = Terminal strip – 3 pole 3 pin (U10) W4 = Terminal strip – 14 pole 14 pin (U10) W6 = Terminal strip – 10 pole 20 pin (base)
Y	Valve coil
	Y7 = Platform down Y30 = Normally open dump valve

WIRE COLOR LEGEND	
Color	**Description**
BL	Blue
BN	Brown
BK	Black
GN	Green
GN/YL	Green/Yellow
OR	Orange
RD	Red
RD/YL	Red/Yellow
WH	White
WH/BK	White/Black
YL	Yellow

Note: Use these 2 legends for the schematic on the opposing page.

www.truck-freeworkshop.com
https://truckmanualshub.com/

Electrical Schematic

IWP Super Series AC Models
(from serial number 4096-105 to 4096-285)

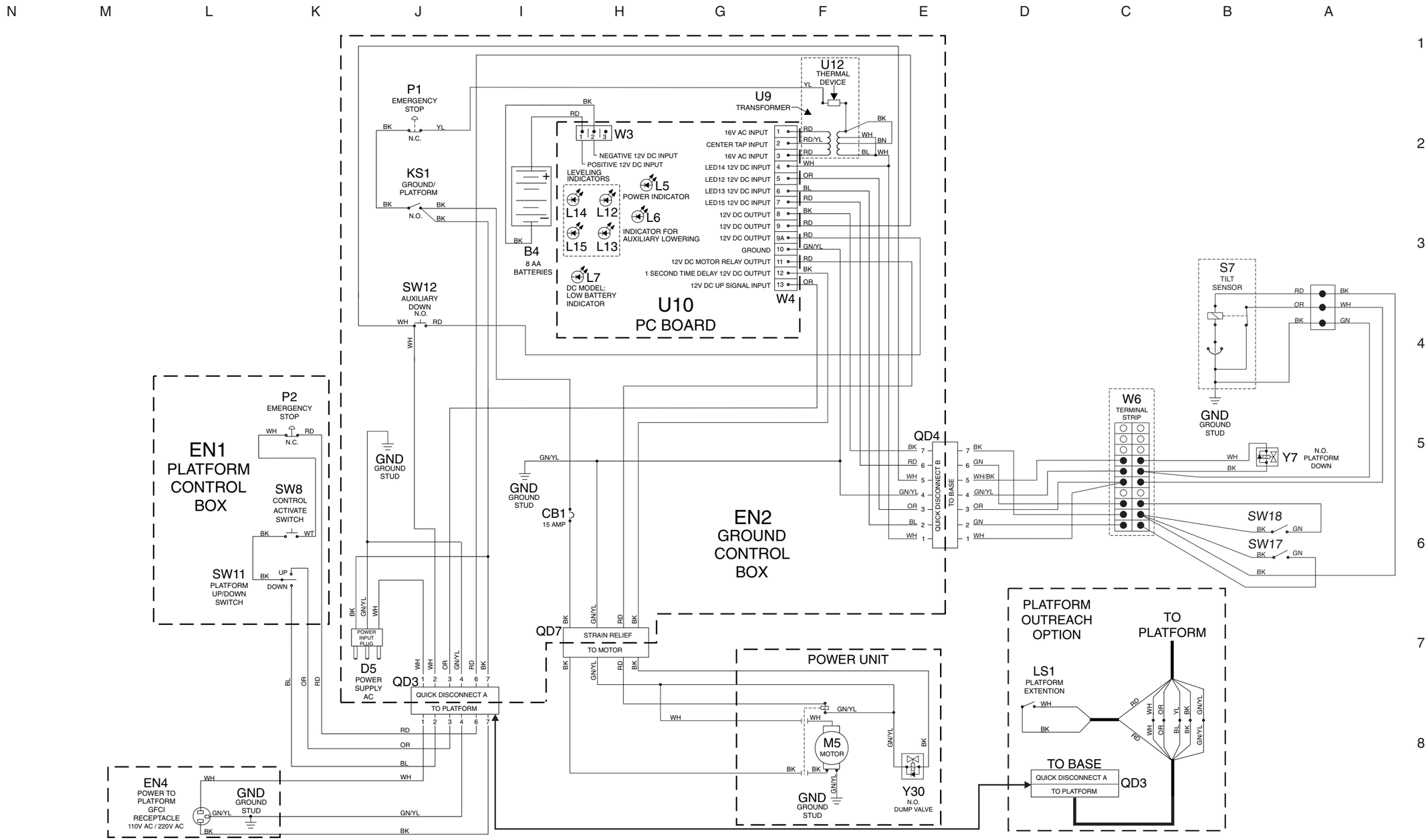

https://truckmanualshub.com/
www.truck-freeworkshop.com

Electrical Schematic

IWP Super Series AC Models
(from serial number 4096-105 to 4096-285)

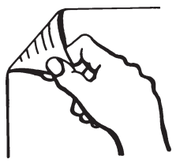

ABBREVIATION LEGEND	
Item	**Description**
B	Battery
	B4 = 8 AA batteries
CB1	15A circuit breaker
D5	Power supply AC
EN	Enclosure
	EN1 = Platform control box EN2 = Ground control box EN4 = Power to platform GFCI receptacle
GND	Ground
KS1	Key switch - ground/platform
L	Led or light
	L5 = Power indicator (ground) L6 = Low battery indicator for auxiliary (ground) L7 = Low battery indicator – main (ground) L12 = Outrigger – front left (ground) L13 = Outrigger – front right (ground) L14 = Outrigger – rear left (ground) L15 = Outrigger – rear right (ground)
LS1	Limit switch - platform extension (option)
M5	Hydraulic power unit
N.C.	Normally closed
N.O.	Normally open
P	Power switch
	P1 = Emergency Stop button at ground controls P2 = Emergency Stop button at platform controls
QD	Quick disconnect
	QD3 = Control cable – to platform control box QD4 = Control cable – to base QD7 = Control cable – to motor
S7	Tilt sensor
SW	Switch
	SW 8 = Control activate SW11 = Platform up/down SW12 = Auxiliary down SW17 = Foot pad, left side SW18 = Foot pad, right side SW24 = Lift enable
U	Electronic component
	U9 = Transformer U10 = PC board U12 = Thermal device
W	Wiring component
	W3 = Terminal strip – 3 pole 3 pin (U10) W4 = Terminal strip – 14 pole 14 pin (U10) W6 = Terminal strip – 10 pole 20 pin (base)
Y	Valve coil
	Y7 = Platform down Y30 = Normally open dump valve

WIRE COLOR LEGEND	
Color	**Description**
BL	Blue
BK	Black
BN	Brown
GN	Green
GN/YL	Green/Yellow
OR	Orange
RD	Red
RD/YL	Red/Yellow
WH	White
WH/BK	White/Black
YL	Yellow

Note: Use these 2 legends for the schematic on the opposing page.

www.truck-freeworkshop.com https://truckmanualshub.com/

Electrical Schematic

IWP Super Series AC Models
(from serial number 4096-286 to 4096-355)

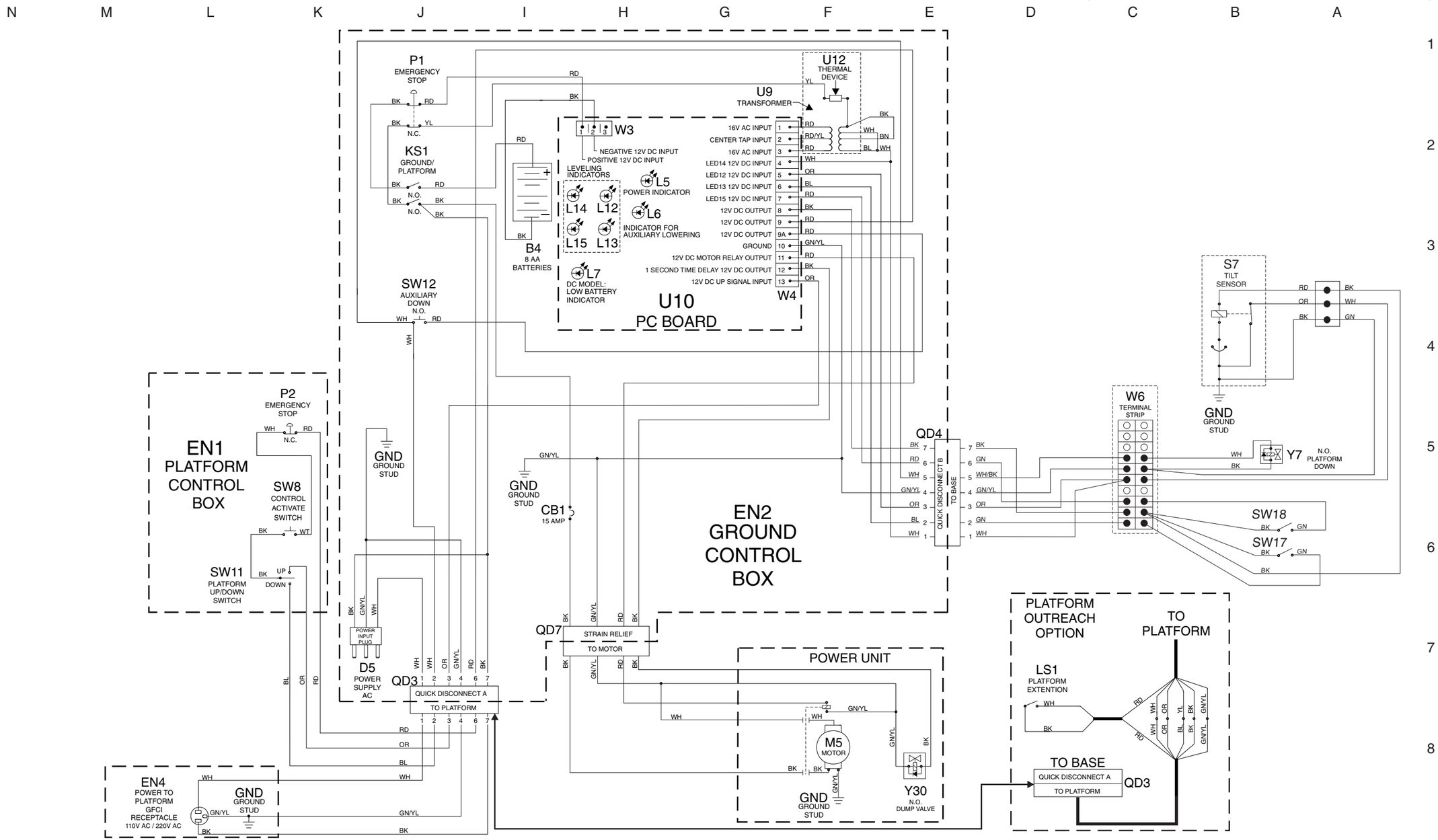

https://truckmanualshub.com/
www.truck-freeworkshop.com

Electrical Schematic

IWP Super Series AC Models
(from serial number 4096-286 to 4096-355)

ABBREVIATION LEGEND	
Item	**Description**
B	Battery
	B4 = 8 AA batteries
CB1	15A circuit breaker
D5	Power supply AC
EN	Enclosure
	EN1 = Platform control box EN2 = Ground control box EN4 = Power to platform GFCI receptacle
GND	Ground
KS1	Key switch - ground/platform
L	Led or light
	L5 = Power indicator (ground) L6 = Low battery indicator for auxiliary (ground) L7 = Low battery indicator – main (ground) L12 = Outrigger – front left (ground) L13 = Outrigger – front right (ground) L14 = Outrigger – rear left (ground) L15 = Outrigger – rear right (ground)
LS1	Limit switch - platform extension (option)
M5	Hydraulic power unit
N.C.	Normally closed
N.O.	Normally open
P	Power switch
	P1 = Emergency Stop button at ground controls P2 = Emergency Stop button at platform controls
QD	Quick disconnect
	QD3 = Control cable – to platform control box QD4 = Control cable – to base QD7 = Control cable – to motor
S7	Tilt sensor
SW	Switch
	SW 8 = Control activate SW11 = Platform up/down SW12 = Auxiliary down SW17 = Foot pad, left side SW18 = Foot pad, right side SW24 = Lift enable
U	Electronic component
	U9 = Transformer U10 = PC board U12 = Thermal device
W	Wiring component
	W3 = Terminal strip – 3 pole 3 pin (U10) W4 = Terminal strip – 14 pole 14 pin (U10) W6 = Terminal strip – 10 pole 20 pin (base)
Y	Valve coil
	Y7 = Platform down Y30 = Normally open dump valve

WIRE COLOR LEGEND	
Color	**Description**
BL	Blue
BK	Black
BN	Brown
GN	Green
GN/YL	Green/Yellow
OR	Orange
RD	Red
RD/YL	Red/Yellow
WH	White
WH/BK	White/Black
YL	Yellow

Note: Use these 2 legends for the schematic on the opposing page.

www.truck-freeworkshop.com https://truckmanualshub.com/

Electrical Schematic

IWP Super Series AC Models
(from serial number 4096-356 to IWP07-7065)

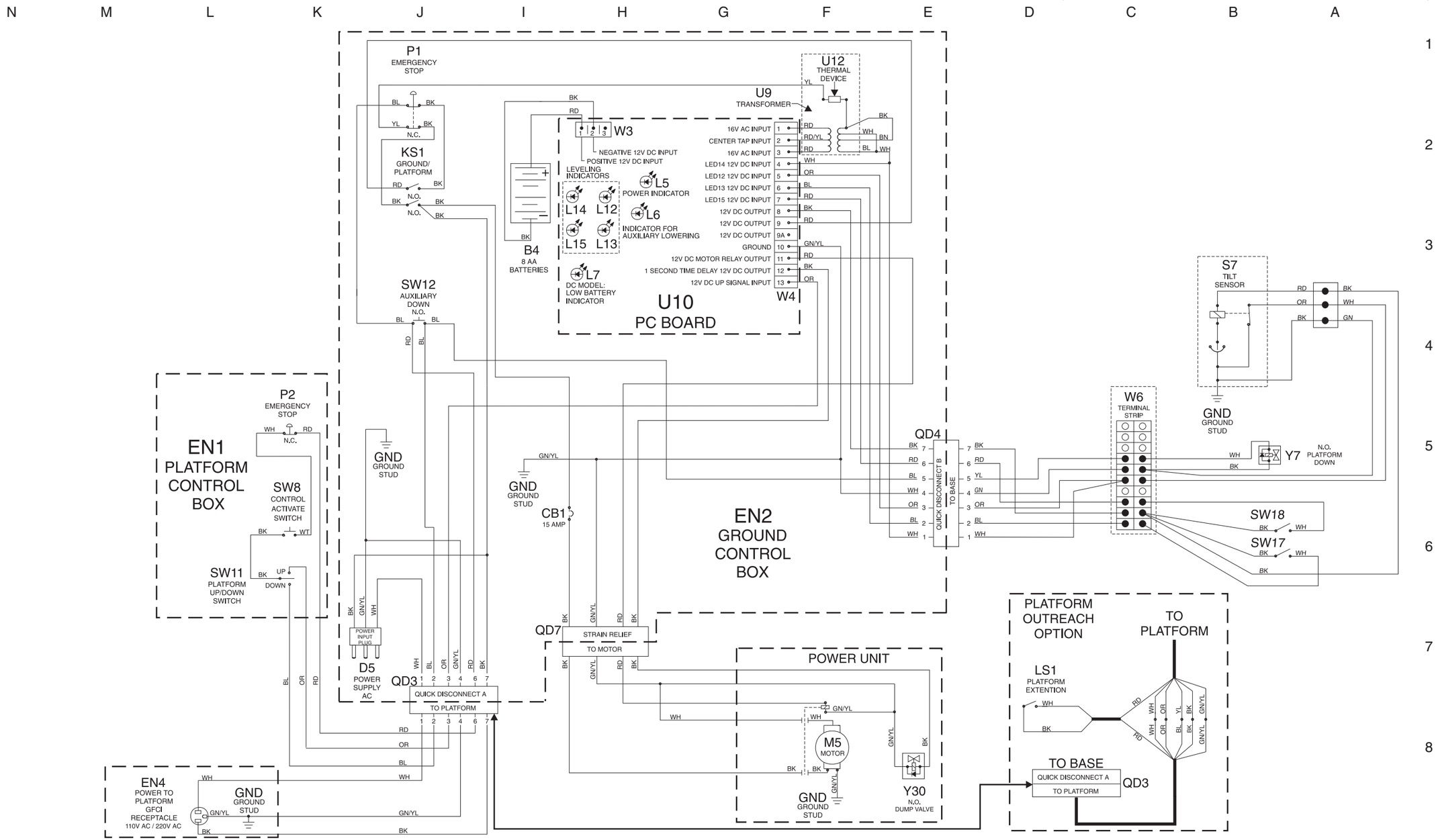

https://truckmanualshub.com/
www.truck-freeworkshop.com

Electrical Schematic

IWP Super Series AC Models
(from serial number 4096-356 to IWP07-7065)

ABBREVIATION LEGEND	
Item	**Description**
B	Battery
	B4 = 8 AA batteries
CB4	Circuit breaker, 15A-110V / 8A-220V
D5	Power supply AC
EN	Enclosure
	EN1 = Platform control box EN2 = Ground control box EN4 = Power to platform GFCI receptacle EN5 = Power unit – 110V AC EN6 = Power unit – 220V AC
FB2	Warning light
GND	Ground
H4	Descent alarm
KS1	Key switch - ground/platform
L	Led or light
	L5 = Power indicator (ground) L6 = Low battery indicator for auxiliary (ground) L7 = Low battery indicator – main (ground) L66 = Level sensor interlock L67 = Footpad interlock
M5	Hydraulic power unit
*N	Note with description *N7 = 110V AC terminal strip detail *N8 = 110V AC motor detail *N9 = 220V AC terminal strip detail *N10 = 220V AC motor detail *N17 = Narrow platform units: WH and BK wires replace BL and OR wires *N27 = Units with out plug: WH and BK wires replace BL and BN wires
N.C.	Normally closed
N.O.	Normally open
P	Power switch
	P1 = Emergency Stop button at ground controls P2 = Emergency Stop button at platform controls
PR	Power relay
	PR4 = Function pump (M5)
QD	Quick disconnect
	QD3 = Control cable – to platform control box QD4 = Control cable – to base
S7	Tilt sensor
SW	Switch
	SW 8 = Control activate SW11 = Platform up/down SW12 = Auxiliary down SW17 = Foot pad, left side SW18 = Foot pad, right side
U	Electronic component
	U9 = Transformer U10 = PC board
W	Wiring component
	W3 = Terminal strip – 3 pole 3 pin (U10) W4 = Terminal strip – 14 pole 14 pin (U10) W5 = Terminal strip – 7 pole 14 pin (base)
Y	Valve coil
	Y7 = Platform down Y30 = Normally open dump valve

WIRE COLOR LEGEND	
Color	**Description**
BL	Blue
BK	Black
BN	Brown
GN/YL	Green/Yellow
OR	Orange
RD	Red
RD/BK	Red/Black
RD/YL	Red/Yellow
WH	White
YL	Yellow

Note: Use these 2 legends for the schematic on the opposing page.

www.truck-freeworkshop.com https://truckmanualshub.com/

Electrical Schematic

IWP Super Series AC Models
(from serial number IWP07-7066 to IWP07-57594)

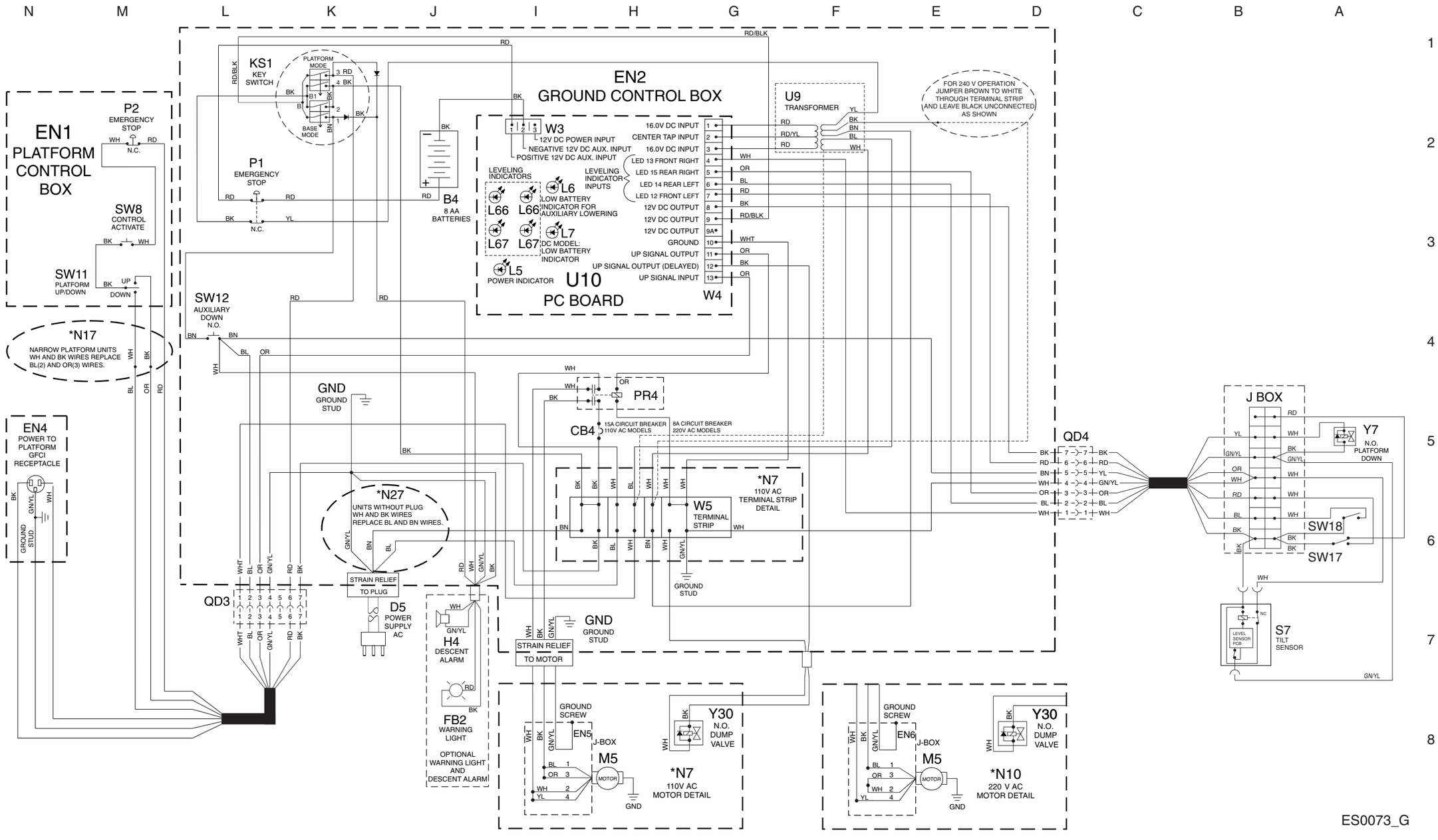

https://truckmanualshub.com/
www.truck-freeworkshop.com

Electrical Schematic

IWP Super Series AC Models
(from serial number IWP07-7066 to IWP07-57594)

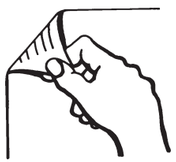

ABBREVIATION LEGEND	
Item	**Description**
B	Battery
	B4 = 8 AA batteries
CB4	Circuit breaker, 15A-110V / 8A-220V
D5	Power supply AC
EN	Enclosure
	EN1 = Platform control box EN2 = Ground control box EN4 = Power to platform GFCI receptacle EN5 = Power unit – 110V AC EN6 = Power unit – 220V AC
FB2	Warning light
GND	Ground
H4	Descent alarm
KS1	Key switch - ground/platform
L	Led or light
	L5 = Power indicator (ground) L6 = Low battery indicator for auxiliary (ground) L7 = Low battery indicator – main (ground) L66 = Level sensor interlock L67 = Footpad interlock
M5	Hydraulic power unit
*N	Note with description *N7 = 110V AC terminal strip detail *N8 = 110V AC motor detail *N9 = 220V AC terminal strip detail *N10 = 220V AC motor detail *N17 = Narrow platform units: WH and BK wires replace BL and OR wires *N27 = Units with out plug: WH and BK wires replace BL and BN wires
N.C.	Normally closed
N.O.	Normally open
P	Power switch
	P1 = Emergency Stop button at ground controls P2 = Emergency Stop button at platform controls
PR	Power relay
	PR4 = Function pump (M5)
QD	Quick disconnect
	QD3 = Control cable – to platform control box QD4 = Control cable – to base
S7	Tilt sensor
SW	Switch
	SW 8 = Control activate SW11 = Platform up/down SW12 = Auxiliary down SW17 = Foot pad, left side SW18 = Foot pad, right side
U	Electronic component
	U9 = Transformer U10 = PC board
W	Wiring component
	W3 = Terminal strip – 3 pole 3 pin (U10) W4 = Terminal strip – 14 pole 14 pin (U10) W5 = Terminal strip – 7 pole 14 pin (base)
Y	Valve coil
	Y7 = Platform down Y30 = Normally open dump valve

WIRE COLOR LEGEND	
Color	**Description**
BL	Blue
BK	Black
BN	Brown
GN/YL	Green/Yellow
OR	Orange
RD	Red
RD/BK	Red/Black
RD/YL	Red/Yellow
WH	White
YL	Yellow

Note: Use these 2 legends for the schematic on the opposing page.

www.truck-freeworkshop.com https://truckmanualshub.com/

Electrical Schematic

IWP Super Series AC Models
(after serial number IWP07-57594)

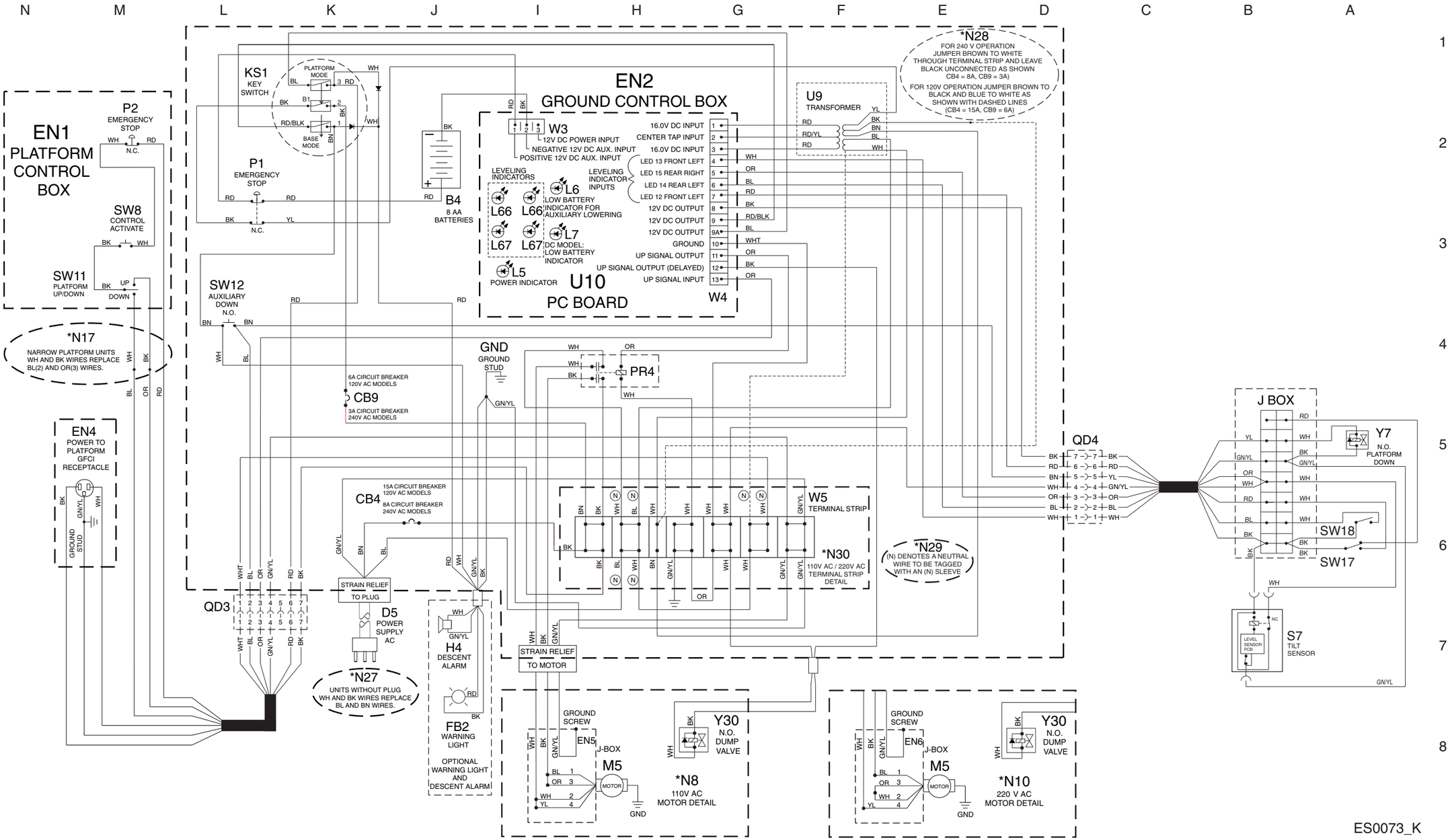

https://truckmanualshub.com/
www.truck-freeworkshop.com

Electrical Schematic

IWP Super Series AC Models
(after serial number IWP07-57594)

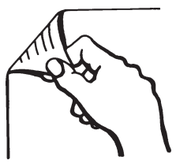

ABBREVIATION LEGEND	
Item	**Description**
B	Battery
	B4 = 8 AA batteries
CB1	15A circuit breaker
D5	Power supply AC
EN	Enclosure
	EN1 = Platform control box EN2 = Ground control box EN4 = Power to platform GFCI receptacle EN9 = Junction box (option)
GND	Ground
KS1	Key switch - ground/platform
L	Led or light
	L5 = Power indicator (ground) L6 = Low battery indicator for auxiliary (ground) L7 = Low battery indicator – main (ground) L12 = Outrigger – front left (ground) L13 = Outrigger – front right (ground) L14 = Outrigger – rear left (ground) L15 = Outrigger – rear right (ground)
LS1	Limit switch - platform extension (option)
M5	Hydraulic power unit
*N17	Narrow platform units: WH and BK wires replace BL and OR wires
N.C.	Normally closed
N.O.	Normally open
P	Power switch
	P1 = Emergency Stop button at ground controls P2 = Emergency Stop button at platform controls
QD	Quick disconnect
	QD3 = Control cable – to platform control box QD4 = Control cable – to base QD7 = Control cable – to motor
S7	Tilt sensor
SW	Switch
	SW 8 = Control activate SW11 = Platform up/down SW12 = Auxiliary down SW17 = Foot pad, left side SW18 = Foot pad, right side
U	Electronic component
	U9 = Transformer U10 = PC board U12 = Thermal device
W	Wiring component
	W3 = Terminal strip – 3 pole 3 pin (U10) W4 = Terminal strip – 14 pole 14 pin (U10) W6 = Terminal strip – 7 pole 7 pin (base)
Y	Valve coil
	Y7 = Platform down Y30 = Normally open dump valve

WIRE COLOR LEGEND	
Color	**Description**
BL	Blue
BN	Brown
BK	Black
GN	Green
GN/YL	Green/Yellow
OR	Orange
RD	Red
RD/YL	Red/Yellow
WH	White
YL	Yellow

Note: Use these 2 legends for the schematic on the opposing page.

www.truck-freeworkshop.com
https://truckmanualshub.com/

Electrical Schematic

IWP Super Series AC TUV Models with Base Mounted Junction Box

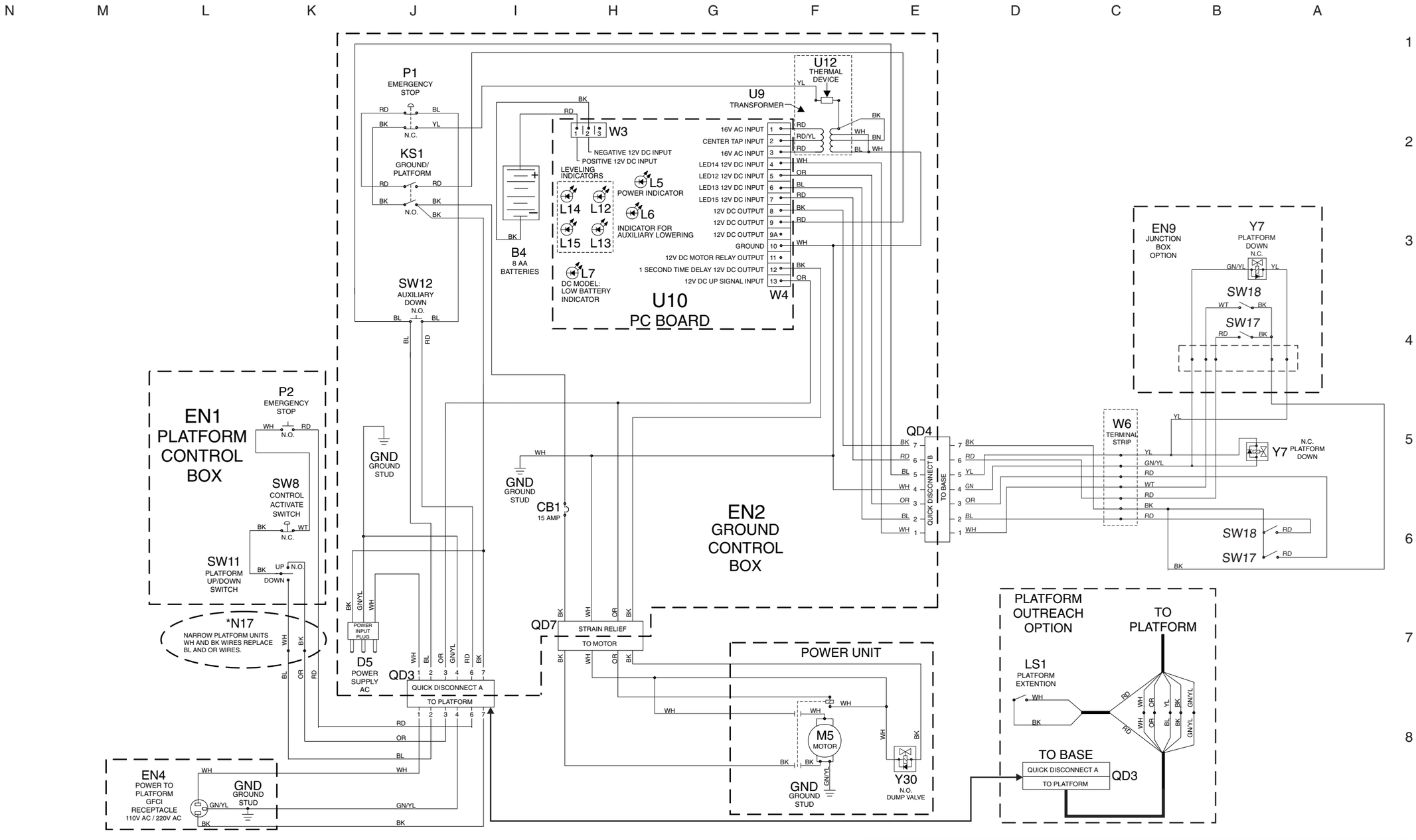

https://truckmanualshub.com/
www.truck-freeworkshop.com

Electrical Schematic

IWP Super Series AC TUV Models with Base Mounted Junction Box

ABBREVIATION LEGEND	
Item	**Description**
B	Battery
	B4 = 8 AA batteries
CB1	15A circuit breaker
D5	Power supply AC
EN	Enclosure
	EN1 = Platform control box EN2 = Ground control box EN4 = Power to platform GFCI receptacle
GND	Ground
KS1	Key switch - ground/platform
L	Led or light
	L5 = Power indicator (ground) L6 = Low battery indicator for auxiliary (ground) L7 = Low battery indicator – main (ground) L12 = Outrigger – front left (ground) L13 = Outrigger – front right (ground) L14 = Outrigger – rear left (ground) L15 = Outrigger – rear right (ground)
LS1	Limit switch - platform extension (option)
M5	Hydraulic power unit
*N17	Narrow platform units: WH and BK wires replace BL and OR wires
N.C.	Normally closed
N.O.	Normally open
P	Power switch
	P1 = Emergency Stop button at ground controls P2 = Emergency Stop button at platform controls
QD	Quick disconnect
	QD3 = Control cable – to platform control box QD4 = Control cable – to base QD7 = Control cable – to motor
S7	Tilt sensor
SW	Switch
	SW 8 = Control activate SW11 = Platform up/down SW12 = Auxiliary down SW17 = Foot pad, left side SW18 = Foot pad, right side SW24 = Lift enable
U	Electronic component
	U10 = PC board
W	Wiring component
	W3 = Terminal strip – 3 pole 3 pin (U10) W4 = Terminal strip – 14 pole 14 pin (U10) W6 = Terminal strip – 10 pole 20 pin (base)
Y	Valve coil
	Y7 = Platform down Y30 = Normally open dump valve

WIRE COLOR LEGEND	
Color	**Description**
BL	Blue
BN	Brown
BK	Black
GN	Green
GN/YL	Green/Yellow
OR	Orange
RD	Red
RD/YL	Red/Yellow
WH	White
YL	Yellow

Note: Use these 2 legends for the schematic on the opposing page.

www.truck-freeworkshop.com https://truckmanualshub.com/

Electrical Schematic

IWP Super Series AC TUV Models
without Base Mounted Junction Box

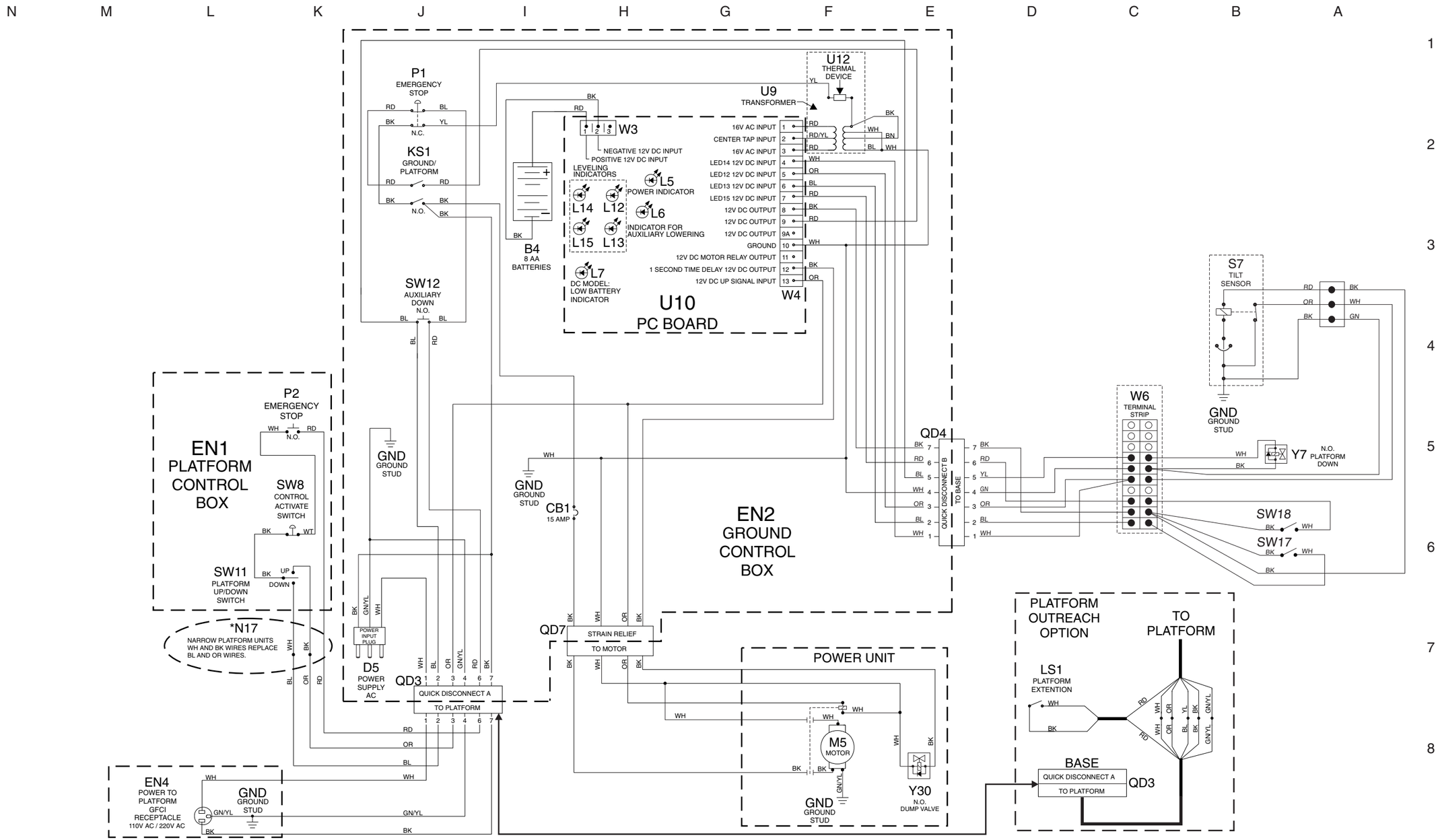

https://truckmanualshub.com/
www.truck-freeworkshop.com

Electrical Schematic

IWP Super Series AC TUV Models without Base Mounted Junction Box

ABBREVIATION LEGEND	
Item	**Description**
B	Battery
	B4 = 8 AA batteries
CB1	15A circuit breaker
D5	Power supply AC
EN	Enclosure
	EN1 = Platform control box EN2 = Ground control box EN4 = Power to platform GFCI receptacle
GND	Ground
KS1	Key switch - ground/platform
L	Led or light
	L5 = Power indicator (ground) L6 = Low battery indicator for auxiliary (ground) L7 = Low battery indicator – main (ground) L12 = Outrigger – front left (ground) L13 = Outrigger – front right (ground) L14 = Outrigger – rear left (ground) L15 = Outrigger – rear right (ground)
LS1	Limit switch - platform extension (option)
M5	Hydraulic power unit
N.C.	Normally closed
N.O.	Normally open
P	Power switch
	P1 = Emergency Stop button at ground controls P2 = Emergency Stop button at platform controls
QD	Quick disconnect
	QD3 = Control cable – to platform control box QD4 = Control cable – to base QD7 = Control cable – to motor
S7	Tilt sensor
SW	Switch
	SW 8 = Control activate SW11 = Platform up/down SW12 = Auxiliary down SW17 = Foot pad, left side SW18 = Foot pad, right side SW24 = Lift enable
U	Electronic component
	U9 = Transformer U10 = PC board U12 = Thermal device
W	Wiring component
	W3 = Terminal strip – 3 pole 3 pin (U10) W4 = Terminal strip – 14 pole 14 pin (U10) W6 = Terminal strip – 10 pole 20 pin (base)
Y	Valve coil
	Y7 = Platform down Y30 = Normally open dump valve

WIRE COLOR LEGEND	
Color	**Description**
BL	Blue
BN	Brown
BK	Black
GN	Green
GN/YL	Green/Yellow
OR	Orange
RD	Red
RD/YL	Red/Yellow
WH	White
WH/BK	White/Black
YL	Yellow

Note: Use these 2 legends for the schematic on the opposing page.

www.truck-freeworkshop.com
https://truckmanualshub.com/

Electrical Schematic

IWP Super Series AC TUV Models with Outreach

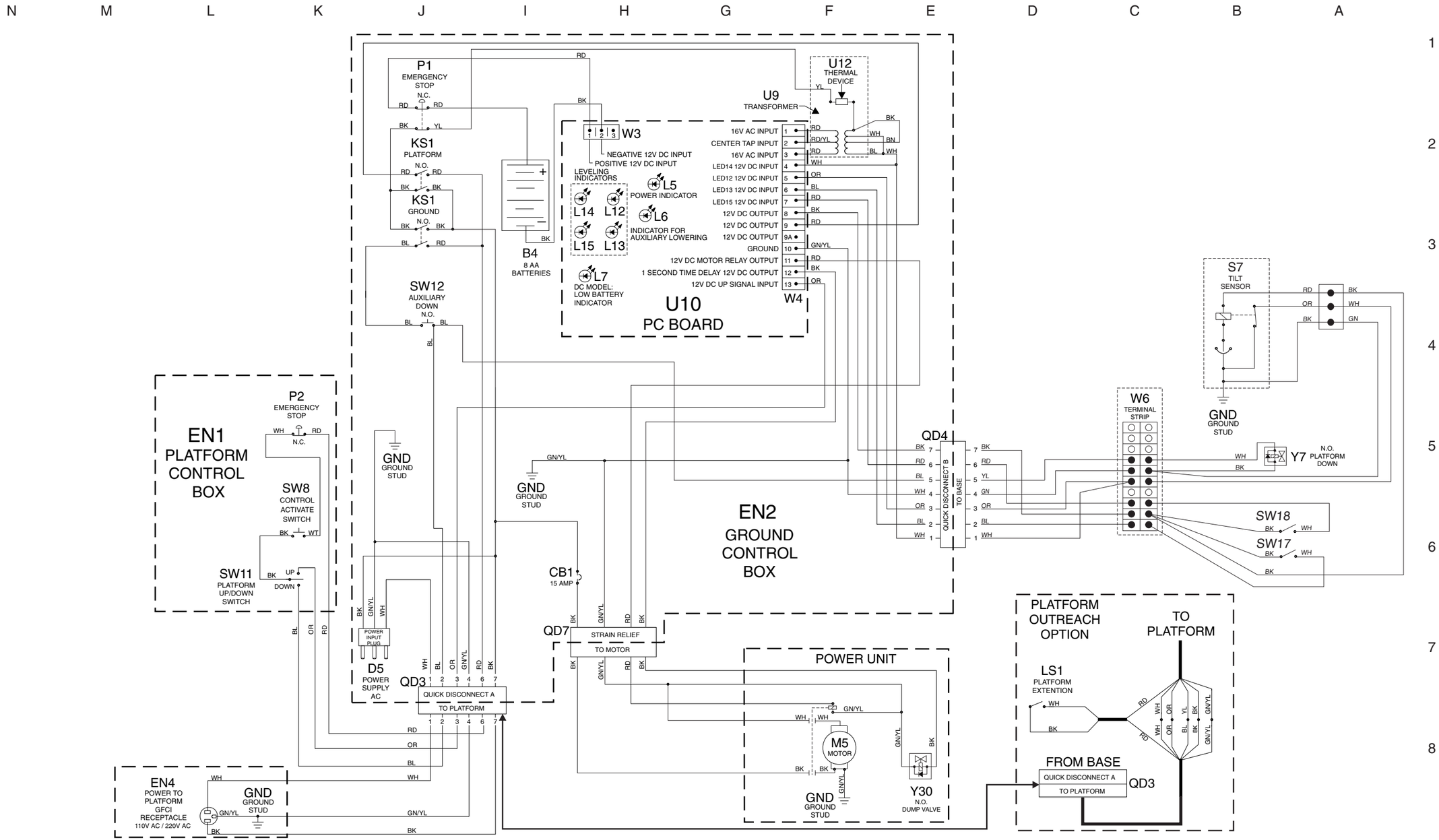

https://truckmanualshub.com/
www.truck-freeworkshop.com

Electrical Schematic

IWP Super Series AC TUV Models
with Outreach

www.truck-freeworkshop.com https://truckmanualshub.com/

Hydraulic Schematic Legend

Pressure Gauge

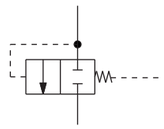
Differential sensing valve

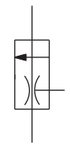
Priority flow regulator

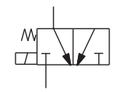
Solenoid operated 2 position 2 way directional valve

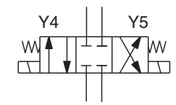

Solenoid operated 3 position 4 way directional valve

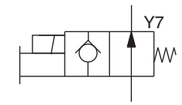

Solenoid operated 2 position 2 way normally closed valve with manual over-ride

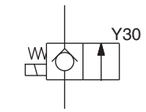

Solenoid operated 2 position 2 way valve normally closed

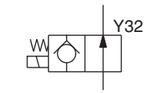

Solenoid operated 2 position 2 way valve, normally open

Check valve, pilot-operated

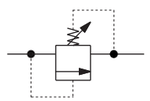
Adjustable relief valve

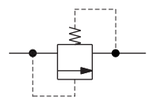
Relief valve

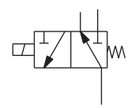
Solenoid operated 2 position 3 way directional valve

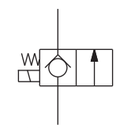
Solenoid operated dump valve

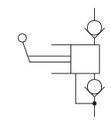
Foot pump valve

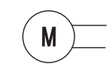

Pump prime mover, electric motor

Orifice with size

Check Valve

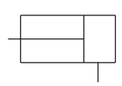
Cylinder single acting

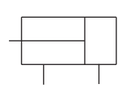
Cylinder double acting

Pump, fixed displacement

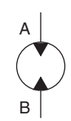

Wheel motor, fixed displacement

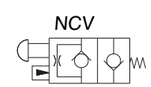

Button operated 2 position 2 way directional valve

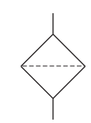
Return filter

https://truckmanualshub.com/
www.truck-freeworkshop.com

Hydraulic Schematic Legend

ABBREVIATION LEGEND	
ITEM	DESCRIPTION
A	Normally open dump valve
B	Check valve
C	Adjustable relief valve
D	Normally closed down valve
E	Flow control valve – pressure compensating
F	Check valve

Note: Use this legend for the schematic on the opposing page.

www.truck-freeworkshop.com https://truckmanualshub.com/

Hydraulic Schematic
AWP Super Series Models

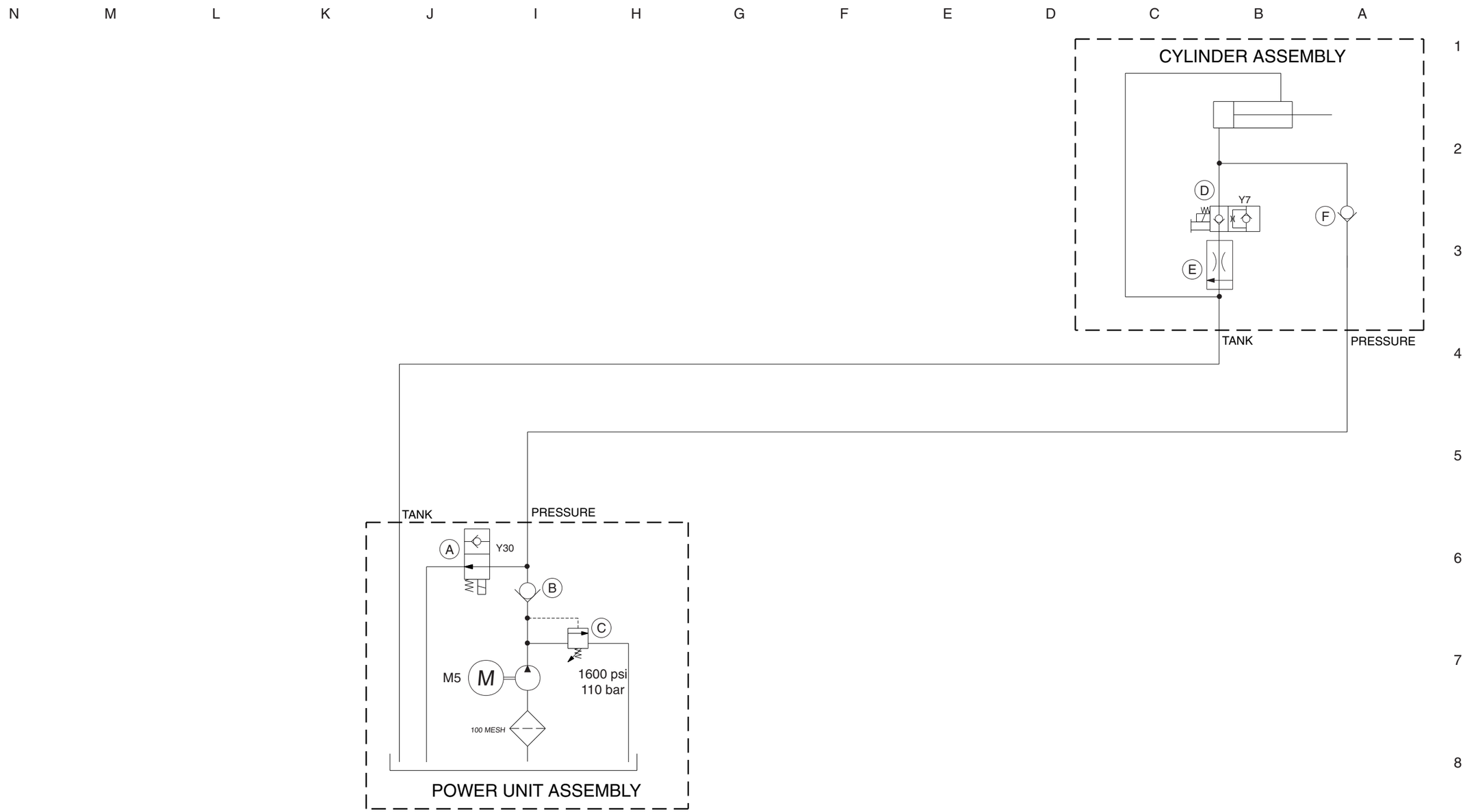

https://truckmanualshub.com/
www.truck-freeworkshop.com

Hydraulic Schematic

AWP Super Series Models

ABBREVIATION LEGEND	
ITEM	**DESCRIPTION**
AI	Compressed air indicator
AL	Air lubricator
CV	Check valve
CV1	Main – pilot operated check valve
CV2	Outrigger interlock valve – front left
CV3	Outrigger interlock valve – front right
CV4	Outrigger interlock valve – rear right
CV5	Outrigger interlock valve – rear left
EN1	Platform control box
EN2	Ground control box
FC1	Orifice - Flow control, hydraulic
FC2	Orifice - Flow control, pneumatic
FS	Filter with water trap
G1	Pressure gauge – compressed air inlet
KS1	Key switch – air supply on/off
M6	Air motor
NCV	Normally closed down valve
NOV	Normally open dump valve
P1	Emergency stop button - base
P2	Emergency stop button - platform
QD6	Compressed air supply
SW8	Control activate switch
SW10	Platform up/down switch
SW12	Outrigger interlock switch – front left
SW13	Outrigger interlock switch – front right
SW14	Outrigger interlock switch – rear right
SW15	Outrigger interlock switch – rear left

IMPORTANT NOTES	
Item	**Description**
Dotted line	Indicates pnuematic route
Solid line	Indicates hydraulic route

Note: Use these 2 legends for the schematic on the opposing page.

www.truck-freeworkshop.com https://truckmanualshub.com/

Hydraulic/Pneumatic Schematic
AWP Super Series Models

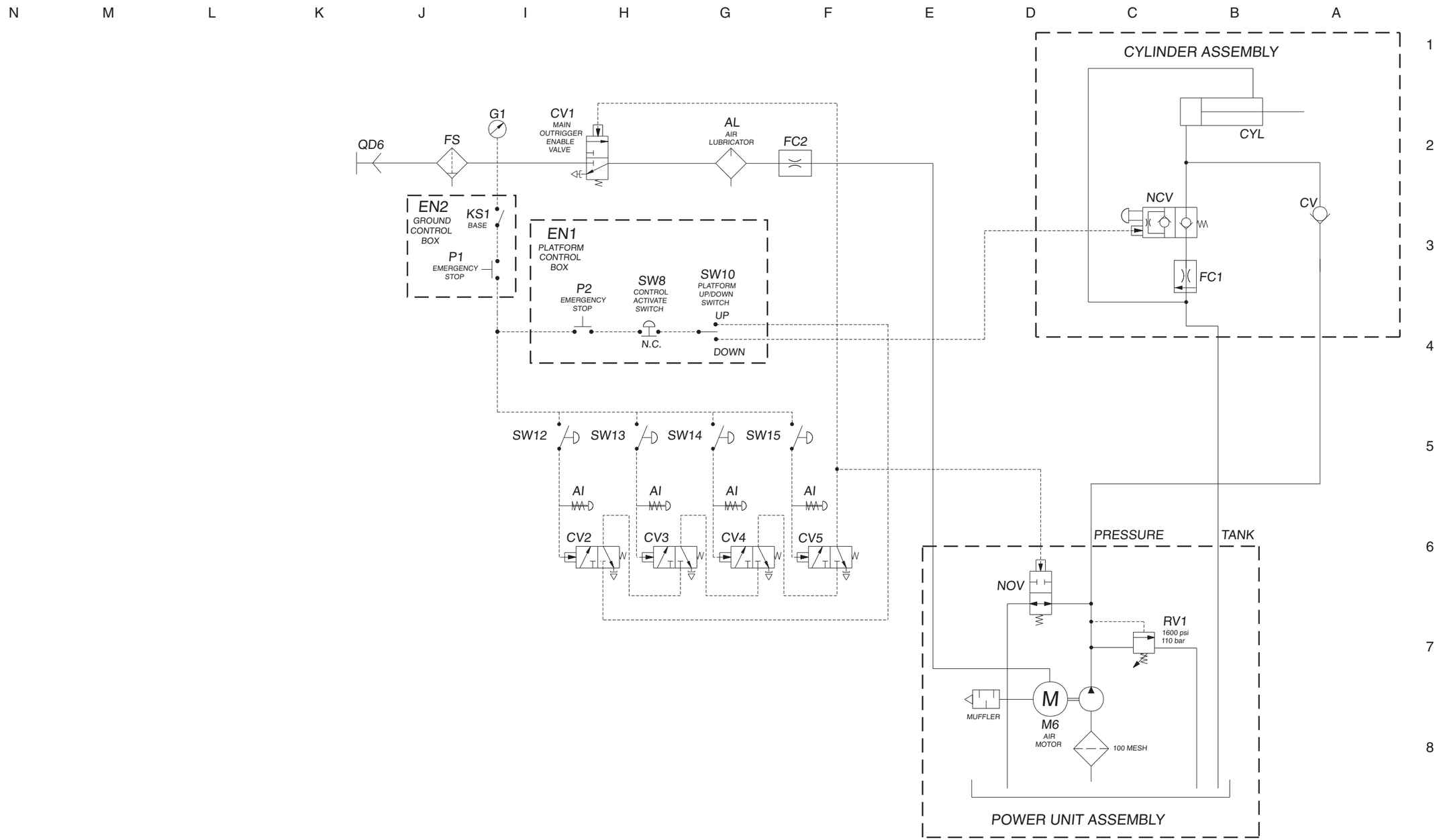

https://truckmanualshub.com/
www.truck-freeworkshop.com

Hydraulic/Pneumatic Schematic

AWP Super Series Models

ABBREVIATION LEGEND	
ITEM	DESCRIPTION
A	Normally open dump valve
B	Check valve
C	Adjustable relief valve
D	Normally closed down valve with manual override
E	Flow control valve – pressure compensating
F	Check valve
G	Check valve, system pressure
H	Check valve, directs flow to tank
I	Manual release valve, lowers base
J	Relief valve, outer base frame
K	Check valve, pilot operated
L	Foot pump

Note: Use this legend for the schematic on the opposing page.

www.truck-freeworkshop.com https://truckmanualshub.com/

Hydraulic Schematic

IWP Super Series Models
without Power Assist

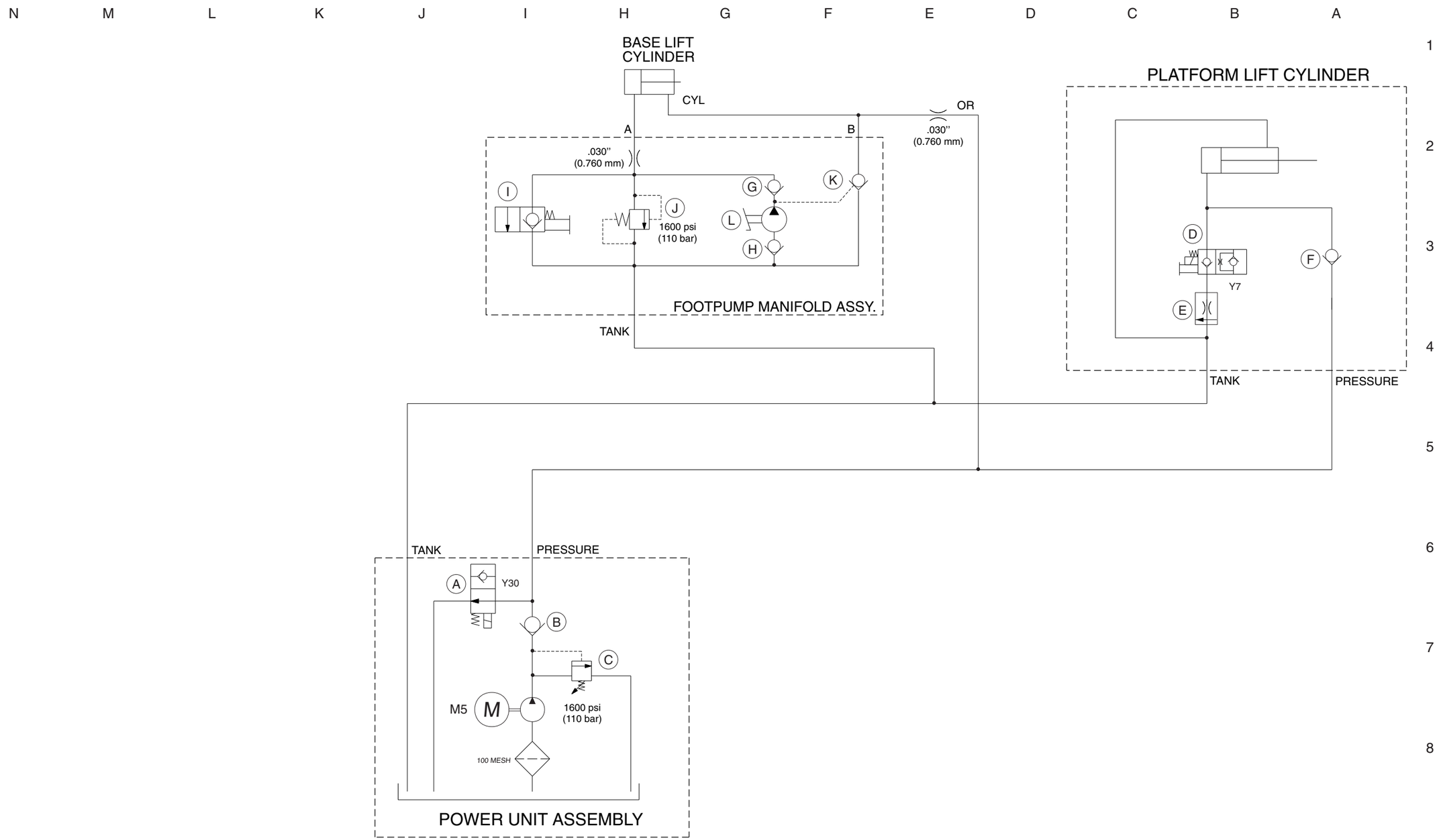

https://truckmanualshub.com/
www.truck-freeworkshop.com

Hydraulic Schematic

IWP Super Series Models
without Power Assist

ABBREVIATION LEGEND	
ITEM	DESCRIPTION
A	Normally open dump valve
B	Check valve
C	Lift relief valve
D	Flow control valve – pressure compensating
E	Check valve
F	Normally closed down valve with manual override
G	Check valve, base lift
H	Check valve, inlet to foot pump
I	Manual release valve, lowers base
J	Relief valve, outer base frame
K	Check valve, pilot operated
L	Check valve, foot pump
AA	Check valve, system pressure
AB	Solenoid valve, all functions
AC	Solenoid valve, forward-reverse
AD	Relief valve, power wheel assist

Note: Use this legend for the schematic on the opposing page.

www.truck-freeworkshop.com https://truckmanualshub.com/

Hydraulic Schematic

IWP Super Series Models
with Power Assist

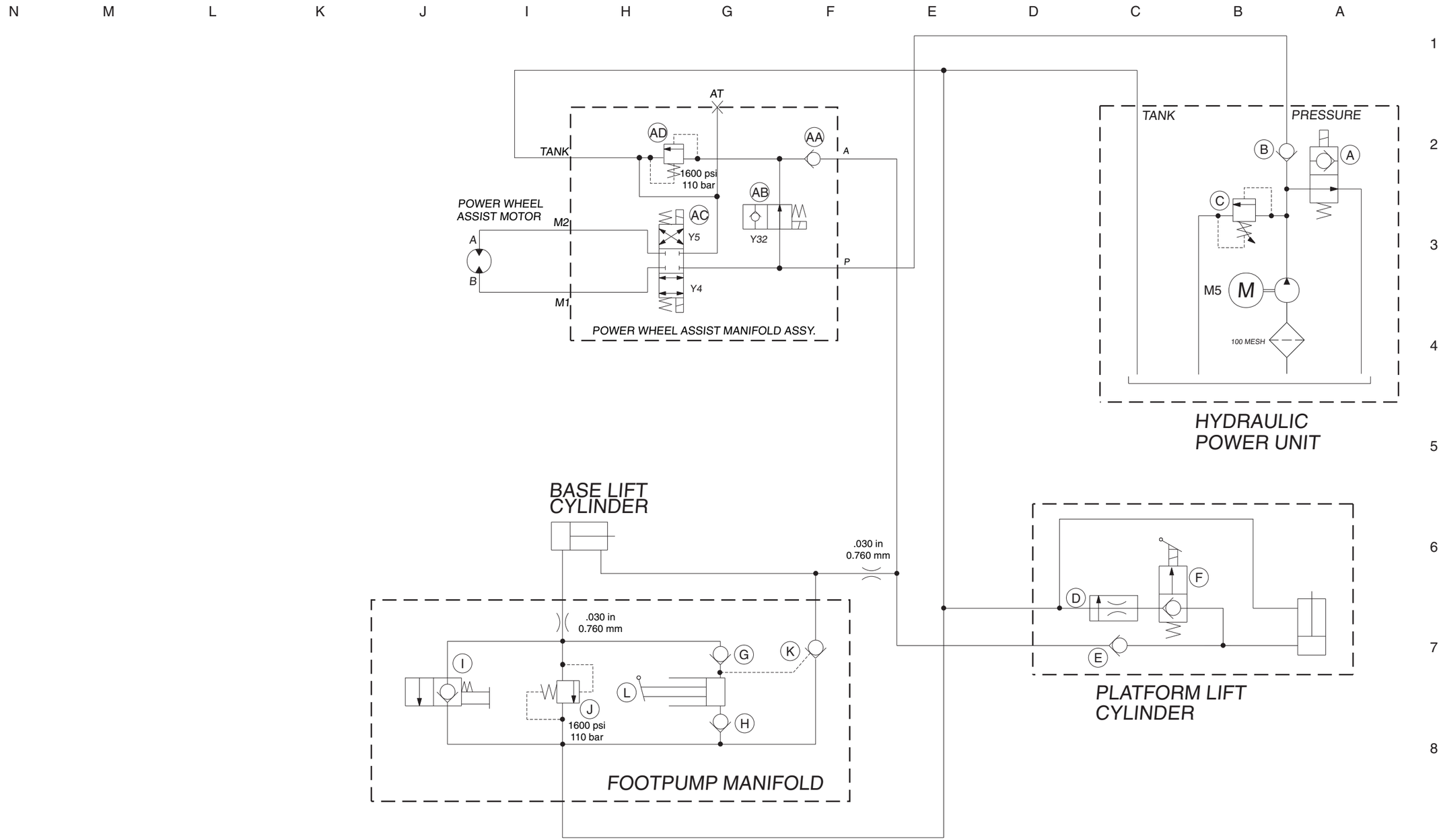

https://truckmanualshub.com/
www.truck-freeworkshop.com

Hydraulic Schematic

IWP Super Series Models
with Power Assist

ABBREVIATION LEGEND	
ITEM	DESCRIPTION
A	Solenoid operated normally open dump valve
B	Check valve
C	Lift relief valve
D	Flow control valve – pressure compensating
E	Check valve
F	Solenoid operated lowering valve with manual override
G	Check valve, base lift
H	Check valve, inlet to foot pump
I	Manual release valve, lowers base
J	Relief valve, outer base frame
K	Check valve, pilot operated
L	Check valve, foot pump
CA	Check valve, system pressure
CB	Solenoid valve, all functions
CC	Solenoid valve, forward-reverse
CD	Relief valve, power wheel assist
CE	Relief valve, cross port

Note: Use this legend for the schematic on the opposing page.

www.truck-freeworkshop.com
https://truckmanualshub.com/

Hydraulic Schematic

IWP Super Series Models
with Power Assist and Brakes

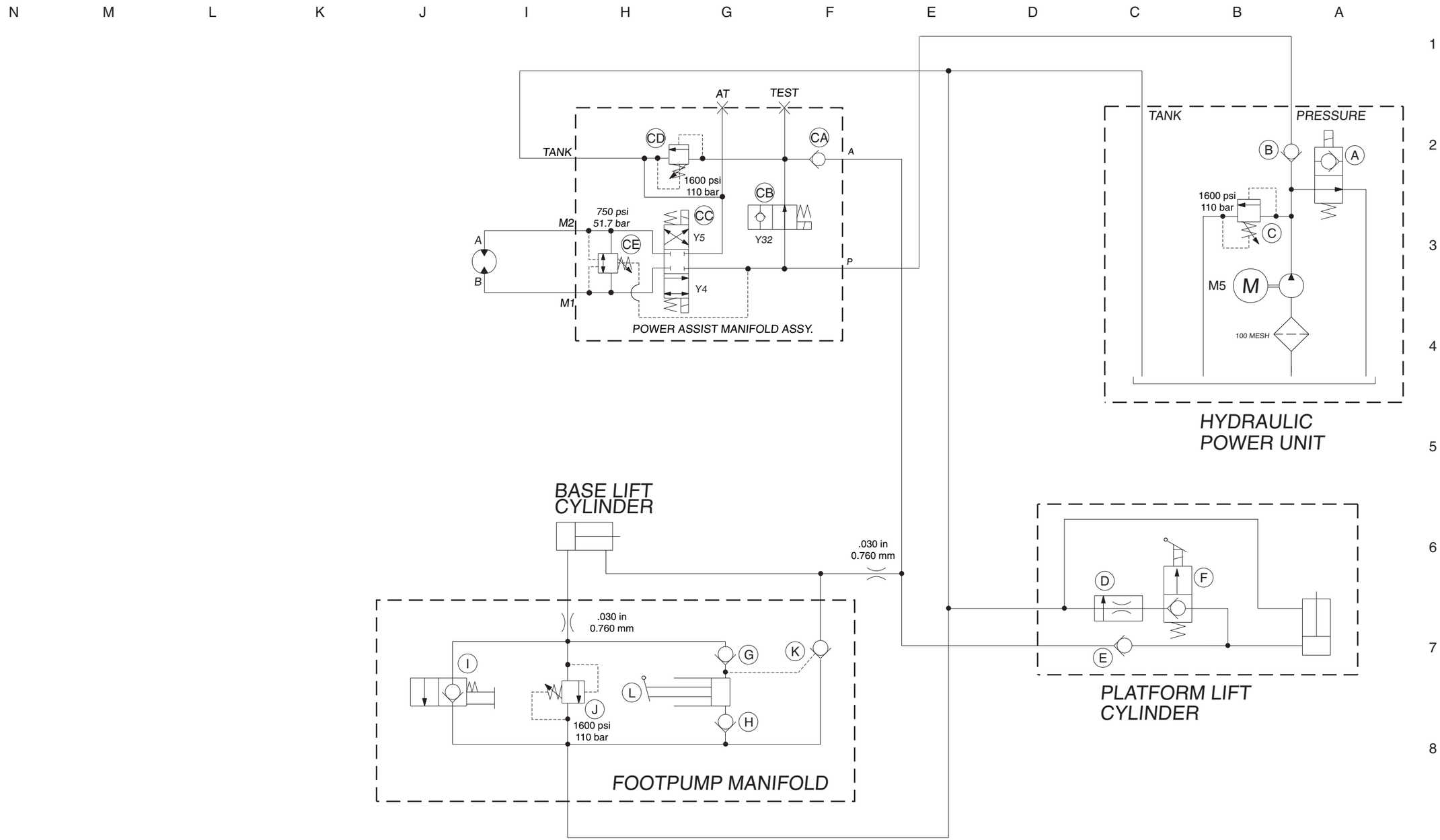

https://truckmanualshub.com/
www.truck-freeworkshop.com

Hydraulic Schematic

IWP Super Series Models
with Power Assist and Brakes

ABBREVIATION LEGEND	
ITEM	DESCRIPTION
A	Normally open dump valve
B	Check valve
C	Adjustable relief valve
D	Normally closed down valve
E	Flow control valve – pressure compensating
F	Check valve
G	Check valve, system pressure
H	Check valve, directs flow to tank
I	Manual release valve, lowers base
J	Relief valve, outer base frame
K	Check valve, pilot
L	Check valve, foot pump
BA	Check valve, system pressure
BB	Solenoid valve, all functions
BC	Solenoid valve, forward-reverse
BD	Solenoid valve, system relief

Note: Use this legend for the schematic on the opposing page.

www.truck-freeworkshop.com https://truckmanualshub.com/

Hydraulic Schematic

IWP Super Series Models
with Power Assist, Brakes and Cross Port Relief

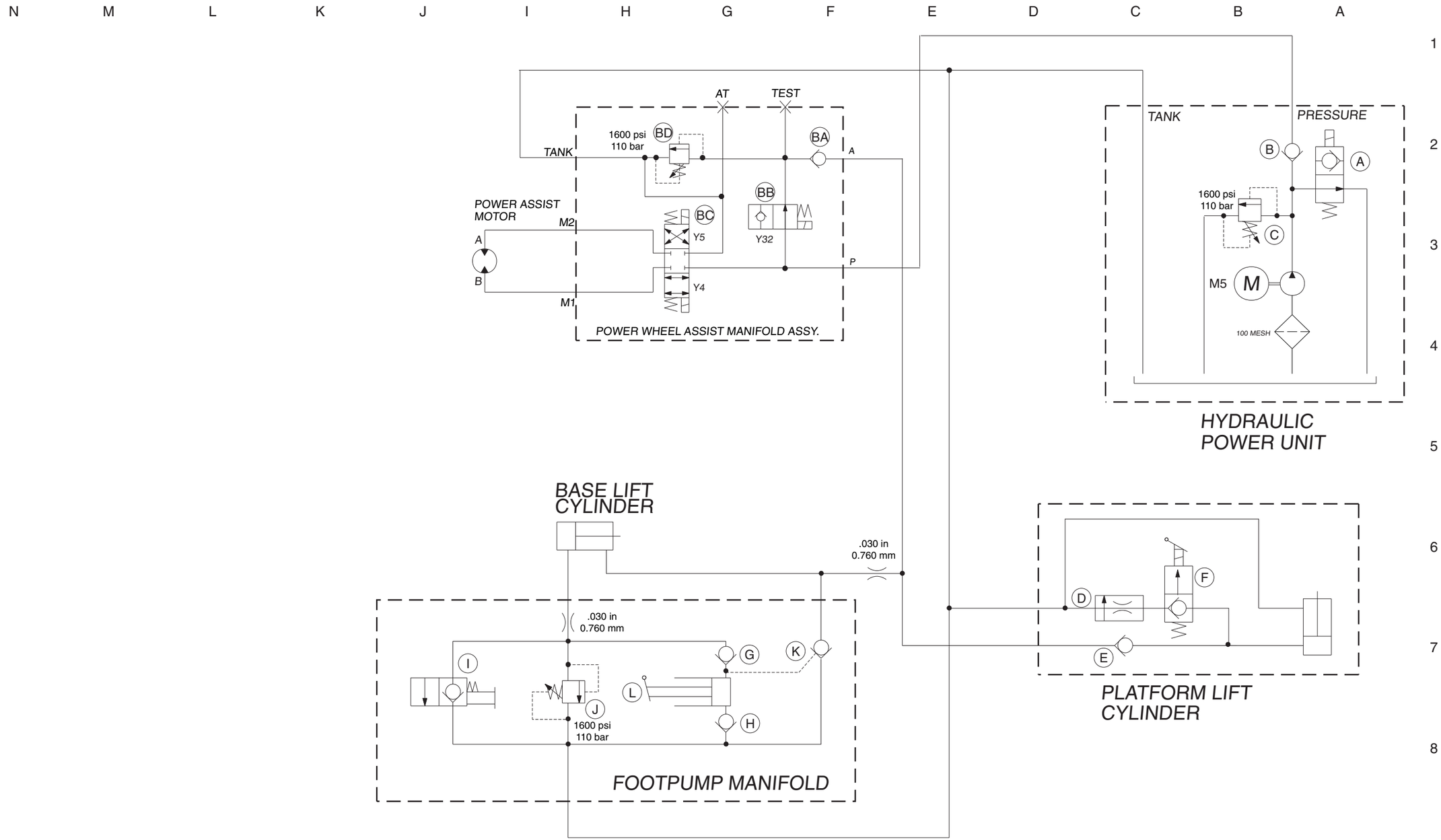

https://truckmanualshub.com/
www.truck-freeworkshop.com

Hydraulic Schematic

IWP Super Series Models
with Power Assist, Brakes and Cross Port Relief

https://truckmanualshub.com/
www.truck-freeworkshop.com

Distributed By:

Genie North America
Phone 425.881.1800
Toll Free USA and Canada
800.536.1800
Fax 425.883.3475

Genie Australia Pty Ltd.
Phone +61 7 3375 1660
Fax +61 7 3375 1002

Genie China
Phone +86 21 53852570
Fax +86 21 53852569

Genie Malaysia
Phone +65 98 480 775
Fax +65 67 533 544

Genie Japan
Phone +81 3 3453 6082
Fax +81 3 3453 6083

Genie Korea
Phone +82 25 587 267
Fax +82 25 583 910

Genie Brasil
Phone +55 11 41 665 755
Fax +55 11 41 665 754

Genie Holland
Phone +31 183 581 102
Fax +31 183 581 566

Genie Scandinavia
Phone +46 31 575100
Fax +46 31 579020

Genie France
Phone +33 (0)2 37 26 09 99
Fax +33 (0)2 37 26 09 98

Genie Iberica
Phone +34 93 579 5042
Fax +34 93 579 5059

Genie Germany
Phone 0800 180 9017
Phone +49 422 149 1818
Fax +49 422 149 1820

Genie U.K.
Phone +44 (0)1476 584333
Fax +44 (0)1476 584334

Genie Mexico City
Phone +52 55 5666 5242
Fax +52 55 5666 3241

https://truckmanualshub.com/
www.truck-freeworkshop.com

Service Manual
AWP SS • IWP SS

(AWP SS from SN 3896-101)
(IWP SS from SN 4096-101)

Part No.
38139

Rev B6