https://truckmanualshub.com/ 1

Hydrema

922F 922F 2.55

ARTICULATED DUMP TRUCKS

Innovative earthmoving since 1959

Since 1959 Hydrema has developed, manufactured, sold and serviced high-tech construction machines. Efficient, innovative and high-quality machines. Our products distinguish themselves from other products on the market through their technical and physical capabilities. Very well suited to perform specialized tasks in construction and installation work.

HYDREMA

https://truckmanualshub.com/ 3

HYDREMA 922F SERIES

Versatile 22 T dumptruck for terrain and road.

The 922F Series is the obvious choice for soft conditions or areas with sensitive ground conditions where the lowest possible ground pressure is required. The dump truck gets through regardless of terrain.

The Hydrema 922F Series, 20 tonnes dumptruck, does in many ways break with the usual design principles for articulated dump trucks of this class.

Developed for Sensitive and Rough Terrain

A low unladen weight, the entirely unique articulated pivot joint, 'genuine' bogie axles with an ample steering angle, as well as the market's best power/weight ratio, gives the 922F Series unrivalled terrain manoeuvrability. Where others have to give up, this dump truck keeps going. A great advantage when work needs to be done as effective as possible!

Stable Driving Performance

The Hydrema 922F Series has great driving cababilities at all speeds and on all surfaces, due to the oscillated and hydraulic stabilized pivot joint. Combined with electronically controlled suspension and level control on the front axle, the result is a very high operator comfort.

The rear axle is a genuine bogie axle, with vertical travel for each individual wheel. This ensures the best possible ground contact regardless of level differences. All six wheels being in constant contact with the surface, and weight therefore being equally distributed, means a very low ground pressure, high stability, safety and comfort for the opperator.

Fuel-Saving Power with Low Noise Levels

In rough terrain, engine power and torque makes all the difference. In the 922F Series, the torque for the 6 wheels come from a powerful 6-cylinder Cummins QSB-6.7 Stage 4 engine and an intelligent 6-gear ZF Soft-Shift transmission.

The variable engine fan provide cooling as needed, which makes it both very fuel efficient and quiet. The advanced transmission shifting system guarantees high stability with smooth gear shifts. This prevents wheel slip and provides maximum torque.

https://truckmanualshub.com/ 4

Simple and Quick Operation

A dump truck from the 922F Series is easy to operate and the operator will soon feel at home with the machine's manoeuverability and functions. User-friendly switches and joystick-controlled tipping, automatic or manual gearshift and industry leading visibility from the suspended cab, provides the best and most comfortable working conditions.

Efficient Tipping

The 922F Series has a very energy-efficient 4-pump hydraulic system, ensuring that control and tipping never feels "sluggish". The separate pumps provide a completely independent control of steering and tipping functions. The vehicle can be positioned at the same time as tipping is started. The powerful dump truck body has a high tipping angle so the material is unloaded quickly.

The powerful tipping cylinders are protected under the body. The tipping hydraulics will automatically increase the engine speed when the tipping joystick is activated. This provides very fast tipping cycle times. The end position dampening of the tipping cylinders and Auto Body Return also increases tipping speed, and makes sure that the body is automatically lowered onto the chassis.

High Quality and Long Life

The 922F Series is a high quality product, and can be used almost everywhere. It has been developed and designed to be used, every day, year after year. Easy to operate and the many possibilities for individual operator settings in the cab also makes it exceptionally suitable for rental.

922F 2.55 for Road Use

Depending on requirements, the dump truck is also available in a road version. The 922F 2.55 is the same dump truck, only in a narrow version. The dump truck body, axles and tyres are more narrow compaired to the standard version, keeping the width of the truck below 2.55 M. The truck can be registered for driving on public roads* and is available in both 30 and 50 km/h versions.

* Region dependent

ADVANTAGES

- Great driving performance. Keeps going where other vehicles have to give up.
- High quality. Solid design. Built to last. Rental friendly.
- Low unladen weight and genuine bogie axles gives a very low ground pressure.
- Highest power-to-weight ratio on the market.
- Extremely user-friendly and simple to use. High safety and operator comfort.

COMFORTABLE

Great comfort and easy service access.

Great operator comfort

The cab has two doors, with lighting for a safe entry in all light conditions. The cab is spacious, with great visibility and an easy-to-clean interior. For maximum safety, the cab is ROPS/FOPS approved.

All functions have the best ergonomic positions. The joystick is installed as an integrated part of the right armrest. The seat, armrests and steering wheel are multi-adjustable.

A computer-controlled instrument display with data storage, a powerful heating and cooling system, a storage box, and connection for 12 V/24 V plugs are standard.

Easy operation of all functions leaves the operator with the best working conditions.

The joystick operate the main dumper functions, such as tipping, gear selection, forward/reverse and differential lock. This provides easy control at your fingertips.

Vibrations are also reduced through heavy-duty viscous cab mounts.

Easy Service Access

The engine bonnet is electric and access to the engine compartment is therefore easy, with a simple push of a button in the cab.

All service points are placed so that the daily service check can be carried out easily and without complications.

TECHNICAL DATA

Designed and built to last.

Chassis

Articulated chassis with pendulum bar and double hydraulic stabilizers in the pivot point. Gives a high degree of stability both when driving and tipping. Fabricated in high tensile steel in order to obtain the highest possible strength and the lowest possible unladen weight. Oscillation: +/- 12º.

Axles

Front: Rigid axle with electronically controlled suspension and level control. Individual level control on each side aligns the machine when driving fast in curves. The front axle has a differential lock with 75% locking action.
Rear: Heavy Duty boogie axle with reduction gear in the hubs. Simple and maintenance-free design. Large pendulum angle. The Bogie design provides constant wheel contact to all wheels and excellent off road performance.

Engine

Cummins QSB 6.7 liter 6 cyl. Stage 4 engine (EPA Tier 4 Final) with DOC and SCR catalyst with AdBlue additive. 24-valve common rail turbo-diesel with intercooler, electronic variable turbocharger and EGR with cooling.
Max. Power. 218 kW / 296 HP at 2100 rpm. Max. Torque 1044 Nm at 1500 rpm.

Steering

The servo-activated hydrostatic steering results in great comfort, as impacts from the terrain are not transferred through to the steering wheel. Separate variable flow pump for steering. Steering angle: +/- 38º

Transmission

ZF ERGOPOWER 6 WG 210 automatic transmission with 6 gear forward og 3 rewerse. The transmission is equipped with 100% lock-up in all gears and manual activated differential lock between the front and rear. Automatic or manual gearshift.
Max speed:
Forward: 50 km/t - Reverse: 31 km/t
Max. tractive effort: 207 KN.

Hydraulic System

The hydraulic system consists of 4 independent hydraulic pumps:
Pump 1: 32 l/m constant flow pump for brakes, pivot point, stabilisers, differential lock and front axle suspension.
Pump 2: 163 l/m variable flow pump for pivot steering.
Pump 3: 189 l/m constant flow pump for tipping operations.
Pump 4: 50 l/m variable flow pump for emergency steering.
(Flow values given at 2200 rpm for the engine).

Brakes / Retarder

Full dual-circuit brake system with oil-immersed disc brakes on all 6 wheels. Fail-Safe parking brake on the front axle. Maintenance-free brakes. Manually operated exhaust brake.

Electric System

Standard 24V system with 70 Amp. alternator. Batteries: 2x 12V, 100Ah.

Dumptruck body

Robot-welded dump truck body in high tensile Hardox 450 steel without side ribs. The double action tipping cylinders are located under the body for maximum protection. Option: Exhaust heatet body and automatically functioning Tail Gate. Tipping time: 7,5 sec. up / 5,5 sec. down. Tipping angle: 70º.

Fuel

Diesel: 300 l. fuel tank.
Ad Blue: 19 l. tank.
Both integrated in the front chassis.

Sound level

LpA: 73 dB(A) (in cab)
LwA: 106 dB(A) (outside cab)

Multiple choice configurations.

Hydrema 922F-series dump trucks offers you several different configurations depending on your needs and requirements.

922HM has wide 800 mm (31.5 in) tires for superb off road capabilities. The 922F Series is available in both a standard version with a dumper body, as well as in two MultiChassis versions with a short and a long weel base, where a variety of customized solutions can be mounted. The choice is yours!

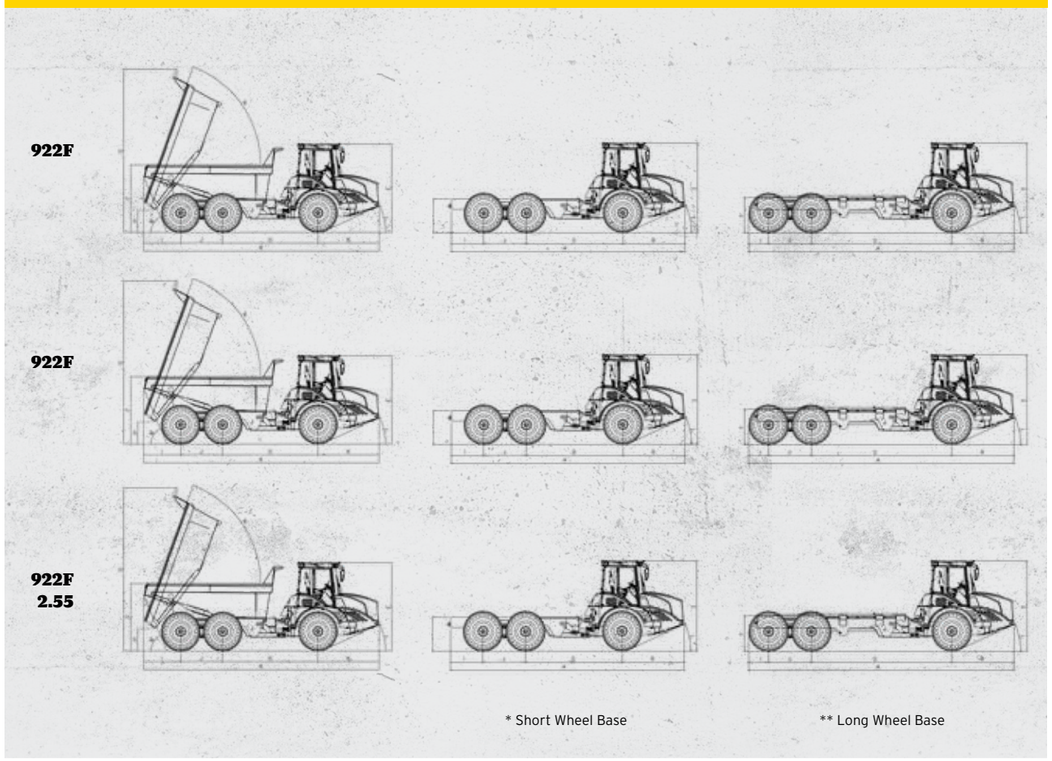

Specifications.

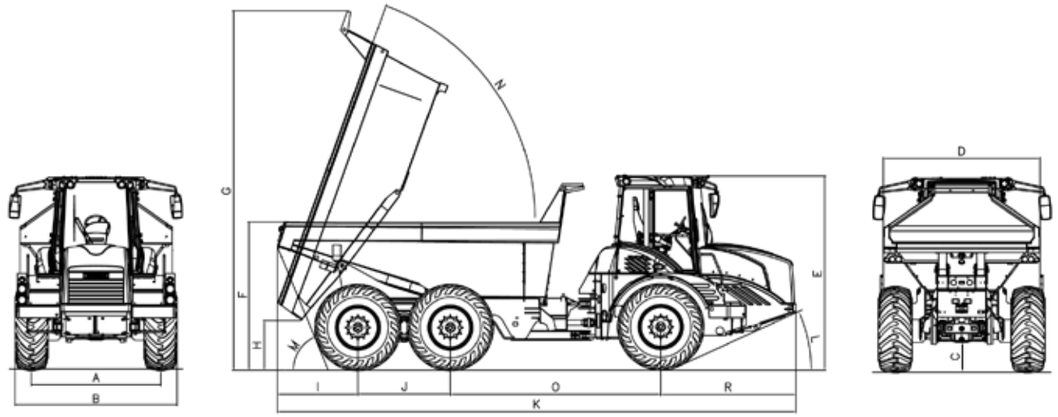

			922F			922F(HM)			922F 2.55		
			STD.	MC SWB*	MC LWB**	STD.	MC SWB*	MC LWB**	STD.	MC SWB*	MC LWB**
	Tires			600/60x30.5			800/45-30.5			20.5-R25 EM	
	Total weight	kg	35900	35500	35700	36400	36000	36200	36600	36200	36400
	Unladen weight	kg	15900	13500	13700	16400	14000	14200	16600	14200	14400
	Load capacity	kg	20000	22000	22000	20000	22000	22000	20000	22000	22000
B.	Total width	mm	2930	2930	2930	3180	3180	3180	2550	2550	2550
C.	Clearance	mm	480	480	480	480	480	480	480	480	480
D.	Dump truck body width	mm	2750	-	-	2750	-	-	2550	-	-
E.	Total height	mm	3490	3490	3490	3490	3490	3490	3490	3490	3490
	Transport height	mm	3440	3440	3440	3440	3440	3440	3440	3440	3440
F.	Loading height	mm	2610	-	-	2610	-	-	2690	-	-
G.	Height with raised body	mm	6340	-	-	6340	-	-	6340	-	-
H.	Tipping clearance	mm	820	-	-	820	-	-	820	-	-
I.	Overhang, rear	mm	1415	1244	762	1415	1244	762	1415	1244	762
J.	Wheel base, bogie	mm	1636	1636	1636	1636	1636	1636	1636	1636	1636
K.	Length	mm	9140	8965	10143	9140	8965	10143	9140	8965	10143
L.	Approach angle, front	°	26	26	26	26	26	26	26	26	26
M.	Approach angle, rear	°	68	-	-	68	-	-	68	-	-
N.	Tipping angle	°	70	-	-	70	-	-	70	-	-
O.	Wheel base	mm	3720	3720	5370	3720	3720	5370	3720	3720	5370
R.	Overhang, front	mm	2370	2370	2370	2370	2370	2370	2370	2370	2370
	Body capacity, levelled	m^3	9,2	-	-	9,2	-	-	9,2	-	-
	Body capacity, heaped	m^3	12	-	-	12	-	-	12	-	-
	Tipping time, raise	sec.	7,5	-	-	7,5	-	-	7,5	-	-
	Tipping time, lower	sec.	5,5	-	-	5,5	-	-	5,5	-	-
	Turning radius, outer	m	8,37	8,37	11,07	8,49	8,49	11,19	8,18	8,18	10,88
	Ground pressure (loaded)	kPa	131	131	131	98	98	98	146	146	146

https://truckmanualshub.com/ 7

Many standard features and more options.

STANDARD EQUIPMENT

Machine:
Suspended front axle with automatic levelling
Tires, 922F: 600/60-30.5
Tires, 922F(HM): 800/45-30.5
Tires, 922F 2.55: 20.5-R25 EM
Exhaust brake
Front axle: Limited slip differential lock
Differential lock between front and rear axle
Maintenance-free service and parking brake
Bonnet with electric opening
4 halogen driving lights
Rear lights integrated in body

Cabin:
Viscous-elastic cab suspension
Multifunction joystick in right armrest
Computer-controlled instrument panel
Two doors with easy access
Non-slip steps for cab access and egress
Automatic driving lights
8 Megabeam working lights
12V and 24V plug box in cab
Wiper with interval control - front / rear
Sun shield on cab - front
Handheld light
Red lighting effect inside cab (for night use)
Automatic air-conditioning
Rotating beacon
Radio with CD and MP3
Two wide angle mirrors with heating and adjustment
Air suspended seat with heating

Operation:
Automatic tipping speed adjustment
Automatic tipping brake
Cruise control
Acoustic reversing alarm
Rear view system with monitor in cab

OPTIONAL EQUIPMENT

Wheels / Tires: (922F)
20.5-R25 EM - ground pressure, loaded: 146 kPa
800/45-30,5 - ground pressure, loaded: 98 kPa
600/60-30.5 - ground pressure, loaded: 131 kPa
650/65-R25 EM - ground pressure, loaded: 120 kPa

Dumper body:
Tailgate for body, hydraulic (incl. central lubrication point)
Body exhaust heating (incl. 2-way exhaust valve)
Reinforced body - 8mm Hardox 450
Rear lights protection

Cab:
Cooling box with electrical regulation - 3.8 gal
DAB-radio with bluetooth + antenna
Extra rotating beacon
Fire extinguisher - 4.4 lb
GPS trackunit
Cab heating (diesel) - 9 kW
4 ps. Xenon working lights - FRONT
2 ps. Xenon working lights - REAR
2 ps. Xenon working lights – SIDE
4 ps. LED working lights - FRONT
2 ps. LED working lights - REAR
2 ps. LED working lights – SIDE

Machine:
Automatic, central lubrication system
Electric fuel pump
2 ps. working lights - rear (mounted on the chassis)
Engine heater (220V - 830W)
Bio hydraulic oil
Warning triangle
Transfers with customer information
Special colour (cab and plastic parts are standard black)

"The golf course architects recommended Hydrema 922 for the job. We collect sand and soil around 2 km from the entrance to the golf course and can run all the way to where the material must be unloaded, leaving no damage to roads and fragile fairways."

https://truckmanualshub.com/ 8

Subject to change. Photos may be shown with optional equipment. - 0855465 / 04/2017

HYDREMA (UK) LTD.
Phone +44 01765 641940

MORE INFO
www.hydrema.co.uk

HYDREMA