https://truckmanualshub.com/

Kubota

U.S.A. : **KUBOTA TRACTOR CORPORATION**
3401 Del Amo Blvd., Torrance, CA 90503, U.S.A.
Telephone : (310)370-3370
Western Division : 1175 S. Guild Avc., Lodi, CA 95240
Telephone : (209)334-9910
Central Division : 14855 FAA Blvd., Fort Worth, TX 76155
Telephone : (817)571-0900
Northern Division : 6300 at One Kubota Way, Groveport, OH 43125
Telephone : (614)835-1100
Southeast Division : 1025 Northbrook Parkway, Suwanee, GA 30024
Telephone : (770)995-8855

Canada : **KUBOTA CANADA LTD.**
5900 14th Avenue, Markham, Ontario, L3S 4K4, Canada
Telephone : (905)294-7477

France : **KUBOTA EUROPE S.A.S**
19-25, Rue Jules Vercruysse, Z.I. BP88, 95101 Argenteuil Cedex, France
Telephone : (33)1-3426-3434

Italy : **KUBOTA EUROPE S.A.S Italy Branch**
Via Grandi, 29 20068 Peschiera Borrome (MI) Italy
Telephone : (39)02-51650377

Germany : **KUBOTA (DEUTSCHLAND) GmbH**
Senefelder Str. 3-5 63110 Rodgau /Nieder-Roden, Germany
Telephone : (49)6106-873-0

U.K. : **KUBOTA (U.K.) LTD.**
Dormer Road, Thame, Oxfordshire, OX9 3UN, U.K.
Telephone : (44)1844-214500

Spain : **KUBOTA ESPAÑA S.A.**
Avenida Recomba No.5, Poligno Industrial la Laguna, Leganes, 28914 (Madrid) Spain
Telephone : (34)91-508-6442

Australia : **KUBOTA TRACTOR AUSTRALIA PTY LTD.**
25-29 Permas Way, Truganina, VIC 3029, Australia
Telephone : (61)-3-9394-4400

Malaysia : **SIME KUBOTA SDN. BHD.**
No.3 Jalan Sepadu 25/123 Taman Perindustrian Axis,
Seksyen 25, 40400 Shah Alam, Selangor Darul Ehsan Malaysia
Telephone : (60)3-736-1388

Philippines : **KUBOTA PHILIPPINES, INC.**
155 Panay Avenue, South Triangle Homes, 1103 Quezon City, Philippines
Telephone : (63)2-9201071

Taiwan : **SHIN TAIWAN AGRICULTURAL MACHINERY CO., LTD.**
16, Fengping 2nd Rd, Taliao Shiang Kaohsiung 83107, Taiwan R.O.C.
Telephone : (886)7-702-2333

Indonesia : **PT KUBOTA MACHINERY INDONESIA**
Tower A at EightyEight@Kasablanka Lantai 16
Jalan Raya Casablanka Kav. 88, Jakarta 12870 Indonesia
Telephone : (62)-21-29568-720

Thailand : **SIAM KUBOTA CORPORATION CO., LTD.**
101/19-24 Moo 20, Navanakorn Industrial Estate, Tambon Khlongnueng, Amphur Khlongluang,
Pathumthani 12120, THAILAND
Telephone : (66)2-909-0300

Korea : **KUBOTA KOREA CO., LTD.**
106-24 Mongsan-Ri, Mankyung-Up, Kimje-City, Chonrapuk-Do, KOREA
Telephone : (82)-63-544-5822

India : **KUBOTA AGRICULTURAL MACHINERY INDIA PVT. LTD.**
Regus, Level 2 Altius, Olympia Tech Park, No.1 SIDCO Industrial Estate, Guindy, Chennai 600032, TN, India
Telephone : (91)-44-4299-4237

Vietnam : **KUBOTA VIETNAM CO., LTD.**
Lot B-3A2-CN, My Phuoc 3 Industrial Park, Ben Cat District, Binh Duong Province, Vietnam
Telephone : (84)-650-3577-507

KUBOTA Corporation

AS . D . 1 - 1 . - . AK

Code No. K1270-7122-1

GR2020G.GR2120.GR2120AU

OPERATOR'S MANUAL

KUBOTA

LAWN AND GARDEN TRACTOR

MODELS GR2020G
GR2120
GR2120AU

1BDAHAOAP0580

READ AND SAVE THIS MANUAL

PRINTED IN U.S.A.

© KUBOTA Corporation 2014

Kubota

https://truckmanualshub.com/

ABBREVIATION LIST

Abbreviations	Definitions
API	American Petroleum Institute
PTO	Power Take Off
PT	Permanent Type (=Ethylene glycol anti-freeze)
rpm	Revolutions Per Minute
SAE	Society of Automotive Engineers
KRA	Kubota Reverse Awareness System

UNIVERSAL SYMBOLS

As a guide to the operation of your tractor, various universal symbols have been utilized on the instruments and controls. The symbols are shown below with an indication of their meaning.

- Safety Alert Symbol
- Gasoline Fuel
- Diesel Fuel
- Brake
- Parking Brake
- Engine-Stop
- Engine-Run
- Preheat
- Starter Control
- Power Take-Off Clutch Control-Off Position
- Power Take-Off Clutch Control-On Position
- Cutting Height
- Coolant Temperature
- Mower-Lowered position
- Mower-Raised position
- Headlight
- Headlight-ON
- Headlight-OFF
- Fast
- Slow
- Engine Speed Control
- Choke
- Battery
- Oil Pressure

California Proposition 65

⚠ WARNING ⚠

Engine exhaust, some of its constituents, certain vehicle components and fluids, contain or emit chemicals known to the State of California to cause cancer and birth defects or other reproductive harm.

IMPORTANT

The engine in this machine is not equipped by the manufacturer with a standard spark arrester.
It is a violation of California Public Resource Code Section 4442 to use or operate this engine on or near any forest-covered, brush-covered land, or grass- covered land unless the exhaust system is equipped with a working spark arrester meeting state laws. Other states or federal areas may have similar laws.

The spark ignition system of GR2020G complies with Canadian ICES-002.

KUBOTA Corporation is ···

Since its inception in 1890, KUBOTA Corporation has grown to rank as one of the major firms in Japan.

To achieve this status, the company has through the years diversified the range of its products and services to a remarkable extent. Nineteen plants and 16,000 employees produce over 1,000 different items, large and small.

All these products and all the services which accompany them, however, are unified by one central commitment. KUBOTA makes products which, taken on a national scale, are basic necessities. Products which are indispensable. Products which are intended to help individuals and nations fulfill the potential inherent in their environment. KUBOTA is the Basic Necessities Giant.

This potential includes water supply, food from the soil and from the sea, industrial development, architecture and construction, transportation.

Thousands of people depend on KUBOTA's know-how, technology, experience and customer service. You too can depend on KUBOTA.

https://truckmanualshub.com/

FOREWORD

You are now the proud owner of a KUBOTA LAWN AND GARDEN TRACTOR. This machine is a product of KUBOTA's quality engineering and manufacturing. It is made of excellent materials and under a rigid quality control system. It will give you long, satisfactory service. To obtain the best use of your machine, please read this manual carefully. It will help you become familiar with the operation of the machine and contains many helpful hints about machine maintenance. It is KUBOTA's policy to utilize, as quickly as possible, every advance in our research. The immediate use of new techniques in the manufacturing of products may cause some small parts of this manual to become outdated. KUBOTA distributors and dealers will have the most up-to-date information. Please do not hesitate to consult them.

SAFETY FIRST

This symbol, the industry's "Safety Alert Symbol", is used throughout this manual and on labels on the machine itself to warn of the possibility of personal injury. Read these instructions carefully. It is essential that you read the instructions and safety regulations before you attempt to assemble or use this unit.

DANGER : Indicates an imminently hazardous situation which, if not avoided, will result in death or serious injury.

WARNING : Indicates a potentially hazardous situation which, if not avoided, could result in death or serious injury.

CAUTION : Indicates a potentially hazardous situation which, if not avoided, could result in minor or moderate injury.

IMPORTANT : Indicates that equipment or property damage could result if instructions are not followed.

NOTE : Gives helpful information.

https://truckmanualshub.com/

CONTENTS

⚠SAFE OPERATION ..... ⚠-1
SERVICING OF LAWN AND GARDEN TRACTOR 1
SPECIFICATIONS 2
IMPLEMENT LIMITATIONS 4
INSTRUMENT PANEL AND CONTROLS 6
MOWER MOUNTING 7
ATTACHING THE MOWER 7
Mounting the Mower Deck 7
ADJUSTING THE PARALLEL LINKAGE 9
ADJUSTING THE MOWER DECK (SIDE TO SIDE) 9
ADJUSTING THE MOWER LIFT STOPPERS 10
DISMOUNTING THE MOWER DECK 10
OPERATING THE ENGINE 11
STARTING THE ENGINE 11
Key Switch 12
Throttle Lever and Choke Lever 13
Cold Weather Starting 14
Block Heater (Option) 14
STOPPING THE ENGINE 14
Engine Stop (By manual) 15
WARMING UP 15
Warm-up and Transmission Oil in the Low Temperature Range 15
JUMP STARTING 16
HIGH ALTITUDE OPERATION 16
OPERATING THE MACHINE 17
OPERATING NEW MACHINE 17
Changing Lubricating Oil for New Machines 17
Engine Break-in 17
Machine Break-in 17
STARTING 18
Operator's Seat 18
Head Light Switch 18
Hydraulic Lift Lever 19
Throttle Lever 19
Parking Brake 19
Speed Control Pedal 20
Cruise Control Device 20
STOPPING 21
Stopping 21
CHECK DURING DRIVING 21
Immediately Stop the Engine if: 21
Easy Checker (TM) 21
Engine Overheating Precautions 21

https://truckmanualshub.com/

Fuel Gauge 22
Hourmeter 22
PARKING 23
Parking 23
TRANSPORTING 23
Directions for Use of Power Steering 23
Glide Steer 24

OPERATING THE MOWER 25
MAKING THE MOST OF YOUR MOWER 25
ADJUSTING CUTTING HEIGHT 25
Cutting Height Control Dial 25
OPERATING THE MOWER 27
KRA system Normal Operating Mode 27
PTO Lever 28
KRA system Override Mode 28

CLEANING 30
CLEANING WITH WATER 30
CLEANING THE MOWING SYSTEM 30

TIRE AND WHEELS 31
TIRES 31
Inflation Pressure 31
WHEELS 32

MAINTENANCE 33
SERVICE INTERVALS 33
LUBRICANTS, FUEL AND COOLANT 37

PERIODIC SERVICE 41
HOW TO OPEN THE HOOD 41
DAILY CHECK 41
Checking Engine Oil Level 42
Checking Amount of Fuel and Refueling 43
Checking and Cleaning Radiator and Screen to Prevent Overheating 44
Checking Tire Pressure 45
Checking Transmission Fluid Level 46
Checking Coolant Level 46
Lubricating All Grease Fittings 47
Checking Movable Parts 48
EVERY 25 HOURS 48
Cleaning Precleaner and Air Cleaner Paper Element 48
EVERY 50 HOURS 49
Checking Engine Start System 49
Checking OPC System 50
Checking PTO Control System 50
Cleaning Air Cleaner Element 51
Checking Carbon Canister Air Filter 52
Checking Gear Box Oil Level 53
Greasing 53
Oiling 54
Checking Battery Condition 57

EVERY 100 HOURS 58
Replacing Air Cleaner Paper Element 58
Cleaning Engine Shroud Panel 59
Checking Fuel Lines, Fuel Vapor Lines and Fuel Filter 59
Checking Brake 61
Checking Fan Drive Belt Tension 61
EVERY 150 HOURS 62
Changing Gear Box Oil 62
EVERY 200 HOURS 63
Replacing Engine Oil Filter Cartridge 63
Changing Engine Oil 64
Replacing Transmission Oil Filter Cartridge 65
Checking Radiator Hose and Clamp 66
Checking Hydraulic Hose 66
Adjusting Front Axle Pivot 68
Checking Spark Plug Condition & Gap 68
Cleaning Engine Shroud 68
Checking Intake Air Line 68
Replacing Fuel Filter 69
EVERY 400 HOURS 69
Changing Transmission Fluid 69
Cleaning Transmission Strainer 70
Changing Front Axle Case Oil 70
Replacing Fuel Filter 71
EVERY 1500 HOURS 71
Checking Fuel Injection Nozzle (Injection Pressure) 71
EVERY 3000 HOURS 71
Checking Injection Pump 71
EVERY 1 YEAR 71
Replacing Air Cleaner Element 71
Flush Cooling System and Changing Coolant 71
Anti-freeze 72
EVERY 2 YEARS 73
Replacing Hydraulic Hose 73
Replacing Fuel Lines and Fuel Vapor Lines 73
Replacing Engine Breather Hose 73
Replacing Radiator Hose 73
Replacing Mower Gear Box Oil Seal 73
Replacing Intake Air Line 73
SERVICE AS REQUIRED 73
Replacing Fuses 73
Replacing bulbs 74
Checking and Replacing Blade 74
Mower Belt Replacement 76
Bleeding Fuel System 76

ADJUSTMENT 77
GENERAL TORQUE SPECIFICATION 77
TIGHTENING TORQUE CHART 78

STORAGE 79

TROUBLESHOOTING 80

https://truckmanualshub.com/

ENGINE TROUBLESHOOTING 80
BATTERY TROUBLESHOOTING 80
MACHINE TROUBLESHOOTING 81
MOWER TROUBLESHOOTING 82

INDEX 83

https://truckmanualshub.com/

⚠ SAFE OPERATION

Careful operation is your best insurance against an accident. Read and understand this section carefully before operation. All operators, no matter how experienced they may be, should read this and other related manuals before operation of the machine or any implement attached to it. It is the owner's obligation to instruct all operators in safe operation.
This cutting machine is capable of amputating hands and feet and throwing objects. Failure to observe the following safety instructions could result in serious injury or death.

1. BEFORE OPERATING

1. Know your equipment and its limitations. Read, understand and follow all instructions in this manual before attempting to start and operate the machine.
2. Know the controls and how to stop quickly.
3. Pay special attention to the safety labels on the machine and mower.
4. The exhaust gas from the muffler is very hot. To prevent fire, do not expose dry grass, mowed grass, oil or any other combustible materials to exhaust gas. Use a spark arrester where required. Also keep the engine and muffler clean all the time.
5. Never wear loose, torn, or bulky clothing. It may catch on moving parts or controls, leading to the risk of accident. Safety boots or shoes, eye and hearing protection, gloves, etc. are recommended.
6. Do not operate machine or any implement attached to it while under the influence of alcohol, drugs, or other substances or while fatigued.
7. Check brakes, and other mechanical parts for faulty adjustment and wear. Replace worn or damaged parts promptly. Check the tightness of all nuts and bolts regularly. (For further details, see "MAINTENANCE" section.)
8. Keep the machine and attachments in good operating condition and keep safety devices in place and in proper working condition.
9. This machine is equipped with many safety devices. Do not attempt to remove or alter them.
10. Keep all shields and guards in place. Replace all missing or damaged items for your safety.
11. Never allow any bystanders around or near machine during operation.
    Be sure the area is clear of other people before mowing.
    Stop machine if anyone enters the area.
12. Before allowing other people to use your machine, explain proper operation to them and have them read this manual before operation.
13. Never allow passengers or non-qualified operators on the machine at any time. You must operate the machine from the seat only.
14. Carefully check the area to be mowed and clear any objects such as rocks, bottles, cans, toys, etc., that may damage the mower, the grass catcher or cause personal injury.
15. Keep your machine clean. Dirt, grease, and trash accumulations contribute to fires or lead to personal injury.
16. Keep all nuts, bolts, and screws tight to be sure the equipment is in safe working condition.
    Check the mower blade mounting bolts for proper tightness at frequent intervals.
17. Use only attachments recommended by KUBOTA.
    Use proper ballast to front or rear of machine to reduce the risk of upsets. Follow the "Safe Operation" procedures, specified in the Equipment's Manual.
18. Follow the maintenance recommendations. See "MAINTENANCE" section.
19. It is recommended that your machine be thoroughly inspected at least once a year by an authorized KUBOTA Dealer.

2. OPERATING

◆ Starting

1. Never start engine or operate levers from anywhere other than the seat.
2. Before starting the engine, make sure that all levers (including auxiliary control levers) are in their neutral positions, that the parking brake is engaged, and that both the mower clutch and the Power Take-Off (PTO) are disengaged.
3. Do not start engine by shorting across starter terminals or by by-passing the safety start switch. The machine may start and move if normal starting circuitry is bypassed.
4. Do not operate or idle engine in a poorly ventilated area. Exhaust contains poisonous carbon monoxide, a colorless and odorless gas.

◆ Working

1. Watch where you are going at all times. Watch for and avoid obstacles. Be alert near trees and other obstructions.
2. When working in groups, always let others know what you are doing ahead of time.
3. Never try to get on or off a moving machine.
4. When using any attachments, never direct discharge material toward bystanders. Do not allow anyone near the attachments while in operation.
   Do not mow when bystanders are present in the mowing area.

https://truckmanualshub.com/

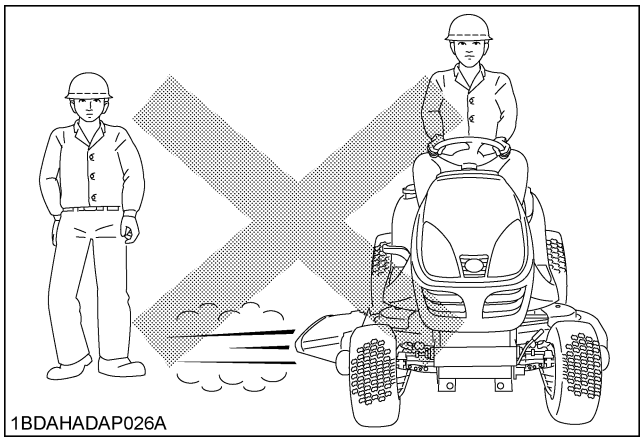

5. To reduce fire hazards, keep the engine exhaust area free of grass or leaves.
6. Slow down before turning.
7. Turn off blades when not mowing.
8. Mow only in daylight.
9. Be sure rotating blades and engine are stopped and the key is removed before placing hands or feet near blades.
10. Shut the engine off and wait for all movement to stop before unclogging chute.
11. Know what is behind you and disengage power to mower before backing up. Do not mow while in reverse unless absolutely necessary and only after observation of the entire area behind the mower.
12. Know what is behind you before overriding the KRA system. Do not override the KRA system unless absolutely necessary and safe to do so.
    KUBOTA strongly recommends against overriding the KRA system.
13. When mowing for the first time, cut the grass higher than desired.
    This will uncover any unseen object that may damage the mower or grass catcher.
14. Always inspect the mower and grass catcher after striking any foreign object. This will insure that all mower and grass catcher parts are safe and secure and not damaged.
    Repair or replace any damaged parts before re-starting.
15. Use only attachment recommended in this manual. Use proper ballast to front or rear of machine to reduce the risk of upsets. Follow the "SAFE OPERATION" procedures specified in the manuals included with the equipment.
16. Do not operate the mower without either the grass container or the guard in place.
    Be aware of the mower discharge direction and do not point it at anyone.
17. Watch for traffic when operating near or crossing roadways.
18. Never leave a running machine unattended.
    Always turn off blades, set parking brake, stop engine, and remove the key before dismounting.
19. Be extremely alert for all other traffic when operating the mower and grass catcher near public roads or highways.
20. Do not operate where machine could tip or slip.
    Do not operate near ditches, holes, embankments, or other terrain which may collapse under the machine's weight. The risk of machine tip-over is increased when the ground is loose or wet.

◆ Pulling loads

Use extra care when pulling loads to reduce the risk of serious personal injury or death due to a machine tip-over.

a) Pull only from the hitch. Never attach loads to the axle housing or any other point above hitch.
b) Limit loads to those you can safely control.
c) Do not turn sharply.
d) Use care when backing.
e) Use front ballast or wheel weights when suggested in this Operator's Manual.

◆ Operation on slopes

Slopes are a major factor related to loss-of-control and tip-over accidents, which can result in severe injury or death. All slopes require extra caution. If you cannot back up the slope or if you feel uneasy on it, do not mow it.

- Do not lift the grass container on a slope.

DO

1. Slowly mow up and down slopes, not across, to avoid machine tip-over. Stay off hills and slopes too steep for safe operation. Do not make sudden changes in speed or direction.
2. Avoid starting or stopping on a slope. If tires lose traction, disengage the blades and proceed slowly straight down the slope.
3. If the machine stops going uphill, disengage PTO and back slowly down.
4. Reduce speed and exercise extreme caution on slopes and in sharp turns to prevent tip-over or loss of control.
5. Use special caution when changing direction on slopes.
6. Remove obstacles such as rocks, tree limbs, etc.
7. Stay alert for holes in the terrain and other hidden hazards. Keep away from drop-offs. Uneven terrain could overturn the machine. Tall grass can hide obstacles.
8. Follow KUBOTA's recommendations for wheel weights or counterweights to improve stability.
9. The weight of grass in the grass container may increase the possibility of tip over.

https://truckmanualshub.com/

DO NOT

1. Do not turn on slopes unless necessary and then turn slowly and gradually downhill, if possible.
2. Do not use the machine on steep inclines.
3. Do not mow near drop-offs, ditches, or embankments. The machine could suddenly turn over if a wheel falls over the edge of a cliff or ditch, or if an edge caves in.
4. Do not mow on wet grass. Reduced traction could cause sliding.
5. Do not try to stabilize the machine by putting your foot on the ground.
6. Do not stop or start suddenly when going uphill or downhill.
7. Never "freewheel". Do not let the machine travel downhill with HST pedal at neutral position.
8. Do not modify or alter the machine and protective guards.

◆ **Children**

Tragic accidents can occur if the operator is not alert to the presence of children. Children are attracted to the machine and the mowing activity. Never assume that children will remain where you last saw them.

1. Keep children out of the mowing area and under the watchful care of another responsible adult.
2. Be alert and turn the machine off if children enter the area.
3. Before and when backing, look behind and down for small children.
4. Never carry children. They may fall off and be seriously injured or interfere with safe machine operation.
5. Never allow children to operate the machine, even under adult supervision.
6. Use extra care when approaching blind corners, shrubs, trees, or other obstructions that might hide children from sight.

◆ **Operators, age 60 years and above**

Data indicates that operators, age 60 years and above, are involved in a large percentage of machine-related injuries. These operators should evaluate their ability to operate the machine safely enough to protect themselves and others from serious injury.

◆ **Stopping**

1. Make sure that the machine has come to a complete stop before dismounting.
2. Before dismounting, disengage the PTO, lower all implements, place all control levers in their neutral positions, apply parking brake, turn off the engine and remove the key.
3. Do not park the machine on a steep incline. Park on a flat level surface.

3. USING THE PTO

1. Before installing or using PTO-driven equipment, read the manufacturer's manual and review the safety labels attached to the equipment.
2. Wait until all moving components have completely stopped before connecting, disconnecting, adjusting, cleaning, or servicing any PTO-driven equipment.
3. Use the PTO with KUBOTA approved attachments.

4. USING THE LIFT LINK

1. Use lift link only with KUBOTA authorized attachments designed for lift link usage.

5. TRANSPORTING

1. Disengage power to attachment(s) when transporting or not in use.
2. Do not tow this machine. Use a suitable truck or trailer when transporting on public roads.
3. It is recommended that this machine not be used on public roads.
4. Use extra care when loading or unloading the machine into a trailer or truck.

6. SERVICING

1. Before servicing the machine, park the machine on a firm, level surface, set the parking brake, stop the engine and remove the key.
2. Securely support machine or any machine elements with stands or suitable blocking before working underneath. For your safety do not rely on hydraulically supported devices, they may leak down, suddenly drop or be accidently lowered.
3. To avoid injury, do not adjust, unclog or service the mower or grass catcher with the engine running. Make sure rotating blades are stopped before dismounting the machine.
4. Disengage power to attachment(s), stop the engine and remove the key before making any repairs or adjustments.
5. Allow the machine to cool off before servicing the engine, muffler, etc.
6. Keep machine free of grass, leaves, or other debris build-up.
7. Use extra care in handling gasoline and diesel fuels. They are flammable and vapor is explosive.
   (1) Use only an approved container.
   (2) Do not remove fuel cap or refuel with the engine running. Allow engine to cool before refueling. Do not smoke while refueling or when standing near fuel.

https://truckmanualshub.com/

(3) Do not refuel the machine indoors and always clean up spilled fuel or oil.
(4) Do not store the machine or fuel container inside where there is an open flame, such as in a water heater.

8. Do not change the engine governor setting or overspeed the engine.
9. Never run a machine inside a closed area.
10. Mower blades are sharp and can cut your hands. Wrap the blade(s) or wear gloves, and use extra caution when servicing them.
11. Keep nuts and bolts, especially blade attachment bolts, tight and keep equipment in good condition.
12. Do not smoke when working around the battery.
    Keep all sparks and flames away from battery. The battery presents an explosion hazard because it gives off hydrogen and oxygen...especially when recharging.
13. Before "JUMP STARTING" a dead battery, read and follow all of the instructions to help protect the alternator from damage due to extreme load changes. (See "JUMP STARTING" in "OPERATING THE ENGINE" section.)
    Batteries contain sulfuric acid and produce explosive gases. Follow the instructions below to prevent personal injury.
    - Wear eye and skin protection.
    - Keep sparks and flame away.
    - Always have adequate ventilation while charging or using the battery.
14. Keep first aid kit and fire extinguisher available at all times.
15. Disconnect the battery's negative (-) cable before working on or near electric components.
16. Do not use or charge the refillable type battery if the fluid level is below the LOWER (lower limit level) mark. Otherwise, the battery component parts may prematurely deteriorate, which may shorten the battery's service life or cause an explosion. Check the fluid level regularly and add distilled water as required so that the fluid level is between the UPPER and LOWER levels.
17. To avoid sparks from an accidental short circuit, always disconnect the battery's negative (-) cable first and connect it last.

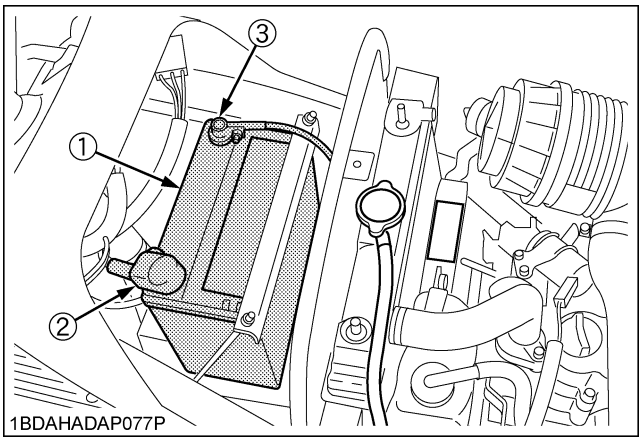

(1) Battery
(2) Positive cable (+)
(3) Negative cable (-)

18. Make sure cir-clips, nuts and spring lock washers are properly secured on the front and rear wheels, respectively.
19. Never tamper with safety devices.
    Check their proper operation regularly.
20. Check brake operation frequently. Adjust and service as required.
21. Properly dispose of used lubricants, filters, batteries, and other such components.
22. Do not attempt to mount a tire on a rim. This should be done by a qualified person with the proper equipment.
23. Always maintain the correct tire inflation pressure. Do not inflate tires above the recommended pressure shown in the Operator's Manual.

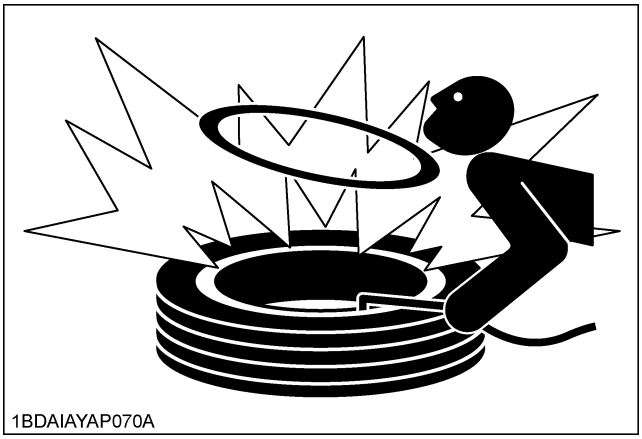

24. Securely support the machine when changing wheels.
25. Make sure that wheel bolts have been tightened to the specified torque.
26. Escaping hydraulic fluid under pressure has sufficient force to penetrate the skin causing serious personal injury. Before disconnecting lines, be sure to relieve all pressure. Before applying pressure to the system, make sure all connections are tight and that lines, pipes, and hoses are not damaged.

https://truckmanualshub.com/

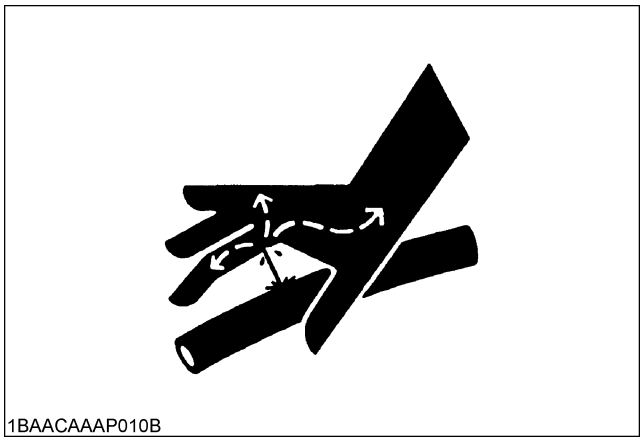

27. Fluid escaping from pinholes may be invisible. Use a piece of cardboard or wood to search for suspected leaks: do not use hands. Use safety goggles or other eye protection.
    If injured by escaping fluid, see a medical doctor at once. Serious infection or reaction will result if proper medical treatment is not administered immediately. This fluid can produce gangrene or severe allergic reaction.

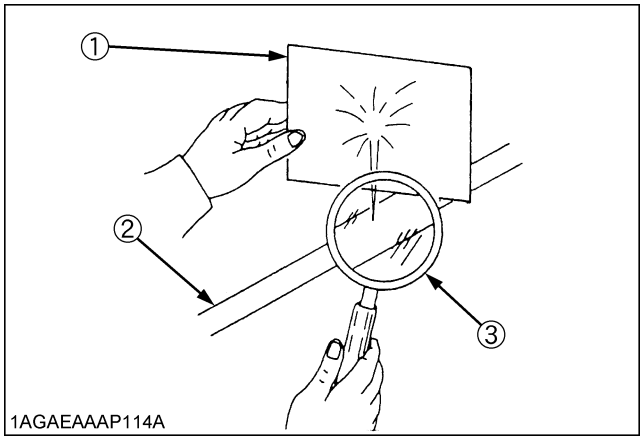

(1) Cardboard
(2) Hydraulic line
(3) Magnifying glass

28. Waste products such as used oil, fuel, hydraulic fluid, and batteries, can harm the environment, people, pets and wildlife. Please dispose properly.
29. Do not use beverage containers for waste fluids or other products. Someone, particularly children, may drink them by mistake.
30. See your local Recycling Center or KUBOTA Dealer to learn how to recycle or get rid of waste products.
    - A Material Safety Data Sheet (MSDS) provides specific details on chemical products; physical and health hazards, safety procedures, and emergency response techniques. The seller of the chemical products used with your machine is responsible for providing the MSDS for that product upon request.

7. STORAGE

1. Keep the machine and supply of fuel in locked storage and remove the key to prevent children or others from playing or tampering with them.
2. When machine is to be stored for a long time, disconnect battery cables or remove the battery. Always remove the negative (-) cable first and reinstall the negative (-) cable last.
3. Do not store the machine with fuel in the tank inside a building where fumes may ignite. Allow the engine to cool before storing.
4. To avoid the danger of exhaust fume poisoning, do not operate the engine in a closed building without adequate ventilation.
5. To reduce fire hazards, clean the machine thoroughly before storage. Dry grass and leaves around the engine and mufflers may ignite.
6. Moisture content in most grasses can damage the mower and grass catcher if these components are not properly cleaned after use. Also, dry grass and leaves left in the container can be a fire hazard. Always make sure the container and the duct are clean and completely empty before storage.

https://truckmanualshub.com/

8. DANGER, WARNING AND CAUTION LABELS

(1) Part No. K1211-6581-1

1BDAHADAP0200

(2) Part No. K1122-6584-2

1BDAHADAP0220

(3) Part No. K5617-7312-1

1BDABBSAP0020

(4) Part No. K1261-6583-1 [GR2020G]
Part No. K1162-6583-1 [GR2120, GR2120AU]

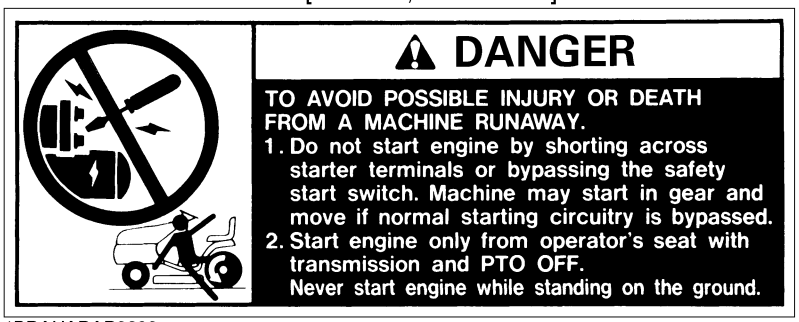

1BDAHADAP0230

(6) Part No. K3284-6569-1 [GR2120AU]

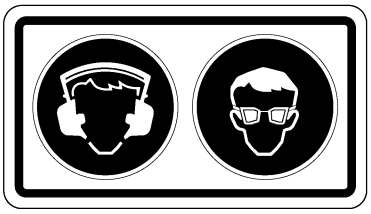

1BDABDMAP011A

(5) Part No. K2651-6568-1 [GR2020G, GR2120]

1AYAACAAP1000
1BDAHAOAP037A

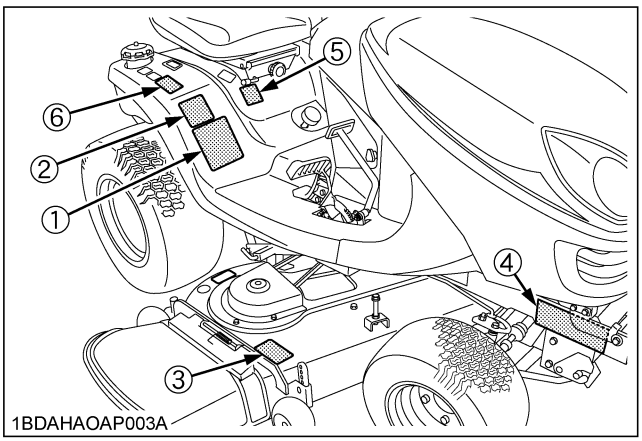

1BDAHAOAP003A

https://truckmanualshub.com/

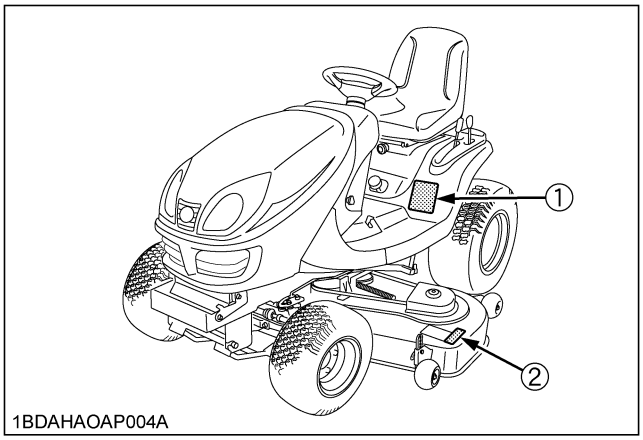

1BDAHAOAP004A

(1) Part No. K1270-6582-1

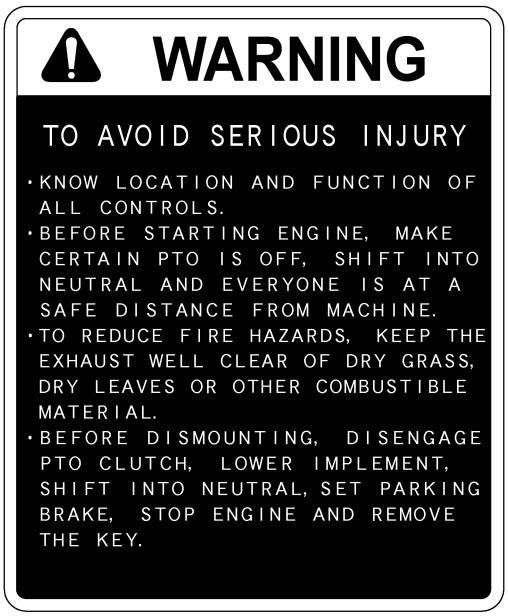

1BDAHAOAP059A

(2) Part No. K5617-7311-1

1BDABBSAP0030

1BDAHAOAP063A

https://truckmanualshub.com/

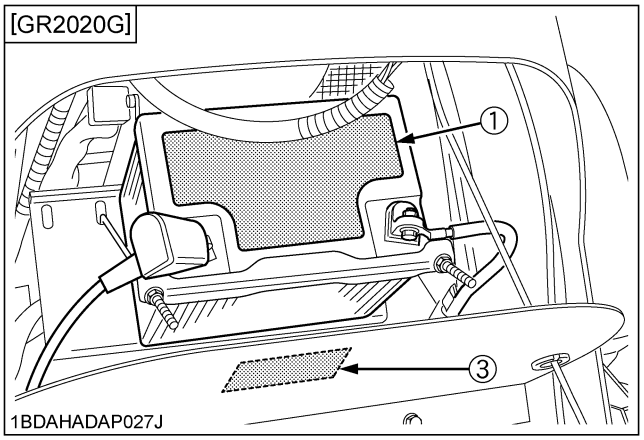

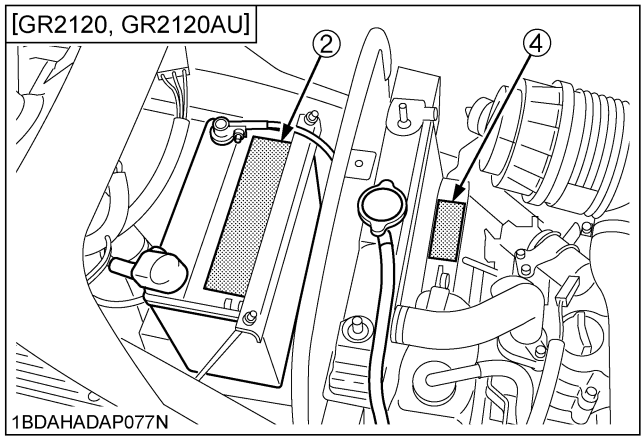

(1) Part No. K1221-6118-1 [GR2020G]

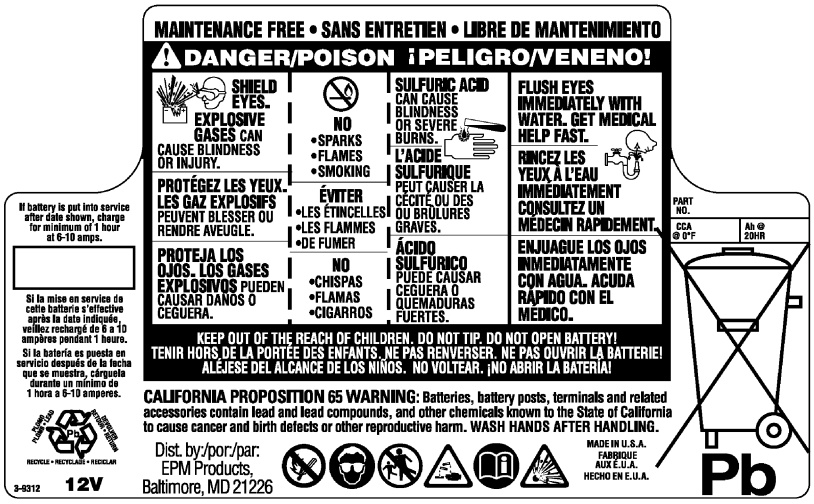

1BDAFAIAP136A

DANGER / POISON
- SHIELD EYES
  EXPLOSIVE GASES can cause blindness or injury.
- NO SPARKS / FLAMES / SMOKING
- SULFURIC ACID can cause blindness or severe burns.
- Flush eyes immediately with water.
- Get medical help fast.

(2) Part No. K3181-6116-1 [GR2120, GR2120AU]

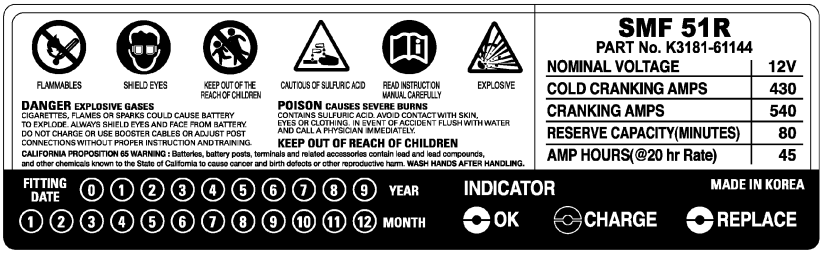

1BDAHAGAP127A

DANGER / POISON
- SHIELD EYES
  EXPLOSIVE GASES can cause blindness or injury.
- NO SPARKS / FLAMES / SMOKING
- SULFURIC ACID can cause blindness or severe burns.
- Flush eyes immediately with water.
- Get medical help fast.

(3) Part No. K1260-6586-1 [GR2020G]
Stay clear of the PTO belt.

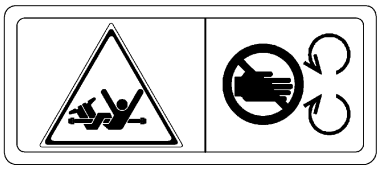

1BDAHAOAP066A

1BDAHAOAP064A

(4) Part No. K1272-6558-1 [GR2120, GR2120AU]

Do not get your hands close to engine fan and fan belt.

1BDABARAP113A

https://truckmanualshub.com/

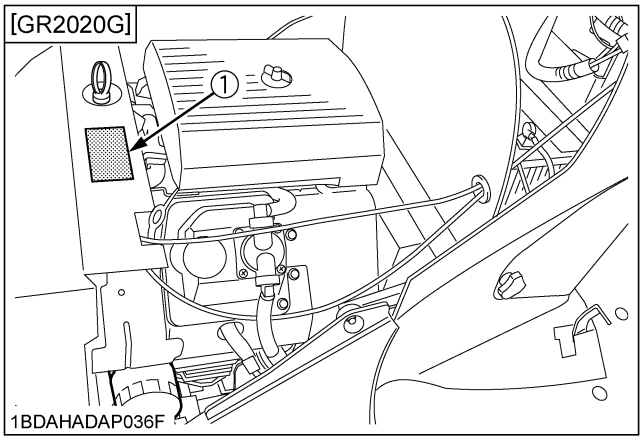

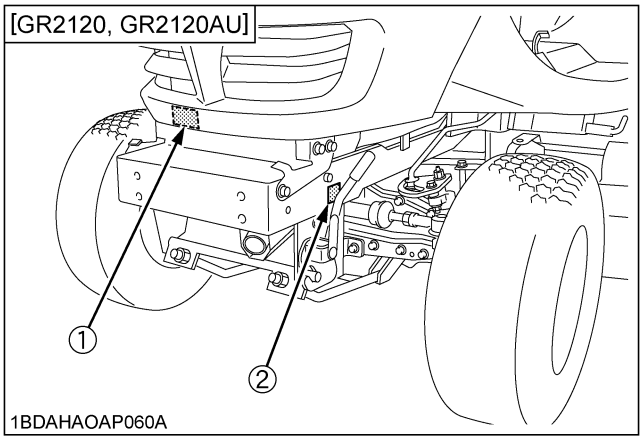

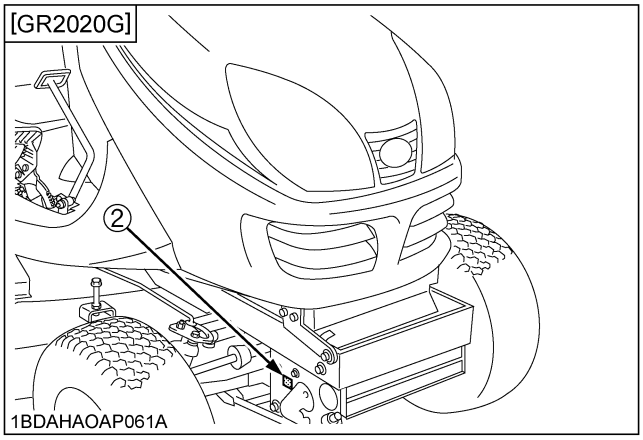

(1) Part No. K1252-6542-1
Do not touch hot surface like muffler, etc.

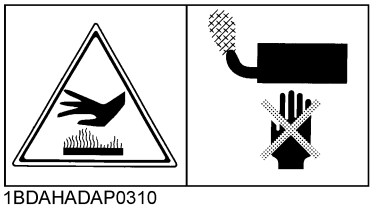

1BDAHADAP0310

(2) Part No. K2110-6573-1
HOT SURFACE
DO NOT TOUCH

1BDAHAAAP0320

1BDAHAOAP065A

https://truckmanualshub.com/

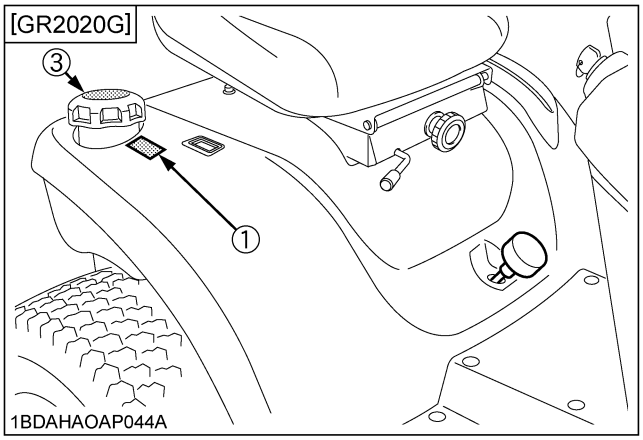

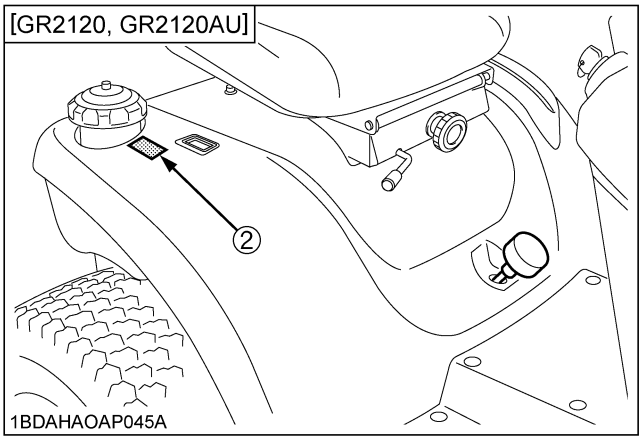

(1) Part No. K3211-6562-1 [GR2020G]

Gasoline fuel only No fire

1BDABBSAP0060

(2) Part No. K1272-6585-2 [GR2120, GR2120AU]

Diesel fuel only No fire

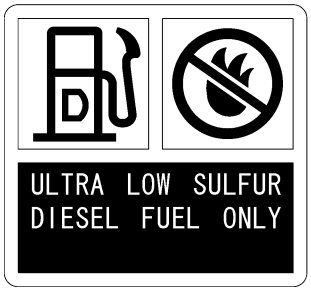

1BDAHAOAP002A

(3) Part No. K1032-3412-2 [GR2020G]

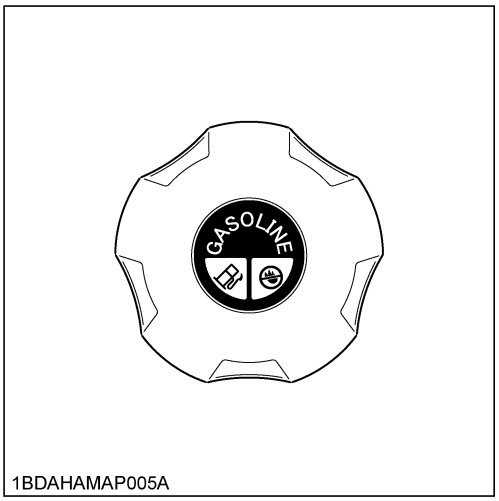

1BDAHAOAP041A

9. CARE OF DANGER, WARNING AND CAUTION LABELS

1. Keep danger, warning and caution labels clean and free from obstructing material.
2. Clean danger, warning and caution labels with soap and water, dry with soft cloth.
3. Replace damaged or missing danger, warning and caution labels with new labels from your local KUBOTA Dealer.
4. If a component with danger, warning and caution label(s) affixed is replaced with new parts, make sure new label(s) is (are) attached in the same location(s) as the replaced component.
5. Mount new danger, warning and caution labels by applying on a clean dry surface and pressing any bubbles to outside edge.

https://truckmanualshub.com/

SERVICING OF LAWN AND GARDEN TRACTOR

After reading this manual thoroughly, you will find that you can do some of the regular maintenance yourself. Your dealer is interested in helping you get the best performance from your new machine and wants to help you get the most value from it. When in need of parts or major service, be sure to see your KUBOTA Dealer. When in need of parts, be prepared to give your dealer the machine, engine and mower serial numbers.
Locate the serial numbers now and record them in the space provided.

	Type	Serial No.
Machine		
Engine		
Mower		
Date of Purchase		
Name of Dealer		
(To be filled in by purchaser)		

◆ **Warranty**
This machine is warranted under the Kubota Limited Express warranty a copy of which may be obtained from your selling dealer. No warranty shall, however, apply if the machine has not been handled according to the instruction given in the Operator's Manual even it is within the warranty period.

◆ **Scrapping the machine and its procedure**
To put the machine out of service, correctly follow the local rules and regulations of the country or territory where you scrap it. If you have questions, consult your local KUBOTA Dealer.

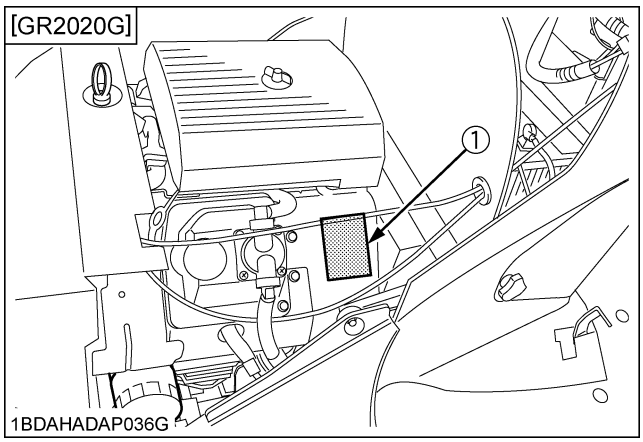

(1) Engine serial No.

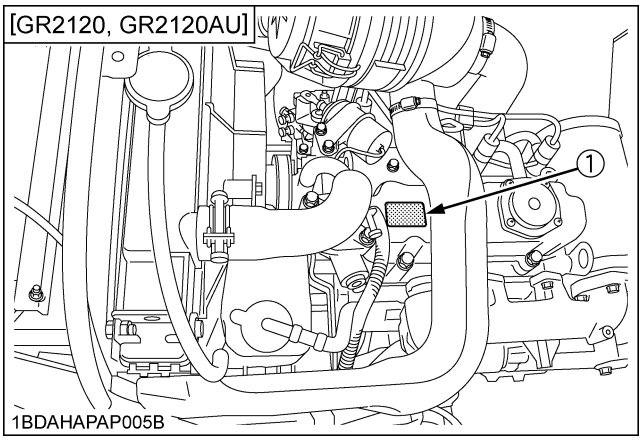

(1) Engine serial No.

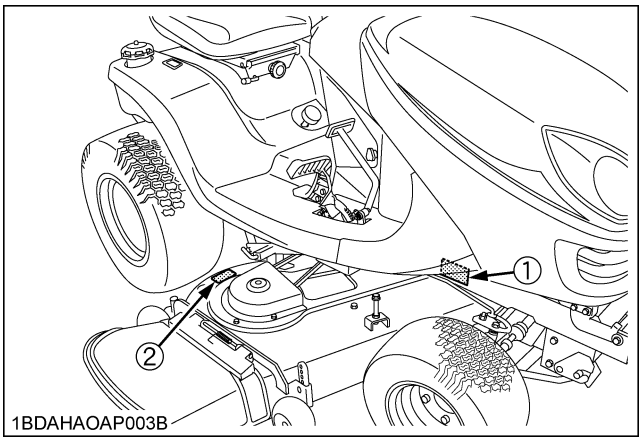

(1) Machine serial No.
(2) Mower serial No.

https://truckmanualshub.com/

SPECIFICATIONS

	Model			GR2020G	GR2120	GR2120AU
Engine	Model			GH630	D782	
	Type			Air-cooled Gasoline	Liquid-cooled Diesel	
	Total displacement		cm^3 (cu. in.)	624 (38.1)	778 (47.5)	
	Gross power		kW (HP)	15.3 (20.5)*1	15.6 (21)*1	
	Rated revolution		rpm	---	3000	
	Low idling revolution		rpm	---	1200 to 1350	
	No. of cylinders			2	3	
	Starter			Electric starter with battery		
	Battery			10U1L (12V, 300CCA)	51R (12V, 475CCA)	
	Fuel			Automobile unleaded or regular gasoline Gasohol*2 MTBE*2	Diesel fuel No.1 (below -10℃) Diesel fuel No.2 (above -10℃)	
	Preheating system			---	Super glow	
	Engine stop			Key stop		
Capacity	Fuel tank		L (U.S.gals.)	16 (4.2)	18 (4.8)	
	Engine oil		L (U.S.qts.)	1.9 (2.0)	2.8 (3.0)	
	Radiator coolant		L (U.S.qts.)	---	2.1 (2.2)	
	Hydrostatic transmission oil		L (U.S.qts.)	3.3 (3.5)		
Machine	PTO			Shaft drive		
	PTO clutch			Hydraulic Wet Multi Discs		
	PTO brake			Wet Multi Discs		
	Tires	Front	Size	16 x 7.50 - 8		
			Type	Turf, Bar	Turf, Bar	Turf
		Rear	Size	23 x 10.50 - 12		
			Type	Turf, Bar	Turf, Bar	Turf
	Steering type			Full hydraulic power steering (Glide steer)		
	Brake			Internal expanding brake		
	Travel speed control			Foot pedal		
	Transmission			Hydrostatic		
	Traveling speeds	Forward	km/h (mph)	0 to 10 (0 to 6.2)		
		Reverse	km/h (mph)	0 to 5 (0 to 3.1)		

https://truckmanualshub.com/

	Model			GR2020G	GR2120		GR2120AU
Dimensions	Overall length		mm (in.)	1990 (78.3)			
	Overall width with mower deck		mm (in.)	1550 (61.0)	1550 (61.0)	1700 (66.9)	1550 (61.0)
	Overall height		mm (in.)	1290 (50.8)			
	Wheel base		mm (in.)	1280 (50.4)			
	Tread	Front	mm (in.)	825 (32.5)			
		Rear	mm (in.)	820 (32.3)			
	Weight with mower deck		kg (lbs)	400 (882)	435 (959)	440 (970)	435 (959)
Mower deck	Model			RCK48GR	RCK48GR	RCK54GR	RCK48GR
Grass catcher				Opt.	Opt.		---

	Model			RCK48GR	RCK54GR
Mower	Cutting width		mm (in.)	1219 (48.0)	1372 (54.0)
	Cutting height		mm (in.)	25 to 102 (1.0 to 4.0)	
	Adjustment of cutting height			Dial gauge	
	Mounting method			Quick joint, Parallel linkage	
	Weight (Approx.)		kg (lbs)	75 (165.3)	80 (176.4)
	Dimensions	Total length	mm (in.)	900 (35.4)	905 (35.6)
		Total width	mm (in.)	1550 (61.0)	1700 (66.9)
		Total height	mm (in.)	290 (11.4)	
	Discharge direction			RIGHT	
	Gear box oil		L (U.S.qts.)	0.15 (0.16)	

NOTE: *1 Manufacturer's estimate The company reserves the right to change the specifications without notice.

*2 Gasohol (up to 10% ethyl alcohol, 90% unleaded gasoline by volume) or Methyl Tertiary Butyl Ether (MTBE) and unleaded gasoline blends (up to a maximum of 15% MTBE by volume) are approved for the engine. Other gasoline/alcohol blends are not approved.

https://truckmanualshub.com/

IMPLEMENT LIMITATIONS

The KUBOTA Machine has been thoroughly tested for proper performance with implements sold or approved by KUBOTA. Use of implements which exceed the maximum loading weight listed below, or which are not recommended for use with the KUBOTA Machine may result in malfunctions or failures of the machine, damage to other property and injury to the operator or others. (Any malfunctions or failures of the machine resulting from use with improper implements are not covered by the warranty.)

	Maximum axle loading weight		
MODEL	Front axle Wf	Rear axle Wr	Total gross vehicle weight
GR2020G GR2120 GR2120AU	300 kg (661 lbs)	500 kg (1102 lbs)	700 kg (1543 lbs)

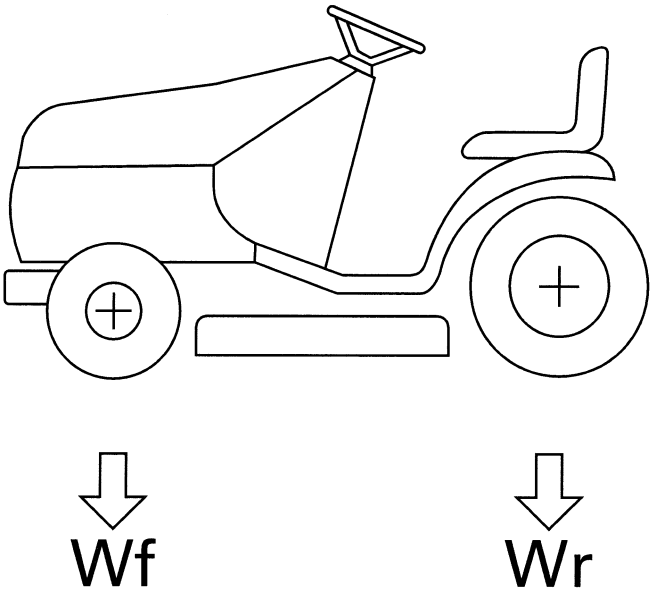

1BDAHAAAP001B

https://truckmanualshub.com/

■ Ballast

WARNING

To avoid serious injury:

- **Additional ballast will be needed for operating specific attachments. When the attachment is raised, drive slowly over rough ground, regardless of how much ballast is used.**
- **Add front ballast to increase front end stability and help prevent possible front end tip up.**
- **Always back up when going up a slope. Driving forward could cause the machine to tip over backward. Stay off hills and slopes too steep for safe operation.**

Front ballast is added for stability and steering control when heavy rear mounted equipment is installed.
Front ballast also compensates for weight transferred to the rear wheels by the draft of towed implements through the hitch.
Add additional front ballast, if necessary, for stability and safety during transport of heavy rear mounted equipment.
Front end ballast may not always maintain the required stability if the machine is driven too fast over rough ground with heavy rear mounted equipment in the raised position. Use care and drive slowly under these conditions.
Limit ballast to machine operating capacity. Be sure to remove ballast when it is not needed.
Add ballast to rear end if needed for stability. Heavy front mounted attachments tend to lift rear wheels. Add enough ballast to maintain steering control and prevent tipover. The Attachment's Manual shows how much rear ballast is required for your application. Rear ballast are available from your KUBOTA Dealer.

https://truckmanualshub.com/

INSTRUMENT PANEL AND CONTROLS

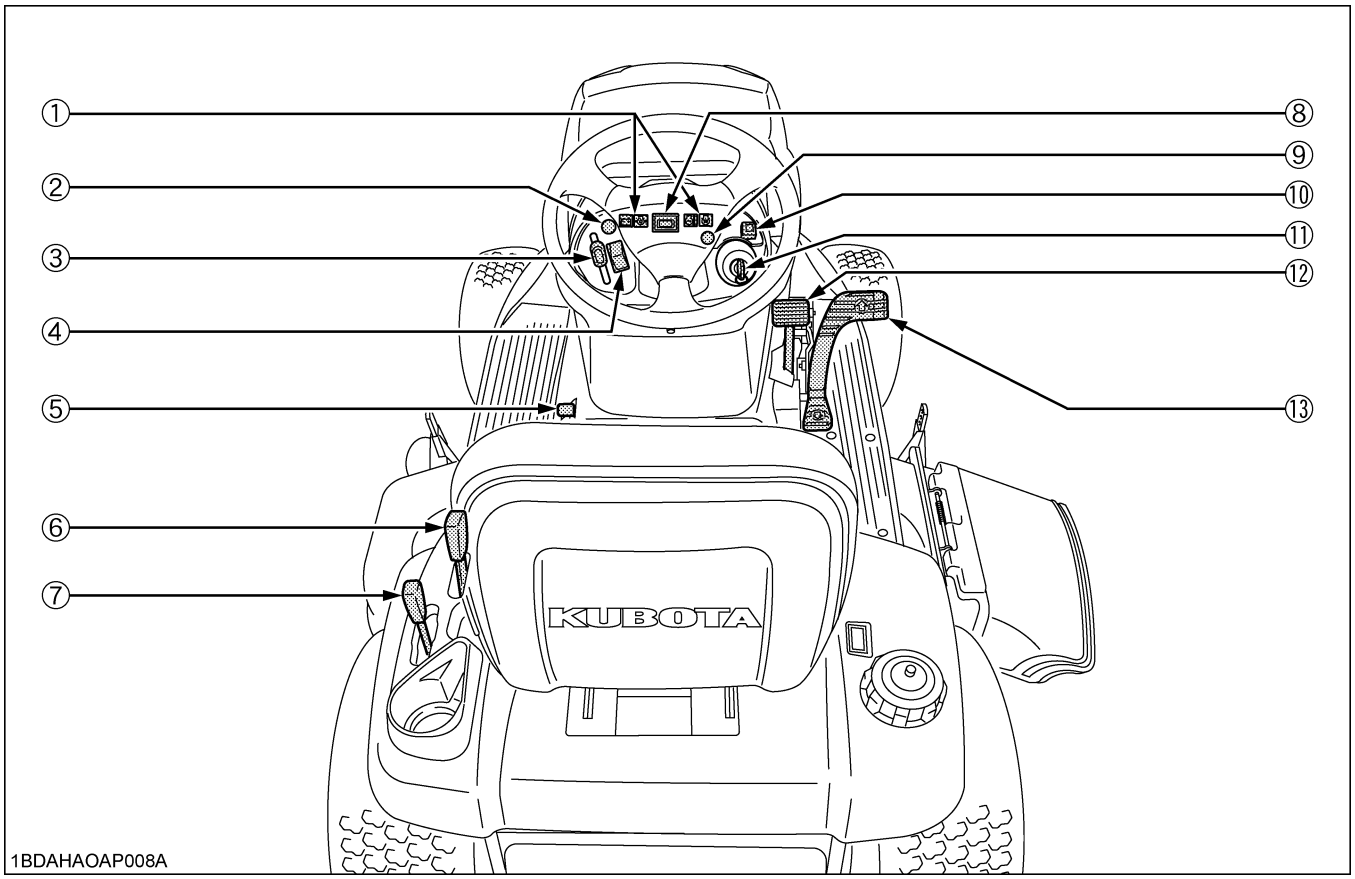

(1) Easy checker(TM)..... 21
(2) Choke lever (GR2020G)..... 13
(3) Throttle lever..... 19
(4) Head light switch..... 18
(5) Parking brake pedal..... 19
(6) PTO lever..... 28
(7) Hydraulic lift lever..... 19
(8) Hour meter..... 22
(9) Cruise control knob..... 20
(10) KRA system override switch..... 28
(11) Key switch..... 12
(12) Brake pedal..... 11
(13) Speed control pedal..... 20

https://truckmanualshub.com/

MOWER MOUNTING

ATTACHING THE MOWER

WARNING

To avoid serious injury:

- **Shut off the engine and remove the key before attaching the mower.**

■Mounting the Mower Deck

1. Park the machine on level ground and place the mower deck at the left side of the machine.
2. Set the front anti-scalp rollers at the topmost position. Turn the front wheel to the right.
3. Pull the hydraulic lift lever to raise rear links.
4. Adjust the height control dial to "1". Slide the mower deck under the machine, and then return wheels to straight ahead position.

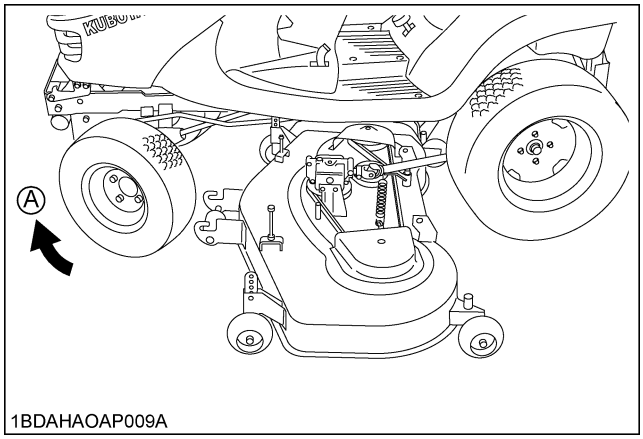

(A) "RIGHT"

5. Place the hydraulic lift lever in the "DOWN" position. Push down the rear links to align with the mower bracket.

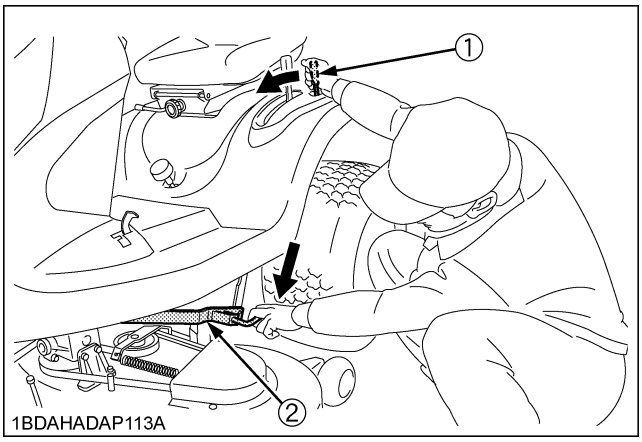

(1) Hydraulic lift lever
(2) Mower's rear link

6. Release the L pins lock to attach the rear links to the mower deck.

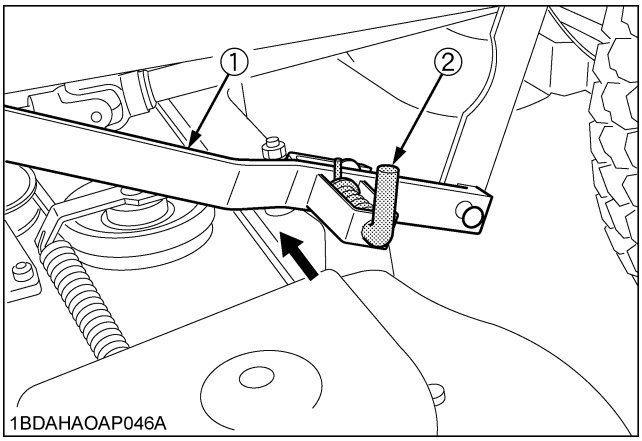

(1) Mower's rear link
(2) L pin

7. Attach the front links to the front roller brackets.

https://truckmanualshub.com/

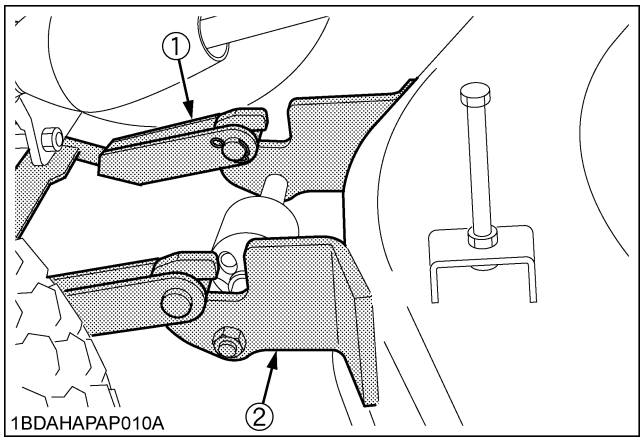

(1) Front link
(2) Front roller bracket

NOTE :
- Adjust the length (L) of the front link.
  (See "ADJUSTING THE PARALLEL LINKAGE" in "MOWER MOUNTING" section.)

8. Pull the lever fulcrum fixing pin and turn it counter clockwise to lock.
9. Hook and raise the front link with the link fixing lever, and then lay the link fixing lever onto the front bracket of the machine.
10. Turn the lever fulcrum fixing pin clockwise and push it into position to fix the link fixing lever.

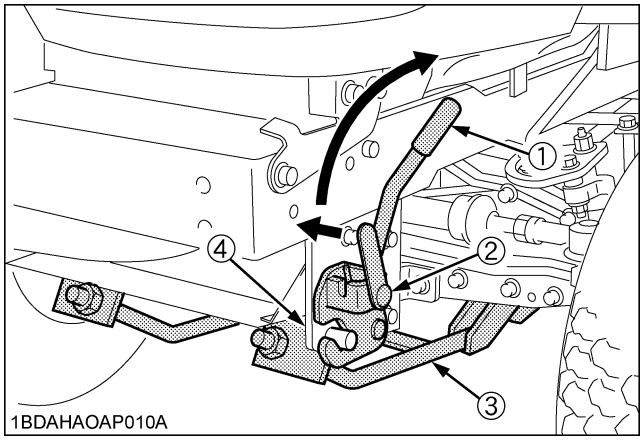

(1) Link fixing lever
(2) Lever fulcrum fixing pin
(3) Front link
(4) Front bracket

11. Pull back the coupler of the universal joint.
    Push the universal joint into the PTO shaft until the coupler locks.
    Tug the universal joint backward and forward to make sure it is locked securely.

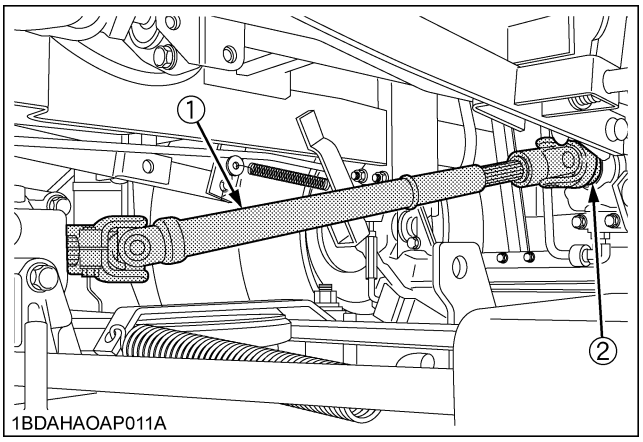

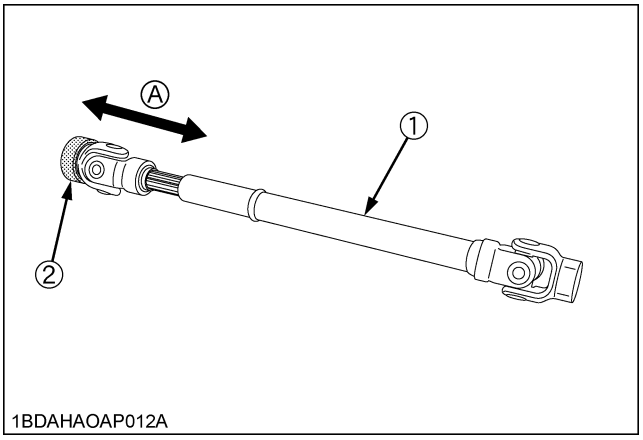

(1) Universal joint *(A) "TUG"*
(2) Coupler

NOTE :
- For dismounting the mower deck, reverse the above procedures.

https://truckmanualshub.com/

ADJUSTING THE PARALLEL LINKAGE

WARNING

To avoid serious injury:

- **Shut off the engine and remove the key.**
- **Set parking brake.**
- **Allow the blades to stop before making adjustments.**
- **Blades may be sharp, when you handle blades, wear heavy gloves or wrap end of blade with a rag.**

1. Park the machine on a level surface.
2. Make sure the mower blades are level. Then tighten the lock nuts securely.
   Adjust (L) of front links with lock nut so that A is 0 to 5 mm (0 to 0.2 in.).
   A = (Y) - (X)

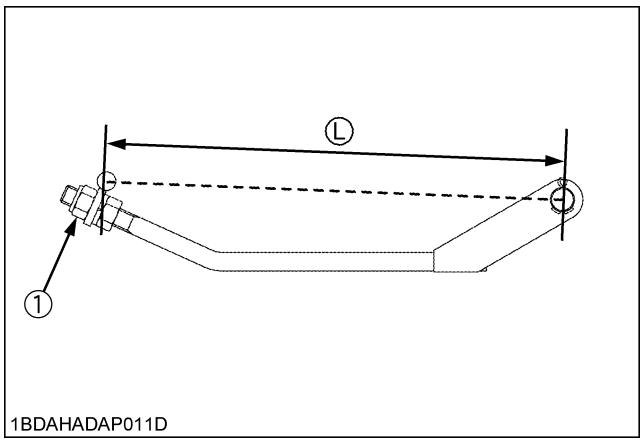

1BDAHADAP011D

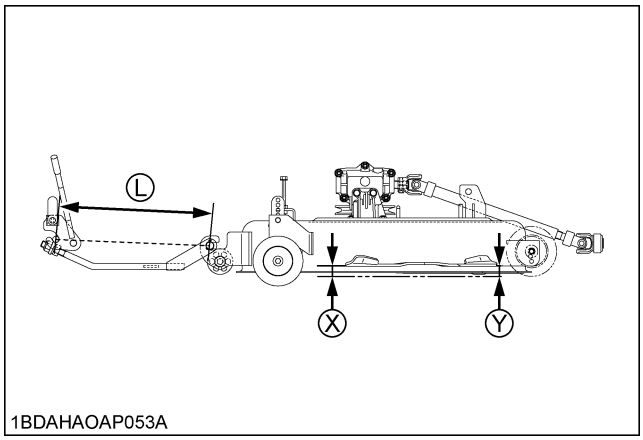

1BDAHAOAP053A

(1) Lock nut

ADJUSTING THE MOWER DECK (SIDE TO SIDE)

WARNING

To avoid serious injury:

- **Shut off the engine and remove the key.**
- **Set parking brake.**
- **Allow the blades to stop before making adjustments.**
- **Blades may be sharp. When you handle blades, wear heavy gloves or wrap end of blade with a rag.**

1. Park the machine on a level surface.
2. Tire inflation pressure must be correct.
   (See "TIRE AND WHEELS" section.)
3. Raise the hydraulic lift lever to the top position.
4. Turn the cutting height control dial to adjust height to the desired height.
5. Lower the mower deck by pushing the hydraulic lift lever forward.
6. Turn the left blade so that it is parallel to rear axle. Hold drive belt and the turn right blade so that it is parallel to axle.
7. Measure from each outside blade tip (L) and (R) to the level surface. The difference between measurements should be less than 3 mm (0.1 in.).

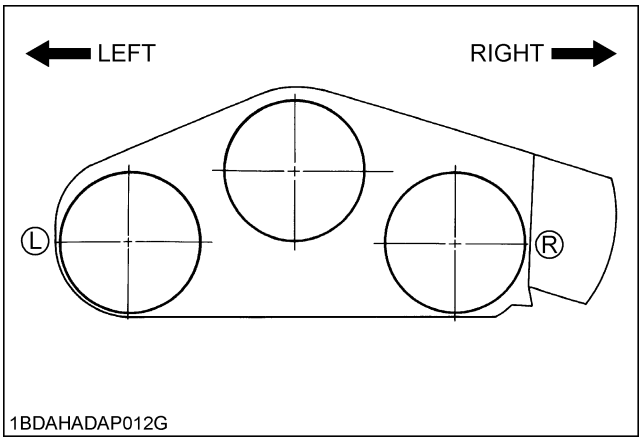

1BDAHADAP012G

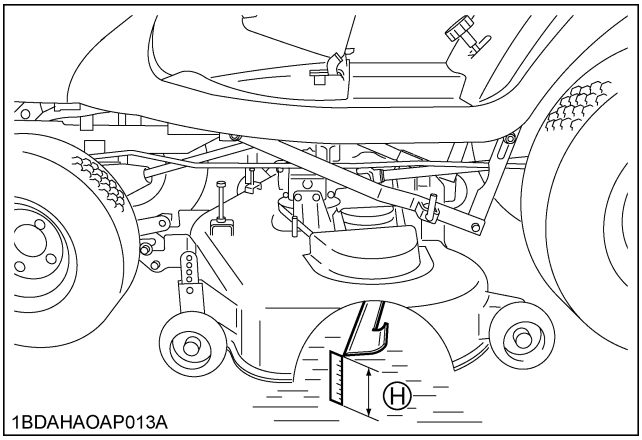

1BDAHAOAP013A

(H) Blade tip height

https://truckmanualshub.com/

8. Loosen the locknut at both sides of the machine. Adjust the cutting height fine tuning bolts so that the difference between measurements (L) and (R) is less than 3 mm (0.1 in.).
9. Lock the nuts.

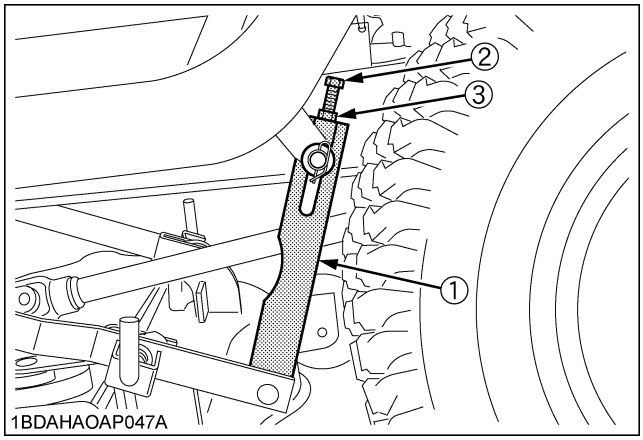

(1) Lift link
(2) Cutting height fine tuning bolt
(3) Lock nut

ADJUSTING THE MOWER LIFT STOPPERS

The mower lift stoppers are designed for maintaining the balance of the mower deck, when lifting the mower to the highest position. Make sure that the stoppers are in contact with the underside of the frame.

To adjust:

1. Lift the mower to the highest position.
2. Loosen the lock nuts and adjust the stoppers on both sides so that the bolt heads are in contact with the underside of the frame.
3. Lower the mower deck.
4. Turn the stoppers counterclockwise a half turn, and then secure the lock nuts.

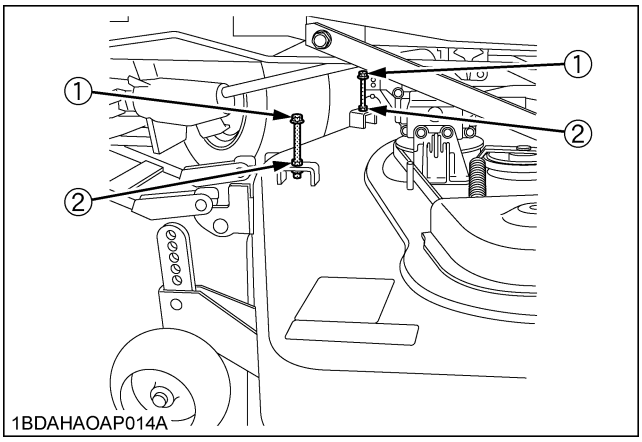

(1) Mower lift stopper
(2) Lock nut

DISMOUNTING THE MOWER DECK

For dismounting the mower deck, reverse the above procedures.

https://truckmanualshub.com/

OPERATING THE ENGINE

WARNING

To avoid serious injury:

- **Read "SAFE OPERATION" in the front of this manual.**
- **Read the danger, warning and caution labels located on the machine.**
- **To avoid danger of exhaust fume poisoning, do not operate the engine in a closed building without proper ventilation.**
- **Never start the engine while standing on the ground. Start the engine only from the operator's seat.**

STARTING THE ENGINE

1. Sit on the operator's seat.

2. Apply the parking brake.

To apply the parking brake:
Depress the brake pedal firmly with your right foot and the parking brake pedal simultaneously with your left foot. Then release the brake pedal while holding the parking brake pedal down.

To release the parking brake:
Depress the brake pedal and release slowly.

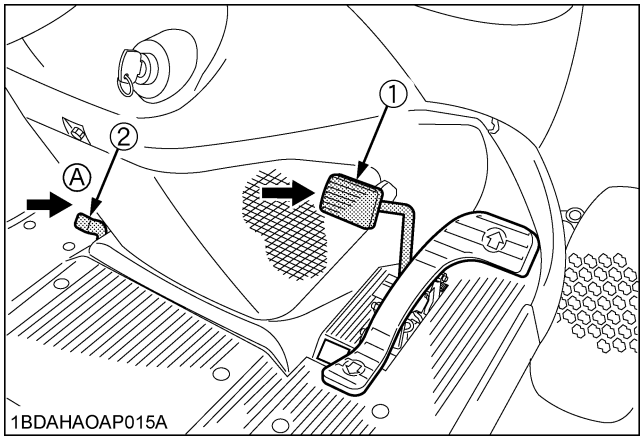

(1) Brake pedal
(2) Parking brake pedal
(A) "DEPRESS"

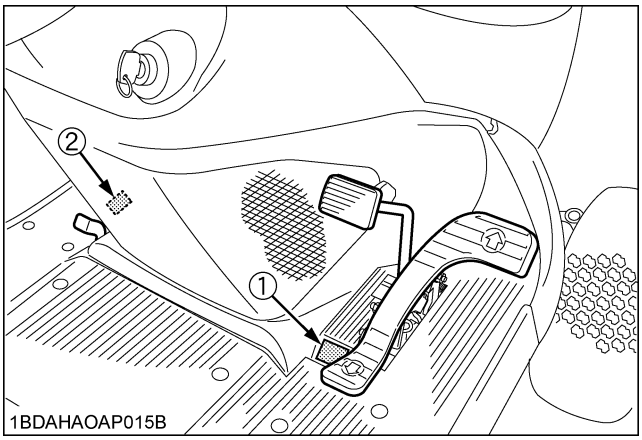

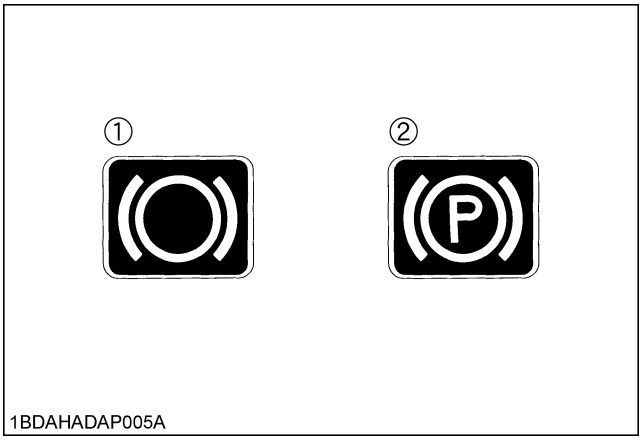

(1) Brake
(2) Parking brake

3. Make sure that the PTO lever is in the "DISENGAGED" position.

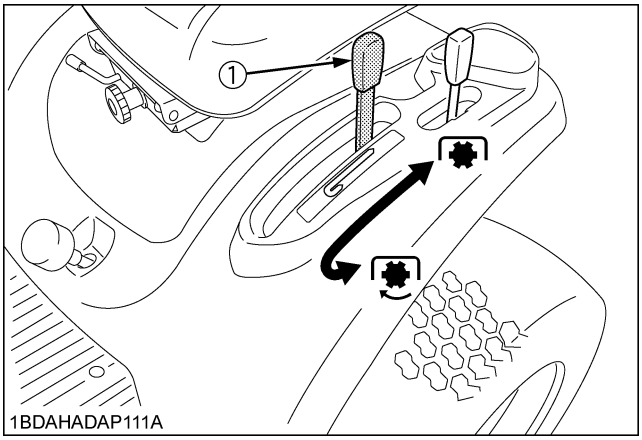

(1) PTO lever
: "ENGAGED"
: "DISENGAGED"

https://truckmanualshub.com/

4. Set the throttle lever 1/2 way forward.

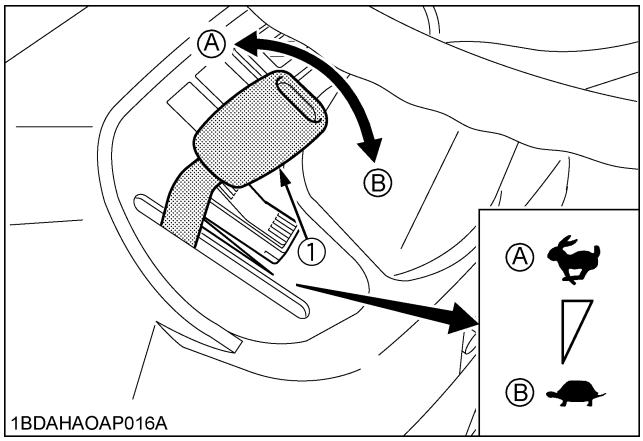

(1) Throttle lever *: "FAST"*
: "SLOW"

5. Insert the key into the key switch and turn clockwise 1 notch.
Make sure the easy checker lights are ON.

■Key Switch
[GR2020G]

OFF.....	The position where the key can be inserted into or removed from the key switch. [When the key is turned to this position, the engine shuts off.]
ON.....	The engine keeps running.
START.....	Apply the parking brake and turn the key switch to this position to start the engine.

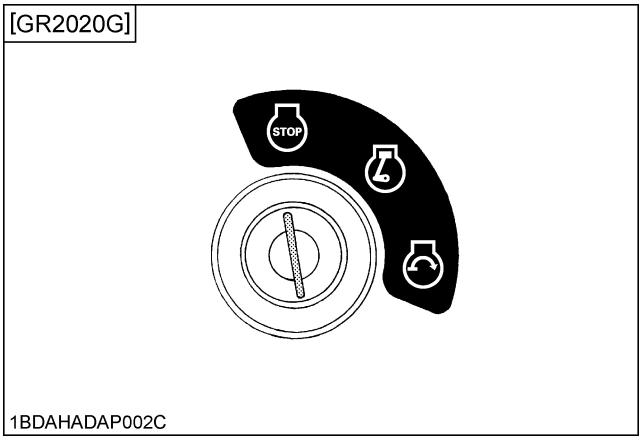

: "OFF" *: "START"*
: "ON"

IMPORTANT :
- Do not use starting fluid or ether.
- To protect the battery and the starter, make sure that the starter is not continuously turned for more than 10 seconds at a time.
  If the engine does not start, allow 60-second cool down period between starting attempts.
- If the starter does not turn the engine over, shut off the starter immediately. Do not make further attempts to start the engine until the condition is corrected. Do not jump start using another battery.
  Consult your local KUBOTA dealer.
- Do not turn the key switch to the "START" position while the engine is running.
- When the temperature is below 0℃ (32℉), run the engine at medium speed to warm up the lubricant of the engine and the transmission for at least 10 minutes. If the machine is operated before the lubricant is warm enough, the machine life will be shortened.
- Do not operate the machine under full load until it is sufficiently warmed up 2 or 3 minutes for temperature above 0℃ (32℉).
- When the ambient temperature is less than -15℃ (5℉), remove the battery from the machine and store it somewhere warm until the next operation.

https://truckmanualshub.com/

[GR2120, GR2120AU]

OFF.....	The position where the key can be inserted into or removed from the key switch. [When the key is turned to this position, the engine shuts off.]
ON.....	The engine keeps running.
PREHEAT...	The super glow plug is heated.
START.....	Apply the parking brake and turn the key switch to this position to start the engine.

[GR2120, GR2120AU]

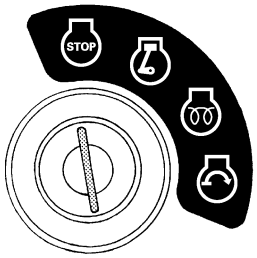

1BDAHADAP003D

: "OFF" *: "PREHEAT"*
: "ON" *: "START"*

IMPORTANT :
- Do not turn the key switch to the "START" position while the engine is running.
- When the temperature is below 0℃ (32℉), run the engine at medium speed to warm up the lubricant of the engine and the transmission for at least 10 minutes. If the machine is operated before the lubricant is warm enough, the machine life will be shortened.
- Do not operate the machine under full load until it is sufficiently warmed.
- Do not use starting fluid or ether.
- When the ambient temperature is less than -15℃ (5℉), remove the battery from the machine and store it somewhere warm until the next operation.

6. [GR2120, GR2120AU]
Turn the key switch to the "PREHEAT" position clockwise, and hold it for about 5 seconds.
For the appropriate preheating time, refer to the table below:

Temperature	Preheating Time
Over 0℃ (32℉)	5 sec.
Below 0℃ (32℉)	10 sec.

■Throttle Lever and Choke Lever

Pulling the throttle lever downward decreases the engine speed and pushing it upward increases the engine speed.

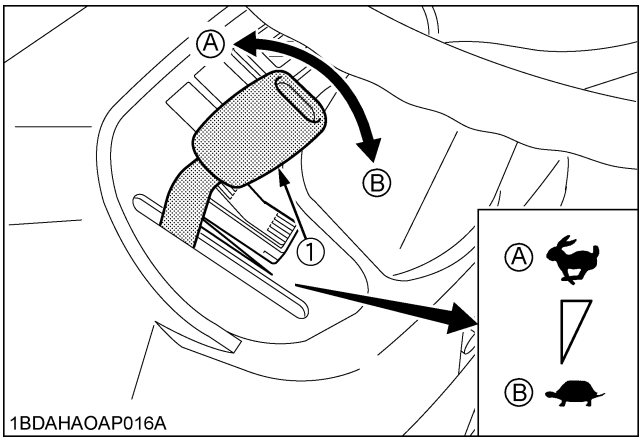

1BDAHAOAP016A

(1) Throttle lever *: "FAST"*
: "SLOW"

[GR2020G]

◆ Choke lever

[For a Cold Engine]

Always pull the choke knob out to the "ON" position to start the engine in cold conditions.

Gradually return the choke control to the "OFF" position after the engine starts and warms up.

The engine/equipment may be operated during the warm-up period, but it may be necessary to leave the choke partially on until the engine warms up.

[For a Warm Engine]

Always push the choke knob in to the "OFF" position after the engine starts.

https://truckmanualshub.com/

7. Turn the key switch to the "START" position and release the key to the "ON" position when the engine starts.

■Cold Weather Starting

[GR2020G]

If the ambient temperature is below 0℃(32℉) and the engine is very cold, start it in the following manner:

1. Pull the choke knob out.
2. Turn the key switch to the "START" ("⏲") position.
   - Operate the starter 5 seconds.
   - If the engine does not start, wait 10 seconds.
   - Repeat this procedure until the engine starts.
3. When the engine starts, release the key to the "ON" ("⏲") position.
4. Place the throttle lever midway between the "SLOW" and the "FAST" positions.

[GR2120, GR2120AU]

When the ambient temperature is below -5℃(23℉) and the engine is very cold. (If the engine fails to start after 10 seconds, turn off the key for 30 seconds. Then repeat steps 6 and 7. To protect the battery and the starter, make sure that the starter is not continuously turned for more than 30 seconds.)

■Block Heater (Option)

A block heater is available as an option from your local dealer. It will assist you in starting your machine when the ambient temperature is below -15℃(5℉).

8. Check to see that all the lamps on the Easy Checker(TM) are "OFF".

If the lamp is still on, immediately stop the engine and determine the cause.

9. Warm the engine by running at medium speed.

STOPPING THE ENGINE

[GR2020G]

1. After slowing the engine to half speed, turn the key switch to the "OFF" position.
2. Remove the key.
3. Do not leave the key switch "ON" (key in the "ON" position) as the battery will discharge when the engine is not running.
4. Apply the parking brake.
5. Close the fuel cock.

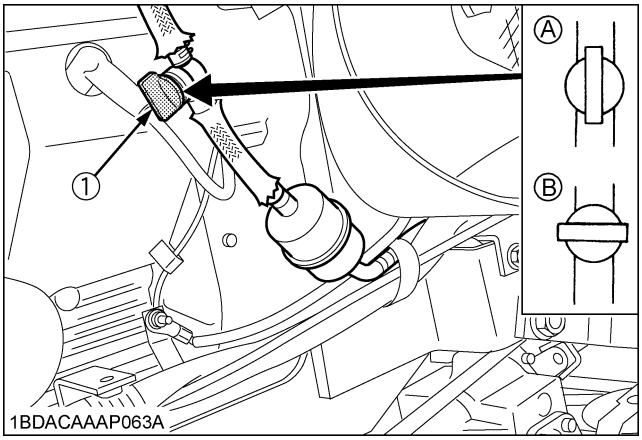

(1) Fuel cock *(A) "OPEN"* *(B) "CLOSE"*

IMPORTANT :

- Do not stop the engine when the machine is on an incline for a long time. The engine oil may go into the carburetor and the muffler through the valve system.
- Place the throttle lever in the half speed position to help prevent the engine from backfiring before stopping the engine.

[GR2120, GR2120AU]

1. After slowing the engine to idle, turn the key switch to the "OFF" position.
2. Remove the key.
3. Do not leave the key switch "ON" (key in the "ON" position) as the battery will discharge when the engine is not running.
4. Set the parking brake.

https://truckmanualshub.com/

■Engine Stop (By manual)

[GR2020G]

The engine stops when the key switch is turned off. If the engine does not stop, make sure the speed control pedal are in neutral position, the PTO lever is "OFF", the mower is lowered to the ground and the parking brake is set, and then carefully get off the machine. Open the hood, close the fuel cock and wait the engine stops. Then contact your local KUBOTA Dealer immediately.

WARNING

To avoid serious injury:

- **Do not operate the machine until the engine stop system is repaired.**

WARMING UP

WARNING

To avoid serious injury:

- **Be sure to apply the parking brake during warm-up.**

For 5 minutes after engine start-up, allow engine to warm up without applying any load. This is to allow oil to reach every engine part. If load should be applied to the engine without this warm-up period, trouble such as seizure, breakage or premature wear may develop.

■Warm-up and Transmission Oil in the Low Temperature Range

Hydraulic oil serves as transmission fluid. In cold weather, the oil may be cold with increased viscosity. This can cause delayed oil circulation or abnormally low hydraulic pressure for some time after engine start-up. This in turn can result in trouble in the hydraulic system or a damage to the hydraulic clutch.

To prevent the above, observe the following instructions:

Warm up the engine at about 50% of rated rpm according to the table below:

Atmospheric temperature	Warm-up time requirement Higher
Higher than 0 ℃ (32 ℉)	Approx. 5 minutes
-10 to 0 ℃ (14 to 32 ℉)	5 to 10 minutes
-20 to -10 ℃ (-4 to 14 ℉)	10 to 15 minutes
Below -20 ℃ (-4 ℉)	More than 15 minutes

IMPORTANT :

- Do not operate unless the engine is well warmed up. If operation is attempted while the engine is still cold, the hydraulic mechanism will not function properly and its service life will be shortened.
- If noises are heard after the hydraulic control lever has been activated and the implement is lifting, the hydraulic mechanism is not adjusted properly. Unless corrected, the unit will be damaged. Contact your local KUBOTA Dealer for adjustment.

https://truckmanualshub.com/

JUMP STARTING

WARNING

To avoid serious injury:

- **Keep cigarettes, sparks, and flames away from battery.**
- **If machine battery is frozen, do not jump start engine.**
- **Do not connect other end of negative (-) jumper cable to negative (-) terminal of machine battery.**

When jump starting engine, follow the instructions below to safely start the engine.

1. Bring helper vehicle with a battery of the same voltage as disabled machine within easy cable reach. "THE VEHICLES MUST NOT TOUCH".
2. Apply the parking brakes of both vehicles and put the shift levers in neutral. Shut the engine off.
3. Put on safety goggles and rubber gloves.
4. Ensure the vent caps are securely in place. (if equipped)
5. Attach the red clamp to the positive (red, (+) or pos.) terminal of the dead battery and clamp the other end of the same cable to the positive (red, (+) or pos.) terminal of the helper battery.
6. Clamp the other cable to the negative (black, (-) or neg.) terminal of the helper battery.
7. Clamp the other end to the engine block or frame of the disabled machine as far from the dead battery as possible.
8. Start the helper vehicle and let its engine run for a few moments. Start the disabled machine.
9. Disconnect the jumper cables in the exact reverse order of attachment. (Steps 7, 6 and 5).

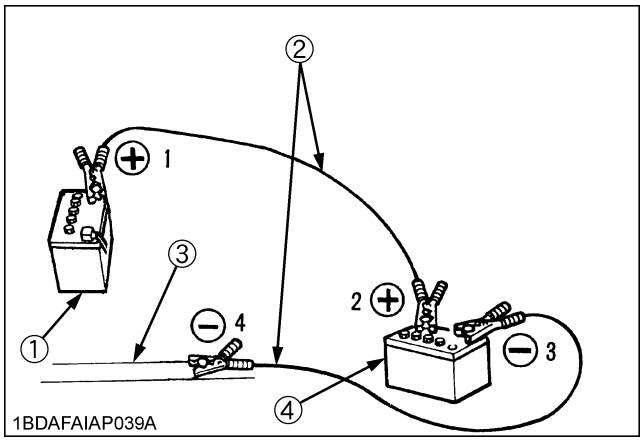

(1) Dead battery
(2) Jumper cables
(3) Engine block or frame
(4) Helper battery

Connect cables in numerical order.
Disconnect in reverse order after use.

IMPORTANT :

- This machine has a 12 volt negative (-) ground starting system.
- Use only same voltage for jump starting.
- Use of a higher voltage source on machine could result in severe damage to machine electrical system. Use only matching voltage source when "Jump starting" a low or dead battery condition.

HIGH ALTITUDE OPERATION

[GR2020G]

Operating the engine with the wrong engine configuration at a given altitude may increase its emissions and decrease fuel efficiency and performance.

To ensure correct engine operation at altitudes above 1219 meters (4000 ft.), it may be necessary to have an authorized KUBOTA dealer install a special high-altitude jet kit in the carburetor. If a high-altitude kit has been installed, the engine must be reconverted to the original jet size, before it is operated at lower altitudes, or overheating and engine damage can result.

https://truckmanualshub.com/

OPERATING THE MACHINE

OPERATING NEW MACHINE

How a new machine is operated and maintained determines the life of the machine.

A new machine just off the factory production line has been tested, but the various parts are not accustomed to each other, so care should be taken to operate the machine for the first 50 hours at a slower speed and avoid excessive work or operation until the various parts become "broken-in." The manner in which the machine is handled during the "breaking-in" period greatly affects the life of your machine. Therefore, to obtain the maximum performance and the longest life of the machine, it is very important to properly break-in your machine. In handling a new machine, the following precautions should be observed.

■Changing Lubricating Oil for New Machines

The lubricating oil is especially important in the case of a new machine. The various parts are not "broken-in" and are not accustomed to each other; small metal grit may develop during the operation of the machine; and this may wear out or damage the parts. Therefore, care should be taken to change the lubricating oil a little earlier than would ordinarily be required.

For further details of change interval hours, see "SERVICE INTERVALS" in "MAINTENANCE" section.

■Engine Break-in

After the first 50 hours of operation, change the engine oil and filter. (See "EVERY 100 HOURS" and "EVERY 200 HOURS" in "PERIODIC SERVICE" section.)

■Machine Break-in

After the first 200 hours of operation, change the transmission fluid.

After the first 50 hours of operation, change the oil filter cartridge. (See "EVERY 200 HOURS" in "PERIODIC SERVICE" section.)

DANGER

To avoid serious injury or death:

- **Do not operate the mower without the deflector shield in the down position.**

WARNING

To avoid serious injury:

- **Do not allow any person other than the driver to ride on the machine.**
- **Do not drive the machine close to the edges of ditches or banks which may collapse under the weight of the machine, especially when the ground is loose or wet.**
- **Slow down before turning.**
- **To avoid tip over, operate up and down slopes, not across. Avoid sudden starts and stops on slopes. Slow down, and use extra caution when changing direction on a slope. Do not use the machine on a steep incline.**
  Park the machine on a firm, level surface.
- **Watch where you are going at all times. Watch for and avoid obstacles. Be alert at curbs, near trees, and other obstructions and hidden hazards.**
- **Do not drive a machine on streets or highways. Watch for traffic when you cross roads or operate near roads.**
- **Look to the rear before and when backing. Make sure the area immediately behind you is clear of obstructions or holes and small children. Use extra caution when a machine is equipped with Grass Catcher.**

WARNING

To avoid serious injury:

- **Clear the work area of objects which might be picked up and thrown by blades.**
- **Do not direct the opening of the chute at bystanders or animals. Ejected objects may cause injury. Plan your mowing carefully before starting operation.**
- **Keep bystanders especially children and animals away from the mowing area.**
- **Be sure to disengage the PTO and sit on the operator's seat before starting the engine.**

https://truckmanualshub.com/

STARTING

1. Adjust the operator's position.

■Operator's Seat

WARNING

To avoid serious injury:

- **Make sure that the seat is completely secured after each adjustment.**
- **Do not allow any person other than the operator to ride on the machine.**

◆ **Travel adjustment**

The operator's seat position can be adjusted forward and backward by 150 mm (6 in.) range by pulling the seat sliding lever.

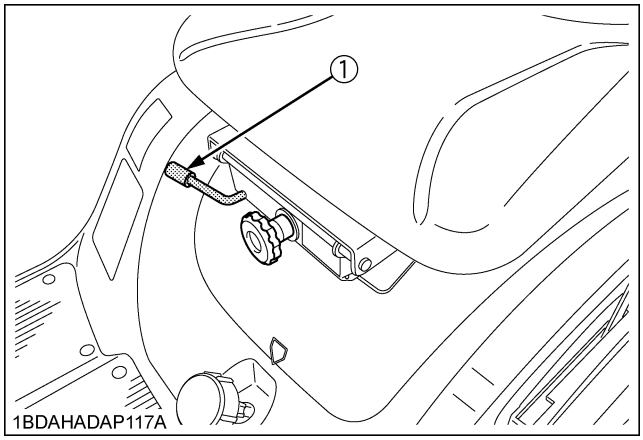

(1) Seat sliding lever

IMPORTANT :

- After adjusting the operator's seat, be sure to check that the seat is properly locked.

◆ **Suspension adjustment**

Turn the suspension adjust knob to achieve the optimum suspension setting.

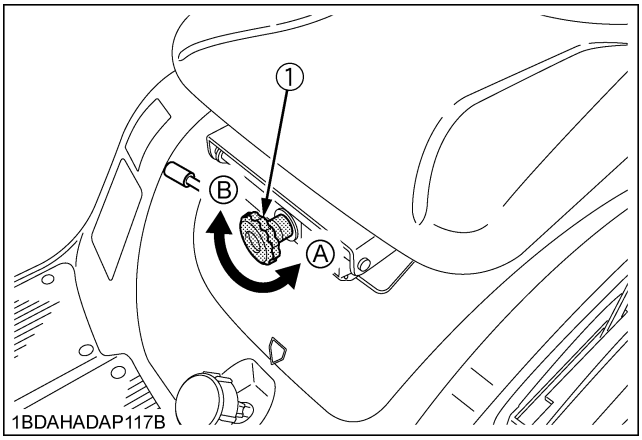

(1) Suspension adjust knob *(A) To decrease tension*
(B) To increase tension

2. Select Light Switch Positions

■Head Light Switch

(A).....Head lights ON.
(B).....Head lights OFF.

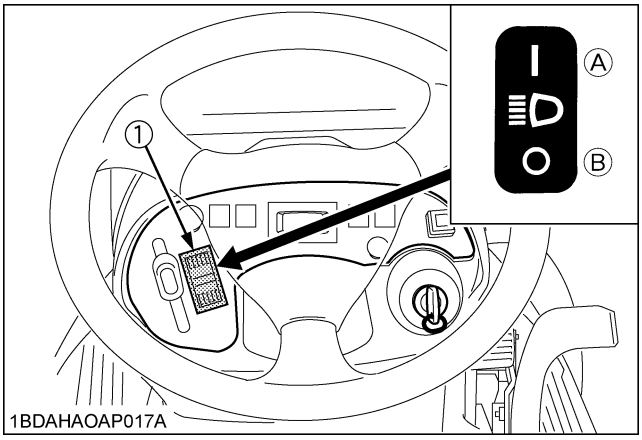

(1) Head light switch

https://truckmanualshub.com/

3. Raise the implement.

■Hydraulic Lift Lever

The hydraulic lift lever is used to raise and lower implement used with the machine (ex. Mower).
To lower implement, push the lever FORWARD.
To raise it, pull the lever BACKWARD.

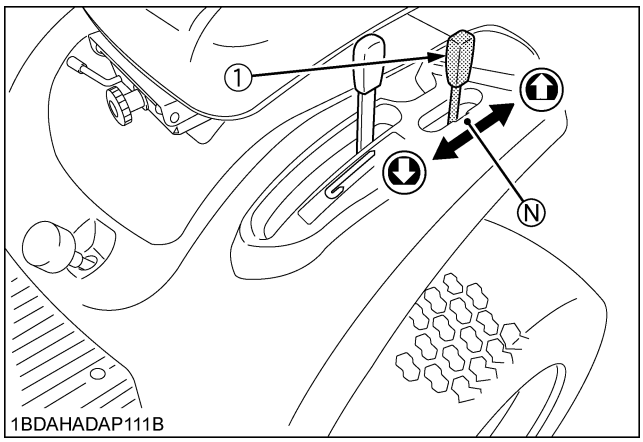

(1) Hydraulic lift lever

: "DOWN"
N: "NEUTRAL"
: "UP"

IMPORTANT :

- Do not operate until the engine is warmed up. If operation is attempted when the engine is still cold, the hydraulic system may be damaged.
- Do not operate at slow Engine rpm. Move the throttle lever above 1/2.
- If noises are heard when implement is lifting after the hydraulic lift lever has been activated, the hydraulic mechanism is not adjusted properly. Contact your local KUBOTA Dealer for adjustment.

4. Accelerate the Engine.

■Throttle Lever

Pulling the throttle lever backward decreases the engine speed and pushing it forward increases the engine speed.

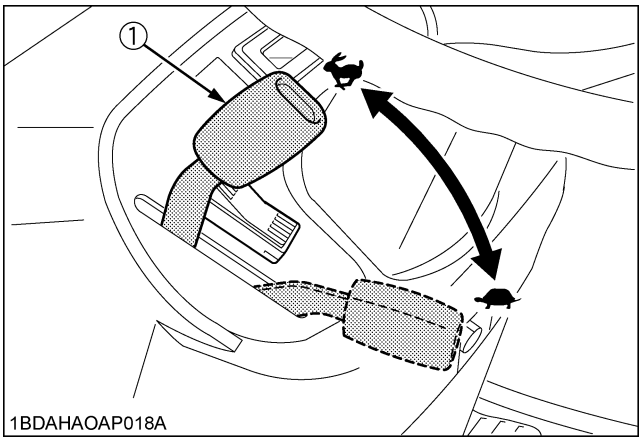

(1) Throttle lever

: "FAST"
: "SLOW"

5. Unlock the Parking Brake.

■Parking Brake

To release the parking brake, depress the brake pedal again.

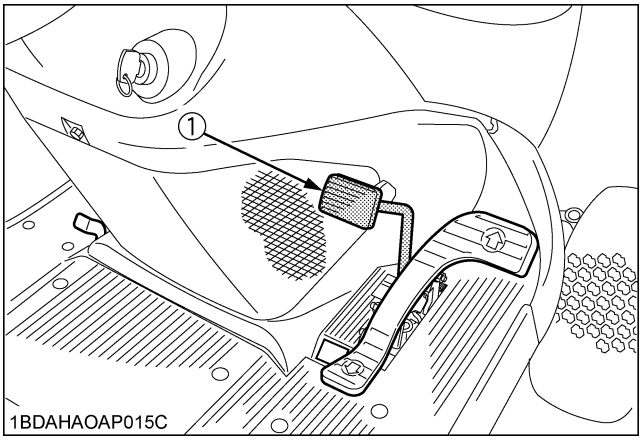

(1) Brake pedal

https://truckmanualshub.com/

6. Depress the Speed Control Pedal.

■Speed Control Pedal

WARNING

To avoid serious injury:

- **Do not operate if the machine moves on a level ground with foot off Speed Control Pedal.**

"FORWARD" (⇧)
Depress the speed control pedal with the toe of your right foot to move forward.

"REVERSE" (⇩)
Depress the speed control pedal with the heel of your right foot to move in reverse.

Depress the speed control pedal a little and you can drive slowly.
To increase travel-speed, depress the speed control pedal more until the desired speed is reached.

NOTE :

- When the parking brake is applied, the speed control pedal is locked in the "NEUTRAL" position.

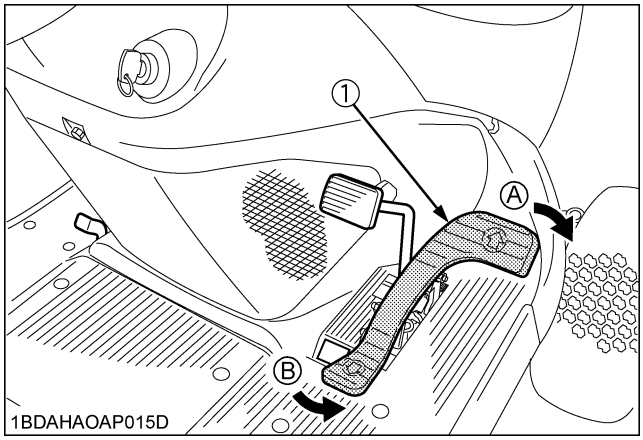

(1) Speed control pedal *(A) "FORWARD"* *(B) "REVERSE"*

■Cruise Control Device

The cruise control device is designed for machine operating efficiency and operator's comfort. This device will provide a constant forward operating speed by mechanically holding the speed control pedal at a selected position.

◆ **To engage cruise control device**

1. Accelerate speed to desired level using speed control pedal.
2. Pull the cruise control knob.
3. Release the speed control pedal while pulling the cruise control knob.
4. Release the cruise control knob and desired speed will be maintained.

◆ **To disengage speed set device**

- Step on the forward acceleration side of the pedal or depress the brake pedal.

NOTE :

- Cruise control device will not operate in reverse.

IMPORTANT :

- To prevent the damage of cruise control device, do not depress the reverse pedal when the cruise control device is engaged.

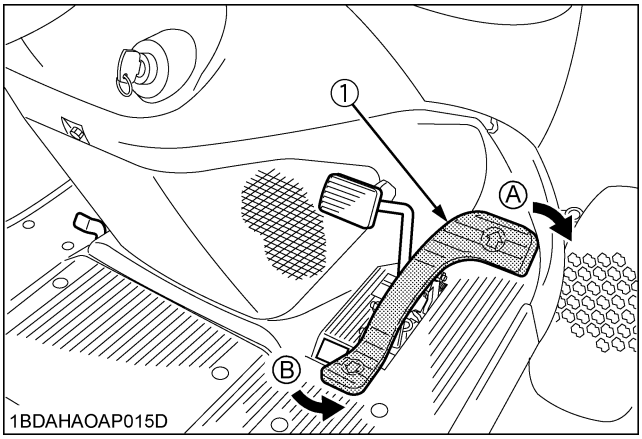

(1) Speed control pedal *(A) "FORWARD"* *(B) "REVERSE"*

https://truckmanualshub.com/

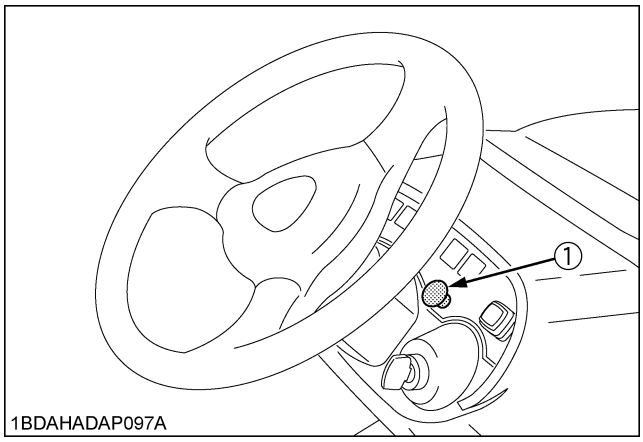

(1) Cruise control knob *: "ENGAGED"*

STOPPING

■Stopping

1. Slow down the engine.
2. Step on the brake pedal.
3. After the machine has stopped, disengage the PTO, lower the implement to the ground and set the parking brake.

CHECK DURING DRIVING

■Immediately Stop the Engine if:

- The engine suddenly slows down or accelerates.
- Unusual noises are suddenly heard.
- Exhaust fumes suddenly become discolored.

While driving, make the following checks to see that all the parts are functioning normally.

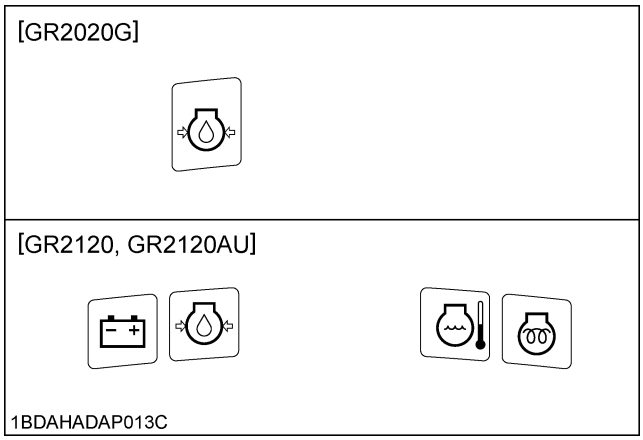

(1) Easy Checker(TM)

■Easy Checker (TM)

If the warning lamps in the Easy Checker(TM) come on during operation, stop the engine immediately, and find the cause as shown below.
Never operate the machine while Easy Checker(TM) lamp is "ON".

: Engine oil pressure

If the oil pressure in the engine goes below the prescribed level, the warning lamp in the Easy Checker(TM) will come on.
If this should happen during operation, and it does not go off when the engine is accelerated to more than 1000 rpm, check the level of engine oil.
(See "Checking Engine Oil Level" in "DAILY CHECK" in "PERIODIC SERVICE" section.)

: Electrical charge

If the alternator is not charging the battery, the warning lamp in the Easy Checker(TM) will come on.
If this should happen during operation, check the electrical charging system or consult your local KUBOTA Dealer.

: Coolant temperature

If this warning light comes on during operation, take the actions according to "Checking and Cleaning Radiator to Prevent Overheating".

: Glow plug Indicator (Pre-heating Indicator)

When the key switch is in the "PREHEAT" position, the glow plug indicator illuminates.

NOTE :
- For checking and servicing of your machine, consult your local KUBOTA Dealer for instructions.

■Engine Overheating Precautions

If the coolant temperature warning light come on or the buzzer sounds, take the following actions.

1. Stop machine operation in a safe place, disengage the mower deck and keep the engine idling.
2. Don't stop the engine immediately; stop it after about 5 minutes of unloaded idling.
3. Shut off the engine and keep well away from the machine for 10 minutes or while the steam is blown out.
4. Checking that there is no danger of being burned, get rid of the causes of overheating according to the manual, see "TROUBLESHOOTING" section.
   Start the engine again.

https://truckmanualshub.com/

■Fuel Gauge

The fuel gauge indicates the fuel level.
Be careful not to empty the fuel tank. Otherwise air may enter the fuel system.
If this should happen, the fuel system should be bled. (See "SERVICE AS REQUIRED" in "PERIODIC SERVICE" section.)

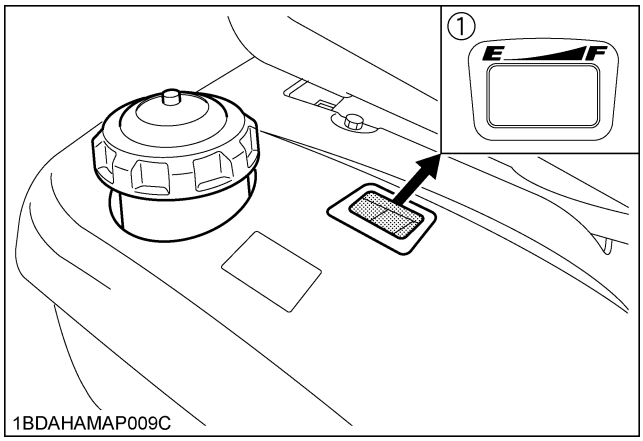

(1) Fuel gauge *(E) "EMPTY"*
(F) "FULL"

IMPORTANT :

- Use proper fuel for your machine, or it damages the machine.
  GR2020G: Gasoline, Gasohol, MTBE
  GR2120, GR2120AU: Diesel fuel
  Gasohol (up to 10% ethyl alcohol, 90% unleaded gasoline by volume) or Methyl Tertiary Butyl Ether (MTBE) and unleaded gasoline blends (up to a maximum of 15% MTBE by volume) are approved for the engine. Other gasoline/alcohol blends are not approved.
- Do not refuel over "F". Fill the tank only to the bottom of the filler neck in the fuel tank.

■Hourmeter

The hourmeter indicates in 5 digits the hours the machine has been used; the last digit indicates 1/10 of an hour.

NOTE :

- As the hour meter works electrically, it starts to work when the key switch is turned to "ON", regardless of the engine running or not.

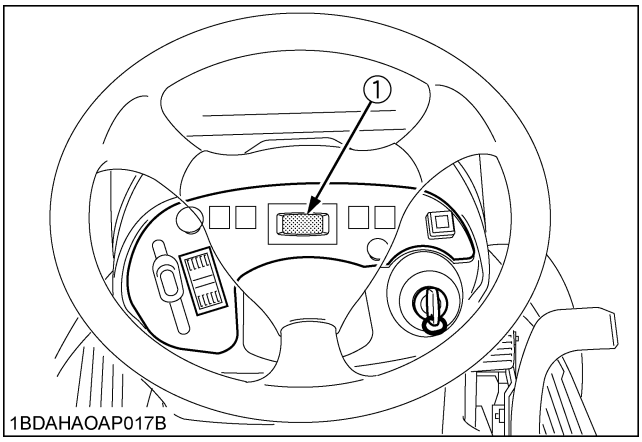

(1) Hours used

https://truckmanualshub.com/

PARKING

■Parking

WARNING

To avoid serious injury:
Before leaving the operator's position:
- **Apply parking brake.**
- **Lower all implements to the ground.**
- **Shut off the engine.**
- **Remove the key.**

1. When parking, be sure to set the parking brake.
   To apply the parking brake;
   Depress the brake pedal firmly with your right foot and the parking brake pedal simultaneously with your left foot. Then release the brake pedal while holding the parking brake pedal down.
2. Before getting off the machine, disengage the PTO, lower all implements to the ground, place all control levers in their "NEUTRAL" positions, set the parking brake, stop the engine and remove the key.
3. If it is necessary to park on an incline, be sure to chock the wheels to prevent accidental rolling of the machine.

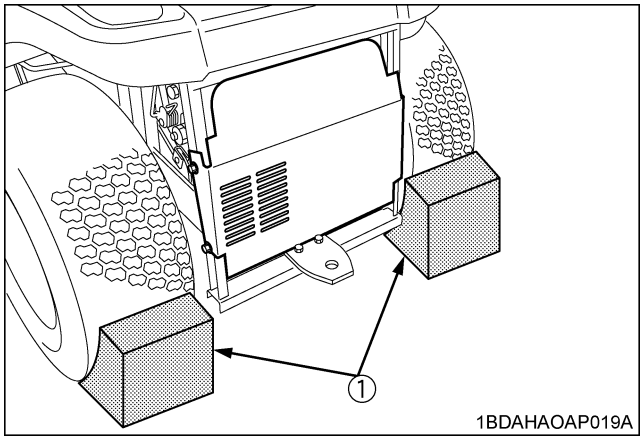

(1) Chocks

TRANSPORTING

IMPORTANT :
1. Transport the machine on a trailer.
   - Fasten the machine to the trailer.
   - To prevent the hood from opening by wind while in transit, it is necessary to either load the machine forward or use a suitable tie down for the hood.
2. Do not attempt to tow this machine, or damage to the transmission may result.
3. Follow all federal and local regulations for securement.

■Directions for Use of Power Steering

1. Power steering is activated only while the engine is running. Slow engine speeds make the steering a little heavier. While the engine is stopped, the machine functions in the same manner as machines without power steering.
2. When the steering wheel is turned all the way to the stop, the relief valve is activated. Do not hold the steering wheel in this position for a long period of time.
3. Avoid turning the steering wheel while the machine is stopped, or tires may wear out sooner.
4. The power steering mechanism makes the steering easier. Be careful when driving on a road at high speeds.

https://truckmanualshub.com/

■Glide Steer

This machine is equipped with the Glide Steer.
It allows full time front axle drive preventing turf damage.
The rear axle has left and right axle clutches inside and both clutch arms are connected to the front axle king pin support with rods.
When driving straight, the rear axle clutches are engaged and both left and right tires have traction. When turning right or left, the rods are pulled by the king pin and disengage the inside rear tire clutch. This will make the front tire and outside rear tire speed differences small.

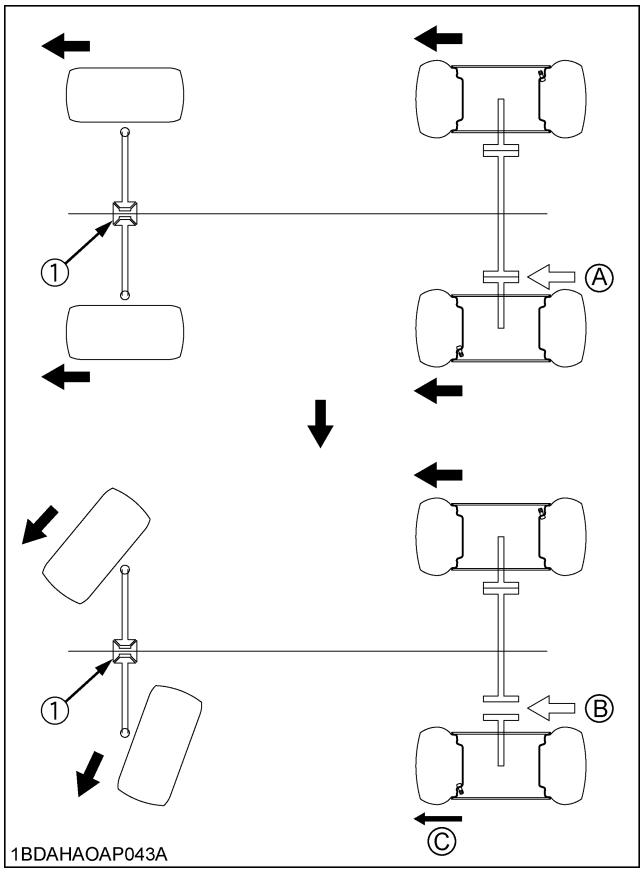

(1) Differential

(A) Rear axle clutch: "ENGAGED"
(B) Rear axle clutch: "DISENGAGED"
(C) Rotation speed: "DOWN"

If the adjustment is not correct or some malfunction occurs in the system, rear clutches are engaged all times and result in larger turn radius or turf damage. In that case, contact your Kubota dealer for checking.

https://truckmanualshub.com/

OPERATING THE MOWER

MAKING THE MOST OF YOUR MOWER

1. When using your mower for the first time, choose a smooth level area and cut in straight and slightly overlapping strips.
2. The size and type of the area to be mowed will determine the proper mowing pattern. Take into account obstructions, such as trees, fences and buildings. To keep grass clippings off fences, sidewalks, etc., it is advisable to go over the outside of the area to be mowed several times in a clockwise direction. To mow the area remaining, work in a counterclockwise direction so that the clippings are dispersed onto the previously cut area.
3. Always keep the left side of the mower toward trees, posts or other obstacles on the first trip around the obstacle.
4. Most lawns should be mowed to keep the grass approximately 50 to 80 mm (2 to 3 in.) high. Best results are obtained by cutting often and not too short. To keep a green lawn, never mow more than 1/3 of the height of the grass or a maximum of 25 mm (1 in.) in 1 mowing.
   For extremely tall grass, set the cutting height at maximum cutting height for the first mowing, then reset to the desired height and mow again. Allow the grass to grow to 80 mm (3 in.), then cut off only the top inch.
5. For best appearance, grass should be cut in the afternoon or evening when it is free of moisture.

WARNING

To avoid serious injury:

- **Clear the work area of objects which might be picked up and thrown by blades.**
- **Keep bystanders and animals away from the mowing area.**
- **Be sure to disengage the PTO and sit on the operator's seat before starting the engine.**

ADJUSTING CUTTING HEIGHT

DANGER

To avoid serious injury or death:

- **Do not operate mower in the "TOP" position.**

■Cutting Height Control Dial

Raise the mower deck to the top position. Turn the cutting height control dial to the desired cutting height.
Lower the mower deck, and then the mower deck will be set to the cutting height.

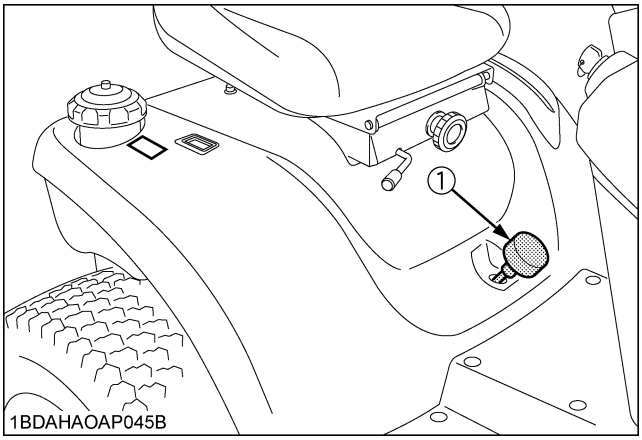

(1) Cutting height control dial

1. Before adjusting the cutting height, check that all tire pressures are correct. If necessary, adjust to the correct tire pressure.
2. To set the cutting height, pull the hydraulic lift lever backward to raise mower deck to the top position.
3. Turn the cutting height control dial to adjust the height.
4. Set the anti-scalp rollers' height as shown to keep clearance between rollers and ground from 6 mm (0.25 in.) to 13 mm (0.5 in.).

https://truckmanualshub.com/

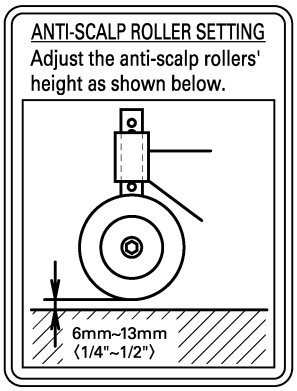

1BDAHADAP069A

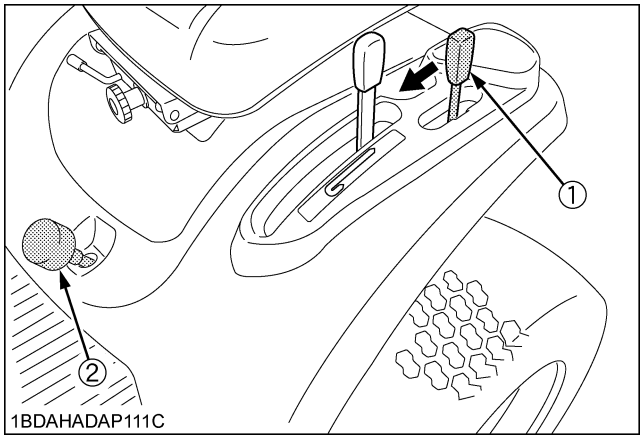

1BDAHADAP111C

(1) Hydraulic lift lever
(2) Cutting height control dial

5. Lower the mower deck by pushing the hydraulic lift lever downward. This lowers the mower deck from the "Transport" position to the "Operating" position.
6. Use the higher settings for mowing in a rough area or when mowing tall grass. Lower settings should be used only for smooth lawns where short grass is desired.

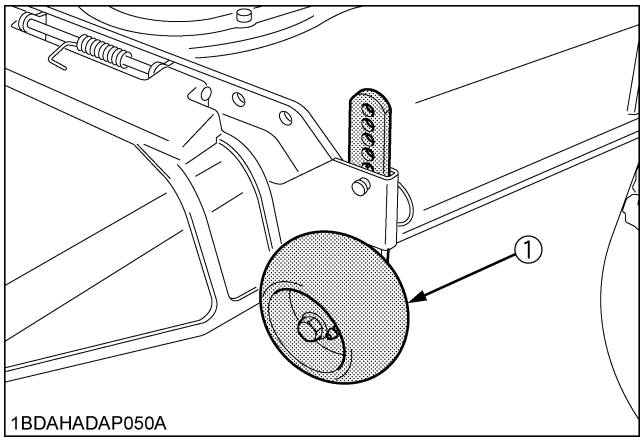

1BDAHADAP050A

(1) Anti-scalp roller

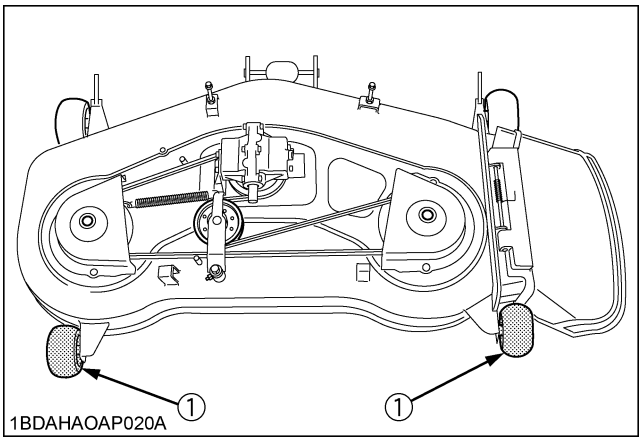

1BDAHAOAP020A

(1) Anti-scalp roller (Rear)

https://truckmanualshub.com/

Reference

- Set the position for a recommended ground clearance of 19 mm (3/4 in.).
  (Figure shows a setting position of cutting height 50 or 55 mm (2.0" or 2.25"))

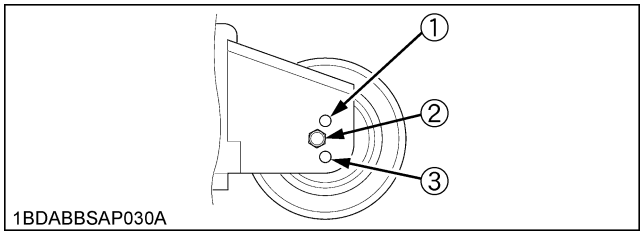

Cutting height inch (mm)	Position of bolts	(Ref.) Ground clearance between rollers and the ground
1" (25) *1	1	6 mm (0.2 in.)
1.25" (32) *2		12.4 mm (0.5 in.)
1.5" (38)		19.0 mm (0.7 in.)
1.75" (44)		25.4 mm (1.0 in.)
2.0" (50)	2	19.0 mm (0.7 in.)
2.25" (58)		25.4 mm (1.0 in.)
2.5" (64)	3	19.0 mm (0.7 in.)
2.75" (70)		25.4 mm (1.0 in.)
3.0" (76) *3		(31.8 mm) (1.3 in.)
3.5" (89) *3		(44.6 mm) (1.8 in.)
4.0" (102) *3		(57.4 mm) (2.3 in.)

*1. Cutting height 1" is a ground clearance of 6 mm.

*2. Cutting height 1.25" is a ground clearance of 12.4 mm.

*3. For cutting heights above 3.0". The anti-scalp rollers will still be effective against scalping.

OPERATING THE MOWER

DANGER

To avoid serious injury or death:

- **Do not operate the mower without the discharge deflector being in place properly.**

NOTE :

- This machine is equipped with the KRA (KUBOTA Reverse Awareness) system.
  This feature shuts down the engine if the operator attempts reverse travel while any PTO driven implement is engaged. The purpose of the KRA system is to increase operator awareness of the risk of back-over accidents. The KRA system incorporates an override switch on the dash that allows the operator to override the system and keep the PTO engaged during reverse travel. KUBOTA strongly recommends against overriding the KRA system, but if the operator deems it absolutely necessary and safe to do so, he may activate the override switch. The override switch light flashes while activated as a reminder to the operator that the PTO (i.e. mower, grass catcher, snowblower, etc.) remains engaged during reverse travel. The operator should return the KRA system to normal operating mode as soon as possible by momentarily disengaging the PTO.

■KRA system Normal Operating Mode

1. Start the engine.
2. Set the throttle lever to the "FAST" position.

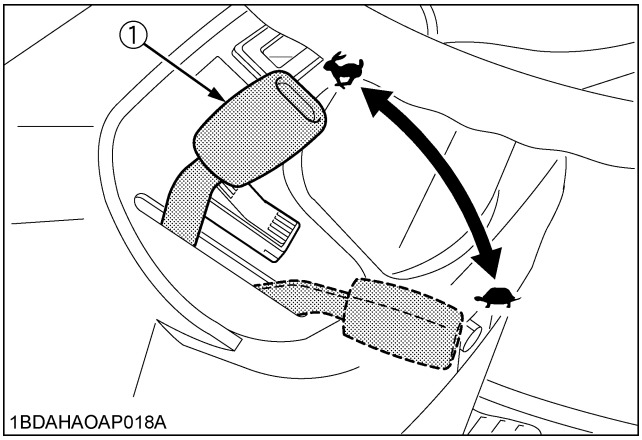

(1) Throttle lever

: "FAST" position
: "SLOW" position

3. Push down the PTO lever to the "ENGAGED" position.

https://truckmanualshub.com/

■PTO Lever

To engage mower blade, push the PTO lever to the "ENGAGED" position. To stop the mower blades, pull the PTO lever to the "DISENGAGED" position.

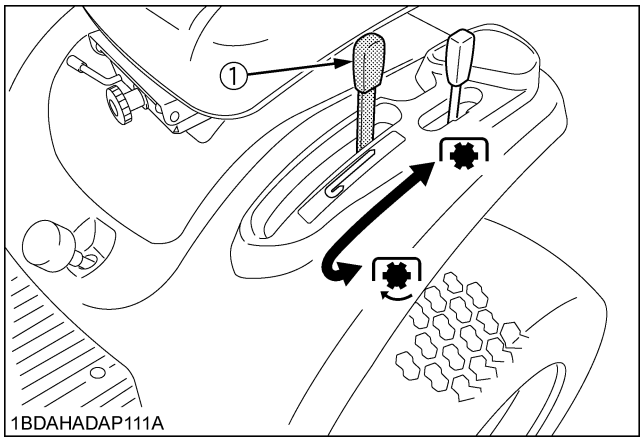

(1) PTO lever *: "ENGAGED"*
: "DISENGAGED"

NOTE :
- When attempting to operate the machine in reverse with the PTO engaged, the engine will shut down.
- If you dismount from the seat while the PTO is running, the engine will stop automatically. (Operator Presence Control)
- Before starting the engine, pull the PTO lever to the "DISENGAGED" position and depress brake pedal, otherwise, the starter will not operate.
- For best cut quality and performance, always mow with the throttle lever in "FAST" position.

Use the speed control pedal to select the desired mowing speed range.

(1) During heavy duty use, operate the machine at a slower ground speed or go over the area twice.
The first pass should be with the deck at the highest cutting position, then mow to desired height.
(2) The mower will not cut cleanly if the ground speed is too high or if the blade speed drops due to an overload.

1. Control ground speed by using the speed control pedal of the machine.

NOTE :
- Keep the mower deck in the fully raised position when the mower is not engaged.

■KRA system Override Mode

WARNING

To avoid serious injury:
- **Before and when backing, look down and behind the machine to be sure no bystanders, especially children, have entered the area.**

NOTE :
- K.R.A. System override switch allows the operator to mow or operate attachments while in reverse if the operator deems it absolutely necessary and safe to do so. (i.e. the operator should make sure that no bystanders, especially children, have entered the area.)
If the owner does not wish certain operators to utilize the override switch allowing mowing or implement operation in reverse, then he or she may remove the fuse from the system to prevent override. (See NOTE (4) below)

1. Start the engine.
2. Set the throttle to the "FAST" position.
3. Push the PTO lever to the "ENGAGED" position.
4. Stop the machine (Set the speed control pedal to NEUTRAL) or depress the speed control pedal forward.
5. Push the K.R.A. System override switch.

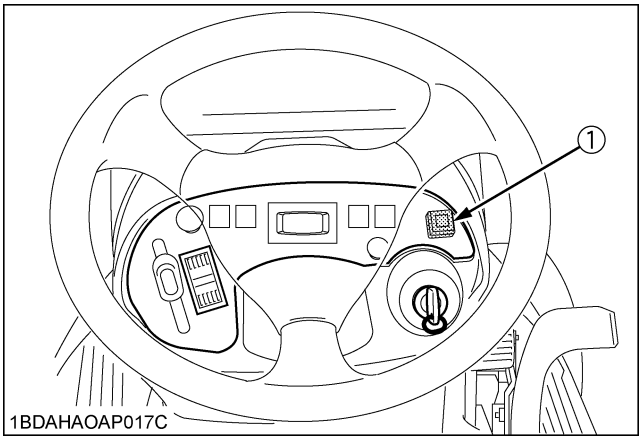

(1) K.R.A. System switch

6. Look down and behind the machine to be sure that no bystanders, especially children have entered the area.
7. Depress the speed control pedal with the heel of your right foot to move in the reverse direction.

https://truckmanualshub.com/

NOTE :

(1) The K.R.A. System Override Mode can not be activated by pushing the switch while the speed control pedal is depressed to initiate rearward movement.

(2) The override switch light flashes while activated as a reminder to the operator that PTO (i.e. mower, tiller, etc.) remains engaged during reverse travel.

(3) The K.R.A. System Override Mode will remain activated until the PTO lever is returned to the "DISENGAGED" position.

(4) To prevent use of the K.R.A. System Override Mode, remove the fuse located under the fender:
- The engine can be started.
- The machine PTO can be engaged if the speed control pedal is in the neutral or forward position.
- Selection of PTO operation (i.e. mower. tiller etc.) during reverse travel is not possible.

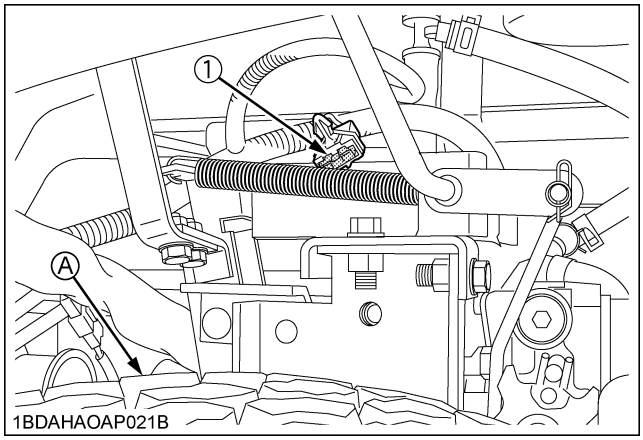

(1) Fuse *(A) Left rear tire*

WARNING

To avoid serious injury or death:

- **Engine components can get extremely hot from operation. To prevent severe burns, do not touch these areas while the engine is running, or immediately after it is turned off.**
  Never operate the engine with heat shields or guards removed.

https://truckmanualshub.com/

CLEANING

WARNING

To avoid serious injury:

- **Do not clean the machine with engine running.**
- **Be sure to set the parking brake during cleaning.**

CLEANING WITH WATER

The use of a high pressure cleaner is not recommended. However if you use one, take care not to splash water on engine parts such as the air filter, exhaust muffler, battery. Do not direct jet towards hydraulic elements.

CLEANING THE MOWING SYSTEM

After each use, carefully clean the mowing deck, particularly underneath. Switch the engine off before cleaning your machine.

The inside part of the mowing system can also be cleaned with water through the discharge duct.

Remove the grass container to access the discharge duct.

Operate the mowing system for a few minutes after cleaning.

NOTE :

- If the mower was used under very difficult conditions (very wet grass, mowing in a very low position), it may be necessary to remove the cutting deck to clean it. At the same time, you should take the opportunity to check the condition of the blades, belts and bolts and replace them if needed.

https://truckmanualshub.com/

TIRE AND WHEELS

TIRES

WARNING

To avoid serious injury:

- **Do not attempt to mount a tire. This should be done by a qualified person with the proper equipment.**
- **Always maintain the correct tire pressure. Do not inflate tires above the recommended pressure shown in the Operator's Manual.**
- **Inflation pressure in front tires rises quickly when using compressed air.**

WARNING

To avoid serious injury:

- **Never operate machine with a loose rim, wheel, or axle.**
- **Whenever bolts are loosened, retighten to specified torque.**
- **Check all bolts frequently and keep them tightened.**

■Inflation Pressure

Though the inflation pressure is factory-set to the prescribed level, it naturally drops slowly in the course of time. Thus, check it everyday and inflate as necessary.

[Turf tire]

	Tire sizes	Recommended Inflation Max. Pressure
Front	16 x 7.50 - 8, 4PR	160 kPa (1.6 kgf/cm^2, 24 psi)
Rear	23 x 10.50 - 12, 4PR	150 kPa (1.5 kgf/cm^2, 22 psi)

[Bar tire]

	Tire sizes	Recommended Inflation Max. Pressure
Front	16 x 7.50 - 8, 4PR	190 kPa (1.9 kgf/cm^2, 28 psi)
Rear	23 x 10.50 - 12, 4PR	140 kPa (1.4 kgf/cm^2, 20 psi)

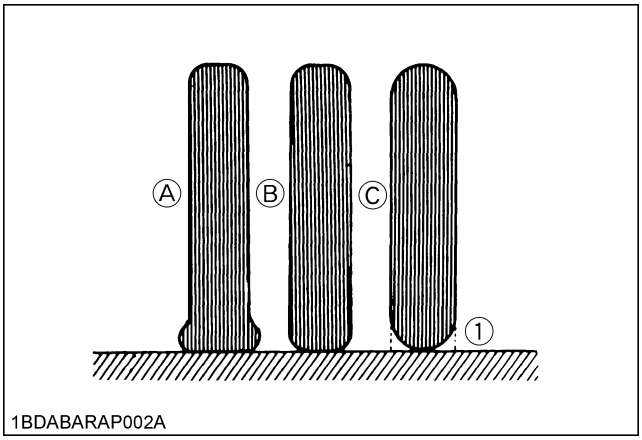

(1) Ground

(A) "INSUFFICIENT"
(B) "NORMAL"
(C) "EXCESSIVE"

https://truckmanualshub.com/

WHEELS

IMPORTANT :

- When re-fitting a wheel, tighten the wheel bolts to the following torques then recheck after travelling 200 m (220 yards) changing directions several times.

NOTE :

- Wheels with beveled or tapered holes:
  Use the tapered wheel bolts. (Front)

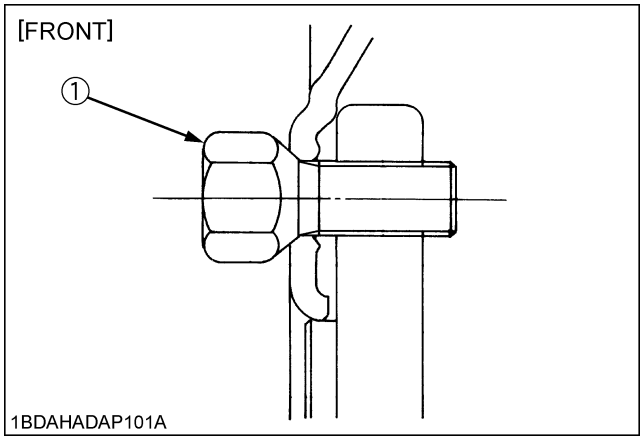

(1) Bolt — *Front 108.5 to 130.2 N-m (11.07 to 13.28 kgf-m) (80 to 96 lbf-ft)*

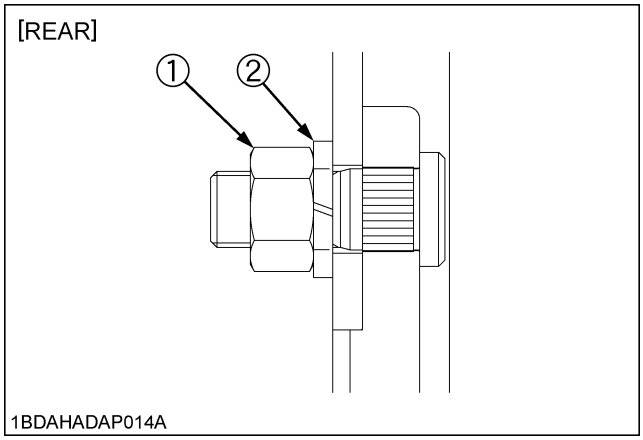

(1) Nut
(2) Spring washer

Rear 77.6 to 90.2 N-m (7.9 to 9.2 kgf-m) (57.2 to 66.5 lbf-ft)

https://truckmanualshub.com/

MAINTENANCE

SERVICE INTERVALS

The following servicing tasks should be carried out on the machine at the stated running-time intervals.

[GR2020G]

No.	Items			Indication hour meter (Hr)																								Ref. Page	
				25	50	75	100	125	150	175	200	225	250	275	300	325	350	375	400	425	450	475	500	525	550	575	600	After 600 Hr		
1	Engine oil		Change		◎						○								○								○	every 200 Hr	64	
2	Engine oil filter		Re-place		◎						○								○								○	every 200 Hr	63	
3	Transmissi-on fluid		Change																○									every 400 Hr	69	
4	Transmissi-on oil filter		Re-place		◎						○								○								○	every 200 Hr	65	
5	Transmissi-on strainer		Clean																○									every 400 Hr	70	
6	Front axle case oil		Change																○									every 400 Hr	70	
7	Front axle pivot		Adjust				◎				○								○								○	every 200 Hr	68	*2
8	Engine shroud panel		Clean				○				○				○				○				○				○	every 100 Hr	59	*2
9	Engine shroud		Clean								○								○								○	every 200 Hr	68	*2
10	Engine start system		Check		○		○		○		○		○		○		○		○		○		○		○		○	every 50 Hr	49	
11	OPC system		Check		○		○		○		○		○		○		○		○		○		○		○		○	every 50 Hr	50	
12	PTO control system		Check		○		○		○		○		○		○		○		○		○		○		○		○	every 50 Hr	50	
13	Oiling		-		○		○		○		○		○		○		○		○		○		○		○		○	every 50 Hr	54	
14	Greasing		-		○		○		○		○		○		○		○		○		○		○		○		○	every 50 Hr	53	
15	Mower gear box oil		Check		○		○		○		○		○		○		○		○		○		○		○		○	every 50 Hr	53	
			Change		◎				○						○						○						○	every 150 Hr	62	
16	Air clea-ner	Pre-clea-ner ele-ment	Clean	○	○	○	○	○	○	○	○	○	○	○	○	○	○	○	○	○	○	○	○	○	○	○	○	every 25 Hr	48	*1
		Air clea-ner ele-ment	Clean	○	○	○	○	○	○	○	○	○	○	○	○	○	○	○	○	○	○	○	○	○	○	○	○	every 25 Hr	48	
			Re-place				○				○				○				○				○				○	every 100 Hr	58	

https://truckmanualshub.com/

No.	Items		Indication hour meter (Hr)																									Ref. Page	
			25	50	75	100	125	150	175	200	225	250	275	300	325	350	375	400	425	450	475	500	525	550	575	600	After 600 Hr		
17	Carbon canister air filter	Check		○		○		○		○		○		○		○		○		○		○		○		○	every 50 Hr	52	*3
18	Battery condition	Check		○		○		○		○		○		○		○		○		○		○		○		○	every 50 Hr	57	
19	Brake	Check				○				○				○				○				○				○	every 100 Hr	61	
20	Fuel filter element	Check				○				○				○				○				○				○	every 100 Hr	59	
		Re-place								○								○								○	every 200 Hr	69	*2
21	Fuel line	Check				○				○				○				○				○				○	every 100 Hr	59	
		Re-place																									every 2 years	73	*2
22	Spark plug condition and gap	Check								○								○								○	every 200 Hr	68	
23	Hydraulic hose	Check								○								○								○	every 200 Hr	66	*2
		Re-place																									every 2 years	73	
24	Mower gear box oil seal	Re-place																									every 2 years	73	*2
25	Fuel system	Bleed																									Service as required	76	
26	Fuse	Re-place																										73	
27	Blade	Re-place																										74	
28	Mower belt	Re-place																										76	

IMPORTANT :

- The jobs indicated by ◎ must be done initially.
  - *1 This maintenance should be done daily or more often in dusty conditions than in normal conditions. Suggested cleaning interval is every 100 hours in normal conditions.
  - *2 These items should be serviced by an authorized KUBOTA Dealer.
  - *3 Clean or replace only if necessary.
- GASOLINE ENGINE EMISSION RELATED MAINTENANCE INSTRUCTIONS:
  1. Non-warranty maintenance, repair, or replacement of the emission control devices and systems should be performed by a qualified repair establishment or individual which has the experience and equipment to perform such work.
     See the Emissions Warranty Statement.
  2. To ensure the best quality and reliability, use new KUBOTA Genuine parts or their equivalents for repair and replacement, whenever you have maintenance done.

https://truckmanualshub.com/

[GR2120, GR2120AU]

No.	Items		Indication on hour meter (Hr)												After since	Ref. page		
			50	100	150	200	250	300	350	400	450	500	550	600				
1	Engine oil	Change	◎			○				○				○	every 200 Hr	64		
2	Engine oil filter	Replace	◎			○				○				○	every 200 Hr	63		
3	Transmission fluid	Change								○					every 400 Hr	69		
4	Transmission oil filter	Replace	◎			○				○				○	every 200 Hr	65		
5	Transmission strainer	Clean								○					every 400 Hr	70		
6	Front axle case oil	Change								○					every 400 Hr	70		
7	Front axle pivot	Adjust		◎		○				○				○	every 200 Hr	68	*2	
8	Engine start system	Check	○	○	○	○	○	○	○	○	○	○	○	○	every 50 Hr	49		
9	OPC system	Check	○	○	○	○	○	○	○	○	○	○	○	○	every 50 Hr	50		
10	PTO control system	Check	○	○	○	○	○	○	○	○	○	○	○	○	every 50 Hr	50		
11	Oiling	-	○	○	○	○	○	○	○	○	○	○	○	○	every 50 Hr	54		
12	Greasing	-	○	○	○	○	○	○	○	○	○	○	○	○	every 50 Hr	53		
13	Mower gear box oil	Check	○	○	○	○	○	○	○	○	○	○	○	○	every 50 Hr	53		
		Change	◎		○			○			○			○	every 150 Hr	62		
14	Air cleaner element	Clean	○	○	○	○	○	○	○	○	○	○	○	○	every 50 Hr	51	*1	@
		Replace													every 1 year	71		
15	Battery condition	Check	○	○	○	○	○	○	○	○	○	○	○	○	every 50 Hr	57		
16	Brake	Check		○		○		○		○		○		○	every 100 Hr	61		
17	Fan drive belt	Check		○		○		○		○		○		○	every 100 Hr	61		
18	Fuel filter element	Check		○		○		○		○		○		○	every 100 Hr	59		@
		Replace								○					every 400 Hr	71	*2	
19	Fuel line	Check		○		○		○		○		○		○	every 100 Hr	59		@
		Replace													every 2 years	73	*2	
20	Hydraulic hose	Check				○				○				○	every 200 Hr	66		
		Replace													every 2 years	73	*2	

https://truckmanualshub.com/

No.	Items		Indication on hour meter (Hr)												After since	Ref. page		
			50	100	150	200	250	300	350	400	450	500	550	600				
21	Radiator hose and clamp	Check				○				○				○	every 200 Hr	66		
		Replace													every 2 years	73	*2	
22	Intake air line	Check				○				○				○	every 200 Hr	68		@
		Replace													every 2 years	73	*3	
23	Fuel injection nozzle injection pressure	Check													every 1500Hr	71	*2	@
24	Injection pump	Check													every 3000Hr	71	*2	@
25	Radiator	Clean													every 1 year	72		
26	Coolant	Change													every 1 year	71		
27	Mower gear box oil seal	Replace													every 2 years	73	*2	
28	Engine breather hose	Replace													every 2 years	73	*2	
29	Fuel system	Bleed													Service as Required	76		
30	Fuse	Replace														73		
31	Blade	Replace														74		
32	Mower belt	Replace														76		

IMPORTANT :

- The jobs indicated by ◎ must be done initially.
  *1 This maintenance should be done daily more often in dusty conditions than in normal conditions.
  Suggested cleaning interval is every 100 hours in normal conditions.
  *2 These items should be serviced by an authorized KUBOTA Dealer.
  *3 Replace only if necessary.
- The items listed above (@ marked) are registered as emission related critical parts by KUBOTA in the U.S.EPA non-road emission regulation. As the engine owner, you are responsible for the performance of the required maintenance on the engine according to the above instruction.
  Please see the Warranty Statement for complete details.

https://truckmanualshub.com/

LUBRICANTS, FUEL AND COOLANT

Place	Capacities		Lubricants, fuel and coolant
	GR2020G	**GR2120, GR2120AU**	
Fuel	---	18 L (4.8 U.S.gals.)	• No.2-D diesel fuel • No.1-D diesel fuel if temperature is below -10 ℃ (14 ℉)
	16 L (4.2 U.S.gals.)	---	• Automobile unleaded or regular gasoline • Unleaded gasoline 87 octane or higher • Gasohol • Methyl Tertiary Butyl Ether
Coolant	---	2.1 L (2.2 U.S.qts.)	Fresh clean water with anti-freeze
Recovery tank	---	0.25 L (0.26 U.S.qts.)	
Engine crankcase	---	2.8 L *1 (3.0 U.S.qts.)	• Engine oil: API Service Classification CF or higher Above 25 ℃ (77 ℉).....SAE30, SAE10W-30 or 15W-40 0 to 25 ℃ (32 to 77 ℉)....SAE20, SAE10W-30 or 15W-40 Below 0 ℃ (32 ℉).....SAE10W, SAE10W-30 or 15W-40
	1.9 L *1 (2.0 U.S.qts.)	---	• Engine oil: API Service Classification SG, SH, SJ or higher Above -18 ℃ (0 ℉).....SAE10W-30 Below 0 ℃ (32 ℉).....SAE5W-20 or 5W-30
Transmission case	3.3 L (3.5 U.S.qts.)		• KUBOTA SUPER UDT-2 fluid*2
Front axle case	1.9 L (2.0 U.S.qts.)		
Mower gear box	0.15 L (0.16 U.S.qts.)		

Note *1 Oil amount when the oil level is at the upper level of the oil level gauge.
*2 The product name of KUBOTA genuine UDT fluid may be different from that in the Operator's Manual depending on countries or territories. Consult your local KUBOTA Dealer for further detail.

NOTE :
- Check the oil level of the transmission case with the mower lifted up.

IMPORTANT :
- To prevent serious damage to hydraulic systems, use only KUBOTA genuine fluid or its equivalent.

https://truckmanualshub.com/

Greasing	No. of greasing points	Capacity	Type of grease
Engine transmission universal joint	2	Until grease overflows	• Multipurpose EP2 Grease (NLGI Grade No. 2)
Glide steer link bolt	2		
Front axel (Center Pin)	2		
Glide steer rear arm	2		
Glide steer arm	2		
Speed control pedal shaft	4	Moderate amount	• Oil
Cruise control link	2		
PTO lever	1		
Hydraulic lift lever	1		
Seat adjuster	6		
Around the hole of the mower link	2		
Around the pin of the mower link	2		
Pivot of mower link	2		
Pivot of lift arm	2		
Front link	2		
Link fulcrum	2		
Choke cable [GR2020G only]	1		
Throttle cable	2		
[MOWER]		Until grease overflows	• Multipurpose EP2 Grease (NLGI Grade No. 2)
Mower universal joint	1		
Spindle shafts	3		
Belt tension pivot	1		

https://truckmanualshub.com/

For North American market

NOTE :

◆ **Engine Oil:**

- Oil used in the engine should have an American Petroleum Institute (API) service classification and Proper SAE Engine Oil according to the ambient temperatures as shown above:

- Refer to the following table for the suitable API classification engine oil according to the engine type (with internal EGR, external EGR or non-EGR) and the fuel.

Fuel used	Engine oil classification (API classification)	
	Oil class of engines except external EGR	Oil class of engines with external EGR
Ultra Low Sulfur Fuel [<0.0015% (15 ppm)]	**CF, CF-4, CG-4, CH-4** or **CI-4**	**CF** or **CI-4** (Class CF-4, CG-4 and CH-4 engine oils cannot be used on EGR type engines)

EGR: Exhaust Gas Re-circulation

- The CJ-4 engine oil is intended for DPF (Diesel Particulate Filter) type engines, and cannot be used on this machine.

	except external EGR	with external EGR
Model	GR2120	---

◆ **Fuel:**

- Cetane number of 45 is minimum. Cetane number greater than 50 is preferred, especially for temperatures below -20℃ (-4℉) or elevations above 1500 m (5000 ft).
- Diesel fuels specified to EN 590 or ASTM D975 are recommended.
- No.2-D is a distillate fuel of lower volatility for engines in industrial and heavy mobile service. (SAE J313 JUN87)
- Gasohol (up to 10% ethyl alcohol, 90% unleaded gasoline by volume) or Methyl Tertiary Butyl Ether (MTBE) and unleaded gasoline blends (up to a maximum of 15% MTBE by volume) are approved for the engine. Other gasoline/ alcohol blends are not approved.

◆ **Transmission Oil:**

*KUBOTA Super UDT-2: For an enhanced ownership experience, we highly recommend Super UDT-2 to be used instead of standard hydraulic/transmission fluid.
Super UDT-2 is a proprietary KUBOTA formulation that deliveries superior performance and protection in all operating conditions.
Regular UDT is also permitted for use in this machine.

- Indicated capacities of water and oil are manufacturer's estimate.

https://truckmanualshub.com/

For other than North American market

NOTE :

◆ **Engine Oil:**

- Oil used in the engine should have an American Petroleum Institute (API) service classification and Proper SAE Engine Oil according to the ambient temperatures as shown above:
- With the emission control now in effect, the CF-4 and CG-4 lubricating oils have been developed for use of a low-sulfur fuel on on-road vehicle engines. When an off-road vehicle engine runs on a high-sulfur fuel, it is advisable to employ the "CF or better" lubricating oil with a high Total Base Number (TBN of 10 minimum).

- Refer to the following table for the suitable API classification engine oil according to the engine type (with internal EGR, external EGR or non-EGR) and the fuel (low-sulfur or high-sulfur fuel).

Fuel used	Engine oil classification (API classification)	
	Oil class of engines except external EGR	Oil class of engines with external EGR
High Sulfur Fuel [≧ 0.05% (500 ppm)]	**CF** (If the "CF-4, CG-4, CH-4 or CI-4" lubricating oil is used with a high-sulfur fuel, change the lubricating oil at shorter intervals. (approximately half))	---
Low Sulfur Fuel [<0.05% (500 ppm)] or Ultra Low Sulfur Fuel [<0.0015% (15 ppm)]	**CF, CF-4, CG-4, CH-4** or **CI-4**	**CF** or **CI-4** (Class CF-4, CG-4 and CH-4 engine oils cannot be used on EGR type engines)

EGR: Exhaust Gas Re-circulation

- The CJ-4 engine oil is intended for DPF (Diesel Particulate Filter) type engines, and cannot be used on this machine.

	except external EGR	with external EGR
Model	GR2120AU	---

◆ **Fuel:**

- Cetane number of 45 minimum. Cetane number greater than 50 is preferred, especially for temperatures below -20℃ or elevations above 1500 m.
- If diesel fuel with sulfur content greater than 0.5% (5000 ppm) sulfur content is used, reduce the service interval for engine oil and filter by 50%.
- NEVER use diesel fuel with sulfur content greater than 0.05% (500 ppm) for EXTERNAL EGR type engine.
- DO NOT use diesel fuel with sulfur content greater than 1.0% (10000 ppm).
- Diesel fuels specified to EN 590 or ASTM D975 are recommended.
- No.2-D is a distillate fuel of lower volatility for engines in industrial and heavy mobile service. (SAE J313 JUN87)
- Gasohol (up to 10% ethyl alcohol, 90% unleaded gasoline by volume) or Methyl Tertiary Butyl Ether (MTBE) and unleaded gasoline blends (up to a maximum of 15% MTBE by volume) are approved for the engine. Other gasoline/ alcohol blends are not approved.

◆ **Transmission Oil:**

The oil used to lubricate the transmission is also used as hydraulic fluid. To insure proper operation of the hydraulic system and to complete lubrication of the transmission, it is important that a multi-grade transmission fluid is used in this system. We recommend the use of **KUBOTA UDT or SUPER UDT fluid** for optimum protection and performance. (Consult your local KUBOTA Dealer for further detail.)
Do not mix different brands together.

- Indicated capacities of water and oil are manufacturer's estimate.

https://truckmanualshub.com/

PERIODIC SERVICE

WARNING

To avoid serious injury:

- **Do not work under any hydraulically supported devices. They can settle, suddenly leak down, or be accidentally lowered. If necessary to work under the machine or any machine elements for servicing or adjustment, securely support them with stands or suitable blocking beforehand.**

HOW TO OPEN THE HOOD

WARNING

To avoid serious injury from contact with moving parts:

- **Never open the hood while the engine is running.**
- **Do not touch muffler or exhaust pipes while they are hot; Severe burns could result.**

To open the hood, lift the hood as shown in the figure.

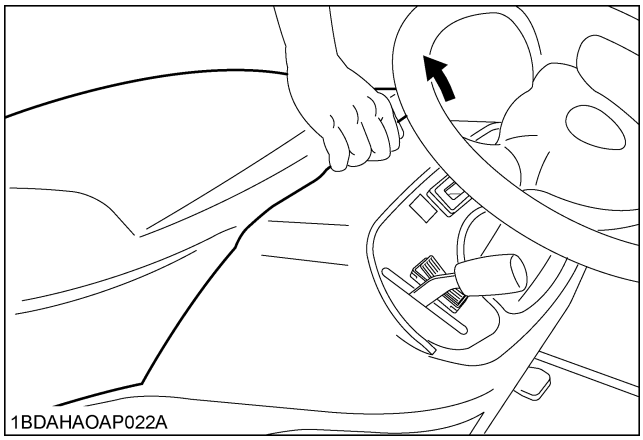

DAILY CHECK

To prevent trouble from occurring, it is important to know the condition of the machine. Check it before starting.

WARNING

To avoid serious injury:

- **Be sure to check and service the machine on a level surface with the engine shut off, the key removed and the parking brake securely set.**

	No.	Check item	Ref. Page
Walking around the machine	1	Tire pressure, wear and damage	31, 45
	2	Oil and water leak	---
	3	Engine oil level	42
	4	Transmission fluid level	46
	5	Coolant level in the recovery tank	46
	6	Damage to machine body, tightness of all bolts and nuts	---
	7	Radiator screen	44
	8	Panel screen	44
	9	Brake free travel	61
	10	Fuel level	43
	11	Check air cleaner	51
Mower	1	Oil leak	53
	2	Make sure blade cap screws are tight	74
	3	Blade wear or damage	74
	4	Check all hardware.	---
	5	Make sure all pins are in place	---
	6	Mower deck cleaning	---
	7	Greasing ● Mower universal joint ● Spindle shafts ● Belt tension pivot	47

https://truckmanualshub.com/

	No.	Check item	Ref. Page
While sitting in the operator's seat	1	Speed control pedal Brake pedal	---
	2	Brake lock	---
	3	Other movable parts	48
Turning the key switch "on"	1	Performance of the easy checker light	21
Starting the engine	1	Color of the exhaust fumes	---
	2	Safety systems. If either of these do not operate properly, contact your local KUBOTA Dealer immediately.	49 50 50
	3	Check for abnormal noise and vibration.	---
Others	1	Check the areas where previous trouble was experienced.	---

■Checking Engine Oil Level

WARNING

To avoid serious injury:

- **Always stop the engine and remove the key before checking oil.**

1. Check engine oil before starting and 5 minutes or more after the engine has stopped.
2. Wipe dipstick area clean.
3. To check the oil level, remove the dipstick, wipe it clean, replace it, and draw it out again. Check to see that the oil level is between the 2 notches.
4. Add new oil to the prescribed level at the oil port if necessary.

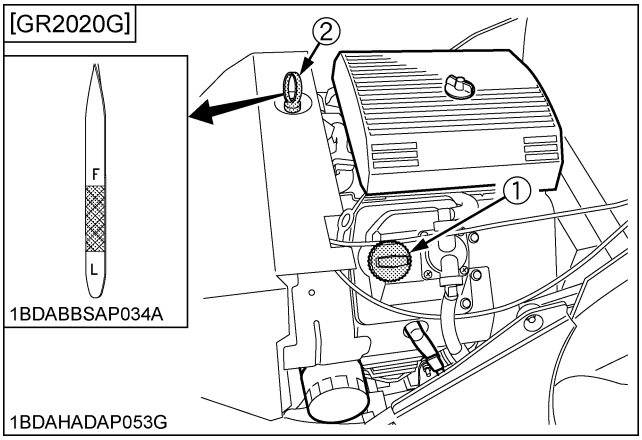

(1) Engine oil port
(2) Oil level dipstick
(F) "UPPER LEVEL"
(L) "LOWER LEVEL"

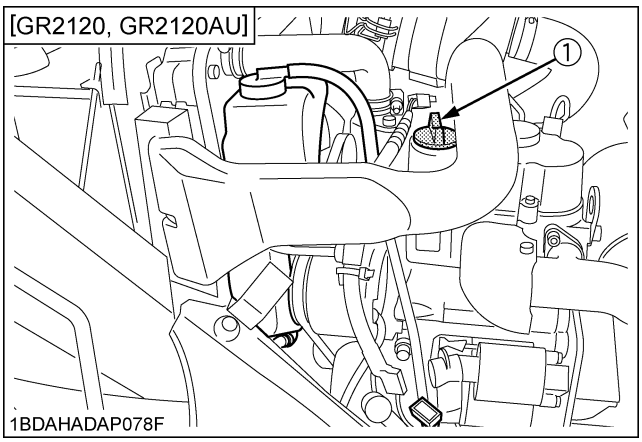

(1) Engine oil port

https://truckmanualshub.com/

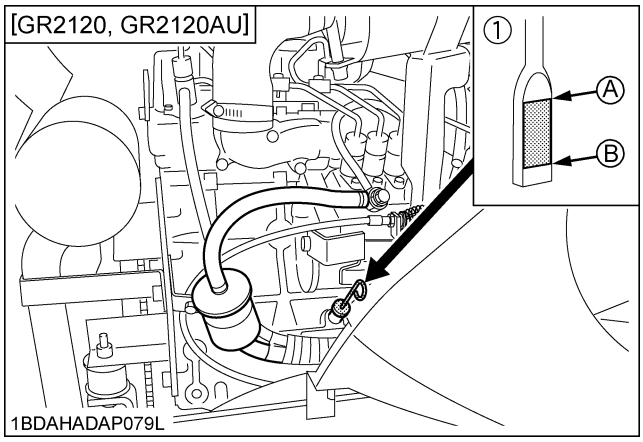

(1) Oil level dipstick *(A) "UPPER LEVEL"* *(B) "LOWER LEVEL"*

IMPORTANT :
- When using a different brand or viscosity oil from the previous one, remove all of the old oil and oil filter. Never mix 2 different types of oil.
- Use the proper Engine Oil SAE according to the ambient temperatures. (See "LUBRICANTS, FUEL AND COOLANT" in "MAINTENANCE" section.)

■Checking Amount of Fuel and Refueling

WARNING

To avoid serious injury:
- **Handle fuel carefully. If the engine is running, do not fill the fuel tank. If engine is hot, let engine cool several minutes before adding fuel. Do not smoke while filling the fuel tank or servicing the fuel system. Fill fuel tank only to bottom of filler neck. Do not fill completely full. The empty space in the tank allows gasoline to expand, when it heats up. Never remove the fuel tank cap or add fuel when the fuel tank is hot.**

Check the fuel level. Take care that the fuel tank does not become empty. When refueling it, park the machine on a level surface.

Fuel tank capacity	GR2020G	16 L (4.2 U.S.gals.)
	GR2120 GR2120AU	18 L (4.8 U.S.gals.)

◆ **[GR2020G]**

IMPORTANT :
- Do not mix oil with gasoline.
- Tighten the fuel cap until it clicks.
- Do not use the fuel cap other than KUBOTA approved one.

Unleaded fuel is recommended. Regular leaded gasoline with an octane rating index of 87 or higher may be used. Avoid switching from unleaded to regular gasoline to prevent engine damage.

NOTE :
- Use fuel within approximately 30 days after purchase to avoid deterioration in fuel quality, or add fuel stabilizer to keep fuel fresh and stabilized.
- Fuel blend differs from season to season for the best seasonal engine performance. To prevent engine performance troubles such as vapor lock or hard starting, use fuel within the season in which the fuel is purchased.
- Infrequent use of the engine during a season can make fuel stale in the fuel tank of the machine. Stale fuel condition can cause engine performance troubles by varnish and plugged carburetor components.
- Seal the fuel storage container tightly and store it out of sunlight and heat to prevent fuel degradation.
- Condensation in the fuel tank may occur because of various operating or environmental conditions. To reduce condensation and avoid affecting machine operation, fill the fuel tank at the end of daily operation and store fuel in the plastic container.

IMPORTANT :
- Do not use stale fuel.
- Fill fuel tank at the end of daily operation to prevent condensation in the fuel tank.

Gasoline/Alcohol blends

Gasohol (up to 10% ethyl alcohol, 90% unleaded gasoline by volume) is approved as a fuel. Other gasoline/alcohol blends including E20 and E85 are not to be used and any failures resulting from use of these fuels will not be warranted.

Gasoline/Ether blends

Methyl Tertiary Butyl Ether (MTBE) and unleaded gasoline blends (up to a maximum of 15% MTBE by volume) are approved as a fuel. Other gasoline/ether blends are not approved.

https://truckmanualshub.com/

◆ **[GR2120, GR2120AU]**

IMPORTANT :
- Use Diesel Fuel Only

1. Use No.2 diesel fuel.
2. Use No.1 diesel fuel if the temperature is below -10℃ (14℉).
3. Always use a strainer when refueling to prevent fuel injection pump contamination.

IMPORTANT :
- Do not permit dirt or trash or water to get into the fuel system.
- Be careful not to let the fuel tank become empty, otherwise air will enter the fuel system, necessitating bleeding before next engine start.
- Be careful not to spill fuel during refueling. If a spill should occur, wipe it off at once, or it may cause a fire.
- To prevent condensation (water accumulation) in the fuel tank, fill the tank before parking overnight.

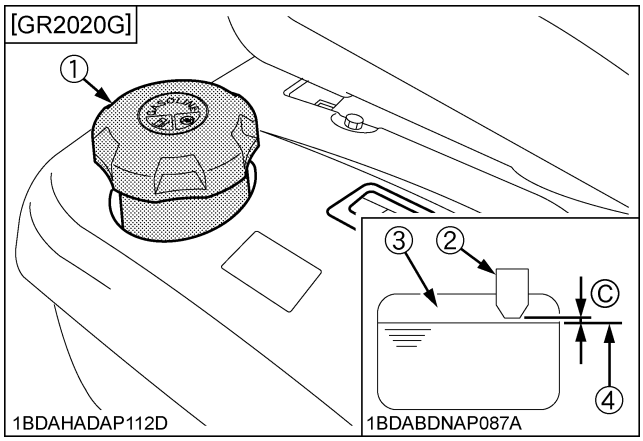

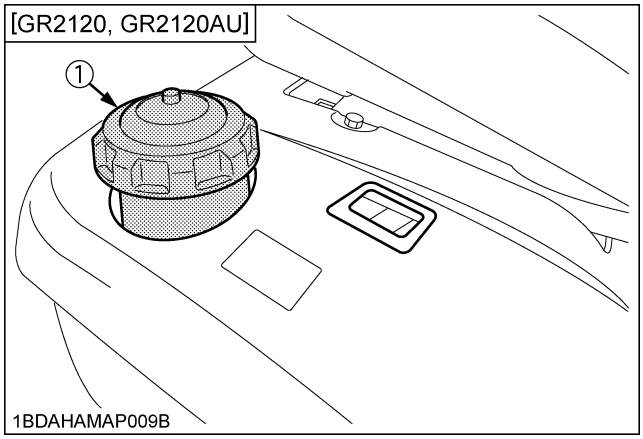

(1) Fuel port
(2) Fuel tank filler neck
(3) Empty space
(4) Max. fuel level
(C) Clearance (Fuel level is under the filler neck.)

■Checking and Cleaning Radiator and Screen to Prevent Overheating

WARNING

To avoid serious injury:
- **Engine components can get extremely hot from operation. To prevent severe burns, do not touch these areas while the engine is running, or immediately after it is turned off.**
- **Never operate the engine without heat shields or guards.**

WARNING

To avoid serious injury:
- **Be sure to stop the engine and remove the key before cleaning.**

IMPORTANT :
- The air intake area must be clear of debris to prevent the engine from overheating.

[GR2020G]

Daily or after every 5 hours of operation, check to be sure the panel screen is clean.

Dirt or chaff on the panel screen decrease cooling performance.

1. Remove the panel screen and remove all foreign material.
2. Each time the panel screen is covered with grass during operation, rub it off the screen with the hand.
3. If the dust or chaff has accumulated inside the panel, remove the panel screen, and clean inside completely.

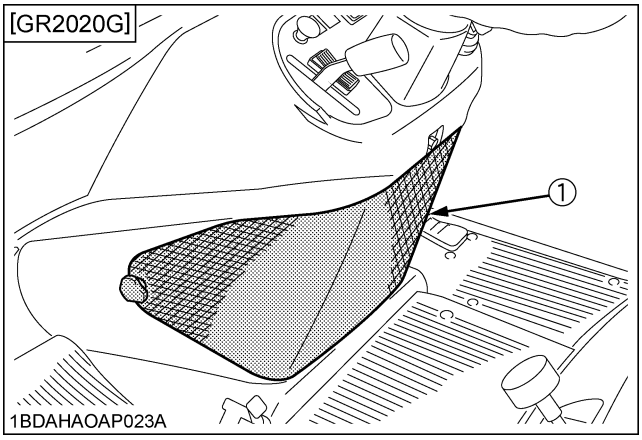

(1) Panel screen

[GR2120, GR2120AU]

Daily or after every 5 hours of operation, check to be sure the radiator screen, radiator core and panel screen are clean.

Dirt or chaff on the radiator screen, radiator core or panel screen decrease cooling performance.

1. Remove the radiator screen and panel screen and remove all foreign material.

https://truckmanualshub.com/

2. Remove the dust from between the fins and the tube.
3. Tighten the fan drive belt as necessary. For this, refer to "EVERY 100 HOURS" in Maintenance section.
4. If scale forms in the tube, clean with the scale inhibitor or its equivalent.
5. Each time the panel screen is covered with grass during operation, rub it off the screen with the hand. Check the radiator screen from time to time if grass accumulates.
6. If the dust or chaff has accumulated inside the panel, remove the radiator screen and the panel screen, and clean inside completely.
   After cleaning, replace the radiator screen and panel screen properly.

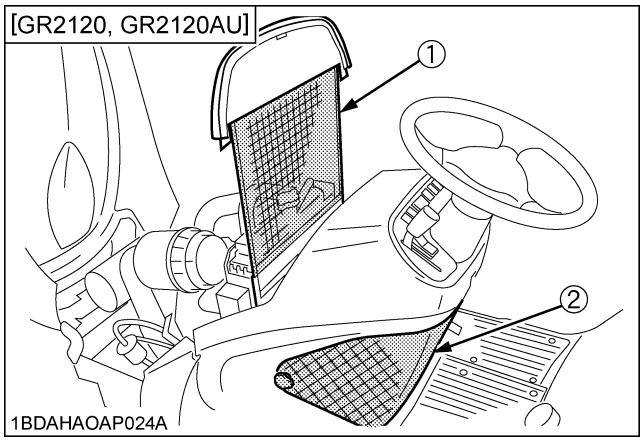

(1) Radiator screen
(2) Panel screen

■Checking Tire Pressure

WARNING

To avoid serious injury:

- **Do not attempt to mount a tire on a rim. This should be done by a qualified person with the proper equipment.**
- **Always maintain the correct tire pressure. Do not inflate tires above the recommended pressure shown in the Operator's Manual.**
- **Inflation pressure in front tires rises quickly when using compressed air.**

WARNING

To avoid serious injury:

- **Never operate machine with a loose rim, wheel, or axle.**
- **Whenever bolts are loosened, retighten to specified torque.**
- **Check all bolts frequently and keep them tightened.**

◆ Inflation Pressure

Though the inflation pressure is factory-set to the prescribed level, it naturally drops slowly in the course of time. Thus, check it everyday and inflate as necessary.

[Turf tire]

	Tire sizes	Recommended Inflation Max. Pressure
Front	16 x 7.50 - 8, 4PR	160 kPa (1.6 kgf/cm^2, 24 psi)
Rear	23 x 10.50 - 12, 4PR	150 kPa (1.5 kgf/cm^2, 22 psi)

[Bar tire]

	Tire sizes	Recommended Inflation Max. Pressure
Front	16 x 7.50 - 8, 4PR	190 kPa (1.9 kgf/cm^2, 28 psi)
Rear	23 x 10.50 - 12, 4PR	140 kPa (1.4 kgf/cm^2, 20 psi)

https://truckmanualshub.com/

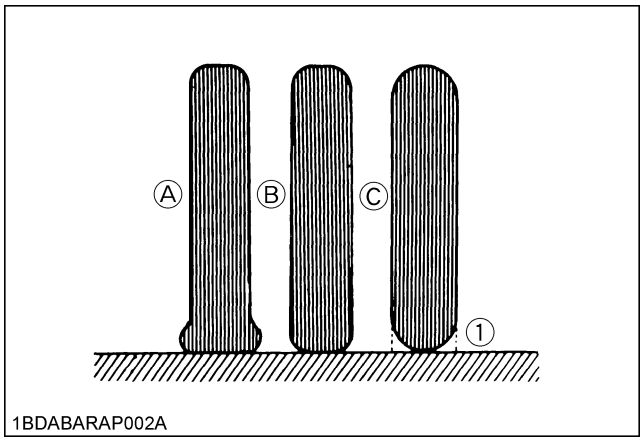

(1) Ground
(A) "INSUFFICIENT"
(B) "NORMAL"
(C) "EXCESSIVE"

■Checking Transmission Fluid Level

1. Park the machine on a flat surface, raise the mower, shut off engine and remove the key.
2. Raise the operator's seat.
3. To check the oil level, draw out the dipstick, wipe it clean, replace it, and draw it out again. Check to see that the oil level lies between the 2 notches.
   If the level is too low, add new oil to the prescribed level at the oil inlet.
   (See "LUBRICANTS, FUEL AND COOLANT" in "MAINTENANCE" section.)

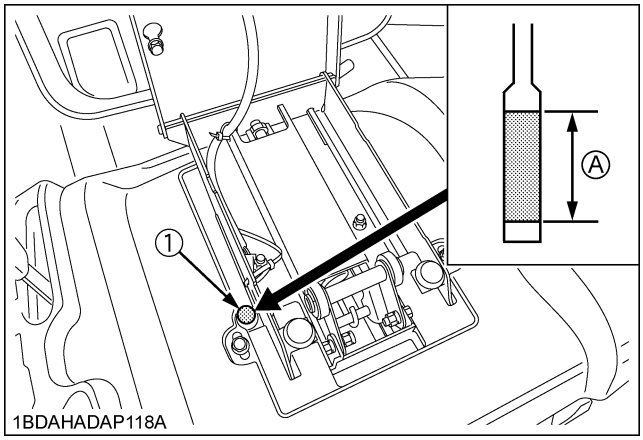

(1) Oil level dipstick
(A) Oil level is acceptable within this range.

NOTE :
- Check the oil level of the transmission case with the mower lifted up.

IMPORTANT :
- If oil level is low, do not run the engine.

■Checking Coolant Level

[GR2120, GR2120AU]

WARNING

To avoid serious injury:
- **Be sure to stop the engine and remove the key before checking coolant level.**
- **Do not remove the radiator cap while coolant is hot. When cool, slowly rotate cap to the first stop and allow sufficient time for excess pressure to escape before removing the cap completely.**

Check the coolant level daily both the radiator and the recovery tank before starting engine.

1. Remove the radiator cap and check to see that the coolant level is just below the fill port.
2. Check to see that the coolant level is between the "FULL" and "LOW" marks of recovery tank.
3. When the coolant level drops due to evaporation, add water only up to just below the fill port of the radiator and the full level of the recovery tank.
   In case of leakage, add anti-freeze and water in the specified mixing ratio up to the full level.
   (See "Flush Cooling System and Changing Coolant" in "EVERY 1 YEAR" in "PERIODIC SERVICE" section.)

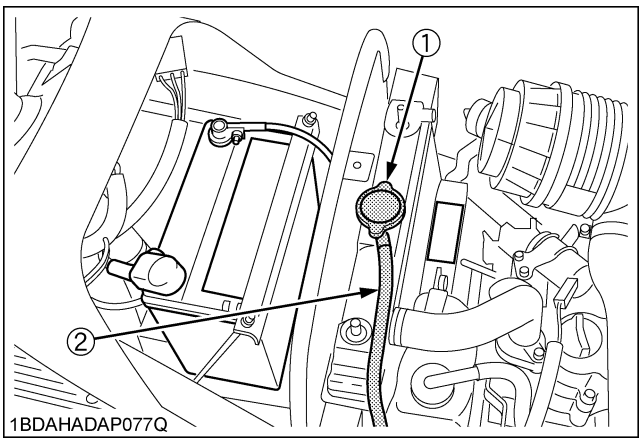

(1) Radiator cap
(2) Over flow pipe

https://truckmanualshub.com/

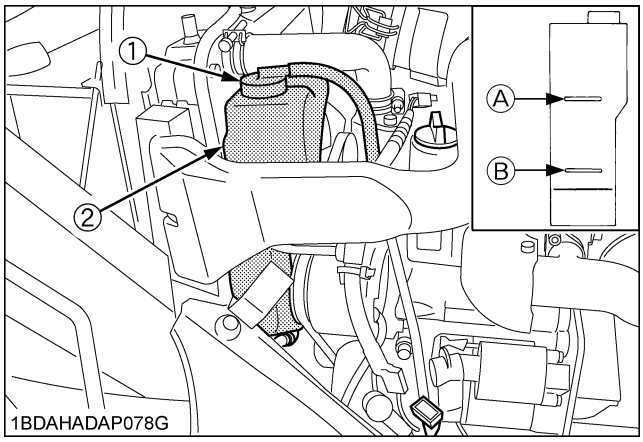

(1) Recovery tank cap *(A) "FULL"*
(2) Recovery tank *(B) "LOW"*

IMPORTANT :
- If the radiator cap has to be removed, follow the caution above and securely retighten the cap.
- Use clean, distilled water and anti-freeze to fill the radiator and the recovery tank.
- If water should leak, consult your local KUBOTA Dealer.

■Lubricating All Grease Fittings

WARNING

To avoid serious injury:
- **Be sure to stop the engine and remove the key before greasing.**

Grease the following locations.

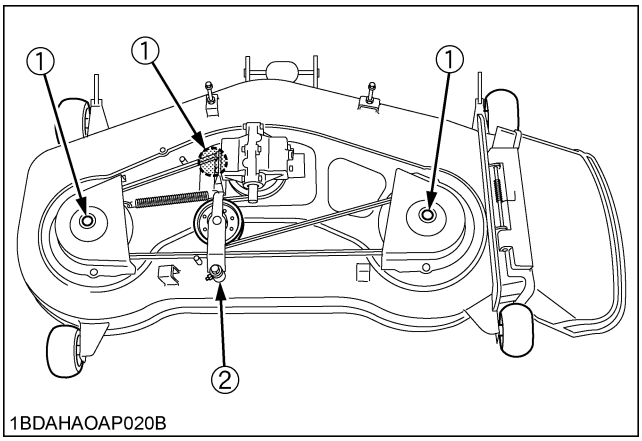

(1) Spindle shaft
(2) Belt tension pivot

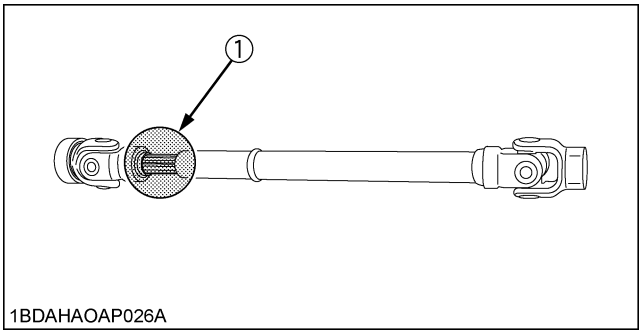

(1) Mower universal joint (Apply grease on the spline shaft.)

https://truckmanualshub.com/

■Checking Movable Parts

If any of the movable parts, such as levers and pedals, is not smoothly moved because of rust or anything sticky, do not attempt to force it into motion.
In the above case, remove the rust or the sticky thing, and apply oil or grease on the relevant spot.
Otherwise, the machine may get damaged.

EVERY 25 HOURS

■Cleaning Precleaner and Air Cleaner Paper Element

[GR2020G]

NOTE :
- Operating in dusty conditions requires more frequent maintenance.

1. Stop the engine and apply the parking brake.
2. Loosen the cover retaining knob and remove the cover.

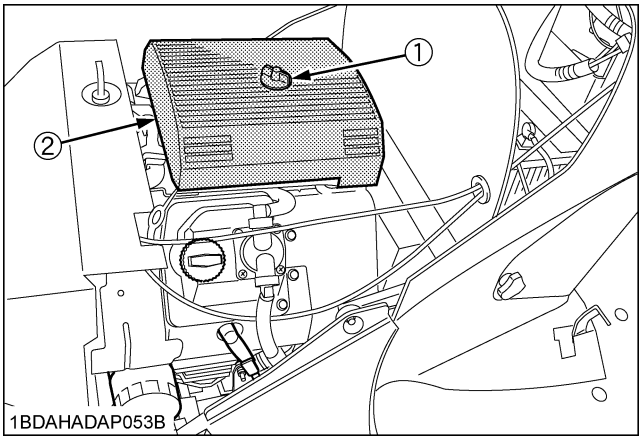

(1) Cover retaining knob
(2) Cover

3. Inspect the foam precleaner without removing it.

NOTE :
- Do not wash the paper element.

[If the foam precleaner is dirty]

1. Remove the precleaner.

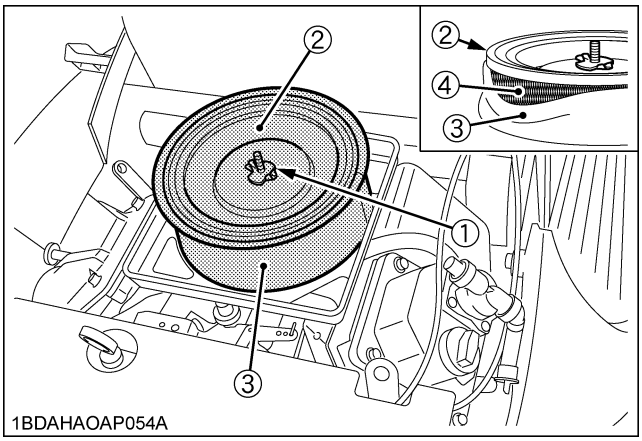

(1) Element cover nut
(2) Element cover
(3) Precleaner
(4) Paper element

https://truckmanualshub.com/

2. Wash the precleaner in warm water with detergent. Rinse the precleaner thoroughly until all traces of detergent are eliminated. Squeeze out excess water (do not wring). Allow the precleaner to air dry.
3. Saturate the precleaner with new engine oil. Squeeze out all excess oil.
4. Reinstall the precleaner.
5. When the precleaner replacement is necessary, order genuine KUBOTA parts.

EVERY 50 HOURS

■Checking Engine Start System

The Engine Start System in your machine are designed to protect you while operating. Please check these Engine Start System periodically. It is recommended to check the Engine Start System before daily operation.

WARNING

To avoid serious injury:

- **Do not allow anyone near the machine while testing.**
- **If the machine does not pass one of the following tests, do not operate the machine. See your local KUBOTA Dealer.**
- **Sit on operator's seat for all tests.**

IMPORTANT :

- Check the following tests before operating the machine.

Test 1 (Safety Start Control 1)

1. Depress the brake pedal fully.
2. Engage the PTO lever.
3. Turn the key switch to the "START" position.
4. The engine should not crank.

Test 2 (Safety Start Control 2)

1. Disengage the PTO lever.
2. Release the brake pedal.
3. Turn the key to the "START" position.
4. The engine should not crank.

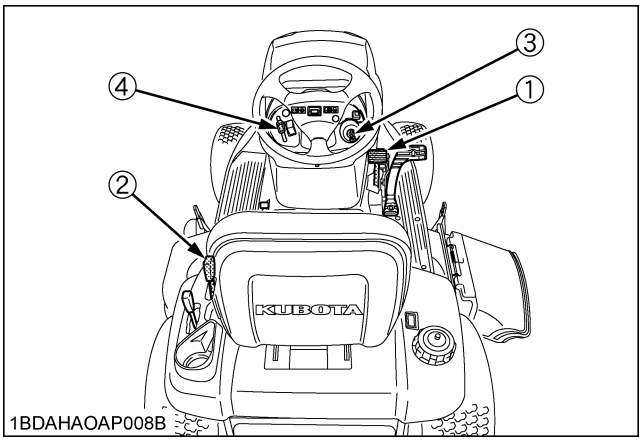

(1) Brake pedal
(2) PTO lever
(3) Key switch
(4) Throttle lever

https://truckmanualshub.com/

■Checking OPC System

The OPC (Operator Presence Control) system in your machine are designed to protect you while operating. Please check these OPC system periodically. It is recommended to check the OPC system before daily operation.

WARNING

To avoid serious injury:

- **Do not allow anyone near the machine while testing.**
- **If the machine does not pass one of the following tests, do not operate the machine. See your local KUBOTA Dealer.**
- **Sit on operator's seat for all tests.**

IMPORTANT :

- Check the following tests before operating the machine.

Test 1 (Seat Safety Control 1)

1. Run the engine at half throttle.
2. Engage the PTO lever.
3. Stand up. (DO NOT GET OFF THE MACHINE.)
4. Engine should shut off.

Test 2 (Seat Safety Control 2)

1. Run the engine at half throttle.
2. Disengage the PTO lever.
3. Release the brake pedal.
4. Stand up. (DO NOT GET OFF THE MACHINE.)
5. Engine should shut off.

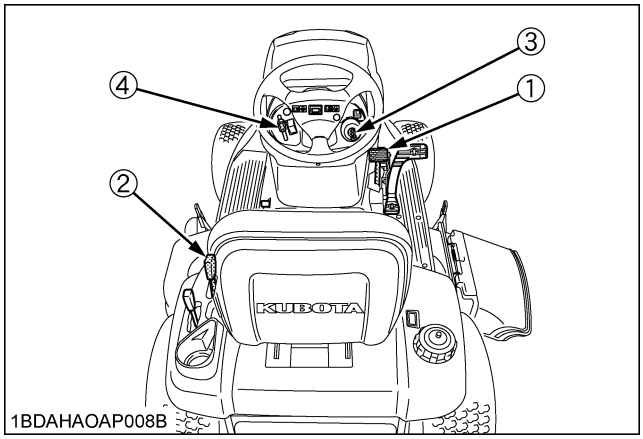

(1) Brake pedal
(2) PTO lever
(3) Key switch
(4) Throttle lever

■Checking PTO Control System

The PTO control system in your machine are designed to protect you while operating. Please check these PTO control system periodically - daily is best - to test function of the PTO control system before operation.

WARNING

To avoid serious injury:

- **Do not allow anyone near the machine while testing.**
- **If the machine does not pass one of the following tests, do not operate the machine. Contact your KUBOTA Dealer.**
- **Sit on operator's seat for all tests.**

IMPORTANT :

- Check the following tests before operating the machine.

Test 1 (KUBOTA Reverse Awareness system (KRA system) 1)

1. Start and run the engine at half throttle.
2. Engage the PTO lever.
3. Press slightly on reverse side of speed control pedal.
4. Engine should shut off.

Test 2 (KUBOTA Reverse Awareness system (KRA system) 2)

1. Start and run the engine at 1/4 throttle.
2. Engage the PTO lever.
3. Press the KRA system override switch.
4. The KRA indicator light should flash.
5. Press slightly on the reverse side of speed control pedal.
6. Engine should not shut off.

Remove the fuse from under the seat before Test 3

Test 3 (KUBOTA Reverse Awareness system (KRA system) 3)

1. Start and run the engine at 1/4 throttle.
2. Engage the PTO lever.
3. Press the KRA system override switch.
4. The KRA indicator light should not flash.
5. Press slightly on reverse side of speed control pedal.
6. Engine should shut off.

https://truckmanualshub.com/

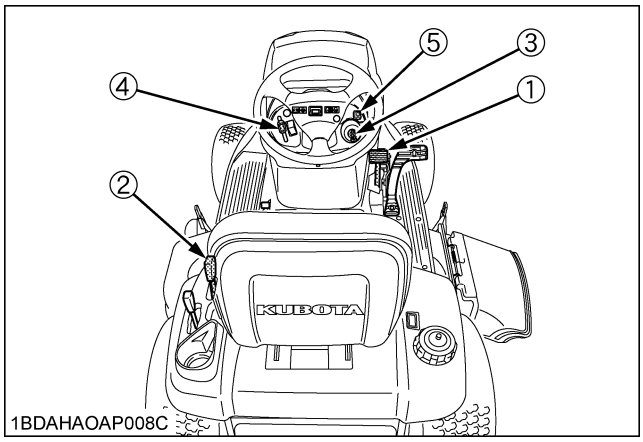

(1) Brake pedal
(2) PTO lever
(3) Key switch
(4) Throttle lever
(5) KRA system override switch

■Cleaning Air Cleaner Element

[GR2120, GR2120AU]

WARNING

To avoid serious injury:

- **Be sure to stop engine and remove the key before cleaning air cleaner element.**

1. Remove the air cleaner cover and element.
   (1) Undo the hook.
   (2) Turn the cover clockwise and detach it.
2. Clean the element:
   (1) When dry dust adheres to the element, blow compressed air from the inside, turning the element. Pressure of compressed air must be under 205kPa (2.1kgf/cm^2, 30psi).
   (2) When carbon or oil adheres to the element, soak the element in detergent for 15 minutes, and then wash it several times in water, rinse with clean water and dry it naturally. After element is fully dried, inspect the inside of the element with a light and check if it is damaged or not. (referring to the instructions on the label attached to the case.)
3. Replace the air cleaner element if:
   Once yearly or after every sixth cleaning, whichever comes first.

NOTE :

- Checked to see if the evacuator valve is blocked with dust.
- Operating in dusty conditions requires more frequent maintenance.

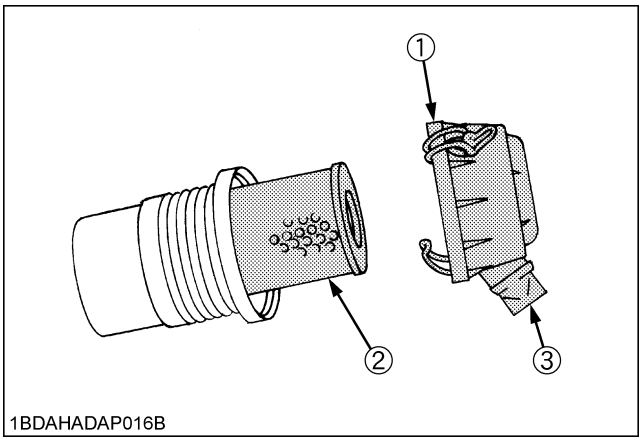

(1) Air cleaner cover
(2) Air cleaner element
(3) Evacuator valve

IMPORTANT :

- The air cleaner uses a dry element, never apply oil.
- Do not run the engine with the filter element removed.
- Align the arrow marks when reinstalling the cover. If the cover is improperly fitted, dust passes by the baffle and directly adheres to the element.

◆ Evacuator valve

Open the evacuator valve one a week under ordinary conditions - or daily when used in a dusty place - to get rid of large particles of dust and dirt.

https://truckmanualshub.com/

■Checking Carbon Canister Air Filter

[GR2020G]

Check the carbon canister air filter every 50 hours of operation. (more often under extremely dusty or dirty conditions.)

WARNING

To avoid serious injury:

- **Always stop the engine, set the parking brake, remove the key, and disengage PTO.**

1. Remove the rear cover and remove the carbon canister air filter.

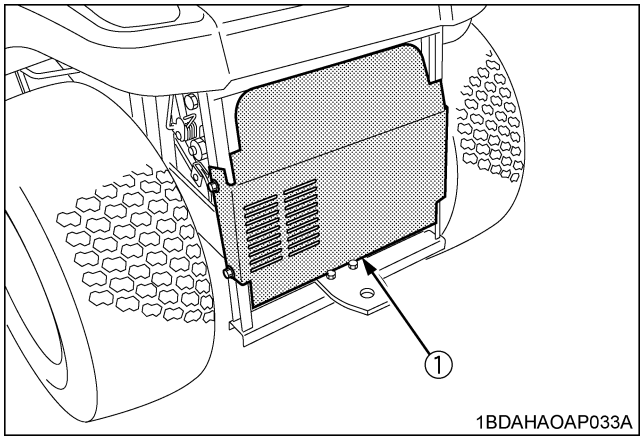

(1) Rear cover

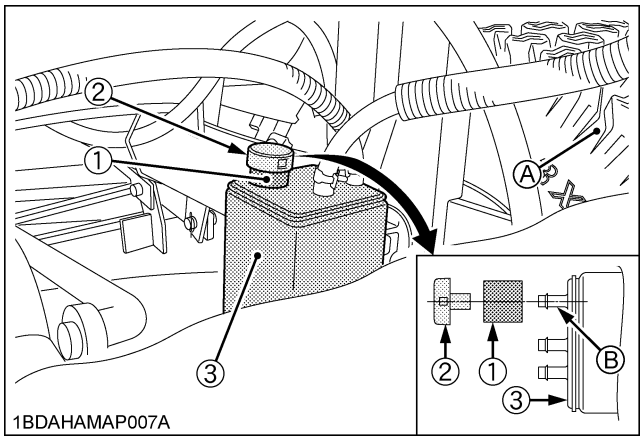

(1) Canister air filter
(2) Cover
(3) Carbon canister
(A) Right rear tire
(B) Air port

2. Check to see if the carbon canister air filter is worn out, damaged or dirty.
3. If the air filter is dirty, wash the air filter in warm water with detergent. Then rinse the air filter thoroughly until all traces of detergent are eliminated. Squeeze out excess water. (do not wring.) Allow the air filter to air dry. Do not use high pressure air to clean filter.
4. If the air filter is worn out, damaged or too dirty to wash clean, replace it with a new one.
5. Reinstall the carbon canister air filter and secure it with the cover.

NOTE :

- Operating in dusty condition may require more frequent maintenance than above.

https://truckmanualshub.com/

■Checking Gear Box Oil Level

WARNING

To avoid serious injury:

- **Always stop the engine and remove the key before checking oil.**

1. Park the machine on a flat surface and lower the mower to the ground.
   To check the oil level, loosen the check plug and check to see that the oil level is just below the check plug port.
   If the level is too low, add new oil to the prescribed level at the oil inlet.
   (See "LUBRICANTS, FUEL AND COOLANT" in "MAINTENANCE" section.)

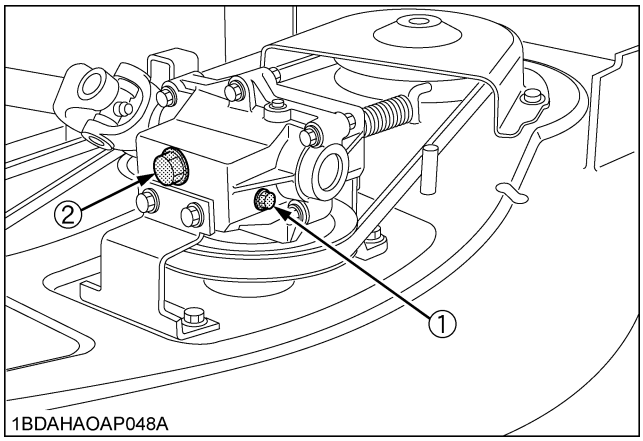

(1) Check plug (Bolt)
(2) Oil filler plug

■Greasing

WARNING

To avoid serious injury:

- **Be sure to stop the engine and remove the key before greasing.**

Grease the following locations.

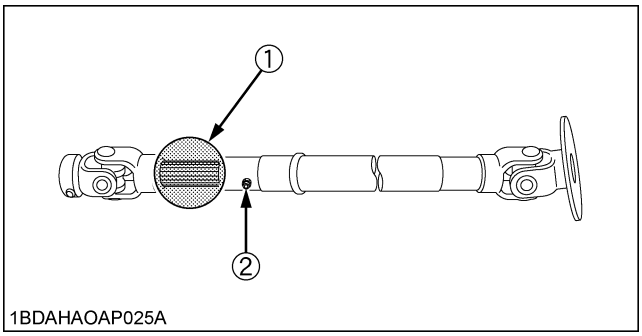

(1) Engine transmission universal joint
(Apply grease on the spline shaft.)
(2) Engine transmission universal joint (Nipple)

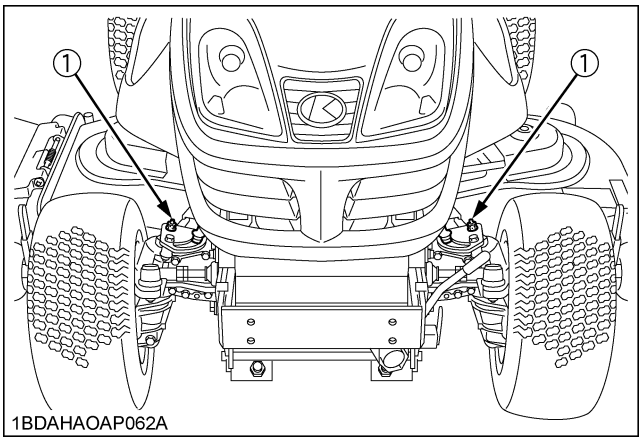

(1) Glide steer link bolt (LH, RH)

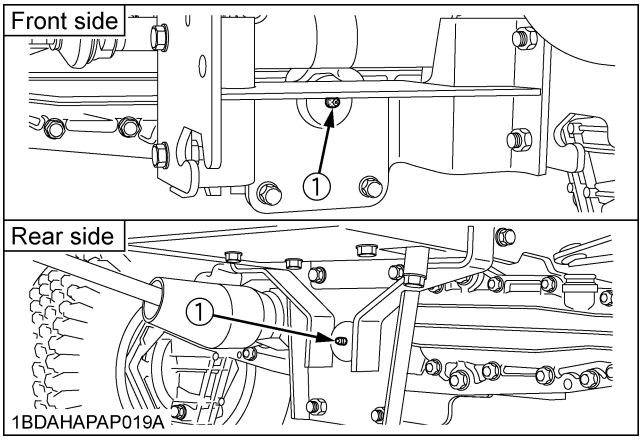

(1) Front axle (Center pin)

https://truckmanualshub.com/

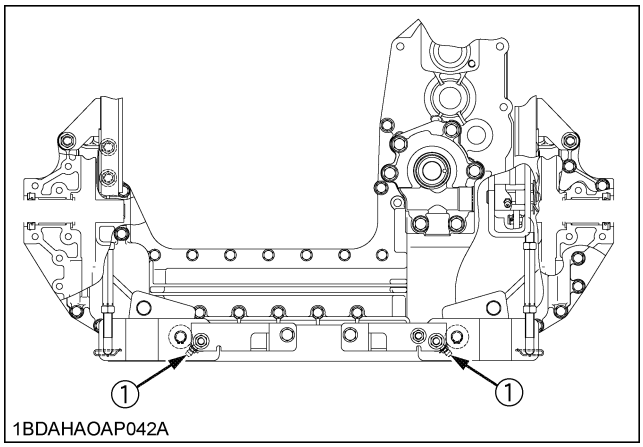

(1) Glide steer rear arm

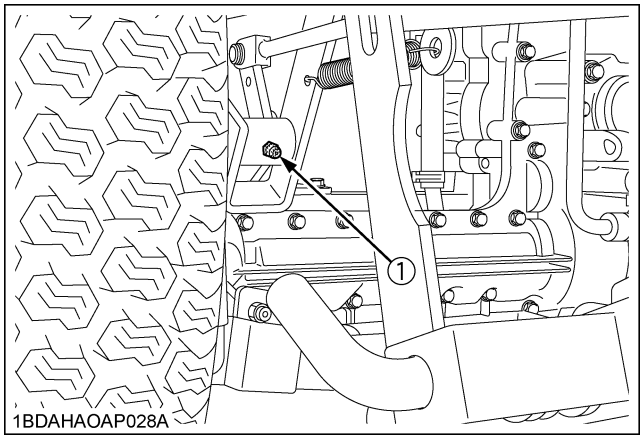

(1) Glide steer arm (RH)

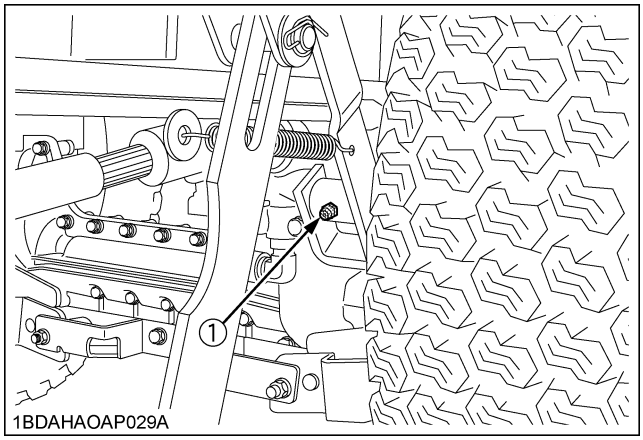

(1) Glide steer arm (LH)

■Oiling

WARNING

To avoid serious injury:

- **Be sure to stop the engine and remove the key before oiling.**

Oil the following locations.

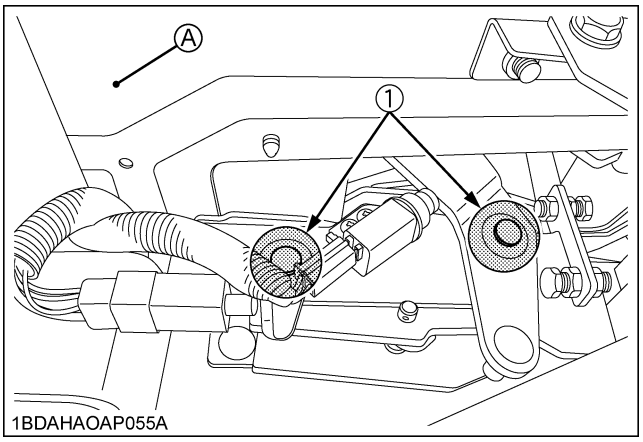

(1) Speed control pedal shaft (RH) *(A) Fender*

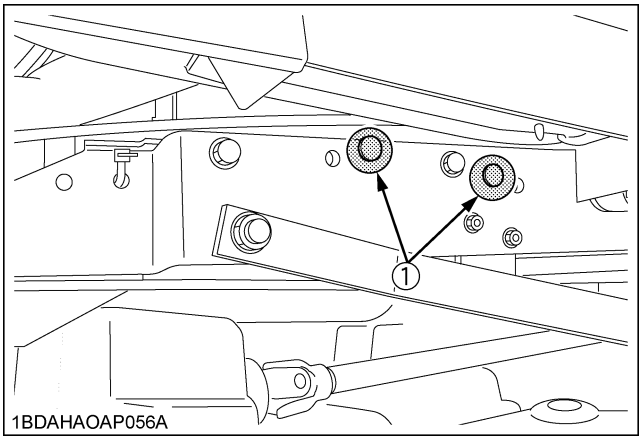

(1) Speed control pedal shaft (LH)

https://truckmanualshub.com/

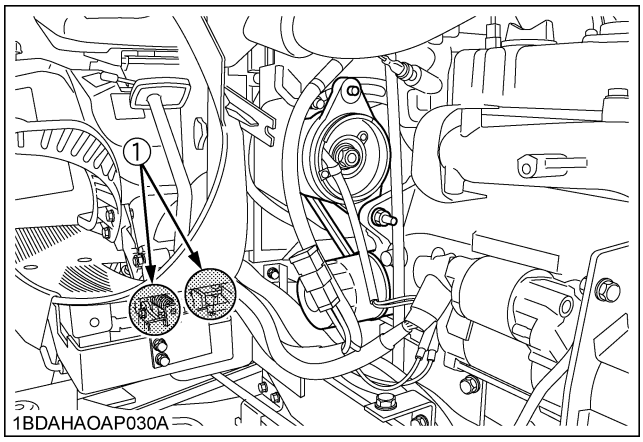

(1) Cruise control link

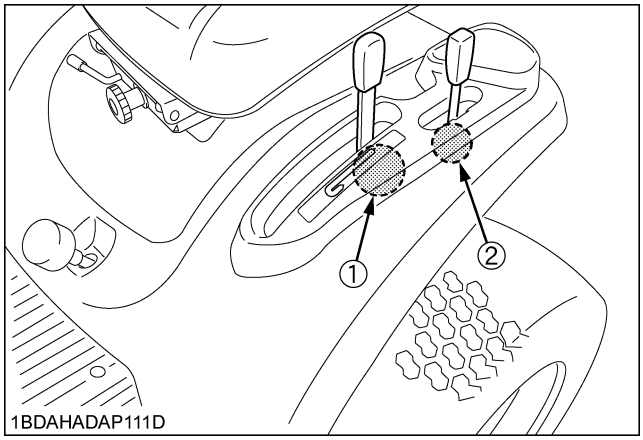

(1) PTO lever (fulcrum)
(2) Hydraulic lift lever (fulcrum)

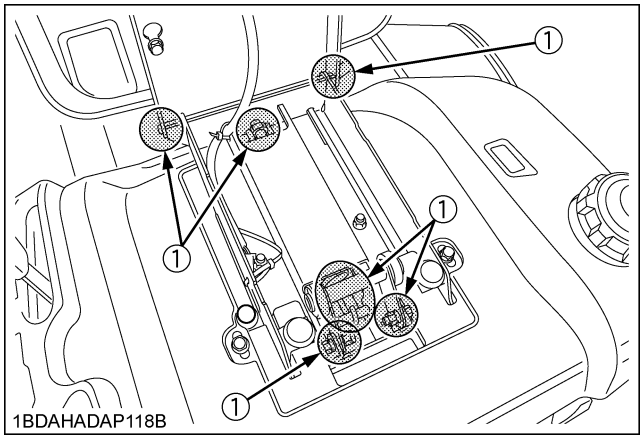

(1) Seat adjuster

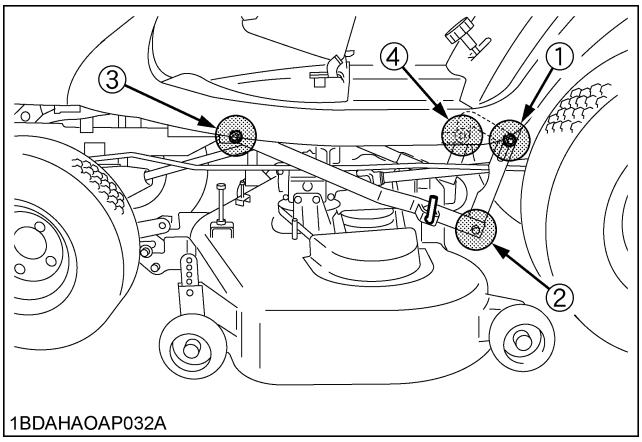

(1) Around the hole of the mower link (LH, RH)
(2) Around the pin of the mower link (LH, RH)
(3) Pivot of mower link (LH, RH)
(4) Pivot of liftarm (LH, RH)

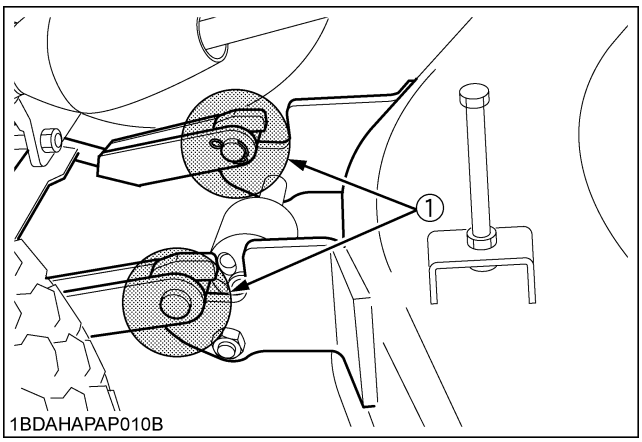

(1) Front link

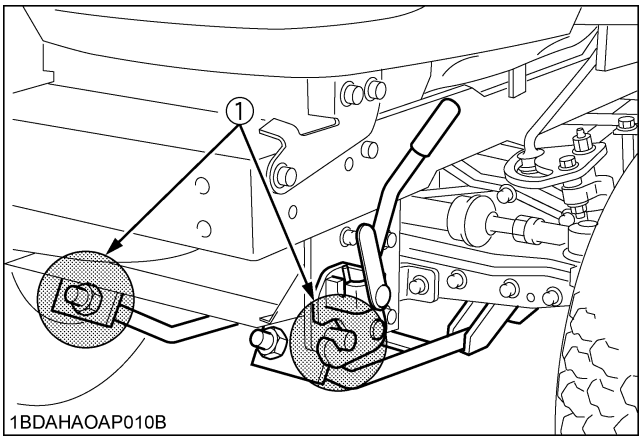

(1) Link fulcrum

https://truckmanualshub.com/

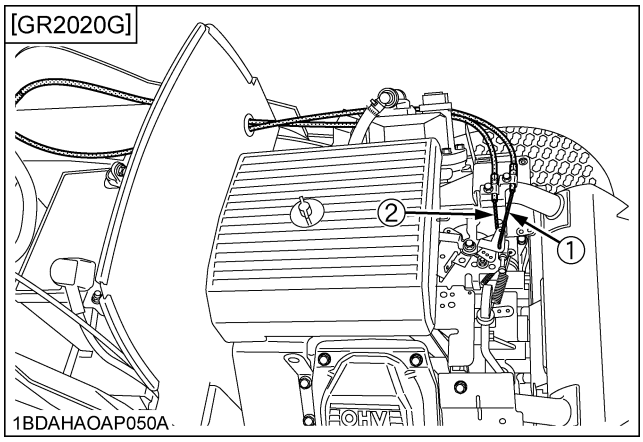

(1) Choke cable
(2) Throttle cable

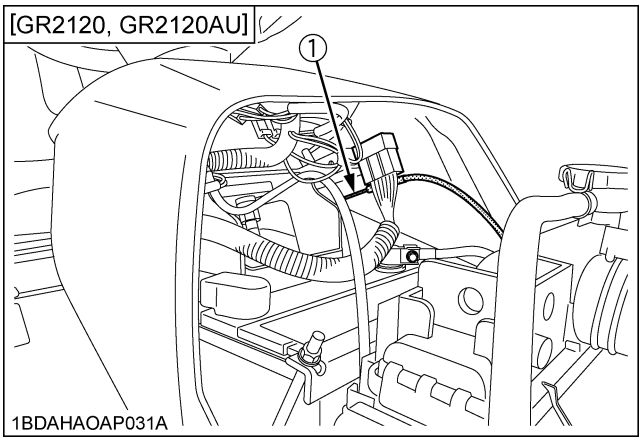

(1) Throttle cable

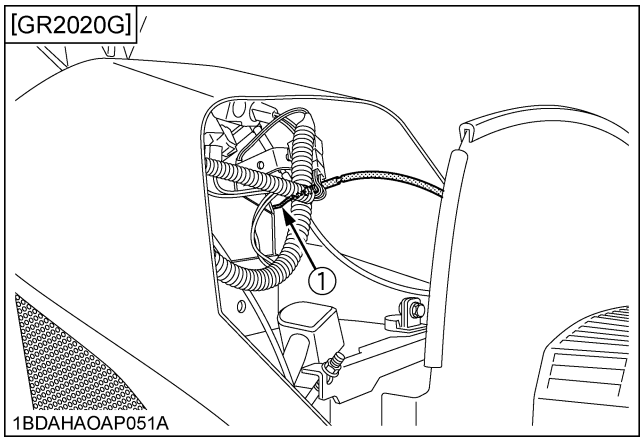

(1) Throttle cable

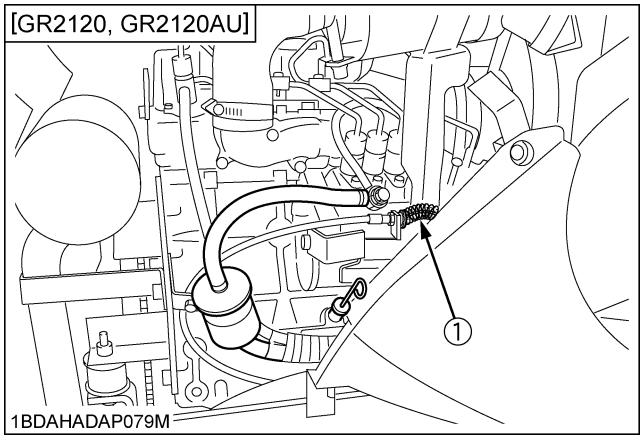

(1) Throttle cable

https://truckmanualshub.com/

■Checking Battery Condition

DANGER

To avoid the possibility of battery explosion:
For the refillable type battery, follow the instructions below.

- **Do not use or charge the refillable type battery if the fluid level is below the LOWER (lower limit level) mark. Otherwise, the battery component parts may prematurely deteriorate, which may shorten the battery's service life or cause an explosion. Check the fluid level regularly and add distilled water as required so that the fluid level is between the UPPER and LOWER levels.**

DANGER

To avoid serious injury or death:

- **When the battery is being activated, hydrogen and oxygen gases in the battery are extremely explosive. Keep open sparks and flames away from the battery at all times, especially when charging the battery.**

WARNING

To avoid serious injury:

- **Batteries, battery posts, terminals and related accessories contain lead and lead compounds, and other chemicals known to the State of California to cause cancer and birth defects or other reproductive harm. WASH HANDS AFTER HANDLING.**
- **Never remove the battery cap while the engine is running.**
- **Keep electrolyte away from eyes, hands and clothes. If you are spattered with it, wash it away completely with water immediately and get medical attention.**
- **Keep open sparks and flames away from the battery at all times. Hydrogen gas mixed with oxygen becomes very explosive.**
- **Wear eye protection and rubber gloves when working around battery.**

The factory-installed battery is of non-refillable type.
If the battery is weak, charge the battery or replace it with new one.

IMPORTANT :

- Mishandling the battery shortens the service life and adds to maintenance costs.
  The original battery is maintenance free, but needs some servicing.
  If the battery is weak, the engine will be difficult to start and the lights will be dim. It is important to check the battery periodically.
- When exchanging an old battery for new one, use battery of equal specification in table below.

Battery Type	Volts (V)	Reserve Capacity (min)	Capacity 20 HR (Ah)	Cold Cranking Amps	Normal Charging Rate (A)
10U1L	12	-	25	300	6 to 10
51R	12	80	45	430	4.5

(For non-accessible maintenance-free type batteries.)
Maintenance-free, non-accessible batteries are designed to eliminate the need to add water. Yet the volume of electrolyte above plates may eventually become depleted due to abnormal conditions such as high heat or improper regulator setting. Use a voltmeter to check the state of charge. (See reference chart below to determine if charging is necessary.)

Battery voltage	Reference state of charge
12.6	100%(Full charge)
12.4	75%
12.2	50%
12.0	25%
11.8	0%

◆ **Battery Charging**

DANGER

To avoid serious injury or death:

- **When the battery is being activated, hydrogen and oxygen gases in the battery are extremely explosive. Keep open sparks and flames away from the battery at all times, especially when charging the battery.**

WARNING

To avoid serious injury:

- **When disconnecting the cable from the battery, start with the negative terminal first. When connecting the cable to the battery, start with the positive terminal first.**
- **Never check battery charge by placing a metal object across the posts.**
  Use a voltmeter or hydrometer.

https://truckmanualshub.com/

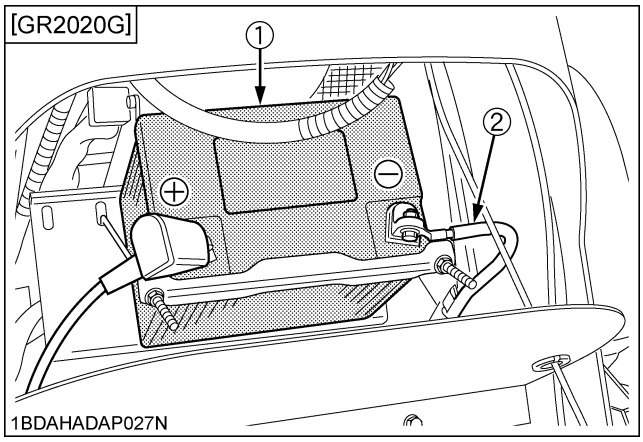

(1) Battery *(+): Positive terminal*
(2) Ground cable *(-): Negative terminal*

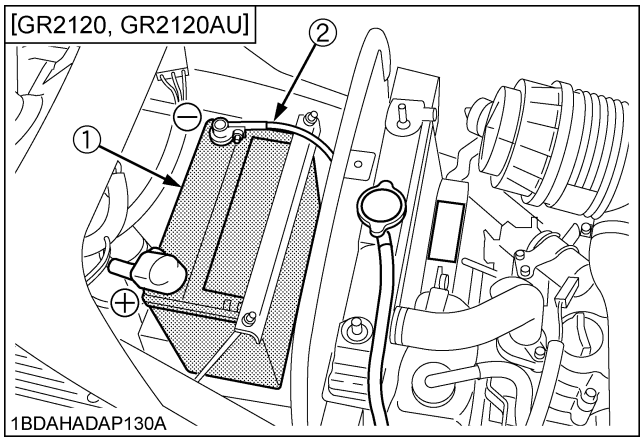

(1) Battery *(+): Positive terminal*
(2) Ground cable *(-): Negative terminal*

1. To slow charge the battery, connect the battery positive terminal to the charger positive terminal and the negative to the negative, then charge for at least 1 hour at 6 to 10 amperes (10U1L) or 4.5 amperes (51R).
2. A boost charge is only for emergencies. It will partially charge the battery at a high rate and in a short time.
   When using a boost-charged battery, it is necessary to recharge the battery as early as possible.
   Failure to do this will shorten the battery's service life.
3. When the specific gravity of electrolyte is between 1.27 and 1.29 the charging is completed.

◆ **Battery for storage**

1. When storing the machine for a long period, remove the battery from machine, adjust the electrolyte to the proper level and store in a dry place out of direct sunlight.
2. The battery self-discharges while it is stored.
   Recharge it once every 3 months in hot seasons and once every 6 months in cold seasons.

EVERY 100 HOURS

■Replacing Air Cleaner Paper Element

[GR2020G]

1. Loosen the cover retaining knob and remove the cover.

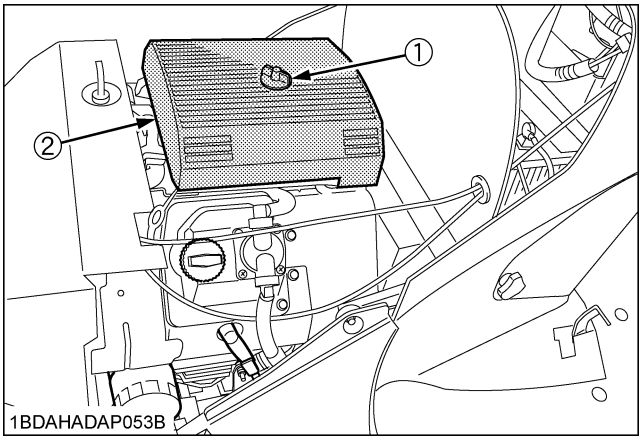

(1) Cover retaining knob
(2) Cover

2. Remove the element cover nut, the element cover, and the paper element with the precleaner.

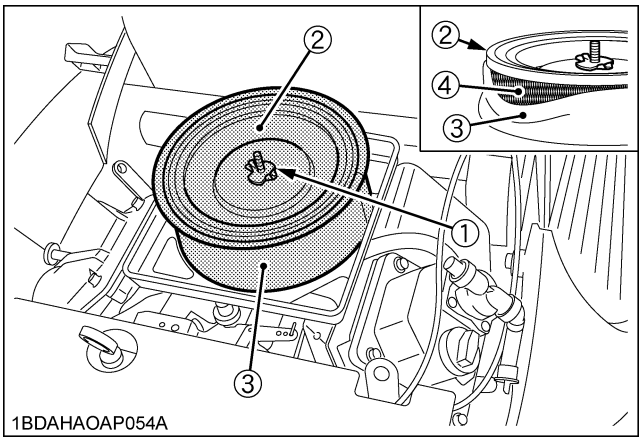

(1) Element cover nut
(2) Element cover
(3) Precleaner
(4) Paper element

3. Carefully remove the precleaner from the paper element. Service the precleaner as described.
   (See "Cleaning Precleaner and Air Cleaner Paper Element" in EVERY 25 HOURS.)

NOTE :

- Operating in dusty condition may require more frequent maintenance than above.

https://truckmanualshub.com/

IMPORTANT :
- Do not wash a paper-element. Do not oil a paper-element. Do not use pressurized air to clean a paper-element, as this will damage the element. Replace a dirty, bent, or damaged element with a genuine KUBOTA element. Handle new elements carefully; do not use if the sealing surfaces are bent or damaged.

4. When servicing the air cleaner, check the air cleaner base. Make sure it is secured and not bent or damaged. Also, check the element cover for damage or improper fit. Replace all damaged air cleaner components.

NOTE :
- If any loose dirt or debris fell on the air cleaner base when the element was removed, carefully remove it and wipe the base clean. Be careful that none of it drops into the intake throat. Check the condition of the rubber seal on the air cleaner stud. If the condition is questionable in any way, replace it with the new seal packaged with the replacement element.

5. Reinstall the paper element, precleaner, element cover, element cover nut, and air cleaner cover. Secure cover with the cover retaining knob.
6. When element replacement is necessary, order genuine KUBOTA parts.

■Cleaning Engine Shroud Panel

[GR2020G]

Consult your local KUBOTA for this service.

■Checking Fuel Lines, Fuel Vapor Lines and Fuel Filter

WARNING

To avoid serious injury:
- **Be sure to stop the engine and remove the key when attempting to make the following checks and changes.**
- **Never fail to check the fuel lines and fuel vapor lines periodically. The fuel lines and fuel vapor lines are subject to wear and aging. Fuel may leak out onto the running engine, causing a fire.**

NOTE :
- Only for GR2020G, check the fuel vapor lines.

The fuel line and fuel vapor line connections should be checked annually or every 100 service hours, whichever comes first.

1. The fuel line and fuel vapor line are made of rubber and ages regardless of service period.
2. If the fuel line, fuel vapor line and clamps are found to be damaged or deteriorated, replace them.
3. Check fuel filter, if it is clogged by debris or contaminated with water, replace it.

IMPORTANT :
- When the fuel line and fuel vapor line are disconnected for maintenance or repair, close both ends of the fuel line and fuel vapor line with a piece of clean cloth or paper to prevent dust and dirt from entering. In addition, particular care must be taken not to admit dust and dirt into the fuel pump. Entrance of even a small amount dust or dirt cause premature wear and malfunction of the fuel pump.

https://truckmanualshub.com/

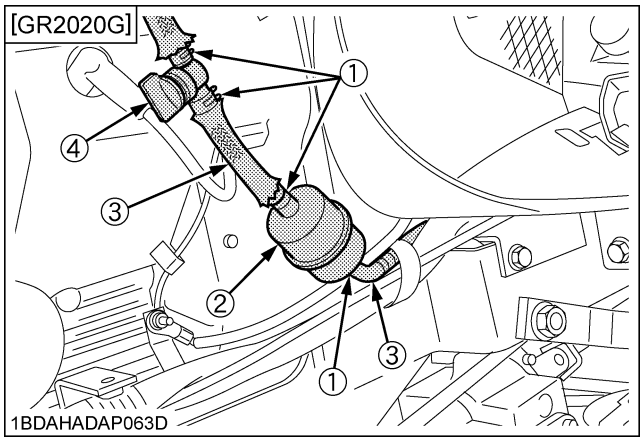

(1) Pipe clamps
(2) Fuel filter
(3) Fuel line
(4) Fuel cock

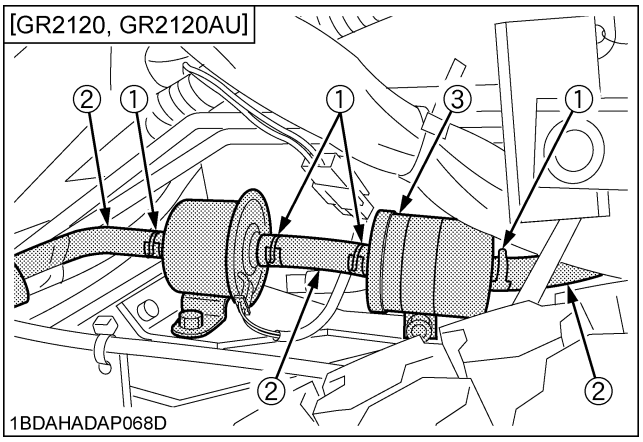

(1) Pipe clamps
(2) Fuel line
(3) Fuel filter

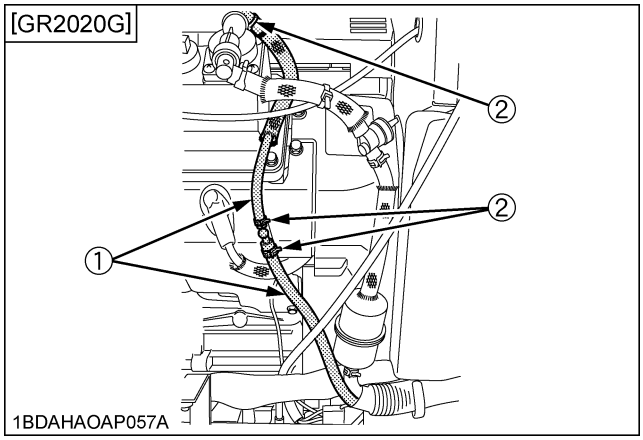

(1) Fuel vapor line
(2) Pipe clamps

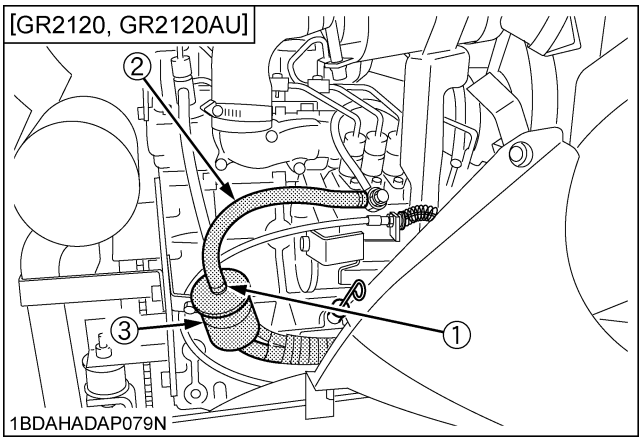

(1) Pipe clamps
(2) Fuel line
(3) Fuel filter

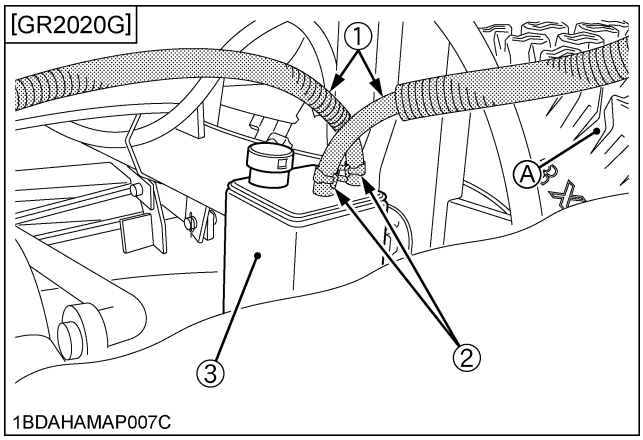

(1) Fuel vapor line
(2) Pipe clamps
(3) Carbon canister
(A) Right rear tire

https://truckmanualshub.com/

■Checking Brake

WARNING

To avoid serious injury:

- **When checking brake, park the machine on a flat area, block wheels, stop the engine and remove the key.**

Correct free travel ranges from 15 to 25 mm (0.59 to 0.98 in.). If it is not correct, consult your local KUBOTA dealer.

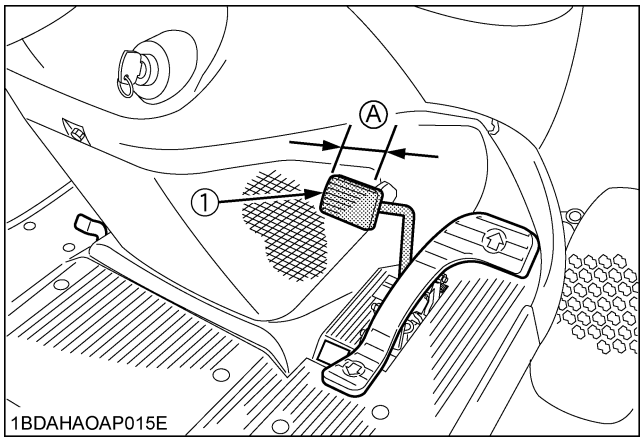

(1) Brake pedal *(A) Free travel 15 to 25 mm (0.59 to 0.98 in.)*

■Checking Fan Drive Belt Tension

[GR2120, GR2120AU]

WARNING

To avoid serious injury:

- **Be sure to stop the engine and remove the key before checking belt tension.**

If the fan drive belt becomes loose, the engine may overheat. To adjust, remove the right cover. Then loosen the tension bolt and adjusting bolt and move the dynamo outward to tighten the belt. After adjustment, securely tighten the bolts.

Moderate belt tension:
The belt should deflect approx. 10 mm (0.39 in.) when the center of the belt is depressed with finger pressure of 98 N (10 kgf).

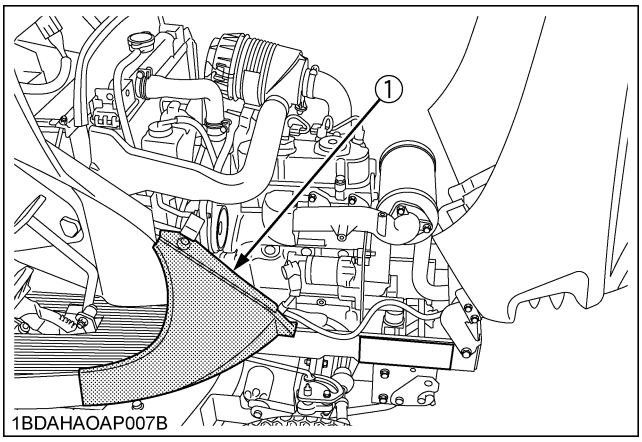

(1) Right cover

https://truckmanualshub.com/

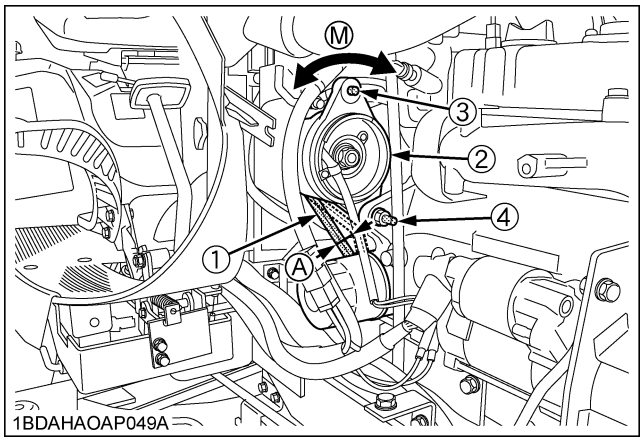

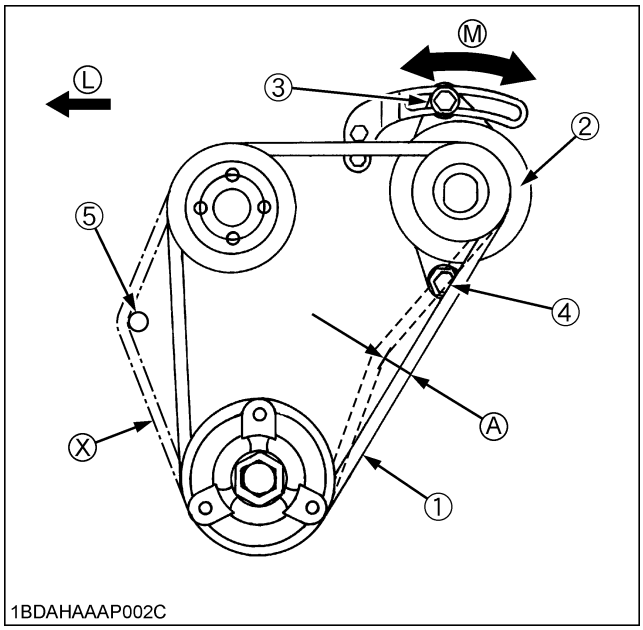

(1) Fan drive belt
(2) Dynamo
(3) Tension bolt
(4) Adjusting bolt
(5) Cap
(A) Approx. 10 mm (0.39 in.)
(M) "MOVE"
(L) "LEFT"
(X) Incorrect belt pass

IMPORTANT :
- When replacing the fan drive belt, be careful not to catch it on the cap under the water pump.

EVERY 150 HOURS

■Changing Gear Box Oil

WARNING

To avoid serious injury:
- **Be sure to stop the engine and remove the key before changing the oil.**

1. To drain the used oil, remove the filler plug at the gear box, tilt the mower deck and drain the oil completely into the oil pan.
2. Fill with the new oil up to the check plug port. (See "LUBRICANTS, FUEL AND COOLANT" in "MAINTENANCE" section.)
3. After filling reinstall the filler plug and the check plug.

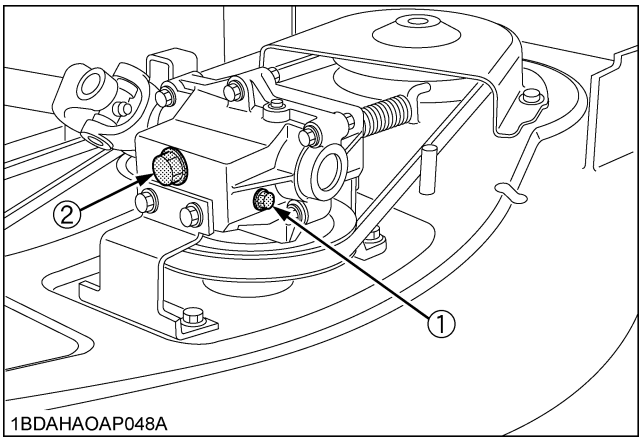

(1) Check plug (Bolt)
(2) Oil filler plug

https://truckmanualshub.com/

EVERY 200 HOURS

■Replacing Engine Oil Filter Cartridge

WARNING

To avoid serious injury:

- **Be sure to stop the engine and remove the key before changing the oil and the oil filter cartridge.**
- **Allow engine to cool down sufficiently; oil can be hot and may cause burns.**

1. The oil filter cartridge must be changed every 200 service hours.
2. Apply a slight coat of oil onto the rubber gasket of new cartridge.
3. Tighten the filter quickly until it contacts the mounting surface.
   [GR2020G]
   Tighten filter by hand.
   [GR2120, GR2120AU]
   Tighten filter by hand an additional 1/2 turn only.
4. After the new cartridge has been replaced, the engine oil level normally lowers a little. Add engine oil to proper level. Check for oil leaks around filter gasket.

IMPORTANT :

- To prevent serious damage to the engine, replacement element of the recommended type must be used. Use only a genuine KUBOTA filter or its equivalent.

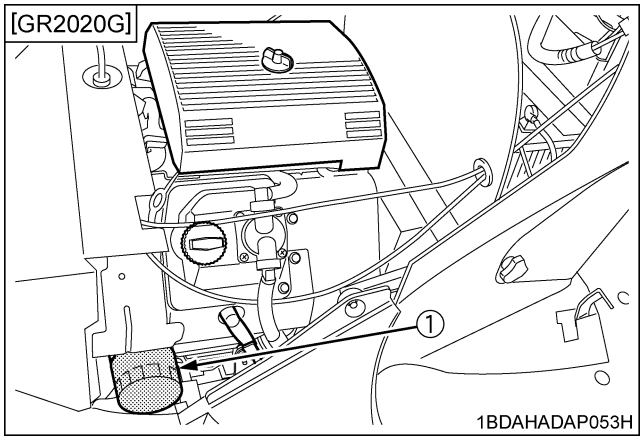

(1) Engine oil filter cartridge

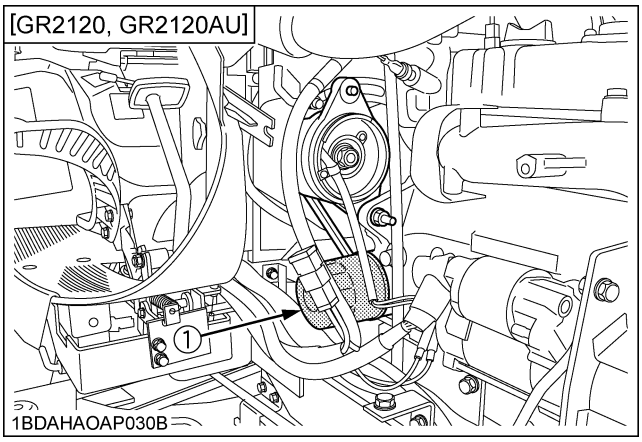

(1) Engine oil filter cartridge

https://truckmanualshub.com/

■Changing Engine Oil

WARNING

To avoid serious injury:

- **Be sure to stop the engine and remove the key before changing the oil.**
- **Allow engine to cool down sufficiently; oil can be hot and may cause burns.**

1. To keep dirt, debris, etc., out of the engine, clean the area around the oil fill cap/dipstick before removing it.
2. Remove the oil drain plug, the oil fill cap, and the dipstick. Be sure to allow ample time for complete drainage.

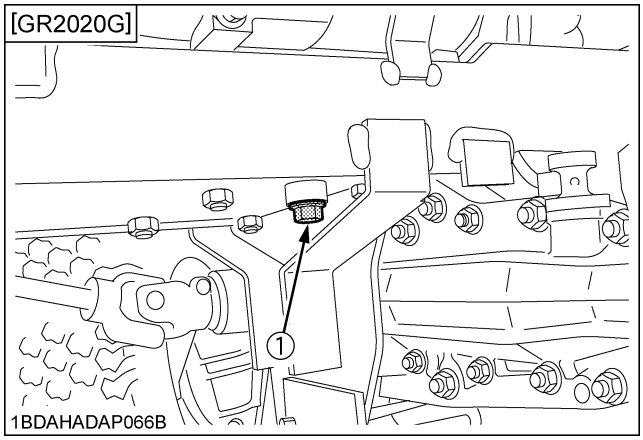

(1) Drain plug

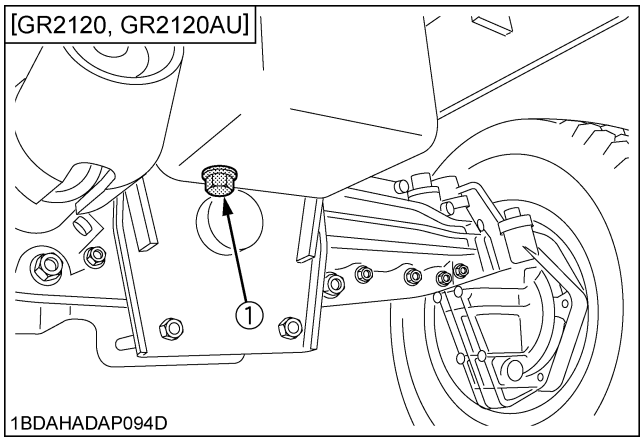

(1) Drain plug

3. The used oil can be drained out more easily if the engine is warm.
4. Reinstall the drain plug. Make sure it is tightened to **13.6 N-m (10 lbf-ft)** torque.
5. Fill the crankcase, with new oil of the proper type, to the "F" mark on the dipstick. (See "LUBRICANTS, FUEL AND COOLANT" in Maintenance section.) Always check the level with the dipstick before adding more oil.

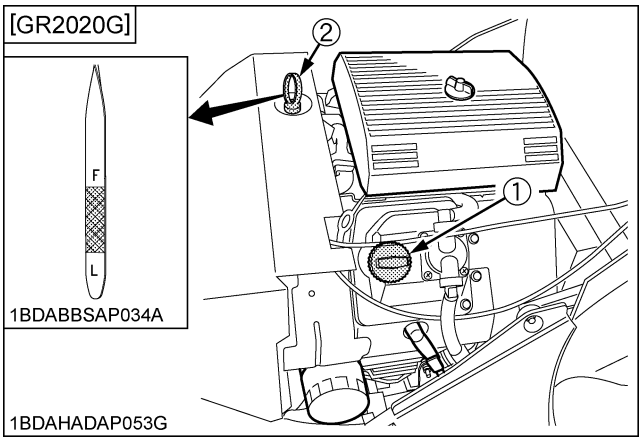

(1) Engine oil port *(F) "UPPER LEVEL"*
(2) Oil level dipstick *(L) "LOWER LEVEL"*

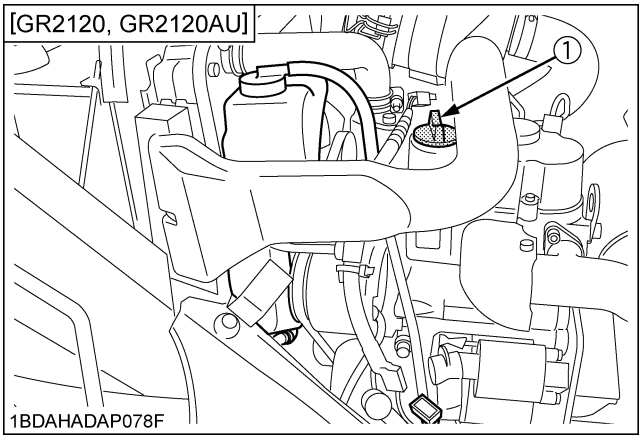

(1) Engine oil port

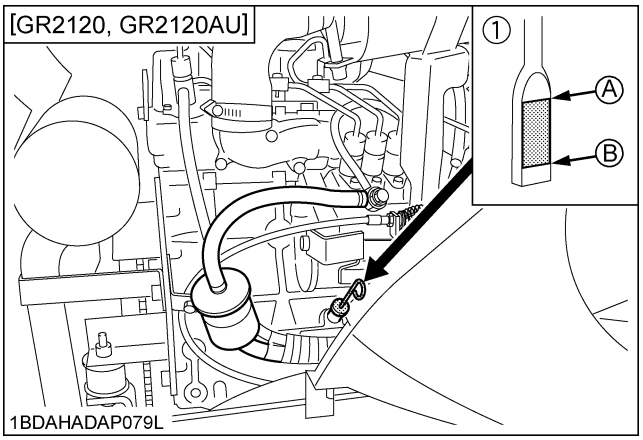

(1) Oil level dipstick *(A) "UPPER LEVEL"*
(B) "LOWER LEVEL"

6. To check the oil level. Remove the dipstick, wipe it clean, insert it and draw it out again. Check to see that the oil level is between the 2 marks.
7. Reinstall the oil fill cap and tighten it securely. Reinstall the dipstick.

https://truckmanualshub.com/

NOTE :
- To prevent extensive engine wear or damage, always maintain the proper oil level in the crankcase. Never operate the engine with the oil level below the "L" mark or over the "F" mark on the dipstick.

■Replacing Transmission Oil Filter Cartridge

WARNING

To avoid serious injury:
- **Be sure to stop the engine and remove the key before changing the oil filter cartridge.**
- **Allow transmission case to cool down sufficiently; oil can be hot and may cause burns.**

1. The oil filter cartridge must be changed every 200 service hours.
2. Remove rear cover.

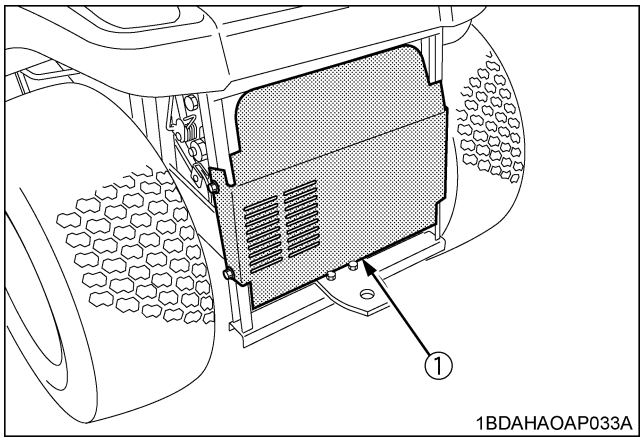

(1) Rear cover

3. Remove the oil filter cartridge by using the filter wrench.

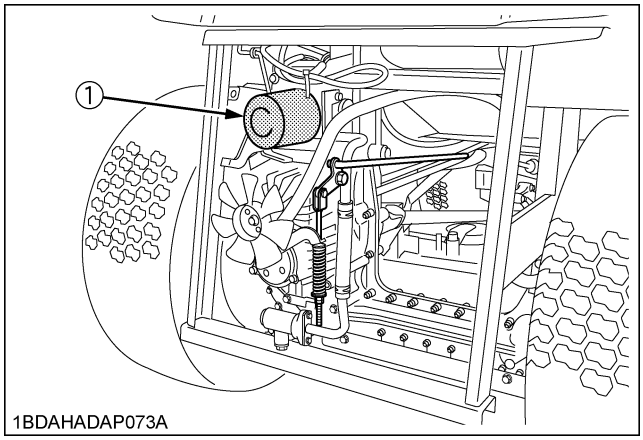

(1) Transmission oil filter cartridge

4. Lightly tighten the screw (A) by using a screwdriver.

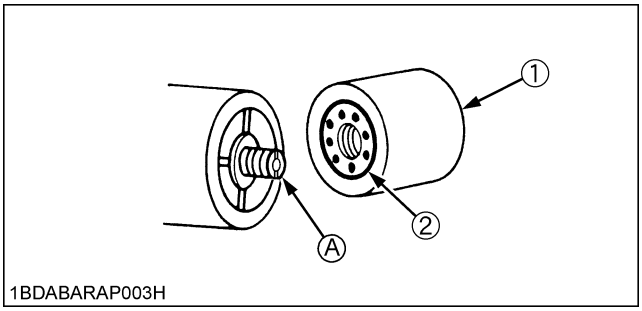

(1) Transmission oil filter cartridge (2) Gasket

5. Apply a slight coat of oil onto the gasket of new filter.
6. To install the new cartridge, screw it in by hand. Over tightening may cause deformation of the rubber gasket.
7. After the new cartridge has been replaced, the transmission fluid level normally lowers a little. Add fluid to proper level. Check for oil leaks around filter gasket.
8. Assemble the rear cover.

IMPORTANT :
- To prevent serious damage or premature failure to the hydraulic system, the replacement filter must be a highly efficient, 10 μm filter. Use only a genuine KUBOTA filter or its equivalent.

https://truckmanualshub.com/

■Checking Radiator Hose and Clamp

[GR2120, GR2120AU]

Check to see if radiator hoses are properly fixed every 200 hours of operation or 6 months, whichever comes first.

1. If hose clamps are loose or water leaks, tighten clamps securely.
2. Replace hoses and tighten hose clamps securely, if radiator hoses are swollen, hardened or cracked.

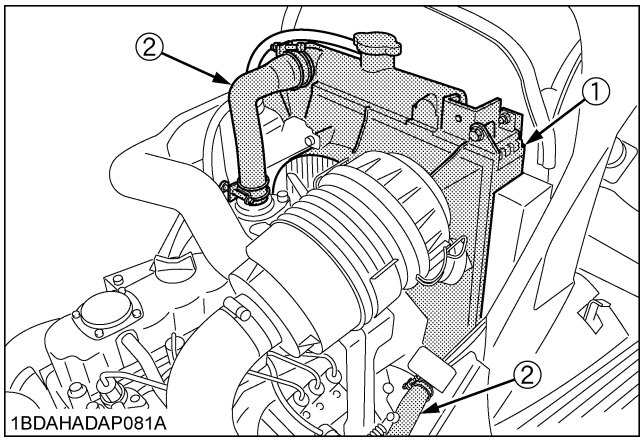

(1) Radiator core
(2) Radiator hose

■Checking Hydraulic Hose

WARNING

To avoid serious injury:

- **Be sure to stop the engine and remove the key before checking and replacing hydraulic hose.**
- **Allow transmission case to cool down sufficiently; oil can be hot and may cause burns.**

Check to see if hydraulic hoses are properly fixed every 200 hours of operation.

1. Check to see that all lines and hose clamps are tight and not damaged.
2. If hoses and clamps are found worn or damaged, replace or repair them at once.

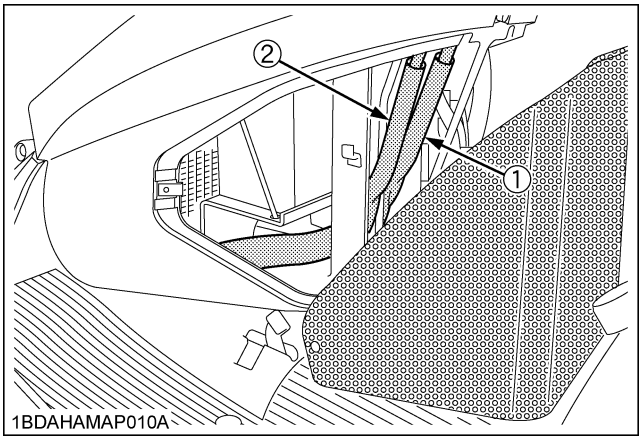

(1) Power steering hose (RH)
(2) Power steering hose (LH)

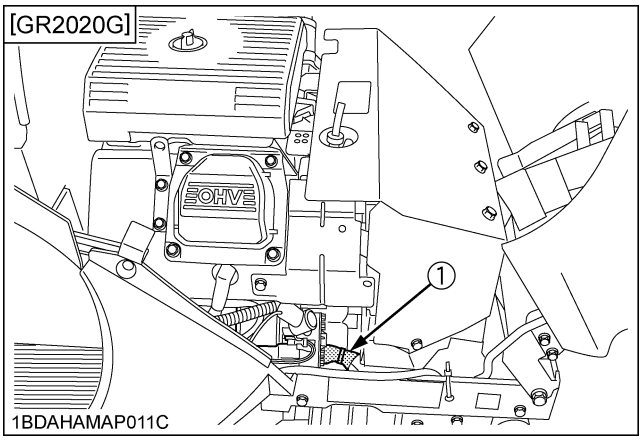

(1) Power steering hose (RH)

https://truckmanualshub.com/

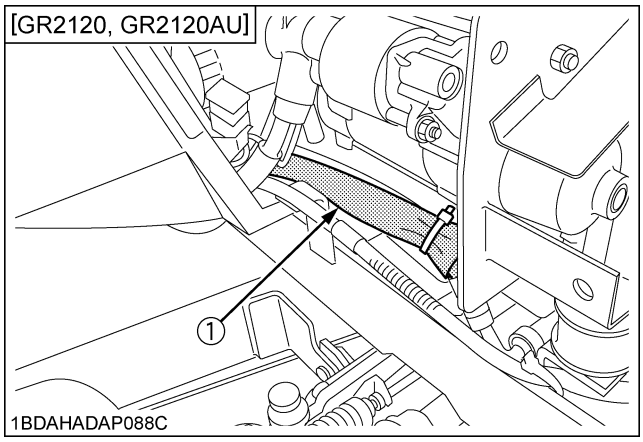

(1) Power steering hose (RH)

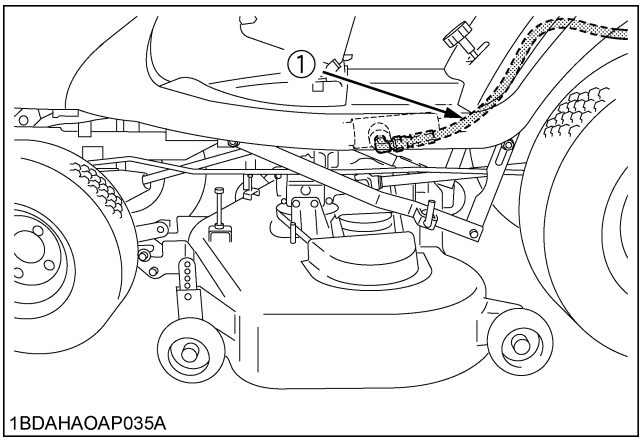

(1) Mower lift cylinder hose

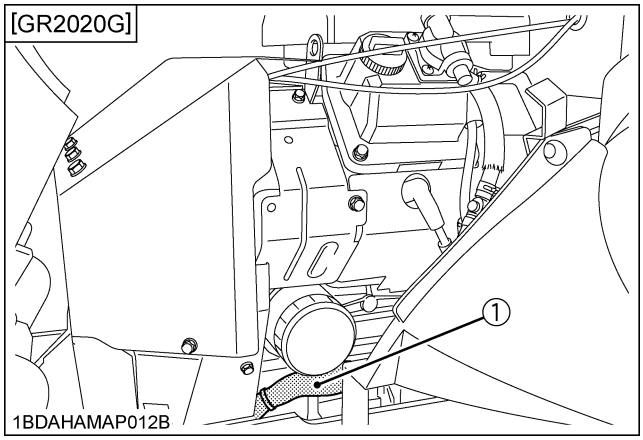

(1) Power steering hose (LH)

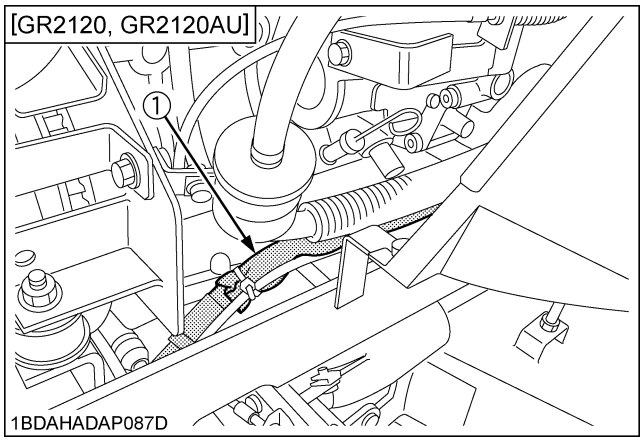

(1) Power steering hose (LH)

https://truckmanualshub.com/

■Adjusting Front Axle Pivot

If the front axle pivot pin adjustment is not correct, vibration in the front wheel can occur. When vibration occurs please contact your KUBOTA Dealer to adjust the free travel of front axle.

■Checking Spark Plug Condition & Gap

[GR2020G]

Remove the spark plugs, check condition, and reset the gap or replace with new plugs as necessary.

1. Open the hood.
2. Before removing spark plugs, the area around the base of the plug to keep dirt and debris out of the engine.
3. Remove the spark plug wires from spark plugs.
4. Use a spark plug wrench to remove the spark plugs.
5. Remove plugs and check its condition.
   Replace the plug if worn or reuse is questionable.
6. Inspect spark plugs for cracked porcelain, pitted electrodes, or other wear and damage. Replace the spark plug if necessary.

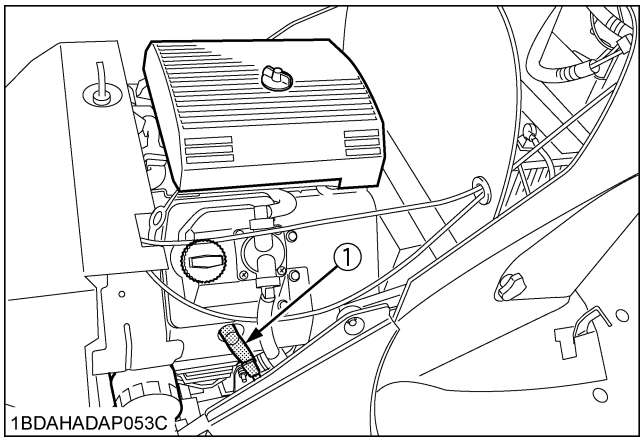

(1) Spark plug

NOTE :

- Do not clean the spark plug in a machine using abrasive grit. Some grit could remain in the spark plug and enter the engine causing extensive wear and damage.

Recommended spark plug	RC12YC CHAMPION

7. Check the gap using a wire feeler gauge. Adjust the gap to 0.76 mm (0.030 in.) by carefully bending the ground electrode.

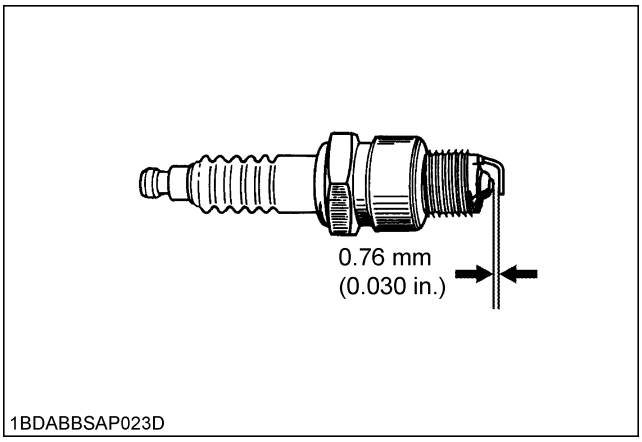

8. Reinstall the spark plug into the cylinder head.

Tightening torque	24.4 to 29.8 N-m (18 to 22 lbf-ft)

■Cleaning Engine Shroud

[GR2020G]

Consult your local KUBOTA Dealer for this service.

■Checking Intake Air Line

[GR2120, GR2120AU]

1. Check to see that hoses and hose clamps are tight and not damaged.
2. If hoses and clamps are found worn or damaged, replace or repair them at once.

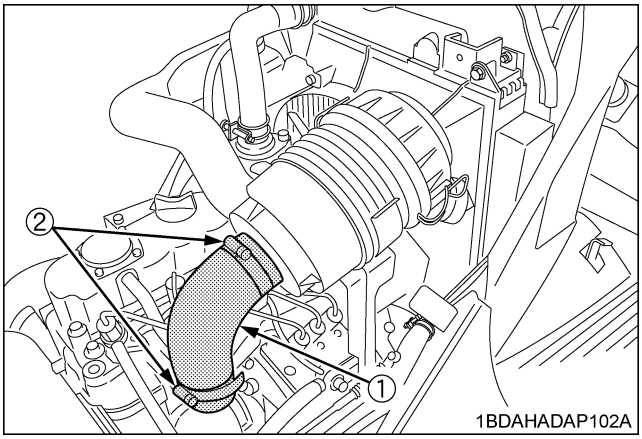

(1) Hose
(2) Clamp

https://truckmanualshub.com/

■Replacing Fuel Filter

[GR2020G]

Change fuel filter every 200 hours. Consult your local KUBOTA Dealer for this service.

EVERY 400 HOURS

■Changing Transmission Fluid

WARNING

To avoid serious injury:

- **Be sure to stop the engine and remove the key before changing or checking the oil.**
- **Allow transmission case to cool down sufficiently; oil can be hot and may cause burns.**

The fluid in the transmission case is also used for the hydrostatic drive system.

1. To drain the transmission oil, place oil pan underneath the transmission case and remove the drain plug.

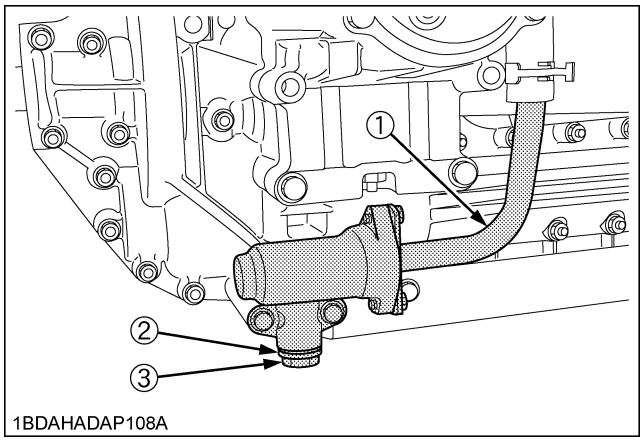

(1) Suction pipe
(2) Seal washer
(3) Drain plug

2. After draining, disassemble and clean the strainer and change the oil filter cartridge. After reassembling, fill with UDT or SUPER UDT hydrostatic transmission fluid, or its equivalent.

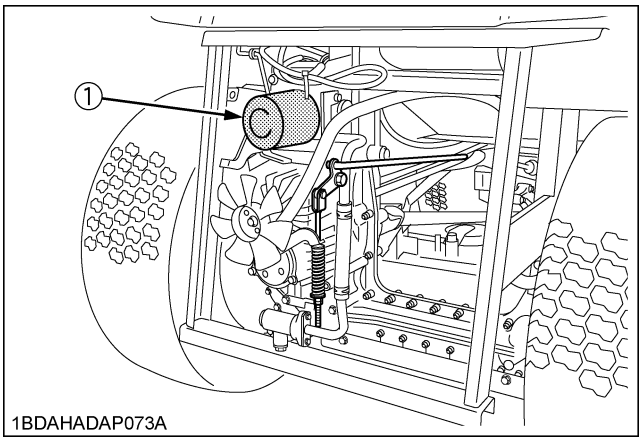

(1) Transmission oil filter cartridge

3. Remove the dipstick and fill with the new oil.
4. After running the engine for a few minutes, stop it and check the oil level again and add oil to the prescribed level if necessary.

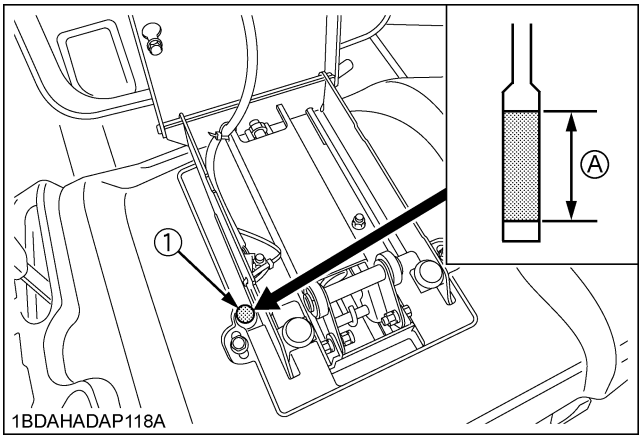

(1) Dipstick *(A) Oil level is acceptable within this range*

NOTE :

- Check the oil level of the transmission case with the mower lifted up.

IMPORTANT :

- Operate only at low rpms immediately after changing the transmission fluid and filter cartridge.
  Keep the engine at medium speed for a few minutes to insure proper lubrication of all parts so there is no damage to transmission.
- Do not engage PTO before checking the oil level.

https://truckmanualshub.com/

■Cleaning Transmission Strainer

When changing the transmission fluid, disassemble and rinse the strainer with nonflammable solvent to completely clean off filings.
Check "O" rings. Replace it if damaged, cracked or hardened.
When reassembling be careful not to damage the parts.

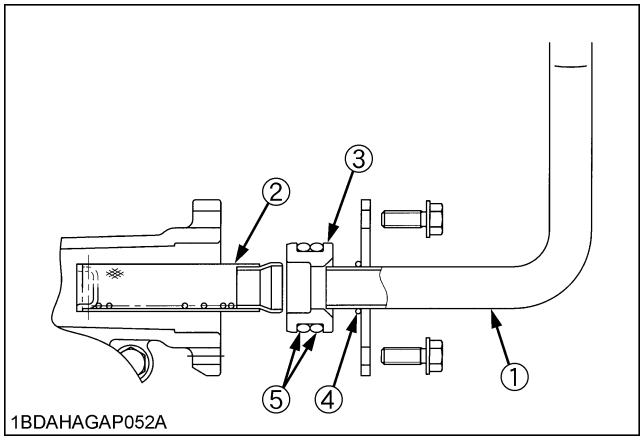

(1) Suction pipe
(2) Strainer
(3) Boss
(4) O-ring (Small)
(5) O-ring (Large)

NOTE :
- Since the fine filings in the oil can damage the precision component parts of the hydraulic system, the end of the suction line is provided with an oil strainer.

■Changing Front Axle Case Oil

1. Park the machine on a firm, flat and level surface.
2. To drain the used oil, remove the right and left drain plugs and filling plug at the front axle case and drain the oil completely into the oil pan.
3. After draining reinstall the drain plugs.
4. Remove the right and left breather plugs.
5. Fill with the new oil up to the upper notch on the dipstick.
   (See "LUBRICANTS, FUEL AND COOLANT" in "MAINTENANCE" section.)

IMPORTANT :
- After 10 minutes, check the oil level again; add oil to prescribed level.

6. After filling reinstall the filling plug and breather plugs.

Oil capacity	1.9 L (2.0 U.S.qts)

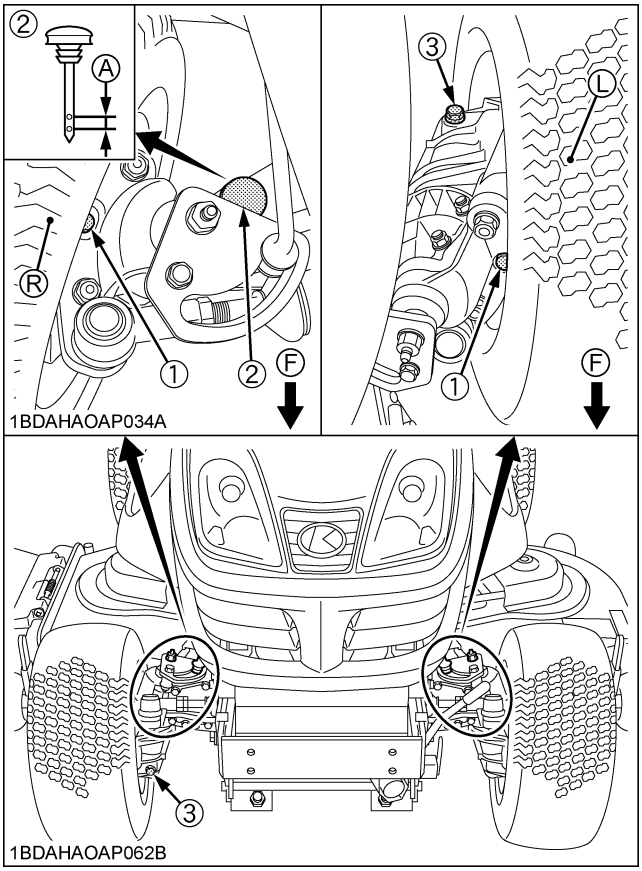

(1) Breather plug
(2) Filling plug with dipstick
(3) Drain plug
(A) Oil level is acceptable within this range
(F) FRONT
(L) Left rear wheel
(R) Right rear wheel

https://truckmanualshub.com/

■Replacing Fuel Filter

[GR2120, GR2120AU]

Change fuel filter every 400 hours. Consult your local KUBOTA Dealer for this service.

EVERY 1500 HOURS

■Checking Fuel Injection Nozzle (Injection Pressure)

[GR2120, GR2120AU]

Consult your local KUBOTA Dealer for this service.

EVERY 3000 HOURS

■Checking Injection Pump

[GR2120, GR2120AU]

Consult your local KUBOTA Dealer for this service.

EVERY 1 YEAR

■Replacing Air Cleaner Element

[GR2120, GR2120AU]

Change the element once a year.

■Flush Cooling System and Changing Coolant

[GR2120, GR2120AU]

WARNING

To avoid serious injury:

- **Do not remove the radiator cap when the engine is hot. Then loosen cap slightly to the stop to relieve any excess pressure before removing cap completely.**

1. Stop the engine and let cool down.
2. To drain the coolant, remove the radiator drain plug and the engine drain plug, and remove the radiator cap. The radiator cap must be removed to completely drain the coolant.

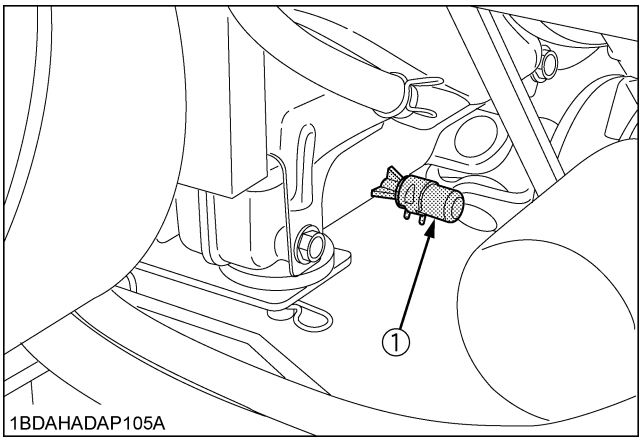

(1) Radiator drain plug

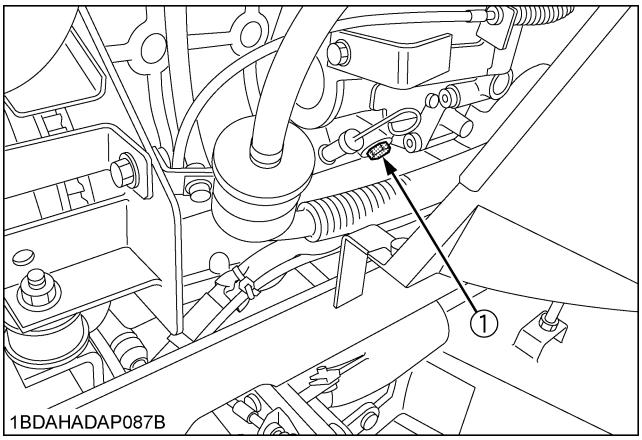

(1) Engine drain plug

3. After all coolant is drained, install the drain plugs.
4. Fill with clean water and cooling system cleaner.
5. Follow directions of the cleaner instruction.
6. After flushing, fill with clean water and anti-freeze until the coolant level is just below the fill port on the radiator.
   Install the radiator cap securely.
7. Fill with coolant up to "FULL" on the recovery tank.
8. Start and operate the engine for a few minutes.
9. Stop the engine and let cool.
10. Check coolant level of recovery tank and add coolant if necessary.

https://truckmanualshub.com/

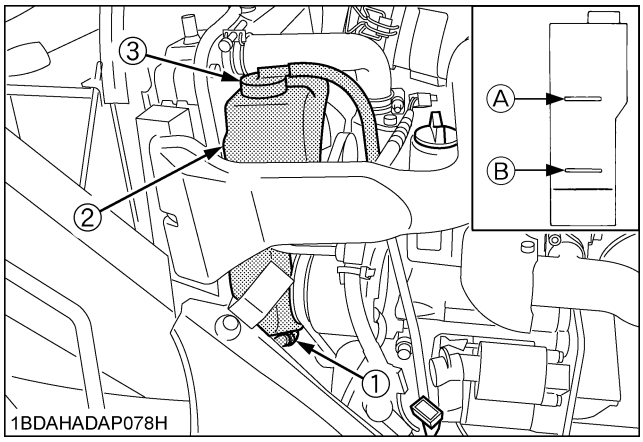

(1) Clamp
(2) Recovery tank
(3) Recovery tank cap
(A) "FULL"
(B) "LOW"

IMPORTANT :
- Do not start engine without coolant.
- Use clean, distilled water and anti-freeze to fill the radiator and recovery tank.
- When the anti-freeze is mixed with water, the anti-freeze mixing ratio must be less than 50%.
- Securely tighten radiator cap. If the cap is loose or improperly fitted, water may leak out and the engine could overheat.

■Anti-freeze

[GR2120, GR2120AU]

WARNING

To avoid serious injury:
- **When using anti-freeze, put on some protection such as rubber gloves. (Anti-freeze contains poison.)**
- **If it is swallowed, seek immediate medical help. Do NOT make a person throw up unless told to do so by poison control or a health care professional. Use standard first aid and CPR for signs of shock or cardiac arrest. Call your local Poison Control Center or your local emergency number for further assistance.**
- **When anti-freeze comes in contact with the skin or clothing, wash it off immediately.**
- **Do not mix different types of Anti-freeze. The mixture can produce chemical reaction causing harmful substances.**
- **Anti-freeze is extremely flammable and explosive under certain conditions. Keep fire and children away from anti-freeze.**
- **When draining fluids from the engine, place some container underneath the engine body.**
- **Do not pour waste onto the ground, down a drain, or into any water source.**
- **Also, observe the relevant environmental protection regulations when disposing of anti-freeze.**

Always use a 50/50 mix of long-life coolant and clean soft water in KUBOTA engines.
Consult your local KUBOTA dealer concerning coolant for extreme conditions.

1. Long-life coolant (hereafter LLC) comes in several types. Use ethylene glycol (EG) type for this engine.
2. Before employing LLC-mixed cooling water, fill the radiator with fresh water and empty it again.
   Repeat this procedure 2 or 3 times to clean up the inside.
3. Mixing the LLC
   Premix 50% LLC with 50% clean soft water. When mixing, stir it up well, and then fill into the radiator.
4. The procedure for the mixing of water and anti-freeze differs according to the make of the anti-freeze and the ambient temperature. Refer to SAE J1034 standard, more specifically also to SAE J814c.

IMPORTANT :
- When mixing the anti-freeze with water, the anti-freeze mixing ratio is 50%.

Vol % Anti-freeze	Freezing Point		Boiling Point*	
	℃	℉	℃	℉
50	-37	-34	108	226

https://truckmanualshub.com/

* At 1.013 x 10^5Pa (760 mmHg) pressure (atmospheric).

A higher boiling point is obtained by using a radiator pressure cap which permits the development of pressure within the cooling system.

5. Adding the LLC
   (1) Add only water if the coolant level reduces in the cooling system by evaporation.
   (2) If there is a mixture leak, add the LLC of the same manufacturer and type in the mixing ratio 50%.

   * Never add any long-life coolant of different manufacturer. (Different brands may have different additive components, and the engine may fail to perform as specified.)

6. When the LLC is mixed, do not employ any radiator cleaning agent. The LLC contains anti-corrosive agent. If mixed with the cleaning agent, sludge may build up, adversely affecting the engine parts.
7. Kubota's genuine long-life coolant has a service life of 2 years. Be sure to change the coolant every 2 years.

NOTE :
- The above data represent industry standards that necessitate a minimum glycol content in the concentrated anti-freeze.

EVERY 2 YEARS

■Replacing Hydraulic Hose

Replace hoses and hose clamps every 2 years or earlier if checked and found that hoses are swollen, hardened or cracked.

■Replacing Fuel Lines and Fuel Vapor Lines

Consult your local KUBOTA Dealer for this service.

■Replacing Engine Breather Hose

[GR2120, GR2120AU]

Consult your local KUBOTA Dealer for this service.

■Replacing Radiator Hose

[GR2120, GR2120AU]

Replace hoses and clamp bands every 2 years or earlier if checked and found that hoses are swollen, hardened or cracked.

■Replacing Mower Gear Box Oil Seal

Consult your local KUBOTA Dealer for this service.

■Replacing Intake Air Line

[GR2120, GR2120AU]

(See "Checking Intake Air Line" in every 200 hours maintenance.)

SERVICE AS REQUIRED

■Replacing Fuses

Replacement of the fuse.
1. Open the hood.
2. Remove the blown fuse.
3. Place a new 3A, 10A, 15A fuse or 40A slow blow fuse in position.

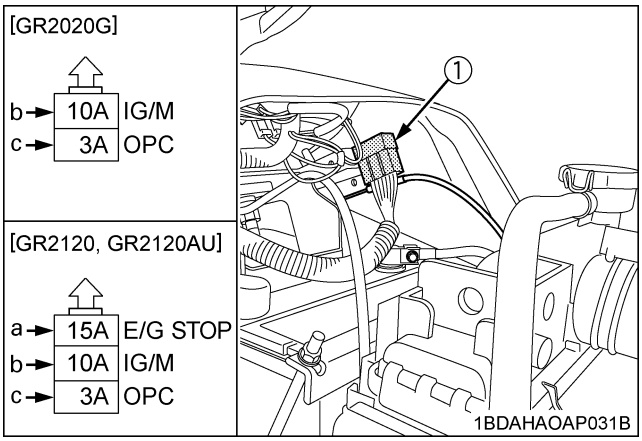

(1) Fuse location

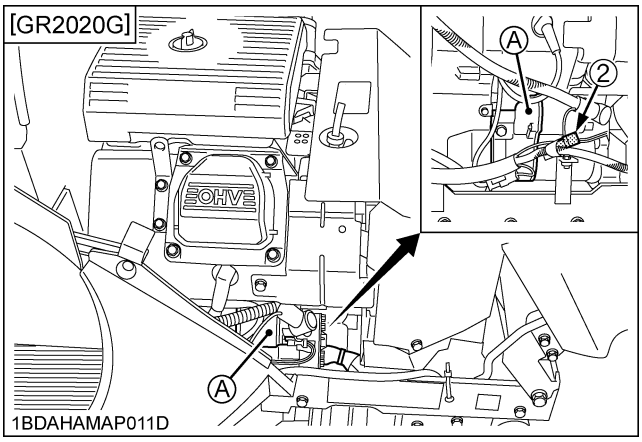

(2) Slow blow fuse *(A) Starter*

https://truckmanualshub.com/

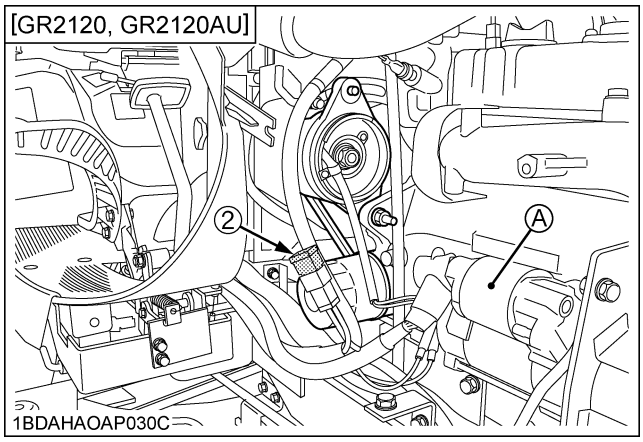

(2) Slow blow fuse *(A) Starter*

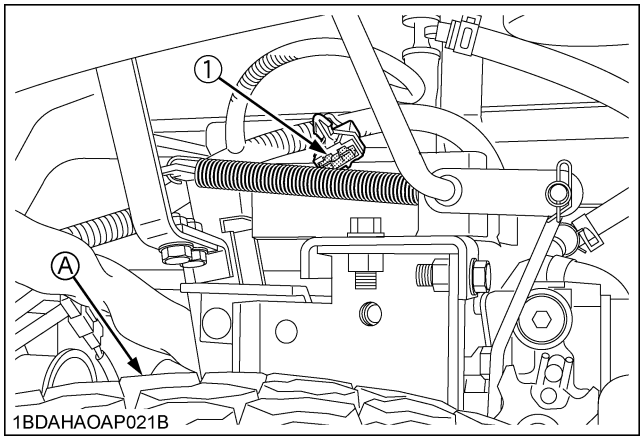

(1) KRA system *(A) Left rear tire*

IMPORTANT :

- If the new fuse happens to blow out within a short time, contact your dealer for inspection and repair. Never "jump" the fuse with wire or foil, or install a larger capacity fuse than is recommended.

a: Stamp or stick label "E/G STOP"
b: Stamp or stick label "IG/M"
c: Stamp or stick label "OPC"

◆ Protected circuit

FUSE NO. (ID LABEL)		CAPACITY (A)	Protected circuit
(1)	E/G STOP	15	Engine stop timer relay
	IG/M	10	Fuel pump, Head light, etc.
	OPC	3	Engine running circuit
(2)	---	Slow blow fuse 40	Check circuit against wrong battery connection
(3)	---	3	KRA system

■Replacing bulbs

(A) Replacement of the headlight bulb

1. Open hood.
2. Turn bulb socket to remove socket from headlight housing.
3. Push bulb down and turn 1/4 turn to remove bulb from the socket.
4. Install new bulb to the socket.
5. Install the socket in housing.
6. Close hood.

Headlight bulb	24W

(B) Replacement of the Indicator light bulb

1. Open hood.
2. Turn bad bulb socket to the left.
   And remove it.
3. Pull bulb from the socket.
4. Push new bulb into the socket.
5. Install the socket.
6. Close hood.

Indicator light bulb	14.0 Rated Voltage/0.27 AMP/2 MSCP

■Checking and Replacing Blade

WARNING

To avoid serious injury:

- **Be sure to stop the engine and remove the key.**
- **Blades may be sharp. When you handle blades, wear heavy gloves or wrap end of blade with a rag.**

◆ Checking

The blade cutting edges should be kept sharp at all times. Sharpen the cutting edges, if they resemble blade (B). Replace the blades if they appear similar to blade (C).

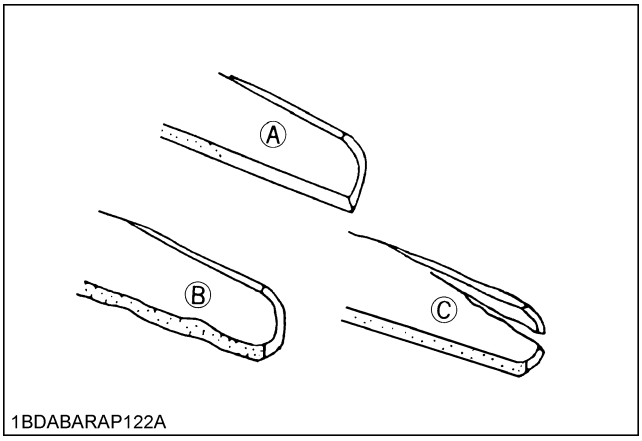

(A) New blade
(B) Worn blade
(C) Cracked blade

https://truckmanualshub.com/

◆ **Replacing**

1. Remove the mower deck from the machine and turn it over to expose the blades.
2. Wedge a block of wood between the blade and mower housing or use a box wrench over the pulley nut to prevent the spindle from rotating while removing the blade bolts; loosen the blade bolt as illustrated.

IMPORTANT :

- Use the proper metric size box or socket wrench to tighten or loosen the blade mounting bolt.

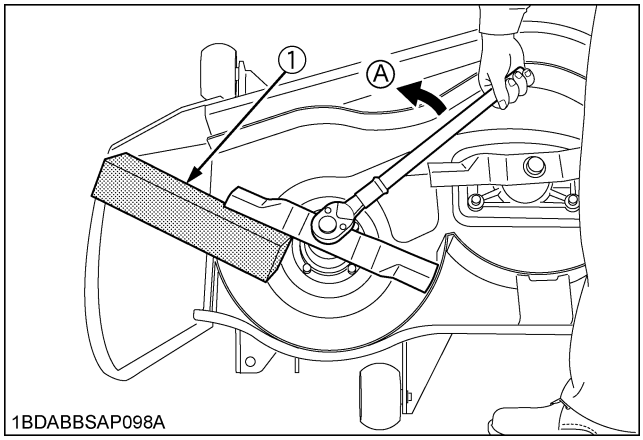

(1) Block *(A) "LOOSEN"*

3. To sharpen the blades yourself, clamp the blade securely in a vise.
   Use a large mill file and file along the original bevel until it becomes sharp.
4. To check the blade for balance, place a small rod through the center hole. If the blade is not balanced, file the heavy side of the blade until balance is achieved.
5. To attach blades, be sure to install the 2 cup washers and lock washer between the blade and the bolt head.

NOTE :

- Make sure that the cup washer is not flattened out or worn; this may cause blade to slip excessively.
  Replace the 2 cup washers if either is damaged.

6. Before checking or replacing the blade, wipe grass and mud off the top and the inside of the mower.
   Especially clean up the inside of the belt cover, because otherwise the belt life will be reduced.

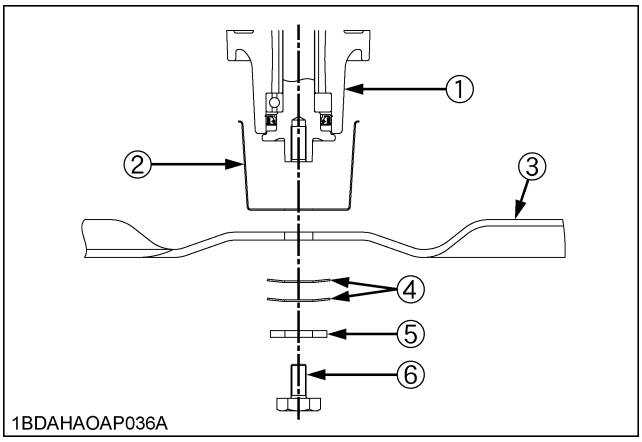

(1) Spindle holder
(2) Cover
(3) Blade
(4) Cup washer
(5) Lock washer
(6) Bolt

IMPORTANT :

- Tighten the bolts of the outer blades from 103 to 118 N-m (76 to 87 lbf-ft, 10.5 to 12.0 kgf-m) of torque.
- To prolong the service life of the blades, rearrange them as shown in the figure below periodically.

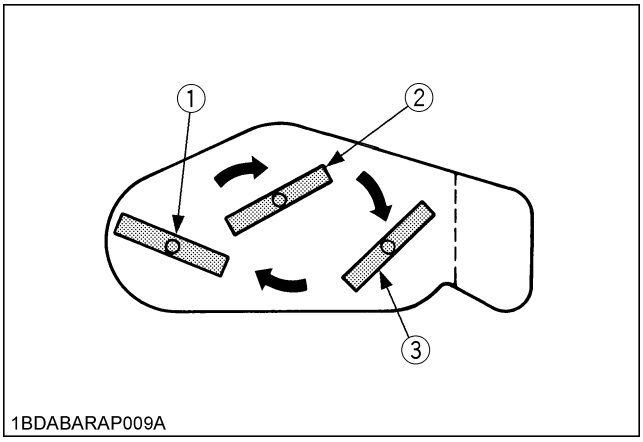

(1) LH blade
(2) Center blade
(3) RH blade

https://truckmanualshub.com/

■Mower Belt Replacement

1. Remove the mower deck from the machine according to the procedure "DISMOUNTING THE MOWER DECK".
2. Remove the left and right hand shield from the mower deck.
3. Clean around the gear box.
4. Remove the belt from the tension pulley.
5. Remove the right hand bracket which mounts the gear box to the mower deck and slip the belt over the top of the gear box.
6. To install a new belt, reverse the above procedure.

NOTE :

Tighten each bolt with following torque.

- Bolts (4) (For aluminum gear case)
  39.2 to 44.1 N-m (28.9 to 32.5 lbf-ft, 4.0 to 4.5 kgf-m)
- Bolts and Nuts (5)
  48.1 to 55.9 N-m (35.5 to 41.2 lbf-ft, 4.9 to 5.7 kgf-m)

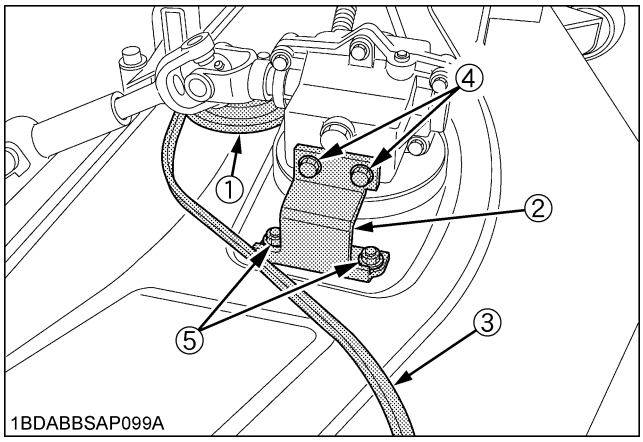

(1) Tension pulley
(2) Bracket (RH)
(3) Belt
(4) Bolt
(5) Bolt and Nut

■Bleeding Fuel System

[GR2120, GR2120AU]

Air must be removed:

1. When the fuel filter or lines are removed.
2. When tank is completely empty.
3. After the machine has not been used for a long period of time.

◆ **Bleeding procedure is as follows:**

1. Fill the fuel tank with fuel.
2. Turn the key switch to the "ON" position and hold it for about 10 seconds.
3. Start the engine and run for about 30 seconds, and then stop the engine.

https://truckmanualshub.com/

ADJUSTMENT

GENERAL TORQUE SPECIFICATION

American standard cap screws with UNC or UNF threads				Metric cap screws			
SAE grade No.		GR.5	GR.8	Property class		Class 8.8	Class 10.9
1/4	(lbf-ft)	8 - 9.6	12 - 14.4	M6	(lbf-ft)	7.2 - 8.3	
	(N-m)	10.7 - 12.9	16.1 - 19.3		(N-m)	9.81 - 11.3	
	(kgf-m)	1.11 - 1.33	1.66 - 1.99		(kgf-m)	1.0 - 1.15	
5/16	(lbf-ft)	17 - 20.5	24 - 29	M8	(lbf-ft)	17.4 - 20.2	21.7 - 25.3
	(N-m)	23.1 - 27.8	32.5 - 39.3		(N-m)	23.6 - 27.4	29.4 - 34.3
	(kgf-m)	2.35 - 2.84	3.31 - 4.01		(kgf-m)	2.4 - 2.8	3.0 - 3.5
3/8	(lbf-ft)	35 - 42	45 - 54	M10	(lbf-ft)	35.5 - 41.2	44.9 - 52.1
	(N-m)	47.5 - 57.0	61.0 - 73.2		(N-m)	48.1 - 55.8	60.8 - 70.5
	(kgf-m)	4.84 - 5.82	6.22 - 7.47		(kgf-m)	4.9 - 5.7	6.2 - 7.2
7/16	(lbf-ft)	56 - 66	75 - 90	M12	(lbf-ft)	57.2 - 66.5	76.0 - 86.8
	(N-m)	75.9 - 89.5	101.7 - 122		(N-m)	77.5 - 90.1	103 - 117
	(kgf-m)	7.74 - 9.12	10.37 - 12.44		(kgf-m)	7.9 - 9.2	10.5 - 12.0
1/2	(lbf-ft)	80 - 96	110 - 132	M14	(lbf-ft)	91.2 - 108	123 - 144
	(N-m)	108.5 - 130.2	149.2 - 179.0		(N-m)	124 - 147	167 - 196
	(kgf-m)	11.07 - 13.29	15.22 - 18.27		(kgf-m)	12.6 - 15.0	17.0 - 20.0
9/16	(lbf-ft)	110 - 132	160 - 192	M16	(lbf-ft)	145 - 166	192 - 224
	(N-m)	149.2 - 179.0	217 - 260.4		(N-m)	196 - 225	260 - 303
	(kgf-m)	15.22 - 18.27	22.14 - 26.57		(kgf-m)	20.0 - 23.0	26.5 - 31.0
5/8	(lbf-ft)	150 - 180	220 - 264				
	(N-m)	203.4 - 244.1	298.3 - 358.0				
	(kgf-m)	20.75 - 24.91	30.44 - 36.53				

https://truckmanualshub.com/

TIGHTENING TORQUE CHART

Thread size d (mm)	Hexa-Bolt Head size B (mm)	No mark			7T		
		lbf-ft	N-m	kgf-m	lbf-ft	N-m	kgf-m
M8	12 or 13	**13.0 - 15.2** (14.1 ± 1.1)	**17.8 - 20.6** (19.2 ± 1.4)	**1.9 - 2.1** (2.0 ± 0.1)	**17.5 - 20.3** (18.9 ± 1.4)	**23.5 - 27.5** (25.5 ± 2.0)	**2.4 - 2.8** (2.6 ± 0.2)
M10	14 or 17	**28.9 - 33.3** (31.1 ± 2.2)	**39.3 - 45.1** (42.2 ± 2.9)	**4.0 - 4.6** (4.3 ± 0.3)	**35.4 - 41.2** (38.3 ± 2.9)	**48.1 - 55.9** (52.0 ± 3.9)	**4.9 - 5.7** (5.3 ± 0.4)
M12	17 or 19	**46.3 - 53.5** (49.9 ± 3.6)	**62.8 - 72.6** (67.7 ± 4.9)	**6.4 - 7.4** (6.9 ± 0.5)	**57.1 - 66.5** (61.8 ± 4.7)	**77.6 - 90.2** (83.9 ± 6.3)	**8.0 - 9.2** (8.6 ± 0.6)
M14	19 or 22	**79.6 - 92.6** (86.1 ± 6.5)	**107.9 - 125.5** (116.7 ± 8.8)	**11.0 - 12.8** (11.9 ± 0.9)	**91.1 - 108.5** (99.8 ± 8.7)	**123.6 - 147.0** (135.3 ± 11.7)	**12.6 - 15.0** (13.8 ± 1.2)

NOTE :
- Figure "7" on the top of the bolt indicates that the bolt is of special material.
- Before tightening, check the figure on the top of bolt.

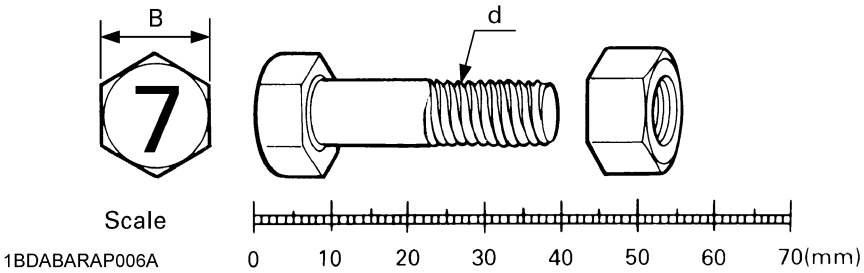

https://truckmanualshub.com/

STORAGE

WARNING

To avoid serious injury:

- **To reduce fire hazards, allow the engine and exhaust system to cool before storing the machine in an enclosed space or near combustible materials.**
- **To avoid the danger of exhaust fume poisoning, do not operate the engine in a closed building without proper ventilation.**
- **Do not clean the machine with engine running.**
- **To avoid fire hazards, Do not leave grass and leaves in the mower and the grass catcher.**
- **When storing, remove the key from the key switch to avoid operation by unauthorized persons.**

When the machine will not be operated for over 2 months, clean the machine and perform the following operations before storage.

1. Repair parts as necessary.
2. Check bolts and nuts and tighten as necessary.
3. Apply grease or engine oil to parts most likely to rust.
4. Inflate the tires to a little above the standard pressure levels. (Approximately 110%)
5. Lower the mower to the ground.
6. Remove the battery from the machine, recharge it, adjust the electrolyte to the proper level, and store in a cool dry place.
   The battery discharges over time even while in storage. Recharge it once a month in hot seasons and once every 2 months in cold seasons.
7. Drain fuel tank, fuel lines.
8. Store the machine where it is dry and sheltered from rain. Cover the machine with a tarpaulin.
9. Moisture content in most grasses can damage the mower and grass catcher if these components are not properly cleaned after use.
   Make sure the mower and the grass catcher are clean and completely empty before storage.
10. Jack the machine up and place blocks under the front and rear axles so that all 4 tires are off the ground.
    Keep the tires out of direct sunlight and extreme heat.

[GR2020G]

11. The fuel system must be completely emptied, or the gasoline must be treated with a stabilizer to prevent deterioration. If you choose to use a stabilizer, follow the manufacturer's recommendations, and add the correct amount for the capacity of the fuel system. Fill the fuel tank with clean, fresh gasoline. Run the engine for 2-3 minutes to get stabilized fuel into the rest of the system. Close the fuel shut-off valve when the unit is being stored.
    To empty the system, run the engine until the tank and the system are empty.
12. Remove the spark plugs. Add 1 tablespoon of engine oil into each spark plug hole. Install the plugs, but do not connect the plug leads. Crank the engine 2 or 3 revolutions.

IMPORTANT :

- When washing the machine, be sure to stop the engine. Allow sufficient time for the engine to cool before washing.
- Cover the machine after the muffler and the engine have cooled down.

REMOVING THE MOWER FROM STORAGE

1. Check the tire inflation pressure and adjust as required.
2. Install the battery. Before installing the battery, be sure it is fully charged.
3. Do daily checking. (See "DAILY CHECK" in "PERIODIC SERVICE" section.)
4. Check all fluid levels. (engine oil, hydrostatic oil)
5. Start the engine. Shut the engine off and walk around the machine and make a visual inspection looking for evidence of oil or other fluids.
6. Run engine a couple of minutes before you put engine under load.
7. With the engine fully warmed up, release the parking brake and test the brakes for proper adjustment as you move forward. Adjust the brakes as necessary.

https://truckmanualshub.com/

TROUBLESHOOTING

ENGINE TROUBLESHOOTING

If the engine is not performing correctly, refer to the table below for the cause.

If	Probable cause
Engine is difficult to start.	● Fuel tank or fuel filter is clogged by dirt.
	● Air or water in the fuel system.
	● In winter, oil viscosity increases, and engine cranks slowly.
	● Battery is discharged.
Insufficient engine power.	● Air cleaner element is clogged. ● Insufficient fuel flow or quality.
Engine stops suddenly.	● Insufficient fuel.
Exhaust fumes are colored.	● Fuel quality is poor.
Black smoke is emitted from the muffler during operation; power output is lowered.	● Air cleaner element clogged.
Bluish white smoke is emitted from the muffler during operation.	● Too much engine oil.
Engine will not idle.	● Fuel filter is clogged.
Engine overheats.	● **[For GR2120, GR2120AU]** Low coolant level.
	● **[For GR2120, GR2120AU]** Loose or defective fan belt.
	● **[For GR2120, GR2120AU]** Coolant flow route corroded.
	● **[For GR2020G]** Cooling fan trouble.

If you have any questions, contact your local KUBOTA Dealer.

BATTERY TROUBLESHOOTING

If	Probable cause
Starter does not function.	● Battery discharged.
	● Poor terminal connection.
	● Battery life expired.
When viewed from top, the top of plates looks whitish.	● Electrolyte level is low.
	● Battery was used too much without recharging.
Recharging is impossible.	● Battery life expired.
Terminals are severely corroded and heat up.	● Poor terminal connection or stained terminal.
Battery electrolyte level drops rapidly.	● There is a crack or pin holes in the electrolytic cells.
	● Charging system trouble.

If you have any questions, contact your local KUBOTA Dealer.

https://truckmanualshub.com/

MACHINE TROUBLESHOOTING

If	Probable cause
Machine operation is not smooth.	● Hydrostatic transmission oil is low.
Machine does not move while engine is running.	● Parking brake is on. ● Transmission oil is insufficient.
Machine moves when speed control pedal is not depressed. (Engine is operated.)	● Hydrostatic neutral system is not correctly adjusted.
Larger turn radius or turf damage by inside rear axle issue.	● Glide steer system is not correctly adjusted.

If you have any questions, contact your local KUBOTA Dealer.

https://truckmanualshub.com/

MOWER TROUBLESHOOTING

If	Probable cause
Discharge chute plugged.	● Grass too wet. ● Grass too long. ● Cutting too low. ● Engine rpm too low. ● Ground speed too fast. ● Restricted airflow.
Streaking of uncut grass.	● Ground speed too fast. ● Engine rpm too low. ● Grass too long. ● Blades dull or damaged. ● Debris in mower deck.
Uneven cut.	● Mower deck not level. ● Ground speed too fast. ● Blades dull. ● Blades worn. ● Tire inflation. ● Mower rollers not adjusted correctly.
Blades scalping grass.	● Cutting height too low. ● Blades speed too fast. ● Ridges in terrain. ● Rough or uneven terrain. ● Bent blade(s). ● Low tire inflation. ● Anti-scalp rollers not adjusted correctly.
Belt slipping.	● Belt tension incorrect. ● Mower deck plugged. ● Debris in pulleys. ● Worn belt.
Excessive vibration.	● Debris on mower deck or in pulleys. ● Damaged mower belt. ● Damaged pulleys. ● Pulleys out of alignment. ● Blades out of balance.
Mower loads down machine.	● Engine rpm too low. ● Ground speed too fast. ● Debris wrapped around mower spindles.
Grass tips are jagged and turn grayish brown.	● Blades dull. ● Blades worn. ● Mower deck is not level.

If you have any questions, contact your local KUBOTA Dealer.

https://truckmanualshub.com/

INDEX

Air Cleaner Element 51
Air Cleaner Element 71
Air Cleaner Paper Element..... 58
Amount of Fuel and Refueling..... 43
Anti-freeze 72
Battery Condition..... 57
Blade 74
Block Heater (Option)..... 14
Brake 61
bulbs..... 74
Carbon Canister Air Filter..... 52
Cold Weather Starting 14
Coolant Level 46
Cruise Control Device 20
Cutting Height Control Dial..... 25
Directions for Use of Power Steering 23
Easy Checker (TM) 21
Engine Break-in..... 17
Engine Breather Hose 73
Engine Oil..... 64
Engine Oil Filter Cartridge 63
Engine Oil Level 42
Engine Overheating Precautions..... 21
Engine Shroud..... 68
Engine Shroud Panel 59
Engine Start System..... 49
Engine Stop (By manual) 15
Fan Drive Belt Tension..... 61
Flush Cooling System and Changing
Coolant..... 71
Front Axle Case Oil 70
Front Axle Pivot..... 68
Fuel Filter 69
Fuel Filter 71
Fuel Gauge..... 22
Fuel Injection Nozzle (Injection Pressure)..... 71
Fuel Lines and Fuel Vapor Lines..... 73
Fuel Lines, Fuel Vapor Lines and Fuel Filter.. 59
Fuel System 76
Fuses..... 73
Gear Box Oil..... 62
Gear Box Oil Level 53
Glide Steer 24
Greasing..... 53
Head Light Switch 18
Hourmeter 22
Hydraulic Hose 66
Hydraulic Hose 73
Hydraulic Lift Lever 19
Immediately Stop the Engine if: 21
Inflation Pressure..... 31
Injection Pump 71
Intake Air Line..... 68
Intake Air Line..... 73
Key Switch 12
KRA system Normal Operating Mode..... 27
KRA system Override Mode 28
Lubricating All Grease Fittings..... 47
Lubricating Oil for New Machines 17
Machine Break-in..... 17
Mounting the Mower Deck 7
Movable Parts..... 48
Mower Belt Replacement 76
Mower Gear Box Oil Seal 73
Oiling 54
OPC System 50
Operator's Seat..... 18
Parking 23
Parking Brake 19
Precleaner and Air Cleaner Paper Element .. 48
PTO Control System..... 50
PTO Lever 28
Radiator and Screen to Prevent
Overheating 44
Radiator Hose..... 73
Radiator Hose and Clamp 66
Spark Plug Condition & Gap..... 68
Speed Control Pedal 20
Stopping 21
Throttle Lever 19
Throttle Lever and Choke Lever 13
Tire Pressure 45
Transmission Fluid 69
Transmission Fluid Level 46
Transmission Oil Filter Cartridge 65
Transmission Strainer..... 70
Warm-up and Transmission Oil in the Low
Temperature Range 15