https://truckmanualshub.com/

MODEL 325C/326C/327C/329C DETACHABLE TRAILER OPERATOR'S MANUAL

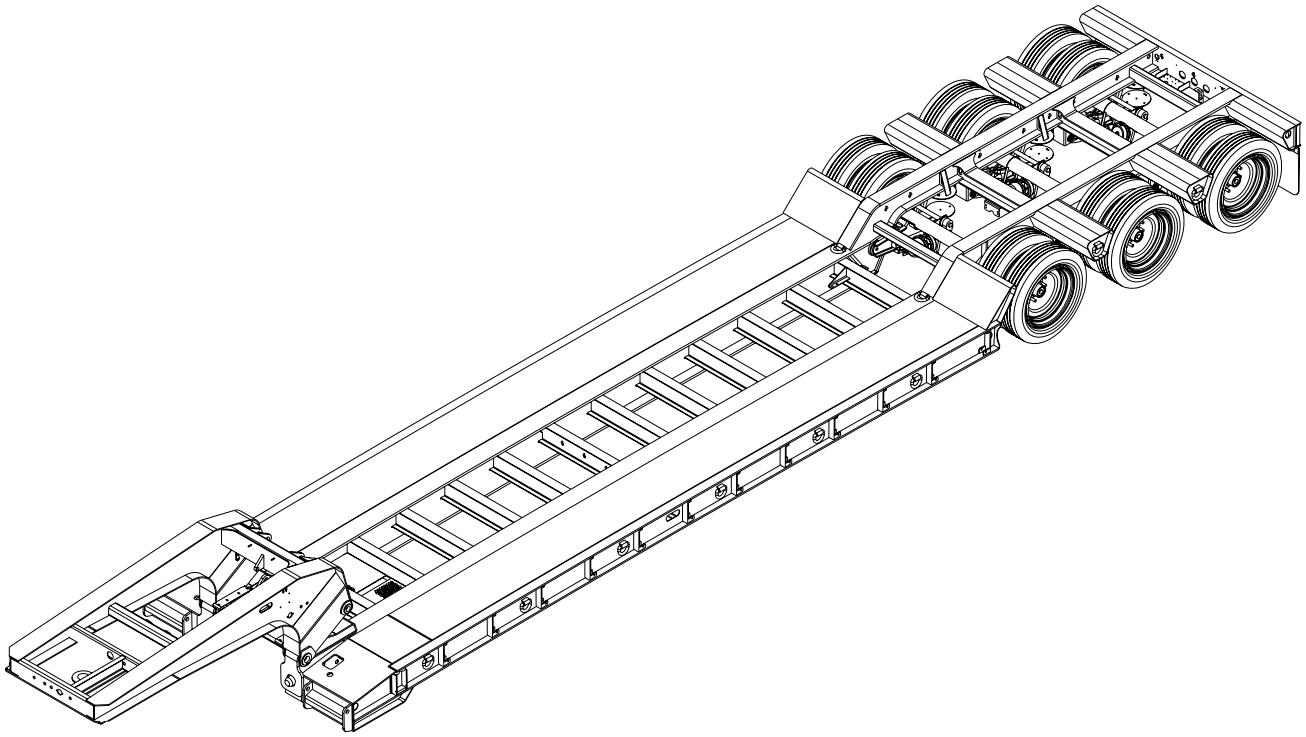

1900 North Street
Marysville, KS 66508
(785)562-5381

F-490-1107 11/07

https://truckmanualshub.com/

https://truckmanualshub.com/

MODEL 325C/326C/327C/329C DETACHABLE TRAILER OPERATOR'S MANUAL

PURCHASED FROM: _____ **DATE** ____ / ____ / ____

ADDRESS: _____

_____

_____

PHONE NO.: _____ **SERIAL NO.:** _____

https://truckmanualshub.com/

REPORTING SAFETY DEFECTS

If you believe that your vehicle has a defect which could cause a crash or could cause injury or death, you should immediately inform the National Highway Traffic Safety Administration (NHTSA) in addition to notifying Landoll Manufacturing.

If NHTSA receives similar complaints, it may open an investigation, and if it finds that a safety defect exists in a group of vehicles, it may order a recall and remedy campaign. However, NHTSA cannot become involved in individual problems between you, your dealer, or Landoll Manufacturing.

To contact NHTSA, you may either call the Auto Safety Hotline toll-free at 1-800-424-9393 (or 366-0123 in Washington, D.C. area) or write to: NHTSA, U.S. Department of Transportation, Washington, D.C. 20590. You can also obtain other information about motor vehicle safety from the Hotline.

In the event of a defect or problem with your LANDOLL equipment, please notify LANDOLL CORPORATION:

LANDOLL CORPORATION
SALES AND SERVICE
1900 NORTH STREET
MARYSVILLE, KANSAS 66508

OR PHONE:
1-800-HAULOLL
(1-800-428-5655)
FAX NO.: (785)562-3240
FOR REPLACEMENT PARTS:
(785)562-4650
1-800-423-4320
FAX NO.: (785) 562-4654

https://truckmanualshub.com/

TABLE OF CONTENTS

SECTION	DESCRIPTION	PAGE NO.
1	INTRODUCTION	
2	STANDARD SPECIFICATIONS	
3	OPERATING INSTRUCTIONS	
3-1	GENERAL	3-1
3-2	PRE-COUPLING OF SEMITRAILER AND TRACTOR	3-3
3-3	COUPLING OF THE TRACTOR TO THE SEMITRAILER	3-4
3-4	CONNECTING TRACTOR SERVICES TO THE SEMITRAILER	3-4
3-5	TRACTOR AND SEMITRAILER CHECK-OUT	3-5
3-6	TOWING THE SEMITRAILER	3-7
3-7	PARKING THE TRAILER	3-8
3-8	UNCOUPLING TOWING VEHICLE FROM SEMITRAILER	3-8
3-9	GOOSENECK LIFTARM LEVER	3-8
3-10	LOAD BLOCKS TRIP LEVER	3-9
3-11	TRAILER LIFT LEVER	3-9
3-12	GOOSENECK LOCK HANDLE	3-9
3-13	AIR HEIGHT CONTROL VALVE (OPTION)	3-9
3-14	HAND VALVE (OPTION)	3-10
3-15	PRESSURE GAUGE	3-10
3-16	AUTOMATIC HEIGHT VALVES (325)	3-11
3-17	AXLE LIFT CONTROL VALVE (OPTION)	3-12
3-18	HYDRAULIC POWER SUPPLY ENGINE THROTTLE (OPTION)	3-12
3-19	HYDRAULIC POWER SUPPLY ENGINE KEY SWITCH	3-12
3-20	SWINGOUT OUTRIGGER PLATFORM EXTENSION SET-UP	3-13
3-21	PREPARATION FOR LOADING AND UNLOADING	3-14
3-22	LOADING THE SEMITRAILER	3-15
3-23	SECURING THE LOAD	3-15
3-24	PREPARATION FOR TRANSPORT	3-17
3-25	UNLOADING THE SEMITRAILER	3-17
3-26	AIR RIDE OPERATION	3-19
3-27	DETACHABLE TRUNNION (MODEL 325)	3-19
3-28	TRAILER AXLE LIFT (MODEL 325)	3-20
3-29	13 FOOT GOOSENECK KINGPIN ADJUSTMENT (MODEL 329 ONLY)	3-20
3-30	HYDRAULIC POWER SUPPLY ENGINE SYSTEM	3-21
3-31	ANTI-LOCK BRAKE SYSTEM (ABS)	3-22
3-32	COLD WEATHER OPERATION	3-23
3-33	HOT WEATHER OPERATION	3-23
4	MAINTENANCE AND LUBRICATION	
4-1	MAINTENANCE SCHEDULE	4-1
4-2	MAINTENANCE PROCEDURES	4-4
4-3	GOOSENECK, FRAME, AND DECK	4-6
4-4	HYDRAULIC SYSTEM	4-6
4-5	ELECTRICAL SYSTEM	4-7
4-6	FIFTH WHEEL	4-7
4-7	SUSPENSION MAINTENANCE	4-14
4-8	ALIGNMENT	4-17
4-9	BRAKE SYSTEM MAINTENANCE	4-20
4-10	HUB AND DRUM MAINTENANCE	4-26
4-11	WHEEL BEARING LUBRICATION AND ADJUSTMENT	4-28
4-12	TIRE MAINTENANCE	4-29
4-13	HYDRAULIC ENGINE PACKAGE (OPTION)	4-31
5	TROUBLESHOOTING	

https://truckmanualshub.com/

SAFETY PRECAUTIONS

THIS IS THE SAFETY ALERT SYMBOL. IT IS USED TO ALERT YOU TO POTENTIAL INJURY HAZARDS. OBEY ALL SAFETY MESSAGES THAT FOLLOW THIS SYMBOL TO AVOID POSSIBLE INJURY OR DEATH.

⚠DANGER — **DANGER INDICATES AN IMMINENTLY HAZARDOUS SITUATION WHICH, IF NOT AVOIDED, WILL RESULT IN DEATH OR SERIOUS INJURY.**

⚠WARNING — **WARNING INDICATES A POTENTIALLY HAZARDOUS SITUATION WHICH, IF NOT AVOIDED, COULD RESULT IN DEATH OR SERIOUS INJURY.**

⚠CAUTION — **CAUTION INDICATES A POTENTIALLY HAZARDOUS SITUATION WHICH, IF NOT AVOIDED, MAY RESULT IN MINOR OR MODERATE INJURY.**

CAUTION — **<u>CAUTION USED WITHOUT THE SAFETY ALERT SYMBOL</u> INDICATES A POTENTIALLY HAZARDOUS SITUATION WHICH, IF NOT AVOIDED, MAY RESULT IN PROPERTY DAMAGE.**

https://truckmanualshub.com/

INTRODUCTION 1

This manual provides operating, servicing, and maintenance instructions for Model 325C/326C/327C/329C detachable trailer, manufactured by Landoll Corporation, Marysville, Kansas 66508.

SECTION 1 **gives basic instructions on the use of this manual.**

SECTION 2 **gives specifications for the trailer, including measurements and component specifications. A Standard Bolt Torque Table is provided to give guidelines for bolt torques to be used when servicing this product.**

SECTION 3 **gives instructions for the proper operation of the equipment.**

SECTION 4 **gives general maintenance procedures, a maintenance schedule, and a lubrication schedule. Improper maintenance will void your warranty.**

IF YOU HAVE ANY QUESTIONS CONTACT:

LANDOLL CORPORATION
1900 NORTH STREET
MARYSVILLE, KANSAS 66508
or phone:
(785) 562-5381 or
(800) 428-5655
or FAX:
(785) 562-4893

SECTION 5 **is a troubleshooting guide to aid in diagnosing and solving problems with the trailer.**

PARTS LIST **is a separate manual showing the various assemblies, subassemblies, and systems. Refer to that manual when ordering Landoll replacement parts. Order parts from your Landoll dealer.**

WARRANTY **The Warranty Registration form is located with the product documents. Fill it out and mail it within 15 days of purchase. The Warranty is printed inside the front cover.**

NOTE: IMPROPER ASSEMBLY, MODIFICATION, OR MAINTENANCE OF YOUR LANDOLL EQUIPMENT CAN VOID YOUR WARRANTY.

COMMENTS **Address comments or questions regarding this publication to:**

LANDOLL CORPORATION
1900 NORTH STREET
MARYSVILLE, KANSAS 66508
ATTENTION: PUBLICATIONS - DEPT. 55

https://truckmanualshub.com/

https://truckmanualshub.com/

STANDARD SPECIFICATIONS 2

CAPACITY*:

MODEL 325C: . . . . . 100,000 LB. DISTRIBUTED
DECK RATING . . . . . 100,000 LB. CONCENTRATED IN 10’
MODEL 326C: . . . . . 70,000 LB. DISTRIBUTED
DECK RATING . . . . . 70,000 LB. CONCENTRATED IN 16’
MODEL 327C: . . . . . 100,000 LB. DISTRIBUTED
DECK RATING . . . . . 100,000 LB. CONCENTRATED IN 16’
MODEL 329C: . . . . . 120,000 LB. DISTRIBUTED
DECK RATING . . . . . 120,000 LB. CONCENTRATED IN 10’

PULL OUT EXTENSION MAXIMUM CAPACITY IS ONE HALF FRAME CAPACITY LISTED ABOVE.

GOOSENECK HYDRAULIC TILT

MODELS 325C, 326C, 327C (STD) . . . . . 10' 7"
MODEL 329C (STD); 325C, 327C (OPTION) . . . . . 13'-0"

KING PIN SETTING

MODELS 325C, 326C, 327C, 329C (STD) . . . . . 15"
MODELS 325C, 327C, 329C (OPTION);. . . . . 42"

LOADED GROUND CLEARANCE:. . . . . 8"

LOADED DECK HEIGHT:. . . . . 24"

HYDRAULIC HOOKUP:

QUICK COUPLERS . . . . . FLAT FACE 3/4" BODY SIZE
MAXIMUM OPERATING PRESSURE** . . . . . 2500 PSI
OPERATING FLOW**. . . . . 17 GPM

ELECTRICAL HOOKUP: . . . . . 7-WAY CONNECTOR

AIR HOOK UP:. . . . . COLOR CODED GLAD HANDS

SPECIFIC BOLT TORQUES

AIR RIDE SUSPENSION:

EQUALIZER BEAM PIVOT AND ADAPTER BOLTS
DESIGNATED W/ NEWAY ON BOLT HEAD . . . . . 800 FT.-LBS.
DESIGNATED W/ HOLLAND NEWAY ON BOLT HEAD . . . . . 550 FT.-LBS.
SHOCK ABSORBER MOUNTING. . . . . 150 FT.-LBS.
AIR SPRING MOUNTING: 1/2". . . . . 35 FT.-LBS.
3/4" . . . . . 35 FT.-LBS.

WHEEL FASTENERS - ALL MODELS:

OUTER SPINDLE NUTS . . . . . 250-400 FT.-LBS.
PILOT WHEEL NUTS . . . . . 450-500 FT.-LBS.

* CAPACITY RATINGS ARE FRAME CAPACITIES ONLY. ACTUAL LOAD CAPACITIES MAY BE RESTRICTED BY FACTORS SUCH AS GROSS AXLE WEIGHT RATINGS (GAWR) OR STATE AND FEDERAL REGULATIONS.

** TRACTOR HYDRAULIC POWER SUPPLY MUST BE CAPABLE OF OPERATING AT THIS PRESSURE AND FLOW RATE AND BE EQUIPPED WITH A PRESSURE RELIEF VALVE SET AT THIS PRESSURE.

https://truckmanualshub.com/

LANDOLL CORPORATION
GENERAL TORQUE SPECIFICATIONS (REV. 4/97)

THIS CHART PROVIDES TIGHTENING TORQUES FOR GENERAL PURPOSE APPLICATIONS WHEN SPECIAL TORQUES ARE NOT SPECIFIED ON PROCESS OR DRAWING.
ASSEMBLY TORQUES APPLY TO PLATED NUTS AND CAPSCREWS ASSEMBLED WITHOUT SUPPLEMENTAL LUBRICATION (AS RECEIVED CONDITION). THEY DO NOT APPLY IF SPECIAL GRAPHITE MOLY-DISULFIDE OR OTHER EXTREME PRESSURE LUBRICANTS ARE USED.
WHEN FASTENERS ARE DRY (SOLVENT CLEANED), ADD 33% TO AS RECEIVED CONDITION TORQUE.
BOLT HEAD IDENTIFICATION MARKS INDICATE GRADE AND MAY VARY FROM MANUFACTURER TO MANUFACTURER.
THICK NUTS MUST BE USED ON GRADE 8 CAPSCREWS.
USE VALUE IN [ ] IF USING PREVAILING TORQUE NUTS.

TORQUE IS SPECIFIED IN FOOT POUNDS

UNC Size	SAE Grade 2		SAE Grade 5		SAE Grade 8		UNF Size	SAE Grade 2		SAE Grade 5		SAE Grade 8	
1/4-20	4	[5]	6	[7]	9	[11]	1/4-28	5	[6]	7	[9]	10	[12]
5/16-18	8	[10]	13	[16]	18	[22]	5/16-24	9	[11]	14	[17]	20	[25]
3/8-16	15	[19]	23	[29]	35	[43]	3/8-24	17	[21]	25	[31]	35	[44]
7/16-14	24	[30]	35	[43]	55	[62]	7/16-20	27	[34]	40	[50]	60	[75]
1/2-13	35	[43]	55	[62]	80	[100]	1/2-20	40	[50]	65	[81]	90	[112]
9/16-12	55	[62]	80	[100]	110	[137]	9/16-18	60	[75]	90	[112]	130	[162]
5/8-11	75	[94]	110	[137]	170	[212]	5/8-18	85	[106]	130	[162]	180	[225]
3/4-10	130	[162]	200	[250]	280	[350]	3/4-16	150	[188]	220	[275]	320	[400]
7/8-9	125	[156]	320	[400]	460	[575]	7/8-14	140	[175]	360	[450]	500	[625]
1-8	190	[237]	408	[506]	680	[850]	1-14	210	[263]	540	[675]	760	[950]
1-1/8-7	270	[337]	600	[750]	960	[1200]	1-1/8-12	300	[375]	660	[825]	1080	[1350]
1-1/4-7	380	[475]	840	[1050]	1426	[1782]	1-1/4-12	420	[525]	920	[1150]	1500	[1875]
1-3/8-6	490	[612]	110	[1375]	1780	[2225]	1-3/8-12	560	[700]	1260	[1575]	2010	[2512]
1/1-2-6	650	[812]	1460	[1825]	2360	[2950]	1/1-2-12	730	[912]	1640	[2050]	2660	[3325]

METRIC

COARSE THREAD METRIC CLASS 10.9 FASTENERS AND CLASS 10.0 NUTS AND THROUGH HARDENED FLAT WASHERS, PHOSPHATE COATED, ROCKWELL “C” 38-45.
USE VALUE IN [ ] IF USING PREVAILING TORQUE NUTS.

Nominal Thread Diameter mm	Standard Torque				Nominal Thread Diameter mm	Standard Torque			
	Newton-Meters		Foot-Pounds			Newton-Meters		Foot-Pounds	
6	10	[14]	7	[10]	20	385	[450]	290	[335]
7	16	[22]	12	[16]	24	670	[775]	500	[625]
8	23	[32]	17	[24]	27	980	[1105]	730	[825]
10	46	[60]	34	[47]	30	1330	[1470]	990	[1090]
12	80	[101]	60	[75]	33	1790	[1950]	1340	[1450]
14	125	[155]	90	[115]	36	2325	[2515]	1730	[1870]
16	200	[240]	150	[180]	39	3010	[3210]	2240	[2380]
18	275	[330]	205	[245]					

Table 2-1 General Torque Specifications

https://truckmanualshub.com/

LANDOLL CORPORATION
HYDRAULIC FITTING TORQUE SPECIFICATIONS
37° JIC, ORS, & ORB (REV. 10/97)

THIS CHART PROVIDES TIGHTENING TORQUES FOR HYDRAULIC FITTING APPLICATIONS WHEN SPECIAL TORQUES ARE NOT SPECIFIED ON PROCESS OR DRAWING.
ASSEMBLY TORQUES APPLY TO PLATED CARBON STEEL AND STAINLESS STEEL FITTINGS ASSEMBLED WITHOUT SUPPLEMENTAL LUBRICATION (AS RECEIVED CONDITION). THEY DO NOT APPLY IF SPECIAL GRAPHITE MOLY-DISULFIDE OR OTHER EXTREME PRESSURE LUBRICANTS ARE USED.
BRASS FITTINGS AND ADAPTERS - 65% OF THE TORQUE VALUE FOR STEEL. STAINLESS STEEL, ALUMINUM AND MONEL - THREADS ARE TO BE LUBRICATED.
TORQUE IS SPECIFIED IN FOOT POUNDS

PARKER BRAND FITTINGS

Dash Size	37 Degree JIC	O-Ring (ORS)	O-Ring Boss (ORB)
-4	11-13	15-17	13-15
-5	14-16	—	21-23
-6	20-22	34-36	25-29
-8	43-47	58-62	40-44
-10	55-65	100-110	57.5-62.5
-12	80-90	134-146	75-85
-16	115-125	202-218	109-121
-20	160-180	248-272	213-237
-24	185-215	303-327	238-262
-32	250-290	—	310-340

LANDOLL CORPORATION
HYDRAULIC FITTING TORQUE SPECIFICATIONS
37° JIC, ORS & ORB (REV. 10/97)

THIS CHART PROVIDES TIGHTENING TORQUES FOR HYDRAULIC FITTING APPLICATIONS WHEN SPECIAL TORQUES ARE NOT SPECIFIED ON PROCESS OR DRAWING.
ASSEMBLY TORQUES APPLY TO PLATED CARBON STEEL AND STAINLESS STEEL FITTINGS ASSEMBLED WITHOUT SUPPLEMENTAL LUBRICATION (AS RECEIVED CONDITION). THEY DO NOT APPLY IF SPECIAL GRAPHITE MOLY-DISULFIDE OR OTHER EXTREME PRESSURE LUBRICANTS ARE USED.
BRASS FITTINGS AND ADAPTERS - 65% OF THE TORQUE VALUE FOR STEEL.
TORQUE IS SPECIFIED IN FOOT POUNDS.

AEROQUIP BRAND FITTINGS

Dash Size	37 Degree JIC	O-Ring (ORS)	O-Ring Boss (ORB)
-4	11-12	10-12	14-16
-5	15-16	—	18-20
-6	18-20	18-20	24-26
-8	38-42	32-35	50-60
-10	57-62	46-50	72-80
-12	79-87	65-70	125-135
-14	—	—	160-180
-16	108-113	92-100	200-220
-20	127-133	125-140	210-280
-24	158-167	150-165	270-360

Table 2-2 Hydraulic Fitting Torque Specifications

https://truckmanualshub.com/

https://truckmanualshub.com/

OPERATING INSTRUCTIONS 3

3-1 GENERAL

This section supplies information for operation of the semitrailer. It describes and locates controls and gives general operation procedures. Read all instructions, warnings, cautions, and danger notes before attempting to operate the semitrailer. Operators must have proper training before operating the semitrailer. **(See Figure 3-1 for location of semitrailer parts.)**

⚠ WARNING

DO NOT OPERATE THE SEMITRAILER WITH ANY KNOWN FAULT THAT MIGHT ENDANGER THE OCCUPANTS, NEARBY WORKERS, OTHER TRAFFIC, THE LOAD, OR THE EQUIPMENT.

⚠ WARNING

DO NOT OPERATE THE SEMITRAILER UNTIL YOU HAVE READ THE OPERATOR'S MANUAL AND COMPLETELY UNDERSTAND THE PROPER USE AND FUNCTION OF ALL CONTROLS. IMPROPER USE CAN CAUSE PERSONAL INJURY, DAMAGE TO YOUR SEMITRAILER AND CARGO, AND CAUSE TIME-CONSUMING BREAKDOWNS.

3-1.1 Parking Brake

The parking brakes are automatically applied by spring pressure with the air actuators of the braking system when air pressure in the emergency line drops below 50 psi. This may be done within the truck using the trailer parking/emergency valve or by disconnecting the emergency gladhands.

3-1.2 Air Brake System

The air brake system of the semitrailer is operated from the towing vehicle after coupling. The towing vehicle's air system must be coupled to the semitrailer and charged to 90 psi minimum before the brakes can adequately function.

3-1.3 Anti-Lock Brake System (ABS)

The Anti-Lock Brake System of the semitrailer is constant powered by the auxiliary (blue) circuit of the seven way electrical connector, with backup power from the stop lamp (red) circuit, and ground through the white wire. It is necessary that the blue circuit is hot when the tractor key switch is on. The blue circuit on the trailer may not be used to power any additional auxiliary devices while the semitrailer is moving forward. If a fault exists in the ABS, normal braking will occur, but the wheels may lock. Service the ABS as soon as possible.

⚠ CAUTION

THE AUXILIARY (BLUE) CIRCUIT IS FOR POWERING THE SEMITRAILER ABS. THIS CIRCUIT MUST BE HOT WHEN THE TRACTOR KEY SWITCH IS ON. NO OTHER ELECTRICAL DEVICES MAY BE POWERED BY THIS CIRCUIT WHILE THE SEMITRAILER IS MOVING FORWARD.

⚠ CAUTION

IF A FAULT EXISTS IN THE SEMITRAILER ABS, NORMAL BRAKING WILL OCCUR, BUT WHEELS MAY LOCK. SERVICE THE ABS AS SOON AS POSSIBLE.

https://truckmanualshub.com/

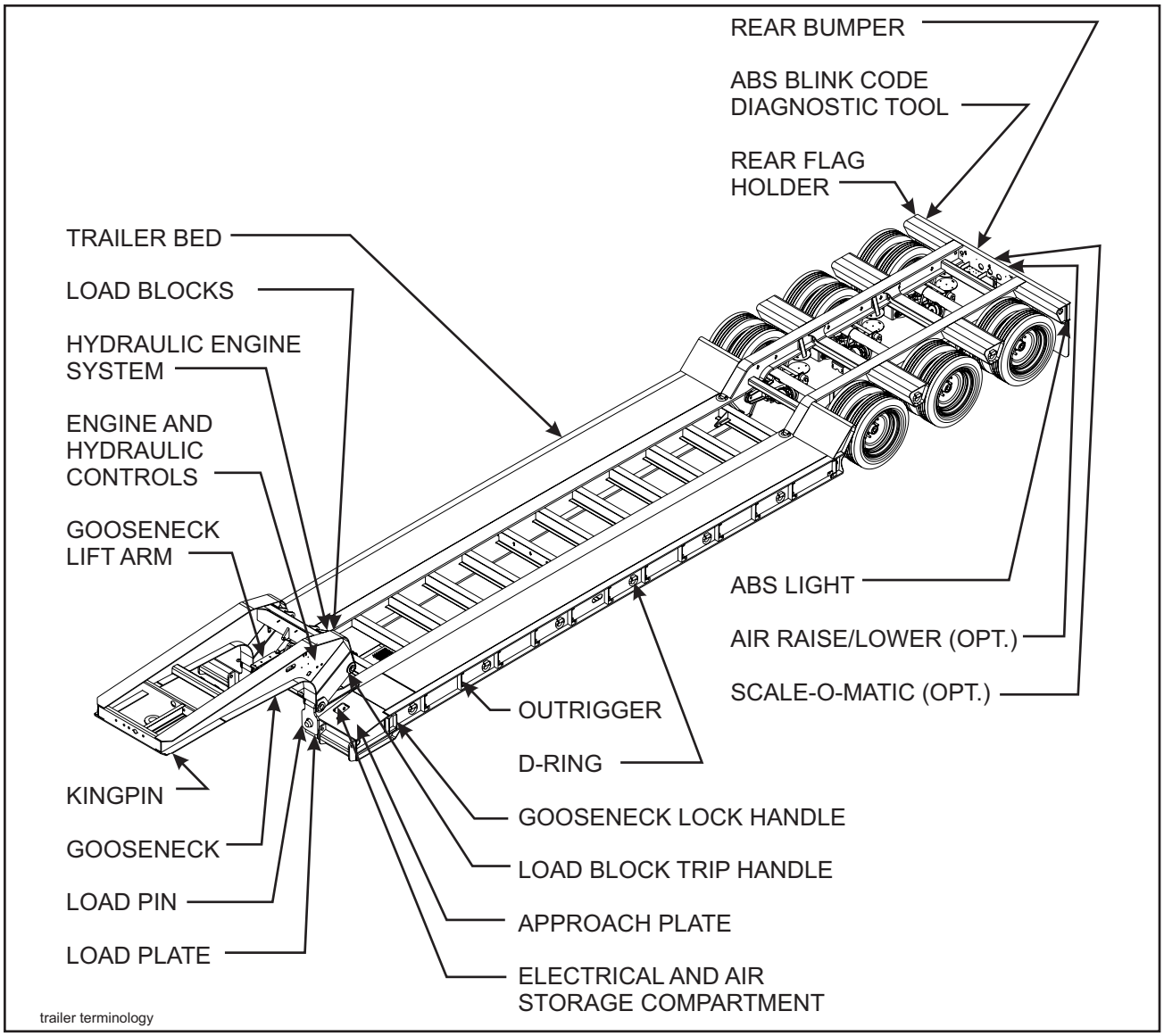

Figure 3-1 Models 325/326/327/329C Trailer Terminology

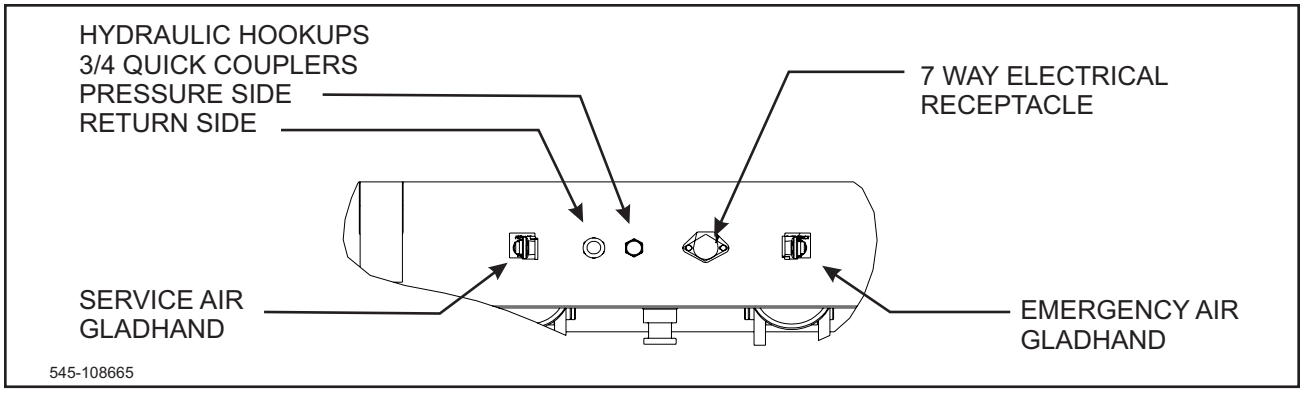

Figure 3-2 Service Hookups

https://truckmanualshub.com/

3-1.4 Electrical

The only electrical operation required of the operator is interconnection of the towing vehicle electrical cable plug with the semitrailer electrical receptacle.

It is necessary that the tractor blue wire be connected to the appropriate electrical source on the tractor.

3-1.5 Hydraulic

Controls are located on the driver's side of the trailer. A hydraulic pump must be coupled to the trailer hydraulic system before any hydraulic controls can function. The hydraulic system is designed to operate at 2500 psi maximum pressure and approximately 17 gpm flow capacity.

3-2 PRE-COUPLING OF SEMITRAILER AND TRACTOR

3-2.1 Slowly back the tractor/truck (towing vehicle) up to the front end of the semitrailer so the kingpin of the gooseneck is centered between the tractor fifth wheel jaws. Stop the towing vehicle just inches ahead of the semitrailer. Set tractor parking brake.

3-2.2 Check the gooseneck king pin plate height. It should be in a horizontal position. The king pin platform should be the same height, to slightly lower, than the latch area of the fifth wheel plate of the towing vehicle. If necessary, connect the tractor hydraulic lines, or start the semitrailer hydraulic power engine. Use the **TRAILER LIFT** lever **(See Section 3-12)** to raise or lower the kingpin plate sufficiently to set proper coupling height. Drain all air and moisture from the towing vehicle air brake system following towing vehicle manufacturer's instructions.

3-2.3 Before pre-coupling the tractor to the semitrailer, drain all air from the air brake system by opening the drain cocks on the reservoirs. Watch for excessive oil or water buildup. Allow full air buildup in towing vehicles air system.

3-2.4 Connect the service and emergency air hoses of the towing vehicle to their respective gladhand on the front of the semitrailer; red emergency line to the gladhand with the **"EMERGENCY"** tag, and the blue service line to the gladhand with the **"SERVICE"** tag **(See Figure 3-2).** Chock the semitrailer wheels before activating the semitrailer air supply valve in the towing vehicle. Set the parking brakes.

⚠ WARNING

FAILURE TO CHOCK SEMITRAILER WHEELS COULD ALLOW MOVEMENT OF THE SEMITRAILER RESULTING IN SERIOUS PERSONAL INJURY, DEATH, OR DAMAGE TO PROPERTY IN ITS PATH.

3-2.5 Check the air brake operations of the semitrailer as follows:

a. Apply brakes and inspect brake action on all wheels for prompt application.

b. Release brakes. All brakes should release immediately. Air pressure should discharge quickly from the relay emergency valve.

c. Disconnect the emergency air line from the semitrailer gladhand. Trailer brakes should promptly set.

d. Re-connect the emergency air line to the semitrailer and activate the semitrailer air supply valve. The semitrailer brakes should set.

https://truckmanualshub.com/

3-3 COUPLING OF THE TRACTOR TO THE SEMITRAILER

⚠ DANGER

KEEP ALL PERSONNEL CLEAR OF FRONT, REAR, AND SIDES OF TOWING VEHICLE AND SEMITRAILER DURING COUPLING, COMPONENT OPERATIONS, AND UNCOUPLING. FAILURE TO STAY CLEAR CAN RESULT IN SERIOUS PERSONAL INJURY OR DEATH.

3-3.1 Verify the semitrailer wheels are chocked and brakes function properly.

3-3.2 Make certain the coupler of the towing vehicle's fifth wheel is open by pulling the latch handle.

3-3.3 Slowly back the towing vehicle so its fifth wheel contacts the front of the king pin plate on the semitrailer and slips under it. Continue backing until the fifth wheel coupler locks onto the semitrailer kingpin.

3-3.4 Verify the vehicle coupling is secure by attempting to pull the tractor forward a few inches. If the tractor disconnects from the semitrailer, locate source of coupling failure; repair before continuing; and repeat **Section 3-3.3 and 3-3.4.**

3-3.5 Check that the towing vehicle couples securely to the semitrailer before setting towing vehicle and semitrailer parking brakes.

IMPORTANT

KEEP BRAKES ENGAGED FOR REMAINDER OF HOOKUP, CHECKOUT PROCEDURES, AND PARKING.

3-4 CONNECTING TRACTOR SERVICES TO THE SEMITRAILER

3-4.1 Connect the towing vehicle 7-pole electrical plug to the electrical receptacle on the front of the semitrailer **(See Figure 3-2).**

IMPORTANT

THE KEY ON THE PLUG AND THE KEYWAY IN THE SOCKET MUST BE PROPERLY ALIGNED BEFORE INSERTING THE PLUG INTO THE SEMITRAILER SOCKET.

⚠ CAUTION

HYDRAULIC OPERATING PRESSURES GREATER THAN 2500 PSI CAN CAUSE DAMAGE TO THE TRAILER.

3-4.2 If you have not already done so, connect the tractor hydraulic lines to the semitrailer.

IMPORTANT

SOME OIL MAY NEED TO BE REMOVED FROM THE TRACTOR RESERVOIR TO ALLOW ROOM FOR 5.5 GALLONS OF ADDITIONAL OIL DISPLACED FROM THE TRAILER HYDRAULIC SYSTEM.

3-4.3 Air Lines: **See Section 3-2.**

https://truckmanualshub.com/

3-5 TRACTOR AND SEMITRAILER CHECK-OUT

⚠ WARNING

FAILURE TO PROPERLY SET AND CHECK PARKING BRAKE, AND CHOCK WHEELS WHEN PARKING AND DURING STORAGE, COULD ALLOW MOVEMENT OF THE TRUCK/SEMITRAILER RIG RESULTING IN SERIOUS PERSONAL INJURY, DEATH, OR DAMAGE TO PROPERTY IN ITS PATH.

⚠ CAUTION

FAILURE TO SUPPORT THE SEMITRAILER FULLY ON THE LOAD BLOCKS DURING TRANSPORT, MAY RESULT IN DAMAGE TO THE LOAD, THE SEMITRAILER, AND POSSIBLE SERIOUS INJURY OR DEATH TO INDIVIDUALS NEAR THE SEMITRAILER.

3-5.1 Activate the hydraulic power source.

3-5.2 Be sure the **GOOSENECK LIFTARM (See Section 3-9)** is in the "UP" position.

3-5.3 Using the **TRAILER LIFT lever (See Section 3-12)**, lift the trailer up until the load blocks can be lowered into position **(See Figure 3-1)**.

3-5.4 Using the **LOAD BLOCK TRIP LEVER (See Section 3-10**), lower the load blocks to the transport position.

3-5.5 Activate the **TRAILER LIFT lever (See Section 3-12)** “DOWN” until the semitrailer rests completely on the load blocks **(See Figure 3-1)**.

3-5.6 Check the operation of all lights and signals on the semitrailer for proper response to switch positions (stop, right turn, left turn, and clearance). Check operation of remote function if present.

3-5.7 Check tire inflation, adjust as needed to the pressure listed on the semitrailer VIN plate, located on the front of the semitrailer.

3-5.8 Check tractor/semitrailer for air leaks. If air leakage is found, repair the defect before transporting.

3-5.9 Check the oil in each hub for proper level and freedom from contamination. If hubs are contaminated with water, dirt or some other foreign material, clean before transporting.

3-5.10 Check tractor air pressure. Pressure must not fall below 90 psi, even after activating brakes a couple of times. Set parking brake and carefully remove all wheel chocks. Set emergency brake and try pulling forward. The semitrailer wheels must not rotate. If semitrailer brakes do not apply, **DO NOT** transport until defect, or defects, are repaired.

https://truckmanualshub.com/

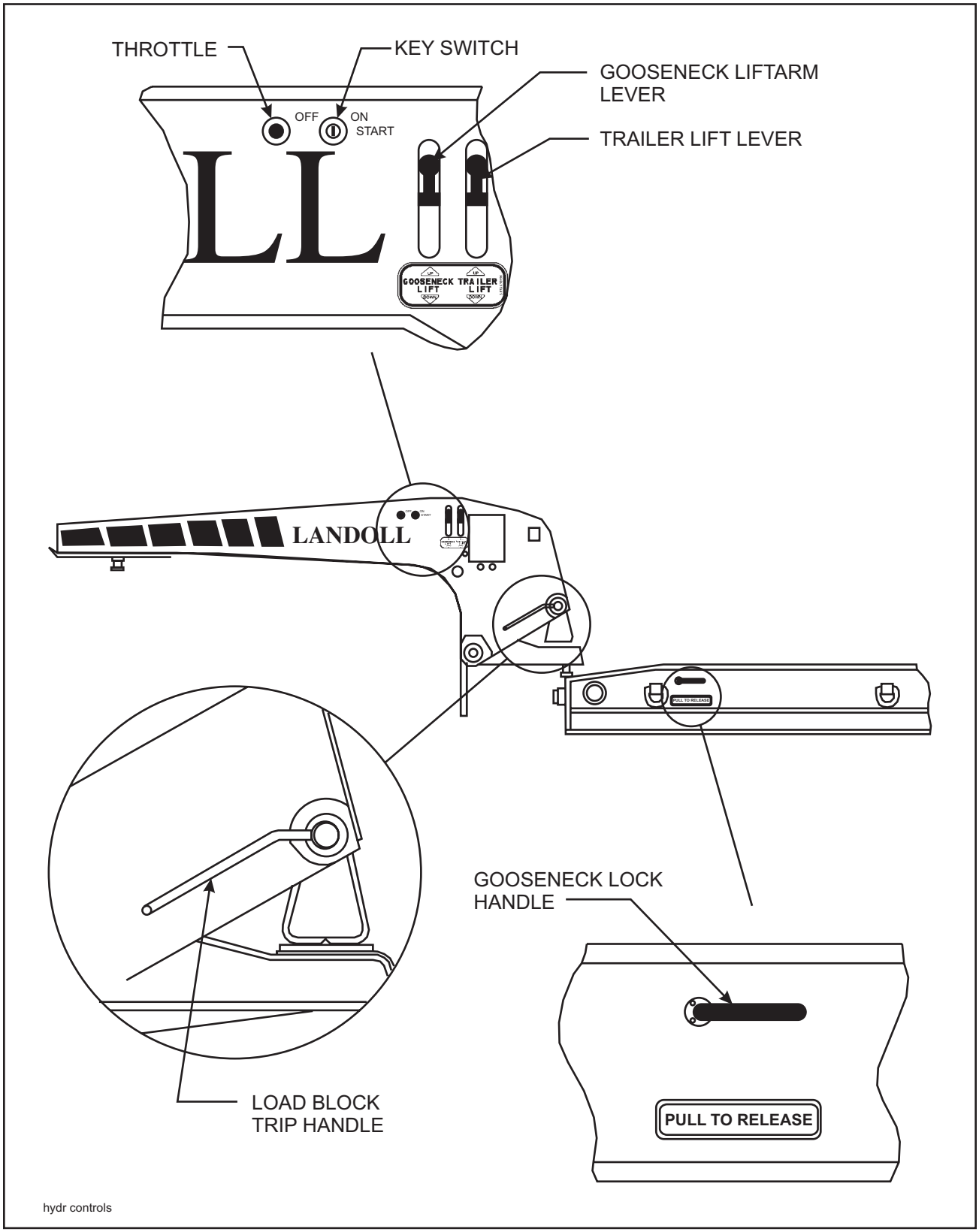

Figure 3-3 Hydraulic Controls

https://truckmanualshub.com/

3-6 TOWING THE SEMITRAILER

Driving the towing vehicle with the semitrailer coupled behind requires constant attention to the overall length of the combination. The “hinged-in-the-middle” configuration of the tractor and semitrailer, load, and weight effect performance. Turning, passing, acceleration, braking, stopping, and backup require special considerations. When executing steep grades or turning tight curves, the semitrailer must not be allowed to push the towing vehicle, or jack knifing the semitrailer with the towing vehicle may result. Application of the semitrailer brakes to keep the semitrailer in tow will help prevent this pushing. Braking should begin before descending a hill or attempting a curve, to assure control.

⚠ CAUTION

WHEN OPERATING SEMITRAILER, DO NOT BACK OVER CURB. THIS WILL CAUSE SEVERE DAMAGE TO UNDERCARRIAGE.

3-6.1 Make a moving test of the semitrailer brakes at low, and medium speeds before traveling at highway speed.

a. The Anti-Lock Brake System (ABS) warning lamp mounted at left rear side of the semitrailer should come on when power is supplied to the ABS by turning the tractor keyswitch on. The warning lamp should go off once the semitrailer exceeds 4 mph. If the warning lamp does not go off, a fault exists in the semitrailer ABS. Once the vehicle speed exceeds 4 mph, the light should remain off unless a fault occurs or the keyswitch is turned off, then on again.

⚠ CAUTION

IF A FAULT EXISTS IN THE SEMITRAILER ABS, NORMAL BRAKING WILL OCCUR, BUT WHEELS MAY LOCK. SERVICE THE ABS AS SOON AS POSSIBLE.

3-6.2 Monitor the air pressure gauge on the dash of the towing vehicle. Pressure should not fall below 90 psi at any time.

3-6.3 The semitrailer wheels track to the inside of the towing vehicle during turns. Thus, turning corners requires a wide swing to prevent “curb hopping”, and to allow the semitrailer wheels to clear any obstacle on the inside of the corner.

3-6.4 To stop, use a gradual and smooth application of brakes. If grabbing occurs, apply less pressure - grabbing brakes are not efficient.

⚠ WARNING

ALWAYS CHECK BEHIND AND UNDER THE TRUCK AND SEMITRAILER FOR PERSONS OR OBJECTS BEFORE MOVING. FAILURE TO CHECK CAN LEAD TO SERIOUS PERSONAL INJURY OR DEATH TO OTHERS, OR DAMAGE TO PROPERTY.

3-6.5 Backing should be done with care. Tail overhang, semitrailer length, and allowable space must be taken into consideration when backing the semitrailer.

https://truckmanualshub.com/

3-7 PARKING THE TRAILER

3-7.1 Position truck/semitrailer rig on a level, solid surface.

3-7.2 Set the **PARKING BRAKE**, **not the semitrailer hand brake**, and check for proper brake holding.

3-7.3 Chock wheels of semitrailer.

3-7.4 Check for any air leaks in lines, relay valve, brake pods, or any other air system component.

⚠ WARNING

WHEN LEAVING THE SEMITRAILER UNATTENDED, POSITION ALL HYDRAULIC CONTROLS TO THE NEUTRAL OR "OFF" POSITION OR DISCONNECT THE TRACTOR HYDRAULIC HOOK-UP.

3-8 UNCOUPLING TOWING VEHICLE FROM SEMITRAILER

3-8.1 Park the semitrailer according to instructions in **Section 3-7.**

3-8.2 Using the **TRAILER LIFT LEVER (See Section 3-11)**, raise the semitrailer until the load blocks can be raised.

3-8.3 Using the **LOAD BLOCK TRIP LEVER (See Section 3-10**), raise the load blocks up into the gooseneck.

3-8.4 Using the **TRAILER LIFT LEVER (See Section 3-11**, lower the semitrailer until the semitrailer rests on the ground.

3-8.5 Shut off the hydraulic pump.

3-8.6 Disconnect the emergency and service air lines and attach them to the tractor gladhand holders. If present, install dummy gladhands on trailer couplings.

3-8.7 Disconnect the 7-pole cable and hydraulic lines from the semitrailer and store with the tractor.

3-8.8 Pull the tractor fifth wheel plate latch release lever.

3-8.9 Attempt to pull the tractor forward. If the tractor uncouples, verify all service lines are disconnected and semitrailer wheels are chocked. If tractor does not disconnect, repeat **Section 3-8.8 and 3-8.9.**

3-8.10 Pull the tractor away from the semitrailer.

⚠ DANGER

ALWAYS CHECK BEHIND AND UNDER THE TRUCK AND SEMITRAILER FOR PERSONS OR OBJECTS BEFORE MOVING. FAILURE TO CHECK CAN LEAD TO SERIOUS PERSONAL INJURY OR DEATH TO OTHERS, OR DAMAGE TO PROPERTY.

3-9 GOOSENECK LIFTARM LEVER

The **GOOSENECK LIFTARM lever (See Figure 3-3)** is located on the driver's side of the gooseneck assembly. It is the left or front most lever. The lever has three positions:

UP This position raises the gooseneck lift arm to the transport or hook-up position.

CENTERED This is the neutral position. This position will not operate any of the semitrailer components.

DOWN This position lowers the gooseneck lift arm, permitting the transport of the detached gooseneck.

https://truckmanualshub.com/

3-10 LOAD BLOCKS TRIP LEVER

The **LOAD BLOCKS TRIP LEVER (See Figures 3-3)** is located on the driver's side of the gooseneck. The function of the lever is to lower the load blocks down to the "TRANSPORT" position and raise them up to the "DETACH" position.

The LOAD BLOCKS TRIP LEVER has only two positions:

UP When the lever is placed in this position, it raises the load blocks up to the "DETACH" position.

DOWN When the lever is placed in this position, it lowers the load blocks down to the "TRANSPORT" position.

3-11 TRAILER LIFT LEVER

The **TRAILER LIFT lever (See Figure 3-3)** is located on the driver's side of the gooseneck assembly. It is the middle lever and has three positions:

UP This position raises the semitrailer deck, allowing the load blocks to be lowered into transport position.

CENTER This is the neutral position. The semitrailer stays in its current position.

DOWN This position lowers the semitrailer deck to the ground, allowing the detachment of the gooseneck or allowing the weight of the semitrailer deck and load to rest on the load blocks. Also, this lowers the gooseneck lift arms, permitting the transport of the detached gooseneck.

3-12 GOOSENECK LOCK HANDLE

The **GOOSENECK LOCK HANDLE (See Figures 3-3)** is located at the front of the driver's side bed frame member and is easily seen from the driver's seat. This handle has two positions:

IN When the handle is in this position, it indicates that the gooseneck locking mechanism is closed.

OUT When the handle is out, it indicates that the gooseneck locking mechanism is opened.

3-13 AIR HEIGHT CONTROL VALVE (OPTION)

The **AIR HEIGHT CONTROL VALVE (See Figure 3-4)** is located on the rear-most airbag crosstube in the semitrailer trunnion. It has two positions:

ON Placing the valve in this position allows manual adjustment of the air ride height.

OFF Placing the valve in this position returns the air ride height adjustment to the automatic mode.

IMPORTANT

WHEN VEHICLE IS IN MOTION, SWITCH MUST BE IN "OFF" POSITION FOR NORMAL HEIGHT CONTROL VALVE AUTOMATIC OPERATION.

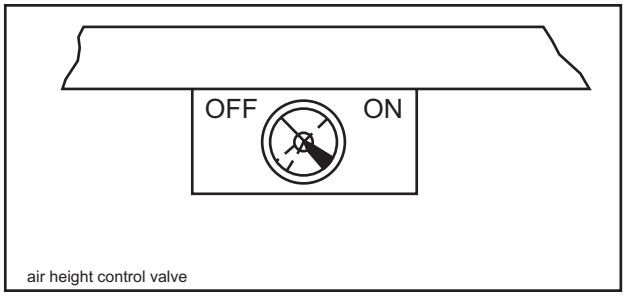

Figure 3-4 Air Height Control Valve

https://truckmanualshub.com/

3-14 HAND VALVE (OPTION)

The **HAND VALVE (See Figure 3-5)** is located on the front side of rear tail channel beside the **AIR HEIGHT CONTROL VALVE**. It has two positions:

RIGHT Placing the valve in this position will exhaust the air from the air ride system, lowering the trailer deck when the **AIR HEIGHT CONTROL VALVE** is in the "ON" position.

LEFT Placing the valve in this position will increase the air pressure in the air ride system, raising the trailer deck when the **AIR HEIGHT CONTROL VALVE** is in the "ON" position.

IMPORTANT

WHEN VEHICLE IS IN MOTION, SWITCH MUST BE IN "OFF" POSITION FOR NORMAL HEIGHT CONTROL VALVE AUTOMATIC OPERATION.

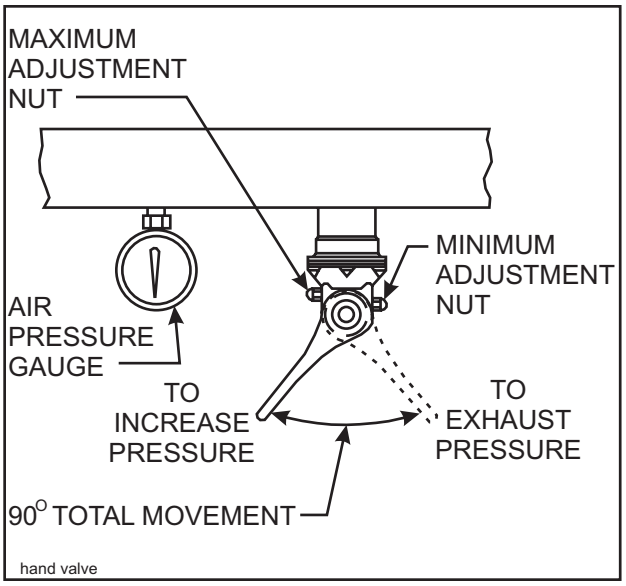

Figure 3-5 Hand Valve

3-15 PRESSURE GAUGE

The **PRESSURE GAUGE (See Figure 3-5)** is located near the HAND VALVE. This gauge provides air pressure information for adjusting the air ride system manually.

3-15.1 Minimum air pressure should be at least three (3) psi. Loosen the minimum adjustment nut **(See Figure 3-5)**, set the air pressure at three (3) psi and tighten the nut again.

3-15.2 Maximum air pressure should be no more than 85 psi. Loosen the maximum adjusting nut **(See Figure 3-5)**, set the air pressure at 85 psi and tighten the nut again.

IMPORTANT

THE TRAILER LIFT LEVER (SEE SECTION 3-11) AND THE HAND VALVE (SEE SECTION 3-14) MAY BE UTILIZED TO RAISE OR LOWER THEIR RESPECTIVE END OF THE SEMITRAILER TO CLEAR OBSTACLES DURING TRANSPORT (I.E. LOW BRIDGES, CURBS, ETC.) BY FOLLOWING THE DIRECTIONS FOR USE OF CONTROLS.

https://truckmanualshub.com/

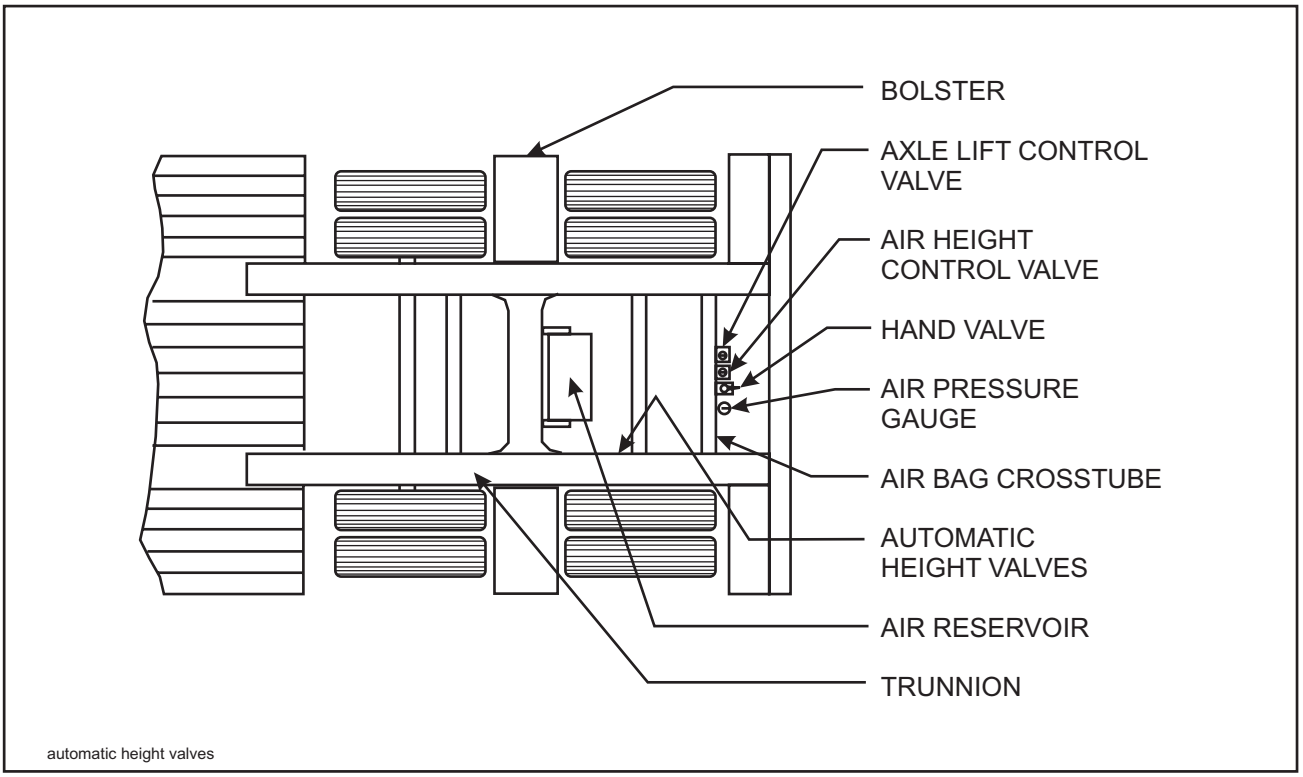

Figure 3-6 Automatic Height Valves

3-16 AUTOMATIC HEIGHT VALVES (325)

The **AUTOMATIC HEIGHT VALVES (See Figure 3-6)** are located inside left main member of the trunnion. The function of this valve is to automatically control the air pressure to the air bags of the air ride system, maintaining the preset ride height. The **AIR RIDE HEIGHT CONTROL VALVE** must be in the "OFF" position for the **AUTOMATIC HEIGHT VALVES** to function.

POSITION The **AUTOMATIC HEIGHT VALVES** have no particular position, but are adjusted constantly by the suspension as the semitrailer is pulled.

https://truckmanualshub.com/

3-17 AXLE LIFT CONTROL VALVE (OPTION)

The **AXLE LIFT CONTROL VALVE (See Figure 3-7)** is located on the rear airbag crosstube. It is used to control the axle lift system and has two positions.

UP Placing the control valve in this position raised the associated axle up off the surface of the ground.

DOWN Placing the control valve in this position lowers the associated axle to the ground to assist in load carrying.

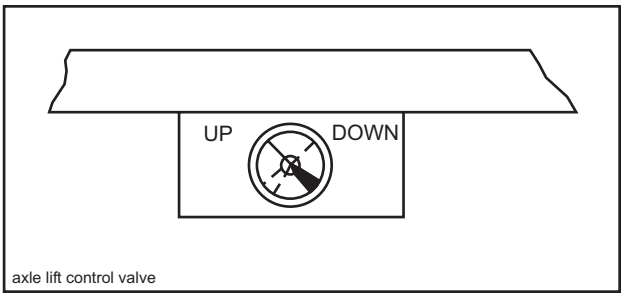

Figure 3-7 Axle Lift Control Valve

3-18 HYDRAULIC POWER SUPPLY ENGINE THROTTLE (OPTION)

The **HYDRAULIC POWER SUPPLY ENGINE THROTTLE (See Figures 3-3)** is located on the driver's side of the gooseneck. The function of the throttle is to control the speed at which the engine powering the hydraulic system is running. This control will only be present on semitrailers containing the optional self-contained hydraulic engine package.

The **HYDRAULIC POWER SUPPLY ENGINE THROTTLE** is a variable control with adjustable settings.

PULLED OUT When the throttle is in this position, the engine is fully choked. This position is used for starting the engine.

ADJUSTED IN The throttle should be turned clockwise to decrease engine speed and counter clockwise to increase engine speed.

PUSHED IN When the throttle is in this position, the engine is at low idle speed. The throttle should be placed in this position just prior to shutting off the engine.

3-19 HYDRAULIC POWER SUPPLY ENGINE KEY SWITCH

The **HYDRAULIC POWER SUPPLY ENGINE KEY SWITCH (See Figures 3-3)** is located on the driver's side of the gooseneck. The function of the key switch is to start and stop the hydraulic power supply engine. This control will only be present on semitrailers containing the hydraulic engine package. The **HYDRAULIC POWER SUPPLY ENGINE KEY SWITCH** has three positions.

START Placing the key switch in this position causes the starter to crank the engine. It should be release to the "ON" position as soon as the engine is running.

ON Placing the key switch in this position allows the engine to run after it has been started.

OFF Placing the key switch in this position causes the engine to stop running.

https://truckmanualshub.com/

3-20 SWINGOUT OUTRIGGER PLATFORM EXTENSION SET-UP

⚠ DANGER

DO NOT OPERATE IF ANY EXTENSION IS NOT LOCKED IN PLACE. INSPECT ALL EXTENSIONS TO INSURE EACH IS LOCKED SECURELY IN POSITION.

3-20.1 Use extension brackets to increase the platform width to support wide loads.

3-20.2 Lift up and rotate swing-out outriggers outward **(See Figure 3-8)**.

3-20.3 Place extension planks on outriggers.

⚠ WARNING

1. TOP OF EXTENSION PLANKS MUST BE FLUSH WITH MAIN DECK BOARDS.

2. CENTERLINE OF TRACKS OR TIRES MUST BE LOADED ON THE MAIN DECK, NOT ON EXTENSION BRACKETS. FAILURE TO LOAD EXTENSION BRACKETS PROPERLY CAN RESULT IN EQUIPMENT DAMAGE AND PERSONAL INJURY.

3-20.4 Center the load on the trailer. DO NOT load to one side. Position the load for proper weight distribution. See **Section 3-21** for loading procedure.

⚠ WARNING

1. DO NOT OVERLOAD EXTENSIONS. OVERWIDTH RATINGS ARE GIVEN IN STANDARD SPECIFICATIONS.

2. DO NOT SECURE LOAD TO OVERWIDTHS OR UNDERCARRIAGE. SECURE LOAD FRAME TO MOUNTED D-RINGS OR GOTCHAS LOCATED IN THE APPROACH PLATE AND FRAME BEAM FLANGES. FAILURE TO DO SO MAY CAUSE SERIOUS INJURY OR DEATH.

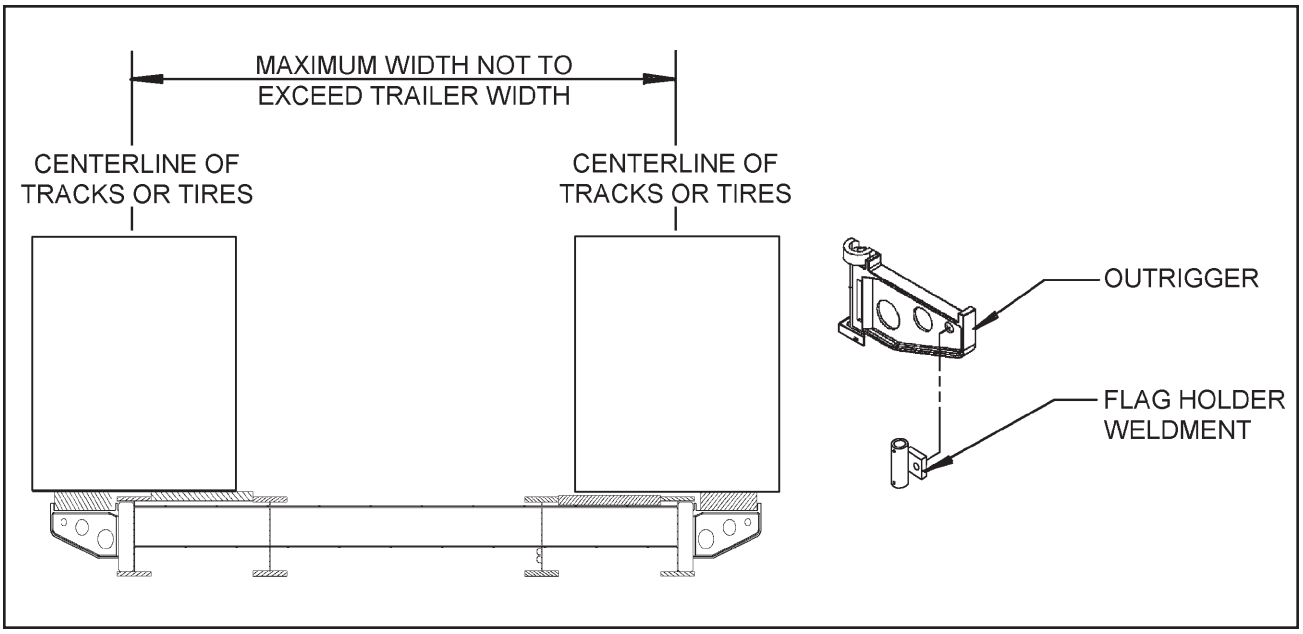

Figure 3-8 Swingout Outrigger Platform Extension

https://truckmanualshub.com/

3-21 PREPARATION FOR LOADING AND UNLOADING

⚠ CAUTION

MODEL 325C SEMITRAILER MAXIMUM CONCENTRATED LOAD IN A 10 FT. AREA IS 100,000 LBS.

MODEL 326C SEMITRAILER MAXIMUM CONCENTRATED LOAD IN A 16 FT. AREA IS 70,000 LBS.

MODEL 327C SEMITRAILER MAXIMUM CONCENTRATED LOAD IN A 16 FT. AREA IS 100,000 LBS.

MODEL 329C SEMITRAILER MAXIMUM CONCENTRATED LOAD IN A 10 FT. AREA IS 120,000 LBS.

⚠ WARNING

1. THE SEMITRAILER MUST BE COUPLED TO A TRACTOR.

2. BEFORE OPERATING:
DO NOT EXCEED THE GROSS AXLE WEIGHT RATINGS FOR ANY AXLE ON YOUR VEHICLE. THE COMBINED WEIGHT OF THE SEMITRAILER AND CARGO MUST NO EXCEED THE GROSS VEHICLE WEIGHT RATING (GVWR) OF THE TRAILER.

⚠ DANGER

BE SURE TO KEEP FEET AND ALL OTHER PARTS OF YOUR BODY CLEAR OF THE BOTTOM OF THE SEMITRAILER DURING LOWERING OPERATION. FAILURE TO KEEP YOUR FEET OR BODY CLEAR MAY RESULT IN SERIOUS PERSONAL INJURY OR DEATH.

3-21.1 Practice all standard industrial safety standards. Do not load any payload that will overload any component of the trailer or cause an unsafe condition.

3-21.2 Park the tractor/semitrailer in a straight line on level even surface. Set the tractor brakes and release the semitrailer brakes **(See Figure 3-9)**. Chock trailer wheels.

3-21.3 Engage the hydraulic pump.

3-21.4 Move **TRAILER LIFT LEVER (See Section 3-11)** to the up position, raising the semitrailer until a clearance of 1 inch is obtained between the load blocks and the semitrailer.

3-21.5 Move **LOAD BLOCK TRIP LEVER (See Section 3-10)** to the up position, raising the load blocks up into the gooseneck.

3-21.6 Move **TRAILER LIFT LEVER (See Section 3-11)** to the down position, lowering the semitrailer to the ground and until a clearance of 1/4 inch has been obtained between the load plate eyes and the load pins.

3-21.7 Disconnect the air and electrical service lines from the semitrailer to the gooseneck and store in the storage compartment provided in the driver's side approach plate.

3-21.8 Pull the gooseneck lock handle out to the release position.

3-21.9 Move the **GOOSENECK LIFTARM LEVER (See Section 3-9)** to the down position until the gooseneck liftarm rests on the tractor frames rearmost crossmember. Do not lift the gooseneck.

3-21.10 Pull the tractor forward a few inches and determine that the gooseneck has detached from the semitrailer. If the gooseneck does not detach from the semitrailer, repeat **steps 3-20.8 and 3-21.10.**

3-21.11 When gooseneck does detach from trailer, proceed to pull the tractor away from the semitrailer.

https://truckmanualshub.com/

3-22 LOADING THE SEMITRAILER

3-22.1 Set the semitrailer up for loading as outlined in **Section 3-21.**

3-22.2 Release the strap securing the load ramps to the deck, if so equipped.

3-22.3 Fold the load ramps down onto the ground.

3-22.4 Drive the load onto the semitrailer. Insure that the load is steering straight up onto the semitrailer and does not maneuver off the side of the semitrailer. Load a stationary load by means of a forklift, crane, or other means satisfactory to the constitution of the load. Position the load accordingly for proper weight distribution.

3-22.5 Chain the load down in accordance with instructions in **Section 3-23.**

3-23 SECURING THE LOAD

⚠ WARNING

DO NOT ALLOW SLACK IN TIEDOWNS. A SHIFTING LOAD MAY CREATE ENOUGH MOMENTUM TO BREAK HI-TEST CHAINS OR STRAP TIES. SLACK IN TIEDOWNS MAY RESULT IN DAMAGE TO THE LOAD, AND DEATH OR SERIOUS INJURY TO PERSONS NEAR THE LOAD.

3-23.1 All items of the semitrailer load must be securely tied to the deck, front and rear, using the D-rings on the semitrailer frame. The load must be tied with chain or tie straps sufficient to withstand the weight of the load using standard approved tiedown methods.

3-23.2 No slack is allowed in the tie down chains or straps. Use binders with chains or a ratchet type buckle on straps to eliminate any slack in the tiedowns.

IMPORTANT

MORE INFORMATION ABOUT CARGO SECUREMENT MAY BE FOUND AT http://www.fmcsa.dot.gov/cargosecurement.pdf. REMEMBER THAT REGULATIONS VARY FROM STATE TO STATE. FOR STATE REGULATIONS, SEE http://www.fhwa.dot.gov/webstate.htm.

https://truckmanualshub.com/

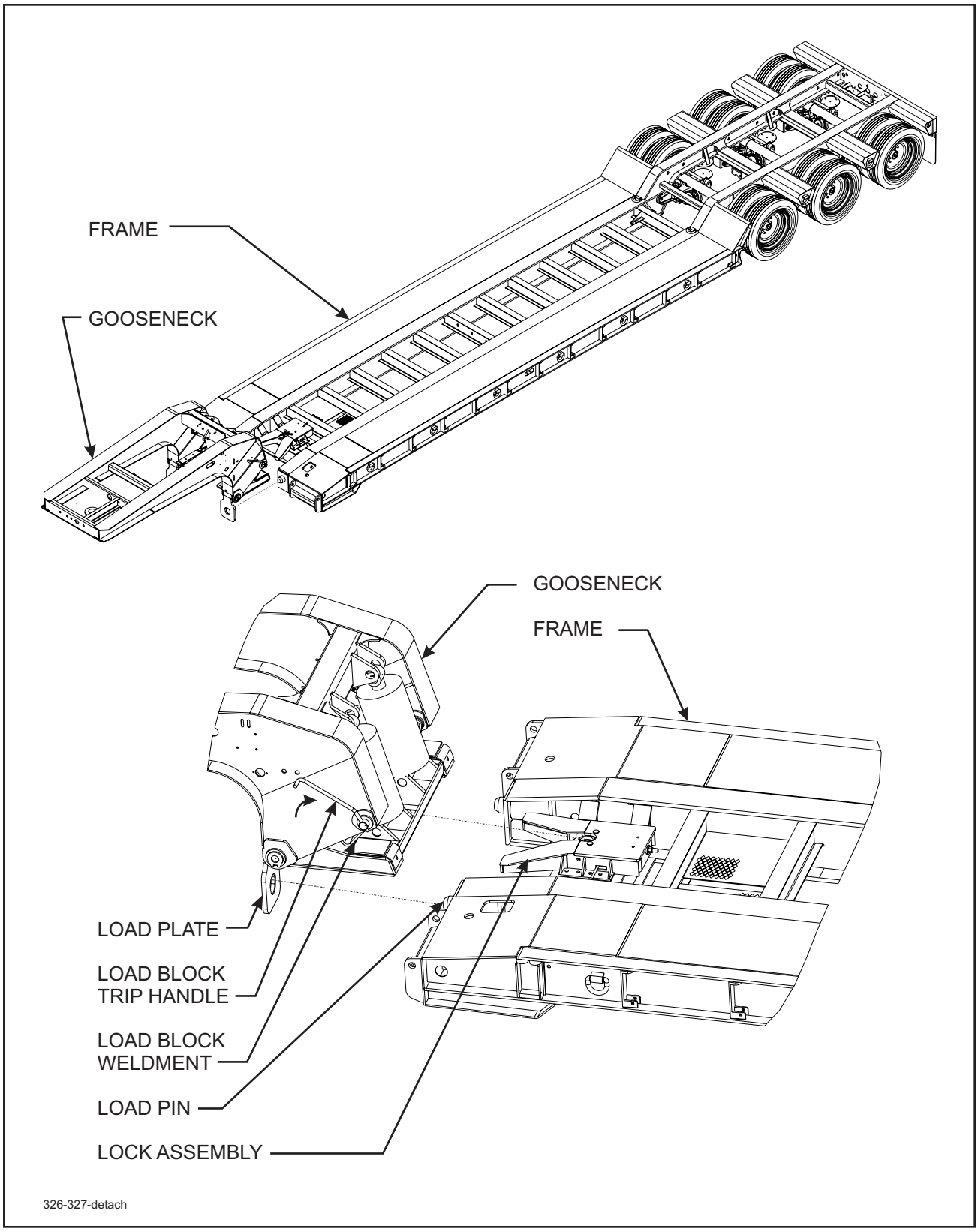

Figure 3-9 Gooseneck Attachment to Frame

https://truckmanualshub.com/

3-24 PREPARATION FOR TRANSPORT

3-24.1 After securing the load, following the steps as outlined in **Section 3-23,** back the tractor until the gooseneck is within a few inches of the front of the semitrailer.

3-24.2 Using the **GOOSENECK LIFT ARM LEVER (See Section 3-9)**, to lower or raise the gooseneck as necessary until the load plate holes are aligned with the load pins.

3-24.3 Slowly back the gooseneck into the semitrailer until the gooseneck lock handle snaps into place indicating the gooseneck is locked into place.

3-24.4 Slowly try to pull the semitrailer forward a few inches to be sure that the gooseneck is locked into place. If the gooseneck is not locked into place on the semitrailer, pull the gooseneck lock handle out again and repeat **step 3-24.3**. If the gooseneck is locked into place, continue the preparation for transport.

3-24.5 Reconnect the electrical and air service lines from the semitrailer to the gooseneck. The 7 pole electrical connector attaches to the receptacle in the side of the gooseneck. Disconnect dummy gladhands to connect service and emergency air hoses to their respective gladhand on the side of the gooseneck.

3-24.6 Using the **GOOSENECK LIFTARM LEVER (See Section 3-9),** raise the gooseneck liftarm to the "UP" position.

3-24.7 Using the **TRAILER LIFT LEVER (See Section 3-11)**, raise the semitrailer until enough clearance is obtained to seat the load blocks.

⚠ CAUTION

FAILURE TO SUPPORT THE SEMITRAILER FULLY ON THE LOAD BLOCKS DURING TRANSPORT AND PARKING MAY RESULT IN DAMAGE TO THE LOAD, THE SEMITRAILER, AND POSSIBLE SERIOUS INJURY OR DEATH TO INDIVIDUALS NEAR THE SEMITRAILER.

3-24.8 Using the LOAD BLOCK TRIP LEVER, lower the load blocks completely. Be sure that both load blocks are lowered the full extent of the cylinder travel.

3-24.9 Using the TRAILER LIFT LEVER, lower the semitrailer until the semitrailer rests fully on the load blocks.

⚠ CAUTION

THE GOOSENECK MAY BE USED IN THE LOWERED OR RAISED POSITIONS TO AVOID LOW CLEARANCE OBSTACLES OR HIGH CENTERING. NEVER EXCEED 2 MILES AN HOUR WHEN TRANSPORTING THE SEMITRAILER IN THIS MANNER.

3-25 UNLOADING THE SEMITRAILER

3-25.1 Prepare to unload the semitrailer by following the steps outlined in **Section 3-21.**

3-25.2 Remove the chains and binder or the tie-straps from the load.

3-25.3 Fold down the load ramps, if so equipped, and drive the load off the front of the semitrailer or remove a stationary load by means of a forklift, crane, or other means satisfactory to the constitution of the load.

3-25.4 Reattach the gooseneck to the semitrailer following the steps as outlined in **Section 3-24.**

⚠ WARNING

WHEN REMOVING LOAD, INSURE THAT THE LOAD IS STEERING STRAIGHT SO IT DOES NOT MANEUVER OFF THE SIDE OF THE SEMITRAILER. FAILURE TO SO COULD RESULT IN DAMAGE TO EQUIPMENT, INJURY, OR DEATH.

3-25.5 Shut down hydraulic power system.

https://truckmanualshub.com/

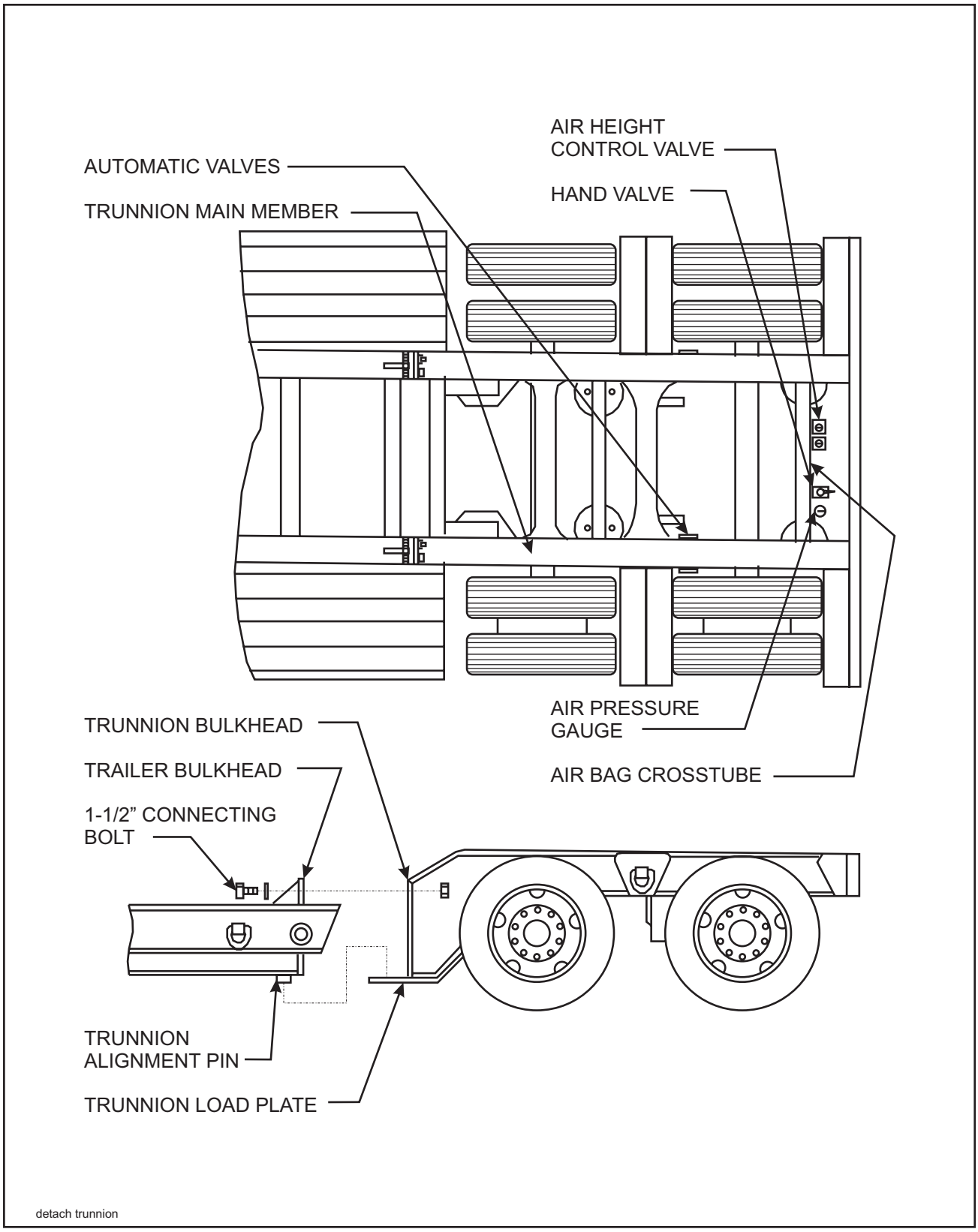

Figure 3-10 Detachable Trunnion

https://truckmanualshub.com/

3-26 AIR RIDE OPERATION

3-26.1 Trailer air pressure must be maintained above 90 PSI before operating. **PROTECTION VALVES** are used to maintain 65 PSI air brake pressure during suspension or remote system air loss.

3-26.2 The semitrailer is equipped with a ride height control valve located on rear axle.

⚠ CAUTION

IF SUSPENSION AIR LOSS SHOULD OCCUR, COMPLETELY DEFLATE SUSPENSION AND TEMPORARILY OPERATE ON THE AIR SPRINGS INTERNAL RUBBER BUMPERS. CAREFULLY PROCEED TO THE NEAREST SEMITRAILER SERVICE FACILITY. TO DEFLATE THE AIR SUSPENSION, DISCONNECT THE LOWER CONNECTION ON THE LINKAGE OF THE AUTOMATIC AIR VALVES. ROTATE THE VALVE CONTROL ARMS DOWN ABOUT 45º TO EXHAUST THE AIR. TO RESTORE TO NORMAL OPERATION, SIMPLY REVERSE THE PROCEDURE.

3-27 DETACHABLE TRUNNION (MODEL 325)

3-27.1 Detaching the trunnion:

- **a.** Park the semitrailer in a straight line on a smooth, firm, level surface in an open area.
- **b.** Set the tractor and the semitrailer brakes.
- **c.** Place a 4" high block under the front of each main member of the detachable trunnion.
- **d.** Turn the **AIR HEIGHT CONTROL VALVE (See Section 3-13)** to the "ON" position.
- **e.** Use the **HAND VALVE (See Section 3-14)** to exhaust enough air from the air ride system to allow the front of the main members to rest solidly on the blocks.
- **f.** Disconnect the trunnion electrical and air lines from the semitrailer bed and store inside the trunnion frame.
- **g.** Remove the four connecting bolts from the semitrailer and trunnion bulkheads **(See Figure 3-10).** Use a crane, hoist, or other suitable lifting device to slightly lift the back of the semitrailer bed if necessary, to provide relief on the bolts, allowing them to be removed.
- **h.** Using a suitable lifting device, lift the semitrailer bed off of the trunnion loadplates.

3-27.2 Reattaching the trunnion:

- **a.** Using a crane, hoist, or other suitable lifting device, position the semitrailer bed in front of the trunnion.
- **b.** Lower the semitrailer bed until the trunnion alignment pins are inserted into the trunnion load plates **(See Figure 3-10).**
- **c.** Using a suitable lifting device, raise the front of the semitrailer bed until the semitrailer bulkheads contact the trunnion bulkheads.
- **d.** Insert and tighten the four attaching bolts.

IMPORTANT

IT MAY BE NECESSARY TO LIFT OR LOWER THE FRONT OF THE TRAILER SLIGHTLY TO PROVIDE AMPLE SLACK TO INSERT THE FOUR CONNECTING BOLTS.

- **e.** Reconnect the air and electrical supply lines and pressurize the towing vehicle's air system to a minimum of 90 psi.
- **f.** Turn the **AIR HEIGHT CONTROL VALVE (See Section 3-13)** to the "OFF" position to return the air ride suspension to automatic control.

https://truckmanualshub.com/

3-28 TRAILER AXLE LIFT (MODEL 325)

The trailer axle lift is used to raise an axle off the surface when it is not needed. If your semitrailer is equipped with this option, the procedure to operate the lift axle is as follows:

IMPORTANT

THE AXLE MUST BE DOWN WHEN THE SEMITRAILER IS LOADED TO MAINTAIN PROPER LOAD WEIGHT DISTRIBUTION.

3-28.1 Locate the **AXLE LIFT CONTROL VALVE (See Section 3-17).**

3-28.2 Turn the valve to the "UP" position to raise the axle.

3-28.3 Turn the valve to the "DOWN" position to lower the axle for transporting a load.

3-29 13 FOOT GOOSENECK KINGPIN ADJUSTMENT (MODEL 329 ONLY)

The adjustable kingpin is used to transfer load weight. If your semitrailer is equipped with the adjustable kingpin option, the procedure to change the kingpin is as follows (**See Figure 3-11** for parts identification):

3-29.1 Remove the hairpin clip from the castle nut on top of the kingpin.

3-29.2 Loosen and remove the castle nut and washer.

3-29.3 Twist the kingpin counter clockwise to loosen it from the locking dowel and remove it from the kingpin housing.

3-29.4 Insert the kingpin in the other kingpin housing and twist it clockwise to lock it with the locking dowel pin.

3-29.5 Install the washer and the castle nut and tighten securely.

3-29.6 Put the hairpin clip through the hole in the kingpin end and the slots in the castle nut and clip it shut.

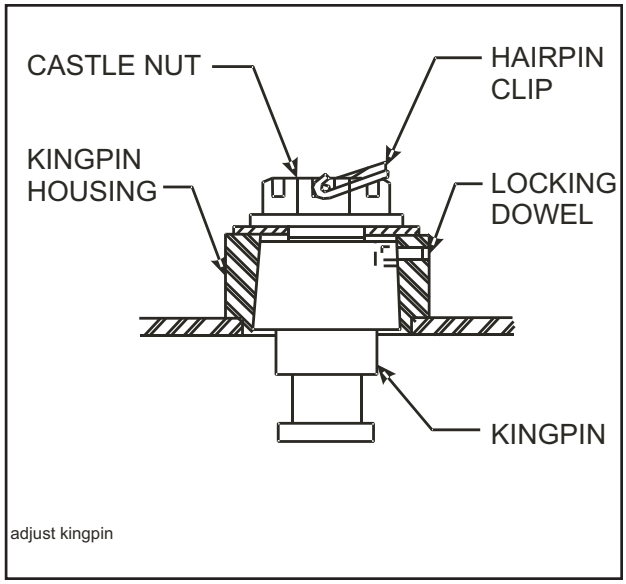

Figure 3-11 Adjustable Kingpin

https://truckmanualshub.com/

3-30 HYDRAULIC POWER SUPPLY ENGINE SYSTEM

The hydraulic power supply engine system is used to power the hydraulic controls in the event the towing vehicle is not equipped with hydraulic hookups. The procedure for operating the hydraulic power supply engine system is as follows:

3-30.1 Locate the throttle and key switch on the gooseneck **(See Figure 3-3)**.

3-30.2 Pull the throttle completely out. This closes the choke on the engine.

3-30.3 Turn the key to the "START" position. The engine should crank and then start. If the engine does not start, refer to **Section 5-6.**

3-30.4 When the engine starts, release the key to the "ON" position and adjust the speed by turning the throttle in or out as necessary until the engine is running smoothly. The hydraulic controls should now be functional.

3-30.5 To shut the engine off, turn or push the throttle all the way in.

3-30.6 Turn the key to the "OFF" position.

https://truckmanualshub.com/

3-31 ANTI-LOCK BRAKE SYSTEM (ABS)

Vehicle standards FMVSS No. 121, anti-lock brake system requires all trailers manufactured after March 1, 1998 with air brake systems to have ABS. Each trailer (including a trailer converter dolly) shall be equipped with an anti-lock brake system that controls the wheels of at least one axle of the trailer. Wheels on other axles of the trailer may be indirectly controlled by the anti-lock brake system.

NHTSA Docket 92-29; notice 11 published September 23, 1996 specifies the ABS warning light be mounted near the rear of the left side of the trailer **(See Figure 3-1)**.

- **Decal or lens marking with ABS to identify the lamp.**
- **The lamp must illuminate one time whenever power is supplied to the ABS. At any time the light remains on when power is supplied there is a malfunction to the system.**

The ABS used on the semitrailer is a commercial unit. Single axle trailers use a two sensor, one modulator system. Tandem axle semitrailers use a four sensor, two modulator system. Sensors are located at each hub of the front and rear axles, and each modulator controls one side of the trailer.

The ABS is constant powered by the auxiliary (blue) circuit, center pin on the semitrailer seven way electrical connector. This circuit must be hot whenever the tractor keyswitch is on. This circuit must also not be used to power any additional electrical devices while the semitrailer is moving forward. However, additional devices such as remote controls may be powered from the auxiliary circuit while the semitrailer is stationary. Back up power to the ABS is supplied through the stop lamp (red) circuit, No. 4 pin on the seven way connector, and ground is supplied by the white wire, No. 1 pin.

⚠ CAUTION

THE AUXILIARY (BLUE) CIRCUIT IS FOR POWERING THE SEMITRAILER ABS. THIS CIRCUIT MUST BE HOT WHEN THE TRACTOR KEY SWITCH IS ON. NO OTHER ELECTRICAL DEVICES MAY BE POWERED BY THIS CIRCUIT WHILE THE SEMITRAILER IS MOVING FORWARD.

Malfunction in the ABS is signaled by illumination of the ABS warning lamp located at the left rear side of the semitrailer. The warning lamp will come on and stay on while power is supplied to the ABS on a moving vehicle, if there is a fault. If a fault in the ABS exists, normal braking will still occur, but wheels may lock. The semitrailer is still operable, but the system should be serviced as soon as possible.

⚠ CAUTION

IF A FAULT EXISTS IN THE SEMITRAILER ABS, NORMAL BRAKING WILL OCCUR, BUT WHEELS MAY LOCK. SERVICE THE ABS AS SOON AS POSSIBLE.

The ABS is also equipped with a Blink Code Diagnostic Tool mounted at the right rear corner of the trailer **(See Figure 3-1).** This tool is used to identify faults that may occur in the ABS so that they may be repaired.

Refer to ABS maintenance manual supplied with semitrailer to answer basic questions for the anti-lock brake system, obtain outline procedures on how to adjust, test, remove, and install ABS components, as well as how to test for faults in the system by using “Blink Code Diagnostics”; and illustrates ABS components, wiring, and plumbing installation diagrams.

https://truckmanualshub.com/

3-32 COLD WEATHER OPERATION

3-32.1 Cold weather causes lubricants to congeal, insulation and rubber parts to become hard, which may lead to problems found in bearings, electrical systems, and air systems. Moisture attracted by warm parts can condense, collect and freeze to immobilize equipment. The truck/semitrailer operator must always be alert for indicators of cold weather malfunctions.

3-32.2 During any extended stop period, neither the service nor parking brake should be used as they can freeze up. Use wheel chocks to secure the vehicle from moving.

3-32.3 Check all structural fasteners, air system fittings, gaskets, seals and bearings for looseness that can develop due to contraction with cold. Do not over-tighten.

3-32.4 Check tire inflation. Tire inflation decreases when the temperature decreases.

3-32.5 Periodically check drain holes in the bottom of the relay valve (for trailers with air brakes) and storage compartments. They must be open at all times to avoid moisture entrapment.

3-33 HOT WEATHER OPERATION

3-33.1 Hot weather operation can create certain problems which must be checked. Expansion of parts result in tightening of bearings, fasteners, and moving parts. Failure of gaskets or seals can occur.

3-33.2 The semitrailer should be parked in the shade if possible. Long exposure to the sun will shorten service life of rubber components (i.e., tires, light and hose grommets, hoses, etc.) and paint life.

3-33.3 Check tire pressure early in the day before beginning operations while the tire is cool. Replace all valve stem caps after checking.

3-33.4 If the area is extremely humid, protect electrical terminals with ignition insulation spray. Coat paint and bare metal surfaces with an appropriate protective sealer.

3-33.5 The use of a filter-lubricator in the towing vehicle's air delivery system is recommended.

https://truckmanualshub.com/

https://truckmanualshub.com/

MAINTENANCE AND LUBRICATION 4

This section contains instructions necessary for proper maintenance of the semitrailer. The Model 325/326/327/329C detachable trailer is designed for years of service with minimal maintenance. However, proper maintenance is important for durability and safe operation and is an owner/user responsibility.

4-1 MAINTENANCE SCHEDULE

Trailer maintenance includes periodic inspection and lubrication. **Table 4-2, Maintenance Schedule**, lists the recommended maintenance and lubrication tasks by time interval and by accumulated mileage (use whichever occurs first).

⚠ DANGER

OPERATING THE TRACTOR OR TRAILER WITH DEFECTIVE, BROKEN OR MISSING PARTS MAY RESULT IN SERIOUS INJURY OR DEATH, DAMAGE TO THE TRACTOR/TRAILER, ITS CARGO, OR PROPERTY IN ITS PATH.

4-1.1 Inspection

a. Inspect the tractor, the trailer, and trailer parts periodically for damage or signs of pending failure. Damaged or broken parts must be repaired or replaced at once. Determine the cause of any binding or hydraulic leakage at once. Correct the problem before using the tractor or trailer.

b. Use the troubleshooting section, **Chapter 5** to check for “SYMPTOMS” and “PROBLEMS” of any trailer system not functioning correctly, or where wear, distortion, or breakage are found. Administer “REMEDY” according to the right-hand column of the troubleshooting section.

4-1.2 Lubrication

Figure 4-1 and Tables 4-1 and 4-2 detail lubrication points and intervals, method of application, and lubricant required, and illustrate the location of each part to be lubricated. During inspections of the trailer, if lubricants are found to be fouled with dirt or sand, those parts should be cleaned with paint thinner, dried, and relubricated immediately. Dirt in a lubricant forms an abrasive compound that will wear parts rapidly.

⚠ WARNING

PAINT THINNER AND OTHER SOLVENTS ARE FLAMMABLE AND TOXIC TO EYES, THE SKIN, AND RESPIRATORY TRACT. AVOID SKIN AND EYE CONTACT. GOOD GENERAL VENTILATION IS NORMALLY ADEQUATE. KEEP AWAY FROM OPEN FLAMES OR OTHER COMBUSTIBLE ITEMS.

https://truckmanualshub.com/

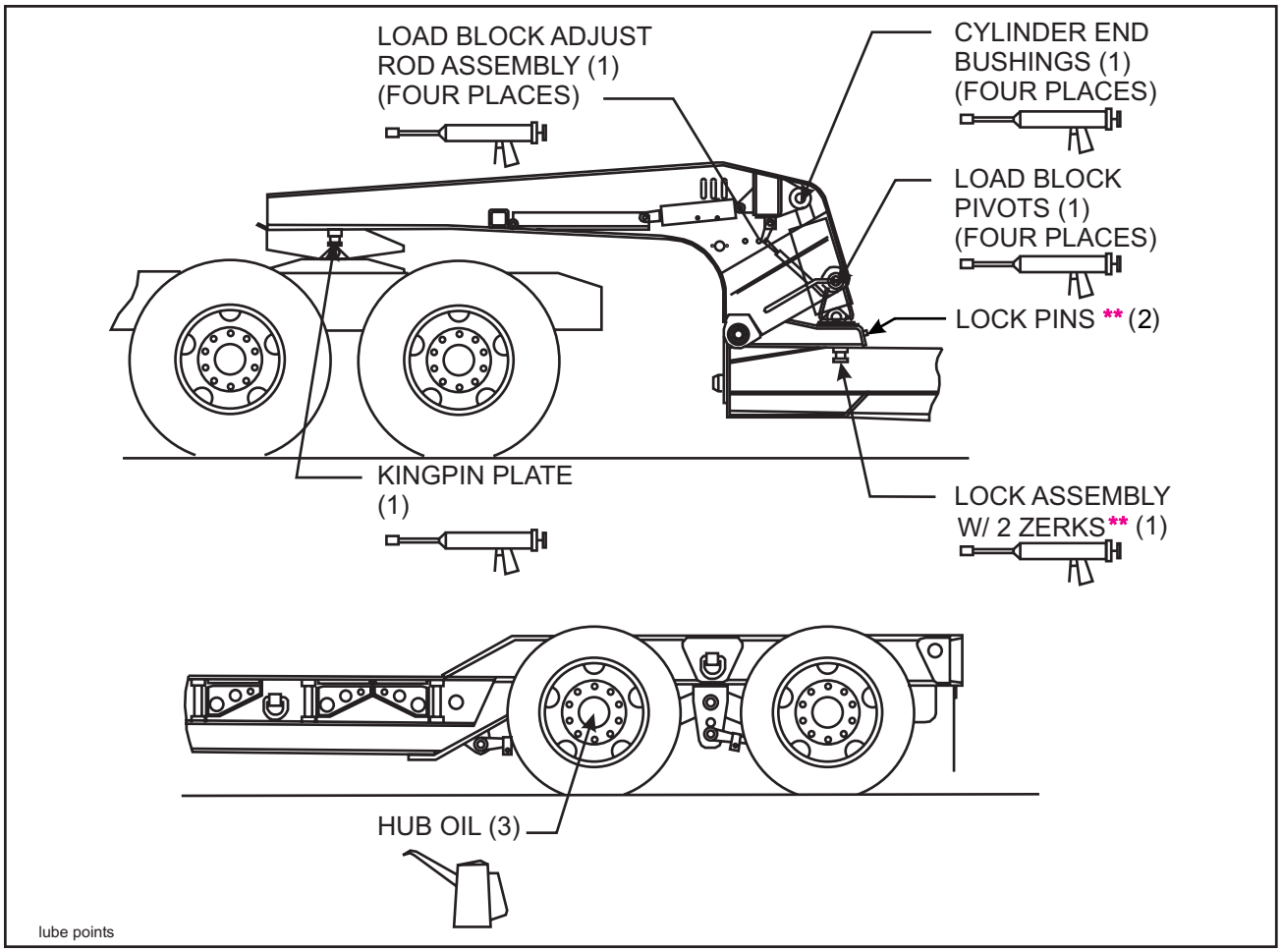

Figure 4-1 Lubrication Points

LUBE	SEASON	BRAND AND PRODUCT (WEIGHT AND/OR TYPE)			
		AMOCO	**EXXON**	**PHILLIPS**	**TEXACO**
1	ALL YEAR	Lit-Multi-purpose Grease	Ronex Multi-purpose Grease	Phil Lube M.W. Grease	MarFax All Purpose
2	ALL YEAR	Industrial Oil 32	Estic 32	Condor 32 or Magnus 32	Regal Oil R&O 32
3	ALL YEAR	Gear Lube SAE 80W-90	Gear Oil GX SAE 80W-90	Superior MP Gear Oil SAE 80W-90	Multi-gear EP SAE 80W-90

Table 4-1 Lubrication Specifications

NOTE: ** DETACH GOOSENECK AND LUBRICATE MONTHLY

https://truckmanualshub.com/

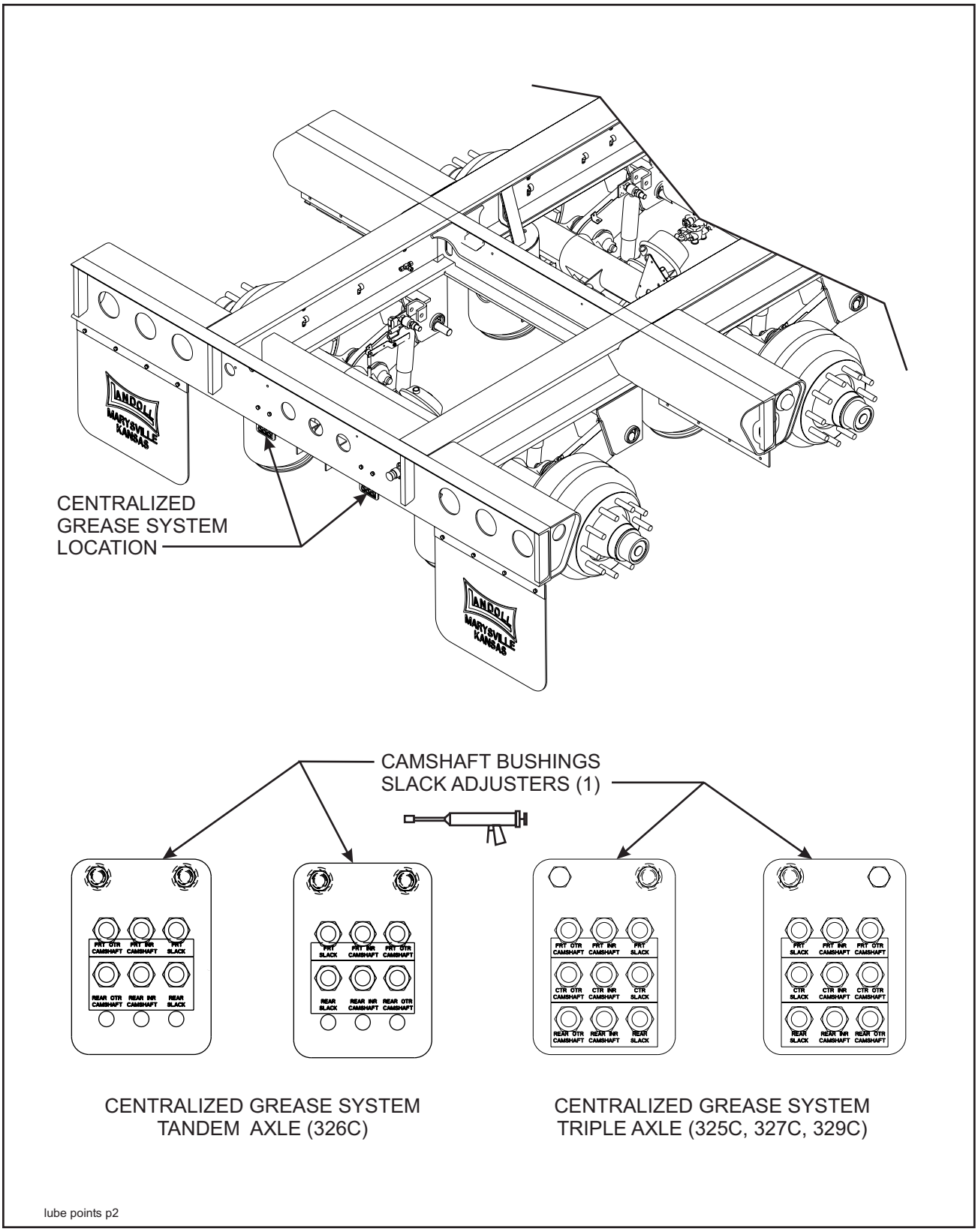

Figure 4-2 Lubrication Points

https://truckmanualshub.com/

4-2 MAINTENANCE PROCEDURES

4-2.1 Repair Parts

Repair parts are illustrated and listed in a separate parts manual. Replacement of parts due to wear is determined by examination and measurement in the Maintenance Procedures of this section.

4-2.2 Tools and Equipment

Tools, equipment, and personnel normally found in a facility capable of making truck repairs will be adequate for maintenance of the semitrailer. No other special tools or equipment should be necessary.

4-2.3 Torque Values

Tables 2-1 and 2-2 list torque values for standard hardware and hydraulic fittings. They are intended as a guide for average applications involving typical stresses and mechanical surfaces. Values are based on the physical limitations of clean, plated, and lubricated hardware. In all cases, when an individual torque value is specified, it takes priority over values given in this table. Replace original fasteners with hardware of equal grade.

4-2.4 Cleaning

a. Wash semitrailer to remove all accumulated dirt and grime.

b. Use any mineral spirits paint thinner (or its equivalent) to remove grease and oil from all parts of the trailer. Rinse degreasing solution off with cold water.

c. Inspect semitrailer for cause of any reported troubles.

⚠ WARNING

PAINT THINNER AND OTHER SOLVENTS ARE FLAMMABLE AND TOXIC TO EYES, SKIN, AND RESPIRATORY TRACT. AVOID SKIN AND EYE CONTACT. GOOD GENERAL VENTILATION IS NORMALLY ADEQUATE. KEEP AWAY FROM OPEN FLAMES OR OTHER COMBUSTIBLE ITEMS.

https://truckmanualshub.com/

NORMAL OPERATING SERVICE INTERVALS [a]								
SERVICE INTERVAL : ITEM	TIMES	1st 5 Hrs	Weekly	Monthly	6 Months	Yearly	LUBE #	NOTES
	MILES	50	500	2,000	12,000	25,000		
LIGHTS		I	I					
WIRING & CONNECTIONS		I		I				
FASTENERS		I,T		I				b
KING PIN AND PLATE		I		C,I,L			3	c
BRAKE AIR SYSTEM		I	I	I				
RELAY VALVES						I,C		
BRAKE ADJ & WEAR		I		I,T				d
SLACK ADJUSTERS		I	I		L		3	c
CAMSHAFT ASSYS		I	I			L	3	c
HUB OIL		I	I,L			R	5	c
WHEEL BEARINGS		I			I,T		5	c
TIRE INFLATION & WEAR		I	I					e
WHEEL LUG NUTS		I,T	I	I,T				f
SUSPENSION ALIGNMENT		I		I				
AIR RIDE SUSPENSION				I,T		I,T		
HYDRAULIC OIL		I	I			R	1	c
HYDRAULIC FILTER		R			R			
HOSES (Inspect & Replace as needed)		I		I		I,R		
WINCH GEAR CASE (OPT.)		I		I			2	c

I – Inspect, R – Replace, T– Tighten/ Adjust Torque, L – Lubricate, C – Clean

NOTES:

a. Perform at the time shown. Shorten service intervals when operating in severe or dirty conditions.
b. See **Tables 2-1 and 2-2 (General and Hydraulic Fitting Torque Charts)** for correct torque.
c. See **Table 4-1 (Lube Specification Chart)** for recommended lubricant.
d. See **Section 4-8, 4-9** for procedures.
e. See Serial Number Plate on the front of the semitrailer for proper inflation requirements.
f. See **Section 4-10, 4-11** for procedures.

Table 4-2 Models 325/326/327/329C Maintenance Schedule

https://truckmanualshub.com/

d. Scrape, sand, prime, and repaint areas where finish is missing or where there is evidence of corrosion.

e. Replace any missing or illegible decals. Replace any missing or damaged reflective tape.

f. Use Troubleshooting Guide to check for "SYMPTOMS" AND "PROBLEMS" of any semitrailer system not functioning correctly, or where wear, distortion, or breakage can be found. Administer "REMEDY" according to right-hand column of Troubleshooting guide.

g. After disassembling any components, thoroughly clean dirt and old lubricant from all parts. Do not use a wire brush on any bearing parts or surfaces — use a stiff bristle brush. Do not use compressed air, or spin bearing parts when cleaning. These practices can throw solvents, dirt, or metal particles into your eyes. Dry clean parts with lint free, clean, soft, absorbent, cloth or paper. Wash and dry hands.

h. Inspect seals, seal wiping surfaces, bearing caps, and bearing cones for wear, pitting, chipping, or other damage.

4-3 GOOSENECK, FRAME, AND DECK

4-3.1 Repairing Structural Defects

If any structural defect is found, the fault must be corrected before further use of the vehicle. To continue usage could endanger the trailer, its load, personnel, traffic, and properties. If any cracks or breaks are found, contact the Landoll factory for repairs. Inspect the deck daily for broken or missing planks or missing attachments. Replace any defective parts promptly.

4-4 HYDRAULIC SYSTEM

4-4.1 General

a. Check the hydraulic oil level weekly, or after any leakage. See **Table 4-1** for proper hydraulic oil. Check the hydraulic oil level with hydraulic cylinders in the retracted position and the hydraulic pump disengaged. Enough volume in tank (approximately 15 gallons) above hydraulic oil level must be available to accept extra oil from cylinders when retracted.

b. Overfilling can cause hydraulic fluid overflow during operation.

c. Hydraulic system pressure relief valves should be set at 2500 psi.

d. Check hoses weekly for cracks or leaks. If a valve or line leaks, it should be replaced immediately.

https://truckmanualshub.com/

4-5 ELECTRICAL SYSTEM

4-5.1 Maintenance of the electrical system consists of inspection and minor servicing. Any wire, connection or electrical component showing signs of corrosion, wear, breakage or unraveling must be repaired or replaced. **(See Figures 4-3 and 4-4 for electrical wiring diagram).**

4-5.2 Frayed or unraveling wire must have the defective section removed and replaced with wire of the same color and gauge. Seal all connections and insulate.

4-5.3 Corroded terminals must have the corrosion removed, source of corrosion neutralized and the terminals resealed, protected, and insulated.

4-5.4 Fuse or circuit breaker burn-out or blow-out usually indicates an electrical short-circuit, although a fuse can occasionally fail from vibration. Insert a second fuse or reset the breaker. If this fuse immediately burns out or the breaker trips, locate the cause of the electrical short and repair.

4-5.5 A light that repeatedly burns-out usually indicates a loose connection, poor system ground, or a malfunctioning voltage regulator. Locate the source of the problem and repair. System grounds must be grounded to bare metal surfaces. Paint, grease, wax, and other coatings act as insulators. Replacement lamps must be equivalent to the factory installed lamp.

4-6 FIFTH WHEEL

DANGER

ALL FIFTH WHEEL MAINTENANCE, ADJUSTMENTS, AND REBUILDING MUST BE DONE BY A QUALIFIED PERSON USING PROPER TOOLS AND PROCEDURES. CONTACT THE LANDOLL FACTORY FOR SERVICING AND REPAIR OF THE FIFTH WHEEL. USING AN IMPROPERLY REPAIRED OR REBUILT FIFTH WHEEL MAY RESULT IN SERIOUS INJURY OR DEATH TO PERSONNEL, DAMAGE TO THE TRACTOR/SEMITRAILER AND ITS CARGO, AND DAMAGE TO PROPERTY IN ITS PATH.

4-6.1 Checking Gooseneck Lock Mechanism Operation:

a. Close the locks using a lock tester. Verify that the locking mechanism is operating correctly.

https://truckmanualshub.com/

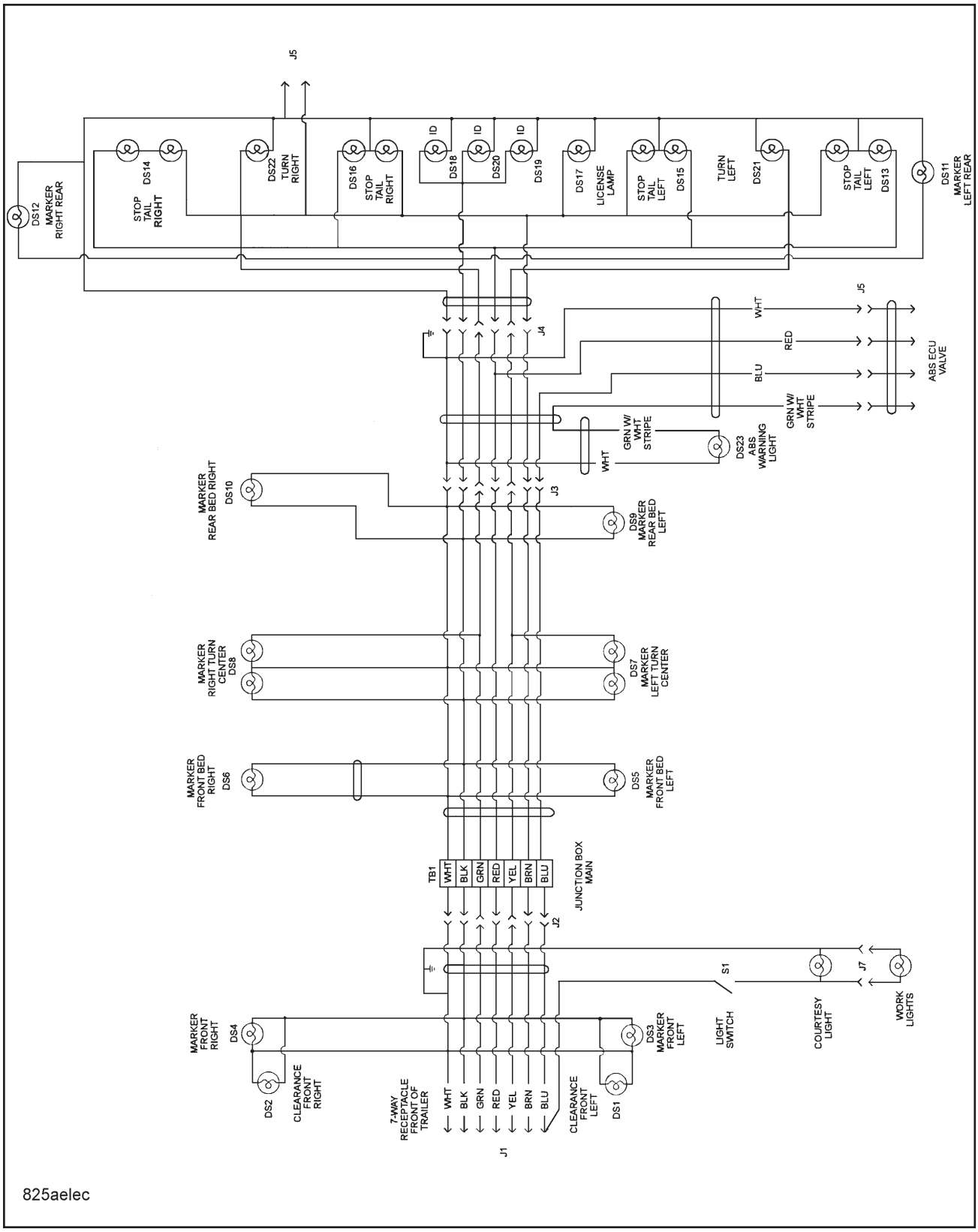

Figure 4-3 Models 325/326/327/329C Wiring Diagram

https://truckmanualshub.com/

325/326/327/329C WIRING PARTS LIST	
REF. DES.	**FUNCTION**
DS1	FRONT LEFT CLEARANCE, YELLOW
DS2	FRONT RIGHT CLEARANCE, YELLOW
DS3	FRONT LEFT MARKER, YELLOW
DS4	FRONT RIGHT MARKER, YELLOW
DS5	LEFT FRONT BED MARKER, YELLOW
DS6	RIGHT FRONT BED MARKER, YELLOW
DS7	LEFT SIDE MARKER/TURN, YELLOW
DS8	RIGHT SIDE MARKER/TURN, YELLOW
DS9	LEFT REAR BED MARKER, YELLOW
DS10	RIGHT REAR BED MARKER, YELLOW
DS11	LEFT REAR SIDE MARKER, RED
DS12	RIGHT REAR SIDE MARKER, RED
DS13	LEFT STOP/TAIL, OUTER
DS14	RIGHT STOP/TAIL, OUTER
DS15	LEFT STOP/TAIL, INNER
DS16	RIGHT STOP/TAIL, INNER
DS17	LICENSE PLATE LIGHT
DS18	IDENTIFICATION RIGHT
DS19	IDENTIFICATION LEFT
DS20	IDENTIFICATION CENTER
DS21	LEFT TURN, YELLOW
DS22	RIGHT TURN, YELLOW
DS23	ABS MALFUNCTION INCATOR, YELLOW
DS24	LEFT REAR SIDE MARKER, RED
DS25	RIGHT REAR SIDE MARKER, RED

325/326/327/329C WIRING PARTS LIST	
REF. DES.	**FUNCTION**
DS26	LEFT STOP/TAIL, OUTER
DS27	RIGHT STOP/TAIL, OUTER
DS28	LEFT STOP/TAIL, INNER
DS29	RIGHT STOP/TAIL, INNER
DS30	LICENSE PLATE LIGHT
DS31	IDENTIFICATION RIGHT
DS32	IDENTIFICATION LEFT
DS33	IDENTIFICATION CENTER
DS34	LEFT TURN, YELLOW
DS35	RIGHT TURN, YELLOW
J1	FRONT MAIN CONNECTOR
J2	G/N DECK CONNECTOR
J3	LOWER DECK CONNECTOR
J4	REAR HARNESS CONNECTOR
J5	REAR AUX. RECEPTACLE
J6	ABS ECU VALVE CONNECTOR
J7	WORK LIGHTS
J8	REAR HARNESS CONNECTOR
J9	FRONT MAIN CONNECTOR
J10	REAR HARNESS CONNECTOR (FLIP)
TB1	PRIMARY JUNCTION BOX
S1	COURTESY LIGHT/WORK LIGHTS

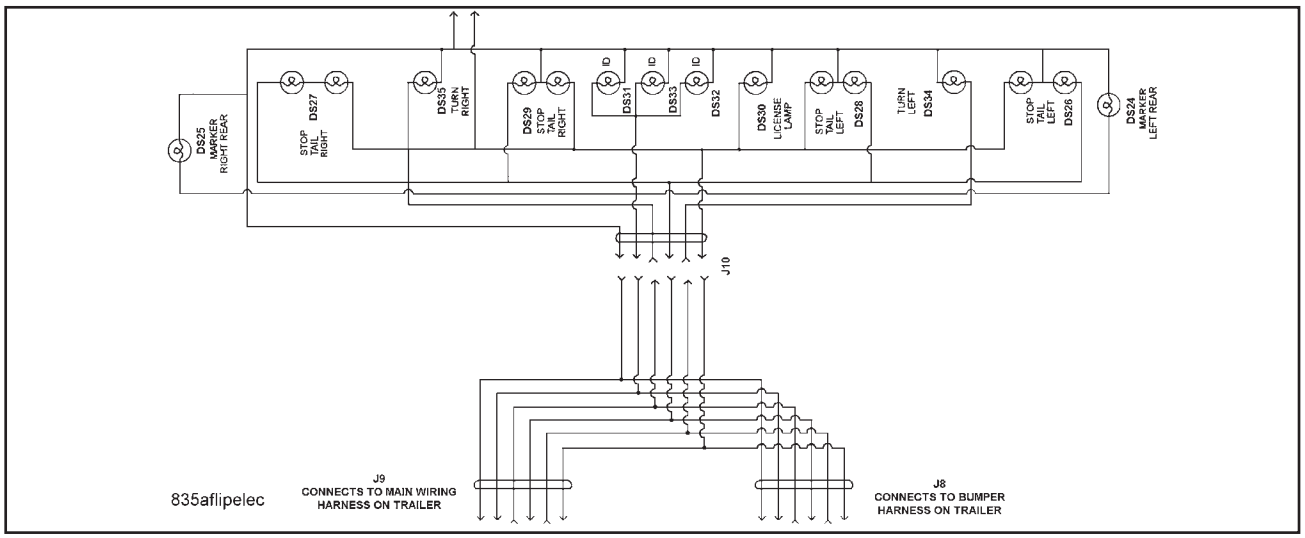

Figure 4-4 Models 325/326/327/329C Flip Axle Wiring Diagram

https://truckmanualshub.com/

4-6.2 Periodic Maintenance of the Gooseneck Lock Mechanism:

a. The gooseneck lock mechanism should be inspected and adjusted as necessary or every 30,000 miles. The inspection should include a check for cracks in the top plate, elongated attachment holes, and excessive wear or failure of component parts. Any defective parts must be replaced before the lock mechanism is used.

b. Close the locks and insert a 2"±.005 plug in the locks.

c. Check for a tight fit. The plug should be snug, but you should be able to rotate it by applying some force.

d. If the plug fits loosely, tighten by rotating the nut on the shank counterclockwise. It may be necessary to tap the end of the yoke shank lightly to allow the nut to seat against the top plate **(See Figure 4-5).**

e. Repeat this procedure until the plug fits snug, but can still be rotated.

f. Use a lock tester to verify the proper operation of the locking mechanism.

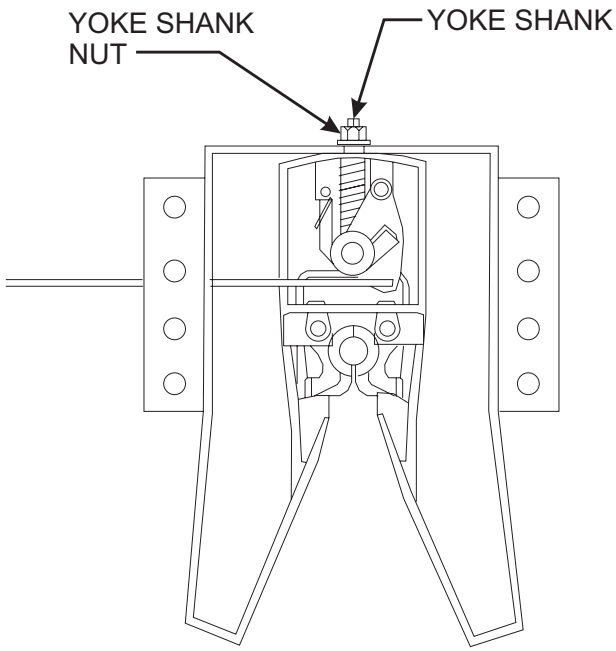

fifth wheel adjustment

Figure 4-5 Fifth Wheel Adjustment

https://truckmanualshub.com/

4-6.3 Gooseneck Lock Rebuilding Procedure:

Refer to **Figure 4-8** for parts identification and proper parts orientation.

a. Disassemble the lock and inspect the top plate for cracks or elongated holes. Cracked top plates must be discarded, but a top plate with elongated holes may be rebuilt after building the holes up and reboring them.

b. Lubricate the lock pin holes with Neverseez or its equivalent.

c. Insert the lock jaws into the top plate with the 2-7/8" bore toward the face of the top plate.

d. Drive the lock pins through the top plate and the lock jaw pin holes until the lock pins are flush with the face of the top plate.

e. Secure the lock pins with cotter pins.

f. Check to be sure the lock jaws can move freely and install a 2" diameter plug in the lock jaws.

g. The yoke must fit precisely for maximum service life and proper lock function. Bend the tips of the yoke slightly outward.

h. Slide the yoke into the top plate with the threaded hole in the yoke facing upward and tap it into position.

i. Check the position of the yoke tips. They must be flush with the ends of the locks or must not extend more than 1/32" beyond the ends of the locks **(See Figure 4-6).** If the yoke are short of the ends of the locks, it will be necessary to grind the outside surfaces of the yoke with a belt sander or grinder until it fits precisely into place **(See Figure 4-6).** If the yoke extends beyond the ends of the locks, it will be necessary to build up the contact surface of the yoke with weld using a low hydrogen E70XX welding rod and grind the surfaces back down to the proper fit **(See Figures 4-6 and 4-7).**

IMPORTANT

NEVER GRIND OR WELD ON THE INSIDE SURFACE OF THE YOKE OR ON THE LOCKS.

j. There are two contact surfaces **(See Figure 4-7)** on the outside of each yoke tip. All four surfaces must have full area contact with the top plate ribs. Continue the weld, grind, and fit process until the yoke has full contact and the yoke tips are flush with the ends of the locks.

k. Lube both the inside and outside friction surfaces of the yoke and then slide it into the top plate with the threaded hole facing up.

l. Install the spring between the yoke and the top plate. Insert the yoke shank through the top plate, spring, and into the yoke. Make sure that the predrilled recess in the yoke shank aligns with the threaded hole in the yoke.

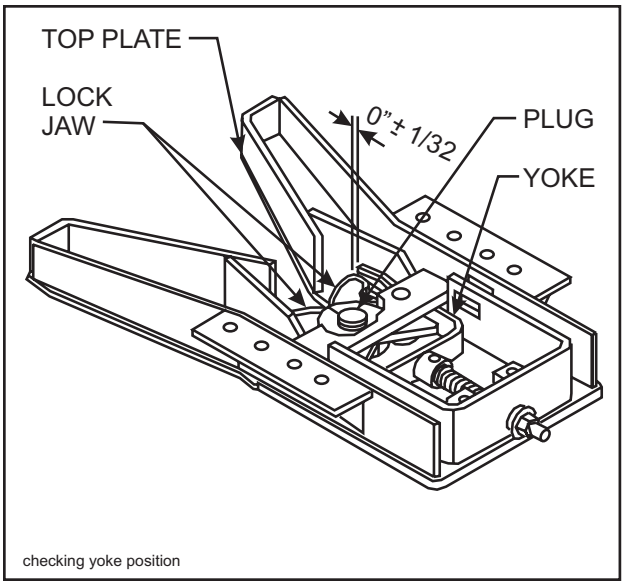

Figure 4-6 Checking Yoke Position

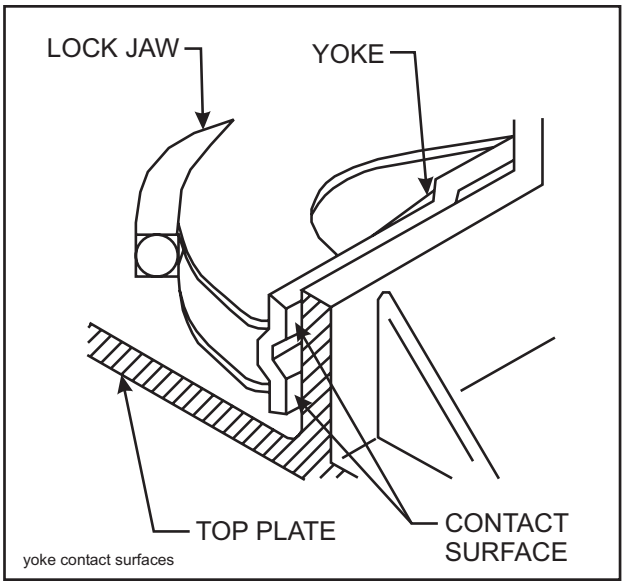

Figure 4-7 Yoke Contact Surfaces

https://truckmanualshub.com/

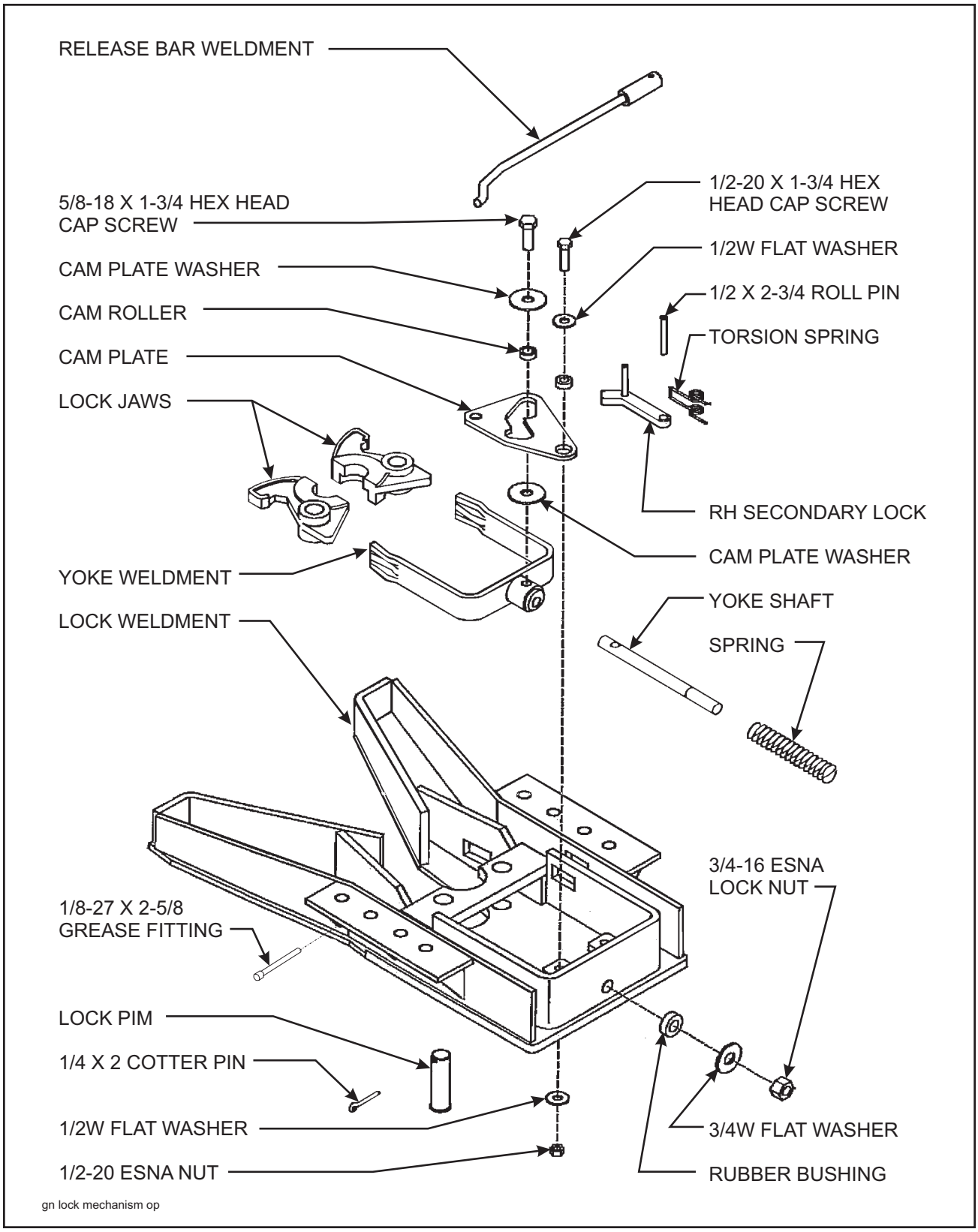

Figure 4-8 Gooseneck Lock Mechanism

https://truckmanualshub.com/

m. Install, in this order, the rubber washer, the metal washer, and the 3/4" lock nut.

n. Insert the release handle through the driver's side guide hole in the top plate, from the outside to the inside.

o. Inspect the cam plate for burrs or rough edges in the cam profile. Remove any that you find.

p. Lubricate the cam profile and the pivot holes with a multi-purpose light grease.

q. Insert the "S" end of the release handle through the small hole in the cam.

r. Lay the cam on the top plate so that the cam profile is over the hole in the yoke and the large hole is over the lub in the top plate opposite the release handle.

s. Slide a 9/16 flat washer between the top plate lug and the cam with the rounded edge of the washer towards the cam.

IMPORTANT

WHEN ASSEMBLING ANY WASHERS TO THE CAM, THE ROUNDED EDGE OF THE WASHER SHOULD FACE THE CAM.

t. Install the 1/2" roller in the large hole of the cam and place a second 1/2 flat washer over the roller. Make sure the rounded edge is against the cam.

u. Insert the 1/2 bolt through the washers, the roller, the cam, and the top plate lug and secure with a 1/2 lock nut. Check the cam to be sure it can move freely.

v. Place a 5/8 flat washer between the yoke and the cam with the round edge of the washer against the cam.

w. Insert the 5/8 roller in the cam opening and lay the second 5/8 washer on top of the roller with the rounded edge against the cam.

x. Insert a 5/8 bolt through the washers, roller, and cam, and into the yoke shank. Tighten the bolt securely and determine that the top washer still rotates freely.

y. Tighten the nut on the yoke shank until the yoke just begins to move.

z. Check the plug in the lock jaws. It should be tight, but still be able to rotate when some force is applied.

aa. To install the secondary lock, start a roll pin into the top plate lug hole that was not used by the cam.

ab. Assemble the torsion spring to the secondary lock and place the assembly between the top plate lug and the face of the top plate. Be sure the open end of the spring faces the rib of the lug. Drive the roll pin in the rest of the way.

ac. Test the gooseneck lock mechanism with a fifth wheel lock tester before using the semitrailer.

https://truckmanualshub.com/

4-7 SUSPENSION MAINTENANCE

4-7.1 Spring Suspension (Model 326)

a. Make certain that all springs are properly located on the wear pads. Twisted springs or cocked hangers will cause uneven spring contact with wear pad and will result in excessive wear on the spring suspension. Check the shocks for excessive wear.

b. To obtain proper torque, it is recommended to back off nuts, clean threads, oil threads with SAE 20 oil, then tighten.

c. Replacing the equalizer bushings and the torque arm bushings on the spring suspension is a complex operation and should be left to trained service personnel. If the bushings need to be replaced, contact a Landoll authorized service center or the Landoll factory for servicing **(See Figure 4-9)**.

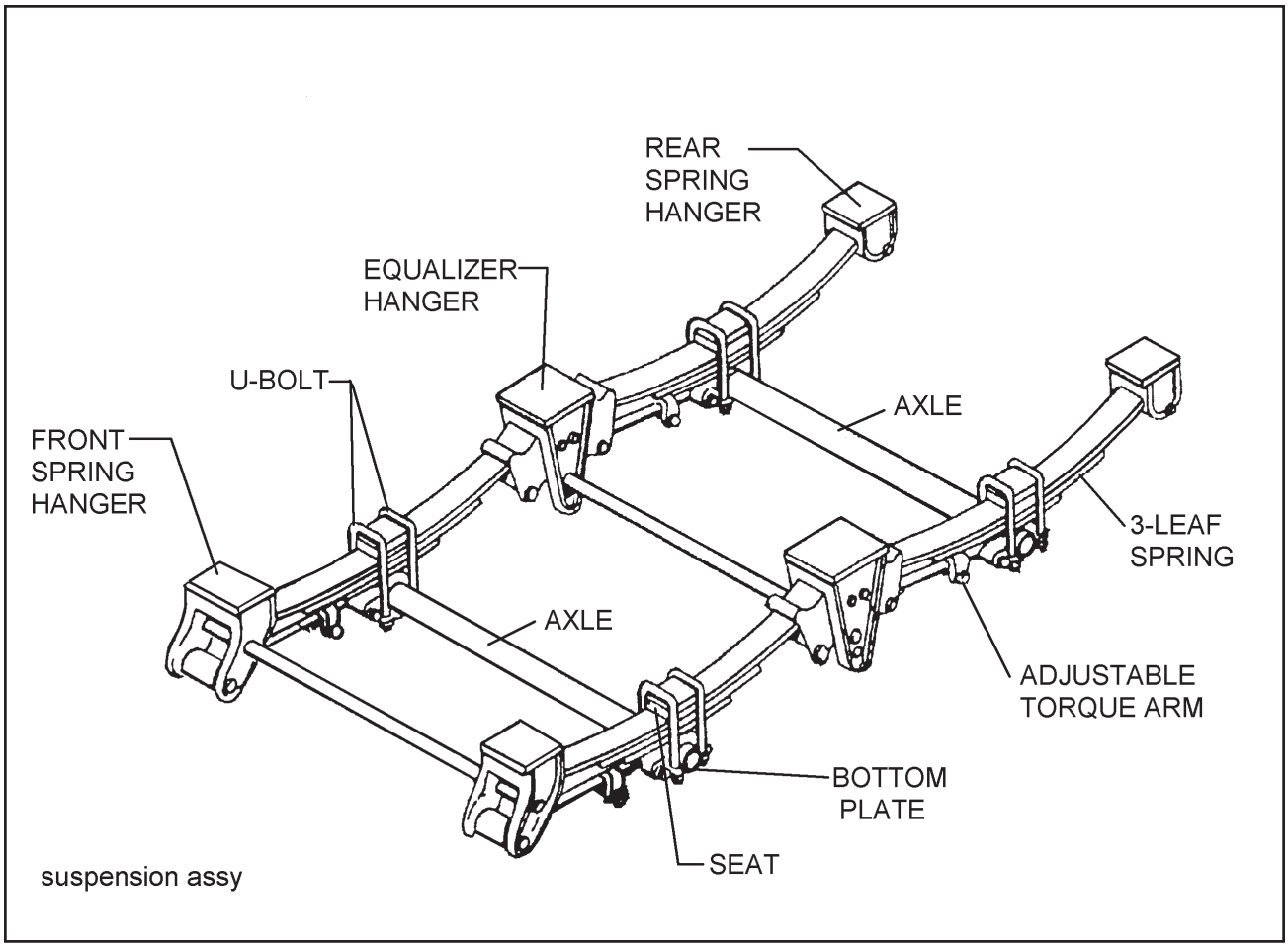

Figure 4-9 Spring Suspension System

https://truckmanualshub.com/

4-7.2 See **Figure 4-10** for Tandem/Triple Axle Air Ride Suspension drawings.

a. Physically check all nuts, bolts, and air line fittings for proper torque (see torque chart below).

AIR SUSPENSION TORQUE CHART				
Size	1-1/8"-7	1/2"-13	*3/4"-16	3/4"-10
Torque in Ft. Lbs.	**800 or 550	35	35	150

* Air Spring Connections Only.

** First number listed is torque required if bolt head designated with Neway; Second number listed is torque required if bolt head designated with Holland Neway.

b. Check all other suspension components for any sign of damage, looseness, wear or cracks.

c. With trailer on level surface and air pressure in excess of 65 psi, all air springs should be of equal firmness. The height control valve on right side of front axle controls all air springs on tandem axle suspensions.

d. The height control valve on right side of center axle controls ride height for all air springs on triple axle suspension.

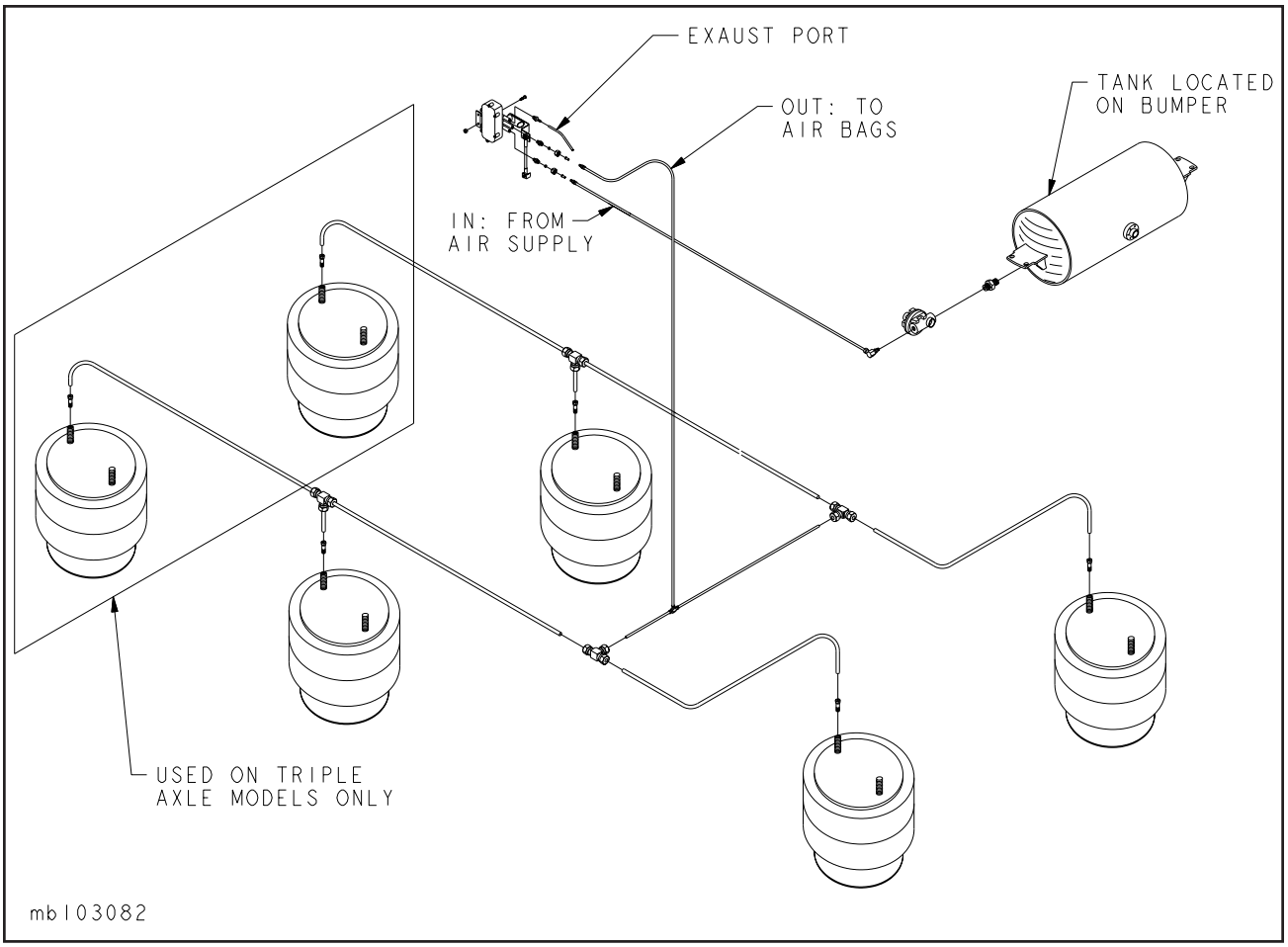

Figure 4-10 Tandem/Triple Axle Air Ride Suspension System

https://truckmanualshub.com/

4-7.3 Air Ride Height Adjustment. **(See Figure 4-11** for parts identification**).**

a. Before adjusting, the vehicle must be empty with the kingpin at operating height and have air supplied to the trailer.

b. Disconnect linkage at the control arm and raise control arm to the “up” position, raising the trailer until a block can be placed between axle tube and undercarriage frame **(See Figure 4-11).**

c. Position the wood block between the axle tube and frame according to table below. Block height is dependent upon suspension ride height and/or axle brake size.

AIR SUSPENSION RIDE HEIGHT AND BLOCK		
Brake Size	Ride Height	Block Height
16-1/2" Dia.	9"	6.5"

d. Lower the trailer by exhausting air from the air springs by moving the control arm to the “down” position (about 45°) until the axle tube is resting on the block.

e. Check the ride height to make sure it is correct. Consult Landoll Service Center if correct height cannot be obtained.

f. Loosen the 1/4" adjusting lock nut located on the adjusting block, allowing the control arm to move approximately 1 inch. Move the adjusting block until holes align, then insert locating pin. **(See Figure 4-11)**.

g. Align the control arm linkage to the control arm lower bracket and re-tighten the 1/4" adjusting lock nut to 2-4 ft.lbs. The ride height valve should now be correctly adjusted.

h. Remove the locating pin.

i. The block can now be removed by using the height control valve as an improvised jack by disconnecting the control arm at the lower bracket and pushing the control arm to an “up” position.

j. Remove the block and reconnect the linkage. This allows the Automatic Height Control Valve to resume normal operation.

k. Check the air ride height. If necessary, go through the adjustment procedure again until the proper air ride height is achieved.

l. Check the air ride height periodically and adjust as needed.

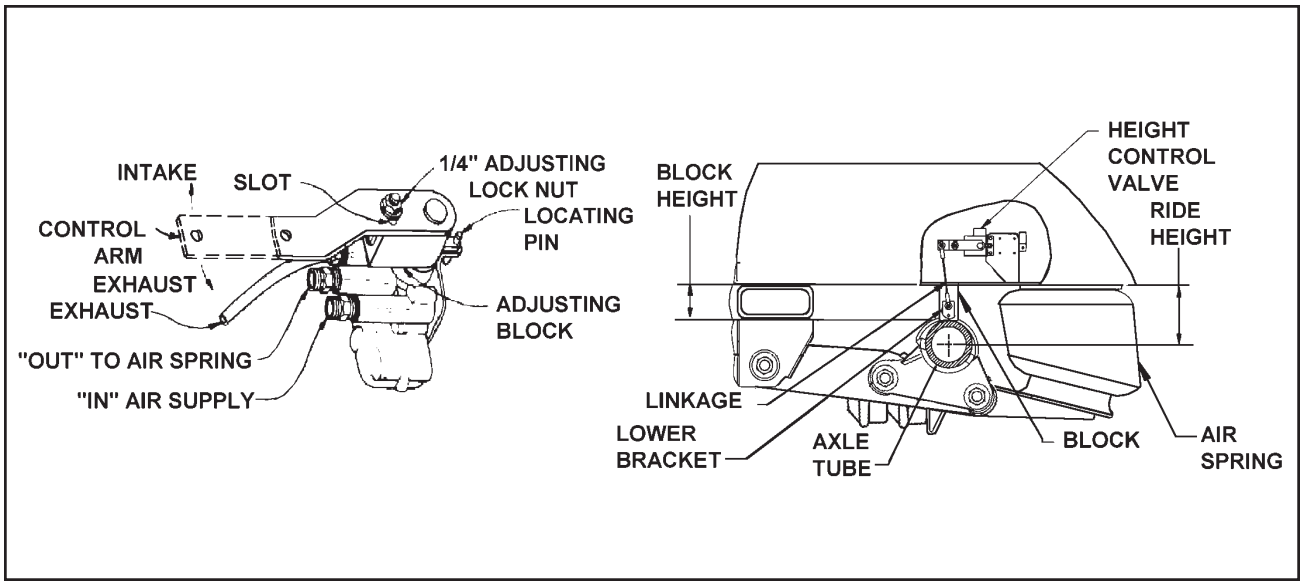

Figure 4-11 Air Ride Height Adjustment

https://truckmanualshub.com/

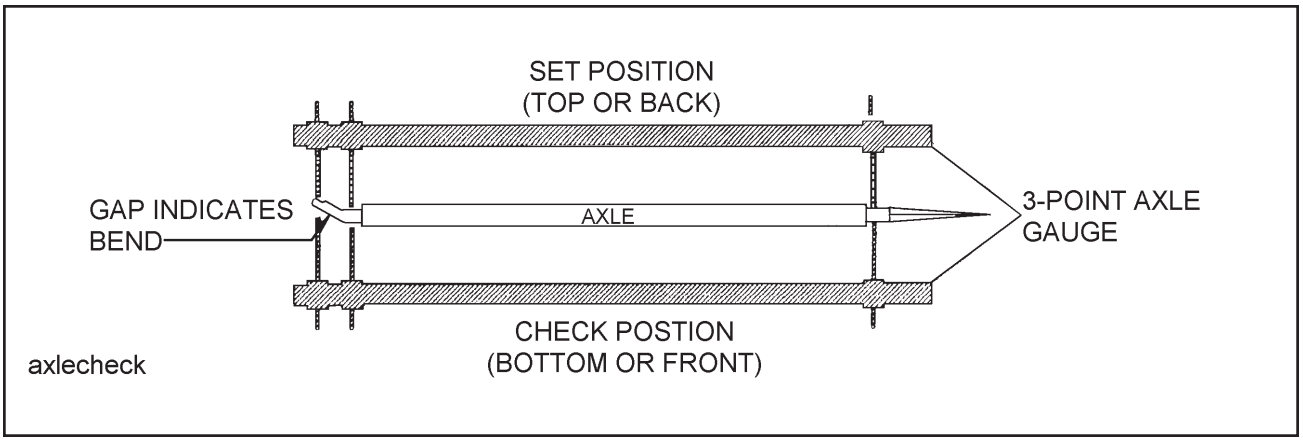

Figure 4-12 Checking Axle for Bend

4-8 ALIGNMENT

4-8.1 Wheel Alignment

⚠ DANGER

TO PREVENT A LIFE THREATENING ACCIDENT:

1. SUPPORT TRAILER AND UNDERCARRIAGE SO TIRES ARE OFF THE GROUND.

2. SUPPORT THE TRAILER AND UNDERCARRIAGE ON JACK STANDS WITH SUFFICIENT CAPACITY TO SUPPORT THE TOTAL WEIGHT OF THE TRAILER AND ANY LOAD WHICH IT MAY BE CARRYING.

When trailer tires show signs of scuffing, feather-edging or uneven wear, examine the trailer for damaged suspension (frame, shocks, linkage, etc.), axle, wheel bearings and wheels. Proper wheel alignment and wheel bearing adjustment is essential for proper tire wear. The simplest form of checking wheel alignment “toe” is by running the trailer over a “SCUFF GAUGE”. A scuff gauge reading of 16 feet or less per mile is considered satisfactory. If a scuff gauge is not readily available, or edge wear on one side of a tire is occurring signifying positive or negative camber, alignment can be checked as follows:

a. Remove wheel, hub and bearing assemblies.

b. Place a 3-point axle gauge against the front side of the axle, and adjust each axle gauge point to the axle. (Double point end against the inner and outer wheel bearing surfaces of the spindle being checked and the other point on the inner bearing surface on the other spindle) **(See Figure 4-12).**

c. Move the axle gauge and place against the back side of the axle. If either of the points of double point end fails to touch the axle surface, a bent spindle is evident. A point gap of .015" or more is considered excessive tire “toe” and the axle must be replaced **(See Figure 4-12)**.

d. Follow the same procedures as in **Section 4-7.1, 4-8.1 b. and c.,** except place the axle gauge above and below the axle. If gauge point gap is found, the axle has positive or negative camber. The trailer axle has no camber from the factory. If it is found to have positive or negative camber, axle replacement is necessary **(See Figure 4-14** for examples of camber).

https://truckmanualshub.com/

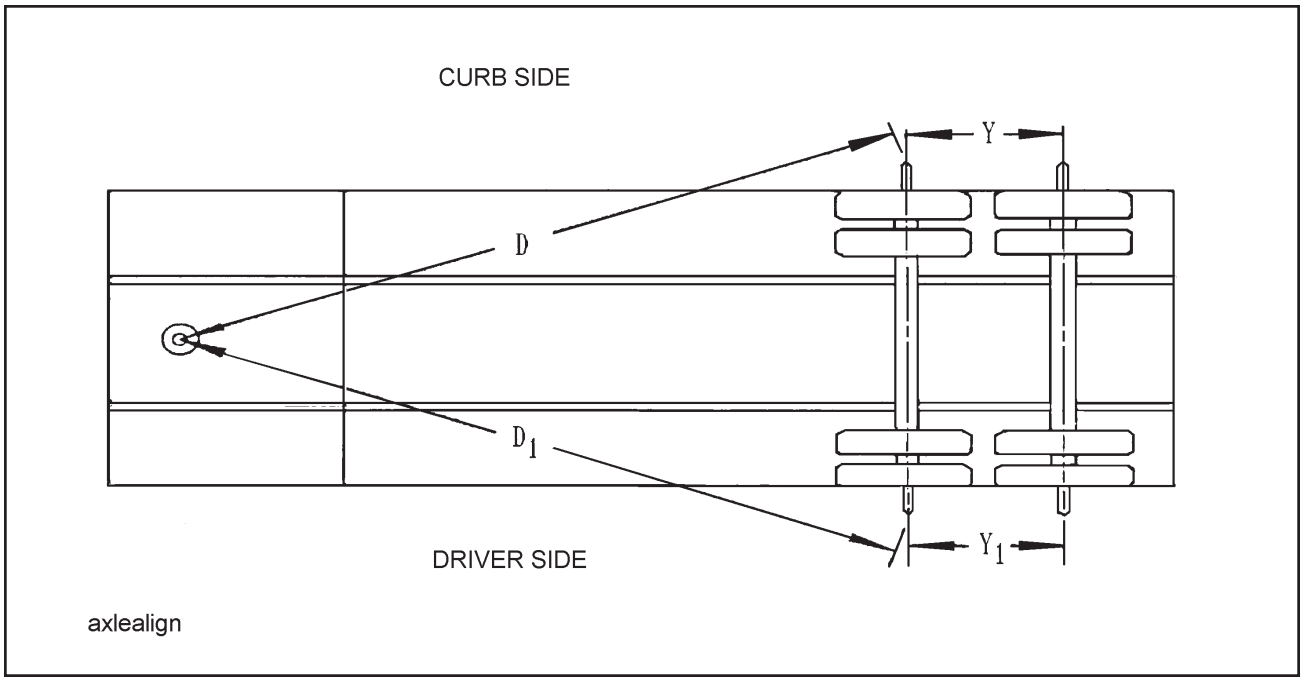

Figure 4-13 Checking Axle Alignment

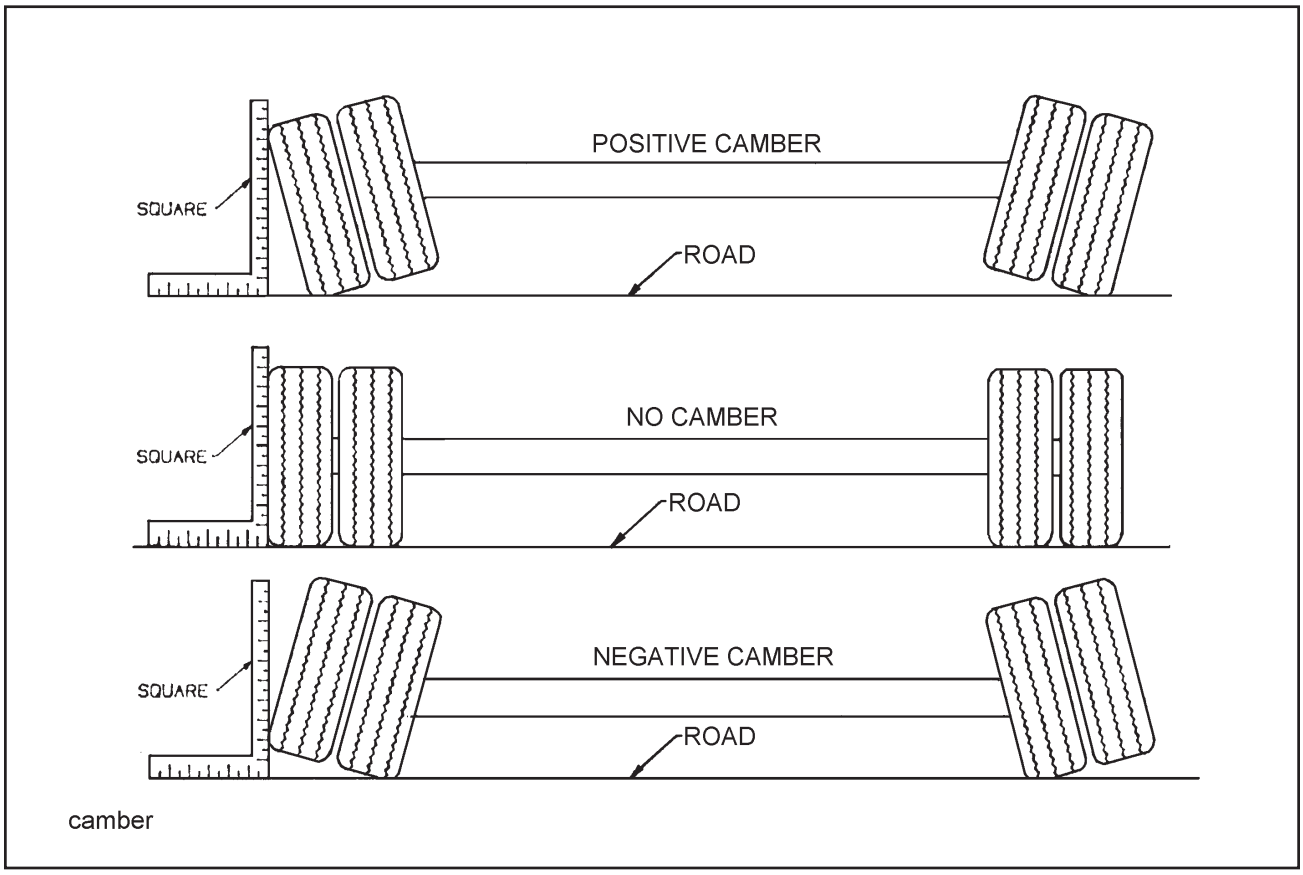

Figure 4-14 Examples of Camber

https://truckmanualshub.com/

4-8.2 Axle Alignment

Proper axle to king pin alignment is necessary to obtain straight tracking. If axle alignment is off, “dog-tracking” occurs. Check alignment manually or by using a semitrailer alignment machine. In either case, a thorough inspection of the complete suspension must be performed and all defects corrected before aligning.

a. Manual Alignment Procedure

1. Position semitrailer on a firm and level surface. Insure that the undercarriage is in the rear most position. Eliminate any suspension binding due to sharp turns or unusual maneuvers.
2. Detach tractor from the semitrailer and jack the trailer up sufficiently to permit measuring from the underside of the trailer.
3. Suspend a plumb bob at axle height from the center of the king pin.
4. Measure (D) from the plumb bob to the center point on one end of the axle. Record this measurement **(See Figure 4-13)**.
5. Measure (D1) to the other end of the axle in the same manner as in **Step 4.**. Record this measurement **(See Figure 4-13).**
6. Set D about 1/8" shorter than D1 to insure proper trailer tracking on slope of road.
7. The suspensions must be in good repair with no binding or other restrictions before aligning. All defective parts of the suspension or axles must be replaced immediately.

b. Air Ride Suspension Axles

The air ride suspension is aligned and adjusted at the factory and it should not be necessary to align the axles. If, however it does become necessary to align the axles, the procedure is as follows:

1. To align air ride suspension axles, locate the front axle equalizer beam pivot bolt in front hanger at front end of lock nut. Loosen the suspension pivot bolt lock nut. Rotate the head of the pivot bolt. For axle alignment forward, rotate bolt head clockwise. For axle alignment rearward, rotate the bolt head counter-clockwise. Both sides of axle need to be adjusted to prevent axle rise or fall.
2. Align the front axle using the method outlined in **Section 4-7.2, 4-8.2 a.**
3. After proper alignment has been obtained, tighten the suspension pivot bolt nut to the torque listed in the table in **Section 4-7.2 a.**
4. Align the rear axle to the front axle. Locate the rear axle equalizer beam pivot bolt in hanger at front end of driver’s side rear axle equalizer beam. Loosen the suspension pivot bolt lock nut. Rotate the head of the pivot bolt. For axle alignment forward, rotate bolt head clockwise. For axle alignment rearward, rotate the bolt head counter-clockwise. The rear axle should be parallel with the front axle, with the dimensions Y and Y1 being the same.
5. Tighten the suspension pivot bolt nut to the torque listed in the table in **Section 4-7.2 a.**

https://truckmanualshub.com/

⚠ WARNING

1. WHEN CRAWLING UNDER THE SEMITRAILER IS NECESSARY, CHOCK ALL WHEELS OF THE TRAILER AND TRACTOR. WHEN JACKING IS NECESSARY, CHOCK ALL WHEELS AND SUPPORT THE SEMITRAILER UNDERCARRIAGE WITH JACK STANDS SUFFICIENT TO WITHSTAND THE WEIGHT OF THE SEMITRAILER AND LOAD. FAILURE TO TAKE ADEQUATE SAFETY MEASURES MAY RESULT IN SERIOUS PERSONAL INJURY OR DEATH.

2. USE GREAT CARE IF WHEELS OR BRAKE DRUMS MUST BE HANDLED. THEY MAY BE VERY HOT AND CAN CAUSE SERIOUS BURNS.

4-9.1 General

A daily general inspection will reveal the most common problems found in the spring brake system. This inspection should include the following:

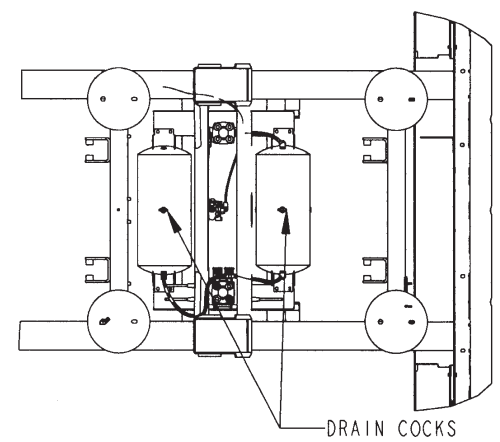

Figure 4-15 Drain Cock Locations

a. Check air hoses for chafing, bends, kinks, or damaged fittings. Replace defective hoses.

b. Check the brake system for loose, missing, deformed, or corroded fasteners. Replace and tighten defective hardware.

c. Check brake linings for excessive wear or distortion.

d. Drain air reservoir daily. A drain cock on the bottom of each air reservoir vents the tank to drain collected water and oil. If held open, air pressure in the tanks is relieved, causing the emergency or parking brakes to be applied **(See Figure 4-15).**

4-9.2 Spring Air Brake Chambers

Check for faulty units. Check the condensation holes on the underside of the brake chambers to make sure they are open. The spring brake has two brake chambers, a service chamber and an emergency chamber or spring chamber. Service brake chambers should be disassembled and cleaned at 50,000 miles or yearly. The diaphragm and any marginal parts should be replaced. When replacing the service diaphragm, replace the corresponding parts for the other chamber on the same axle (to aid in even brake application and release). Examine yoke pin for wear and replace as necessary. The spring chamber should not be serviced. Replace entire unit (both service and spring chamber) if spring chamber becomes faulty.

⚠ WARNING

THE SPRING BRAKE CHAMBER EMPLOYS A SPRING WITH HIGH FORCES. SERVICE SHOULD NOT BE ATTEMPTED. SERIOUS INJURY OR DEATH MAY RESULT.

https://truckmanualshub.com/

a. Caging the Power Spring

1. Chock the trailer wheels.
2. Remove dust cap from spring brake chamber.
3. Remove the release bolt from it's holding brackets and insert it into the spring brake chamber. DO NOT USE AN IMPACT WRENCH TO CAGE THE SPRING BRAKE.
4. Turn the bolt until the spring brake is caged. This should be 2-1/4 to 2-1/2 inches of release bolt extension.
5. The brakes should now be totally released. Do not operate loaded trailer with brake manually released.
6. To reset the spring brake, turn the release bolt until the spring is released. Remove the release bolt and store it in its brackets.
7. Snap the dust cap back in place on the chamber.

b. Removal

1. Chock all tractor and trailer wheels and drain the air system.
2. Mark the brake chamber for proper air line port alignment for reassembly.
3. CAGE THE POWER SPRING following the steps outlined in **Section 4-8.2, 4-9.2a.**
4. Disconnect the slack adjuster from the connecting rod by removing the clevis pin **(See Figure 4-18)**.
5. Mark all air service lines for proper reinstallation and disconnect from the brake chamber.
6. Remove the brake chamber from the axle brackets.

c. Installation

1. CAGE THE POWER SPRING following the steps outlined in **Section 4-8.2, 4-9.2a.**
2. Position the inlet ports by loosening the service chamber clamp bands and rotating center housing such that ports are located according to alignment marks made during disassembly, then retighten the clamp bands.
3. Position the breather hole in the downward facing position by loosening the clamp bands on the spring brake chamber and rotating the chamber housing until the breather hold faces downward. Retighten the clamp bands.
4. Remount the brake chamber on the axle brackets and reconnect the air service hoses and the slack adjuster connecting rod **(See Figure 4-18).**

IMPORTANT

BE SURE THE SERVICE LINE IS ON THE SERVICE CHAMBER PORT AND THE EMERGENCY LINE IS ON THE SPRING BRAKE PORT.

5. Check for leakage by charging the air system to a minimum of 90 psi and applying soap suds to the brake chamber and connections. If a growing bubble is detected or bubbles are blown away, locate the source of the leak and repair.
6. Insure that the clamp band is properly seated and tight **before** uncaging the power spring.

4-9.3 Emergency Relay Valve Maintenance

Every 3600 operating hours, 100,000 miles, or yearly, the Emergency Relay Valve should be disassembled, cleaned, and lubricated by a trained technician.

⚠ WARNING

REPAIR OR REPLACEMENT OF THE RELAY/EMERGENCY VALVE IS A COMPLEX OPERATION AND SHOULD BE PERFORMED BY TRAINED SERVICE PERSONNEL. CONTACT A LANDOLL AUTHORIZED SERVICE CENTER OR THE LANDOLL FACTORY FOR SERVICING.

https://truckmanualshub.com/

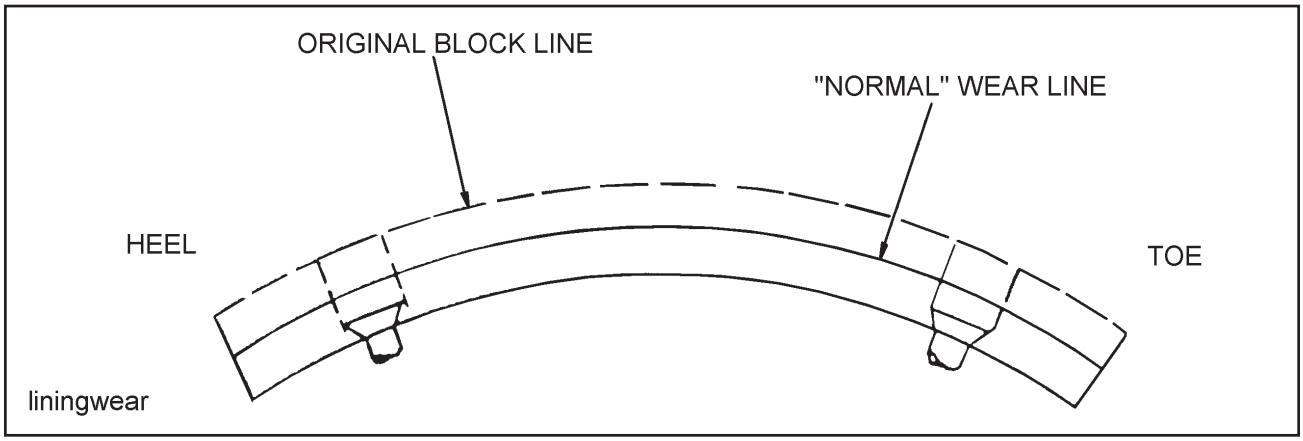

Figure 4-16 Brake Lining Wear

4-9.4 Brake Assembly Maintenance

The brake assemblies should be inspected and adjusted every 2,000 miles or monthly. Examine the brake linings visually to locate the lining showing the greatest amount of wear. The wheel and drum should be removed and the linings replaced if the thinnest portion of the lining is 3/8 in. (9.5 mm) or less. Do not allow the linings to wear thin enough that the lining rivet contacts the drum. **(See Figure 4-16)**. Lubricate brake assembly per **Figure 4-1, Lubrication Points** and **Table 4-1, Maintenance Schedule.**

⚠ WARNING

DO NOT ALLOW GREASE TO CONTACT BRAKE LININGS AS THIS COULD RESULT IN REDUCED BRAKING PERFORMANCE.

a. Brake Adjustment

This semitrailer is equipped with automatic slack adjusters which compensate for brake lining wear and keep brakes adjusted. Brakes should not be adjusted manually except when relining brakes.

b. Disassembly for 16-1/2" x 7" Brakes (See Figure 4-17).

1. Release brakes and back off slack adjuster.
2. Remove slack adjuster lock ring and slack adjuster.
3. Remove drum assembly.
4. Disengage the roller retainers from the rollers.
5. Press down on the bottom brake shoe and remove the lower cam roller. Lift the top shoe and take out the top cam roller.
6. Lift out the shoe retractor spring, which is now free of tension.
7. Swing the lower shoe back approximately 180° to relieve the tension on the shoe keeper springs. Remove the springs and slip the shoes off the anchor pins.
8. Remove camshaft lock ring, spacer washer(s) and camshaft.
9. After removing the shoes, completely inspect all brake components, servicing as necessary.

c. Reassembly for 16-1/2 x 7" Brakes (See Figure 4-17).

1. Install new anchor pin bushings, camshaft bushing and camshaft seals into the spider.

IMPORTANT

WHEN INSTALLING CAMSHAFT SEALS, THE SEAL ON THE SLACK ADJUSTER SIDE IS INSTALLED FACING INTO SPIDER. THIS ALLOWS GREASE TO PURGE OUTSIDE THE BRAKE ASSEMBLY WHEN GREASING THE CAMSHAFT BUSHING.

2. Install cam roller, retainer clip and retractor spring retainers onto the camshaft.
3. Install 1/8" thick camshaft washer onto the camshaft.
4. Install the camshaft into the spider. Install spacer washer and lock ring retainer on camshaft before sliding the camshaft through the camshaft support bracket. Install the slack adjuster, washer and lock ring retainer.

https://truckmanualshub.com/

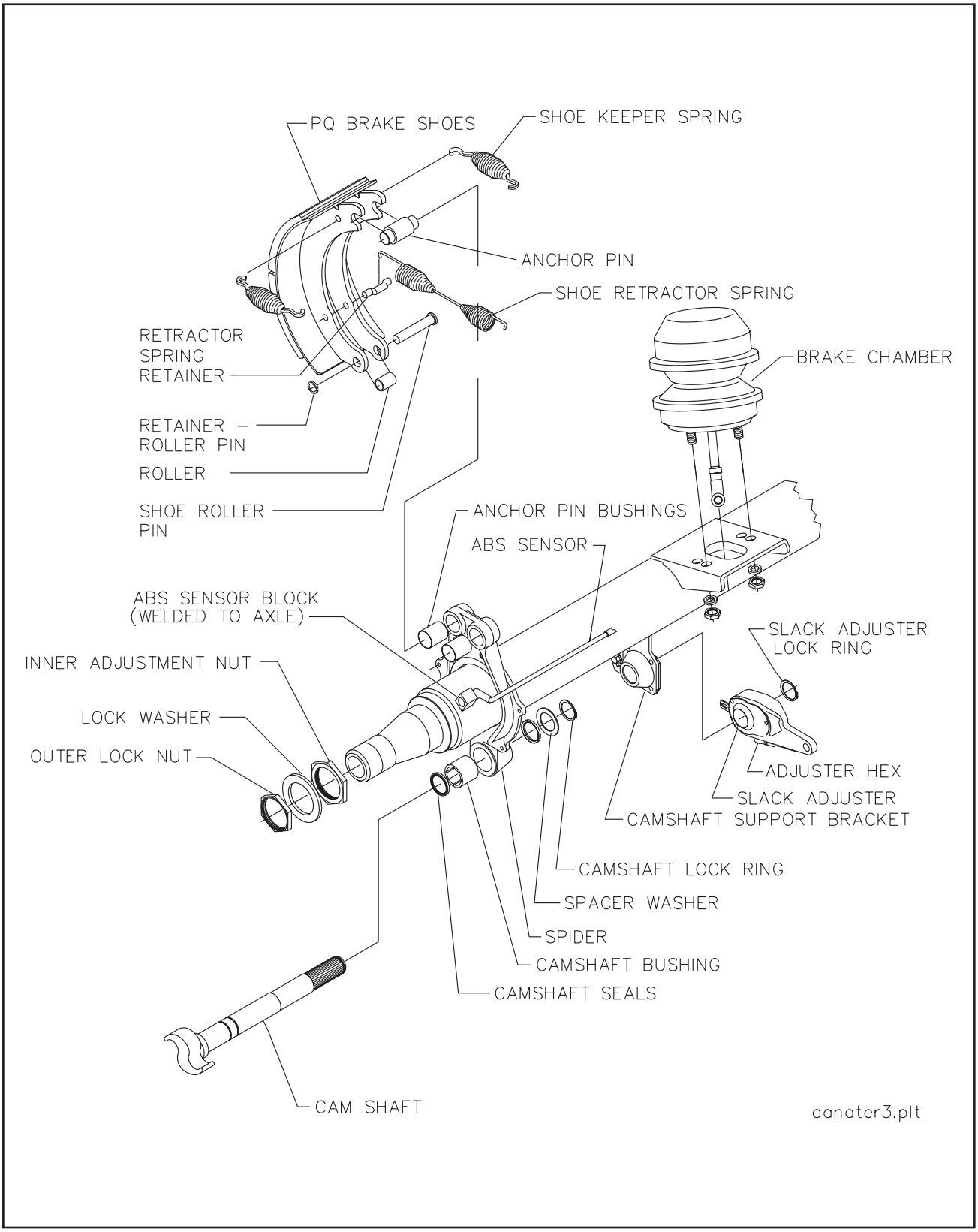

Figure 4-17 Axle and Brake Assembly

https://truckmanualshub.com/

5. Install the brake keeper onto the shoes. Install shoes onto the spider by placing shoes in place on the anchor pins, then “wrap” the two shoes into place about the spider.
6. Install the shoe retractor spring onto the shoes.
7. Connect slack adjuster to brake chamber pushrod.
8. Adjust automatic slack adjuster as outlined in **Section 4-8.5, 4-9.5c.**

4-9.5 Automatic Slack Adjuster

The semitrailer automatic slack adjusters provide the means for routine brake adjustment to compensate for lining wear. Inspect slack adjusters every 2,000 miles to assure correct operation.

⚠ CAUTION

THE INSTALLATION GUIDE MUST BE USED WHEN INSTALLING OR REINSTALLING AUTOMATIC SLACK ADJUSTER. FAILURE TO DO SO MAY RESULT IN IMPROPERLY ADJUSTED BRAKES WHICH MAY CAUSE BRAKE DAMAGE OR LEAD TO BRAKE FAILURE.

a. Operational Check (See Figure 4-18)

1. Block wheels to prevent vehicle from rolling.
2. Check that the push rod is fully retracted, apply air to release spring brake.
3. Turn adjustment hex counterclockwise to create an excessive clearance condition. (A ratcheting sound will occur.)
4. Make a full service brake application. On release, allow sufficient time for brake to fully retract. During the brake release, observe rotation of the adjustment hex (attach a wrench on the hex to make this movement easier to see). This rotation indicates that an excessive clearance condition has been determined by the slack adjuster, and it is making an adjustment to compensate. On each subsequent brake release the amount of adjustment and push rod travel will be reduced until the desired clearance is achieved.
5. The push rod stroke should be 1 1/2" to 2" with an 100 to 105 PSI service brake application.
6. Measure the movement of the push rod from the completely released position to the applied position by marking the push rod where it exits the air chamber before and after application.
7. If the brakes have been running tight, the control arm location should be checked.

⚠ WARNING

IF THE ADJUSTER APPEARS NOT TO BE OPERATING, CHECK THE OTHER BRAKE COMPONENTS FOR PROPER FUNCTION AND ELIMINATE ANY BINDING. RECHECK THE AUTOMATIC SLACK ADJUSTER. IF THE ADJUSTER IS NOT FUNCTIONING, THE UNIT MUST BE REPLACED BECAUSE FAILURE OF PROPER ADJUSTMENT FUNCTION WILL RESULT IN LOSS OF BRAKES.

b. Replacing Slack Adjuster (See Figure 4-18)

1. Chock wheels to prevent vehicle from rolling. Release spring and service brake. Air chamber push rod must be **fully released.**
2. To maintain a fully released parking brake, a minimum of 105 psi reservoir pressure must be maintained. If air pressure is not available the spring brake must be manually caged.
3. Remove the existing slack adjuster and clevis - DO NOT REMOVE EXISTING JAM NUT.
4. Install the new clevis (with 1/2" pin) onto the push rod up to the jam nut -DO NOT TIGHTEN JAM NUT.

https://truckmanualshub.com/

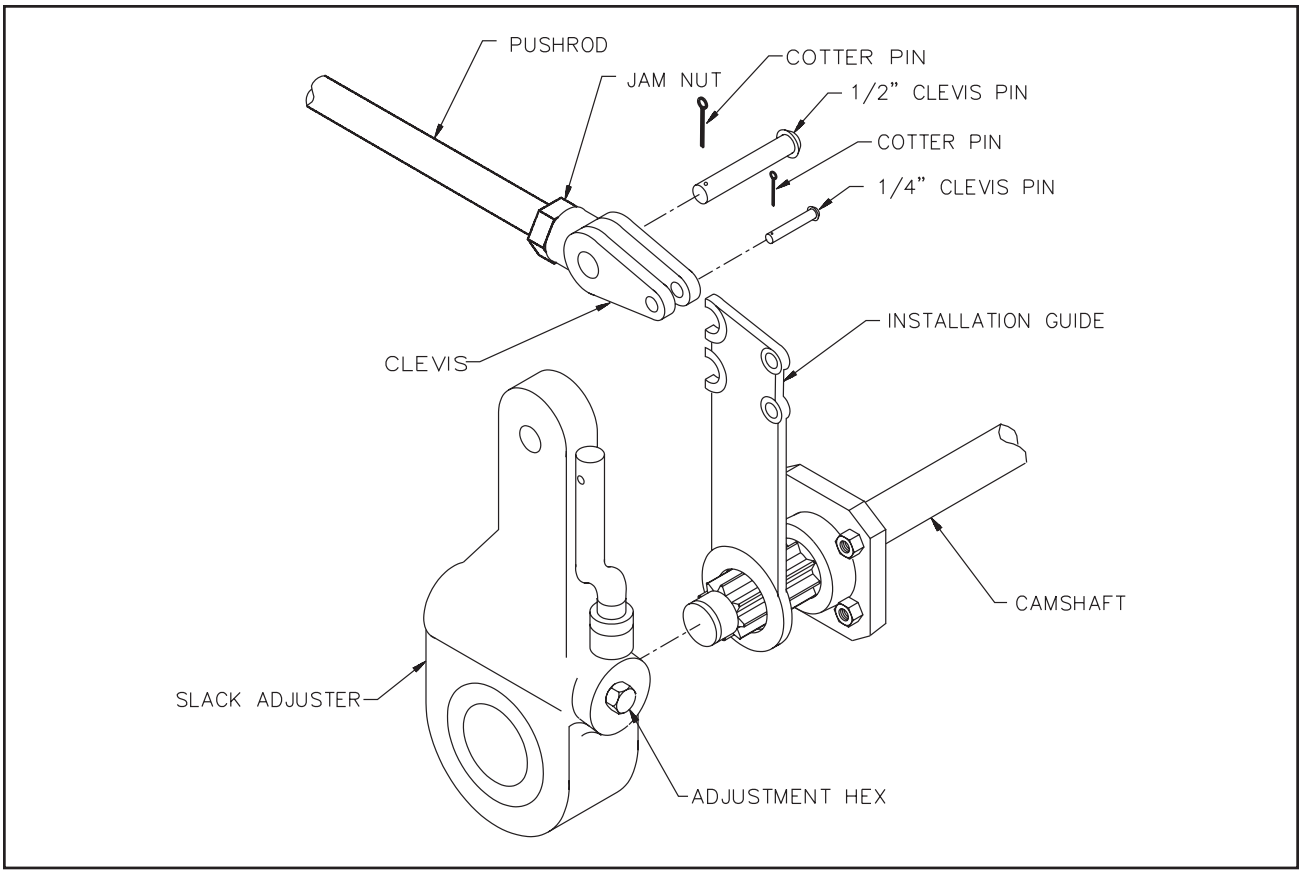

Figure 4-18 Slack Adjuster

5. Fit the installation guide over the cam splines so the 1/2" pin slots face the air chamber.
6. Swing the guide into the clevis until the appropriate slot totally engages 1/2" pin.
7. Observe the guide pointer arrow:
   If the guide pointer is <u>above</u> the clevis pointer, adjust clevis CCW for alignment.
   If the guide pointer is <u>below</u> the clevis pointer, adjust clevis CW for alignment.
8. Reposition clevis until the guide pointer aligns with the clevis pointer.
9. Verify by engaging 1/4" pin through the clevis and guide.
10. Tighten jam nut to 50 ft.-lbs. torque min.
11. Remove the guide from cam shaft.
12. If the push rod threads extend through the clevis more than 1/16", remove clevis and cut rod to length.
13. If the push rod is not fully engaged in clevis body, install a new push rod - cut to length.
14. Install the slack adjuster on the cam shaft.
15. Rotate the manual adjuster shaft CW until the slack adjuster arm holes align with the clevis. Install 1/2" and 1/4" pins and cotter pins.

c. Adjusting Slack Adjuster

1. Rotate the manual adjuster clockwise until brake shoes contact drum.
2. Back off manual adjuster 1/2 turn. (counterclockwise)
3. Manually uncage the spring brake.
4. Build up vehicle air pressure.
5. Fully apply and release the brakes several times to check for adequate clearance to all adjacent components.
6. Measure the distance from air chamber to 1/2" pin. Apply brakes with 100-105 psi air pressure and remeasure distance to 1/2" pins.
7. The stroke (difference of these two measurements) must be less than 2 inches.

https://truckmanualshub.com/

4-10 HUB AND DRUM MAINTENANCE

4-10.1 Clean and inspect the brake drums whenever relining the brakes. To be suitable for further service, the brake drum should pass the following checks.

a. The brake surface should be free of scoring, excessive heat checks and cracks.

b. The brake surface diameter should be within the maximum diameter cast or stamped on the drum.

c. The mounting holes and pilot must be round and true.

d. The mounting surface must be clean and flat.

⚠ WARNING

FAILURE TO REPLACE FAULTY BRAKE DRUMS WILL RESULT IN AN UNRELIABLE BRAKING SYSTEM, AND MAY LEAD TO AN ACCIDENT.

4-10.2 It may be necessary to turn or resurface the braking surface to remove small heat checks or other surface defects resulting from normal use.

a. The maximum diameter cast into the back plate portion of the brake drum is the maximum diameter or discard diameter to which the brake drum may be turned or worn and still be usable. If any portion of the brake surface exceeds the maximum diameter it must be discarded. The maximum is .120 over the nominal new diameter unless stated otherwise on the casting. The maximum diameter cast into the brake drum supersedes all published information.

b. When resurfacing a drum, allow at least 0.040 inches under the maximum diameter for additional wear.

⚠ WARNING

TURNING A BRAKE DRUM BEYOND 0.040 INCHES UNDER THE MAXIMUM DIAMETER WILL RESULT IN A WEAKER BRAKE DRUM AND MAY RESULT IN AN ACCIDENT.

4-10.3 Replacement of the brake drum is required if any of the following conditions exist:

a. The brake drum is cracked.

b. The brake surface is heat checked, grooved or worn beyond the rebore limit or the maximum diameter.

c. The back plate is cracked.

d. The bolt holes are elongated.

e. The brake drum has been severely overheated.

f. The brake drum is out-of-round.

⚠ CAUTION

REPLACE BRAKE DRUMS IN PAIRS TO ACHIEVE THE SAME BRAKING POWER ON BOTH WHEELS AND MAINTAIN AN EVEN BRAKING LOAD ON THE AXLE. FAILURE TO DO THIS MAY SIGNIFICANTLY REDUCE THE PERFORMANCE, SERVICE LIFE, AND/OR SAFETY OF YOUR VEHICLE.

4-10.4 Replace the hub and drum as follows **(See Figure 4-19):**

a. Remove the brake drum **(See Figure 4-19)**. It may be necessary to release the slack adjuster.

b. Remove hub cap and catch lubricant in a pan.

c. Remove outer spindle nut, spindle locking washer, inner spindle nut, and bearing. Remove hub from axle.

d. Using an appropriate driver, remove inner bearing cone, and seal.

e. Using an appropriate driver, remove bearing cups from hub.

f. Check that the hub cavity is clean. If the hub is to be reused, clean it thoroughly.

https://truckmanualshub.com/

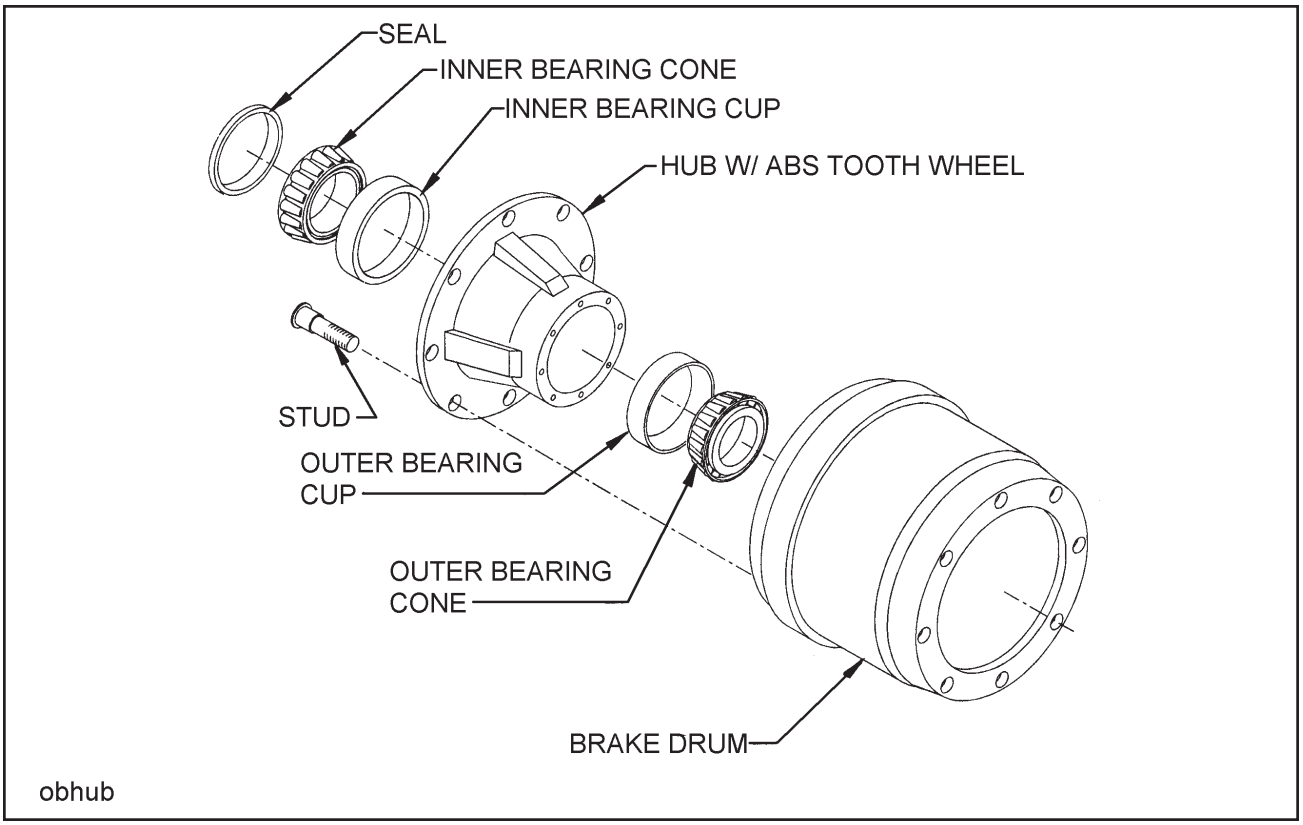

Figure 4-19 Outboard Mount Hub and Drum

g. Insert bearing cups into the hub.

h. Clean the mounting surfaces with a good grade commercial cleaner and soft rag. Dry all component parts with a clean, absorbent cloth or paper. Lubricant will not adhere to surfaces wet with solvent.

i. Install inner bearing, cone, and seal.

IMPORTANT

DO NOT MIX NEW CUPS WITH OLD CONES OR NEW CONES WITH OLD CUPS.

j. Place the hub or wheel over the axle spindle being careful to align the hub bore with the axle. Do not damage the seal. Support the hub assembly until the outer bearing cone and spindle nut are installed, to avoid damaging the seal.

k. Install the outer bearing cone and inner spindle nut, tightening the nut until it is snug against the outer bearing cone. Remove the hub support allowing the hub to rest on the bearings.

l. Install and adjust bearings **(See Section 4-10, 4-11, Wheel Bearing Lubrication and Adjustment).**

m. Install the hub cap with the proper gasket. Tighten the cap screws of the hub cap to 15 to 20 ft-lbs. of torque.

n. Remove the filler plug and fill the hub cavity to the recommended level with a gear type oil.

o. Place the drum over the hub and brake shoes being careful not to damage the threads on the studs. Make sure the drum seats flat against the hub flange and mates properly with the hub pilot. There should be no interference between the brake drum pilot chamfer and the corner radius on the hub. If interference exists, the hub will not be able to function properly.

https://truckmanualshub.com/

4-11 WHEEL BEARING LUBRICATION AND ADJUSTMENT

With semitrailer sitting level, the oil level must be checked daily and maintained between the “ADD” and “FULL” lines on the hub cap window. Check for cracked windows, missing filler plugs, and oil leaks. Add hub oil through the “POP-IN” filler plug located in the center of the hub windows. Re-install the “POP-IN” plugs after filling each hub. Adjust wheel bearings and change oil every 50,000 miles or with each brake lining replacement, which ever occurs first.

4-11.1 Adjustment

a. With a drain pan under the hub cap, remove the hub cap assembly allowing oil to drain.

b. Lift the wheel off of the ground.

c. Adjust slack adjuster to eliminate brake drag during tire/wheel rotation.

d. Remove outer lock nut and inner nut and lock washer.

e. Tighten the inner adjustment nut to a minimum of 75 ft.-lbs., while rotating wheel to insure proper seating of the bearings and cups in the wheel hub.

f. Loosen the inner adjustment nut so that the wheel will turn freely.

g. Retighten the inner adjustment nut to 50 ft.-lbs. while rotating the wheel, to properly position the bearings for the final adjustment.

h. Loosen the inner adjustment nut 1/3 turn.

i. Install the spindle nut lock washer so that the dowel on the inner nut will align with a hole in the lock washer and the washer tang fits in the spindle keyway.

j. Install the outer lock nut and tighten to 250-300 ft.-lbs. End-play of .001" to .010" must be present in the adjusted wheel bearing assembly.

⚠ DANGER

FAILURE TO TORQUE THE OUTER LOCK NUT PROPERLY COULD CAUSE THE WHEEL TO COME OFF DURING VEHICLE OPERATION RESULTING IN PROPERTY DAMAGE OR LOSS OF LIFE.

k. Install the hub cap with a new gasket and fill with oil to the full mark. **See Table 4-1.**

l. Adjust brakes according to **Section 4-8.4, 4-9.4 a.**

m. Check hub oil level after the wheel has set level in one position for a few minutes to allow the oil to work into the bearings.

https://truckmanualshub.com/

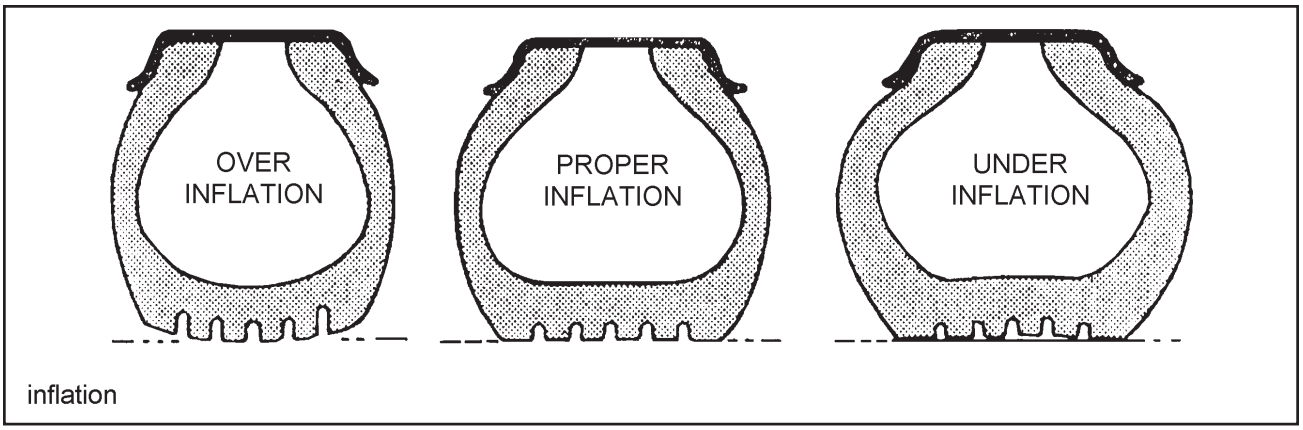

Figure 4-20 Tire Inflation Examples

4-12 TIRE MAINTENANCE

4-12.1 Tire Inflation. Tire inflation will cause tire to ground contact characteristics as shown in **Figure 4-20**. Tire inflation should be checked daily while the tire is cold, and during road stops. Checking the tire pressures while tires are hot will give a faulty increased pressure reading. Adjusting tire air pressure to the specified amount while tires are hot will produce improper tire to road contact and thus abnormal wear. Do not exceed cold inflation pressure listed on the semitrailer VIN plate located on the front of the trailer. Exceeding cold inflation pressure will result in damaged tire bodies, rims, and wheels. Replace all valve stem caps when pressure checking/adjusting has been completed. Remove any foreign objects from between duals.

4-12.2 Tire Matching. Both tires on the same spindle must be the same size in order to properly distribute the load and braking forces between them. The tire must be mounted on a rim and properly inflated before measuring. If there is an allowable difference in size the smaller tire should be mounted to the inside position of the duals.

a. Tape Measuring Method: Measure around each tire on the tread surface. A maximum difference of 3/4" is allowed between the two mating tires of a dual **(See Figure 4-21).**

b. Straight Edge or String Method: (This method cannot be used if tire and wheel assemblies are not mounted on the axle.) Jack trailer up until the wheels are off of the ground. Hold a straight edge against the tires of both ends of an axle. A gap at one tire indicates a smaller tire. A maximum of 1/8" gap is allowed **(See Figure 4-22)**.

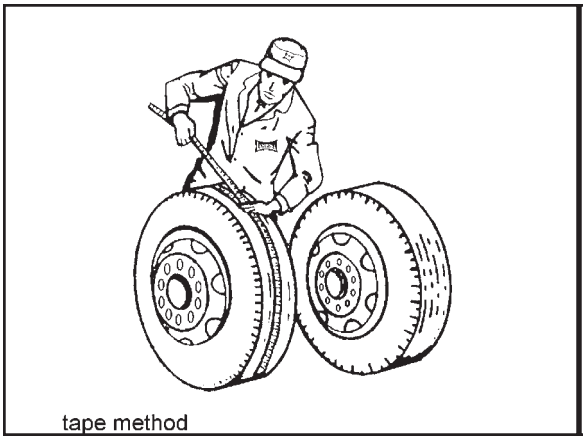

Figure 4-21 Measuring Tape Method

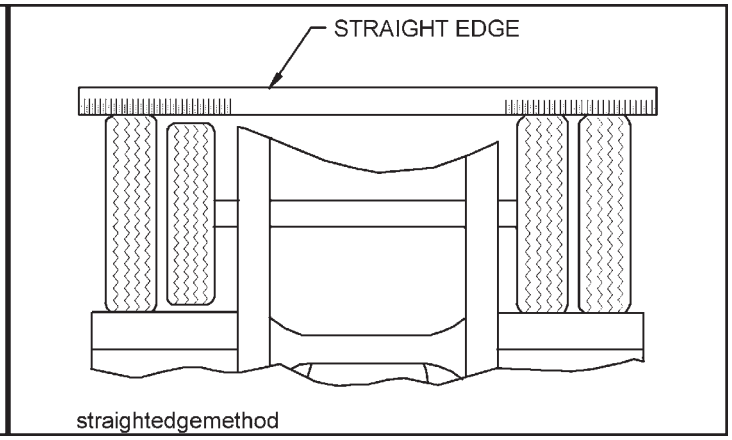

Figure 4-22 Straight Edge Method

https://truckmanualshub.com/

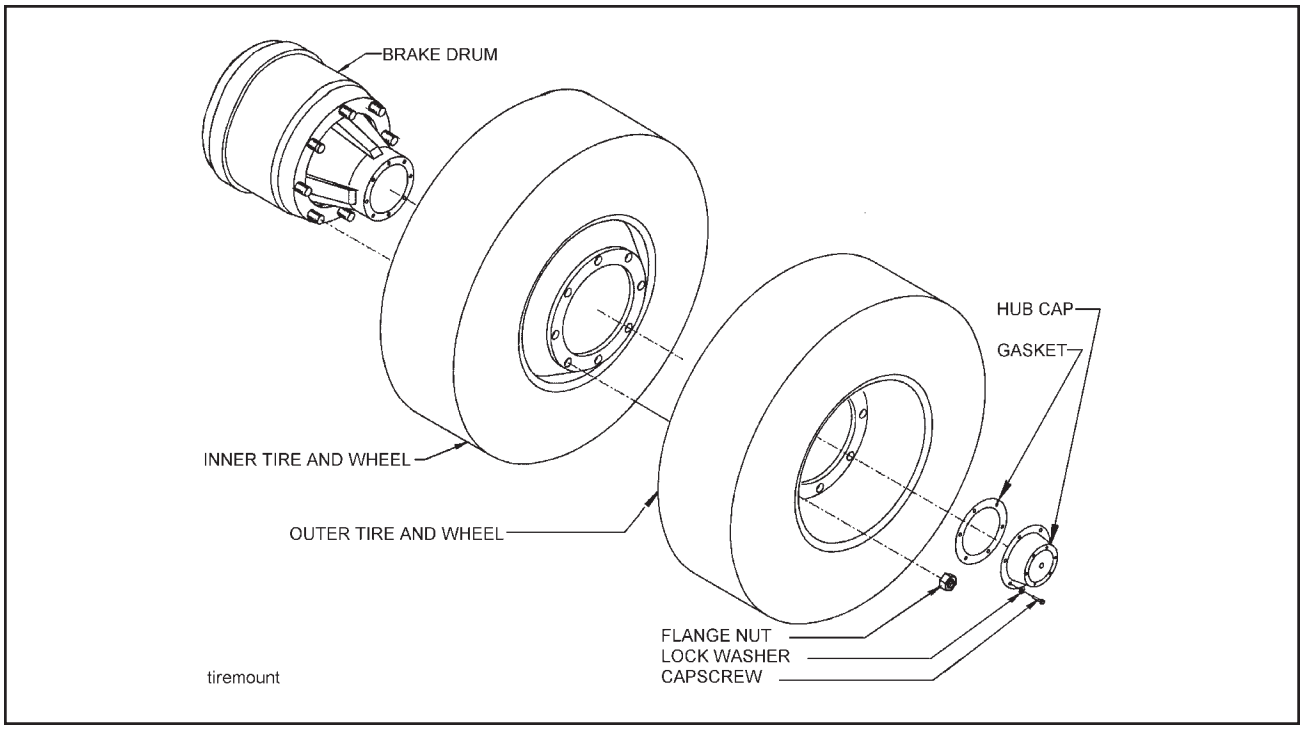

Figure 4-23 Mounting Tires and Wheels

4-12.3 Mounting Tire and Wheel (Hub Type)

a. Make sure that all mounting surfaces are clean and free of rust, dirt or paint. A wire brush may be used to clean these surfaces **(See Figure 4-23)**.

b. Position the inner disc wheel over the studs, being careful not to damage the stud threads. Make sure that the disc wheel is flat against the mounting surface and that there is clearance between the disc wheel taper and brake drum.

c. Position the outer disc wheel being careful not to damage the stud threads. Be sure the valve stems for both the inner and outer tire are accessible.

d. Install the flange nut (pilot mount) and tighten to 50 foot-pounds using the sequence in **Figure 4-24.** Then tighten to full torque of 500 to 550 foot-pounds .

e. Torque will drop after the first 50 to 100 miles of operation. Check the nuts for proper torque after this interval and retighten them.

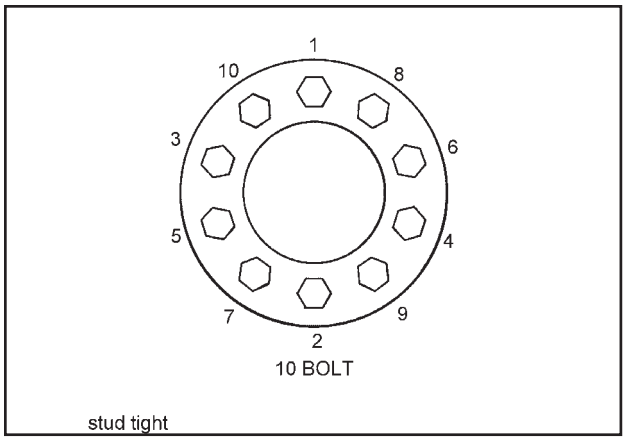

Figure 4-24 Stud Tightening Sequence

⚠ WARNING

USE A TORQUE WRENCH TO ASSURE PROPER TORQUE. INSUFFICIENT TORQUE CAN CAUSE STUD BREAKAGE AND DAMAGE WHEEL PILOTS. OVERTORQUE CAN OVERSTRESS THE STUDS AND STRIP THE THREADS.

https://truckmanualshub.com/

4-13 HYDRAULIC ENGINE PACKAGE (OPTION)

The hydraulic engine package should be inspected weekly to insure continued proper operation. The inspection should include:

4-13.1 Check the hydraulic oil level weekly, or after any leakage. See **Table 4-1** for proper hydraulic oil. With all hydraulic cylinders in the retracted position and with the engine stopped, check the hydraulic oil level.

4-13.2 Check hoses weekly for cracks or leaks. If a valve or line leaks, it should be replaced immediately.

4-13.3 Check the engine oil each time before using. Oil level should be maintained between the “ADD” and “FULL” marks on the oil dip stick. For further maintenance procedures and proper lubrication specifications, please refer to the engine owner’s manual that was supplied with the hydraulic engine package.

4-13.4 Replace hydraulic filter with new filter at least every 6 months or more often under adverse conditions.

4-13.5 Use the fuel recommended for the engine package installed on you trailer.

https://truckmanualshub.com/

https://truckmanualshub.com/

TROUBLESHOOTING 5

Troubleshooting should be performed by a trained and competent technician. Landoll Corporation is not responsible for equipment that is improperly maintained. Contact an authorized Landoll Service center or the Landoll factory for servicing.

5-1 ELECTRICAL

Most electrical system problems show up as a burned out light or fuse, or inoperative electrical component. Wiring, grounds, or components may be at fault. Locate the symptom in this section that best identifies your electrical problem. Check out each possible problem under that symptom. If the problem cannot be located, see an automotive electrical specialist.

SYMPTOM	PROBLEM: REMEDY
NO LIGHTS	**Fuse blown:** replace fuse. **Connection at plug-in:** tighten connection. **Broken or corroded wires:** replace wire. **Ground wire loose:** clean and tighten ground.
LIGHTS FLICKERING	**Wires shorted or loose:** locate, insulate, replace, or tighten. **Grounding through fifth wheel:** locate broken ground wire (tractor or semitrailer).
LIGHTS DIM	**Voltage difference between semitrailer & tractor:** match bulbs with tractor voltage. **Grounding through fifth wheel:** locate broken ground wire (tractor or semitrailer).
LIGHTS BRIGHT & BURN OUT	**Voltage difference between semitrailer & tractor:** match bulbs with tractor voltage.
FUSE BLOW-OUT OR CIRCUIT BREAKER TRIPPING	**Vibration:** locate source of vibration and repair. **Short circuit:** replace fuse and try all accessories. If fuse blows right away, locate short and repair.
LAMP BULB BURN OUT	**Vibration:** locate source of vibration and repair. **Short circuit:** replace fuse and try all accessories. If fuse blows right away, locate short and repair. **Loose connection:** check lamp sockets and ground connections. **Intermittent short:** locate short and repair. **Improper voltage:** check voltage regulator output.

https://truckmanualshub.com/

5-2 TIRES - WHEELS - SUSPENSION

Most tire, wheel, and suspension related problems are due to excessive loads, extreme conditions, and improper maintenance. Tire, wheel, and suspension problems can be easily detected and solved by checking the following guide.

SYMPTOM	PROBLEM: REMEDY
VIBRATIONS WHILE DRIVING	**Improper tire inflation:** inflate to proper pressure. **Tires cupped or have flat spots:** replace tires. **Wheels bent or loose:** replace or tighten. **Tires incorrectly mounted:** remount. **Mud in wheels:** clean wheels. **Tire(s) out of balance:** balance tires. **Brakes dragging:** locate cause and repair. **Object(s) stuck between duals:** remove object(s).
RAPID TIRE WEAR/ DETERIORATION:	
CENTER TREAD WEAR	**Over inflation:** deflate to correct inflation.
SHOULDER TREAD WEAR - BOTH SHOULDERS	**Under inflation:** increase inflation to correct PSI. Check axle alignment. **Overload:** loads are above rated tire capacity. DO NOT load above rated tire capacity.
SHOULDER TREAD WEAR - ONE SHOULDER	**Axle damage:** straighten or replace axle. **Axles not parallel:** check axle alignment.
OVERALL TREAD WEAR	**Overloading:** check tire load rating. **High speeds:** adjust speed according to road and load conditions. **Incorrect dual matching:** properly match dual tires. **Front and rear axle suspension air bags not inflated:** Adjust front and rear axle ride height control valves to proper settings.
TIRE FLAT SPOTS	**Quick stops:** adjust braking practices. **Grabbing brakes:** adjust brakes properly. **Worn or loose wheel bearings:** adjust or replace as needed. **Out of balance wheels and tire:** balance wheels and tires. Check ABS system function. **Front and rear axle suspension air bags not inflated:** Adjust front and rear axle ride height control valves to proper settings.
UNEVEN WEAR	**Suspension bushings worn:** replace bushings. **Worn or loose wheel bearings:** adjust or replace as needed. **Out of balance wheels and tires:** balance wheels and tires.

https://truckmanualshub.com/

TIRES - WHEELS - SUSPENSION (CONTINUED)

SYMPTOMS	PROBLEM: REMEDY
RIM FAILURE*:	
CRACKING	**Over inflated tires:** deflate tire to proper PSI. **High speeds:** adjust speed according to road and load conditions. **High speed cornering:** adjust cornering practices. **Over loading:** check rim load rating.
*IN ALL INSTANCES OF RIM FAILURE, REPLACE THE RIM IMMEDIATELY!	
BENDING OR WARPING	**Curb-hopping or potholes:** adjust turning practices and adjust speed accordingly with road conditions. **Improper tightening sequence:** follow proper tightening sequence.
BROKEN STUDS*	**Over tightening:** use correct torque when mounting.
*REPLACE BROKEN STUDS BEFORE USING THE SEMITRAILER!	
SEMITRAILER TRACKING PROBLEMS:	
TRACKS TO ONE SIDE	**Axle alignment:** re-align axle.
TRACKS TO EITHER SIDE	**Broken or bent springs or equalizers:** replace defective parts. **Axles not parallel**: realign axles
AIR RIDE HEIGHT PROBLEMS:	
TOO HIGH	**Axle to control valve linkage:** readjust linkage. **Height Control Valve internal leak:** repair or replace valve.
TOO LOW	**Axle to control valve linkage:** readjust linkage. **Height Control Valve filter plugged:** clean or replace valve. **Pressure Protection Valve filter plugged:** clean or replace valve. **System air pressure low (65 PSI minimum required):** troubleshoot air supply.
UNEVEN FROM SIDE TO SIDE	**Linkage adjustment:** readjust linkage. **Exhaust port plugged:** clean or replace valve(s). **Height control valve internal leak:** repair or replace valve. **Supply line to one height control valve pinched, restricted, or plugged:** repair or replace line.

https://truckmanualshub.com/

5-3 BRAKES

SYMPTOM	PROBLEM: REMEDY
NO BRAKES OR BRAKES ARE INTERMITTENT	**Brake air system improperly connected:** reconnect hand valves properly. **Relay/Emergency valve plugged:** clean valve. **Defective tractor protection valve:** repair or replace. **Restricted tubing or hose line:** locate and eliminate restriction. **Broken line:** locate break and repair. **Tractor air system failure:** troubleshoot tractor air system and repair. Check ABS system function.
SINGLE BRAKE DRAGGING OR LOCKED	**Broken internal brake component:** locate and replace broken part. **Flat spot on cam roller or cam shaft:** replace and lubricate. **Improper adjustment:** adjust slack adjusters. **Spider bushing or cam bracket bushing binding:** lubricate or replace bushing. **Improper lubrication:** lubricate **Worn brake shoe bushing:** replace bushing. **Brake drum distortion:** replace drum. **Broken brake chamber spring:** replace spring. **Brake chamber pushrod binding:** re-align brake chamber bracket. **Air brake line loose or broken:** tighten or repair.
UNEVEN BRAKES	**See "SINGLE BRAKE DRAGGING OR LOCKED"** **Restriction in hose:** locate restriction and remove. **Worn brake linings:** reline brakes. **Grease on linings:** reline brakes. **Broken slack adjuster:** replace slack adjuster. **Leaking brake chamber diaphragm:** replace diaphragm.
BRAKES APPLY TOO SLOWLY	**Brakes need adjusting or lubrication:** adjust or lubricate as needed. **Low air pressure in brake system (below 105 PSI):** check tractor air system. **Restricted tubing or hose:** locate restriction and remove. **Defective relay valve:** clean or replace. **Call Factory or see qualified Trailer/Brake Technician**
BRAKES RELEASE TOO SLOWLY	**Brakes need adjusting or lubrication:** adjust or lubricate as needed. **Brake rigging binding:** align brakes or replace bent parts. **Exhaust port of relay valve restricted or plugged:** clean valve. **Tractor pressure too low:** Adjust to provide 105 psi min.

https://truckmanualshub.com/

BRAKES (CONTINUED)

SYMPTOM	PROBLEM: REMEDY
ALL BRAKES DO NOT RELEASE	**Air system improperly connected to tractor:** tighten or adjust connections. **Brake valve on tractor is applied:** release brake. **Relay emergency valve in emergency position:** check line pressure and check valve. **Restricted tubing or line:** locate restriction and remove. **Defective tractor protection valve:** troubleshoot tractor air system. **Parking brakes locked:** troubleshoot air system. **Moisture in air system:** Check air system **Tractor pressure too low:** Adjust to provide 105 psi min.
INSUFFICIENT BRAKES	**Brakes need adjusting:** adjust brakes. **Brakes need lubricating:** lubricate brakes. **Brakes need relining:** reline brakes. **Low air pressure:** troubleshoot air system. **Defective relay emergency valve:** repair or replace. **Brakes overheated:** stop and allow brakes to cool, locate cause of overheating.
BRAKES GRABBING	**Grease on brake linings:** reline brakes. **Brake rigging binding:** align brakes or replace bent parts. **Defective brake valve on tractor:** repair or replace valve. **Defective relay emergency valve:** repair or replace valve.
EXCESSIVE LEAKAGE WITH BRAKES RELEASED	**Relay emergency valve leaking:** repair or replace valve. **Leaking tubing or hose:** replace defective part.
EXCESSIVE LEAKAGE WITH BRAKES APPLIED	**Relay emergency valve leaking:** repair or replace valve. **Leaking brake chamber diaphragm:** replace diaphragm. **Call Factory or see qualified Trailer/Brake Technician** **Leaking tubing or hose:** replace defective part.
EXCESSIVE LEAKAGE WITH EMERGENCY SYSTEM ONLY APPLIED - NO LEAKAGE WITH NORMAL BRAKING	**Defective relay emergency valve:** repair or replace valve.
EXCESSIVE WATER PRESENT IN BRAKE SYSTEM	**Reservoir not drained often enough:** drain reservoir daily.
EXCESSIVE OIL PRESENT IN BRAKE SYSTEM	**Compressor on tractor passing excessive oil:** repair compressor.
BRAKE WILL NOT APPLY PROPERLY	**Flat spot on cam roller or camshaft:** replace and lubricate.

https://truckmanualshub.com/

BRAKES (CONTINUED)

SYMPTOM	PROBLEM: REMEDY
BRAKES WILL NOT APPLY WHEN EMERGENCY LINE IS DISCONNECTED	**Initial air pressure too low:** allow air system to build up to minimum 90 PSI and stabilize. **Defective relay valve:** repair or replace valve. **Air line leak:** locate leak and repair. **Brake chamber leak:** locate leak and repair or replace.
ABS WARNING LIGHT STAYS ON	**Refer to Rockwell WABCO ABS maintenance manual supplied with semitrailer, for system function and use of blink code diagnostics**.

5-4 BRAKE DRUMS

SYMPTOM	PROBLEM: REMEDY
EXCESSIVE LOSS OF BRAKES OR FADING	**Overheated brake drums:** check for defective or misadjusted brake linings, distorted or over-machined drums. Also check for operating conditions or loads that create severe or excessive brake applications.
BRAKES PULL TO EITHER SIDE	**Drums of different diameters:** replace with drums of same diameter. **Foreign matter in drums:** clean drums out.
ROUGH OR NOISY BRAKING ACTION	**Defective drums:** pull drums and inspect for any of the following; Heat spotted drums, grease spotting, blue drums, scored drums, excessive wear at rivet holes or edges, polished drums, out of round drums, unbalanced drums, worn/damaged brake components, foreign matter in drums. Correct situation or replace defective part(s).
VIBRATION IN RIDE	**Defective drums or out-of-round:** replace drums. **Out-of-balance drums:** balance drums.

https://truckmanualshub.com/

5-5 HYDRAULIC SYSTEM

Most hydraulic system failures follow the same pattern: a gradual or sudden loss of pressure or flow with a resulting loss of cylinder or motor power. Any one of the system's components may be at fault. By following step-by-step procedures, the trouble can be located in a short time.

SYMPTOM	PROBLEM: REMEDY
SYSTEM INOPERATIVE	**Not enough oil in system:** fill, check for leaks. **Wrong oil in system:** change oil, see specifications. **Filter dirty or clogged:** drain oil and replace filter. **Hydraulic lines dirty or collapsed:** clean or replace as necessary. **Air leaks in pump suction line:** repair or replace as necessary. **Worn or dirty pump: clean, repair or replace.** Check for contaminated oil. Drain and flush. **Badly worn components:** examine for internal leakage. Replace faulty components. Check for cause of wear. **Leakage:** check all components, and relief valve for proper settings. **Excessive load:** check unit specifications for load limits. **Slipping or broken pump drive:** repair or replace couplings. Check for alignment.
SYSTEM OPERATES ERRATICALLY	**Air in the system:** check suction side of system for leaks. Repair leaks. **Cold oil:** allow ample warm-up time. Use proper weight oil for operating temperature. **Dirty or damaged components:** clean or repair as needed. **Restriction in filters or lines:** clean and/or replace filter or lines. **Not enough oil in system:** fill and check for leaks.
SYSTEM OPERATES SLOWLY	**Oil viscosity too high, or "cold oil".** Allow oil to warm up before operating. **Low pump drive speed:** increase engine speed (check pump owners manual for specifications). **Low oil level:** check reservoir and add oil as necessary. **Air in system:** check suction side for leaks. Repair leaks. **Badly worn pump, valves, cylinders, etc.:** repair or replace faulty component(s) as necessary. **Restrictions in lines or filter:** clean and/or replace filter or lines. **Improper adjustments:** check orifices, relief valves, etc. Adjust as necessary. **Oil leaks:** tighten fittings. Replace seals, gaskets and damaged lines.

https://truckmanualshub.com/

HYDRAULIC SYSTEM (CONTINUED)

SYMPTOM	PROBLEM: REMEDY
SYSTEM OPERATES TOO FAST	**Wrong size or incorrectly adjusted restrictor:** replace or adjust as necessary. **Engine running too fast:** reduce engine speed.
OVER HEATING OF OIL IN SYSTEM	**Oil passing through relief valve for excessive time:** return control valve to neutral when not in use. **Incorrect, low, dirty oil:** use recommended oil. Fill reservoir with clean oil. Replace filter. **Engine running too fast:** reduce engine speed. **Excessive component internal leakage:** repair or replace component as necessary. **Restriction in filters or lines:** clean and/or replace filter or lines. **Insufficient heat radiation:** clean dirt and mud from reservoir and components. **Malfunctioning component:** repair or replace. **Excess oil going to dock level circuit:** adjust flow divider for 2.5 to 3.1 GPM flow.
FOAMING OF OIL	**Incorrect, low, or dirty oil:** replace, clean or add oil as needed. **Water in oil:** replace oil **Air leaks:** check suction line and component seals for suction leaks. Replace defective parts.
NOISY PUMP	**Low, incorrect, foamy oil:** replace, clean, or add oil as needed. **Suction line plugged:** clean out obstruction or replace line. Flush system, replace filter. **Pump damaged:** repair or place.
LEAKY PUMP	**Damaged or worn shaft seal:** Replace seal and/or shaft and check for misalignment. **Loose or broken parts:** Tighten or replace.
CYLINDERS MOVE WITH CONTROL VALVE IN NEUTRAL POSITION	**Leaking cylinder seals or fittings:** Replace worn seals or fittings. **Control valve not centering when released:** Check linkage for binding and repair. **Valve damaged:** Repair or replace.
CONTROL VALVE LEAKS	**Seals damaged or worn:** Replace.
CYLINDER LEAKS	**Seals worn or damaged:** Replace. **Rod damaged:** Replace. **Barrel damaged:** Replace.
CYLINDERS DO NOT FUNCTION, OR CREEP WITH PTO DISENGAGED	**Leaking fittings or cylinder seals:** Tighten loose fittings. Replace worn seals or fittings. **Piloted check valve or O-ring leak:** Replace defective component.

https://truckmanualshub.com/

5-6 HYDRAULIC POWER SUPPLY ENGINE PACKAGE

To troubleshoot the engine in the hydraulic engine package, please refer to the owner's manual that was provided with the engine package.

https://truckmanualshub.com/

NOTES

https://truckmanualshub.com/

https://truckmanualshub.com/

Equipment from Landoll Corporation is built to exacting standards ensured by ISO 9001registration at all Landoll manufacturing facilities.

Model 325C/326C/327C/329C Detachable Trailer Operator's Manual

Re-Order Part Number F-490-1107

LANDOLL CORPORATION
1900 North Street
Marysville, Kansas 66508
(785) 562-5381
800-428-5655 ~ WWW.LANDOLL.COM

Copyright 2010. Landoll Corporation
"All rights reserved, including the right to reproduce this material or portions thereof in any form"